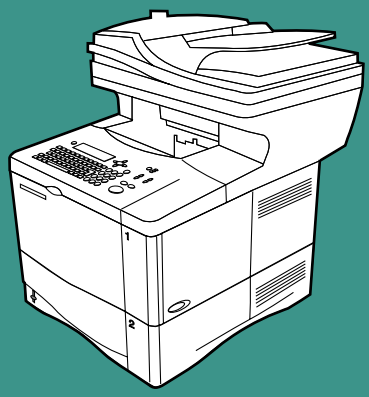

hp LaserJet
4100mfp • 4101mfp

invent

service addendum

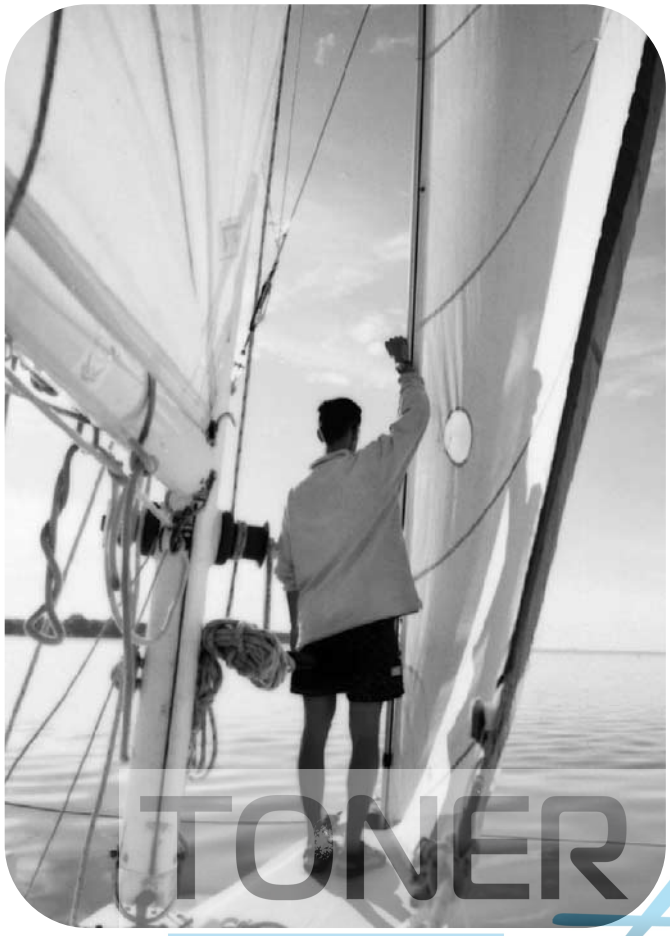

hp LaserJet 4100mfp series

service addendum

Publication number C9148-90909

Second edition, April 2002

Quick reference service PIN code: 04410002

Warranty

The information contained in this document is subject to change without notice.

Hewlett-Packard makes no warranty of any kind with respect to this information. HEWLETT-PACKARD SPECIFICALLY DISCLAIMS THE IMPLIED WARRANTY OF MERCHANTABILITY AND FITNESS FOR A PARTICULAR PURPOSE.

Hewlett-Packard shall not be liable for any direct, indirect, incidental, consequential, or other damage alleged in connection with the furnishing or use of this information.

Trademark Credits

Adobe®, Acrobat®, PostScript™, and the Acrobat logo are either registered trademarks or trademarks of Adobe Systems Incorporated in the United States and/or other countries/regions.

Microsoft®,MS-DOS, and Windows® are U.S. registered trademarks of Microsoft Corp.

Netscape™ is a U.S. trademark of Netscape Communications Corporation.

TrueType™ is a U.S. trademark of Apple Computer, Inc.

ENERGY STAR® is a U.S. registered service mark of the United States Environmental Protection Agency.

Hewlett-Packard Company
11311 Chinden Boulevard
Boise, Idaho 83714 U.S.A.

Table of contents

List of figures

List of tables

1 Product Information

2 Service approach

3 Operation

4 Maintenance

5 Theory of operation

6 Removal and replacement

7 Troubleshooting

8 Parts and diagrams

Index

List of figures

List of tables

1 Product Information

Introduction

With the HP LaserJet 4100 series multifunction printer (MFP), a workgroup can print, make copies, and send digital documents using a single device. Multiple functions can occur simultaneously in the MFP.

This service manual is an addendum to the HP LaserJet 4100 series printer service manual.

The HP LaserJet 4100mfp can be upgraded to the HP LaserJet 4101mfp by ordering the following parts:

- one additional 500-sheet media input tray (C8055A)
- duplex printing accessory (for automatic two-sided printing (C8054A)
- digital sending software (C7140A)

Note The terminology used in this manual contains minor differences from the HP LaserJet 4100 series printer service manual. These differences reflect changes made since the publication of the HP LaserJet 4100 series printer service manual.

Product configurations

The HP LaserJet 4100mfp series is available in two configurations.

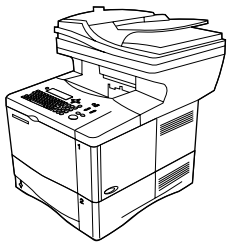

HP LaserJet 4100mfp (C9148A)

- 64 MB RAM; 5 GB (or larger) hard disk for RIP ONCE, transmit and scan once; job retention; and font, form, and signature storage
- HP Jetdirect 10/100 Base-TX print server card for network connection
- 100-sheet media input tray
- 500-sheet media input tray
- automatic document feeder (ADF) with 30-sheet capacity
- embedded scan to e-mail

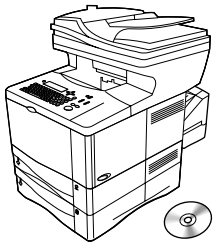

HP LaserJet 4101mfp (C9149A)

- all of the features of the HP LaserJet 4100mfp listed above
- one additional 500-sheet media input tray
- a duplex printing accessory (for automatic two-sided printing)
- HP digital-sending service software version 3.0 (or later)
  - full send-to-e-mail capability
  - SMTP mail service support
  - Lightweight Directory Access Protocol (LDAP) compatibility

Note The HP LaserJet 4101mfp is available only in the United States and Canada.

Product features

Product speed and throughput

- copying of letter-size media at 25 pages per minute (ppm) or A4-size media at 24 ppm
- monochrome scanning of letter-size originals at 25 ppm or A4-size originals at 24 ppm, and color scanning at 8 ppm
- instant-on fuser
- scan-once copying
- RIP ONCE copy capability
- scan-ahead capability to start copying or sending while the printer is busy
- monthly duty cycle of 150,000 pages

Image quality

- FastRes 1200: 1200 dots per inch (dpi) print quality for fast, high-quality printing of business text and graphics
- copying and scanning at a resolution of 600 pixels per inch (ppi)
- up to 256 levels of gray for smooth, photo-like images
- HP print cartridge for crisp, sharp output

Paper handling

- HP LaserJet 4100mfp: the 100-page and 500-page input trays are standard
- HP LaserJet 4101mfp: the 100-page and two 500-page input trays are standard
- capable of copying on a wide range of media sizes, types, and weights
- expandable to hold up to 1600 sheets of media
- standard 250-sheet face-down output
- duplexing (standard on the HP LaserJet 4101mfp)
- glass, which can accommodate media sizes up to letter/A4 size
- ADF with 30-page capacity to handle media sizes up to legal size

Copying capability

- easy-to-use copy functionality
- document collation
- multiple copies
- multiple pages per sheet (n-up)
- document reduction and enlargement
  - ADF: 25 percent to 200 percent in one-percent increments (in ten-percent increments when the REDUCE or ENLARGE button is held down)
  - Flatbed glass: 25 percent to 400 percent in one-percent increments (in ten-percent increments when the REDUCE or ENLARGE button is held down)
- automatic page-to-page enlargement or reduction
- image-quality improvement through background removal, best-quality mode, and contrast adjustment

Expandable design

- stackable 500-sheet trays (up to two additional trays can be added to the HP LaserJet 4100mfp, and one additional tray can be added to the HP LaserJet 4101mfp)
- duplex printing accessory (standard with the HP LaserJet 4101mfp)
- HP Fast InfraRed printing adapter (FIR port)
- digital-sending service software (standard with the HP LaserJet 4101mfp)
- expandable memory through installation of additional dual inline memory modules (DIMMs)

Product specifications

Table 1. Physical specifications

4100mfp (print unit, scan unit, and ADF unit)	
Height	637 mm (25.1 inches)
Depth	520.7 mm (20.5 inches)
Width	805 mm (31.7 inches)
Weight	26 kg (56.5 pounds)
Scan unit only	
Height	140 mm (5.6 inches)
Depth	540 mm (21.6 inches)
Width	415 mm (16.6 inches)
Weight	approximately 5 kg (11.1 pounds)
ADF unit only	
Height	152 mm (6.1 inches)
Depth	344 mm (13.8 inches)
Width	415 mm (16.6 inches)
Weight	approximately 3 kg (6.4 pounds)

Table 2. Performance

Category	**Specification**
Scanning speed (ADF mode)	139 mm/second (5.6 inches/second)
Scanning speed (flatbed mode)	69 mm/second (2.8 inches/second)
Copy speed	25 ppm (letter) 24 ppm (A4)
Copy resolution	600 by 600 ppi optical
Digital send resolution	600 by 600 ppi optical

Table 3. ADF/flatbed-unit acoustical specifications

Category	Specification
Sound Power Level, L_{WAd} (1 bel = 10 decibels)	• Scanning: 6.7 dB (A) • Standby: 5.2 dB (A)

Note Testing per International Standard Organization (ISO) 9296.

Note “Operating” means that the product is copying and printing continuously at 25 ppm. Values are subject to change. See http://www.hp.com/lj4100mfp for current information.

Table 4. Skew specifications

Print unit		
Tolerance	**Cut paper**	**Envelope**
Skew	1.5 mm (.03 inch) over 260 mm (10.24 inches) length---simplex 1.50 mm (.03 inch) over 260 mm (10.24 inches) length---duplex	6.0mm (.24 inch) over 220mm (8.66 inches) length
First line leading edge	6.0 mm (.24 inch) +/- 2mm (.08 inch)	15mm (.59 inch) +/- 4.5 mm (.18 inch)
Left margin	5.0 mm (.20 inch) +/- 1.5 mm (.06 inch)	15mm (.59 inch) +/- 4.5 mm (.18 inch)
Text stretching	1 percent for cut sheet---simplex 1 percent for cut sheet---duplex	None
Scan unit		
Tolerance	**ADF**	**Glass**
Skew	<= 1 percent	<= 1 percent
Leading edge	+/- 2 mm (.08 inch)	+/- 1 mm (.04 inch)
Left margin	+/- 1 mm (.04 inch)	+/- 1 mm (.04 inch)
Parallel (vertical and horizontal)	+/- 0.6 percent	+/- 0.6 percent
Image length and width	+/- 1.2 percent	+/- 1 percent

Media specifications

Note This section refers to the MFP only. See the HP LaserJet 4100 series printer service manual for printing specifications, or see the *Print Media Guide* for the HP LaserJet printer family for general requirements.

Table 5. Supported paper sizes and weights for the ADF

Size	Dimensions	Weight
Letter	216 by 279 mm (8.5 by 11 inches)	50 to 105 g/m^2 (13 to 28 lb)
A4	210 by 297 mm (8.3 by 11.7 inches)	
Legal	216 by 356 mm (8.5 by 14 inches)	
Custom sizes	Minimum: 148.5 by 210 mm (5.9 by 8.3 inches Maximum: 215.9 by 355.6 mm (8.5 to 14 inches)	60 to135 g/m2 (16 to 36 lb)

Special considerations for ADF documents

- Documents must be free of tears or perforations.
- Documents must be square or rectangular and in good condition (not fragile or worn).
- Documents must be free of glue, correction fluid, or wet ink.
- Remove sticky notes, tape flags, staples, and paper clips.
- Multipart forms cannot be used in the ADF.

Supported media for the glass

The glass can accommodate the following types of media:

- letter- or A4-size and smaller originals, books, manuals, receipts, and similar documents
- irregular and worn documents, stapled documents, and photographs
- multiple-page letter-size documents

Model and serial numbers

The model number and serial number are listed on an identification label located underneath the control panel door.

The serial number contains information about the country/region of origin, product revision level, production code, and production number of the product.The label also contains power rating and regulatory information.

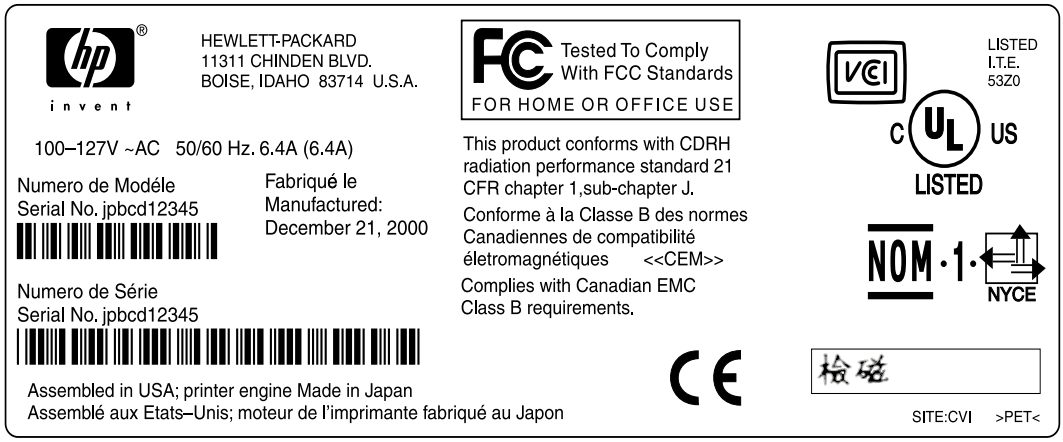

Figure 1. **Model and serial number label**

Note If the control panel fails, the model and serial number label panel must be removed (see "Control-panel door" on page 79) and installed on the replacement control panel.

Product overview

Front view

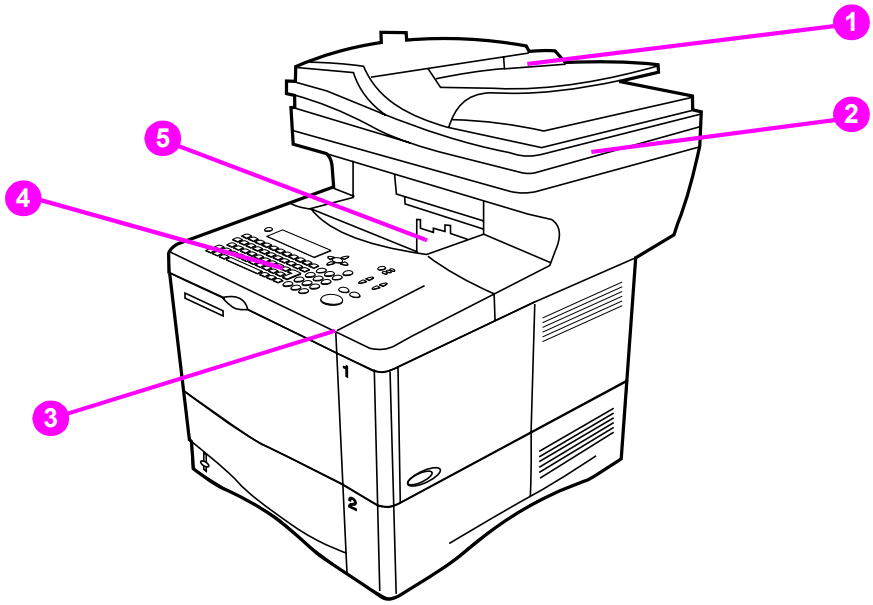

Figure 2. **Product parts (front view; right side)**

1. automatic document feeder (ADF) input (with sliding media guides)
2. ADF cover (lifts for access to the glass)
3. control-panel door (provides access to the print cartridge; serial and model numbers are located on a panel underneath the door)
4. control panel
5. output bin (for printed output and copies)

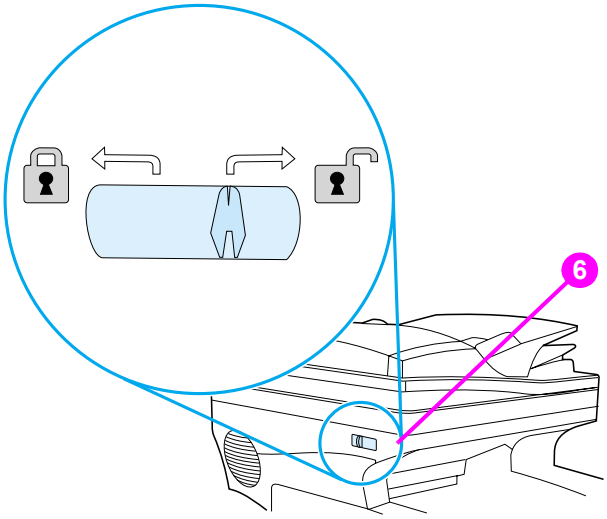

Figure 3. **Optical-unit lock (front view; left side)**

6. optical-unit lock

Back view

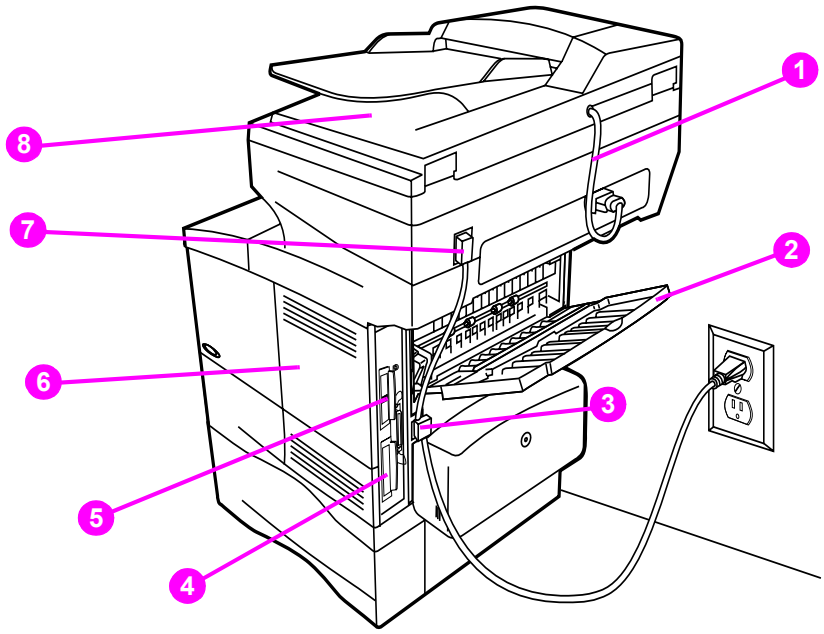

Figure 4. **Product parts (back view)**

1 ADF connector cable

2 straight-through output door

3 power connection (from power source to print unit)

4 hard disk

5 HP JetDirect card

6 memory access door (more than one DIMM can be installed)

7 power jumper cable (from print unit to scan unit)

8 ADF output bin

2 Service approach

Service approach

Repair of the printer normally begins with a three-step process:

1 Isolate the problem to the major system (the host computer, the network and/or server, or MFP major assemblies).

2 Determine whether the problem is located in one of the paper-handling devices or in the product engine.

3 Troubleshoot the problem using the procedures in the troubleshooting chapter of this manual. See “Troubleshooting” on page 109.

When a faulty part is identified, repair is usually accomplished by assembly-level replacement of field replaceable units (FRUs). Some mechanical assemblies can be repaired at the subassembly level. Hewlett-Packard does not support replacement of components on the printed circuit boards (PCBs).

Major assemblies

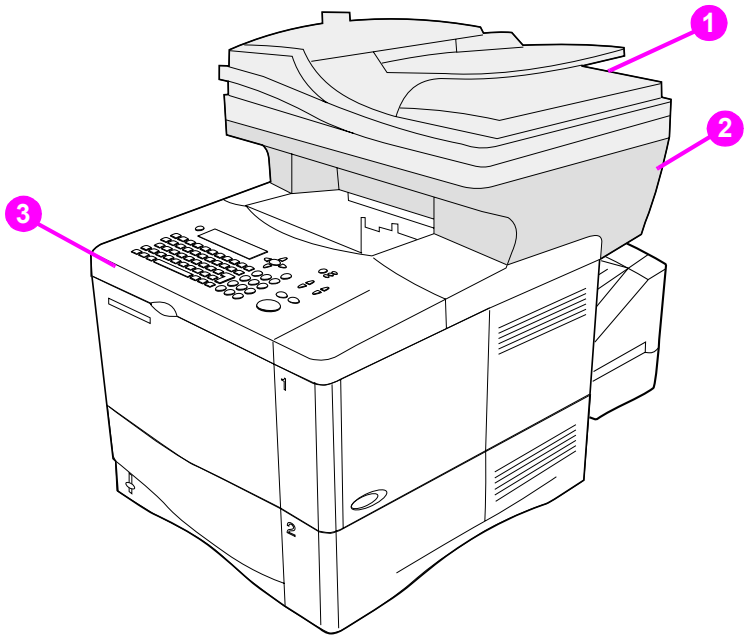

Figure 5. **Major assemblies**

1 automatic document feed (ADF) unit

2 scan unit

3 print unit

Contact HP

World Wide Web

Printer drivers, updated HP printer software, and product and support information can be obtained from the following websites:

- U.S., http://www.hp.com/support/lj4100
- Europe, http://www.hp.com/support/lj4100
- China, ftp://www.hp.com.cn/support/lj4100
- Japan, ftp://www.jpn.hp.com/support/lj4100
- Korea, http://www.hp.co.kr/support/lj4100
- Taiwan, http://www.hp.com.tw/support/lj4100,
  or the local driver website, http://www.dds.com.tw

HP support assistant CD-ROM

This support tool offers a comprehensive online information system designed to provide technical and product information about Hewlett-Packard products. To subscribe to this quarterly service in the U.S. or Canada, call (1) (800) 457-1762. In Hong Kong, Indonesia, Malaysia, or Singapore, call Mentor Media at (65) 740-4477.

HP authorized resellers and support

To locate HP authorized resellers and support, call (1) (800) 243-9816 in the U.S. or (1) (800) 387-3867 in Canada

HP service agreements

Call (1) (800) 743-8305 in the U.S. or (1) (800) 268-1221 in Canada.

3 Operation

Using the ADF unit

The automatic document feeder (ADF) is a fast, convenient way to feed multiple-page originals for copying or digital-sending. You can load the ADF with as many as 30 sheets of paper. The ADF accepts documents that meet the following specifications:

- single-sided or double-sided originals
- documents on standard letter-size, A4-size, and legal-size paper
- documents ranging in size from 148.5 by 210.0 mm (5.9 by 8.3 inches) to 215.9 by 355.6 mm (8.5 by 14.0 inches)
- documents ranging in weight from 50 to 105 g/m^2 (16 to 28lb)
- documents that are free of tears or perforations
- documents that are square or rectangular and in good condition (not fragile or worn)
- documents that are free of glue, correction fluid, wet ink, sticky notes, tape flags, staples, or paper clips

CAUTION Do not use multipart forms.

The ADF transports the original document through the ADF paper path. Copies made using the ADF are delivered to the output bin beneath the scan unit.

General guidelines for using the ADF unit

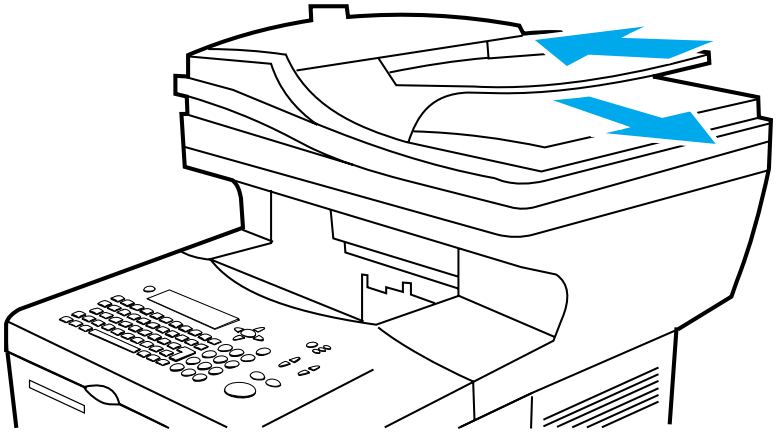

Figure 6. **Using the ADF**

Note The source documents must be placed in the ADF input with the side you intend to copy facing up.

1. Before placing documents in the ADF, prepare the documents by doing the following:
   - flatten curls or wrinkles
   - remove staples, paper clips, sticky notes, and similar materials
2. Place documents in the ADF input tray.
3. On the control panel, select the sending or copying options you want to use. See the “Walk-up copying” and “Sending to e-mail” sections in the *use* guide for information about these functions.
4. After making your selections, press START. Copies are sent to the output bin beneath the scan unit.
5. When the scan is complete, remove the original document from the ADF output.

Using the glass

You can also use the digital-sending and copying features by using the glass, located below the ADF. The glass can accommodate letter- or A4-size and smaller originals, books, manuals, receipts, and similar documents. Irregular and worn documents, stapled documents, and photographs can also be easily sent or copied using the flatbed.

General guidelines for using the glass

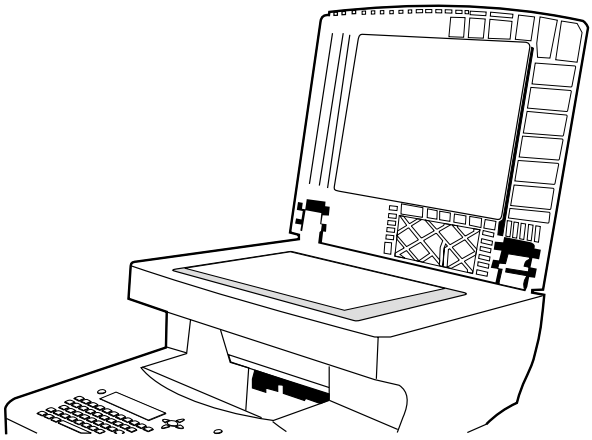

Figure 7. **Using the glass**

1. Open the ADF cover and place the original document face-down on the glass. Lower the cover.
2. On the control panel, select the sending or copying options you want to use. See the “Walk-up copying” and “Sending to e-mail” sections in the *use* guide for information about these functions.
3. After making the selections, press START. Copies are sent to the output bin beneath the flatbed.
4. When the scan is complete, remove the original document from the glass.

Using the control panel

Layout and operation

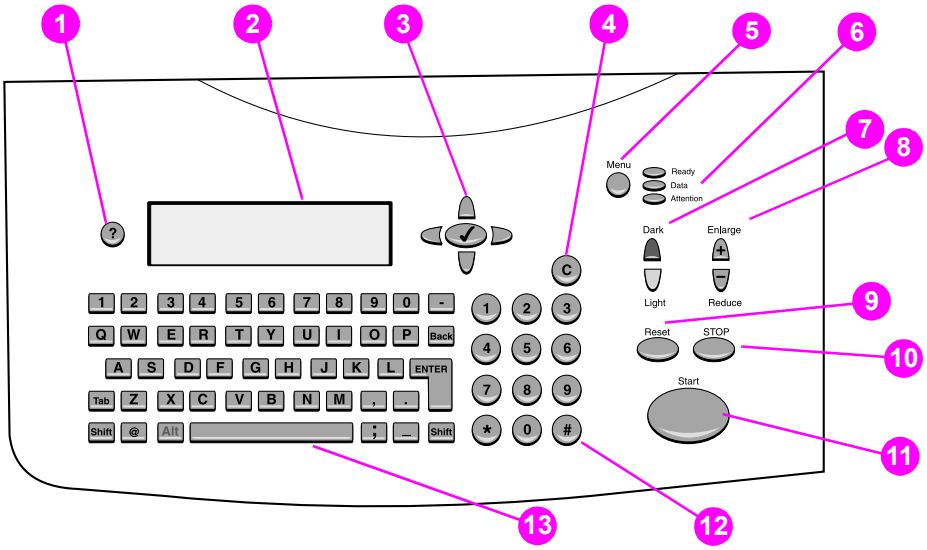

Figure 8. **Control panel**

1 ? (Help): provides Help files that contain information about the control-panel display when problems occur.

2 Control-panel display.

3 Navigation buttons: four arrow buttons that are used to move among elements on the control-panel display. Use the central SELECT (✓) button to choose an element or enter a menu.

4 C (Clear): resets the copy count or other numeric entries.

5 MENU: use to choose device configuration menus on the control panel.

6 Status lights: Ready light, Data light, and Attention light.

7 Light and dark buttons: use to increase or decrease the brightness of the copy image

8 REDUCE and ENLARGE buttons: use to scale the copy size.

9 RESET: returns all current job settings to their default values.

10 STOP: cancels a copy job, digital send job, or print job.

11 START: begins or resumes a job.

12 Numeric keypad and keyboard: the keypad is used to type numerical values. The keyboard is used for digital-sending features and for typing other data.

Hint

If the MFP is put into a paused mode (see "Menu map" on page 33), the control panel displays the message Paused at the top of the display. To return the MFP to the ready mode, press MENU and then use the navigation buttons (callout 3) to highlight RESUME on the control-panel display. Press the SELECT (✓) button. The message displayed on the control panel changes from Paused to Ready.

The MFP paused mode is not the same as PowerSave mode. When the MFP is in PowerSave mode, the control-panel displays the message PowerSave On at the top of the display. When in PowerSave mode, pressing any key or button on the control panel will return the MFP to the ready state.

Navigation

By pressing the arrow navigation buttons, you can shift focus between objects on the control-panel display to describe the document to be handled and the actions to be performed. A bold border around a graphic object or a reverse video effect in a text list indicates the current focus. Use the central SELECT (✓) button to select menus.

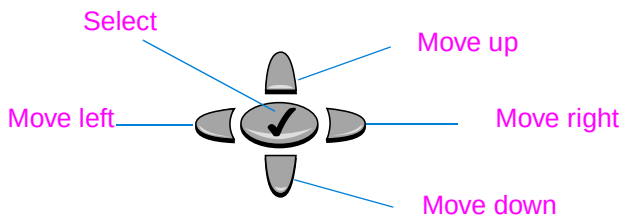

Figure 9. **Navigation buttons**

Walk-up copy display

Use the walk-up copy display menu on the control-panel display to describe the original document and to specify the actions to be taken and their parameters. The primary walk-up copy display menu choices are:

- Describe Original
- Copy Settings
- Send Options

After power is turned on the MFP initializes and the top-level menu display appears when the MFP is ready to process jobs.

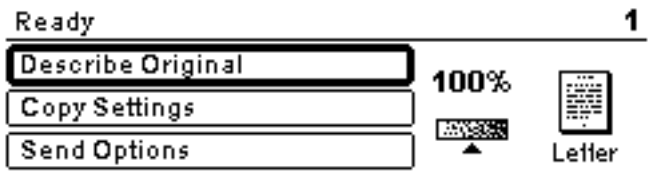

Figure 10. **Top-level control-panel menu display**

The Describe Original menu is used for both digital-sending and copying. The other menus are addressed in the “Walk-up copying” and “Sending to e-mail” sections in the *use* guide.

Status bar

The status bar is the uppermost line of available text on the control-panel display.

- The status line shows both product-status messages and user prompts. When the product is idle, this line displays `Ready To Copy`, `Accepting Copy Jobs`, or `Ready`. During scanning, the line might read `Scanning Page x`. During copying, you might see `Data Recieved Processing Job`. Error messages are not communicated on the status line, but they appear in a text box overlay that blocks normal display views until the message is cleared.
- The copy count shows the number of copies selected. This selection is made using the keypad. Acceptable values are from 1 to 99.

Menus

The HP LaserJet 4100mfp series uses a system of control-panel menus to set job parameters, set system defaults, and manage product performance and features. Menu options are reached by pressing the MENU button on the right side of the control-panel display and scrolling through the list to locate the option you want to use. The following menus are available.

- Pause/Resume (see Hint on page 30)
- Retrieve job
- Information
- Paper handling
- Configure device
- Diagnostic
- Service (PIN code: 04410002)

For more information about menus, see “Control panel and control panel menus” in the *use* guide.

Configure device, diagnostic, and service menus

The configure device menu is used to establish the product’s default settings. The selected defaults can be locked by the system administrator. You can override the default settings at the control panel for the current job only. It might be necessary to reset these options to factory defaults when troubleshooting the MFP unit.

The diagnostic menu is used to calibrate and test MFP components. The diagnostic menu can also be used to print or view an event log. An event log records the number and type of errors the product has experienced.

The service menu is used by HP-authorized service representatives only and is protected by an eight-digit personal identification number (PIN). See “Service menu” on page 127. The service menu can be used to verify the serial number of the MFP unit.

Menu map

The menu map is a graphical representation of the MFP menus. Press the MENU button on the control panel to gain access to the main menu display. For more information about navigating the menus, see "Navigation" on page 31.

Note Default settings shown in bold.

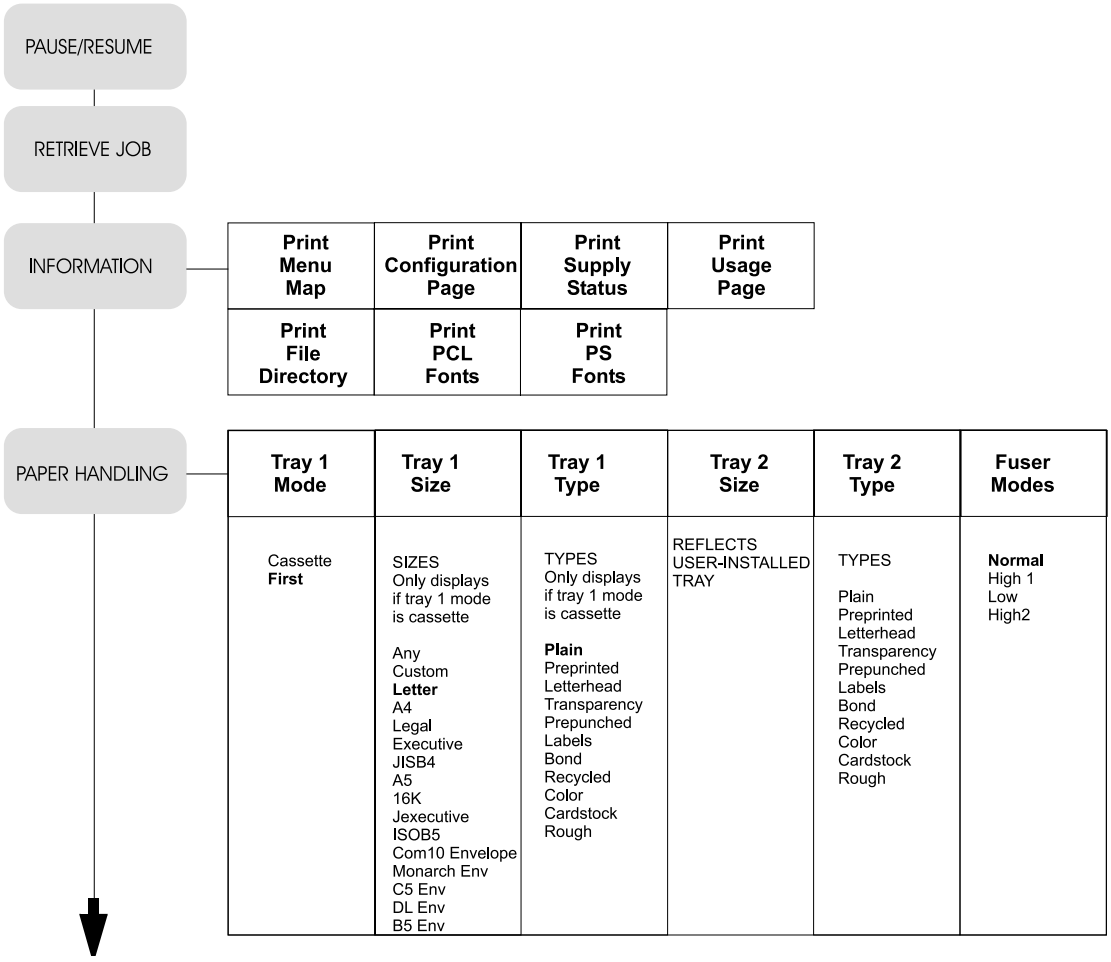

Figure 11. **MFP menu map 1 of 2**

Menu map, continued

CONFIGURE DEVICE

Originals	Sending	Printing	Print Quality	System Setup	I/O
Paper Size **Letter** Number of Sides (**1**, 2) Content (Text, Graphics, **Mixed**) Contrast (0-8) **4**	E-Mail Scan Preference: BW, **Color** File Type: **PDF** TIFF MTIFF JPEG Find Send Gateways SMTP Gateway LDAP Gateway Test Send Gateways	Copies (**1** - 32,000) Default Paper Size Letter Default Custom Paper Size (unit - X/Y dimension) Override A4/Letter (Yes/**No**) Manual Feed (On/**Off**) Courier Font (**Regular**/Dark) Wide A4 (**No**/Yes) Print PS Errors (On/**Off**) PCL Form Length **60** Orientation **Portrait** Font Source **Internal** Font Number **0** Font Pitch **10.00** Symbol Set PC-8 Append CR to LF NO	Set Registration Print Test Page Source= Tray 2 Adjust Tray 1 Adjust Tray 2 Resolution (300, 600, **FastRes 1200**, ProRes 1200) Ret (Off, Light, **Medium**, Dark) Economode (**Off**/On) Toner Density (1-5) - **3** Small Paper Mode (**Normal**/Slow) Auto Cleaning (**Off**/On) Create Cleaning Page	Job Storage Limit (0-100) **32** Job Held Timeout (**Off**, 1hr, 4hr) Power Save Time (1, 15, **30**, 90 min, 1, 2, 4 hours) Copy/Send Settings Reset Copy Timeout **60** Reset Send Timeout **60** Hold Off Print Job **ON** Hold Off Time **15** Scan Ahead **ON** Auto Job Interrupt **OFF** Copy Job Interrupt **OFF** Personality (**Auto**, PCL, PS) Clearable Warnings (**Job**, On) Auto Continue (Off, **On**) Toner Low Continue (Stop, **Continue**) Toner Out Continue (Stop, **Continue**) Jam Recovery (Off, On, **Auto**) Language English	I/O Timeout **15** Parallel Input High Speed **YES** Advanced Functions **ON** Find Send Gateways SMTP Gateway LDAP Gateway EIO 1 JetDirect Menu TCP/IP **ON** Config Method **BootTP** IPX/SPX **ON** Frame Type **Auto** AppleTalk **ON** DLC/LLC **ON** Link Speed **AUTO** Test Send Gateways
Copying					**Resets**
Number of Sides (**1**, 2) Image Quality (**Normal**, Best) Collate (Off/**On**) Copies (**1** to 999) Background Removal (0-8) **2**					Restore Factory Powersave **ON** Lock Carriage Clear Address Book

DIAGNOSTICS

Print Event Log	Show Event Log	Calibrate Scanner	Paper Path Test	Scanner	Control Panel
		Calibrate Lead Adjust Center adjust Leading Edge Glass Side Edge Glass	Print Test Page Source **Tray 2** Copies **1**	Sensors ADF Output Motor Flatbed Motor Pickup Solenoid Lamp	LEDs Displays Buttons

SERVICE (password protected)

Clear Event Log	Total Page Count	Maintenance Count	Maintenance Interval 200000	ADF Count	Flatbed Count
ADF Simplex Count	**Copy Scan Count**	**Send Scan Count**	**Copy Pages Count**	**Scanner Settings**	**Serial Number xxxxxxxxx**
Cold Reset Paper Size A4/**Letter**				Save Settings Restore Settings	

Figure 12. **MFP menu map 2 of 2**

4 Maintenance

Cleaning the product

General guidelines

Perform the following cleaning procedures when you change the print cartridge or when print-quality problems occur. To minimize problems, keep the product free from dust and debris.

WARNING! Turn the main power-switch off ***and*** unplug the MFP power cord before you disconnect any cables or accessories, and before you perform preventative maintenance or cleaning. Failure to follow this warning can result in serious product damage or personal injury.

CAUTION While cleaning the product, do not to touch the transfer roller (the black rubber roller located underneath the print cartridge). Skin oils on the roller can affect print quality.

Table 6. General cleaning guidelines

Part	Cleaning interval	Cloth	Solvent
Covers	Clean when visibly dirty.	Soft, tight weave; lint-free.	Water (add a mild detergent if desired). See caution below.
Control panel	Clean when dusty or when fingerprints build up.	Soft, tight weave; lint-free.	Water. See caution below.
ADF rollers	Clean if the user is experiencing misfeeds, or multipage feeds, or if documents are skewing when traveling through the ADF.	Soft, tight weave; lint-free.	Water. See caution below.
Glass	Clean when visibly dirty or if the user is experiencing poor copy quality such as blurriness or streaking.	Soft, tight weave; lint-free.	Ammonia-based cleaner or water. See caution below.
Whiteboard cover (white vinyl backing located on the bottom of the ADF cover)	Clean when visibly dirty.	Soft, tight weave; lint-free.	Ammonia-based cleaner or water. See caution below.
Clear mylar sheet (ADF delivery guide)	Clean when visibly dirty or if the user is experiencing poor copy quality such as blurriness or streaking.	Soft, tight weave; lint-free.	Water. See caution below.

CAUTION To prevent damage, do not pour or spray cleaning solvents directly onto MFP components. Spray water or cleaning solvent onto a cloth and wipe down components that need cleaning. Because some MFP components should never be exposed to ammonia fumes, use ammonia-based cleaners sparingly and only where indicated.

Running the cleaning page

Run the cleaning page to keep the fuser free of toner and paper particles. Accumulation of toner and particles can cause specks to appear on the front-side or back-side of your jobs. It is recommended that you either use the cleaning page every time you replace the print cartridge or that you establish an automatic cleaning schedule.

You can run a cleaning page in two ways:

- automatically at an interval that you establish
- manually as needed from the control panel

For information about these procedures, see the HP LaserJet 4100 series printer service manual.

1 Access the `Configure Device` menu. See "Menus" on page 32.

2 Select `Print Quality`.

3 Select `Create Cleaning Page` and follow the instruction on the page.

Cleaning the ADF delivery guide (clear mylar strip)

1 Raise the ADF unit.

2 Open the delivery-guide cover by pressing in the small plastic handles on either side of the delivery guide.

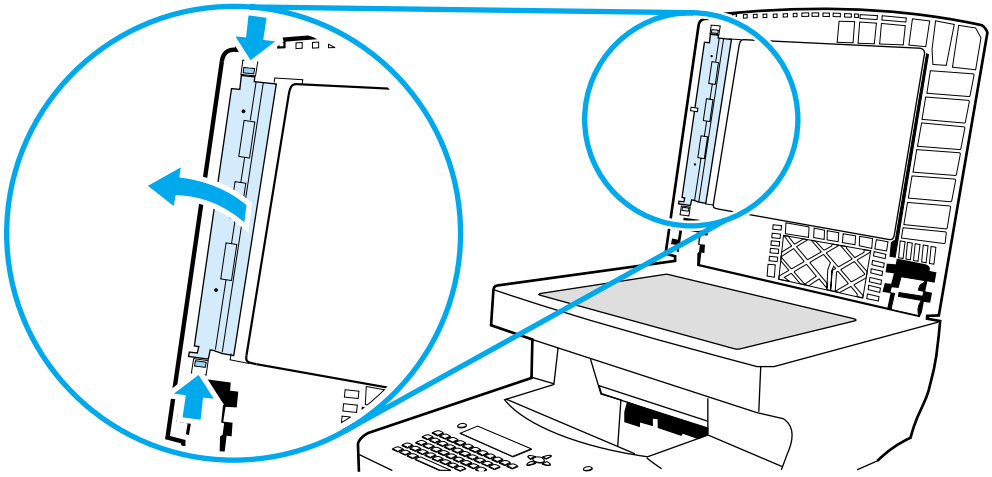

Figure 13. **Open the delivery-guide cover**

3 Remove the clear, plastic sheet (callout 1).

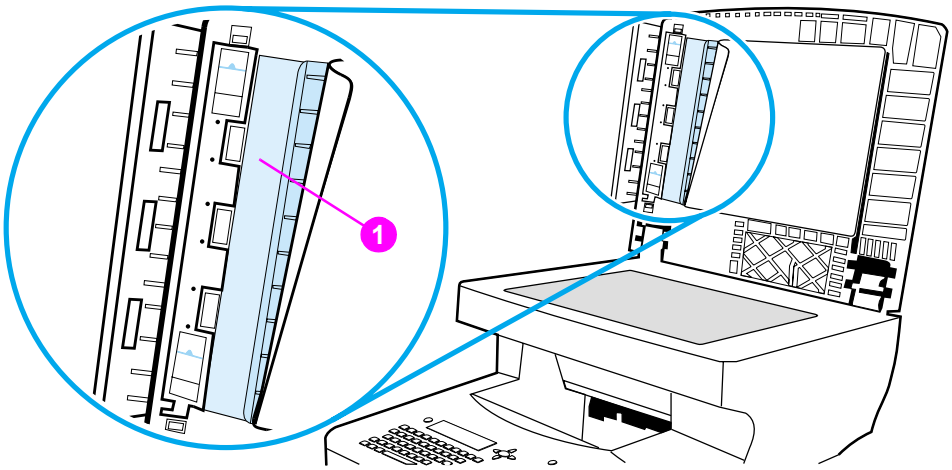

Figure 14. **Remove the clear plastic sheet**

4 Use a clean, soft, dry cloth to wipe the surface of the clear plastic sheet (do not use an ammonia based cleaner.

5 Reinstall the clear, plastic sheet by sliding its leading edge under the gray ribbed guide (callout 2), which is located under the white padded sheet.

6 Align the holes in the sheet with the small plastic spindles (callout 3) in the delivery guide. Press the clear, plastic sheet down onto the spindles.

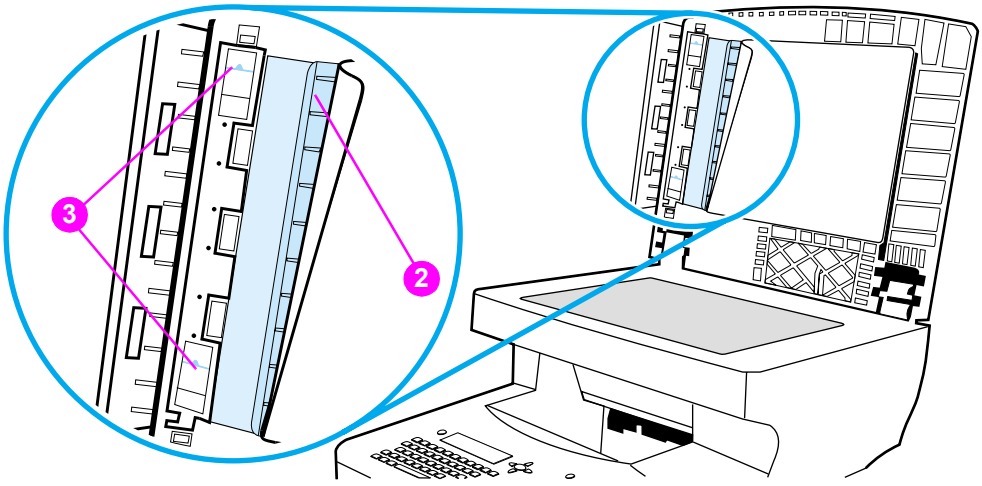

Figure 15. **Replace the clear, plastic sheet**

Note Make sure that the free end of the clear, plastic sheet (part number RB2-8793-000CN) is tucked behind the gray ribbed guide and the white padded sheet.

7 Close the delivery-guide cover. The cover is properly closed when you hear the delivery-guide cover plastic handles click into place.

8 Wipe the outside surface of the delivery guide with the cloth.

Replacing user-replaceable parts

To ensure that the product maintains optimal performance, replace certain parts when the `Perform Printer Maintenance` message appears on the product control-panel display.

The maintenance message appears every 200,000 pages (default setting). To check the number of pages the product has printed, either print a configuration page or a supplies status page. See "Evaluate the information pages" on page 130.

Hint To order a print-unit maintenance kit, see the HP LaserJet 4100 series printer service manual.

Note Unless they are damaged, the ADF pickup roller, separation roller, and separation pad should not need to be replaced.

Table 7. User-replaceable parts

MFP Item	Procedure	Interval
ADF unit	See "ADF unit" on page 78.	User replaceable. As required.
ADF input tray	See "ADF input tray" on page 73.	User replaceable. As required.
ADF delivery guide (clear mylar strip)	See the removal step in "Cleaning the ADF delivery guide (clear mylar strip)" on page 37.	User replaceable. As required.
ADF pickup roller	See "ADF pickup roller" on page 74.	User replaceable. As required.
ADF separation roller	See "ADF separation roller" on page 76.	User replaceable. As required.
ADF separation pad	See "ADF separation pad" on page 77.	User replaceable. As required.
ADF separation assembly compression spring	See "ADF separation pad" on page 77 and "ADF unit (2 of 2)" on page 160.	User replaceable. As required.
ADF pick/feed cover	See "ADF separation pad" on page 77 and "ADF unit (2 of 2)" on page 160.	User replaceable. As required.
ADF delivery guide holder (clear mylar sheet holder)	See the step in "Cleaning the ADF delivery guide (clear mylar strip)" on page 37 and "ADF unit (1 of 2)" on page 158.	User replaceable. As required.
ADF face-up bin handle	See "Covers" on page 148.	User replaceable. As required.
5GB hard disk drive	To locate the hard drive, see "Back view" on page 21.	User replaceable. As required.

Table 7. User-replaceable parts (continued)

MFP Item	Procedure	Interval
HP JetDirect network card	To locate the HP JetDirect network card, see “Back view” on page 21.	User replaceable. As required.
Memory DIMM	To locate the memory DIMM, see “Copy processor board” on page 57.	User replaceable. As required.
Firmware DIMM	To locate the memory DIMM, see “Copy processor board” on page 57.	User replaceable. As required.
Power jumper cable	To locate the power jumper cable, see “Back view” on page 21.	
Print cartridge	See the HP LaserJet 4100 series printer service manual.	User replaceable. As required. About every 10,000 pages for print cartridge part number C8061X. About every 6000 pages for print cartridge part number C8061A.

Table 8. Print-unit maintenance kit parts

MFP Item	Procedure	Interval
Print-unit transfer roller	See the HP LaserJet 4100 series printer service manual.	User replaceable. See “Expected life of components” in the HP LaserJet 4100 series printer service manual.
Print-unit feed rollers	See the HP LaserJet 4100 series printer service manual.	User replaceable. See “Expected life of components” in the HP LaserJet 4100 series printer service manual.
Print-unit separation pad	See the HP LaserJet 4100 series printer service manual.	User replaceable. See “Expected life of components” in the HP LaserJet 4100 series printer service manual.
Print-unit fuser	See the HP LaserJet 4100 series printer service manual.	User replaceable. See “Expected life of components” in the HP LaserJet 4100 series printer service manual.

Updating product firmware

Downloading a remote firmware update

The HP LaserJet 4100mfp product supports remote firmware updates (RFUs). The update is downloaded from the website http://www.hp.com/go/lj4100_firmware (downloading a firmware update is similar to downloading printing-system software and printer drivers).

This website also features an “E-mail me when new software is available” link. This feature notifies you by e-mail when a new firmware update version is available for the MFP. If you used HP WebReg to register your product, you are automatically sent an e-mail notification when a new firmware update version is available for the MFP.

Hint The RFU file on the website is a self-extracting .EXE file. Detailed instructions about how to download the RFU file can be found at the website http://www.hp.com/go/lj4100_firmware.

The RFU process consists of three steps:

- Determine the version of firmware currently installed (print a configuration page; see “Configuration page” on page 130). Look for the version information in the device information section of the configuration page.
- Go to the website http://www.hp.com/go/lj4100_firmware website and download the update.
- Install the update.

Note For more information about remote firmware updates, contact your HP Customer Care Center and ask for a software technical reference sheet (see “Support” on page 144).

Installing the update

CAUTION If a firmware update involves a change in the format on nonvolatile random-access memory (NVRAM), any user-set settings (for example, configure device settings) revert to default settings. Before installing an updated version of the firmware, print any information pages required to reset user defined settings. See “Evaluate the information pages” on page 130.

Note To install a firmware update on a computer using the UNIX operating system, use any method that delivers the .RFU file to the printer. For example, $cp/home/yourmachine/FILENAME/dev/parallel where /home/yourmachine/FILENAME with substitutions for the locations that contain the location of the .RFU file.

RFU installation messages

During normal RFU installation the following three messages appear on the control-panel display.

- `Recieving Upgrade`
  - This message appears from the time the printer recognizes the beginning of a .RFU file being sent until the time the printer verifies the validity and integrity of the .RFU file.
- `Performing Upgrading For Help Press?`
  - This message appears while the printer is reprogramming the DIMM with the .RFU file information.
- `Wait For Printer To Reinitialize`
  - This message appears from the time the printer finishes reprogramming the DIMM until the printer re-initializes.

Using HP Web JetAdmin (single update)

Note This procedure requires Web JetAdmin version 6.1 or later. Download the update from the website http://www.hp.com/go/lj4100_firmware and follow the steps below to update a single MFP product.

1. Start the HP Web JetAdmin program.
2. Enter the Internet protocol (IP) address or IP hostname of the printer in the QUICK DEVICE FIND FIELD, and click GO. The printer Status window appears.
3. Click the right arrow on the toolbar to display the UPDATE button. Click the UPDATE button.
4. When prompted for the type of update, click UPDATE PRINTERS, and then click CONTINUE.
5. Under UPLOAD NEW FIRMWARE IMAGE: click BROWSE to locate the .RFU file you downloaded from the website http://www.hp.com/go/lj4100_firmware.
6. Click UPLOAD to move the .RFU file from your hard drive to the HP Web JetAdmin server. Refresh the browser.
7. Select the .RFU file from the SELECT NEW FIRMWARE VERSION: drop-down menu.
8. Click UPDATE FIRMWARE. HP Web JetAdmin sends the selected.RFU file to the printer.

Using HP Web JetAdmin (multiple or unattended update)

Note This procedure requires Web JetAdmin version 6.1 or later. Download the update from the website http://www.hp.com/go/lj4100_firmware and follow the steps below to update multiple MFP products or perform an unattended installation.

1. Start the HP Web JetAdmin program.
2. Create a device group. One way to do this is:
   - Click DEVICES on the 1. CHOOSE: drop-down menu.
   - Click DEVICE MODEL from the 2. FILTER: drop-down menu.
   - In the 3. CRITERIA (OPTIONAL): field, type your MFP model number (for example, 4100)
   - Click GO.
3. In the DEVICE LIST, select the printers you want to include in the group and click CREATE GROUP.
4. When prompted, type a name for the new device group, and then click OK.
5. Click UPDATE.
6. When prompted for the type of update, click UPDATE PRINTERS, and then click CONTINUE.
7. From the list of HP printers, select the printers to be updated or click SELECT ALL.
8. Click UPDATE FIRMWARE. HP Web JetAdmin sends the selected .RFU file to the selected printers.

Windows parallel connection (local printer)

Note Download the update from the website http://www.hp.com/go/lj4100_firmware and follow the steps below to update the firmware on a non-shared local printer.

Hint The LaserJet 4100mfp series uses a type-B parallel cable to connect to a computer's LPT1 port.

1. Open a MS-DOS command window.
2. Type copy /b path\filename portname at the command prompt.
   - path is the location the .RFU file was downloaded to
   - filename is the name of the .RFU file downloaded from the website
   - portname is the appropriate printer port (for example, *LPT1*)
3. Press the computer ENTER key. The .RFU file is sent to the printer.

Windows parallel connection (network printer)

Note Download the update from the website http://www.hp.com/go/lj4100_firmware and follow the steps below to update the firmware on a network printer.

1. Open a MS-DOS command window.
2. Type copy /b path\filename\sharename\printername at the command prompt.
   - path is the location the .RFU file was downloaded to
   - filename is the name of the .RFU file downloaded from the website
   - sharename is the name of the computer from which the printer is shared (host computer)
   - printername is the printer share name
3. Press the computer's ENTER key. The .RFU file is sent to the printer.

Troubleshooting RFU installation

RFU installation error messages

The following messages can appear on the control-panel display if the installation is interrupted for some reason. Turn the MFP power off, and then back on again. Attempt the RFU installation again.

Hint If the update is not successful but an error message does not appear on the control-panel display check the event log for RFU error codes. See "Firmware-update event-log errors" on page 119.

- `Job Canceled From Printer Control Panel`
  - No update occurred. Turn the MFP power off, and then back on again. Attempt the RFU installation again.
- `Break In I/o Stream During Send` (for example the parallel cable was removed)
  - No update occurred. Turn the MFP power off, and then back on again. Attempt the RFU installation again.
- `Power Cycle Occurred During Recieving Upgrade`
  - No update occurred. Turn the MFP power off, and then back on again. Attempt the RFU installation again.
- `Power Cycle Occurred During Upgrading Printer`
  - No update occurred. Turn the MFP power off, and then back on again. Attempt the RFU installation again.
- `Power Cycle Occurred During Wait For Printer To Reinitialize`
  - Update was completed (no action required).
- `.RFU File Is Corrupt`
  - The printer recognizes that the RFU file is damaged (corrupted) and rejects the update. Download a new RFU file from the website http://www.hp.com/go/lj4100_firmware. Turn the MFP power off, and then back on again. Attempt the RFU installation again.
- `Wrong Printer Model Contained In The .RFU File`
  - The printer recognizes that the RFU file is not correct for installation to the intended MFP product and rejects the update. Download the correct RFU file from the website http://www.hp.com/go/lj4100_firmware. Turn the MFP power off, and then back on again. Attempt the RFU installation again.
- `Update Was Interrupted`
  - See the information about the job canceled, break in I/O, and power cycle error messages in this section.
- `Flash Hardware Failure Occurred`
  - The flash DIMM has failed. Replace the flash DIMM on the formatter.

Hint The HP LaserJet 4100mfp product contains a backup copy of the latest version of firmware on the flash DIMM. If a RFU update fails, the MFP uses this backup copy of the firmware to restart. Then attempt to install the update again. When the MFP starts using the backup copy of the firmware, some mfp capabilities are not functional (for example, copying or digital sending). A successful update must be accomplished to fully restore MFP functions.

Performing hard-drive disk initialization

Before performing hard-drive initialization, print the following MFP information pages. Use these pages to reset any menu settings that the user has changed from factory defaults.

- Configuration page (see "Evaluate the information pages" on page 130).
- File directory page (see "Evaluate the information pages" on page 130).

1. Turn the product power off.
2. Press and hold down the START button. Turn the product power on. Continue to hold down the START button until the printer initializes and the three control panel LEDs illuminate continuously. Release the START button.
3. Press and release the LEFT navigation button. The message INITIALIZE DISKS appears on the control-panel display.
4. Press and release the SELECT (✓) button. Two rows of asterisks appear on the control-panel display.
5. When the astericks disappear and the message READY appears on the control panel display, the mfp can process jobs.

Cold Reset

A cold reset clears all data from the printer memory and sets may of the defaults back to the factory settings.

Before performing hard-drive initialization, print the following MFP information pages. Use these pages to reset any menu settings that the user has changed from factory defaults.

- Configuration page (see "Evaluate the information pages" on page 130).
- File directory page (see "Evaluate the information pages" on page 130).

1. Turn the product off.
2. Press and hold down the SELECT (✓) button.
3. Turn the product on.
4. Continue to hold down the SELECT (✓) button until all three LEDs are illuminated. Release the SELECT (✓) button.
5. Press the UP navigation button twice. The message COLD RESET will appear on the control panel display.
6. Press the SELECT (✓) button once. The message STARTS will appear on the control panel display.
7. When the cold reset is complete, the MFP will restart.

NVRAM initialization

NVRAM initialization should be performed immediately after replacing the formatter board. Not initializing NVRAM might result in print quality defects.

CAUTION Initializing NVRAM erases several memory settings (for example, page count, printer serial number, and the event log). This information is permanently lost.

Before performing NVRAM initialization print the following MFP information page. Use this page to reset any menu settings that the user has changed from factory defaults.

- Configuration page (see "Evaluate the information pages" on page 130).

1. Turn the product power off.
2. Press and hold down the DOWN navigation button. Continue to hold the DOWN button down until the printer initializes and the three control panel LEDs illuminate continuously. Release the DOWN button.
3. Press and release the UP navigation button.
4. Press and hold down the START button.
5. Press and release the UP navigation button. Release the START button. The message SKIP DISK LOAD appears on the control panel display.
6. Press the DOWN navigation button until the message NVRAM INIT appears on the control panel display.
7. Press the SELECT (✓) button. The NVRAM initialization process will begin.
8. When completed, the printer will initialize and the message READY will appear on the control panel display. The MFP is ready to process jobs.

Calibration

Performing automatic Calibration

The MFP can be automatically calibrated to register scanned images correctly. When CALIBRATE SCANNER is selected from the diagnostic menu, the MFP prints a calibration target page. Messages appear on the control panel with instructions about automatically calibrating the MFP.

1 Press the MENU button.

2 Select DIAGNOSTICS.

3 Select CALIBRATE SCANNER.

4 Select CALIBRATE.

5 The message To Print Target Page On Paper Size: Letter. Press Start. To Quit, Press Stop appears on the control-panel display. Press the START button to print the calibration target page. While this page is printing, the message Target Page Printing To Quit, Press Stop appears on the control-panel display.

Note The paper size displayed in the message is the cold-reset paper size (either letter or A4).

6 When the message Load Target Page Face Up In Adf Clear Flatbed And Press Start To Quit, Press Stop appears, place the target page in the ADF and press the START button.

7 The target page is moved through the ADF paper path and automatic calibration begins. The message calibration running do not raise cover appears on the control-panel display.

8 When calibration is over, the MFP returns to the ready mode (the message READY appears on the control-panel display) and can process print and scan jobs.

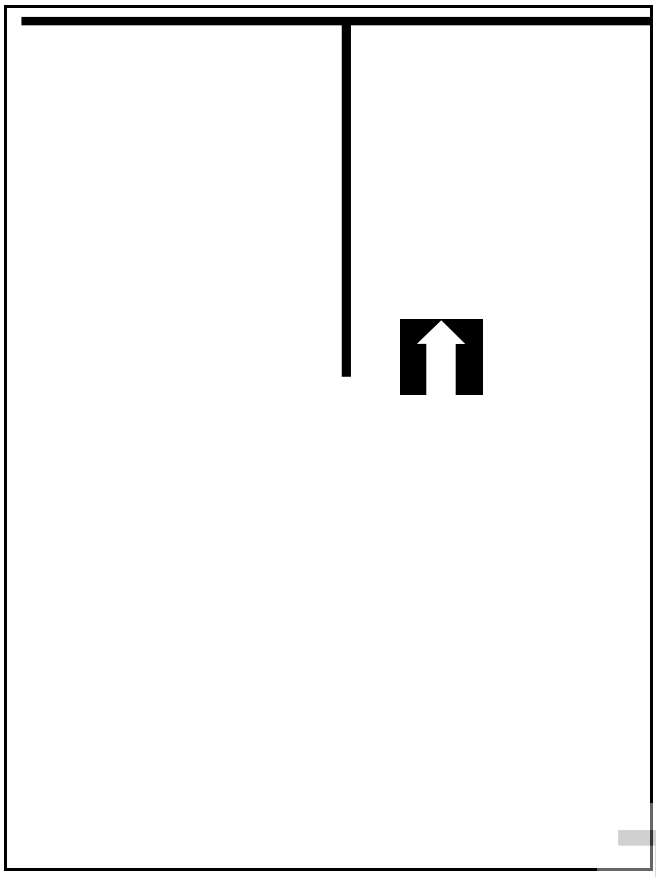

Figure 16. **Sample calibration target page**

Performing manual calibration

Manual calibration provides precise control of image placement. Vertical and horizontal image registry for both the ADF and the glass can be set individually. For example, changing the leading-edge adjustment for the ADF does not effect the leading-edge adjustment of the glass.

Note Manual calibration increment values are in pixels (600 pixels-per-inch). All values are positive numbers. The center adjustment value 2670 represents an imaginary center line through the ADF. It may not be exactly centered due to mechanical tolerances between MFP units

Hint Before attempting to manually calibrate the MFP, first try the automatically calibrating procedure (see "Performing automatic Calibration" on page 47).

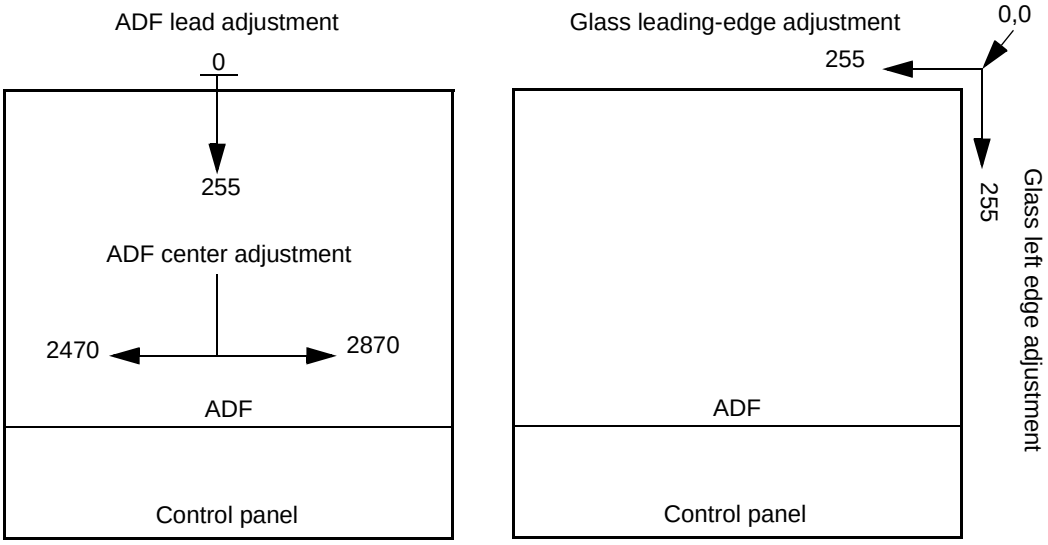

Figure 17. **Manual calibration registration lines**

Lead adjustment for the ADF

Hint It might be helpful to reset the product settings to factory defaults before attempting manual calibration. Be sure to print a configuration page *before* doing a setting reset so that any user-defined settings can be restored (see "Configuration page" on page 130).

1. Press the MENU button.
2. Select DIAGNOSTICS.
3. Select CALIBRATE SCANNER.
4. Select LEAD ADJUSTMENT.
5. The message Lead Adjustment ### Range 0-255 appears on the control-panel display. Use the numeric keypad to type a value for the leading-edge adjustment.

Hint Entering a lower value than current setting moves the image away from the leading edge (toward the bottom of the page). Entering a higher value than the current setting moves the image toward the leading edge (toward the top of the page).

6. Press the SELECT (✓) button to save the setting.
7. Use the ADF to scan a source document (use the calibration target page if you have already automatically calibrated the MFP). Verify that the leading edge is correctly positioned on the output copy.

Center adjustment for the ADF

Hint It might be helpful to reset the product settings to factory defaults before attempting manual calibration. Be sure to print a configuration page *before* doing a setting reset so that any user-defined settings can be restored (see "Configuration page" on page 130).

1. Press the MENU button.
2. Select DIAGNOSTICS.
3. Select CALIBRATE SCANNER.
4. Select CENTER ADJUSTMENT.
5. The message Center Adjustment #### RANGE 2470-2870 appears on the control-panel display. Use the numeric keypad to type a value for the center adjustment.

Hint Entering a lower value than current setting moves the image away from the left edge (toward the right side of the page). Entering a higher value than the current setting moves the image toward the left edge of the page.

6. Press the SELECT (✓) button to save the setting.
7. Use the ADF to scan a source document (use the calibration target page if you have already automatically calibrated the MFP). Verify that the image is correctly positioned on the output copy.

Leading-edge adjustment for the glass

Hint It might be helpful to reset the product settings to factory defaults before attempting manual calibration. Be sure to print a configuration page *before* doing a setting reset so that any user-defined settings can be restored (see "Configuration page" on page 130).

1. Press the MENU button.
2. Select DIAGNOSTICS.
3. Select CALIBRATE SCANNER.
4. Select LEAD ADJUSTMENT GLASS.
5. The message Leading Edge Glass ### Range 0-255 appears on the control-panel display. Use the numeric keypad to type a value for the leading-edge adjustment.

Hint Entering a lower value than current setting moves the image away from the leading edge of the page (towards the bottom of the page). Entering a higher value than the current setting moves the image toward the leading edge (toward the top of the page).

6. Press the SELECT (✓) button to save the setting.
7. Use the glass to scan a source document (use the calibration target page if you have already automatically calibrated the MFP). Verify that the image is correctly positioned on the output copy.

Side-edge adjustment for the glass

Hint It might be helpful to reset the product settings to factory defaults before attempting manual calibration. Be sure to print a configuration page *before* doing a setting reset so that any user-defined settings can be restored (see "Configuration page" on page 130).

1. Press the MENU button.
2. Select DIAGNOSTICS.
3. Select CALIBRATE SCANNER.
4. Select SIDE EDGE ADJUSTMENT GLASS.
5. The message Side Edge Glass ### Range 0-255 appears on the control-panel display. Use the numeric keypad to type a value for the side-edge adjustment.

Hint Entering a lower value than current setting moves the image away from the left edge (toward the right side of the page). Entering a higher value than the current setting moves the image toward the left edge of the page.

6. Press the SELECT (✓) button to save the setting.
7. Use the glass to scan a source document (use the calibration target page if you have already automatically calibrated the MFP). Verify that the image is correctly positioned on the output copy

5 Theory of operation

Introduction

This chapter presents an overview of the relationships between major components in the MFP. It also provides a general description of the following:

- mechanical systems (for example, the flatbed intake fan)
- electronic circuits (for example, the scanner controller circuit)
- sensors (for example, the document-detect sensor)

Overview

Scanning a document consists of three main processes. First, the document is transported through the ADF or manually placed on the glass. Second, the document is illuminated and the light is captured (the document-exposure process). Third, the captured light is converted to a digital signal and sent to the base printer for output (image processing).

When the copy processor board (CPB) receives a scan command from the control panel, it sends the command to the scanner controller board, which initiates and controls the scanning process.

These main components are used in the scanning process.

- scanner controller board (controls the scanning process and communication with the CPB)
- automatic document feeder (ADF) (transports the source document)
- optical unit (holds the scanning lamp and charged couple device [CCD])
- scanning lamp (exposes the document)
- charged-couple device (CCD) driver PCB (converts reflected light to digital RGB signals for final output)

Document transportation process

The ADF receives a signal from the scanner control PCB and begins to transport the document. A sensor in the ADF detects the document in the input tray. The ADF picks up the document. Then, the document travels through the ADF toward the flatbed. A second sensor in the ADF confirms that the document was successfully transported through the ADF. After the scanning process the document is transported to the ADF output.

Document exposure system

- The source document is loaded through the ADF.
  After receiving the scan command from the copy processor board, the scanner controller board sends a signal to the scanning lamp in the optical unit. The lamp illuminates the document as the ADF passes the document past the optical unit (the optical unit does not move). A calibration strip mounted under the glass allows automatic document registration during the exposer process. The light is reflected from the scanning plate and is sent (by way of three mirrors and a lens) to the CCD driver PCB for image processing. The source document is deposited in the ADF output.
- The source document is manually placed on the glass.
  After receiving the scan command from the copy processor board, the scanner controller sends a signal to the scanning lamp. The lamp illuminates the document as the optical-unit motor moves the optical unit down the length of the document. The light is reflected from the scanning plate and is sent (by way of three mirrors and a lens) to the CCD driver PCB for image processing. When the scanning process is complete, the optical unit returns to its home position.

Light-conversion process

When the charged couple device receives the reflected light, it photo-electrically converts the light to three analog signals (red-green-blue, or RGB). These three signals pass through an analog-to-digital converter, and the resulting digital signals are sent to the scanner controller board. The scanner controller board sends the digital signals to the copy processor board, which initiates output through the base printer.

Note If the source document is manually placed on the glass, the scanning process is the same, except for document transportation.

General descriptions

This section describes the individual MFP components and their roles in the scanning process. Figure 18 illustrates the relationship between the MFP components. Figure 19 illustrates the flatbed-assembly component locations. Figure 20 illustrates the ADF-unit component locations. The following components are identified:

- scanner controller board
  - CPU
  - fan-motor drive circuit
  - ADF drive motor circuit
  - optical-unit motor circuit
  - optical-unit home-position sensor (PI1201)
- optical unit
  - scanner motor
  - inverter PCB
  - scanning lamp
  - CCD driver PCB
- power supply
- flatbed intake fan
- intermediate PCB
- ADF cover-open sensor (PS10)
- ADF unit
  - document-detect sensor (PS2)
  - document leading-edge sensor (PS1)
  - ADF drive motor
  - pickup solenoid

The block diagram below illustrates the relationship among the MFP components.

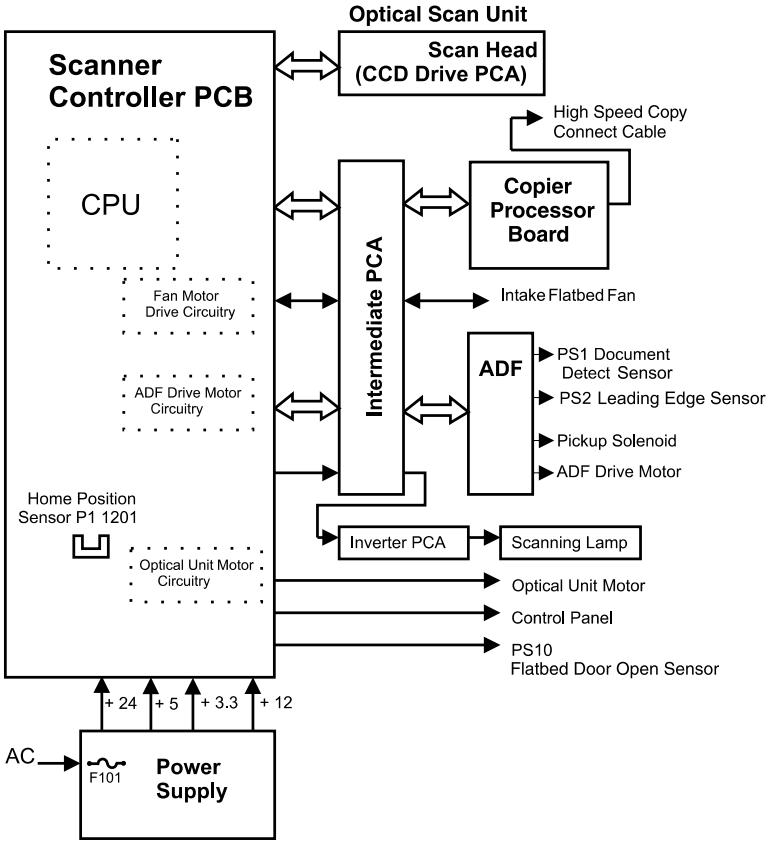

Figure 18. **MFP block diagram**

Scan-unit components

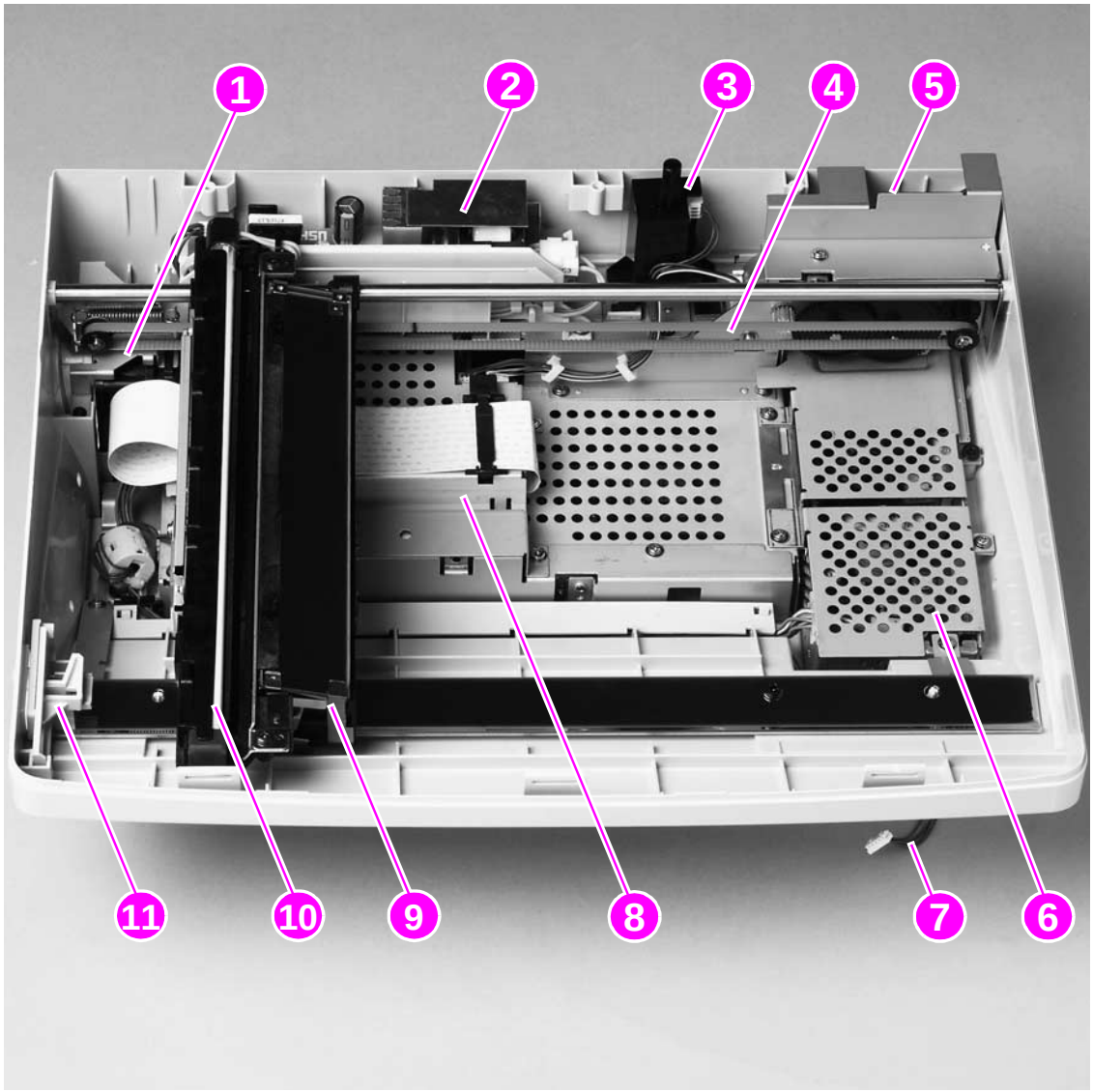

Figure 19. **Scan-unit components**

1 intake fan

2 inverter control PCB

3 ADF door-open sensor (PS10)

4 optical-unit drive-belt

5 optical-unit motor (under the shield)

6 power supply (under the shield)

7 control-panel connector

8 scanner controller board (under the shield)

9 optical-unit assembly (includes the CCD driver PCB)

10 scanner lamp

11 optical-unit lock

ADF components

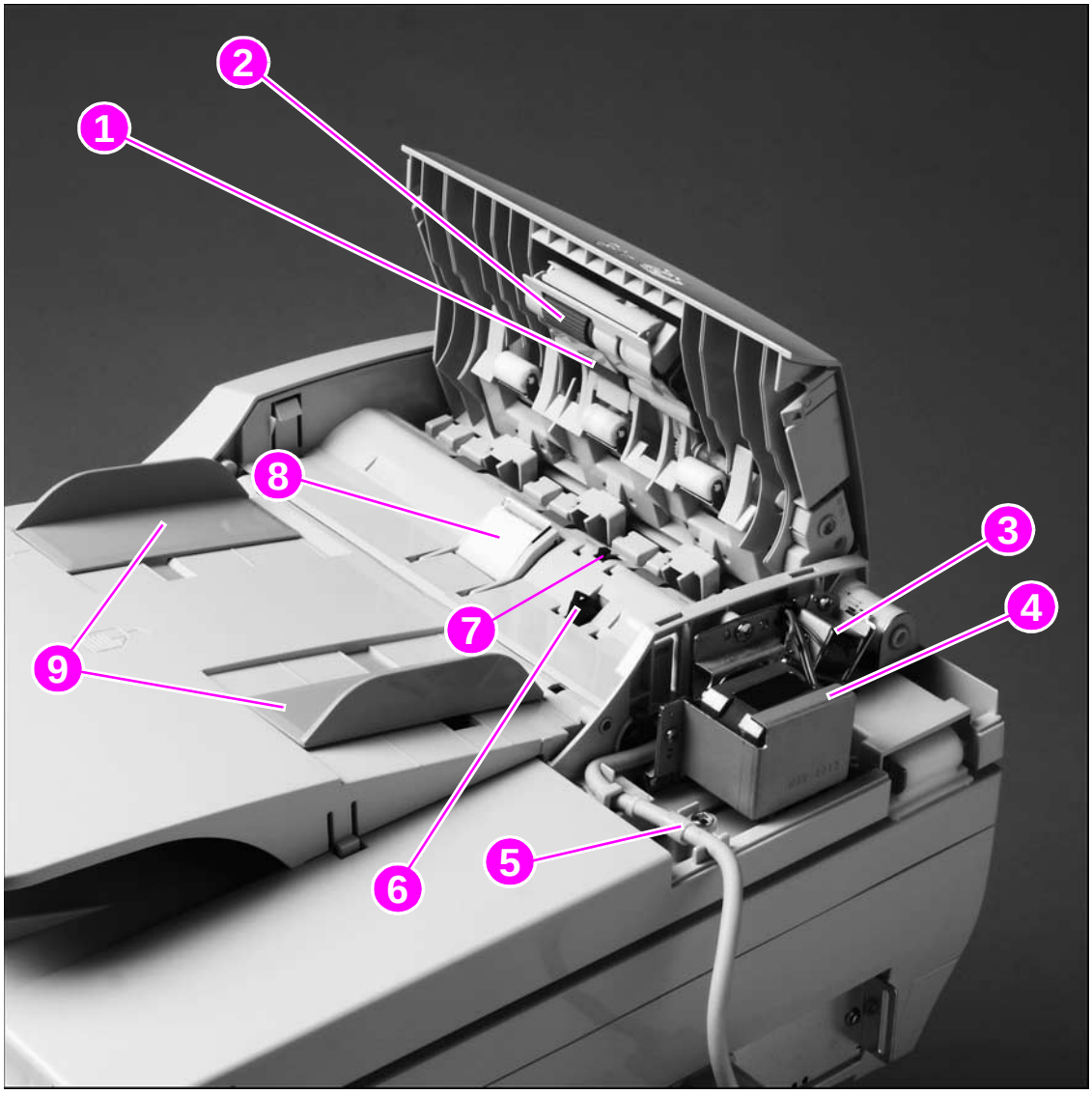

Figure 20. **ADF-unit components**

1. ADF separation roller
2. ADF pickup roller
3. ADF pickup solenoid (SL1)
4. ADF drive motor
5. ADF-to-scanner controller connector
6. document-detect sensor flag(PS2)
7. leading-edge sensor (inside the ADF; PS1)
8. ADF separation pad
9. ADF sliding media guides

Copy processor board

This section describes the operation of the copy processor board (CPB) during normal operation of the MFP. This description is more detailed than the CPB troubleshooting chapter in this manual.

The CPB is the link between the formatter in the print unit and the scanner controller board in the scan unit. Control signals from the formatter are sent to the CPB. The CPB then sends these control signals to the scanner controller board. After the scanner controller board completes the scanning process, the scanned data is sent to the copy processor board. The copy processor board processes the image and sends the image data to the formatter.

CPB terminology

- ASIC (application specific integrated circuit): is the system controller that provides the peripheral component interconnect (PCI), DIMM, and processor interface. The ASIC performs monochrome data compression.
- Firmware code DIMM (dual inline memory module): contains the firmware that controls the system.
- Digital signal processor (DSP): runs the image processing algorithms.
- FPGA (field programmable gate array): provides an interface to the scanner, SRAM, DSP, and PCI bridge and provides front-end image processing.
- IEEE 1394 phy. (physical layer): provides an interface from the CPB to the formatter (high-speed copy connect cable)
- IEEE 1394 protocol chip: connects the PCI bus to the IEEE 1394 phy.
- MIPS (millions of instructions per second) processor: is the system processor that runs the firmware.
- PCI (peripheral component interconnect) bridge: connects the PCI bus to the FPGA.
- RAM (random access memory) DIMM: provides main system memory and temporary storage for image data and firmware variables.
- RAM for DSP: provides temporary storage for image processing in the DSP.
- SRAM (static RAM): is the memory used for aligning the image data from the scanner.

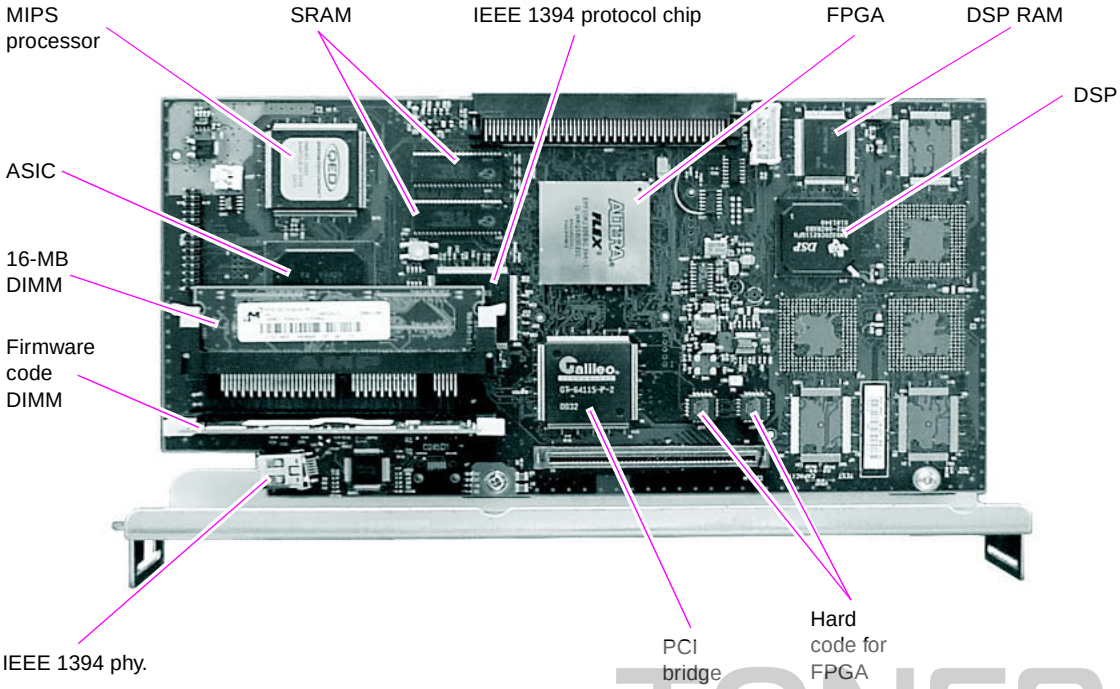

Figure 21. **Copy processor board components**

The CPB controls the following scanning-process control signals:

- ADF unit and scan unit operation
  - directs the scanner controller board about when to scan
  - directs the scanner controller board about how to scan
  - directs the scanner controller board about when to activate motors
  - directs the scanner about when to turn the scanning lamp on and off
- Image processing
  - color alignment
  - resolution conversion
  - image sharpening
  - moire removal
  - image scaling
  - shifting of data strips (reconstructing separately processed image data before CPB communication to the formatter)
  - RGB conversion for CPB communication
  - CPB communication over the high-speed copy connect cable to the formatter in one of the following formats:
    - Hardware Ready Bits (HRB) (fastpath) communication with the hard disk on the formatter
    - PCL-XL (N-up, rotation, book mode) communication with the hard disk on the formatter
    - JPEG compression (when sending data digitally) communication with the hard disk on the formatter
  - data compression before sending to the formatter over the high-speed copy connect cable

Typical scanning-process flow

1. The original document is placed on the glass or in the ADF.
2. The user selects job preferences by using the control-panel buttons and keys. The user presses the START button. Job preferences are sent to the formatter.
3. Some job preferences are held and then processed later (for example, N-up) by the formatter. Others are sent to the CPB.
4. The CPB sends control signals to the scanner controller board. The document is scanned.
5. The scanner controller board sends scanned-image data back to the CPB.
6. The CPB processes the image.
7. The CPB sends the image data to the formatter.
8. The formatter further processes the image data (if required).
9. The image data is then either printed or sent digitally, depending on what the user specified at the beginning of the process.

Copy processor board LEDs

The CPB has four light-emitting diodes (LEDs) that can be viewed when you face the back of the MFP (callout 1). These LEDs illuminate in specific patterns depending on the CPB status during initialization (initialization occurs when power to the MFP is turned on). After initialization, the LEDs can be used to troubleshoot the CPB (see "Troubleshooting with the copy processor board" on page 124).The table in this section describes the LED pattern sequences during the first and second stage of CPB initialization.

Hint

The LEDs can be difficult to see through the holes provided in the CPB faceplate (callout 1) in a high-light environment. It might be necessary to turn off some lights or remove the faceplate to see the LEDs.

The LED patterns an HP LaserJet 4100/4101mfp displays are the opposite of those on the HP LaserJet 9000mfp because of how the CPBs are mounted. The CPB is mounted upside down in the HP LaserJet 9000mfp.

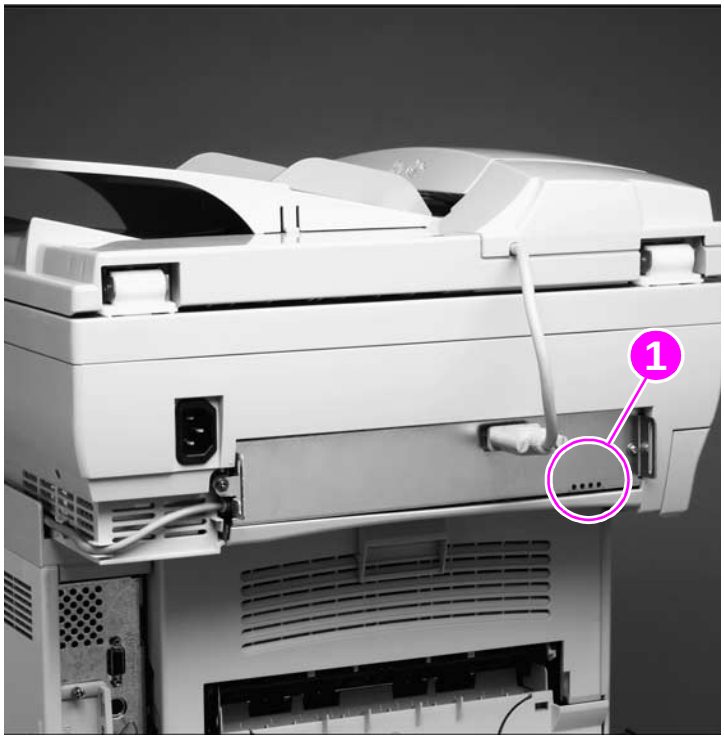

Figure 22. **Copy processor board LEDs**

Table 9. Copy processor board LEDs (initialization sequence)

LED pattern	CPB status
First stage of CPB initialization	
ON* ON* ON ON *LEDs might flash before coming to a solid illuminated state	• CPB flash DIMM detected • CPB RAM DIMM detected • CPB processor is working • CPB has communication with the ASIC
Note	If CPB initialization stops and the LEDs stay in the continuously illuminated state, a CPB failure has occurred (for example, a memory DIMM is not present or fully seated). To troubleshoot a CPB failure, see "Troubleshooting with the copy processor board" on page 124.

Table 9. Copy processor board LEDs (initialization sequence)

LED pattern	CPB status
ON ON OFF ON	• Communication is established between the MIPS processor and the PCI bridge.
OFF ON OFF ON	• Communication is established between the MIPS processor and the FPGA.
OFF OFF OFF ON	• The FPGA SRAM is checked.
OFF OFF OFF OFF	• Communication is established between the MIPS processor, the DSP, and the DSP RAM.
Second stage of CPB initialization	
LED pattern	**CPB status**
OFF OFF OFF ON	• The rightmost LED illuminates and stays on when the connection to the SSA (the portion of the firmware tat runs in the print engines RAM) is established.
OFF OFF ON ON	• The LED second from the right illuminates when communication occurs between the CPB and the scan engine.
ON* OFF ON ON *Flashing after a one to two second solid illumination state	• The leftmost LED illuminates to indicate the CPB has booted properly. When this LED begins to flash (referred to as the CPB heartbeat), the CPB is functioning normally and the MFP is ready to process jobs.
Hint	The CPB remains in this state even when the MFP is in PowerSave mode.

Scanner controller board

The scanner controller board controls the operation of flatbed and ADF components used in the following scanning processes: document transportation, document exposure, and imaging. When the copy processor board sends the scan commands to the scanner controller board, the scanner controller board sends signals to the motors, solenoids, scanning lamp, and CCD driver PCB.

The scanner controller board controls the operation of the following components:

- ADF document transportation
  - ADF sensors (door-open, document-detect, and leading-edge sensors)
  - ADF solenoid
  - ADF drive motor
- document exposure
  - optical-unit home-position sensor
  - scanning lamp
  - scanning motor
- imaging process
  - CCD driver PCB (converts reflected light to a digital RGB signal)
  - copy processor communication
- flatbed intake fan (off in PowerSave mode, half-speed when idle; full-speed when scanning)

ADF motor circuit

The ADF motor circuit controls the operation of the ADF motor. The ADF motor is a +24 vdc stepping motor. It rotates in a counterclockwise direction. The ADF motor is not fault-protected.

Note When a fault-protected motor circuit fails, an error message appears on the control panel. The ADF motor circuit is not fault protected. No error message appears on the control-panel display if this circuit fails.

Optical-unit motor circuit

The optical unit motor circuit controls the optical unit motor and the movement of the unit. The optical unit motor is a +24 vdc stepping motor. It rotates in both a clockwise and counterclockwise direction. If the optical unit motor fails, the message `30.1.17 SCAN FAILURE` appears on the control-panel display.

Scan-unit intake-fan motor circuit

The fan motor circuit controls the fan speed. The fan is off in PowerSave mode, it rotates at half-speed when the product is idle, and at full-speed during the scanning process, when a document is detected in the ADF, or when a control-panel button or key is pushed. If the fan motor fails, the message `30.01.06 Scan Failure` appears on the control panel-display.

Scanner controller board connectors

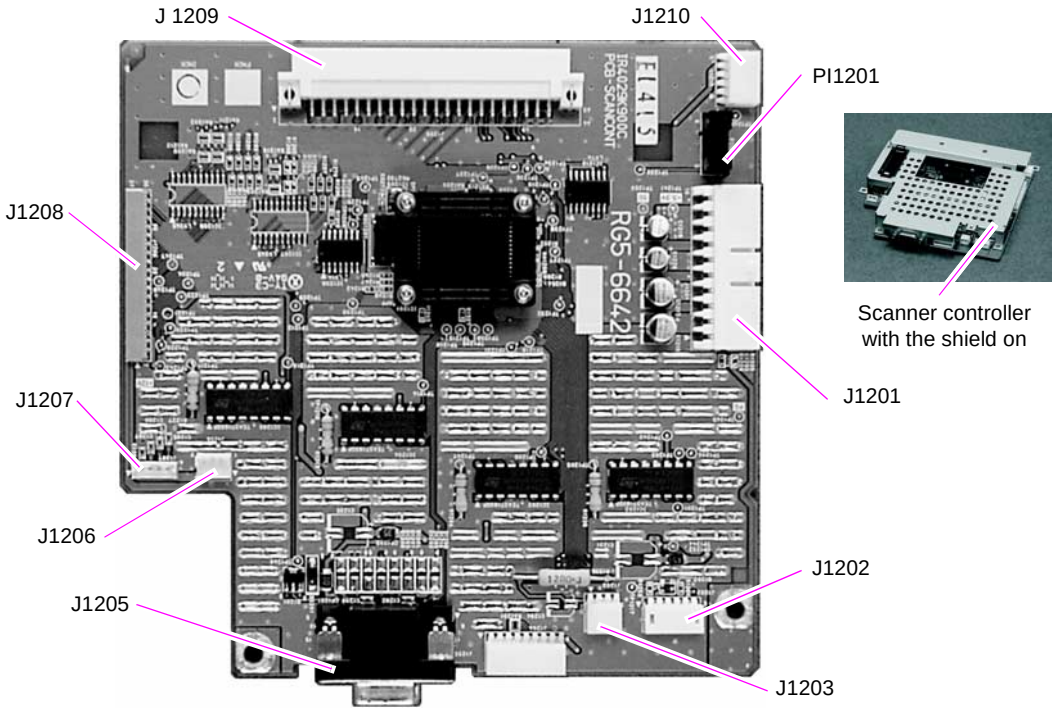

Figure 23. **Scanner controller board connectors (shield off)**

Table 10. Scanner controller board connectors

Connector	Description	Remarks
J1201	Power-supply connector	10-pin connector. To gain access to this connector, remove the glass. See "Glass" on page 92.
J1202	Inverter PCB connector	5-pin connector. To gain access to this connector, remove the glass. See "Glass" on page 92.
J1203	Flatbed intake fan	3-pin connector. To gain access to this connector, remove the glass. See "Glass" on page 92.
J1205	ADF connector	15-pin connector. Verify that the connector's locking thumb screws are tight. This connector can be removed accessed without removing any other MFP components.
J1206	ADF door-open sensor (PS10)	3-pin connector. To gain access to this connector, remove the glass. See "Glass" on page 92.
J1207	Optical-unit drive motor	4-pin connector. To gain access to this connector, remove the glass. See "Glass" on page 92.
J1208	CCD connector	Flat ribbon cable. To gain access to this cable, remove the glass. See "Glass" on page 92.
J1209	Intermediate PCB	This connector connects the copy processor board to the scanner controller board. It cannot be disconnected independently of removing the scanner controller board.
J1210	Control panel	5-pin connector. To gain access to this connector, remove the glass. See "Glass" on page 92.
PI1201	Optical-unit home-position sensor (PI1201)	This sensor is soldered to the scanner controller board. To gain access to this sensor, remove the glass. See "Glass" on page 92.

Intermediate PCB

The intermediate PCB connects the copy processor board and the ADF to the scanner controller board.

Power supply

The power supply converts ac power from the source inlet (power cord) to low-voltage dc power. Low-voltage power is supplied to various flatbed and ADF components. Low-voltage power from the power supply consists of +3.3 vdc, +5 vdc, +12 vdc, and +24 vdc voltages.

Table 11. Low-voltage components

Voltage	Components
+3.3 vdc	• scanner controller board • scanner controller-to-engine controller connector • scanner controller-to-copy processor board intermediate PCB • CCD drive circuit • document-detect sensor • leading-edge sensor • optical unit home-position sensor
+5 vdc	• scanner controller board • scanner controller-to-video controller connector • CCD drive circuit
+12 vdc	• scanner controller board • CCD drive circuit
+24 vdc	• scanner controller board • document-pickup solenoid • ADF motor • optical-unit motor • flatbed intake fan • inverter circuit

Overcurrent and overvoltage protection

The power supply uses overcurrent and overvoltage protection. If a short-circuit on the load side (flatbed and ADF component side) causes an excessive current or voltage draw, the overcurrent or overvoltage protection function interrupts the power-supply output. If this happens, turn the printer off, and then identify and repair the malfunctioning component.

Note The power supply must remain off for at least two minutes for the overcurrent and overvoltage functions to reset.

A fuse (power supply PCB F101) protects against overcurrent coming from the ac source inlet (power cord).

Power-supply block diagram

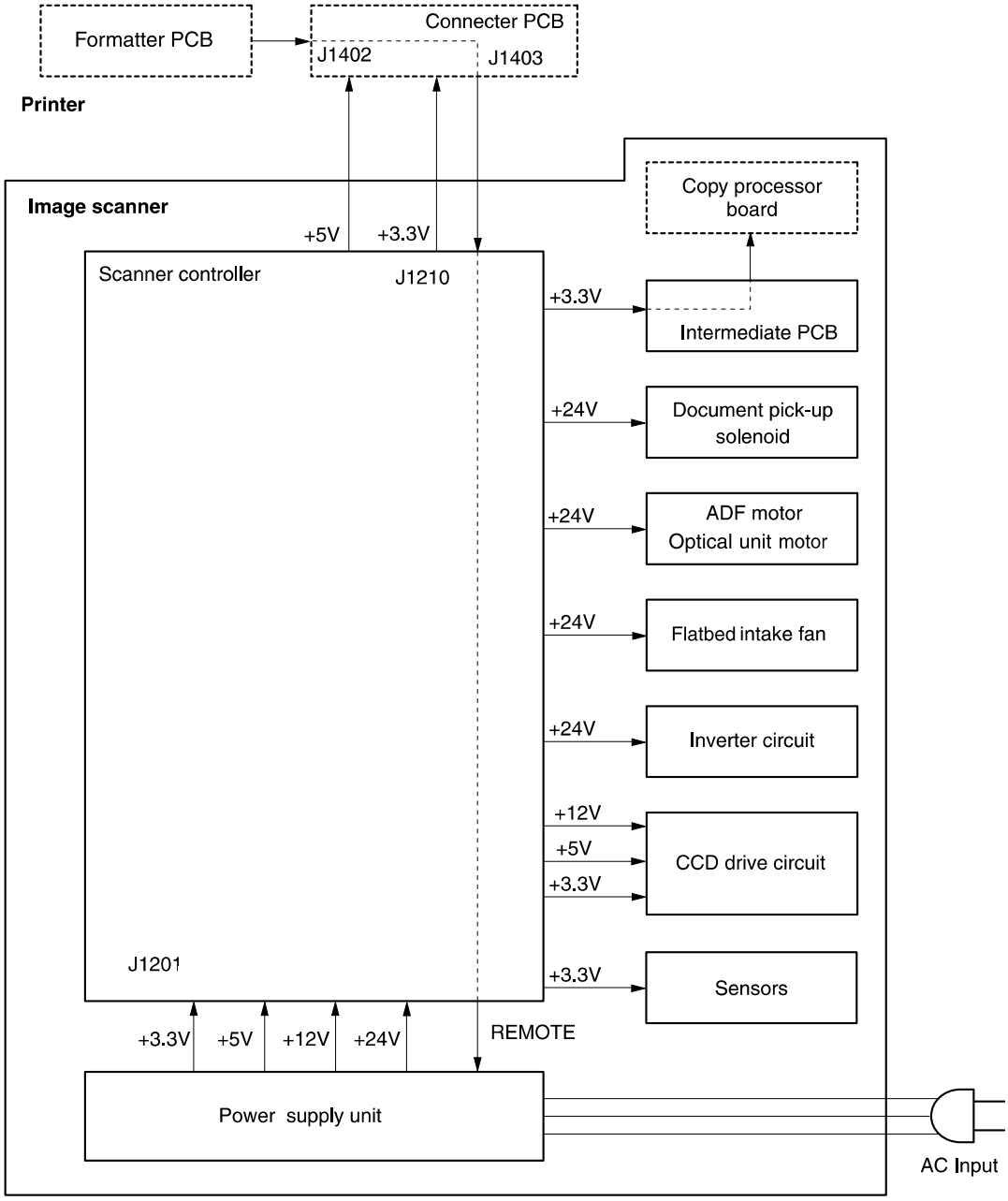

Figure 24. **Power-supply block diagram**

Optical unit

The optical unit consists of the optical unit chassis, the scanning lamp, the CCD driver PCB, and the optical-unit motor. When the power is turned on, the scanner controller board activates the optical-unit motor, and the unit begins to move along the rails. When the optical-unit home sensor flag (located on the bottom of the unit) aligns with the home-position sensor (located on the scanner controller board; PI1201), the unit stops in the home position.

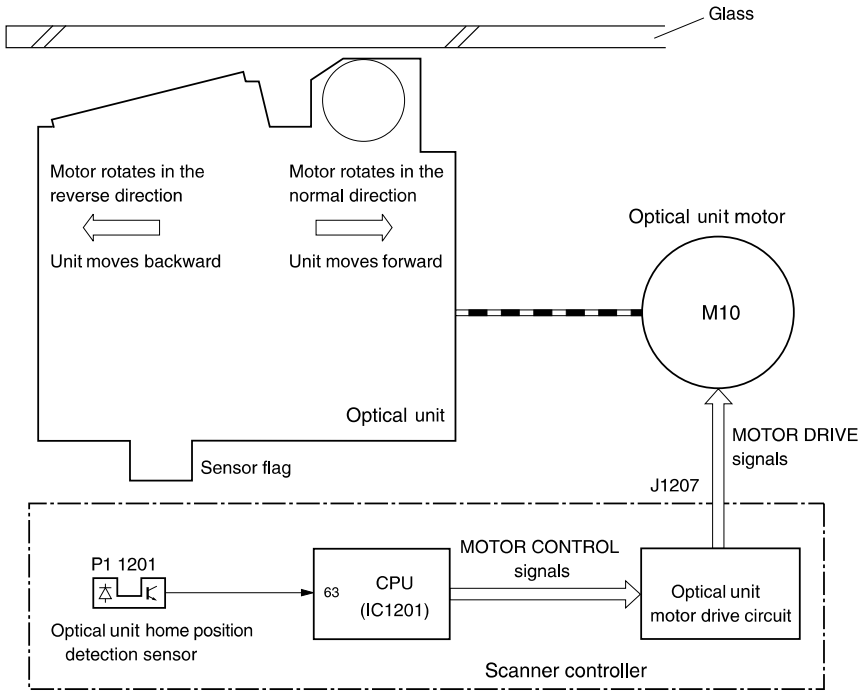

Figure 25. **Optical unit block diagram**

The scanner controller board illuminates the flatbed lamp after receiving the scan command from the copy processor board. As the document is exposed to the illumination of the scanning lamp, the reflected light from the glass is sent by way of three scanning mirrors and a lens to the CCD driver PCB for image processing. When the scanning process is complete, the optical unit returns to the home position.

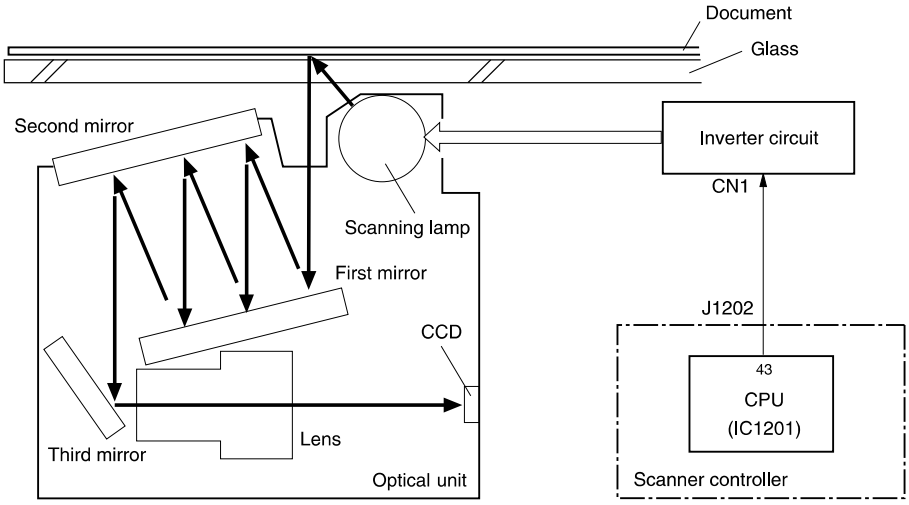

Figure 26. **Scanning process**

Inverter PCB

The inverter PCB provides the current and voltage phase the scanning lamp requires.

Scanning lamp

The scanning lamp illuminates the source document, which causes reflected light from the glass to be directed to the CCD driver PCB for document imaging.

CCD driver PCB

When the CCD driver receives the reflected light from the exposure process, it photo-electrically converts the light into three analog signals (RGB). These three signals pass through an analog-to-digital converter, and the resulting digital signals are sent to the scanner controller PCB. The scanner controller sends the digital signals to the copy processor board for output by the base printer, which initiates output through the base printer.

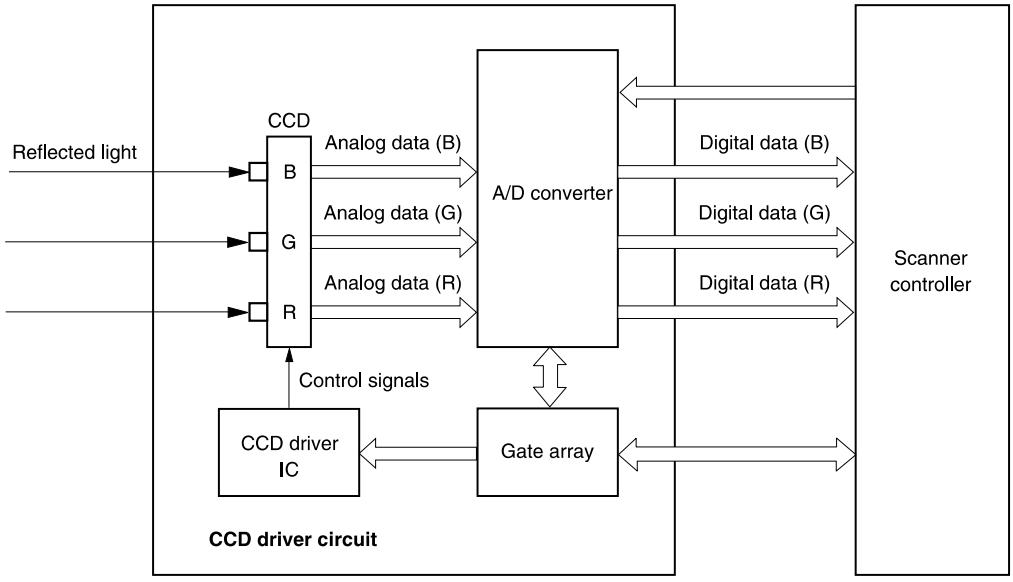

Figure 27. **Signal conversion**

ADF document-feed system

Overview

The ADF document-feed system detects the presence of a source document in the document tray, picks up the document and transports it through the ADF paper path, and then delivers the source document to the ADF output.

- The ADF motor rotates counterclockwise, which rotates the feed and delivery rollers. The document pickup solenoid is activated, causing the pickup and separation rollers to rotate. If more than one source document is in the ADF input tray, the separation roller and separation pad clear the multiple-sheet feed, and then the first document is sent into the flatbed scanning path.
- The leading-edge sensor detects the source document in the paper path and then the scanning lamp illuminates.
- The source document is passed through the flatbed scanning path and the image processing operation (controlled by the CCD driver) begins.
- The delivery roller transfers the source document to the ADF output. If more source documents are in the input tray, the process repeats.

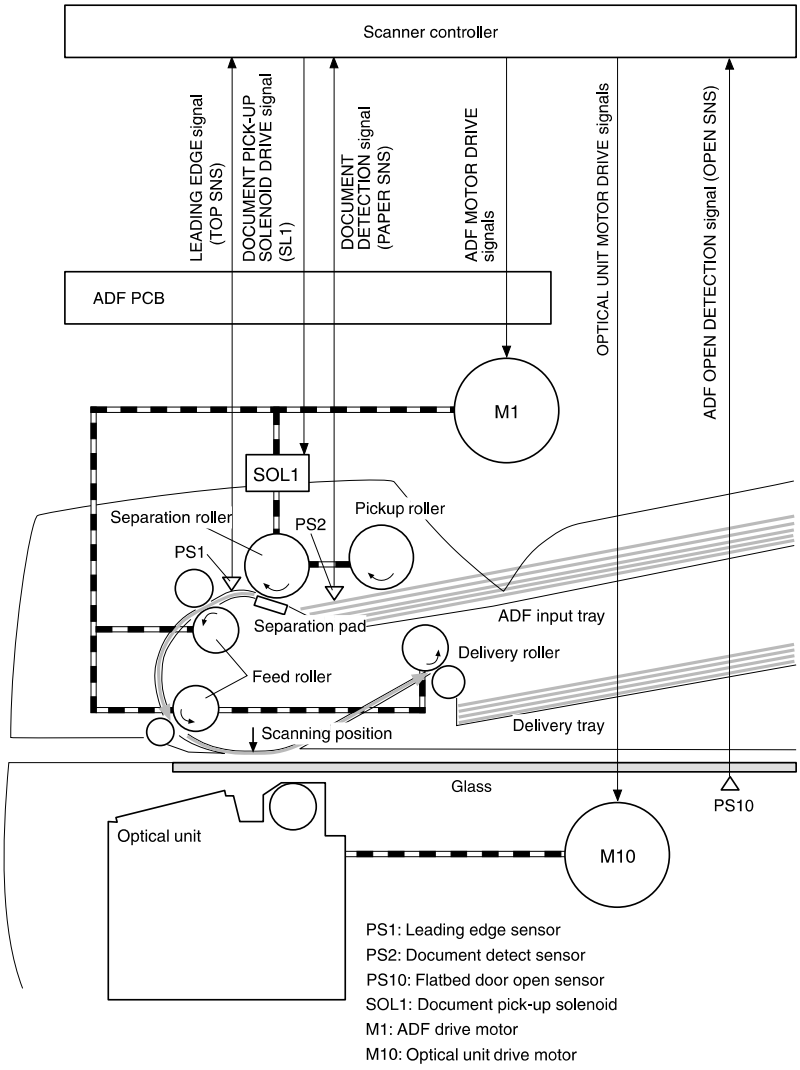

Figure 28. **Document transport path**

Hint To locate these components on the ADF, see "ADF components" on page 56.

ADF cover sensor (PS10)

The ADF door-open sensor (PS10) detects ADF door status (open or closed). If the ADF door is opened, a `FLATBED COVER OPEN` message appears on the control-panel display. If the ADF door is opened during the document transport process, the ADF drive-motor stops and a door-open message appears on the control panel.

Document-detect sensor (PS2)

The document-detect sensor (PS2) detects the presence of documents when they are placed into the ADF document input tray.

Leading-edge sensor (PS1)

When a document enters the document transport path, it must pass the leading-edge sensor (PS1) within a specified amount of time. If it does not, a paper-jam message appears on the control-panel display.

ADF motor

The ADF motor is controlled by the scanner controller board. When the scanner controller receives the scan command, the ADF motor rotates counterclockwise, which starts rotation of the feed and delivery rollers.

Document pickup process

When the document pickup solenoid is activated, the pickup and separations rollers begin to rotate. If more than one source document is in the pickup tray, the separation roller and separation pad clear the multiple feed, and then the first document is sent toward the flatbed.

Document jams

The scanner controller board detects a jam by verifying that each document passes the leading-edge sensor in a specified amount of time. If a document does not pass by the sensor in time, the scanning operation stops. A document-jam message appears on the control-panel display, and the user must clear the jam. The scanner controller board can detect two types of jams:

- **Document-delay jam:** If the leading-edge sensor does not detect the leading edge of the document after the document pickup solenoid is activated, the scanner controller initiates a document-delay jam signal.
- **Document-stationary jam:** If the leading-edge sensor does not detect the trailing edge of the document after it detects that the leading edge has passed, the scanner controller board initiates a document-stationary jam signal.

Scan-unit intake fan

The intake fan draws fresh air into the flatbed assembly. It is controlled by the fan-drive circuit, which is located on the scanner controller board. The fan is off in PowerSave mode, it rotates at half-speed when the product is idle, and at full-speed during the scanning process. The intake fan motor is fault-protected. If the fan motor fails, the message `30.01.06 Scan Failure` appears on the control-panel display.

CAUTION The fan must be replaced so that it draws air into the flatbed. Failure to correctly position the fan can result in damage to MFP components. Verify that the airflow arrow (located under the drive-belt tension bracket) embossed on the fan housing points *into* the flatbed. See, "Correctly orient the intake fan and bracket" on page 107.

6 Removal and replacement

Removal and replacement strategy

This chapter documents the removal and replacement of field replaceable units (FRUs) only. Reinstallation is generally the reverse of removal. Occasionally, notes are included to provide directions for difficult or critical replacement procedures.

WARNING! Unplug the power cord from the power outlet (at the wall receptacle) before attempting to service the product. If this warning is not followed, severe injury can result. Certain functional checks during troubleshooting must be performed with power supplied to the product. However, the power supply should be disconnected during removal.

The power cord ***must*** be unplugged from the wall receptacle. Unplugging the cord from the back of the print unit ***does not*** prevent AC power from going to the scan unit. See "Back view" on page 21.

CAUTION The product contains components that are sensitive to electrostatic discharge (ESD). Always perform service work at an ESD-protected workstation. If an ESD-protected workstation is not available, discharge body static by grasping the print engine chassis before touching an ESD sensitive component. Ground the print engine chassis *before* servicing the product.

Required tools

- #2 Phillips screwdriver with magnetic tip
- small flatblade screwdriver
- needle-nose pliers
- ESD mat (if available)
- penlight (optional)

CAUTION A PoziDriv screwdriver will damage screw heads on the product. Use a #2 Phillips screwdriver.

Hint To install a self-tapping screw, first turn it counterclockwise to align it with the existing thread pattern, then carefully turn it clockwise to tighten. Do not overtighten.

Before performing service

- If possible, print a configuration page. See "Configuration page" on page 130.
- Remove all media from the product.
- Unplug the power cord ***from the wall*** receptacle. Unplugging the cord from the back of the print unit ***does not*** prevent AC power from going to the scan unit.
- Place the product on an ESD mat, if available. If an ESD-protected workstation is not available, discharge body static and ground the print engine chassis *before* servicing the product.
- Remove the print cartridge. See "Checking the print cartridge" on page 137.

After performing service

- Replace the print cartridge.
- Reconnect all cables to the product.
- Replace all accessories and reload the media.
- Verify that the latest firmware is installed on the product. See "Configuration page" on page 130.
- Restore customer configuration settings.

Common fasteners

Table 12. Common fasteners found in the MFP

Illustration and description
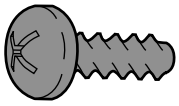 Black self-tapping Phillips-head screw
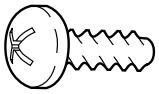 Silver self-tapping Phillips-head screw
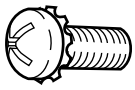 Machine screw with serrated washer
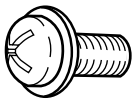 Short Phillips-head screw with small shoulder
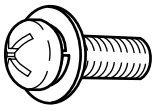 Long Phillips-head screw with large shoulder
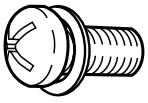 Phillips-head machine screw with loose washer
Hint To order replacement screws, see table 27 on page 146.

Parts removal order

Use the following diagram to determine the order in which parts must be removed (scan unit and ADF units only).

Table 13. Parts-removal tree

- ADF input tray
- ADF pickup roller
- ADF separation roller
- ADF separation pad
- Control panel door
- ADF unit
  - Glass
    - Door interlock (PS10)
    - Inverter PCB
    - Scanning lamp
      - Optical unit
        - Optical-unit drive gear/motor
          - scan-unit power supply
        - Intake fan
        - Copy processor board
          - Scanner controller
- scan-unit right-side cover
  - Copy processor board
- scan-unit left-side cover
  - Intake fan filter
- Formatter cage
  - scan unit
    - Printing-unit top cover

Note The copy processor board is intentionally listed twice.

ADF input tray

1 Open the ADF cover. Gently pry the input-tray hinge pin (located towards the front of the MFP; callout 1) out of its pivot hole.

CAUTION The hinge pin can easily be snapped off of the input tray if too much pressure is applied.

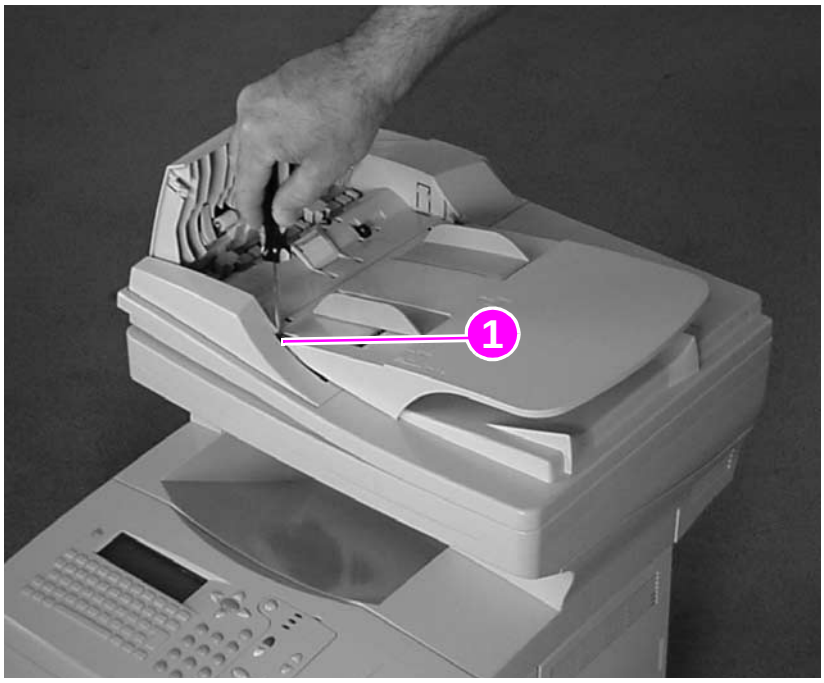

Figure 29. **Release the ADF input-tray hinge**

2 When the hinge pin clears the pivot hole, rotate the input tray away from the MFP (as indicated by the arrow) and slide the other hinge pin out of its pivot hole. Remove the tray.

Figure 30. **Remove the ADF input tray**

ADF pickup roller

1 Open the ADF cover (callout 1).

2 Pull the plastic tab (callout 2) to release the lower edge of the roller shield.

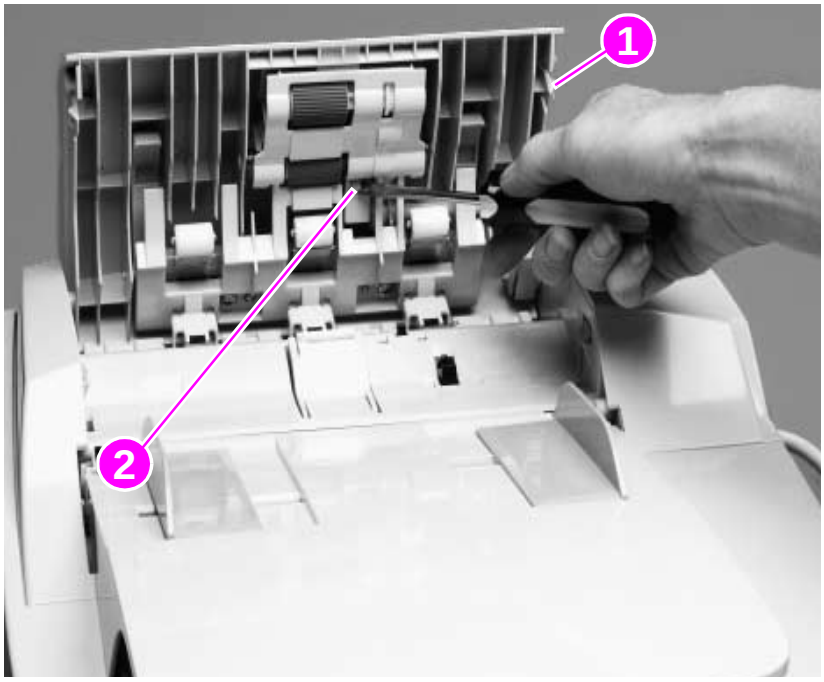

Figure 31. **Release the roller shield**

3 Release the roller shield from the two small pins (callout 3), and remove it from the product.

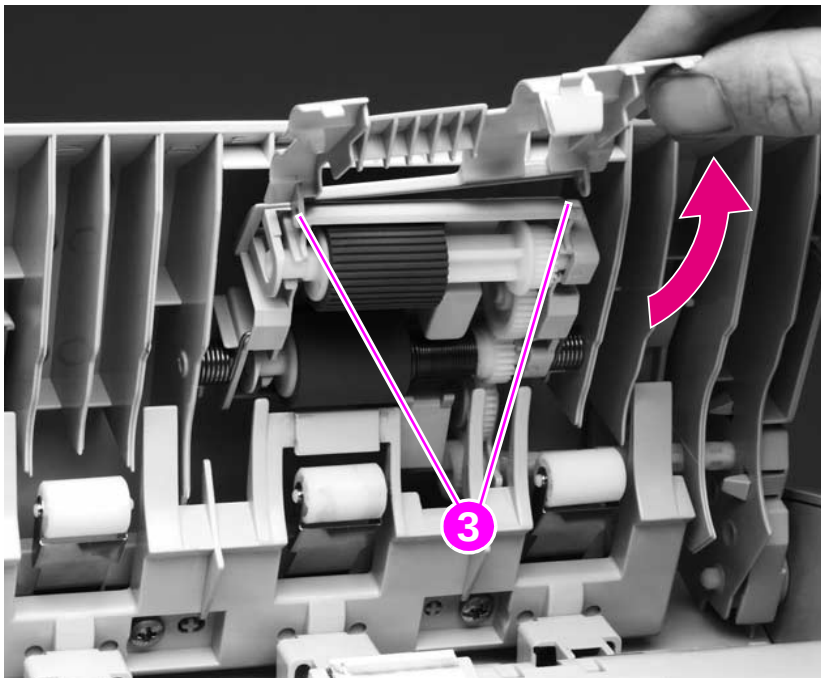

Figure 32. **Remove the roller shield**

4 Slide the roller toward the gear end. Gently pry the roller-shaft locking tab (callout 4) away from the roller. Remove the ADF pickup roller.

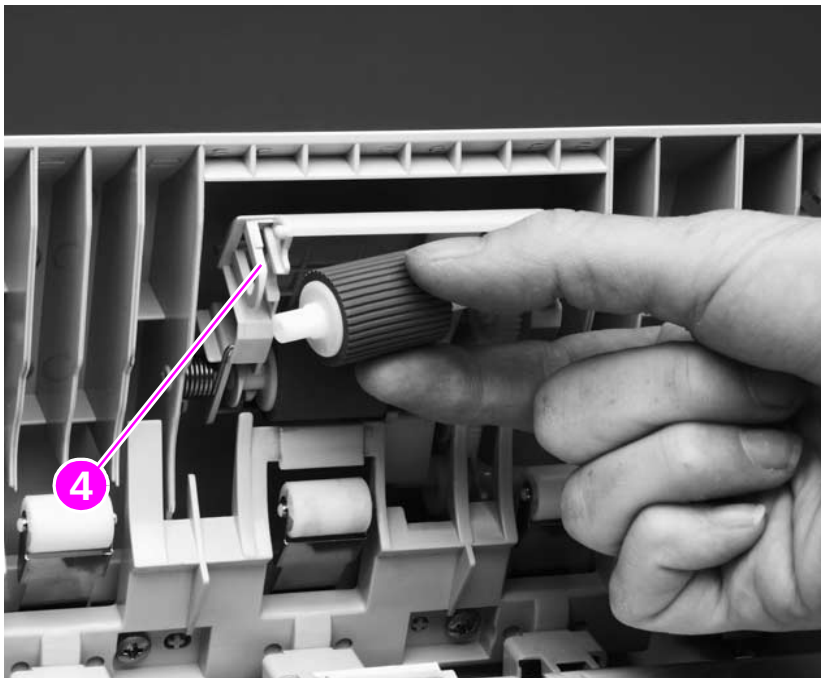

Figure 33. **Remove the ADF pickup roller**

Hint When replacing the roller, verify that the roller gear and drive gear are properly meshed.

ADF separation roller

1 Open the ADF cover, and remove the roller shield. See “ADF pickup roller” on page 74.

2 Slide the roller toward the gear end. Gently pry the roller-shaft locking tab (callout 1) away from the roller. Remove the ADF separation roller.

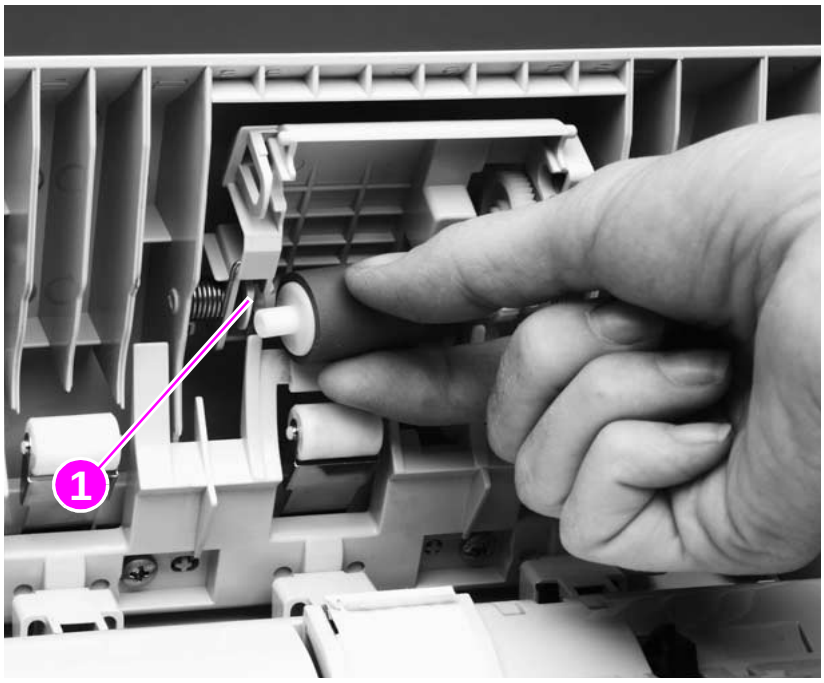

Figure 34. **Remove the ADF separation roller**

Hint When replacing the roller, verify that the roller gear and drive gear are properly meshed.

ADF separation pad

1 Open the ADF cover.

2 Press and release two separation locking tabs (callout 1; shown already released).

3 Rotate the separation pad until it is perpendicular to the product.

4 Release the separation-pad arms (callout 2) by gently pressing them toward the ADF cover.

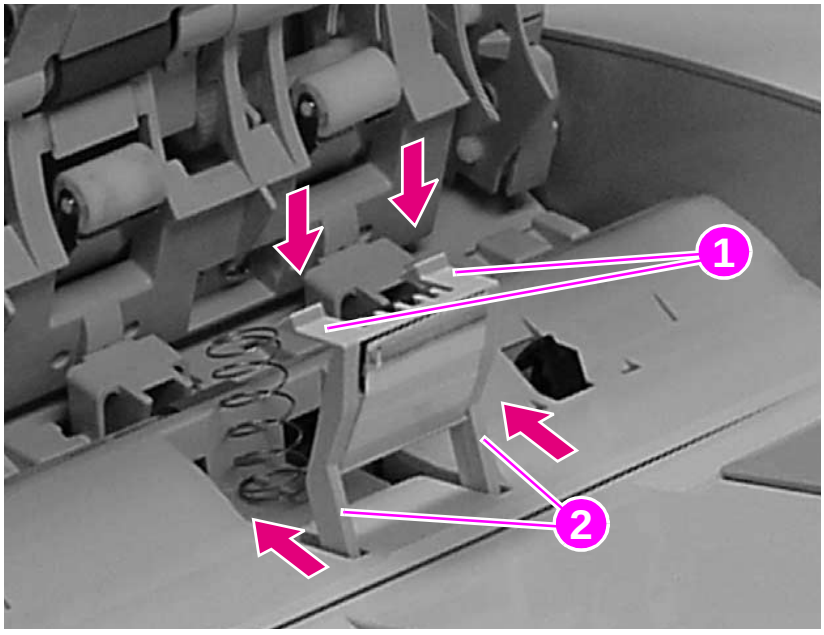

Figure 35. **Remove the ADF separation pad**

Note When replacing the separation pad, verify that the spring is firmly seated on its pedestal (callout 3).

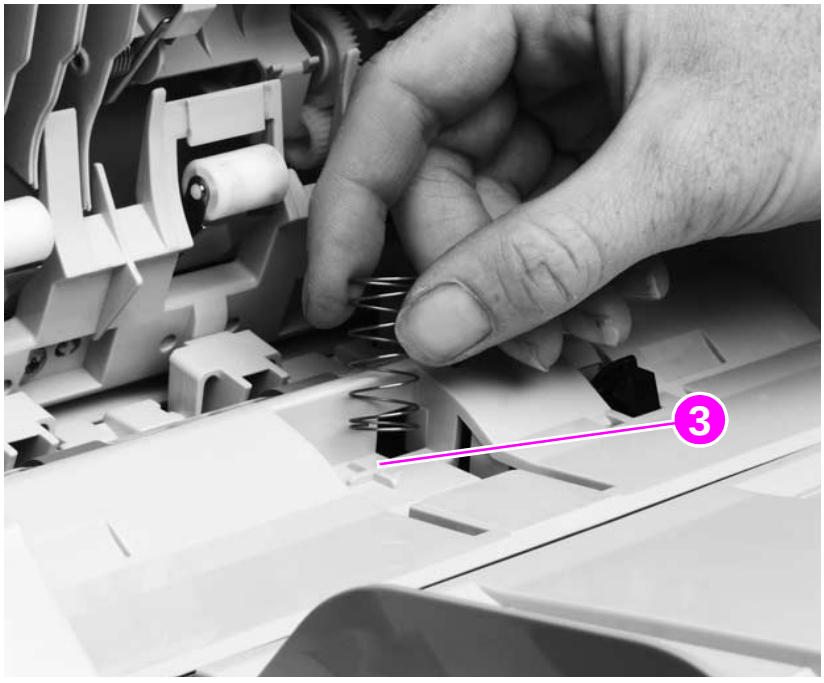

Figure 36. **Replace the ADF separation pad spring**

ADF unit

1 Disconnect the ADF cable (callout 1).

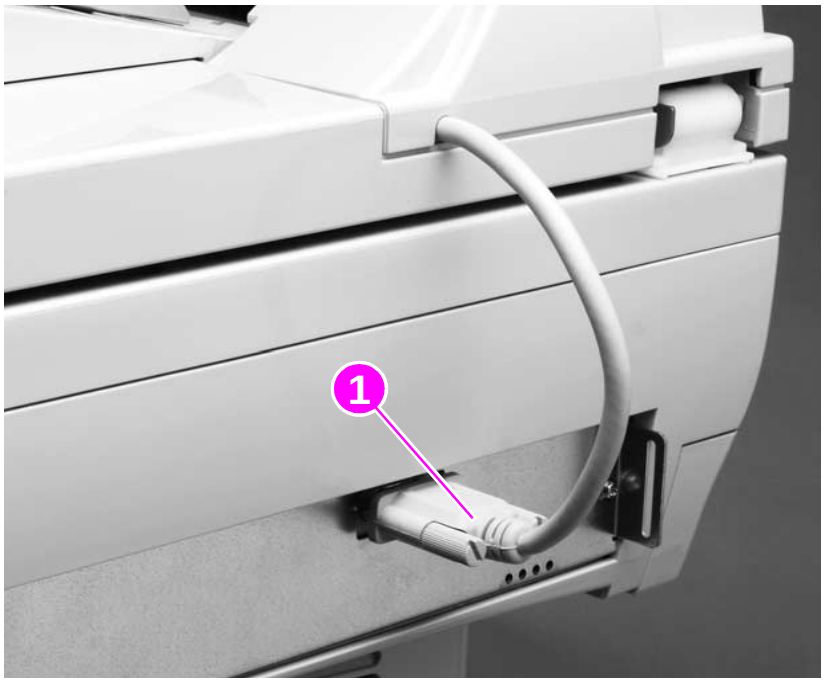

Figure 37. **Disconnect the cable**

2 Open the ADF unit, and lift it straight up and off of the scan unit.

Figure 38. **Remove the ADF unit**

Control-panel door

1 Open the control-panel door, and remove the print cartridge. Cover the print cartridge to keep it out of direct light; see the HP LaserJet 4100 series printer service manual for print-cartridge information.

Figure 39. **Remove the print cartridge**

2 Press the two tabs (callout 1) on the inside of the print-cartridge lever to release it.

3 Remove one screw (callout 2).

4 Remove the wire-harness plastic cover (callout 3).

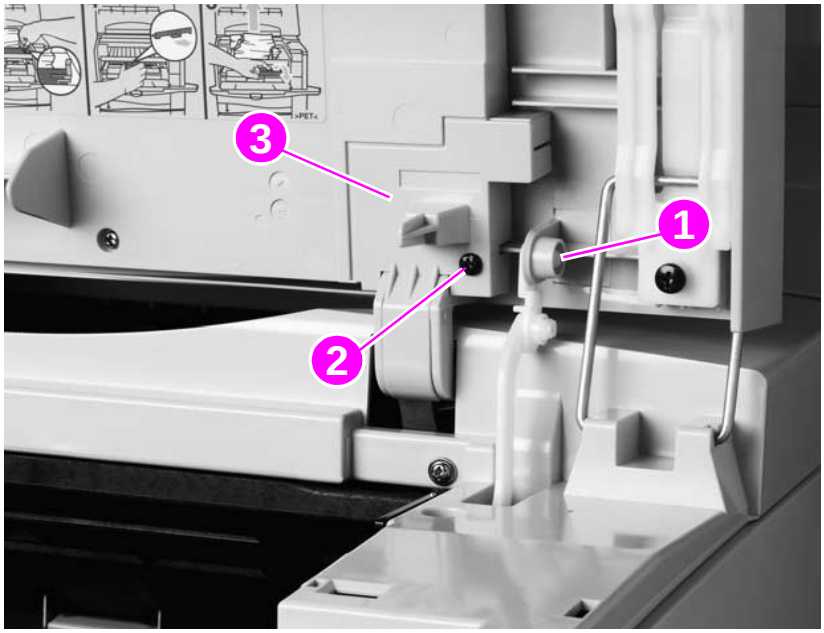

Figure 40. **Remove the control-panel wire-harness cover**

5 Remove one screw (callout 4), and disconnect the top edge of the grounding strip.

Figure 41. **Disconnect the control-panel grounding strip**

6 Disconnect the control-panel-cable connector (callout 5).

7 Separate the door-support pins (callout 6) to release them.

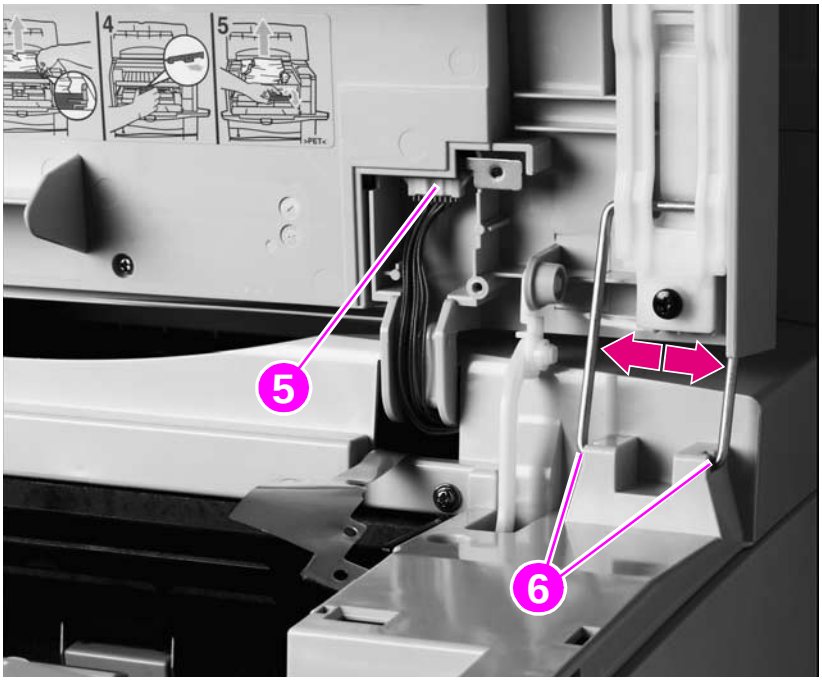

Figure 42. **Release the control-panel door-support pins**

8 Flex the left arm (callout 7) to the right (inward), and move the control-panel door toward the right side of the product until the arm releases. Slide the control-panel door toward the left, and remove it from the product.

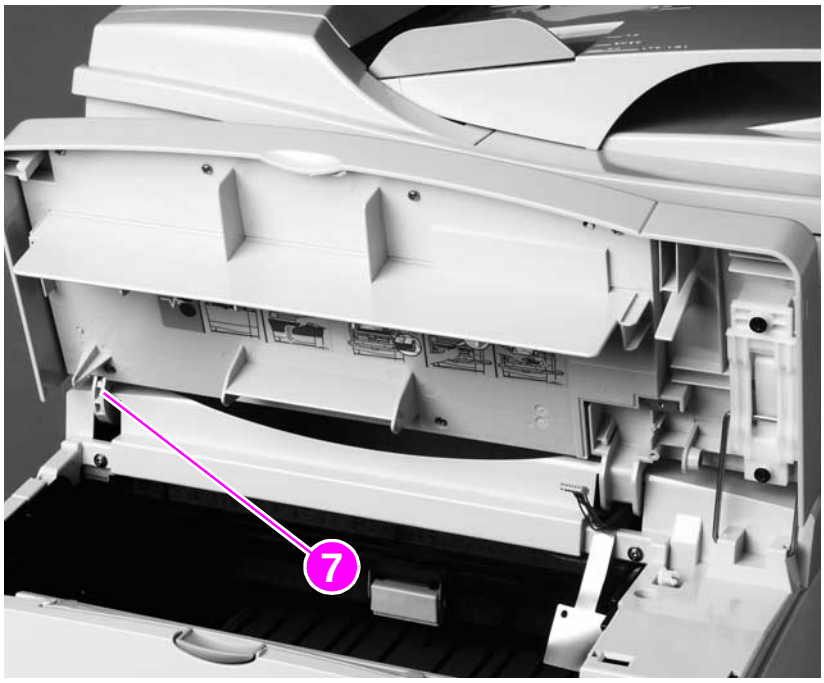

Figure 43. **Remove the control-panel door**

Note **Step 9 is essential. The MFP must retain the original serial- and model-number label panel**.

WARNING! The control panel in figure 44 is shown installed in the open position so that the label panel screws can be easily seen. Remove the control panel and lay it on a flat surface *before* removing the label panel to keep from dropping the mounting screws into the print unit.

9 Remove seven screws (callout 8), and remove the panel. Reinstall the label panel on the replacement control-panel door.

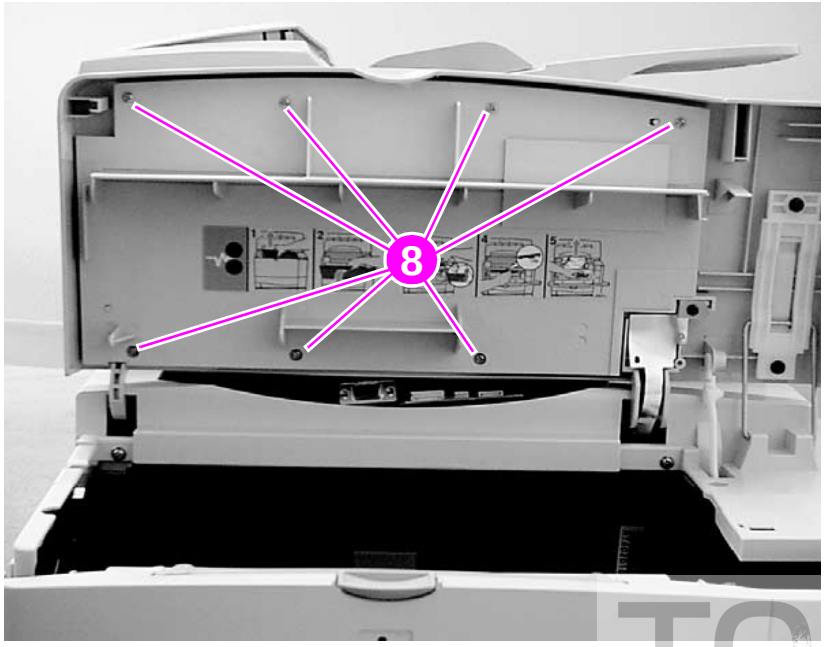

Figure 44. **Remove the product serial- and model-number panel**

Scan-unit right-side cover

Note If a duplex accessory is installed, remove it to access the right-side cover mounting screw.

1 Remove one screw (callout 1) from the plastic tab on the scan-unit right-side cover.

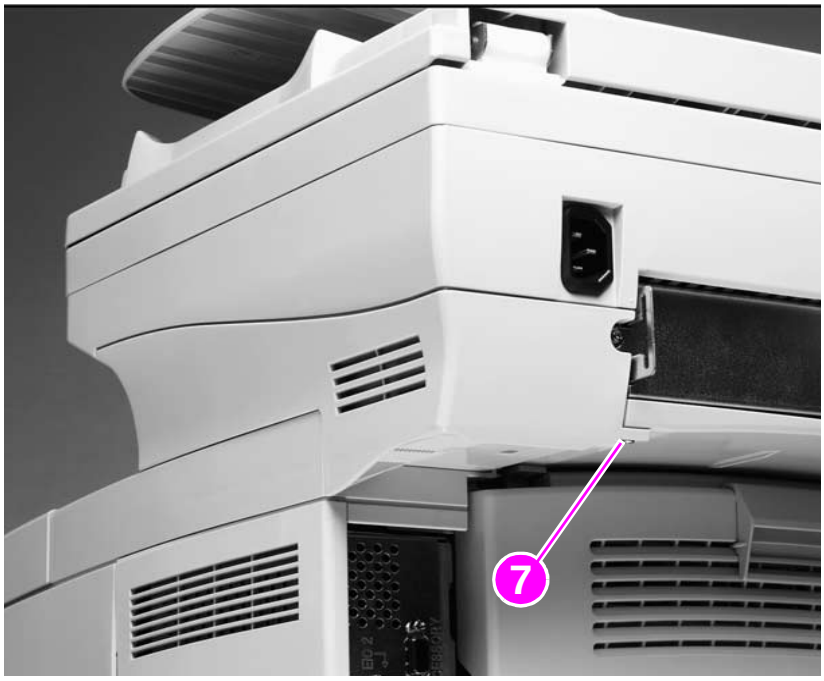

Figure 45. **Remove the right-side cover screw**

2 Grasp the plastic tab and pull the cover downward and away from the right side of the product. Lift the cover up to release it, and then remove it from the product.

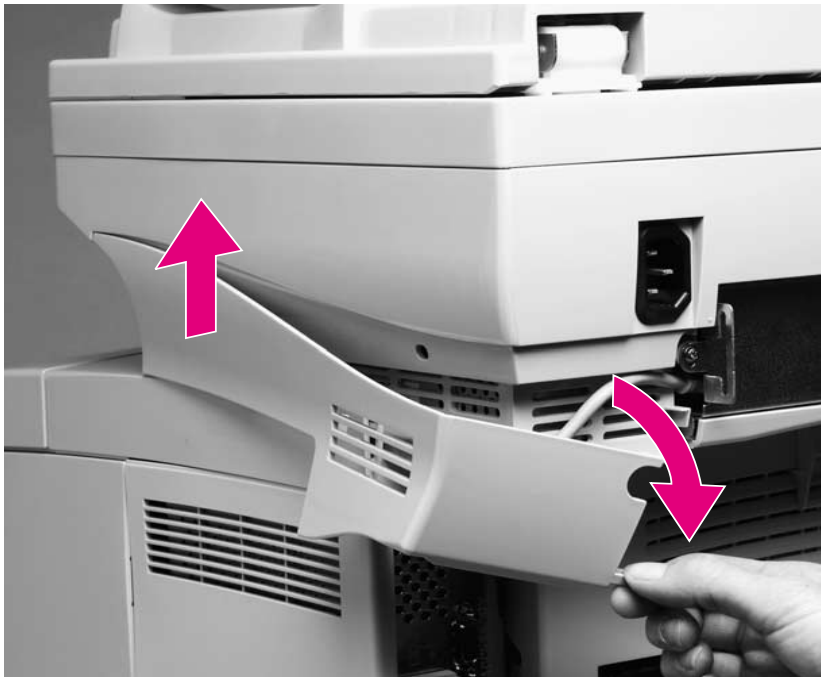

Figure 46. **Remove the scan-unity right-side cover**

Copy processor board

1 Remove the scan-unit right-side cover. See "Scan-unit right-side cover" on page 82.

2 Unplug the ADF connector cable (callout 1) and remove two screws (callout 2).

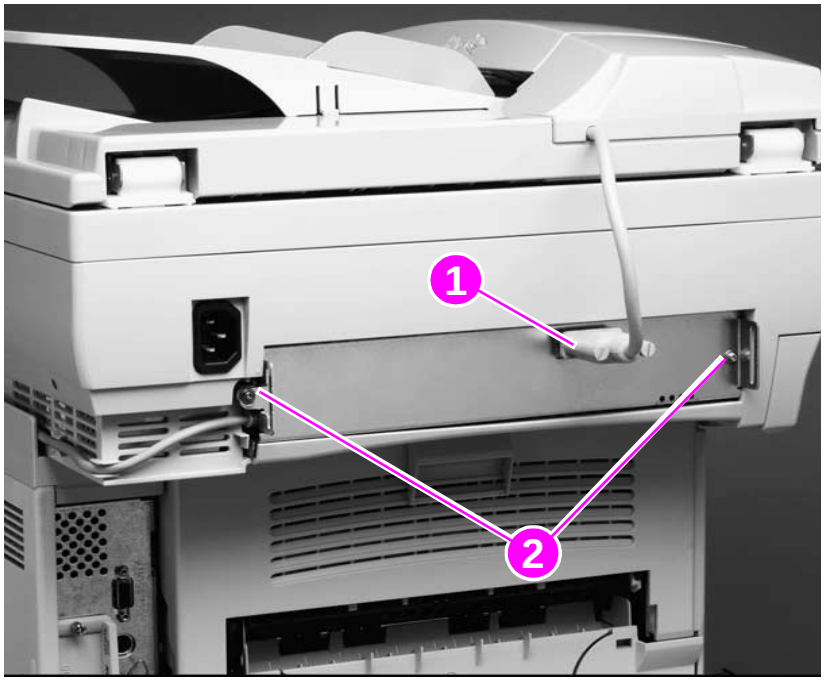

Figure 47. **Disconnect the ADF cables**

CAUTION Sliding the CPB out without unplugging the high-speed copy connect cable (callout 3) will damage the cable connector.

3 Slide the copy processor board (CPB) out of the product approximately 2.5 mm (1 inch), and disconnect the high-speed copy connect cable (callout 3).

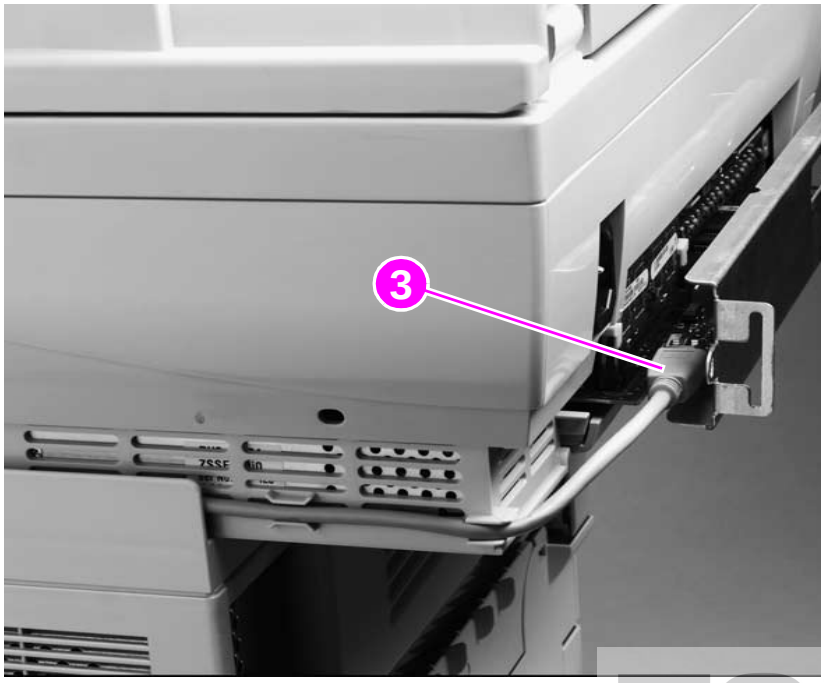

Figure 48. **Disconnect the high-speed copy connect cable**

4 Remove the CPB from the product.

Scan-unit left-side cover

Note If a duplex accessory is installed, remove it to access the right-side cover mounting screw.

1 Remove one screw (callout 1) from the scan-unit left-side cover.

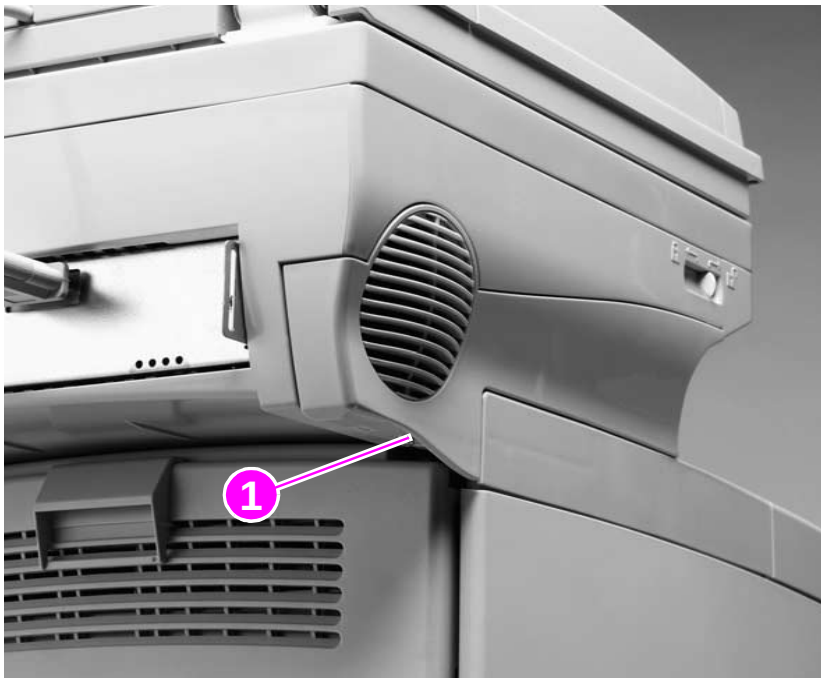

Figure 49. **Remove the left-side screw**

2 Gently pry the rounded top edge of the cover (callout 2) with a flatblade screwdriver until you can grasp it.

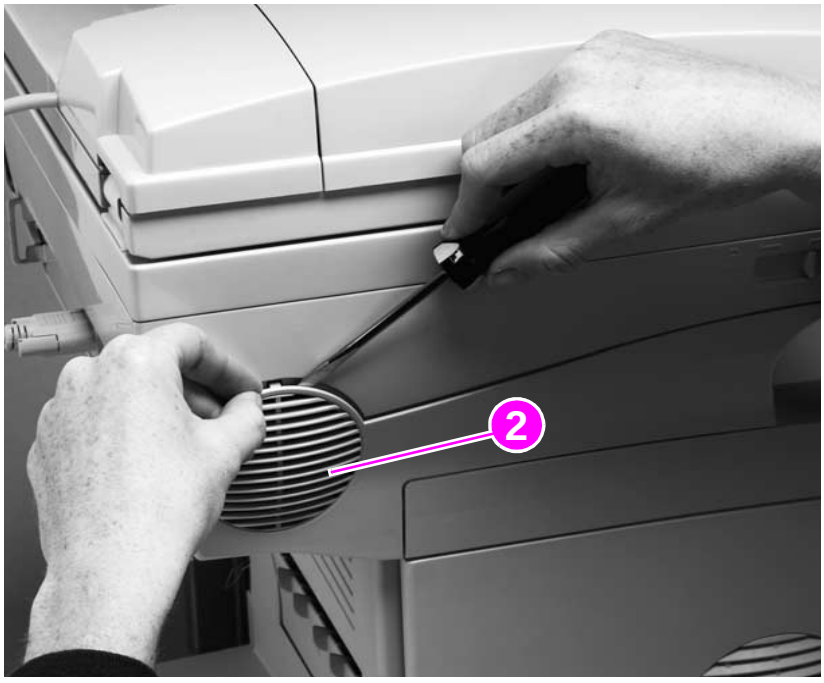

Figure 50. **Gently pry the top edge of the left-side cover**

3 Pull the cover downward and away from the left side of the product. Lift the cover up to release it, and then remove it from the product.

Figure 51. **Remove the scan-unit left-side cover**

Intake fan filter

1 Remove the scan-unit left-side cover. See “Scan-unit left-side cover” on page 84.

2 Remove the intake filter (callout 1).

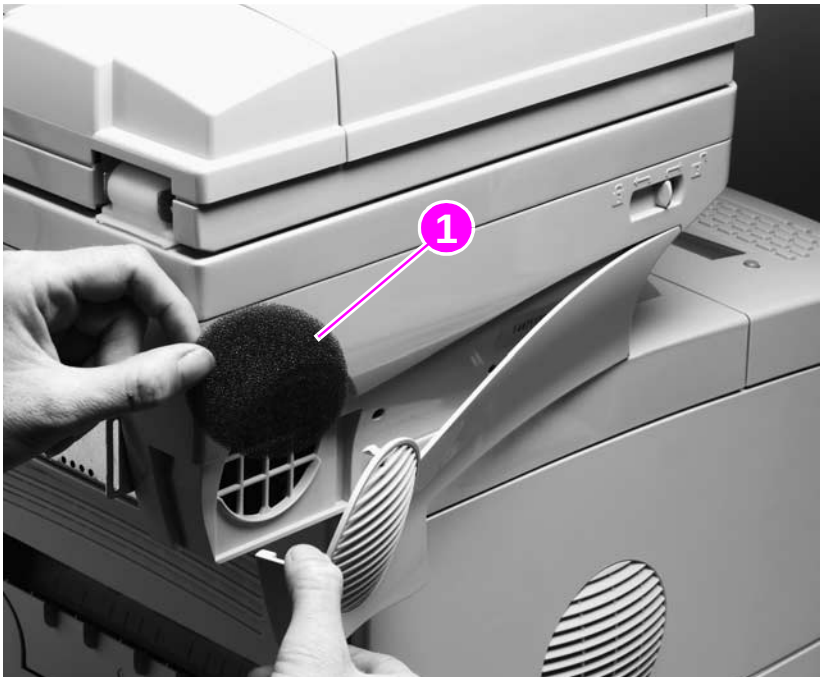

Figure 52. **Remove the intake filter.**

Formatter cage

1 Grasp the back edge (callout 1) of the formatter-cage cover.

2 Pull the cover toward the back of the product, and remove it.

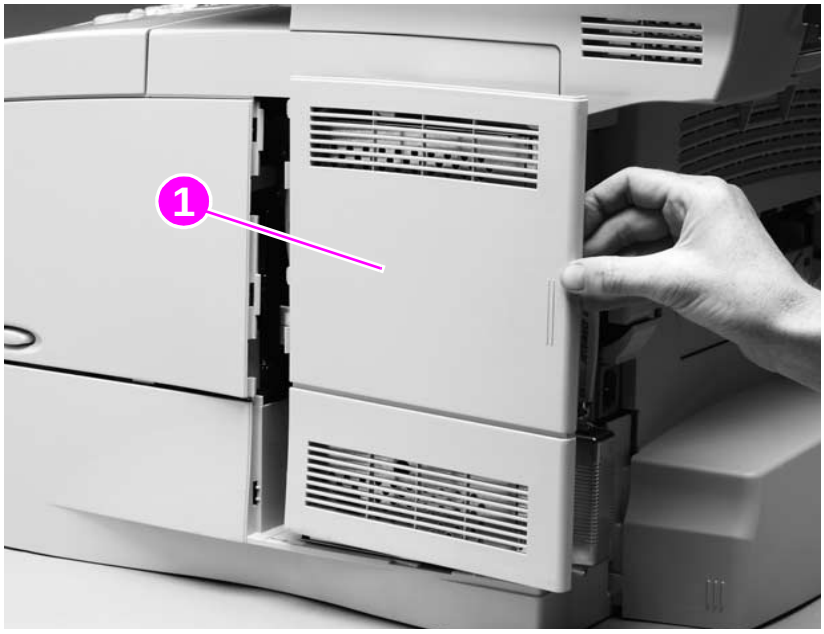

Figure 53. **Remove the formatter-cage cover**

3 Remove two screws (callout 2).

4 Slide the formatter cage toward the back of the product approximately 2.5 mm (1 inch), and locate the formatter end of the high-speed copy connect cable connector (callout 3).

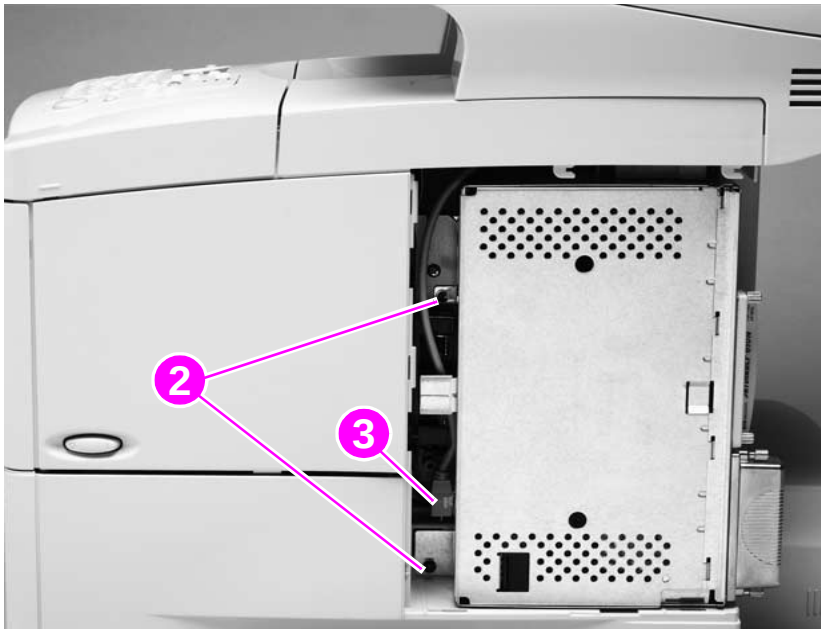

Figure 54. **Slide the formatter cage toward the back of the product**

5 Twist the formatter away from the right side of the product, and unplug the high-speed copy connect cable (callout 4).

6 Remove the formatter cage.

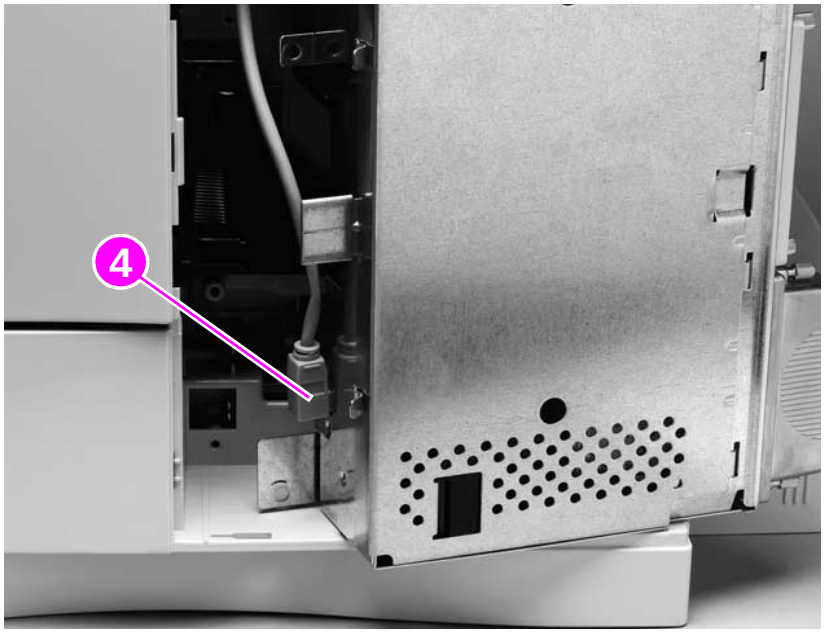

Figure 55. **Disconnect the formatter high-speed copy connect cable**

Note When replacing the formatter cage, align the back of the formatter cage with two large guide pins and then slide it forward

Scan unit

1 Remove the following covers and assemblies:

- ADF unit. See “ADF unit” on page 78.
- scan-unit right-side and left-side covers. See “Scan-unit right-side cover” on page 82 through “Scan-unit left-side cover” on page 84.
- formatter cage. See “Formatter cage” on page 87.

2 Secure the optical unit by sliding the lock to the closed position.

Figure 56. **Secure the optical unit**

3 Remove two screws from the CPB and slide the CPB out of the product approximately 2.5 mm (1 inch). It is not necessary to remove the CPB from the scan unit.

4 Disconnect the CPB cable (callout 1).

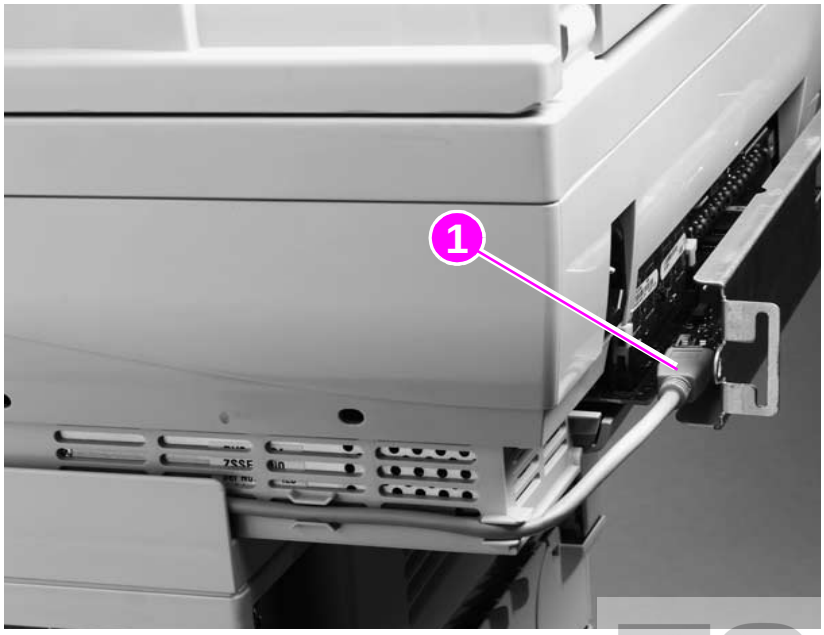

Figure 57. **Disconnect the CPB cable**

5 Disconnect the scan unit cable (callout 2) under the glass.

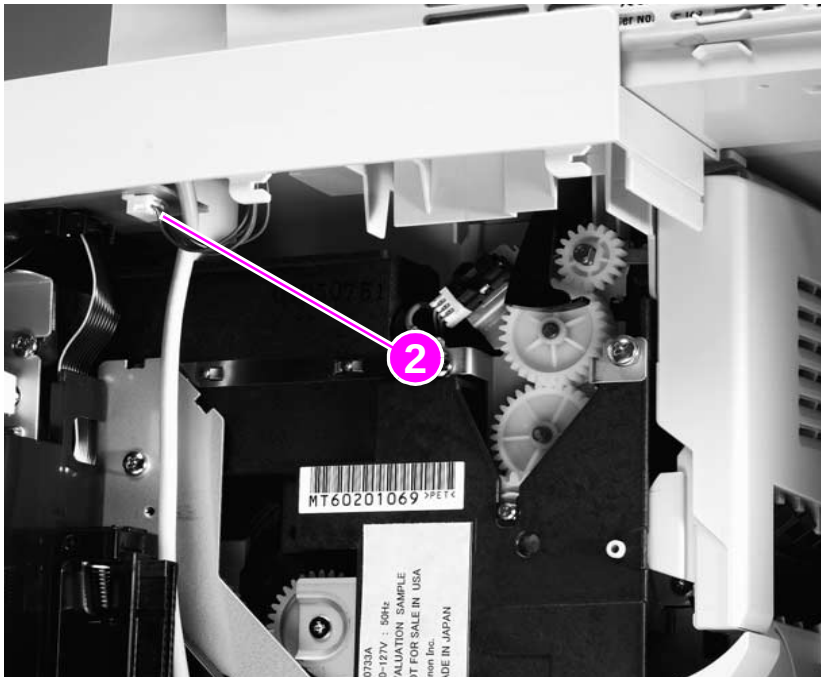

Figure 58. **Disconnect the scan unit cable**

6 Face the front of the product, and remove two screws (callout 3).

7 Slide the scan unit toward the back of the product, and remove it.

Figure 59. **Remove the scan unit**

Printing-unit top cover

1 Remove the scan unit. See “Scan unit” on page 89.

2 Open the rear output door.

3 Remove two screws (callout 1) from the back of the product.

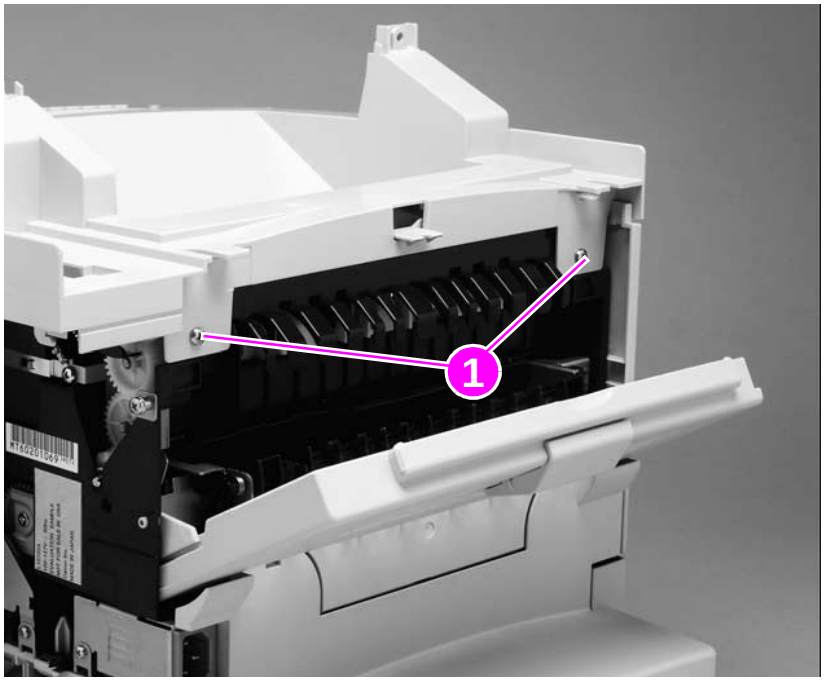

Figure 60. **Remove the top-cover rear-mounting screws**

4 Face the front of the product, and open the control-panel door.

5 Remove four screws (callout 2).

6 Lift the top cover off of the product.

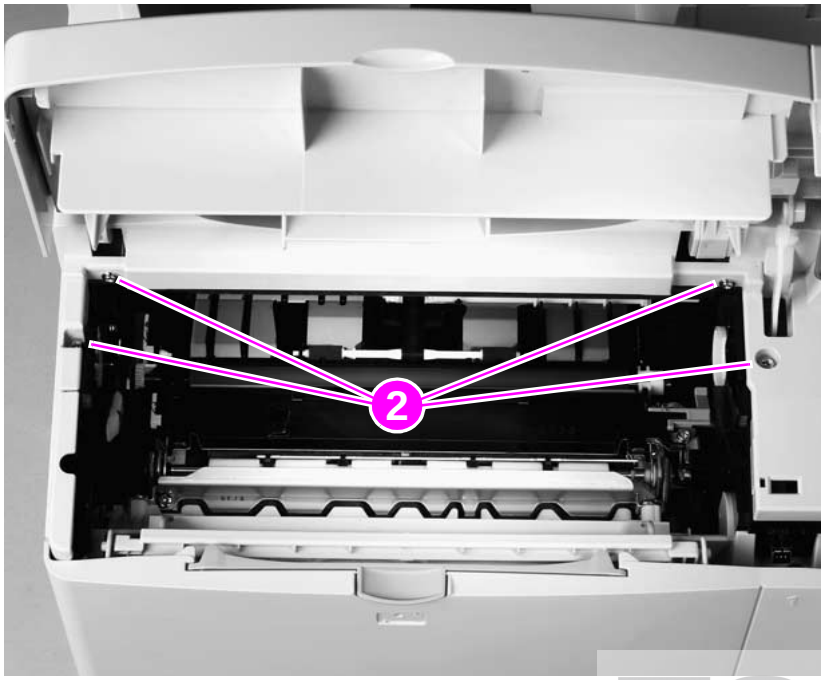

Figure 61. **Remove the printing-unit top cover**

Glass

Note It is not necessary to remove the scan unit from the print unit (as shown) to remove the glass.

1 Remove the ADF assembly. See "ADF unit" on page 78.

2 Remove three screws (callout 1).

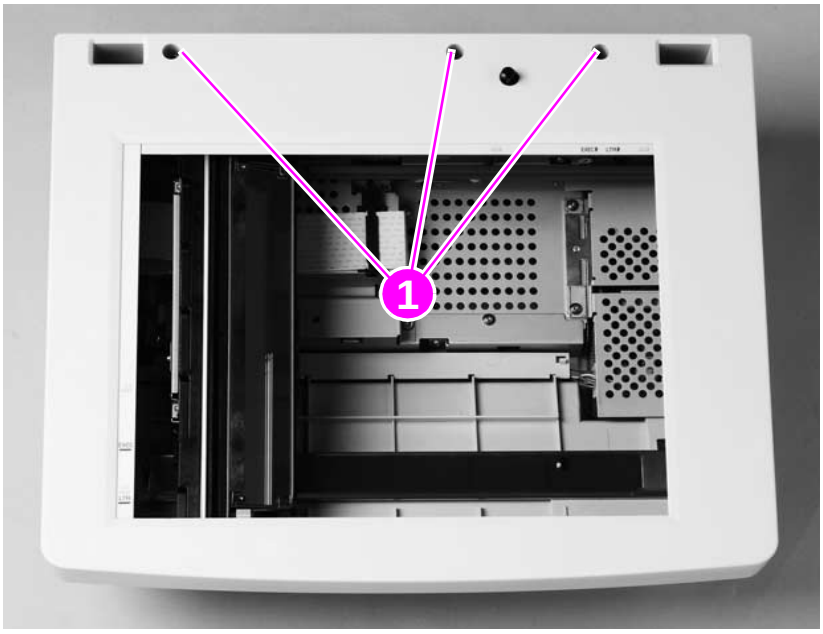

Figure 62. **Remove the glass mounting screws**

CAUTION Use caution, the thin plastic tab holders (callout 2) can bend or break. Avoid touching the glass. Fingerprints and skin oils can cause poor print quality.

3 Move the glass toward the front of the product until the three plastic tabs (callout 2) release. Lift the glass straight up, and remove it from the product.

4 After replacing the glass, calibrate the ADF/scan unit. See "Performing automatic Calibration" on page 47.

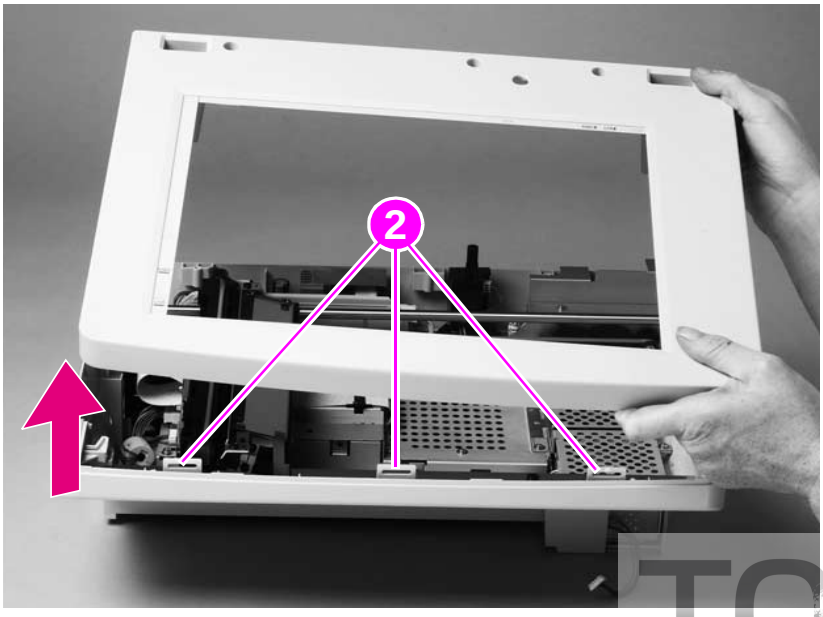

Figure 63. **Remove the glass**

Scanning lamp

1 Remove the glass. See “Glass” on page 92.

CAUTION Do not touch the lamp, because skin oils can create hot spots. Do not touch the mirror, because fingerprints will affect print quality.

2 Note the cable routing pattern, and examine the pink cable where it rests over the cable guide. Verify that the cable has a small black mark (callout 1). If not, make the mark yourself.

Note When replacing the scanning lamp, transfer the black mark onto the replacement bulb cable. Position the cable with this mark centered in the cable guide (callout 1). This ensures that the cable has sufficient length to allow the optical unit to move to its home position. Lay the cable flat in the cable trough. Verify that it is not twisted.

3 Disconnect the lamp connector (callout 2).

Note A torroid may be installed on the scanning lamp cable. If a torroid is installed, remove its single mounting screw before going on to the next step.

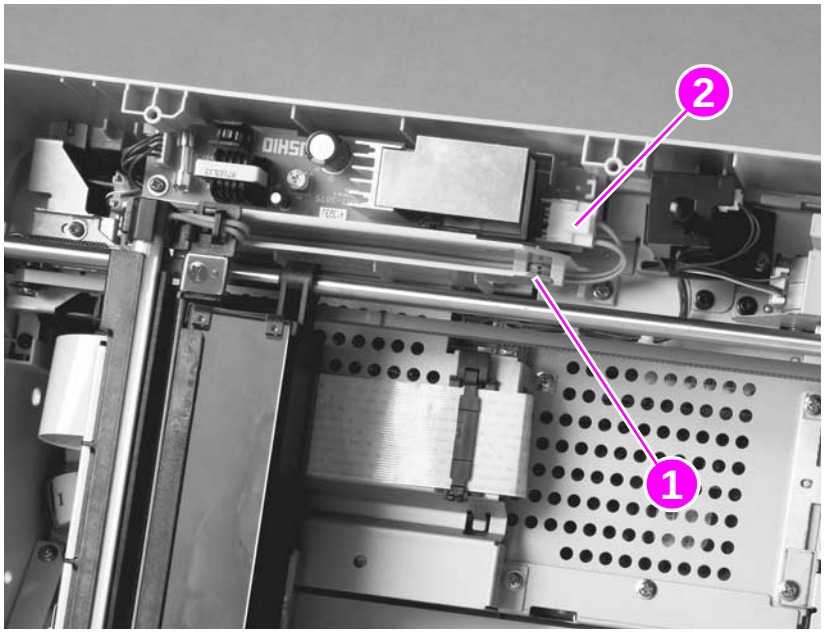

Figure 64. **Note the cable routing pattern**

4 Remove the cable from the cable guides and trough (callout 4).

5 Hold the black end (callout 5), and slide the lamp toward the back of the product (in the direction of the arrow).

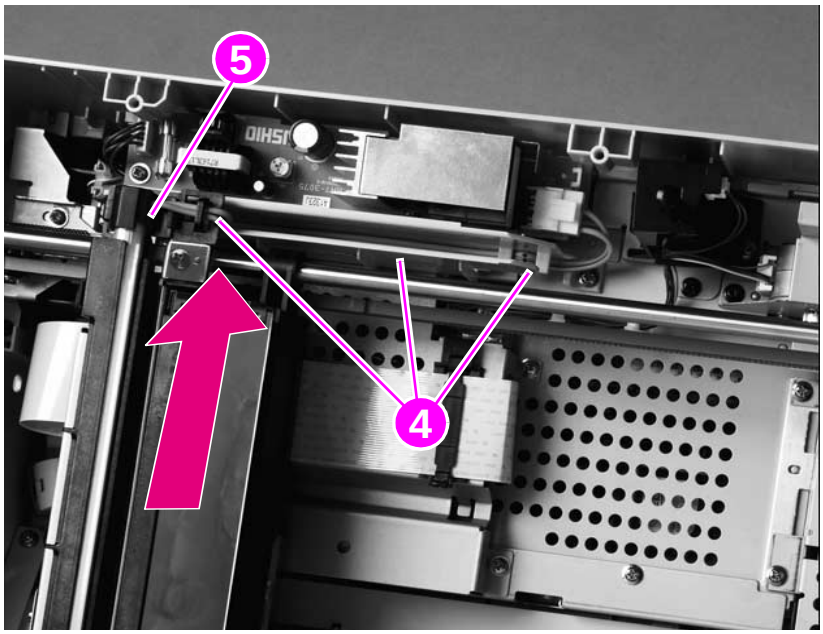

Figure 65. **Remove the scanning lamp**

CAUTION When installing the scanning lamp, the wire harness must be properly routed under the harness clips and flat through the harness trough to avoid interference with the optical unit as it moves in the scan unit.

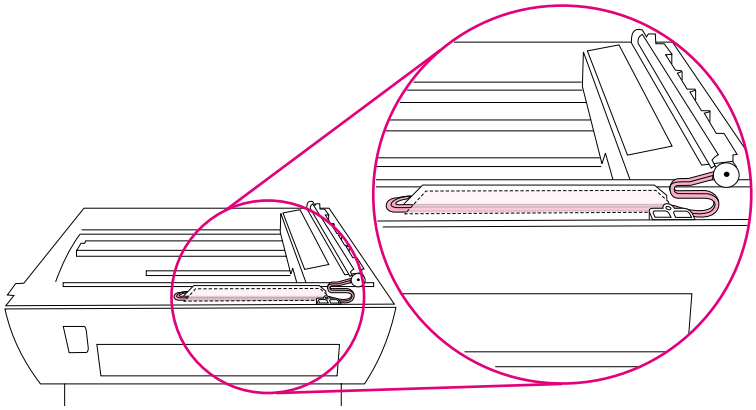

Figure 66. **Scanning-lamp wire harness routing**

Reinstall Note Anytime the glass is removed and replaced, calibrate the ADF/scan unit. See "Calibration" on page 47.

Optical unit

1 Remove the following assemblies:

- glass. See “Glass” on page 92
- scanning lamp. See “Scanning lamp” on page 93.

CAUTION Do not touch the mirror, because fingerprints will affect print quality.

CAUTION It is important to note the routing and placement of the optical-unit ribbon cable *before* removing it. Incorrect routing or placement when the cable is re-installed might cause damage to the cable or the optical unit. See figure 72 on page 97.

2 Open the cable clip (callout 1) and disconnect the scanner-carriage ribbon cable from the scanner controller PCB.

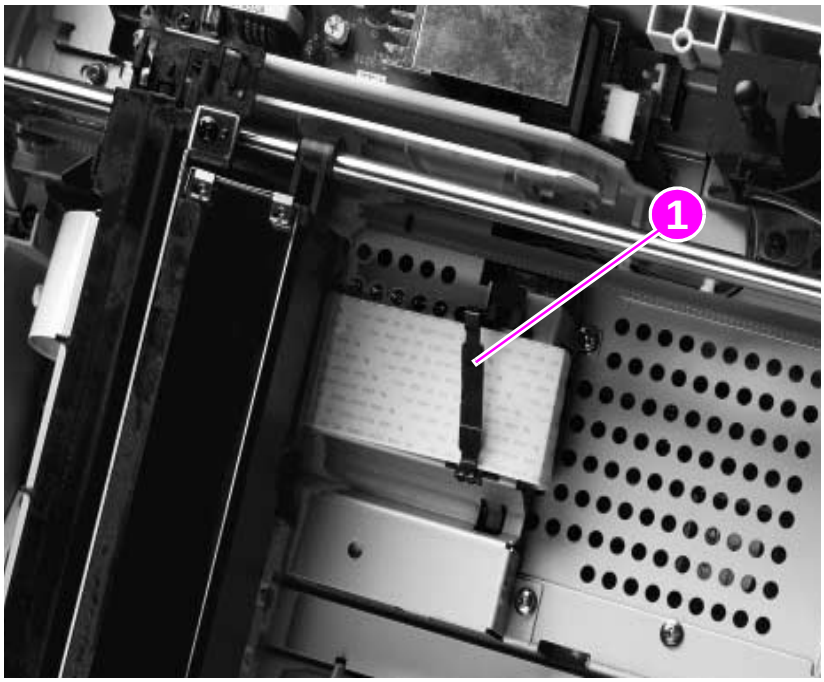

Figure 67. **Release the optical unit ribbon cable**

Hint Unsnap the clip arm from its hinge end (see figure 68) and remove it to prevent losing the clip arm during servicing. Take note of how the clip is hinged and how it is fastened before removing it.

Figure 68. **Optical-unit ribbon-cable clip**

3 Center the optical unit in the scan unit to allow access to the optical-unit drive-belt tension bracket (callout 2).

4 Loosen, but do not remove, the tension-spring bracket screw (callout 3) and swivel the bracket to release the tension on the drive-belt (callout 4). Slip both ends of the drive-belt off the drive and tension gears.

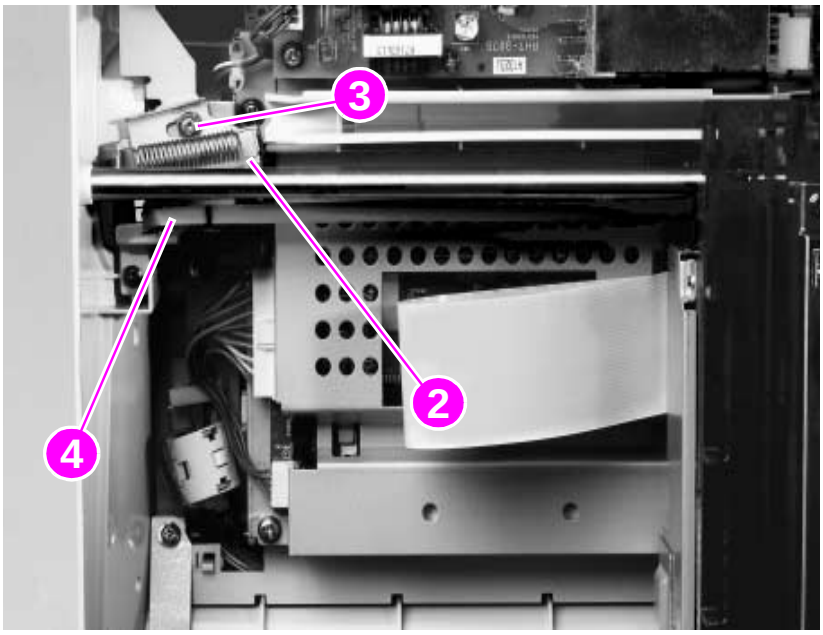

Figure 69. **Release the tension-spring bracket**

5 Lift the round rail up to remove it from two holders (callout 5), and remove the optical unit from the scan unit.

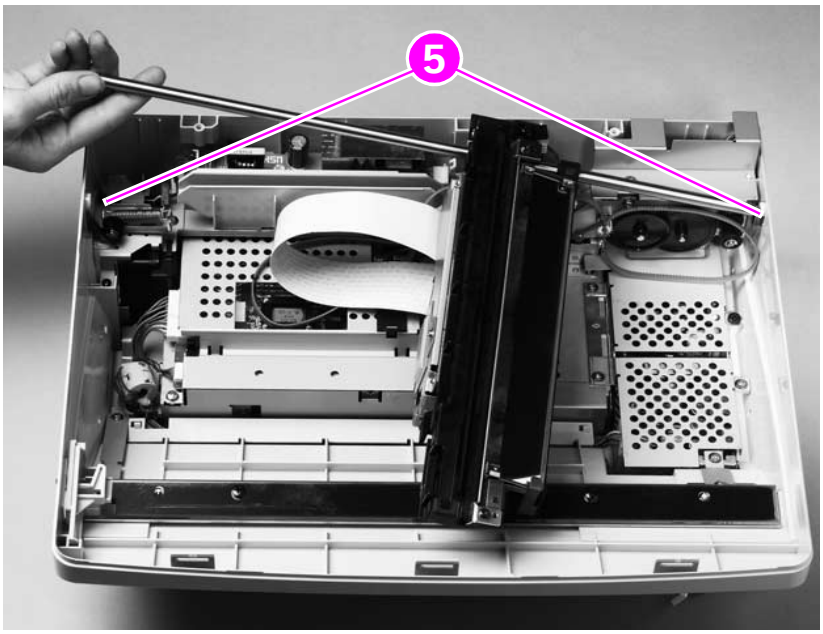

Figure 70. **Remove the optical unit**

Reinstall Note Anytime the glass is removed and replaced, calibrate the ADF/scan unit. See "Calibration" on page 47.

Reinstall Note With the optical unit installed, place the optical-unit drive-belt onto the drive and tension gears. Verify that the drive-belt teeth face inward and are engaged with the gear teeth.

Position the bracket with the locator pins in the provided holes on the bracket, and tighten the screw until it holds the bracket in place but still allows the bracket to move.

Verify that the bracket is correctly positioned on the locator pins, and fully tighten the screw.

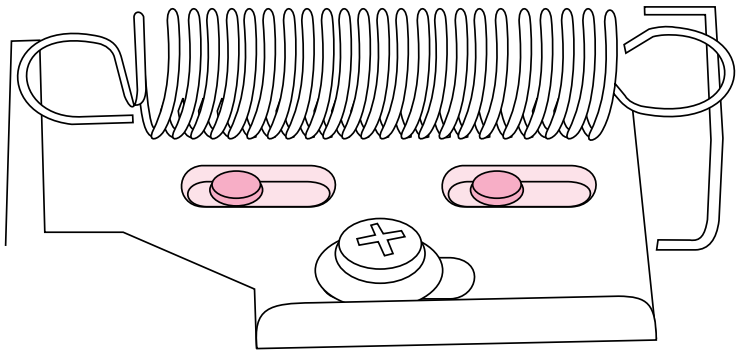

Figure 71. **Optical-unit drive-belt tension bracket**

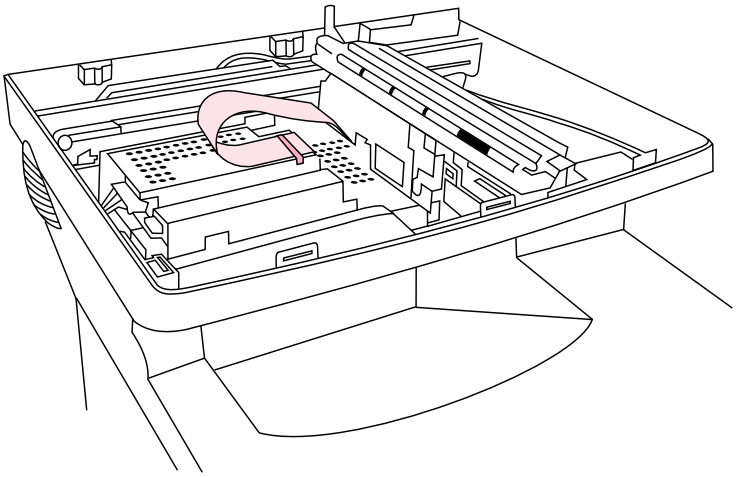

Figure 72. **Optical-unit ribbon cable**

CAUTION The optical-unit ribbon cable ***must*** be looped behind the optical head and secured with the ribbon-cable clip. Failure to correctly route or secure the ribbon cable might result in damage to the cable or the optical unit.

ADF door open sensor (PS10)

1 Remove the glass. See “Glass” on page 92.

2 Unplug one connector (callout 1).

3 Remove one screw (callout 2).

4 Lift the ADF door sensor up, and remove it from the product.

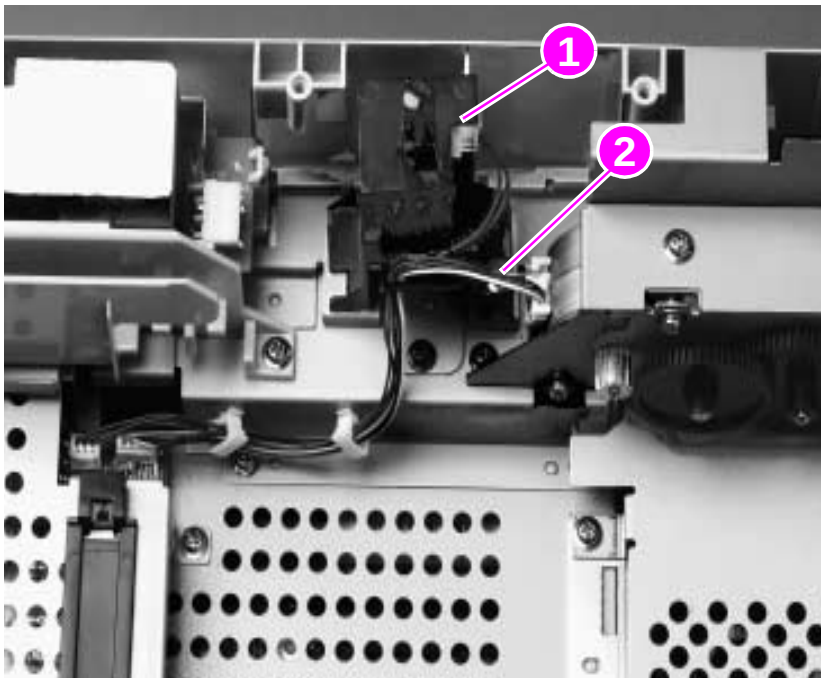

Figure 73. **Remove the ADF door open sensor**

Reinstall Note

When replacing the glass, verify that the sensor switch pin freely moves in the hole through the glass mounting frame.

Anytime the glass is removed and replaced, calibrate the ADF/scan unit. See “Calibration” on page 47.

Optical-unit drive gear/motor assembly

1 Remove the following assemblies:

- glass. See “Glass” on page 92.
- optical unit. See “Optical unit” on page 95.

2 Release the motor cable (callout 1) from the wire lance on the interlock switch, and from the two wire-harness retainers (callout 2).

3 Unplug the connector (callout 3) from the scanner controller PCB.

4 Remove one screw (callout 4) and the cover plate.

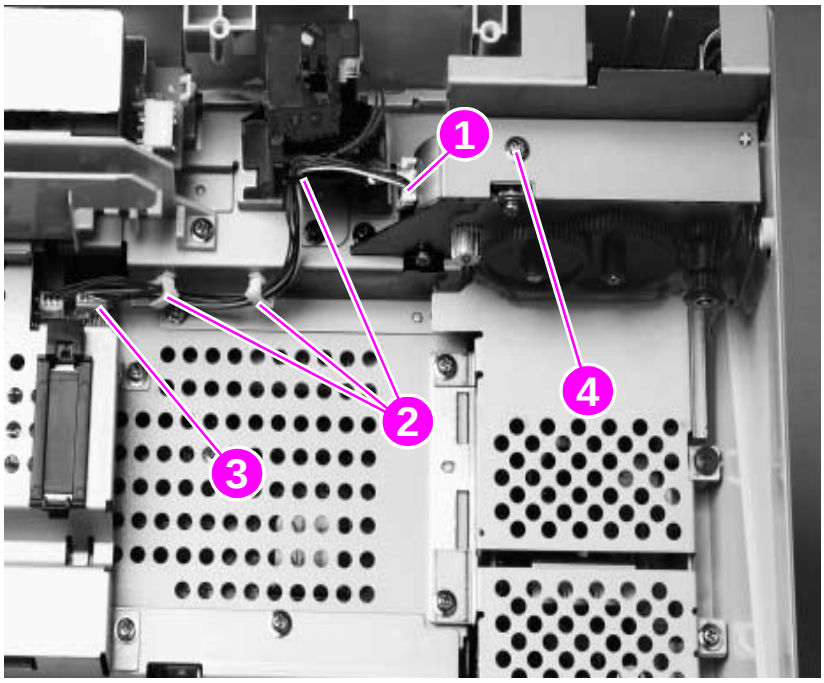

Figure 74. **Remove the optical-unit cover plate**

5 Remove two screws (callout 5).

6 Lift the optical-unit drive gear/motor assembly (callout 6) up, and remove it from the product.

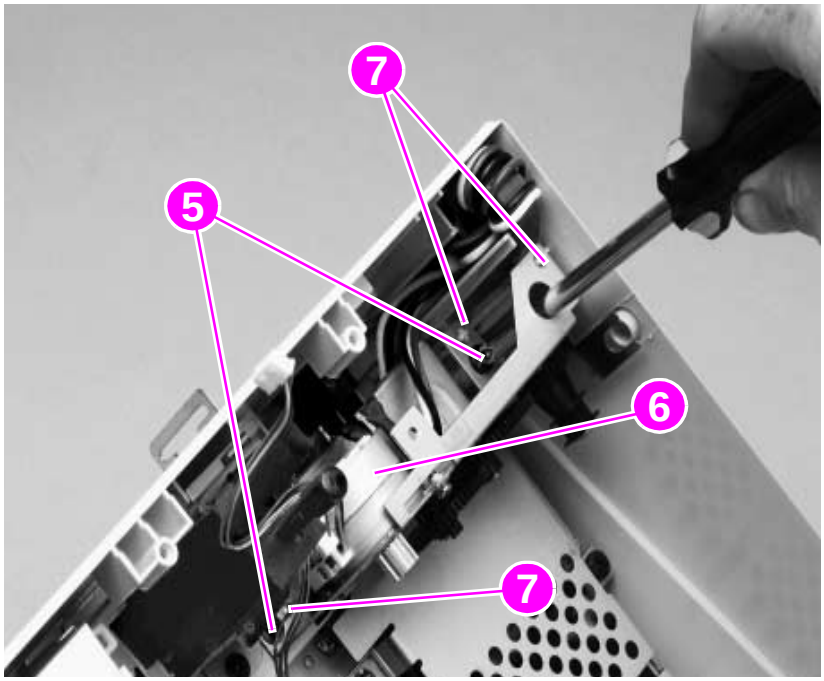

Figure 75. **Remove the optical-unit drive gear/motor assembly**

Note When replacing the gear/motor assembly, align the assembly on the three locator pins (callout 7).

Reinstall Note Anytime the glass is removed and replaced, calibrate the ADF/scan unit. See "Calibration" on page 47.

Scan-unit power supply

1 Remove the following assemblies:

- glass. See “Glass” on page 92.
- optical unit. See “Optical unit” on page 95.
- optical-unit drive gear/motor assembly. See “Optical-unit drive gear/motor assembly” on page 99.

CAUTION The product contains components that are sensitive to electrostatic discharge (ESD). Always perform service work at an ESD-protected workstation. If an ESD-protected workstation is not available, discharge body static by grasping the print engine chassis before touching an ESD sensitive component. Ground the print engine chassis *before* servicing the product.

2 Remove three screws and the power-supply shield (callout 1).

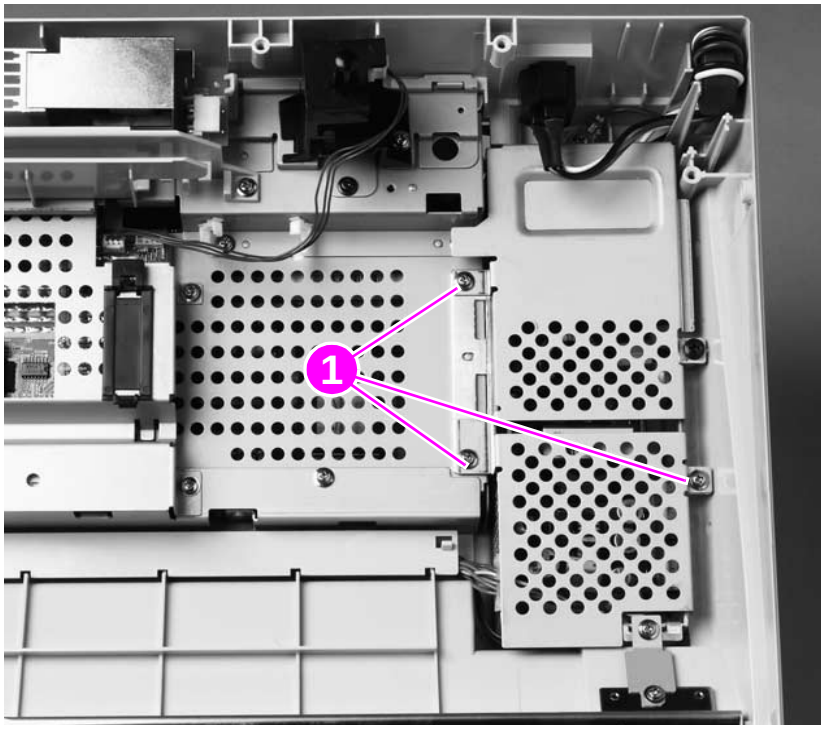

Figure 76. **Remove the power-supply shield**

3 Unplug two connectors (callout 2), and remove them from the plastic harness retainers on the power-supply chassis.

4 Remove two screws (callout 3).

5 Remove one ground-clip screw (callout 4).

6 Lift the power supply up, and remove it from the scan unit.

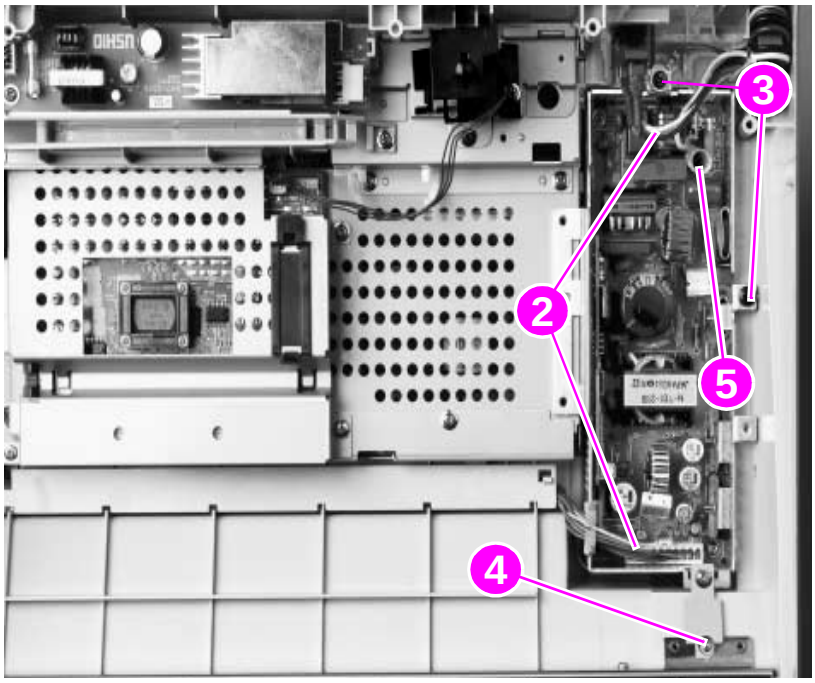

Figure 77. **Remove the power supply**

CAUTION When replacing the power supply, do not pinch wires when installing the shield. If the replacement power supply does not come with a grounding clip (callout 4), remove the clip from the failed power supply and install it on the replacement unit.

CAUTION When replacing the power supply, verify that the heat-resistant veristor cover (callout 5) is securely in place.

Reinstall Note Anytime the glass is removed and replaced, calibrate the ADF/scan unit. See "Calibration" on page 47.

Inverter PCB

1 Remove the glass. See “Glass” on page 92.

CAUTION The product contains components that are sensitive to electrostatic discharge (ESD). Always perform service work at an ESD-protected workstation. If an ESD-protected workstation is not available, discharge body static by grasping the print engine chassis before touching an ESD sensitive component. Ground the print engine chassis *before* servicing the product.

Hint The inverter PCB is fuse-protected (callout 1). Before replacing the inverter PCB, verify that the fuse is not open. The inverter PCB will not function if the fuse is open.

1 Remove one screw (callout 2).

2 Unplug one connector (callout 3).

3 Unfasten the clip (callout 4).

4 Lift the inverter PCB up, and remove it from the scan unit.

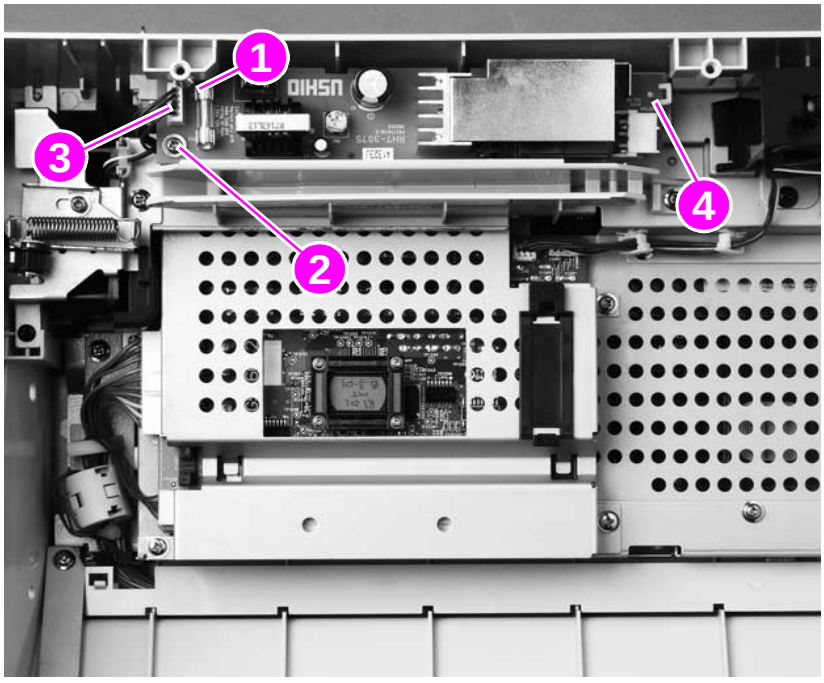

Figure 78. **Remove the inverter PCB**

Reinstall Note Anytime the glass is removed and replaced, calibrate the ADF/scan unit. See “Calibration” on page 47.

Scanner controller PCB

1 Remove the following assemblies:

- copy processor board (CPB). See “Copy processor board” on page 83.
- glass. See “Glass” on page 92
- optical unit. See “Optical unit” on page 95.
- inverter PCB. See “Inverter PCB” on page 103.

CAUTION The product contains components that are sensitive to electrostatic discharge (ESD). Always perform service work at an ESD-protected workstation. If an ESD-protected workstation is not available, discharge body static by grasping the print engine chassis before touching an ESD sensitive component. Ground the print engine chassis *before* servicing the product.

2 Unplug six connectors (callout 1) (four are shown; two more are located along the rear edge of the PCB and can be reached through the opening created when the copy processor board is removed).

3 Remove four screws (callout 2).

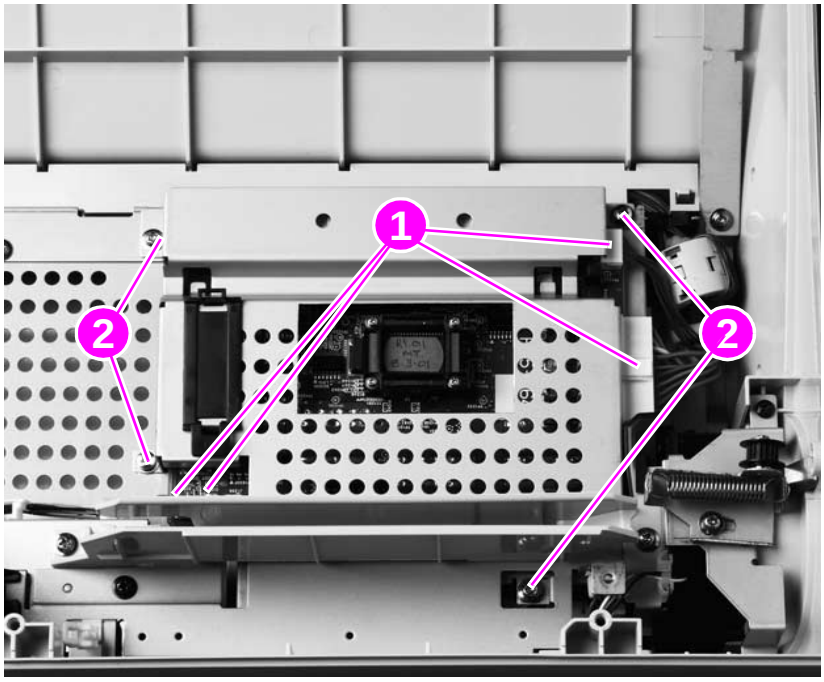

Figure 79. **Unplug the connectors**

4 Reach through the copy processor board cavity, and grasp the scanner controller PCB.

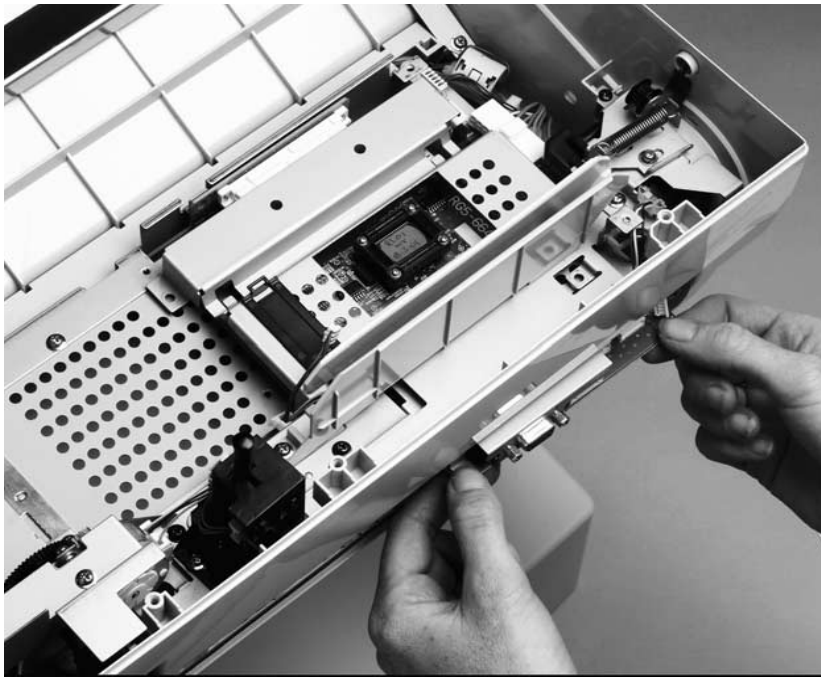

Figure 80. **Grasp the scanner controller PCB**

5 Slide the scanner controller away from the product to disconnect it. Then, tilt it upward, and lift it out of the scan unit.

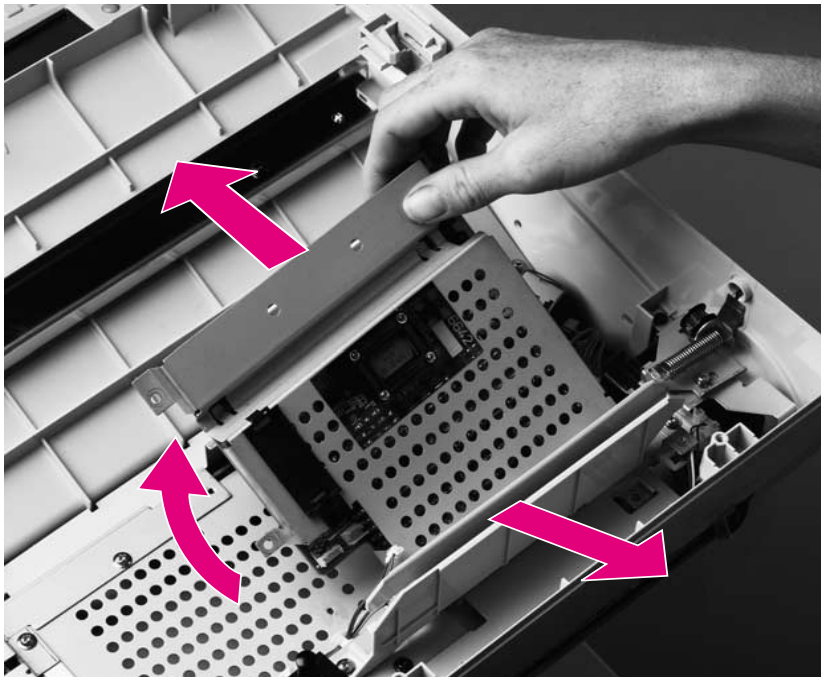

Figure 81. **Remove the scanner controller**

WARNING! Do not bend or force the scanner controller PCB 40-pin connector. Before you seat the 40-pin connector, align the scanner controller PCB and verify that the connector pins are aligned.

Reinstall Note Anytime the glass is removed and replaced, calibrate the ADF/scan unit. See "Calibration" on page 47.

Intake fan

1 Remove the following assemblies:

- copy processor board (CPB). See “Copy processor board” on page 83.
- glass. See “Glass” on page 92.
- optical unit. See “Optical unit” on page 95.

2 Unplug the fan connector from the scanner controller PCB (the 3-pin connector is located along the rear edge of the PCB and can be reached through the opening created when the copy processor board was removed).

3 Remove three screws (callout 1).

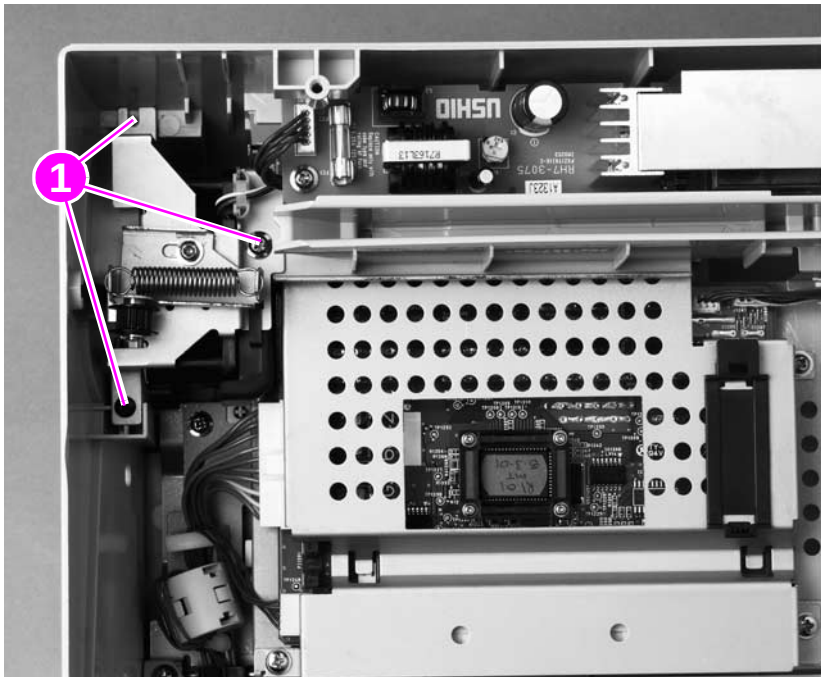

Figure 82. **Remove the fan mounting screws**

4 Disconnect the 10-pin scanner controller PCB connector (callout 2) to provide access to the fan air duct (callout 3). Use care when removing the fan air duct (callout 3) to prevent bending or breaking its locking tab.

5 Carefully lift the fan air duct locking tab (callout 3) and slide the fan shield away (as indicated by the arrow) from the fan, and then remove it.

6 Pry the top of the grounding strip (callout 4) out of the optical-unit-rail mounting hole.

7 Remove the wire harness from the retainer (callout 5) and pull the wire harness into the scan unit. Lift the fan straight up, and remove it from the scan unit.

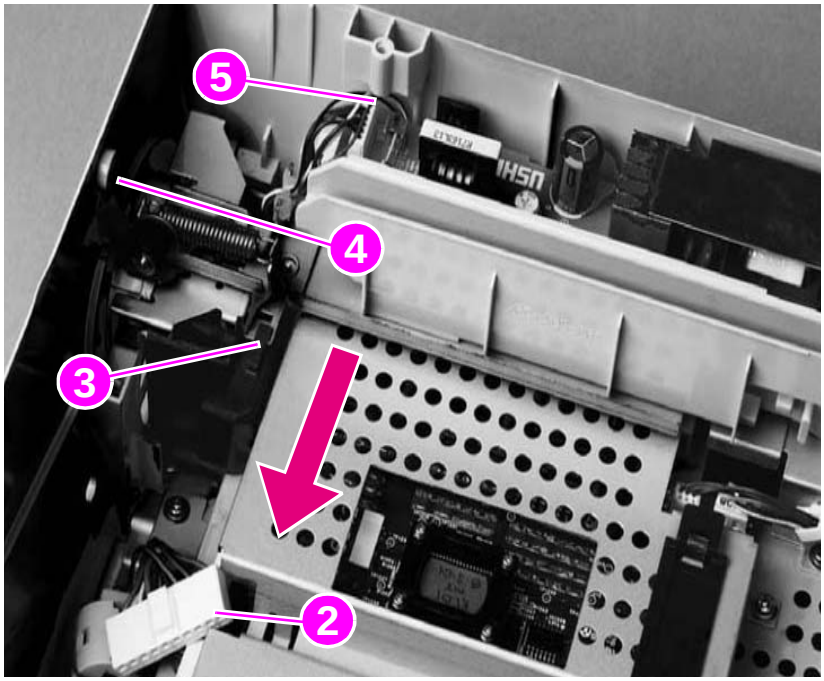

Figure 83. **Remove the intake fan**

CAUTION The fan must draw air into the scan unit. Failure to correctly position the fan can result in damage to MFP components. Verify that the airflow arrow (located under the drive-belt tension bracket) embossed on the fan housing points into the scan unit. Verify that the optic-unit drive belt tension bracket (which sits on top of the fan) seats into the slot provided. See figure 84 on page 107.

Reinstall Note Anytime the glass is removed and replaced, calibrate the ADF/scan unit. See "Calibration" on page 47.

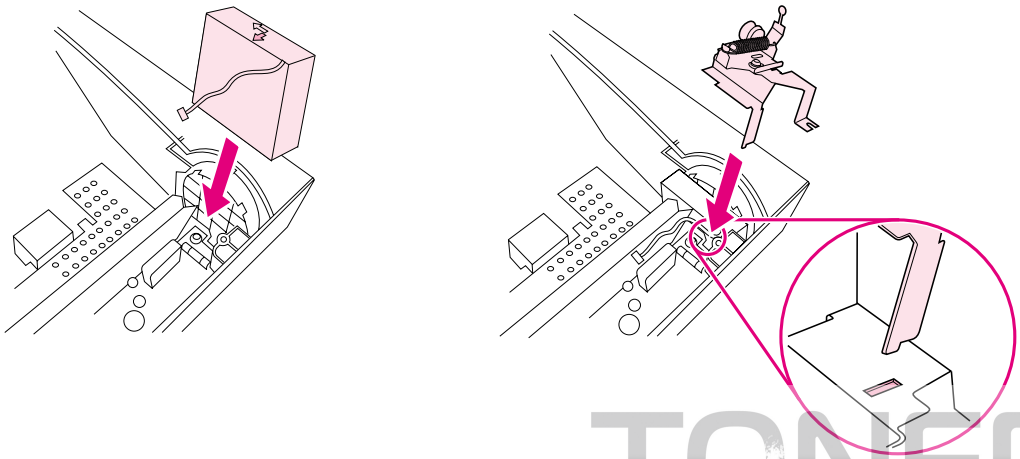

Figure 84. **Correctly orient the intake fan and bracket**

7 Troubleshooting

Troubleshooting process

The troubleshooting process is a systematic approach that addresses the primary problems first, and then other problems, to discover the causes for MFP malfunctions and errors. The "Basic troubleshooting process flow" on page 113 illustrates the primary steps for troubleshooting. An answer to a troubleshooting question allows troubleshooting to proceed to the next primary step.

When answers indicate that additional testing and correction is needed, go to the appropriate section in this chapter and follow the directions there. After completing the additional testing and correcting the problem, proceed to the next primary step.

Note Always follow this process in sequence. Failure to do so can result in increased repair time, difficulty, and expense.

Hint If a remote firmware update installation fails, see "RFU installation error messages" on page 44 and/or "Firmware-update event-log errors" on page 119.

This list describes the basic questions to answer and provides the corresponding troubleshooting sections that define the problem(s).

Table 14. Primary steps for troubleshooting

"Basic troubleshooting" on page 114	Does the MFP perform the initialization and power-on sequence? This table contains the procedures for basic MFP troubleshooting.
"Control-panel messages" on page 120	Does the control panel display an error condition? This table contains the procedures for clearing control-panel messages.
"ADF paper-path test" on page 126	Is it possible to perform a paper-path test? This section contains information about troubleshooting paper-path and print-media problems.
"Evaluate the information pages" on page 130	Does information in the event log explain the problem? This section contains the procedures for printing the information pages and evaluating and correcting printer configuration.
"Image-formation troubleshooting" on page 136 "EconoMode" on page 137	Does the print quality meet customer expectations? This section contains print cartridge checks, information about EconoMode, and image-defect examples.
"Media troubleshooting" on page 140	Is the media in use acceptable for this MFP? This section contains information about how to determine print-media problems and correct them.

Preliminary operating checks

Verify that the conditions in the following lists are met before troubleshooting a specific MFP problem.

Installation conditions

- The MFP is plugged in, and specified power is delivered.

Hint The print unit and the scan unit have separate power cords and power receptacles. Verify that both of these cords are correctly installed and that the print unit's power cord is connected to a working power receptacle. See "Back view" on page 21.

- The MFP receives maintenance on a regular basis. See "Cleaning the product" on page 36.
- The MFP is positioned on a solid, level surface.
- The MFP is not exposed to direct sunlight.
- The print unit is never exposed to ammonia fumes. See "General guidelines" on page 36.
- The customer is using acceptable print media. See the HP LaserJet 4100 series printer service manual for printing specifications, or see the *Print Media Guide* for the HP LaserJet printer family for general requirements.
- The scanner-carriage lock is in the unlocked position. See "Front view" on page 20.
- The cable from the ADF is securely fastened to the connector on the scanner-controller assembly. See "Back view" on page 21.
- The line voltage does not vary more than 10 percent from the nominal rated value specified on the power-rating label. See the HP LaserJet 4100 series printer service manual for environmental specifications.
- The operating environment for the MFP is within the temperature and humidity specifications. See the HP LaserJet 4100 series printer service manual for environmental specifications.
- Non-HP components (such as refilled print cartridges, font DIMMs, and memory DIMMs) are removed from the MFP.

Note Sudden changes in MFP environment can cause image defects and media-handling problems. Make sure the MFP is not exposed to direct sunlight or to heating or cooling vents. Allow time for the MFP and media to acclimate whenever changing environments (for example, moving from a cold environment to a warm one). Acclimation can take anywhere from 3 to 24 hours depending on the ambient conditions.

Media condition

- The selected tray is properly loaded with media and the sliding media guides are adjusted correctly.
- The selected tray is not overfilled with media.
- The media is not damp.
- The media is not dirty.

Unit condition

- Verify that The HP LaserJet 4100mfp is not in a paused print-job state (if the unit is in a paused state, the READY LED is not illuminated and the message PAUSED appears on the control-panel display; see the Hint on page 30).
- Verify that the HP LaserJet 4100mfp is not in PowerSave mode.
- Verify that the ADF cover is closed.

Basic troubleshooting process flow

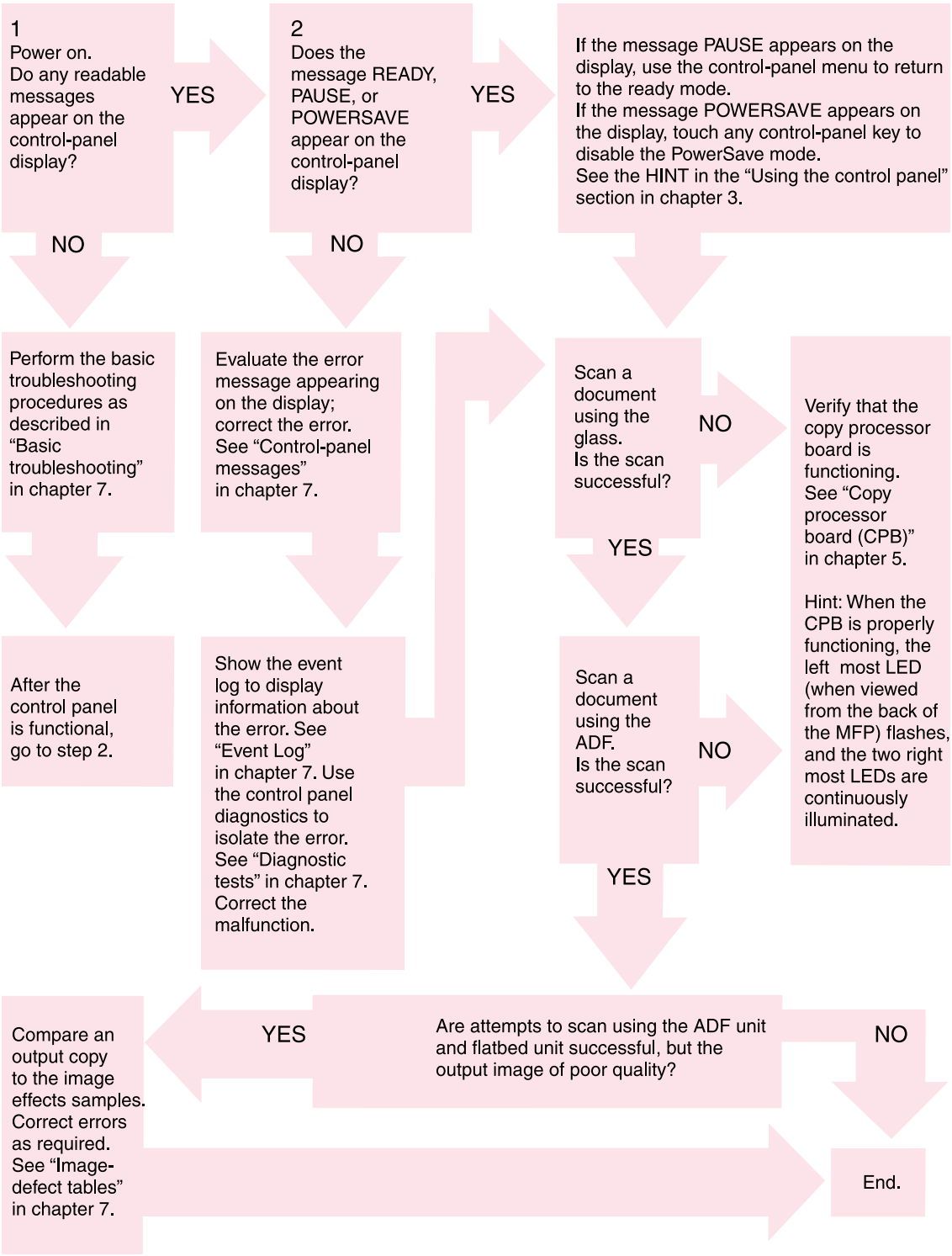

Figure 85. **Basic troubleshooting flowchart**

Basic troubleshooting

Verify that the conditions in the following lists are met before troubleshooting a specific MFP problem.

Table 15. Basic troubleshooting

#	Verification steps	Possible problems	Solutions
1	Is Power On successful? When power is turned on the following events take place: • The flatbed and printing-unit fans start operating. • The control panel illuminates and the initialization screens appear. • The CPB LEDs illuminate. • The optical unit moves to the home position and the scanning lamp illuminates for about 3 seconds.	No power.	1. Verify that the product is plugged in. 2. Verify that the power cable is functional and that the power switch is on. 3. Verify that the power cord between the print unit and the scan unit is correctly installed and fully seated at both ends. See "Back view" on page 21. 4. Perform a print-engine test (see the HP 4100 series printer service manual for more information). 5. Perform the power-on checks as instructed in the HP 4100 series printer service manual.
2	Is the product ready? The control panel should function without error messages and the READY LED should be illuminated.	The control panel displays an error.	Consult the list of common messages in this chapter. See "Control-panel messages" on page 120.
		The control panel is not functional, the display is blank, or garbled text appears on the display.	Verify that the power cord is properly plugged into its receptacle on the flatbed unit. See "Back view" on page 21. Verify the control panel cable is full seated at scanner controller board location J1210. See "Scanner controller board connectors" on page 62. Verify the connector at the other end of this cable is fully seated. See "Disconnect the scan unit cable" on page 90. Verify that the control panel cable is fully seated in it connector on the control panel door. See "Release the control-panel door-support pins" on page 80. Verify that no power-on defect exists. See "Power malfunctions" on page 116. Reseat the firmware and memory DIMMS. See "Copy processor board" on page 57. Verify any optional devices (for example a duplex accessory) are correctly installed. Replace the control panel. See "Control-panel door" on page 79.
3	Do information pages print? Print a configuration page. The configuration page should print without paper-feed problems or print-quality defects.	The control panel displays an error message.	Consult the list of common messages in this chapter. See "Control-panel messages" on page 120.
		Media does not move smoothly through the flatbed paper path.	Isolate the media problem. See "Media troubleshooting" on page 140 and "Jam troubleshooting" on page 128.
		Poor print quality.	See "Image-formation troubleshooting" on page 136.

Table 15. Basic troubleshooting (continued)

#	Verification steps	Possible problems	Solutions
4	Is the copy function operational? Place the configuration page into the ADF input and copy it. The page should feed smoothly through the flatbed path and copies should print without print-quality problems. Copy first from the glass and then from the ADF to determine if the problem is with the print unit or the scan unit.	Poor copy quality.	See "Image-formation troubleshooting" on page 136.
		Print quality is acceptable but the image is not properly registered on the page.	Calibrate the flatbed. See "Calibration" on page 47.
		Media does not move smoothly through the ADF paper path.	Isolate the media problem. See "Media troubleshooting" on page 140 and "ADF paper-path test" on page 126.

Power-on defects

Table 16. Power malfunctions

Item	Solution
ADF unit or scan unit does not function.	• Print a print-engine test (see the HP LaserJet 4100 series printer service manual for more information). This helps to isolate the power malfunction to the print unit or the scan unit. • Verify that the power connector from the print unit to the scan unit is correctly plugged in at both ends. See "Back view" on page 21. • Verify that the flatbed intake fan is functioning (the unit is receiving power). If the fan is not functioning, verify that the connectors at J1203 (scanner controller PCB) and J1201 (power supply) are correctly connected and fully seated. • Check for frayed, pinched, or damaged wires. • Verify that the flatbed power supply is functioning.
Printer is functioning (power on, fans running, and so forth) but the control-panel display is blank or displays garbled text.	• Verify that the control-panel cable connector location J1210 on the scanner controller PCB is correctly connected and fully seated. • Verify that the control-panel wire harness is correctly connected to the control-panel door (located behind the control-panel grounding strip). See "Control-panel door" on page 79. • Verify that the power supply in the flatbed unit is functioning. • Check for frayed, pinched, or damaged wires. • Replace the control panel.
Hint The control panel gets its power from the power supply in the scan unit, not the power supply in the print unit.	
No ac power.	
Defective power-supply unit.	• Verify that the power-supply fuse is not blown (power-supply PCB location F101). • Verify that all power-supply connectors are fully seated. • Replace the power supply. See "Scan-unit power supply" on page 101.
No dc power.	
No ac power is supplied.	• Check for ac power.
The overcurrent/overvoltage detection circuit is activated.	• Turn off the MFP and then turn it back on. If the problem persists, find the cause of the overcurrent/ overvoltage on the load side of the power-supply circuits. See "Power supply" on page 63. **Note** Leave the MFP off for two minutes.
Defective wiring, dc loads, or scanner controller PCB.	• Turn off the power switch. Check the wiring ahead of the scanner controller PCB and check the dc loads. If you discover the problem, replace the wiring and dc loads. If no problem exists on the wiring or dc loads, replace the scanner controller PCB. See "Power supply" on page 63.

Troubleshooting with the control panel

The tables in this section explain common messages that might appear on the control-panel display.

Within each table, the messages and their meanings are listed in alphabetical order, with numbered messages listed at the end of the tables.

Control-panel display

The control panel should display READY, PAUSED, or POWERSAVE ON. For information about error messages that appear, see the event log. If the control panel is blank or garbled, see "Power-on defects" on page 116.

Hint If the control-panel messages are in a language other than the one the user wants, use the menu map (see "Menu map" on page 33) and the navigation buttons (see "Navigation" on page 31) to enter the configure device system setup submenu. Scroll down to the language options and select the appropriate language.

Event log

Use the event log to diagnose and troubleshoot MFP errors and intermittent failures. You can either print or display the event log from the control panel. (Select Print Event Log or Show Event Log.)

The event log records up to 50 entries, with the most recent entry at the top of the list. When recording entries after 50, the oldest entry (found at the bottom of the list) is dropped off the list to make room for the most recent entry. The printed event log is printed in four columns, showing event number, page count, error code, and description or personality.

The description or personality gives detail to the error messages. The information is useful for troubleshooting.

Items that should be logged in the event log include the following:

- critical errors
- jams
- sensors sensing out of range
- deleted jobs
- unexpected paper size
- complex page
- buffer overflow
- NVRAM changes
- any diagnostics tests

Print the event log

The MFP internal event log stores the 50 most recent events, and can be printed at any time. To print the event log:

1. Using the navigation buttons, open the menu.
2. Select DIAGNOSTICS.
3. Select PRINT EVENT LOG.
4. Press the SELECT (✓) button.
5. The control panel displays Printing event log and the event log is printed.

Interpret the event log

Each individual entry in the log is called an error, while all errors that occur at the same page count are called an event. Events usually conclude with a time-out or no response from the device (error `66.xy` in the event log).

Use the event log tables in this section to associate errors in the event log with the control-panel error message.

1. Check the event log for specific error trends in the last 10,000 printed pages.
2. Ask the customer for any observed error trends. (For example, do jams tend to occur in a specific area of the MFP?)
3. Record any specific error trends.
4. See "Control-panel messages" on page 120 and follow the recommended action.

HP LaserJet 4100mfp series

event log page 1

Current Page Count: 38 Serial Number: XXXXXXXXXX

Number	Event	Page Count	Description or Personality
15	49 4C02	38	
14	68 3D0A	32	
13	68 8101	32	68.? PERMANENT STORAGE ERROR
12	68 3D09	32	
11	68 8001	32	68.? PERMANENT STORAGE ERROR
10	68 3D0A	23	
9	68 8101	23	68.? PERMANENT STORAGE ERROR
8	68 3D02	23	
7	68 1101	23	
6	68 8001	23	68.? PERMANENT STORAGE ERROR
5	68 3D02	19	
4	68 1101	19	
3	68 8001	19	68.? PERMANENT STORAGE ERROR
2	68 3D0A	5	
1	68 8101	5	68.? PERMANENT STORAGE ERROR

Figure 86. **Sample MFP event-log page**

Display the event log

The displayed event log allows the customer to scroll through the contents of the event log from the control panel. Select this to display the 50 most recent events, with the most recent first. Use the navigation buttons to scroll through the event log contents. If the event log is empty, the control panel will display `Event Log Is Empty`.

Note If an error occurs when upgrading MFP firmware, the error codes in table 17 on page 119 are entered into the event log. An error message *does not* appear on the control-panel display.

Follow these steps to display the event log:

1. Press the MENU button.
2. Select `DIAGNOSTICS`.
3. Select `SHOW EVENT LOG`.
4. The event log appears.

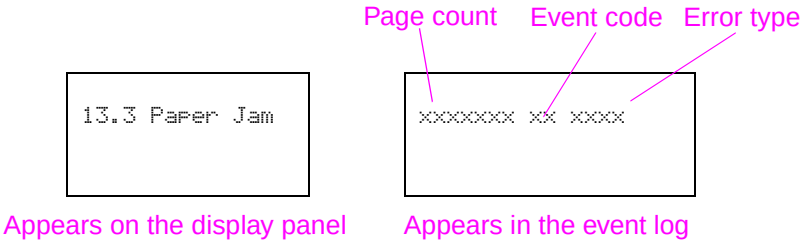

Figure 87. **Control-panel display of the event log**

Hint Whenever a `13.xx` jam message appears on the control panel, a good practice is to clear the jammed paper from the MFP, press STOP to stop printing, and print the event log. Even if you cannot print the event log, you can display it on the control panel.

Table 17. Firmware-update event-log errors

Event-log display	Explanation	Recommended action
`99.01.00`	The cyclical redundancy code (CRC) value in the incoming upgrade is different from that stored in MFP memory. The buffered firmware image is discarded.	1. Verify that you are using the correct firmware upgrade version and try upgrading the firmware again.
`99.02.00`	The input/output connection was disrupted during the firmware upgrade.	1. Verify that the copy processor board is firmly seated in its connector. 2. Verify that the formatter is firmly seated in its connector. 2. Verify that the high-speed copy connect cable is firmly connected at both ends.
`99.03.00`	The firmware image being written to the hard-drive disk does not match the image stored in the MFP's memory.	1. Verify that you are using the correct firmware upgrade version and try upgrading the firmware again.

Control-panel messages

Be sure to read the exact text of the control-panel message, including the error message number (not all error messages display an error number) and the text, in order to locate the error message in the tables. The control panel for this MFP stores enhanced information.

Not all possible error messages that can appear on the control-panel display are listed in table 18 on page 120. If a message appears that is not in this table see the HP LaserJet 4100 series printer service manual for more information about control-panel messages.

The messages displayed on the control panel provide six categories of information. Each message category is assigned a priority. If two or more conditions occur at the same time, the highest priority message appears. When it has been cleared, the next priority message appears, and so on. The displayed messages and their priorities are:

- **Status messages**—Status messages communicate the current state of the MFP to the operator.
- **Warning messages**—Warnings are messages that are important enough that the user must acknowledge them, but not serious enough to make the MFP stop the printing process.
- **Error messages**—Error messages communicate to the operator that some action must be performed, such as adding paper or clearing a jam.
- **Critical error messages**—Critical error messages communicate MFP failures to the operator.

Hint If the control panel display is blank or messages appear garbled, see "Basic troubleshooting" on page 114.

Table 18. Control-panel error messages

Message	Explanation	Recommended action
ADF Pick Error	Too many pages have been placed in the ADF. The ADF separation pad or roller is dirty, damaged, or not properly installed.	1. Remove some of the pages and try the operation again. If necessary, open the ADF cover and remove any jammed media, and then close the ADF cover. 2. Verify that the document-detect-sensor (PS2) and leading-edge-sensor (PS1) flags can freely move (see "ADF-unit components" on page 56). 3. Verify that the ADF separation pad and roller are clean, in good condition, and properly installed (see "Cleaning the product" on page 36, "ADF separation roller" on page 76, and "ADF separation pad" on page 77).
ADF Paper Jam	A page has jammed inside the ADF and must be cleared before copying can continue.	1. Raise the ADF cover and remove the jammed media, and then lower the ADF tray. 2. Refer to steps for clearing an ADF misfeed error. 3. Verify that the ADF paper delivery guide is clean and its clear plastic sheet properly installed (see "Cleaning the ADF delivery guide (clear mylar strip)" on page 37).
Calibration Failed	The auto calibration procedure was not completed.	1. Verify that there is not any media left on the glass from a previous copy job. 2. Attempt to perform the auto calibration procedure again (see "Performing automatic Calibration" on page 47).

Table 18. Control-panel error messages (continued)

Message	Explanation	Recommended action
Check Cables And Cycle Power	Communication between the printer formatter and the copy processor board has failed.	1. Verify that the high-speed copy connect cable between the formatter and the copy processor board is correctly connected (see "Formatter cage" on page 87). Reseat the connectors. 2. Verify that the copy processor board is firmly seated into the connector on the intermediate PCB. 3. Check for broken, frayed, or pinched wires. 4. Verify that the firmware DIMM and memory DIMM on the copy processor board are firmly seated. See "Copy processor board" on page 57. 5. Verify that the copy processor board LEDs are illuminated. See the table in "Troubleshooting with the copy processor board" on page 124.
Incomplete Initialization Error	A sensor is not in the correct position when the MFP is initializing when the power is turned on.	1. Verify that all of the sensors move freely (see "Scan-unit components" on page 55 and "ADF components" on page 56). 2. Turn the power off, and then back on.
Flatbed Cover Open	The ADF cover is open or the ADF door sensor (PS10) is not properly functioning.	1. Close the ADF door. Press the START button. 2. Verify that the ADF door sensor (PS10) is functioning. ● Open the cover. The message on the control panel should alternate between READY and FLATBED COVER OPEN. ● Perform a sensor service test (see "Diagnostic tests" on page 126. 3. Check the ADF door sensor (PS10) for loose connectors or pinched and frayed wires. 4. Replace the sensor if necessary (see "ADF door open sensor (PS10)" on page 98).
Processing Auto Cleaning Page	The auto-cleaning page is in process. This can take up to 2.5 minutes.	1. Wait until the cleaning page has printed. 2. Reload the source document and press START to begin the job. See the HP LaserJet 4100 series printer service manual for more information.
Processing Cleaning Page	The manual-cleaning page is in process. This can take up to 2.5 minutes.	1. Wait until the cleaning page has printed. 2. Reload the source document and press START to begin the job. See the HP LaserJet 4100 series printer service manual for more information.
Resend Upgrade	The firmware image was corrupted during an upgrade operation.	Start the firmware upgrade operation over. See "Downloading a remote firmware update" on page 41.

Table 18. Control-panel error messages (continued)

Message	Explanation	Recommended action
30.0.01 or 30.0.02 SCANNER I/O FAILURE CHECK COPY CONNECT CARD	Communication has failed between the copy processor board and the formatter.	1. Verify that the high-speed copy connect cable between the formatter and the copy processor board is correctly connected (see "Formatter cage" on page 87). Reseat the connectors. 2. Verify that the copy processor board is firmly seated into the connector on the intermediate PCB. 3. Check for broken, frayed, or pinched wires. 4. Verify that the copy processor board LEDs are illuminated. See the table in "Troubleshooting with the copy processor board" on page 124.
30.1.06 Scan Failure	Scan-unit intake-fan failure.	1. With product power on, verify that the fan is functioning (the fan is off when the MFP is in PowerSave mode). See "Scan-unit intake fan" on page 68. 2. Check for loose connectors and frayed or pinched wires. Reseat the fan connector at scanner controller PCB location J1203 (see "Scanner controller board connectors" on page 62). 3. Replace the fan.
30.1.15 Scan Failure	The flatbed cover is open while the MFP is initializing after the power is turned on.	1. Turn the power off. 2. Close the flatbed cover. 3. Turn the power on.
30.1.17 Scan Failure	Flatbed optical-unit-motor failure.	1. Verify that the optical-unit lock is in the unlocked position. See "Front view" on page 20. 2. Verify that the flatbed optical unit moves during initialization when the power is turned on. -Or- Use the control-panel diagnostic menu to test the scanner motor. See lamp test in "Diagnostic tests" on page 126. 3. Verify that the optical-unit drive-belt is properly installed, tensioned, and that its teeth are meshed with the drive gear. Verify that the ribbon cable is properly installed and does not hinder the optical-unit movements (see "Optical unit" on page 95). 4. Check for loose connectors and frayed or pinched wires. Reseat the optical-unit connector at scanner control PCB location J1207 (see "Scanner controller board connectors" on page 62). 5. Replace the scan-unit optical-unit gear/motor assembly.
30.1.18 Scan Failure	An Application-specific integrated circuit (ASIC) has failed on the scanner control board.	1. Turn the power off. 2. Reseat the scanner controller board. Turn the power on. If the error message persists, replace the scanner controller board.

Table 18. Control-panel error messages (continued)

Message	Explanation	Recommended action
30.1.19 Scan Failure	The scanning lamp does not illuminate. Inverter PCB or scanning lamp failure.	1. Verify that the scanning lamp briefly illuminates when the product's power is turned on (open the flatbed cover to view the lamp and then turn the power on). -Or- Use the control-panel diagnostic menu to test the lamp. See light source test in "Diagnostic tests" on page 126. 2. Verify that the scanning lamp fuse located on the Inverter PCB is not open (see "Inverter PCB" on page 103). 3. Check for loose connectors and frayed or pinched wires. Reseat the inverter connector at inverter PCB location CN2 and at scanner PCB location J1202 (see "Scanner controller board connectors" on page 62). 4. Replace the scanning lamp with a known functioning lamp. If the problem persists, proceed to the next step. 5. Replace the inverter PCB.
30.1.20 or 30.1.21 or 30.1.22 or 30.1.25 Scan Failure	The copy processor board has experienced a processing error.	1. Turn the power off and then back on. 2. If the error message persists, replace the copy processor board. 3. Verify that the copy processor board LEDs are illuminated. See the table in "Troubleshooting with the copy processor board" on page 124.
Scanning From Glass (appears when attempting to use the ADF; if you press the start button and the ADF document-detect sensor [S1] does not detect a source document, the MFP attempts to scan from the glass)	ADF document-detect sensor (PS2) did not detect a document in the ADF input tray.	1. Verify that the source documents are properly inserted in the ADF. 2. Verify that no media has jammed in the ADF document path (see "Document jams" on page 68). 3. Verify that the document-detect-sensor flag is not damaged and that it moves freely (see "ADF components" on page 56). 4. Use the control-panel diagnostic menu to test the sensor. See "Diagnostic tests" on page 126. 5. Verify that the ADF serial cable is securely connected to the copy processor board (see "Back view" on page 21). 6. Verify that the document-detect-sensor flag is not damaged and that it moves freely (see "ADF components" on page 56). 7. Replace the ADF unit (see "ADF unit" on page 78).

Troubleshooting with the copy processor board

The table in this section is a quick reference source for troubleshooting common copy processor board (CPB) failures that might occur after or during CPB initialization. The LED pattern column describes the status of the four LEDs located on the back of the MFP. The control-panel display column lists the messages that appear on the control-panel display when a failure occurs. The MFP functionality column describes what MFP functions are affected by the CPB failure. The action column lists the appropriate CPB troubleshooting steps.

To troubleshoot the CPB using the LEDs, check the LEDs that are illuminated and those that are not. Check for messages appearing on the control-panel display. Press the SELECT (✓) button to select OK. Match the LED pattern to the examples found in table 19 on page 125. Perform the corresponding procedure that is listed in the action column of the table.

For information about LED patterns that appear while the CPB is initializing, see "Copy processor board LEDs" on page 59.

Note

This section does not describe copy processor board LED patterns that occur during CPB initialization (when MFP power is first turned on). For information about CPB initialization LED patterns and their meanings, see "Copy processor board" on page 57.

The print and scan units have separate power supplies. The control panel and the CPB are powered by the power supply in the scan unit.

Hint

The LEDs can be difficult to see through the holes provided in the CPB faceplate (callout 1) in a high-light environment. It might be necessary to turn off some lights or remove the faceplate to see the LEDs.

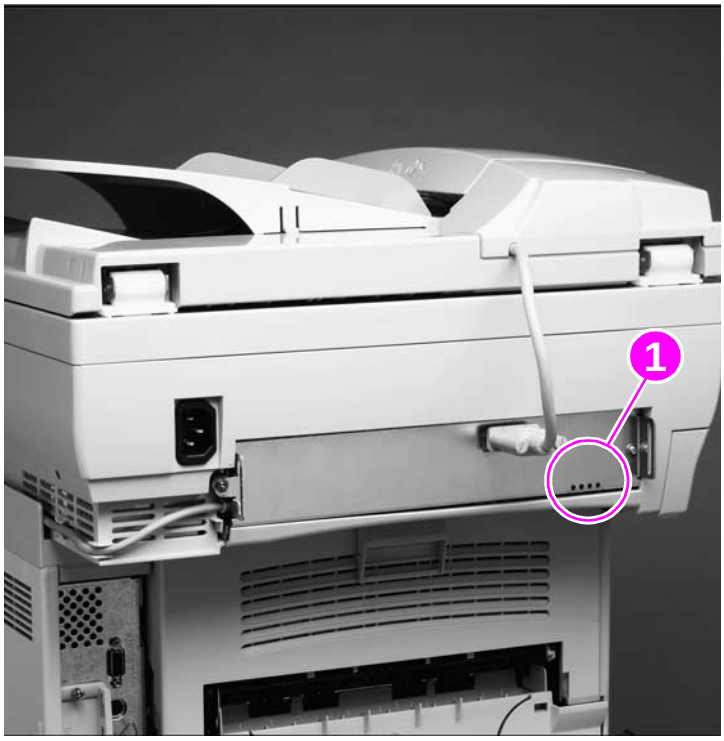

Figure 88. **Copy processor board LEDs**

Table 19. Troubleshooting copy processor board LEDs

LED pattern (LJ4100mfp and LJ4101mfp only)	Control panel display	MFP functionality	Action
OFF OFF OFF OFF	None (no power)	• Print (a configuration page)-no • Copy (from the ADF or glass)-no • Send (digital sending)-no	1. Verify the MFP power is turned on (see "Basic troubleshooting" on page 114 and "Power-on defects" on page 116). 2. Verify that the MFP is plugged into a working power source.
OFF OFF OFF OFF	Alternates between Power and Check Cables And Cycle Power	Select OK, then attempt to • Print (a configuration page)-no • Copy (from the ADF or glass)-no • Send (digital sending)-no	1. Reseat the CPB. 2. Turn the MFP power off, then back on again. 3. Verify that the scan unit power supply is functional (see "Power supply" on page 63 and "Power-on defects" on page 116).
ON* OFF ON ON *Flashing	READY, POWERSAVE ON, or PAUSED	• Print (a configuration page)-yes • Copy (from the ADF or glass)-yes • Send (digital sending)-yes	Normal ready state. No action required. For information about the PAUSED or POWERSAVE ON modes, see the hint in "Using the control panel" on page 30.
ON* OFF ON OFF *Flashing *OR* OFF OFF ON OFF	Alternates between Power and Check Cables And Cycle Power	Select OK, then attempt to • Print (a configuration page)-yes • Copy (from the ADF or glass)-no • Send (digital sending)-no	1. Verify that the high-speed copy connect cable is fully seated at both ends (see "Copy processor board" on page 83 and "Formatter cage" on page 87). 2. Turn the MFP power off, then back on again. 3. Replace the high-speed copy connect cable.
ON* ON ON ON *Flashing	Alternates between Power and Check Cables And Cycle Power	Select OK, then attempt to • Print (a configuration page)-yes • Copy (from the ADF or glass)-no • Send (digital sending)-no	1. Reseat the firmware DIMM (see "Copy processor board" on page 57). 2. Turn the MFP power off, then back on again.
ON** ON ON ON **Dimly lit LED	Alternates between Power and Check Cables And Cycle Power	Select OK, then attempt to • Print (a configuration page)-yes • Copy (from the ADF or glass)-no • Send (digital sending)-no	1. Reload the MFP firmware (see "Downloading a remote firmware update" on page 41). 2. Replace the firmware DIMM (see see "Copy processor board" on page 57).
ON ON ON ON	Alternates between Power and Check Cables And Cycle Power	Select OK, then attempt to • Print (a configuration page)-yes • Copy (from the ADF or glass)-no • Send (digital sending)-no	1. Reseat the memory DIMM (see "Copy processor board" on page 57). 2. Verify that the memory DIMM is a 16MB DIMM. 3. Replace the memory DIMM. 4. Reseat the firmware code DIMM.

Note If the CPB failure persists after all attempts to troubleshoot the problem, replace the CPB.

Hint The LED patterns an HP LaserJet 4100/4101mfp displays are the opposite of those on the HP LaserJet 9000mfp because of how the CPBs are mounted. The CPB is mounted upside down in the HP LaserJet 9000mfp.

ADF paper-path test

The paper-path test can be used to verify that various paper paths are working properly or to troubleshoot problems with tray configuration.

To print a paper-path test

1 Press the MENU button.

2 Select DIAGNOSTICS.

3 Select PAPER PATH TEST.

4 Select the source, destination, and number of copies (1, 10, 50, 100, 500) to be printed.

5 Select PRINT TEST PAGE to start the paper-path test.

Diagnostic tests

The diagnostic tests verify the functionality of ADF-unit and flatbed-unit components. These tests are useful in identifying ADF-unit and flatbed-unit malfunctions.

To perform a diagnostic test

1 Press the MENU button.

2 Select DIAGNOSTICS.

3 Select SCANNER. The following flatbed components can be tested.

- SENSORS; tripping various sensor flags causes a sensor-status message to appear on the control-panel display
  - PS1 leading-edge paper-detect photo sensor (see "Leading-edge sensor (PS1)" on page 68)
  - PS2 document-detect photo sensor (see "ADF-unit components" on page 56)
  - PS10 flatbed-cover-open photo sensor (see "Scan-unit components" on page 55)
  - PI1201 optical-unit home-position photo sensor (see "Optical unit" on page 65) (to trip this sensor, perform a copy job with the sensor-status screen displayed on the control panel)
- ADF OUTPUT MOTOR; activates the ADF motor and all of the ADF feed rollers (see "ADF document-feed system" on page 67)
- SCANNER MOTOR; activates the optical-unit motor, causing the optical unit to move back and forth in the flatbed (see "Optical unit" on page 65)
- PICKUP SOLENOID; energizes the ADF pickup solenoid (see "ADF document-feed system" on page 67)
- LIGHT SOURCE; illuminates the scanning lamp, which verifies that the inverter PCB and lamp are functioning properly (see "Scanning lamp" on page 66)

4 Select CONTROL PANEL. The following control-panel components can be tested.

- LEDs; illuminates the three control-panel LEDs (see "Layout and operation" on page 30)
- DISPLAY; illuminates all of the control-panel-display pixels (see "Layout and operation" on page 30)
- BUTTONS; shows on the control-panel display a layout of the control-panel buttons and keys; when a button or key is selected on the control panel it is illuminated on the display, indicating that the button or key is functioning (see "Layout and operation" on page 30)

5 Press the START button to begin a test. Press the STOP button to end the test.

Service menu

The service menu MFP commands should be used only by authorized service personnel. You can gain access to the service menu only by using the **service PIN code 04410002**. While in the service menu, you can do the following:

- Clear the event log.
- Verify and set the page count and serial number. These are shown on the configuration page.
- Change the maintenance intervals.
- Set the cold-reset paper size.

To access the service menu (PIN code: 04410002)

1 Press the MENU button.

2 Select SERVICE. Enter PIN code (04410002). Press the SELECT (✓) button.

3 Use the navigation buttons to scroll to the desired service-menu item. See table 20 on page 127.

4 Press the SELECT (✓) button to save a new setting or to perform a service-menu action and exit the service menu.

Table 20. Service menu

Item	Description
Clear event log	Removes all recorded events from the log. **CAUTION** Clearing the event log is a permanent action and cannot be undone.
Total page count	Lifetime count of all pages--scanned, copied, and printed.
Maintenance count	Number of pages copied and printed since the last maintenance interval.
Maintenance interval	Number of pages copied and printed that will cause the Perform Printer Maintenance message to appear on the control-panel display (the default setting is 200,000 pages).
ADF count	Lifetime count of all pages scanned using the ADF.
Flatbed count	Lifetime count of all pages scanned using the flatbed.
ADF simplex count	Lifetime count of one-sided pages scanned using the ADF.
Copy scan count	Lifetime count of one-sided pages scanned for copy jobs using the ADF or the flatbed.
Send scan count	Lifetime count of one-sided pages scanned for digital send jobs using the ADF or the flatbed
Copy pages count	Lifetime count of pages printed as output from copy jobs
Scanner settings	Scanner NVRAM settings can be saved and restored in case they are needed when upgrading MFP firmware.
Serial number	Displays the MFP's serial number.
Cold reset paper	Default paper size when the MFP is reset (the default setting is letter).

Jam troubleshooting

Media jams occur when media either does not reach or does not clear the document-detect sensor (PS1) and leading-edge sensor (PS2) in a specific amount of time (see "ADF document-feed system" on page 67 and "ADF components" on page 56). If a paper jam occurs, a `13.XX PAPER JAM` message appears on the MFP control panel.

Jams

Jams occur most often when the following conditions exist:

- Media trays are not correctly loaded or the sliding media guides are not correctly positioned.
- The print media does not meet the specifications listed in the *Print Media Guide* for the HP LaserJet printer family.
- The media is in poor condition. See "General guidelines for using the ADF unit" on page 28.
- The MFP needs cleaning. See "Cleaning the product" on page 36.

Table 21. General ADF jam troubleshooting

Cause	Solution
Continuous jams	
	• Verify that the document-detect-sensor flag and the leading-edge-sensor flag can freely move (see "ADF document-feed system" on page 67 and "ADF components" on page 56). • Verify that the ADF separation pad and roller are clean, in good condition, and properly installed (see "Cleaning the product" on page 36, "ADF separation roller" on page 76, and "ADF separation pad" on page 77). • Verify that the ADF paper delivery guide (clear mylar strip) is clean and its clear plastic sheet is properly installed (see "Cleaning the ADF delivery guide (clear mylar strip)" on page 37).
Multiple feed	
Dirty/worn/deformed separation pad or roller.	• If the separation pad or roller is dirty, clean it. • If the separation pad or roller is worn or deformed, replace it.
Dirty/worn/deformed feed roller.	• If the feed roller is dirty, clean it. • If the feed roller is worn or deformed replace it.
Wrinkles/folded leading edge	
Dirty/worn/deformed separation pad or roller.	• If the separation pad or roller is dirty, clean it. • If the separation pad or roller is worn or deformed, replace it.
Dirty/worn/deformed feed roller.	• If the feed roller is dirty, clean it. • If the feed roller is worn or deformed, replace it.
Dirty/worn/deformed delivery roller.	• If the delivery roller is dirty, clean it. • If the delivery roller is worn or deformed, replace it.
Skew	
Paper dust or dirt in the feed roller or feed guide.	• Clean the dirty area. See "Cleaning the ADF delivery guide (clear mylar strip)" on page 37.
ADF input tray guides are not properly adjusted.	• Verify that the guides are not adjusted either too tightly against the media or too loosely and separate from the media.
Scratched/deformed feed guide.	• Check the paper path. If the guides are scratched or deformed, replace the ADF input tray. See "ADF input tray" on page 73.

Clearing repeated ADF jams

1. Check to see that media is correctly loaded in trays and that the ADF input tray guides are correctly adjusted (see “General ADF jam troubleshooting” on page 128).
2. Try turning over the stack of paper in the tray. If you are using letterhead paper, try printing from a different tray.
3. Do not use previously printed paper or torn, worn, or irregular paper.
4. Check the media specifications. If the media is outside of the recommended specifications, problems might occur. See the *Print Media Guide* for the HP LaserJet printer family.

Creating a customer print job

Ask the user to send a print job from the problem source(s) to the problem destination(s). Try to recreate the jam errors by having the user perform a paper-path test. See “ADF paper-path test” on page 126.

When verifying print jobs, make sure that all of the settings are selected as the way the user wants them. Keep in mind that application settings take priority over driver settings, which take priority over the MFP control-panel settings. If a single setting is not present in the application, but is set in the driver, that setting overrides the control-panel settings.

Evaluate the information pages

From the MFP control panel, you can print pages that give details about the MFP and its current configuration. The following information pages are available:

- Configuration page
  - JetDirect page (if a JetDirect card is installed)
- File-directory page
- Usage page

To select and print items from the information menu:

1 Press the MENU button.

2 Select INFORMATION.

3 Select the information page you want to print.

4 Press the SELECT (✓) button to print the information page.

Configuration page

Use the configuration page to view current MFP settings, to help troubleshoot MFP problems, or to verify installation of optional accessories, such as memory (DIMMs), input and output paper-handling accessory, and printer languages.

The content of the configuration page varies, depending on the options currently installed in the MFP. Additional information about optional MFP accessories (for example, an optional paper tray, duplex unit, envelope feeder, or additional memory) will appear on this page if they are installed.

Configuration-page elements

Use the configuration page to verify the installed firmware version, maintenance interval setting, three most recent entries in the event log, total memory installed, installed options, and other useful information about the MFP product. The configuration page contains information about the following attributes:

A. Device information

B. Event log

C. Installed personalities and options

D. Memory

E. Security

F. Paper trays and options

Hint Adding the digital-sending capability to the MFP changes the layout of the configuration page from the sample used in this manual.

CPB firmware version (flash DIMM) This might not change when a remote firmware update is installed

Formatter firmware (print engine) version (located on the hard disk) This changes when a remote firmware update is successfully installed

LDAP and SMTP information was now appears on the configuration page

hp LaserJet 4100mfp series

invent

configuration page 1

Device Information (A)

Product Name: HP LaserJet 4100 MFP
Device Name: HP LaserJet 4100 MFP
Product Number: 7
Formatter Number: S46XXXXXXXX
Device Serial Number: XXXXXXXXXX
CPB: 1.81 (6.0)
SCB: MFP200 22
Firmware Datecode: 02/14/2002 02.050.5
PS Wait Time-Out: 300 Seconds
Page Count: 55
Preventive Maintenance Interval: 200000
Pages Since Last Maintenance: 20

Memory (D)

Total Memory: 64 MB
DWS: 13.98
Automatic Resource Saving Enabled

Event Log (B)

Number of Entries in Use: 2
Maximum Number of Entries: 50
Three Most Recent Entries:

Number	Error	Page Count
2	49 4C02	0
1	49 00FF	0

Security (E)

Control Panel Lock: NONE
Control Panel Password: DISABLED
Write Protect: DISABLED

Installed Personalities and Options (C)

PCL (20010402)
PS (20010402)
PCLXL ((20010402)

DIMM Slot 1: Side 1: 8 MB Flash
Side 2: 8 MB Flash
DIMM Slot 2: Side 1: 32 MB SDRAM
Side 2: 32 MB SDRAM
DIMM Slot 3: Side 1: : Empty

DIMM Slot 4: Empty
EIO 1: HP JetDirect J4169A
EIO 2: HP J6054A
EIO 3: Empty
DISK Storage: 4641 MB Capacity
LDAP Gateway: 0.0.0.0
SMTP Gateway: 0.0.0.0

Paper Trays and Options (F)

Default Paper Size: LETTER
Tray 1 Size: UNKNOWN
Tray 2 Size: LETTER

Figure 89. **Sample configuration page**

Hint If an HP JetDirect EIO card is installed, an HP JetDirect configuration page will also be printed.

JetDirect page

Use the JetDirect page to view current network settings, to help troubleshoot MFP problems, or to verify network statistics or protocol information.

JetDirect-page elements

A. HP JetDirect configuration

B. Network statistics

C. Protocol information

Jet Direct firmware can be updated, but is not updated when a remote firmware upgrade is installed

hp LaserJet 4100mfp series

EIO 2 - JetDirect Page 1

--------HP JetDirect Configuration--------

Status:	I/O Card Ready
Model Number:	J6057A
Hardware Address:	0001E65E2513
Firmware Version:	R.22.09
Port Config:	10BASE-T HALF
Auto Negotiation	ON
Manufacturing ID:	22014150902201
Date Manufactured	11/2002

----------Security Settings----------

Admin Password:	Not Specified
SSL/TLS:	Disabled
Cert Expires:	Not Applicable
SNMP Versions:	1; 2
SNMP Set Cmty Name:	Not Specified
Access LIst:	Not Specified

----------Network Statistics----------

Total Packets Received;	339163
Unicast Packets Received:	7095
Bad Packets Received:	0
Framing Errors Received:	0
Total Packets Transmitted:	106942
Unsendable Packets:	0
Transmit Collisions:	42
Transmit Late Collisions:	0

----------TCP/IP----------=--------

Status:	Ready
Host Name:	NPI5E2513
IP Address:	00.00.00.00
Subnet Mask:	000.000.000.0
Default Gateway:	00.00.00.0
Config By:	DHCP
DHCP Server:	0.0.0.0
TFTP Server:	00.0.00.0
Config File:	Not Specified
Domain Name:	hp.com
DNS Server:	00.00.000.0
WINS Server:	00.0.00.00
Syslog Server:	Not Specified
Idle timeout:	270 seconds
Web JetAdmin URL:	Not Specified

----------IPX/SPX----------

Status:	Ready
Primary Frame Type:	Auto Select
Network Frame Type	Rcvd
Unknown EN II	7513
00062640 EN 802.2	49472
Unknown EN SNAP	3256
Unknown EN 802.3	41109

----------Novell/Netware----------

Status:	16
Not Configured	
Node Name:	NPI5E2513
NetWare Mode:	Queue Server
NDS Tree Name:	
NDS Context:	
Attached Server:	
SAP Interval:	60 seconds

----------AppleTalk----------=--------

Status:	Ready
Name:	HP laserJet 4100 MFP6
NetWare Mode:	*
Zone:	HP LaserJet
Type 1:	LaserWriter
Type 2:	65281
Network Number:	19
Node Number:	

----------DLC/LLC----------=--------

Status:	Ready

Figure 90. **Sample JetDirect page**

Supplies status page

Use the supplies status page to view current printer supply status, to help troubleshoot MFP problems, or to verify MFP information.

Supplies-page elements

A. Supplies-ordering information

B. Cartridge information

C. Other supplies information

D. Device information

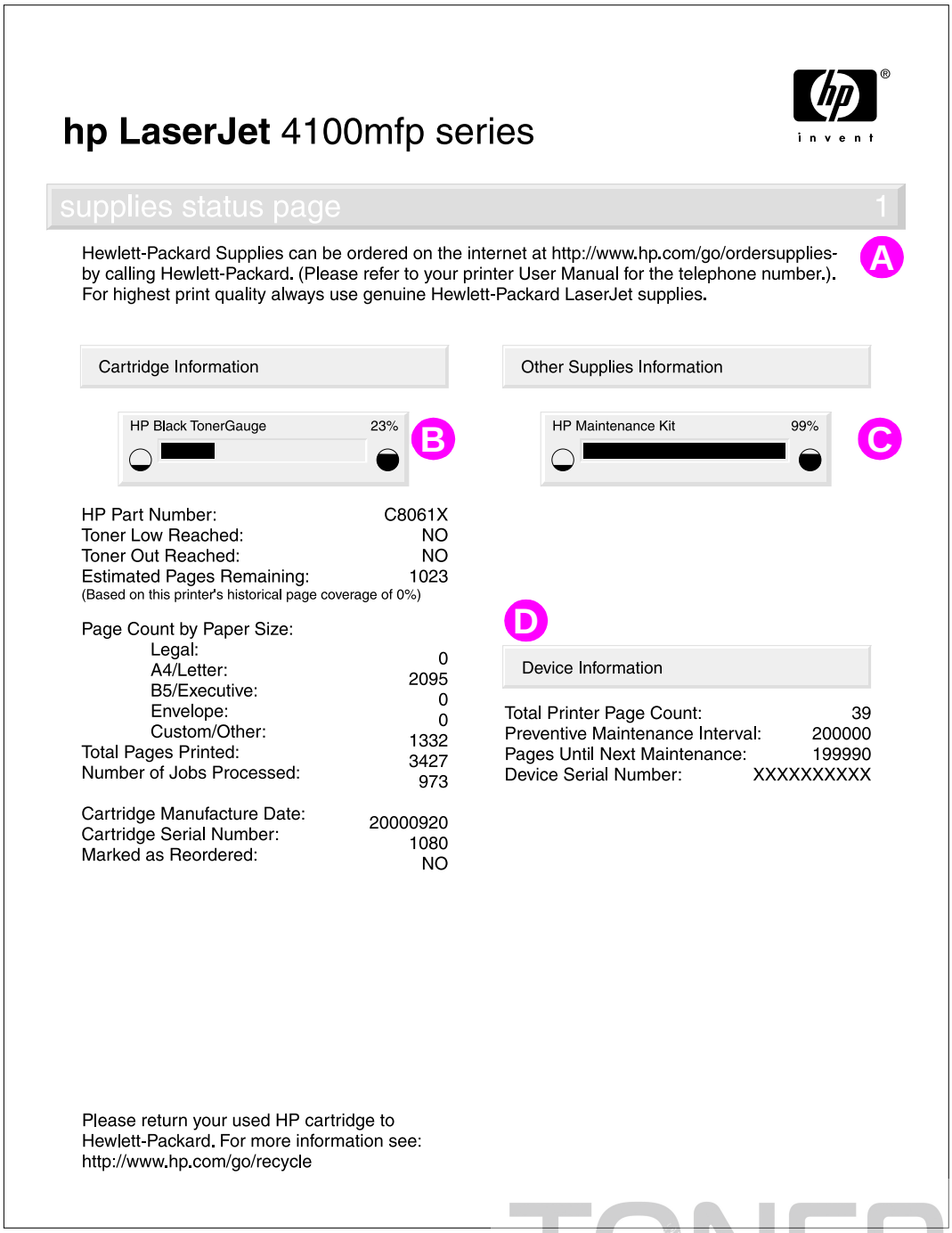

hp LaserJet 4100mfp series

invent

supplies status page 1

Hewlett-Packard Supplies can be ordered on the internet at http://www.hp.com/go/ordersupplies- by calling Hewlett-Packard. (Please refer to your printer User Manual for the telephone number.). For highest print quality always use genuine Hewlett-Packard LaserJet supplies. A

Cartridge Information

HP Black TonerGauge 23% B

HP Part Number: C8061X
Toner Low Reached: NO
Toner Out Reached: NO
Estimated Pages Remaining: 1023
(Based on this printer's historical page coverage of 0%)

Page Count by Paper Size:
Legal: 0
A4/Letter: 2095
B5/Executive: 0
Envelope: 0
Custom/Other: 1332
Total Pages Printed: 3427
Number of Jobs Processed: 973

Cartridge Manufacture Date: 20000920
Cartridge Serial Number: 1080
Marked as Reordered: NO

Other Supplies Information

HP Maintenance Kit 99% C

D

Device Information

Total Printer Page Count: 39
Preventive Maintenance Interval: 200000
Pages Until Next Maintenance: 199990
Device Serial Number: XXXXXXXXXX

Please return your used HP cartridge to Hewlett-Packard. For more information see: http://www.hp.com/go/recycle

Figure 91. **Sample supplies status page**

Usage page

The usage page is designed to fit into a pay-per-page (PPP) model. A reseller can configure the usage page with instructions that a user can send the information back to the reseller in order to prepare bills.

Print a usage page from the MFP control panel (or gain access to the information remotely from HP Web JetAdmin) to determine how many simplex or duplex pages of each paper size have been scanned on the copy module and printed on the MFP. Counting pixels approximates average toner coverage. Jams are not counted. The data cannot be reset manually, and values such as total print and scan impressions, toner coverage, serial number, default language, and default paper size are backed up between the MFP NVRAM and hard disk.

hp LaserJet 4100mfp series

usage page (S/N XXXXXXXXXX) 1

Product Name: HP LaserJet 4100 MFP
Device Name: HP LaserJet 4100 MFP

Usage Totals

PRINTED (PRINT & COPY)

Page Size	SIMPLEX Count	SIMPLEX Units	DUPLEX Count	DUPLEX Units	Total
	**	**			0.0
LETTER	9	1.0			9.0
LEGAL	0	1.3			0.0
A4	0	1.0			0.0
EXECUTIVE	0	0.8			0.0
COM10 ENVE	0	0.4			0.0
MONARCH EN	0	0.3			0.0
C5 ENVELOP	0	0.6			0.0
DL ENVELOP	0	0.4			0.0
JISB5	0	0.7			0.0
B5 ENVELOP	0	0.7			0.0
CUSTOM	0	1.0			0.0
ANY	0	1.0			0.0
A5	0	0.5			0.0
16K	0	0.8			0.0
JEXEC	0	1.1			0.0
ISOB5	0	1.0			0.0
TOTAL PRINTER USAGE					9.0

Total Copy Pages Printed 2

SCANNED (COPY & SEND)

Page Size	SIMPLEX Units	Total
	**	**
LETTER	0	1.0	0.0
LEGAL	0	1.3	0.0
A4	0	1.0	0.0
EXECUTIVE	0	0.8	0.0
JISB5	0	0.7	0.0
A5	0	0.5	0.0
TOTAL SCANNER USAGE		0.0

Copy Job Scan Count: 3
Send Job Scan Count: 0

ADF Total Pages: 2
Flatbed Scan Count: 1

Coverage: 3.586 (1)

Figure 92. **Sample usage page**

File directory page

Use the file directory page to view current directory structures, to help troubleshoot MFP problems, or to verify storage capabilities.

File-directory-page elements

A. Directory information

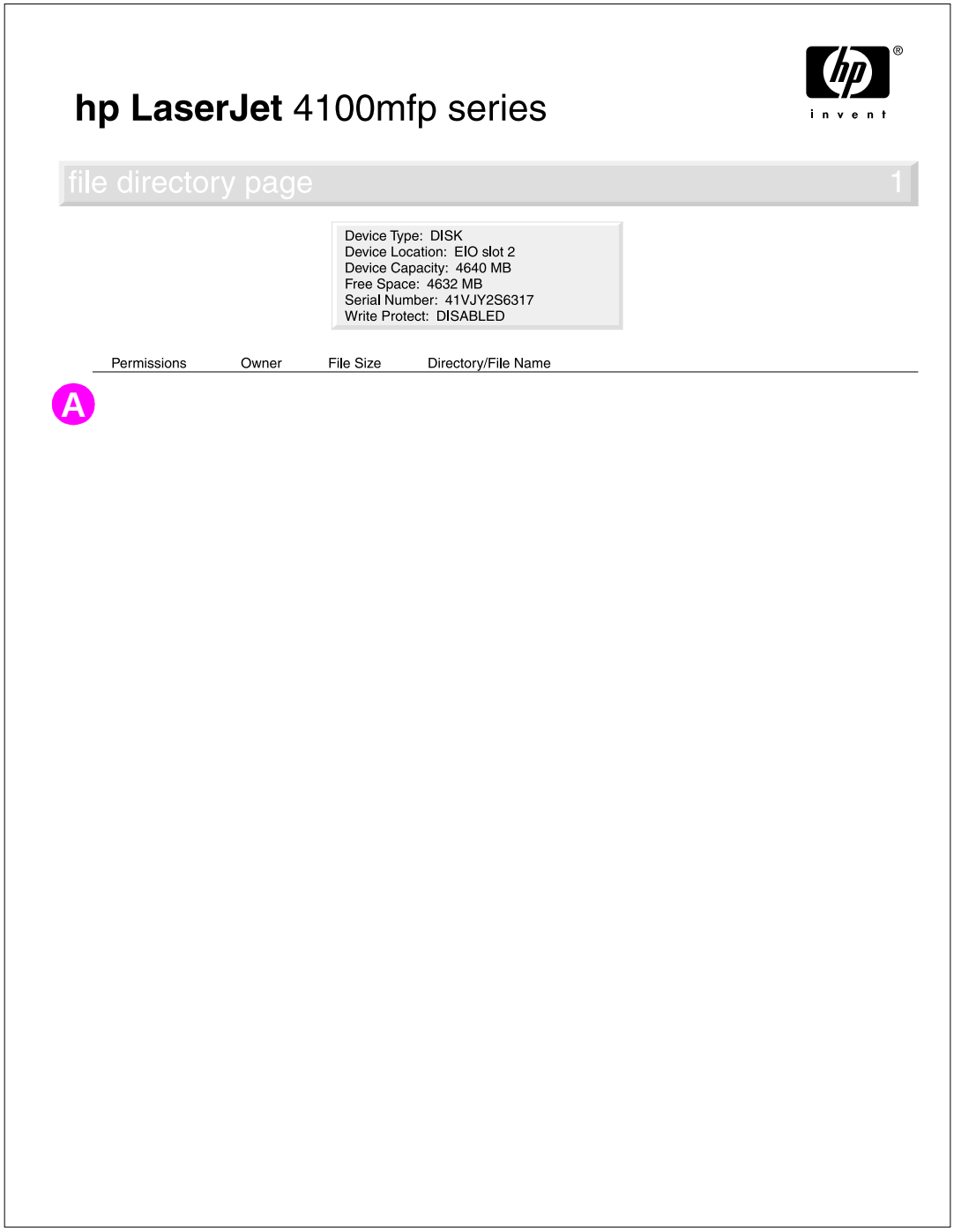

Figure 93. **Sample file-directory page**

Image-formation troubleshooting

When working with users, obtain a print sample before troubleshooting the MFP. Also, ask the user to describe the quality expected from the MFP. The print sample helps clarify the user's description of the problem.

Hint When troubleshooting image defects, try scanning a test page through the ADF and from the glass to help isolate the cause of the image defect to the ADF or the print unit.

Often an image-formation problem can be linked to media that is outside the specifications Hewlett-Packard has established for optimum MFP performance. See "Media troubleshooting" on page 140 for help with persistent image-formation problems.

Table 22. Image-quality checks

Image-quality checks	Action
Is the print cartridge full and is it manufactured by HP?	"Checking the print cartridge" on page 137
Is the customer using print media that meets all HP specifications?	"Media troubleshooting" on page 140
Is the print sample similar to those in the image-defect tables?	"Image-formation troubleshooting" on page 136
Does the media meet HP standards?	To determine if you are using the correct media type, see the *Print Media Guide* for the HP LaserJet printer family.

Checking the print cartridge

Image-formation defects are often the result of problems with the print cartridge. Use the following list to verify that the print cartridge is still operating correctly.

Hint If toner gets on your clothing while you are handling the print cartridge, wipe it off with a dry cloth and then wash the clothing in cold water.

Perform all of the following checks before replacing the print cartridge.

- Verify that the print cartridge has toner.
  - **6000-page** capacity **full print cartridge weight** is about 1343 grams (47.4 oz).
  - **10,000-page** capacity **full print cartridge weight** is about 1490 grams (52.59 oz).
  - **6000-page** capacity **empty print cartridge weight** is about 1105 grams (39.0 oz).
  - **10,000-page** capacity **empty print cartridge weight** is about 1110 grams (39.18 oz).
- Check the print cartridge to see if it has been disassembled or refilled.
- Verify that the print cartridge is seated properly in the MFP cavity.
- Inspect the cartridge for toner leaking through worn seals. (Manual rotation of the drum can cause internal damage, and toner spills can result.)

Note The print cartridge is rated for 6000 to 10,000 images at five-percent coverage. Check the surface of the photosensitive drum in the cartridge to see if it has been damaged or scratched. Touching the drum contaminates the photosensitive surface and might cause spotting and defects during printing.

- White areas on the page might indicate that the drum has been exposed to light for too long. If white areas appear, stop the MFP and wait a few minutes. This should eliminate most defective images. If not, the print cartridge can be placed in a dark environment for several days, which might restore some life to the drum.

EconoMode

EconoMode creates draft-quality printing by reducing the amount of toner on the printed page by up to 50 percent. Advise the customer to turn EconoMode on or off either from the printer driver or a software application.

Image-defect tables

Hint The image defects described in this section are associated with the ADF unit and the scan unit. For more information about image defects and their causes, see the HP LaserJet 4100 series printer service manual.

The MFP output quality is subject to user judgment. This section of the manual helps define print-quality defects and the factors that affect print quality.

The print samples shown in the following figures illustrate some print-quality defects. To use for future reference, HP suggests that you keep copies of print-quality defects you encounter in the field and an explanation of their causes.

Hint When troubleshooting image defects, try scanning a test page through the ADF and from the glass to help isolate the cause of the image defect to the ADF unit, scan unit or the print unit.

Table 23. Image defects

Problem	Condition	Solution
Distorted images 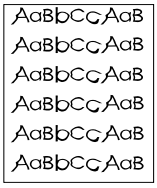	Improper optical-unit drive-belt tension.	• Adjust the belt tension for the pickup motor. See "Optical unit" on page 95. • If the problem persists, replace the belt. See "Optical unit" on page 95.
Blank page (when using the ADF) 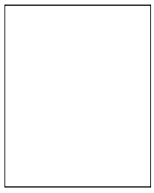	The source document was not placed in the ADF input tray face-up.	• Verify that the source document is face-up in the ADF input tray.
	The source document was not detected in the ADF input tray.	• Remove and then reinsert the source document into the ADF input tray. • Verify that the document-detect-sensor (PS2) flag freely moves See "ADF components" on page 56. • Use the control-panel diagnostic test to verify that the sensor, ADF motor, and pickup solenoid are fuctional. See "Diagnostic tests" on page 126.
	A source document was not picked up when attempting to feed multiple documents.	• Inspect the ADF pickup and separation rollers for damage. See "ADF components" on page 56. Clean the rollers if dirty. See "Cleaning the product" on page 36.
Horizontal lines 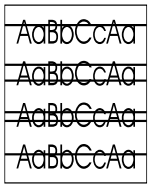	Dirty glass, whiteboard cover, ADF delivery guide (clear mylar strip).	• Clean the glass, whiteboard cover, and/or ADF delivery guide. See "Cleaning the product" on page 36.
	ADF unit and/or scan unit is improperly calibrated.	• Calibrate the scan unit. See "Calibration" on page 47 and/or "Performing manual calibration" on page 48.

Table 23. Image defects (continued)

Problem	Condition	Solution
Page skew	The ADF unit or scan unit needs to be calibrated.	• Calibrate the scan unit. See "Calibration" on page 47 and/or "Performing manual calibration" on page 48.
	ADF input tray guides are not properly adjusted.	• Verify that the ADF guides are not adjusted to tightly against the media or to loosely and separate from the media.
	ADF paper delivery guide (clear mylar strip) is dirty.	• Clean the ADF paper delivery guide. See "Cleaning the ADF delivery guide (clear mylar strip)" on page 37.
Vertical lines	Dirty glass, whiteboard cover, ADF delivery guide (clear mylar strip).	• Clean the glass, whiteboard cover, and/or ADF delivery guide (clear mylar strip). See "Cleaning the product" on page 36.
	ADF unit and/or scan unit is improperly calibrated.	• Calibrate the scan unit. See "Calibration" on page 47 and/or "Performing manual calibration" on page 48.
	Deformed pickup roller.	• Replace the deformed roller. See "ADF pickup roller" on page 74.
	Foreign substances are deposited on the pickup roller.	• Clean the pickup roller (flatbed). • If the problem persists, replace the pickup roller. See "ADF pickup roller" on page 74.
	Defective optical-unit CCD driver.	• Replace the optical unit. See "Optical unit" on page 95.
	Scars on the mirrors or lens in the flatbed optical unit.	• Replace the flatbed optical unit. See "Optical unit" on page 95.
Image shifted	Image is shifted vertically, horizontally, or both ways on the page. Scan unit is improperly calibrated.	• Calibrate the scan unit. See "Calibration" on page 47.
Image skips	Image shifts on the page or starts and stops at irregular intervals	• Verify that the ADF document-detect-sensor (PS2) and leading-edge-sensor (PS1) flags move freely. See "Document-detect sensor (PS2)" on page 68, "Leading-edge sensor (PS1)" on page 68, and "ADF components" on page 56.
Unexpected image	Unexpected images when using the ADF to make copies.	• Verify that there is not any media left on the glass from a previous copy job.

Media troubleshooting

Media defects can cause jams and image defects. If the previously described conditions are corrected and the printing problem is not corrected, continue to investigate the media as the source of the defect.

Problems with print media are sometimes difficult to detect. To determine if you are using the correct media type, see the *Print Media Guide* for the HP LaserJet printer family.

When determining the cause of a MFP failure, a distinction must be made between problems that relate to the MFP itself and those that involve print media. Often a problem that seems to be related to the MFP is actually a matter of poor print-media selection or handling. To determine whether a problem is caused by the MFP or by the media, try these simple steps to remedy the situation:

- Turn the media over in the tray to print on the reverse side.
- Rotate sheets 180 degrees (end-to-end) to feed with a different leading edge.

If the symptoms cease, or change in some way, assume that the problems are caused by the print media.

Isolate a paper path

Use the straightest paper path

Some problems can be avoided by using the straightest available paper path.

Isolate the source of the jam

Define the source of the media that jams.

Determine where media jams occur

Check where media stops when a jam occurs.

Is the MFP is misfeeding or creating multifeed jams

The following are some possible causes of misfeeding or multifeed jams:

- The media might be too heavy or too light.
- The paper might be too smooth.
- The customer might be attempting to print embossed paper, preprinted forms, or perforated paper that does not meet HP specifications.
- The paper might be loaded incorrectly. Turn over the sheets in the paper tray to determine if in-ream curl is causing misfeeding.
- The customer might be fanning media before loading it into the tray.
- The customer might be adding media in small amounts. Do not add small amounts of media to a stack that is already loaded, and do not mix types of media in the tray.
- The MFP or media storage environment might be too humid or too dry.

Hint For more information about media troubleshooting, see the HP LaserJet 4100mfp *use* guide.

Isolate a media brand

If the MFP jams with only one brand of media:

- Try switching media brands.
- If the paper ream in use appears to be old, open a fresh ream of the same paper and load it properly into the MFP. If the problem disappears, investigate storage and handling conditions.

Isolate a media type

When jams and other problems occur frequently, it is often because the customer is using a special paper. Customers must only use print media that conforms to all Hewlett-Packard specifications, and should always test media before purchasing large quantities. Media should be tested before storage to verify quality printing results. Then, if problems arise, storage or handling conditions can isolate the most likely cause. Some types of media that might cause problems are:

- adhesive labels
- envelopes
- transparencies
- preprinted forms and letterhead
- embossed media
- perforated paper
- chemically treated paper
- synthetic paper
- coated paper
- other special media

Wiring diagrams

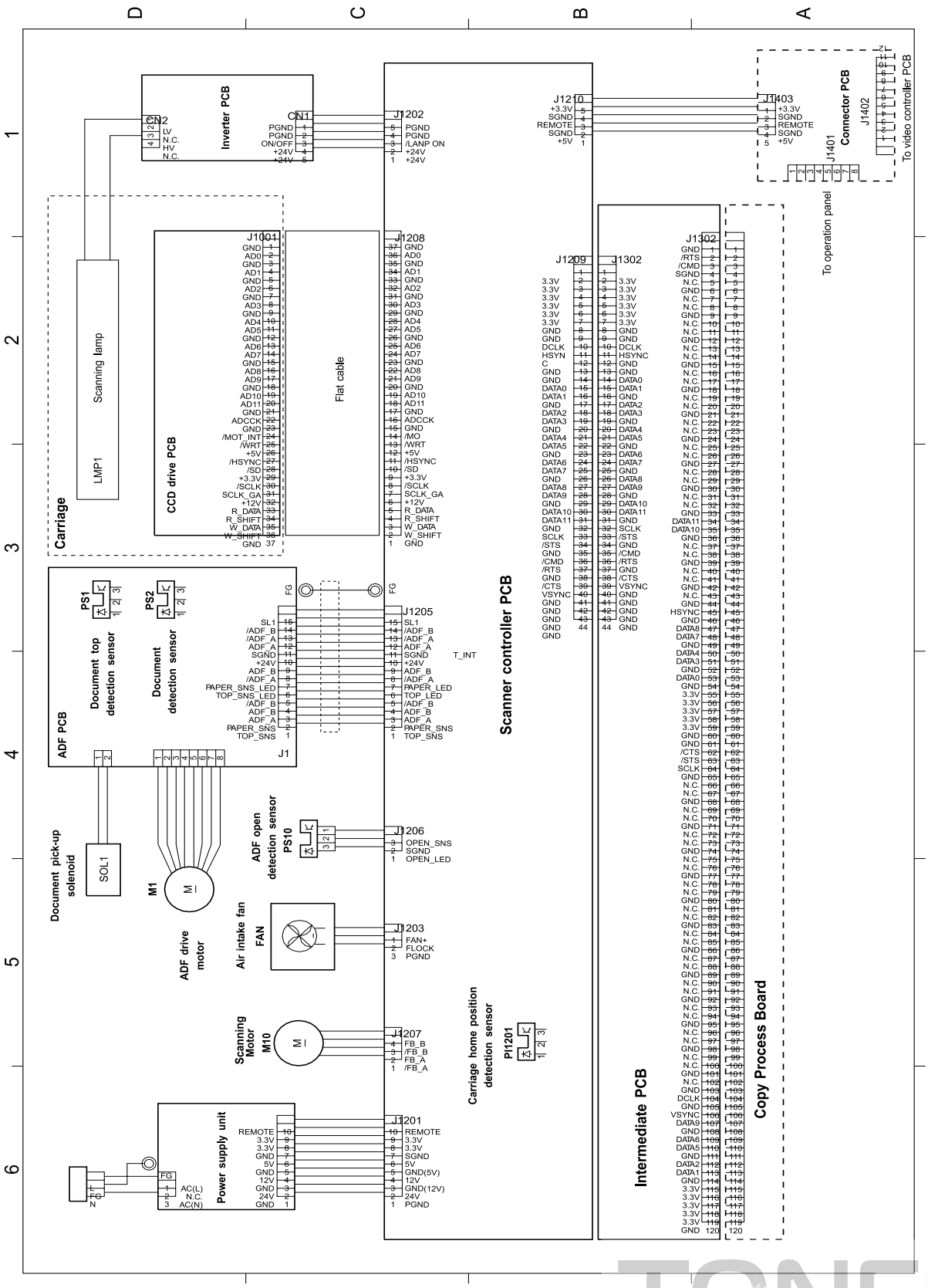

Figure 94. **Wiring diagram**

8 Parts and diagrams

Ordering parts, supplies and getting support

Parts

Order replacement parts from the following website:
http://www.hp.com/ssg/parts/direct_order.html

Related documentation and software

Order documentation and software from the sites listed in table 24. Some documentation and software are available at the listed websites.

Support

Table 24. Technical support websites

HP Connect Online (for HP partners)	http://www.connect-online.hp.com HP Connect Online is an Internet site that is created exclusively for our partners. You can easily find all the HP information that you need for your daily business. And you can get it earlier than from any other site.
HP Customer Care Online Software drivers, support documentation, and answers to frequently asked questions	http://www.hp.com Select your country or region in the “select a country or region” field located at the top right corner of the page. Select the support block.
HP Technical Training Classes and schedules	USA: http://www.partner.americas.hp.com Canada: http://www.canada.hp.com Asia: http://partnercare.asiapac.hp.com Latin America: http://www.conecta.latinamerica.hp.com
Parts Parts information	http://partsurfer.hp.com *or* http://www.hp.com/hps/parts/

HP provides free telephone support during the product warranty period. When you call, you will be connected to a responsive team waiting to help you. For the number you should call in your country or region, see the support sheet that came in the box with your product. Before calling have the following information available:

- Product name (for example HP LaserJet 4101mfp)
- Product serial number (found on the underside of the control panel door on the HP 4100/4101mfp series printers)
- The date of purchase of your product and a description of the problem you are experiencing

Test your software installation. Attempt to print a test page from your software program. Try reinstalling the software. If reinstalling the software does not correct the problem, see the Readme file on the CD-ROM that came with your product. Or call the phone number for your country or region listed on the support sheet that came in the box with your product. You can also find answers to frequently asked questions at the following websites:

- htpp//:www.hp.com/support/lj4100mfp *or*
- htpp//:www.hp.com/support/lj4101mfp

Accessories

The following items are available through your local authorized HP dealer. To find a dealer near you, call the HP Customer Information Center at (1)(800) 752-0900.

Hint Optional 2-MB and 4-MB Flash DIMMs are available for the HP 4100 LaserJet series printer. Do not install these DIMMs in the HP 4100mfp or the 4101mfp. These MFP models contain a hard drive and will ignore the optional Flash DIMMs.

Table 25. Accessories and supplies

Description	Part no.	Product no.
SDRAM DIMM		
4 MB	C4140-67901	C4140A
8 MB	C7842-67901	C4141A
16 MB (CPB factory default)	C7843-67901	C4142A
32 MB	C7845-67901	C4143A
64 MB (formatter factory default)	Q1887-67901	C3913A
128 MB	C9121-67901	C9121A
615N 10/100 Enhanced Input Output card	J6057-69001	J6057A
WARNING! The copy processor board (CPB) will only support the 16-MB SDRAM DIMM. *Only* use the 16-MB SDRAM DIMM part number C4142-67901 on the CPB.		
Envelope feeder	C8053-69002	C8053B
500-sheet media input tray	C8055-67901	C8055A
Duplex printing accessory	C8054-69001	C8054A
Digital sending software	not applicable	C7140A
Hard disk; 5 gigabytes (GIG) or larger without firmware	J6054-61003	J6054A
HP LaserJet 4100mfp service training kit	C9148-67903	

Consumables

Table 26. Consumables

Description	Product no.
HP multipurpose paper	HPM1120
HP LaserJet paper	HPJ1124
Toner cartridge (6000 page)	C8061A
Toner cartridge (10000 page)	C8061X

Common hardware

The product has six common fasteners. See table 27 for a description of these screw types.

Table 27. Screws used in the ADF unit and scan unit

Description	Part no.
Screw, M4x8, self-tapping truss head	XB4-7400-809CN
Screw, M4x10, self-tapping pan head	XB4-7401-009CN
Screw, M4x12, self-tapping pan head	XB4-7401-207CN
Screw, M3x8, with washer	XA4-1238-000CN
Screw, M4x12	XA9-0773-000 CN
Screw, M3x0.5, copy processor board	0515-2908-000CN

HP Laserjet 4100 differences

The HP LaserJet 4100mfp and the HP LaserJet 4101mfp are based on the HP 4100 series printer. See table 28 for a list of major differences between the HP 4100 series printer and the HP LaserJet 4100/4101mfp products.

Table 28. HP LaserJet 4100 differences

HP LaserJet 4100	HP LaserJet 4100/4101mfp
Control cover PCB assembly RG5-5372-040CN	Not used on the HP 4100/4101mfp products
Not used on the HP 4100 LaserJet series printer	Connector PCB RG5-6534-000CN See “Top-cover assembly” on page 150.
Not used on the HP 4100 LaserJet series printer	Rod RB2-8749-000CN See “Top-cover assembly” on page 150.
Not used on the HP 4100 LaserJet series printer	Panel cable RG5-6644-000CN See “Top-cover assembly” on page 150.
Not used on the HP 4100 LaserJet series printer	Spring holder, upper RB2-8754-000CN See “Top-cover assembly” on page 150.
Not used on the HP 4100 LaserJet series printer	Spring holder, lower RB2-8755-000CN See “Top-cover assembly” on page 150.
Not used on the HP 4100 LaserJet series printer	Handle, face-up RB2-8751-000CN See “Covers” on page 148.
Not used on the HP 4100 LaserJet series printer	Cover, front assembly RG5-5298-000CN See “Covers” on page 148.
Not used on the HP 4100 LaserJet series printer	Cover, key C9148-4000X See “Covers” on page 148.

How to use the parts lists and diagrams

The figures in this chapter illustrate the major subassemblies in the MFP and their component parts. A table (part number list) follows each exploded assembly diagram. Each table lists the reference designator, the associated part number for the item, and a description of the part.

Parts that have no reference designator or part number are not field-replaceable units (FRUs) and cannot be ordered.

CAUTION While looking for a MFP electrical component part number, pay careful attention to the voltage listed in the description column to ensure that the component part number selected is for the correct model of the printer.

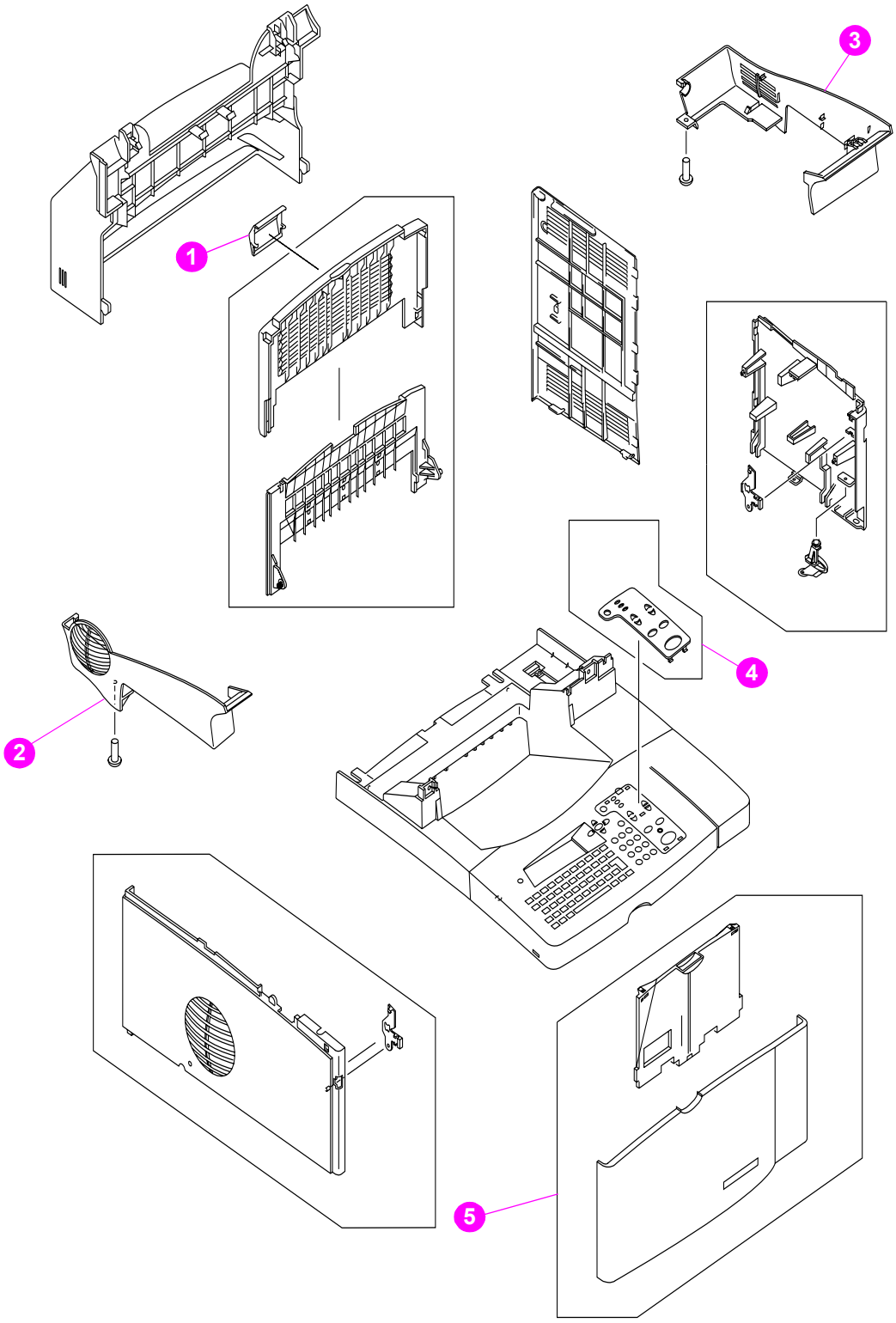

Figure 95. **Covers**

Table 29. Covers

Part Number	Description	Reference
RB2-8751-000CN	Handle, face-up	1; Figure 95
RB2-8757-000CN	Cover, side left	2; Figure 95
RB2-8758-000CN	Cover, side right	3; Figure 95
C9148-40001 C9148-40002 C9148-40003 C9148-40004 C9148-40005 C9148-40006 C9148-40007 C9148-40008	Cover, key English Cover, key French Cover, key Italian Cover, key German Cover, key Spanish Cover, key Dutch Cover, key Danish Cover, key Finish	4; Figure 95
RG5-5298-000CN	Cover, front assembly	5; Figure 95

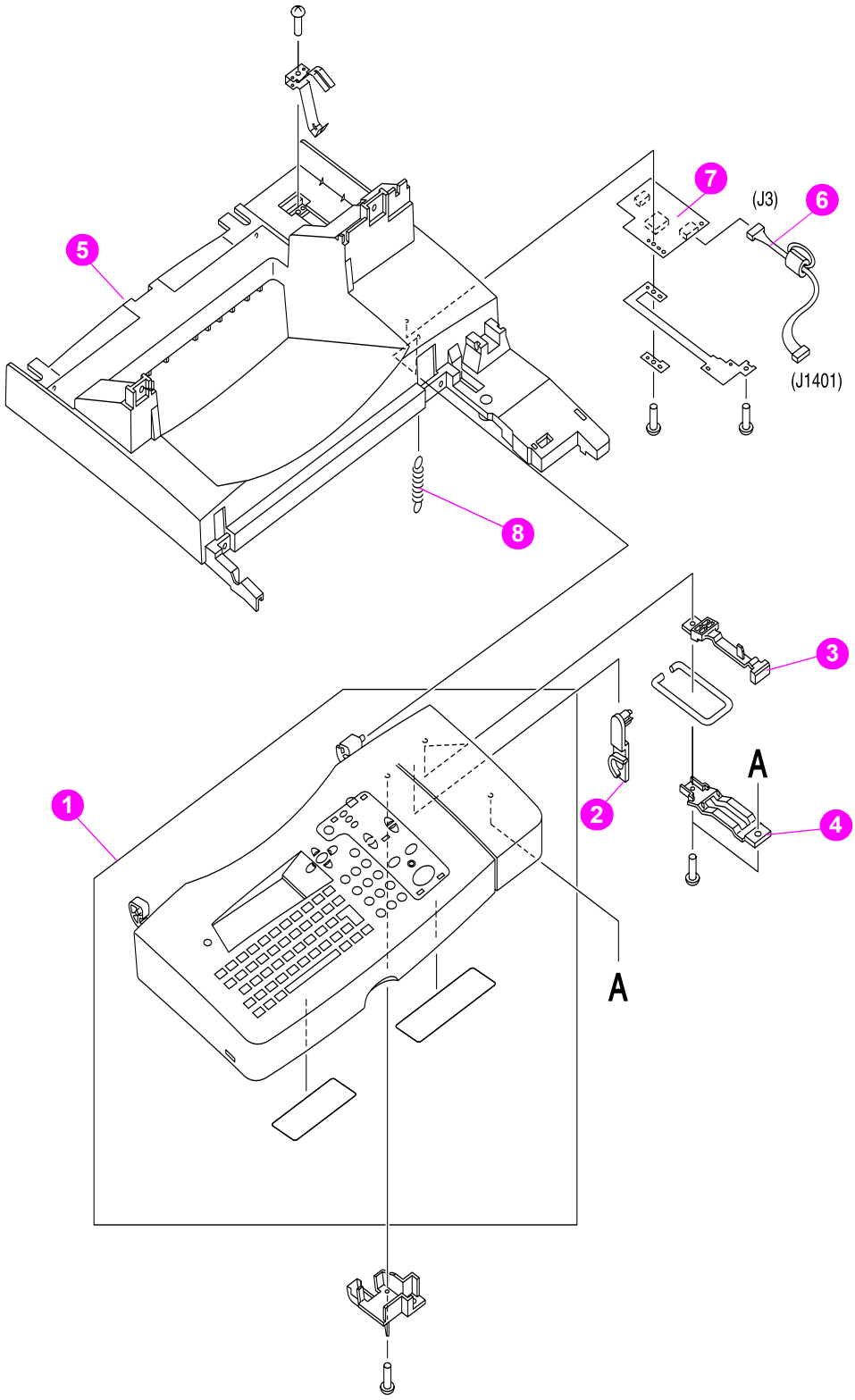

Figure 96. **Top-cover assembly**

Table 30. Top-cover assembly

Part Number	Description	Reference
RG5-6563-000CN	Control-panel assembly	1; Figure 96
C9148-69002	Exchange Control-panel assembly	1; Figure 96
RB2-8749-000CN	Rod	2; Figure 96
RB2-8754-000CN	Spring holder, upper	3; Figure 96
RB2-8755-000CN	Spring holder, lower	4; Figure 96
RB2-8748-000CN	Frame, upper	5; Figure 96
RG5-6644-000CN	Panel cable	6; Figure 96
RG5-6534-000CN	Connector PCB assembly	7; Figure 96
RB2-8764-000CN	Spring, tension	8; Figure 96

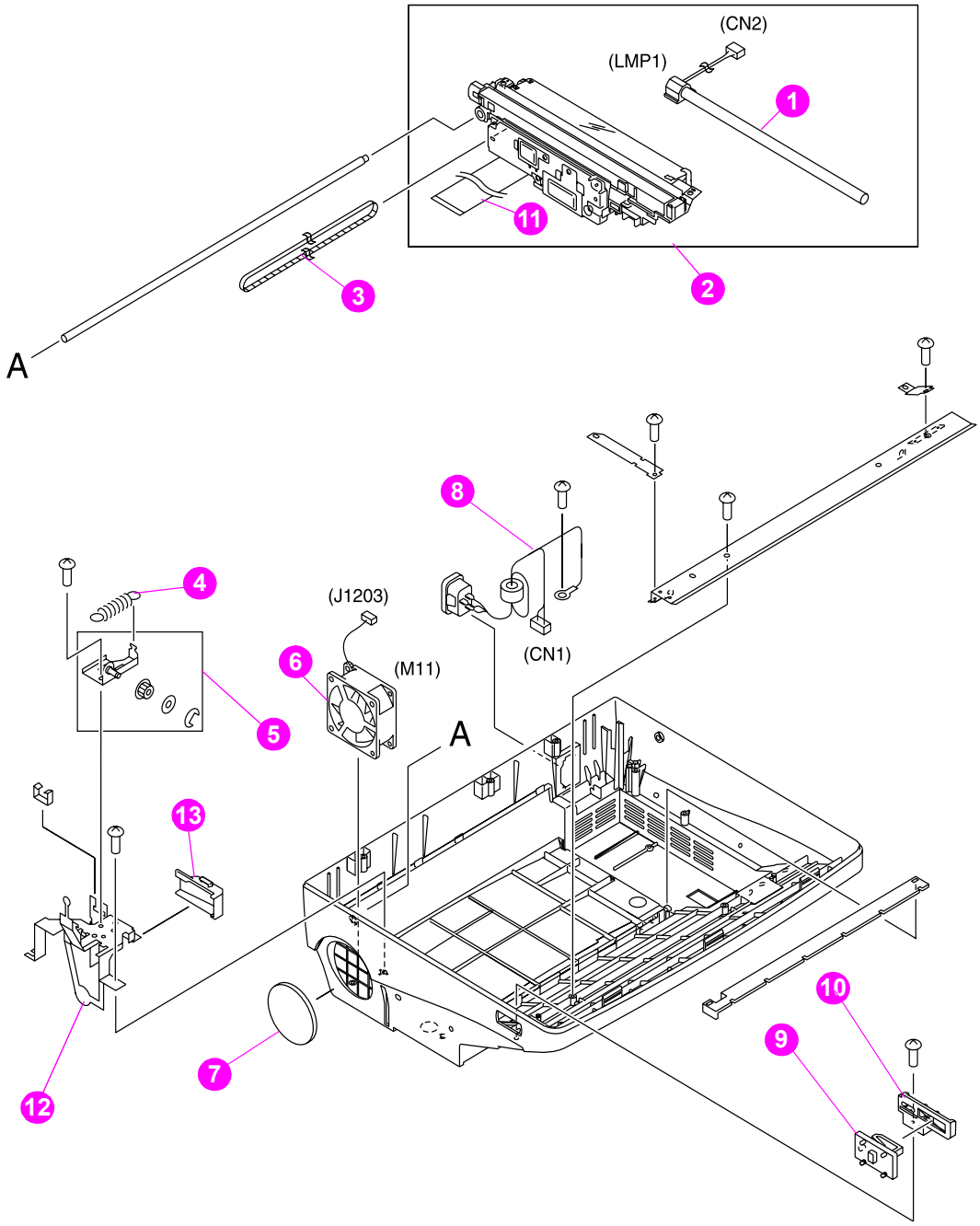

Figure 97. **Scan unit (1 of 2)**

Table 31. Scan unit (1 of 2)

Part Number	Description	Reference
RH7-3074-000CN	Lamp, scanner	1; Figure 97
RG1-4124-000CN	Optical unit (comes with the scanning lamp and ribbon cable)	2; Figure 97
RA2-2964-000CN	Belt, timing	3; Figure 97
RS1-2417-000CN	Spring, Tension (tension spring for optic-unit drive belt)	4; Figure 97
RG1-4131-000CN	Pulley, carriage assembly (optic-unit drive-belt tension bracket)	5; Figure 97
RH7-1511-000CN	Fan	6; Figure 97
RA2-2955-000CN	Filter, air	7; Figure 97
RH2-5517-000CN	Cable, inlet	8; Figure 97
RA2-2947-000CN	Lever. lock	9; Figure 97
RA2-2948-000CN	Holder, lock	10; Figure 97
RH2-5476-000CN	Ribbon cable (optic scan unit)	11; Figure 97
RF1-4169-000CN	Fan cage	12; Figure 97
RA2-2961-000CN	Fan duct	13; Figure 97

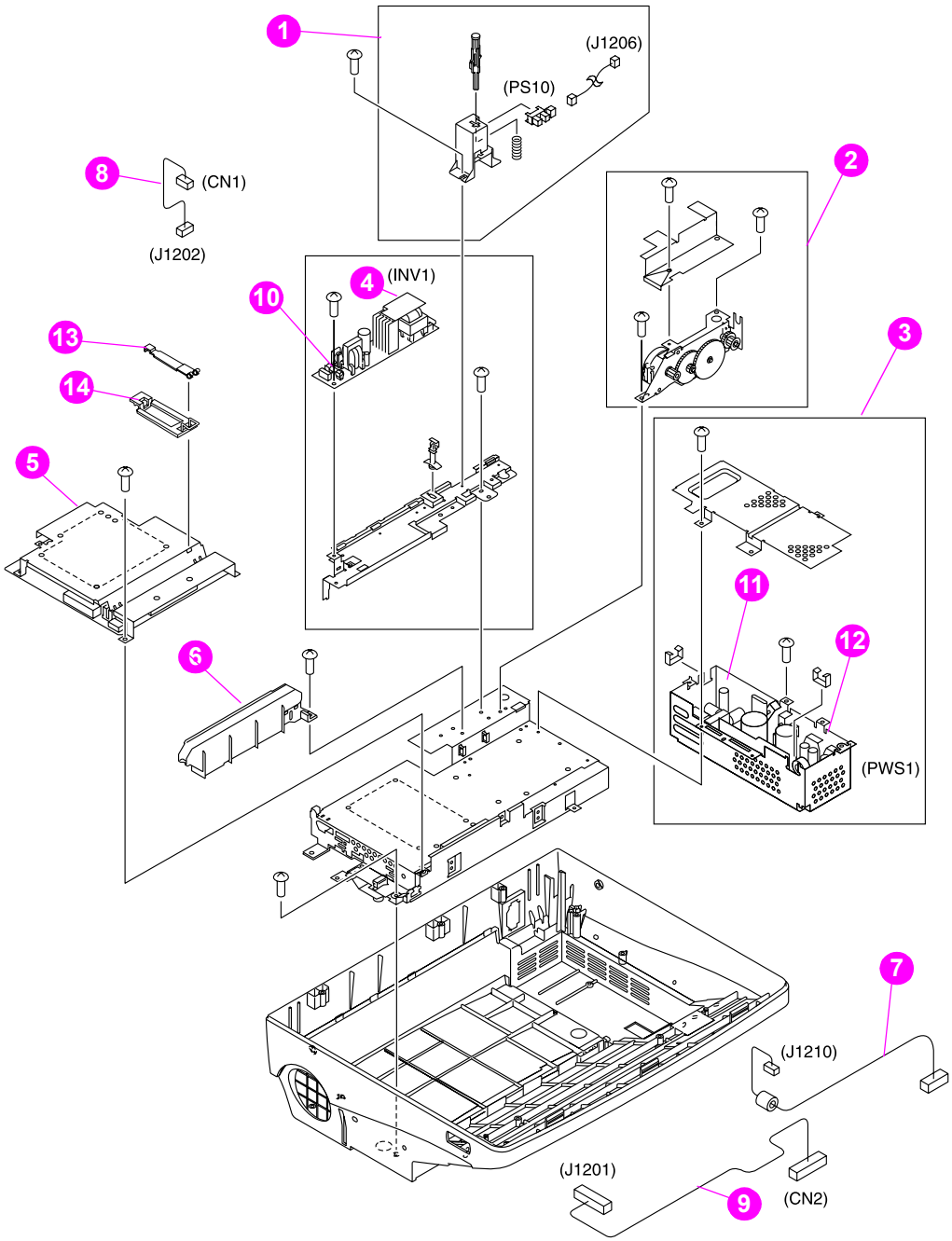

Figure 98. **Scan unit (2 of 2)**

Table 32. Scan unit (2 of 2)

Part Number	Description	Reference
RG1-4120-000CN	ADF door-open sensor assembly (PS10)	1; Figure 98
RG1-4122-000CN	Scan-unit motor assembly (optic unit drive gear/motor)	2; Figure 98
RG1-4175-000CN	Power supply with veristor cover (does not include top shield)	3; Figure 98
RH7-3075-000CN	Inverter control PCB assembly	4; Figure 98
RG1-4123-000CN	Scanner controller PCB	5; Figure 98
RA2-2940-000CN	Cable guide (for the scanning lamp cable)	6; Figure 98
RH2-5513-000CN	Cable, control panel (J1210)	7; Figure 98
RH2-5515-000CN	Cable, inverter controller (J1202)	8; Figure 98
RH2-5516-000CN	Cable, power	9; Figure 98
VD7-0041-251CN	Fuse, inverter controller	10; Figure 98
RH2-5550-000CN	Veristor-cover (in the power supply)	11; Figure 98
VD7-0644-001CN	Fuse, power supply	12; Figure 98
RA2-2949-000CN	Plate, guide upper (optic unit ribbon cable clip)	13; Figure 98
RA2-2943-000CN	Plate, guide lower (optic unit ribbon cable clip)	14; Figure 98

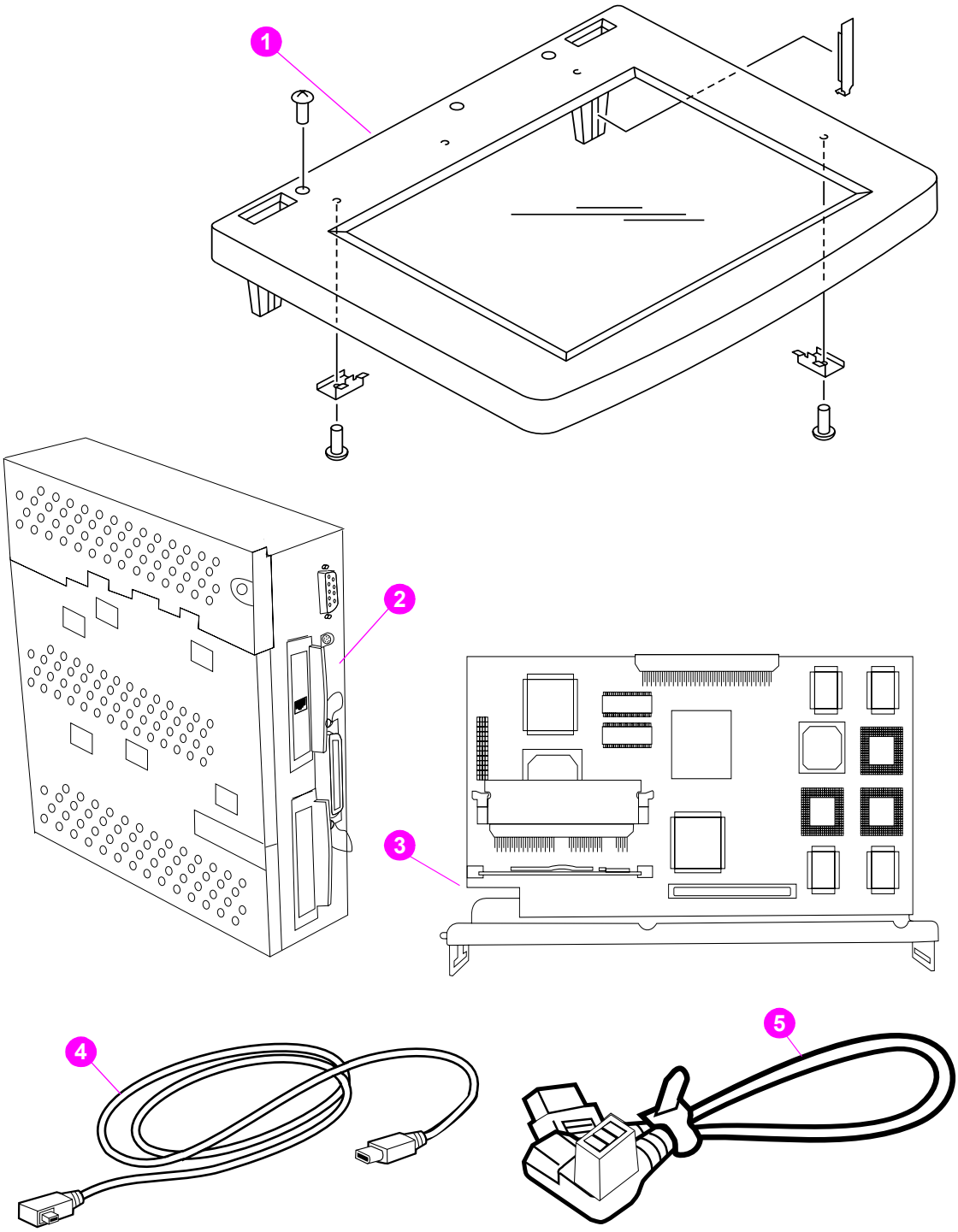

Figure 99. **Glass, formatter, CPB, and cables**

Table 33. Glass, formatter, CPB, high-speed copy connect cable, and power cord

Part Number	Description	Reference
RG1-4127-000CN	Glass assembly	1; Figure 99
C7844-67901	Formatter assembly, 4100mfp and 4101mfp without hard disk, DIMMS, or JetDirect card	2; Figure 99
C9168-67911	DIMM, firmware formatter	Not shown
C9168-67902	DIMM, firmware CPB (flash)	Not shown
C8541-67901	Copy processor board (CPB) with faceplate	3; Figure 99
5969-8960	High-speed copy connect cable	4; Figure 99
C9148-60102	Power cable jumper (scan unit to print unit jumper)	5; Figure 99

Note To find the part numbers for a hard disk, memory DIMMs, JetDirect card, or other accessories, see "Accessories and supplies" on page 145.

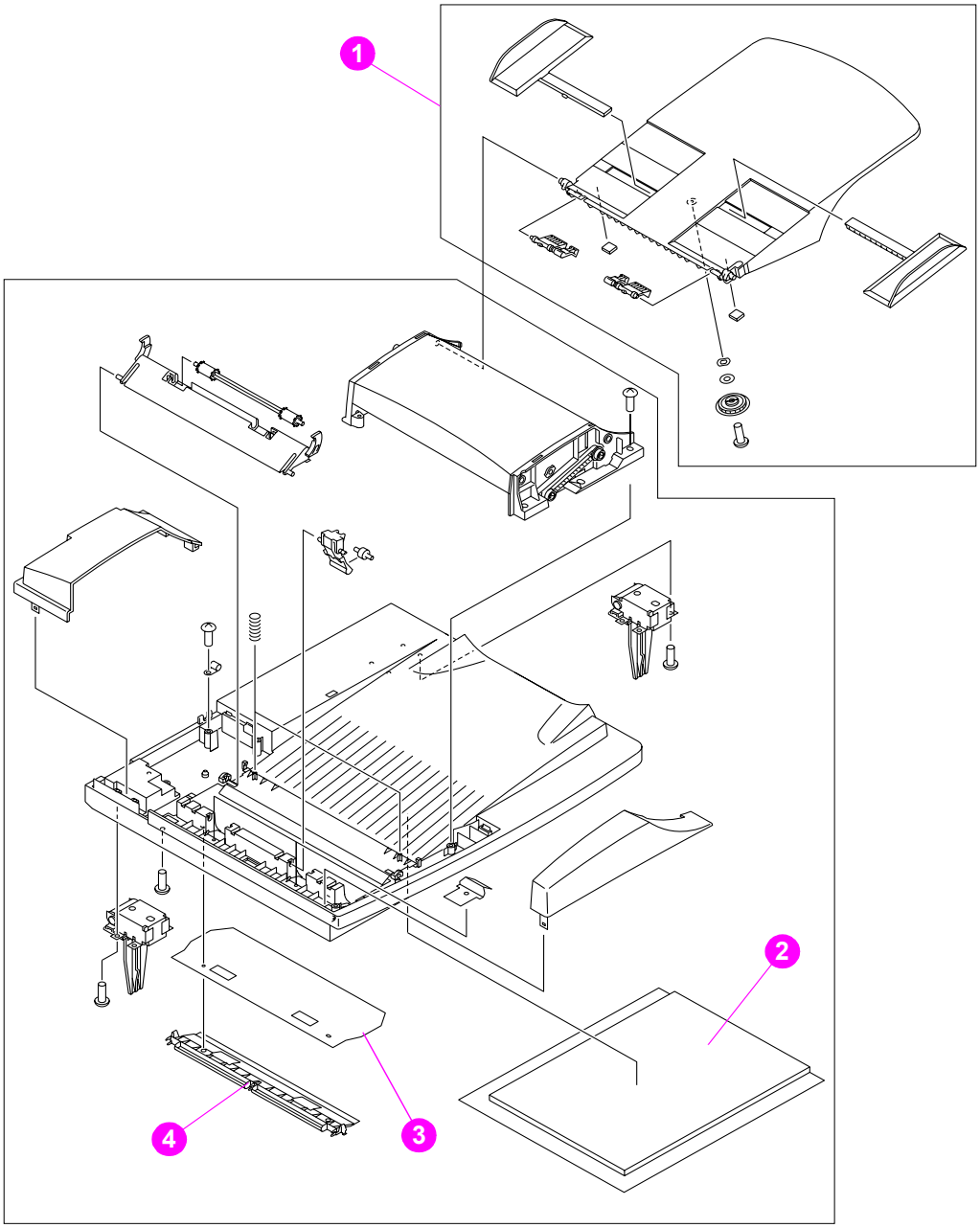

Figure 100. **ADF unit (1 of 2)**

Table 34. ADF unit (1 of 2)

Part Number	Description	Reference
RG5-6549-000CN	ADF unit (entire assembly) Does not include the ADF input tray (RG5-6579-000CN)	
C9148-69001	Exchange ADF (entire assembly) Does not include the ADF input tray (RG5-6579-000CN)	
RG5-6579-000CN	ADF input tray	1; Figure 100
RB2-8795-000CN	White backboard sheet	2; Figure 100
RB2-8793-000CN	Mylar sheet, clear	3; Figure 100
RF5-3804-000CN	Mylar-sheet holder	4; Figure 100

Note

Only replace the entire ADF unit if all attempts to troubleshoot the unit at a component level have failed *or* if the ADF unit component that has failed is not a service part (it has no part number). See "Troubleshooting" on page 109.

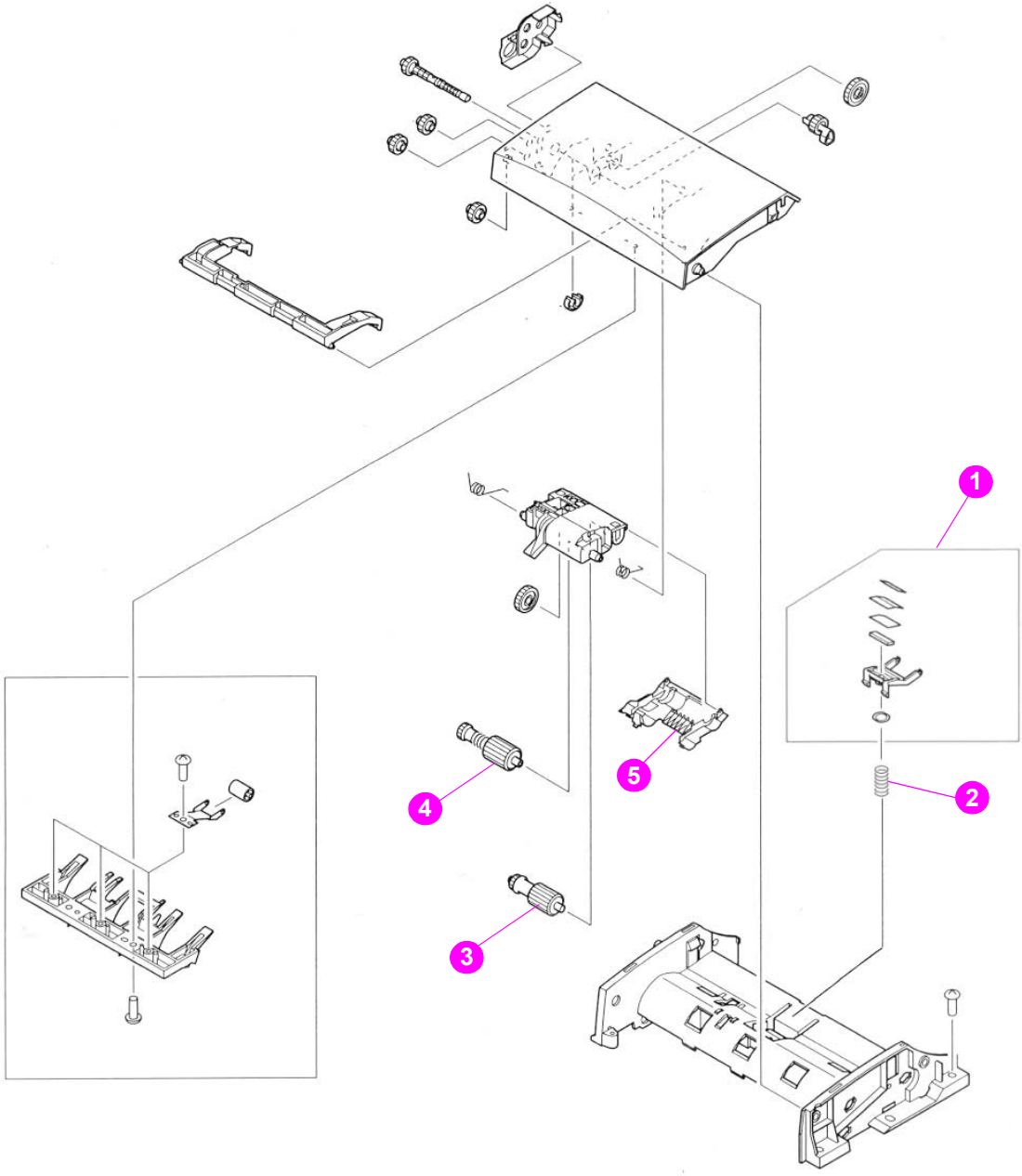

Figure 101. **ADF unit (2 of 2)**

Table 35. ADF unit (2 of 2)

Part Number	Description	Reference
RF5-3808-000CN	Separation-pad assembly	1; Figure 101
RS6-2572-000CN	Spring, compression	2; Figure 101
RB2-8769-0000CN	Roller, pickup	3; Figure 101
RG5-6583-000CN	Roller, separation	4; Figure 101
RB2-8781-000CN	Cover, rollers	5; Figure 101

Alphabetical parts list

Table 36. Alphabetical parts list

Part Number	Description	Ref.
RG1-4120-000CN	ADF door-open sensor assembly (PS10)	1; Figure 98
RG5-6579-000CN	ADF input tray	1; Figure 100
RG5-6549-000CN	ADF unit (entire assembly) Does not include the ADF input tray (RG5-6579-000CN)	
RA2-2964-000CN	Belt, timing	3; Figure 97
RA2-2940-000CN	Cable guide (for the scanning lamp cable)	6; Figure 98
RH2-5513-000CN	Cable, control panel (J1210)	7; Figure 98
RH2-5517-000CN	Cable, inlet	8; Figure 97
RH2-5515-000CN	Cable, inverter controller (J1202)	8; Figure 98
RH2-5516-000CN	Cable, power	9; Figure 98
RG5-6534-000CN	Connector PCB assembly	7; Figure 96
RG5-6563-000CN	Control-panel assembly	1; Figure 96
C8541-67901	Copy processor board (CPB) with faceplate	3; Figure 99
RG5-5298-000CN	Cover, front assembly	5; Figure 95
C9148-40001 C9148-40002 C9148-40003 C9148-40004 C9148-40005 C9148-40006 C9148-40007 C9148-40008	Cover, key English Cover, key French Cover, key Italian Cover, key German Cover, key Spanish Cover, key Dutch Cover, key Danish Cover, key Finish	4; Figure 95
RB2-8781-000CN	Cover, rollers	5; Figure 101
RB2-8757-000CN	Cover, side left	2; Figure 95
RB2-8758-000CN	Cover, side right	3; Figure 95
C9168-67901	DIMM, firmware CPB (flash)	Not shown
C9147-679020	DIMM, firmware formatter	Not shown
RH7-1511-000CN	Fan	6; Figure 97
RF1-4169-000CN	Fan cage	12; Figure 97
RA2-2961-000CN	Fan duct	13; Figure 97
RA2-2955-000CN	Filter, air	7; Figure 97
C7844-67109	Formatter assembly, 4100mfp and 4101mfp without hard disk, DIMMS, or JetDirect card	2; Figure 99
RB2-8748-000CN	Frame, upper	5; Figure 96
VD7-0644-001CN	Fuse power supply	12; Figure 98
VD7-0041-251CN	Fuse, inverter controller	10; Figure 98
RG1-4127-000CN	Glass assembly	1; Figure 99
RB2-8751-000CN	Handle, face-up	1; Figure 95
5969-8660	High-speed copy connect cable	4; Figure 99
RA2-2948-000CN	Holder, lock	10; Figure 97
RH7-3075-000CN	Inverter control PCB assembly	4; Figure 98
RH7-3074-000CN	Lamp, scanner	1; Figure 97
RA2-2947-000CN	Lever. lock	9; Figure 97
RB2-8793-000CN	Mylar sheet, clear	3; Figure 100

Table 36. Alphabetical parts list (continued)

Part Number	Description	Ref.
RF5-3804-000CN	Mylar-sheet holder	4; Figure 100
RG1-4124-000CN	Optical unit (comes with the scanning lamp and ribbon cable)	2; Figure 97
RG5-6644-000CN	Panel cable	6; Figure 96
RA2-2943-000CN	Plate, Guide lower	14; Figure 98
RA2-2949-000CN	Plate, Guide upper	13; Figure 98
C9148-60102	Power cable jumper (scan unit to print unit jumper)	5; Figure 99
RH1-4175-000CN	Power supply with veristor cover (does not include top shield)	3; Figure 98
RG1-4131-000CN	Pulley, carriage assembly (optic-unit drive-belt tension bracket)	5; Figure 97
RH2-5476-000CN	Ribbon cable (optic scan unit)	11; Figure 97
RB2-8749-000CN	Rod	2; Figure 96
RB2-8769-0000CN	Roller, pickup	3; Figure 101
RG5-6583-000CN	Roller, separation	4; Figure 101
RG1-4123-000CN	Scanner controller PCB	5; Figure 98
RG1-4122-000CN	Scan-unit motor assembly (optic unit drive gear/motor)	2; Figure 98
RF5-3808-000CN	Separation-pad assembly	1; Figure 101
RB2-8755-000CN	Spring holder, lower	4; Figure 96
RB2-8754-000CN	Spring holder, upper	3; Figure 96
RS6-2572-000CN	Spring, compression	2; Figure 101
RB2-8764-000CN	Spring, tension	8; Figure 96
RS1-2417-000CN	Spring, Tension (tension spring for optic-unit drive belt)	4; Figure 97
RH2-5550-000CN	Veristor-cover (in the power supply)	11; Figure 98
RB2-8795-000CN	White backboard sheet	2; Figure 100

Numerical parts list

Table 37. Numerical parts list

Part Number	Description	Ref.
5969-8660	High-speed copy connect cable	4; Figure 99
C7844-67901	Formatter assembly, 4100mfp and 4101mfp without hard disk, DIMMS, or JetDirect card	2; Figure 99
C8541-67901	Copy processor board (CPB) with faceplate	3; Figure 99
C9147-67920	DIMM, firmware formatter	Not shown
C9148-40001 C9148-40002 C9148-40003 C9148-40004 C9148-40005 C9148-40006 C9148-40007 C9148-40008	Cover, key English Cover, key French Cover, key Italian Cover, key German Cover, key Spanish Cover, key Dutch Cover, key Danish Cover, key Finish	4; Figure 95
C9148-60102	Power cable jumper (scan unit to print unit jumper)	5; Figure 99
C9168-67901	DIMM, firmware CPB (flash)	Not shown
RA2-2940-000CN	Cable guide (for the scanning lamp cable)	6; Figure 98
RA2-2943-000CN	Plate, Guide lower (optic unit ribbon cable clip)	14; Figure 98
RA2-2947-000CN	Lever. lock	9; Figure 97
RA2-2948-000CN	Holder, lock	10; Figure 97
RA2-2949-000CN	Plate, Guide upper (optic unit ribbon cable clip)	13; Figure 98
RA2-2955-000CN	Filter, air	7; Figure 97
RA2-2961-000CN	Fan duct	13; Figure 97
RA2-2964-000CN	Belt, timing	3; Figure 97
RB2-8748-000CN	Frame, upper	5; Figure 96
RB2-8749-000CN	Rod	2; Figure 96
RB2-8751-000CN	Handle, face-up	1; Figure 95
RB2-8754-000CN	Spring holder, upper	3; Figure 96
RB2-8755-000CN	Spring holder, lower	4; Figure 96
RB2-8757-000CN	Cover, side left	2; Figure 95
RB2-8758-000CN	Cover, side right	3; Figure 95
RB2-8764-000CN	Spring, tension	8; Figure 96
RB2-8769-0000CN	Roller, pickup	3; Figure 101
RB2-8781-000CN	Cover, rollers	5; Figure 101
RB2-8793-000CN	Mylar sheet, clear	3; Figure 100
RB2-8795-000CN	White backboard sheet	2; Figure 100
RF1-4169-000CN	Fan cage	12; Figure 97
RF5-3804-000CN	Mylar-sheet holder	4; Figure 100
RF5-3808-000CN	Separation-pad assembly	1; Figure 101
RG1-4120-000CN	ADF door-open sensor assembly (PS10)	1; Figure 98
RG1-4122-000CN	Scan-unit motor assembly (optic unit drive gear/motor)	2; Figure 98
RG1-4123-000CN	Scanner controller PCB	5; Figure 98

Table 37. Numerical parts list (continued)

Part Number	Description	Ref.
RG1-4124-000CN	Optical unit (comes with the scanning lamp and ribbon cable)	2; Figure 97
RG1-4127-000CN	Glass assembly	1; Figure 99
RG1-4131-000CN	Pulley, carriage assembly (optic-unit drive-belt tension bracket)	5; Figure 97
RG5-5298-000CN	Cover, front assembly	5; Figure 95
RG5-6534-000CN	Connector PCB assembly	7; Figure 96
RG5-6549-000CN	ADF unit (entire assembly) Does not include the ADF input tray (RG5-6579-000CN)	
RG5-6563-000CN	Control-panel assembly	1; Figure 96
RG5-6579-000CN	ADF input tray	1; Figure 100
RG5-6583-000CN	Roller, separation	4; Figure 101
RG5-6644-000CN	Panel cable	6; Figure 96
RH1-4175-000CN	Power supply with veristor cover (does not include top shield)	3; Figure 98
RH2-5476-000CN	Ribbon cable (optic scan unit)	11; Figure 97
RH2-5513-000CN	Cable, control panel (J1210)	7; Figure 98
RH2-5515-000CN	Cable, inverter controller (J1202)	8; Figure 98
RH2-5516-000CN	Cable, power	9; Figure 98
RH2-5517-000CN	Cable, inlet	8; Figure 97
RH2-5550-000CN	Veristor-cover (in the power supply)	11; Figure 98
RH7-1511-000CN	Fan	6; Figure 97
RH7-3074-000CN	Lamp, scanner	1; Figure 97
RH7-3075-000CN	Inverter control PCB assembly	4; Figure 98
RS1-2417-000CN	Spring, Tension (tension spring for optic-unit drive belt)	4; Figure 97
RS6-2572-000CN	Spring, compression	2; Figure 101
VD7-0041-251CN	Fuse, inverter controller	10; Figure 98
VD7-0644-001CN	Fuse, power supply	12; Figure 98

Index

D

E

F

S

T

U

V

W

invent

http://www.hp.com/support/lj4100mfp
http://www.hp.com/support/lj4101mfp

C9148-90909

software technical reference addendum

invent

hp LaserJet 4100mfp
hp LaserJet 4101mfp

Section 1

Known Issues

HP LaserJet 4100mfp
Known issues

General product

- ISSUE (External): Labels do not print from the cassette trays.

  DESCRIPTION: Printing labels from trays 2, 3, and 4 can damage the product. Labels can be printed only from tray 1.

  WORKAROUND: Do not print labels from trays 2, 3, and 4. Use tray 1.

- ISSUE (External): Transparencies do not print correctly.

  DESCRIPTION: The product can accommodate only transparencies designed specifically for laser printers.

  WORKAROUND: Use only transparencies designed for laser printers.

- ISSUE (External): Job Mode does not support input from both the flat-bed trays and the automatic document feeder (ADF).

  WORKAROUND: When using Job Mode, use only the flat-bed scanner for input into the print job.

Print job

- ISSUE (External): Printer has 55.4 error, but still accepts print job data.

  DESCRIPTION: Printer shows a 55.4 error (**Printer Error cycle power to continue**), but still accepts print job data. Appearance of this error should take the printer off-line.

  WORKAROUND: Restart the product and print the job again.

HP LaserJet printing system installer

- ISSUE (External): During Network installation, changing the port name causes Network Installer to fail and returns a severe error message.

  DESCRIPTION: If the port name is changed during installation and a port name longer than 49 characters is used, the installer is unable to install any drivers and returns a setup error dialog box that states, "Setup was unable to install the HP LaserJet 4100 PCL 6 driver. Refer to the installation Notes for information on how to install this driver manually." Clicking **OK** produces identical message boxes for PCL 5e and PS drivers.

  WORKAROUND: Use a port name no longer than 49 characters.

- ISSUE (External): Acrobat Reader appears as installable, but cannot be installed through the Silent Installer option of the product's Customization utility.

  DESCRIPTION: When running the product's Customization utility using the **Silent Installer** option, Acrobat Reader appears on the list of installable components. However, Acrobat Reader and the printer accessory documentation are not installed. When using the interactive Customization utility, Acrobat Reader is selectable and will be installed as expected.

  WORKAROUND: For Acrobat Reader and the printer accessory documentation to be installed, use the interactive option of the Customization utility.

- ISSUE (internal): After a typical installation, the printer drivers do not appear in Add Printer until the computer is restarted.

  DESCRIPTION: In Windows 98, the Add Printer Wizard manufacturer's list of printers is not updated until the computer is restarted. The printer drivers will appear in the manufacturer's list of printers in the HP folder after the computer is restarted.

  WORKAROUND: Restart the computer after the printer installation is completed.

- ISSUE (External): In Windows 98, a second copy of the printer is installed through plug-n-play after restarting the computer.

  DESCRIPTION: When the printer is connected to a local port on a computer using Windows 98, and is also connected through a network, an additional copy of the printer will be installed through plug-n-play after restarting the computer.

  WORKAROUND: Disconnect the local port connection to the printer, or install a printer driver for the local connection.

- ISSUE (External): You are unable to cancel the HP LaserJet printing system installer after file copy has begun.

  DESCRIPTION: No **Cancel** button is available when the printing system installer is copying files and updating the system. The **Cancel** button is not available because cancellation during the file copy or system update processes could leave your system in an unknown state.

  WORKAROUND: Complete the printing system installation and use the printing system uninstaller located in the HP LaserJet Programs folder to uninstall the printing system. Also, do not close programs or turn off the computer during the file copy and system update process. After the uninstall process is complete, the printing system installer can be rerun with your new selections.

- ISSUE (External): There is no response when trying to run the installer's SETUP.EXE file.

  [Comment: This issue was inherited from the Cayenne STR. It applies to Scout and DESCRIPTION: The installation program checks for a minimum of 7 MB of free disk space on the computer before starting the installation of the software. If there is not at least 7 MB of free disk space, the installer will not start and no error messages or warnings appear.

  WORKAROUND: Verify that there is at least 20 MB of free disk space available for the installation of the software.

- ISSUE (External): The installer presents custom installation options during a typical installation.

  DESCRIPTION: This problem occurs during a typical installation if you mistakenly select **Custom Installation**, click **Back**, click **Typical Installation**, and then click **Next**. The installer presents custom installation options rather than typical installation options.

  WORKAROUND: Cancel the installation process by exiting the installer. Restart the installer and be sure to select **Typical Installation**.

- ISSUE (External): You experience proxy errors while trying to perform a Web Update during installation.

  WORKAROUND: Go to the **http://www.hp.com** Web site and download the latest version of the HP LaserJet printing system software. Install the newly downloaded software rather than installing the software from the HP LaserJet software CD browser.

- ISSUE (Internal): Selecting another port during installation generates a severe error dialog box and requires you to run Setup again.

  DESCRIPTION: If you select **Connected to this computer** on the **Type of Connection** dialog box during installation, and then, on the **Select Port** dialog box, either change the characters in the text box beside the **Parallel:** option button, or select the **Other:** option button and change the characters in the text box that is enabled, a severe error is generated and installation.

  WORKAROUND: Select only the ports available in the **Select Port** dialog box.

HP LaserJet printing system uninstaller

- ISSUE (External): The HP LaserJet printing system uninstaller does not completely uninstall the printing system software.

  DESCRIPTION: If the printing system installer is used to install more than one language on the same system, only the files and components from the last installation will be removed. The printing system installer stores only one uninstallation file per system.

WORKAROUND: Uninstall the printing system for one language before installing the printing system for a second language.

- ISSUE (External): When uninstalling the PS driver, the uninstaller does not remove all PS driver files.

  DESCRIPTION: When using the Window 2000 operating system, the uninstaller does not remove all PS driver files unless the PS driver has been used at least once.

  WORKAROUND 1: Use the PS driver at least once before uninstalling it.

  WORKAROUND 2: Manually remove the PS driver from the Printer folder by selecting the driver icon and removing it.

- ISSUE (External): PS driver name is incorrect in the **Components** dialog box of the uninstaller.

  DESCRIPTION: When uninstalling, the **Components** dialog box shows the PS driver as "HP LaserJet 4100 P" rather than "HP LaserJet 4100 PS". The PCL 5e and PCL 6 drivers are shown correctly.

  WORKAROUND 1: Use the uninstaller anyway; this issue does not affect uninstallation.

  WORKAROUND 2: If your operating system is Windows 2000 or Windows XP, you may also use the print server to remove the drivers.

- ISSUE (External): The Uninstaller does not remove all driver registry entries.

  DESCRIPTION: When uninstalling printer drivers using Windows 98 and Windows Me, the registry does not remove all driver registry entries. If you subsequently try to re-install the driver, you are prompted to keep the existing driver (recommended) or replace the existing driver. If you select the option to keep the existing driver, the driver does not print.

  WORKAROUND: Re-install the driver. When you are prompted to either keep the existing drivers or and replace them, select the option to replace the existing driver.

Install Network Printer wizard

- ISSUE (External): For port names more than 63 characters in length, the port creation fails.

  DESCRIPTION: If you choose to change the port name and use a new name consisting of more than 63 characters, the port creation will fail. A dialog box appears with the following message: "There was an error creating the port. Please refer to the readme file about how to create network printer ports." The printer will be set up to the local printer port. The driver installation finishes, and the printer is set up to print to LPTx.

WORKAROUND: Run the installer again and enter a name with fewer than 63 characters.

- ISSUE (External): The IP Address is set using Suggest Settings and printer creation fails.

  DESCRIPTION: Conditions required: The computer is configured with TCP/IP only and a Dial Up Adapter, the printer has an assigned IP address, and a specific device search is performed by hardware address.

  After the printer is discovered using the hardware address, you can use the Suggest Settings option on the IP Settings screen. If you use the Suggest Settings option (autonet), the installation continues as though the installer is assigning an autonet address to the printer. However, the installation will fail and IP on printer will not be written.

  WORKAROUND: Do not change the IP Address using the Suggest Settings option.

- ISSUE (External): The Install Network Printer Wizard does not suggest a default queue name.

  DESCRIPTION: A new queue is created each time the Install Network Printer Wizard runs on different computers. For the first eight installations, the Install Network Printer Wizard suggests a default queue name incrementing by _q2, _q3... This is successful until the ninth queue. When the ninth queue should be created, the queue is not created and the queue name field remains blank.

  WORKAROUND: Type in the name of the queue.

NOTE: Use Add Printer or the appropriate installer to attach to an existing queue rather than using the Install Network Printer Wizard to create a new queue for each workstation. If you want a new queue for each workstation, you will have to type in a new queue name.

Customization utility

- ISSUE (External): When installing the printing system software using a custom disk set created with the Customization Utility, the following error occurs: "Setup is unable to find _SETUP.DLL, which is needed to complete the installation. Error 103"

  DESCRIPTION: When installing from a custom printing system disk set, the language selection must match the language that was selected when the custom printing system was created.

  The custom installation program will prompt the user for a language selection. If the language selected during installation is different from the language selected when the custom printing set was created, error 103 occurs. The custom printing system installer created with the Customization Utility contains only the language that was selected when

the custom printing system was created; therefore, that same language must be selected when installing with the custom printing system.

WORKAROUND: Verify the same language that was selected when the custom printing system was created is also selected when the custom printing system is used to perform an installation.

- ISSUE (External): When the Customization Utility is run by a non-administrator on an OS-only image of Windows NT 4.0, an infinite loop occurs.

  DESCRIPTION: A dialog box appears stating that some files need to be updated before the utility can be run, and you are prompted to restart to make this happen. However, when you click OK on this window (the default selection is Yes), the computer restarts and, when you log in again, the Make-Disk utility automatically runs again and the same dialog box appears. This continues to happen as long as you are not logged in as an administrator of the system.

  WORKAROUND 1. When the dialog box stating that some files need to be updated appears, click No, and then click OK to exit the Customization utility. Log in with an administrator account. The Make-Disk utility automatically runs and the dialog box appears once more. Restart the computer and log in again using the administrator account. The Customization Utility will run correctly.

Network bidirectional communication

- ISSUE (External): On NT 4.0 clients, errors occur when running HP Port Resolver.

  DESCRIPTION: When running the HP Port Resolver to provide bidirectional functionality from a Windows NT 4.0 client machine to a remote printer connected through a Windows NT 4.0 shared computer, one of the following may occur:

  1. When clicking the printer driver **Update Now** button, a "printer communication error" is posted.

  2. When using the Printer Status and Alerts utility, a broken connection is displayed.

  3. When using the porttest.exe test utility, the error code 0x80070005 is returned.

  Windows 95, Windows 98, Windows Me, and Windows 2000 are not affected by this issue. The condition occurs only in Windows NT 4.0.

  WORKAROUND: If an "Update Now" or "Stand Alone Status" from a Windows NT 4.0 client fails to communicate with a printer on a remote WIndows NT 4.0 shared computer, make sure that the Network> Services> RPC Configuration service is correctly installed on both the client AND the host (print server) machines, and that the RPC **Name**

Service Provider field (click RPC - "Properties" to view this information) is set to "Windows NT Locator."

- ISSUE (External): Enterprise Autoconfiguration does not work on a Windows NT 4.0 client from a TCP/IP host using Windows XP.

  DESCRIPTION: Enterprise Autoconfiguration (EAC) does not work on a Windows NT 4.0 client from a TCP/IP host using Windows XP. Windows XP (Professional) works if the DNS does not have a conflict resolving the printer name to the correct TCP/IP address.

  WORKAROUND: Resolve the incorrect DNS information to ensure that the TCP/IP address and printer name reference one another correctly.

Local (IR, parallel, and USB) bidirectional support

- ISSUE (External): Some advanced features of the HP LaserJet printing system are not supported over a parallel or USB printer connection.

  DESCRIPTION: Printing system components that require bidirectional communication are not supported over parallel or USB printer connections. The components that are not supported over parallel or USB include:

  - Driver Autoconfiguration
  - Update Now
  - Printer Status and Alerts

  WORKAROUND: None.

Web Registration

- ISSUE (External): Before the browser opens to perform a Web Registration, the Web Registration program displays a message asking if the registration was successful

  WORKAROUND: Click **Yes** to clear the **Web Registration** dialog box. Proceed with the Web Registration.

Web installation

- ISSUE (External): The Installer hangs if you start a new installation after canceling Web install.

  DESCRIPTION: If, after canceling Web Update, you immediately click **Install Printer** again in the CD browser, several errors can occur:

  - the system can crash
  - the setup progress bar might proceed to 99%, then the system can hang

- an _ins5576 error can appear, followed by a system crash

WORKAROUND 1: Do not click **Install Printer** immediately after canceling out of Web installation. Instead, wait several minutes before clicking **Install Printer**.

WORKAROUND 2: Start Task Manager (press Ctrl + Alt + Delete) and end the IFTW.EXE task.

General printer driver

- ISSUE (External): The **Proof and Hold** option in Job Retention prints all of the copies of a print job.

  DESCRIPTION: Some applications might send each copy of a print job as separate jobs from the application.

  WORKAROUND: Clear the selection for collation in the software application.

- ISSUE (External): When duplexing, you cannot print on the back side of the first sheet if you selected **Use Different Paper** for the first page.

  WORKAROUND: The printing system does not allow at this time for the use of different paper for the first page of a duplexed printing job. This functionality might be added in future products.

- ISSUE (External): When using Print on Both Sides with multiple copies, the second copy prints on the first copy's last page instead of on a separate page.

  DESCRIPTION: This is a known issue with several applications. For example, an application sends a three-page, two-copy job as one six-page document. When print data is sent to the printer in this manner, the driver cannot distinguish that it is really two copies of the same print job.

  WORKAROUND: Turn on **Ignore Application Collation** in the printer driver and turn off collation in the application's **Print** dialog box.

- ISSUE (External): Graphic image files with the Portable Network Graphics (PNG) file extension do not print with the current version of Netscape Navigator (4.73).

  DESCRIPTION: Netscape does not support graphic image files with the .PNG file extension by default. A PNG plug-in must be downloaded from Netscape and installed into the browser.

  WORKAROUND: Download and install the Portable Network Graphics plug-in from Netscape.

- ISSUE (External): The **Forms** tab of the Windows NT version of the print driver interface includes paper sizes that are not physically supported by the HP LaserJet 4100mfp (for example, A3 and 11 by 17 inches).

  WORKAROUND: The printer driver includes a feature that can be selected on the **Configure** tab, "Allow Scaling from Large Paper". The

options on this feature allow the driver to add the larger paper sizes from other installed drivers to its list of available sizes. They then appear in the driver and the NT driver **Forms** tab. For more information on using the **Allow Scaling from Larger Paper** option, refer to the driver help function.

- ISSUE (External): The test page does not print after a Drag N Drop installation.

  DESCRIPTION: When using Windows 98 or Windows ME and installing the printing system software on a network using the Drag N Drop feature from server to client, the test page does not print at the end of the installation process. This occurs only with the second driver installed when you install two or more drivers together. It does not occur if you restart your computer between driver installations. The drivers will install successfully if you do not print a test page.

  WORKAROUND: Print a test page from the **General** tab. This issue does not affect other print jobs.

PCL 6 driver

- ISSUE (External): Duplex print jobs with back cover result in two blank sheets at end of document, not one.

  WORKAROUND: None. Recycle the extra sheet.

- ISSUE (External): A general protection fault occurs on a Windows NT 4.0 client workstation when the user attempts to use Point and Print to install the HP LaserJet printer PCL 5e driver version 4.3.2.89, shared on a Windows 2000 or Windows XP host.

  DESCRIPTION: This problem occurs when a Windows 2000 host is updated from the kernel mode PCL 5e driver (version 4.3.2.76) to the user mode PCL 5e driver (version 4.3.2.89) and a user on a Windows NT 4.0 share attempts to download the updated driver from the Windows 2000 host. Because the new driver (version 4.3.2.89) is a user-mode driver, the Windows NT 4.0 client does not support it. This causes the general protection fault on the Windows NT 4.0 client.

  WORKAROUND: Uninstall all HP LaserJet kernel mode PCL 5e drivers from the Windows 2000 host. Install the updated using a user mode Windows 2000 PCL 5e driver on the Windows 2000 host. Install the Windows NT 4.0 drivers on the Windows 2000 host for Point and Print. Use Point and Print to download the kernel mode Windows NT 4.0 driver to the Windows NT 4.0 client.

PS driver

- ISSUE (External): The custom page sizes on the multipurpose trays do not work when **PostScript Custom Size** is selected.

DESCRIPTION: This problem can occur when printing a job using Microsoft Word 2000 with a Windows NT 4.0, Windows 2000, or Windows XP operating system.

WORKAROUND: Click **Start**, click **Settings**, and then click **Printers**. Right-click the printer icon, and then click **Properties**. Define the custom size, using the **Forms** tab, by selecting **Create new form**. **PostScript Custom Size** does not work.

- ISSUE (External): The watermark does not print on all copies when First Page Only is selected.

  DESCRIPTION: The problem occurs when printing from Microsoft Word 2000 using a PS driver installed with Windows 2000 or Windows XP, and the option to collate is selected both in Word and on the **Advanced** tab of the driver. When set to print on the first page only, and more than one copy is being printed, the watermark prints only on the first page of the first copy. The watermark does not print on the first page of subsequent copies. When printing from Microsoft Word 2000 using a PS driver installed with the Windows 95, Windows 98, or Windows Me operating systems, there is no workaround.

  WORKAROUND: When printing from Microsoft Word 2000 using a PS driver installed with Windows 2000, select **Collate** in the **Advanced** tab on the driver, but make sure that the option to collate is not selected in Word. To make sure that the collate option is not selected, click **File**, and then click **Print**.

- ISSUE (External): The driver sends bitmap fonts instead of Type42 fonts.

  DESCRIPTION: In Office 97 applications (Microsoft Word and Microsoft Excel), the Windows 95, Windows 98, or Windows Me driver sends bitmap fonts instead of PS fonts.

  WORKAROUND: To set Type42 fonts, click **Start**, click **Settings**, and then click **Printers**. Right-click the printer icon and click **Properties**. Click the **Font** tab, and then click **Send Font as**. Change the default setting of **Send True Type fonts As:**, which is "Outline," to "Type42" and apply it.

- ISSUE (External): Harvard Graphics documents do not print when you use a PS driver.

  DESCRIPTION: When printing a document from Harvard Graphics using the PS driver, a Dr. Watson error appears saying "An application error has occurred and an application error log is being generated. hgw98.exe. Exception: access violation (0xc00000005), Address: 0x0063dacb." The error also occurs when PS is selected as default printer and Harvard Graphics is opened.

  WORKAROUND: Print using PCL 5 or PCL 6 drivers.

- ISSUE (External): The watermark prints upside down when N-up is selected using the HP LaserJet 4100mfp printer PS driver.

DESCRIPTION: When attempting to print with N-up selected at 2 pages per sheet using the PS driver, the watermark prints upside down on the printout. This occurs in all operating systems.

WORKAROUND: Use the settings in the driver. Under Watermarks, set value to greater than 2.

- ISSUE (External): Watermark does not mirror when Mirror Image is selected in the PS driver.

  DESCRIPTION: When a watermark and **Mirror Image** are selected in the PS driver, the document will print mirrored, but the watermark will not.

  WORKAROUND: Do not use watermarks when printing mirror images.

- ISSUE (External): Print jobs in CorelDraw 9 yield shaded areas print in discrete blocks, rather than showing smooth transition.

  DESCRIPTION: When printing shaded areas in CorelDraw 9, using the PS driver on the Windows 95 operating system, the shading is not smooth, but appears in discrete blocks. This issue occurs because of a defect in the color-to-grayscale conversions.

  WORKAROUND 1: Use the PCL 6 driver.

  WORKAROUND 2: Use a color PS PPD driver, such as HP LaserJet 8550.

- ISSUE (External): During red, green, blue (RGB) color conversion to gray using the PS driver, the blue gradients are lost in PowerPoint slides.

  DESCRIPTION: The PS driver reports itself as a gray device to the operating system, causing the operating system to convert RGB values to gray incorrectly. The incorrect conversion results in the loss of the blue-to-black gradient.

  WORKAROUND 1: Use the PCL 6 driver.

  WORKAROUND 2: Use a color PS PPD driver, such as HP LaserJet 8550.

Job Retention

- ISSUE (External): When you are using the Windows 95, Windows 98, or Windows Me operating systems, the PIN number settings for Job Retention work differently in the PS environment from those in earlier products.

  DESCRIPTION: The previous instructions to set a PIN number were: To print a private job using the PS driver you have to choose one of the 50 predefined PIN numbers (20 for Windows 9x) from the PIN drop-down menu.

  WORKAROUND: Use the following enhanced method of setting PIN numbers:

To print a private job using the PS driver, you can choose a PIN number between 0000 and 9999 by selecting a value between 0 and 9 for each PIN digit. For example, to choose 1579 as a PIN number, select the following:

- PIN Digit 1 (for Private Job): 1
- PIN Digit 2 (for Private Job): 5
- PIN Digit 3 (for Private Job): 7
- PIN Digit 4 (for Private Job): 9

Printer Status and Alerts

Supported operating systems and environments

- The computer must have Internet Explorer 4.72X or later installed.
- Printer Status and Alerts is supported on Windows 95 (with WinSock 2.0), Windows 98, Windows Me, Windows 4.0, Windows 2000, and Windows XP.
- Printer Status and Alerts is available only for network printers through the installer. The software does not support parallel or USB connections. If Printer Status and Alerts is tracking a networked product that is subsequently switched to an LPT port, the utility will not be able to track jobs or get device status for that product.
- Printer Status and Alerts does not support the use of Terminal Server on Windows NT 4.0, and Windows 2000, and Windows XP.
- Unlike HP Toolbox, Printer Status and Alerts only polls the product during an active print job to minimize network traffic.

The following restrictions apply to HP products that use Printer Status and Alerts:

- For **Device Status** (printer icons in the status window), the computer must have Internet Explorer version 4.72.X or later installed. To find the version number, open Internet Explorer and click **Help**, then click About Internet Explorer. No Internet Explorer is necessary for getting status about jobs for network-connected printers. Internet Explorer can be installed after installing Printer Status and Alerts.
- On a few applications, such as Microsoft Excel and Seagate Crystal Reports, multiple copies of the same document show up in the Printer Status and Alerts window as separate jobs. This is because these applications actually send each copy as a separate job.
- For the JAWS for Windows screen reader, the computer must have Internet Explorer version 5.0 or later installed. To find the version number, open Internet

Explorer and click **Help**, then click **About Internet Explorer**. Version 5.0 is reported as Version 5.00.X or later. No Internet Explorer is necessary for getting status about jobs for network-connected printers. Internet Explorer can be installed after installing Printer Status and Alerts.

- When renaming a driver, job and device status will not be tracked until the computer is restarted.
- Drivers added after Printer Status and Alerts is installed are not recognized until the computer is restarted.
- Clicking the **Cancel** button in the Printer Status and Alerts window will not always cancel a job. This button sends a cancel request to the printer, but if the job has already been processed, it might not be possible to cancel the job (this is commonly the case with smaller jobs).
- When using Printer Status and Alerts with Microsoft printer sharing, the following items apply:
    - The Microsoft patch "Vredir" is required if you want to use Printer Status and Alerts on a Windows 95, Windows 98, or Windows Me computer for a printer that has been shared directly from a computer with Windows NT 4.0, Windows 2000, or Windows XP installed. Failure to install the patch could cause an intermittent blue screen to appear on the client computer.
    - In order for Printer Status and Alerts to function on the client computer when using Microsoft shared products, the host system must have either the **Printer Status and Alerts** or the **HP Driver Autoconfiguration** option from the HP installer on the computer.
    - For Windows 95, Windows 98, and Windows Me client computers that have Printer Status and Alerts installed, installing a printer using the Point and Print method will not activate Printer Status and Alerts.
- ISSUE (External): Multiple copies of the same print job show up in the Printer Status and Alerts window as separate jobs.

  DESCRIPTION: Some software applications send each copy of a print job as a separate job. Therefore, Printer Status and Alerts represent each copy as a separate job.

  WORKAROUND: Exit Printer Status and Alerts when printing from software applications that send each copy of a print job as a separate job. To exit Printer Status and Alerts, right-click the **Printer Status and Alerts** icon in the Windows system tray. Click **Exit**. In the **Printer Status and Alerts Startup** dialog box, click **Yes**, start again after reboot.
- ISSUE (External): A broken connection icon appears.

DESCRIPTION: This problem can occur on Windows NT 4.0 client computers that are using bidirectional communication and HP Port Resolver to a remote printer using a Windows NT 4.0 share.

WORKAROUND: Follow these steps:

1. Make sure that the RFC Configuration service is correctly installed on both the client and the print server host.

2. Make sure that the RFC Name Service Provider field is set to "Windows NT Locator."

- ISSUE (External): A print job stuck gets stuck and creates a bottleneck in Printer Status and Alerts.

  DESCRIPTION: This problem was observed when sending many print jobs to the same printer. If the jobs begin to timeout, one job may be left stuck in a Canceling status. This stuck job affects the performance of Printer Status and Alerts on subsequent print jobs. The updating of printer status for these new print jobs slows, causing some of the print jobs to timeout.

NOTE: This problem does not affect printing performance.

  WORKAROUND: Follow this procedure to shutdown and restart Printer Status and Alerts:

  1. Right-click the **Printer Status and Alerts** icon in the Windows system tray.

  2. Click **Exit**.

  3. When prompted, click **Yes**, start again after reboot.

  4. Click **Start**, and then click **Run**.

  5. Type "HPSTATUS.EXE", without the quotation marks.

  6. Click **OK** to start Printer Status and Alerts.

- ISSUE (External): On Windows 95, Windows 98, or Windows Me, installing two different copies of the same printer on the same port may result in printer status being tracked for only one of the printers.

  DESCRIPTION: Having two copies of the same driver (Windows 95, Windows 98, or Windows Me) sometimes results in no job or device status for either one.

  WORKAROUND: Delete the duplicate printer.

Novell Netware

- ISSUE (External): NDPS Printer Agents and NDS Queue Names are not available in the **Browse for Printer** dialog box during installation.

DESCRIPTION: When installing on a Novell 5.1 server, after selecting **Browse** in the **Specify Network Path** dialog box, NDS Tree and Container objects appear in the **Browse for Printer** dialog box, but leaf objects such as NDS Queues or NDPS Printer Agents do not appear.

WORKAROUND: Type the print path to the printer on the network.

- ISSUE (External): When the HP LaserJet printing system is installed on a client Novell Directory Services (NDS) installation, the installations stalls.

  DESCRIPTION: In Windows NT 4.0, Windows 2000, and Windows XP, the HP LaserJet NDS installation hangs at 100%. This occurs because when the Novell login screen requests that you log into the Novell server to continue the installation, the Novell login screen is hidden behind the printing system installer screen.

  WORKAROUND: Use ALT + TAB to select the Novell login screen and log into the server normally. After login, the printing system will continue as expected.

- ISSUE (External): A Windows 98 system receives a blue-screen error upon rebooting after a custom installation.

  DESCRIPTION: In a rare case, a blue screen may appear with a Windows 98 operating system if the computer is restarted after a custom installation of the HP LaserJet printing system software. This problem was found on a Windows 98 system connected through IPX to a Windows NT 4.0 share. The system showed a blue-screen error after restarting after an installation of all selectable options of a custom installation.

  WORKAROUND: Start the computer again.

- ISSUE (External): The **Have Disk** button does not appear in the **Add Printer** dialog box when using Point and Print to install a driver in Windows NT 4.0.

  DESCRIPTION: This is a bug identified by Novell in NetWare 4.8 for Windows NT 4.0, Windows 2000, and Windows XP.

  WORKAROUND: Novell has supplied a bug fix for this defect. The Novell file name is 250903.EXE. This file contains an updated NWSPOOL.DLL file. There are two methods for installing this update:

  - In Windows Explorer, right-click the 250903.INF file and click **Install**.
  - In Windows Explorer, go to the C:\WINNT\SYSTEM32\ folder, rename the existing NWSPOOL.DLL file, and copy the updated NWSPOOL.DLL file to the folder.

- ISSUE (External): When using the Add Printer Wizard, the Enterprise Autoconfiguration feature does not work through the NDS 5.x server using Microsoft Client for Novell.

DESCRIPTION: When using Novell, the Enterprise Autoconfiguration feature works only with Novell's Netware client, not with Microsoft Client for Novell.

WORKAROUND: When using Novell, use the Enterprise Autoconfiguration feature only with Novell's Netware client.

- ISSUE (External): After pressing **Update Now** on the **Configure** tab, the hourglass cursor appears for a long time before a **Printer Communication Error** dialog box appears.

  DESCRIPTION: When you press **Update Now** on the driver **Configure** tab in a PCL 6 driver using Windows NT 4.0 on an NDPS network connection, the hourglass cursor appears for as long as 3 minutes 45 seconds before generating a **Printer Communication Error** dialog box.

  WORKAROUND: None.

Adobe Acrobat Reader

ISSUE (External): If you use special or extended characters in the login name on the Windows 2000 and Windows XP to install the Adobe Acrobat Reader, the installer starts but then quits. The login name accepts only common Latin ASCII characters 1 through 256 (that is, no special characters such as a hyphen or slash; no letters with accents or other marks, and letters that are not in the common Roman alphabet.

WORKAROUND: Log in using a user name that does not use special or extended characters.

Section 2

HP LaserJet 4100
Printing System Report

Introduction

The *HP LaserJet 4100 Printing System Report* contains information about the following topics:

- Supported operating systems
- Printing system driver versions
- Localization of components by language
- Typical and Custom installation
- Printing system components
- Registry entries during installation
- Shared files
- Fonts
- Product documentation

Information provided in the report is described below. The order of the sections may vary.

Section 1.0, General Information

This section includes the following information:

- The Windows operating systems supported by the HP LaserJet 9000 product
- The languages supported by the drivers, together with the native name of the language (for example, Czech), the two-letter language code (Cz), the localization ID (0x0005), and the total number of languages. Unless otherwise noted in the information about specific components, printing system components are supported in each of the languages listed here.
- The CD language layout, showing the languages contained in each printing system software CD (Americas, Asian, and Rest of World)
- Printer models, including the model, a brief description, and Plug and Play ID
- The components installed during a Typical Installation
- The components that are available for installation during a Custom Installation. Features that are installed but remain invisible are marked as such.

Section 2.0, Component Version Summary

This section lists version numbers for drivers, online documents, and other printing system software.

Sections 3.0 through 6.0, HP LaserJet PCL 6, PCL 5, and PS drivers

These sections present information about the driver for each operating system. The component name and version are stated, and the languages in which the component is supported are listed, as well as the supported connections.

Driver information listed in these sections includes:

- Driver name
- Driver mode: kernel (Windows NT 4.0) or user (Windows 2000 and XP)
- Driver file: filename
- Configure file: filename
- Help file: filename
- Data file: filename

- Data type: the data type (for example, raw, string, or binary)
- Language monitor: monitor name
- Copy Name: the name of the printer driver. If a driver of the same name has already been installed, a copy number is assigned.
- Suffix: the driver suffix name (for example, PCL 6, PCL 5, or PS)
- Share suffix: The default name for the driver if you choose to share the product on a network connection.
- Add Print file (for example, HPBF5120.INF. This is the name of the file to use when you install the printing system software using the Add Printer Wizard.
- INF String: This is the default driver name used when you install the printing system software using the Add Printer Wizard.

Information presented in the "Pre-Add Driver Runtime Action" section includes actions performed before the driver is added.

Information presented in the section "Post-Add Driver Runtime Action" section includes actions performed after the driver has been added.

The "Component Size" section shows the number of files in the component and the total file size.

"File Information" sections (for the driver or the .INF file, for instance) include the following information:
- Uninstall: An indication (yes or no) whether the component is automatically uninstalled by the uninstaller.
- CD directory: the path of the component on the printing system software CD.
- Install directory: the location of the component when installed on your system.

For each operating-system file group, the following information is given:
- Shared: An indication (yes or no) whether the file group is shared by other components.
- Potentially Locked: An indication whether the file may be locked if the file is in use by another application.
- Self-Registering: An indication (yes or no) whether the file is a self-registering file. A self-registering file is an OLE server that can place information about itself in the registry so that it can be seen by other registry applications.

Information about each file in the file group includes:
- Filename
- File version
- Date created
- File size
- File description

Driver Common Registry Entries

Information in this section includes:
- Title
- Description
- Type

For each component of the driver common registry entries, the component and component version is stated, and the supported operating system, supported languages, and supported connections are listed.

Information about individual registry entries includes:

- Name
- Action
- Root
- Key
- Data type
- Value
- Uninstall

Fonts

The "Font File Information" section provides the following information:

- Font name: This is the report heading, and is the same as the typeface name.
- Font filename
- Font version
- Typeface name
- Weight-style: font attributes, such as regular, bold, or italic
- Postscript (R) name: the name of the equivalent Postscript (R) font.

Other Components

Information about other printing system components (for example, network bidirectional communication, fonts, Printer Status and Alerts, and others includes:

- Title
- Description
- Type

For each component, the name of the component and its version is stated, and the supported operating system, supported languages, and supported connections are listed.

Information presented in the "Pre-(operation) Runtime Action" section includes actions that are performed before the operation is performed. For instance, a pre-add registry runtime action is one that is performed before an entry in the registry is added. Outcomes vary according to the results of the action.

Information presented in the "Post-(operation) Runtime Action" section includes actions performed after the driver has been added.

The "Component Size" section shows the number of files in the component and the total file size.

"File Information" sections (for the driver or the .INF file, for instance) include the following information:

- Uninstall: An indication (yes or no) whether the component is automatically uninstalled by the uninstaller.
- CD directory: the path of the component on the printing system software CD.

- Install directory: the location of the component when installed on your system.

For each operating-system file group, the following information is given:
- Shared: An indication (yes or no) whether the file group is shared by other components.
- Potentially Locked: An indication whether the file may be locked if shared by another application.
- Self-Registering: An indication (yes or no) whether the file creates a registry entry during installation.

Information about each file within file groups includes:
- Filename
- File version
- Date created
- File size
- File description

Additional information

Depending on the component, additional information may be provided. The following information is reported when pertinent to a specific component.

"Component Installation Availability" sections describe checks that the installer makes to be sure that preconditions for installation of the component are satisfied. For example, if the Adobe (R) Acrobat (R) Reader (TM) is already installed on your system, this component is not selectable for installation.

"Icon Entries" sections, where applicable, provide the following information:
- Icon Name.
- Action: Indicates that if an existing value for the icon is found, it is replaced, and that a new value is created if the icon does not exist .
- Group Type: This information applies only to Windows 2000, Windows NT 4.0, and Windows XP. Administrators can determine whether the icon is available to the user who installed the component or is available to others on the network.
- Icon Link: The location of the icon link, depending on the operating system
- Root Folder: The location of the icon in the Programs folder.
- Uninstall: An indication (yes or no) whether the icon is automatically uninstalled by the uninstaller.

HP LaserJet 4100 Printing System Report

Hewlett-Packard Company Confidential
Internal Use Only

Generated: April 14, 2002 09:09 PM
Printing System Version: 4.1.0.0
Software Package: EC 3.0a
Release Version: gs5gc1_0.003

Table of Contents

9.0 driver auto configuration

9.1 All Windows 32 bit
- 9.1.1 Component Installation Availability
- 9.1.2 Pre-File Copy Runtime Action
- 9.1.3 Post-File Copy Runtime Action
- 9.1.4 Component Size
- 9.1.5 File Information - HPNRA
- 9.1.6 Registry Entries

10.0 Driver Update Now

10.1 Windows 95, 98, and ME
- 10.1.1 Component Size
- 10.1.2 File Information - UpdateNow
- 10.1.3 INI File Entries

11.0 Printer Font/Forms Driver Updater

11.1 All Windows 32 bit
- 11.1.1 Post-File Copy Runtime Action
- 11.1.2 Component Size
- 11.1.3 File Information - EXE
- 11.1.4 File Information - DLLs

12.0 Printer Status and Alerts

12.1 All Windows 32 bit
- 12.1.1 Component Installation Availability
- 12.1.2 INI File Entries
- 12.1.3 Icon Entries

12.2 Windows 95, 98, and ME
- 12.2.1 Component Installation Availability
- 12.2.2 Pre-File Copy Runtime Action
- 12.2.3 Post-File Copy Runtime Action
- 12.2.4 Component Size
- 12.2.5 File Information - Core
- 12.2.6 File Information - MS
- 12.2.7 File Information - Images
- 12.2.8 File Information - Win9x
- 12.2.9 Registry Entries
- 12.2.10 INI File Entries

12.3 Windows NT 4.0
- 12.3.1 Component Installation Availability
- 12.3.2 Pre-File Copy Runtime Action
- 12.3.3 Post-File Copy Runtime Action

1.0 General Information

1.1 Supported Operating Systems

Windows 95
Windows 98
Windows ME
Windows NT 4.0
Windows 2000
Windows XP

1.2 Supported Languages

Language	CD Language	Code	LocID
English	English	En	0x0009
Czech	Cesky	Cz	0x0005

Danish	Dansk	Da	0x0006
German	Deutsch	Ge	0x0007
Spanish	Espanol	Sp	0x000a
Finnish	Suomi	Fi	0x000b
Hungarian	Magyar	Hu	0x000e
Italian	Italiano	It	0x0010
Japanese	Japanese	Jp	0x0011
Korean	Korean	Ko	0x0012
Dutch	Nedrlnds	Du	0x0013
Norwegian	Norsk	No	0x0014
Polish	Polski	Po	0x0015
Russian	Russ	Ru	0x0019
Swedish	Svenska	Sw	0x001d
Turkish	Turkce	Tk	0x001f
Chinese-Traditional	Chi_Trad	Ct	0x0404
French-Standard	Francais	Fr	0x040c
Portuguese-Brazil	Portugus	Bz	0x0416
Chinese-Simplified	Chi_Simp	Cs	0x0804
Arabic	Arabic	Ar	0x0401
Hebrew	Hebrew	He	0x040d

Total Languages: 22

1.3 CD Languages Layout

Americas:

Dutch
English
French-Standard
German
Italian
Portuguese-Brazil
Spanish
Hebrew

Asian:

Chinese-Simplified
Chinese-Traditional
English
Japanese
Korean

Rest of World:

Czech
Danish
English
Finnish
Hungarian
Norwegian
Polish

Russian
Swedish
Turkish
Arabic

1.4 Printer Models

Model: HP LaserJet 4100
Description: Laser printer with 16 MB RAM and a 500-sheet tray.
Plug and Play ID: HEWLETT-PACKARDHP_LaB55B

Model: HP LaserJet 4100N
Description: Laser printer with 32 MB RAM and HP JetDirect network card.
Plug and Play ID: HEWLETT-PACKARDHP_LaB55B

Model: HP LaserJet 4100TN
Description: Laser printer with 32 MB RAM, two 500-sheet trays, and HP JetDirect network card.
Plug and Play ID: HEWLETT-PACKARDHP_LaB55B

Model: HP LaserJet 4100DTN
Description: Laser Printer with 32 MB RAM, two 500-sheet trays, HP JetDirect network card, and duplexer.
Plug and Play ID: HEWLETT-PACKARDHP_LaB55B

Model: HP LaserJet 4100MFP
Description: LaserJet Printer with 64 MB RAM, Hard Disk Drive, 100 and 500-sheet trays, 30-Sheet Document Feeder, HP JetDirect network card, and Copy Module.
Plug and Play ID: Hewlett-PackardHP_LaA170

Model: HP LaserJet 4101MFP
Description: LaserJet Printer with 64 MB RAM, Hard Disk Drive, 100 and two 500-sheet trays, 30-Sheet Document Feeder, HP JetDirect network card, Duplexer, and Copy Module.
Plug and Play ID: Hewlett-PackardHP_LaA170

1.5 Typical/Custom Installation Based on Printer Connection

Parallel (LPT)
Other (IR, or Com)
Network (Server)
Network (Client)
USB

1.5.1 Typical Installation

HP LaserJet 4100 PCL 6 Driver
driver auto configuration
Screen Fonts

(Invisible)
HP LaserJet 4100 PCL 5e Driver *
HP LaserJet 4100 PS Driver *
Driver Common Registry Entries
Language Monitor
Network Bi-directional Communication
Driver Update Now
Printer Font/Forms Driver Updater
Printing System Uninstaller
Product Registration
HP Driver Test Page
Release Notes

* The driver is installed, but the printer icon is not created. The user then can use "Windows Add Printer" to create a new printer selecting the driver in the manufacture list and select keep driver. This allows this driver to be installed without having the CD or downloading it.

1.5.2 Custom Installation

HP LaserJet 4100 PCL 6 Driver
- * Driver Common Registry Entries (Invisible)
- * Language Monitor (Invisible)
- * Driver Update Now (Invisible)

HP LaserJet 4100 PCL 5e Driver
- * Driver Common Registry Entries (Invisible)
- * Language Monitor (Invisible)
- * Driver Update Now (Invisible)

HP LaserJet 4100 PS Driver
- * Language Monitor (Invisible)

driver auto configuration
- * Network Bi-directional Communication (Invisible)
- * Printer Font/Forms Driver Updater (Invisible)

Printer Status and Alerts
- * Network Bi-directional Communication (Invisible)
- * Printer Status and Alerts (Invisible)

Screen Fonts
Adobe® Acrobat® Reader(TM)
Online User's Guide
- * Adobe® Acrobat® Reader(TM)

Printing System Uninstaller (Invisible - Always Installed)
Product Registration (Invisible - Always Installed)
HP Driver Test Page (Invisible - Always Installed)
Release Notes (Invisible - Always Installed)

* Required if the component above is selected by the User for installation.

Note: See component information section for runtime component availability.

2.0 Component Version Summary

2.1 Printer Drivers

HP LaserJet 4100 PCL 6 Driver - Windows 95, 98, and ME	4.14.4100.12
HP LaserJet 4100 PCL 6 Driver - Windows NT 4.0	4.14.4100.12
HP LaserJet 4100 PCL 6 Driver - Windows 2000/XP	4.14.4100.12
HP LaserJet 4100 PCL 5e Driver - Windows 95, 98, and ME	4.14.4100.12
HP LaserJet 4100 PCL 5e Driver - Windows NT 4.0	4.14.4100.12
HP LaserJet 4100 PCL 5e Driver - Windows 2000 and XP	4.14.4100.12
HP LaserJet 4100 PS Driver - Windows 95, 98, and ME	3.0.8
HP LaserJet 4100 PS Driver - Windows NT 4.0	3.0.8
HP LaserJet 4100 PS Driver - Windows 2000 and XP	3.0.8

2.2 Other SW or Online Document

Driver Common Registry Entries - All Windows 32 bit	4.14.0.0
Language Monitor - All Windows 32 bit	10.0.0.14
Network Bi-directional Communication - All Windows 32 bit	5.0.41.6
Network Bi-directional Communication - Windows 95, 98, and ME	5.0.41.6
Network Bi-directional Communication - Windows NT 4.0, 2000 and XP	5.0.41.6
driver auto configuration - All Windows 32 bit	5.0.41.5
Driver Update Now - Windows 95, 98, and ME	1.0.0.0
Printer Font/Forms Driver Updater - All Windows 32 bit	1.0.0.3
Printer Status and Alerts - All Windows 32 bit	2.5.0.0
Printer Status and Alerts - Windows 95, 98, and ME	2.5.0.0
Printer Status and Alerts - Windows NT 4.0	2.5.0.0
Printer Status and Alerts - Windows 2000 and XP	2.5.0.0
Printing System Uninstaller - All Windows 32 bit	4.0.0.0
Screen Fonts - All Windows 32 bit	1.0.0.0
Product Registration - All Windows 32 bit	2.2.1.3
HP Driver Test Page - All Windows 32 bit	3.0.0.0
Adobe® Acrobat® Reader(TM) - All Windows 32 bit	5.0.0.1
Release Notes - All Windows 32 bit	4.0.0.0
Online User's Guide - Windows 32 bit - Printer Manuals	4.0.0.0

COMPONENT INFORMATION

3.0 HP LaserJet 4100 PCL 6 Driver

UI Title: HP LaserJet 4100 PCL 6 Driver
UI Description: Best option for printing. The PCL 6 printer driver can provide the best overall performance
and WYSIWYG printing.
Type: Printer Driver

3.1 Windows 95, 98, and ME

Component: XL95
Component Version: 4.14.4100.12
Supported OS: Windows 95, Windows 98, and Windows ME
Supported Languages: All supported by Printing System CD
Supported Connections: All supported by Printing System CD

3.1.1 Driver Information

Driver Name: HP LaserJet 4100 PCL 6
Driver Mode: Kernel Mode
Driver File: HPBF0420.DRV
Configure File: HPBF0420.DRV
Help File: HPBF0420.HLP
Data File: HPBF0420.PMD
Data Type: RAW
Language Monitor: HP Master Monitor
Copy Name: HP LaserJet 4100 (%d) PCL 6
Suffix: PCL 6
Share Suffix: PCL 6
Add Print file: HP4100P6.INF
INF String: HP LaserJet 4100 PCL 6

3.1.2 Pre-Add Driver Runtime Action

Asian Font HPD File Registry Entry. The printer name the user inputted is added to the "Key" and the value is set to the font file supporting the two byte language.

Name: DIMMFonts1
Action: Replace - Replaces an existing value. Creates a new value if the value does not exist.

Root: HKEY_LOCAL_MACHINE
Key: System\CurrentControlSet\Control\Print\Printers\<Runtime User Input: "Printer Name">\PrinterDriverData
Data Type: String
Value: Chinese-Simplified - SCFTNT95.HPD, Korean - KOFTNT95.HPD, or Chinese-Traditional - TCFTNT95.HPD
Uninstall: Yes

3.1.3 Post-Add Driver Runtime Action

Log the printer name for Finish Option driver auto-configuration (Update Now).

3.1.4 Component Size

Total File Count: 14
Total File Size: 3,240 KB

3.1.5 File Information - Driver

Uninstall: Yes
CD Directory: <CD root>\<language>\drivers\win9x_me\pcl6
Install Directory:

9x/ME - <Drive>:\Windows\System
NT 4.0 - <Drive>:\Windows\system32\spool\Drivers\Win40
2000/XP - <Drive>:\Windows\system32\spool\Drivers\Win40

File Group: XL_En_Win9x
Shared File: Yes
Potentially Locked: No
Self-Registering: No

File Name	File Version	Date Created	File Size	File Description
hpbf0420.drv	4.14.0.12	03\04\2002 11:38 AM	2,803,200	HP LaserJet 4100 Series PCL 6 Printer Driver
hpbf0420.hlp		03\01\2002 07:07 PM	56,676	Windows Help File
hpbf0420.pmd		03\04\2002 11:37 AM	71,959	HP PCL Driver Printer Description File
hpbfab16.dll	0.0.1.0	12\19\1997 04:07 AM	1,392	HP LaserJet FA Printer Driver 16 bit Thunking DLL

hpbfab32.dll	0.0.1.0	12\19\1997 04:08 AM	19,968	HP LaserJet FA Printer Driver 32 bit Thunking DLL
hpbafd16.dll	4.7.0	08\08\2001 01:59 AM	12,208	HP Appflags Utility DLL - 16bit
hpbftm16.dll	0.1.0.2	05\07\1999 07:01 PM	1,200	PFM to Dummy TrueType
hpbftm32.dll	0.1.0.3	03\13\2000 10:28 PM	99,840	PFM to Dummy TrueType
hpbfab.ddu	0.0.1.0	03\10\2001 01:44 AM	38,400	HP LaserJet FA Printer Driver Support
hpbmmon.dll	10.00.14	09\19\2001 11:23 AM	53,248	Win32 Master Monitor
hpdomon.dll	03.42.00	03\16\2000 05:55 PM	56,832	Win32 Language Monitor for direct connect HP printers
hpbhealr.dll		07\31\2001 09:17 AM	94,274	Application Dynamic-Link Library
(Korean systems only)				
koftnt95.hpd		06\30\2000 06:58 AM	297	HP PCL Font Matrix File
(Chinese-Simplified systems only)				
scftnt95.hpd		06\30\2000 06:59 AM	192	HP PCL Font Matrix File
(Chinese-Traditional systems only)				
tcftnt95.hpd		06\30\2000 06:59 AM	240	HP PCL Font Matrix File

3.1.6 File Information - INF

Uninstall: Yes
CD Directory: <CD root>\<language>\drivers\win9x_me\pcl6
Install Directory:

9x/ME - <Drive>:\Windows\INF
NT 4.0 - <Drive>:\WinNT\Temp
2000/XP - <Drive>:\WinNT\Temp

File Group: XL_En_Win9x_INF
Shared File: No
Potentially Locked: No
Self-Registering: No

File Name	File Version	Date Created	File Size	File Description
hp4100p6.inf		03\06\2002 12:22 PM	8,814	Windows Installation File

3.1.7 INI File Entries

Key: HP LaserJet 4100 PCL 6

Name: Supported
Action: Add - Creates a new value. If the value already exists, this action is ignored.
INI File: (9x/ME) <Drive>:\Windows\hpsasdrv.mtx
Uninstall: No

3.2 Windows NT 4.0

Component: XLNT
Component Version: 4.14.4100.12
Supported OS: Windows NT 4.0
Supported Languages: All supported by Printing System CD
Supported Connections: All supported by Printing System CD

3.2.1 Driver Information

Driver Name: HP LaserJet 4100 PCL 6
Driver Mode: Kernel Mode
Driver File: HPBF0422.DLL
Configure File: HPBF0420.DLL
Help File: HPBF0420.HLP
Data File: HPBF0424.PMD
Data Type: RAW
Language Monitor: HP Master Monitor
Copy Name: HP LaserJet 4100 (%d) PCL 6
Suffix: PCL 6
Share Suffix: PCL 6
Add Print file: HP4100P6.INF
INF String: HP LaserJet 4100 PCL 6
Vendible Driver:
Windows 95 - HP LaserJet 4100 PCL 6
Windows 98 - HP LaserJet 4100 PCL 6
Windows ME - HP LaserJet 4100 PCL 6

3.2.2 Pre-Add Driver Runtime Action

Asian Font HPD File Registry Entry. The printer name the user inputted is added to the "Key" and the value is set to the font file supporting the two byte language.

Name: DIMMFonts1
Action: Replace - Replaces an existing value. Creates a new value if the value does not exist.
Root: HKEY_LOCAL_MACHINE
Key: System\CurrentControlSet\Control\Print\Printers\<Runtime User Input: "Printer Name">\
PrinterDriverData
Data Type: String

Value: Chinese-Simplified - SCFTNT95.HPD, Korean - KOFTNT95.HPD, or Chinese-Traditional -
TCFTNT95.HPD
Uninstall: Yes

3.2.3 Component Size

Total File Count: 28
Total File Size: 4,942 KB

3.2.4 File Information - Driver

Uninstall: Yes
CD Directory: <CD root>\<language>\drivers\winnt40\pcl6
Install Directory:

NT 4.0 - <Drive>:\Windows\System\system32\spool\Drivers\w32x86\ and Subdirectory (Kernel Mode:
\2 or User Mode: \3)
2000/XP - <Drive>:\Windows\System\system32\spool\Drivers\w32x86\ and Subdirectory (Kernel Mode:
\2 or User Mode: \3)

File Group: XL_En_NT40
Shared File: Yes
Potentially Locked: No
Self-Registering: No

File Name	File Version	Date Created	File Size	File Description
hpbf0420.dll	4.14.0.12	03\04\2002 11:40 AM	1,931,024	HP LaserJet 4100 Series PCL 6 Driver User Interface
hpbf0422.dll	4.14.0.12	03\04\2002 11:39 AM	1,441,040	HP LaserJet 4100 Series PCL 6 Printer Driver
hpbf0424.pmd		03\04\2002 11:39 AM	86,494	HP PCL Driver Printer Description File
hpbf0420.hlp		03\01\2002 07:08 PM	56,676	Windows Help File
hpbafd32.dll	4.7.0.0	08\08\2001 01:57 AM	45,056	HP Appflags Utility DLL - 32bit
hpbftm32.dll	0.1.0.3	03\13\2000 10:28 PM	99,840	PFM to Dummy TrueType
hpnra.exe	5.0.41.5	10\26\2000 04:22 PM	49,152	Network Registry Agent
hpboid.exe	1.0.41.6	09\22\2000 02:28 PM	61,440	HP Status Server Module
hpbpro.exe	1.0.41.3	10\19\2000 01:18 AM	69,632	PortResolver Module
hppapml0.exe	1.0.45.0	11\05\2000 05:51 PM	61,440	PML Driver
hppapml0.dll	1.0.45.0	11\05\2000 05:53 PM	53,248	PML Run-time library
hpbnrac2.dll	5.0.41.3	06\28\2000 10:40 AM	49,152	NRA COLA interface
hpbmiapi.dll	1.0.41.3	05\24\2001 08:07 AM	81,920	hpbmiapi Module

hpboidps.dll	1.0.41.6	09\22\2000 02:28 PM	36,864	HP Status Server Proxy Stub Module
hpbprops.dll	1.0.41.3	10\19\2000 01:18 AM	36,864	HpbproPS
hpjcmn2u.dll	2.00.1214	06\06\2000 01:57 PM	163,840	Federation Hpcommon Library
hpjipx1u.dll	1.00.1214	06\06\2000 01:57 PM	94,208	HPNWIPX
hppapts0.dll	1.0.45.1	11\05\2000 05:43 PM	94,208	SNMP Network Interface (Windows)
hppasnm0.dll	1.0.45.0	11\05\2000 05:43 PM	57,344	SNMP Network Interface (Windows)
hpbmini.dll	1.0.0.4	01\24\2002 09:12 AM	147,456	hpbmini
hpbf0422.hpi		01\25\2002 11:06 AM	17,776	HP Installation File
atl.dll	3.00.8449	02\08\2000 11:47 AM	58,938	ATL Module for Windows NT (Unicode)
hpbmmon.dll	10.00.14	09\19\2001 11:23 AM	53,248	Win32 Master Monitor
hpdomon.dll	03.42.00	03\23\2000 11:25 AM	58,368	Win32 Language Monitor for direct connect HP printers
hpbhealr.dll		07\31\2001 09:17 AM	94,274	Application Dynamic-Link Library
(Korean systems only)				
koftnt95.hpd		06\30\2000 06:59 AM	297	HP PCL Font Matrix File
(Chinese-Simplified systems only)				
scftnt95.hpd		06\30\2000 06:59 AM	192	HP PCL Font Matrix File
(Chinese-Traditional systems only)				
tcftnt95.hpd		06\30\2000 06:59 AM	240	HP PCL Font Matrix File

3.2.5 File Information - INF

Uninstall: Yes
CD Directory: <CD root>\<language>\drivers\winnt40\pcl6
Install Directory:

NT 4.0 - <Drive>:\WinNT\INF
2000/XP - <Drive>:\WinNT\Temp

File Group: XL_En_NT40_INF
Shared File: No
Potentially Locked: No
Self-Registering: No

File Name	File Version	Date Created	File Size	File Description
hp4100p6.inf		03\06\2002 12:24 PM	2,845	Windows Installation File

3.2.6 File Information - ATL

Uninstall: No
CD Directory: CAB File
Install Directory:

NT 4.0 - <Drive>:\WinNT\INF
2000/XP - <Drive>:\WinNT\Temp

File Group: BIDI_NT_ATL
Shared File: Yes
Potentially Locked: Yes
Self-Registering: Yes

File Name	File Version	Date Created	File Size	File Description
atl.dll	3.00.8449	02\08\2000 11:47 AM	58,938	ATL Module for Windows NT (Unicode)

3.2.7 INI File Entries

Key: HP LaserJet 4100 PCL 6
Name: Supported
Action: Add - Creates a new value. If the value already exists, this action is ignored.
INI File: (NT4/2000/XP) <Drive>:\WinNT\hpsasdrv.mtx
Uninstall: No

3.3 Windows 2000/XP

Component: XL2K
Component Version: 4.14.4100.12
Supported OS: Windows 2000, and Windows XP
Supported Languages: All supported by Printing System CD
Supported Connections: All supported by Printing System CD

3.3.1 Driver Information

Driver Name: HP LaserJet 4100 PCL 6
Driver Mode: User Mode
Driver File: HPBF042G.DLL
Configure File: HPBF042E.DLL
Help File: HPBF042E.HLP
Data File: HPBF042I.PMD
Data Type: RAW
Language Monitor: HP Master Monitor

Copy Name: HP LaserJet 4100 (%d) PCL 6
Suffix: PCL 6
Share Suffix: PCL 6
Add Print file: HP4100P6.INF
INF String: HP LaserJet 4100 PCL 6
Vendible Driver:

Windows 95 - HP LaserJet 4100 PCL 6
Windows 98 - HP LaserJet 4100 PCL 6
Windows ME - HP LaserJet 4100 PCL 6
Windows NT 4.0 - HP LaserJet 4100 PCL 6

3.3.2 Pre-Add Driver Runtime Action

Asian Font HPD File Registry Entry. The printer name the user inputted is added to the "Key" and the value is set to the font file supporting the two byte language.

Name: DIMMFonts1
Action: Replace - Replaces an existing value. Creates a new value if the value does not exist.
Root: HKEY_LOCAL_MACHINE
Key: System\CurrentControlSet\Control\Print\Printers\<Runtime User Input: "Printer Name">\
PrinterDriverData
Data Type: String
Value: Chinese-Simplified - SCFTNT95.HPD, Korean - KOFTNT95.HPD, or Chinese-Traditional -
TCFTNT95.HPD
Uninstall: Yes

3.3.3 Component Size

Total File Count: 26
Total File Size: 4,886 KB

3.3.4 File Information - Driver

Uninstall: Yes
CD Directory: <CD root>\<language>\drivers\win2000_xp\pcl6
Install Directory:

2000/XP - <Drive>:\Windows\System\system32\spool\Drivers\w32x86\ and Subdirectory (Kernel Mode:
\2 or User Mode: \3)

File Group: XL_En_Win2K
Shared File: Yes

Potentially Locked: No
Self-Registering: No

File

File Name	File Version	Date Created	File Size	File Description
hpbf042e.dll	4.14.0.12	03\04\2002 11:42 AM	1,930,000	HP LaserJet 4100 Series PCL 6 Driver User Interface
hpbf042g.dll	4.14.0.12	03\04\2002 11:41 AM	1,503,504	HP LaserJet 4100 Series PCL 6 Printer Driver
hpbf042i.pmd		03\04\2002 11:41 AM	86,494	HP PCL Driver Printer Description
hpbf042e.hlp		03\01\2002 07:08 PM	56,676	Windows Help File
hpbafd32.dll	4.7.0.0	08\08\2001 01:57 AM	45,056	HP Appflags Utility DLL - 32bit
hpbftm32.dll	0.1.0.3	03\13\2000 10:28 PM	99,840	PFM to Dummy TrueType
hpnra.exe	5.0.41.5	10\26\2000 04:22 PM	49,152	Network Registry Agent
hpboid.exe	1.0.41.6	09\22\2000 02:28 PM	61,440	HP Status Server Module
hpbpro.exe	1.0.41.3	10\19\2000 01:18 AM	69,632	PortResolver Module
hppapml0.exe	1.0.45.0	11\05\2000 05:51 PM	61,440	PML Driver
hppapml0.dll	1.0.45.0	11\05\2000 05:53 PM	53,248	PML Run-time library
hpbnrac2.dll	5.0.41.3	06\28\2000 10:40 AM	49,152	NRA COLA interface
hpbmiapi.dll	1.0.41.3	05\24\2001 08:07 AM	81,920	hpbmiapi Module
hpboidps.dll	1.0.41.6	09\22\2000 02:28 PM	36,864	HP Status Server Proxy Stub Module
hpbprops.dll	1.0.41.3	10\19\2000 01:18 AM	36,864	HpbproPS
hpjcmn2u.dll	2.00.1214	06\06\2000 01:57 PM	163,840	Federation Hpcommon Library
hpjipx1u.dll	1.00.1214	06\06\2000 01:57 PM	94,208	HPNWIPX
hppapts0.dll	1.0.45.1	11\05\2000 05:43 PM	94,208	SNMP Network Interface (Windows)
hppasnm0.dll	1.0.45.0	11\05\2000 05:43 PM	57,344	SNMP Network Interface (Windows)
hpbmini.dll	1.0.0.4	01\24\2002 09:12 AM	147,456	hpbmini
hpbf042g.hpi		01\25\2002 11:01 AM	16,786	HP Installation File
hpbmmon.dll	10.00.14	09\19\2001 11:23 AM	53,248	Win32 Master Monitor
hpdomon.dll	03.42.00	03\23\2000 11:25 AM	58,368	Win32 Language Monitor for direct connect HP printers
hpbhealr.dll		07\31\2001 09:17 AM	94,274	Application Dynamic-Link Library
(Korean systems only)				
koftnt95.hpd		06\30\2000 06:59 AM	297	HP PCL Font Matrix File
(Chinese-Simplified systems only)				
scftnt95.hpd		06\30\2000 06:59 AM	192	HP PCL Font Matrix File
(Chinese-Traditional systems only)				
tcftnt95.hpd		06\30\2000 06:59 AM	240	HP PCL Font Matrix File

3.3.5 File Information - INF

Uninstall: Yes

CD Directory: <CD root>\<language>\drivers\win2000_xp\pcl6
Install Directory:

2000/XP - <Drive>:\WinNT\INF

File Group: XL_En_Win2K_INF
Shared File: No
Potentially Locked: No
Self-Registering: No

File Name	File Version	Date Created	File Size	File Description
hp4100p6.inf		03\06\2002 12:25 PM	2,827	Windows Installation File

---

3.3.6 INI File Entries

Key: HP LaserJet 4100 PCL 6
Name: Supported
Action: Add - Creates a new value. If the value already exists, this action is ignored.
INI File: (NT4/2000/XP) <Drive>:\WinNT\hpsasdrv.mtx
Uninstall: No

4.0 HP LaserJet 4100 PCL 5e Driver

UI Title: HP LaserJet 4100 PCL 5e Driver
UI Description: Provides PCL 5e compatibility with improved features and functionality.
Type: Printer Driver

4.1 Windows 95, 98, and ME

Component: PCL595
Component Version: 4.14.4100.12
Supported OS: Windows 95, Windows 98, and Windows ME
Supported Languages:

English	French-Standard
Italian	German
Spanish	Portuguese-Brazil
Dutch	Arabic
Czech	Danish
Finnish	Hungarian

Norwegian	Polish
Russian	Swedish
Turkish	Hebrew

Language Count: 18
Supported Connections: All supported by Printing System CD

4.1.1 Driver Information

Driver Name:	HP LaserJet 4100 PCL 5e
Driver Mode:	Kernel Mode
Driver File:	HPBF0410.DRV
Configure File:	HPBF0410.DRV
Help File:	HPBF0410.HLP
Data File:	HPBF0410.PMD
Data Type:	RAW
Language Monitor:	HP Master Monitor
Copy Name:	HP LaserJet 4100 (%d) PCL 5e
Suffix:	PCL 5e
Share Suffix:	PCL 5e
Add Print file:	HP4100P5.INF
INF String:	HP LaserJet 4100 PCL 5e

4.1.2 Pre-Add Driver Runtime Action

Asian Font HPD File Registry Entry. The printer name the user inputted is added to the "Key" and the value is set to the font file supporting the two byte language.

Name: DIMMFonts1
Action: Replace - Replaces an existing value. Creates a new value if the value does not exist.

Root: HKEY_LOCAL_MACHINE
Key: System\CurrentControlSet\Control\Print\Printers\<Runtime User Input: "Printer Name">\

PrinterDriverData
Data Type: String
Value: Chinese-Simplified - SCFTNT95.HPD, Korean - KOFTNT95.HPD, or Chinese-Traditional -

TCFTNT95.HPD
Uninstall: Yes

4.1.3 Post-Add Driver Runtime Action

Log the printer name for Finish Option driver auto-configuration (Update Now).

4.1.4 Component Size

Total File Count: 13

Total File Size: 3,244 KB

4.1.5 File Information - Driver

Uninstall: Yes
CD Directory: <CD root>\<language>\drivers\win9x_me\pcl5e
Install Directory:

9x/ME - <Drive>:\Windows\System
NT 4.0 - <Drive>:\Windows\system32\spool\Drivers\Win40
2000/XP - <Drive>:\Windows\system32\spool\Drivers\Win40

File Group: PCL5_En_Win9x
Shared File: Yes
Potentially Locked: No
Self-Registering: No

File Name	File Version	Date Created	File Size	File Description
hpbf0410.drv	4.14.0.12	03\04\2002 11:38 AM	2,803,200	HP LaserJet 4100 Series PCL 5e Printer Driver
hpbf0410.hlp		03\01\2002 07:07 PM	57,759	Windows Help File
hpbf0410.pmd		03\04\2002 11:37 AM	75,205	HP PCL Driver Printer Description File
hpbfab16.dll	0.0.1.0	12\19\1997 04:07 AM	1,392	HP LaserJet FA Printer Driver 16 bit Thunking DLL
hpbfab32.dll	0.0.1.0	12\19\1997 04:08 AM	19,968	HP LaserJet FA Printer Driver 32 bit Thunking DLL
hpbafd16.dll	4.7.0	08\08\2001 01:59 AM	12,208	HP Appflags Utility DLL - 16bit
hpbftm16.dll	0.1.0.2	05\07\1999 07:01 PM	1,200	PFM to Dummy TrueType
hpbftm32.dll	0.1.0.3	03\13\2000 10:28 PM	99,840	PFM to Dummy TrueType
hpbfab.ddu	0.0.1.0	03\10\2001 01:44 AM	38,400	HP LaserJet FA Printer Driver Support
hpbmmon.dll	10.00.14	09\19\2001 11:23 AM	53,248	Win32 Master Monitor
hpdomon.dll	03.42.00	03\16\2000 05:55 PM	56,832	Win32 Language Monitor for direct connect HP printers
hpbhealr.dll		07\31\2001 09:17 AM	94,274	Application Dynamic-Link Library

---

4.1.6 File Information - INF

Uninstall: Yes
CD Directory: <CD root>\<language>\drivers\win9x_me\pcl5e
Install Directory:

```
                    9x/ME   -         <Drive>:\Windows\INF
                    NT 4.0  -         <Drive>:\WinNT\Temp
                    2000/XP -         <Drive>:\WinNT\Temp
```

```
File Group:                PCL5_En_Win9x_INF
Shared File:               No
Potentially Locked:        no
Self-Registering:          No

File Name                File Version     Date Created           File Size   File Description

hp4100p5.inf                              03\06\2002 12:22 PM        8,814   Windows Installation File
```

4.1.7 INI File Entries

```
Key:                HP LaserJet 4100 PCL 5e
Name:               Supported
Action:             Add - Creates a new value.  If the value already exists, this action is ignored.
INI File:           (9x/ME)        <Drive>:\Windows\hpsasdrv.mtx
Uninstall:          No
```

4.2 Windows NT 4.0

```
Component:                  PCL5NT
Component Version:          4.14.4100.12
Supported OS:               Windows NT 4.0
Supported Languages:
                            English              French-Standard
                            Italian              German
                            Spanish              Portuguese-Brazil
                            Dutch                Arabic
                            Czech                Danish
                            Finnish              Hungarian
                            Norwegian            Polish
                            Russian              Swedish
                            Turkish              Hebrew

Language Count:             18
Supported Connections:      All supported by Printing System CD
```

4.2.1 Driver Information

Driver Name: HP LaserJet 4100 PCL 5e
Driver Mode: Kernel Mode
Driver File: HPBF0412.DLL
Configure File: HPBF0410.DLL
Help File: HPBF0410.HLP
Data File: HPBF0414.PMD
Data Type: RAW
Language Monitor: HP Master Monitor
Copy Name: HP LaserJet 4100 (%d) PCL 5e
Suffix: PCL 5e
Share Suffix: PCL 5e
Add Print file: HP4100P5.INF
INF String: HP LaserJet 4100 PCL 5e
Vendible Driver:
Windows 95 - HP LaserJet 4100 PCL 5e
Windows 98 - HP LaserJet 4100 PCL 5e
Windows ME - HP LaserJet 4100 PCL 5e

4.2.2 Pre-Add Driver Runtime Action

Asian Font HPD File Registry Entry. The printer name the user inputted is added to the "Key" and the value is set to the font file supporting the two byte language.

Name: DIMMFonts1
Action: Replace - Replaces an existing value. Creates a new value if the value does not exist.

Root: HKEY_LOCAL_MACHINE
Key: System\CurrentControlSet\Control\Print\Printers\<Runtime User Input: "Printer Name">\
PrinterDriverData
Data Type: String
Value: Chinese-Simplified - SCFTNT95.HPD, Korean - KOFTNT95.HPD, or Chinese-Traditional -
TCFTNT95.HPD
Uninstall: Yes

4.2.3 Component Size

Total File Count: 27
Total File Size: 4,945 KB

4.2.4 File Information - Driver

Uninstall: Yes
CD Directory: <CD root>\<language>\drivers\winnt40\pcl5e
Install Directory:

NT 4.0 - <Drive>:\Windows\System\system32\spool\Drivers\w32x86\ and Subdirectory (Kernel Mode: \2 or User Mode: \3)

2000/XP - <Drive>:\Windows\System\system32\spool\Drivers\w32x86\ and Subdirectory (Kernel Mode: \2 or User Mode: \3)

File Group: PCL5_En_NT40
Shared File: Yes
Potentially Locked: No
Self-Registering: No

File Name	File Version	Date Created	File Size	File Description
hpbf0410.dll	4.14.0.12	03\04\2002 11:41 AM	1,931,024	HP LaserJet 4100 Series PCL 5e Driver User Interface
hpbf0412.dll	4.14.0.12	03\04\2002 11:39 AM	1,441,040	HP LaserJet 4100 Series PCL 5e Printer Driver
hpbf0414.pmd		03\04\2002 11:39 AM	87,854	HP PCL Driver Printer Description File
hpbf0410.hlp		03\01\2002 07:08 PM	57,759	Windows Help File
hpbafd32.dll	4.7.0.0	08\08\2001 01:57 AM	45,056	HP Appflags Utility DLL - 32bit
hpbftm32.dll	0.1.0.3	03\13\2000 10:28 PM	99,840	PFM to Dummy TrueType
hpnra.exe	5.0.41.5	10\26\2000 04:22 PM	49,152	Network Registry Agent
hpboid.exe	1.0.41.6	09\22\2000 02:28 PM	61,440	HP Status Server Module
hpbpro.exe	1.0.41.3	10\19\2000 01:18 AM	69,632	PortResolver Module
hppapml0.exe	1.0.45.0	11\05\2000 05:51 PM	61,440	PML Driver
hppapml0.dll	1.0.45.0	11\05\2000 05:53 PM	53,248	PML Run-time library
hpbnrac2.dll	5.0.41.3	06\28\2000 10:40 AM	49,152	NRA COLA interface
hpbmiapi.dll	1.0.41.3	05\24\2001 08:07 AM	81,920	hpbmiapi Module
hpboidps.dll	1.0.41.6	09\22\2000 02:28 PM	36,864	HP Status Server Proxy Stub Module
hpbprops.dll	1.0.41.3	10\19\2000 01:18 AM	36,864	HpbproPS
hpjcmn2u.dll	2.00.1214	06\06\2000 01:57 PM	163,840	Federation Hpcommon Library
hpjipx1u.dll	1.00.1214	06\06\2000 01:57 PM	94,208	HPNWIPX
hppapts0.dll	1.0.45.1	11\05\2000 05:43 PM	94,208	SNMP Network Interface (Windows)
hppasnm0.dll	1.0.45.0	11\05\2000 05:43 PM	57,344	SNMP Network Interface (Windows)
hpbmini.dll	1.0.0.4	01\24\2002 09:12 AM	147,456	hpbmini
hpbf0412.hpi		01\25\2002 11:02 AM	17,772	HP Installation File
atl.dll	3.00.8449	02\08\2000 11:47 AM	58,938	ATL Module for Windows NT (Unicode)
hpbmmon.dll	10.00.14	09\19\2001 11:23 AM	53,248	Win32 Master Monitor
hpdomon.dll	03.42.00	03\23\2000 11:25 AM	58,368	Win32 Language Monitor for direct connect HP printers
hpbhealr.dll		07\31\2001 09:17 AM	94,274	Application Dynamic-Link Library

---

4.2.5 File Information - INF

Uninstall: Yes
CD Directory: <CD root>\<language>\drivers\winnt40\pcl5e
Install Directory:

NT 4.0 - <Drive>:\WinNT\INF
2000/XP - <Drive>:\WinNT\Temp

File Group: PCL5_En_NT40_INF
Shared File: No
Potentially Locked: no
Self-Registering: No

File Name	File Version	Date Created	File Size	File Description
hp4100p5.inf		03\06\2002 12:23 PM	2,833	Windows Installation File

---

4.2.6 File Information - ATL

Uninstall: No
CD Directory: CAB File
Install Directory:

NT 4.0 - <Drive>:\WinNT\INF
2000/XP - <Drive>:\WinNT\Temp

File Group: BIDI_NT_ATL
Shared File: Yes
Potentially Locked: Yes
Self-Registering: Yes

File Name	File Version	Date Created	File Size	File Description
atl.dll	3.00.8449	02\08\2000 11:47 AM	58,938	ATL Module for Windows NT (Unicode)

4.2.7 INI File Entries

Key: HP LaserJet 4100 PCL 5e
Name: Supported
Action: Add - Creates a new value. If the value already exists, this action is ignored.

INI File: (NT4/2000/XP) <Drive>:\WinNT\hpsasdrv.mtx
Uninstall: No

4.3 Windows 2000 and XP

Component: PCL52K
Component Version: 4.14.4100.12
Supported OS: Windows 2000, and Windows XP
Supported Languages:

English	French-Standard
Italian	German
Spanish	Portuguese-Brazil
Dutch	Arabic
Czech	Danish
Finnish	Hungarian
Norwegian	Polish
Russian	Swedish
Turkish	Hebrew

Language Count: 18
Supported Connections: All supported by Printing System CD

4.3.1 Driver Information

Driver Name: HP LaserJet 4100 PCL 5e
Driver Mode: User Mode
Driver File: HPBF041G.DLL
Configure File: HPBF041E.DLL
Help File: HPBF041E.HLP
Data File: HPBF041I.PMD
Data Type: RAW
Language Monitor: HP Master Monitor
Copy Name: HP LaserJet 4100 (%d) PCL 5e
Suffix: PCL 5e
Share Suffix: PCL 5e
Add Print file: HP4100P5.INF
INF String: HP LaserJet 4100 PCL 5e
Vendible Driver:
Windows 95 - HP LaserJet 4100 PCL 5e
Windows 98 - HP LaserJet 4100 PCL 5e
Windows ME - HP LaserJet 4100 PCL 5e
Windows NT 4.0 - HP LaserJet 4100 PCL 5e

4.3.2 Pre-Add Driver Runtime Action

Asian Font HPD File Registry Entry. The printer name the user inputted is added to

the "Key" and the value is set to the font file supporting the two byte language.

Name: DIMMFonts1
Action: Replace - Replaces an existing value. Creates a new value if the value does not exist.

Root: HKEY_LOCAL_MACHINE
Key: System\CurrentControlSet\Control\Print\Printers\<Runtime User Input: "Printer Name">\PrinterDriverData
Data Type: String
Value: Chinese-Simplified - SCFTNT95.HPD, Korean - KOFTNT95.HPD, or Chinese-Traditional - TCFTNT95.HPD
Uninstall: Yes

4.3.3 Component Size

Total File Count: 25
Total File Size: 4,888 KB

4.3.4 File Information - Driver

Uninstall: Yes
CD Directory: <CD root>\<language>\drivers\win2000_xp\pcl5e
Install Directory:

2000/XP - <Drive>:\Windows\System\system32\spool\Drivers\w32x86\ and Subdirectory (Kernel Mode: \2 or User Mode: \3)

File Group: PCL5_En_Win2K
Shared File: Yes
Potentially Locked: No
Self-Registering: No

File Name	File Version	Date Created	File Size	File Description
hpbf041e.dll	4.14.0.12	03\04\2002 11:43 AM	1,930,000	HP LaserJet 4100 Series PCL 5e Driver User Interface
hpbf041g.dll	4.14.0.12	03\04\2002 11:41 AM	1,503,504	HP LaserJet 4100 Series PCL 5e Printer Driver
hpbf041i.pmd		03\04\2002 11:41 AM	87,854	HP PCL Driver Printer Description File
hpbf041e.hlp		03\01\2002 07:08 PM	57,759	Windows Help File
hpbafd32.dll	4.7.0.0	08\08\2001 01:57 AM	45,056	HP Appflags Utility DLL - 32bit

hpbftm32.dll	0.1.0.3	03\13\2000 10:28 PM	99,840	PFM to Dummy TrueType
hpnra.exe	5.0.41.5	10\26\2000 04:22 PM	49,152	Network Registry Agent
hpboid.exe	1.0.41.6	09\22\2000 02:28 PM	61,440	HP Status Server Module
hpbpro.exe	1.0.41.3	10\19\2000 01:18 AM	69,632	PortResolver Module
hppapml0.exe	1.0.45.0	11\05\2000 05:51 PM	61,440	PML Driver
hppapml0.dll	1.0.45.0	11\05\2000 05:53 PM	53,248	PML Run-time library
hpbnrac2.dll	5.0.41.3	06\28\2000 10:40 AM	49,152	NRA COLA interface
hpbmiapi.dll	1.0.41.3	05\24\2001 08:07 AM	81,920	hpbmiapi Module
hpboidps.dll	1.0.41.6	09\22\2000 02:28 PM	36,864	HP Status Server Proxy Stub Module
hpbprops.dll	1.0.41.3	10\19\2000 01:18 AM	36,864	HpbproPS
hpjcmn2u.dll	2.00.1214	06\06\2000 01:57 PM	163,840	Federation Hpcommon Library
hpjipx1u.dll	1.00.1214	06\06\2000 01:57 PM	94,208	HPNWIPX
hppapts0.dll	1.0.45.1	11\05\2000 05:43 PM	94,208	SNMP Network Interface (Windows)
hppasnm0.dll	1.0.45.0	11\05\2000 05:43 PM	57,344	SNMP Network Interface (Windows)
hpbmini.dll	1.0.0.4	01\24\2002 09:12 AM	147,456	hpbmini
hpbf041g.hpi		01\25\2002 11:02 AM	16,782	HP Installation File
hpbmmon.dll	10.00.14	09\19\2001 11:23 AM	53,248	Win32 Master Monitor
hpdomon.dll	03.42.00	03\23\2000 11:25 AM	58,368	Win32 Language Monitor for direct connect HP printers
hpbhealr.dll		07\31\2001 09:17 AM	94,274	Application Dynamic-Link Library

4.3.5 File Information - INF

Uninstall: Yes
CD Directory: <CD root>\<language>\drivers\win2000_xp\pcl5e
Install Directory:

2000/XP - <Drive>:\WinNT\INF

File Group: PCL5_En_Win2K_INF
Shared File: No
Potentially Locked: no
Self-Registering: No

File Name	File Version	Date Created	File Size	File Description
hp4100p5.inf		03\06\2002 12:25 PM	2,846	Windows Installation File

4.3.6 INI File Entries

Key: HP LaserJet 4100 PCL 5e
Name: Supported

Action: Add - Creates a new value. If the value already exists, this action is ignored.
INI File: (NT4/2000/XP) <Drive>:\WinNT\hpsasdrv.mtx
Uninstall: No

5.0 HP LaserJet 4100 PS Driver

UI Title: HP LaserJet 4100 PS Driver
UI Description: Provides PostScript compatibility and features.
Type: Printer Driver

5.1 Windows 95, 98, and ME

Component: PS95
Component Version: 3.0.8
Supported OS: Windows 95, Windows 98, and Windows ME
Supported Languages: All supported by Printing System CD
Supported Connections: All supported by Printing System CD

5.1.1 Driver Information

Driver Name: HP LaserJet 4100 PS
Driver Mode: Kernel Mode
Driver File: PSCRIPT.DRV
Configure File: PSCRIPT.DRV
Help File: PSCRIPT.HLP
Data File: HP4100_4.PPD
Data Type: RAW
Language Monitor: HP Master Monitor
Copy Name: HP LaserJet 4100 (%d) PS
Suffix: PS
Share Suffix: PS
Add Print file: HP4100PS.INF
INF String: HP LaserJet 4100 Series PS

5.1.2 Component Size

Total File Count: 10
Total File Size: 876 KB

5.1.3 File Information - Driver

Uninstall: Yes
CD Directory: <CD root>\<language>\drivers\win9x_me\ps

Install Directory:

9x/ME	-	<Drive>:\Windows\System
NT 4.0	-	<Drive>:\Windows\system32\spool\Drivers\Win40
2000/XP	-	<Drive>:\Windows\system32\spool\Drivers\Win40

File Group: PS_En_Win9x
Shared File: Yes
Potentially Locked: No
Self-Registering: No

File Name	File Version	Date Created	File Size	File Description
hp4100_4.ppd		01\30\2002 03:18 PM	51,422	Postscript Driver Printer Description File
pscript.hlp		12\04\2000 04:51 PM	30,543	Windows Help File
pscript.drv	4.90.3000	12\04\2000 04:51 PM	395,472	PostScript Printer Driver
pscript.ini		12\04\2000 04:51 PM	365	Initialization File
iconlib.dll	4.90.3000	12\04\2000 04:51 PM	118,144	Icon Library
fonts.mfm		12\04\2000 04:51 PM	95,719	Windows 9x Font Matrix File
hpbmmon.dll	10.00.14	09\19\2001 11:23 AM	53,248	Win32 Master Monitor
hpdomon.dll	03.42.00	03\16\2000 05:55 PM	56,832	Win32 Language Monitor for direct connect HP printers
hpbhealr.dll		07\31\2001 09:17 AM	94,274	Application Dynamic-Link Library

---

5.1.4 File Information - INF

Uninstall: Yes
CD Directory: <CD root>\<language>\drivers\win9x_me\ps
Install Directory:

9x/ME	-	<Drive>:\Windows\INF
NT 4.0	-	<Drive>:\WinNT\Temp
2000/XP	-	<Drive>:\WinNT\Temp

File Group: PS_En_Win9x_INF
Shared File: No
Potentially Locked: no
Self-Registering: No

File Name	File Version	Date Created	File Size	File Description
hp4100ps.inf		02\11\2002 02:18 PM	1,861	Windows Installation File

---

5.1.5 INI File Entries

Key:	HP LaserJet 4100 PS
Name:	Supported
Action:	Add - Creates a new value. If the value already exists, this action is ignored.
INI File:	(9x/ME) <Drive>:\Windows\hpsasdrv.mtx
Uninstall:	No

5.2 Windows NT 4.0

Component:	PSNT
Component Version:	3.0.8
Supported OS:	Windows NT 4.0
Supported Languages:	All supported by Printing System CD
Supported Connections:	All supported by Printing System CD

5.2.1 Driver Information

Driver Name:	HP LaserJet 4100 PS
Driver Mode:	Kernel Mode
Driver File:	PSCRIPT4.DLL
Configure File:	PS4UI.DLL
Help File:	PSCRIPT4.HLP
Data File:	HP4100_6.PPD
Data Type:	RAW
Language Monitor:	HP Master Monitor
Copy Name:	HP LaserJet 4100 (%d) PS
Suffix:	PS
Share Suffix:	PS
Add Print file:	HP4100PS.INF
INF String:	HP LaserJet 4100 PS
Vendible Driver:	
	Windows 95 - HP LaserJet 4100 PS
	Windows 98 - HP LaserJet 4100 PS
	Windows ME - HP LaserJet 4100 PS

5.2.2 Component Size

Total File Count:	14
Total File Size:	1,630 KB

5.2.3 File Information - Driver

Uninstall: Yes
CD Directory: <CD root>\<language>\drivers\winnt40\ps
Install Directory:

NT 4.0 - <Drive>:\Windows\System\system32\spool\Drivers\w32x86\ and Subdirectory
(Kernel Mode:
\2 or User Mode: \3)
2000/XP - <Drive>:\Windows\System\system32\spool\Drivers\w32x86\ and Subdirectory
(Kernel Mode:
\2 or User Mode: \3)

File Group: PS_En_NT40
Shared File: Yes
Potentially Locked: No
Self-Registering: No

File Name	File Version	Date Created	File Size	File Description
hp4100_6.ppd		01\30\2002 03:18 PM	51,401	Postscript Driver Printer Description File
pscript4.hlp		12\04\2000 04:45 PM	24,070	Windows Help File
pscript4.dll	4.00	12\04\2000 04:45 PM	367,824	PostScript Printer Driver
ps4ui.dll	4.00	12\04\2000 04:45 PM	108,816	PostScript Driver User Interface
pscript.ntf		12\04\2000 04:45 PM	790,300	Windows NT Font Matrix File
hpcjrps4.dll	1.0.35.0	11\27\2001 09:35 AM	15,872	JobRetention Render Plug-In module
hpcjrui4.dll	1.0.35.0	11\27\2001 09:35 AM	39,424	Application Dynamic-Link Library
hpcstr4.dll	1.0.35.0	11\27\2001 09:35 AM	12,288	Application Dynamic-Link Library
hpps1_4.ini		09\24\2001 11:47 AM	159	Initialization File
hpbmmon.dll	10.00.14	09\19\2001 11:23 AM	53,248	Win32 Master Monitor
hpdomon.dll	03.42.00	03\23\2000 11:25 AM	58,368	Win32 Language Monitor for direct connect HP printers
hpbhealr.dll		07\31\2001 09:17 AM	94,274	Application Dynamic-Link Library
hpboem80.ntf		11\20\2001 06:38 AM	52,344	Windows NT Font Matrix File

---

5.2.4 File Information - INF

Uninstall: Yes
CD Directory: <CD root>\<language>\drivers\winnt40\ps
Install Directory:

NT 4.0 - <Drive>:\WinNT\INF
2000/XP - <Drive>:\WinNT\Temp

File Group: PS_En_NT40_INF
Shared File: No
Potentially Locked: no
Self-Registering: No

File Name	File Version	Date Created	File Size	File Description
hp4100ps.inf		02\11\2002 02:19 PM	1,589	Windows Installation File

5.2.5 INI File Entries

Key: HP LaserJet 4100 PS
Name: Supported
Action: Add - Creates a new value. If the value already exists, this action is ignored.
INI File: (NT4/2000/XP) <Drive>:\WinNT\hpsasdrv.mtx
Uninstall: No

5.3 Windows 2000 and XP

Component: PS2K
Component Version: 3.0.8
Supported OS: Windows 2000, and Windows XP
Supported Languages: All supported by Printing System CD
Supported Connections: All supported by Printing System CD

5.3.1 Driver Information

Driver Name: HP LaserJet 4100 PS
Driver Mode: User Mode
Driver File: PSCRIPT5.DLL
Configure File: PS5UI.DLL
Help File: PSCRIPT.HLP
Data File: HPB41007.PPD
Data Type: RAW
Language Monitor: HP Master Monitor
Copy Name: HP LaserJet 4100 (%d) PS
Suffix: PS
Share Suffix: PS
Add Print file: HP4100PS.INF
INF String: HP LaserJet 4100 PS
Vendible Driver:
Windows 95 - HP LaserJet 4100 PS
Windows 98 - HP LaserJet 4100 PS

Windows ME - HP LaserJet 4100 PS
Windows NT 4.0 - HP LaserJet 4100 PS

5.3.2 Component Size

Total File Count: 14
Total File Size: 1,614 KB

5.3.3 File Information - OS_Files

Uninstall: No
File Source: $WINDIR\Driver Cache\i386\driver.cab
Install Directory:

2000/XP - <Drive>:\Windows\System\system32\spool\Drivers\w32x86\ and Subdirectory (Kernel Mode: \2 or User Mode: \3)

File Group: OS_Files
Shared File: Yes
Potentially Locked: No
Self-Registering: No

File Name	File Version	Date Created	File Size	File Description
pscript5.dll	5.00.2150.1	11\30\1999 11:39 PM	383,248	PostScript Printer Driver
ps5ui.dll	5.00.2134.1	11\30\1999 11:39 PM	106,256	PostScript Driver User Interface
pscript.hlp		10\07\1999 03:07 PM	24,033	Windows Help File
pscript.ntf		05\10\1999 04:37 PM	790,300	Windows NT Font Matrix File

---

5.3.4 File Information - Driver

Uninstall: Yes
CD Directory: <CD root>\<language>\drivers\win2000_xp\ps
Install Directory:

2000/XP - <Drive>:\Windows\System\system32\spool\Drivers\w32x86\ and Subdirectory (Kernel Mode: \2 or User Mode: \3)

File Group: PS_En_Win2K
Shared File: Yes
Potentially Locked: No

Self-Registering: No

File Name	File Version	Date Created	File Size	File Description
hpbpsjrr.dll	1.0.35.0	11\27\2001 10:08 AM	9,216	JobRetention Render Plug-In module
hpbpsjui.dll	1.0.35.0	11\27\2001 10:07 AM	20,992	Application Dynamic-Link Library
hpjrcstr.dll	1.0.35.0	11\27\2001 10:07 AM	8,192	Application Dynamic-Link Library
hpjrljps.ini		09\24\2001 09:51 AM	159	Initialization File
hpbmmon.dll	10.00.14	09\19\2001 11:23 AM	53,248	Win32 Master Monitor
hpdomon.dll	03.42.00	03\23\2000 11:25 AM	58,368	Win32 Language Monitor for direct connect HP printers
hpbhealr.dll		07\31\2001 09:17 AM	94,274	Application Dynamic-Link Library
hpb41007.ppd		01\30\2002 03:18 PM	51,396	Postscript Driver Printer Description File
hpboem80.ntf		11\20\2001 06:38 AM	52,344	Windows NT Font Matrix File

---

5.3.5 File Information - INF

Uninstall: Yes
CD Directory: <CD root>\<language>\drivers\win2000_xp\ps
Install Directory:

2000/XP - <Drive>:\WinNT\INF

File Group: PS_En_Win2K_INF
Shared File: No
Potentially Locked: no
Self-Registering: No

File Name	File Version	Date Created	File Size	File Description
hp4100ps.inf		02\11\2002 02:19 PM	1,508	Windows Installation File

---

5.3.6 INI File Entries

Key: HP LaserJet 4100 PS
Name: Supported
Action: Add - Creates a new value. If the value already exists, this action is ignored.
INI File: (NT4/2000/XP) <Drive>:\WinNT\hpsasdrv.mtx
Uninstall: No

6.0 Driver Common Registry Entries

Title: Driver Common Registry Entries (invisible component)
Description: Installed with all HP PCL driver installations at support BIDI. Registry entries for BIDI.
Type: Other Support SW or Online Document(No Files)

6.1 All Windows 32 bit

Component: Driver_Common
Component Version: 4.14.0.0
Supported OS: All supported by Printing System CD
Supported Languages: All supported by Printing System CD
Supported Connections: Parallel (LPT), Other (IR, or Com), Network (Server), and Network (Client)

6.1.1 Registry Entries

Name: MODEL_NAME
Action: Replace - Replaces an existing value. Creates a new value if the value does not exist.
Root: HKEY_LOCAL_MACHINE
Key: SOFTWARE\Hewlett-Packard\HP Network Registry Agent\HprdbObjects
Data Type: Binary
Value: 01,03,06,01,04,01,0b,02,03,09,04,02,01,01,03,02,00
Uninstall: No

Name: MOPY_MODE
Action: Replace - Replaces an existing value. Creates a new value if the value does not exist.
Root: HKEY_LOCAL_MACHINE
Key: SOFTWARE\Hewlett-Packard\HP Network Registry Agent\HprdbObjects
Data Type: Binary
Value: 01,03,06,01,04,01,0b,02,03,09,04,02,01,02,04,01,01,00
Uninstall: No

Name: prtMediaPathType2
Action: Replace - Replaces an existing value. Creates a new value if the value does not exist.
Root: HKEY_LOCAL_MACHINE
Key: SOFTWARE\Hewlett-Packard\HP Network Registry Agent\HprdbObjects
Data Type: Binary
Value: 01,03,06,01,02,01,2b,0d,04,01,09,01,02
Uninstall: No

```
Name:               PHD1-MODEL
Action:             Replace - Replaces an existing value.  Creates a new value if the value does not
exist.

Root:               HKEY_LOCAL_MACHINE
Key:                SOFTWARE\Hewlett-Packard\HP Network Registry Agent\HprdbObjects
Data Type:          Binary
Value:              01,03,06,01,04,01,0b,02,03,09,04,02,01,01,04,05,01,01,00
Uninstall:          No

Name:               PHD2-MODEL
Action:             Replace - Replaces an existing value.  Creates a new value if the value does not
exist.

Root:               HKEY_LOCAL_MACHINE
Key:                SOFTWARE\Hewlett-Packard\HP Network Registry Agent\HprdbObjects
Data Type:          Binary
Value:              01,03,06,01,04,01,0b,02,03,09,04,02,01,01,04,05,02,01,00
Uninstall:          No

Name:               PHD3-MODEL
Action:             Replace - Replaces an existing value.  Creates a new value if the value does not
exist.

Root:               HKEY_LOCAL_MACHINE
Key:                SOFTWARE\Hewlett-Packard\HP Network Registry Agent\HprdbObjects
Data Type:          Binary
Value:              01,03,06,01,04,01,0b,02,03,09,04,02,01,01,04,05,03,01,00
Uninstall:          No

Name:               PHD4-MODEL
Action:             Replace - Replaces an existing value.  Creates a new value if the value does not
exist.

Root:               HKEY_LOCAL_MACHINE
Key:                SOFTWARE\Hewlett-Packard\HP Network Registry Agent\HprdbObjects
Data Type:          Binary
Value:              01,03,06,01,04,01,0b,02,03,09,04,02,01,01,04,05,04,01,00
Uninstall:          No

Name:               PHD5-MODEL
Action:             Replace - Replaces an existing value.  Creates a new value if the value does not
exist.

Root:               HKEY_LOCAL_MACHINE
Key:                SOFTWARE\Hewlett-Packard\HP Network Registry Agent\HprdbObjects
Data Type:          Binary
Value:              01,03,06,01,04,01,0b,02,03,09,04,02,01,01,04,05,05,01,00
Uninstall:          No

Name:               PHD6-MODEL
```

```
Action:             Replace - Replaces an existing value.  Creates a new value if the value does not
exist.
Root:               HKEY_LOCAL_MACHINE
Key:                SOFTWARE\Hewlett-Packard\HP Network Registry Agent\HprdbObjects
Data Type:          Binary
Value:              01,03,06,01,04,01,0b,02,03,09,04,02,01,01,04,05,06,01,00
Uninstall:          No

Name:               PHD1-DEVICE-MEMORY
Action:             Replace - Replaces an existing value.  Creates a new value if the value does not
exist.
Root:               HKEY_LOCAL_MACHINE
Key:                SOFTWARE\Hewlett-Packard\HP Network Registry Agent\HprdbObjects
Data Type:          Binary
Value:              01,03,06,01,04,01,0b,02,03,09,04,02,01,04,01,07,03,01,04,00
Uninstall:          No

Name:               PHD2-DEVICE-MEMORY
Action:             Replace - Replaces an existing value.  Creates a new value if the value does not
exist.
Root:               HKEY_LOCAL_MACHINE
Key:                SOFTWARE\Hewlett-Packard\HP Network Registry Agent\HprdbObjects
Data Type:          Binary
Value:              01,03,06,01,04,01,0b,02,03,09,04,02,01,04,01,07,03,02,04,00
Uninstall:          No

Name:               PHD3-DEVICE-MEMORY
Action:             Replace - Replaces an existing value.  Creates a new value if the value does not
exist.
Root:               HKEY_LOCAL_MACHINE
Key:                SOFTWARE\Hewlett-Packard\HP Network Registry Agent\HprdbObjects
Data Type:          Binary
Value:              01,03,06,01,04,01,0b,02,03,09,04,02,01,04,01,07,03,03,04,00
Uninstall:          No

Name:               PHD4-DEVICE-MEMORY
Action:             Replace - Replaces an existing value.  Creates a new value if the value does not
exist.
Root:               HKEY_LOCAL_MACHINE
Key:                SOFTWARE\Hewlett-Packard\HP Network Registry Agent\HprdbObjects
Data Type:          Binary
Value:              01,03,06,01,04,01,0b,02,03,09,04,02,01,04,01,07,03,04,04,00
Uninstall:          No

Name:               PHD5-DEVICE-MEMORY
Action:             Replace - Replaces an existing value.  Creates a new value if the value does not
exist.
Root:               HKEY_LOCAL_MACHINE
```

```
Key:                SOFTWARE\Hewlett-Packard\HP Network Registry Agent\HprdbObjects
Data Type:          Binary
Value:              01,03,06,01,04,01,0b,02,03,09,04,02,01,04,01,07,03,05,04,00
Uninstall:          No

Name:               PHD6-DEVICE-MEMORY
Action:             Replace - Replaces an existing value.  Creates a new value if the value does not
exist.
Root:               HKEY_LOCAL_MACHINE
Key:                SOFTWARE\Hewlett-Packard\HP Network Registry Agent\HprdbObjects
Data Type:          Binary
Value:              01,03,06,01,04,01,0b,02,03,09,04,02,01,04,01,07,03,06,04,00
Uninstall:          No

Name:               MEDIA13-NAME
Action:             Replace - Replaces an existing value.  Creates a new value if the value does not
exist.
Root:               HKEY_LOCAL_MACHINE
Key:                SOFTWARE\Hewlett-Packard\HP Network Registry Agent\HprdbObjects
Data Type:          Binary
Value:              01,03,06,01,04,01,0b,02,03,09,04,02,01,04,01,08,03,0d,01,00
Uninstall:          No

Name:               MEDIA14-NAME
Action:             Replace - Replaces an existing value.  Creates a new value if the value does not
exist.
Root:               HKEY_LOCAL_MACHINE
Key:                SOFTWARE\Hewlett-Packard\HP Network Registry Agent\HprdbObjects
Data Type:          Binary
Value:              01,03,06,01,04,01,0b,02,03,09,04,02,01,04,01,08,03,0e,01,00
Uninstall:          No

Name:               MEDIA15-NAME
Action:             Replace - Replaces an existing value.  Creates a new value if the value does not
exist.
Root:               HKEY_LOCAL_MACHINE
Key:                SOFTWARE\Hewlett-Packard\HP Network Registry Agent\HprdbObjects
Data Type:          Binary
Value:              01,03,06,01,04,01,0b,02,03,09,04,02,01,04,01,08,03,0f,01,00
Uninstall:          No

Name:               MEDIA16-NAME
Action:             Replace - Replaces an existing value.  Creates a new value if the value does not
exist.
Root:               HKEY_LOCAL_MACHINE
Key:                SOFTWARE\Hewlett-Packard\HP Network Registry Agent\HprdbObjects
Data Type:          Binary
Value:              01,03,06,01,04,01,0b,02,03,09,04,02,01,04,01,08,03,10,01,00
```

```
Uninstall:          No

Name:               MEDIA17-NAME
Action:             Replace - Replaces an existing value.  Creates a new value if the value does not
exist.
Root:               HKEY_LOCAL_MACHINE
Key:                SOFTWARE\Hewlett-Packard\HP Network Registry Agent\HprdbObjects
Data Type:          Binary
Value:              01,03,06,01,04,01,0b,02,03,09,04,02,01,04,01,08,03,11,01,00
Uninstall:          No

Name:               hrDiskStorageMedia2
Action:             Replace - Replaces an existing value.  Creates a new value if the value does not
exist.
Root:               HKEY_LOCAL_MACHINE
Key:                SOFTWARE\Hewlett-Packard\HP Network Registry Agent\HprdbObjects
Data Type:          Binary
Value:              01,03,06,01,02,01,19,03,06,01,02,02
Uninstall:          No

Name:               hrDiskStorageMedia3
Action:             Replace - Replaces an existing value.  Creates a new value if the value does not
exist.
Root:               HKEY_LOCAL_MACHINE
Key:                SOFTWARE\Hewlett-Packard\HP Network Registry Agent\HprdbObjects
Data Type:          Binary
Value:              01,03,06,01,02,01,19,03,06,01,02,03
Uninstall:          No

Name:               hrDiskStorageMedia4
Action:             Replace - Replaces an existing value.  Creates a new value if the value does not
exist.
Root:               HKEY_LOCAL_MACHINE
Key:                SOFTWARE\Hewlett-Packard\HP Network Registry Agent\HprdbObjects
Data Type:          Binary
Value:              01,03,06,01,02,01,19,03,06,01,02,04
Uninstall:          No

Name:               hrMemorySize
Action:             Replace - Replaces an existing value.  Creates a new value if the value does not
exist.
Root:               HKEY_LOCAL_MACHINE
Key:                SOFTWARE\Hewlett-Packard\HP Network Registry Agent\HprdbObjects
Data Type:          Binary
Value:              01,03,06,01,02,01,19,02,02,00
Uninstall:          No

Name:               HELD-JOB-ENABLE
```

```
Action:             Replace - Replaces an existing value.  Creates a new value if the value does not
exist.
Root:               HKEY_LOCAL_MACHINE
Key:                SOFTWARE\Hewlett-Packard\HP Network Registry Agent\HprdbObjects
Data Type:          Binary
Value:              01,03,06,01,04,01,0B,02,03,09,04,02,01,01,06,07,02,04,00
Uninstall:          No

Name:               HOST-APPLICATION-AVAILABLE-MEMORY
Action:             Replace - Replaces an existing value.  Creates a new value if the value does not
exist.
Root:               HKEY_LOCAL_MACHINE
Key:                SOFTWARE\Hewlett-Packard\HP Network Registry Agent\HprdbObjects
Data Type:          Binary
Value:              01,03,06,01,04,01,0B,02,03,09,04,02,01,01,02,3B,00
Uninstall:          No

Name:               PRINT_ENGINE_REVISION
Action:             Replace - Replaces an existing value.  Creates a new value if the value does not
exist.
Root:               HKEY_LOCAL_MACHINE
Key:                SOFTWARE\Hewlett-Packard\HP Network Registry Agent\HprdbObjects
Data Type:          Binary
Value:              01,03,06,01,04,01,0B,02,03,09,04,02,01,04,01,02,1A,00
Uninstall:          No

Name:               prtInputMaxCapacity1
Action:             Replace - Replaces an existing value.  Creates a new value if the value does not
exist.
Root:               HKEY_LOCAL_MACHINE
Key:                SOFTWARE\Hewlett-Packard\HP Network Registry Agent\HprdbObjects
Data Type:          Binary
Value:              01,03,06,01,02,01,2B,08,02,01,09,01,01
Uninstall:          No

Name:               prtInputMaxCapacity2
Action:             Replace - Replaces an existing value.  Creates a new value if the value does not
exist.
Root:               HKEY_LOCAL_MACHINE
Key:                SOFTWARE\Hewlett-Packard\HP Network Registry Agent\HprdbObjects
Data Type:          Binary
Value:              01,03,06,01,02,01,2B,08,02,01,09,01,02
Uninstall:          No

Name:               prtInputMaxCapacity3
Action:             Replace - Replaces an existing value.  Creates a new value if the value does not
exist.
Root:               HKEY_LOCAL_MACHINE
```

```
Key:                SOFTWARE\Hewlett-Packard\HP Network Registry Agent\HprdbObjects
Data Type:          Binary
Value:              01,03,06,01,02,01,2B,08,02,01,09,01,03
Uninstall:          No

Name:               prtInputMaxCapacity4
Action:             Replace - Replaces an existing value.  Creates a new value if the value does not
exist.
Root:               HKEY_LOCAL_MACHINE
Key:                SOFTWARE\Hewlett-Packard\HP Network Registry Agent\HprdbObjects
Data Type:          Binary
Value:              01,03,06,01,02,01,2B,08,02,01,09,01,04
Uninstall:          No

Name:               prtInputMaxCapacity5
Action:             Replace - Replaces an existing value.  Creates a new value if the value does not
exist.
Root:               HKEY_LOCAL_MACHINE
Key:                SOFTWARE\Hewlett-Packard\HP Network Registry Agent\HprdbObjects
Data Type:          Binary
Value:              01,03,06,01,02,01,2B,08,02,01,09,01,05
Uninstall:          No

Name:               prtInputMaxCapacity6
Action:             Replace - Replaces an existing value.  Creates a new value if the value does not
exist.
Root:               HKEY_LOCAL_MACHINE
Key:                SOFTWARE\Hewlett-Packard\HP Network Registry Agent\HprdbObjects
Data Type:          Binary
Value:              01,03,06,01,02,01,2B,08,02,01,09,01,06
Uninstall:          No

Name:               prtInputMaxCapacity7
Action:             Replace - Replaces an existing value.  Creates a new value if the value does not
exist.
Root:               HKEY_LOCAL_MACHINE
Key:                SOFTWARE\Hewlett-Packard\HP Network Registry Agent\HprdbObjects
Data Type:          Binary
Value:              01,03,06,01,02,01,2B,08,02,01,09,01,07
Uninstall:          No

Name:               prtInputMaxCapacity8
Action:             Replace - Replaces an existing value.  Creates a new value if the value does not
exist.
Root:               HKEY_LOCAL_MACHINE
Key:                SOFTWARE\Hewlett-Packard\HP Network Registry Agent\HprdbObjects
Data Type:          Binary
Value:              01,03,06,01,02,01,2B,08,02,01,09,01,08
```

```
Uninstall:          No

Name:               prtInputMaxCapacity9
Action:             Replace - Replaces an existing value.  Creates a new value if the value does not
exist.

Root:               HKEY_LOCAL_MACHINE
Key:                SOFTWARE\Hewlett-Packard\HP Network Registry Agent\HprdbObjects
Data Type:          Binary
Value:              01,03,06,01,02,01,2B,08,02,01,09,01,09
Uninstall:          No

Name:               prtInputMaxCapacity10
Action:             Replace - Replaces an existing value.  Creates a new value if the value does not
exist.

Root:               HKEY_LOCAL_MACHINE
Key:                SOFTWARE\Hewlett-Packard\HP Network Registry Agent\HprdbObjects
Data Type:          Binary
Value:              01,03,06,01,02,01,2B,08,02,01,09,01,0a
Uninstall:          No

Name:               prtInputMaxCapacity11
Action:             Replace - Replaces an existing value.  Creates a new value if the value does not
exist.

Root:               HKEY_LOCAL_MACHINE
Key:                SOFTWARE\Hewlett-Packard\HP Network Registry Agent\HprdbObjects
Data Type:          Binary
Value:              01,03,06,01,02,01,2B,08,02,01,09,01,0b
Uninstall:          No

Name:               prtInputMaxCapacity12
Action:             Replace - Replaces an existing value.  Creates a new value if the value does not
exist.

Root:               HKEY_LOCAL_MACHINE
Key:                SOFTWARE\Hewlett-Packard\HP Network Registry Agent\HprdbObjects
Data Type:          Binary
Value:              01,03,06,01,02,01,2B,08,02,01,09,01,0c
Uninstall:          No

Name:               prtInputMaxCapacity13
Action:             Replace - Replaces an existing value.  Creates a new value if the value does not
exist.

Root:               HKEY_LOCAL_MACHINE
Key:                SOFTWARE\Hewlett-Packard\HP Network Registry Agent\HprdbObjects
Data Type:          Binary
Value:              01,03,06,01,02,01,2B,08,02,01,09,01,0d
Uninstall:          No

Name:               prtInputMaxCapacity14
```

Action: Replace - Replaces an existing value. Creates a new value if the value does not exist.
Root: HKEY_LOCAL_MACHINE
Key: SOFTWARE\Hewlett-Packard\HP Network Registry Agent\HprdbObjects
Data Type: Binary
Value: 01,03,06,01,02,01,2B,08,02,01,09,01,0e
Uninstall: No

Name: prtInputMaxCapacity15
Action: Replace - Replaces an existing value. Creates a new value if the value does not exist.
Root: HKEY_LOCAL_MACHINE
Key: SOFTWARE\Hewlett-Packard\HP Network Registry Agent\HprdbObjects
Data Type: Binary
Value: 01,03,06,01,02,01,2B,08,02,01,09,01,0f
Uninstall: No

Name: prtInputModel1
Action: Replace - Replaces an existing value. Creates a new value if the value does not exist.
Root: HKEY_LOCAL_MACHINE
Key: SOFTWARE\Hewlett-Packard\HP Network Registry Agent\HprdbObjects
Data Type: Binary
Value: 01,03,06,01,02,01,2B,08,02,01,0F,01,01
Uninstall: No

Name: prtInputModel2
Action: Replace - Replaces an existing value. Creates a new value if the value does not exist.
Root: HKEY_LOCAL_MACHINE
Key: SOFTWARE\Hewlett-Packard\HP Network Registry Agent\HprdbObjects
Data Type: Binary
Value: 01,03,06,01,02,01,2B,08,02,01,0F,01,02
Uninstall: No

Name: prtInputModel3
Action: Replace - Replaces an existing value. Creates a new value if the value does not exist.
Root: HKEY_LOCAL_MACHINE
Key: SOFTWARE\Hewlett-Packard\HP Network Registry Agent\HprdbObjects
Data Type: Binary
Value: 01,03,06,01,02,01,2B,08,02,01,0F,01,03
Uninstall: No

Name: prtInputModel4
Action: Replace - Replaces an existing value. Creates a new value if the value does not exist.
Root: HKEY_LOCAL_MACHINE

```
Key:                SOFTWARE\Hewlett-Packard\HP Network Registry Agent\HprdbObjects
Data Type:          Binary
Value:              01,03,06,01,02,01,2B,08,02,01,0F,01,04
Uninstall:          No

Name:               prtInputModel5
Action:             Replace - Replaces an existing value.  Creates a new value if the value does not
exist.
Root:               HKEY_LOCAL_MACHINE
Key:                SOFTWARE\Hewlett-Packard\HP Network Registry Agent\HprdbObjects
Data Type:          Binary
Value:              01,03,06,01,02,01,2B,08,02,01,0F,01,05
Uninstall:          No

Name:               prtInputModel6
Action:             Replace - Replaces an existing value.  Creates a new value if the value does not
exist.
Root:               HKEY_LOCAL_MACHINE
Key:                SOFTWARE\Hewlett-Packard\HP Network Registry Agent\HprdbObjects
Data Type:          Binary
Value:              01,03,06,01,02,01,2B,08,02,01,0F,01,06
Uninstall:          No

Name:               prtInputModel7
Action:             Replace - Replaces an existing value.  Creates a new value if the value does not
exist.
Root:               HKEY_LOCAL_MACHINE
Key:                SOFTWARE\Hewlett-Packard\HP Network Registry Agent\HprdbObjects
Data Type:          Binary
Value:              01,03,06,01,02,01,2B,08,02,01,0F,01,07
Uninstall:          No

Name:               prtInputModel8
Action:             Replace - Replaces an existing value.  Creates a new value if the value does not
exist.
Root:               HKEY_LOCAL_MACHINE
Key:                SOFTWARE\Hewlett-Packard\HP Network Registry Agent\HprdbObjects
Data Type:          Binary
Value:              01,03,06,01,02,01,2B,08,02,01,0F,01,08
Uninstall:          No

Name:               prtInputModel9
Action:             Replace - Replaces an existing value.  Creates a new value if the value does not
exist.
Root:               HKEY_LOCAL_MACHINE
Key:                SOFTWARE\Hewlett-Packard\HP Network Registry Agent\HprdbObjects
Data Type:          Binary
Value:              01,03,06,01,02,01,2B,08,02,01,0F,01,09
```

```
Uninstall:          No

Name:               prtInputModel10
Action:             Replace - Replaces an existing value.  Creates a new value if the value does not
exist.

Root:               HKEY_LOCAL_MACHINE
Key:                SOFTWARE\Hewlett-Packard\HP Network Registry Agent\HprdbObjects
Data Type:          Binary
Value:              01,03,06,01,02,01,2B,08,02,01,0F,01,0a
Uninstall:          No

Name:               prtInputModel11
Action:             Replace - Replaces an existing value.  Creates a new value if the value does not
exist.

Root:               HKEY_LOCAL_MACHINE
Key:                SOFTWARE\Hewlett-Packard\HP Network Registry Agent\HprdbObjects
Data Type:          Binary
Value:              01,03,06,01,02,01,2B,08,02,01,0F,01,0b
Uninstall:          No

Name:               prtInputModel12
Action:             Replace - Replaces an existing value.  Creates a new value if the value does not
exist.

Root:               HKEY_LOCAL_MACHINE
Key:                SOFTWARE\Hewlett-Packard\HP Network Registry Agent\HprdbObjects
Data Type:          Binary
Value:              01,03,06,01,02,01,2B,08,02,01,0F,01,0c
Uninstall:          No

Name:               prtInputModel13
Action:             Replace - Replaces an existing value.  Creates a new value if the value does not
exist.

Root:               HKEY_LOCAL_MACHINE
Key:                SOFTWARE\Hewlett-Packard\HP Network Registry Agent\HprdbObjects
Data Type:          Binary
Value:              01,03,06,01,02,01,2B,08,02,01,0F,01,0d
Uninstall:          No

Name:               prtInputModel14
Action:             Replace - Replaces an existing value.  Creates a new value if the value does not
exist.

Root:               HKEY_LOCAL_MACHINE
Key:                SOFTWARE\Hewlett-Packard\HP Network Registry Agent\HprdbObjects
Data Type:          Binary
Value:              01,03,06,01,02,01,2B,08,02,01,0F,01,0e
Uninstall:          No

Name:               prtInputModel15
```

```
Action:             Replace - Replaces an existing value.  Creates a new value if the value does not
exist.
Root:               HKEY_LOCAL_MACHINE
Key:                SOFTWARE\Hewlett-Packard\HP Network Registry Agent\HprdbObjects
Data Type:          Binary
Value:              01,03,06,01,02,01,2B,08,02,01,0F,01,0f
Uninstall:          No

Name:               prtOutputName1
Action:             Replace - Replaces an existing value.  Creates a new value if the value does not
exist.
Root:               HKEY_LOCAL_MACHINE
Key:                SOFTWARE\Hewlett-Packard\HP Network Registry Agent\HprdbObjects
Data Type:          Binary
Value:              01,03,06,01,02,01,2b,09,02,01,07,01,01
Uninstall:          No

Name:               prtOutputName2
Action:             Replace - Replaces an existing value.  Creates a new value if the value does not
exist.
Root:               HKEY_LOCAL_MACHINE
Key:                SOFTWARE\Hewlett-Packard\HP Network Registry Agent\HprdbObjects
Data Type:          Binary
Value:              01,03,06,01,02,01,2b,09,02,01,07,01,02
Uninstall:          No

Name:               prtOutputName3
Action:             Replace - Replaces an existing value.  Creates a new value if the value does not
exist.
Root:               HKEY_LOCAL_MACHINE
Key:                SOFTWARE\Hewlett-Packard\HP Network Registry Agent\HprdbObjects
Data Type:          Binary
Value:              01,03,06,01,02,01,2b,09,02,01,07,01,03
Uninstall:          No

Name:               prtOutputName4
Action:             Replace - Replaces an existing value.  Creates a new value if the value does not
exist.
Root:               HKEY_LOCAL_MACHINE
Key:                SOFTWARE\Hewlett-Packard\HP Network Registry Agent\HprdbObjects
Data Type:          Binary
Value:              01,03,06,01,02,01,2b,09,02,01,07,01,04
Uninstall:          No

Name:               prtOutputName5
Action:             Replace - Replaces an existing value.  Creates a new value if the value does not
exist.
Root:               HKEY_LOCAL_MACHINE
```

```
Key:                SOFTWARE\Hewlett-Packard\HP Network Registry Agent\HprdbObjects
Data Type:          Binary
Value:              01,03,06,01,02,01,2b,09,02,01,07,01,05
Uninstall:          No

Name:               prtOutputName6
Action:             Replace - Replaces an existing value.  Creates a new value if the value does not
exist.
Root:               HKEY_LOCAL_MACHINE
Key:                SOFTWARE\Hewlett-Packard\HP Network Registry Agent\HprdbObjects
Data Type:          Binary
Value:              01,03,06,01,02,01,2b,09,02,01,07,01,06
Uninstall:          No

Name:               prtOutputName7
Action:             Replace - Replaces an existing value.  Creates a new value if the value does not
exist.
Root:               HKEY_LOCAL_MACHINE
Key:                SOFTWARE\Hewlett-Packard\HP Network Registry Agent\HprdbObjects
Data Type:          Binary
Value:              01,03,06,01,02,01,2b,09,02,01,07,01,07
Uninstall:          No

Name:               prtOutputName8
Action:             Replace - Replaces an existing value.  Creates a new value if the value does not
exist.
Root:               HKEY_LOCAL_MACHINE
Key:                SOFTWARE\Hewlett-Packard\HP Network Registry Agent\HprdbObjects
Data Type:          Binary
Value:              01,03,06,01,02,01,2b,09,02,01,07,01,08
Uninstall:          No

Name:               prtOutputName9
Action:             Replace - Replaces an existing value.  Creates a new value if the value does not
exist.
Root:               HKEY_LOCAL_MACHINE
Key:                SOFTWARE\Hewlett-Packard\HP Network Registry Agent\HprdbObjects
Data Type:          Binary
Value:              01,03,06,01,02,01,2b,09,02,01,07,01,09
Uninstall:          No

Name:               prtOutputName10
Action:             Replace - Replaces an existing value.  Creates a new value if the value does not
exist.
Root:               HKEY_LOCAL_MACHINE
Key:                SOFTWARE\Hewlett-Packard\HP Network Registry Agent\HprdbObjects
Data Type:          Binary
Value:              01,03,06,01,02,01,2b,09,02,01,07,01,0a
```

```
                    Uninstall:          No

                    Name:               prtOutputName11
                    Action:             Replace - Replaces an existing value.  Creates a new value if the value does not
exist.
                    Root:               HKEY_LOCAL_MACHINE
                    Key:                SOFTWARE\Hewlett-Packard\HP Network Registry Agent\HprdbObjects
                    Data Type:          Binary
                    Value:              01,03,06,01,02,01,2b,09,02,01,07,01,0b
                    Uninstall:          No

                    Name:               prtOutputName12
                    Action:             Replace - Replaces an existing value.  Creates a new value if the value does not
exist.
                    Root:               HKEY_LOCAL_MACHINE
                    Key:                SOFTWARE\Hewlett-Packard\HP Network Registry Agent\HprdbObjects
                    Data Type:          Binary
                    Value:              01,03,06,01,02,01,2b,09,02,01,07,01,0c
                    Uninstall:          No

                    Name:               prtOutputName13
                    Action:             Replace - Replaces an existing value.  Creates a new value if the value does not
exist.
                    Root:               HKEY_LOCAL_MACHINE
                    Key:                SOFTWARE\Hewlett-Packard\HP Network Registry Agent\HprdbObjects
                    Data Type:          Binary
                    Value:              01,03,06,01,02,01,2b,09,02,01,07,01,0d
                    Uninstall:          No

                    Name:               prtOutputName14
                    Action:             Replace - Replaces an existing value.  Creates a new value if the value does not
exist.
                    Root:               HKEY_LOCAL_MACHINE
                    Key:                SOFTWARE\Hewlett-Packard\HP Network Registry Agent\HprdbObjects
                    Data Type:          Binary
                    Value:              01,03,06,01,02,01,2b,09,02,01,07,01,0e
                    Uninstall:          No

                    Name:               NOT-READY-SOURCE-SCANNER
                    Action:             Replace - Replaces an existing value.  Creates a new value if the value does not
exist.
                    Root:               HKEY_LOCAL_MACHINE
                    Key:                SOFTWARE\Hewlett-Packard\HP Network Registry Agent\HprdbObjects
                    Data Type:          Binary
                    Value:              01,03,06,01,04,01,0b,02,03,09,04,02,01,02,02,02,01,00
                    Uninstall:          No
```

7.0 Language Monitor

Title: Language Monitor (invisible component)
Description: Installed with all driver installations. The local print monitor sends print jobs to local devices. These include familiar ports like LPT1 and COM1.
Type: Other Support SW or Online Document

7.1 All Windows 32 bit

Component: Langmon
Component Version: 10.0.0.14
Supported OS: All supported by Printing System CD
Supported Languages: All supported by Printing System CD
Supported Connections: Parallel (LPT), Other (IR, or Com), Network (Server), and Network (Client)

7.1.1 Post-Add Registry Runtime Action

Adds connection data for HP Master Language Monitor.

Name: <Plug and Play Device Name>
Action: Replace - Replaces an existing value. Creates a new value if the value does not exist.
Root: HKEY_LOCAL_MACHINE
Key: Software\Hewlett-Packard\mstrmon\Network
Data Type: String
Value:
Uninstall: Yes

Name: <Plug and Play Device Name>
Action: Replace - Replaces an existing value. Creates a new value if the value does not exist.
Root: HKEY_LOCAL_MACHINE
Key: Software\Hewlett-Packard\mstrmon\LPT
Data Type: String
Value:
Uninstall: Yes

Name: <Plug and Play Device Name>
Action: Replace - Replaces an existing value. Creates a new value if the value does not exist.
Root: HKEY_LOCAL_MACHINE
Key: Software\Hewlett-Packard\mstrmon\Dot4
Data Type: String
Value:
Uninstall: Yes

7.1.2 Component Size

Total File Count: 3
Total File Size: 199 KB

7.1.3 File Information - Langmon

Uninstall: Yes
CD Directory: CAB File
Install Directory:

9x/ME - <Drive>:\Windows\System\
NT 4.0 - <Drive>:\WinNT\system32\
2000/XP - <Drive>:\WinNT\system32\

File Group: langmon_Win9x
Shared File: No
Potentially Locked: Yes
Self-Registering: No

File Name	File Version	Date Created	File Size	File Description
hpbhealr.dll		07\31\2001 09:17 AM	94,274	Application Dynamic-Link Library
hpbmmon.dll	10.00.14	09\19\2001 11:23 AM	53,248	Win32 Master Monitor
hpdomon.dll	03.42.00	03\16\2000 05:55 PM	56,832	Win32 Language Monitor for direct connect HP printers

---

File Group: langmon_NT40
Shared File: No
Potentially Locked: Yes
Self-Registering: No

File Name	File Version	Date Created	File Size	File Description
hpbhealr.dll	3.42.0.0	07\31\2001 09:17 AM	94,274	Application Dynamic-Link Library
hpbmmon.dll	10.00.14	09\19\2001 11:23 AM	53,248	Win32 Master Monitor
hpdomon.dll	03.42.00	03\23\2000 11:25 AM	58,368	Win32 Language Monitor for direct connect HP printers

---

8.0 Network Bi-directional Communication

Title: Network Bi-directional Communication (invisible component)
Description: Installed with Auto-configuration and Printer Status and Alerts. Allows Applications to communicate with the printer.
Type: Other Support SW or Online Document

8.1 All Windows 32 bit

Component: BIDI
Component Version: 5.0.41.6
Supported OS: All supported by Printing System CD
Supported Languages: All supported by Printing System CD
Supported Connections: Parallel (LPT), Network (Server), and Network (Client)

8.1.1 Pre-Add Registry Runtime Action

Installs DCOM if necessary. Registers hpbpro.exe and hpboid.exe.

8.1.2 Post-File Copy Runtime Action

Log component's files for Share Count Update. All shared Bi-directional Communication and Auto-configuration shared file count are change to the highest of all of the file that make up BIDI.

8.1.3 Post-File Copy Runtime Action

Log if Bi-directional Communication is over network. This information is used by the installer scripts.

8.1.4 Component Size

Total File Count: 10
Total File Size: 740 KB

8.1.5 File Information - ATL

Uninstall: No
CD Directory: CAB File
Install Directory:

9x/ME - <Drive>:\Windows\System\
NT 4.0 - <Drive>:\WinNT\system32\
2000/XP - <Drive>:\WinNT\system32\

File Group: BIDI_WIN9X_ATL
Shared File: Yes
Potentially Locked: Yes
Self-Registering: Yes

File Name	File Version	Date Created	File Size	File Description
atl.dll	3.00.8168	02\08\2000 11:47 AM	69,632	ATL Module for Windows (ANSI)

File Group: BIDI_NT_ATL
Shared File: Yes
Potentially Locked: Yes
Self-Registering: Yes

File Name	File Version	Date Created	File Size	File Description
atl.dll	3.00.8449	02\08\2000 11:47 AM	58,938	ATL Module for Windows NT (Unicode)

8.1.6 File Information - Core

Uninstall: Yes
CD Directory: CAB File
Install Directory:

9x/ME - <Drive>:\Windows\System\
NT 4.0 - <Drive>:\WinNT\system32\
2000/XP - <Drive>:\WinNT\system32\

File Group: BIDI
Shared File: Yes
Potentially Locked: Yes
Self-Registering: No

File Name	File Version	Date Created	File Size	File Description
hpboid.exe	1.0.41.6	09\22\2000 02:28 PM	61,440	HP Status Server Module
hpbpro.exe	1.0.41.4	01\30\2002 06:41 PM	77,824	PortResolver Module
hpjcmn2u.dll	2.00.1214	06\06\2000 01:57 PM	163,840	Federation Hpcommon Library
hpjipx1u.dll	1.00.1214	06\06\2000 01:57 PM	94,208	HPNWIPX
hppapml0.dll	1.0.45.0	01\16\2001 02:50 PM	53,248	PML Run-time library
hppapml0.exe	1.0.45.0	01\16\2001 02:48 PM	61,440	PML Driver

File Group: BIDI_SELFREG

Shared File: Yes
Potentially Locked: Yes
Self-Registering: Yes

File Name	File Version	Date Created	File Size	File Description
hpbmiapi.dll	1.0.41.3	06\28\2000 10:23 AM	81,920	hpbmiapi Module
hpboidps.dll	1.0.41.6	09\22\2000 02:28 PM	36,864	HP Status Server Proxy Stub Module
hpbprops.dll	1.0.41.4	01\30\2002 06:41 PM	57,344	HpbproPS

8.1.7 Registry Entries

Name: EnableDCOM
Action: Replace - Replaces an existing value. Creates a new value if the value does not exist.
Root: HKEY_LOCAL_MACHINE
Key: SOFTWARE\Microsoft\OLE
Data Type: String
Value: Y
Uninstall: No

Name: Timeout
Action: Replace - Replaces an existing value. Creates a new value if the value does not exist.
Root: HKEY_LOCAL_MACHINE
Key: SOFTWARE\Hewlett-Packard\HPB BiDi Port Resolver
Data Type: Number (decimal value)
Value: 30000
Uninstall: No

8.2 Windows 95, 98, and ME

Component: BIDI9x
Component Version: 5.0.41.6
Supported OS: Windows 95, Windows 98, and Windows ME
Supported Languages: All supported by Printing System CD
Supported Connections: Parallel (LPT), Network (Server), and Network (Client)

8.2.1 Post-File Copy Runtime Action

Log component's files for Share Count Update. All shared Bi-directional Communication and Auto-configuration shared file count are change to the highest of all of the file that make up BIDI.

8.2.2 Post-File Copy Runtime Action

Log if Bi-directional Communication is over network. This information is used by the installer scripts.

8.2.3 Component Size

Total File Count: 3
Total File Size: 200 KB

8.2.4 File Information - BIDI_Win9x

Uninstall: Yes
CD Directory: CAB File
Install Directory:

9x/ME - <Drive>:\Windows\System\

File Group: BIDI_WIN9X
Shared File: Yes
Potentially Locked: Yes
Self-Registering: No

File Name	File Version	Date Created	File Size	File Description
hpbnrac2.dll	5.0.41.3	06\28\2000 10:41 AM	49,152	NRA COLA interface
hppapts0.dll	1.0.45.1	01\16\2001 02:05 PM	94,208	SNMP Network Interface (Windows)
hppasnm0.dll	1.0.45.0	01\16\2001 02:40 PM	61,440	SNMP Network Interface (Windows)

8.2.5 Registry Entries

Name: EnableRemoteConnect
Action: Replace - Replaces an existing value. Creates a new value if the value does not exist.

Root: HKEY_LOCAL_MACHINE
Key: SOFTWARE\Microsoft\OLE
Data Type: String
Value: Y
Uninstall: No

Name: HP Port Resolver

Action: Replace - Replaces an existing value. Creates a new value if the value does not exist.

Root: HKEY_LOCAL_MACHINE
Key: SOFTWARE\Microsoft\Windows\CurrentVersion\RunServices
Data Type: String
Value: (9x/ME) <Drive>:\Windows\System\hpbpro.exe
Uninstall: Yes

Name: HP Status Server
Action: Replace - Replaces an existing value. Creates a new value if the value does not exist.

Root: HKEY_LOCAL_MACHINE
Key: SOFTWARE\Microsoft\Windows\CurrentVersion\RunServices
Data Type: String
Value: (9x/ME) <Drive>:\Windows\System\hpboid.exe
Uninstall: Yes

8.3 Windows NT 4.0, 2000 and XP

Component: BIDINT
Component Version: 5.0.41.6
Supported OS: Windows NT 4.0, Windows 2000, and Windows XP
Supported Languages: All supported by Printing System CD
Supported Connections: Parallel (LPT), Network (Server), and Network (Client)

8.3.1 Post-File Copy Runtime Action

Log component's files for Share Count Update. All shared Bi-directional Communication and Auto-configuration shared file count are change to the highest of all of the file that make up BIDI.

8.3.2 Post-File Copy Runtime Action

Log if Bi-directional Communication is over network. This information is used by the installer scripts.

8.3.3 Component Size

Total File Count: 3
Total File Size: 196 KB

8.3.4 File Information - BIDI_NT

Uninstall: Yes
CD Directory: CAB File

Install Directory:

NT 4.0 - <Drive>:\WinNT\system32\
2000/XP - <Drive>:\WinNT\system32\

File Group: BIDI_NT
Shared File: Yes
Potentially Locked: Yes
Self-Registering: No

File Name	File Version	Date Created	File Size	File Description
hpbnrac2.dll	5.0.41.3	06\28\2000 10:40 AM	49,152	NRA COLA interface
hppapts0.dll	1.0.45.1	01\16\2001 03:11 PM	94,208	SNMP Network Interface (Windows)
hppasnm0.dll	1.0.45.0	01\16\2001 03:12 PM	57,344	SNMP Network Interface (Windows)

9.0 driver auto configuration

UI Title: driver auto configuration
UI Description: Provides automatic configuration of printer accessories in driver using bi-directional communication.
Type: Other Support SW or Online Document

9.1 All Windows 32 bit

Component: HPNRA
Component Version: 5.0.41.5
Supported OS: All supported by Printing System CD
Supported Languages: All supported by Printing System CD
Supported Connections: Parallel (LPT), Network (Server), and Network (Client)

9.1.1 Component Installation Availability

Check user's system registry for Direct connect BIDI registry flag. If true, turn on Direct connect BIDI installation (if direct connect BIDI is supported).

9.1.2 Pre-File Copy Runtime Action

Closes down existing HPNRA (hpnra.exe) before reinstalling.

9.1.3 Post-File Copy Runtime Action

Log component's files for Share Count Update. All shared Bi-directional Communication and Auto-configuration shared file count are change to the highest of all of the file that make up BIDI.

9.1.4 Component Size

Total File Count: 1
Total File Size: 44 KB

9.1.5 File Information - HPNRA

Uninstall: Yes
CD Directory: CAB File
Install Directory:

9x/ME - <Drive>:\Windows\System\
NT 4.0 - <Drive>:\WinNT\system32\
2000/XP - <Drive>:\WinNT\system32\

File Group: BIDI_WIN9X_HPNRA
Shared File: Yes
Potentially Locked: Yes
Self-Registering: No

File Name	File Version	Date Created	File Size	File Description
hpnra.exe	5.0.41.5	10\26\2000 04:21 PM	45,056	Network Registry Agent

---

File Group: BIDI_NT_HPNRA
Shared File: Yes
Potentially Locked: Yes
Self-Registering: No

File Name	File Version	Date Created	File Size	File Description
hpnra.exe	5.0.41.5	10\26\2000 04:21 PM	49,152	Network Registry Agent

---

9.1.6 Registry Entries

Name: HP Network Registry Agent

Action: Replace - Replaces an existing value. Creates a new value if the value does not exist.
Root: HKEY_LOCAL_MACHINE
Key: SOFTWARE\Microsoft\Windows\CurrentVersion\Run
Data Type: String
Value: (9x/ME) <Drive>:\Windows\System\hpnra.exe
(NT4/2000/XP) <Drive>:\WinNT\system32\hpnra.exe
Uninstall: Yes

Name: AutoUpdateFrequencyMinutes
Action: Add - Creates a new value. If the value already exists, this action is ignored.
Root: HKEY_LOCAL_MACHINE
Key: SOFTWARE\Hewlett-Packard\HP Network Registry Agent
Data Type: Number (decimal value)
Value: 0
Uninstall: No

10.0 Driver Update Now

Title: Driver Update Now (invisible component)
Description: Run-time driver configuration. Use to update driver configuration for Windows 9x and Me.
Type: Other Support SW or Online Document

10.1 Windows 95, 98, and ME

Component: UpdateNow
Component Version: 1.0.0.0
Supported OS: Windows 95, Windows 98, and Windows ME
Supported Languages: All supported by Printing System CD
Supported Connections: Parallel (LPT), Network (Server), and Network (Client)

10.1.1 Component Size

Total File Count: 1
Total File Size: 80 KB

10.1.2 File Information - UpdateNow

Uninstall: Yes
CD Directory: CAB File
Install Directory:

9x/ME - <Drive>:\Program Files\Hewlett-Packard\LJ4100

File Group: UpdateNow
Shared File: No
Potentially Locked: No
Self-Registering: No

File Name	File Version	Date Created	File Size	File Description
hpbupnow.exe		10\02\2001 12:15 AM	81,920	Application File

10.1.3 INI File Entries

Key: General
Name: version
Action: Add - Creates a new value. If the value already exists, this action is ignored.
INI File: (9x/ME) <Drive>:\Windows\hpbupnow.ini
Uninstall: Yes

11.0 Printer Font/Forms Driver Updater

Title: Printer Font/Forms Driver Updater (invisible component)
Description: Allow PCL drivers to access Fonts/Forms on the printer with Bi-directional communication.
Type: Other Support SW or Online Document

11.1 All Windows 32 bit

Component: SnowyLite
Component Version: 1.0.0.3
Supported OS: All supported by Printing System CD
Supported Languages: All supported by Printing System CD
Supported Connections: Parallel (LPT), Network (Server), and Network (Client)

11.1.1 Post-File Copy Runtime Action

Log component's files for Share Count Update. All shared Bi-directional Communication and Auto-configuration shared file count are change to the highest of all of the file that make up BIDI.

11.1.2 Component Size

Total File Count: 7
Total File Size: 1,240 KB

11.1.3 File Information - EXE

Uninstall: Yes
CD Directory: CAB File
Install Directory:

9x/ME - <Drive>:\Windows\System
NT 4.0 - <Drive>:\Windows\System\system32\spool\Drivers\w32x86\ and Subdirectory (Kernel Mode: \2 or User Mode: \3)\2
2000/XP - <Drive>:\Windows\System\system32\spool\Drivers\w32x86\ and Subdirectory (Kernel Mode: \2 or User Mode: \3)\3

File Group: SnowyLite_EXE
Shared File: Yes
Potentially Locked: Yes
Self-Registering: No

File Name	File Version	Date Created	File Size	File Description
hpbsnwlt.exe	1.0.0.5	10\18\2000 08:51 AM	217,088	HP Resource Manager Client Fonts/Forms Driver Updater

---

11.1.4 File Information - DLLs

Uninstall: Yes
CD Directory: CAB File
Install Directory:

9x/ME - <Drive>:\Windows\System\
NT 4.0 - <Drive>:\WinNT\system32\
2000/XP - <Drive>:\WinNT\system32\

File Group: SnowyLite_DLLs
Shared File: Yes
Potentially Locked: Yes

Self-Registering: No

File Name	File Version	Date Created	File Size	File Description
hpjcmn2.dll	2.00.1237	06\20\2000 02:13 PM	135,168	Federation Hpcommon Library
hpjpro1.dll	1.2.1	11\24\1999 01:37 PM	102,400	HP Federation PortResolver DLL
hpjpts2.dll	2.00.1237	06\20\2000 02:18 PM	106,496	Federation PTS Library
hpjsnm2.dll	2.00.1237	06\20\2000 02:19 PM	69,632	Federation SNMP Library
hprrm.dll	2.0.1237.0	08\27\1999 01:07 PM	385,072	Application Dynamic-Link Library
pfmmake.dll	1.0.2.22	08\18\2000 02:26 PM	254,464	HP Resource Manager - PFM DLL

12.0 Printer Status and Alerts

Title: Printer Status and Alerts (invisible component)
Description: Registry of HP drivers that are supported by PSA, and PSA's configuration.
Type: Other Support SW or Online Document(No Files)

12.1 All Windows 32 bit

Component: SAS
Component Version: 2.5.0.0
Supported OS: All supported by Printing System CD
Supported Languages: All supported by Printing System CD
Supported Connections: Parallel (LPT), Network (Server), and Network (Client)

12.1.1 Component Installation Availability

Check for NT Terminal Services. If running do not allow component to be selectable for installation. Also, check for Direct connect BIDI registry flag. If true, turn on Direct connect BIDI installation (if direct connect BIDI is supported).

12.1.2 INI File Entries

Key: LegacyPrinterDSRates
Name: MoreOften
Action: Add - Creates a new value. If the value already exists, this action is ignored.
INI File: (9x/ME) <Drive>:\Windows\hpstatus.ini
(NT4/2000/XP) <Drive>:\WinNT\hpstatus.ini
Uninstall: Yes

```
Key:                LegacyPrinterDSRates
Name:               MoreOftenLessOne
Action:             Add - Creates a new value.  If the value already exists, this action is ignored.
INI File:           (9x/ME)        <Drive>:\Windows\hpstatus.ini
                    (NT4/2000/XP)  <Drive>:\WinNT\hpstatus.ini
Uninstall:          Yes

Key:                LegacyPrinterDSRates
Name:               Middle
Action:             Add - Creates a new value.  If the value already exists, this action is ignored.
INI File:           (9x/ME)        <Drive>:\Windows\hpstatus.ini
                    (NT4/2000/XP)  <Drive>:\WinNT\hpstatus.ini
Uninstall:          Yes

Key:                LegacyPrinterDSRates
Name:               LessOftenPlusOne
Action:             Add - Creates a new value.  If the value already exists, this action is ignored.
INI File:           (9x/ME)        <Drive>:\Windows\hpstatus.ini
                    (NT4/2000/XP)  <Drive>:\WinNT\hpstatus.ini
Uninstall:          Yes

Key:                LegacyPrinterDSRates
Name:               LessOften
Action:             Add - Creates a new value.  If the value already exists, this action is ignored.
INI File:           (9x/ME)        <Drive>:\Windows\hpstatus.ini
                    (NT4/2000/XP)  <Drive>:\WinNT\hpstatus.ini
Uninstall:          Yes

Key:                WindowsSpoolerRates
Name:               MoreOften
Action:             Add - Creates a new value.  If the value already exists, this action is ignored.
INI File:           (9x/ME)        <Drive>:\Windows\hpstatus.ini
                    (NT4/2000/XP)  <Drive>:\WinNT\hpstatus.ini
Uninstall:          Yes

Key:                WindowsSpoolerRates
Name:               MoreOftenLessOne
Action:             Add - Creates a new value.  If the value already exists, this action is ignored.
INI File:           (9x/ME)        <Drive>:\Windows\hpstatus.ini
                    (NT4/2000/XP)  <Drive>:\WinNT\hpstatus.ini
Uninstall:          Yes

Key:                WindowsSpoolerRates
Name:               Middle
Action:             Add - Creates a new value.  If the value already exists, this action is ignored.
INI File:           (9x/ME)        <Drive>:\Windows\hpstatus.ini
                    (NT4/2000/XP)  <Drive>:\WinNT\hpstatus.ini
Uninstall:          Yes
```

```
Key:                WindowsSpoolerRates
Name:               LessOftenPlusOne
Action:             Add - Creates a new value.  If the value already exists, this action is ignored.
INI File:           (9x/ME)        <Drive>:\Windows\hpstatus.ini
                    (NT4/2000/XP)  <Drive>:\WinNT\hpstatus.ini
Uninstall:          Yes

Key:                WindowsSpoolerRates
Name:               LessOften
Action:             Add - Creates a new value.  If the value already exists, this action is ignored.
INI File:           (9x/ME)        <Drive>:\Windows\hpstatus.ini
                    (NT4/2000/XP)  <Drive>:\WinNT\hpstatus.ini
Uninstall:          Yes

Key:                images
Name:               redbar
Action:             Add - Creates a new value.  If the value already exists, this action is ignored.
INI File:           (9x/ME)        <Drive>:\Windows\hpstatus.ini
                    (NT4/2000/XP)  <Drive>:\WinNT\hpstatus.ini
Value:              (9x/ME)        <Drive>:\Program Files\Hewlett-Packard\Status\redbar.gif
                    (NT4/2000/XP)  <Drive>:\Profile Files\Hewlett-Packard\Status\redbar.gif
Uninstall:          Yes

Key:                images
Name:               redblink
Action:             Add - Creates a new value.  If the value already exists, this action is ignored.
INI File:           (9x/ME)        <Drive>:\Windows\hpstatus.ini
                    (NT4/2000/XP)  <Drive>:\WinNT\hpstatus.ini
Value:              (9x/ME)        <Drive>:\Program Files\Hewlett-Packard\Status\redblink.gif
                    (NT4/2000/XP)  <Drive>:\Profile Files\Hewlett-Packard\Status\redblink.gif
Uninstall:          Yes

Key:                images
Name:               greenbar
Action:             Add - Creates a new value.  If the value already exists, this action is ignored.
INI File:           (9x/ME)        <Drive>:\Windows\hpstatus.ini
                    (NT4/2000/XP)  <Drive>:\WinNT\hpstatus.ini
Value:              (9x/ME)        <Drive>:\Program Files\Hewlett-Packard\Status\greenbar.gif
                    (NT4/2000/XP)  <Drive>:\Profile Files\Hewlett-Packard\Status\greenbar.gif
Uninstall:          Yes

Key:                images
Name:               blackbar
Action:             Add - Creates a new value.  If the value already exists, this action is ignored.
INI File:           (9x/ME)        <Drive>:\Windows\hpstatus.ini
                    (NT4/2000/XP)  <Drive>:\WinNT\hpstatus.ini
Value:              (9x/ME)        <Drive>:\Program Files\Hewlett-Packard\Status\blackbar.gif
```

```
                                        (NT4/2000/XP)  <Drive>:\Profile Files\Hewlett-Packard\Status\blackbar.gif
                    Uninstall:          Yes

                    Key:                images
                    Name:               working
                    Action:             Add - Creates a new value.  If the value already exists, this action is ignored.
                    INI File:           (9x/ME)        <Drive>:\Windows\hpstatus.ini
                                        (NT4/2000/XP)  <Drive>:\WinNT\hpstatus.ini
                    Value:              (9x/ME)        <Drive>:\Program Files\Hewlett-Packard\Status\working.gif
                                        (NT4/2000/XP)  <Drive>:\Profile Files\Hewlett-Packard\Status\working.gif
                    Uninstall:          Yes

                    Key:                images
                    Name:               brokenconnection
                    Action:             Add - Creates a new value.  If the value already exists, this action is ignored.
                    INI File:           (9x/ME)        <Drive>:\Windows\hpstatus.ini
                                        (NT4/2000/XP)  <Drive>:\WinNT\hpstatus.ini
                    Value:              (9x/ME)        <Drive>:\Program Files\Hewlett-
Packard\Status\brokenconnection.gif
                                        (NT4/2000/XP)  <Drive>:\Profile Files\Hewlett-
Packard\Status\brokenconnection.gif
                    Uninstall:          Yes

                    Key:                images
                    Name:               LevelUnknown
                    Action:             Add - Creates a new value.  If the value already exists, this action is ignored.
                    INI File:           (9x/ME)        <Drive>:\Windows\hpstatus.ini
                                        (NT4/2000/XP)  <Drive>:\WinNT\hpstatus.ini
                    Value:              (9x/ME)        <Drive>:\Program Files\Hewlett-Packard\Status\level-unknown.gif
                                        (NT4/2000/XP)  <Drive>:\Profile Files\Hewlett-Packard\Status\level-unknown.gif
                    Uninstall:          Yes

                    Key:                images
                    Name:               LevelOk
                    Action:             Add - Creates a new value.  If the value already exists, this action is ignored.
                    INI File:           (9x/ME)        <Drive>:\Windows\hpstatus.ini
                                        (NT4/2000/XP)  <Drive>:\WinNT\hpstatus.ini
                    Value:              (9x/ME)        <Drive>:\Program Files\Hewlett-Packard\Status\level-ok.gif
                                        (NT4/2000/XP)  <Drive>:\Profile Files\Hewlett-Packard\Status\level-ok.gif
                    Uninstall:          Yes

                    Key:                images
                    Name:               LevelEmpty
                    Action:             Add - Creates a new value.  If the value already exists, this action is ignored.
                    INI File:           (9x/ME)        <Drive>:\Windows\hpstatus.ini
                                        (NT4/2000/XP)  <Drive>:\WinNT\hpstatus.ini
                    Value:              (9x/ME)        <Drive>:\Program Files\Hewlett-Packard\Status\level-Empty.gif
                                        (NT4/2000/XP)  <Drive>:\Profile Files\Hewlett-Packard\Status\level-Empty.gif
```

```
Uninstall:          Yes

Key:                images
Name:               Level00N
Action:             Add - Creates a new value.  If the value already exists, this action is ignored.
INI File:           (9x/ME)        <Drive>:\Windows\hpstatus.ini
                    (NT4/2000/XP)  <Drive>:\WinNT\hpstatus.ini
Value:              (9x/ME)        <Drive>:\Program Files\Hewlett-Packard\Status\level-00N.gif
                    (NT4/2000/XP)  <Drive>:\Profile Files\Hewlett-Packard\Status\level-00N.gif
Uninstall:          Yes

Key:                images
Name:               Level12
Action:             Add - Creates a new value.  If the value already exists, this action is ignored.
INI File:           (9x/ME)        <Drive>:\Windows\hpstatus.ini
                    (NT4/2000/XP)  <Drive>:\WinNT\hpstatus.ini
Value:              (9x/ME)        <Drive>:\Program Files\Hewlett-Packard\Status\level-012.gif
                    (NT4/2000/XP)  <Drive>:\Profile Files\Hewlett-Packard\Status\level-012.gif
Uninstall:          Yes

Key:                images
Name:               Level25
Action:             Add - Creates a new value.  If the value already exists, this action is ignored.
INI File:           (9x/ME)        <Drive>:\Windows\hpstatus.ini
                    (NT4/2000/XP)  <Drive>:\WinNT\hpstatus.ini
Value:              (9x/ME)        <Drive>:\Program Files\Hewlett-Packard\Status\level-025.gif
                    (NT4/2000/XP)  <Drive>:\Profile Files\Hewlett-Packard\Status\level-025.gif
Uninstall:          Yes

Key:                images
Name:               Level50
Action:             Add - Creates a new value.  If the value already exists, this action is ignored.
INI File:           (9x/ME)        <Drive>:\Windows\hpstatus.ini
                    (NT4/2000/XP)  <Drive>:\WinNT\hpstatus.ini
Value:              (9x/ME)        <Drive>:\Program Files\Hewlett-Packard\Status\level-050.gif
                    (NT4/2000/XP)  <Drive>:\Profile Files\Hewlett-Packard\Status\level-050.gif
Uninstall:          Yes

Key:                images
Name:               Level75
Action:             Add - Creates a new value.  If the value already exists, this action is ignored.
INI File:           (9x/ME)        <Drive>:\Windows\hpstatus.ini
                    (NT4/2000/XP)  <Drive>:\WinNT\hpstatus.ini
Value:              (9x/ME)        <Drive>:\Program Files\Hewlett-Packard\Status\level-075.gif
                    (NT4/2000/XP)  <Drive>:\Profile Files\Hewlett-Packard\Status\level-075.gif
Uninstall:          Yes

Key:                images
```

```
Name:               Level100
Action:             Add - Creates a new value.  If the value already exists, this action is ignored.
INI File:           (9x/ME)        <Drive>:\Windows\hpstatus.ini
                    (NT4/2000/XP)  <Drive>:\WinNT\hpstatus.ini
Value:              (9x/ME)        <Drive>:\Program Files\Hewlett-Packard\Status\level-100.gif
                    (NT4/2000/XP)  <Drive>:\Profile Files\Hewlett-Packard\Status\level-100.gif
Uninstall:          Yes

Key:                images
Name:               Ok
Action:             Add - Creates a new value.  If the value already exists, this action is ignored.
INI File:           (9x/ME)        <Drive>:\Windows\hpstatus.ini
                    (NT4/2000/XP)  <Drive>:\WinNT\hpstatus.ini
Value:              (9x/ME)        <Drive>:\Program Files\Hewlett-Packard\Status\ok.gif
                    (NT4/2000/XP)  <Drive>:\Profile Files\Hewlett-Packard\Status\ok.gif
Uninstall:          Yes

Key:                images
Name:               Unknown
Action:             Add - Creates a new value.  If the value already exists, this action is ignored.
INI File:           (9x/ME)        <Drive>:\Windows\hpstatus.ini
                    (NT4/2000/XP)  <Drive>:\WinNT\hpstatus.ini
Value:              (9x/ME)        <Drive>:\Program Files\Hewlett-Packard\Status\unknown.gif
                    (NT4/2000/XP)  <Drive>:\Profile Files\Hewlett-Packard\Status\unknown.gif
Uninstall:          Yes

Key:                images
Name:               greenblink
Action:             Add - Creates a new value.  If the value already exists, this action is ignored.
INI File:           (9x/ME)        <Drive>:\Windows\hpstatus.ini
                    (NT4/2000/XP)  <Drive>:\WinNT\hpstatus.ini
Value:              (9x/ME)        <Drive>:\Program Files\Hewlett-Packard\Status\greenblink.gif
                    (NT4/2000/XP)  <Drive>:\Profile Files\Hewlett-Packard\Status\greenblink.gif
Uninstall:          Yes

Key:                images
Name:               unknowndevice
Action:             Add - Creates a new value.  If the value already exists, this action is ignored.
INI File:           (9x/ME)        <Drive>:\Windows\hpstatus.ini
                    (NT4/2000/XP)  <Drive>:\WinNT\hpstatus.ini
Value:              (9x/ME)        <Drive>:\Program Files\Hewlett-Packard\Status\unknowdevice.gif
                    (NT4/2000/XP)  <Drive>:\Profile Files\Hewlett-Packard\Status\unknowdevice.gif
Uninstall:          Yes

Key:                HP C LaserJet 4500-PS
Name:               supported
Action:             Add - Creates a new value.  If the value already exists, this action is ignored.
INI File:           (9x/ME)        <Drive>:\Windows\hpsasdrv.mtx
```

```
                    (NT4/2000/XP)  <Drive>:\WinNT\hpsasdrv.mtx
Uninstall:          No

Key:                HP Color LaserJet 4500 PCL 6
Name:               supported
Action:             Add - Creates a new value.  If the value already exists, this action is ignored.
INI File:           (9x/ME)        <Drive>:\Windows\hpsasdrv.mtx
                    (NT4/2000/XP)  <Drive>:\WinNT\hpsasdrv.mtx
Uninstall:          No

Key:                HP Color LaserJet 4500 PCL 5c
Name:               supported
Action:             Add - Creates a new value.  If the value already exists, this action is ignored.
INI File:           (9x/ME)        <Drive>:\Windows\hpsasdrv.mtx
                    (NT4/2000/XP)  <Drive>:\WinNT\hpsasdrv.mtx
Uninstall:          No

Key:                HP Color LaserJet 4500
Name:               supported
Action:             Add - Creates a new value.  If the value already exists, this action is ignored.
INI File:           (9x/ME)        <Drive>:\Windows\hpsasdrv.mtx
                    (NT4/2000/XP)  <Drive>:\WinNT\hpsasdrv.mtx
Uninstall:          No

Key:                HP Color LaserJet 8550 PCL 5C
Name:               supported
Action:             Add - Creates a new value.  If the value already exists, this action is ignored.
INI File:           (9x/ME)        <Drive>:\Windows\hpsasdrv.mtx
                    (NT4/2000/XP)  <Drive>:\WinNT\hpsasdrv.mtx
Uninstall:          No

Key:                HP Color LaserJet 8550 PS
Name:               supported
Action:             Add - Creates a new value.  If the value already exists, this action is ignored.
INI File:           (9x/ME)        <Drive>:\Windows\hpsasdrv.mtx
                    (NT4/2000/XP)  <Drive>:\WinNT\hpsasdrv.mtx
Uninstall:          No

Key:                HP Color LaserJet 8500 PS
Name:               supported
Action:             Add - Creates a new value.  If the value already exists, this action is ignored.
INI File:           (9x/ME)        <Drive>:\Windows\hpsasdrv.mtx
                    (NT4/2000/XP)  <Drive>:\WinNT\hpsasdrv.mtx
Uninstall:          No

Key:                HP CLJ 8500 - PS
Name:               supported
Action:             Add - Creates a new value.  If the value already exists, this action is ignored.
```

```
INI File:           (9x/ME)        <Drive>:\Windows\hpsasdrv.mtx
                    (NT4/2000/XP)  <Drive>:\WinNT\hpsasdrv.mtx
Uninstall:          No

Key:                HP LaserJet 4000 Series PCL 6
Name:               supported
Action:             Add - Creates a new value.  If the value already exists, this action is ignored.
INI File:           (9x/ME)        <Drive>:\Windows\hpsasdrv.mtx
                    (NT4/2000/XP)  <Drive>:\WinNT\hpsasdrv.mtx
Uninstall:          No

Key:                HP LaserJet 4000 Series PCL 5e
Name:               supported
Action:             Add - Creates a new value.  If the value already exists, this action is ignored.
INI File:           (9x/ME)        <Drive>:\Windows\hpsasdrv.mtx
                    (NT4/2000/XP)  <Drive>:\WinNT\hpsasdrv.mtx
Uninstall:          No

Key:                HP LaserJet 4000 Series PCL
Name:               supported
Action:             Add - Creates a new value.  If the value already exists, this action is ignored.
INI File:           (9x/ME)        <Drive>:\Windows\hpsasdrv.mtx
                    (NT4/2000/XP)  <Drive>:\WinNT\hpsasdrv.mtx
Uninstall:          No

Key:                HP LaserJet 4000 Series PS
Name:               supported
Action:             Add - Creates a new value.  If the value already exists, this action is ignored.
INI File:           (9x/ME)        <Drive>:\Windows\hpsasdrv.mtx
                    (NT4/2000/XP)  <Drive>:\WinNT\hpsasdrv.mtx
Uninstall:          No

Key:                HP LaserJet 4000 PCL 6
Name:               supported
Action:             Add - Creates a new value.  If the value already exists, this action is ignored.
INI File:           (9x/ME)        <Drive>:\Windows\hpsasdrv.mtx
                    (NT4/2000/XP)  <Drive>:\WinNT\hpsasdrv.mtx
Uninstall:          No

Key:                HP LaserJet 4000 PCL 5e
Name:               supported
Action:             Add - Creates a new value.  If the value already exists, this action is ignored.
INI File:           (9x/ME)        <Drive>:\Windows\hpsasdrv.mtx
                    (NT4/2000/XP)  <Drive>:\WinNT\hpsasdrv.mtx
Uninstall:          No

Key:                HP LaserJet 4000 PS
Name:               supported
```

```
Action:             Add - Creates a new value.  If the value already exists, this action is ignored.
INI File:           (9x/ME)        <Drive>:\Windows\hpsasdrv.mtx
                    (NT4/2000/XP)  <Drive>:\WinNT\hpsasdrv.mtx
Uninstall:          No

Key:                HP LaserJet 5000 Series PCL 6
Name:               supported
Action:             Add - Creates a new value.  If the value already exists, this action is ignored.
INI File:           (9x/ME)        <Drive>:\Windows\hpsasdrv.mtx
                    (NT4/2000/XP)  <Drive>:\WinNT\hpsasdrv.mtx
Uninstall:          No

Key:                HP LaserJet 5000 Series PCL 5e
Name:               supported
Action:             Add - Creates a new value.  If the value already exists, this action is ignored.
INI File:           (9x/ME)        <Drive>:\Windows\hpsasdrv.mtx
                    (NT4/2000/XP)  <Drive>:\WinNT\hpsasdrv.mtx
Uninstall:          No

Key:                HP LaserJet 5000 Series PCL
Name:               supported
Action:             Add - Creates a new value.  If the value already exists, this action is ignored.
INI File:           (9x/ME)        <Drive>:\Windows\hpsasdrv.mtx
                    (NT4/2000/XP)  <Drive>:\WinNT\hpsasdrv.mtx
Uninstall:          No

Key:                HP LaserJet 5000 Series PS
Name:               supported
Action:             Add - Creates a new value.  If the value already exists, this action is ignored.
INI File:           (9x/ME)        <Drive>:\Windows\hpsasdrv.mtx
                    (NT4/2000/XP)  <Drive>:\WinNT\hpsasdrv.mtx
Uninstall:          No

Key:                HP LaserJet 5000 PCL 6
Name:               supported
Action:             Add - Creates a new value.  If the value already exists, this action is ignored.
INI File:           (9x/ME)        <Drive>:\Windows\hpsasdrv.mtx
                    (NT4/2000/XP)  <Drive>:\WinNT\hpsasdrv.mtx
Uninstall:          No

Key:                HP LaserJet 5000 PCL 5e
Name:               supported
Action:             Add - Creates a new value.  If the value already exists, this action is ignored.
INI File:           (9x/ME)        <Drive>:\Windows\hpsasdrv.mtx
                    (NT4/2000/XP)  <Drive>:\WinNT\hpsasdrv.mtx
Uninstall:          No

Key:                HP LaserJet 5000 PS
```

```
Name:               supported
Action:             Add - Creates a new value.  If the value already exists, this action is ignored.
INI File:           (9x/ME)        <Drive>:\Windows\hpsasdrv.mtx
                    (NT4/2000/XP)  <Drive>:\WinNT\hpsasdrv.mtx
Uninstall:          No

Key:                HP LaserJet 8000 Series PCL 6
Name:               supported
Action:             Add - Creates a new value.  If the value already exists, this action is ignored.
INI File:           (9x/ME)        <Drive>:\Windows\hpsasdrv.mtx
                    (NT4/2000/XP)  <Drive>:\WinNT\hpsasdrv.mtx
Uninstall:          No

Key:                HP LaserJet 8000 Series PCL 5e
Name:               supported
Action:             Add - Creates a new value.  If the value already exists, this action is ignored.
INI File:           (9x/ME)        <Drive>:\Windows\hpsasdrv.mtx
                    (NT4/2000/XP)  <Drive>:\WinNT\hpsasdrv.mtx
Uninstall:          No

Key:                HP LaserJet 8000 Series PCL
Name:               supported
Action:             Add - Creates a new value.  If the value already exists, this action is ignored.
INI File:           (9x/ME)        <Drive>:\Windows\hpsasdrv.mtx
                    (NT4/2000/XP)  <Drive>:\WinNT\hpsasdrv.mtx
Uninstall:          No

Key:                HP LaserJet 8000 Series PS
Name:               supported
Action:             Add - Creates a new value.  If the value already exists, this action is ignored.
INI File:           (9x/ME)        <Drive>:\Windows\hpsasdrv.mtx
                    (NT4/2000/XP)  <Drive>:\WinNT\hpsasdrv.mtx
Uninstall:          No

Key:                HP LaserJet 8000 PCL 6
Name:               supported
Action:             Add - Creates a new value.  If the value already exists, this action is ignored.
INI File:           (9x/ME)        <Drive>:\Windows\hpsasdrv.mtx
                    (NT4/2000/XP)  <Drive>:\WinNT\hpsasdrv.mtx
Uninstall:          No

Key:                HP LaserJet 8000 PCL 5e
Name:               supported
Action:             Add - Creates a new value.  If the value already exists, this action is ignored.
INI File:           (9x/ME)        <Drive>:\Windows\hpsasdrv.mtx
                    (NT4/2000/XP)  <Drive>:\WinNT\hpsasdrv.mtx
Uninstall:          No
```

```
Key:                HP LaserJet 8000 PS
Name:               supported
Action:             Add - Creates a new value.  If the value already exists, this action is ignored.
INI File:           (9x/ME)        <Drive>:\Windows\hpsasdrv.mtx
                    (NT4/2000/XP)  <Drive>:\WinNT\hpsasdrv.mtx
Uninstall:          No

Key:                HP LaserJet 8100 Series PCL 6
Name:               supported
Action:             Add - Creates a new value.  If the value already exists, this action is ignored.
INI File:           (9x/ME)        <Drive>:\Windows\hpsasdrv.mtx
                    (NT4/2000/XP)  <Drive>:\WinNT\hpsasdrv.mtx
Uninstall:          No

Key:                HP LaserJet 8100 Series PCL 5e
Name:               supported
Action:             Add - Creates a new value.  If the value already exists, this action is ignored.
INI File:           (9x/ME)        <Drive>:\Windows\hpsasdrv.mtx
                    (NT4/2000/XP)  <Drive>:\WinNT\hpsasdrv.mtx
Uninstall:          No

Key:                HP LaserJet 8100 Series PCL
Name:               supported
Action:             Add - Creates a new value.  If the value already exists, this action is ignored.
INI File:           (9x/ME)        <Drive>:\Windows\hpsasdrv.mtx
                    (NT4/2000/XP)  <Drive>:\WinNT\hpsasdrv.mtx
Uninstall:          No

Key:                HP LaserJet 8100 Series PS
Name:               supported
Action:             Add - Creates a new value.  If the value already exists, this action is ignored.
INI File:           (9x/ME)        <Drive>:\Windows\hpsasdrv.mtx
                    (NT4/2000/XP)  <Drive>:\WinNT\hpsasdrv.mtx
Uninstall:          No

Key:                HP LaserJet 8100 PCL 6
Name:               supported
Action:             Add - Creates a new value.  If the value already exists, this action is ignored.
INI File:           (9x/ME)        <Drive>:\Windows\hpsasdrv.mtx
                    (NT4/2000/XP)  <Drive>:\WinNT\hpsasdrv.mtx
Uninstall:          No

Key:                HP LaserJet 8100 PCL 5e
Name:               supported
Action:             Add - Creates a new value.  If the value already exists, this action is ignored.
INI File:           (9x/ME)        <Drive>:\Windows\hpsasdrv.mtx
                    (NT4/2000/XP)  <Drive>:\WinNT\hpsasdrv.mtx
Uninstall:          No
```

```
Key:                HP LaserJet 8100 PS
Name:               supported
Action:             Add - Creates a new value.  If the value already exists, this action is ignored.
INI File:           (9x/ME)        <Drive>:\Windows\hpsasdrv.mtx
                    (NT4/2000/XP)  <Drive>:\WinNT\hpsasdrv.mtx
Uninstall:          No

Key:                HP LaserJet 8150 Series PCL 6
Name:               supported
Action:             Add - Creates a new value.  If the value already exists, this action is ignored.
INI File:           (9x/ME)        <Drive>:\Windows\hpsasdrv.mtx
                    (NT4/2000/XP)  <Drive>:\WinNT\hpsasdrv.mtx
Uninstall:          No

Key:                HP LaserJet 8150 Series PCL 5e
Name:               supported
Action:             Add - Creates a new value.  If the value already exists, this action is ignored.
INI File:           (9x/ME)        <Drive>:\Windows\hpsasdrv.mtx
                    (NT4/2000/XP)  <Drive>:\WinNT\hpsasdrv.mtx
Uninstall:          No

Key:                HP LaserJet 8150 Series PS
Name:               supported
Action:             Add - Creates a new value.  If the value already exists, this action is ignored.
INI File:           (9x/ME)        <Drive>:\Windows\hpsasdrv.mtx
                    (NT4/2000/XP)  <Drive>:\WinNT\hpsasdrv.mtx
Uninstall:          No

Key:                HP LaserJet 8150 PCL 6
Name:               supported
Action:             Add - Creates a new value.  If the value already exists, this action is ignored.
INI File:           (9x/ME)        <Drive>:\Windows\hpsasdrv.mtx
                    (NT4/2000/XP)  <Drive>:\WinNT\hpsasdrv.mtx
Uninstall:          No

Key:                HP LaserJet 8150 PCL 5e
Name:               supported
Action:             Add - Creates a new value.  If the value already exists, this action is ignored.
INI File:           (9x/ME)        <Drive>:\Windows\hpsasdrv.mtx
                    (NT4/2000/XP)  <Drive>:\WinNT\hpsasdrv.mtx
Uninstall:          No

Key:                HP LaserJet 8150 PS
Name:               supported
Action:             Add - Creates a new value.  If the value already exists, this action is ignored.
INI File:           (9x/ME)        <Drive>:\Windows\hpsasdrv.mtx
                    (NT4/2000/XP)  <Drive>:\WinNT\hpsasdrv.mtx
```

```
Uninstall:          No

Key:                HP LaserJet 4100 Series PCL 6
Name:               supported
Action:             Add - Creates a new value.  If the value already exists, this action is ignored.
INI File:           (9x/ME)        <Drive>:\Windows\hpsasdrv.mtx
                    (NT4/2000/XP)  <Drive>:\WinNT\hpsasdrv.mtx
Uninstall:          No

Key:                HP LaserJet 4100 Series PCL 5e
Name:               supported
Action:             Add - Creates a new value.  If the value already exists, this action is ignored.
INI File:           (9x/ME)        <Drive>:\Windows\hpsasdrv.mtx
                    (NT4/2000/XP)  <Drive>:\WinNT\hpsasdrv.mtx
Uninstall:          No

Key:                HP LaserJet 4100 Series PS
Name:               supported
Action:             Add - Creates a new value.  If the value already exists, this action is ignored.
INI File:           (9x/ME)        <Drive>:\Windows\hpsasdrv.mtx
                    (NT4/2000/XP)  <Drive>:\WinNT\hpsasdrv.mtx
Uninstall:          No

Key:                HP LaserJet 4100 PCL 6
Name:               supported
Action:             Add - Creates a new value.  If the value already exists, this action is ignored.
INI File:           (9x/ME)        <Drive>:\Windows\hpsasdrv.mtx
                    (NT4/2000/XP)  <Drive>:\WinNT\hpsasdrv.mtx
Uninstall:          No

Key:                HP LaserJet 4100 PCL 5e
Name:               supported
Action:             Add - Creates a new value.  If the value already exists, this action is ignored.
INI File:           (9x/ME)        <Drive>:\Windows\hpsasdrv.mtx
                    (NT4/2000/XP)  <Drive>:\WinNT\hpsasdrv.mtx
Uninstall:          No

Key:                HP LaserJet 4100 PS
Name:               supported
Action:             Add - Creates a new value.  If the value already exists, this action is ignored.
INI File:           (9x/ME)        <Drive>:\Windows\hpsasdrv.mtx
                    (NT4/2000/XP)  <Drive>:\WinNT\hpsasdrv.mtx
Uninstall:          No

Key:                HP Mopier 240 PCL 6
Name:               supported
Action:             Add - Creates a new value.  If the value already exists, this action is ignored.
INI File:           (9x/ME)        <Drive>:\Windows\hpsasdrv.mtx
```

```
                    (NT4/2000/XP)  <Drive>:\WinNT\hpsasdrv.mtx
Uninstall:          No

Key:                HP Mopier 240 PCL
Name:               supported
Action:             Add - Creates a new value.  If the value already exists, this action is ignored.
INI File:           (9x/ME)        <Drive>:\Windows\hpsasdrv.mtx
                    (NT4/2000/XP)  <Drive>:\WinNT\hpsasdrv.mtx
Uninstall:          No

Key:                HP Mopier 240 PS
Name:               supported
Action:             Add - Creates a new value.  If the value already exists, this action is ignored.
INI File:           (9x/ME)        <Drive>:\Windows\hpsasdrv.mtx
                    (NT4/2000/XP)  <Drive>:\WinNT\hpsasdrv.mtx
Uninstall:          No

Key:                HP Mopier 320 PCL 6
Name:               supported
Action:             Add - Creates a new value.  If the value already exists, this action is ignored.
INI File:           (9x/ME)        <Drive>:\Windows\hpsasdrv.mtx
                    (NT4/2000/XP)  <Drive>:\WinNT\hpsasdrv.mtx
Uninstall:          No

Key:                HP Mopier 320 PCL
Name:               supported
Action:             Add - Creates a new value.  If the value already exists, this action is ignored.
INI File:           (9x/ME)        <Drive>:\Windows\hpsasdrv.mtx
                    (NT4/2000/XP)  <Drive>:\WinNT\hpsasdrv.mtx
Uninstall:          No

Key:                HP Mopier 320 PS
Name:               supported
Action:             Add - Creates a new value.  If the value already exists, this action is ignored.
INI File:           (9x/ME)        <Drive>:\Windows\hpsasdrv.mtx
                    (NT4/2000/XP)  <Drive>:\WinNT\hpsasdrv.mtx
Uninstall:          No

Key:                HP CLJ 8500 - PCL,NotSupported
Name:               HPCPCLA.DRV,1.0.0090
Action:             Add - Creates a new value.  If the value already exists, this action is ignored.
INI File:           (9x/ME)        <Drive>:\Windows\hpsasdrv.mtx
                    (NT4/2000/XP)  <Drive>:\WinNT\hpsasdrv.mtx
Uninstall:          No

Key:                HP CLJ 8500 - PCL,NotSupported
Name:               HPCPCLA.DLL,1.0.0090
Action:             Add - Creates a new value.  If the value already exists, this action is ignored.
```

```
INI File:           (9x/ME)        <Drive>:\Windows\hpsasdrv.mtx
                    (NT4/2000/XP)  <Drive>:\WinNT\hpsasdrv.mtx
Uninstall:          No

Key:                HP LaserJet 4000 Series PCL 5e,NotSupported
Name:               HPRASDD.DLL,4.00
Action:             Add - Creates a new value.  If the value already exists, this action is ignored.
INI File:           (9x/ME)        <Drive>:\Windows\hpsasdrv.mtx
                    (NT4/2000/XP)  <Drive>:\WinNT\hpsasdrv.mtx
Uninstall:          No

Key:                HP LaserJet 4000 PCL 5e,NotSupported
Name:               HPRASDD.DLL,4.00
Action:             Add - Creates a new value.  If the value already exists, this action is ignored.
INI File:           (9x/ME)        <Drive>:\Windows\hpsasdrv.mtx
                    (NT4/2000/XP)  <Drive>:\WinNT\hpsasdrv.mtx
Uninstall:          No

Key:                HP LaserJet 4050 Series PCL 6
Name:               supported
Action:             Add - Creates a new value.  If the value already exists, this action is ignored.
INI File:           (9x/ME)        <Drive>:\Windows\hpsasdrv.mtx
                    (NT4/2000/XP)  <Drive>:\WinNT\hpsasdrv.mtx
Uninstall:          No

Key:                HP LaserJet 4050 Series PCL 5e
Name:               supported
Action:             Add - Creates a new value.  If the value already exists, this action is ignored.
INI File:           (9x/ME)        <Drive>:\Windows\hpsasdrv.mtx
                    (NT4/2000/XP)  <Drive>:\WinNT\hpsasdrv.mtx
Uninstall:          No

Key:                HP LaserJet 4050 Series PCL
Name:               supported
Action:             Add - Creates a new value.  If the value already exists, this action is ignored.
INI File:           (9x/ME)        <Drive>:\Windows\hpsasdrv.mtx
                    (NT4/2000/XP)  <Drive>:\WinNT\hpsasdrv.mtx
Uninstall:          No

Key:                HP LaserJet 4050 Series PS
Name:               supported
Action:             Add - Creates a new value.  If the value already exists, this action is ignored.
INI File:           (9x/ME)        <Drive>:\Windows\hpsasdrv.mtx
                    (NT4/2000/XP)  <Drive>:\WinNT\hpsasdrv.mtx
Uninstall:          No

Key:                HP LaserJet 4050 PCL 6
Name:               supported
```

```
Action:             Add - Creates a new value.  If the value already exists, this action is ignored.
INI File:           (9x/ME)        <Drive>:\Windows\hpsasdrv.mtx
                    (NT4/2000/XP)  <Drive>:\WinNT\hpsasdrv.mtx
Uninstall:          No

Key:                HP LaserJet 4050 PCL 5e
Name:               supported
Action:             Add - Creates a new value.  If the value already exists, this action is ignored.
INI File:           (9x/ME)        <Drive>:\Windows\hpsasdrv.mtx
                    (NT4/2000/XP)  <Drive>:\WinNT\hpsasdrv.mtx
Uninstall:          No

Key:                HP LaserJet 4050 PS
Name:               supported
Action:             Add - Creates a new value.  If the value already exists, this action is ignored.
INI File:           (9x/ME)        <Drive>:\Windows\hpsasdrv.mtx
                    (NT4/2000/XP)  <Drive>:\WinNT\hpsasdrv.mtx
Uninstall:          No

Key:                HP Color LaserJet 4550 Series PCL 6
Name:               supported
Action:             Add - Creates a new value.  If the value already exists, this action is ignored.
INI File:           (9x/ME)        <Drive>:\Windows\hpsasdrv.mtx
                    (NT4/2000/XP)  <Drive>:\WinNT\hpsasdrv.mtx
Uninstall:          No

Key:                HP Color LaserJet 4550 Series PCL 5c
Name:               supported
Action:             Add - Creates a new value.  If the value already exists, this action is ignored.
INI File:           (9x/ME)        <Drive>:\Windows\hpsasdrv.mtx
                    (NT4/2000/XP)  <Drive>:\WinNT\hpsasdrv.mtx
Uninstall:          No

Key:                HP Color LaserJet 4550 Series PS
Name:               supported
Action:             Add - Creates a new value.  If the value already exists, this action is ignored.
INI File:           (9x/ME)        <Drive>:\Windows\hpsasdrv.mtx
                    (NT4/2000/XP)  <Drive>:\WinNT\hpsasdrv.mtx
Uninstall:          No

Key:                HP Color LaserJet 4550 PCL 6
Name:               supported
Action:             Add - Creates a new value.  If the value already exists, this action is ignored.
INI File:           (9x/ME)        <Drive>:\Windows\hpsasdrv.mtx
                    (NT4/2000/XP)  <Drive>:\WinNT\hpsasdrv.mtx
Uninstall:          No

Key:                HP Color LaserJet 4550 PCL 5c
```

```
Name:               supported
Action:             Add - Creates a new value.  If the value already exists, this action is ignored.
INI File:           (9x/ME)        <Drive>:\Windows\hpsasdrv.mtx
                    (NT4/2000/XP)  <Drive>:\WinNT\hpsasdrv.mtx
Uninstall:          No

Key:                HP Color LaserJet 4550 PS
Name:               supported
Action:             Add - Creates a new value.  If the value already exists, this action is ignored.
INI File:           (9x/ME)        <Drive>:\Windows\hpsasdrv.mtx
                    (NT4/2000/XP)  <Drive>:\WinNT\hpsasdrv.mtx
Uninstall:          No

Key:                HP C LaserJet 4500-HP
Name:               supported
Action:             Add - Creates a new value.  If the value already exists, this action is ignored.
INI File:           (9x/ME)        <Drive>:\Windows\hpsasdrv.mtx
                    (NT4/2000/XP)  <Drive>:\WinNT\hpsasdrv.mtx
Uninstall:          No

Key:                HP LaserJet 9000 Series PCL 6
Name:               supported
Action:             Add - Creates a new value.  If the value already exists, this action is ignored.
INI File:           (9x/ME)        <Drive>:\Windows\hpsasdrv.mtx
                    (NT4/2000/XP)  <Drive>:\WinNT\hpsasdrv.mtx
Uninstall:          No

Key:                HP LaserJet 9000 Series PCL 5e
Name:               supported
Action:             Add - Creates a new value.  If the value already exists, this action is ignored.
INI File:           (9x/ME)        <Drive>:\Windows\hpsasdrv.mtx
                    (NT4/2000/XP)  <Drive>:\WinNT\hpsasdrv.mtx
Uninstall:          No

Key:                HP LaserJet 9000 Series PS
Name:               supported
Action:             Add - Creates a new value.  If the value already exists, this action is ignored.
INI File:           (9x/ME)        <Drive>:\Windows\hpsasdrv.mtx
                    (NT4/2000/XP)  <Drive>:\WinNT\hpsasdrv.mtx
Uninstall:          No

Key:                HP LaserJet 9000 PCL 6
Name:               supported
Action:             Add - Creates a new value.  If the value already exists, this action is ignored.
INI File:           (9x/ME)        <Drive>:\Windows\hpsasdrv.mtx
                    (NT4/2000/XP)  <Drive>:\WinNT\hpsasdrv.mtx
Uninstall:          No
```

```
Key:                HP LaserJet 9000 PCL 5e
Name:               supported
Action:             Add - Creates a new value.  If the value already exists, this action is ignored.
INI File:           (9x/ME)        <Drive>:\Windows\hpsasdrv.mtx
                    (NT4/2000/XP)  <Drive>:\WinNT\hpsasdrv.mtx
Uninstall:          No

Key:                HP LaserJet 9000 PS
Name:               supported
Action:             Add - Creates a new value.  If the value already exists, this action is ignored.
INI File:           (9x/ME)        <Drive>:\Windows\hpsasdrv.mtx
                    (NT4/2000/XP)  <Drive>:\WinNT\hpsasdrv.mtx
Uninstall:          No

Key:                PrinterAlertRates
Name:               MoreOften
Action:             Add - Creates a new value.  If the value already exists, this action is ignored.
INI File:           (9x/ME)        <Drive>:\Windows\hpstatus.ini
                    (NT4/2000/XP)  <Drive>:\WinNT\hpstatus.ini
Uninstall:          Yes

Key:                PrinterAlertRates
Name:               MoreOftenLessOne
Action:             Add - Creates a new value.  If the value already exists, this action is ignored.
INI File:           (9x/ME)        <Drive>:\Windows\hpstatus.ini
                    (NT4/2000/XP)  <Drive>:\WinNT\hpstatus.ini
Uninstall:          Yes

Key:                PrinterAlertRates
Name:               Middle
Action:             Add - Creates a new value.  If the value already exists, this action is ignored.
INI File:           (9x/ME)        <Drive>:\Windows\hpstatus.ini
                    (NT4/2000/XP)  <Drive>:\WinNT\hpstatus.ini
Uninstall:          Yes

Key:                PrinterAlertRates
Name:               LessOftenPlusOne
Action:             Add - Creates a new value.  If the value already exists, this action is ignored.
INI File:           (9x/ME)        <Drive>:\Windows\hpstatus.ini
                    (NT4/2000/XP)  <Drive>:\WinNT\hpstatus.ini
Uninstall:          Yes

Key:                PrinterAlertRates
Name:               LessOften
Action:             Add - Creates a new value.  If the value already exists, this action is ignored.
INI File:           (9x/ME)        <Drive>:\Windows\hpstatus.ini
                    (NT4/2000/XP)  <Drive>:\WinNT\hpstatus.ini
Uninstall:          Yes
```

```
Key:                images
Name:               DCError
Action:             Add - Creates a new value.  If the value already exists, this action is ignored.
INI File:           (9x/ME)        <Drive>:\Windows\hpstatus.ini
                    (NT4/2000/XP)  <Drive>:\WinNT\hpstatus.ini
Value:              (9x/ME)        <Drive>:\Program Files\Hewlett-Packard\Status\directerror.gif
                    (NT4/2000/XP)  <Drive>:\Profile Files\Hewlett-Packard\Status\directerror.gif
Uninstall:          Yes

Key:                images
Name:               DCWarning
Action:             Add - Creates a new value.  If the value already exists, this action is ignored.
INI File:           (9x/ME)        <Drive>:\Windows\hpstatus.ini
                    (NT4/2000/XP)  <Drive>:\WinNT\hpstatus.ini
Value:              (9x/ME)        <Drive>:\Program Files\Hewlett-Packard\Status\directwarning.gif
                    (NT4/2000/XP)  <Drive>:\Profile Files\Hewlett-Packard\Status\directwarning.gif
Uninstall:          Yes

Key:                images
Name:               DCReady
Action:             Add - Creates a new value.  If the value already exists, this action is ignored.
INI File:           (9x/ME)        <Drive>:\Windows\hpstatus.ini
                    (NT4/2000/XP)  <Drive>:\WinNT\hpstatus.ini
Value:              (9x/ME)        <Drive>:\Program Files\Hewlett-Packard\Status\directnormal.gif
                    (NT4/2000/XP)  <Drive>:\Profile Files\Hewlett-Packard\Status\directnormal.gif
Uninstall:          Yes

Key:                ControlPanelOnly
Name:               HP LaserJet 1200
Action:             Add - Creates a new value.  If the value already exists, this action is ignored.
INI File:           (9x/ME)        <Drive>:\Windows\hpstatus.ini
                    (NT4/2000/XP)  <Drive>:\WinNT\hpstatus.ini
Uninstall:          Yes

Key:                NoTonerOrLED
Name:               HP LaserJet 1200
Action:             Add - Creates a new value.  If the value already exists, this action is ignored.
INI File:           (9x/ME)        <Drive>:\Windows\hpstatus.ini
                    (NT4/2000/XP)  <Drive>:\WinNT\hpstatus.ini
Uninstall:          Yes

Key:                NoTonerOrLED
Name:               HP LaserJet 1220
Action:             Add - Creates a new value.  If the value already exists, this action is ignored.
INI File:           (9x/ME)        <Drive>:\Windows\hpstatus.ini
                    (NT4/2000/XP)  <Drive>:\WinNT\hpstatus.ini
Uninstall:          Yes
```

```
Key:                NoTonerOrLED
Name:               HP LaserJet 2200
Action:             Add - Creates a new value.  If the value already exists, this action is ignored.
INI File:           (9x/ME)        <Drive>:\Windows\hpstatus.ini
                    (NT4/2000/XP)  <Drive>:\WinNT\hpstatus.ini
Uninstall:          Yes

Key:                NoTonerOrLED
Name:               HP LaserJet 3200
Action:             Add - Creates a new value.  If the value already exists, this action is ignored.
INI File:           (9x/ME)        <Drive>:\Windows\hpstatus.ini
                    (NT4/2000/XP)  <Drive>:\WinNT\hpstatus.ini
Uninstall:          Yes

Key:                HP LaserJet 1200 Series PS
Name:               supported
Action:             Add - Creates a new value.  If the value already exists, this action is ignored.
INI File:           (9x/ME)        <Drive>:\Windows\hpsasdrv.mtx
                    (NT4/2000/XP)  <Drive>:\WinNT\hpsasdrv.mtx
Uninstall:          No

Key:                HP LaserJet 1200 Series PCL 6
Name:               supported
Action:             Add - Creates a new value.  If the value already exists, this action is ignored.
INI File:           (9x/ME)        <Drive>:\Windows\hpsasdrv.mtx
                    (NT4/2000/XP)  <Drive>:\WinNT\hpsasdrv.mtx
Uninstall:          No

Key:                HP LaserJet 1200 Series PCL 5e
Name:               supported
Action:             Add - Creates a new value.  If the value already exists, this action is ignored.
INI File:           (9x/ME)        <Drive>:\Windows\hpsasdrv.mtx
                    (NT4/2000/XP)  <Drive>:\WinNT\hpsasdrv.mtx
Uninstall:          No

Key:                HP LaserJet 1200/1200A Series PCL 6
Name:               supported
Action:             Add - Creates a new value.  If the value already exists, this action is ignored.
INI File:           (9x/ME)        <Drive>:\Windows\hpsasdrv.mtx
                    (NT4/2000/XP)  <Drive>:\WinNT\hpsasdrv.mtx
Uninstall:          No

Key:                HP LaserJet 1200/1200A Series PCL 5e
Name:               supported
Action:             Add - Creates a new value.  If the value already exists, this action is ignored.
INI File:           (9x/ME)        <Drive>:\Windows\hpsasdrv.mtx
                    (NT4/2000/XP)  <Drive>:\WinNT\hpsasdrv.mtx
```

```
Uninstall:          No

Key:                HP LaserJet 2200 Series PS
Name:               supported
Action:             Add - Creates a new value.  If the value already exists, this action is ignored.
INI File:           (9x/ME)        <Drive>:\Windows\hpsasdrv.mtx
                    (NT4/2000/XP)  <Drive>:\WinNT\hpsasdrv.mtx
Uninstall:          No

Key:                HP LaserJet 2200 Series PCL 6
Name:               supported
Action:             Add - Creates a new value.  If the value already exists, this action is ignored.
INI File:           (9x/ME)        <Drive>:\Windows\hpsasdrv.mtx
                    (NT4/2000/XP)  <Drive>:\WinNT\hpsasdrv.mtx
Uninstall:          No

Key:                HP LaserJet 2200 Series PCL 5e
Name:               supported
Action:             Add - Creates a new value.  If the value already exists, this action is ignored.
INI File:           (9x/ME)        <Drive>:\Windows\hpsasdrv.mtx
                    (NT4/2000/XP)  <Drive>:\WinNT\hpsasdrv.mtx
Uninstall:          No

Key:                HP LaserJet 3200 Series PS
Name:               supported
Action:             Add - Creates a new value.  If the value already exists, this action is ignored.
INI File:           (9x/ME)        <Drive>:\Windows\hpsasdrv.mtx
                    (NT4/2000/XP)  <Drive>:\WinNT\hpsasdrv.mtx
Uninstall:          No

Key:                HP LaserJet 3200 Series PCL 6
Name:               supported
Action:             Add - Creates a new value.  If the value already exists, this action is ignored.
INI File:           (9x/ME)        <Drive>:\Windows\hpsasdrv.mtx
                    (NT4/2000/XP)  <Drive>:\WinNT\hpsasdrv.mtx
Uninstall:          No

Key:                HP LaserJet 3200 Series PCL 5e
Name:               supported
Action:             Add - Creates a new value.  If the value already exists, this action is ignored.
INI File:           (9x/ME)        <Drive>:\Windows\hpsasdrv.mtx
                    (NT4/2000/XP)  <Drive>:\WinNT\hpsasdrv.mtx
Uninstall:          No

Key:                HP LaserJet 1220 Series PS
Name:               supported
Action:             Add - Creates a new value.  If the value already exists, this action is ignored.
INI File:           (9x/ME)        <Drive>:\Windows\hpsasdrv.mtx
```

```
                    (NT4/2000/XP)  <Drive>:\WinNT\hpsasdrv.mtx
Uninstall:          No

Key:                HP LaserJet 1220 Series PCL 6
Name:               supported
Action:             Add - Creates a new value.  If the value already exists, this action is ignored.
INI File:           (9x/ME)        <Drive>:\Windows\hpsasdrv.mtx
                    (NT4/2000/XP)  <Drive>:\WinNT\hpsasdrv.mtx
Uninstall:          No

Key:                HP LaserJet 1220 Series PCL 5e
Name:               supported
Action:             Add - Creates a new value.  If the value already exists, this action is ignored.
INI File:           (9x/ME)        <Drive>:\Windows\hpsasdrv.mtx
                    (NT4/2000/XP)  <Drive>:\WinNT\hpsasdrv.mtx
Uninstall:          No

Key:                Addedcontent
Name:               Ordersupplies
Action:             Add - Creates a new value.  If the value already exists, this action is ignored.
INI File:           (9x/ME)        <Drive>:\Windows\hpstatus.ini
                    (NT4/2000/XP)  <Drive>:\WinNT\hpstatus.ini
Value:              (9x/ME)        <Drive>:\Windows\System\hpbor.dll
                    (NT4/2000/XP)  <Drive>:\WinNT\system32\hpbor.dll
Uninstall:          Yes

Key:                allprinters
Name:               independent
Action:             Add - Creates a new value.  If the value already exists, this action is ignored.
INI File:           (9x/ME)        <Drive>:\Windows\hpstatus.ini
                    (NT4/2000/XP)  <Drive>:\WinNT\hpstatus.ini
Uninstall:          Yes

Key:                allprinters
Name:               onejobprocessingalert
Action:             Add - Creates a new value.  If the value already exists, this action is ignored.
INI File:           (9x/ME)        <Drive>:\Windows\hpstatus.ini
                    (NT4/2000/XP)  <Drive>:\WinNT\hpstatus.ini
Uninstall:          Yes

Key:                allprinters
Name:               finishedjobalert
Action:             Add - Creates a new value.  If the value already exists, this action is ignored.
INI File:           (9x/ME)        <Drive>:\Windows\hpstatus.ini
                    (NT4/2000/XP)  <Drive>:\WinNT\hpstatus.ini
Uninstall:          Yes

Key:                allprinters
```

```
Name:               warningalert
Action:             Add - Creates a new value.  If the value already exists, this action is ignored.
INI File:           (9x/ME)        <Drive>:\Windows\hpstatus.ini
                    (NT4/2000/XP)  <Drive>:\WinNT\hpstatus.ini
Uninstall:          Yes

Key:                allprinters
Name:               Erroralert
Action:             Add - Creates a new value.  If the value already exists, this action is ignored.
INI File:           (9x/ME)        <Drive>:\Windows\hpstatus.ini
                    (NT4/2000/XP)  <Drive>:\WinNT\hpstatus.ini
Uninstall:          Yes

Key:                refreshrate
Name:               Allprinters
Action:             Add - Creates a new value.  If the value already exists, this action is ignored.
INI File:           (9x/ME)        <Drive>:\Windows\hpstatus.ini
                    (NT4/2000/XP)  <Drive>:\WinNT\hpstatus.ini
Uninstall:          Yes

Key:                Addedcontent
Name:               orderurl
Action:             Add - Creates a new value.  If the value already exists, this action is ignored.
INI File:           (9x/ME)        <Drive>:\Windows\hpstatus.ini
                    (NT4/2000/XP)  <Drive>:\WinNT\hpstatus.ini
Uninstall:          Yes

Key:                NoSetLoc -- Do NOT Edit!!!
Name:               HP LaserJet 1200
Action:             Add - Creates a new value.  If the value already exists, this action is ignored.
INI File:           (9x/ME)        <Drive>:\Windows\hpstatus.ini
                    (NT4/2000/XP)  <Drive>:\WinNT\hpstatus.ini
Uninstall:          Yes

Key:                NoSetLoc -- Do NOT Edit!!!
Name:               HP LaserJet 1220
Action:             Add - Creates a new value.  If the value already exists, this action is ignored.
INI File:           (9x/ME)        <Drive>:\Windows\hpstatus.ini
                    (NT4/2000/XP)  <Drive>:\WinNT\hpstatus.ini
Uninstall:          Yes

Key:                NoSetLoc -- Do NOT Edit!!!
Name:               HP LaserJet 2200
Action:             Add - Creates a new value.  If the value already exists, this action is ignored.
INI File:           (9x/ME)        <Drive>:\Windows\hpstatus.ini
                    (NT4/2000/XP)  <Drive>:\WinNT\hpstatus.ini
Uninstall:          Yes
```

```
Key:                NoSetLoc -- Do NOT Edit!!!
Name:               HP LaserJet 3200
Action:             Add - Creates a new value.  If the value already exists, this action is ignored.
INI File:           (9x/ME)        <Drive>:\Windows\hpstatus.ini
                    (NT4/2000/XP)  <Drive>:\WinNT\hpstatus.ini
Uninstall:          Yes

Key:                NoSetLoc -- Do NOT Edit!!!
Name:               HP LaserJet 3200M
Action:             Add - Creates a new value.  If the value already exists, this action is ignored.
INI File:           (9x/ME)        <Drive>:\Windows\hpstatus.ini
                    (NT4/2000/XP)  <Drive>:\WinNT\hpstatus.ini
Uninstall:          Yes

Key:                ControlPanelOnly
Name:               HP LaserJet 1220
Action:             Add - Creates a new value.  If the value already exists, this action is ignored.
INI File:           (9x/ME)        <Drive>:\Windows\hpstatus.ini
                    (NT4/2000/XP)  <Drive>:\WinNT\hpstatus.ini
Uninstall:          Yes
```

12.1.3 Icon Entries

```
Icon Name:          Printer Status and Alerts
Action:             Replace - Replaces an existing value.  Creates a new value if the value does not
exist.
Group Type:         Personal (Applies to Windows NT, 2000 and XP Only)
Icon Link:          (9x/ME)        <Drive>:\Windows\System\hpstatus.exe
                    (NT4/2000/XP)  <Drive>:\WinNT\system32\hpstatus.exe
Root Folder:        Programs: Adds an icon to the Start Menu\Programs Folder.
Uninstall:          Yes
```

12.2 Windows 95, 98, and ME

```
Component:                SAS95
Component Version:        2.5.0.0
Supported OS:             Windows 95, Windows 98, and Windows ME
Supported Languages:      All supported by Printing System CD
Supported Connections:    Parallel (LPT), Network (Server), and Network (Client)
```

12.2.1 Component Installation Availability

Check user's system for WinSock 2. If not installed do not allow component to be selectable for installation. Also, check for Direct connect BIDI registry flag. If true, turn on Direct connect BIDI installation (if direct connect BIDI is supported).

12.2.2 Pre-File Copy Runtime Action

Closes down Printer Status and Alerts (HPSAJobMonitor) before reinstalling.

12.2.3 Post-File Copy Runtime Action

Calls a Microsoft re-distributable executable to update COMCTL32.DLL (runs 40comupd.exe). All drivers hooks are removed from Printer Status and Alerts. Adds settings captured from installer dialog to the HP Status INI file.

12.2.4 Component Size

Total File Count: 50
Total File Size: 3,760 KB

12.2.5 File Information - Core

Uninstall: Yes
CD Directory: CAB File
Install Directory:

9x/ME - <Drive>:\Windows\System\

File Group: SAS
Shared File: Yes
Potentially Locked: Yes
Self-Registering: No

File Name	File Version	Date Created	File Size	File Description
hpbdrvhk.exe	2.5	01\25\2002 01:52 PM	61,440	HP Status Driver Install Utility
hpbdrvin.dll	2.5	01\25\2002 01:53 PM	61,440	HP Status Driver Installer
hpbspsvr.exe	2.5	01\25\2002 01:45 PM	53,248	HP SocketPing Server
hpstatus.exe	2.5	01\25\2002 01:54 PM	106,496	HP Printer Status and Alerts
jfwapi.dll	2.5.0.0	10\16\2001 11:20 AM	29,184	Application Dynamic-Link Library

---

File Group: SAS_SELFREG
Shared File: Yes
Potentially Locked: Yes
Self-Registering: Yes

File Name	File Version	Date Created	File Size	File Description
hpbdrtpl.dll	2.5	01\25\2002 01:44 PM	102,400	hpbdrtpl Module

hpbewsdm.dll	2.5	01\25\2002 01:46 PM	61,440	hpbewsdm Module
hpbmappr.dll	2.5	01\25\2002 01:45 PM	32,768	hpbmappr Module
hpbprque.dll	2.5	01\25\2002 01:48 PM	61,440	hpbprque Module
hpbskpng.dll	2.5	01\25\2002 01:44 PM	49,152	hpbskpng Module
hpbsminp.dll	2.5	01\25\2002 01:48 PM	28,672	hpbsminp Module
hpbsubmn.dll	2.5	01\25\2002 01:50 PM	40,960	submon Module
hpbwspds.dll	2.5	01\25\2002 01:45 PM	73,728	hpbwspds Module

File Group: SAS_En
Shared File: Yes
Potentially Locked: Yes
Self-Registering: Yes

File Name	File Version	Date Created	File Size	File Description
hpbdvmui.dll	2.5	01\25\2002 01:43 PM	151,552	devmonui Module
hpbor.dll	2.5.0.0	01\25\2002 03:13 PM	159,744	Application Dynamic-Link Library
hpbsasui.dll	2.5	01\25\2002 01:49 PM	102,400	SAS_UI Module
hpbsbmui.dll	2.5	01\25\2002 01:50 PM	135,168	submonui Module
hpbspref.dll	2.5	01\25\2002 01:42 PM	98,304	hpbspref Module
hpbswsdm.dll	2.5	01\25\2002 01:47 PM	118,784	hpbswsdm Module

12.2.6 File Information - MS

Uninstall: No
CD Directory: CAB File
Install Directory:

9x/ME - <Drive>:\Windows\System\

File Group: SAS_MS
Shared File: Yes
Potentially Locked: Yes
Self-Registering: No

File Name	File Version	Date Created	File Size	File Description
imagehlp.dll	4.00	04\24\1998 05:43 PM	106,256	Windows NT Image Helper
mfc42.dll	6.00.8168.0	06\17\1998 08:57 PM	995,383	MFCDLL Shared Library - Retail Version
msvcp60.dll	6.00.8168.0	06\17\1998 03:52 AM	401,462	Microsoft (R) C++ Runtime Library
msvcrt.dll	6.00.8168.0	06\17\1998 10:49 AM	254,005	Microsoft (R) C Runtime Library
msvcrt40.dll	4.21.0000	05\31\1998 03:06 PM	326,656	Microsoft® C Runtime Library

---

12.2.7 File Information - Images

Uninstall: Yes
CD Directory: CAB File
Install Directory:

9x/ME - <Drive>:\Program Files\Hewlett-Packard\Status

File Group: SAS_IMAGES
Shared File: Yes
Potentially Locked: No
Self-Registering: No

File Name	File Version	Date Created	File Size	File Description
blackbar.gif	4.21.0.0	03\03\2000 02:21 PM	1,676	Graphics File
brokenconnection.gif	4.21.0.0	03\30\2000 04:37 PM	1,708	Graphics File
cancel.gif	4.21.0.0	03\03\2000 02:21 PM	419	Graphics File
directerror.gif	4.21.0.0	06\11\2001 02:19 PM	1,111	Graphics File
directnormal.gif	4.21.0.0	06\11\2001 02:19 PM	1,053	Graphics File
directwarning.gif	4.21.0.0	06\11\2001 02:19 PM	1,156	Graphics File
gobutton.gif	4.21.0.0	03\03\2000 02:21 PM	1,101	Graphics File
greenbar.gif	4.21.0.0	03\03\2000 02:21 PM	1,699	Graphics File
greenblink.gif	4.21.0.0	03\17\2000 05:36 PM	1,387	Graphics File
level-00n.gif	4.21.0.0	03\17\2000 05:35 PM	932	Graphics File
level-012.gif	4.21.0.0	03\17\2000 05:35 PM	894	Graphics File
level-025.gif	4.21.0.0	03\17\2000 05:36 PM	899	Graphics File
level-050.gif	4.21.0.0	03\17\2000 05:36 PM	903	Graphics File
level-075.gif	4.21.0.0	03\17\2000 05:36 PM	898	Graphics File
level-100.gif	4.21.0.0	03\17\2000 05:36 PM	894	Graphics File
level-empty.gif	4.21.0.0	03\17\2000 05:36 PM	875	Graphics File
level-ok.gif	4.21.0.0	03\17\2000 05:36 PM	916	Graphics File
level-unknown.gif	4.21.0.0	03\17\2000 05:36 PM	896	Graphics File
ok.gif	4.21.0.0	03\17\2000 05:36 PM	852	Graphics File
redbar.gif	4.21.0.0	03\03\2000 02:21 PM	1,785	Graphics File
redblink.gif	4.21.0.0	03\17\2000 05:36 PM	1,392	Graphics File
unknown.gif	4.21.0.0	03\17\2000 05:36 PM	837	Graphics File
unknowndevice.gif	4.21.0.0	03\30\2000 04:37 PM	1,492	Graphics File
working.gif	4.21.0.0	03\03\2000 02:39 PM	1,609	Graphics File

12.2.8 File Information - Win9x

Uninstall: Yes

CD Directory: CAB File
Install Directory:

9x/ME - <Drive>:\Windows\System\

File Group: SAS_WIN9X
Shared File: Yes
Potentially Locked: Yes
Self-Registering: No

File Name	File Version	Date Created	File Size	File Description
hpbdrp16.dll	2.5	01\25\2002 01:53 PM	53,248	HP Status Driver Replacer Win9X
hpbjds9x.exe	2.5	01\25\2002 01:52 PM	73,728	HP Job Detector Win9x
hpbprx9x.drv	1.1.01	11\02\2000 04:01 PM	40,960	HP Status Printer Driver
hpsync9x.exe	1.0.0.10	05\14\2000 11:08 PM	44,544	HP Win9X Driver Synchronizer

---

12.2.9 Registry Entries

Name: HP Status
Action: Replace - Replaces an existing value. Creates a new value if the value does not exist.
Root: HKEY_LOCAL_MACHINE
Key: SOFTWARE\Microsoft\Windows\CurrentVersion\Run
Data Type: String
Value: (9x/ME) <Drive>:\Windows\System\hpstatus.exe
Uninstall: Yes

Name: NewImportModule
Action: Replace - Replaces an existing value. Creates a new value if the value does not exist.
Root: HKEY_LOCAL_MACHINE
Key: SOFTWARE\Hewlett-Packard\HPSpoolerImportFixup
Data Type: String
Value: (9x/ME) <Drive>:\Windows\System\hpbprx9x.drv
Uninstall: Yes

Name: ReplacerModule
Action: Replace - Replaces an existing value. Creates a new value if the value does not exist.
Root: HKEY_LOCAL_MACHINE
Key: SOFTWARE\Hewlett-Packard\HPSpoolerImportFixup
Data Type: String
Value: (9x/ME) <Drive>:\Windows\System\hpbdrp16.dll

Uninstall: Yes

12.2.10 INI File Entries

Key: hpstatus-aggressive
Name: pscript.drv
Action: Add - Creates a new value. If the value already exists, this action is ignored.
INI File: (9x/ME) <Drive>:\Windows\win.ini
Uninstall: Yes

12.3 Windows NT 4.0

Component: SASNT
Component Version: 2.5.0.0
Supported OS: Windows NT 4.0
Supported Languages: All supported by Printing System CD
Supported Connections: Parallel (LPT), Network (Server), and Network (Client)

12.3.1 Component Installation Availability

Check for NT Terminal Services. If running do not allow component to be selectable for installation. Also, check for Direct connect BIDI registry flag. If true, turn on Direct connect BIDI installation (if direct connect BIDI is supported).

12.3.2 Pre-File Copy Runtime Action

Closes down Printer Status and Alerts (HPSAJobMonitor) before reinstalling.

12.3.3 Post-File Copy Runtime Action

Calls a Microsoft re-distributable executable to update COMCTL32.DLL (runs 40comupd.exe). All drivers hooks are removed from Printer Status and Alerts. Adds settings captured from installer dialog to the HP Status INI file.

12.3.4 Component Size

Total File Count: 51
Total File Size: 3,755 KB

12.3.5 File Information - Core

Uninstall: Yes
CD Directory: CAB File
Install Directory:

NT 4.0 - <Drive>:\WinNT\system32\

File Group: SAS
Shared File: Yes
Potentially Locked: Yes
Self-Registering: No

File Name	File Version	Date Created	File Size	File Description
hpbdrvhk.exe	2.5	01\25\2002 01:52 PM	61,440	HP Status Driver Install Utility
hpbdrvin.dll	2.5	01\25\2002 01:53 PM	61,440	HP Status Driver Installer
hpbspsvr.exe	2.5	01\25\2002 01:45 PM	53,248	HP SocketPing Server
hpstatus.exe	2.5	01\25\2002 01:54 PM	106,496	HP Printer Status and Alerts
jfwapi.dll	2.5.0.0	10\16\2001 11:20 AM	29,184	Application Dynamic-Link Library

---

File Group: SAS_SELFREG
Shared File: Yes
Potentially Locked: Yes
Self-Registering: Yes

File Name	File Version	Date Created	File Size	File Description
hpbdrtpl.dll	2.5	01\25\2002 01:44 PM	102,400	hpbdrtpl Module
hpbewsdm.dll	2.5	01\25\2002 01:46 PM	61,440	hpbewsdm Module
hpbmappr.dll	2.5	01\25\2002 01:45 PM	32,768	hpbmappr Module
hpbprque.dll	2.5	01\25\2002 01:48 PM	61,440	hpbprque Module
hpbskpng.dll	2.5	01\25\2002 01:44 PM	49,152	hpbskpng Module
hpbsminp.dll	2.5	01\25\2002 01:48 PM	28,672	hpbsminp Module
hpbsubmn.dll	2.5	01\25\2002 01:50 PM	40,960	submon Module
hpbwspds.dll	2.5	01\25\2002 01:45 PM	73,728	hpbwspds Module

File Group: SAS_En
Shared File: Yes
Potentially Locked: Yes
Self-Registering: Yes

File Name	File Version	Date Created	File Size	File Description
hpbdvmui.dll	2.5	01\25\2002 01:43 PM	151,552	devmonui Module
hpbor.dll	2.5.0.0	01\25\2002 03:13 PM	159,744	Application Dynamic-Link Library
hpbsasui.dll	2.5	01\25\2002 01:49 PM	102,400	SAS_UI Module
hpbsbmui.dll	2.5	01\25\2002 01:50 PM	135,168	submonui Module
hpbspref.dll	2.5	01\25\2002 01:42 PM	98,304	hpbspref Module
hpbswsdm.dll	2.5	01\25\2002 01:47 PM	118,784	hpbswsdm Module

12.3.6 File Information - NT

Uninstall: Yes
CD Directory: CAB File
Install Directory:

NT 4.0 - <Drive>:\WinNT\system32\

File Group: SAS_NT
Shared File: Yes
Potentially Locked: Yes
Self-Registering: No

File Name	File Version	Date Created	File Size	File Description
hpbdrvrp.dll	2.5	01\25\2002 01:53 PM	28,672	HP Status Driver Replacer WinNT
hpbhksrv.exe	2.5.0.0	01\25\2002 01:53 PM	40,960	Application File
hpbjdsnt.exe	2.5	01\25\2002 01:52 PM	90,112	HP Job Detector
hpbprxkm.dll	2.5	01\25\2002 01:51 PM	19,296	HP Status WinNT KM Driver
hpsyncnt.exe	2.5	01\25\2002 01:52 PM	28,672	HP WinNT Driver Synchronizer

12.3.7 File Information - MS

Uninstall: No
CD Directory: CAB File
Install Directory:

NT 4.0 - <Drive>:\WinNT\system32\

File Group: SAS_MS
Shared File: Yes
Potentially Locked: Yes
Self-Registering: No

File Name	File Version	Date Created	File Size	File Description
imagehlp.dll	4.00	04\24\1998 05:43 PM	106,256	Windows NT Image Helper
mfc42.dll	6.00.8168.0	06\17\1998 08:57 PM	995,383	MFCDLL Shared Library - Retail Version
msvcp60.dll	6.00.8168.0	06\17\1998 03:52 AM	401,462	Microsoft (R) C++ Runtime Library
msvcrt.dll	6.00.8168.0	06\17\1998 10:49 AM	254,005	Microsoft (R) C Runtime Library

msvcrt40.dll	4.21.0000	05\31\1998 03:06 PM	326,656	Microsoft® C Runtime Library

12.3.8 File Information - Images

Uninstall: Yes
CD Directory: CAB File
Install Directory:

NT 4.0 - <Drive>:\Profile Files\Hewlett-Packard\Status

File Group: SAS_IMAGES
Shared File: Yes
Potentially Locked: No
Self-Registering: No

File Name	File Version	Date Created	File Size	File Description
blackbar.gif	4.21.0.0	03\03\2000 02:21 PM	1,676	Graphics File
brokenconnection.gif	4.21.0.0	03\30\2000 04:37 PM	1,708	Graphics File
cancel.gif	4.21.0.0	03\03\2000 02:21 PM	419	Graphics File
directerror.gif	4.21.0.0	06\11\2001 02:19 PM	1,111	Graphics File
directnormal.gif	4.21.0.0	06\11\2001 02:19 PM	1,053	Graphics File
directwarning.gif	4.21.0.0	06\11\2001 02:19 PM	1,156	Graphics File
gobutton.gif	4.21.0.0	03\03\2000 02:21 PM	1,101	Graphics File
greenbar.gif	4.21.0.0	03\03\2000 02:21 PM	1,699	Graphics File
greenblink.gif	4.21.0.0	03\17\2000 05:36 PM	1,387	Graphics File
level-00n.gif	4.21.0.0	03\17\2000 05:35 PM	932	Graphics File
level-012.gif	4.21.0.0	03\17\2000 05:35 PM	894	Graphics File
level-025.gif	4.21.0.0	03\17\2000 05:36 PM	899	Graphics File
level-050.gif	4.21.0.0	03\17\2000 05:36 PM	903	Graphics File
level-075.gif	4.21.0.0	03\17\2000 05:36 PM	898	Graphics File
level-100.gif	4.21.0.0	03\17\2000 05:36 PM	894	Graphics File
level-empty.gif	4.21.0.0	03\17\2000 05:36 PM	875	Graphics File
level-ok.gif	4.21.0.0	03\17\2000 05:36 PM	916	Graphics File
level-unknown.gif	4.21.0.0	03\17\2000 05:36 PM	896	Graphics File
ok.gif	4.21.0.0	03\17\2000 05:36 PM	852	Graphics File
redbar.gif	4.21.0.0	03\03\2000 02:21 PM	1,785	Graphics File
redblink.gif	4.21.0.0	03\17\2000 05:36 PM	1,392	Graphics File
unknown.gif	4.21.0.0	03\17\2000 05:36 PM	837	Graphics File
unknowndevice.gif	4.21.0.0	03\30\2000 04:37 PM	1,492	Graphics File
working.gif	4.21.0.0	03\03\2000 02:39 PM	1,609	Graphics File

12.3.9 Registry Entries

Name: HP Status
Action: Replace - Replaces an existing value. Creates a new value if the value does not exist.
Root: HKEY_LOCAL_MACHINE
Key: SOFTWARE\Microsoft\Windows\CurrentVersion\Run
Data Type: String
Value: (NT4/2000/XP) <Drive>:\WinNT\system32\hpstatus.exe
Uninstall: Yes

Name: NewImportModule
Action: Replace - Replaces an existing value. Creates a new value if the value does not exist.
Root: HKEY_LOCAL_MACHINE
Key: SOFTWARE\Hewlett-Packard\HPSpoolerImportFixup
Data Type: String
Value: (NT4/2000/XP) <Drive>:\WinNT\system32\hpbprxkm.dll
Uninstall: Yes

Name: ReplacerModule
Action: Replace - Replaces an existing value. Creates a new value if the value does not exist.
Root: HKEY_LOCAL_MACHINE
Key: SOFTWARE\Hewlett-Packard\HPSpoolerImportFixup
Data Type: String
Value: (NT4/2000/XP) <Drive>:\WinNT\system32\hpbdrvrp.dll
Uninstall: Yes

12.4 Windows 2000 and XP

Component: SAS2K
Component Version: 2.5.0.0
Supported OS: Windows 2000, and Windows XP
Supported Languages: All supported by Printing System CD
Supported Connections: Parallel (LPT), Network (Server), and Network (Client)

12.4.1 Component Installation Availability

Check for NT Terminal Services. If running do not allow component to be selectable for installation. Also, check for Direct connect BIDI registry flag. If true, turn on Direct connect BIDI installation (if direct connect BIDI is supported).

12.4.2 Pre-File Copy Runtime Action

Closes down Printer Status and Alerts (HPSAJobMonitor) before reinstalling.

12.4.3 Post-File Copy Runtime Action

Calls a Microsoft re-distributable executable to update COMCTL32.DLL (runs 40comupd.exe). All drivers hooks are removed from Printer Status and Alerts. Adds settings captured from installer dialog to the HP Status INI file.

12.4.4 Component Size

Total File Count: 53
Total File Size: 3,831 KB

12.4.5 File Information - Core

Uninstall: Yes
CD Directory: CAB File
Install Directory:

2000/XP - <Drive>:\WinNT\system32\

File Group: SAS
Shared File: Yes
Potentially Locked: Yes
Self-Registering: No

File Name	File Version	Date Created	File Size	File Description
hpbdrvhk.exe	2.5	01\25\2002 01:52 PM	61,440	HP Status Driver Install Utility
hpbdrvin.dll	2.5	01\25\2002 01:53 PM	61,440	HP Status Driver Installer
hpbspsvr.exe	2.5	01\25\2002 01:45 PM	53,248	HP SocketPing Server
hpstatus.exe	2.5	01\25\2002 01:54 PM	106,496	HP Printer Status and Alerts
jfwapi.dll	2.5.0.0	10\16\2001 11:20 AM	29,184	Application Dynamic-Link Library

---

File Group: SAS_SELFREG
Shared File: Yes
Potentially Locked: Yes
Self-Registering: Yes

File Name	File Version	Date Created	File Size	File Description
hpbdrtpl.dll	2.5	01\25\2002 01:44 PM	102,400	hpbdrtpl Module
hpbewsdm.dll	2.5	01\25\2002 01:46 PM	61,440	hpbewsdm Module
hpbmappr.dll	2.5	01\25\2002 01:45 PM	32,768	hpbmappr Module
hpbprque.dll	2.5	01\25\2002 01:48 PM	61,440	hpbprque Module
hpbskpng.dll	2.5	01\25\2002 01:44 PM	49,152	hpbskpng Module

hpbsminp.dll	2.5	01\25\2002 01:48 PM	28,672	hpbsminp Module
hpbsubmn.dll	2.5	01\25\2002 01:50 PM	40,960	submon Module
hpbwspds.dll	2.5	01\25\2002 01:45 PM	73,728	hpbwspds Module

File Group: SAS_En
Shared File: Yes
Potentially Locked: Yes
Self-Registering: Yes

File Name	File Version	Date Created	File Size	File Description
hpbdvmui.dll	2.5	01\25\2002 01:43 PM	151,552	devmonui Module
hpbor.dll	2.5.0.0	01\25\2002 03:13 PM	159,744	Application Dynamic-Link Library
hpbsasui.dll	2.5	01\25\2002 01:49 PM	102,400	SAS_UI Module
hpbsbmui.dll	2.5	01\25\2002 01:50 PM	135,168	submonui Module
hpbspref.dll	2.5	01\25\2002 01:42 PM	98,304	hpbspref Module
hpbswsdm.dll	2.5	01\25\2002 01:47 PM	118,784	hpbswsdm Module

12.4.6 File Information - MS

Uninstall: No
CD Directory: CAB File
Install Directory:

2000/XP - <Drive>:\WinNT\system32\

File Group: SAS_MS
Shared File: Yes
Potentially Locked: Yes
Self-Registering: No

File Name	File Version	Date Created	File Size	File Description
imagehlp.dll	4.00	04\24\1998 05:43 PM	106,256	Windows NT Image Helper
mfc42.dll	6.00.8168.0	06\17\1998 08:57 PM	995,383	MFCDLL Shared Library - Retail Version
msvcp60.dll	6.00.8168.0	06\17\1998 03:52 AM	401,462	Microsoft (R) C++ Runtime Library
msvcrt.dll	6.00.8168.0	06\17\1998 10:49 AM	254,005	Microsoft (R) C Runtime Library
msvcrt40.dll	4.21.0000	05\31\1998 03:06 PM	326,656	Microsoft® C Runtime Library

12.4.7 File Information - Images

Uninstall: Yes
CD Directory: CAB File
Install Directory:

2000/XP - <Drive>:\Profile Files\Hewlett-Packard\Status

File Group: SAS_IMAGES
Shared File: Yes
Potentially Locked: No
Self-Registering: No

File Name	File Version	Date Created	File Size	File Description
blackbar.gif	4.21.0.0	03\03\2000 02:21 PM	1,676	Graphics File
brokenconnection.gif	4.21.0.0	03\30\2000 04:37 PM	1,708	Graphics File
cancel.gif	4.21.0.0	03\03\2000 02:21 PM	419	Graphics File
directerror.gif	4.21.0.0	06\11\2001 02:19 PM	1,111	Graphics File
directnormal.gif	4.21.0.0	06\11\2001 02:19 PM	1,053	Graphics File
directwarning.gif	4.21.0.0	06\11\2001 02:19 PM	1,156	Graphics File
gobutton.gif	4.21.0.0	03\03\2000 02:21 PM	1,101	Graphics File
greenbar.gif	4.21.0.0	03\03\2000 02:21 PM	1,699	Graphics File
greenblink.gif	4.21.0.0	03\17\2000 05:36 PM	1,387	Graphics File
level-00n.gif	4.21.0.0	03\17\2000 05:35 PM	932	Graphics File
level-012.gif	4.21.0.0	03\17\2000 05:35 PM	894	Graphics File
level-025.gif	4.21.0.0	03\17\2000 05:36 PM	899	Graphics File
level-050.gif	4.21.0.0	03\17\2000 05:36 PM	903	Graphics File
level-075.gif	4.21.0.0	03\17\2000 05:36 PM	898	Graphics File
level-100.gif	4.21.0.0	03\17\2000 05:36 PM	894	Graphics File
level-empty.gif	4.21.0.0	03\17\2000 05:36 PM	875	Graphics File
level-ok.gif	4.21.0.0	03\17\2000 05:36 PM	916	Graphics File
level-unknown.gif	4.21.0.0	03\17\2000 05:36 PM	896	Graphics File
ok.gif	4.21.0.0	03\17\2000 05:36 PM	852	Graphics File
redbar.gif	4.21.0.0	03\03\2000 02:21 PM	1,785	Graphics File
redblink.gif	4.21.0.0	03\17\2000 05:36 PM	1,392	Graphics File
unknown.gif	4.21.0.0	03\17\2000 05:36 PM	837	Graphics File
unknowndevice.gif	4.21.0.0	03\30\2000 04:37 PM	1,492	Graphics File
working.gif	4.21.0.0	03\03\2000 02:39 PM	1,609	Graphics File

12.4.8 File Information - NT

Uninstall: Yes
CD Directory: CAB File
Install Directory:

2000/XP - <Drive>:\WinNT\system32\

File Group: SAS_NT
Shared File: Yes
Potentially Locked: Yes
Self-Registering: No

File Name	File Version	Date Created	File Size	File Description
hpbdrvrp.dll	2.5	01\25\2002 01:53 PM	28,672	HP Status Driver Replacer WinNT
hpbhksrv.exe	2.5.0.0	01\25\2002 01:53 PM	40,960	Application File
hpbjdsnt.exe	2.5	01\25\2002 01:52 PM	90,112	HP Job Detector
hpbprxkm.dll	2.5	01\25\2002 01:51 PM	19,296	HP Status WinNT KM Driver
hpsyncnt.exe	2.5	01\25\2002 01:52 PM	28,672	HP WinNT Driver Synchronizer

12.4.9 File Information - Win2K

Uninstall: Yes
CD Directory: CAB File
Install Directory:

2000/XP - <Drive>:\WinNT\system32\

File Group: SAS_WIN2K
Shared File: Yes
Potentially Locked: Yes
Self-Registering: No

File Name	File Version	Date Created	File Size	File Description
hpb2ksrv.exe	2.5	01\25\2002 01:51 PM	45,056	HP Status Win2k Service
hpbprx2k.dll	2.5	01\25\2002 01:51 PM	32,768	HP Status Win2K UM Driver

12.4.10 Registry Entries

Name: HP Status
Action: Replace - Replaces an existing value. Creates a new value if the value does not exist.
Root: HKEY_LOCAL_MACHINE
Key: SOFTWARE\Microsoft\Windows\CurrentVersion\Run
Data Type: String
Value: (NT4/2000/XP) <Drive>:\WinNT\system32\hpstatus.exe

Uninstall: Yes

Name: NewImportModule
Action: Replace - Replaces an existing value. Creates a new value if the value does not exist.
Root: HKEY_LOCAL_MACHINE
Key: SOFTWARE\Hewlett-Packard\HPSpoolerImportFixup
Data Type: String
Value: (NT4/2000/XP) <Drive>:\WinNT\system32\hpbprxkm.dll
Uninstall: Yes

Name: ReplacerModule
Action: Replace - Replaces an existing value. Creates a new value if the value does not exist.
Root: HKEY_LOCAL_MACHINE
Key: SOFTWARE\Hewlett-Packard\HPSpoolerImportFixup
Data Type: String
Value: (NT4/2000/XP) <Drive>:\WinNT\system32\hpbdrvrp.dll
Uninstall: Yes

Name: NewImportModuleUM
Action: Replace - Replaces an existing value. Creates a new value if the value does not exist.
Root: HKEY_LOCAL_MACHINE
Key: SOFTWARE\Hewlett-Packard\HPSpoolerImportFixup
Data Type: String
Value: (NT4/2000/XP) <Drive>:\WinNT\system32\hpbprx2k.dll
Uninstall: Yes

13.0 Printing System Uninstaller

Title: Printing System Uninstaller (invisible component)
Description: HP Printing System Uninstaller
Type: Other Support SW or Online Document

13.1 All Windows 32 bit

Component: UN_32
Component Version: 4.0.0.0
Supported OS: All supported by Printing System CD
Supported Languages: All supported by Printing System CD
Supported Connections: All supported by Printing System CD

13.1.1 Component Size

Total File Count: 18
Total File Size: 928 KB

13.1.2 File Information - Uninstaller

Uninstall: Yes
CD Directory: CAB File
Install Directory:

9x/ME - <Drive>:\Program Files\Hewlett-Packard\LJ4100\Uninstall
NT 4.0 - <Drive>:\Profile Files\Hewlett-Packard\LJ4100\Uninstall
2000/XP - <Drive>:\Profile Files\Hewlett-Packard\LJ4100\Uninstall

---

File Group: UN_En
Shared File: No
Potentially Locked: Yes
Self-Registering: No

File Name	File Version	Date Created	File Size	File Description
_isdel.exe	5.51.138.0	10\27\1998 02:06 PM	27,648	32-bit InstallShield Deleter.
setup.exe	5.52.164.0	01\12\1999 01:42 PM	73,728	32-bit Setup Launcher
inst32i.ex	5.52.164.0	02\23\1999 12:45 PM	296,674	
os.dat	5.52.164.0	07\27\1998 06:41 PM	450	
lang.dat	5.52.164.0	01\12\1999 12:34 PM	23,541	
_setup.dll	5.50.134.0	09\29\1998 06:34 PM	34,816	32-bit Setup Launcher Resource
setup.ins	5.50.134.0	04\04\2002 05:43 AM	141,269	
_sys1.hdr	5.50.134.0	04\04\2002 05:44 AM	3,905	
_sys1.cab	5.50.134.0	04\04\2002 05:44 AM	175,466	Cabinet File
_user1.hdr	5.50.134.0	04\04\2002 05:44 AM	4,468	
_user1.cab	5.50.134.0	04\04\2002 05:44 AM	123,972	Cabinet File
data.tag	5.50.134.0	04\04\2002 05:44 AM	130	
setup.ini	5.50.134.0	04\04\2002 05:44 AM	87	Initialization File
setup.lid	5.50.134.0	04\04\2002 05:44 AM	49	
unhp.exe	5.50.134.0	02\07\2002 04:47 PM	40,960	Application File
data1.hdr	5.50.134.0	04\04\2002 05:44 AM	2,583	
data1.cab	5.50.134.0	04\04\2002 05:44 AM	469	Cabinet File
layout.bin	5.50.134.0	04\04\2002 05:44 AM	608	

13.1.3 Registry Entries

Name: DisplayName

Action: Replace - Replaces an existing value. Creates a new value if the value does not exist.
Root: HKEY_LOCAL_MACHINE
Key: Software\Microsoft\Windows\CurrentVersion\Uninstall\HP LaserJet 4100 Uninstaller
Data Type: String
Value: HP LaserJet 4100 Uninstaller
Uninstall: Yes

Name: UninstallString
Action: Replace - Replaces an existing value. Creates a new value if the value does not exist.
Root: HKEY_LOCAL_MACHINE
Key: Software\Microsoft\Windows\CurrentVersion\Uninstall\HP LaserJet 4100 Uninstaller
Data Type: String
Value: (9x/ME) <Drive>:\Program Files\Hewlett-Packard\LJ4100\Uninstall\unhp.exe ciuninst.ini
(NT4/2000/XP) <Drive>:\Profile Files\Hewlett-Packard\LJ4100\Uninstall\unhp.exe ciuninst.ini
Uninstall: Yes

13.1.4 Icon Entries

Icon Name: HP LaserJet 4100 Uninstaller
Action: Replace - Replaces an existing value. Creates a new value if the value does not exist.
Group Type: Personal (Applies to Windows NT, 2000 and XP Only)
Icon Link: (9x/ME) <Drive>:\Program Files\Hewlett-Packard\LJ4100\Uninstall\unhp.exe
(NT4/2000/XP) <Drive>:\Profile Files\Hewlett-Packard\LJ4100\Uninstall\unhp.exe
Root Folder: Programs: Adds an icon to the Start Menu\Programs Folder\Sub-Folder.
Uninstall: Yes

14.0 Screen Fonts

UI Title: Screen Fonts
UI Description: Printer-matching TrueType fonts to help ensure WYSIWYG printing.
Type: Other Support SW or Online Document

14.1 All Windows 32 bit

Component: FONTS
Component Version: 1.0.0.0
Supported OS: All supported by Printing System CD
Supported Languages: All supported by Printing System CD

Supported Connections: All supported by Printing System CD

14.1.1 Component Size

Total File Count: 158
Total File Size: 11,214 KB

14.1.2 File Information - Fonts

Uninstall: No
CD Directory: <CD root>\fonts
Install Directory:

9x/ME - <Drive>:\Windows\Fonts
NT 4.0 - <Drive>:\WinNT\Fonts
2000/XP - <Drive>:\WinNT\Fonts

File Group: Fonts
Shared File: No
Potentially Locked: No
Self-Registering: No

Font File Information

Albertus Medium
albr55w.ttf 09\01\1998 01:08 PM 92,344 KB
Font Version: Version 1.3 (Hewlett-Packard)
Typeface Name Albertus Medium
Weight-Style: Regular
Postscript(R) Name: Albertus-Medium

Albertus Extra Bold
albr85w.ttf 09\01\1998 01:08 PM 92,088 KB
Font Version: Version 1.3 (Hewlett-Packard)
Typeface Name Albertus Extra Bold
Weight-Style: Regular
Postscript(R) Name: Albertus-ExtraBold

ITC Avant Garde Gothic Book
avgr45w.ttf 09\01\1998 01:11 PM 82,832 KB
Font Version: Version 1.3 (Hewlett-Packard)
Typeface Name ITC Avant Garde Gothic
Weight-Style: Book
Postscript(R) Name: AvantGarde-Book

ITC Avant Garde Gothic Book Oblique
avgr46w.ttf 09\01\1998 01:11 PM 77,664 KB

```
                                  Font Version:       Version 1.3 (Hewlett-Packard)
                                  Typeface Name       ITC Avant Garde Gothic
                                  Weight-Style:       Book Oblique
                                  Postscript(R) Name: AvantGarde-BookOblique

ITC Avant Garde Gothic Demi
avgr65w.ttf                                  09\01\1998 01:11 PM  83,200 KB
                                  Font Version:       Version 1.3 (Hewlett-Packard)
                                  Typeface Name       ITC Avant Garde Gothic Demi
                                  Weight-Style:       Regular
                                  Postscript(R) Name: AvantGarde-Demi

ITC Avant Garde Gothic Demi Oblique
avgr66w.ttf                                  09\01\1998 01:11 PM  77,744 KB
                                  Font Version:       Version 1.3 (Hewlett-Packard)
                                  Typeface Name       ITC Avant Garde Gothic Demi
                                  Weight-Style:       Oblique
                                  Postscript(R) Name: AvantGarde-DemiOblique

ITC Bookman Light
bokr35w.ttf                                  09\01\1998 01:11 PM  98,200 KB
                                  Font Version:       Version 1.3 (Hewlett-Packard)
                                  Typeface Name       ITC Bookman Light
                                  Weight-Style:       Regular
                                  Postscript(R) Name: Bookman-Light

ITC Bookman Light Italic
bokr36w.ttf                                  09\01\1998 01:11 PM  86,908 KB
                                  Font Version:       Version 1.3 (Hewlett-Packard)
                                  Typeface Name       ITC Bookman Light
                                  Weight-Style:       Italic
                                  Postscript(R) Name: Bookman-LightItalic

ITC Bookman Demi
bokr75w.ttf                                  09\01\1998 01:11 PM  97,836 KB
                                  Font Version:       Version 1.3 (Hewlett-Packard)
                                  Typeface Name       ITC Bookman Demi
                                  Weight-Style:       Regular
                                  Postscript(R) Name: Bookman-Demi

ITC Bookman Demi Italic
bokr76w.ttf                                  09\01\1998 01:11 PM  86,876 KB
                                  Font Version:       Version 1.3 (Hewlett-Packard)
                                  Typeface Name       ITC Bookman Demi
                                  Weight-Style:       Italic
                                  Postscript(R) Name: Bookman-DemiItalic

CG Omega
```

```
cgor45w.ttf                                  09\01\1998 01:09 PM  99,104 KB
                                  Font Version:       Version 1.3 (Hewlett-Packard)
                                  Typeface Name       CG Omega
                                  Weight-Style:       Regular
                                  Postscript(R) Name: CGOmega

CG Omega Italic
cgor46w.ttf                                  09\01\1998 01:09 PM  90,004 KB
                                  Font Version:       Version 1.3 (Hewlett-Packard)
                                  Typeface Name       CG Omega
                                  Weight-Style:       Italic
                                  Postscript(R) Name: CGOmega-Italic

CG Omega Bold
cgor65w.ttf                                  09\01\1998 01:09 PM  98,876 KB
                                  Font Version:       Version 1.3 (Hewlett-Packard)
                                  Typeface Name       CG Omega
                                  Weight-Style:       Bold
                                  Postscript(R) Name: CGOmega-Bold

CG Omega Bold Italic
cgor66w.ttf                                  09\01\1998 01:09 PM  90,652 KB
                                  Font Version:       Version 1.3 (Hewlett-Packard)
                                  Typeface Name       CG Omega
                                  Weight-Style:       Bold Italic
                                  Postscript(R) Name: CGOmega-BoldItalic

CG Times
cgtr45w.ttf                                  09\01\1998 01:09 PM  94,692 KB
                                  Font Version:       Version 1.3 (Hewlett-Packard)
                                  Typeface Name       CG Times
                                  Weight-Style:       Regular
                                  Postscript(R) Name: CGTimes

CG Times Italic
cgtr46w.ttf                                  09\01\1998 01:09 PM  85,724 KB
                                  Font Version:       Version 1.3 (Hewlett-Packard)
                                  Typeface Name       CG Times
                                  Weight-Style:       Italic
                                  Postscript(R) Name: CGTimes-Italic

CG Times Bold
cgtr65w.ttf                                  09\01\1998 01:09 PM  95,520 KB
                                  Font Version:       Version 1.3 (Hewlett-Packard)
                                  Typeface Name       CG Times
                                  Weight-Style:       Bold
                                  Postscript(R) Name: CGTimes-Bold
```

```
CG Times Bold Italic
cgtr66w.ttf                                   09\01\1998 01:09 PM  86,032 KB
                                  Font Version:       Version 1.3 (Hewlett-Packard)
                                  Typeface Name       CG Times
                                  Weight-Style:       Bold Italic
                                  Postscript(R) Name: CGTimes-BoldItalic

ITC Zapf Chancery Medium Italic
chanc___.ttf                                  07\16\1998 09:41 AM  73,948 KB
                                  Font Version:       Version 1.10 (Hewlett-Packard)
                                  Typeface Name       ITC Zapf Chancery
                                  Weight-Style:       Medium Italic
                                  Postscript(R) Name: ZapfChancery-MediumItalic

Clarendon Condensed Bold
clar67w.ttf                                   09\01\1998 01:09 PM  96,712 KB
                                  Font Version:       Version 1.3 (Hewlett-Packard)
                                  Typeface Name       Clarendon Condensed
                                  Weight-Style:       Bold
                                  Postscript(R) Name: Clarendon-Condensed-Bold

Coronet
coronet.ttf                                   07\16\1998 09:41 AM  84,468 KB
                                  Font Version:       Version 1.04
                                  Typeface Name       Coronet
                                  Weight-Style:       Regular
                                  Postscript(R) Name: Coronet

CourierPS
cpsr45w.ttf                                   09\01\1998 01:10 PM  91,556 KB
                                  Font Version:       Version 1.3 (Hewlett-Packard)
                                  Typeface Name       CourierPS
                                  Weight-Style:       Regular
                                  Postscript(R) Name: Courier

CourierPS Oblique
cpsr46w.ttf                                   09\01\1998 01:10 PM  84,908 KB
                                  Font Version:       Version 1.3 (Hewlett-Packard)
                                  Typeface Name       CourierPS
                                  Weight-Style:       Oblique
                                  Postscript(R) Name: Courier-Oblique

CourierPS Bold
cpsr65w.ttf                                   09\01\1998 01:10 PM  91,464 KB
                                  Font Version:       Version 1.3 (Hewlett-Packard)
                                  Typeface Name       CourierPS
                                  Weight-Style:       Bold
                                  Postscript(R) Name: Courier-Bold
```

```
CourierPS Bold Oblique
cpsr66w.ttf                                   09\01\1998 01:10 PM  84,064 KB
                                   Font Version:       Version 1.3 (Hewlett-Packard)
                                   Typeface Name       CourierPS
                                   Weight-Style:       Bold Oblique
                                   Postscript(R) Name: Courier-BoldOblique

ITC Zapf Dingbats
dings___.ttf                                  07\16\1998 09:41 AM  55,304 KB
                                   Font Version:       April 15,1997; 1.00, initial release
                                   Typeface Name       ITC Zapf Dingbats
                                   Weight-Style:       Regular
                                   Postscript(R) Name: ZapfDingbats

Garamond Antiqua
garr45w.ttf                                   09\01\1998 01:10 PM  104,512 KB
                                   Font Version:       Version 1.3 (Hewlett-Packard)
                                   Typeface Name       Garamond
                                   Weight-Style:       Antiqua
                                   Postscript(R) Name: Garamond-Antiqua

Garamond Kursiv
garr46w.ttf                                   09\01\1998 01:10 PM  92,084 KB
                                   Font Version:       Version 1.3 (Hewlett-Packard)
                                   Typeface Name       Garamond
                                   Weight-Style:       Kursiv
                                   Postscript(R) Name: Garamond-Kursiv

Garamond Halbfett
garr65w.ttf                                   09\01\1998 01:10 PM  104,816 KB
                                   Font Version:       Version 1.3 (Hewlett-Packard)
                                   Typeface Name       Garamond
                                   Weight-Style:       Halbfett
                                   Postscript(R) Name: Garamond-Halbfett

Garamond Kursiv Halbfett
garr66w.ttf                                   09\01\1998 01:10 PM  93,944 KB
                                   Font Version:       Version 1.3 (Hewlett-Packard)
                                   Typeface Name       Garamond
                                   Weight-Style:       Kursiv Halbfett
                                   Postscript(R) Name: Garamond-KursivHalbfett

Helvetica
helr45w.ttf                                   09\01\1998 01:10 PM  83,644 KB
                                   Font Version:       Version 1.3 (Hewlett-Packard)
                                   Typeface Name       Helvetica
                                   Weight-Style:       Regular
```

```
                                    Postscript(R) Name: Helvetica

Helvetica Oblique
helr46w.ttf                                   09\01\1998 01:10 PM  78,116 KB
                                    Font Version:       Version 1.3 (Hewlett-Packard)
                                    Typeface Name       Helvetica
                                    Weight-Style:       Oblique
                                    Postscript(R) Name: Helvetica-Oblique

Helvetica Narrow
helr47w.ttf                                   09\01\1998 01:10 PM  83,792 KB
                                    Font Version:       Version 1.3 (Hewlett-Packard)
                                    Typeface Name       Helvetica Narrow
                                    Weight-Style:       Regular
                                    Postscript(R) Name: Helvetica-Narrow

Helvetica Narrow Oblique
helr48w.ttf                                   09\01\1998 01:10 PM  78,448 KB
                                    Font Version:       Version 1.3 (Hewlett-Packard)
                                    Typeface Name       Helvetica Narrow
                                    Weight-Style:       Oblique
                                    Postscript(R) Name: Helvetica-Narrow-Oblique

Helvetica Bold
helr65w.ttf                                   09\01\1998 01:10 PM  83,980 KB
                                    Font Version:       Version 1.3 (Hewlett-Packard)
                                    Typeface Name       Helvetica
                                    Weight-Style:       Bold
                                    Postscript(R) Name: Helvetica-Bold

Helvetica Bold Oblique
helr66w.ttf                                   09\01\1998 01:10 PM  79,884 KB
                                    Font Version:       Version 1.3 (Hewlett-Packard)
                                    Typeface Name       Helvetica
                                    Weight-Style:       Bold Oblique
                                    Postscript(R) Name: Helvetica-BoldOblique

Helvetica Narrow Bold
helr67w.ttf                                   09\01\1998 01:10 PM  84,056 KB
                                    Font Version:       Version 1.3 (Hewlett-Packard)
                                    Typeface Name       Helvetica Narrow
                                    Weight-Style:       Bold
                                    Postscript(R) Name: Helvetica-Narrow-Bold

Helvetica Narrow Bold Oblique
helr68w.ttf                                   09\01\1998 01:11 PM  78,820 KB
                                    Font Version:       Version 1.3 (Hewlett-Packard)
                                    Typeface Name       Helvetica Narrow
```

```
                                    Weight-Style:       Bold Oblique
                                    Postscript(R) Name: Helvetica-Narrow-BoldOblique

Letter Gothic
letr45w.ttf                                  09\01\1998 01:11 PM  83,852 KB
                                    Font Version:       Version 1.3 (Hewlett-Packard)
                                    Typeface Name       Letter Gothic
                                    Weight-Style:       Regular
                                    Postscript(R) Name: LetterGothic

Letter Gothic Italic
letr46w.ttf                                  09\01\1998 01:11 PM  78,644 KB
                                    Font Version:       Version 1.3 (Hewlett-Packard)
                                    Typeface Name       Letter Gothic
                                    Weight-Style:       Italic
                                    Postscript(R) Name: LetterGothic-Italic

Letter Gothic Bold
letr65w.ttf                                  09\01\1998 01:11 PM  83,920 KB
                                    Font Version:       Version 1.3 (Hewlett-Packard)
                                    Typeface Name       Letter Gothic
                                    Weight-Style:       Bold
                                    Postscript(R) Name: LetterGothic-Bold

Marigold
marigold.ttf                                 07\16\1998 09:41 AM  103,036 KB
                                    Font Version:       Version 1.04
                                    Typeface Name       Marigold
                                    Weight-Style:       Regular
                                    Postscript(R) Name: Marigold

New Century Schoolbook Roman
ncsr55w.ttf                                  09\01\1998 01:11 PM  98,952 KB
                                    Font Version:       Version 1.3 (Hewlett-Packard)
                                    Typeface Name       New Century Schoolbook
                                    Weight-Style:       Roman
                                    Postscript(R) Name: NewCenturySchlbk-Roman

New Century Schoolbook Italic
ncsr56w.ttf                                  09\01\1998 01:11 PM  87,452 KB
                                    Font Version:       Version 1.3 (Hewlett-Packard)
                                    Typeface Name       New Century Schoolbook
                                    Weight-Style:       Italic
                                    Postscript(R) Name: NewCenturySchlbk-Italic

New Century Schoolbook Bold
ncsr75w.ttf                                  09\01\1998 01:11 PM  98,520 KB
                                    Font Version:       Version 1.3 (Hewlett-Packard)
```

```
                                Typeface Name       New Century Schoolbook
                                Weight-Style:       Bold
                                Postscript(R) Name: NewCenturySchlbk-Bold

New Century Schoolbook Bold Italic
ncsr76w.ttf                                  09\01\1998 01:11 PM  87,804 KB
                                Font Version:       Version 1.3 (Hewlett-Packard)
                                Typeface Name       New Century Schoolbook
                                Weight-Style:       Bold Italic
                                Postscript(R) Name: NewCenturySchlbk-BoldItalic

Antique Olive
olvr55w.ttf                                  09\01\1998 01:08 PM  83,148 KB
                                Font Version:       Version 1.3 (Hewlett-Packard)
                                Typeface Name       Antique Olive
                                Weight-Style:       Regular
                                Postscript(R) Name: AntiqueOlive

Antique Olive Italic
olvr56w.ttf                                  09\01\1998 01:08 PM  78,224 KB
                                Font Version:       Version 1.3 (Hewlett-Packard)
                                Typeface Name       Antique Olive
                                Weight-Style:       Italic
                                Postscript(R) Name: AntiqueOlive-Italic

Antique Olive Bold
olvr75w.ttf                                  09\01\1998 01:08 PM  83,424 KB
                                Font Version:       Version 1.3 (Hewlett-Packard)
                                Typeface Name       Antique Olive
                                Weight-Style:       Bold
                                Postscript(R) Name: AntiqueOlive-Bold

Palatino Roman
palr45w.ttf                                  09\01\1998 01:11 PM  99,008 KB
                                Font Version:       Version 1.3 (Hewlett-Packard)
                                Typeface Name       Palatino
                                Weight-Style:       Roman
                                Postscript(R) Name: Palatino-Roman

Palatino Italic
palr46w.ttf                                  09\01\1998 01:11 PM  87,184 KB
                                Font Version:       Version 1.3 (Hewlett-Packard)
                                Typeface Name       Palatino
                                Weight-Style:       Italic
                                Postscript(R) Name: Palatino-Italic

Palatino Bold
palr65w.ttf                                  09\01\1998 01:11 PM  98,812 KB
```

```
                                Font Version:       Version 1.3 (Hewlett-Packard)
                                Typeface Name       Palatino
                                Weight-Style:       Bold
                                Postscript(R) Name: Palatino-Bold

Palatino Bold Italic
palr66w.ttf                                  09\01\1998 01:11 PM  88,436 KB
                                Font Version:       Version 1.3 (Hewlett-Packard)
                                Typeface Name       Palatino
                                Weight-Style:       Bold Italic
                                Postscript(R) Name: Palatino-BoldItalic

CoronetPS Italic
ps_10249.ttf                                 10\24\2000 02:34 PM  67,296 KB
                                Font Version:       Version 1.0
                                Typeface Name       CoronetPS
                                Weight-Style:       Italic
                                Postscript(R) Name: Coronet-Regular

Eurostile
ps_10267.ttf                                 10\18\2000 01:22 PM  56,624 KB
                                Font Version:       Version 1.0
                                Typeface Name       Eurostile
                                Weight-Style:       Regular
                                Postscript(R) Name: Eurostile

Eurostile Bold
ps_10268.ttf                                 10\18\2000 01:22 PM  56,464 KB
                                Font Version:       Version 1.0
                                Typeface Name       Eurostile Bold
                                Weight-Style:       Regular
                                Postscript(R) Name: Eurostile-Bold

ClarendonPS
ps_10269.ttf                                 10\24\2000 02:34 PM  67,368 KB
                                Font Version:       Version 1.0
                                Typeface Name       ClarendonPS
                                Weight-Style:       Regular
                                Postscript(R) Name: Clarendon

Cooper Black
ps_10369.ttf                                 10\18\2000 01:18 PM  65,568 KB
                                Font Version:       Version 1.0
                                Typeface Name       Cooper Black
                                Weight-Style:       Regular
                                Postscript(R) Name: CooperBlack

Cooper Black Italic
```

```
ps_10370.ttf                                    10\18\2000 01:19 PM  66,016 KB
                                  Font Version:       Version 1.0
                                  Typeface Name       Cooper Black
                                  Weight-Style:       Italic
                                  Postscript(R) Name: CooperBlack-Italic

Goudy Bold Italic
ps_10695.ttf                                    10\18\2000 01:19 PM  68,356 KB
                                  Font Version:       Version 1.0
                                  Typeface Name       Goudy
                                  Weight-Style:       Bold Italic
                                  Postscript(R) Name: Goudy-BoldItalic

Antique Olive Roman Bold
ps_11118.ttf                                    10\18\2000 01:23 PM  54,304 KB
                                  Font Version:       Version 1.0
                                  Typeface Name       Antique Olive Roman
                                  Weight-Style:       Bold
                                  Postscript(R) Name: AntiqueOlive-Bold

Antique Olive Roman
ps_11119.ttf                                    10\18\2000 01:23 PM  54,232 KB
                                  Font Version:       Version 1.0
                                  Typeface Name       Antique Olive Roman
                                  Weight-Style:       Regular
                                  Postscript(R) Name: AntiqueOlive-Roman

Antique Olive CompactPS
ps_11120.ttf                                    10\24\2000 02:35 PM  55,004 KB
                                  Font Version:       Version 1.0
                                  Typeface Name       Antique Olive CompactPS
                                  Weight-Style:       Regular
                                  Postscript(R) Name: AntiqueOlive-Compact

StempelGaramond Roman
ps_11545.ttf                                    10\18\2000 01:23 PM  75,332 KB
                                  Font Version:       Version 1.0
                                  Typeface Name       StempelGaramond Roman
                                  Weight-Style:       Regular
                                  Postscript(R) Name: StempelGaramond-Roman

StempelGaramond Roman Italic
ps_11546.ttf                                    10\18\2000 01:23 PM  71,684 KB
                                  Font Version:       Version 1.0
                                  Typeface Name       StempelGaramond Roman
                                  Weight-Style:       Italic
                                  Postscript(R) Name: StempelGaramond-Italic
```

```
StempelGaramond Roman Bold
ps_11547.ttf                                    10\18\2000 01:24 PM  72,384 KB
                                 Font Version:       Version 1.0
                                 Typeface Name       StempelGaramond Roman
                                 Weight-Style:       Bold
                                 Postscript(R) Name: StempelGaramond-Bold

StempelGaramond Roman Bold Italic
ps_11548.ttf                                    10\18\2000 01:24 PM  72,596 KB
                                 Font Version:       Version 1.0
                                 Typeface Name       StempelGaramond Roman
                                 Weight-Style:       Bold Italic
                                 Postscript(R) Name: StempelGaramond-BoldItalic

Antique Olive Roman Italic
ps_11846.ttf                                    10\18\2000 01:24 PM  56,364 KB
                                 Font Version:       Version 1.0
                                 Typeface Name       Antique Olive Roman
                                 Weight-Style:       Italic
                                 Postscript(R) Name: AntiqueOlive-Italic

Optima
ps_12506.ttf                                    10\18\2000 01:24 PM  65,008 KB
                                 Font Version:       Version 1.0
                                 Typeface Name       Optima
                                 Weight-Style:       Regular
                                 Postscript(R) Name: Optima

Optima Italic
ps_12507.ttf                                    10\18\2000 01:25 PM  65,072 KB
                                 Font Version:       Version 1.0
                                 Typeface Name       Optima
                                 Weight-Style:       Italic
                                 Postscript(R) Name: Optima-Italic

Optima Bold
ps_12510.ttf                                    10\18\2000 01:25 PM  65,088 KB
                                 Font Version:       Version 1.0
                                 Typeface Name       Optima
                                 Weight-Style:       Bold
                                 Postscript(R) Name: Optima-Bold

Optima Bold Italic
ps_12511.ttf                                    10\18\2000 01:25 PM  66,068 KB
                                 Font Version:       Version 1.0
                                 Typeface Name       Optima
                                 Weight-Style:       Bold Italic
                                 Postscript(R) Name: Optima-BoldItalic
```

Goudy
ps_12542.ttf 10\18\2000 01:19 PM 70,656 KB
Font Version: Version 1.0
Typeface Name Goudy
Weight-Style: Regular
Postscript(R) Name: Goudy

Goudy Italic
ps_12543.ttf 10\18\2000 01:19 PM 69,224 KB
Font Version: Version 1.0
Typeface Name Goudy
Weight-Style: Italic
Postscript(R) Name: Goudy-Italic

Goudy Bold
ps_12544.ttf 10\18\2000 01:20 PM 70,100 KB
Font Version: Version 1.0
Typeface Name Goudy
Weight-Style: Bold
Postscript(R) Name: Goudy-Bold

Goudy ExtraBold
ps_12545.ttf 10\18\2000 01:20 PM 68,468 KB
Font Version: Version 1.0
Typeface Name Goudy ExtraBold
Weight-Style: Regular
Postscript(R) Name: Goudy-ExtraBold

BodoniPS
ps_12581.ttf 10\24\2000 02:35 PM 66,748 KB
Font Version: Version 1.0
Typeface Name BodoniPS
Weight-Style: Regular
Postscript(R) Name: Bodoni

BodoniPS Italic
ps_12582.ttf 10\24\2000 02:35 PM 69,248 KB
Font Version: Version 1.0
Typeface Name BodoniPS
Weight-Style: Italic
Postscript(R) Name: Bodoni-Italic

BodoniPS Bold
ps_12585.ttf 10\24\2000 02:35 PM 67,520 KB
Font Version: Version 1.0
Typeface Name BodoniPS
Weight-Style: Bold

```
                                    Postscript(R) Name: Bodoni-Bold

BodoniPS Bold Italic
ps_12586.ttf                                  10\24\2000 02:36 PM  69,344 KB
                                    Font Version:       Version 1.0
                                    Typeface Name       BodoniPS
                                    Weight-Style:       Bold Italic
                                    Postscript(R) Name: Bodoni-BoldItalic

Lubalin Graph Italic
ps_12623.ttf                                  10\24\2000 01:24 PM  69,304 KB
                                    Font Version:       Version 1.0
                                    Typeface Name       Lubalin Graph
                                    Weight-Style:       Italic
                                    Postscript(R) Name: LubalinGraph-BookOblique

Lubalin Graph Bold Italic
ps_12625.ttf                                  10\24\2000 01:25 PM  71,676 KB
                                    Font Version:       Version 1.0
                                    Typeface Name       Lubalin Graph
                                    Weight-Style:       Bold Italic
                                    Postscript(R) Name: LubalinGraph-DemiOblique

Albertus MT
ps_12639.ttf                                  10\18\2000 01:21 PM  57,492 KB
                                    Font Version:       Version 1.0
                                    Typeface Name       Albertus MT
                                    Weight-Style:       Regular
                                    Postscript(R) Name: AlbertusMT

Albertus MT Italic
ps_12640.ttf                                  10\18\2000 01:21 PM  59,516 KB
                                    Font Version:       Version 1.0
                                    Typeface Name       Albertus MT
                                    Weight-Style:       Italic
                                    Postscript(R) Name: AlbertusMT-Italic

Lubalin Graph
ps_12675.ttf                                  10\18\2000 01:27 PM  62,700 KB
                                    Font Version:       Version 1.0
                                    Typeface Name       Lubalin Graph
                                    Weight-Style:       Regular
                                    Postscript(R) Name: LubalinGraph-Book

Lubalin Graph Bold
ps_12677.ttf                                  10\24\2000 01:24 PM  63,100 KB
                                    Font Version:       Version 1.0
                                    Typeface Name       Lubalin Graph
```

```
                                    Weight-Style:       Bold
                                    Postscript(R) Name: LubalinGraph-Demi

Bodoni Poster
ps_12704.ttf                                 10\18\2000 01:27 PM  68,464 KB
                                    Font Version:       Version 1.0
                                    Typeface Name       Bodoni Poster
                                    Weight-Style:       Regular
                                    Postscript(R) Name: Bodoni-Poster

ClarendonPS Bold
ps_12968.ttf                                 10\24\2000 02:36 PM  66,880 KB
                                    Font Version:       Version 1.0
                                    Typeface Name       ClarendonPS
                                    Weight-Style:       Bold
                                    Postscript(R) Name: Clarendon-Bold

Univers 45 Light
ps_13501.ttf                                 10\18\2000 01:28 PM  55,872 KB
                                    Font Version:       Version 1.0
                                    Typeface Name       Univers 45 Light
                                    Weight-Style:       Regular
                                    Postscript(R) Name: Univers-Light

Univers 45 Light Italic
ps_13502.ttf                                 10\24\2000 01:28 PM  60,468 KB
                                    Font Version:       Version 1.0
                                    Typeface Name       Univers 45 Light
                                    Weight-Style:       Italic
                                    Postscript(R) Name: Univers-LightOblique

Univers ExtendedPS
ps_13547.ttf                                 10\24\2000 02:37 PM  55,692 KB
                                    Font Version:       Version 1.0
                                    Typeface Name       Univers ExtendedPS
                                    Weight-Style:       Regular
                                    Postscript(R) Name: Univers-Extended

Univers ExtendedPS Bold
ps_13548.ttf                                 10\24\2000 02:37 PM  56,092 KB
                                    Font Version:       Version 1.0
                                    Typeface Name       Univers ExtendedPS
                                    Weight-Style:       Bold
                                    Postscript(R) Name: Univers-BoldExt

Letter GothicPS
ps_13777.ttf                                 10\24\2000 02:38 PM  55,712 KB
                                    Font Version:       Version 1.0
```

```
                                    Typeface Name       Letter GothicPS
                                    Weight-Style:       Regular
                                    Postscript(R) Name: LetterGothic

Letter GothicPS Italic
ps_13778.ttf                                  10\24\2000 02:38 PM  59,412 KB
                                    Font Version:       Version 1.0
                                    Typeface Name       Letter GothicPS
                                    Weight-Style:       Italic
                                    Postscript(R) Name: LetterGothic-Slanted

Letter GothicPS Bold
ps_13779.ttf                                  10\24\2000 02:38 PM  55,496 KB
                                    Font Version:       Version 1.0
                                    Typeface Name       Letter GothicPS
                                    Weight-Style:       Bold
                                    Postscript(R) Name: LetterGothic-Bold

Letter GothicPS Bold Italic
ps_13780.ttf                                  10\24\2000 02:39 PM  59,624 KB
                                    Font Version:       Version 1.0
                                    Typeface Name       Letter GothicPS
                                    Weight-Style:       Bold Italic
                                    Postscript(R) Name: LetterGothic-BoldSlanted

GillSans Light
ps_13870.ttf                                  10\18\2000 01:29 PM  54,872 KB
                                    Font Version:       Version 1.0
                                    Typeface Name       GillSans Light
                                    Weight-Style:       Regular
                                    Postscript(R) Name: GillSans-Light

GillSans Light Italic
ps_13871.ttf                                  10\18\2000 01:29 PM  56,724 KB
                                    Font Version:       Version 1.0
                                    Typeface Name       GillSans Light
                                    Weight-Style:       Italic
                                    Postscript(R) Name: GillSans-LightItalic

GillSans
ps_13872.ttf                                  10\18\2000 01:29 PM  55,040 KB
                                    Font Version:       Version 1.0
                                    Typeface Name       GillSans
                                    Weight-Style:       Regular
                                    Postscript(R) Name: GillSans

GillSans Italic
ps_13873.ttf                                  10\18\2000 01:29 PM  57,100 KB
```

```
                                Font Version:       Version 1.0
                                Typeface Name       GillSans
                                Weight-Style:       Italic
                                Postscript(R) Name: GillSans-Italic

GillSans Bold
ps_13874.ttf                                 10\18\2000 01:30 PM  55,704 KB
                                Font Version:       Version 1.0
                                Typeface Name       GillSans
                                Weight-Style:       Bold
                                Postscript(R) Name: GillSans-Bold

GillSans Bold Italic
ps_13875.ttf                                 10\18\2000 01:30 PM  57,460 KB
                                Font Version:       Version 1.0
                                Typeface Name       GillSans
                                Weight-Style:       Bold Italic
                                Postscript(R) Name: GillSans-BoldItalic

Univers 55
ps_14021.ttf                                 10\18\2000 01:30 PM  55,428 KB
                                Font Version:       Version 1.0
                                Typeface Name       Univers 55
                                Weight-Style:       Regular
                                Postscript(R) Name: Univers

Univers 55 Italic
ps_14022.ttf                                 10\24\2000 01:28 PM  60,604 KB
                                Font Version:       Version 1.0
                                Typeface Name       Univers 55
                                Weight-Style:       Italic
                                Postscript(R) Name: Univers-Oblique

Univers 45 Light Bold
ps_14023.ttf                                 10\24\2000 01:32 PM  55,388 KB
                                Font Version:       Version 1.0
                                Typeface Name       Univers 45 Light
                                Weight-Style:       Bold
                                Postscript(R) Name: Univers-Bold

Univers 45 Light Bold Italic
ps_14024.ttf                                 10\24\2000 01:32 PM  62,288 KB
                                Font Version:       Version 1.0
                                Typeface Name       Univers 45 Light
                                Weight-Style:       Bold Italic
                                Postscript(R) Name: Univers-BoldOblique

Univers 57 Condensed
```

```
ps_14029.ttf                                    10\18\2000 01:31 PM  55,064 KB
                                  Font Version:       Version 1.0
                                  Typeface Name       Univers 57 Condensed
                                  Weight-Style:       Regular
                                  Postscript(R) Name: Univers-Condensed

Univers 47 CondensedLight Bold
ps_14030.ttf                                    10\24\2000 01:30 PM  55,440 KB
                                  Font Version:       Version 1.0
                                  Typeface Name       Univers 47 CondensedLight
                                  Weight-Style:       Bold
                                  Postscript(R) Name: Univers-CondensedBold

Univers 57 Condensed Italic
ps_14039.ttf                                    10\24\2000 01:29 PM  61,280 KB
                                  Font Version:       Version 1.0
                                  Typeface Name       Univers 57 Condensed
                                  Weight-Style:       Italic
                                  Postscript(R) Name: Univers-CondensedOblique

Univers 47 CondensedLight Bold Italic
ps_14040.ttf                                    10\24\2000 01:31 PM  60,664 KB
                                  Font Version:       Version 1.0
                                  Typeface Name       Univers 47 CondensedLight
                                  Weight-Style:       Bold Italic
                                  Postscript(R) Name: Univers-CondensedBoldOblique

GillSans ExtraBold
ps_14051.ttf                                    10\18\2000 01:32 PM  56,384 KB
                                  Font Version:       Version 1.0
                                  Typeface Name       GillSans ExtraBold
                                  Weight-Style:       Regular
                                  Postscript(R) Name: GillSans-ExtraBold

GillSans Condensed
ps_14053.ttf                                    10\18\2000 01:32 PM  54,028 KB
                                  Font Version:       Version 1.0
                                  Typeface Name       GillSans Condensed
                                  Weight-Style:       Regular
                                  Postscript(R) Name: GillSans-Condensed

GillSans Condensed Bold
ps_14054.ttf                                    10\18\2000 01:32 PM  54,904 KB
                                  Font Version:       Version 1.0
                                  Typeface Name       GillSans Condensed
                                  Weight-Style:       Bold
                                  Postscript(R) Name: GillSans-BoldCondensed
```

```
Oxford Italic
ps_14072.ttf                                  10\24\2000 01:26 PM  67,812 KB
                                   Font Version:       Version 1.0
                                   Typeface Name       Oxford
                                   Weight-Style:       Italic
                                   Postscript(R) Name: Oxford

Univers ExtendedPS Italic
ps_14480.ttf                                  10\24\2000 02:40 PM  59,976 KB
                                   Font Version:       Version 1.0
                                   Typeface Name       Univers ExtendedPS
                                   Weight-Style:       Italic
                                   Postscript(R) Name: Univers-ExtendedObl

Univers ExtendedPS Bold Italic
ps_14481.ttf                                  10\24\2000 02:40 PM  61,380 KB
                                   Font Version:       Version 1.0
                                   Typeface Name       Univers ExtendedPS
                                   Weight-Style:       Bold Italic
                                   Postscript(R) Name: Univers-BoldExtObl

Joanna MT
ps_14503.ttf                                  10\18\2000 01:33 PM  64,020 KB
                                   Font Version:       Version 1.0
                                   Typeface Name       Joanna MT
                                   Weight-Style:       Regular
                                   Postscript(R) Name: JoannaMT

Joanna MT Italic
ps_14504.ttf                                  10\18\2000 01:33 PM  65,876 KB
                                   Font Version:       Version 1.0
                                   Typeface Name       Joanna MT
                                   Weight-Style:       Italic
                                   Postscript(R) Name: JoannaMT-Italic

Joanna MT Bold
ps_14505.ttf                                  10\18\2000 01:34 PM  64,748 KB
                                   Font Version:       Version 1.0
                                   Typeface Name       Joanna MT
                                   Weight-Style:       Bold
                                   Postscript(R) Name: JoannaMT-Bold

Joanna MT Bold Italic
ps_14506.ttf                                  10\18\2000 01:34 PM  66,732 KB
                                   Font Version:       Version 1.0
                                   Typeface Name       Joanna MT
                                   Weight-Style:       Bold Italic
                                   Postscript(R) Name: JoannaMT-BoldItalic
```

Taffy
ps_14507.ttf 10\18\2000 01:20 PM 55,036 KB
Font Version: Version 1.0
Typeface Name Taffy
Weight-Style: Regular
Postscript(R) Name: Taffy

Bodoni PosterCompressed
ps_14508.ttf 10\18\2000 01:35 PM 66,784 KB
Font Version: Version 1.0
Typeface Name Bodoni PosterCompressed
Weight-Style: Regular
Postscript(R) Name: Bodoni-PosterCompressed

Eurostile ExtendedTwo
ps_14511.ttf 10\18\2000 01:35 PM 57,008 KB
Font Version: Version 1.0
Typeface Name Eurostile ExtendedTwo
Weight-Style: Regular
Postscript(R) Name: Eurostile-ExtendedTwo

Eurostile ExtendedTwo Bold
ps_14512.ttf 10\18\2000 01:35 PM 57,704 KB
Font Version: Version 1.0
Typeface Name Eurostile ExtendedTwo
Weight-Style: Bold
Postscript(R) Name: Eurostile-BoldExtendedTwo

Clarendon Light
ps_14513.ttf 10\18\2000 01:35 PM 66,192 KB
Font Version: Version 1.0
Typeface Name Clarendon Light
Weight-Style: Regular
Postscript(R) Name: Clarendon-Light

Copperplate32bc
ps_14514.ttf 10\18\2000 01:21 PM 64,556 KB
Font Version: Version 1.0
Typeface Name Copperplate32bc
Weight-Style: Regular
Postscript(R) Name: Copperplate-ThirtyTwoBC

Copperplate33bc
ps_14515.ttf 10\18\2000 01:21 PM 64,904 KB
Font Version: Version 1.0
Typeface Name Copperplate33bc
Weight-Style: Regular

```
                                    Postscript(R) Name: Copperplate-ThirtyThreeBC

Mona Lisa Recut
ps_14525.ttf                                 10\18\2000 02:04 PM  79,016 KB
                                    Font Version:       Version 1.0
                                    Typeface Name       Mona Lisa Recut
                                    Weight-Style:       Regular
                                    Postscript(R) Name: MonaLisa-Recut

Helvetica Condensed
ps_14526.ttf                                 10\18\2000 01:36 PM  55,992 KB
                                    Font Version:       Version 1.0
                                    Typeface Name       Helvetica Condensed
                                    Weight-Style:       Regular
                                    Postscript(R) Name: Helvetica-Condensed

Helvetica Condensed Italic
ps_14527.ttf                                 10\24\2000 01:21 PM  61,860 KB
                                    Font Version:       Version 1.0
                                    Typeface Name       Helvetica Condensed
                                    Weight-Style:       Italic
                                    Postscript(R) Name: Helvetica-Condensed-Oblique

Helvetica Condensed Bold
ps_14528.ttf                                 10\18\2000 01:36 PM  55,992 KB
                                    Font Version:       Version 1.0
                                    Typeface Name       Helvetica Condensed
                                    Weight-Style:       Bold
                                    Postscript(R) Name: Helvetica-Condensed-Bold

Helvetica Condensed Bold Italic
ps_14529.ttf                                 10\24\2000 01:22 PM  62,016 KB
                                    Font Version:       Version 1.0
                                    Typeface Name       Helvetica Condensed
                                    Weight-Style:       Bold Italic
                                    Postscript(R) Name: Helvetica-Condensed-BoldObl

Albertus MT Lt
ps_14530.ttf                                 10\18\2000 01:22 PM  59,508 KB
                                    Font Version:       Version 1.0
                                    Typeface Name       Albertus MT Lt
                                    Weight-Style:       Regular
                                    Postscript(R) Name: AlbertusMT-Light

Geneva
ps_24509.ttf                                 10\18\2000 01:37 PM  56,192 KB
                                    Font Version:       Version 1.0
                                    Typeface Name       Geneva
```

```
                                    Weight-Style:       Regular
                                    Postscript(R) Name: Geneva

New York
ps_24510.ttf                                  10\18\2000 01:37 PM  65,216 KB
                                    Font Version:       Version 1.0
                                    Typeface Name       New York
                                    Weight-Style:       Regular
                                    Postscript(R) Name: NewYork

Apple Chancery Italic
ps_24516.ttf                                  10\24\2000 01:19 PM  68,368 KB
                                    Font Version:       Version 1.0
                                    Typeface Name       Apple Chancery
                                    Weight-Style:       Italic
                                    Postscript(R) Name: Apple-Chancery

Candid
ps_24517.ttf                                  10\20\2000 02:36 PM  78,420 KB
                                    Font Version:       Version 1.0
                                    Typeface Name       Candid
                                    Weight-Style:       Regular
                                    Postscript(R) Name: Candid

Chicago
ps_24518.ttf                                  10\18\2000 02:05 PM  54,528 KB
                                    Font Version:       Version 1.0
                                    Typeface Name       Chicago
                                    Weight-Style:       Regular
                                    Postscript(R) Name: Chicago

Hoefler Text
ps_24519.ttf                                  10\24\2000 01:22 PM  78,444 KB
                                    Font Version:       Version 1.0
                                    Typeface Name       Hoefler Text
                                    Weight-Style:       Regular
                                    Postscript(R) Name: HoeflerText-Regular

Hoefler Text Italic
ps_24520.ttf                                  10\24\2000 01:23 PM  75,616 KB
                                    Font Version:       Version 1.0
                                    Typeface Name       Hoefler Text
                                    Weight-Style:       Italic
                                    Postscript(R) Name: HoeflerText-Italic

Hoefler Text Black
ps_24521.ttf                                  10\18\2000 01:37 PM  76,848 KB
                                    Font Version:       Version 1.0
```

```
                                    Typeface Name       Hoefler Text Black
                                    Weight-Style:       Regular
                                    Postscript(R) Name: HoeflerText-Black

Hoefler Text Black Italic
ps_24522.ttf                                  10\18\2000 01:37 PM  76,896 KB
                                    Font Version:       Version 1.0
                                    Typeface Name       Hoefler Text Black
                                    Weight-Style:       Italic
                                    Postscript(R) Name: HoeflerText-BlackItalic

Hoefler Text Ornaments
ps_24523.ttf                                  10\24\2000 04:36 PM  38,712 KB
                                    Font Version:       Version 1.0
                                    Typeface Name       Hoefler Text Ornaments
                                    Weight-Style:       Regular
                                    Postscript(R) Name: HoeflerText-Ornaments

Monaco
ps_24524.ttf                                  10\18\2000 02:06 PM  57,484 KB
                                    Font Version:       Version 1.0
                                    Typeface Name       Monaco
                                    Weight-Style:       Regular
                                    Postscript(R) Name: Monaco

MarigoldPS
ps_94073.ttf                                  10\24\2000 02:40 PM  73,724 KB
                                    Font Version:       Version 1.0
                                    Typeface Name       MarigoldPS
                                    Weight-Style:       Regular
                                    Postscript(R) Name: Marigold

SymbolPS
symps__.ttf                                   07\16\1998 09:41 AM  38,312 KB
                                    Font Version:       April 15,1997; 1.00, initial release
                                    Typeface Name       SymbolPS
                                    Weight-Style:       Regular
                                    Postscript(R) Name: Symbol

Times Roman
timr45w.ttf                                   09\01\1998 01:12 PM  96,340 KB
                                    Font Version:       Version 1.3 (Hewlett-Packard)
                                    Typeface Name       Times
                                    Weight-Style:       Roman
                                    Postscript(R) Name: Times-Roman

Times Italic
timr46w.ttf                                   09\01\1998 01:12 PM  86,420 KB
```

```
                                    Font Version:       Version 1.3 (Hewlett-Packard)
                                    Typeface Name       Times
                                    Weight-Style:       Italic
                                    Postscript(R) Name: Times-Italic

Times Bold
timr65w.ttf                                   09\01\1998 01:12 PM  95,648 KB
                                    Font Version:       Version 1.3 (Hewlett-Packard)
                                    Typeface Name       Times
                                    Weight-Style:       Bold
                                    Postscript(R) Name: Times-Bold

Times Bold Italic
timr66w.ttf                                   09\01\1998 01:12 PM  87,144 KB
                                    Font Version:       Version 1.3 (Hewlett-Packard)
                                    Typeface Name       Times
                                    Weight-Style:       Bold Italic
                                    Postscript(R) Name: Times-BoldItalic

Univers Medium
unvr55w.ttf                                   09\01\1998 01:12 PM  81,712 KB
                                    Font Version:       Version 1.3 (Hewlett-Packard)
                                    Typeface Name       Univers
                                    Weight-Style:       Medium
                                    Postscript(R) Name: Univers-Medium

Univers Medium Italic
unvr56w.ttf                                   09\01\1998 01:12 PM  76,812 KB
                                    Font Version:       Version 1.3 (Hewlett-Packard)
                                    Typeface Name       Univers
                                    Weight-Style:       Medium Italic
                                    Postscript(R) Name: Univers-MediumItalic

Univers Condensed Medium
unvr57w.ttf                                   09\01\1998 01:12 PM  82,728 KB
                                    Font Version:       Version 1.3 (Hewlett-Packard)
                                    Typeface Name       Univers Condensed
                                    Weight-Style:       Medium
                                    Postscript(R) Name: Univers-Condensed-Medium

Univers Condensed Medium Italic
unvr58w.ttf                                   09\01\1998 01:12 PM  78,072 KB
                                    Font Version:       Version 1.3 (Hewlett-Packard)
                                    Typeface Name       Univers Condensed
                                    Weight-Style:       Medium Italic
                                    Postscript(R) Name: Univers-Condensed-MediumItalic

Univers Bold
```

```
unvr65w.ttf                                   09\01\1998 01:12 PM  81,836 KB
                                  Font Version:       Version 1.3 (Hewlett-Packard)
                                  Typeface Name       Univers
                                  Weight-Style:       Bold
                                  Postscript(R) Name: Univers-Bold

Univers Bold Italic
unvr66w.ttf                                   09\01\1998 01:12 PM  76,884 KB
                                  Font Version:       Version 1.3 (Hewlett-Packard)
                                  Typeface Name       Univers
                                  Weight-Style:       Bold Italic
                                  Postscript(R) Name: Univers-BoldItalic

Univers Condensed Bold
unvr67w.ttf                                   09\01\1998 01:12 PM  82,876 KB
                                  Font Version:       Version 1.3 (Hewlett-Packard)
                                  Typeface Name       Univers Condensed
                                  Weight-Style:       Bold
                                  Postscript(R) Name: Univers-Condensed-Bold

Univers Condensed Bold Italic
unvr68w.ttf                                   09\01\1998 01:12 PM  78,144 KB
                                  Font Version:       Version 1.3 (Hewlett-Packard)
                                  Typeface Name       Univers Condensed
                                  Weight-Style:       Bold Italic
                                  Postscript(R) Name: Univers-Condensed-BoldItalic
```

15.0 Product Registration

```
Title:                    Product Registration (invisible component)
Description:              HP Web, E-mail, or mail-in Registration.
Type:                     Other Support SW or Online Document
```

15.1 All Windows 32 bit

```
Component:                WebReg
Component Version:        2.2.1.3
Supported OS:             All supported by Printing System CD
Supported Languages:      All supported by Printing System CD
Supported Connections:    All supported by Printing System CD
```

15.1.1 Component Size

Total File Count: 37
Total File Size: 1,727 KB

15.1.2 File Information - WebReg

Uninstall: Yes
CD Directory: <CD root>\setup\webreg
Install Directory:

9x/ME - <Drive>:\Program Files\Hewlett-Packard\LJ4100\WebReg
NT 4.0 - <Drive>:\Profile Files\Hewlett-Packard\LJ4100\WebReg
2000/XP - <Drive>:\Profile Files\Hewlett-Packard\LJ4100\WebReg

---

File Group: WebReg
Shared File: No
Potentially Locked: Yes
Self-Registering: No

File Name	File Version	Date Created	File Size	File Description
cp30fwm.dll		07\12\2000 01:28 PM	183,808	Application Dynamic-Link Library
del.dll		09\15\2000 12:19 PM	36,864	Application Dynamic-Link Library
emailhlp.chs		09\15\2000 12:18 PM	328	
emailhlp.cht		09\15\2000 12:18 PM	341	
emailhlp.csy		09\15\2000 12:18 PM	497	
emailhlp.cz		07\12\2000 01:28 PM	497	
emailhlp.da		07\12\2000 01:28 PM	476	
emailhlp.dan		09\15\2000 12:20 PM	476	
emailhlp.de		07\12\2000 01:28 PM	560	
emailhlp.en		07\12\2000 01:28 PM	598	
emailhlp.es		07\12\2000 01:28 PM	511	
emailhlp.fin		07\12\2000 01:28 PM	483	
emailhlp.fr		07\12\2000 01:28 PM	535	
emailhlp.hu		09\15\2000 12:18 PM	529	
emailhlp.it		07\12\2000 01:28 PM	576	
emailhlp.jp		07\12\2000 01:28 PM	508	
emailhlp.jpn		09\15\2000 12:20 PM	506	
emailhlp.ko		07\12\2000 01:28 PM	425	
emailhlp.kor		09\15\2000 12:20 PM	423	
emailhlp.nl		07\12\2000 01:28 PM	485	
emailhlp.no		07\12\2000 01:29 PM	441	
emailhlp.plk		09\15\2000 12:18 PM	440	
emailhlp.po		07\12\2000 01:29 PM	440	
emailhlp.pt		07\12\2000 01:29 PM	461	

emailhlp.ru		09\15\2000 12:18 PM	554	
emailhlp.sv		07\12\2000 01:29 PM	448	
emailhlp.sve		09\15\2000 12:20 PM	448	
emailhlp.th		07\12\2000 01:29 PM	424	
emailhlp.tha		09\15\2000 12:19 PM	422	
emailhlp.trk		09\15\2000 12:19 PM	478	
msvcrt.dll	6.00.8397.0	07\12\2000 01:29 PM	266,293	Microsoft (R) C Runtime Library
sccrc32n.dll	3.0.0.0	09\15\2000 12:18 PM	45,056	Application Dynamic-Link Library
scwr32n.dll	3.0.0.0	09\15\2000 12:18 PM	53,248	Application Dynamic-Link Library
webreg.exe	3.7.6	01\10\2002 08:03 AM	479,290	Registration Player Application
webreg.rpd	2.2.1.2	01\16\2002 02:37 PM	612,009	
zlib.dll	2.2.1.2	09\15\2000 12:19 PM	77,824	Application Dynamic-Link Library

File Group: WebRegProduct
Shared File: No
Potentially Locked: Yes
Self-Registering: No

File Name	File Version	Date Created	File Size	File Description
reg.prm	2.2.1.2	01\14\2002 01:51 PM	1,128	

15.1.3 Icon Entries

Icon Name: Web Registration
Action: Replace - Replaces an existing value. Creates a new value if the value does not exist.
Group Type: Personal (Applies to Windows NT, 2000 and XP Only)
Icon Link: (9x/ME) <Drive>:\Program Files\Hewlett-Packard\LJ4100\WebReg\WebReg.exe
(NT4/2000/XP) <Drive>:\Profile Files\Hewlett-Packard\LJ4100\WebReg\WebReg.exe
Root Folder: Programs: Adds an icon to the Start Menu\Programs Folder\Sub-Folder.
Uninstall: Yes

16.0 HP Driver Test Page

Title: HP Driver Test Page (invisible component)
Description: Prints HP version of a driver test page.
Type: Other Support SW or Online Document

16.1 All Windows 32 bit

Component: TestPage
Component Version: 3.0.0.0
Supported OS: All supported by Printing System CD
Supported Languages: All supported by Printing System CD
Supported Connections: All supported by Printing System CD

16.1.1 Component Size

Total File Count: 1
Total File Size: 720 KB

16.1.2 File Information - Testpage

Uninstall: Yes
CD Directory: CAB File
Install Directory:

9x/ME - <Drive>:\Program Files\Hewlett-Packard\LJ4100
NT 4.0 - <Drive>:\Profile Files\Hewlett-Packard\LJ4100
2000/XP - <Drive>:\Profile Files\Hewlett-Packard\LJ4100

File Group: Testpage_En
Shared File: No
Potentially Locked: No
Self-Registering: No

File Name	File Version	Date Created	File Size	File Description
hptp32.exe	1.0.0.1	03\06\2002 12:09 PM	737,280	hptp32MFCApplication

---

17.0 Adobe® Acrobat® Reader(TM)

UI Title: Adobe® Acrobat® Reader(TM)
UI Description: Acrobat Reader is not installed on your system. Installing the reader will allow viewing of the online documentation.
Type: Other Support SW or Online Document

17.1 All Windows 32 bit

Component: Reader
Component Version: 5.0.0.1
Supported OS: All supported by Printing System CD
Supported Languages: All supported by Printing System CD
Supported Connections: All supported by Printing System CD

17.1.1 Component Installation Availability

Check user's system for Adobe Acrobat Reader. If already installed do not allow component to be selectable for installation.

17.1.2 Component Size

Total File Count: 1
Total File Size: 8,770 KB

17.1.3 File Information - Reader

Uninstall: Yes
CD Directory: <CD root>\<language>\reader\
Install Directory:

9x/ME - <Drive>:\Windows\Temp
NT 4.0 - <Drive>:\Windows\Temp
2000/XP - <Drive>:\Windows\Temp

File Group: Reader_En
Shared File: No
Potentially Locked: No
Self-Registering: No

File Name	File Version	Date Created	File Size	File Description
ar.exe	2.02.001	12\19\2001 08:32 AM	8,981,440	PackageForTheWeb Stub

---

18.0 Release Notes

Title: Release Notes (invisible component)
Description: Installation/Release Notes

Type: Other Support SW or Online Document

18.1 All Windows 32 bit

Component: RelNotes
Component Version: 4.0.0.0
Supported OS: All supported by Printing System CD
Supported Languages: All supported by Printing System CD
Supported Connections: All supported by Printing System CD

18.1.1 Component Size

Total File Count: 1
Total File Size: 40 KB

18.1.2 File Information - RelNotes

Uninstall: Yes
CD Directory: <CD root>\<language>
Install Directory:

9x/ME - <Drive>:\Program Files\Hewlett-Packard\LJ4100\Manuals
NT 4.0 - <Drive>:\Profile Files\Hewlett-Packard\LJ4100\Manuals
2000/XP - <Drive>:\Profile Files\Hewlett-Packard\LJ4100\Manuals

---

File Group: RelNotes_En
Shared File: No
Potentially Locked: No
Self-Registering: No

File Name	File Version	Date Created	File Size	File Description
read4100.wri		01\23\2002 05:06 PM	41,353	Windows Write Document File

---

18.1.3 Icon Entries

Icon Name: Readme
Action: Replace - Replaces an existing value. Creates a new value if the value does not exist.
Group Type: Personal (Applies to Windows NT, 2000 and XP Only)
Icon Link: (9x/ME) <Drive>:\Program Files\Hewlett-Packard\LJ4100\Manuals\Read4100.wri

(NT4/2000/XP) <Drive>:\Profile Files\Hewlett-Packard\LJ4100\Manuals\Read4100.wri

Root Folder: Programs: Adds an icon to the Start Menu\Programs Folder\Sub-Folder.

Uninstall: Yes

19.0 Online User's Guide

UI Title: Online User's Guide

UI Description: HP LaserJet 4100 User's Guide, which includes information about product operation, troubleshooting, warranty and specifications, supplies, and support.

Type: Other Support SW or Online Document

19.1 Windows 32 bit - Printer Manuals

Component: UserGuide

Component Version: 4.0.0.0

Supported OS: All supported by Printing System CD

Supported Languages:

Chinese-Simplified	Hungarian
Polish	Russian
Turkish	Japanese
Korean	Chinese-Traditional
Czech	Arabic
Hebrew	

Language Count: 11

Supported Connections: All supported by Printing System CD

19.1.1 Component Size

Total File Count: 2

Total File Size: 9,402 KB

19.1.2 File Information - UserGuide

Uninstall: Yes

CD Directory: <CD root>\chi_trad\manuals

Install Directory:

9x/ME - <Drive>:\Program Files\Hewlett-Packard\LJ4100\Manuals

NT 4.0 - <Drive>:\Profile Files\Hewlett-Packard\LJ4100\Manuals

2000/XP - <Drive>:\Profile Files\Hewlett-Packard\LJ4100\Manuals

File Group: User_Guide_PDF_Cs
Shared File: No
Potentially Locked: No
Self-Registering: No

File Name	File Version	Date Created	File Size	File Description
hp4100cs.pdf		02\09\2002 04:00 PM	8,408,551	Adobe Portable Document Format File
hp4100mfpstart.pdf		11\14\2001 06:51 AM	1,219,268	Adobe Portable Document Format File

19.1.3 Icon Entries

Icon Name: Online User's Guide
Action: Replace - Replaces an existing value. Creates a new value if the value does not exist.
Group Type: Personal (Applies to Windows NT, 2000 and XP Only)
Icon Link: (9x/ME) <Drive>:\Program Files\Hewlett-Packard\LJ4100\Manuals\hp4100<510>.pdf
(NT4/2000/XP) <Drive>:\Profile Files\Hewlett-Packard\LJ4100\Manuals\hp4100<510>.pdf
Root Folder: Programs: Adds an icon to the Start Menu\Programs Folder\Sub-Folder.
Uninstall: Yes

19.2 Windows 32 bit - MFP and Printer Manuals

Component: UserGuideMFP
Component Version: 4.0.0.0
Supported OS: All supported by Printing System CD
Supported Languages:

English	French-Standard
German	Italian
Spanish	Danish
Dutch	Finnish
Norwegian	Portuguese-Brazil
Swedish	

Language Count: 11
Supported Connections: All supported by Printing System CD

19.2.1 Component Size

Total File Count: 5

Total File Size: 24,479 KB

19.2.2 File Information - UserGuide

Uninstall: Yes
CD Directory: <CD root>\<language>\manuals
Install Directory:

9x/ME - <Drive>:\Program Files\Hewlett-Packard\LJ4100\Manuals
NT 4.0 - <Drive>:\Profile Files\Hewlett-Packard\LJ4100\Manuals
2000/XP - <Drive>:\Profile Files\Hewlett-Packard\LJ4100\Manuals

---

File Group: User_Guide_PDF_En
Shared File: No
Potentially Locked: No
Self-Registering: No

File Name	File Version	Date Created	File Size	File Description
hp4100mfp.pdf		12\18\2001 02:27 AM	4,804,261	Adobe Portable Document Format File
hp4100en.pdf		02\11\2002 08:57 AM	7,095,958	Adobe Portable Document Format File
hp4100mfpstart.pdf		11\14\2001 06:51 AM	1,219,268	Adobe Portable Document Format File
c48911_e.pdf		01\10\2002 04:45 PM	10,364,555	Adobe Portable Document Format File
hp4100en.chm		02\09\2002 04:00 PM	1,582,648	Compiled HTML Help File

---

19.2.3 Icon Entries

Icon Name: Online User's Guide
Action: Replace - Replaces an existing value. Creates a new value if the value does not exist.
Group Type: Personal (Applies to Windows NT, 2000 and XP Only)
Icon Link: (9x/ME) <Drive>:\Program Files\Hewlett-Packard\LJ4100\Manuals\hp4100<510>.pdf
(NT4/2000/XP) <Drive>:\Profile Files\Hewlett-Packard\LJ4100\Manuals\hp4100<510>.pdf
Root Folder: Programs: Adds an icon to the Start Menu\Programs Folder\Sub-Folder.
Uninstall: Yes

Icon Name: Online User's Guide MFP
Action: Replace - Replaces an existing value. Creates a new value if the value does not exist.
Group Type: Personal (Applies to Windows NT, 2000 and XP Only)

```
                    Icon Link:          (9x/ME)        <Drive>:\Program Files\Hewlett-
Packard\LJ4100\Manuals\hp4100mfp.pdf
                                        (NT4/2000/XP)  <Drive>:\Profile Files\Hewlett-
Packard\LJ4100\Manuals\hp4100mfp.pdf
                    Root Folder:        Programs: Adds an icon to the Start Menu\Programs Folder\Sub-Folder.
                    Uninstall:          Yes

                    Icon Name:          MFP start guide
                    Action:             Replace - Replaces an existing value.  Creates a new value if the value does not
exist.
                    Group Type:         Personal (Applies to Windows NT, 2000 and XP Only)
                    Icon Link:          (9x/ME)        <Drive>:\Program Files\Hewlett-
Packard\LJ4100\Manuals\hp4100mfpstart.pdf
                                        (NT4/2000/XP)  <Drive>:\Profile Files\Hewlett-
Packard\LJ4100\Manuals\hp4100mfpstart.pdf
                    Root Folder:        Programs: Adds an icon to the Start Menu\Programs Folder\Sub-Folder.
                    Uninstall:          Yes



End of Report.
```

invent

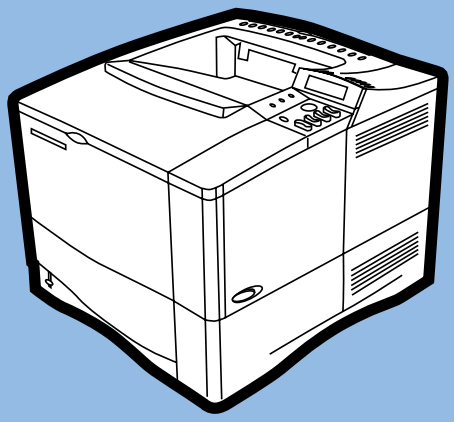

hp LaserJet 4100

invent

service manual

HP LaserJet 4100 Series Printer

Service Manual

Publication number C8049-90920

First edition, April 2001

Warranty

The information contained in this document is subject to change without notice.

Hewlett-Packard makes no warranty of any kind with respect to this information. HEWLETT-PACKARD SPECIFICALLY DISCLAIMS THE IMPLIED WARRANTY OF MERCHANTABILITY AND FITNESS FOR A PARTICULAR PURPOSE.

Hewlett-Packard shall not be liable for any direct, indirect, incidental, consequential, or other damage alleged in connection with the furnishing or use of this information.

Trademark Credits

ENERGY STAR® is a U.S. registered mark of the United States Environmental Protection Agency.

Microsoft® is a U.S. registered trademark of Microsoft Corp.

MS-DOS® is a U.S. registered trademark of Microsoft Corp.

Netscape™ is a U.S. trademark of Netscape Communications Corporation.

PostScript™ is a trademark of Adobe Systems Incorporated that may be registered in certain jurisdictions.

TrueType™ is a U.S. trademark of Apple Computer, Inc.

Hewlett-Packard Company
11311 Chinden Boulevard
Boise, Idaho 83714 U.S.A.

Contents

1 Printer description

2 Service approach

3 Printer operation

4 Printer maintenance

5 Theory of operation

6 Removing and replacing parts

7 Troubleshooting

8 Parts and diagrams

Index

Figures

Tables

1 Printer description

Chapter contents

Printer features

Table 1. Printer features for the HP LaserJet 4100 series printers

Models	**HP LaserJet 4100 (C8049A):** • 25 pages per minute (ppm) for letter-size paper, and 24 ppm for A4-size paper • 16 megabytes (MB) random-access memory (RAM) • 600-sheets input capacity **HP LaserJet 4100N (C8050A):** Base unit plus the following: • 16 MB RAM (32 MB total) • 10/100BaseT card **HP LaserJet 4100TN (C8051A):** Base unit plus the following: • 16 MB RAM (32 MB total) • 10/100BaseT card • One 500-sheet feeder (1100-sheet input capacity) **HP LaserJet 4100DTN (C8052A):** Base unit plus the following: • 16 MB RAM (32 MB total) • 10/100BaseT card • One 500-sheet feeder (1100-sheet input capacity) • Duplex printing accessory
Accessories	• Stackable 500-sheet feeder with XY size capability • Duplex printing accessory • 75-sheet envelope feeder • 4, 8, 16, 32, 64, and 128 MB dual inline memory modules (DIMMs) • 2 and 4 MB flash DIMMs • LocalTalk/Universal Serial Bus (USB)/Serial and Token Ring EIO cards • Infrared adapter • Enhanced input/output (EIO) hard disk drive • HP Print to Mail (not available in all regions)
Speed	• 25 ppm for letter-size paper, and 24 ppm for A4-size paper • RIP ONCE (rasterized image processing) capability with 16 MB or hard-disk options for faster production • First page out = 12 seconds • 250 MHz RISC processor

Table 1. Printer features for the HP LaserJet 4100 series printers (continued)

Resolution	The printer prints true 1200 dpi and supports the following: • HP ProRes 1200 at full engine speed (PCL6 and PS)—produces 1200-dpi printing for the best quality of graphic images • HP FastRes 1200 (PCL6 only)—produces emulated 1200-dpi print quality for fast, high-quality printing of business text and graphics • 600 dpi with PCL5e and PS • 300 dpi with PCL5e and HP PostScript™ Level 3 emulation (PS)
Typefaces/fonts	110 Scalable TrueType™ (80 built-in, 30 with HP FontSmart, all PCL and PS accessible)
Memory	Standard Memory: • HP LaserJet 4100: 16 MB synchronous dynamic random access memory (SDRAM) standard (installed on a DIMM) • HP LaserJet 4100N/4100TN/4100DTN: 32 MB SDRAM standard (installed on a DIMM) Optional Memory: • 4, 8, 16, 32, 64, and 128 MB SDRAM DIMM • Expandable memory (up to 256 MB) using three DIMM slots
Mass storage options	• 2 and 4 MB flash DIMMs • 2 gigabyte (GB) or larger EIO hard disk
Interface	• Bidirectional (IEEE-1284-compliant) parallel interface • Paper-handling connector (PHC) • 10/100Base-TX Fast Ethernet (4100N/4100TN/4100DTN)
Optional networking	• Enhanced input/output (EIO)—HP JetDirect EIO internal print server network cards • Token Ring (EIO) network cards • Fast Ethernet (10/100Base-TX single RJ-45 port) • HP JetDirect Connectivity card (EIO) for USB, Serial, LocalTalk
Expansion slots	• Three 100-pin DIMM slots • Two EIO slots

Table 1. Printer features for the HP LaserJet 4100 series printers (continued)

Paper trays	**100-sheet tray 1** • Standard and custom sizes: from 76 by 127 mm (3 by 5 inches) to 216 by 356 mm (8.5 by 14 inches) **500-sheet tray 2** • Letter: 216 by 279 mm (8.5 by 11 inches) • A4: 210 by 297 mm (8.3 by 11.7 inches) • Executive: 191 by 267 mm (7.3 by 10.5 inches) • Legal: 216 by 356 mm (8.5 by 14 inches) • B5 (JIS): 182 by 257 mm (7.2 by 10 inches) • A5: 148 by 210 mm (5.8 by 8.2 inches) • Custom sizes: from 148 by 210 mm (5.8 by 8.2 in) to 216 by 356 mm (8.5 by 14 in) **500-sheet tray 3 (HP LaserJet 4100TN/4100DTN)** • Letter: 216 by 279 mm (8.5 by 11 inches) • A4: 210 by 297 mm (8.3 by 11.7 inches) • Executive: 191 by 267 mm (7.3 by 10.5 inches) • Legal: 216 by 356 mm (8.5 by 14 inches) • B5 (JIS): 182 by 257 mm (7.2 by 10 inches) • A5: 148 by 210 mm (5.8 by 8.2 inches) • Custom sizes: from 148 by 210 mm (5.8 by 8.2 in) to 216 by 356 mm (8.5 by 14 in) **Optional 500-sheet tray** • Letter: 216 by 279 mm (8.5 by 11 inches) • A4: 210 by 297 mm (8.3 by 11.7 inches) • Executive: 191 by 267 mm (7.3 by 10.5 inches) • Legal: 216 by 356 mm (8.5 by 14 inches) • B5 (JIS): 182 by 257 mm (7.2 by 10 inches) • A5: 148 by 210 mm (5.8 by 8.2 inches) • Custom sizes: from 148 by 210 mm (5.8 by 8.2 in) to 216 by 356 mm (8.5 by 14 in)
Paper path	Straight-through paper path available.
Output capacity	• 250-sheet top output bin (with bin-full sensor) • 50-sheet rear output bin
Input capacity	• HP LaserJet 4100 and 4100N: hold 600 sheets of paper. • HP LaserJet 4100TN and 4100DTN: hold 1,100 sheets of paper. • Expandable to hold up to 1,600 sheets of paper with optional 500-sheet tray(s); also holds envelopes.
Media handling options	• Duplexer • Envelope feeder (up to 75 envelopes) • 500-sheet tray • HP Print to Mail (not available in all regions)
Media weights	See page 25 through page 27.

Table 1. Printer features for the HP LaserJet 4100 series printers (continued)

HP genuine toner cartridge	• No-shake cartridge design. • HP UltraPrecise toner for crisp, sharp output. • Supplies status page—provides information about the toner gauge, page count, and paper sizes used in the printer.
Printer languages	• HP PCL6 • HP PCL5e • PostScript 3 emulation • Automatic language switching
Duty cycle	Up to 150,000 pages per month.
Expanded support capabilities	Embedded Web server provides remote access and status information.

Product compatibility matrix

Table 2. Product compatibility matrix

		HP LaserJet printer series:		
Product	**Part number**	**4000**	**4050**	**4100**
Envelope feeder	C4122A	●	●	
	C8053A	●	●	●
Duplex printing accessory (duplexer)	C4123A	●	●	
	C8054A	●	●	●
Toner cartridges				
6,000 pages	C4127A	●	●	
10,000 pages	C4127X	●	●	
6,000 pages	C8061A	●	●	●
10,000 pages	C8061X	●	●	●
Paper trays				
500-sheet paper feeder and tray	C4124A	●[1]	●[1]	●[2]
500-sheet paper feeder and tray	C8055A	●[1]	●[1]	●
500-sheet replacement tray	C4125A	●[1]	●[1]	●[2]
500-sheet replacement tray	C8056A	●[1]	●[1]	●
500-sheet standard replacement tray	C3122A	●[3]	●[3]	●[3]
250-sheet standard replacement tray	C4126A	●[1]	●[1]	

1. A5 size is detected as custom size.
2. A5 size is detected as custom size; larger custom sizes might be detected as A5 size.
3. Supports only letter, A4, and legal sizes.

Table 2. Product compatibility matrix

		HP LaserJet printer series:		
Product	**Part number**	**4000**	**4050**	**4100**
Memory				
4 MB extended data out (EDO) DIMM	C4135A	●		
8 MB EDO DIMM	C4136A	●		
16 MB EDO DIMM	C4137A	●		
4 MB SDRAM DIMM	C4140A	●	●	●
8 MB SDRAM DIMM	C4141A	●	●	●
8 MB SDRAM DIMM	C7842A	●	●	●
16 MB SDRAM DIMM	C4142A	●	●	●
16 MB SDRAM DIMM	C7843A	●	●	●
24 MB SDRAM DIMM	C7844A	●	●	●
32 MB SDRAM DIMM	C4143A	●	●	●
32 MB SDRAM DIMM	C7845A	●	●	●
64 MB SDRAM DIMM	C3913A	●	●	●
64 MB SDRAM DIMM	C7846A	●	●	●
128 MB SDRAM DIMM	C9121A			●
2 MB flash DIMM	C4286A	●	●	●
4 MB flash DIMM	C4287A	●	●	●
Font DIMMs				
Traditional Chinese font DIMM (8 MB Asian read-only memory [ROM])	C4292A	●	●	●
Simplified Chinese font DIMM (8 MB Asian ROM)	C4293A	●	●	●
Korean font DIMM (8 MB Asian ROM)	D4838A	●	●	●
Jet Direct EIO cards				
Ethernet RJ-45 only	J3110A	●	●	●
Ethernet RJ-45 and BNC, LocalTalk	J3111A	●	●	●
Token Ring	J4167A	●	●	●
10/100Base-TX	J4169A	●	●	●
USB, LocalTalk, and Serial	J4135A	●	●	●
Fast infrared receiver (FIR) pod	C4103A		●	●
EIO hard disk	C2985B	●	●	●
Preventive maintenance kits, user installable (consumable)				
110 V kit	C7851A	●	●	
220 V kit	C7852A	●	●	
110 V kit	C8057A			●
220 V kit	C8058A			●

Identification

Model and serial numbers

The model number and printer serial number are listed on an identification label located under the top cover on the right side of the printer. The model number is alphanumeric, such as C8049A for the HP LaserJet 4100 printer.

The serial number contains information about the country of origin, the revision level, the production code, and production number of the printer. An example of a serial number is USBB123456.

The label also contains power rating and regulatory information as shown in figure 1.

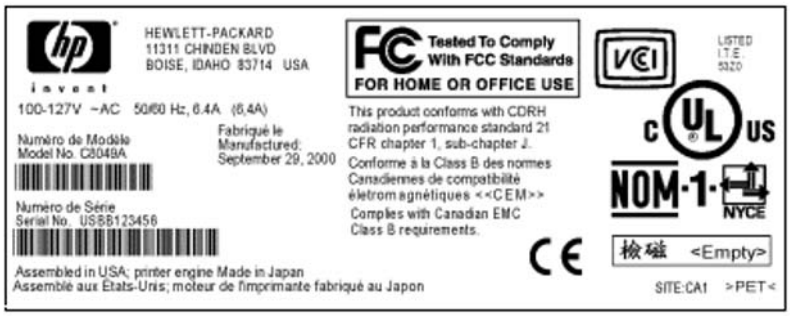

Figure 1. **Sample label**

Site requirements

The following environmental specifications must be maintained to ensure the correct operation of the printer. Consider the following points before installing the printer:

- Install in a well-ventilated, dust-free area.
- Install on a hard, flat, continuous surface, with all four printer feet level. Do not install on carpet or other soft surfaces.
- Ensure adequate power is supplied. Printer power requirements are listed in table 3. Uninterruptable power supplies (UPSs) are not recommended.
- Install where temperature and humidity are stable, away from water sources, humidifiers, air conditioners, refrigerators, or other major appliances. See table 4 for temperature and humidity ranges.
- Install away from direct sunlight, open flames, or ammonia fumes. If the printer is placed near a window, make sure the window has a curtain or blind to block direct sunlight.
- Install with enough space around the printer for access and ventilation.
- Install away from the direct flow of exhaust from air ventilation systems.

Table 3. Electrical specifications for the HP LaserJet 4100 series printers

Volts	Frequency	Circuit Capacity	Watts (W) (typical)
100-127 VAC±10%	50/60 Hz ± 3 Hz	Minimum recommended = 10 amps	printing = 450 W standby = 19 W PowerSave on = 18 W (EPA ENERGY STAR®)
220-240 VAC±10%	50/60 Hz ± 3 Hz	Minimum recommended = 5 amps	printing = 450 W standby = 19 W PowerSave on = 18 W (EPA ENERGY STAR®)

Installation requirements

Install the printer with enough space around it to open trays and bins, install toner, and perform maintenance. If the duplexer is installed, the printer needs 101 mm (4 inches) of ventilation space on the left side (fan side) and rear of the printer.

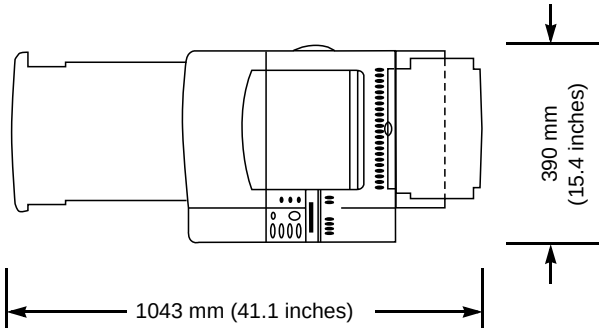

Figure 2. **Top view, HP LaserJet 4100/4100N/4100TN/4100DTN printer with trays and rear output bin open**

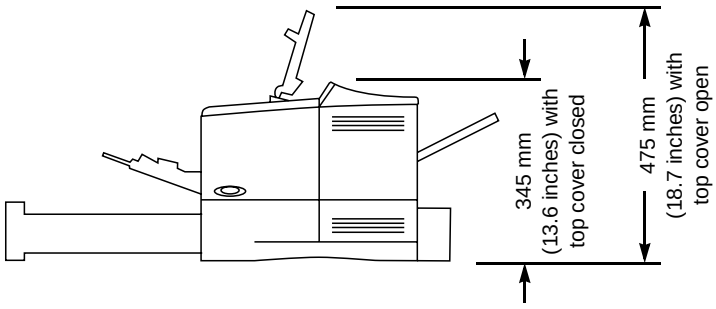

Figure 3. **Side view, HP LaserJet 4100/4100N printer**

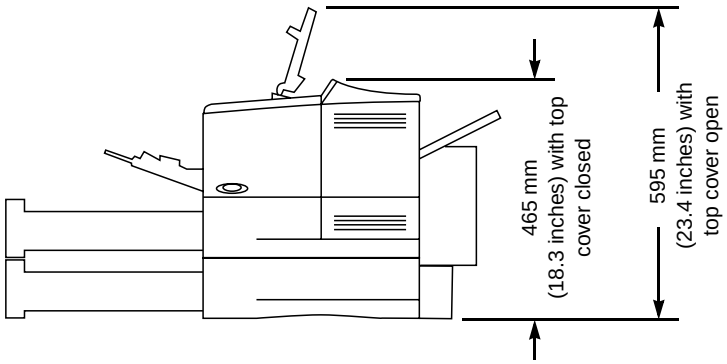

Figure 4. **Side view, HP LaserJet 4100TN/4100DTN printer**

Printer weight (without toner cartridge)

- HP LaserJet 4100/4100N printers: 18 kg (39 lb)
- HP LaserJet 4100TN printer: 25 kg (55 lb)
- HP LaserJet 4100DTN printer: 28 kg (62 lb)

Environmental requirements

Table 4. Printer and toner cartridge environmental conditions

Item	Operating	Storage
Temperature	10° to 32° C (50 to 91° F)	Toner cartridge: 0° to 35°C (32 to 95° F) Printer: -20 to 60°C (-4° to 140° F)
Relative humidity	20 to 80 percent relative humidity (RH) (with no condensation)	10 to 95 percent RH

Table 5. Operating sound power or pressure (Per ISO 9296)

Sound power level	L_{WAd}= 6.6 Bels (A) printing, L_{WAd}= 4.1 Bels (A) idle
Operating position	L_{pAm}= 58 dB (A) printing, L_{pAm}= 32 dB (A) idle
Bystander position	L_{pAm}= 52 dB (A) printing, L_{pAm}= 26 dB (A) idle

Note Testing per International Standards Organization (ISO) 9296/7779

Print media specifications

The following tables show print media specifications for the HP LaserJet 4100 series printer.

Table 6. Print media specifications, tray 1

Supported media	Dimensions[1]	Weight	Capacity[2]
Minimum size (custom[3])	76 by 127 mm (3 by 5 inches)	60 to 199 g/m^2 (16 to 53 lb)	100 sheets of 75 g/m^2 (20 lb) paper
Maximum size (custom[3])	216 by 356 mm (8.5 by 14 inches)		
Transparencies	Same as minimum and maximum paper sizes listed above	Thickness: 0.10 to 0.11 mm (0.0039 to 0.0043 inch)	50 transparencies
Labels		Thickness: 0.13 to 0.18 mm (0.005 to 0.007 inch)	50 labels
Envelopes		75 to 105 g/m^2 (20 to 28 lb)	10 envelopes

1. The printer supports a wide range of print media sizes. Check the printer software for supported sizes. To print custom-size media, see the user guide.

2. Capacity can vary depending on media weight and thickness, and environmental conditions.

3. Custom media must be fed short-edge first (portrait).

Table 7. Print media specifications, trays 2, 3, and 4

Supported media	Dimensions[1]	Weight	Capacity[2]
Letter	216 by 279 mm (8.5 by 11 inches)	60 to 105 g/m^2 (16 to 28 lb)	500 sheets of 75 g/m^2 (20 lb) paper or 50 transparencies
A4	210 by 297 mm (8.3 by 11.7 inches)		
Executive	191 by 267 mm (7.3 by 10.5 inches)		
Executive (JIS) (custom[3])	216 by 330 mm (8.5 by 13 inches)		
16K (custom[3])	197 by 273 mm (7.75 by 10.75 inches)		
Legal	216 by 356 mm (8.5 by 14 inches)		
B5 (ISO) (custom[3])	176 by 250 mm (6.9 by 9.9 inches)		
B5 (JIS)	182 by 257 mm (7.2 by 10 inches)		
A5	148 by 210 mm (5.8 by 8.2 inches)		
Custom[3]	148 by 210 mm to 216 by 356 mm (5.8 by 8.2 inches to 8.5 by 14 inches)		

1. The printer supports a wide range of print media sizes. Check the printer software for supported sizes. To print custom-size media, see the user guide.

2. Capacity can vary depending on media weight and thickness, and environmental conditions.

3. Custom media must be fed short-edge first (portrait).

Table 8. Print media specifications, optional envelope feeder

Supported envelope	Dimensions	Weight	Capacity[1]
Monarch (#7 3/4)	98.4 by 190.5 mm (3.88 by 7.50 inches)	75 to 105 g/m2 (20 to 28 lb)	75 envelopes
Commercial 10 (#10)	104.9 by 241.3 mm (4.13 by 9.5 inches)		
DL ISO	110 by 220 mm (4.33 by 8.66 inches)		
C5 ISO	162 by 229 mm (6.38 by 9.02 inches)		
B5 ISO	176 by 250 mm (6.93 by 9.84 inches)		

1. Capacity can vary depending on media weight and thickness, and environmental conditions.

Table 9. Print media specifications, optional duplexer

Supported media	Dimensions	Weight
Letter	216 by 279 mm (8.5 by 11 inches)	60 to 105 g/m2 (16 to 28 lb)
A4	210 by 297 mm (8.3 by 11.7 inches)	
Executive	184 by 267 mm (7.3 by 10.5 inches)	
Legal	216 by 356 mm (8.5 by 14 inches)	
B5 (JIS)	182 by 257 mm (7.2 by 10 inches)	

Supported types of print media

The printer supports the following types of print media:

- plain
- letterhead
- prepunched
- bond
- color
- rough
- preprinted
- transparency (see page 32)
- labels (see page 31)
- recycled
- card stock

Note Transparencies and labels must be specified for use in laser printers.

Types of print media to avoid

The following characteristics can affect the performance of the HP LaserJet printer unless the paper or other print media used is specifically designed to work with the HP LaserJet printer.

- Print media that is very rough, highly textured, or heavily embossed.
- Print media with multipart forms.
- Print media that offsets materials or discolors.
- Print media that is damaged, curled, wrinkled, or irregularly shaped.
- Paper that is extremely shiny or glossy.
- Paper, labels, envelopes, or transparencies that produce undesirable emissions or melt when exposed to a fusing temperature between 175° to 230° C (347° to 446° F) for 0.1 second.
- Media coatings, dyes, or inks that produce undesirable emissions or melt when exposed to a fusing temperature between 175° to 230° C (347° to 446° F) for 0.1 second.
- Envelopes that have an open flap with the adhesive exposed so that closing the flap seals the envelope.
- Envelopes with clasps, snaps, tie strings, windows, or synthetic materials. These materials can severely damage the printer.
- Envelopes that are not square, straight, or constructed correctly (see "Envelope construction" on page 33).
- Envelopes with a basis weight less than 60 g/m^2 (16 lb) or greater than 105 g/m^2 (28 lb).
- Envelopes with baggy construction or folds that are not sharply creased.

Note Some media types might not work in the printer because of differences in manufacturer specifications or environmental conditions.

Weight equivalence table

The following table shows equivalent weights for different grades of paper. A boldface type value indicates a commonly available standard weight for that grade. Shaded boxes indicate a commonly available standard weight for that grade.

Note Text and book grades marked with an asterisk (*) actually calculate to 51, 61, 71, and 81 but are rounded to standard book or text weights of 50, 60, 70, and 80.

Table 10. Weight equivalence table

Bond weight (17 by 22 inches)	Book/text weight (25 by 38 inches)	Cover weight (20 by 26 inches)	Bristol weight (22.5 by 28.5 inches)	Index weight (25.5 by 30.5 inches)	Tag weight (24 by 36 inches)	Metric weight
16#	41#	22#	27#	33#	37#	60 g/m^2
17#	43#	24#	29#	35#	39#	64 g/m^2
20#	50# *	28#	34#	42#	46#	75 g/m^2
21#	54#	30#	36#	44#	49#	80 g/m^2
24#	60# *	33#	41#	50#	55#	90 g/m^2
27#	68#	37#	45#	55#	61#	100 g/m^2
28#	70# *	39#	49#	58#	65#	105 g/m^2
29#	74#	41#	50#	61#	68#	110 g/m^2
32#	80# *	44#	55#	67#	74#	120 g/m^2
36#	90#	50#	62#	75#	83#	135 g/m^2
39#	100#	55#	67#	82#	91#	148 g/m^2
40#	101#	55#	68#	83#	92#	150 g/m^2
43#	110#	60#	74#	90#	100#	163 g/m^2
45#	115#	63#	77#	94#	104#	170 g/m^2
47#	119#	65#	80#	97#	108#	176 g/m^2
51#	128#	70#	86#	105#	117#	190 g/m^2
53#	134#	74#	90#	110#	122#	199 g/m^2
54#	137#	75#	93#	113#	125#	203 g/m^2
58#	146#	80#	98#	120#	133#	216 g/m^2
65#	165#	90#	111#	135#	150#	244 g/m^2
66#	169#	92#	114#	138#	154#	250 g/m^2
67#	171#	94#	115#	140#	155#	253 g/m^2
70#	178#	98#	120#	146#	162#	264 g/m^2
72#	183#	100#	123#	150#	166#	271 g/m^2

Adhesive labels

When printing on labels, use of tray 1 is recommended. Labels are multiple-layer media typically consisting of a face sheet (the printable surface), pressure-sensitive adhesive, and a liner (a carrier sheet coated with a release agent). Labels used in the HP LaserJet printer must be specifically designed for laser printers. If labels other than those compatible with laser printers are used, there is a significant risk of labels peeling or of adhesive contamination that can severely damage the printer. All materials in laser label stock must be compatible with the heat and pressure of the fusing process.

The table below summarizes the adhesive label specifications that provide the best performance.

Table 11. Adhesive labels specifications

Property	Specifications
Adhesive	Must not be on any external surfaces of the label before, during, or after printing. Label construction, adhesive release strength, and die-cutting must not allow labels to peel off during printing.
Caliper (thickness)	Must not exceed 0.23 mm (9.0 mils).
Fusing compatibility	All inks, adhesives, and other materials used in the label construction must be compatible with the heat and pressure of the fusing process. Materials must not scorch, melt, ignite, offset materials, or release undesirable emissions when heated to a temperature between 175° to 230° C (347° to 446° F) for 0.1 second.
Packaging	Adhesive labels should be packaged in moisture-proof wrap to preserve properties.
Shelf life	One year maximum, stored at 23° C (73° F) and 50 percent RH.

Overhead transparencies

When printing transparencies, use of tray 1 is recommended. Overhead transparency film must be designed specifically for use with laser printers. Photocopy transparency film might not be compatible with laser printers because of higher temperature and stiffness requirements.

Overhead transparency film is very smooth and must have a topcoat to provide the proper electrical and toner adhesion properties. A transparency that is made of poor materials or that is too thin can easily melt in the fuser and damage the printer.

Overhead transparency materials must be compatible with the heat and pressure of the fusing process.

The table below summarizes the overhead transparency specifications that provide the best performance.

Table 12. Overhead transparencies specifications

Property	Specifications
Caliper (thickness)	0.10 mm to 0.11 mm (4.0 mils to 4.4 mils).
Electrical surface resistivity	2.0 to 15 by 10^{10} ohms/square.
Fusing compatibility	Overhead transparency materials must be compatible with the heat and pressure of the fusing process. Materials must not discolor, melt, offset materials, or release undesirable emissions when heated to a temperature between 175° to 230° C (347° to 446° F) for 0.1 second.

Envelopes

Envelope construction

Envelopes can only be printed from tray 1 or from the optional envelope feeder. Because of their construction, some envelopes will not feed through the printer dependably. Observe the following guidelines when purchasing and using envelopes:

- Make sure the envelope's leading edge, which enters the printer first, is straight, with a sharp, well-creased fold that has no more than two thicknesses of paper. Envelopes that exceed 105 g/m^2 (28 lb) basis weight can cause jamming.
- Avoid using flimsy envelopes with thick or curved leading edges; they will not feed reliably.
- Envelopes should lie flat and should not be wrinkled, nicked, or otherwise damaged.
- Avoid envelopes with baggy construction; they might wrinkle while going through the printer's fuser assembly.
- Make sure that the adhesive labels used on envelopes will not scorch, melt, offset, or release undesirable emissions when heated to a temperature between 175° to 230° C (347° to 446° F) for 0.1 second.
- Avoid using envelopes with encapsulated adhesives that rely on pressure rather than moistening to seal.
- Do not use envelopes with clasps, snaps, tie strings, transparent windows, holes, perforations, or cutouts.
- Do not use envelopes that have any adhesive surfaces exposed to the printer.
- Woven or smooth finishes are recommended to ensure good toner adhesion on envelopes.

Many envelopes will feed through the HP LaserJet printer without problems. However, some envelope constructions (as shown in the figure below) will not feed reliably. Problems can occur when the envelopes are folded more tightly than normal, causing a thick leading edge near a corner. Folding inconsistencies at the manufacturer can cause some envelopes to feed well and others to jam.

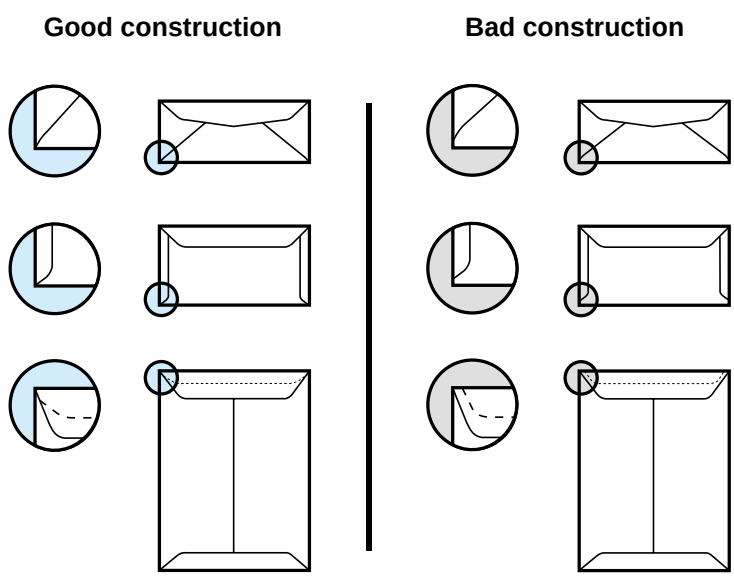

Envelope specifications

The table below summarizes the envelope specifications that provide the best performance.

Table 13. Envelope specifications

Property	Specifications
Basis weight	64 g/m^2 to 105 g/m^2 (17 lb to 28 lb) typical. See the user guide for specific printer and input limits.
Caliper (thickness)	0.09 mm to 0.14 mm (3.6 mil to 5.5 mil) typical single-layer thickness.
Surface roughness	100 to 200 Sheffield.
Fusing compatibility	All inks, adhesives, and other materials used in the envelope construction must be compatible with the heat and pressure of the fusing process. Materials must not scorch, melt, ignite, offset materials, or release undesirable emissions when heated to a temperature between 175° to 230° C (347° to 446° F) for 0.1 second.
Dimensional accuracy and construction quality	• Envelopes must be folded within ±1.0 mm (±0.04 inch) of nominal size with no more than two thickness of paper anywhere along the leading edge. • All folds must be sharply creased and construction must be tight (not baggy) to avoid wrinkling. • Envelopes must not be stuck together from excess seam adhesive (blocking). • The flap must be flat within 1.5 mm (0.059 in) over the width where adhesive is applied.
Curl	Envelopes must lie flat, with no more than 6 mm (0.25 inch) curl across the entire surface.
Adhesive flap curl	Envelope flap should be flat, with 1.5 mm (0.059 inch) over the width where adhesive is applied.
Moisture content	4 percent to 6 percent by weight.
Grain	Different envelope constructions might require different grain orientations for best performance, which is left to the discretion of the manufacturer.
Packaging	Envelopes should be contained in a protective box to prevent edge damage and maintain flatness.

Card stock and heavy paper

Many types of card stock and paper can be printed from tray 1, including index cards and postcards.

For optimum printer performance, do not use paper heavier than 199 g/m^2 (53 lb) in tray 1 or 105 g/m^2 (28 lb) in other trays. Paper that is too heavy might cause misfeeds, stacking problems, jams, poor toner fusing, poor print quality, or excessive mechanical wear.

Note Before loading card stock, make sure it is regular in shape and not damaged or wrinkled. Also, make sure the cards are not stuck together.

The table below summarizes the paper specifications that provide the best performance.

Table 14. Paper specifications

Property	Specifications
Basis weight	64 g/m^2 to 105 g/m^2 (17 lb to 28 lb) typical. See the user guide for specific printer and input limits.
Caliper (thickness)	0.09 mm to 0.17 mm (3.5 mil to 6.5 mil) typical. See the user guide for specific printer and input limits.
Minimum stiffness	1.2 minimum (Taber) machine direction; 0.8 minimum (Taber) cross direction.
Grain	Portrait feeding: short or long grain up to 36 lb. Landscape feeding: long grain.
Electrical surface resistivity	10^9 to 10^{13} ohms/square.
Electrical volume resistivity	10^9 to 10^{14} ohms - cm.
Surface roughness	100 to 190 Sheffield optimal; 30 to 350 Sheffield extended (fusing or feeding performance can be degraded at outer ranges).
Fusing compatibility	Must not scorch, melt, ignite, offset materials, or release undesirable emissions when heated to a temperature between 175° to 230° C (347° to 446° F) for 0.1 second.
Furnish (composition)	One hundred percent chemical pulp and/or cotton content; recycled paper with up to 5 percent groundwood can be used.
Dimensional accuracy	Cut sheet within ±0.80 mm (±0.03 inch) of nominal.
Cut edge quality	Cuts must be smooth and clean with no fray or edge roll.
Curl	Must lie flat within 5 mm (0.2 inch).
Moisture content	4 percent to 6 percent by weight.
Packaging	Card stock and heavy paper should be packaged in a moisture-proof ream wrap.
Wax pick	12 minimum (Dennison).

Safety information

Toner safety

Handling and storage

WARNING! Keep toner cartridges and toner particles away from excessive heat, sparks, and open flames.

If toner is spilled, avoid breathing in toner particles. Inhalation of toner particles can cause respiratory tract irritation. Vacuum or sweep the material into a bag or other sealed container. If a vacuum is used, the motor must be rated as dust-tight.

Dispose of waste toner in accordance with local requirements. Do not discharge toner particles in drains.

First aid measures

- **Ingestion**. If toner is ingested, drink several glasses of water. Get medical attention if discomfort persists.
- **Inhalation**. If toner particles are inhaled, move to fresh air immediately. If symptoms occur (such as coughing, dizziness, or difficulty breathing), consult a physician.
- **Eye contact**. If toner comes in contact with the eyes, immediately flush with plenty of water for at least 15 minutes. If irritation persists, consult a physician.
- **Skin contact**. If toner spills on skin, remove as much toner as possible with a dry tissue, and then wash with cold water.

Clothing contact

Note Toner can stain clothing. Hot water or heat (from a clothes dryer) can cause toner to melt and permanently fuse into clothing.

Clothing is best cleaned by removing as much toner as possible with a dry tissue, and then washing with cold water. Air-dry clothing.

Additional information

The Toner Cartridge/Drum Material Safety Data Sheet (MSDS) can be obtained by contacting HP at the following website:
http://www.ljsupplies.com

Laser safety

Do not open the laser scanner assembly. Avoid direct exposure to the laser beams.

WARNING! Using controls, making adjustments, bypassing safety switches, or performing procedures other than those specified in this service manual can result in exposure to hazardous radiation.

Regulatory information

For regulatory information and requirements, please see the user guide.

2 Service approach

Chapter contents

Service approach

Repair of the printer normally begins with use of the printer's internal diagnostics in conjunction with the troubleshooting procedures in chapter 7. When a faulty part is located, repair is generally accomplished by assembly-level replacement of field-replaceable units (FRUs). Some mechanical assemblies might be repaired at the subassembly level. Hewlett-Packard does not support replacement of components on printed circuit boards.

Parts and supplies

Ordering information

Chapter 8 of this manual contains FRU and accessory part numbers. Replacement parts can be ordered from the HP Customer Services and Support Organization.

Use only accessories specifically designed for this printer. Order accessories from an authorized service or support provider. (See page 42.)

Printer documentation

The table below lists part numbers to use when ordering documentation. For information about ordering, see page 42.

Note Some of the materials listed in table 15 are also available online at http://www.hp.com.

Table 15. Printer documentation

Item	Description or use	Part number
HP LaserJet Printer Family Print Media Guide	A guide to using paper and other print media with HP LaserJet printers	5963-7863 (English only)
PCL 5/PJL Technical Reference Documentation Package	A guide to using printer commands with HP LaserJet printers	5021-0330 (English only)
HP LaserJet Basics CD-ROM	A guide to using HP LaserJet printer hardware	H8789A (English only); online at: http://software.hp.com
User Getting Started Guide, HP LaserJet 4100 Series Printers	An additional copy of the user getting started guide	C8049-90903 (English only)
HP LaserJet 4100 Series Printers User Documentation CD-ROM	An additional copy of the user documentation CD-ROM	C8049-60104 (English only)
HP LaserJet 4100 Series Printers Software Technical Reference	A guide to the printer software	C8049-90921 (English only)
Service and Support CD-ROM for the HP LaserJet 4100 Series Printers	An interactive training CD-ROM for printer service representatives and customer care specialists	C8049-60116 (English only)
HP LaserJet 4100 Series Printers Service Manual	A service manual for the 4100 printer series.	C8049-90920 (English only)
HP LaserJet 4100 Series Printers Training Kit	Includes service manual and service and support CD-ROM	C8049-67901 (English only)

HP direct ordering for genuine HP parts

Customer Services and Support Organization (CSSO):

- (1) (800) 227-8164 (U.S. only)
- (49 7031) 142253 (Europe only)
- See chapter 8 for additional information.

Exchange program

HP offers remanufactured assemblies for some parts. These are identified in chapter 8 and can be ordered through CSSO.

Consumables

Paper and toner cartridges can be ordered directly from Hewlett-Packard. See chapter 8 for ordering information.

World Wide Web

Printer drivers, updated HP printer software, and product and support information can be obtained from the following URL:
in the U.S., http://www.hp.com/support/lj4100

Printer drivers can be obtained from the following sites:

in China, ftp://www.hp.com.cn/support/lj4100
in Japan, ftp://www.jpn.hp.com/support/lj4100
in Korea, http://www.hp.co.kr/support/lj4100
in Taiwan, http://www.hp.com.tw/support/lj4100
or the local driver website, http://www.dds.com.tw

HP service parts information compact disc

This powerful, CD-ROM-based parts information tool is designed to give users fast, easy access to parts information and recommended stocking lists for a wide range of HP products. To subscribe to this quarterly service in the U.S. or Canada, call (1) (800) 336-5987. In Asia Pacific, call (65) 740-4484. Parts identification and pricing information can also be found on the World Wide Web at: http://www.hp.com/go/partsinfo

HP support assistant compact disc

This support tool offers a comprehensive online information system designed to provide technical and product information about Hewlett-Packard products. To subscribe to this quarterly service in the U.S. or Canada, call (1) (800) 457-1762. In Hong Kong, Indonesia, Malaysia, or Singapore, call Mentor Media at (65) 740-4477.

Customer care reseller sales and service support center

The Customer Care Reseller Sales and Service Support Center is available to assist resellers and service technicians. To reach this support center, call (1) (800) 544-9976.

HP authorized resellers and support

To locate authorized HP resellers and support, call
(1) (800) 243-9816 in the U.S. or (1) (800) 387-3867 in Canada.

HP service agreements

Call (1) (800) 743-8305 in the U.S. or (1) (800) 268-1221 in Canada.

Other areas

Outside of North America and Europe, contact the local HP sales office for assistance in obtaining technical support for resellers and service technicians.

Toner cartridge information

The toner cartridge is designed to simplify replacement of the major “consumable” parts. The toner cartridge contains the printing mechanism and a supply of toner.

At five percent page coverage, a toner cartridge will print approximately 6,000 or 10,000 pages, depending on the toner cartridge model installed. A toner cartridge might print fewer pages if routinely printing with dense ink coverage, or more pages when routinely printing pages with less ink coverage, such as short memos. If EconoMode or small media is always used, however, the toner supply could outlast the mechanical parts in the toner cartridge.

Note For best results, always use a toner cartridge before the expiration date stamped on the toner cartridge box.

Refilled toner cartridges

While Hewlett-Packard does not prohibit the use of refilled toner cartridges during the warranty period or while the printer is under a maintenance contract, it is not recommended for the following reasons:

- Repairs resulting from the use of refilled toner cartridges are not covered under Hewlett-Packard warranty or maintenance contracts.
- Hewlett-Packard has no control or process to ensure that a refilled toner cartridge functions at the high level of reliability of a new HP LaserJet toner cartridge. Hewlett-Packard also cannot predict the long-term reliability effect on the printer from using different toner formulations found in refilled cartridges.
- The print quality of HP LaserJet toner cartridges influences the customer’s perception of the printer. Hewlett-Packard has no control over the actual print quality of a refilled toner cartridge.

Recycling toner cartridges

To reduce waste, Hewlett-Packard offers a recycling program for used toner cartridges. Cartridge components that do not wear out are recycled. Plastics and other materials are recycled.

Hewlett-Packard pays the shipping costs from the user to the recycling plant. For each cartridge returned, Hewlett-Packard donates one U.S. dollar to be shared by the Nature Conservancy and the National Wildlife Federation. To join this recycling effort, follow the instructions inside the toner cartridge box.

Warranty statement

The warranty for this product gives the customer specific legal rights. There might also be other rights that vary from area to area.

Printer warranty

Hewlett-Packard warrants the HP LaserJet 4100 series printer for one year. For detailed information about the printer warranty, see the limited warranty statement in the user guide.

Limited warranty for toner cartridge life

Note The warranty below applies to the toner cartridge that came with this printer. This warranty supersedes all previous warranties (7/19/96).

The HP toner cartridge is warranted to be free from defects in materials and workmanship for the life of the cartridge until the HP toner is depleted. The HP toner is depleted when the printer indicates a toner-low message. Hewlett-Packard will, at its option, either replace products that prove to be defective or refund the purchase price.

The warranty does not cover toner cartridges that have been refilled, or are emptied, abused, misused, or tampered with in any way. This limited warranty gives the customer specific legal rights. The customer might have other rights which vary from state to state, province to province, and country to country.

To the extent allowed by applicable law, in no event shall Hewlett-Packard Company be liable for any incidental, consequential, special, indirect, punitive, or exemplary damages or lost profits from any break of this warranty or otherwise.

3 Printer operation

Chapter contents

Using the control panel

Control panel layout

The printer control panel consists of a two-line display and lights and keys as shown below:

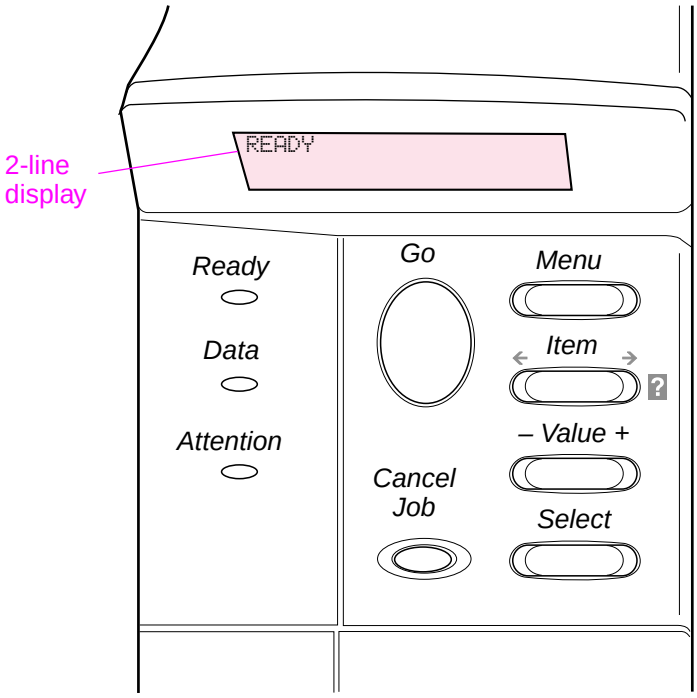

Figure 5. **Control panel layout**

Control panel lights

Table 16. Control panel lights

Light	Indication
Ready	The printer is ready to print.
Data	The printer is processing information.
Attention	Action is required. See the control panel display.

Control panel keys

Table 17. Control panel keys

Key	Function
GO	• Places the printer either online or offline. • Prints any data in the printer's buffer. • Allows the printer to resume printing after being offline. Clears most printer messages and places the printer online. • Allows the printer to continue printing with an error message such as `TRAY X LOAD [TYPE] [SIZE]` or `UNEXPECTED PAPER SIZE`. • Confirms a manual feed request if tray 1 is loaded and `TRAY 1 MODE=CASSETTE` has been set from the paper-handling menu on the printer control panel. • Overrides a manual feed request from tray 1 by selecting paper from the next available tray. • Exits the control panel menus. (To save a selected control panel setting, first press SELECT.)
CANCEL JOB	Cancels the print job that the printer is processing. The time and pages it takes to cancel depends on the size of the print job and the number of pages in the buffer. (Press it only once.)
MENU	Cycles through the control panel menus. Press the right end of the button to move forward or the left end of the button to move backward.
ITEM	Cycles through the selected menu's items. Press the right end of the button to move forward or the left end of the button to move backward.
– VALUE +	Cycles through the selected menu item's values. Press + to move forward or – to move backward.
SELECT	• Saves the selected value for that item. An asterisk (*) appears next to the selection to indicate that it is the new default. Default settings remain when the printer is switched off or reset. • Prints any information pages shown in the control panel.
?	Provides instructions for resolving most printer errors. Certain control panel error messages alternate with instructions about gaining access to the online help system. Press the right end of the ITEM button to scroll through help messages.

Settings and defaults

The printer makes most printing decisions based on either temporary settings or permanent defaults.

Note Settings sent from software applications override printer defaults.

Table 18. Settings and defaults

Setting or default	Explanation
Temporary setting	A value set for the current print job by the software application. For example, a request from the software to print three copies instead of the control panel default value of one copy is a temporary setting. The printer continues to use the temporary setting until it receives another software request or until it is reset.
Control panel default	A value set at the control panel when you select a menu item. An asterisk appears, indicating the default setting. The printer retains this default when it is turned off.
Factory default	The value set for each menu item at the factory. Factory defaults are listed in the item column in the menu tables starting on page 52.

Setting the display language

1. Press and hold SELECT while turning on the printer. Hold SELECT until SELECT LANGUAGE appears on the control panel display.
2. Release SELECT.
3. When LANGUAGE=ENGLISH appears on the display, press – VALUE + until the language you want appears.
4. Press SELECT to save your choice.
   An asterisk (*) will appear beside the selected language.
5. Press GO to exit the menu.

Control panel menus

Press MENU for access to all control panel menus. When additional trays or other accessories are installed in the printer, new menu items might automatically appear.

Changing a control panel setting

1 Press MENU until the menu you want appears on the control panel display.

2 Press ITEM until the item you want appears.

3 Press – VALUE + until the setting you want appears.

4 Press SELECT to save the selection.
An asterisk (*) appears next to the selection in the display, indicating that it is now the default.

5 Press GO to exit the menu.

Note

Settings in the printer driver and software application override control panel settings. Software application settings override printer driver settings.

If you cannot get to a menu or item, it is either not an option for the printer, or the customer's network administrator has locked the function (the control panel reads `ACCESS DENIED MENUS LOCKED`). See the customer's network administrator.

Printing a control panel menu map

To see the current settings for all of the menus and menu items available on the control panel, print a control panel menu map.

1 Press MENU until `INFORMATION MENU` appears on the control panel display.

2 Press ITEM until `PRINT MENU MAP` appears.

3 Press SELECT to print the menu map.

Quick copy jobs menu

This menu provides a list of the quick copy jobs stored on the printer. The user can print or delete these jobs from the control panel.

Note This menu appears only if you have an optional hard-disk accessory or 32 MB of memory installed and quick copy jobs are stored on it.

Table 19. Quick copy jobs menu

Item	Value	Explanation
[USERNAME] [JOBNAME]		The name of the person who owns the quick copy job and the job name.
COPIES=1	1 to 999 DELETE	The number of additional copies the user wants to print. 1-999: Prints the requested number of copies of the job. DELETE: Deletes the job from the printer's hard disk. After changing a setting, press SELECT.

Private/stored jobs menu

This menu provides a list of the stored jobs on the printer. The user can print or delete these jobs from the control panel. See the user guide for more information.

Note This menu appears only if you have an optional hard-disk accessory or 32 MB of memory installed and there are private or stored jobs on it.

Table 20. Private/stored jobs menu

Item	Value	Explanation
[USERNAME] [JOBNAME]		The name of the person who owns the quick copy job and the job name.
PIN:0000		To print the job, the user must enter the personal identification number (PIN) assigned to the job in the driver. See the user guide for more information.
COPIES=1	1 to 999 DELETE	The number of copies the user wants to print. 1-999: Prints the requested number of copies of the job. DELETE: Deletes the job from the printer. After changing a setting, press SELECT.

Information menu

This menu contains printer information pages that give details about the printer and its configuration. To print an information page, use the ITEM key to scroll to the desired page and then press SELECT.

Table 21. Information menu

Item	Explanation
PRINT MENU MAP	The menu map shows the layout and current settings of the control panel menu items.
PRINT CONFIGURATION	The configuration page shows the printer's current configuration. If an HP JetDirect print server card is installed (HP LaserJet 4100N/TN/DTN printers), a JetDirect Configuration Page will also print.
PRINT PCL FONT LIST	The PCL font list shows all the PCL fonts currently available to the printer.
PRINT PS FONT LIST	The PS font list shows all the PS fonts currently available to the printer.
PRINT FILE DIRECTORY	This item appears only when a mass storage device (such as an optional flash DIMM or hard disk) containing a recognized file system is installed in the printer. The file directory shows information for all installed mass storage devices.
PRINT EVENT LOG	The event log lists the most current 20 printer events or errors.
SHOW EVENT LOG	This item allows you to view the most recent printer events on the control panel display. Press – VALUE + to scroll through the event log entries. **Note** The event log lists the error number (the first two digits), the error code, and the associated page count.
PRINT USAGE PAGE	The usage page shows the quantity of pages printed, as well as the paper source used. It also reflects the number of one-sided versus two-sided pages. **Note** This item will only show in the information menu if an optional hard-disk accessory or 32 MB of memory is installed in the printer. This item will generate a page containing information that can be used for accounting purposes.
PRINT SUPPLIES STATUS	When used with an HP genuine toner cartridge, the supplies status page shows toner cartridge information, statistics about the total number of pages by size and jobs processed, toner cartridge manufacture date and serial number, page counts, and maintenance information.

Table 21. Information menu (continued)

Item	Explanation
PRINT PAPER PATH TEST	The paper-path test can be used to verify that the paper path is working correctly, or to troubleshoot problems with a type of paper. Choose the input tray, output bin, duplexer (if available), and number of copies.

Paper-handling menu

When paper-handling settings are correctly configured through the control panel, you can print by choosing the type and size of media from the printer driver or software application.

Some items in this menu (such as duplex and manual feed) are available from a software application, or from the printer driver (if the appropriate driver is installed). Printer driver and software application settings override control panel settings.

Table 22. Paper handling menu

Item/Default value	Values	Explanation
ENVELOPE FEEDER SIZE=COM10 (110 V printers) or SIZE=DL (220 V printers)	For supported print media sizes, see page 28.	This item appears only when the optional envelope feeder is installed. Set the value to correspond with the envelope size currently loaded in the envelope feeder.
ENVELOPE FEEDER TYPE=PLAIN	For supported print media types, see page 28.	This item appears only when the optional envelope feeder is installed. Set the value to correspond with the envelope type currently loaded in the envelope feeder.
TRAY 1 MODE= FIRST	FIRST CASSETTE	Determine how the printer will use tray 1. FIRST: If print media is loaded in tray 1, the printer will pull media from that tray first. CASSETTE**:** A media size must be assigned to tray 1 using the TRAY 1 SIZE option (the next item in this menu when TRAY 1 MODE=CASSETTE). This allows tray 1 to be used as a reserved tray.
TRAY 1 SIZE= LETTER (110 V printers) or A4 (220 V printers)	For supported print media sizes, see page 25 through page 27.	This item appears only when TRAY 1 MODE= CASSETTE. Set the value to correspond with the media size currently loaded in tray 1.
TRAY 1 TYPE= PLAIN	For supported print media types, see page 28.	This item appears only when TRAY 1 MODE= CASSETTE. Set the value to correspond with the print media type currently loaded in tray 1.
TRAY 2 TYPE= PLAIN	For supported print media types, see page 28.	Set the value to correspond with the media type currently loaded in tray 2.

Table 22. Paper handling menu (continued)

Item/Default value	Values	Explanation
TRAY 3 TYPE= PLAIN	For supported print media types, see page 28.	This item appears only when a third paper tray is installed. Set the value to correspond with the media type currently loaded in tray 3.
TRAY 4 TYPE= PLAIN	For supported print media types, see page 28.	This item appears only when a fourth paper tray is installed. Set the value to correspond with the media type currently loaded in tray 4.
SMALL PAPER SPEED=NORMAL	NORMAL SLOW	Select SLOW when alternating printing envelopes (or small media sizes) and standard media sizes and print problems appear. Be sure to return the speed to NORMAL when finished. When SLOW is selected, the printer briefly pauses between pages to reduce the possibility of a repeating image.
MANUAL FEED=OFF	OFF ON	Feed the print media manually from tray 1, rather than automatically from a tray. When MANUAL FEED=ON and tray 1 is empty, the printer goes offline when it receives a print job and displays MANUALLY FEED [PAPER SIZE].
DUPLEX=OFF	OFF ON	This item appears only when an optional duplexer is installed. Set the value to ON to print on both sides (duplex) or OFF to print on one side (simplex) of a sheet of paper.
BINDING= LONG EDGE	LONG EDGE SHORT EDGE	This item appears only when an optional duplexer is installed and DUPLEX=ON. Choose the binding edge when duplexing (printing on both sides of paper).

Table 22. Paper handling menu (continued)

Item/Default value	Values	Explanation
CONFIGURE FUSER MODE MENU=NO	NO YES	Configure the fuser mode associated with each print media type. (This is only necessary if you experience loose toner problems, excessive curl, or other print-quality issues when printing on certain media types.) NO: The fuser-mode menu items are not available. YES: Additional items appear (see below). **Note** To see the default fuser mode for each media type, select YES, scroll back to the information menu, and print a menu map.
[TYPE]=NORMAL	NORMAL HIGH1 LOW HIGH2	This item appears only when CONFIGURE FUSER MODE MENU=YES. Most paper types are set to NORMAL fuser mode by default. The exceptions are as follows: ROUGH=HIGH1 TRANSPARENCY=LOW NORMAL fuser mode provides a fuser temperature for optimum results on most typical papers. HIGH1 fuser mode provides a higher fuser temperature. HIGH1 should be used with rough-textured or heavy paper if you have trouble with toner adhering to the page. LOW fuser mode provides a lower temperature, which can help reduce curl on lightweight paper and transparencies. However, toner might not adhere as well to the page. HIGH2 fuser mode uses the same higher temperature as HIGH1, but it also slows printer throughput, which creates the best fusing for very rough paper. **Note** HIGH2 fuser mode only operates for A4-, letter-, and legal-size paper, and slows the throughput to 16 pages per minute.

Printing menu

Some items in this menu can be used from a software application or from the printer driver (if the appropriate driver is installed). Printer driver and software application settings override control panel settings.

Table 23. Printing menu

Item	Values	Explanation
COPIES=1	1 TO 999	Set the default number of copies by selecting any number from 1 to 999. Press – VALUE + once to change the setting by increments of 1, or hold down – VALUE + to scroll by increments of 10.
PAPER SIZE=LETTER ENVELOPE=COM10 (110 V printers) or PAPER SIZE=A4 ENVELOPE=DL (220 V printers)	For supported print media sizes, see page 26 through page 28.	Set the default size for print media. (The item name changes from paper to envelope as you scroll through the available sizes.)
CONFIGURE CUSTOM PAPER=NO	NO YES	NO: The custom-paper menu items are not available. YES: The custom-paper menu items appear (see the next item).
UNIT OF MEASURE= INCHES (110 V printers) or MILLIMETERS (220 V printers)	INCHES MILLIMETERS	This item appears only when CONFIGURE CUSTOM PAPER=YES. Select the unit of measurement for the custom paper size.
X DIMENSION=8.5 INCHES (110 V printers) or 216 MILLIMETERS (220 V printers)	3.00 TO 8.5 INCHES (110 V printers) or 76 to 216 MILLIMETERS (220 V printers)	This item appears only when CONFIGURE CUSTOM PAPER=YES. Select the media width dimension to be fed into the printer (short edge).
Y DIMENSION=14.0 INCHES (110 V printers) or 356 MILLIMETERS (220 V printers)	5.00 TO 14.0 INCHES (110 V printers) or 127 to 356 MILLIMETERS (220 V printers)	This item appears only when CONFIGURE CUSTOM PAPER=YES. Select the media length dimension (long edge).
ORIENTATION= PORTRAIT	PORTRAIT LANDSCAPE	Determine the default orientation of print on the page.

Table 23. Printing menu (continued)

Item	Values	Explanation
FORM LENGTH=60 LINES (110 V printers) or 64 LINES (220 V printers)	5 to 128	Sets vertical spacing from 5 to 128 lines for default paper size. Press – VALUE + once to change the setting by increments of 1, or hold down – VALUE + to scroll by increments of 10.
PCL FONT SOURCE=INTERNAL	INTERNAL SOFT SLOT 1, 2, OR 3 (depends on location of available fonts)	INTERNAL: Internal fonts. SOFT: Permanent soft fonts. SLOT 1, 2, or 3: Fonts stored in one of the three DIMM slots. **Note** Print a PCL font list (page 55) to see the available fonts.
PCL FONT NUMBER=0	0 TO 999 (depends on location of available fonts)	The printer assigns a number to each font and lists the numbers on the PCL font list. The font number appears in the font # column of the printout. **Note** Print a PCL font list (page 55) to see the available fonts.
PCL FONT PITCH= 10.00	0.44 to 99.99	This item might not appear, depending on the font selected. Press – VALUE + once to change setting by increments of 0.01 for pitch, or hold down – VALUE + to scroll by increments of 1.
PCL SYMBOL SET=PC-8	PC-8 many others	Select any one of several available symbol sets from the printer control panel. A symbol set is a unique grouping of all the characters in a font. A value of PC-8 or PC-850 is recommended for line drawn characters.

Table 23. Printing menu (continued)

Item	Values	Explanation
COURIER FONT=REGULAR	REGULAR DARK	Select the version of Courier font to use: REGULAR: The internal Courier font available on the HP LaserJet 4 series printers. DARK: The internal Courier font available since the HP LaserJet III series printers. Both fonts are not available at the same time.
WIDE A4=NO	NO YES	The WIDE A4 setting changes the number of characters that can be printed on a single line of A4 paper. NO: Up to 78 10-pitch characters can be printed on one line. YES: Up to 80 10-pitch characters can be printed on one line.
OVERRIDE A4/LETTER=NO	NO YES	Choose YES to print on letter-size paper automatically when an A4 job is sent, but no A4-size paper is loaded in the printer (or to print on A4-size paper when a letter job is sent, but no letter-size paper is loaded in the printer).
APPEND CR TO LF=NO	NO YES	Select YES to append a carriage return to each line feed encountered in backward-compatible PCL jobs (pure text, no job control). Some environments, such as UNIX, indicate a new line using only the line-feed control code. This option allows the user to append the required carriage return to each line feed.

Print quality menu

Some items in this menu can be used from a software application, or from the printer driver (if the appropriate driver is installed). Printer driver and software application settings override control panel settings.

Table 24. Print quality menu

Item	Values	Explanation
RESOLUTION= FASTRES 1200	300 600 FASTRES 1200 PRORES 1200	Select the resolution from the following values: 300**:** Produces draft print quality at the printer's maximum speed; 300 dpi (dots per inch) is recommended for some bitmapped fonts and graphics, and for compatibility with the HP LaserJet III family of printers. 600**:** Produces high print quality at the printer's maximum speed. FASTRES 1200**:** Produces optimum print quality (comparable to 1200 dpi) at the printer's maximum speed. PRORES 1200**:** Produces optimum print quality (true 1200 dpi) at the printer's maximum speed. When the resolution is changed, any downloaded resources (such as fonts or macros) will need to be downloaded again, unless they are stored on an optional hard disk or flash DIMM.
RET=MEDIUM	OFF LIGHT MEDIUM DARK	Use the printer's Resolution Enhancement technology (REt) setting to produce print with smooth angles, curves, and edges. The REt does not affect print quality when the print resolution is set to ProRes 1200. All other print resolutions, including FastRes 1200, benefit from REt.

Table 24. Print quality menu (continued)

Item	Values	Explanation
ECONOMODE=OFF	OFF ON	Turn EconoMode on (to save toner) or off (for high quality). EconoMode creates draft-quality printing by reducing the amount of toner on the printed page by up to 50 percent. **Caution** Hewlett-Packard does not recommend constant use of EconoMode. If EconoMode is always used, the toner supply might outlast the mechanical parts in the toner cartridge.
TONER DENSITY=3	1 2 3 4 5	Lighten or darken the print on the page by changing the toner density setting. The settings range from 1 (light) to 5 (dark), but the default setting of 3 usually produces the best results. Use a lower toner density setting to save toner.
AUTO CLEANING PAGE=OFF	ON OFF	Set AUTO CLEANING PAGE=ON to have the printer automatically create and process a cleaning page (to remove debris from the fuser) per the interval specified in the next item.
AUTO CLEANING FREQUENCY=2000	1000 2000 5000 10,000 20,000	This item appears when AUTO CLEANING PAGE=ON. Select the page interval for automatically creating and processing a cleaning page.
CLEANING PAGE SIZE= LETTER (110 V printers) or A4 (220 V printers)	LETTER A4	This item appears when AUTO CLEANING PAGE=ON. This sets the media size upon which the auto cleaning page is processed. The default media size corresponds with the cold-reset media size.

Table 24. Print quality menu (continued)

Item	Values	Explanation
CREATE CLEANING PAGE	No value to select.	Press SELECT to print a cleaning page (for cleaning excess toner from the fuser assembly). In order for the cleaning page to work correctly, print the page on copier-grade paper (not bond or rough paper). Follow the instructions on the cleaning page.
PROCESS CLEANING PAGE	No value to select.	This item appears only after a cleaning page has been created (as described above). Follow the instructions on the cleaning page. **Note** It might take approximately two minutes for the printer to finish processing the cleaning page.

Configuration menu

Items in this menu affect the printer's behavior. Configure the printer according to printing needs.

Table 25. Configuration menu

Item	Values	Explanation
POWERSAVE TIME= 30 MINUTES	1 MINUTE 15 MINUTES 30 MINUTES 1 HOUR 2 HOURS 4 HOURS	Set the printer to enter PowerSave after it has been idle for a specified amount of time. Turning PowerSave off is not recommended. The PowerSave feature does the following: • Minimizes the amount of power consumed by the printer when it is idle. • Reduces wear on the printer's electronic components by turning off the backlight on the display. When you send a print job, press a control panel key, open a paper tray, or open the top cover, the printer automatically comes out of PowerSave mode. **Note** PowerSave turns off the backlight on the display, but the display is still readable.
TONER LOW= CONTINUE	CONTINUE STOP	Determine how the printer behaves when toner is low. A toner-low message first appears on the display when about 15 percent of the toner remains in the cartridge (about 1,500 pages remaining for the 10,000-page cartridge and about 900 pages remaining for the 6,000-page cartridge at 5 percent page coverage). CONTINUE: The printer will continue to print with the message displayed. STOP: The printer will stop printing and further action is required.
TONER OUT= CONTINUE	CONTINUE STOP	Determine how the printer behaves when toner is out. A toner-out message appears on the display when the toner cartridge is out of toner. CONTINUE: The printer will continue to print with the message displayed. However, the print quality might be very poor or difficult to see. STOP: The printer will stop printing and further action is required.

Table 25. Configuration menu (continued)

Item	Values	Explanation
CLEARABLE WARNINGS=JOB	JOB ON	Set the length of time that a clearable warning appears on the printer control panel. JOB: Warning messages appear on the control panel until the end of the job from which they were generated. ON: Warning messages appear on the control panel until Go is pressed.
AUTO CONTINUE= ON	ON OFF	Determine how the printer reacts to errors. ON: If a minor error occurs that prevents printing, the message will appear, and the printer will go offline for 10 seconds before returning online. OFF: If a minor error occurs that prevents printing, the message will remain on the display and the printer will remain offline until Go is pressed. If the printer is on a network, you will probably want to turn AUTO CONTINUE to ON.
JAM RECOVERY= AUTO	AUTO ON OFF	Determine how the printer behaves when a jam occurs. AUTO: The printer automatically selects the best mode for printer jam recovery (usually ON). ON: The printer automatically reprints pages after a jam is cleared. OFF: The printer does not reprint pages following a jam. Printing performance might be increased with this setting.
MAINTENANCE MESSAGE=OFF	OFF	This item appears only after the PERFORM PRINTER MAINTENANCE message appears on the display. OFF: The PERFORM PRINTER MAINTENANCE message will be temporarily cleared but will return after 5 percent of the printer maintenance interval (or after approximately 10,000 pages). The message should be turned off only while waiting for the printer maintenance kit to be installed. If the required maintenance is not performed, the printer's performance will degrade.
PRINT PS ERRORS= OFF	OFF ON	Select ON to print the PS error page when PS errors occur.

Table 25. Configuration menu (continued)

Item	Values	Explanation
RAM DISK=AUTO	OFF AUTO	Determine how the RAM disk is configured. This item appears only if there is no optional hard-disk accessory installed and the printer has at least 16 MB of memory. OFF: The RAM disk is disabled. Configure the amount of memory to be used through the following item: RAM DISK SIZE. **Note** If the setting is changed from OFF to AUTO or from AUTO to OFF, the printer will automatically reinitialize.
QUICK COPY JOBS=32	0 to 50	Specifies the number of quick copy jobs that can be stored on the printer's hard-disk accessory.
HELD JOB TIMEOUT=OFF	OFF 1 HOUR 4 HOURS 1 DAY 1 WEEK	Sets the amount of time that stored jobs are kept before being automatically deleted from the printer.
PERSONALITY= AUTO	AUTO PCL PS	Select the default printer language (personality). Possible values are determined by which valid languages are installed in the printer. Normally, you should not change the printer language (the default is AUTO). If you change it to a specific printer language, the printer will not automatically switch from one language to another unless specific software commands are sent to the printer.

I/O menu

Items in the I/O (input/output) menu affect the communication between the printer and the computer.

Table 26. I/O menu

Item	Values	Explanation
PARALLEL ADV COMMUNICATN=ON	ON OFF	Turn the bidirectional parallel communication on or off. The default is set for a bidirectional parallel port (IEEE-1284). This setting allows the printer to send status readback messages to the computer. (Turning on the parallel advanced functions might slow language switching.)
PARALLEL HIGH SPEED=YES	YES NO	Select the speed at which data is transmitted to the printer. YES: The printer accepts faster parallel communications used for connections with newer computers. NO: The printer accepts slower parallel communications used for connections with older computers.
I/O TIMEOUT=15 SECONDS	5 to 300 SECONDS	Select the I/O timeout period in seconds. (The I/O timeout refers to the time, measured in seconds, that the printer waits before ending a print job.) This setting allows you to adjust timeout for best performance. If data from other ports appear in the middle of your print job, increase the timeout value. Press – VALUE + once to change settings by increments of 1, or hold down – VALUE + to scroll by increments of 10.

EIO menu (networked printers)

The EIO (enhanced input/output) menu appears only when an EIO device is installed in an EIO slot on the printer (such as an HP JetDirect print server). The items in the menu depend on the particular accessory product installed. If the printer contains an HP JetDirect print server EIO card, you can configure basic networking parameters using the EIO menu. These and other parameters can also be configured through HP Web JetAdmin.

Table 27. EIO menu

Item	Values	Explanation
CFG NETWORK=NO	NO YES	Select whether or not you want to use the HP JetDirect menu. NO: Bypass the HP JetDirect menu. YES: Use the HP JetDirect menu. You must change this to YES each time you want to use the menu. **Note** You must select CFG NETWORK=YES to display the following items.
IPX/SPX=ON	ON OFF	Select whether the IPX/SPX protocol stack (in Novell NetWare networks, for example) is enabled (ON) or disabled (OFF).
DLC/LLC=ON	ON OFF	Select whether the DLC/LLC protocol stack is enabled (ON) or disabled (OFF).
TCP/IP=ON	ON OFF	Select whether the TCP/IP protocol stack is enabled (ON) or disabled (OFF).
ATALK=ON	ON OFF	Select whether the Apple EtherTalk protocol stack is enabled (ON) or disabled (OFF).

Table 27. EIO menu (continued)

Item	Values	Explanation
CFG IPX/SPX=NO	NO YES	Select whether you want to use the IPX/SPX menu and set IPX/SPX protocol parameters. NO: Bypass the IPX/SPX menu items. YES: Use the IPX/SPX menu items. In the IPX/SPX menu, you can specify the frame-type parameter used on your network. The default is AUTO, to automatically set and limit the frame type to the first one detected. For Ethernet cards, frame type selections are EN_8023, EN_II, EN_8022, EN_SNAP. For Token Ring cards, frame type selections include TR_8022, TR_SNAP. In the IPX/SPX menu for Token Ring cards, you can also specify NetWare Source Routing parameters, which are SRC RT=AUTO (default), OFF, SINGLE R, or ALL RT.
CFG TCP/IP=NO	NO YES	Select whether you want to use the TCP/IP menu and set TCP/IP protocol parameters. NO: Bypass the TCP/IP menu items. YES: Use the TCP/IP menu items. In the TCP/IP menu, you can specify BOOTP=YES or DHCP=YES for TCP/IP parameters to be automatically loaded from a bootP or DHCP server when the printer is turned on. If you specify BOOTP=NO and DHCP=NO, you can manually set the following TCP/IP parameters from the control panel: each byte of the IP address (IP), Subnet Mask (SM), Syslog Server (LG), and Default Gateway (GW). You can also manually set the idle timeout period. Print an HP JetDirect configuration page to verify your settings. However, note that the print server might overwrite selected parameters with values that ensure proper operation.

Table 27. EIO menu (continued)

Item	Values	Explanation
CFG LINK=NO	NO YES	Select whether you want to manually configure the HP JetDirect 10/100Base-TX print server's network link speed and communication mode. The HP JetDirect settings must match the network. NO: Bypass the link configuration menu items. YES: Use the link configuration menu items. One of the following link configurations can be set: AUTO: The print server will automatically configure itself to match the network's link speed and communication mode. 10T HALF: 10 Mbps, half-duplex operation. 10T FULL: 10 Mbps, full-duplex operation. 100T HALF: 100 Mbps, half-duplex operation. 100T FULL: 100 Mbps, full-duplex operation.

Resets menu

Use the reset and restore options on this menu with caution. You can lose buffered page data or printer configuration settings when you select these items. Only reset the printer under the following circumstances:

- You want to restore the printer's default settings.
- Communication between the printer and computer has been interrupted.

The items in the resets menu will clear all memory in the printer, while CANCEL JOB clears only the current job.

Table 28. Resets menu

Item	Values	Explanation
NEW TONER CARTRIDGE=NO	NO YES	Change the value to YES when you first install a non-HP toner cartridge. YES allows the printer to recognize the new cartridge, and the printer resets the toner gauge to full.
RESTORE FACTORY SETTINGS		Press SELECT to perform a simple reset and restores most of the factory (default) settings. This item also clears the input buffer for the active I/O.
POWERSAVE= ON	ON OFF	This item turns the PowerSave mode on or off. POWERSAVE=ON mode does the following: • Minimizes the amount of power consumed by the printer when it is idle • Reduces wear on the printer's electronic components by turning off the backlight on the display When you send a print job, press a control panel key, open a paper tray, or open the top cover, the printer automatically comes out of PowerSave mode. In the configuration menu, you can set how long the printer remains idle before it enters PowerSave mode. Turning PowerSave off is not recommended. **Note** PowerSave turns off the backlight on the display, but the display is still readable.

Service mode

Service mode should be used only by authorized service personnel. The following can be done in service mode:

- Verify and set the page count and serial number. These are shown on the configuration page.
- Set the cold reset paper size default. (This sets the factory default paper size to either Letter or A4).
- Turn the diagnostic functions on or off (for software developers only).
- Clear the event log.
- Set the interval at which the PERFORM PRINTER MAINTENANCE message appears on the control panel display.

To enter service mode:

1. While turning on the printer, hold down SELECT and CANCEL JOB until all of the lights on the control panel are lit.
2. Press the right side of the MENU key, then press SELECT. The message SERVICE MODE temporarily appears and will reappear when the printer completes the initialization process.
3. To exit the service mode, press GO.

Note If READY appears in the control panel, the keys might have been released too soon, or the wrong keys were pressed.

Note Before replacing the formatter or firmware DIMM, print a configuration page and a menu map to verify the current printer settings. Use the information on these pages to reset the customer's printer settings.

Service menu

To enter the service menu, see “Service mode” on page 74.

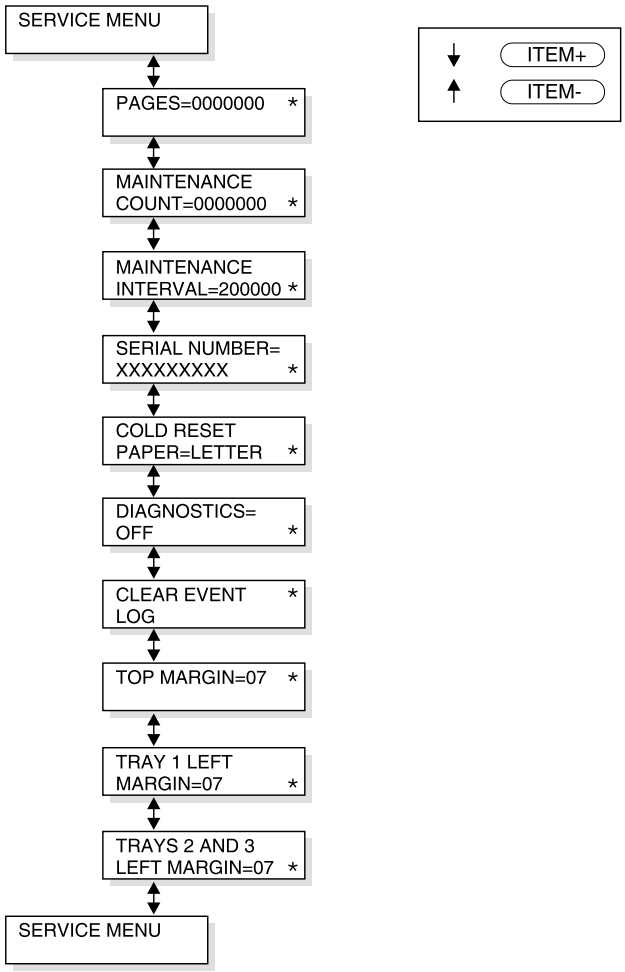

Figure 6. **Service menu**

Changing settings

The item-count value is changed using a different method than is used for other control panel values. Instead of increasing the entire value by increments, each digit can be selected and modified individually. The following control panel keys are used to modify the page count value:

SELECT — Enters any changes to the current digit and advances the cursor one digit to the right. If the last digit is currently selected, pressing the SELECT key wraps the cursor around to the first digit.

VALUE - — Increases the value of the currently selected digit by one. Pressing VALUE + when 9 is the value of the currently selected digit will change the value of the digit to 0.

– VALUE — Decreases the value of the currently selected digit by one. Pressing – VALUE when 0 is the value of the currently selected digit will change the value of the digit to 9.

Table 29 shows the sequence of keystrokes used to change the page count from a value of 000000 to a value of 0010480.

Table 29. Changing the page count (example)

Key press	Display	Description
	SERVICE MODE	
MENU+	SERVICE MENU	Enter the SERVICE MENU.
ITEM+	PAGES=0000000 *	Advance to the first item in the SERVICE MENU.
SELECT	PAGES=0000000 *	Advance the cursor one digit to the right.
SELECT	PAGES=0000000 *	Advance the cursor one digit to the right.
VALUE +	PAGES=0010000 *	Increase the value of the third digit by one.
SELECT	PAGES=0010000 *	Enter the change to the third digit and advance the cursor one digit to the right.
SELECT	PAGES=0010000 *	Advance the cursor one digit to the right.
VALUE + (4 presses)	PAGES=0010400 *	Increase the value of the fifth digit by four.
SELECT	PAGES=0010400 *	Enter the change to the fifth digit and advance the cursor one digit to the right.
– VALUE (2 presses)	PAGES=0010480 *	Decrease the value of the sixth digit by two.
SELECT (2 presses)	PAGES=0010480 *	Enter the change to the sixth digit and advance the cursor one digit to the right causing the cursor to wrap around to the first digit.
GO		Exit.

Page count

The page count that is stored in nonvolatile memory (NVRAM) and is shown on the configuration page printout represents the number of pages the printer has printed (excluding engine test prints). If it is necessary to install a new formatter in the printer, the page count must be reset so that it represents the age of the printer engine rather than the age of the formatter.

Note Before replacing the formatter or firmware DIMM, print a configuration page and a menu map to verify the current printer settings. Use the information on these pages to reset the customer's printer settings.

Maintenance count

The maintenance count should be reset only after a maintenance kit has been installed. For more information, see page 86.

Maintenance interval

The `MAINTENANCE INTERVAL` in the service-mode menu sets the page count interval at which the next service is due for the printer. This is set initially at the factory to 200,000 pages. (For example, the `PERFORM PRINTER MAINTENANCE` message appears at 200,000 pages. If the printer maintenance kit is installed at 200,114 pages, the message reappears 200,000 pages later, at 400,114 pages.) The procedure for editing this number is similar to editing the `PAGES` item.

Serial number

The printer serial number is stored in NVRAM. If a formatter is replaced, then the printer serial number must be reentered. The procedure for editing this number is similar to editing the `PAGES` item.

Note Before replacing the formatter or firmware DIMM, print a configuration page and a menu map to verify the current printer settings. Use the information on these pages to reset the customer's printer settings.

Cold reset paper

The cold reset paper size is stored in NVRAM. When a printer cold reset is performed, the default paper size (in the printing menu) is set to the value saved for the cold reset paper size. Possible values are `COLD RESET PAPER=LETTER` and `COLD RESET PAPER=A4`. When replacing the formatter in countries that use A4 rather than letter-size paper, set the cold reset paper size to `A4`.

Diagnostics

This menu item enables or disables the use of the firmware diagnostic features for software development. Possible values are `DIAGNOSTICS=OFF*` and `DIAGNOSTICS=ON`. When enabled, the diagnostic features are available when the printer is in the online `READY` state by pressing the SELECT key.

Note The feature above is for software developers only.

Clear event log

This item deletes all items that have been recorded in the internal event log.

Top margin

This item can be used to adjust the margin between the top of the page and the top of the printed image.

Note Adjust the top margin value in the software application first. This top margin value does not affect the engine test top margin.

Before adjusting the top margin through the service menu, first ensure the engine test top margin register is properly adjusted (page 175).

To set the top margin registration value:

1 Press the ITEM key to scroll through the service menu until `TOP MARGIN=07` appears.

2 Press the VALUE key to increase or decrease the margin.

3 Press the SELECT key to save the new margin adjustment.

Tray 1 left margin

This item can be used to adjust the margin between the left side of the pages from tray 1 and the left side of the printed image.

1 Press the ITEM key until `TRAY 1 LEFT MARGIN=07` appears.

2 Press the VALUE key to increase or decrease the margin.

3 Press the SELECT key to save the new margin adjustment.

Trays 2 and 3 left margin

This item can be used to adjust the margin between the left side of the pages from trays 2 and 3 and the left side of the printed image.

1 Press the ITEM key until `TRAYS 2 AND 3 LEFT MARGIN=07` appears.

2 Press the VALUE key to increase or decrease the margin.

3 Press the SELECT key to save the new margin adjustment.

Testing the printer

When you print a configuration page, the printer checks its internal controller and I/O interface, and then prints a test page. You can review the configuration page printout to verify proper installation of such options as paper trays or printer languages. For more information, see page 227.

Engine test

The engine test print can be used to verify that the print engine is functioning correctly. For more information, see page 190.

Resetting the printer

Cold reset

Cold reset clears all data from the printer memory and sets many of the defaults back to the factory settings.

CAUTION Performing a cold reset resets the HP JetDirect configuration. To avoid making changes to your configuration, remove the HP JetDirect card before performing a cold reset.

If possible, print a configuration page and a menu map to verify the current printer settings. Use the information on these pages to reset the customer's printer settings.

To perform a cold reset:

1. Print a configuration page and a menu map.
2. Turn on the printer while holding the GO key down.
3. When COLD RESET appears on the control panel display, release the GO key.

Clearing NVRAM

This procedure will clean up the NVRAM by removing old areas that are not being used.

1. Turn off the printer.
2. Hold down the CANCEL JOB key, and then turn on the printer.
3. When CLEANUP NVRAM appears on the control panel display, release the CANCEL JOB key.

Initialization of NVRAM

Initialization of NVRAM should always be executed immediately after replacing the formatter board. This procedure aligns the firmware with the formatter. Not initializing NVRAM could result in deterioration of print quality.

CAUTION Initializing NVRAM will erase several of the memory settings (including page count, printer serial number, and the event log).

Note Before initializing NVRAM, print a configuration page and a menu map to verify the current printer settings. Use the information on these pages to reset the customer's printer settings.

To initialize NVRAM

1. Print a configuration page and a menu map.
2. Turn off the printer.
3. Remove all formatter accessories (EIO cards, hard drive, DIMMs, etc.).
4. While turning on the printer, hold down SELECT and CANCEL JOB until all of the lights on the control panel are lit.
5. Press CANCEL JOB, and then SELECT. The NVRAM INIT message appears on the control panel display.
6. After initializing the NVRAM, use service mode to reenter the settings from the configuration page.

Initialization of the hard disk

To initialize the hard disk

1. Print a configuration page and a menu map.
2. Turn off the printer.
3. While turning on the printer, hold down SELECT and CANCEL JOB until all of the lights on the control panel are lit.
4. Press MENU-, and then VALUE-.
5. Press SELECT.

System configuration

MS-DOS system configuration

To communicate properly with the printer, the MS-DOS® environment requires the addition or modification of **mode** commands in the AUTOEXEC.BAT file. Add or modify the **mode** command(s), depending on the interface configuration, as follows:

Parallel DOS commands

Most IBM- and AT-compatible computers default to a parallel printer port. To ensure that information is sent to the parallel printer port, type the following MS-DOS command at the MS-DOS prompt or include it in the Autoexec.bat file:

```
MODE LPT1: , , P
```

For MS-DOS version 4.0 and above, type:

```
MODE LPT1: , , B
```

Note This example assumes that you are using parallel printer port LPT1. If you are using LPT2 or LPT3, replace LPT1 in the example with the printer port that you are using.

Since the **mode** command is an external MS-DOS command (a program named **mode.com** is run when the **mode** command is invoked), the program file must be contained in the root directory, or in a directory specified in a preceding **path** command in the Autoexec.bat file.

After changing the Autoexec.bat file, restart the computer to initiate the changes.

4 Printer maintenance

Chapter contents

Cleaning the printer and accessories

To maintain superior print quality and performance, thoroughly clean the printer and the paper-handling accessories:

- after printing approximately 10,000 pages.
- whenever print quality problems occur.

Also, run a cleaning page every time you change the toner cartridge.

Clean the outside surfaces of the printer and accessories with a water-dampened cloth. Clean the inside parts as indicated in table 30 on page 83. Observe the warning and caution below.

WARNING! Before beginning these steps, turn the printer off and unplug all power cords to avoid shock hazard.

Be careful when cleaning around the fusing assembly area. It might be hot.

CAUTION To avoid permanent damage to the toner cartridge, do not use ammonia-based cleaners on or around the printer.

Do not touch the transfer roller. Skin oils on the roller can cause print quality defects. If toner gets on clothing, wipe it off with a dry cloth and wash the clothes in cold water. Hot water sets toner into fabric.

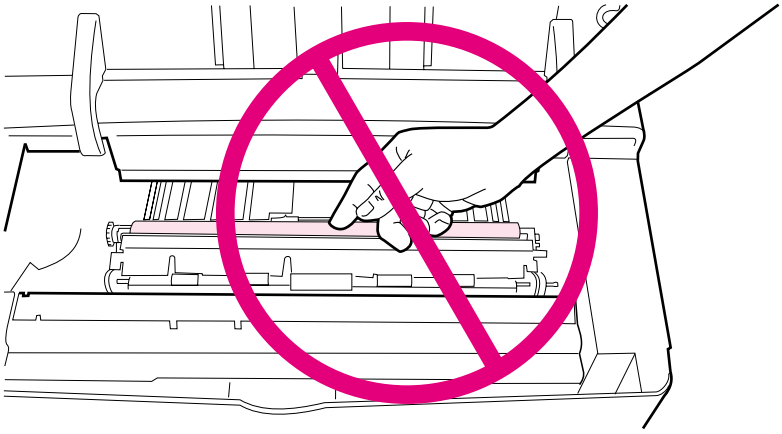

Figure 7. **Location of the transfer roller – Do Not Touch!**

Table 30. Cleaning the printer

Component	Cleaning method/notes
Outside covers	Use a water-dampened cloth. Do not use solvents or ammonia-based cleaners.
Inside	With a dry, lint-free cloth, wipe any dust, spilled toner, and paper particles from the paper path area, the registration roller, and the toner cartridge cavity. Do not touch the transfer roller with bare hands.
Paper pickup, feed, and separation rollers	Use a water-dampened, lint-free cloth.
Tray 1 separation pad	Use a dry, lint-free cloth.
Registration roller	Use a dry, lint-free cloth.
Transfer roller	Use a dry, lint-free cloth. DO NOT TOUCH the transfer roller.
Fuser	Use a water-dampened, lint-free cloth.

Using the printer cleaning page

If toner specks appear on the front or back side of print jobs, follow the procedure below.

From the printer control panel, do the following:

1 Press MENU until PRINT QUALITY MENU appears.

2 Press ITEM until CREATE CLEANING PAGE appears.

3 Press SELECT to create the cleaning page.

4 Follow the instructions on the cleaning page to complete the cleaning process.

Note In order for the cleaning page to work correctly, print the page on copier-grade paper (not bond or rough paper).

You might need to create and process a cleaning page more than once. When toner has been cleaned from the fuser assembly, shiny black spots will appear on the page's black strip. If white spots appear on the black strip, create another cleaning page.

To ensure good print quality with certain types of paper, use the cleaning page every time the toner cartridge is replaced. If the cleaning page is frequently needed, try a different type of paper.

Using the auto-cleaning page

The auto-cleaning page feature helps keep the fuser rollers clean, which maintains excellent output quality. The auto-cleaning page feature is accessible through the control panel and is supported through Web JetAdmin, as well. Once set up, the printer runs a cleaning page through the printer as a separate job at the frequency requested with no further user intervention. The settings can be changed or the feature can be turned off at any time.

Note Once the auto-cleaning page feature is enabled, the printer automatically pulls plain letter- or A4-sized media from a tray. If the paper size or types are not available in the printer, a message appears in the control panel display requesting the user to load media into the printer.

To override a paper load message, press GO, and then answer the questions on the control panel display.

To set up the auto-cleaning page:

1 Press MENU until PRINT QUALITY MENU appears.

2 Press ITEM until AUTO CLEANING PAGE appears.

3 Press VALUE+ until =ON appears, and then press SELECT.

4 Press VALUE+ to select the auto cleaning frequency, and then press SELECT.

5 Press ITEM until CLEANING PAGE SIZE=LETTER or A4, and then press VALUE+ to select the paper size to be used for cleaning.

6 Press SELECT to save the auto-cleaning settings.

Note The auto cleaning page takes about 2.5 minutes to process.

Cleaning spilled toner

Defective or worn out toner cartridges can develop leaks. Also, after a jam has occurred, there might be some toner remaining on the rollers and guides inside the printer. The pages that print immediately after the jam might pick up this toner.

Clean spilled toner with a cloth dampened with cold water. Do not touch the transfer roller with the damp cloth or with your fingers. Do not use a vacuum cleaner unless it is equipped with a micro-fine particle filter.

Performing printer maintenance

The printer maintenance cycle for this printer is every 200,000 pages. The kit contains the following replacement parts:

- one fuser
- one transfer roller
- one transfer roller tool
- one pickup roller (for tray 1)
- six feed and separation rollers (for trays 2, 3, and 4)
- one pair of disposable gloves
- instructions

See the instructions included in the kit for detailed replacement procedures.

The maintenance kit can be ordered from the Customer Services and Support Center. To order the maintenance kit, see page 270.

Table 31. Maintenance kit part numbers

Description	Exchange no.	Product no.
Maintenance kit (110 V)	C8057-69001	C8057A
Maintenance kit (220 V)	C8058-69001	C8058A

Reset maintenance count

The maintenance page count should be reset only after a maintenance kit has been installed.

This resets the maintenance counter so that the message `PERFORM PRINTER MAINTENANCE` will appear after another 200,000 pages (default).

1. Hold down the - ITEM and - VALUE keys.
2. Turn the printer on.
3. Wait for `RESET MAINTENANCE COUNT` to appear and then release both keys.

Expected life of components

The following table shows the expected life of certain components in the printer. To order parts, see chapter 8.

Table 32. Life of components

No.	Part name	Part number	Expected life
1	Tray 1 pickup roller	RG5-3718-000CN	100,000 pages (for tray 1)
2	Tray 1 separation pad	RF5-3086-000CN	200,000 pages (for tray 1)
3	Tray 1 pickup assembly	RG5-5084-000CN	200,000 pages (for tray 1)
4	Feed and separation rollers (trays 2, 3, and 4)	RF5-3114-000CN	200,000 pages
5	Fuser 110 V 220 V	 RG5-5063-000CN RG5-5064-000CN	 200,000 pages 200,000 pages
6	Transfer roller	RG5-5295-000CN	200,000 pages
7	Cooling fan	RH7-1442-000CN	25,000 hours
8	Duplexer exhaust fan	RH7-1443-000CN	25,000 hours

Note If an HP LaserJet 4100 series printer component is not listed above, the component should last the life of the printer.

5 Theory of operation

Chapter contents

Power supply system

AC/DC power distribution

In this circuit, the AC power input from the power receptacle is converted into DC power. The DC power is supplied to the loads.

The AC power is supplied to the low-voltage power supply circuit in the engine controller board when the power switch (SW1) is turned on.

The AC power is converted into +24 VDC, +5 VDC, and +3.3 VDC in the circuit. The +24 VDC is supplied to the main motor, scanner motor, solenoids, clutches, and to the high-voltage power supply circuit. The +5 VDC is supplied to the laser and formatter, while +3.3 VDC is supplied to the sensors and ICs on the engine controller board.

The +24 VDC is divided into +24 VA, which is constantly supplied from the low-voltage power supply circuit, and +24 VB, which is interrupted when the interlock switch (SW101) is turned off by opening the top cover. The +24 VB is supplied to the high-voltage power supply circuit on the engine controller board and relay (RL102). It also functions as a door-open detection signal (/DOPEN), so that the CPU detects an open door.

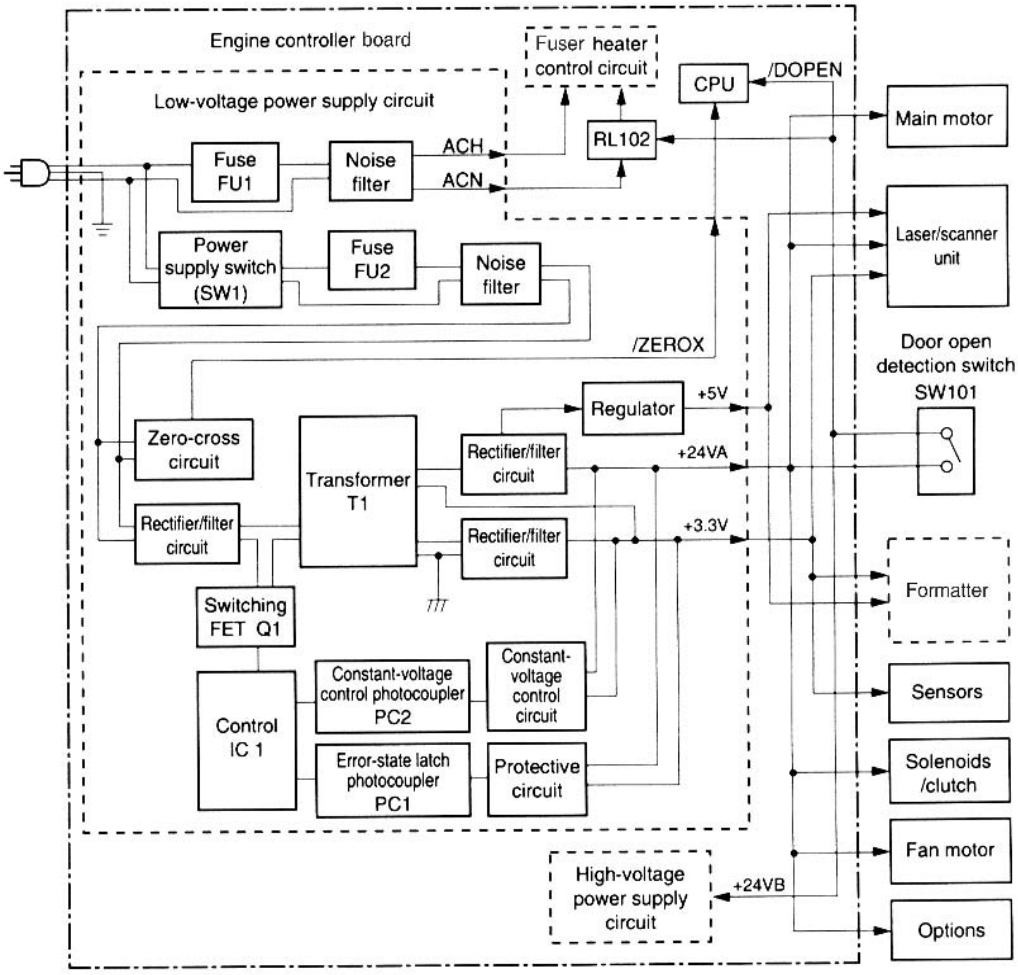

Figure 8. **Low-voltage power supply circuit**

Overcurrent/overvoltage protection

If a short-circuit or other problem on the load side causes an excessive current flow or generates abnormal voltage, the overcurrent/overvoltage protection systems automatically cut off the output voltage to protect the power supply circuit.

If the overcurrent or overvoltage protection system are activated and the power supply circuit does not generate DC voltage, it is necessary to turn the power off, correct the problem, and then turn the printer on again.

The circuit has two fuses (FU1, FU2), which break and cut off the output voltage if overcurrent flows through the AC line.

Fuser over-temperature protection

The fusing heater safety circuit is located on the engine controller board and constantly monitors the fusing temperature.

To protect the fuser from excessive temperatures, the printer has the following three protective functions:

- The CPU monitors the voltage of the FSRTH1 and FSRTH2 thermistor signals. If the fuser temperature reaches 240° C (464° F), then the CPU turns off the relay (RL101) to interrupt the power to the fusing heater.
- If the temperature of the fusing heater continues to rise abnormally and the temperature of the thermal switch (TP101) exceeds about 250° C (482° F), TP101 opens up to cut off the power supply to the fusing heater.
- The power supply on the coil side of RL101 and RL102 is connected to +24 VB. When the top cover is opened, the power supply to RL101 and RL102 is cut off and the relay is turned off.

High-voltage power distribution

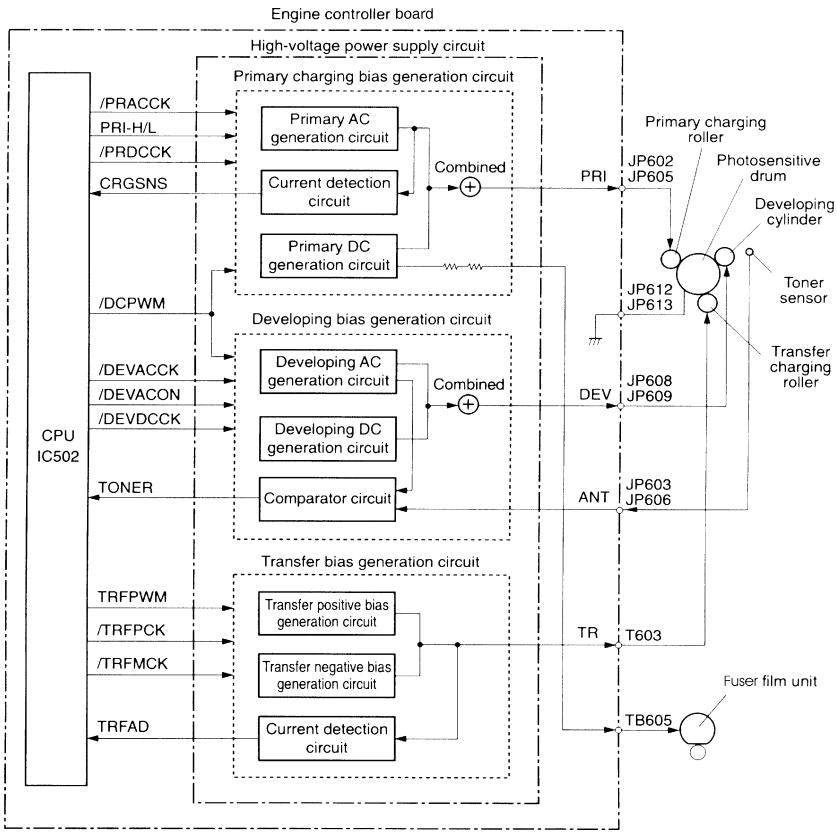

Figure 9. **Engine controller board**

In response to the instructions from the microprocessor (CPU:IC502) on the engine controller board, the high-voltage power supply circuit applies high voltage to the primary charging roller, developing cylinder, transfer roller, and the fuser film unit.

The circuit also detects the toner level and the presence or absence of the toner cartridge.

Toner-cartridge detection

This printer has cartridge detection and toner-level detection.

For the cartridge detection, the CPU checks the voltage of the cartridge detection signal (CRGSNS), which is a feedback signal for the primary charging. The CPU checks the voltage of the CRGSNS signal several times while the primary charging AC bias is applied to the primary charging roller. When the average of the voltage is 1 V or less, the CPU recognizes a "cartridge out" situation.

Cartridge memory

This memory is built-in EEPROM in the cartridge, so that the printer is capable of detecting the cartridge conditions.

Read/write of the cartridge memory is performed by the memory controller board through the antenna unit. The cartridge information read by the memory controller is updated by the engine controller and written to the memory. The read/write of the memory is implemented when the memory controller board receives a command from the engine controller board.

The engine controller instructs the memory controller to perform read/write at the following timing.

Reading timing

- When the power is turned on
- When the door is closed
- When the engine controller receives a command from the formatter

Writing timing

- When printing is completed
- When the engine controller receives a command from the formatter

The memory data sent from the memory controller also contains the error status that has occurred during read/write operation. When error status is sent, the engine controller attempts to read the operation four times. If the error status is not cleared after the operation, the engine controller determines one of the following error conditions: sub-CPU failure, memory data abnormality, or memory access abnormality.

CAUTION Do not remove the toner cartridge when the top cover interlock is overridden. Cartridge memory will be disabled.

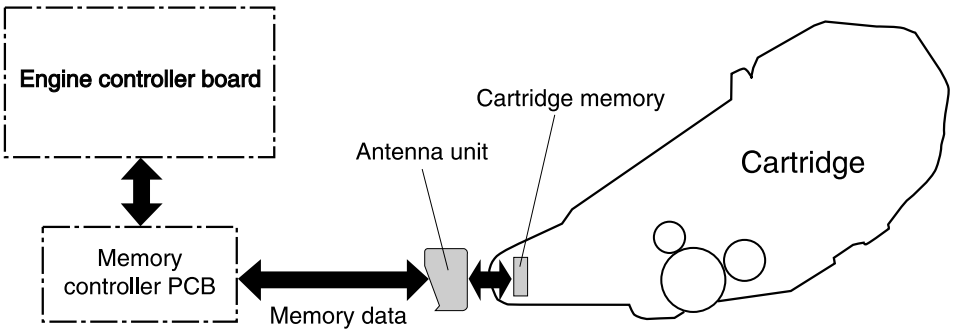

Figure 10. **Cartridge memory**

Engine controller system

The following systems and functions are controlled by the engine controller board:

- DC power distribution (+3.3 V DC, +5 V DC, +24 VA)
- Laser and scanner drive
- Paper-motion monitoring and control (photosensors and flags)
- Clutches (tray pickup and tray 1 feed)
- Engine test
- Motors (main drive, scanner, and fans)

Printer operations are controlled by the CPU on the engine controller board. When you press the power button, the printer enters standby mode until it receives a print command or image data. The CPU then sends the signals to drive internal components, such as laser diodes, motors, and solenoids.

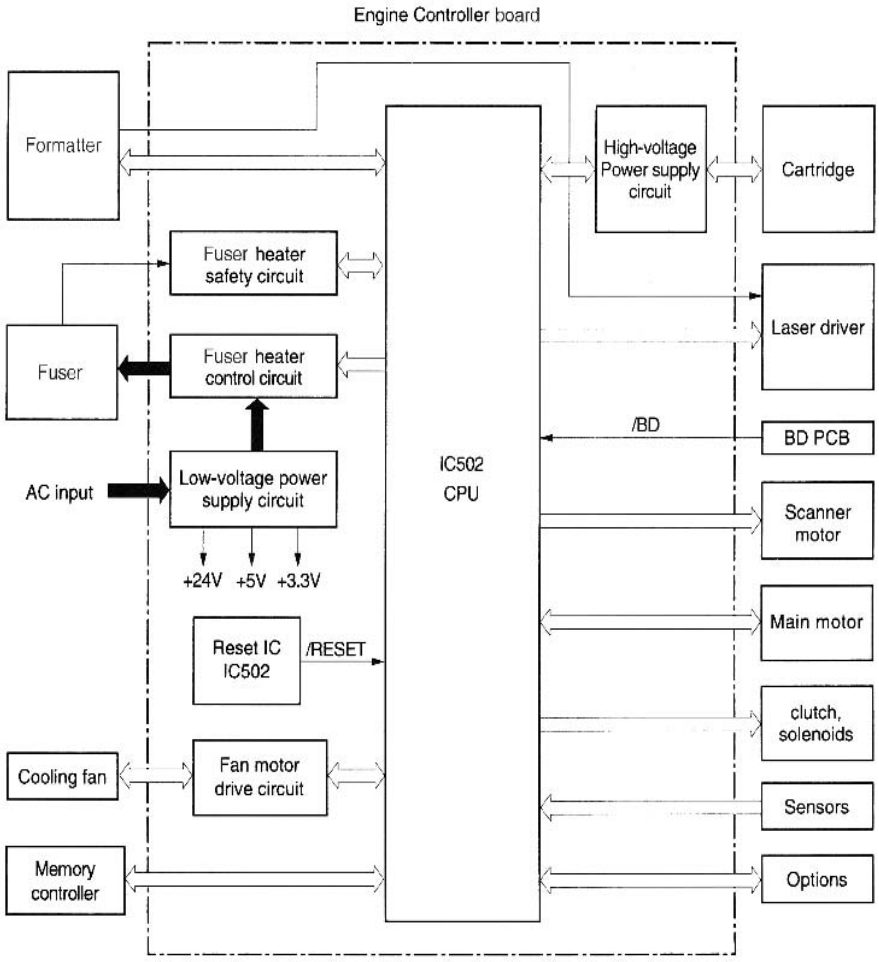

Figure 11. **Engine controller board**

Engine controller board inputs and outputs

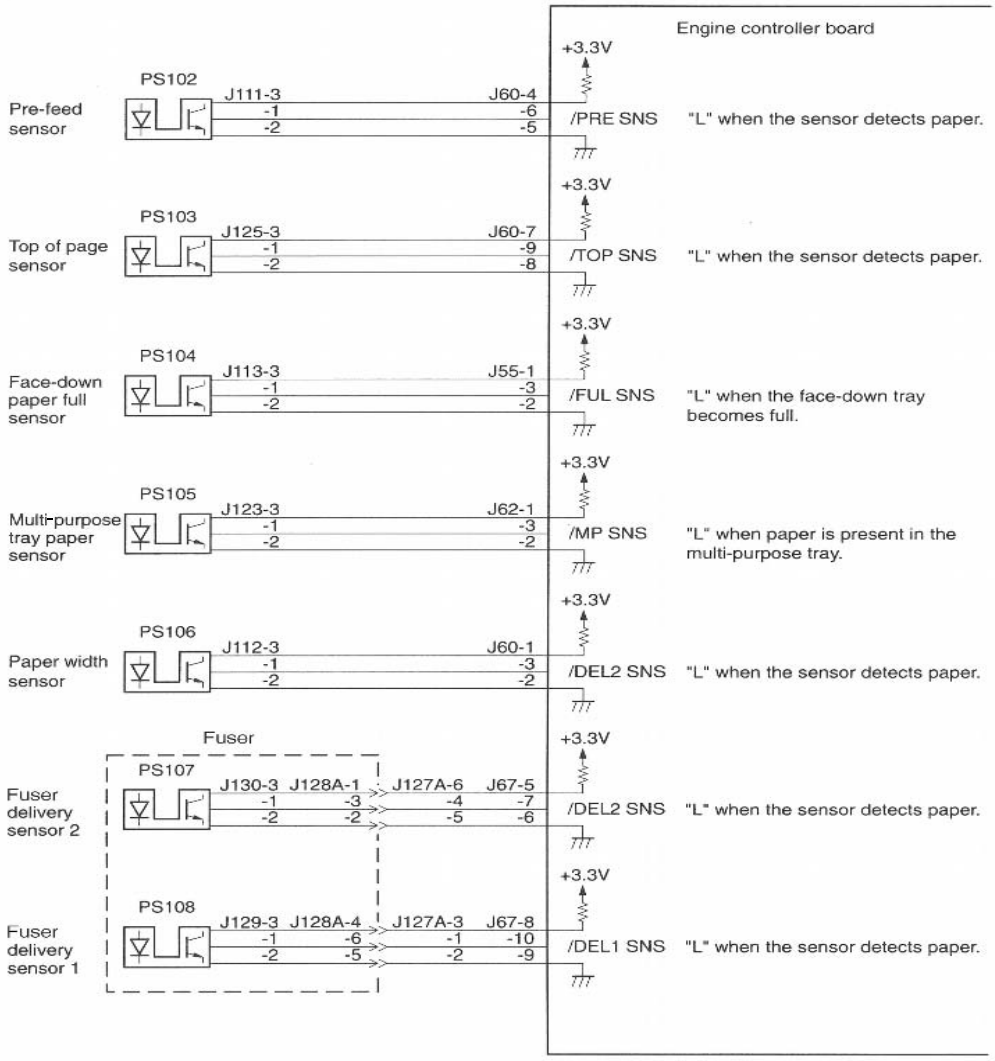

Figure 12. **Engine controller board I/O (1 of 5)**

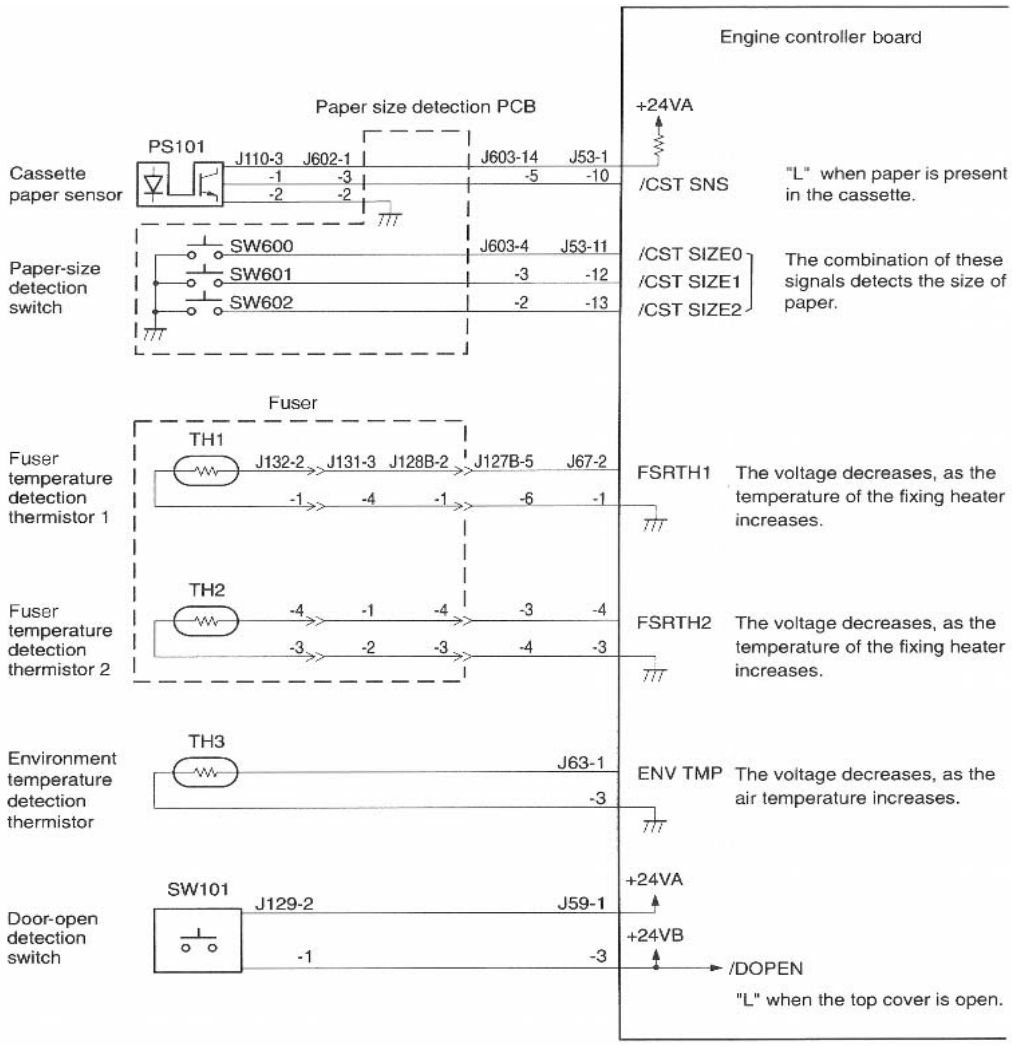

Figure 13. **Engine controller board I/O (2 of 5)**

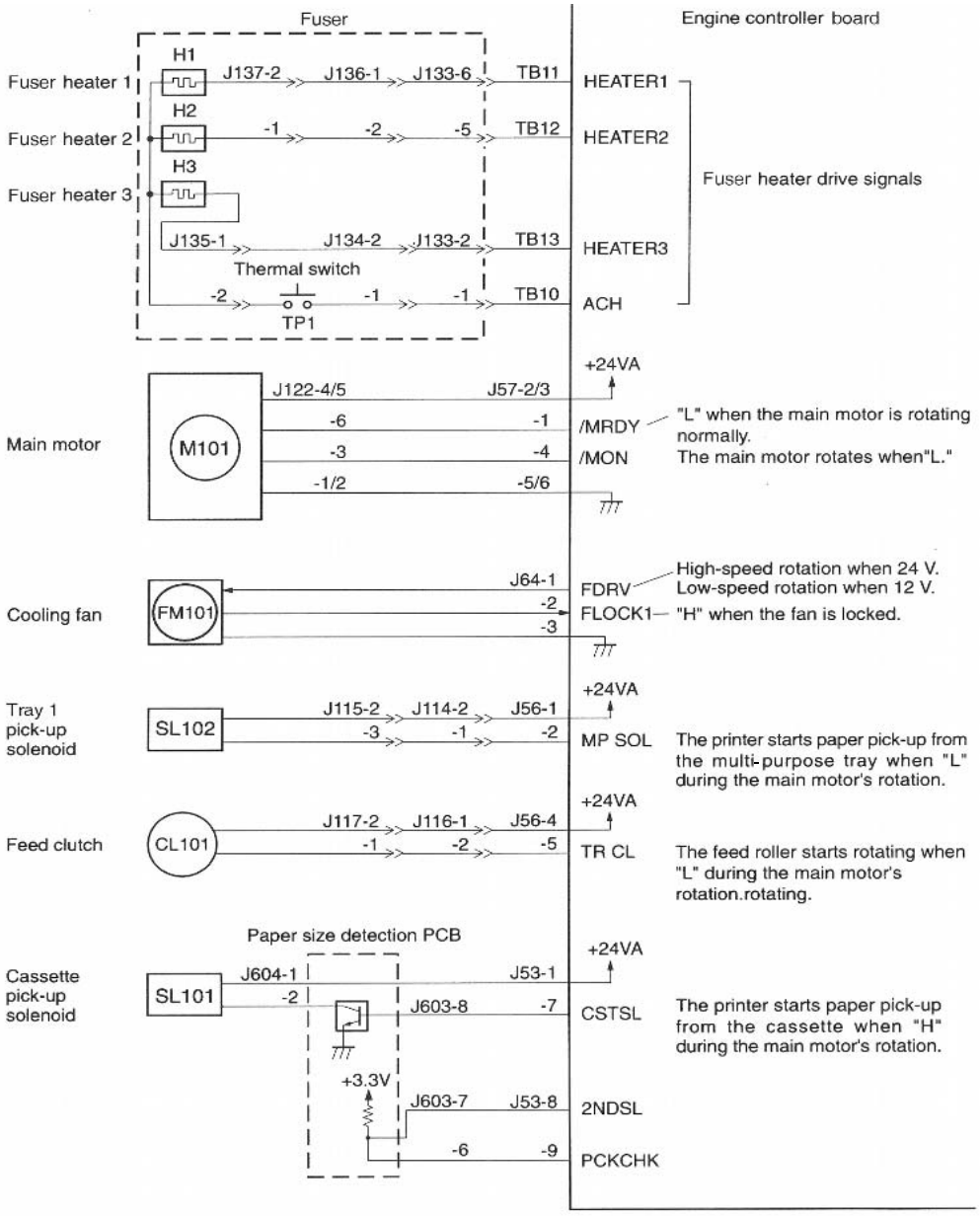

Figure 14. **Engine controller board I/O (3 of 5)**

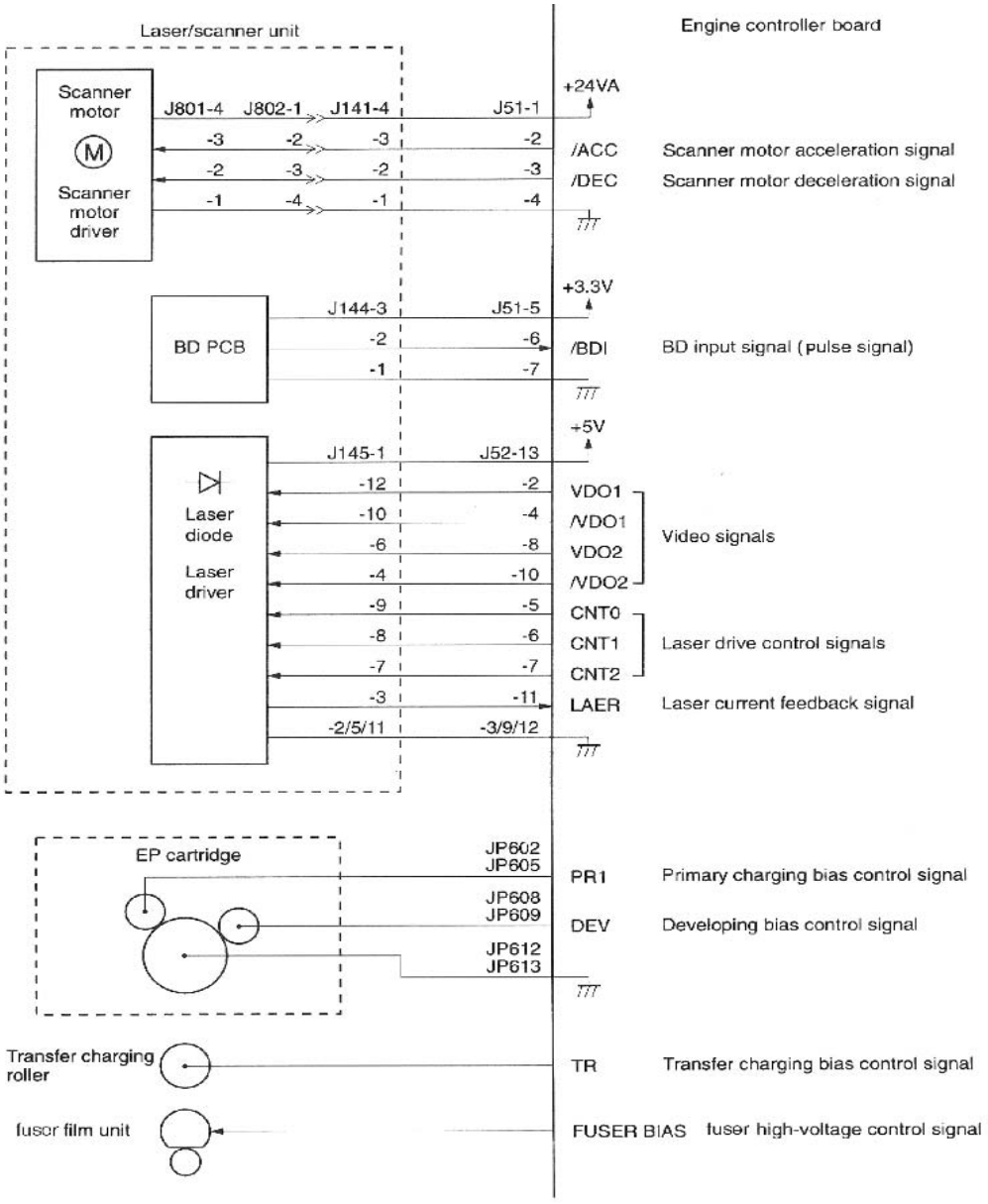

Figure 15. **Engine controller board I/O (4 of 5)**

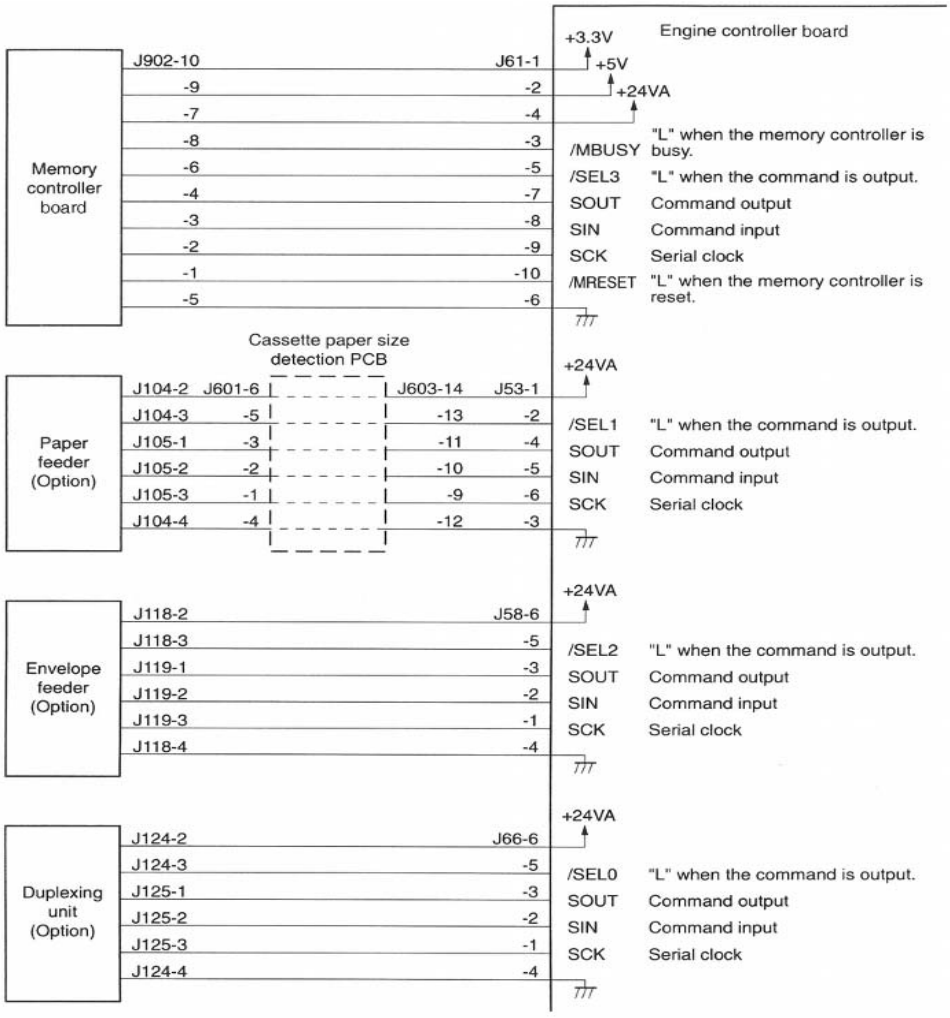

Figure 16. **Engine controller board I/O (5 of 5)**

Laser/scanner drive

The HP LaserJet 4100 series printer has two diodes in the laser/scanner assembly. The printer uses a twin-beam method to scan two lines simultaneously. Based on information received from the formatter, the engine controller board sends signals to the laser scanner assembly to modulate the laser diodes on and off and to drive the laser scanner motor. See “Image formation system” on page 108 for more information.

Paper-motion monitoring and control

The engine controller board controls paper motion by continuously monitoring the various paper sensors and coordinating paper movement with the other print processes. For more information, see “Paper feed system” on page 117.

Solenoids, sensors, clutches, and switches

The engine controller board monitors the various sensors and switches in the printer and controls the solenoids and clutches for paper movement. See "Engine controller board inputs and outputs" on pages 96 through 100.

Engine test print

The engine controller board has a built-in engine test pattern that can be printed without using the data from the formatter. See “Engine test” on page 190 in chapter 7.

Motors

See “Timing diagram” on page 131 for specific timing details for the printer motors.

This printer and optional input trays are driven by the main motor, which is controlled by commands from the CPU.

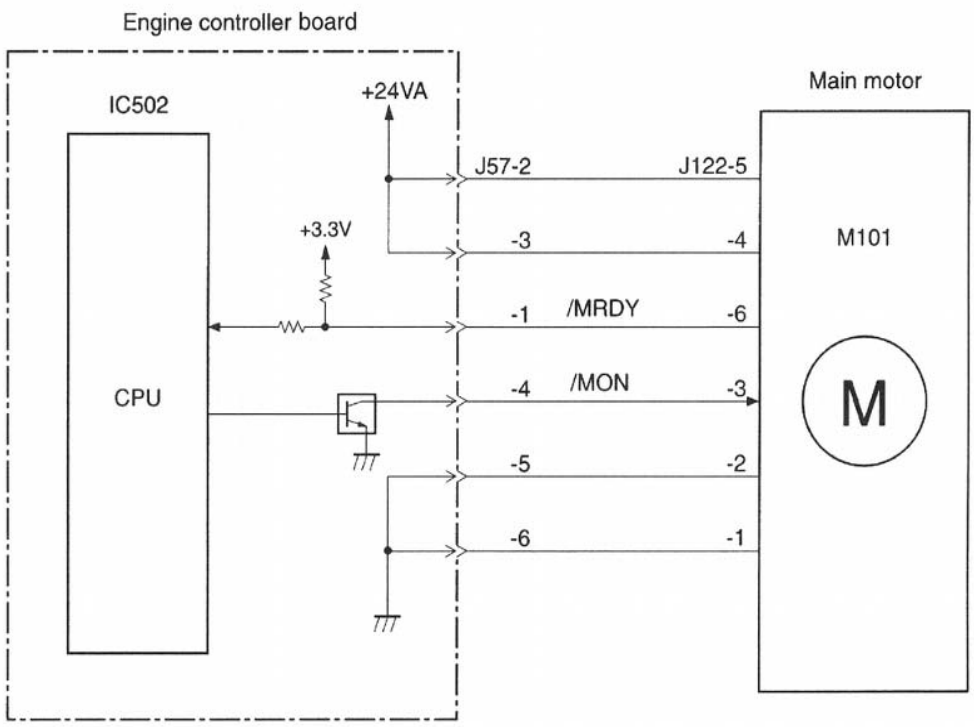

Figure 17. **Main motor control**

The main motor is a DC brushless motor with hall elements, and is unified with the motor drive circuit.

The CPU (IC502) sets the main motor drive signal (/MON) to “L” and rotates the main motor. When the main motor rotates and reaches the specified speed, the main motor sets the main motor ready signal (/MRDY) to "L". When the /MRDY signal is "L," the CPU determines that the main motor is rotating correctly.

Note When the printer is idle, the main motor comes on every seven hours for 500 milliseconds.

If the printer is in the following conditions, the CPU determines a main motor failure.

- The /MRDY signal does not go to "L" after 700 ms from the main motor rotation start.
- During normal rotation, the /MRDY signal goes to "H" continuously for 0.1 second after going to "L".

The scanner motor is controlled and monitored by the engine controller board. It rotates the scanner mirror during the initial rotation period and the print period.

The fan motor is controlled and monitored by the engine controller board. The fan operates at full speed during the printing modes. During the wait period after the power is on, the fan motor prevents the temperature from rising in the printer.

Note While in idle or PowerSave mode, the fan motor comes on every 14 minutes and stays on for 6 minutes to cool the heat generated by the engine controller board and the power supply.

Formatter system

The formatter is responsible for the following:

- Controlling the PowerSave mode
- Receiving and processing print data from the various printer I/Os
- Monitoring control panel inputs and relaying printer status information (through the control panel and the bidirectional I/O)
- Developing and coordinating data placement and timing with the print engine
- Storing font information
- Communicating with the host computer through the bidirectional interface

The formatter receives a print job from the bidirectional interface and separates it into image information and instructions that control the printing process. The engine controller board synchronizes the image formation system with the paper input and output systems, and then signals the formatter to send the print image data.

The formatter also provides the electrical interface and mounting locations for two EIO cards, additional memory DIMMs, the hard-disk accessory, and the optional HP Fast Infrared Receiver.

PowerSave

This feature in the configuration menu conserves power after the printer has been idle for an adjustable period of time. When the printer is in PowerSave mode, the control panel backlight is turned off, but the printer retains all printer settings, downloaded fonts, and macros. The default setting is POWERSAVE=ON, with a 30-minute idle time. PowerSave can also be turned OFF from the resets menu on the control panel.

The printer exits PowerSave mode and enters the warm-up cycle when any of the following occurs:

- A print job, valid data, or a PML or PJL command is received at the parallel port, serial port, FIR port, or EIO card.
- A control panel key is pressed.
- The top cover is opened.
- A paper tray is opened.
- The engine test button is pressed.

Note Printer error messages override the PowerSave message. The printer will enter PowerSave mode at the appropriate time, but the error message will continue to appear.

Resolution Enhancement technology

The formatter contains circuitry for Resolution Enhancement technology (REt), which modifies the standard video dot data on its way to the engine controller board to produce “smoothed” line edges. The REt can be turned on or off from the control panel or from some software applications. The default setting is medium.

Note The REt settings sent from software applications or printer drivers override the control panel settings.

EconoMode

The EconoMode setting uses up to 50 percent less toner than standard mode printing by reducing the dot density. However, EconoMode does not extend toner cartridge component life. EconoMode, which can be thought of as “draft mode,” can be selected from the control panel (print-quality menu) and through some software applications and printer drivers. The default setting is OFF.

CAUTION HP does not recommend full-time use of EconoMode. If EconoMode is used full-time, it is possible that the toner supply will outlast the mechanical parts in the toner cartridge.

Note EconoMode does not affect print speed or memory usage, or extend the life of the toner cartridge.

Input/output

Parallel interface

The formatter receives incoming data through its bidirectional interface (IEEE-1284). The I/O provides high speed and two way communication between the printer and the host, allowing the user to change printer settings and monitor printer status from the host computer. The user can configure the HIGH SPEED item in the control panel menu. The default setting, YES, allows the I/O to run at the higher speeds supported by most newer computers. When set to NO, the parallel interface runs at the slower mode that is compatible with older computers. The user can also configure the ADVANCED FUNCTIONS item. The default setting, ON, allows for two-way parallel communications. The OFF mode disables the advanced functionality. The I/O is compatible with the bidirectional parallel interface standard.

Expanded I/O

The optional expanded I/O (EIO) card can be installed in the slots provided on the formatter. It provides automatic I/O switching between multiple computers or networks connected to the printer.

HP Fast Infrared Receiver

The optional HP Fast Infrared Receiver enables wireless printing from any iRDA-compliant portable device (such as a laptop computer) to the printer.

The printing connection is maintained by positioning the sending infrared port within operating range. The connection can be blocked by objects such as a hand or paper, or by direct sunlight or any bright light shining into either infrared port.

Flash

Optional flash is available in 2 MB and 4 MB flash memory DIMMs for storing forms, fonts, and signatures.

Hard-disk accessory

The optional hard-disk accessory can be mounted in one of the EIO slots on the rear of the formatter. The optional EIO-based hard disk is used for creating multiple original prints (mopies) and storing forms, fonts, and signatures.

CPU

The HP LaserJet 4100 series printer formatter incorporates a 250 MHz RISC processor.

Printer memory

If the printer encounters difficulty managing available memory, a clearable warning message will appear on the control panel.

Some printer messages are affected by the auto-continue and clearable warning settings from the configuration menu on the printer control panel. If `CLEARABLE WARNING=JOB` is set on the control panel, warning messages appear on the control panel until the end of the job from which they were generated. If `CLEARABLE WARNING=ON` is set, warning messages appear on the control panel until Go is pressed. If an error occurs that prevents printing and `AUTO CONTINUE=ON` is set, the printer goes offline for 10 seconds before it returns online. If `AUTO CONTINUE=OFF` is set, the message appears until Go is pressed.

Read-only memory

Besides storing microprocessor control programs, the read-only memory (ROM) stores dot patterns of internal character sets (fonts).

Random-access memory

The random-access memory (RAM) contains the page, I/O buffers, and the font storage area. It stores printing and font information received from the host system, and can also serve to temporarily store a full page of print-image data before the data is sent to the print engine. Memory capacity can be increased by adding DIMMs to the formatter. Note that adding memory (DIMMs) might also increase the print speed for complex graphics.

DIMM slots

The DIMM slots can be used to add memory, fonts, or firmware upgrades.

Firmware DIMM

To upgrade printer firmware, insert a new firmware DIMM in the lowest DIMM slot inside the formatter assembly (see page 150).

Nonvolatile memory

The printer uses nonvolatile memory (NVRAM) to store I/O and information about the print environment's configuration. The contents of NVRAM are retained when the printer is turned off or disconnected.

Memory Enhancement technology

The HP Memory Enhancement technology (MEt) effectively doubles the standard memory through a variety of font- and data-compression methods.

Note The MEt is only available in PCL mode; it is not functional when printing in PS mode.

PJL overview

Printer job language (PJL) is an integral part of configuration, in addition to the standard printer command language (PCL). With standard cabling, PJL allows the printer to perform functions such as:

- Two-way communication with the host computer through a bidirectional parallel connection. The printer can tell the host about such things as the control panel settings, and it allows the control panel settings to be changed from the host.
- Dynamic I/O switching allows the printer to be configured with a host on each I/O. The printer can receive data from more than one I/O simultaneously, until the I/O buffer is full. This can occur even when the printer is offline.
- Context-sensitive switching allows the printer to automatically recognize the personality (PS or PCL) of each job and configure itself to serve that personality.
- Isolation of print environment settings from one print job to the next. For example, if a print job is sent to the printer in landscape mode, the subsequent print jobs print in landscape only if they are formatted for landscape printing.

PML

The printer management language (PML) allows remote configuration and status readback through the I/O ports.

Control panel

The formatter sends and receives printer status and command data to and from a control panel board.

Image formation system

The image formation system is the main system in the printer. It consists of five stages:

1. Conditioning
2. Developing
3. Transferring
4. Fusing
5. Cleaning

When the formatter board sends the print signal to the engine controller board, it drives the main motor to rotate the photosensitive drum, the developing cylinder, the primary charging roller, the transfer charging roller, and the fuser pressure roller.

The primary charging roller places a uniform negative charge on the surface of the photosensitive drum. To form a latent image on the photosensitive drum, the laser beams modulated by the video signals are illuminated on the photosensitive drum surface.

The latent image formed on the photosensitive drum is changed to a visual image by the toner on the developing cylinder, then transferred to the paper by the transfer charging roller. Then the transferred toner is fused with heat and pressure in the fuser to be a permanent image on the paper. After that, the residual toner on the photosensitive drum surface is scraped off with the cleaning blade. Finally, the charge on the drum is made uniform by the primary charging roller to prepare for a new latent image.

The cartridge has a toner sensor that detects the remaining toner level and the presence of the cartridge.

If the toner in the cartridge becomes lower than the specified level or if there is no cartridge in the printer, it is reported to the formatter.

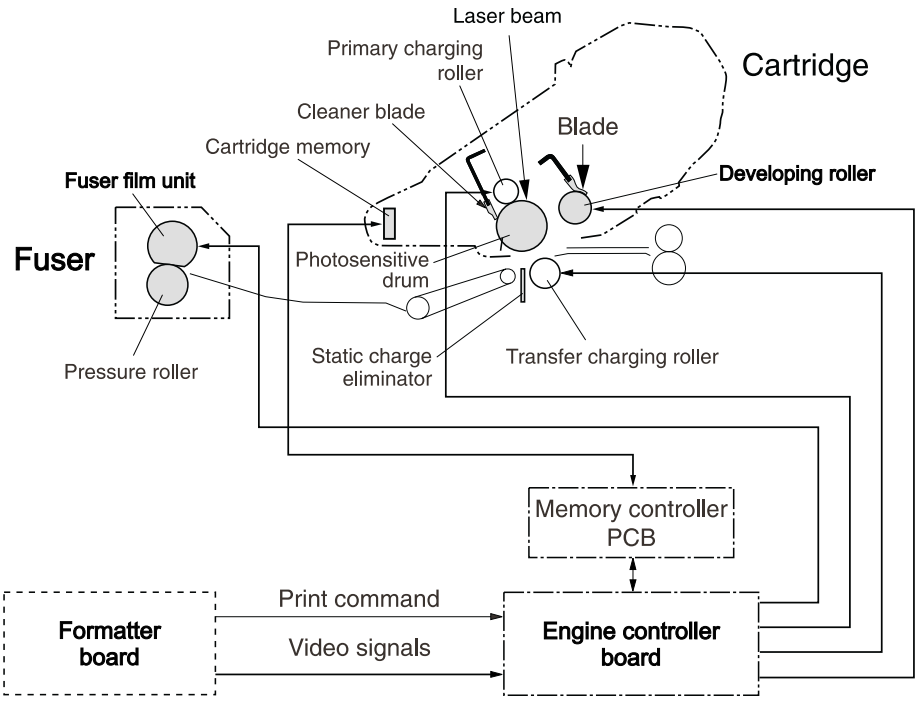

Figure 18. **Image formation system**

Toner cartridge

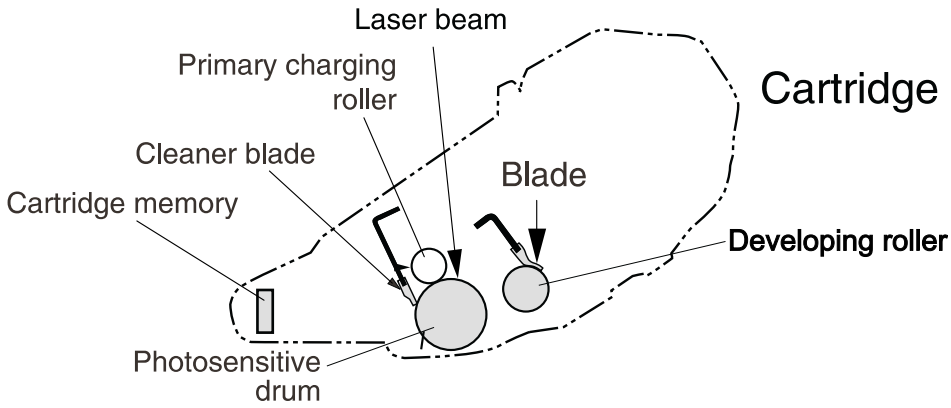

Figure 19. **Toner cartridge**

A major portion of the image formation system is contained in the cartridge as shown in figure 19.

The toner cartridge is the “heart” of the image formation system. It houses the cleaning, conditioning, and developing steps of the process. The toner cartridge contains the photosensitive drum, primary charging roller, developing roller, toner cavity, and cleaner blade. Including these components that wear, degrade, or are consumed in the replaceable toner cartridge eliminates the need for a service call when replacement is required.

Photosensitive drum

The special properties of the photosensitive drum allow an image to be formed on the drum surface and then transferred to paper. The drum is an aluminum cylinder coated with a layer of organic-photoconductive material (OPC) which is non-toxic. The OPC material has properties similar to a photoresistor. It becomes electrically conductive when exposed to light. (The negative charges deposited on the drum are conducted to the ground potential of the drum base.) Areas not exposed to light remain nonconductive and maintain their negative charge. The aluminum base of the photosensitive drum is electrically connected to ground potential.

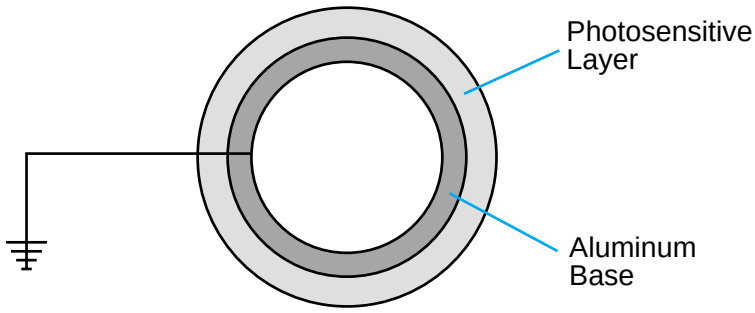

Figure 20. **Photosensitive drum**

Cleaning the drum

The cleaning blade is in contact with the surface of the drum at all times. As the drum rotates during printing, excess toner is scraped off and stored in the waste toner receptacle.

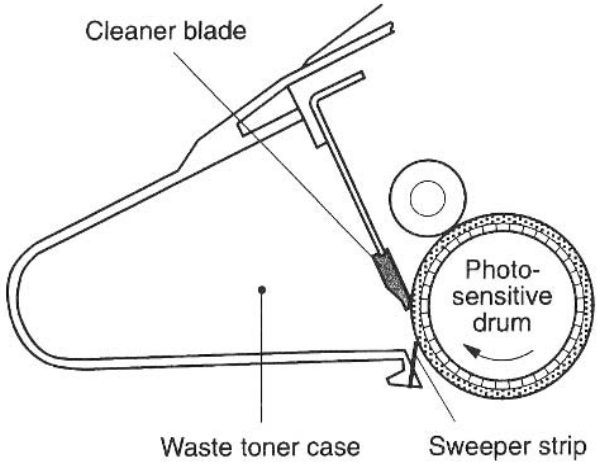

Figure 21. **Cleaning the drum**

Conditioning the drum

The conditioning process consists of applying a uniform negative charge on the surface of the drum with the primary charging roller. The primary charging roller is coated with conductive rubber with an AC bias applied to erase any residual charges and maintain a constant drum surface charge. The amount of DC voltage is modified by the print density setting.

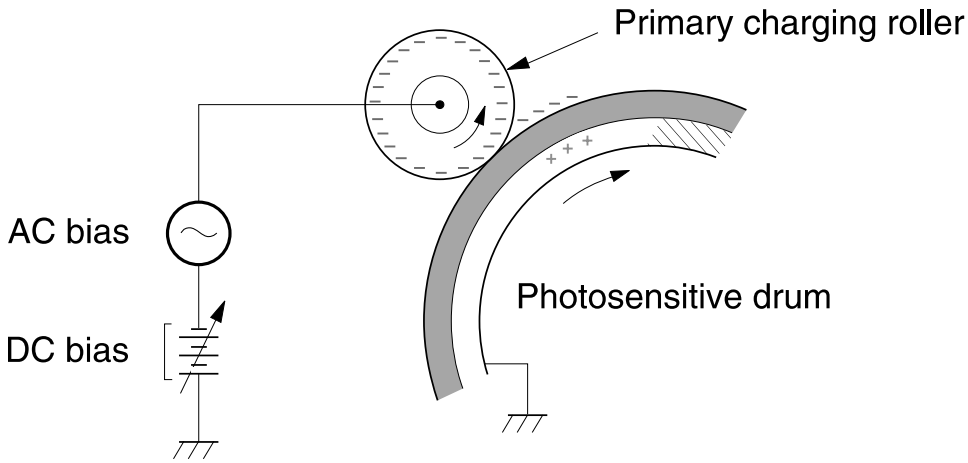

Figure 22. **Primary charging roller**

Writing the image

The laser/scanner of this printer has two diodes in the laser unit. During the writing process, the modulated laser diodes project two beams onto the rotating six-sided scanning mirror. As the mirror rotates, the beams reflect off the mirror, through a set of focusing lenses, through a slot in the top of the toner cartridge, and onto the photosensitive drum. The beams sweep the drum from left to right, discharging the negative potential wherever the beams strike the surface. This creates a latent electrostatic image, which later is developed into a visible image.

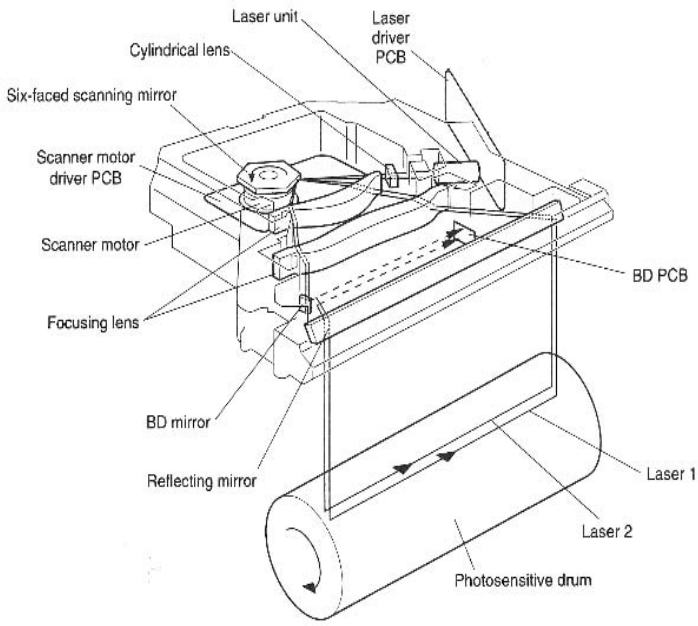

Figure 23. **Writing the image**

Because the beams are sweeping the entire length of the drum and the drum is rotating, the entire surface area of the drum can be covered. The speed of the scanner motor (which turns the scanning mirror) and the speed of the main motor (which turns the drum) are synchronized, and each successive sweep of a beam is offset by 1/1200th of an inch. The beams can be turned on and off to place a dot of light every 1/1200th of an inch. This is how the printer achieves its true 1200 by 1200 dpi resolution. After the writing process, the drum surface has an invisible (latent) electrostatic image.

At the beginning of each sweep, the beams strike the beam detect mirror and PCB, generating the beam detect signal (BD). The BD signal is sent to the engine controller board, where it is converted to an electrical signal used to synchronize the output of video data for one sweep (two scan lines) and to diagnose problems with the laser diode or scanner motor.

Developing the image

The developing process develops the latent electrostatic image into a visible image on the drum. The developing unit consists of a metallic cylinder that rotates around a fixed magnetic core inside the toner cavity. Toner is a powdery substance made of black plastic resin bound to iron particles, which is uniformly attracted to the magnetic core of the cylinder.

The toner particles obtain a negative surface charge by rubbing against the developing cylinder which is connected to a negative DC supply. The negatively charged toner is attracted to the discharged (exposed, grounded) areas on the drum. An AC potential is applied to the developing cylinder to decrease the attraction between the toner and the magnetic core of the cylinder, and to increase the repelling action of the toner against the areas of the drum not exposed to laser light. This AC potential improves density and contrast.

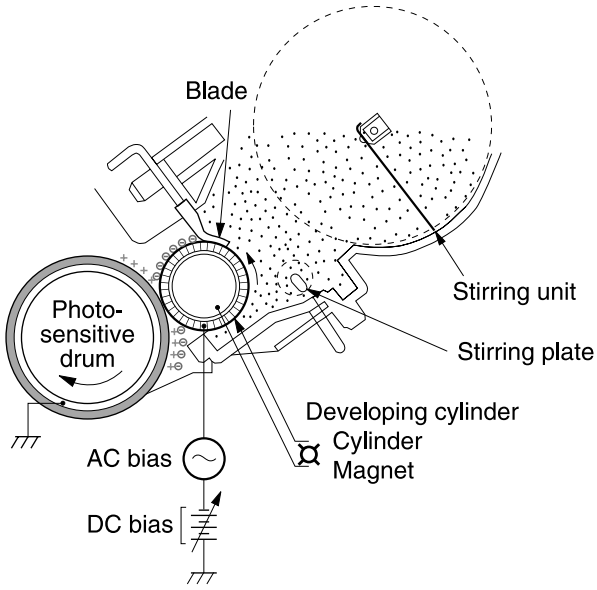

Figure 24. **Developing the image**

The print density control in the print quality menu adjusts the DC bias of the developing cylinder by changing the force of attraction between the toner and drum. A change in the DC bias causes either more or less toner to be attracted to the drum, which in turn either increases or decreases the print density. Both the primary and developer DC bias voltages are changed in response to the density setting.

Transferring the image

During the transferring process the toner image on the drum surface is transferred to the paper. A positive charge applied to the back of the paper by the transfer roller causes the negatively charged toner on the drum surface to be attracted to the page.

The small diameter of the drum, combined with the stiffness of the paper, causes the paper to peel away from the drum. The static eliminator teeth also help separate the paper from the drum. The static eliminator teeth weaken the attractive forces between the negatively charged drum surface and the paper. After separation, the drum is cleaned and conditioned for the next image.

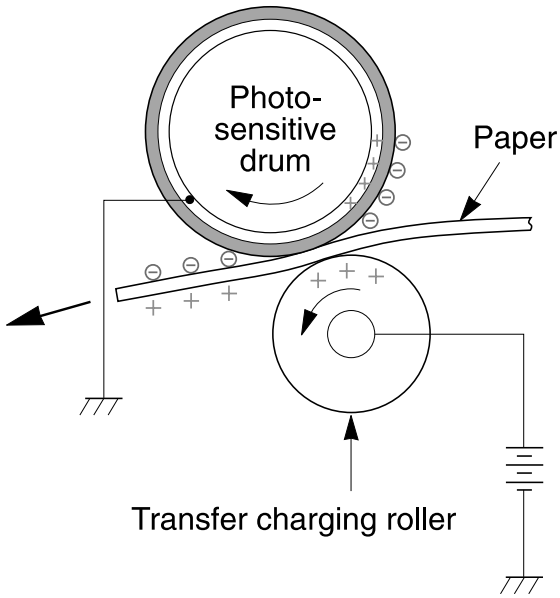

Figure 25. **Transferring the image**

Image fusing/variable fusing temperature

During the fusing process, the toner is fused into the paper by heat and pressure to produce a permanent image. The paper passes between a heated fusing roller and a soft pressure roller. This melts the toner and presses it into the paper.

This printer utilizes an on-demand fusing method, which uses fusing film with small heat capacity. This method has fast temperature-rising time. It is not necessary to supply power to the fuser heater during the standby mode. Wait time is shortened and energy conservation is made possible by this method.

The fusing roller contains a ceramic strip that contains three heating elements, providing heat for the fusing process. Fusing temperature is monitored by the engine controller board using two thermistors. The engine controller board maintains a temperature of about 195° C (383° F) during print mode. If the fusing system overheats (about 240° C/464° F), a relay opens, interrupting power to the fusing heater and causing a fuser error message (`50.X FUSER ERROR`). If the fusing system exceeds 250° C (482° F), the thermal fuse will open, cutting off power to the fuser.

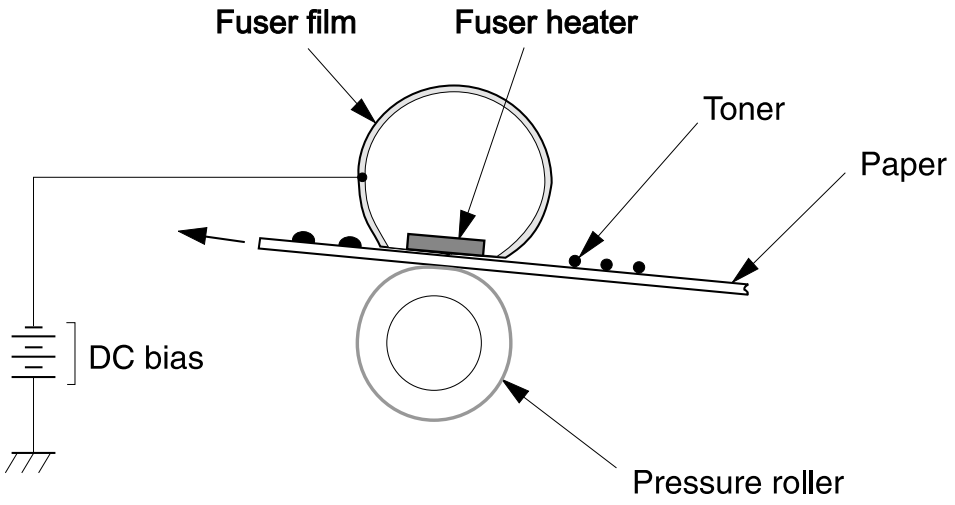

Figure 26. **Image fusing**

Variable fusing temperature

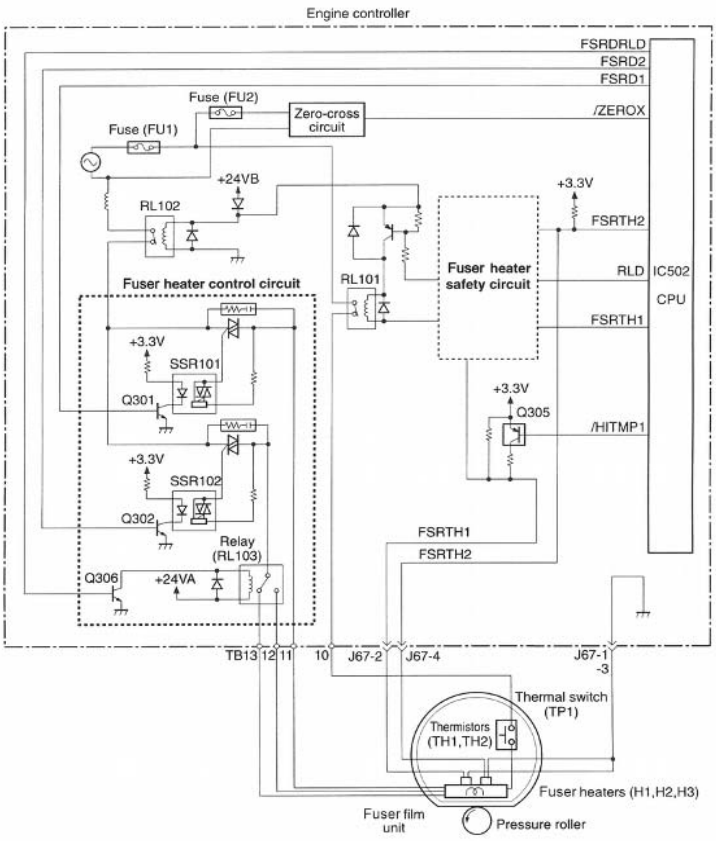

Figure 27. **Fusing temperature control**

Variable fusing temperature is a feature that gives the user or service technician the ability to adjust the fusing temperature based on the media being used in the printer. The default mode is normal and should be optimal for most users. There are optional fuser-mode selections. If very heavy or rough media is being used, then high fuser mode is beneficial. If transparencies or light media are being used, then low fuser mode might be appropriate. `CONFIGURE FUSER MODE` is in the paper-handling menu and when set to the default of `NO`, paper types are not displayed in the menu. When `CONFIGURE FUSER MODE` is set to `YES`, the different paper types are displayed in the menu (see page 59).

Note High2 fusing mode only operates for A4-, letter-, and legal-size paper, and slows the throughput to 16 pages per minute.

Paper feed system

The printer in figure 29 on page 119 has two standard paper sources: the 100-sheet tray (tray 1) and the 500-sheet tray (tray 2). Up to two additional optional paper trays can be included.

Both the size of the paper in the tray and the presence of a tray are detected by the three switches (SW600, 601, 602) on the paper size detection circuit assembly.

All of the rollers on the paper path are driven by the main motor (M101). While the main motor rotates, the tray pickup solenoid is turned on, the tray pickup roller rotates, and a sheet of print media is fed into the printer. Then, the sheet passes the registration assembly, which compensates for the skew of the sheet.

After the top of page sensor (PS103) detects the leading edge of the sheet, the vertical synchronization signal (/TOP) is sent from the engine controller board to the formatter.

After the formatter receives the /TOP signal, the /VDO signal is sent; this synchronizes the leading edge of the image on the drum with the leading edge of the sheet. The sheet of print media goes through transfer, separation, and fusing stages; passes through the delivery unit; and is delivered to the top output bin or rear output bin.

There are five photosensors (PS102, PS103, PS106, PS107, PS108) in the paper path that detect the presence of media. If a sheet does not reach or pass these sensors within a prescribed time interval, the microprocessor on the engine controller board detects a jam.

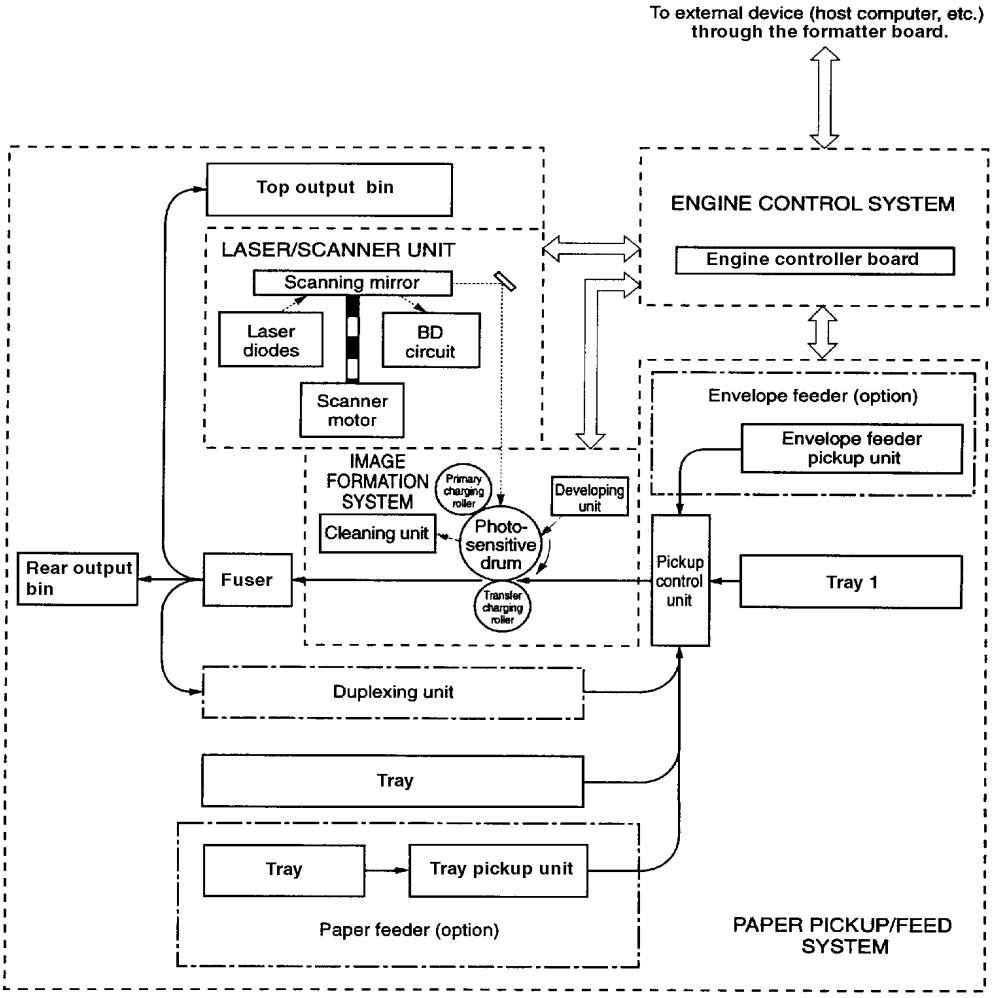

Figure 28. **Paper feed subsystem**

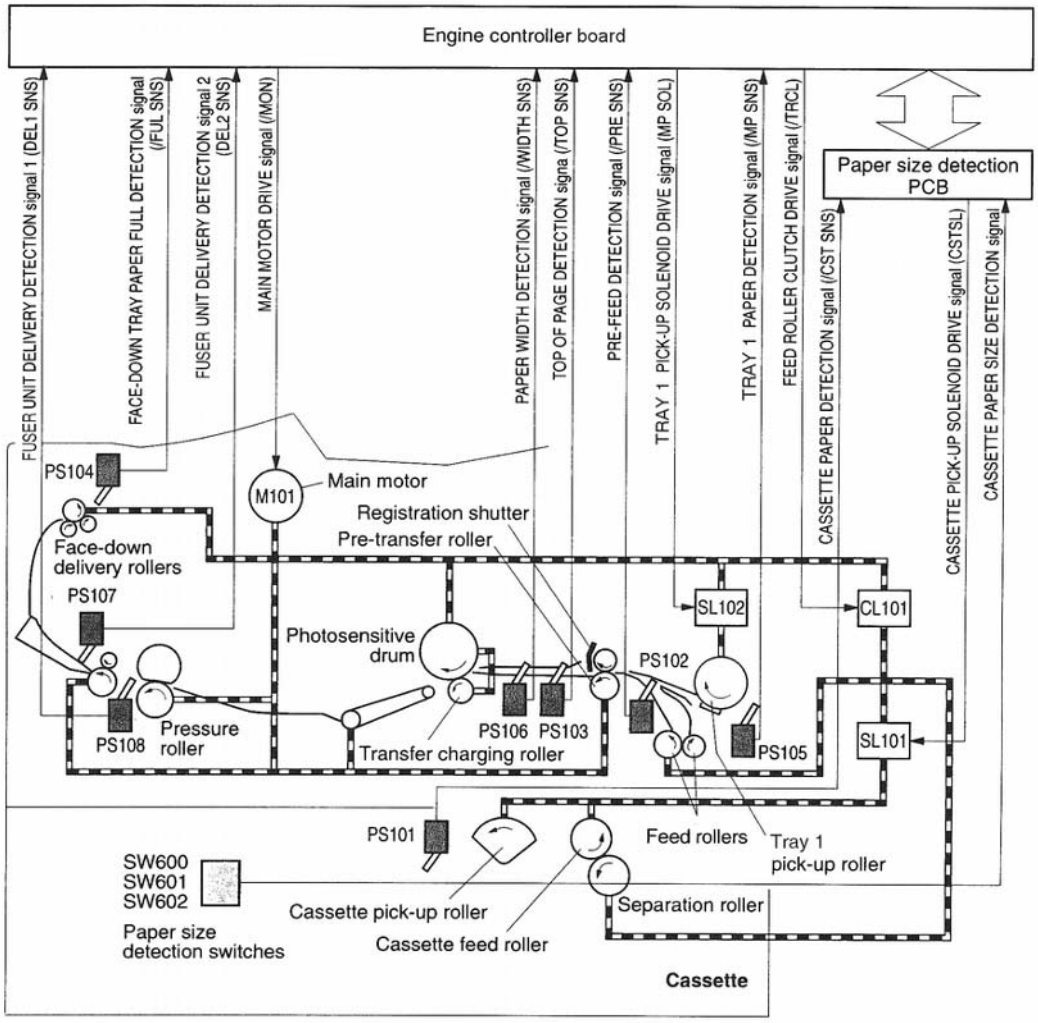

Figure 29. **Paper path**

Clutches and sensors

See chapter 7 for locations of switches, sensors, and clutches.

Printing from tray 1

The presence of paper in tray 1 is detected by the tray 1 paper sensor (PS105).

When the engine controller board receives the /PRNT signal from the formatter, the printer starts the initial rotation phase. (This consists of main motor warm-up, scanner motor warm-up, high-voltage control sequence and fuser warm-up.) When the initial rotation phase ends, the tray 1 pickup solenoid (SL102) is activated.

The cam rotates, the paper tray lifter rises, and the media comes in contact with the tray 1 pickup roller. At the same time, the tray 1 pickup roller rotates twice and a sheet of media in tray 1 is picked up. The lifter plate prevents unnecessary sheets from feeding with the first sheet.

The sheet then reaches the registration assembly, where its skew is corrected. Then it goes through transfer, separation, and fusing stages; passes through the delivery unit; and is delivered to the output bin.

Note If paper is removed from tray 1 just before it is picked, the tray 1 pickup roller might continue to rotate up to six times and a jam will be detected.

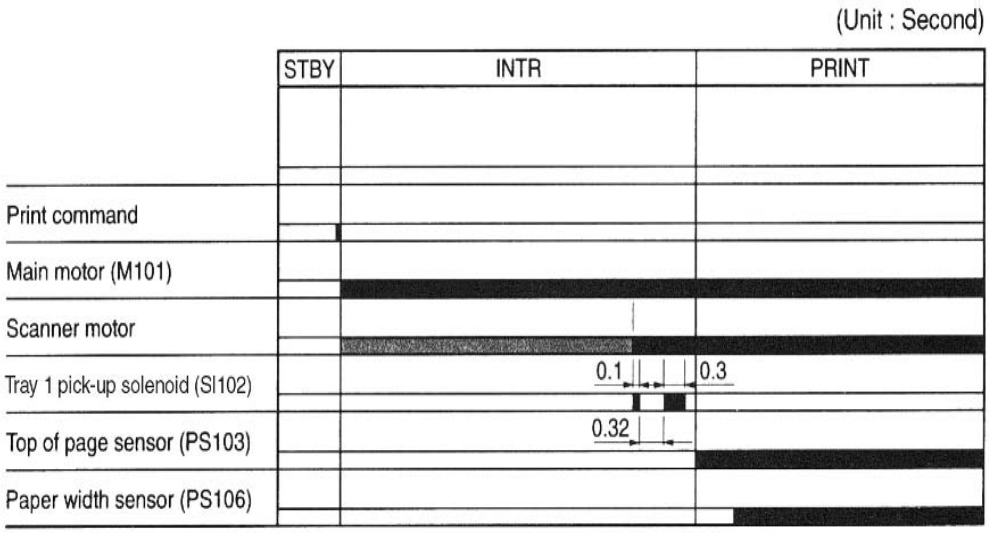

Figure 30. **Tray 1 pickup timing**

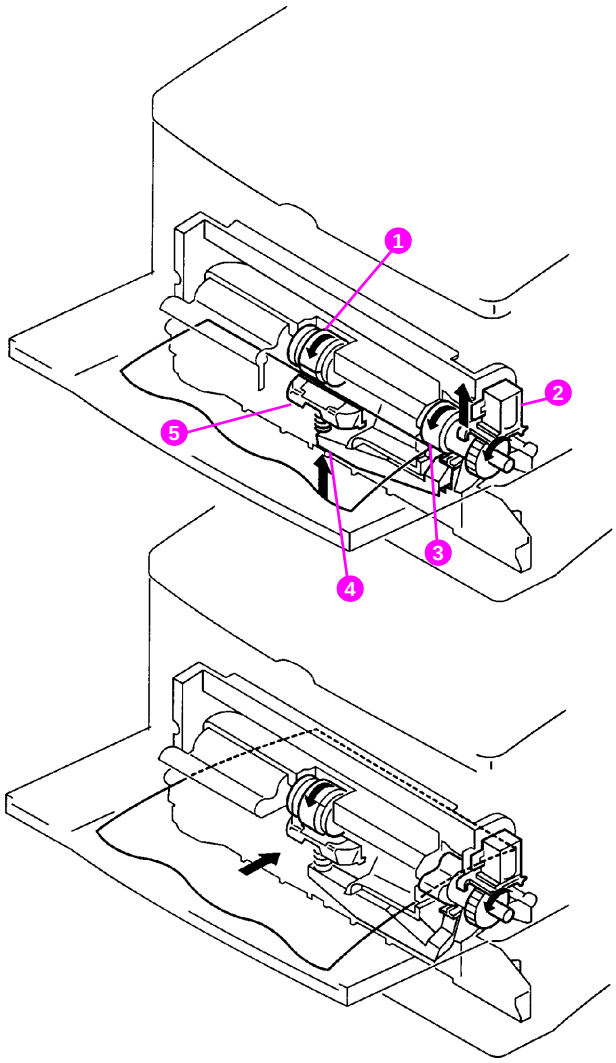

Figure 31. **Tray 1 pickup**

1 Tray 1 pickup roller

2 Tray 1 pickup solenoid

3 Cam

4 Lifter arm

5 Lifter plate

Printing from tray 2

When the formatter sends the /PRNT signal to the printer, the main motor (M101) and scanner motor start rotation. When the main motor reaches its prescribed speed, the feed roller clutch (CL101) and tray 2 pickup solenoid (SL101) are activated. (The tray 2 pickup roller, tray 2 feed roller, tray 2 separation roller, and paper feed rollers are driven by the main motor rotation.)

The tray 2 pickup roller, activated by the pickup solenoid, rotates once and picks up the media in the tray. The unnecessary sheets are removed by the separation roller and the media is fed to the pre-feed sensor (PS102).

The sheet then reaches the registration assembly, where its skew is corrected. Then it goes through transfer, separation, and fusing stages; passes through the delivery unit; and is delivered to the output bin.

Note If paper is removed from tray 1 just before it is picked, the tray 1 pickup roller might continue to rotate up to six times and a jam will be detected.

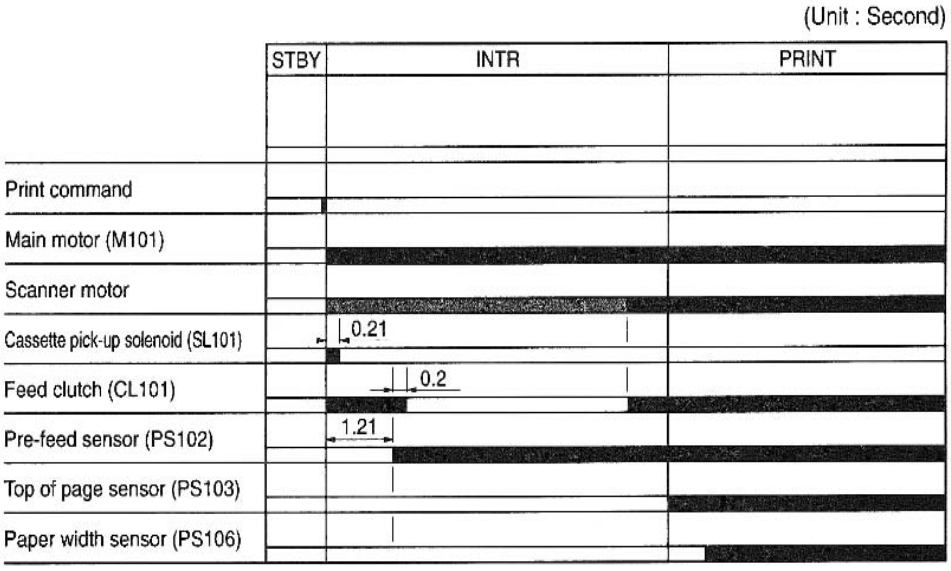

Figure 32. **Tray 2 pickup timing**

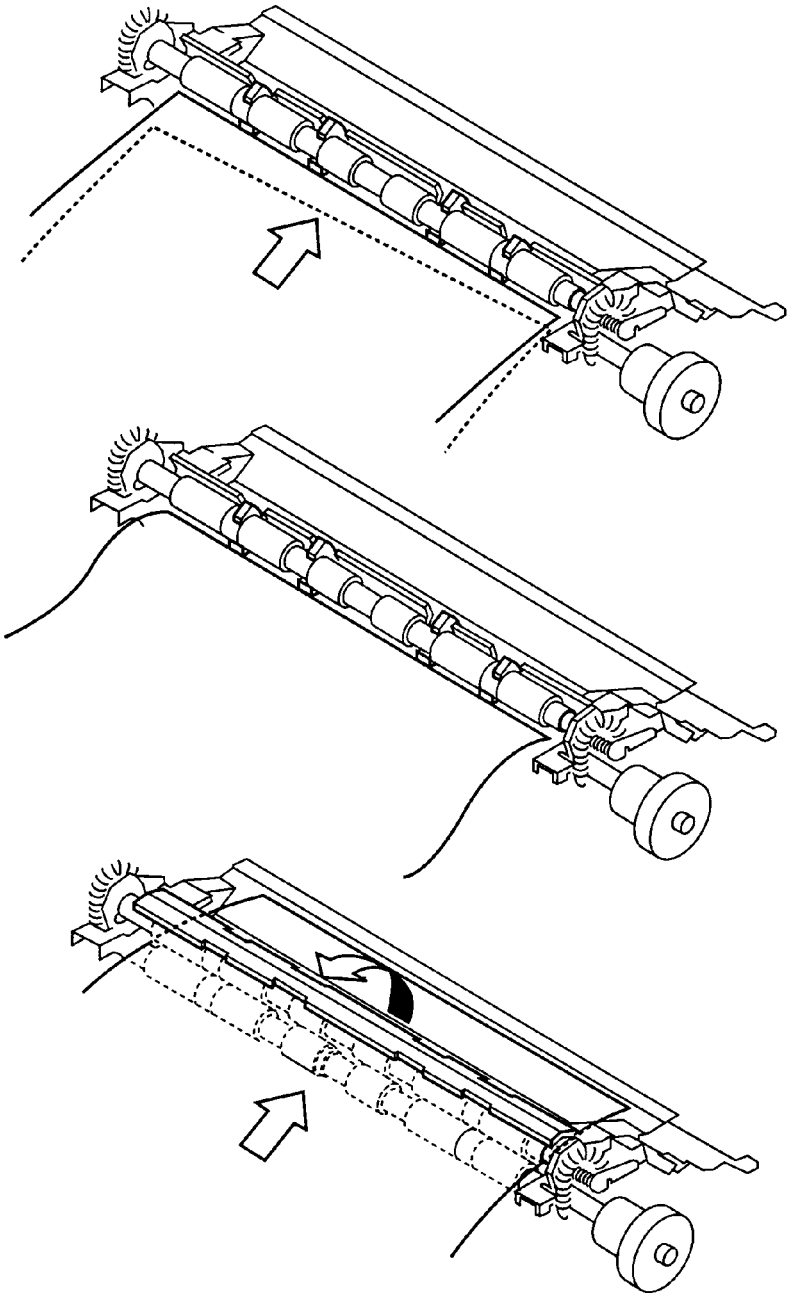

Figure 33. **Skew correction at registration assembly**

Multiple-feed prevention mechanism

The printer uses the separation roller in tray 2 to prevent multiple-feeding. Normally, the separation roller rotates in the same direction as the feed roller. The separation roller is equipped with a torque limiter, but because the force of the feed roller exceeds that of the torque limiter, the separation roller is actually driven by the feed roller.

If multiple sheets of media are picked up, however, the low friction force between the sheets weakens the rotational force from the feed roller to the separation roller. Consequently, the torque limiter takes control of the separation roller, and rotates the separation roller in the reverse direction, which removes the extra sheets.

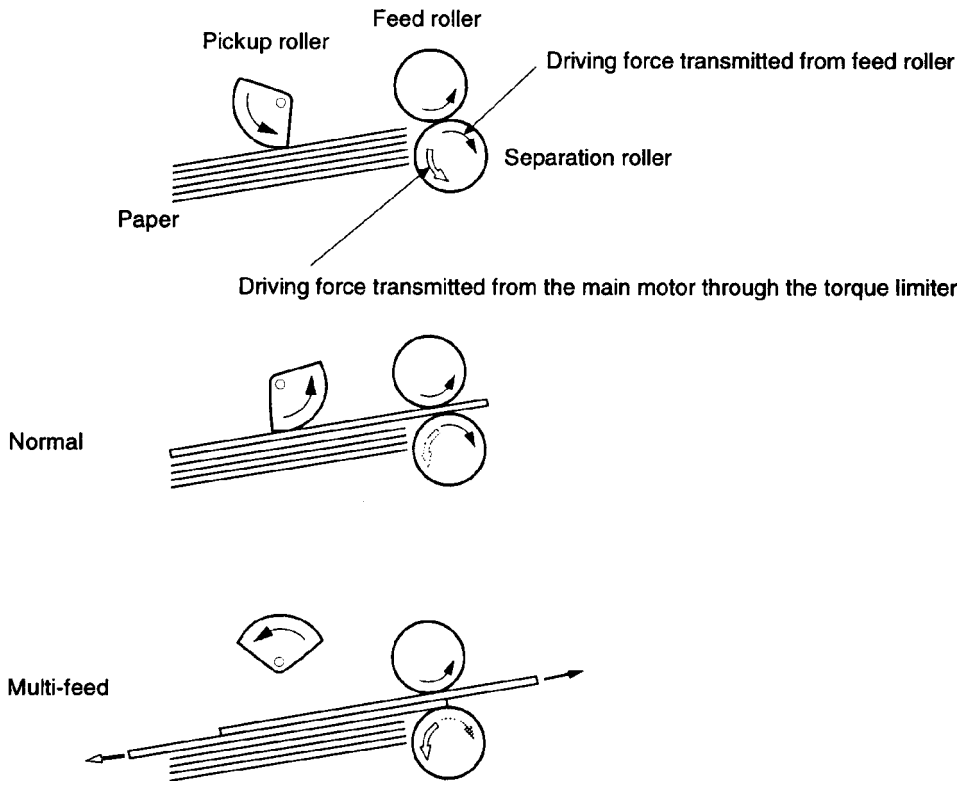

Figure 34. **Multiple-feed prevention mechanism**

Printing from the optional 500-sheet tray

Note The HP LaserJet 4100 series printers support up to two optional 500-sheet feeders.

The operation sequences of the paper feeder are controlled by the paper-feeder driver. A 4-bit microprocessor is used in the paper-feeder driver, which controls the paper feeder sequences and the communication with the engine controller board. The engine controller board sends the pickup command to the paper-feeder driver with the necessary timing.

The paper-feeder driver drives the solenoid in response to the pickup command. The paper-feeder driver also returns the status of the paper feeder to the engine controller board.

A charge of +24 VDC is supplied to the paper feeder from the printer, and +3.3 V for the integrated circuits is generated from +24 VDC inside the paper-feeder driver.

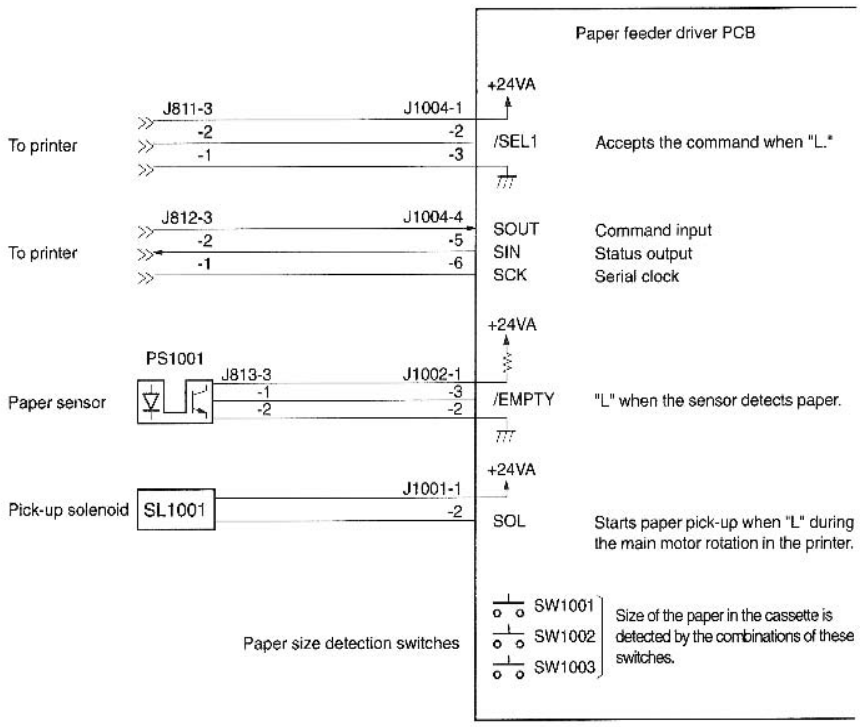

Figure 35. **Paper-feeder driver I/O**

Pickup and feeding

The media size and the presence of the 500-sheet tray are detected by three switches (SW1001, 1002, 1003) on the paper-feeder driver. The relationship between the switch combinations and the paper sizes is the same as for the printer.

The paper feeder is driven by the main motor (M101) of the printer. When a print command is sent to the paper feeder from the formatter, the main motor of the printer starts rotation. When the main motor reaches its prescribed speed, the paper-feeder driver receives the pickup command from the engine controller board, and the paper-feeder pickup solenoid (SL1001) is activated. (The pickup roller, feed roller, and separation roller are driven by the main motor's rotation.)

The pickup roller, activated by the solenoid, rotates once, picking up the media inside the 500-sheet tray. Any unnecessary sheets are removed by the separation roller and the media is fed to the prefeed sensor (PS102) of the printer.

The sheet then reaches the registration assembly, where its skew is corrected. Then it goes through transfer, separation, and fusing stages; passes through the delivery unit; and is delivered to the output bin. (For more information, see the graphic on page 252 in chapter 7.)

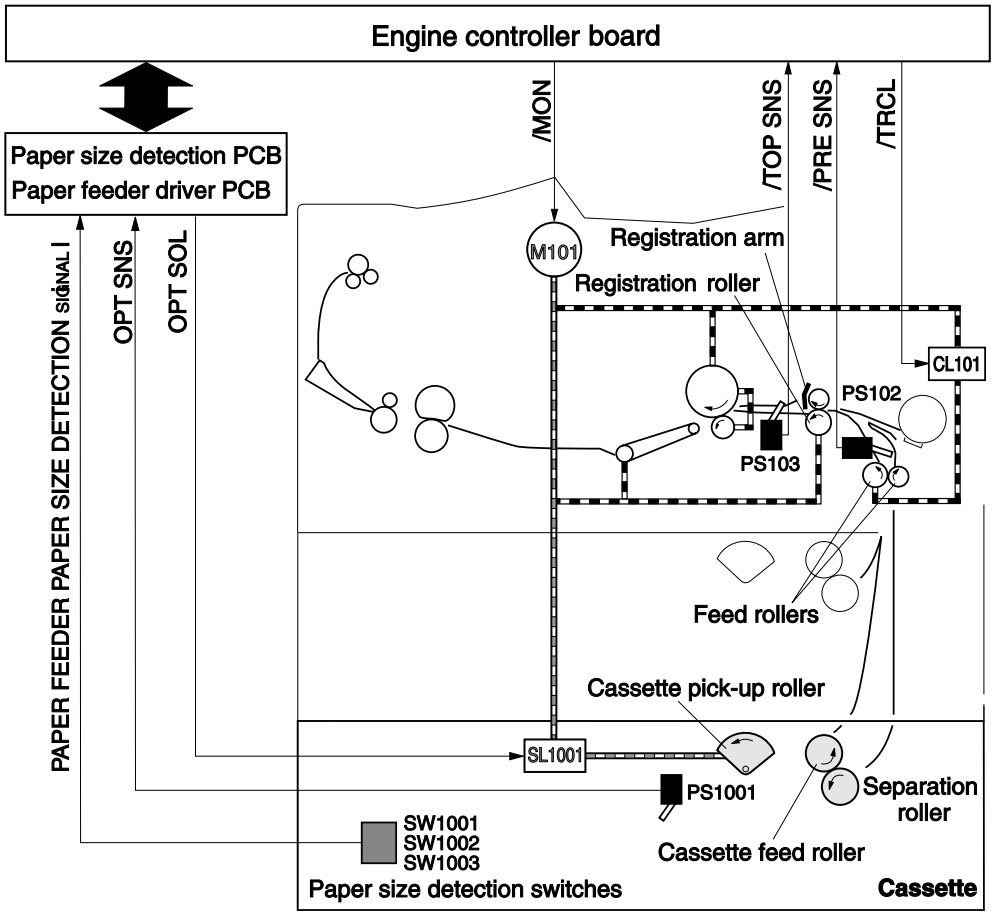

Figure 36. **Paper feed pickup**

Envelope feeder

The operation sequences of the envelope feeder are controlled by the envelope-feeder driver. A 4-bit microprocessor is used in the envelope feeder driver, which controls the envelope-feeder sequence and the communication with the engine controller board of the printer.

The engine controller board sends the pickup command to the envelope-feeder driver with the necessary timing. The envelope-feeder driver activates the solenoid in response to the command. The envelope feeder driver also sends the envelope-feeder status to the engine controller board.

A charge of +24 VDC is supplied to the envelope feeder from the printer, and +3.3 V for the ICs is generated from the +24 VDC inside the envelope-feeder driver.

Pickup and feeding

In the envelope feeder, the envelope sensor (PS901) detects the presence of envelopes and the envelope-size sensor (PS903) detects if the envelope size is wide or narrow. All of the rollers in the envelope feeder are driven by the envelope pickup motor (M901).

When a print command is sent to the printer from the formatter, the printer starts the main motor (M101). When the initial rotation phase is completed, the scanner motor starts rotating. As the scanner motor rotates, the envelope pick-up motor starts rotating to drive the pickup roller, feed roller, and separation roller, and an envelope is picked up.

Then, any unnecessary envelopes are stopped by the separation roller, and the envelope is fed to the printer. The envelope then reaches the registration assembly, where its skew is corrected. Then it goes through transfer, separation, and fusing stages; passes through the delivery unit; and is delivered to the output bin. See figure 104 on page 252.

Duplexer

The operation sequences of the duplexer are controlled by the duplexer driver. A 4-bit microprocessor is used in the duplexer driver, which controls the duplexer sequence and the communication with the engine controller board.

The duplexer driver drives the solenoid, motors, and fan according to commands sent from the engine controller board to the duplexer and duplex pickup command via serial communication. The duplexer also returns its status to the engine controller board.

A charge of +24 VDC is supplied to the duplexer from the printer, and +5 V for the ICs is generated from the +24 VDC inside the duplexer driver.

Reversing and duplexer pickup

The duplexer has two stepping motors, the reversing motor (M701) and the duplex feed motor (M702). Normal and reverse rotations are controlled by the duplexer driver.

Print media is fed to the duplexer from the face-up output tray divertor, which is controlled by the duplexer solenoid.

Note If the face-up tray is open, the duplexer cannot be used.

When the trailing edge of the media passes the reverse sensor (PS703), the reversing motor changes direction. The media is then transported by the oblique roller and feed roller so that its edge makes contact with the left panel to correct its skew.

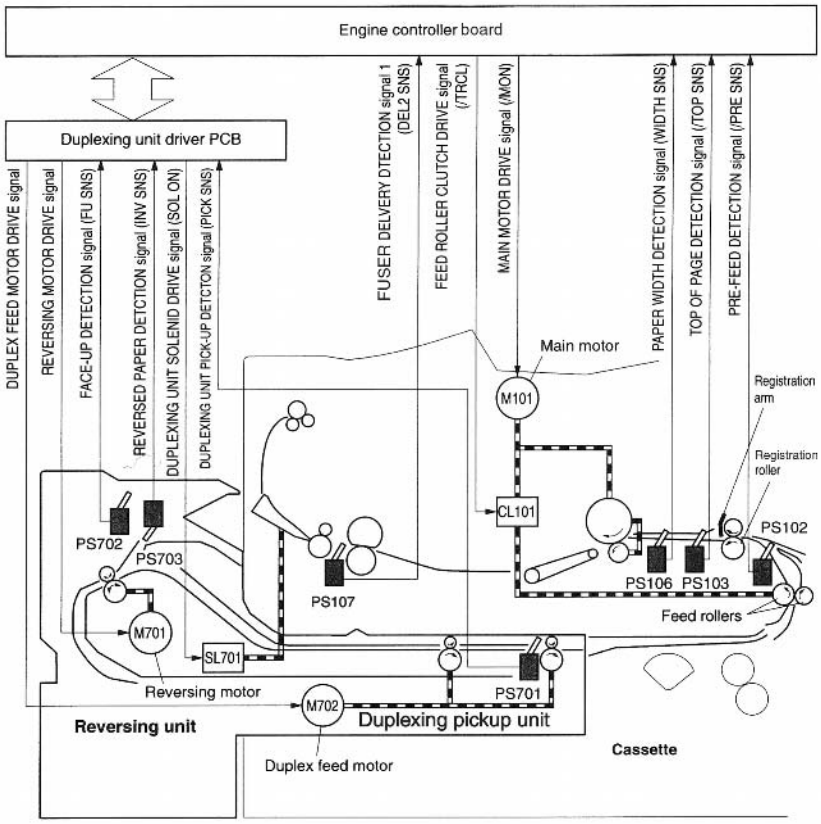

Figure 37. **Paper path for the duplexer**

Jams

The following paper sensors are installed to detect whether or not the print media is present and whether or not it is fed normally.

- Tray 2 paper sensor (PS101)
- Prefeed sensor (PS102)
- Top-of-page sensor (PS103)
- Face-down tray paper-full sensor (PS104)
- Tray 1 (multi-purpose tray) paper sensor (PS105)
- Paper width sensor (PS106)
- Fuser delivery sensor 1 (PS108)
- Fuser delivery sensor 2 (PS107)

The microprocessor (CPU) on the engine controller board detects a jam by checking for media presence in the sensor unit at the check timing stored in the memory.

If the CPU detects that a jam has occurred, it stops print operation and signals the formatter.

Environmental detection

This printer is capable of detecting the ambient environment using the environment temperature sensor (TH3). The sensor, installed on the left side of the printer, measures the air temperature.

The CPU detects the air temperature with the voltage of ENVTMP signal and recognizes the ambient environment as one of the following three conditions:

- Low temperature: air temperature is 17° C (63° F) or lower
- Normal temperature: air temperature is 17° to 31° C (63° to 88° F)
- High temperature: air temperature is 31° C (88° F) or higher

This printer switches the temperature control for the fuser according to the ambient environment.

When the voltage of the ENVTMP signal becomes abnormally low-temperature (TH3 short) or abnormally high-temperature (TH3 open), the CPU detects an environment temperature sensor failure.

Basic sequence of operation

The operation sequences of this printer are controlled by the microprocessor on the engine controller board. The purposes of periods from power on until the main motor stops after the completion of printing are described below.

Table 33. Printer timing

Period	Timing	Purpose
WAIT	From power on until the main motor completes the initial rotation.	Clears the drum surface potential and cleans the transfer roller. During this period, the printer checks the toner level and the presence of the cartridge.
STBY (standby)	From the end of the WAIT or the LSTR period until the input of the PRNT signal from the formatter. Or from the end of the LSTR period until power off.	Maintains the printer in ready state.
INTR (initial rotation)	From the input of the PRNT signal from the formatter until the engine controller sends the TOP signal.	Stabilizes the photosensitive drum sensitivity in preparation for printing. Also cleans the transfer roller.
PRNT (print)	After the end of initial rotation until the top of the page sensor detects the trailing edge of the print media.	Forms images on the photosensitive drum based on the video signals from the formatter and transfers the image to the print media. During this period, the printer checks the toner level.
LSTR (last rotation)	After the primary voltage (DC) turns off until the main motor stops. If another PRNT signal is sent from the formatter, the printer returns to the INTR period. If not, it returns to the STBY period.	Delivers the last sheet of print media and cleans the transfer roller.

Figure 38. **Timing diagram**

6 Removing and replacing parts

Chapter contents

Removal and replacement strategy

This chapter describes how to remove and reassemble major assemblies.

Replacement is generally the reverse of removal. Occasionally, hints and notes are included to provide direction for difficult or critical replacement procedures.

WARNING! Unplug the power cord from the power outlet before attempting to service the printer. If this warning is not followed, severe injury can result.

Never operate or service the printer with the protective cover removed from the laser/scanner assembly. The reflected beams, although invisible, can damage your eyes.

Some sheet metal edges, particularly around the formatter cage, are sharp. Be careful when working in these areas to avoid cutting yourself.

CAUTION The printer contains parts that are sensitive to electrostatic-static discharge (ESD). Always perform servicing at an ESD-protected workstation. The ESD symbol appears in this chapter when the parts being serviced are especially susceptible to ESD damage.

CAUTION If possible, print the configuration page and menu map before working on the product. Replacing the formatter assembly clears the settings in memory. Clearing the settings can render the product inoperable. The list of configuration settings can assist in restoring the settings.

CAUTION To install a self-tapping screw, first turn it counterclockwise to align it with the existing thread pattern, then carefully turn clockwise to tighten. Do not overtighten. If a self-tapping screw-hole becomes stripped, repair the screw-hole or replace the affected assembly.

Before performing service . . .

- ☐ Print a configuration page, menu map, and an event log.
- ☐ Remove all accessories.
- ☐ Remove all media from the printer.
- ☐ Turn off the printer, and then unplug all cables from the printer, beginning with the power cable.
- ☐ Place the printer on an ESD mat.
- ☐ Remove all trays.
- ☐ Remove the toner cartridge.

After completing service . . .

- ☐ Replace the toner cartridge.
- ☐ Reinstall all trays.
- ☐ Reconnect all cables to the printer.
- ☐ Load media.
- ☐ Replace all accessories.
- ☐ Make sure the latest firmware is installed on the printer.
- ☐ Restore customer configuration settings.

Required tools

Tools

- Phillips #2 magnetized screwdriver with 6-inch shaft
- Flat-blade screwdriver with 6-inch shaft
- Needle-nose pliers
- ESD mat

Other helpful tools

- A container (such as an ice cube tray) to hold printer screws
- Masking tape and pen to tag and identify connectors and screws
- Penlight
- Gloves (when removing or replacing the transfer roller)

Screws used in the printer

All screws used in the printer are Phillips head, which require a Phillips screwdriver. The following figure shows the difference between a Phillips and a Posidriv screwdriver. Note that the Phillips tip has more beveled surfaces.

CAUTION Using a Posidriv screwdriver will damage the screw heads. Use a Phillips #2 screwdriver only.

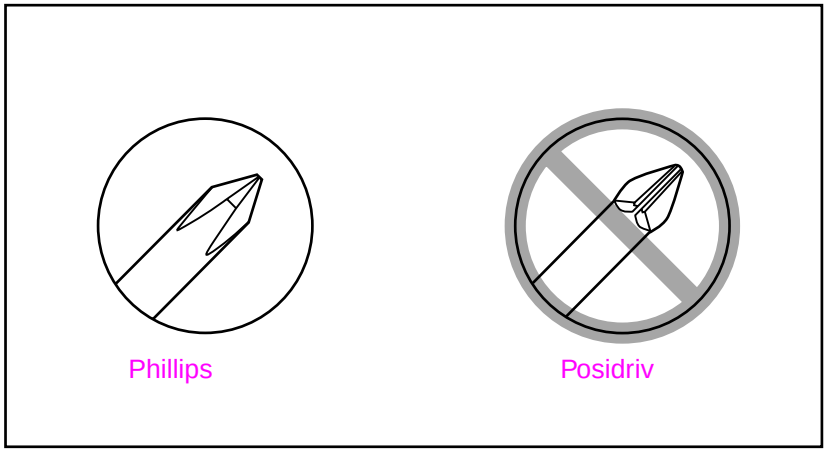

Figure 39. **Comparing Phillips and Posidriv screwdrivers**

Table 34 on page 137 describes the screws used in the printer and provides guidelines to help determine where each type of screw is used. The screws can vary in length depending on the thickness of the material being fastened.

Always note where each type of screw is located and replace each one into its original location.

CAUTION To install a self-tapping screw, first turn it counterclockwise to align it with the existing thread pattern, then carefully turn clockwise to tighten. Do not overtighten. If a self-tapping screw-hole becomes stripped, repair the screw-hole or replace the affected assembly.

Table 34. Screws used in the printer

Drawing and description	Purpose
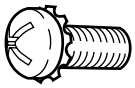 Phillips machine screw with captive star washer	Used to fasten metal to metal when good electrical contact is needed
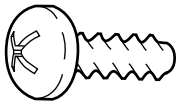 Self-tapping Phillips screw	Used to fasten metal or plastic to plastic frames
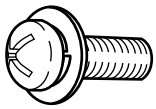 Phillips machine screw with lock and flat washer	Used to fasten metal or plastic to threaded plastic or metal
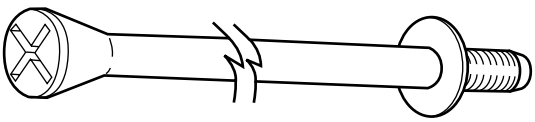 Long screw (116 mm/4.8 inches)	Used to anchor the tray 2 feed module assembly to the engine

Screw measurement guide

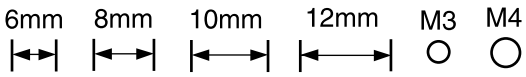

Removing covers

CAUTION Before removing covers, turn off the printer and unplug the power cord and any cables.

Hint Left and right are indicated as you face the front of the printer unless otherwise noted.

Rear right side cover

Figure 40. **Removing the rear right side cover**

The formatter assembly and dual inline memory modules (DIMMs) are located underneath the right side cover.

1. Grasp the cover by its rear lip and pull it firmly toward the rear of the printer until it stops.
2. Remove the cover from the printer.

Control panel

Control panel overlay

Figure 41. **Removing the control panel overlay**

1. Using a flat-blade screwdriver, gently pry upward and outward on the right side of the control panel overlay to loosen it.
2. Remove the control panel overlay from the tabs on the left and lift it upward, off of the printer.

Control panel board

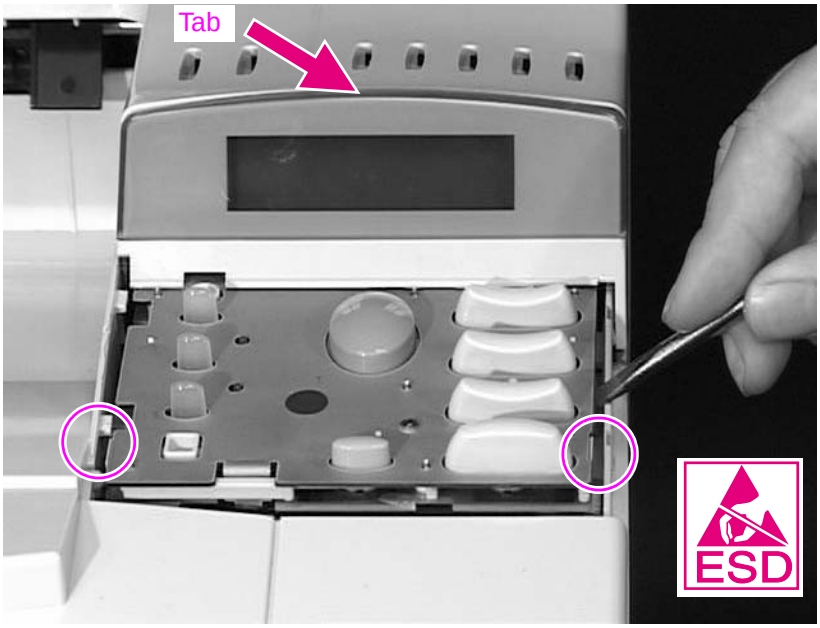

Figure 42. **Removing the control panel board**

1. Remove the control panel overlay (page 139).
2. Using a flat-blade screwdriver, release the claws on each side of the control panel board shown, and then lift upward.

CAUTION To prevent damage to the control panel board, release the claws before prying upward.

3. Remove the top of the control panel board from the top tab.
4. Disconnect the ribbon cable from the control panel board.

Top cover

CAUTION Do not remove the toner cartridge when the top cover interlock is overridden. Cartridge memory will be damaged.

CAUTION To prevent damage to the toner cartridge, do not expose it to light for more than a few minutes.

1 To remove the top cover:

- **a** Open the top cover and remove the toner cartridge.
- **b** Remove the rear right side cover (page 138).
- **c** Remove the control panel (page 139).

Figure 43. **Disconnecting the toner cartridge drive arm**

2 Disconnect the toner cartridge drive arm by using needle-nose pliers to pinch the pin from its hinge on the top cover.

Hint Be sure to reconnect the toner cartridge drive arm when you replace the top cover, or the toner cartridge will not seat properly.

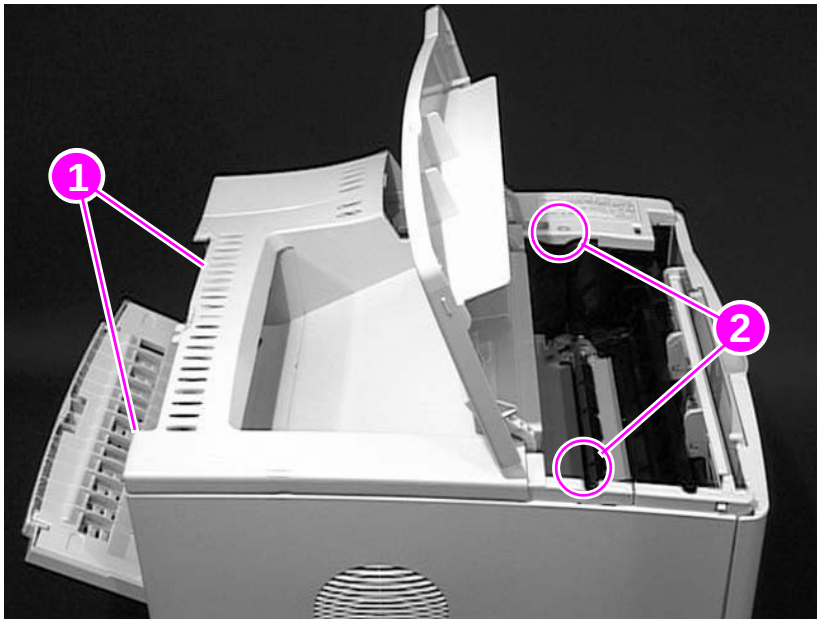

Figure 44. **Removing the top cover**

3 Open the rear output bin, and then remove two screws (callout 1) from the top cover, near the top of the bin.

4 Remove two more screws (callout 2) located under the top cover door.

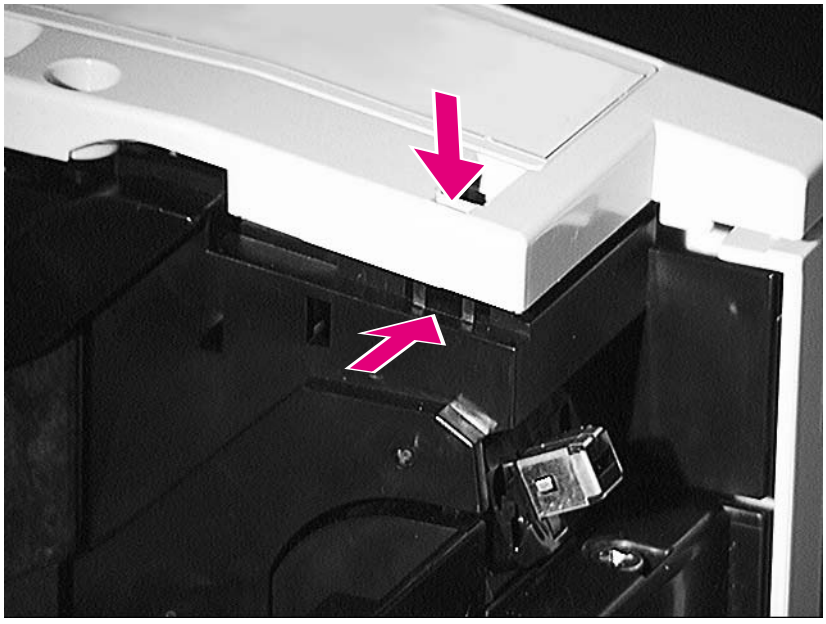

Figure 45. **Releasing tabs to lift the top cover**

5 Squeeze the frame below the tab to release the top cover. It might be necessary to use a small flat-blade screwdriver to release the tab inside the small hole.

6 Holding the output delivery assembly in place (located toward the rear of the printer), remove the top cover.

Left side cover

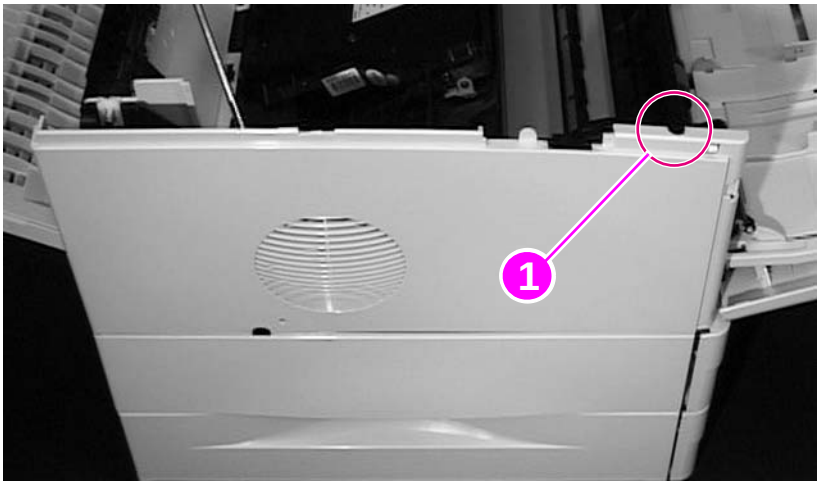

Figure 46. **Removing the left side cover**

1. To remove the left side cover:
   - **a** Remove the rear right side cover (page 138).
   - **b** Remove the control panel (page 139).
   - **c** Remove the top cover (page 141).
2. Open tray 1.
3. Lift the left side cover upward off of the catch (callout 1), and then pull the cover away from the printer.

Front right side cover

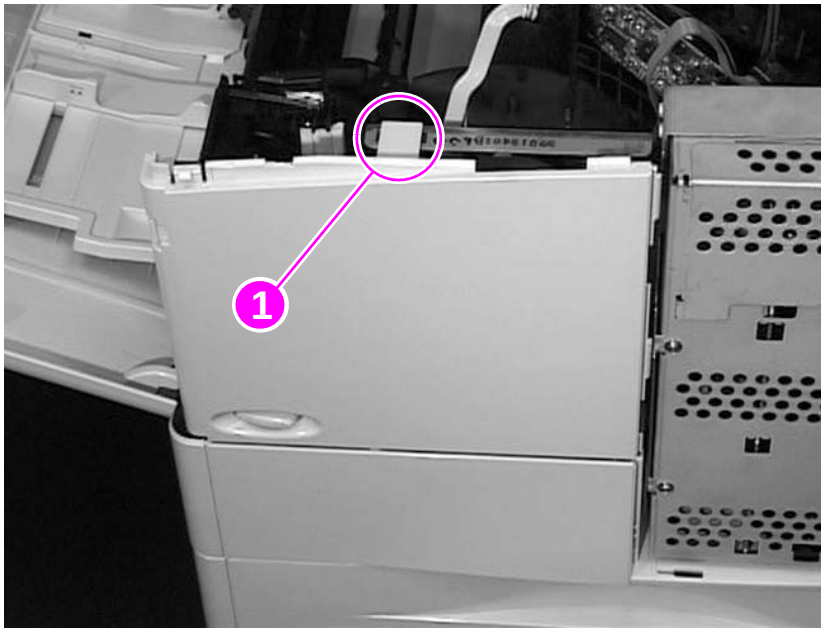

Figure 47. **Removing the front right side cover**

1. To remove the front right side cover:
   - **a** Remove the rear right side cover (page 138).
   - **b** Remove the control panel (page 139).
   - **c** Remove the top cover (page 141).
2. Open tray 1.
3. Release the latch (callout 1) at the top center of the cover.
4. Lift the cover straight up until it is free of the locating pins at the bottom and the power switch rod, then pull it away from the printer.

Hint When you reinstall the front right side cover, be sure to reconnect the power switch rod.

Rear cover/rear output bin

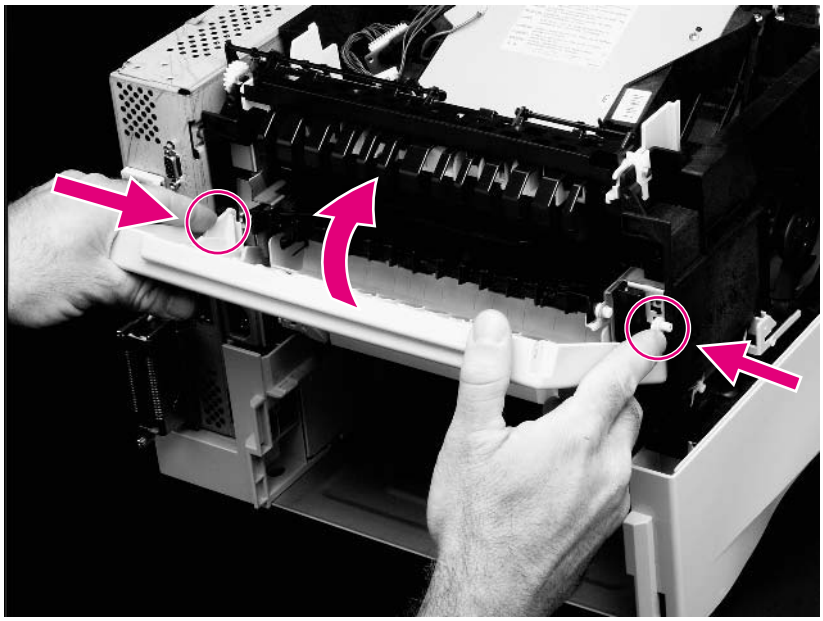

Figure 48. **Removing the rear cover/rear output bin**

1. Remove the tray 2 dust cover if installed.
2. Facing the rear of the printer, press the left side (formatter side) of the rear output bin and release the hinge from the slot.
3. Rotate the bin upward and slide it to the left to release the right hinge.

Hint Before reinstalling the dust cover, ensure the claws at the top of the dust cover are not damaged, and then snap the claws into place.

Tray 1

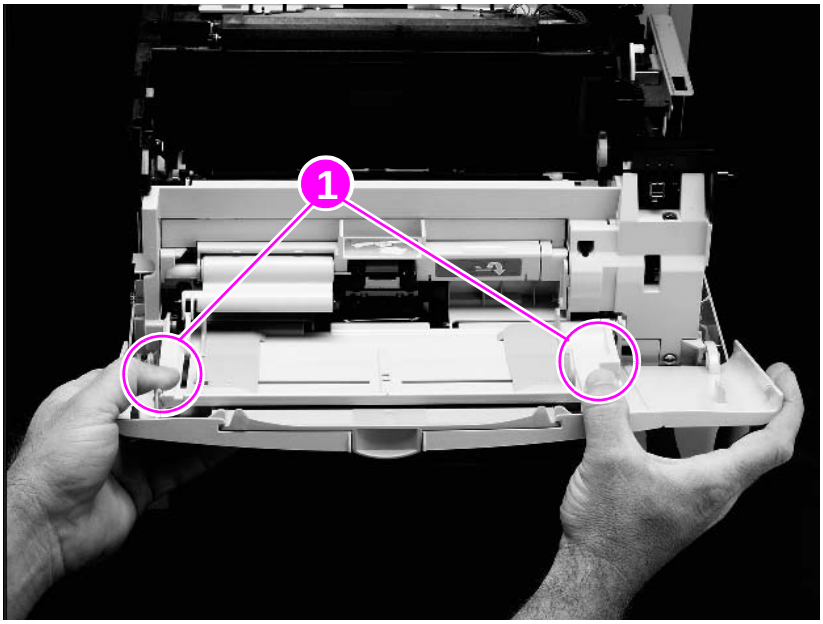

Figure 49. **Removing tray 1 from the front cover**

1. Open tray 1.
2. Push outward on the two slot hinges (callout 1) to release the pins on tray 1.
3. Slide the front cover to the right and remove it from the three hinges on the bottom.

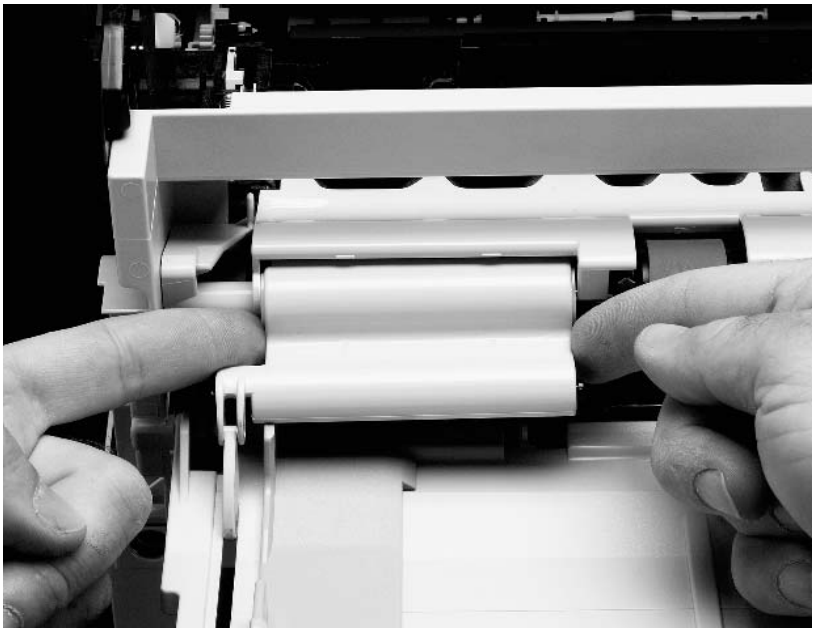

Figure 50. **Removing the tray 1 sensor arm cover**

4. Firmly pull both sides of the tray 1 sensor arm cover toward you until it releases from the shaft.

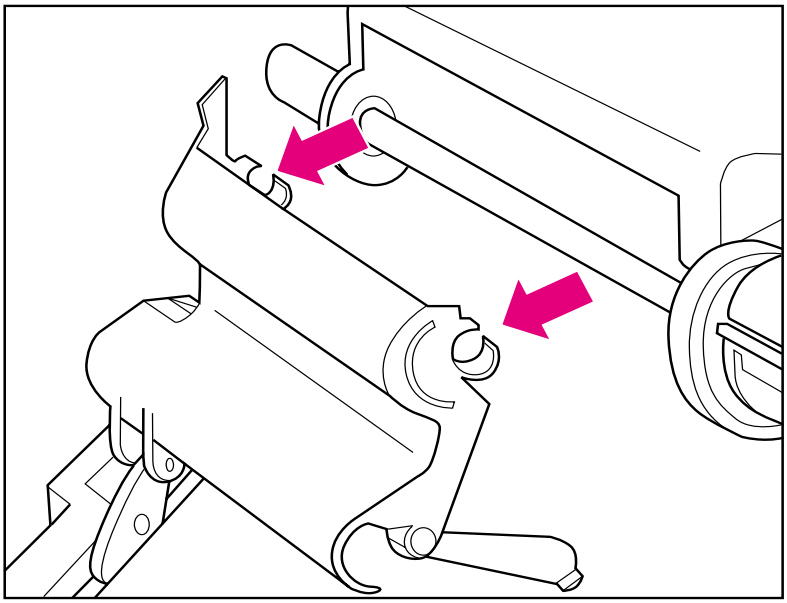

Figure 51. **Detail of the tray 1 sensor arm cover**

Hint When you reinstall the tray 1 sensor arm cover, be sure the sensor arms move freely.

5 Rotate tray 1 upward and release the hinge spring from the bottom of tray 1 located on the right tray 1 hinge pin. Note the position of the hinge spring before proceeding.

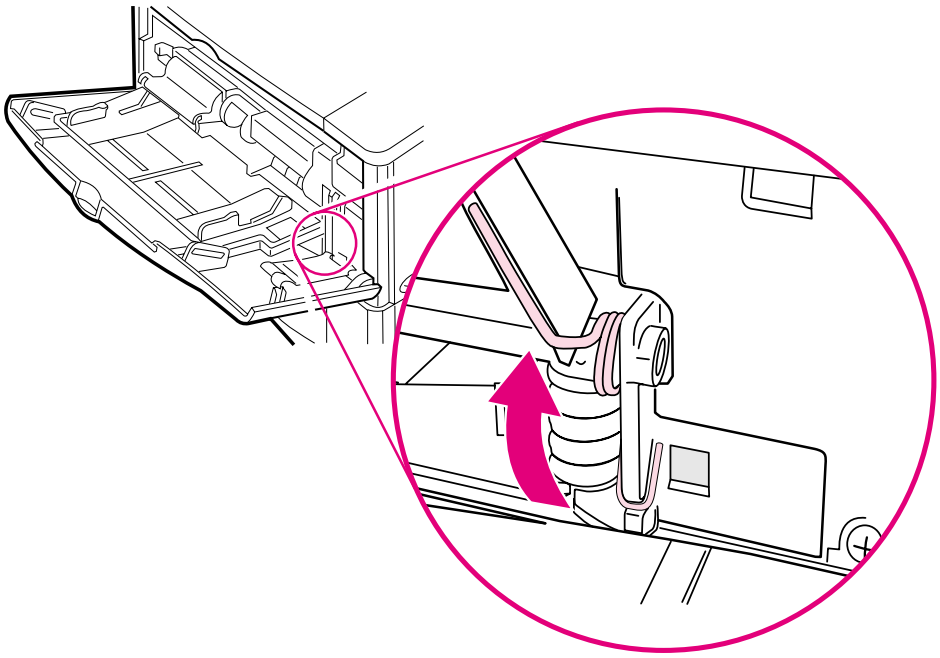

Figure 52. **Detail of hinge spring**

6 Rotate tray 1 downward completely and remove the tray from the left hinge.

7 Slide tray 1 to the left to remove the tray from the right hinge.

Hint Tape the hinge spring to tray 1.

Hint When you reinstall the hinge spring, place the long side of the spring in the slot underneath tray 1, and hook the short end of the spring in the small notch located directly below the pivot point.

Fuser

WARNING! Let the fuser assembly cool before removal.

1 If a duplexer is installed, remove it. If a duplexer is not installed, remove the tray 2 dust cover from the rear of the printer by pulling from the bottom.

2 Remove the rear cover/rear output bin (page 145).

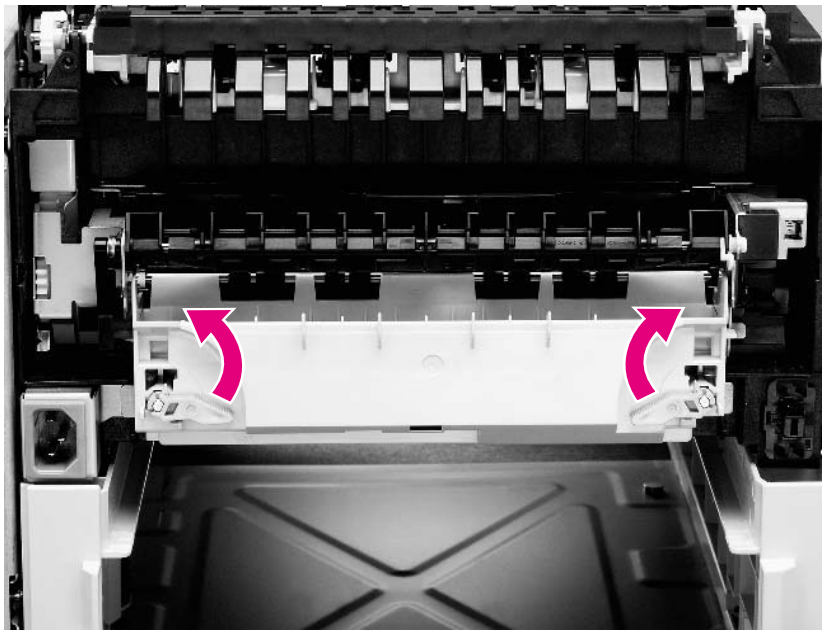

Figure 53. **Unlocking the fuser assembly**

3 Rotate the two blue levers on the fuser assembly up to the unlocked position.

4 Pull the fuser assembly straight out of the printer.

CAUTION To prevent damage to the fuser assembly, do not grasp the fuser by the black plastic diverter.

Hint When reinstalling the fuser assembly, be sure the blue levers are initially in the unlocked position. Make sure the fuser assembly is seated fully before rotating the blue levers down into the locked position.

Firmware DIMM

CAUTION Static electricity can damage dual inline memory modules (DIMMs). When handling DIMMs, either wear an antistatic wrist strap or frequently touch the surface of the DIMM's antistatic package, and then touch bare metal on the printer.

1. Print a configuration page, a menu map, and an event log. The information is necessary to reconfigure the printer after you replace the firmware DIMM.
2. Turn off the printer.
3. Unplug the power cord and disconnect any other cables.
4. Remove the rear right side cover (page 138). The formatter assembly is directly underneath.
5. Open the formatter access door by pulling on the large metal tab (see figure 55 on page 151).
6. Remove any installed accessories, EIO devices, memory DIMMs, or flash DIMMs.

Note Remove the old firmware DIMM installed in the lowest DIMM slot.

7. Remove the new firmware DIMM from the antistatic bag and install the DIMM in the lowest DIMM slot.

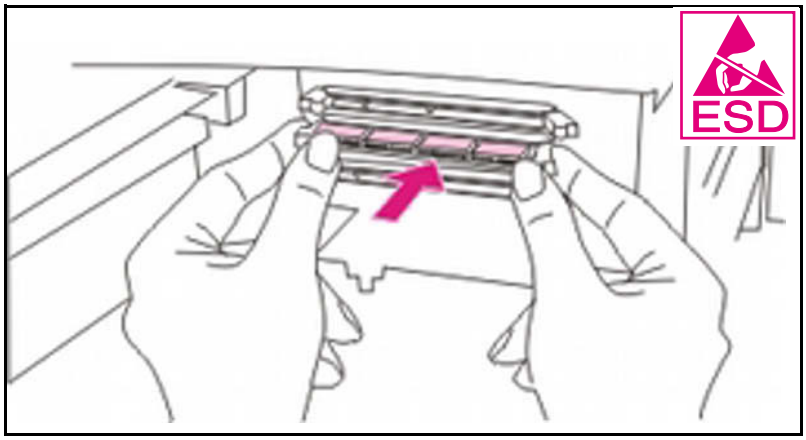

Figure 54. **Installing a firmware DIMM**

8. Close the formatter access door.
9. Plug the power cord into the printer.
10. Wait until READY appears.
11. Turn off the printer.
12. Reinstall all accessories, EIO devices, memory DIMMs, or flash DIMMs.
13. Turn on the printer.
14. Print a new configuration page and menu map, and compare the settings with the information pages printed in step 1. Verify the installed options and menu settings are consistent.

Formatter assembly

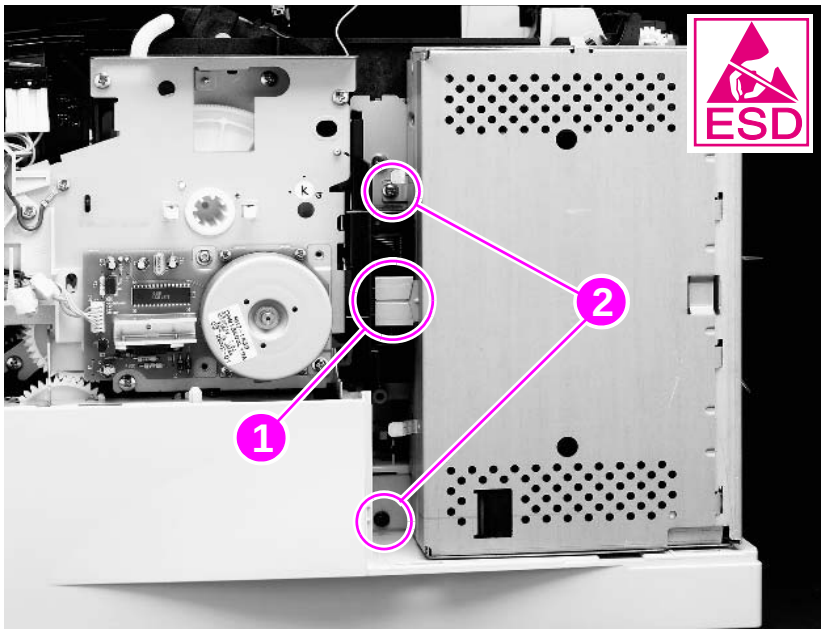

Figure 55. **Removing the formatter assembly**

1. Print a configuration page and menu map. The information is necessary to reconfigure the printer after you replace the formatter.
2. Remove the rear right side cover (page 138). The formatter assembly is directly underneath.
3. Pull outward on the large metal tab (callout 1) to open the DIMM access door. Remove and transfer any DIMMs or EIO accessories to the new formatter assembly.
4. Remove the two screws (callout 2) to the left of the formatter assembly.
5. Slide the formatter assembly toward the rear of the printer and remove it.

Hint If a new formatter assembly is installed, perform a NVRAM initilization (see page 79).

Note Using the configuration page and menu map you printed in step 1 above, reconfigure the printer after replacing the formatter assembly and initializing NVRAM. Be sure to reset the printer's page count, serial number, maintenance count, all configuration page features, and all control panel settings.

Hint When reinstalling the formatter assembly, ensure it is seated over the two stepped screws located behind the formatter assembly.

Output delivery assembly

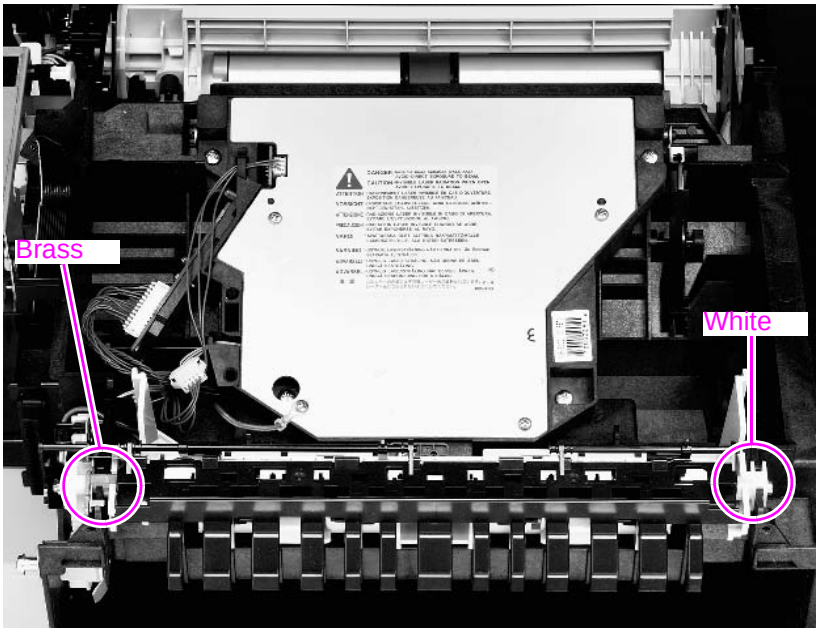

Figure 56. **Removing the output delivery assembly**

1 To remove the output delivery assembly:

   a Remove the rear right side cover (page 138).

   b Remove the control panel (page 139).

   c Remove the top cover (page 141).

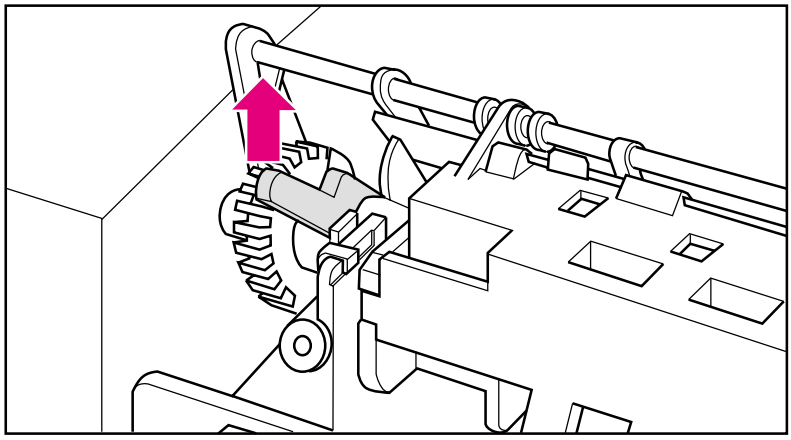

Figure 57. **Left end of output delivery assembly (brass arm)**

2 Facing the rear of the printer, rotate the brass arm up 90° located on the gear-end of the output delivery assembly.

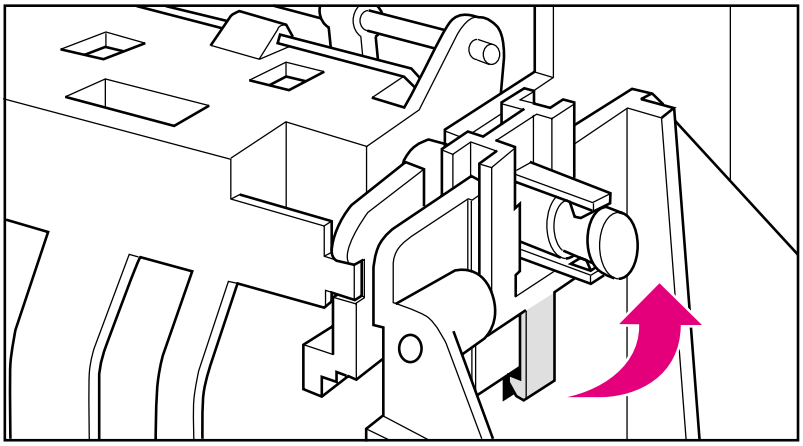

Figure 58. **Right end of output delivery assembly (white tab)**

3 Facing the rear of the printer, carefully release the white tab located on the right end of the output delivery assembly.

CAUTION The white tab is fragile. Use minimum deflection when releasing the tab.

4 Lift the assembly up and out of the printer.

CAUTION Lift the assembly carefully to avoid damaging the top output-bin-full sensor flag.

Hint When the assembly is replaced, the flag must be able to rotate freely.

Laser/scanner

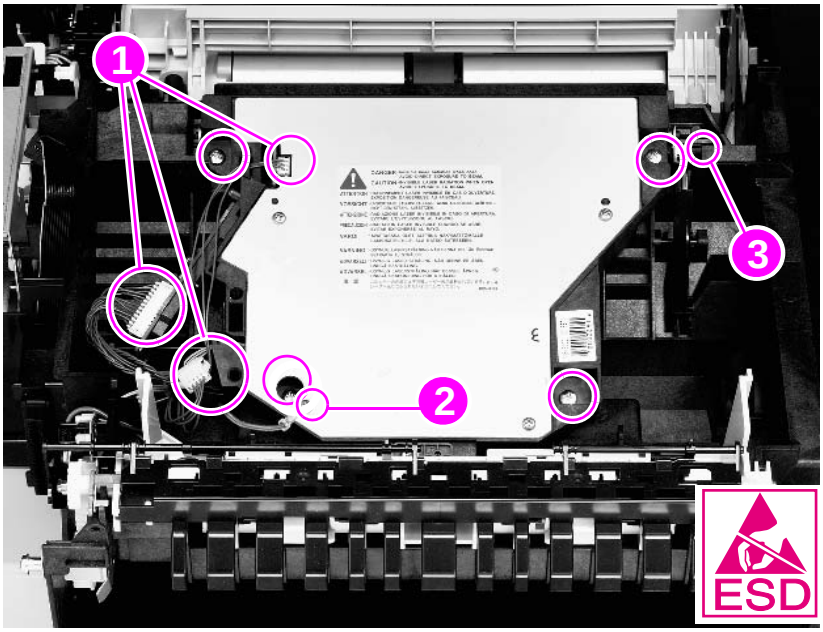

Figure 59. **Removing the laser/scanner**

1 To remove the laser/scanner:

   a Remove the rear right side cover (page 138).

   b Remove the control panel (page 139).

   c Remove the top cover (page 141).

   The laser/scanner is on top of the printer, tilted toward the rear.

2 Unplug the three connectors (callout 1) as shown.

3 Remove the screw to disconnect the grounding cable (callout 2).

4 Remove the four recessed screws around the edges of the laser/scanner. Do not remove the three small screws on the cover of the laser/scanner.

CAUTION Do not loosen the Allen screw on the rear of the scanner assembly.

5 Lift the laser/scanner straight up.

Hint When you replace the laser/scanner, be sure the black shutter interlock arm (callout 3) is resting on top of the metal shutter plate.

Cartridge memory

Cartridge memory controller

1 To remove the cartridge memory controller PCA:

   a Remove the rear right side cover (page 138).

   b Remove the control panel (page 139).

   c Remove the top cover (page 141).

   d Remove the laser/scanner assembly (page 154).

CAUTION Do not loosen the Allen screw on the rear of the laser/scanner assembly.

2 Disconnect the two wires from the cartridge memory controller PCA.

3 Remove the two self-tapping screws from the cartridge memory controller PCA.

Cartridge memory antenna

1 To remove the cartridge memory antenna:

   a Remove the toner cartridge.

   b Remove the rear right side cover (page 138).

   c Remove the control panel (page 139).

   d Remove the top cover (page 141).

   e Remove the laser/scanner assembly (page 154).

CAUTION Do not loosen the Allen screw on the rear of the laser/scanner assembly.

2 Disengage the antenna clips from the printer frame (located under the scanner near the memory controller PCA).

3 Disconnect the wire from the cartridge memory antenna.

4 Rotate the antenna (located inside the printer above the paper guide assembly) down to remove it from the metal bracket.

Fan

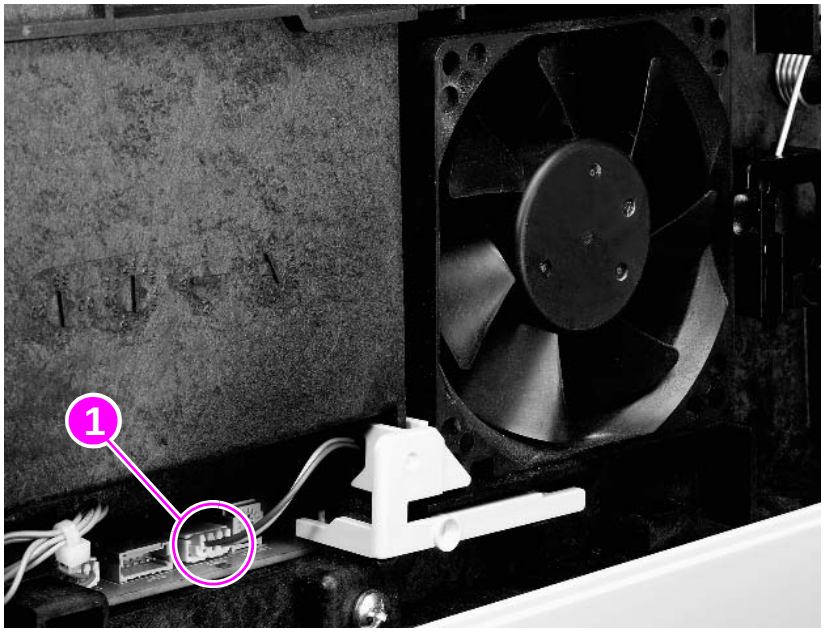

Figure 60. **Removing the fan**

1. To remove the fan:
   - **a** Remove the rear right side cover (page 138).
   - **b** Remove the control panel (page 139).
   - **c** Remove the top cover (page 141).
   - **d** Remove the left side cover (page 143).
2. Unplug the fan's connector (callout 1) to the engine controller board on the left side of the printer.

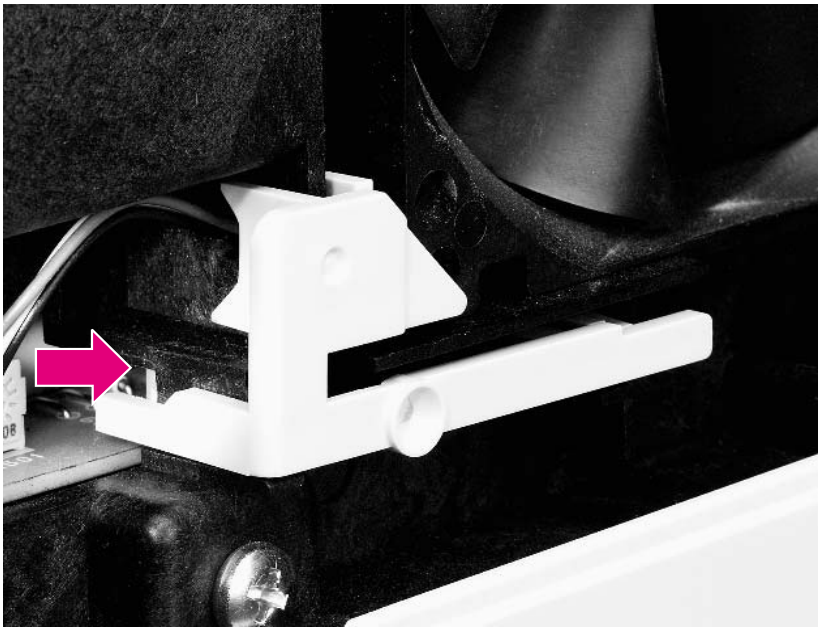

Figure 61. **Detail of the plastic fan clip**

3 Using a flat-blade screwdriver, press the retaining claw behind the left edge of plastic fan clip, and then remove the clip from the fan.

4 Slide the fan toward the rear of the printer and remove it.

Hint When replacing the fan, be sure the airflow arrow on the fan points inward.

Main motor

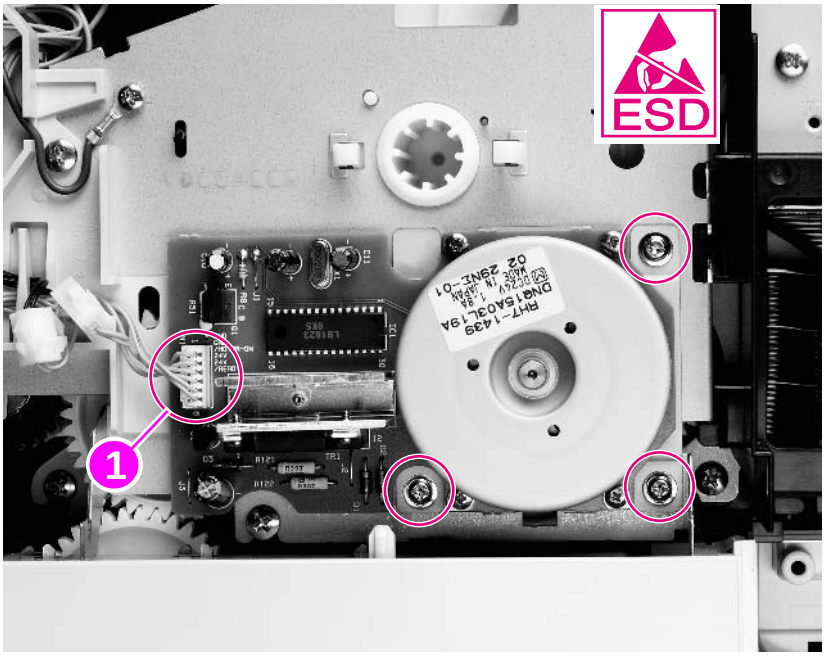

Figure 62. **Removing the main motor**

1. To remove the main motor:
   - **a** Remove the rear right side cover (page 138).
   - **b** Remove the control panel (page 139).
   - **c** Remove the top cover (page 141).
   - **d** Remove the front right side cover (page 144).
2. While holding the main motor board, unplug the main motor connector (callout 1) on the right front side of the printer.
3. Remove the three screws around the corners of the metal plate.
4. Remove the main motor from the printer.

Transfer roller

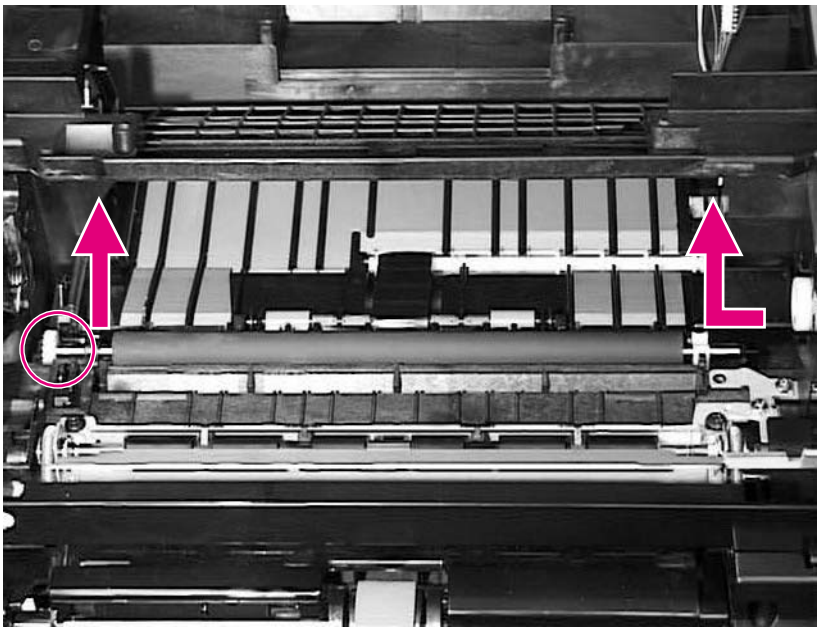

Figure 63. **Removing the transfer roller**

CAUTION Do not remove the toner cartridge when the top cover interlock is overridden. Cartridge memory will be damaged.

CAUTION To prevent damage to the toner cartridge, do not expose it to light for more than a few minutes.

1 Open the top cover and remove the toner cartridge. The transfer roller is underneath the toner cartridge.

CAUTION Do not touch the black rubber part of the roller. Skin oils on the roller can cause problems with print quality. Use of gloves is recommended.

2 Using a flat-blade screwdriver, lift the left end of the metal shaft out of place near the blue gear. Slide the transfer roller to the left to remove.

Hint When you install the transfer roller, make sure the black collar on the left side is oriented properly, with the open end down.

Tray 1 pickup roller

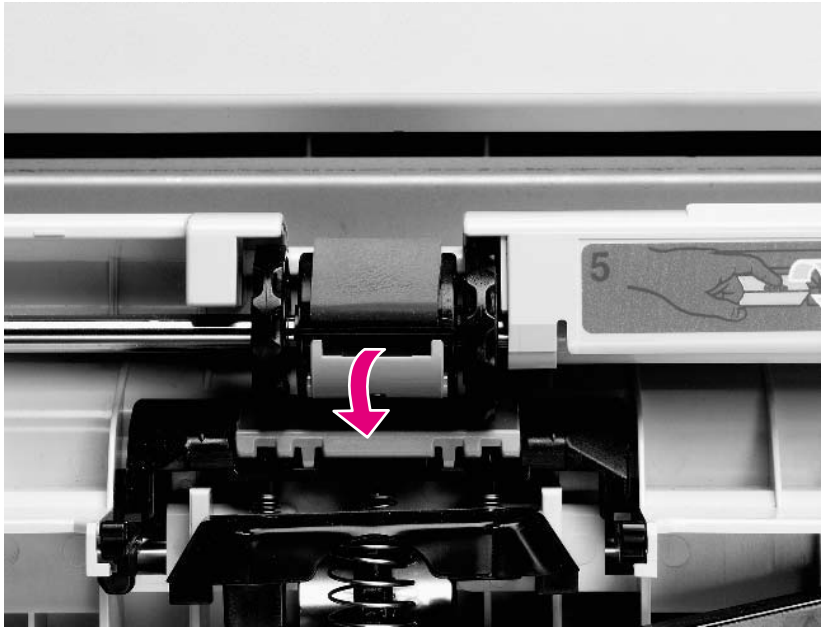

Figure 64. **Removing the pickup roller (shown with envelope entrance cover removed)**

1. Open tray 1. The tray 1 pickup roller is in the center of the tray 1 pickup assembly.
2. Grasp the envelope entrance cover directly above the pickup roller and pull it straight away from the printer.
3. Use a flat-blade screwdriver to pry open the blue latch on the roller.
4. Lift the roller out.

Hint To replace the roller, make sure the pin in the roller lines up with the hole in the shaft. Then, ensure the blue latch snaps securely in place.

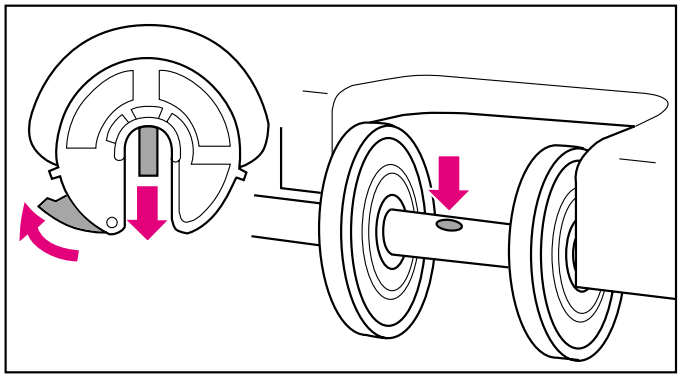

Figure 65. **Installation of tray 1 pickup roller**

Tray 1 pickup assembly

1 To remove the tray 1 pickup assembly:

- **a** Remove the rear right side cover (page 138).
- **b** Remove the control panel (page 139).
- **c** Remove the top cover (page 141).
- **d** Remove the left side cover (page 143).
- **e** Remove the front right side cover (page 144).
- **f** Remove tray 1 (page 146).

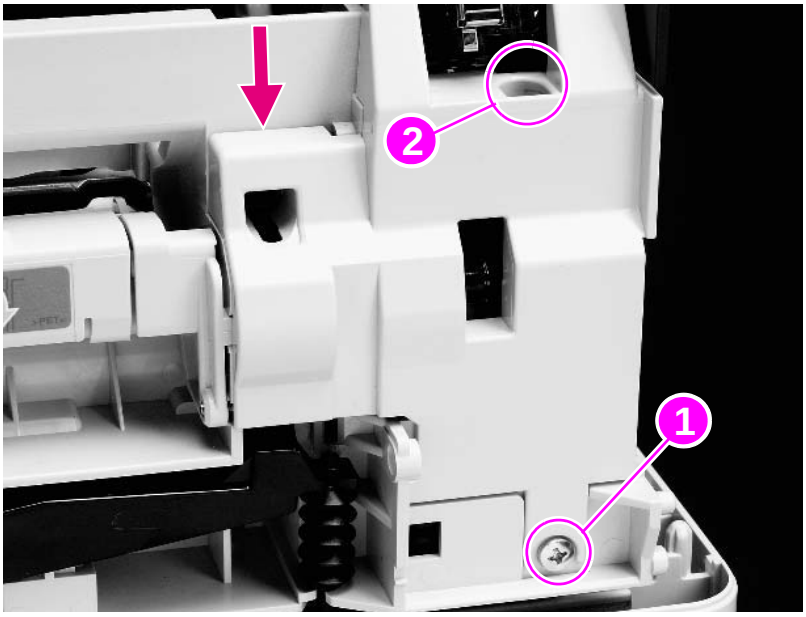

Figure 66. **Removing the gear cover**

2 Remove the gear cover as follows:

a. Remove the self-tapping screw (callout 1) at the bottom of the gear cover.

b. Remove the long screw (116 mm/4.8 inches) on the right side of the tray 1 pickup assembly (callout 2).

c. Remove the gear cover by pressing down on the claw.

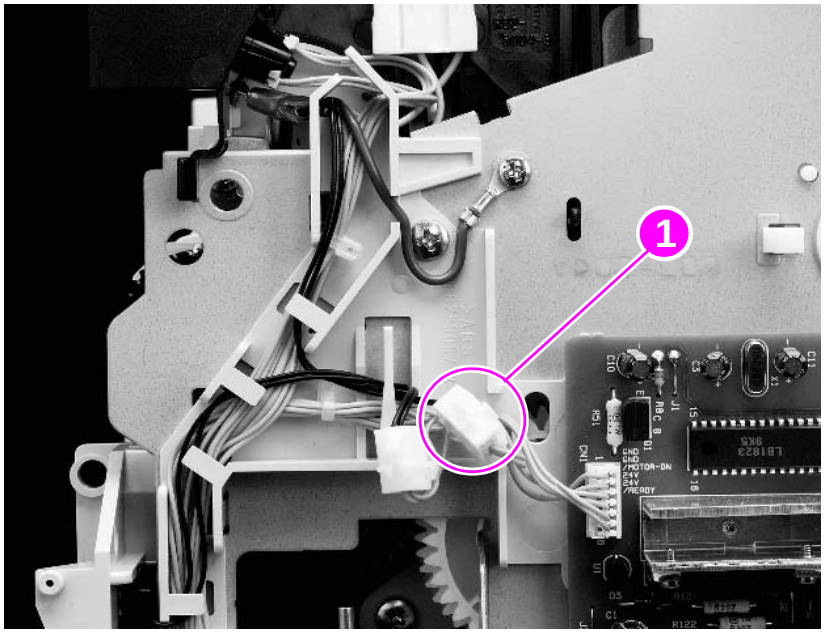

Figure 67. **Removing the tray 1 pickup assembly—right side**

3 Disconnect the three-pin solenoid connector (callout 1) on the right side of the tray 1 pickup assembly and unroute the cable from the cable guide. (Note the way the cables are routed for replacement.)

Note The solenoid connector is a three-part connector. Do not lose the gender-changer (center piece).

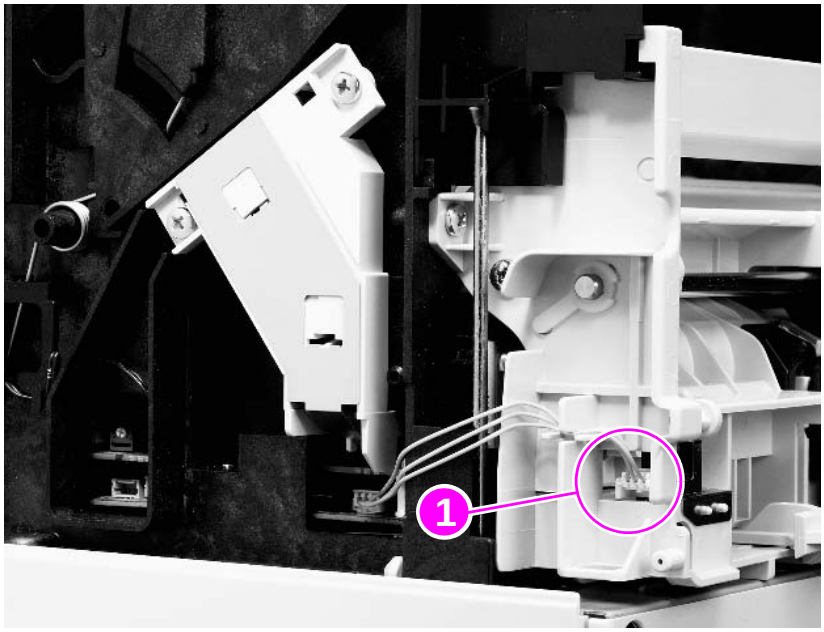

Figure 68. **Removing the tray 1 pickup assembly—left side**

4 Unplug the connector (callout 1) to the engine controller board on the left side of the tray 1 pickup assembly. (Note the way the cables are routed for replacement.)

5 Remove the long screw (116 mm/4.8 inches) from the left side of the assembly.

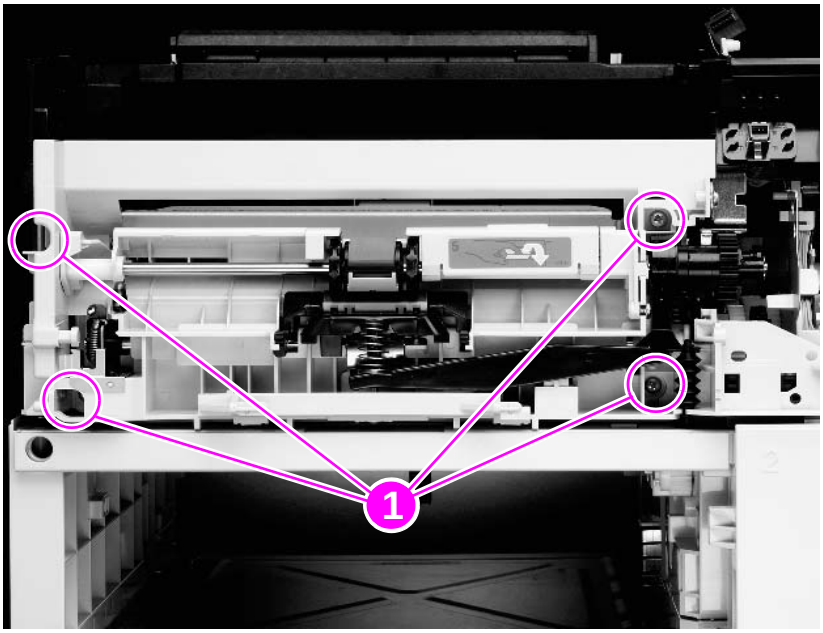

Figure 69. **Removing the tray 1 pickup assembly—front side**

6 Remove the four screws (callout 1) shown, and carefully pull the tray 1 pickup assembly straight out.

CAUTION Do not damage the solenoid cable on the right side of the tray 1 pickup assembly.

Note The left side toner cartridge might become dislodged while removing the tray 1 pickup assembly. Ensure the left side toner cartridge guide is installed before reinstalling the four screws that secure the tray 1 pickup assembly.

Right side toner cartridge guide

Remove the right side toner cartridge guide to get to the printer drive assembly. Follow the steps below:

1 To remove the tray 1 pickup assembly:

- **a** Remove the rear right side cover (page 138).
- **b** Remove the control panel (page 139).
- **c** Remove the top cover (page 141).
- **d** Remove the front right side cover (page 144).
- **e** Remove tray 1 (page 146).
- **f** Remove the tray 1 pickup assembly (page 161).

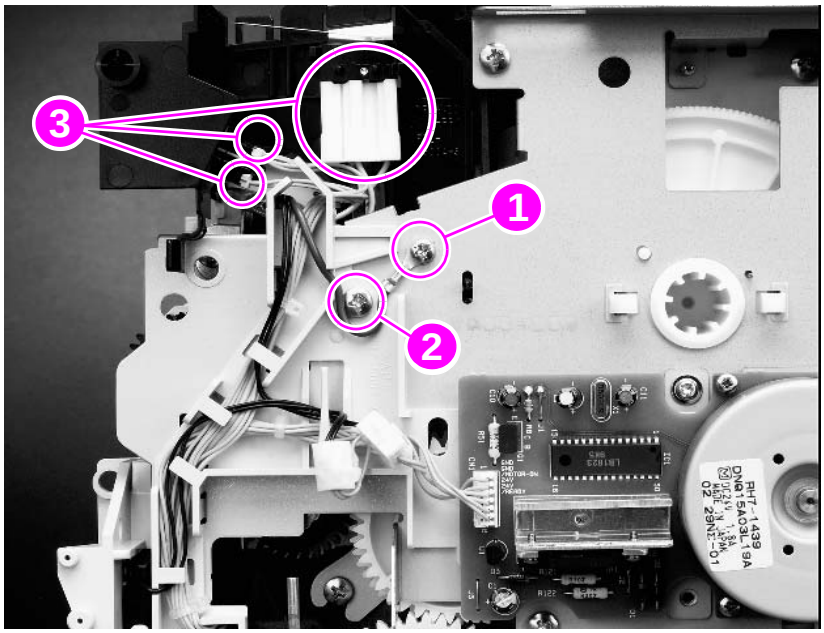

Figure 70. **Removing the right side toner cartridge guide**

2 Remove the small silver screw (callout 1) to disconnect the ground wire.

3 Remove the self-tapping screw (callout 2) on the right front side of the printer.

4 Lift the right side toner cartridge guide off the printer.

5 Unplug the three connectors (callout 3).

Registration assembly

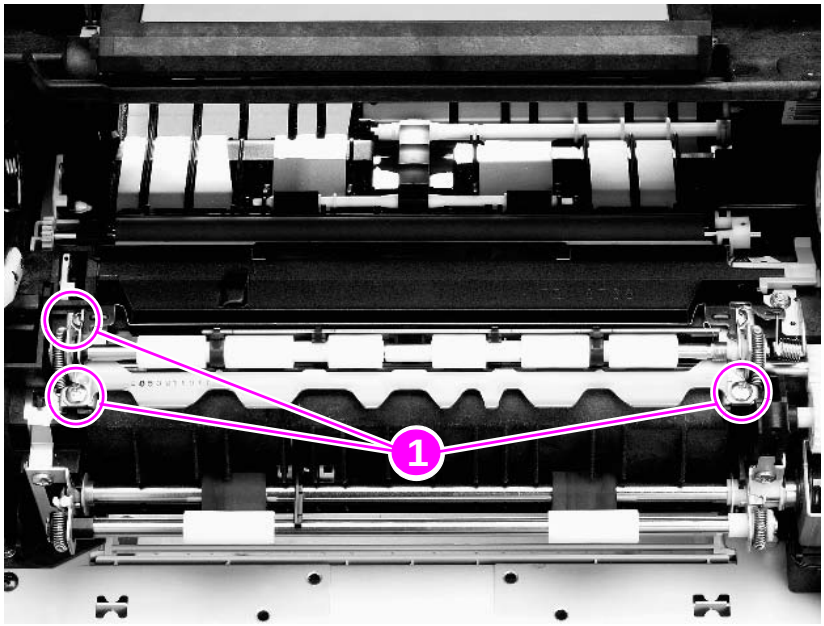

Figure 71. **Removing the registration assembly**

1 To remove the registration assembly:

   a Remove the rear right side cover (page 138).

   b Remove the control panel (page 139).

   c Remove the top cover (page 141).

   d Remove the left side cover (page 143).

   e Remove the front right side cover (page 144).

   f Remove tray 1 (page 146).

   g Remove the tray 1 pickup assembly (page 161).

   h Lift aside the right side toner cartridge guide (page 164). It is not necessary to unplug the connectors.

2 Remove the three self-tapping screws (callout 1) shown. (Lift the green handle on the right end of the registration assembly to get to the screw on the left rear side.)

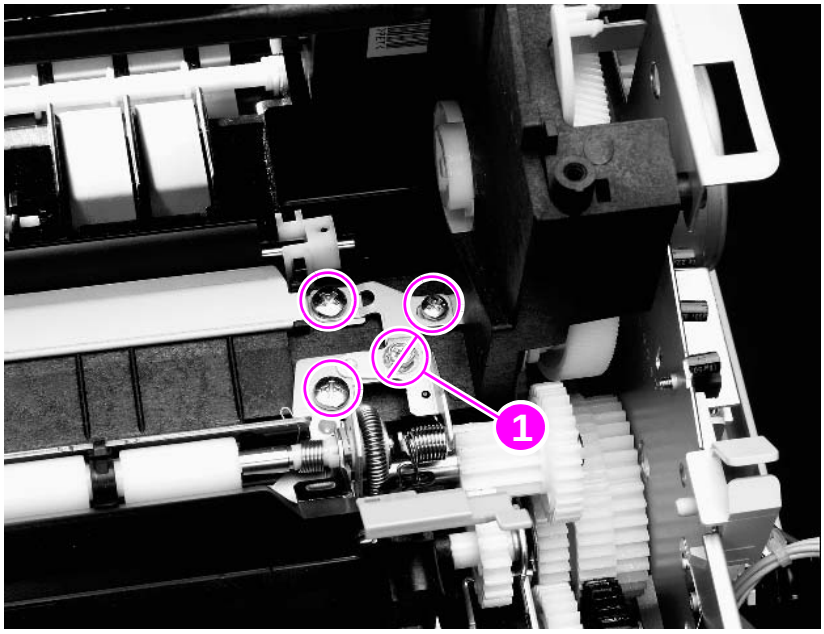

Figure 72. **Detail of screws for the registration assembly**

CAUTION Do not remove the silver, hex-headed screw (callout 1) closest to the registration assembly! It holds the spring in place. Take out the silver screw farther from the registration assembly (the one that is under the green handle).

3 Lift the green handle. Remove the two self-tapping screws and the rearmost silver screw shown. See the caution above.

4 Lift the registration assembly from the printer.

Paper feed assembly

1 To remove the paper feed assembly:

   a Remove the rear right side cover (page 138).

   b Remove the control panel (page 139).

   c Remove the top cover (page 141).

   d Remove the left side cover (page 143).

   e Remove the front right side cover (page 144).

   f Remove tray 1 (page 146).

   g Remove the tray 1 pickup assembly (page 161).

   The paper feed assembly is on the front of the printer.

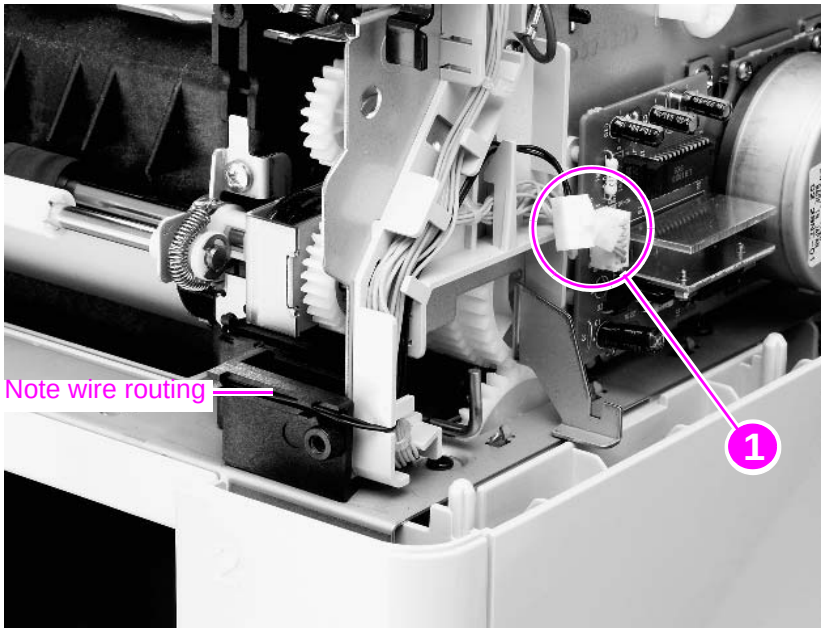

Figure 73. **Unplugging the connector to the paper feed assembly**

2 Unplug and unroute the two-pin connector (callout 1) from the right side.

CAUTION For replacement of the paper feed assembly, note the way the wires are routed to the connector. If a wire is routed improperly, it can be damaged.

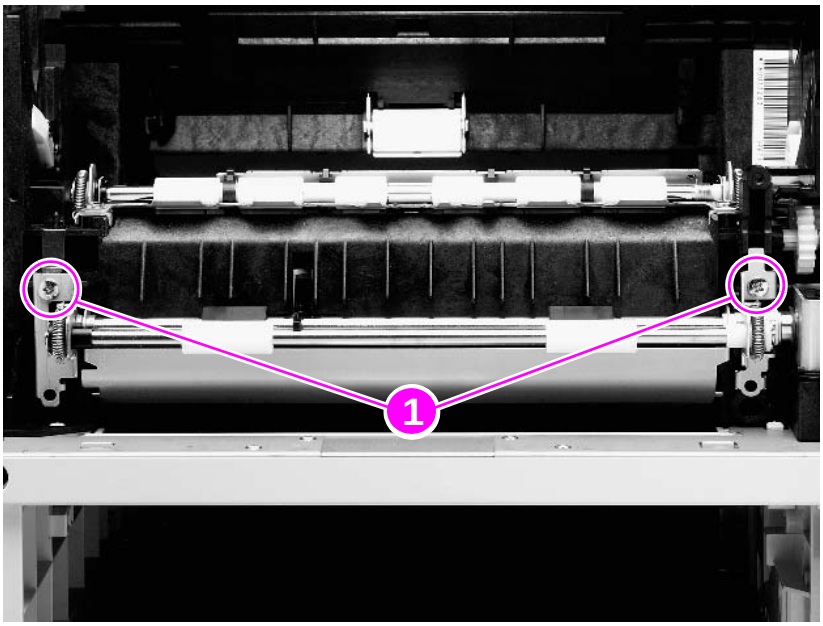

Figure 74. **Removing the upper screws from the paper feed assembly**

3 Remove the two upper screws (callout 1), and then remove the paper feed assembly.

Hint After replacing the paper feed assembly, make sure to insert the two upper screws only. The two lower screws are for holding the tray 1 pickup assembly in place. Ensure the lower sheet-metal guide hangs down loosely.

Hint For replacement of the paper feed assembly, orient the clutch properly by inserting the tab into the slot, as shown.

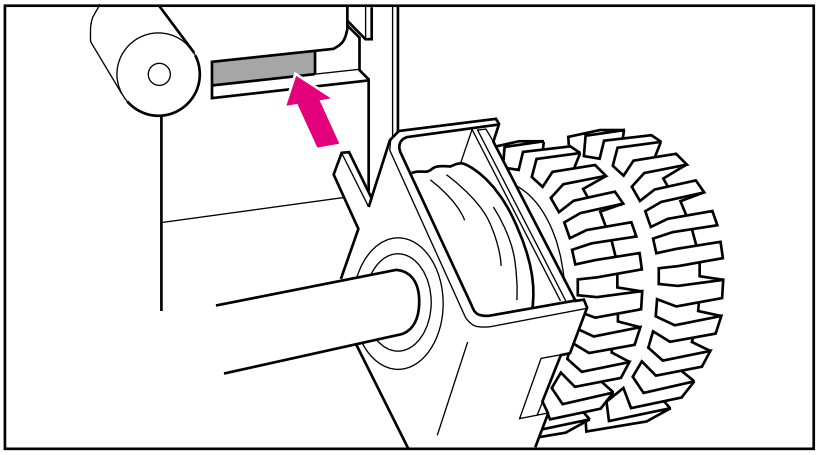

Figure 75. **Detail of clutch orientation**

Printer drive assembly (gear train)

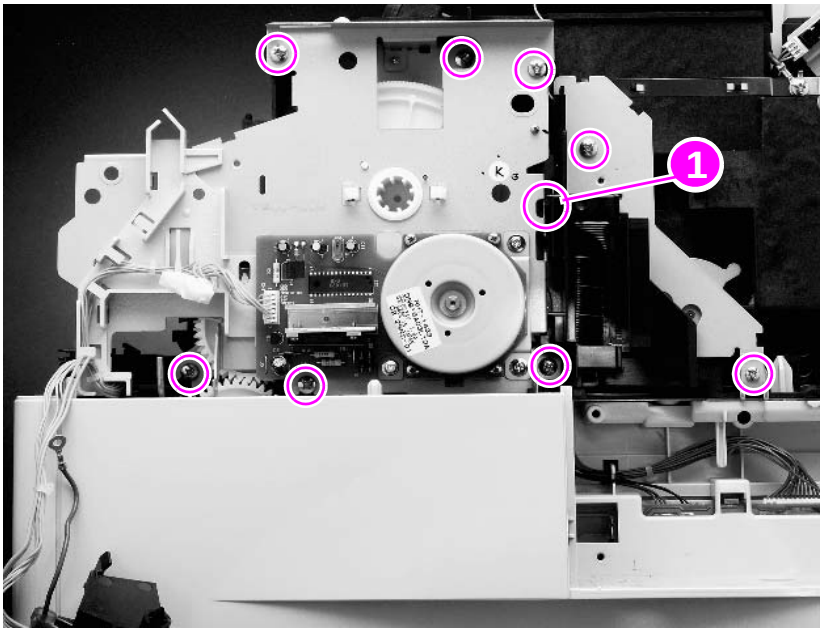

Figure 76. **Removing the printer drive assembly**

1 To remove the printer drive assembly:
   - **a** Remove the rear right side cover (page 138).
   - **b** Remove the control panel (page 139).
   - **c** Remove the top cover (page 141).
   - **d** Remove the left side cover (page 143).
   - **e** Remove the front right side cover (page 144).
   - **f** Remove the rear cover/rear output bin (page 145).
   - **g** Remove the fuser assembly (page 149).
   - **h** Remove tray 1 (page 146).
   - **i** Remove the tray 1 pickup assembly (page 161).
   - **j** Remove the right side toner cartridge guide (page 164).
   - **k** Remove the registration assembly (page 165).
   - **l** Remove the formatter assembly (page 151).
2 Remove the seven self-tapping screws and one machine screw.
3 Pull the ribbon cable assembly upward to release it from the two tabs at the bottom. Then, pull outward to release it from the retaining claw and pin (callout 1).
4 Unplug the main motor, and remove all remaining wires from the white plastic cable guide.

Note It might be necessary to separate the engine module from the paper-feed module (see page 171).

5 Slide out the printer drive assembly.

Note When you reinstall the printer drive assembly, slide the top in first and then push the bottom in.

Delivery drive assembly

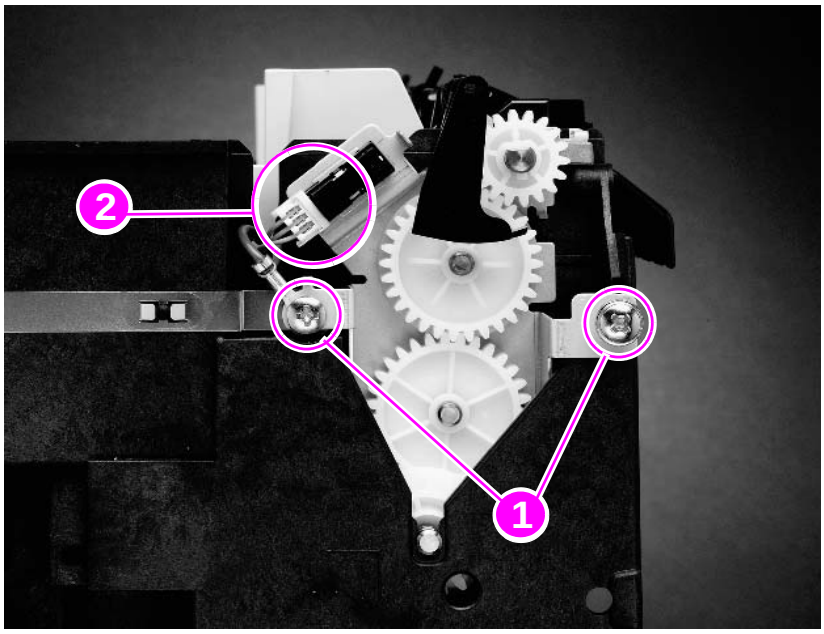

Figure 77. **Removing the delivery drive assembly**

1. To remove the delivery drive assembly:
   - **a** Remove the rear right side cover (page 138).
   - **b** Remove the control panel (page 139).
   - **c** Remove the top cover (page 141).
   - **d** Remove the rear cover/rear output bin (page 145).
   - **e** Remove the fuser assembly (page 149).
   - **f** Remove the output delivery assembly (page 152)
   - **g** Remove the formatter assembly (page 151).
2. Remove the two screws (callout 1).
3. Unplug the three-pin connector (callout 2) shown.
4. Lift the delivery drive assembly upward, away from the printer.

Separating the engine module from the paper-feed module

1 To separate the engine module from the paper-feed module:

   a Remove the tray 2 dust cover or the duplexer (if installed).

   a Remove the rear right side cover (page 138).

   b Remove the formatter assembly (page 151).

   c Remove the two long screws from the tray 1 pickup assembly (page 161 and 162).

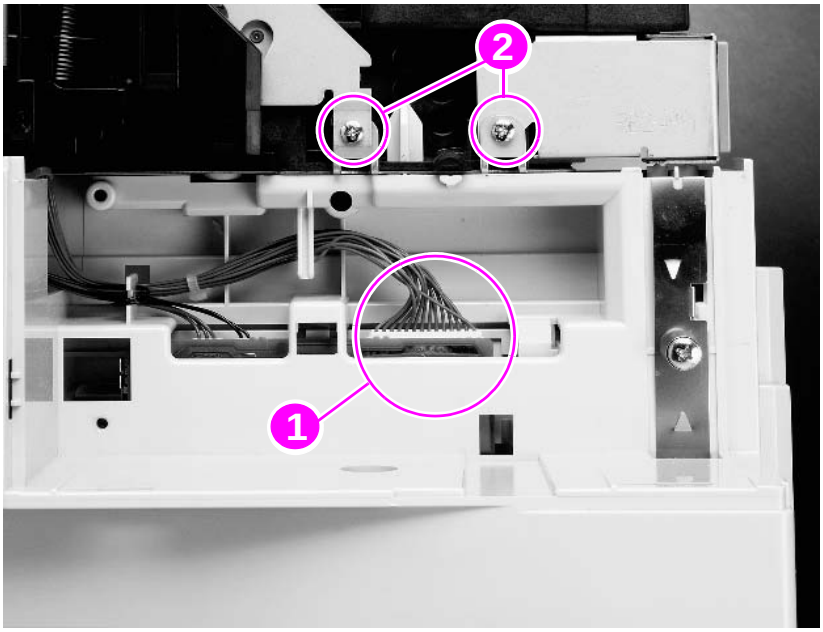

Figure 78. **Unplugging the connector to the paper-feed module**

2 Unplug the connector (callout 1) to the paper-feed module on the right rear side of the printer (under the formatter assembly). Remove the cable from its brackets.

3 Remove the two screws (callout 2), or one screw, if the printer drive assembly has been removed.

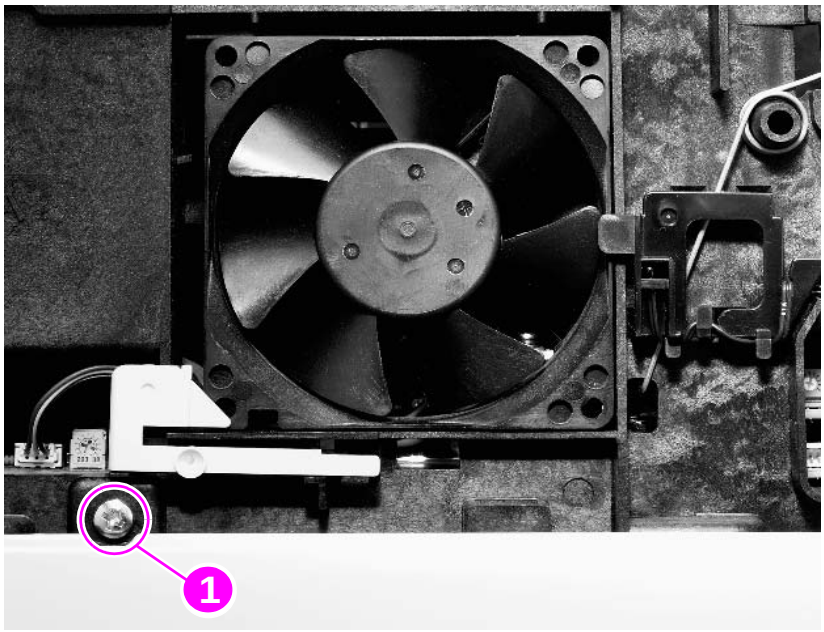

Figure 79. **Separating the engine from the paper-feed module**

4 Remove the single, self-tapping screw (callout 1) from the left side of the printer, below the fan.

CAUTION Lift the engine carefully, being sure that all cables are disconnected.

5 Lift the engine away from the paper-feed module.

Engine controller board

Note After you replace the engine controller board, readjust the top margin as described on page 175.

1 Remove the fuser assembly (page 149).

2 Separate the engine from the paper-feed module (page 171). The engine controller board is on the underside of the engine.

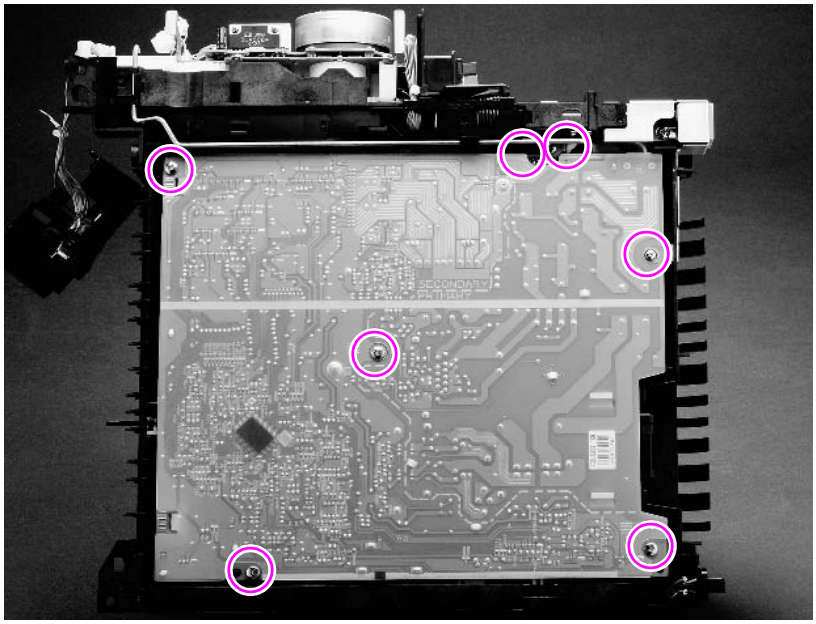

Figure 80. **Removing the engine controller board**

3 Remove the seven screws shown.

- Four self-tapping M4 screws (three in front and one in the right rear)
- From the left rear, three M3 screws (two recessed)

4 Disconnect the power switch rod.

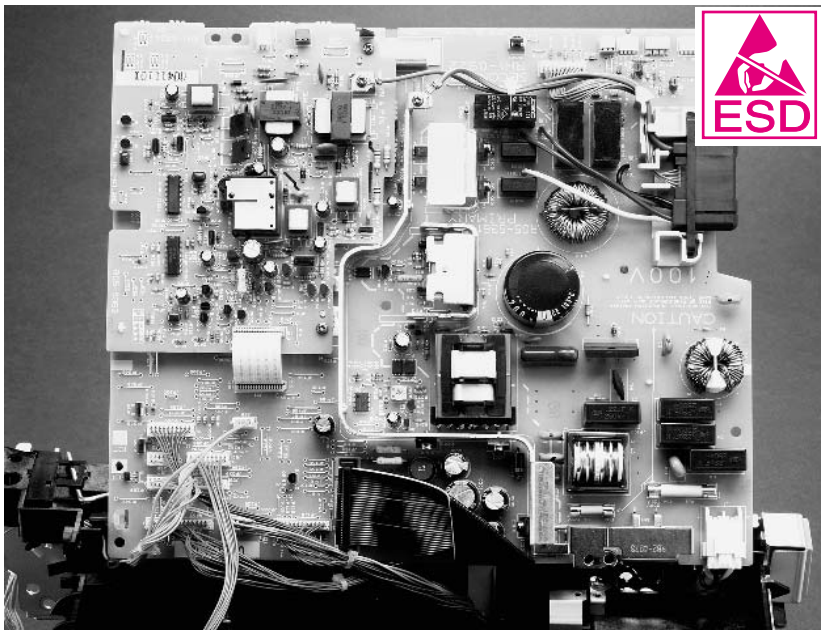

Figure 81. **Removing the engine controller board**

5 Disconnect the three connectors on the fan side.

6 Lifting from the fan side, tip the board up.

Hint Use masking tape and a pen to identify all cables, if necessary.

7 Unplug all connectors from the engine controller board.

Hint The black cable holder in the middle of the engine controller board can be folded aside with the cables intact. When you replace the board, reconnect and route all cables before reconnecting the power switch rod.

Adjusting the top margin

When you replace the engine controller board, you must readjust the top margin as follows:

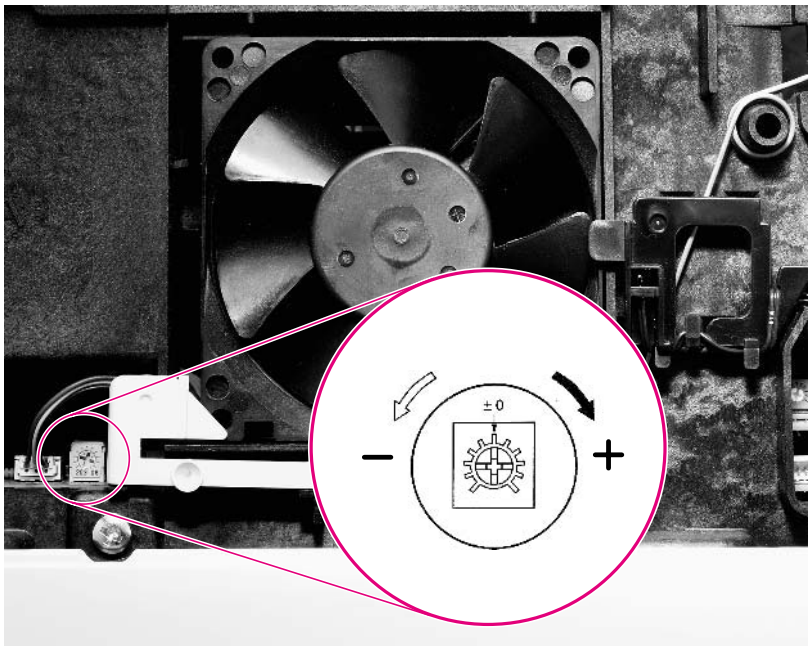

Figure 82. **Location of VR501**

1 After setting the VR501 on the engine controller board to the center position (0), load letter or A4 paper in tray 2, 3, or 4. Press the engine test print button (located on the left side of the printer, below the vent) to make several test prints.

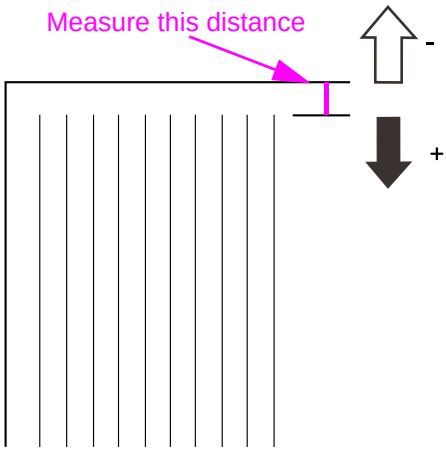

Figure 83. **Adjusting the top margin**

2 Measure the distance between the leading edge of the paper and the print pattern. Measure all the test prints and calculate the average.

3 Adjust VR501 so that the margin becomes 2 mm (.08 inch). Turn VR501 clockwise to increase the margin or counter-clockwise to decrease the margin.

4 Make several test prints again and perform step 2 above. If the top margin is still incorrect, repeat the procedure.

Paper-feed guide assembly

1 To remove the paper-feed guide assembly:

   a Remove the rear right side cover (page 138).

   b Remove the control panel (page 139).

   c Remove the top cover (page 141).

   d Remove the left side cover (page 143).

   e Remove the front right side cover (page 144).

   f Remove the rear cover/rear output bin (page 145).

   g Remove the fuser assembly (page 149).

   h Remove tray 1 (page 146).

   i Remove the tray 1 pickup assembly (page 161).

   j Remove the right side toner cartridge guide (page 164).

   k Remove the registration assembly (page 165).

   l Remove the formatter assembly (page 151).

   m Remove the printer drive assembly (page 169).

   n Separate the engine module from the paper-feed module (page 171).

   o Remove the engine controller board (page 173).

2 Remove the plastic main gear cable guide by releasing the three tabs.

3 Loosen the plastic formatter ribbon cable guide.

4 Disconnect the paper-sensor cable.

5 Remove the two self-tapping screws.

6 Carefully remove the paper-feed guide assembly.

Note The engine controller board grounding spring might interfere with removal.

Removing tray assemblies

Paper-feed rollers for trays 2, 3, and 4

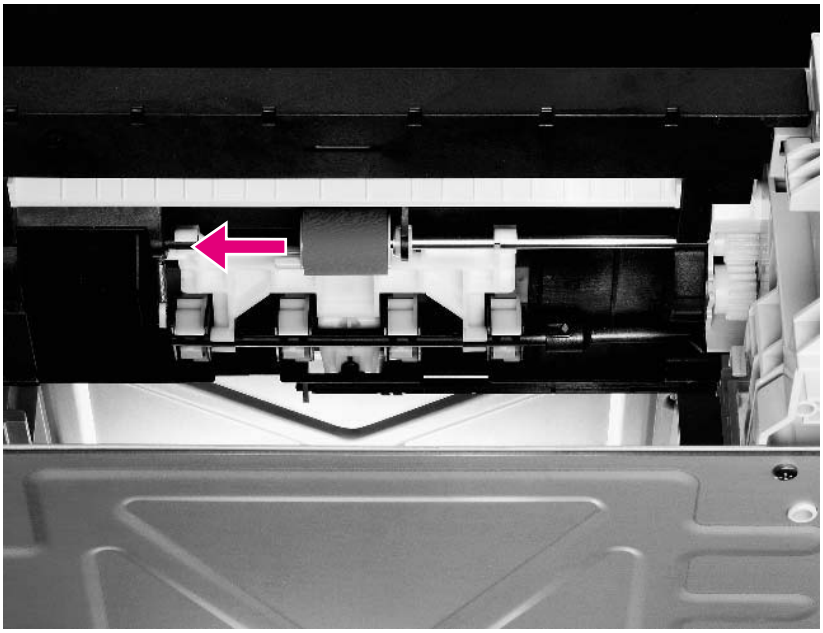

Figure 84. **Removing the paper feed roller**

1. Remove the paper tray(s) from the paper feeder(s). The paper-feed roller is inside the feeder, on top of the paper feeder assembly.
2. Pinch the release at the left side of the roller and slide it off the shaft.

Hint When reinstalling the feed roller, ensure it locks into place. Otherwise, repeated paper jams might occur.

Separation rollers for trays 2, 3, and 4

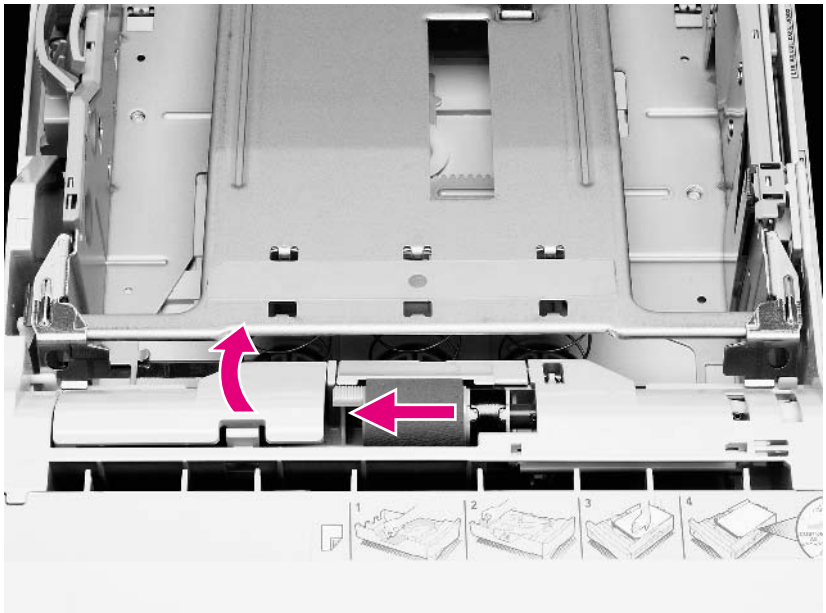

Figure 85. **Removing the separation roller**

The separation roller is inside the paper trays.

1. Release the latch and lift the access cover inside the tray.
2. Pinch the release at the left side of the roller and slide it off the shaft.

CAUTION To prevent damage to the printer, ensure the access cover is securely locked into position.

Note When reinstalling the separation roller, ensure it locks into place. Otherwise, repeated paper jams might occur.

Tray 2 paper-feed module disassembly

Remove the paper-feeder plate to gain access to the paper pickup drive assembly. It is not necessary to separate the engine module from the paper-feed module to gain access to the paper-size detection PCB, although it will provide easier access.

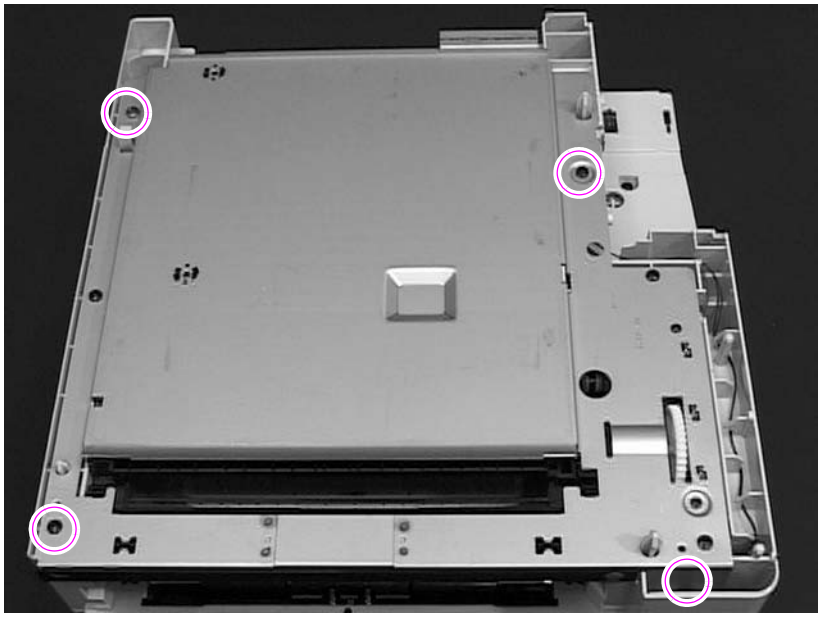

Figure 86. **Removing the tray 2 paper-feeder plate**

1. Separate the engine module from the paper-feed module (page 171).
2. Remove the tray from the paper-feed module.
3. Remove the four self-tapping screws (one screw is recessed in front).
4. Lift the paper-feeder plate to remove it.
5. Release the two tabs on the paper-size detection PCB cover.
6. Disconnect the three cables on the paper-size detection PCB.
7. Press the two tabs to release the paper-size detection PCB. Note the cable routing.
8. Slide the PCB from the paper-feeder frame.
9. Remove the two machine screws from the paper pickup drive assembly.

Tray 3 and 4 paper-feed module disassembly

Remove the paper-feeder plate to gain access to the paper pickup drive assembly. It is not necessary to remove the paper-feeder plate to access the feeder controller PCA, although it will provide easier access.

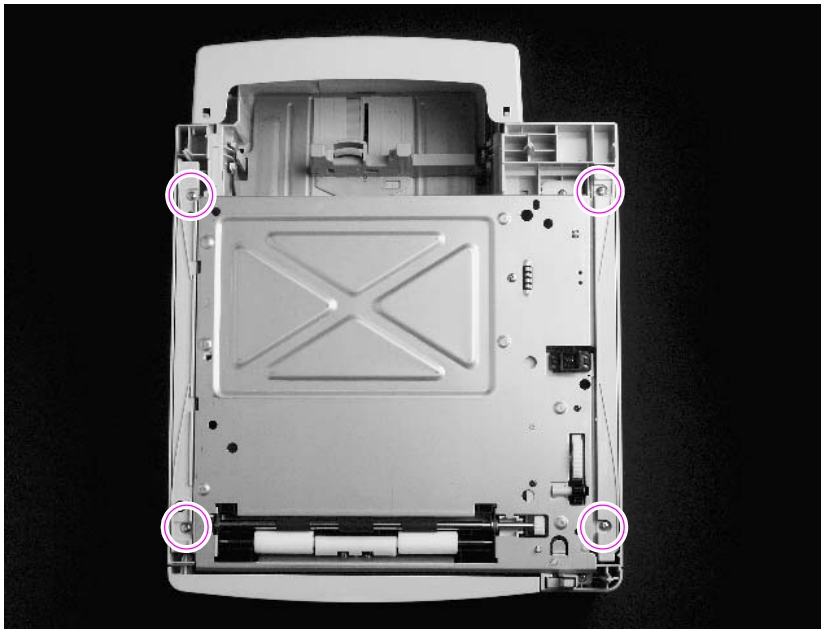

Figure 87. **Removing the paper-feeder plate**

1. Lift the printer from the optional feeder.
2. Remove the tray from the paper feeder.
3. Remove the four self-tapping screws from the side rails as shown, and then lift the side rails from the paper feeder.
4. Remove the six self-tapping screws around the paper-feeder plate (two on the left and four on the right).
5. Remove the two machine screws and one self-tapping screw from the paper-feeder plate and the paper pickup assembly.
6. Carefully lift the paper-feeder plate from the paper-feeder frame and the paper pickup assembly.
7. Use a flat-blade screwdriver to release the two tabs on the feeder controller PCA cover.
8. Disconnect the four connectors from the PCA. Note the cable routing.
9. Remove the single self-tapping screw from the PCA.
10. Slide the PCA from the paper-feeder frame.

Note The clutch release lever (located near the tray number) might dislodge if not careful. figure 89 and figure 90 show detail of the lever location for reassembly.

11. Remove the paper pickup assembly.
12. Ensure the clutch release (figure 88) functions properly after the paper-feeder plate is reinstalled.

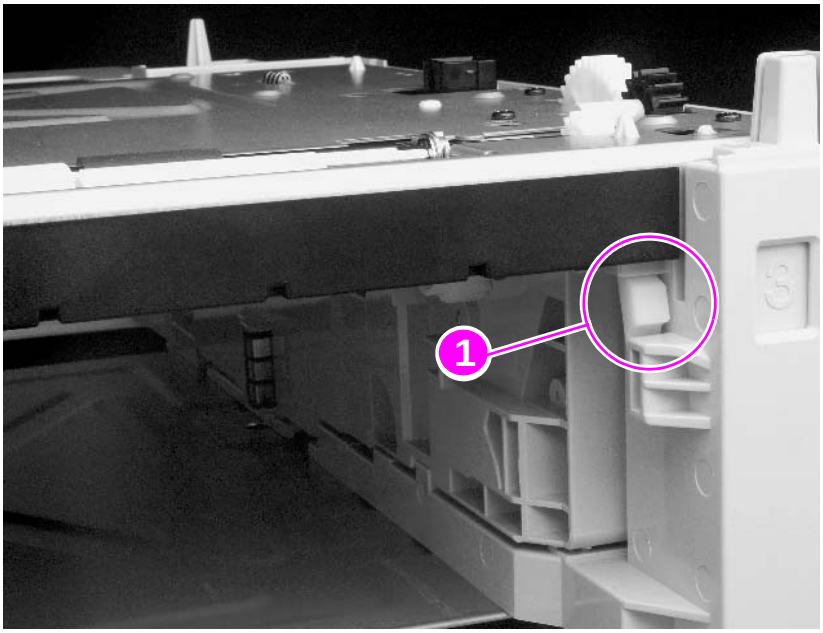

Figure 88. **Detail of clutch release**

Hint Pull the clutch release (callout 1) towards the front of the tray. Hold the clutch in place as you reinstall the paper-feeder plate.

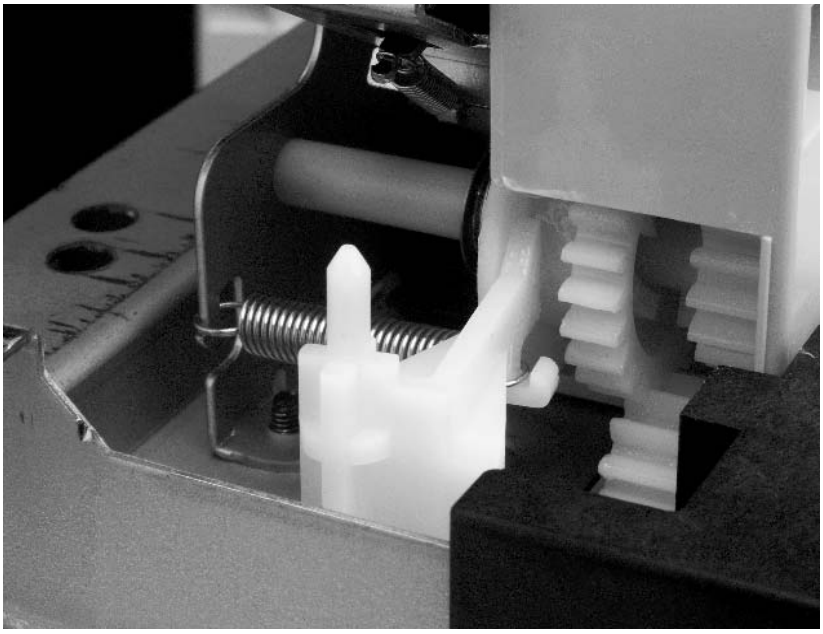

Figure 89. **Detail of spring and lever**

Note If the spring and lever dislodge when removing the paper-feeder plate, use needle-nose pliers to reattach the spring before replacing the lever.

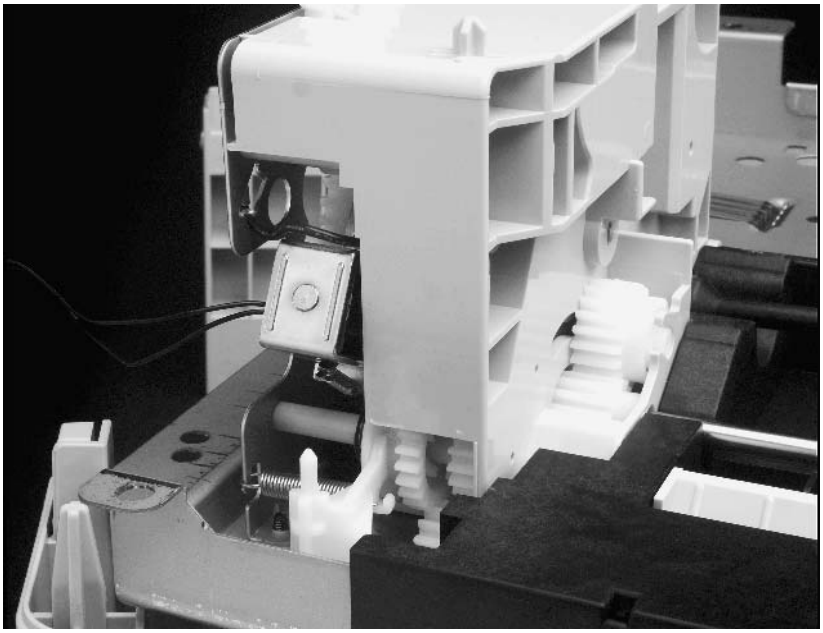

Figure 90. **Location of spring and lever (the paper feeder is inverted)**

7 Troubleshooting

Chapter contents

Troubleshooting process

The troubleshooting process is a systematic approach that addresses the major problems first, and then other problems, as you identify the causes for printer malfunctions and errors. The troubleshooting flowchart on page 185 illustrates the major steps for troubleshooting the printing system. Each heading depicts a major troubleshooting step.

The following list describes the basic questions for the customer and the corresponding troubleshooting step to help you quickly define the problem(s).

Table 35. Major steps for troubleshooting

"Power on" (page 188)	Does the printer power up and display a message? This section gives the procedures for correcting power supply problems.
"Display" (page 191)	Does the control panel indicate `READY`, `OFFLINE`, or `POWERSAVE ON`? This section gives the procedures for clearing control panel error messages.
"Event log" (page 191)	Are there recurring problems in the event log? This section gives information about printing the event log and evaluating the error history.
"Printer messages" (page 193)	Does the printer control panel display an error message? This section provides an alphabetical and numerical listing of the printer control panel messages, and gives the recommended actions to resolve the problem.
"General paper-path troubleshooting" (page 220)	Is there a jam in the printer? This section gives information about solving problems in the paper path.
"Information pages" (page 222)	Will the printer print information pages successfully? This section gives the procedures for printing the information pages and evaluating and correcting the printer's configuration.
"Image quality" (page 227)	Does the print quality meet the customer's expectations? This section gives toner cartridge checks, information about EconoMode, image defect examples, and the repetitive defect ruler.

Troubleshooting flowchart

A “yes” answer to the questions below allows you to proceed to the next major step.

A “no” answer indicates that additional testing is needed. Proceed to the referenced location and follow the directions for that area. After completing the additional testing, proceed to the next major step.

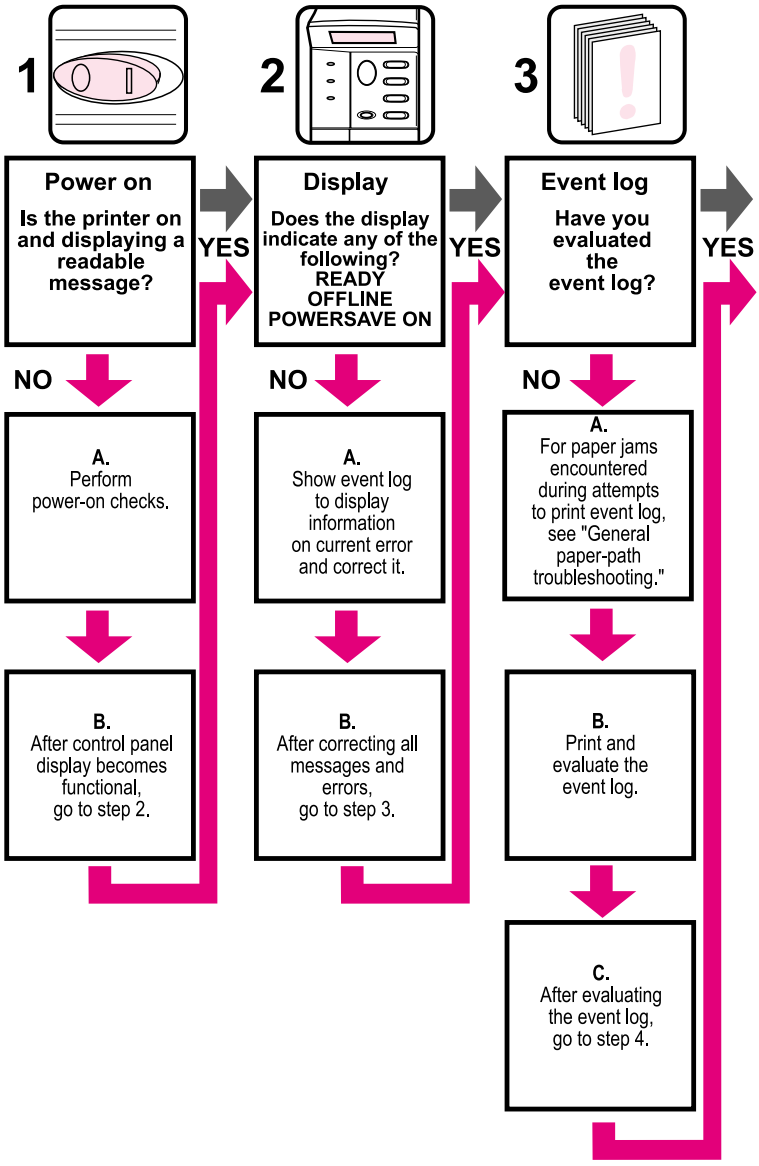

Figure 91. **Troubleshooting flowchart (1 of 2)**

Troubleshooting flowchart (continued)

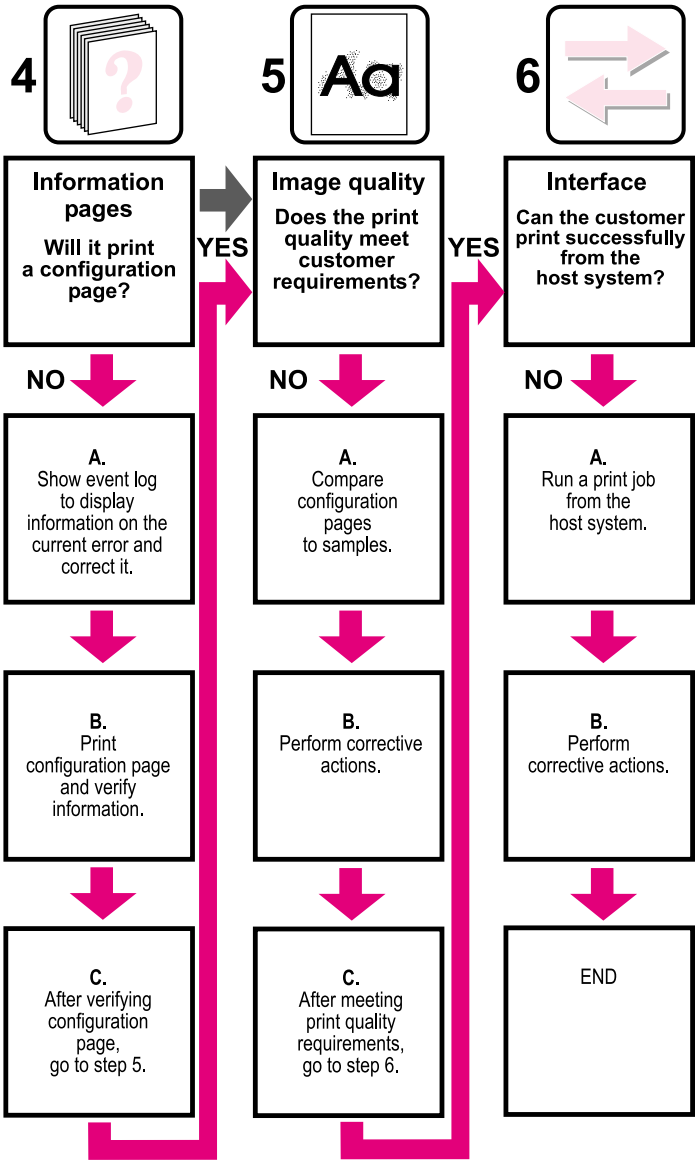

Figure 92. **Troubleshooting flowchart, continued**

Troubleshooting the printing system

Preliminary operating checks

Before troubleshooting a specific printer problem, you should ensure that:

- The printer is being maintained on a regular basis as described in chapter 4.
- The customer is using acceptable print media as specified in the *HP LaserJet Printer Family Print Media Guide*.
- The printer is positioned on a solid, level surface.
- The line voltage does not vary more than 10 percent from the nominal rated value as specified on the power rating label.
- The operating environment for the printer and paper is within the temperature and humidity specifications listed in chapter 1 of this manual.
- The printer is never exposed to ammonia fumes such as those produced by diazo copiers or office cleaning materials.
- The printer is not exposed to direct sunlight.
- Non-HP components (such as refilled toner cartridges, EIO accessories, and DIMMS) are removed from the printer.

Note When moving the printer into a warm room from a cold location such as a warehouse, various problems can occur as a result of condensation in the printer. Additionally, if the photosensitive drum is cold, the resistance of the photoconductive layer will be high. This will lead to incorrect contrast. Leave the printer running for 10 to 20 minutes before its first job.

Power on

Note It is important to have the printer control panel functional as soon as possible in the troubleshooting process so that the printer's diagnostics can assist in locating printing errors.

Table 36. Power on defect or blank display

Problem	Action
The power cord is not plugged into the wall outlet and the printer.	Make sure the power cord is firmly plugged into the printer and the outlet.
Proper AC power is not available.	Measure the voltage at the outlet. If necessary, plug the power cord into another AC circuit outlet.
The power switch is off.	Set the switch to the on position. You should hear the switch toggle. If the front right side cover has been removed recently, be sure that the rod leading to the power supply moves as the rocker switch is toggled. If the printer still does not turn on, the power switch might be defective. 1. Remove the engine controller board. 2. Measure the resistance between the two terminals of the power switch (SW1) by applying the tester probes to the terminals. The resistance must be low (under 1 KΩ) when the power is turned on, and high (over 6 MΩ) when the switch is turned off. 3. Replace the engine controller board, if necessary.
The overcurrent/ overvoltage detection circuit is activated.	Wait for more than two minutes before turning the printer back on.
A fuse is blown.	1. Check the fuses (FU1 and FU2) on the engine controller board. 2. Replace the fuses if necessary.

Table 36. Power on defect or blank display (continued)

Problem	Action
The fan does not turn on when the printer is first powered up.	**Note** An operational fan indicates the following: 1. AC power is present in the printer. 2. DC power supply is functional (both 24 VDC and 3.5 VDC are being generated). 3. The engine controller board's microprocessor is functional. **If the fan is not working:** 1. Turn the printer off and remove the formatter. Disconnect the optional accessories. 2. Turn the printer on and check the fan again. If the fan is still not working, perform the following steps: 1. Verify that the fan is connected to the engine controller board. 2. Replace the fan. 3. Replace the engine controller board. **Note** The fan only operates during initial power on and while printing, unless the temperature inside the printer is too high. If the temperature is too high, the fan turns on to cool the inside of the printer.
The fan works, but the control panel display is blank.	1. Print an engine test. See "Engine test" on page 190. 2. If the engine test is successful, perform the following steps: a. Reseat the control panel and formatter connector. b. Replace the control panel assembly. c. Replace the firmware DIMM. d. Replace the cable from the control panel. 3. If the engine test is not successful, replace the engine controller board.

Engine test

The printer has a built-in test pattern (pairs of vertical lines). The test print can be made by pressing the test print switch located on the left side of the printer (see figure 93 on page 190) once—after the photosensitive drum has stopped and the printer has entered the standby mode. If the switch is held down, the test pattern is printed continuously. The switch can be used when paper is loaded in any tray other than tray 1.

The engine test:

- Verifies if the print engine is functioning correctly (the formatter is completely bypassed during an engine test)
- Is used for isolating printer problems
- Is used for checking and adjusting registration
- Prints from tray 2, 3, or 4 only, not from tray 1
- Can be activated with the formatter removed

Note For the printer to perform an engine test, tray 2, 3, or 4 must be installed and loaded with paper, and the toner cartridge must be installed in the printer.

Location of engine test button

The engine test button is located on the left side of the printer, below the fan vent, as shown figure 93 on page 190.

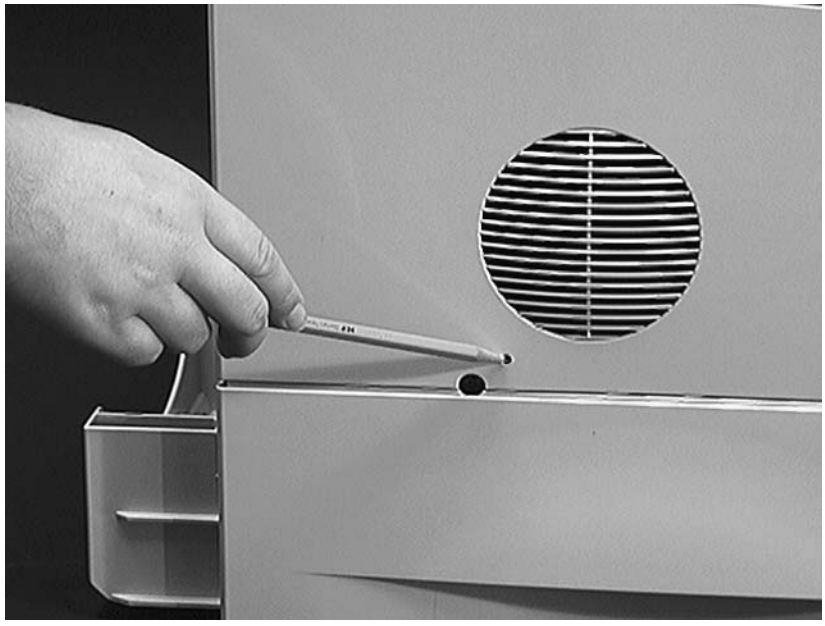

Figure 93. **Location of the engine test button**

Display

The control panel should display `READY`, `OFFLINE`, or `POWERSAVE ON`. If the display is blank, see page 188. If an error message is displayed, refer to the printer messages table starting on page 194 and perform the necessary actions to correct the error condition.

Event log

Use the event log to diagnose and troubleshoot printer errors and intermittent failures. You can either display or print the event log.

Access the event log from the control panel information menu. (Select `PRINT EVENT LOG` or `SHOW EVENT LOG`.) The event log retains the printer's last 20 error messages.

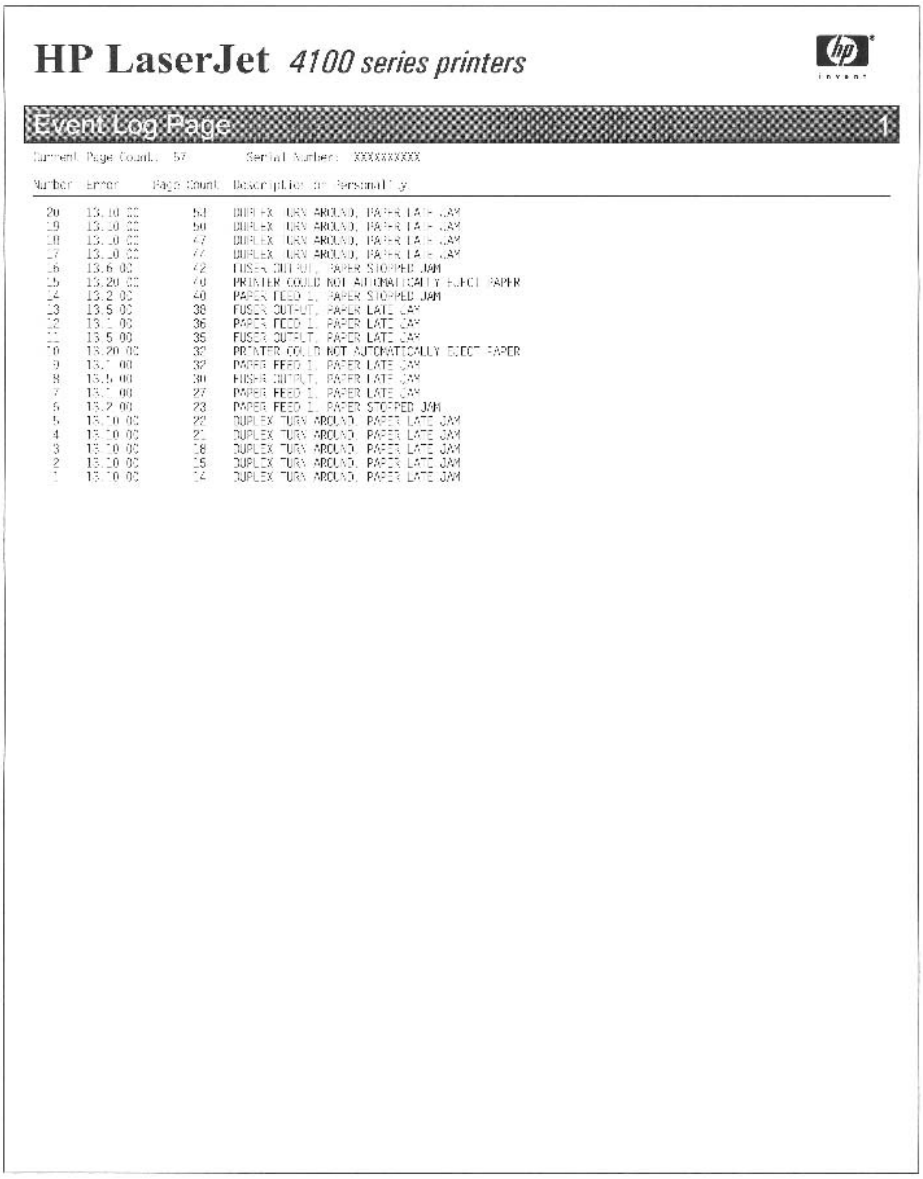

HP LaserJet *4100 series printers*

Event Log Page 1

Current Page Count: 57 Serial Number: XXXXXXXXXX

Number	Error	Page Count	Description or Personality
20	13.10 02	54	DUPLEX TURN AROUND, PAPER LATE JAM
19	13.10 02	50	DUPLEX TURN AROUND, PAPER LATE JAM
18	13.10 02	47	DUPLEX TURN AROUND, PAPER LATE JAM
17	13.10 02	44	DUPLEX TURN AROUND, PAPER LATE JAM
16	13.6 02	42	FUSER OUTPUT, PAPER STOPPED JAM
15	13.20 02	40	PRINTER COULD NOT AUTOMATICALLY EJECT PAPER
14	13.2 02	40	PAPER FEED 1, PAPER STOPPED JAM
13	13.5 02	38	FUSER OUTPUT, PAPER LATE JAM
12	13.1 02	36	PAPER FEED 1, PAPER LATE JAM
11	13.5 02	35	FUSER OUTPUT, PAPER LATE JAM
10	13.20 02	32	PRINTER COULD NOT AUTOMATICALLY EJECT PAPER
9	13.1 02	32	PAPER FEED 1, PAPER LATE JAM
8	13.5 02	30	FUSER OUTPUT, PAPER LATE JAM
7	13.1 02	27	PAPER FEED 1, PAPER LATE JAM
6	13.2 02	23	PAPER FEED 1, PAPER STOPPED JAM
5	13.10 02	22	DUPLEX TURN AROUND, PAPER LATE JAM
4	13.10 02	21	DUPLEX TURN AROUND, PAPER LATE JAM
3	13.10 02	18	DUPLEX TURN AROUND, PAPER LATE JAM
2	13.10 02	15	DUPLEX TURN AROUND, PAPER LATE JAM
1	13.10 02	12	DUPLEX TURN AROUND, PAPER LATE JAM

Figure 94. **Sample event log**

Print the event log

The printer's internal event log stores the last 20 errors and can be printed at any time. To print the event log:

1 Press MENU until INFORMATION MENU appears.

2 Press ITEM until PRINT EVENT LOG appears.

3 Press SELECT to print the event log.

Display the event log

If the printer cannot print or move any media, follow these steps to display the event log.

1 Press MENU until INFORMATION MENU appears.

2 Press ITEM until SHOW EVENT LOG appears.

3 Press SELECT to show the event log. The control panel will show the sequence, the error type, and the page count at which it occurred.

4 Press + to scroll through the event log.

5 Write down the error messages.

6 Check the event log for specific error trends in the last 10,000 printed pages.

7 Ask the customer for any observed error trends. (For example, do jams tend to occur in a specific area of the printer?)

8 Record any specific error trends.

9 If the control panel displays READY, OFFLINE, or POWERSAVE ON, go to the next section. If it displays any other message, refer to the printer messages table starting on page 194 and perform the necessary corrective action.

Interpret the event log

The event log is the key tool in troubleshooting printer problems. Figure 94 on page 191 shows a typical event log. The event log shows the current page count at the top left of the page with the printer's serial number directly to the right of the page count. The left column is the error sequence number (the highest sequence number is the most recent error logged). The second column is the error type. The next column is the page count at the time of the error, and the last column is the personality (PCL or PostScript) column or the cause of the jam at the time of the error.

To interpret the event log:

- Each individual entry in the log is called an "error," while all errors occurring at the same page count are called an "event." Read the recommended action for each error comprising an event to gain a clear picture of what took place during that event.
- Use the printer messages table in this section to associate errors in the event log with the control panel error message. Follow the recommended action listed in the table for each error or event.

Printer messages

The following table explains messages that might appear on the printer control panel. Numerical and alphabetical printer messages and their meanings are listed in the following table.

Hint

If a message persists in requesting that you load a tray, or if a message indicates that a previous print job is still in the printer memory, press GO to print or press CANCEL JOB to clear the job from the printer memory.

Note

Not all messages are described (many are self-explanatory).

Some printer messages are affected by the auto-continue and clearable warning settings from the configuration menu in the printer control panel. If `CLEARABLE WARNING=JOB` is set on the control panel, warning messages remain on the control panel until the end of the job from which they were generated. If `CLEARABLE WARNING=ON` is set, warning messages appear on the control panel until GO is pressed. If an error occurs that prevents printing and `AUTO CONTINUE=ON` is set, the printer goes offline for 10 seconds before it returns online. If `AUTO CONTINUE=OFF` is set, the message remains until GO is pressed.

Table 37. Printer messages

Control panel message	Explanation	Recommended action
ACCESS DENIED MENUS LOCKED	The control panel function you are trying to use has been locked by the network administrator to prevent unauthorized access.	Ask the network administrator to unlock the function.
BAD DUPLEXER CONNECTION	The duplexer is not correctly installed.	1. Ensure that the right-angle power cord that shipped with the printer is being used. 2. Turn the printer off. 3. Remove and reinstall the duplexer. 4. Turn the printer off and back on. 5. If the message persists, make sure the duplexer is connected and the connector is not damaged. 6. Replace the duplexer.
BAD ENV FEEDER CONNECTION	The envelope feeder is not connected properly to the printer.	1. Remove and reinstall the envelope feeder. 2. Turn the printer off and back on. 3. Replace the envelope feeder.
BAD OPT TRAY CONNECTION	There is a problem with an optional 500-sheet paper tray connection with the printer: • The tray is not connected properly. • More than two optional 500-sheet paper trays have been installed (the printer cannot support more than four trays total). • The electronics in the paper tray are faulty.	1. Reinstall the optional tray. 2. Turn the printer off and back on. 3. Make sure the optional tray is connected and the connector is not damaged. 4. Replace the optional-tray or optional-feeder controller PCA.
CANNOT DUPLEX CLOSE REAR BIN	The printer cannot duplex because the rear output bin is open.	1. Close the rear output bin. 2. If the message persists, check sensor PS702 in the duplexer.

Table 37. Printer messages (continued)

Control panel message	Explanation	Recommended action
CHECK INPUT DEVICE alternates with PAPER PATH OPEN PLEASE CLOSE IT	The optional input tray cannot feed print media to the printer because a door or paper guide is open.	1. Check the doors and paper guides and close any that are open. 2. If doors and trays are closed, check tabs and sensor levers in the tray for proper operation. Replace any defective tabs or sensors. 3. Replace the PCA controller in the feeder.
CHECK OUTPUT DEVICE alternates with CLOSE OUTPUT DELIVERY PATH	The optional output device is not properly connected to the printer.	1. Ensure the optional output device is fully seated and properly installed. 2. Check any doors on the output device and verify they are closed.
CHECKING PAPER PATH	The engine is checking for possible jams or print media that was not cleared from the printer.	Wait for the printer to finish checking (up to 30 seconds).
CLOSE TOP COVER	The top cover is open and must be closed for printing to continue.	1. Close the top cover. 2. If the message persists, check SW101 for proper operation. (See page 263 for the sensor location.) Make sure wires are connected. 3. Replace SW101. 4. If the new switch does not solve the error, the wiring or the engine controller board might be defective.
DISK DEVICE FAILURE	The EIO disk had a critical failure or fatal error.	1. Reseat the EIO disk. 2. Remove the EIO disk and replace it with a new one.
DISK FILE OPERATION FAILED	The requested operation could not be performed (for example, attempting to download a file to a nonexistent directory).	1. Check the file name and the directory name. 2. Reseat the EIO disk. 3. Retry the operation.

Table 37. Printer messages (continued)

Control panel message	Explanation	Recommended action
DISK FILE SYSTEM IS FULL	The disk file system is full.	1. Delete all unnecessary files from the EIO disk and then try again. Use HP Resource Manager to download or delete files and fonts. (See the software help for more information.) 2. Advise the customer to increase the permanent storage (use a larger EIO disk or add a RAM DIMM).
DISK IS WRITE PROTECTED	The EIO disk is protected, and no new files can be written to it.	Disable the write protection through HP Resource Manager.
DUPLEX ERROR CHECK DUPLEXER	There is a problem with the duplexer.	1. Make sure the duplexer is properly installed. 2. Make sure the right-angle power cord is used for the printer and the duplexer is making a good connection. 3. Replace the duplexer PCA.
EIO DISK [x] NOT FUNCTIONAL	The EIO disk is not working correctly.	1. Reseat the EIO disk in slot [X]. 2. Remove and replace the EIO disk in slot [X].
EIO [x] NOT FUNCTIONAL	The EIO disk is not working correctly.	1. Reseat the EIO disk in slot [X]. 2. Remove and replace the EIO disk in slot [X].
EIO [x] INITIALIZING alternates with DO NOT POWER OFF	The disk accessory in EIO slot [x] is initializing.	1. Wait for the message to disappear (up to five minutes). If the printer EIO card is operating correctly and communicating with the network, this message disappears after approximately one minute and no action is required. 2. If the EIO card is unable to communicate with the network, this message remains for five minutes and then disappears. The problem might be an unseated EIO card, a bad EIO card, a bad cable or connection on the network, or a network problem. 3. Contact the network administrator.

Table 37. Printer messages (continued)

Control panel message	Explanation	Recommended action
ENV FEEDER LOAD [TYPE] [SIZE]	A job has been sent to the envelope feeder and the feeder is empty, the wrong size is loaded in the feeder, or the type and size are set incorrectly on the control panel.	1. Load the requested envelope type and size into the envelope feeder. 2. Make sure the envelope size and type are set correctly from the paper-handling menu in the printer control panel. 3. Press GO if the desired envelope is already loaded in the feeder. 4. Press -VALUE+ to scroll through other available types and sizes. 5. Press SELECT to accept the alternate type or size.
ENVELOPE FEEDER SIZE = [xxxxx]	The printer is asking what size envelopes have been loaded in the envelope feeder.	In response, you can take either of the following actions: 1. Press SELECT to accept the current envelope size. 2. Press -VALUE+ to change the size and then press SELECT to accept the new size. If you do not press any buttons, the message disappears in about one minute. **Note** Changing the size here changes the default for the envelope-feeder size in the paper-handling menu.
ENVELOPE FEEDER TYPE = [xxxxx]	The printer has received a job under the following conditions: • The envelope type the job requested is not available in the printer. • Envelopes have been placed in the envelope feeder (thus triggering the paper sensor).	You can take either of the following actions: 1. Press SELECT to accept the paper type and then press GO. 2. Press +VALUE- to change the type, press SELECT to accept the new type, and then press GO to continue.
FLASH DEVICE FAILURE	The flash DIMM had a critical or fatal failure.	1. Reseat the flash DIMM and ensure it is locked into place. 2. Remove the flash DIMM and replace it with a new one.
FLASH FILE OPERATION FAILED	The requested operation could not be performed (for example, attempting to download a file to a nonexistent directory).	1. Check the file name and the directory name. 2. Reseat the flash DIMM. 3. Retry the operation.

Table 37. Printer messages (continued)

Control panel message	Explanation	Recommended action
FLASH FILE SYSTEM IS FULL	The flash file system is full.	Delete unnecessary files from the flash DIMM and try again. Use HP Resource Manager to download or delete files and fonts. (See the software help for more information.)
FLASH IS WRITE PROTECTED	The flash DIMM is protected and no new files can be written to it.	Disable the write protection through HP Resource Manager.
INPUT DEVICE CONDITION [XX.YY]	An input paper-handling device has a condition that needs attention before printing can resume. 1st X = Device number in chain 2nd X= Device type (three types): 1 = Input 2 = Output 3 = Stapler/stacker unit YY = Device specific error	1. Turn the printer off. 2. Disconnect the cable to the input paper handling devices and then reconnect it. 3. Ensure the device is properly connected and any doors or paper guides are properly closed. 4. Turn the printer on. 5. See the documentation that came with the paper-handling device for assistance.
INSTALL DUPLEXER	The printer is unable to print the current job because the duplexer is not installed or not inserted correctly.	1. Install or reinsert the duplexer and ensure it is fully seated. 2. Ensure the right-angle power cord is used for the printer.
INSTALL TONER CARTRIDGE	The toner cartridge has been removed and must be reinstalled for printing to continue.	Reinstall the toner cartridge and ensure it is fully seated.
INSTALL TRAY [X]	The printer is unable to print the current job because the specified tray [X] is open or not inserted correctly.	1. Reinsert the specified tray. 2. Check for damaged tabs on the right side of the tray. 3. Check for damaged tray sensor switches in the printer. 4. Replace the PCA controller in the feeder.

Table 37. Printer messages (continued)

Control panel message	Explanation	Recommended action
LOADING PROGRAM [NUMBER] alternates with DO NOT POWER OFF	Programs and fonts can be stored on the printer's file system. At startup time, these entities are loaded into RAM. (These entities can take a long time to load into RAM depending on the size and number of entities being loaded.) The <NUMBER> specifies a sequence number indicating the current program being loaded.	Wait for the program to load.
MANUALLY FEED [TYPE] [SIZE]	One of the following occurred: • A manual feed was requested. • There is no media in tray 1. • The wrong size of media is loaded. • The control panel is not set for the size and type of media loaded.	1. Load the requested paper into tray 1. 2. Press GO if the desired paper is already loaded in tray 1. 3. Press -VALUE+ to scroll through other available types and sizes. 4. Press SELECT to accept the alternate type or size.
MEMORY FULL STORED DATA LOST	There is no available memory in the printer. The current job might not print correctly and some resources (such as downloaded fonts or macros) might have been deleted.	Advise the customer to add more memory to the printer or to simplify the print job.
MEMORY SETTINGS CHANGED	The printer changed its memory settings because it did not have enough memory to use the previous settings for I/O buffering and resource saving. This usually occurs after removing memory from the printer, adding a duplexer, or adding a printer language.	Advise the customer to add more memory to the printer or to simplify the print job.

Table 37. Printer messages (continued)

Control panel message	Explanation	Recommended action
MEMORY SHORTAGE JOB CLEARED	The printer did not have enough free memory to print the entire job. The remainder of the job will not print and will be cleared from memory.	1. Press Go to continue. 2. Advise the customer to add more memory to the printer or to simplify the print job.
MEMORY SHORTAGE PAGE SIMPLIFIED	The printer had to compress the job to fit it in available memory. Some data loss might have occurred.	1. Press Go to continue. (The print quality of these pages might not be acceptable.) 2. Advise the customer to add more memory to the printer or to simplify the print job.
NON HP TONER DETECTED alternates with PRESS GO TO CONTINUE	The printer has detected that the toner cartridge is not a genuine HP toner cartridge because it does not see or recognize the toner cartridge's identification (model, manufacturing date, and serial number).	1. Make sure the toner cartridge is a genuine HP toner cartridge. A non-HP toner cartridge will produce this error. Any printer repair required as a result of using non-HP toner is not covered under the printer warranty. 2. If the HP toner cartridge is new, the Elabel (cartridge memory) is missing or has been tampered with. If you believe the toner cartridge is a fraud, call the HP fraud hotline at (1) (877) 219-3183 (toll-free in North America). 3. If the HP toner cartridge is used, the printer will not recognize the cartridge until 20 pages have been printed. After 20 pages have been printed, the error message disappears. 4. If the HP toner cartridge is used, and the error message remains after 20 pages have been printed, the cartridge has previously run out of toner. Replace the toner cartridge.
OFFLINE	The printer is offline.	Press Go to place the printer online.
OUTPUT BIN FULL alternates with CLEAR PAPER FROM [BINNAME]	The output bin is full and needs to be emptied.	Remove the sheets from the output bin.

Table 37. Printer messages (continued)

Control panel message	Explanation	Recommended action
PAPER WRAPPED AROUND FUSER	Print media is wrapped around the fuser.	1. Turn the printer off to keep the media from wrapping more firmly around the fuser. 2. Open the top cover and remove the toner cartridge. 3. Remove all the visible media. 4. Leave the printer turned off and remove the fuser to remove any remaining print media.
PERFORM PRINTER MAINTENANCE	To ensure optimum print quality, the printer prompts the customer to have routine maintenance performed every 200,000 pages.	Install the printer maintenance kit. You must reset the maintenance page count after performing printer maintenance by pressing ITEM- and VALUE- while turning the printer on. **Note** The printer maintenance kit is a consumable item and is not covered under warranty.
PROCESSING JOB	The printer is processing a job.	Wait for the job to finish. This can take several minutes for a complex print job.
PROCESSING CLEANING PAGE	The printer is conducting the manual cleaning-page process.	Wait for the job to finish. This can take up to 2.5 minutes.
RAM DISK DEVICE FAILURE	The RAM disk had a critical or fatal failure.	1. Reseat the RAM disk. 2. Replace the RAM disk.
RAM DISK FILE OPERATION FAILED	The requested operation could not be performed (for example, attempting to download a file to a non-existent directory).	1. Check the filename and directory name. 2. Reseat the RAM disk. 3. Retry the operation.

Table 37. Printer messages (continued)

Control panel message	Explanation	Recommended action
RAM DISK FILE SYSTEM IS FULL	The RAM disk file system is full.	1. Delete unnecessary files and then try again, or turn the printer off, and then turn the printer on to delete all files on the device. (Delete files using HP Resource Manager or another software utility. See the software online help for more information.) 2. If the message persists, increase the size of the RAM disk. Change the RAM disk size from the configuration menu on the printer control panel. HP Resource Manager can also be used to increase or decrease the RAM disk size.
RAM DISK IS WRITE PROTECTED	The RAM disk is protected, and no new files can be written to it.	Disable the write protection through HP JetAdmin.
TONER LOW	The message first appears when about 15 percent of the toner is remaining in the toner cartridge (about 1,500 pages remaining for the 10,000-page cartridge and about 900 pages remaining for the 6,000-page cartridge at five percent coverage). Depending on how the printer has been configured in the configuration menu, it will either continue to print or stop.	1. If the printer has stopped, you can resume printing by pressing Go for each job. 2. Advise the customer to have a replacement toner cartridge on hand.
TONER OUT	The toner cartridge has run out of toner. Depending on how the printer has been configured, it will either continue to print or stop. Due to the resolution of the toner level sensor, it is possible that a small amount of toner (less than one percent) might still be present in the cartridge.	1. If the printer has stopped, you can resume printing by pressing Go for each job. 2. Replace the toner cartridge.

Table 37. Printer messages (continued)

Control panel message	Explanation	Recommended action
TRAY [X] EMPTY [TYPE] [SIZE]	The specified tray is empty, but the current job does not need this tray in order to print correctly. If this message appears and the tray contains print media, a sensor could be damaged. PS105 detects paper in tray 1. PS101 detects paper in tray 2. PS1001 detects paper in the optional 500-sheet feeder. See figure 113 on page 263 and figure 114 on page 264 for sensor locations.	1. Load the empty tray (x) to clear the message. If you do not load the specified tray, the printer will continue printing from the next available tray, and the message remains. 2. If the message remains after the specified tray is loaded, check sensor arm flags for damage and be sure they move freely. 4. Replace defective paper out sensors.
TRAY [x] LOAD [TYPE] [SIZE] where **x** is tray 2, 3, or 4	This message occurs for the following reasons: • Tray 2, 3, or 4 was requested, but the tray is empty. • Tray 2, 3, or 4 was requested, but the adjustments are not set for the requested type or size.	1. Make sure that all three paper size adjustments have been made (see the explanation of adjustments in table 39 on page 220). Also make sure that the type has been set at the control panel. 2. Load the requested media into an indicated tray. Ensure the tray is fully seated. 3. If you are trying to print on A4- or letter-size media and this message appears, make sure the default paper size is set correctly from the printing menu in the printer control panel and also in the software program. 4. Press GO to print from the next available tray. 5. Press -VALUE+ to scroll through the available types and sizes. 6. Press SELECT to accept the alternate type or size.

Table 37. Printer messages (continued)

Control panel message	Explanation	Recommended action
TRAY 1 LOAD [TYPE] [SIZE]	The print job has requested a size and/or type of media that is not loaded.	1. Load the requested print media into tray 1 (or any other desired tray). ● Ensure that the trays are correctly adjusted for size. ● The tray type settings (and size for tray 1) must be set from the paper-handling menu. 2. If you are trying to print A4- or letter-size media and this message appears, make sure the default paper size is set correctly from the printing menu in the printer control panel. 3. If this message appears and the correct media is loaded: ● Ensure that all paper size adjustments have been properly performed (see page 220). ● Ensure the tray type setting is correct in the paper-handling menu. ● Check the size tabs on the right side of the tray. ● Check the size switches and paper sensors. ● Ensure the tray is fully seated. 4. To print on a different media that is already loaded: a. Press GO to print from the next available tray. b. Press -VALUE+ to scroll through the available types and sizes. c. Press SELECT to accept the alternate type or size. d. Inspect the switches in the tray. e. Turn the printer on with the tray removed and push the switches by hand to see if they register. See “Paper-size detection switches” on page 255.

Table 37. Printer messages (continued)

Control panel message	Explanation	Recommended action
TRAY 1 SIZE = [xxxx]	The printer is asking what size of media has been loaded in tray 1.	In response, you can take either of the following actions: 1. Press SELECT to accept the paper size. 2. Press -VALUE+ to change the size and then press SELECT to accept the new size. The printer will first display the TRAY 1 TYPE = XXXX message (see the description of that message). If you do not press any buttons in the time-out period (about one minute), it displays this TRAY 1 SIZE = XXXX message. Changing the size here changes the default for tray 1 paper size in the paper-handling menu.
TRAY 1 TYPE = [xxxx]	The printer has received a job under the three following conditions: • The media type requested by the job is not available in the printer. • Tray 1 has been set for CASSETTE. • Media has been placed in tray 1 (thus triggering tray 1's paper sensor). If you do not press any buttons, the message disappears in about one minute).	You can take either of the following actions: 1. Press SELECT to accept the paper type. 2. Press -VALUE+ to change the type and then press SELECT to select the new type. **Note** Changing the type here changes the default for tray 1 media type in the paper-handling menu. If you do not do anything during the time-out period (about one minute), the printer will print on the media in tray 1.
UNABLE TO MOPY JOB	Memory or file system failures would not allow a mopy job to occur. Only one copy will be produced.	1. Reseat RAM DIMMs and/or the EIO hard disk. 2. Install additional memory or an EIO hard disk.
UNABLE TO STORE JOB	Memory or file system failures would not allow the print to store the job.	1. Reseat RAM DIMMs and/or the EIO hard disk. 2. Install additional memory or an EIO hard disk.

Table 37. Printer messages (continued)

Control panel message	Explanation	Recommended action
UNSUPPORTED SIZE IN TRAY [yy]	An external paper-handling device detected an unsupported media size. The printer will go offline until the condition is corrected.	Verify the media meets the supported size specifications in table 7 on page 26.
USE [TYPE] [SIZE] INSTEAD?	If the requested media size or type is not loaded, the printer asks if it should use another size or type instead.	1. Press -VALUE+ to scroll through the available types and sizes. 2. Press SELECT to accept the alternate type or size.
WAIT FOR PRINTER TO REINITIALIZE	The RAM disk setting has been changed from the printer control panel. This change will not take effect until the printer reinitializes.	If you change the mode of the external device, turn the printer off, turn the printer on and wait for the printer to reinitialize.
xx.yy PRINTER ERROR PRESS GO TO CONTINUE	A printer error has occurred that can be cleared by pressing GO on the printer control panel.	Press GO on the printer control panel.
13.XX PAPER JAM [LOCATION]	Media is jammed at the specified location (and possibly at other locations). If the message persists after all jams have been cleared, a sensor or sensor lever might be stuck or broken.	For all jam messages, do the following: 1. Remove jammed print media from the specified location. Check the entire paper path for other pieces of media in the path. 2. Open and close the top cover to clear the message. 3. If the jam reoccurs, see “General paper-path troubleshooting” on page 220. 4. Check sensors and flags in the paper path for proper operation. For sensor locations, see page 263.

Table 37. Printer messages (continued)

Control panel message	Explanation	Recommended action
13.0 PAPER JAM [LOCATION]	A non-specific paper jam occurred.	1. Remove jammed media from the specified location. 2. Verify the paper tray is fully closed. 3. Inspect and/or replace the feed and separation rollers. 4. Ensure there is no obstruction in the path, such as a torn piece of paper. 5. Open and close the top cover to clear the message. 6. Check sensors and flags for proper operation (page 263).
13.1 PAPER JAM OPEN INPUT TRAYS	Paper-delay jam at paper-feed area.	1. Ensure that paper trays are loaded and adjusted properly so media can feed from the tray. It might be necessary to reduce the stack height of media in the tray. 2. Check the input area for obstructions such as media in the path. Also check to see if the registration assembly damaged or unseated. 3. Check PS102 and PS103 for proper operation. Replace any defective sensors or flags. For sensor locations, see page 263. 4. Verify the media meets the specifications in table 6 and table 7 (page 25 and page 26). 5. Check the pickup feed and separation rollers for unusual wear. Replace as needed. 6. Rotate the media in the input tray by 180° and/or turn it over.

Table 37. Printer messages (continued)

Control panel message	Explanation	Recommended action
13.2 PAPER JAM OPEN INPUT TRAYS	Paper-stopped jam at paper-feed area.	1. Check the input area for obstructions such as paper in the path. Also check to see if the registration assembly is damaged or if the transfer roller is out of place. 2. Check PS102 and PS103 for proper operation. Replace any defective sensors or flags. For sensor locations, see page 263. 3. Ensure the media does not exceed the maximum length (356 mm/14 inches). 4. If multiple sheets are feeding, it might be necessary to fan the media and reduce the stack height. 5. Verify that the fuser is properly installed.
13.5 PAPER JAM CHECK REAR DOOR alternates with OPEN AND CLOSE TOP COVER	Paper-delay jam at fuser.	1. Check the transfer roller and small media belt to ensure they are operating and can feed print media. 2. Check the paper path for obstructions at the transfer roller, toner cartridge, paper feed assembly, and fuser. 3. Check PS107 and PS108 for proper operation. Replace any defective sensors or flags. For sensor locations, see page 263. 4. Turn the media stack over and/or rotate it by 180° in the input tray.
13.6 PAPER JAM CHECK REAR DOOR alternates with OPEN AND CLOSE TOP COVER	Paper-stopped jam at fuser.	1. Check the paper path for obstructions at the fuser and output/delivery area. 3. Check PS107 and PS108 for proper operation. Replace any defective sensors or flags. For sensor locations, see page 263.
13.10 PAPER JAM CHECK DUPLEXER alternates with OPEN AND CLOSE TOP COVER	Jam at duplexer.	1. Check the duplexer and the rear area of the printer for obstructions or damage. 2. Check PS701 and PS703 in the duplexer for proper operation. Replace the duplexer if a sensor is defective.

Table 37. Printer messages (continued)

Control panel message	Explanation	Recommended action
13.20 PAPER JAM CHECK REAR DOOR alternates with OPEN AND CLOSE TOP COVER OPEN INPUT TRAYS	Media stopped in the paper path during power-on or when the top door was closed.	1. Remove all media in the paper path, and then open and close the top cover. 2. If the message persists after all media is removed: • Check if media is jammed in the prefeed area (PS102). • Check PS102, PS103, PS107, and PS108 for proper operation. Replace any defective sensors or flags (see page 263).
13.21 DOOR OPEN JAM	The top cover was open while printing.	1. Clear the jam and close the top door. 2. If the message persists, check the top door switch (SW101) for proper operation.
13.99 PAPER JAM [LOCATION]	A non-specific paper jam occurred.	1. Remove jammed media from the specified location. 2. Verify the paper tray is fully closed. 3. Inspect and/or replace the feed and separation rollers. 4. Ensure there is no obstruction in the path, such as a torn piece of paper. 5. Open and close the top cover to clear the message. 6. Check sensors and flags for proper operation (page 263).
20 INSUFFICIENT MEMORY alternates with PRESS GO TO CONTINUE	The printer received more data than can fit in available memory. You might have tried to transfer too many macros, soft fonts, or complex graphics.	Press Go to print the transferred data (some data might be lost). Advise the customer to simplify the print job or install additional memory.
21 PAGE TOO COMPLEX alternates with PRESS GO TO CONTINUE	The data (dense text, rules, raster or vector graphics) sent to the printer is too complex.	Press Go to print the transferred data. (Some data might be lost.) Advise the customer to simplify the print job.
40 EIO x BAD TRANSMISSION alternates with PRESS GO TO CONTINUE	The connection has been broken between the printer and the EIO card in the specified slot. (Data loss might occur in this situation.)	1. Press Go to clear the error message and continue printing. 2. Reseat the EIO card in slot [X].

Table 37. Printer messages (continued)

Control panel message	Explanation	Recommended action
`41.x PRINTER ERROR` alternates with `PRESS GO TO CONTINUE`	A temporary printing error has occurred.	Press Go. The page containing the error will automatically be reprinted. If the error persists: 1. Reseat the connections to the laser scanner and then to the engine controller board. 2. Replace the laser scanner. 3. Replace the engine controller board.
`41.3 UNEXPECTED PAPER SIZE` alternates with `LOAD TRAY [X] TYPE SIZE`	The printer detected a media size different from what it was expecting. This is typically caused if two or more sheets stick together in the printer or if the tray is not properly adjusted.	1. Reload the tray with the correct print media size. 2. Ensure that media in the tray is loaded under the front and back tabs. Check sensors PS103 and PS106 for proper operation. 3. If you are printing from tray 1, verify that the correct paper size is selected in the control panel. 4. If you are printing from tray 2, 3, or 4, verify that the three paper-size adjustments (length guide, width guide, size-selector switch) on the paper tray have been made correctly. Make sure the media is under the corner tabs. 5. After performing the actions above, press Go. The page containing the error will automatically be reprinted if jam recovery is enabled. (Or, you might want to press Cancel Job to clear the job from the printer's memory.)
`41.5 PRINTER ERROR`	The media reached the PS102 or PS103 sensor too early.	1. This error usually occurs with smooth media, such as transparencies or labels. • If the problem persists when using tray 1, load media one sheet at a time. • If the problem persists when using trays 3 and 4, replace the feed and separation rollers. 2. Check sensors PS102 and PS103 for proper operation.

Table 37. Printer messages (continued)

Control panel message	Explanation	Recommended action
49.XX PRINTER ERROR alternates with CYCLE POWER TO CONTINUE	A firmware error occurred.	1. Press CANCEL JOB to clear the print job from the printer memory. 2. Turn the printer off, and then turn the printer on. 3. Try printing a job from a different software application. If the job prints, go back to the first application and try printing a different file. (If the message only appears with a certain software application or print job, contact the software vendor for assistance.) 4. If the message persists with different software applications and print jobs, disconnect all cables to the printer that connect it to the network or printer. 5. Turn the printer off. 6. Remove all memory DIMMs or third-party DIMMs from the printer. (Do not remove the firmware DIMM in the lowest DIMM slot.) 7. Remove all EIO devices from the printer. 8. Turn the printer on. 9. If the error no longer exists, install each DIMM and EIO device one at a time, making sure to turn the printer off and back on as you install each device. 10. Replace a DIMM or EIO device if you determine that it causes the error. 11. Remember to reconnect all cables that connect the printer to the network or computer. 12. If the error persists, replace the firmware DIMM. 13. Replace the formatter.

Table 37. Printer messages (continued)

Control panel message	Explanation	Recommended action
50.X FUSER ERROR	A fuser error has occurred. X description: 1 = Low fuser temperature 2 = Fuser warm-up service 3 = High fuser temperature	1. Turn the printer off, wait 20 minutes, and then turn the printer on. 2. If the message persists, reseat the fuser. • If that does not work, replace the fuser. • To check the fuser, turn the printer off and remove the fuser. Measure the resistance between the fuser connectors J132-1 and J132-2. If it is not within the range of 200 kΩ to 500 kΩ, replace the fuser. • If there is not continuity between the fuser connectors J143F (neutral) and J142F (hot) with the fuser removed, replace the fuser. • If the problem is not related to the fuser, replace the engine controller board.
50.4 PRINTER ERROR alternates with CYCLE POWER TO CONTINUE	A problem exists with the customer's line voltage.	1. Remove the printer from any UPS supplies, additional power supplies, or power strips. 2. Plug the printer into a wall outlet and see if this resolves the problem. 3. If the printer is already plugged into a wall outlet, try another power source in the building that is independent of the one currently being used. 4. The line voltage and current source at the printer location might need to be inspected to ensure that it meets the printer's electrical specifications.
51.X PRINTER ERROR alternates with CYCLE POWER TO CONTINUE	A loss of beam-detect occurred. X description: 1 = Beam-detect error 2 = Laser error	1. Press Go. The page containing the error will automatically be reprinted. 2. Turn the printer off and then on. 3. Reseat cables to the laser/scanner and engine controller. 4. Replace the laser/scanner.

Table 37. Printer messages (continued)

Control panel message	Explanation	Recommended action
52.X PRINTER ERROR alternates with CYCLE POWER TO CONTINUE	The laser scanner speed is incorrect. X description: 1 = Scanner startup error 2 = Scanner rotation error	1. Press Go. The page containing the error will automatically be reprinted. 2. Turn the printer off and then on. 3. Reseat cables to the laser/scanner and engine controller. 4. Replace the laser/scanner.
53.XY.ZZ PRINTER ERROR	There is a memory error with an accessory. The DIMM that caused the error will not be used. Values of X, Y, and ZZ are as follows: X = DIMM type 0 = ROM 1 = RAM Y = Device location 0 = internal memory (ROM or RAM) 1 to 4 = DIMM slots 1, 2, 3, or 4 ZZ = Error number 0, 1, 2 = Unsupported o unrecognized memory 3 = Failed RAM test 4, 5 = Exceeded maximum RAM or ROM size 6 = Invalid DIMM speed 7 = DIMM reporting information incorrectly 8 = DIMM RAM parity error 9 = ROM needs to be mapped to an unsupported address 10 = DIMM address conflict 11 = PDC XROM out of bounds 12 = Unable to make a temporary mapping	1. Turn the printer off, and reseat or replace the specified DIMM. 2. Try the DIMM in another slot. (The firmware DIMM must remain in slot #4—the lowest DIMM slot.) 3. Replace the DIMM that caused the error.
54.1 REMOVE SEALING TAPE alternates with FROM TONER CARTRIDGE	The toner cartridge has been installed without removing the sealing tape.	1. Open the top cover and remove the toner cartridge. 2. Pull the sealing tape tab to remove the strip. 3. Reinstall the toner cartridge and close the top cover.

Table 37. Printer messages (continued)

Control panel message	Explanation	Recommended action
54.4 PRINTER ERROR alternates with CYCLE POWER TO CONTINUE	A problem exists with the customer's line voltage.	1. Remove the printer from any UPS supplies, additional power supplies, or power strips. 2. Plug the printer into a wall outlet and see if this resolves the problem. 3. If the printer is already plugged into a wall outlet, try another power source in the building that is independent of the one currently being used. 4. The line voltage and current source at the printer location might need to be inspected to ensure that it meets the printer's electrical specifications.
55.xx PRINTER ERROR alternates with CYCLE POWER TO CONTINUE	An internal communications error occurred.	The page containing the error will automatically be reprinted. 1. Check the power at the customer's location. 2. Replace the formatter and/or firmware DIMM. 4. Replace the engine controller board.
56.X PRINTER ERROR alternates with CYCLE POWER TO CONTINUE	An incompatible combination of input/output bins was selected. X = description: 1 = Illegal input or bad accessory connector 2 - Illegal output	The page containing the error will automatically be reprinted. 1. Turn the printer off, and then turn the printer on. 2. Check the printer's configuration. 3. Verify accessory connection.
57.X PRINTER ERROR alternates with CYCLE POWER TO CONTINUE	A fan failure was detected. X description: 4 = Printer fan 7 = Duplex fan	1. Check the fan's connector and make sure the fan is not blocked. 2. Replace the fan.
58.2 PRINTER ERROR alternates with CYCLE POWER TO CONTINUE	An environmental thermistor (TH3) failure occurred.	1. Turn the printer off, and then turn the printer on. 2. Verify the environmental thermistor cable is securely connected. 3. Replace the environmental thermistor. 4. If the error persists, replace the engine controller board.

Table 37. Printer messages (continued)

Control panel message	Explanation	Recommended action
59.X PRINTER ERROR alternates with CYCLE POWER TO CONTINUE	A main motor error occurred. X description: 0 = Motor error 1 = Motor startup error 2 = Motor rotation error	1. Turn the printer off, and then turn the printer on. 2. Check and reseat the fuser and toner cartridge to make sure they are not hindering gear movement in the drive train. 3. Check the main motor's cable to ensure that it is seated properly. 4. If the error persists, replace the main motor.
62.X PRINTER ERROR	There is a problem with the printer memory. The X value refers to the location of the problem: 0 = Internal memory 1 to 4 = DIMM slots 1, 2, 3, or 4	1. Reseat the specified DIMM. 2. Replace the specified DIMM.
64 PRINTER ERROR alternates with CYCLE POWER	A scan buffer error occurred.	1. Turn the printer off, and then turn the printer on. 2. Perform a cold reset. 3. If the message persists, replace the formatter or firmware DIMM.
66.XX.YY [TYPE] FAILURE alternates with CHECK CABLES AND CYCLE POWER	An error occurred in an external paper-handling device. 1st X = Device number in chain 2nd X = Device type 1 Input 2 Output 3 Stapler/stacker unit YY = Device specific error	Press Go to clear the message. If the message will not clear: 1. Turn the printer off, and then turn the printer on. 3. Check and reseat all cables between the printer and the specified device. 4. Reseat the external paper-handling device.
68 NVRAM ERROR CHECK SETTINGS	An error occurred in the printer non-volatile memory (NVRAM) and one or more printer settings has been reset to its factory default.	1. Print a configuration page and check the printer settings to determine which values have changed. 2. Hold down Cancel Job while turning the printer on. This will clean up the NVRAM by removing old areas that are not being used.

Table 37. Printer messages (continued)

Control panel message	Explanation	Recommended action
68 NVRAM FULL CHECK SETTINGS	An error occurred in the printer's NVRAM and one or more printer settings has been reset to its factory default.	1. Print a configuration page and check the printer settings to determine which values have changed. 2. Hold down CANCEL JOB while turning the printer on. This will clean up the NVRAM by removing old areas that are not being used.
68.X PERMANENT STORAGE ERROR alternates with CHECK SETTINGS	An error occurred in the printer's permanent storage and one or more printer settings has been reset to its factory default.	Print a configuration page and check the printer settings to determine which values have changed.
68.X PERMANENT STORAGE FULL	The printer's permanent storage is full. Some settings might have been reset to the factory defaults.	1. Print a configuration page and check the printer settings to determine which values have changed. 2. Hold down CANCEL JOB while turning the printer on. This will clean up the permanent storage by removing old areas that are not being used.
69.X PRINTER ERROR alternates with CYCLE POWER TO CONTINUE	A temporary printing error occurred. X description: 0 = The duplex mechanism has failed	1. Turn the printer off, and then turn the printer on. 2. Reseat the duplexer. 3. Replace the duplexer.

Table 37. Printer messages (continued)

Control panel message	Explanation	Recommended action
79 SERVICE [XXXX]	The printer detected an error.	1. Press CANCEL JOB to clear the print job from the printer memory. 2. Turn the printer off, and then turn the printer on. 3. Try printing a job from a different software application. If the job prints, go back to the first application and try printing a different file. (If the message only appears with a certain software application or print job, contact the software vendor for assistance.) 4. If the message persists with different software applications and print jobs, disconnect all cables to the printer that connect it to the network or printer. 5. Turn the printer off. 6. Remove all memory DIMMs or third-party DIMMs from the printer. (Do not remove the firmware DIMM in the lowest DIMM slot.) 7. Remove all EIO devices from the printer. 8. Turn the printer on. 9. If the error no longer exists, install each DIMM and EIO device one at a time, making sure to turn the printer off and back on as you install each device. 10. Replace a DIMM or EIO device if you determine that it causes the error. 11. Remember to reconnect all cables that connect the printer to the network or computer. 12. If the error persists, replace the firmware DIMM. 13. Replace the formatter.

Table 37. Printer messages (continued)

Control panel message	Explanation	Recommended action
8X.YYYY EIO [Z] ERROR	The EIO accessory in slot [z] has encountered a critical error. [z] description: 1 = EIO slot 1—The printer detected an error with the EIO accessory. 2 = EIO slot 2—The printer detected an error with the EIO accessory. 6 = EIO slot 1—The EIO accessory detected an error. 7 = EIO slot 2—The EIO accessory detected an error.	1. Turn the printer off, and then turn the printer on. 2. Turn the printer off, reseat the EIO accessory in slot [z], and then turn the printer on. 3. Turn the printer off, remove the EIO accessory from slot [z], install it in a different EIO slot, and turn the printer on. 4. Replace the EIO accessory in slot [z].

The following table lists the disk-error numbers reported on either the printer collation or job storage disk-error page, which is printed when an error exists.

Table 38. Mopy disk error messages

Disk error number	Error description	Solution
1	Disk volume not present–it might be uninitialized	Hard disk: Initialize the hard disk. If the problem persists, replace the hard disk. RAM disk: Turn the printer off, and then turn the printer on.
3	A requested file or directory could not be found	The data might be corrupted. Delete the job that prompted the error.
5	Invalid number of bytes given in a read/write request	The data might be corrupted. Delete the job that prompted the error.
6	Attempt to create a file or directory that already exists	The user has sent a username that is the same as an existing directory. Change the username in the driver and resend the job.
15	Bad disk	Hard disk: Initialize the hard disk. If the problem persists, replace the hard disk.
16	No volume label	Hard disk: Initialize the hard disk. If the problem persists, replace the hard disk.
23	Bad seek request–the resulting offset would be negative	The data might be corrupted. Delete the job that prompted the error.

Table 38. Mopy disk error messages

Disk error number	Error description	Solution
24	Unexpected internal error	The data might be corrupted. Delete the job that prompted the error. Disk-media problem: Initialize the hard disk or restart the printer to reinitialize the RAM disk. If the problem persists on a hard disk, replace the hard disk.
55	Bad file system	Data might be corrupted. Delete the job that prompted the error. Disk-media problem: Initialize the hard disk or restart the printer to reinitialize the RAM disk. If the problem persists on a hard disk, replace the hard disk.
56	Hardware failure	Replace the hard disk.
59	The maximum number of directories has been reached	A maximum number of directories can be put on a disk. Stored jobs are stored in directories created for each user. To solve this problem: 1. Delete all jobs stored for a user. The firmware will automatically delete the directory for a user with no stored jobs. 2. Delete other directories on the disk.
70	Disk error	1. Reseat the disk. 2. Replace the disk.

General paper-path troubleshooting

Jams occur in the printer when print media does not either reach or clear a photosensor along the printer paper path in a specific amount of time. If a jam occurs, a `13.XX PAPER JAM` message appears on the printer control panel. The following table contains general questions you might ask and topics to explore before troubleshooting.

Table 39. General paper-path troubleshooting questions

Troubleshooting check	Action
What is the frequency of the jams (for example: continuous, one jam per 100 pages, one jam per 1000 pages)?	Verify with the customer. Print the event log to determine the jam history. See figure 94, “Sample event log,” on page 191. to evaluate the event log.
Do jams only occur when the print media is fed from a particular paper input source (such as tray 1 or tray 2)?	Use the paper path test to isolate the problem. See “Paper-path test” on page 222.
Do jams only occur when print media is output to a specific output bin (either the top output bin or rear output bin)?	Use the paper-path test to isolate the problem. See “Paper-path test” on page 222.
Do jams occur with a specific type of paper?	Try different media. See the *HP LaserJet Printer Family Print Media Guide*. The guide is bundled with this service manual.
Where does the leading edge of the first sheet of paper in the printer paper path stop when a jam occurs? Are any sheets of media damaged or torn?	Attempt to duplicate. Use the paper-path test to isolate the problem. Inspect the paper path and all paper-path mechanical assemblies up to the location where the jams occur.
Is the customer loading the paper trays correctly?	Observe the customer loading print media. Do not fan paper. See proper media handling procedures in the *HP LaserJet Printer Family Print Media Guide*.
Is the customer overfilling the paper trays?	Ensure that print media is not over the maximum fill marks in the paper trays. Heavy media, such as transparencies, labels, and card stock, might feed better if only a few sheets are loaded at a time. Observe the customer loading paper in the trays.

Table 39. General paper-path troubleshooting questions (continued)

Troubleshooting check	Action
Are the paper tray guides set correctly?	For tray 1, ensure the guides are adjusted correctly with the sides of the media. Make sure the media fits under the tabs on the guides and not above the load-level indicators. For trays 2, 3, and 4: 1. Squeeze the lever on the left guide and slide the guides into place to match the width of the paper. 2. Squeeze the lever on the rear paper guide and slide it to the desired size until it clicks into place. 3. To make the third adjustment, squeeze the blue tab located on the right side of the tray and move it to the correct position based on the media size required. 4. Make sure the print media is flat in the tray at all four corners and below the front and back tabs.
Does the printer need to be cleaned?	Inspect the paper path and paper path rollers. See the cleaning procedures in chapter 4.
When was maintenance last performed on the printer?	Determine from the configuration page the number of pages since the last maintenance. (See “Maintenance interval” on page 77.) The printer maintenance kit should be installed every 200,000 images.

There are five photosensors (PS102, PS103, PS106, PS107, and PS108) in the paper path for detecting arrival or passing of the paper. Additional sensors are located in the optional duplexer.

If the sheet does not reach or pass these sensors within the prescribed time, the microprocessor on the engine controller board assesses a jam. See page 263 for the location and function of sensors.

Paper-path test

To perform a paper-path test:

1 Press MENU until INFORMATION MENU appears.

2 Press ITEM until PRINT PAPER PATH TEST appears.

3 Press SELECT. INPUT=TRAY 1 is displayed

4 Press VALUE+ to cycle selections until the desired paper tray appears.

5 Press SELECT. OUTPUT=TOP BIN is displayed.

6 Press VALUE+ until the desired output bin appears (open the rear output bin to print to it).

7 Press SELECT. DUPLEX=ON is displayed. This selection only appears when a duplexer is installed.

8 Press VALUE+ until the desired duplex mode (ON or OFF) appears.

9 Press SELECT. COPIES=1 appears.

10 Press VALUE+ to cycle selections until the desired number of copies appears. Choose 1, 10, 50, 100, or 500 copies.

11 Press SELECT to perform the paper-path test.

Information pages

From the printer control panel you can print pages that give details about the printer and its current configuration. The following information pages are described here:

- Menu map
- Configuration page

For a complete list of the printer information pages, print a menu map and see the information menu.

Menu map

To see the current settings for the menus and items available on the control panel, print a control panel menu map:

1 Press MENU until INFORMATION MENU appears.

2 Press ITEM until PRINT MENU MAP appears.

3 Press SELECT to print the menu map.

The content of the menu map varies, depending on the options currently installed in the printer. The printer driver or software application can override many of these values.

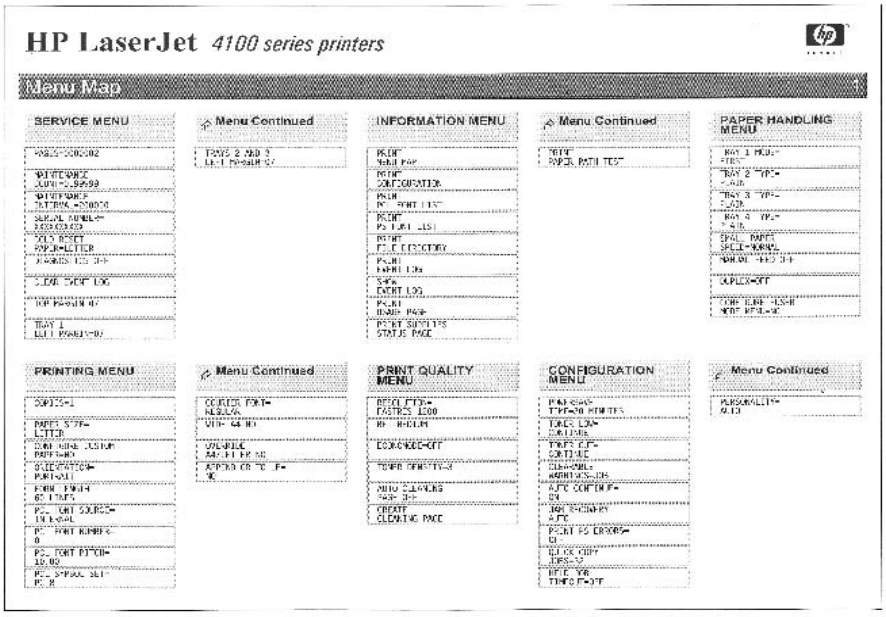

Figure 95. **Sample menu map (1 of 2)**

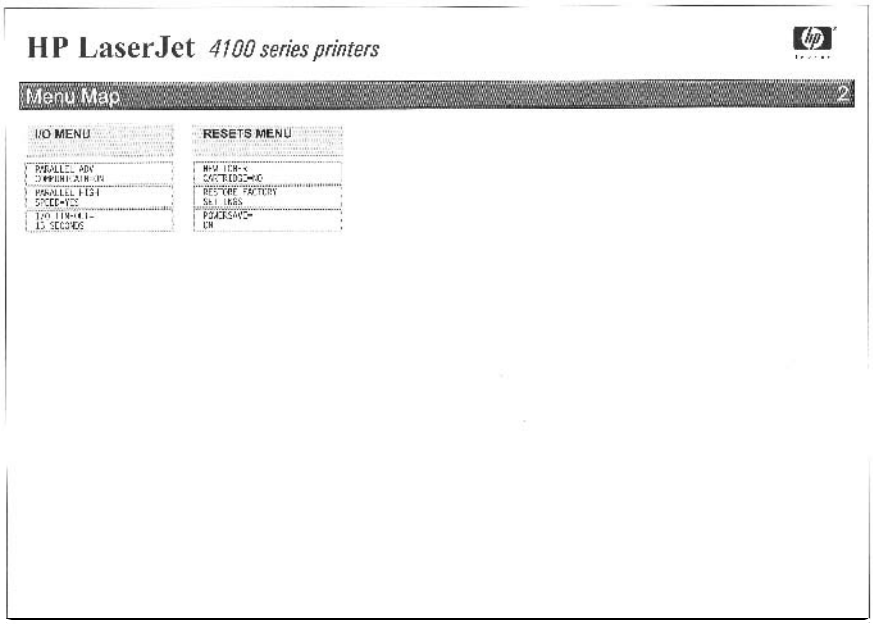

Figure 96. **Sample menu map (2 of 2)**

Embedded Web server

The embedded Web server allows you to view printer and network status and to manage printing functions from your computer instead of from the printer control panel. This service is designed for offices using an IP network and a standard Web browser. Below are examples of what you can do using the embedded Web server:

- View printer control panel messages.
- Determine the remaining life of all consumables.
- Order consumables.
- View and change tray configurations.
- View and change the printer control panel menu configuration.
- View and print internal pages.
- Receive notification of printer events.
- View and change network configuration.

To use the embedded Web server, you must have an IP-based network and a Web browser. The embedded Web server can be used with Microsoft® Internet Explorer 4 or above, and with Netscape™ Navigator 4 and above. IPX-based printer connections are not supported by the embedded Web server.

To use the embedded Web server

1 Open your Web browser.

2 Type the IP address assigned to the printer into the Address or Location field.

The IP address for the printer is listed on the printer configuration page. For more information about printing a configuration page, see page 226.

Embedded Web server page sets

The embedded Web server has three sets of internal Web pages for collecting information about the printer and for changing configuration options. These sets are:

- Home pages
- Device pages
- Networking pages

When the embedded Web server is active, each set of pages is listed on the browser screen. Click the set that you want to view, and the selection expands to display a list of frequently used Web links.

Note Each page in the embedded Web server connects to online Help. For more information regarding a particular page, click the Help button.

Home page set

The home pages of the embedded Web server are the informational pages for the printer. These include:

- **Printer status page**

  This page displays printer capabilities, control panel messages, and status lights that currently appear on the printer control panel. From here, you can set the frequency at which the embedded Web server will check the printer status. This page also displays consumable life levels and the input tray configurations.

- **Configuration page**

  This page displays the printer configuration page. For more information about interpreting and printing the configuration page, see page 226.

- **Supplies status page**

  This page displays the levels of the consumables for the printer.

- **Usage page**

  This page displays the amount of each media type that has been used by the printer.

- **Event log page**

  This page displays the printer event log. For more information about displaying and printing the event log, page 192.

- **Device identification page**

  This page displays the name, asset number, network address, model number, and serial number for this printer.

- **Device page set**

  The device pages of the embedded Web server allow you to configure the printer from your computer. The device pages can be password protected. Always consult with your network administrator before changing the printer's configuration.

- **Configure printer page**

  Configure all printer settings from this page.

- **Alerts page**

  Input a list of recipients for electronic notification of various printer events.

- **E-mail page**

  Configure the incoming and outgoing mail servers.

- **Security page**

  Set a password for the embedded Web server. Passwords and features configuration should only be determined by the network administrator. If a password is set, users will require a password for entry into the device sections of the embedded Web server.

- **Other links page**

  Add or customize links to other websites. These links are displayed on the navigational bar throughout the embedded Web server pages.

  There are two permanent links: "Ask a question" where the user can get help with the printer, and "Order Supplies" where you can order printer supplies. "Order Supplies" is only available from the device page set.

- **Language page**

  Determine the language in which to display the embedded Web server information.

- **Device Identification page**

  Name the printer and assign an asset number to it. Input the name and e-mail address of the primary point of contact for information about the printer. This page also shows the printer's network names, addresses, and printer model information.

Configuration page

Use the configuration page to view current printer settings, to help troubleshoot printer problems, or to verify installation of optional accessories, such as memory (DIMMs), paper trays, and printer languages.

Note If an HP JetDirect print server EIO card is installed, a JetDirect configuration page will print out as well.

To print a configuration page:

1. Press MENU until `INFORMATION MENU` appears.
2. Press ITEM until `PRINT CONFIGURATION` appears.
3. Press SELECT to print the configuration page.

Figure 97 on page 227 is a sample configuration page. The content of the configuration page varies, depending on the options currently installed in the printer.

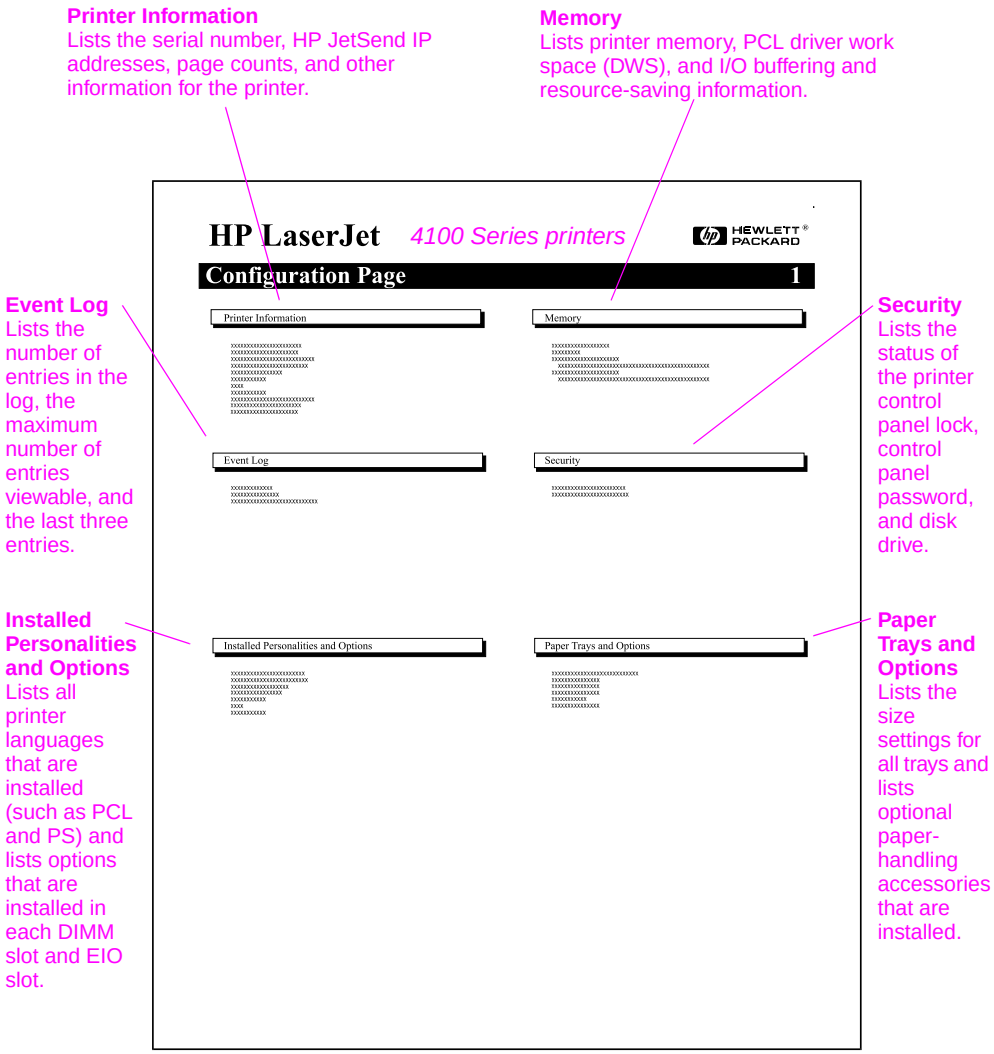

Figure 97. **Sample configuration page (HP LaserJet 4100 series printer)**

Verify installed options

Under “Installed Personalities and Options” on the configuration page, look for options such as hard disk or DIMM types and sizes.

Verify that the options installed in the printer are reflected on the configuration page. If an installed device is not shown, reseat the device and print a new configuration page.

Image quality

When you are working with customers, obtain a print sample before you begin troubleshooting the printer. Ask the customer to explain the quality expected from the printer. The print sample will also help clarify the customer’s explanation.

Table 40. Image quality checks

Image quality checks	Action
Does the problem repeat on the page?	Use the repetitive defect ruler on page 243.
Is the toner cartridge full and is it manufactured by HP?	Check the toner cartridge using the checklist on page 228.
Is the customer using print media that meets all HP paper specification standards?	For more information about HP's paper specification standards, see chapter 1 of this manual and the *HP LaserJet Printer Family Print Media Guide*.
Is the print sample similar to those in the print-quality tables see page 1-22?	Compare and perform the actions recommended in the print-quality tables.
Is the problem on the toner cartridge drum or the transfer roller?	Perform the half self-test functional check (page 244) to determine where the defect is. If a dark and distinct toner image is preset on the drum's surface, assume that the first four functions of the electrophotographic process are functioning (cleaning, conditioning, writing, and developing–see chapter 5), and troubleshoot the failure as a transfer or fusing problem.

Check the toner cartridge

Image formation defects are often the result of problems with the toner cartridge. If there is any doubt, always replace the toner cartridge before troubleshooting image defects.

Use the following checklist to ensure that the toner cartridge is still operable.

- Ensure that the toner cartridge has toner. Weight is one indication of the presence of toner, as shown in table 41.

Table 41. Weights of toner cartridges

Toner Cartridge Capacity	Full Weight	Typical Empty Weight[1]
6,000 pages	1343 grams (47.4 ounces)	1105 grams (39 ounces)
10,000 pages	1490 grams (52.59 ounces)	1110 grams (39.18 ounces)

1. Depending on the exact pages printed, the toner cartridge might be empty and weigh more than these values.

- Check the expiration date of the toner cartridge (stamped on the box).
- Check the toner cartridge to see if it has been disassembled or refilled.
- Ensure that the toner cartridge is seated properly in the printer.
- Inspect the cartridge for toner leaking through worn seals. (If the drum has been manually rotated, the rotation might have caused internal damage and toner might spill.)

Note Toner cartridges are rated for 6,000 or 10,000 images at 5 percent coverage (depending on the model). It is possible to wear out the gears and the cartridge seals before `TONER LOW` appears if the number of images exceeds 6,000 or 10,000 (depending on the model). See “EconoMode” below. A depleted cartridge will often create print defects.

- Check the surface of the photosensitive drum in the cartridge to see if it has been damaged or scratched. Touching the drum will contaminate the photosensitive surface and can cause spotting and defects during printing.
- White areas on the page might indicate that the drum has been exposed to light for too long. If white areas appear, stop the printer and wait a few minutes. This should eliminate most defective images. If not, place the toner cartridge in a dark environment for several days. This can restore some life to the drum.

EconoMode

EconoMode creates draft-quality printing by reducing the amount of toner on the printed page by up to 50 percent. Advise the customer to turn EconoMode on or off from the printer driver or software application, because those settings override the control panel settings. EconoMode settings can also be changed from the print quality menu.

CAUTION HP does not recommend full-time use of EconoMode. If EconoMode is used frequently, it is possible that the toner supply will outlast the mechanical parts in the toner cartridge.

Image defects

The quality of the printer output is subject to the judgment of the user. This section of the manual helps you define print quality defects and understand what factors affect print quality.

The print samples shown in the following tables illustrate some print quality defects. For future reference, retain copies of print quality defects encountered in the field with an explanation of their causes.

The image defects listed below are covered in the following tables.

Hint

If you find a defect that is not depicted, record the probable cause along with the conditions in the printing environment and save a copy of the defect for future reference.

Table 42. Image defects

Problem	Cause	Solution
Black page	The high-voltage power supply connections are contaminated.	Clean the high-voltage power supply terminals. (See “Engine controller board layout,” figure 105 on page 254.) Also clean the high-voltage springs where they contact the toner cartridge.
	The high-voltage power supply is installed improperly. If the high-voltage power supply has been removed and replaced, it might not be seated properly.	Remove the engine controller board and check the connectors for damage. Reseat the engine controller board, being certain to fully seat the connectors.
	Defective primary charging roller.	Replace the toner cartridge.
	The laser drive circuitry is damaged on the engine controller board so that the laser is always on.	Replace the laser scanner assembly and engine controller board, followed by the formatter, if necessary.

Table 42. Image defects

Problem	Cause	Solution
White page	No toner is available for print.	Remove sealing tape or replace the toner cartridge.
	Defective laser shutter.	Check the laser shutter for free operation when inserting the toner cartridge.
	Toner cartridge guide damaged, improperly positioned, or missing.	Make sure the guide is installed properly above the toner cartridge.
	No transfer roller voltage.	Without transfer roller voltage, toner cannot be attracted from the surface of the drum to the print media. Perform the half self-test functional check (page 244) to check all other electrophotographic processes. Replace the transfer roller if necessary.
	No developing bias.	1. Clean the high-voltage power supply contacts. With no developing bias charge, toner is not attracted to the drum. 2. Replace the engine controller board.
	No drum ground path.	With no ground path, the drum cannot discharge. The negative charge on the drum repels toner, and leaves a white page with bubble print. 1. Check the drum ground spring and reconnect it, if necessary. 2. Replace the engine controller board.
	Defective laser scanner cable assembly.	Low-level signals exchanged between the laser/scanner assembly and the engine controller board might be affecting laser output. Replace the laser/scanner cable assembly.

Table 42. Image defects

Problem	Cause	Solution
Blank spots 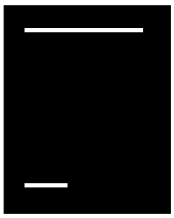	Print media does not meet printer specifications or is stored improperly.	1. Print a few more pages to see if the problem corrects itself. 2. Turn over the stack of media in the tray. Also try rotating the media 180°. 3. If the print media does not meet HP specifications, replace the paper, and advise the customer to use the recommended print media and store it properly.
	Contaminated or deformed transfer roller.	Replace the transfer roller.
	Defective toner cartridge.	Replace the toner cartridge.
		See also “Dropouts” on page 235.
Creases 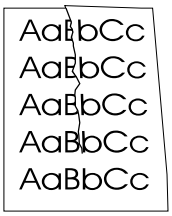	Print media does not meet printer specifications or is stored improperly.	1. Print a few more pages to see if the problem corrects itself. 2. Turn over the stack of media in the tray. Also try rotating the media 180°. 3. If the print media does not meet HP specifications, replace the paper, and advise the customer to use the recommended print media and store it properly.
	Printer’s operating environment does not meet specifications.	Make sure the printer’s operating environment meets specifications.
	Print media is loaded incorrectly.	Make sure print media is loaded correctly and that the guides fit properly against the media stack.
	Wrong tray.	Print from a different tray (such as tray 1).
	Wrong output bin for print media type.	Print to a different output bin (top or rear output bin).
	Obstruction in paper path.	1. Check the paper path for print media debris. 2. Check for damaged components that could be creasing the media.

Table 42. Image defects

Problem	Cause	Solution
Curl 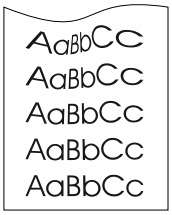	Print media does not meet printer specifications or is stored improperly.	1. Print a few more pages to see if the problem corrects itself. 2. Turn over the stack of media in the tray. Also try rotating the media 180°. 3. If the print media does not meet HP specifications, replace the paper, and advise the customer to use the recommended print media and store it properly.
	Printer's operating environment does not meet specifications.	Make sure the printer's operating environment meets specifications.
	Wrong output bin.	Print to a different output bin (top or rear output bin).
	Wrong fuser setting for print media type.	From the paper-handling menu on the control panel, change the fuser mode setting or choose another paper type from the printer driver.
		See also "Dropouts" on page 235.
Contamination on back 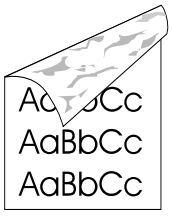	Contamination inside printer (tray separation roller, feed roller, transfer roller, fuser, toner cartridge).	1. Print at least 10 pages to see if the problem goes away. 2. Print a cleaning page (page 84). Identify and clean the contaminated part according to the repetitive defect ruler on page 243. If contamination cannot be removed, replace the contaminated part. 3. Check for toner leaks.
	Print media does not meet printer specifications or is stored improperly.	1. Print a few more pages to see if the problem corrects itself. 2. Turn over the stack of media in the tray. Also try rotating the media 180°. 3. If the print media does not meet HP specifications, replace the paper, and advise the customer to use the recommended print media and store it properly.

Table 42. Image defects

Problem	Cause	Solution
Distorted image 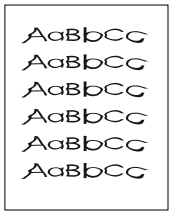	Print media does not meet printer specifications or is stored improperly.	1. Print a few more pages to see if the problem corrects itself. 2. Turn over the stack of media in the tray. Also try rotating the media 180°. 3. If the print media does not meet HP specifications, replace the paper, and advise the customer to use the recommended print media and store it properly.
	Printer's operating environment does not meet specifications.	Make sure the printer's operating environment meets specifications.
	Wrong output bin for print media type.	Print to a different output bin.
	Poor connection of cables to the laser scanner.	Reseat the cables connected to the laser/scanner.
	Poor connection of cables to the engine controller board.	Reseat the cables connected to the engine controller board.
	Defective laser scanner.	Replace the laser scanner.
	Defective engine controller board.	Replace the engine controller board.
Dropouts 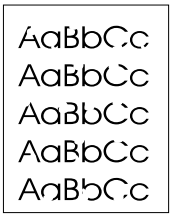	Paper might be too smooth.	Check the paper (or other print media) type and quality.
	Printer's operating environment does not meet specifications.	Make sure the printer's operating environment meets specifications.
	Wrong toner density setting.	From the print-quality menu on the control panel, adjust the toner density setting. Make sure EconoMode is off.
	Wrong fuser setting for paper type.	From the paper-handling menu on the control panel, change the fuser mode setting to High1 or High2 or choose another paper type from the printer driver.
		See also "Blank Spots" on page 233.

Table 42. Image defects

Problem	Cause	Solution
Faded print/ bubbles	No drum ground path.	With no ground path, the drum cannot discharge. The negative charge on the drum repels toner and leaves a white page with bubble print. 1. Check the drum ground spring and reconnect it, if necessary. 2. Replace the engine controller board.
	Engine controller board.	Replace the engine controller board.
Gray background	Print media does not meet printer specifications or is stored improperly.	1. Print a few more pages to see if the problem corrects itself. 2. Turn over the stack of media in the tray. Also try rotating the media 180°. 3. If the print media does not meet HP specifications, replace the paper, and advise the customer to use the recommended print media and store it properly
	Printer's operating environment does not meet specifications.	Make sure the printer's operating environment meets specifications.
	Wrong toner density setting.	From the print-quality menu on the control panel, adjust the toner density setting. Make sure EconoMode is off.
	Faulty toner cartridge.	Replace the toner cartridge.
		See also "Light print, dark print, or fade" on page 238.
Horizontal black lines	Defective laser scanner assembly or engine controller board.	1. See the "Repetitive defect ruler" on page 243. 2. Reseat connectors on the laser scanner and engine controller board. 3. Replace the laser/scanner assembly followed by the engine controller board, if necessary.

Table 42. Image defects

Problem	Cause	Solution
Horizontal smudges 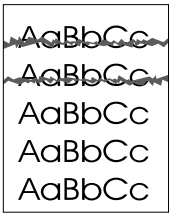	Paper-path contamination or damage.	1. See the “Repetitive defect ruler” on page 243. 2. Check the toner cartridge and replace it if necessary. 3. Check the fuser and replace it, if necessary.
Horizontal white lines 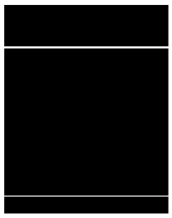		1. Check the toner cartridge and replace it if necessary. 2. Check the fuser and replace it if necessary. 3. Replace the laser/scanner assembly, followed by the engine controller board, if necessary.

Table 42. Image defects

Problem	Cause	Solution
Light print, dark print, or fade 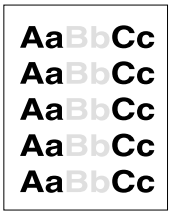	Wrong toner density setting.	From the print-quality menu on the control panel, adjust the toner density setting. Make sure EconoMode is off.
	Toner cartridge is low.	Replace the toner cartridge.
	Transfer roller is defective.	Replace the transfer roller.
	Print media does not meet printer specifications or is stored improperly.	1. Print a few more pages to see if the problem corrects itself. 2. Turn over the stack of media in the tray. Also try rotating the media 180°. 3. If the print media does not meet HP specifications, replace the paper, and advise the customer to use the recommended print media and store it properly.
	Poor contact to the engine controller board.	1. Ensure that the drum ground spring is connected to the engine controller board correctly. 2. Clean the contacts if they are contaminated. If the problem remains after cleaning, or parts are damaged or deformed, replace them. 3. Replace the engine controller board, if necessary.
	Defective laser/scanner.	Replace the laser/scanner.
	Defective engine controller board.	Replace the engine controller board. See also “Faded Print/Bubbles” on page 236.

Table 42. Image defects

Problem	Cause	Solution
Loose toner 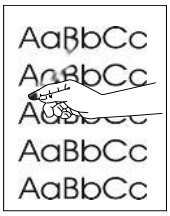	Contamination in the printer.	1. Print a few more pages to see if the problem corrects itself. 2. Clean the inside of the printer or use the printer's cleaning page. (See "Cleaning the printer and accessories" starting on page 82.)
	Toner cartridge is defective.	Replace the toner cartridge.
	Paper might be too smooth.	Check the paper (or other print media) type and quality.
	Wrong fuser setting for paper type.	From the paper-handling menu on the control panel, change the fuser mode setting or choose another paper type from the printer driver.
	Defective fuser.	1. Maintenance might be due. Check this by printing a copy of the supplies status page. If maintenance is due, order and install the printer maintenance kit. 2. Replace the fuser.
Repetitive defects 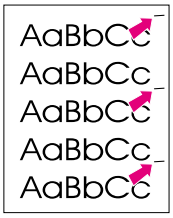	Contamination or defect on a roller.	See the "Repetitive defect ruler" on page 243.
Skew 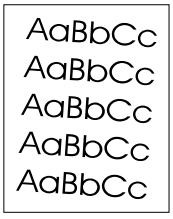	Print media does not meet printer specifications or is stored improperly.	1. Print a few more pages to see if the problem corrects itself. 2. Verify that there are no torn pieces of media inside the printer. 3. Turn over the stack of media in the tray. Also try rotating the media 180°. 4. If the print media does not meet HP specifications, replace the paper, and advise the customer to use the recommended print media and store it properly.
	Print media is not loaded correctly or trays are not adjusted properly.	Make sure print media is loaded correctly and that the guides fit properly against the media stack.
	Registration assembly is improperly installed.	Be sure that the registration assembly is installed correctly.

Table 42. Image defects

Problem	Cause	Solution
Toner smear 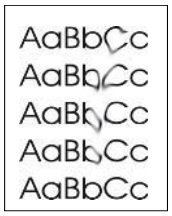	Contamination in the printer.	1. Print a few more pages to see if the problem corrects itself. 2. Clean the inside of the printer or use the printer's cleaning page. (See "Cleaning the printer and accessories" starting on page 82.)
	Paper might be too smooth.	Check the paper (or other print media) type and quality.
	Defective toner cartridge.	Replace the toner cartridge. (See instructions with the toner cartridge.)
	Wrong fuser setting for paper type.	From the paper-handling menu on the control panel, change the fuser mode setting or choose another paper type from the printer driver.
Toner specks 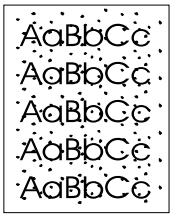	Contamination in printer.	1. Print a few more pages to see if the problem corrects itself. 2. Clean the inside of the printer or use the printer's cleaning page. (See "Cleaning the printer and accessories" starting on page 82.) 3. Activate the automatic cleaning page in the print-quality menu.
	Print media does not meet printer specifications or is stored improperly.	1. Print a few more pages to see if the problem corrects itself. 2. Turn over the stack of media in the tray. Also try rotating the media 180°. 3. If the print media does not meet HP specifications, replace the paper, and advise the customer to use the recommended print media and store it properly.
	Use of alternating small and standard print media (such as envelopes and letterhead).	To alternate small and standard paper, from the configuration menu on the control panel, set `SMALL PAPER SPEED=SLOW`

Table 42. Image defects

Problem	Cause	Solution
Vertical black lines	Defective toner cartridge.	Replace the toner cartridge.
	Contaminated fuser entrance guide.	Clean the guide.
	Scratches on the fuser.	Replace the fuser.
	Worn fuser film.	1. Set the fuser to a lower temperature mode. 2. Replace the fuser. **Note** To prevent the print-quality problem, reduce printing on large volumes of narrow media, such as envelopes. Instead, alternate smaller volumes of narrow media with full-page printing jobs.
Vertical dots	Contaminated static eliminator teeth.	Clean the static eliminator.
	Poor contact between the static eliminator and the engine controller board.	Clean the contacts, if contaminated. If the problem remains after cleaning, or parts are damaged or deformed, replace them.
	Deformed or deteriorated transfer roller.	Replace the transfer roller.
	Defective engine controller board.	Replace the engine controller board.
Vertical white lines	Lack of toner or faulty toner cartridge.	Redistribute the toner in the toner cartridge. If the problem continues, replace the toner cartridge.
	Contamination in the laser path.	1. Clean the laser path. (Remove the laser/scanner assembly and clean the lens.) 2. Replace the laser/scanner assembly.
	Defective fuser.	Replace the fuser assembly.

Table 42. Image defects

Problem	Cause	Solution
Repeating image 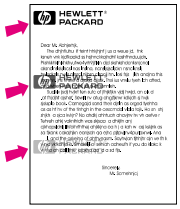	This type of defect might occur when using preprinted forms, a large quantity of narrow media, or a fuser mode that is set too high for your media.	1. Print a few more pages and see if the problem corrects itself. 2. Make sure that print media type and quality meet HP specifications. 3. If you observe that this type of defect occurs on wide paper (such as letter or A4-size paper) just after printing on narrow media (such as envelopes), you can set SMALL PAPER SPEED on the paper-handling menu to SLOW. Note that this will slow down printing. 4. Check your fuser mode.
	Maintenance due	Print a copy of the supplies status page. If maintenance is due, order and install the printer maintenance kit.
Misformed characters 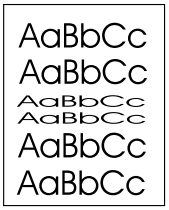	Printer's operating environment does not meet specifications.	1. Print a few more pages to see if the problem corrects itself. 2. Make sure that the environmental specifications for the printer are being met.
	Maintenance due	Print a copy of the supplies status page. If maintenance is due, order and install the printer maintenance kit.
Tire tracks 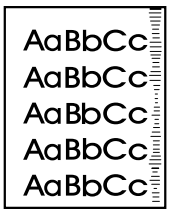	Toner cartridge is worn out.	1. Replace the toner cartridge after 6,000 or 10,000 pages, depending on the type of toner cartridge that is installed in the printer. 2. Reduce the number of pages that you print with very low toner coverage. 3. Use the 6,000-page cartridge if you cannot reduce the number of pages that have very little toner coverage.

Table 42. Image defects

Problem	Cause	Solution
White spots on black 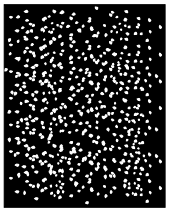		1. Print a few more pages to see if the problem corrects itself. 2. Make sure that print media type and quality meet HP specifications. 3. Make sure that the environmental specifications for the printer are being met. 4. Replace the toner cartridge.

Repetitive defect ruler

Repetitive print defects are usually associated with a specific roller within the printer or the toner cartridge. Use figure 98 to isolate the cause of repetitive print defects. Align the first occurrence of the defect with the top of the “ruler” and measure to the next occurrence of the defect to determine the roller in question. When you are certain that your defect pattern matches the pattern of the ruler, replace the indicated roller.

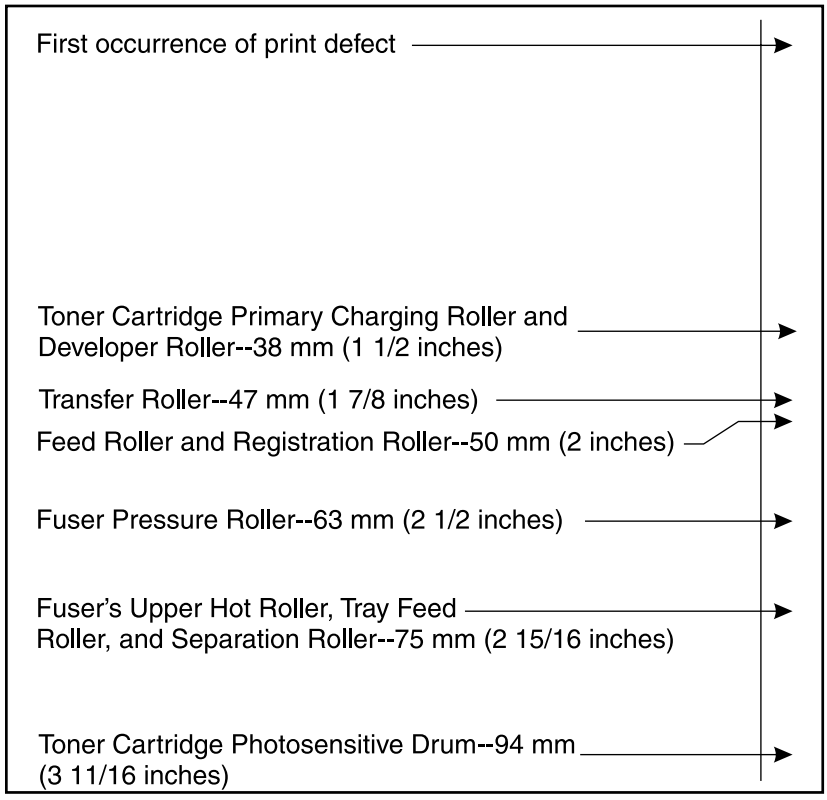

Figure 98. **Repetitive print defect ruler**

Image system troubleshooting

Half self-test functional check

The electrophotographic process can be subdivided into the following stages:

- Cleaning (removes excess toner from drum surface)
- Conditioning (places a uniform electrical charge on drum)
- Writing (laser strikes surface of drum and creates latent image)
- Developing (forms the toner image on drum)
- Transferring (charge transfers the image to print media)
- Fusing (heat and pressure produces a permanent image)

The purpose of the half self-test check is to determine which stage is malfunctioning. Perform the test as follows:

1. Print a configuration page from the control panel information menu.
2. Open the top cover after the paper advances halfway through the printer (about three seconds after the main motor begins rotation). The leading edge of the paper should have advanced past the toner cartridge.
3. Remove the toner cartridge.
4. Open the toner cartridge drum shield to view the drum surface.

If a dark and distinct toner image is present on the drum's surface, assume that the first four functions of the electrophotographic process are functioning (cleaning, conditioning, writing, and developing–see chapter 5), and troubleshoot the failure as a transfer or fusing problem.

If no image is present on the photosensitive drum, perform all the following functional checks.

Drum rotation functional check

The photosensitive drum, located in the toner cartridge, must rotate for the print process to work. The photosensitive drum receives its drive from the main drive assembly. To verify whether the drum is rotating:

1. Open the top cover.
2. Remove the toner cartridge.
3. Mark the cartridge's drive gear with a felt-tipped marker. Note the position of the mark.
4. Install the toner cartridge and close the top cover. The start-up sequence should rotate the drum enough to move the marked gear.
5. Open the printer and inspect the marked gear. Verify that the mark moved. If the gear did not move, inspect the main drive assembly to ensure that it is meshing with the toner cartridge gears. If the drive gears function and the drum does not move, replace the toner cartridge.

Note This test is especially important if refilled toner cartridges are in use.

High-voltage power supply functional check

The high-voltage power supply assembly provides the necessary voltages for the printer's electrophotographic processes. The +24 B VDC supply is used to power the high-voltage power supply assembly. A summary of the major components of the high-voltage system is given in table.

Table 43. High voltage system checks

Checks	Action
Are the connectors for the primary charge roller, drum ground, developing bias, and toner level sensor damaged, corroded, contaminated, or missing?	1. Inspect and correct each item. 2. Check the toner cartridge. 3. Check all wire connections. 4. Replace the engine controller board if the connection cannot be repaired.
Are the high-voltage power supply connections contaminated, bent, or broken?	1. Clean the terminals with alcohol only. 2. Check all wire connections. 3. Replace the engine controller board if the connection cannot be repaired.
Is the internal toner cartridge damaged?	Replace the toner cartridge.

Locations of components

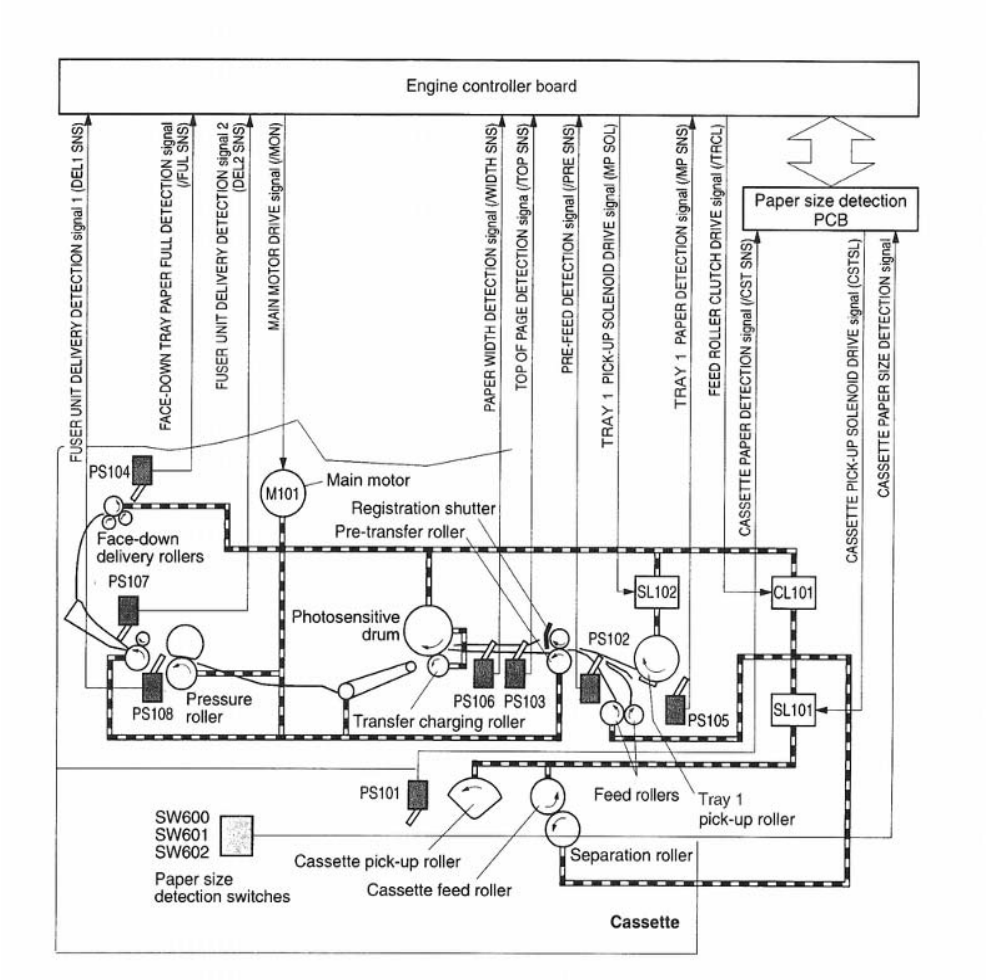

Figure 99. **Components of the paper pickup and feed system**

Table 44. Components of the paper pickup and feed system

PS101	Tray 2 paper sensor
PS102	Prefeed sensor
PS103	Top-of-page sensor
PS104	Top output-bin-full sensor
PS105	Tray 1 paper sensor
PS106	Paper width sensor
PS107	Fuser delivery sensor 2
PS108	Fuser delivery sensor 1
SL101	Tray 2 pickup solenoid
SL102	Tray 1 pickup solenoid
CL101	Paper feed guide clutch
M101	Main motor

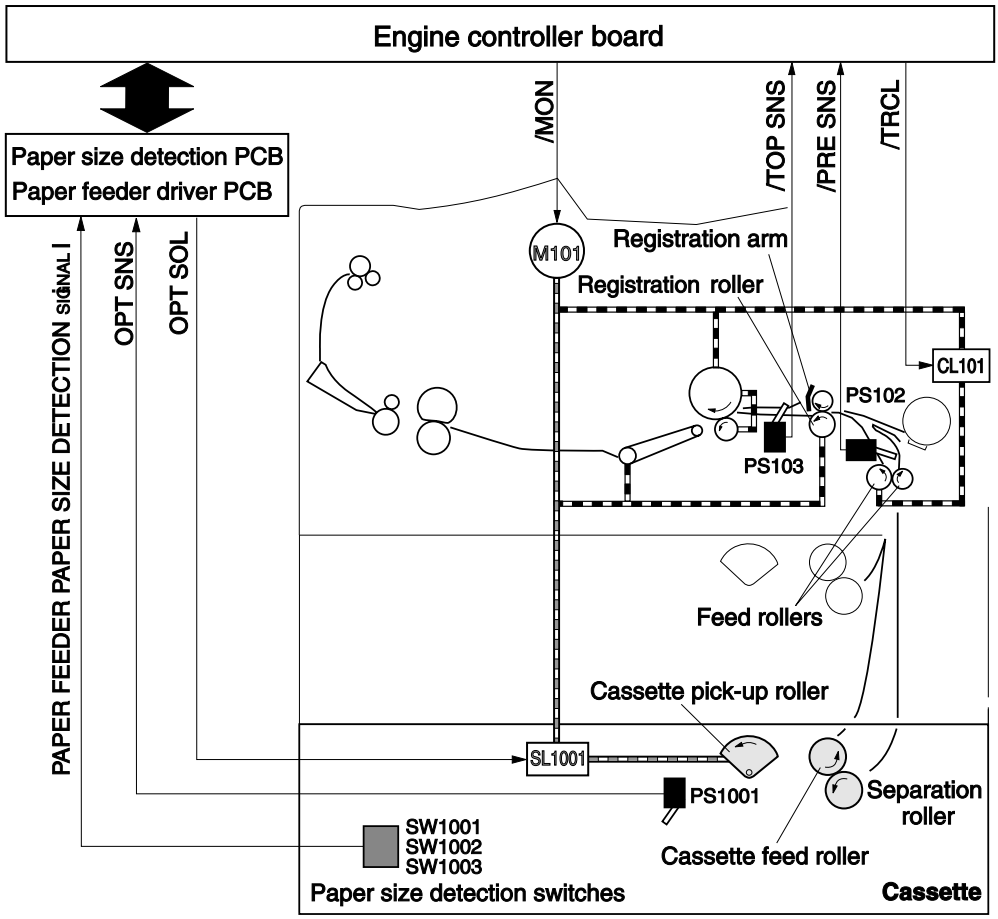

Figure 100. **Components of the optional paper feeder**

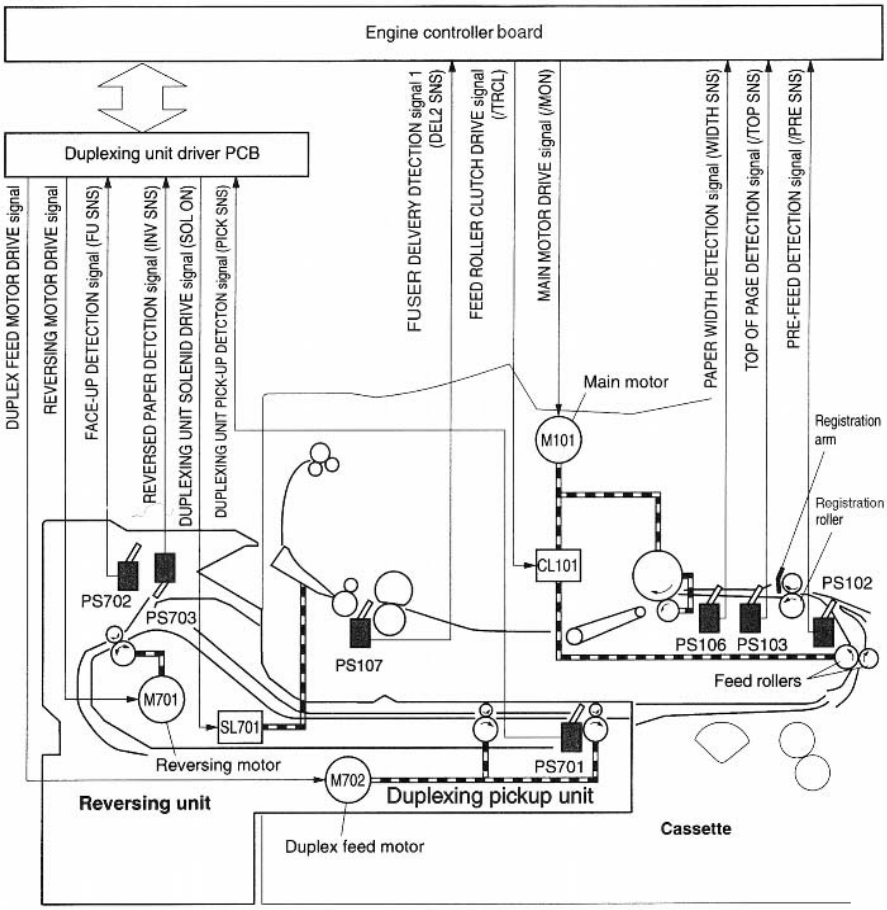

Figure 101. **Components of the optional duplexer**

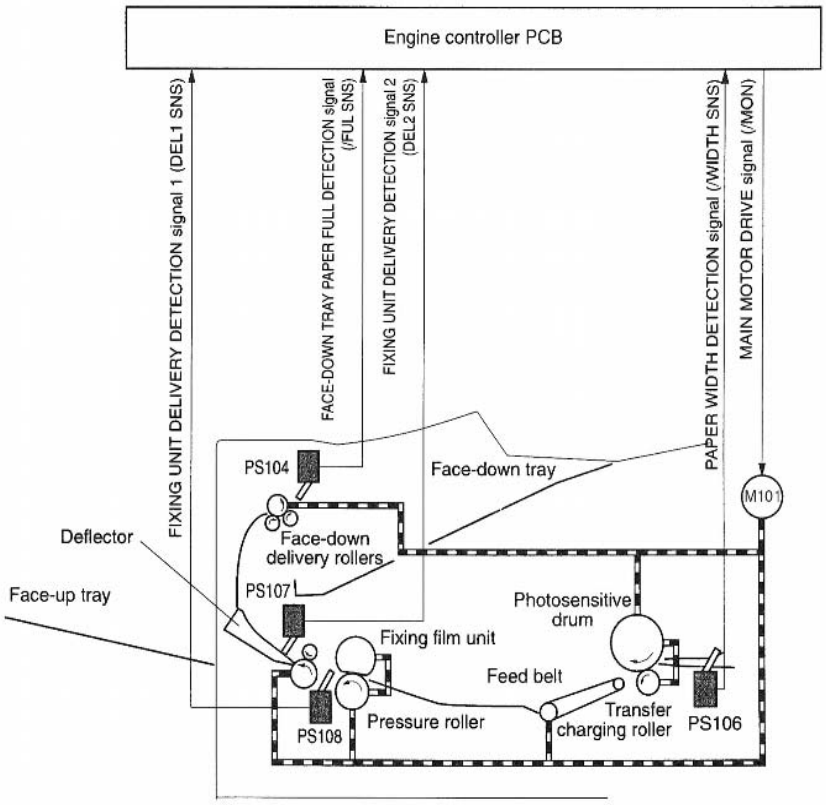

Figure 102. **Components of the fusing and delivery unit**

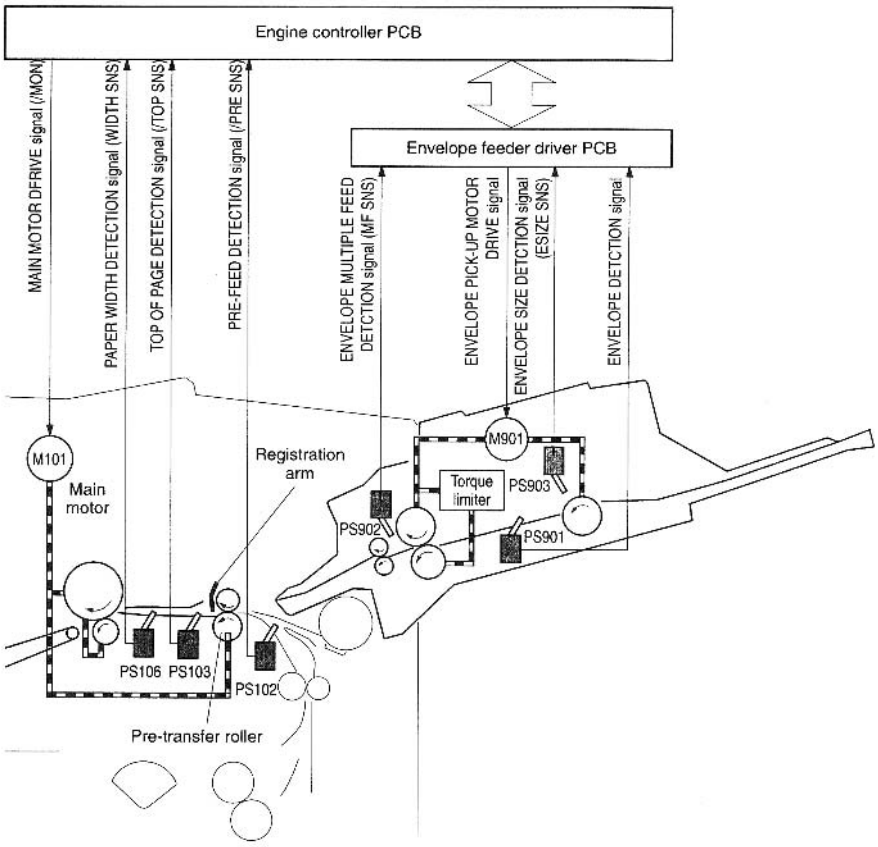

Figure 103. **Components of the optional envelope feeder**

Paper path

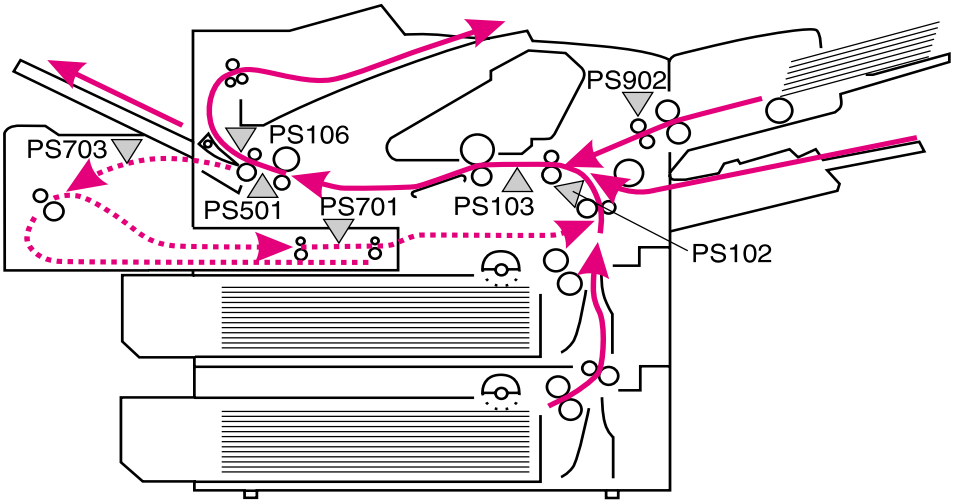

Figure 104. **Paper sensors and the paper path**

Table 45. Paper sensors

Sensor	Description	Sensor location
PS101	Tray 2 paper sensor	Sensor located on pickup drive assembly
PS102	Prefeed sensor	Sensor and flag located on registration/feed sensor assembly
PS103	Top-of-page sensor	Sensor and flag located on registration/feed sensor assembly
PS104	Top output bin full sensor	Sensor located on top output bin assembly
PS105	Tray 1 paper sensor	Sensor located on tray 1 assembly
PS106	Paper width sensor	Sensor located on the output assembly
PS107	Fuser paper-delivery sensor 2	Sensor and flag located on fuser assembly
PS108	Fuser paper-delivery sensor 1	Sensor located on engine controller flags on engine controller board and fusing assembly
PS701	Duplex pickup paper sensor (duplexer)	Sensor and flag located in duplexer

Table 45. Paper sensors

PS703	Reversed-paper sensor (duplexer)	Sensor and flag located in duplexer
PS902	Envelope multiple feed sensor (envelope feeder)	Sensor and flag located in envelope feeder
PS1001	Optional 500-sheet paper feeder paper sensor	Sensor located on the 500-sheet tray
PS901	Envelope paper sensor	Sensor located on envelope feeder
PS903	Envelope width sensor	Sensor located on envelope feeder
PS702	Rear output bin open	Sensor located on the duplexer

Engine controller board

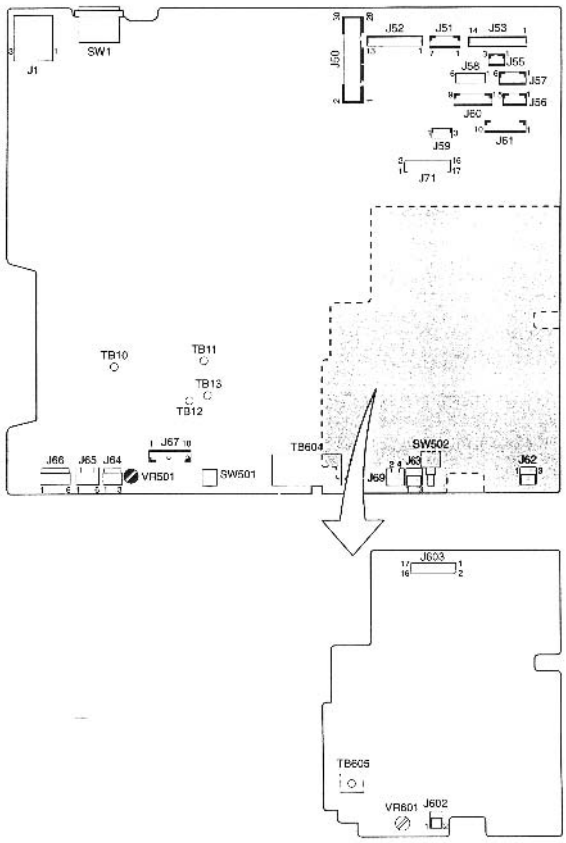

Figure 105. **Engine controller board layout**

Table 46. Engine controller board layout

SW1	Power switch
SW501	Test-print switch
SW502	Adjusted at factory
VR501	Top-of-page adjustment
VR601	Adjusted at factory

Paper-size detection switches

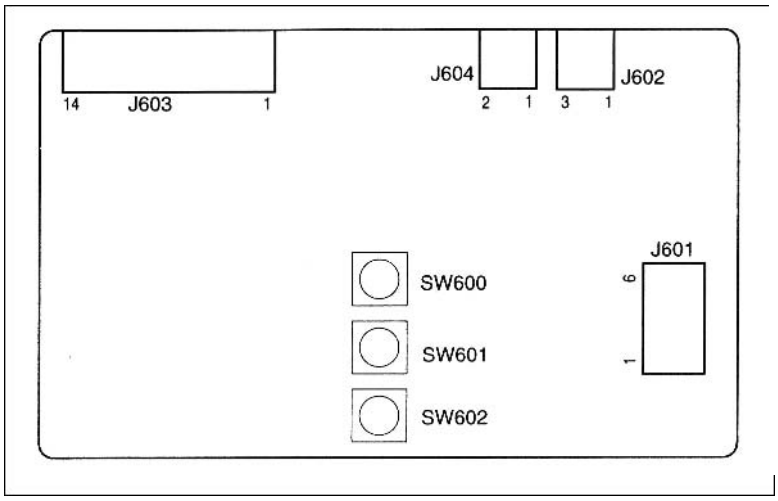

Figure 106. **Paper-size detection switches (1 of 2)**

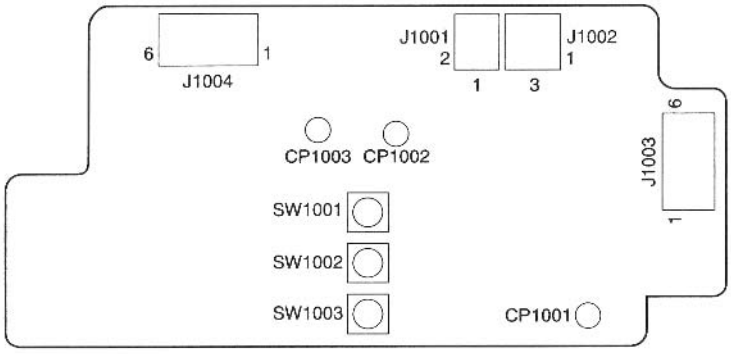

Figure 107. **Paper-size detection switches (2 of 2)**

Table 47. Paper-size detection switches

Paper size	Paper size detection switch		
	SW600/1001	**SW601/1002**	**SW602/1003**
No tray	OFF	OFF	OFF
Legal	OFF	OFF	ON
Executive	OFF	ON	OFF
Letter	OFF	ON	ON
Other	ON	OFF	OFF
Custom	ON	OFF	ON
B5	ON	ON	OFF
A4	ON	ON	ON

Motors and fans

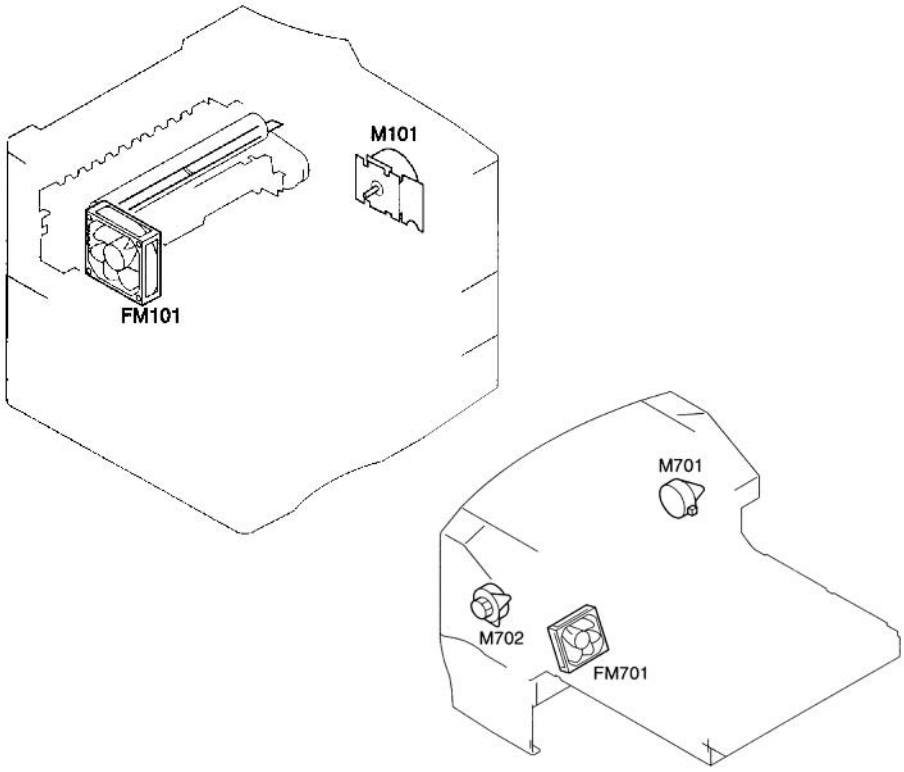

Figure 108. **Location of motors**

Table 48. Motors

M101	Main motor
M701	Reversing motor (duplexer)
M702	Duplex feed motor (duplexer)
M901	Envelope feeder motor
FM101	Cooling fan
FM701	Duplexer exhaust fan (duplexer)

Connectors

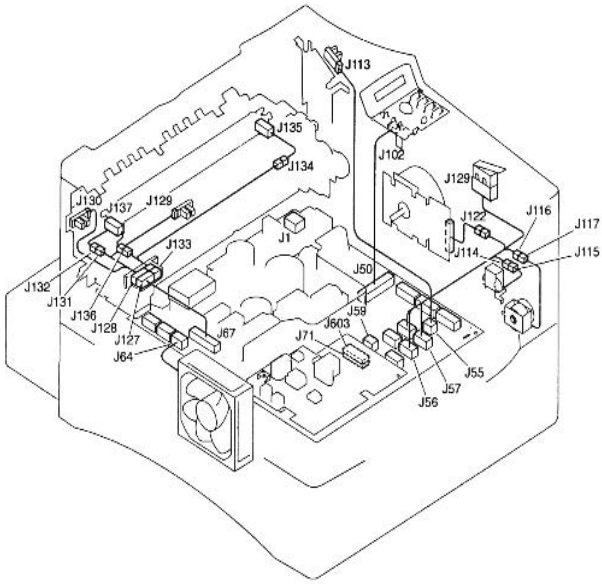

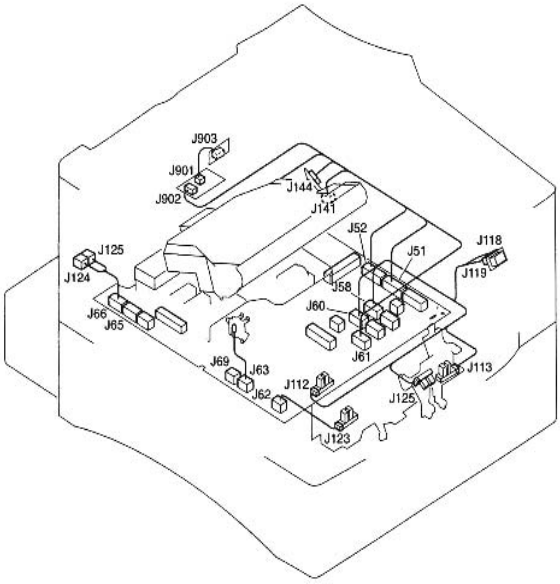

Figure 109. **Connectors (1 of 3)**

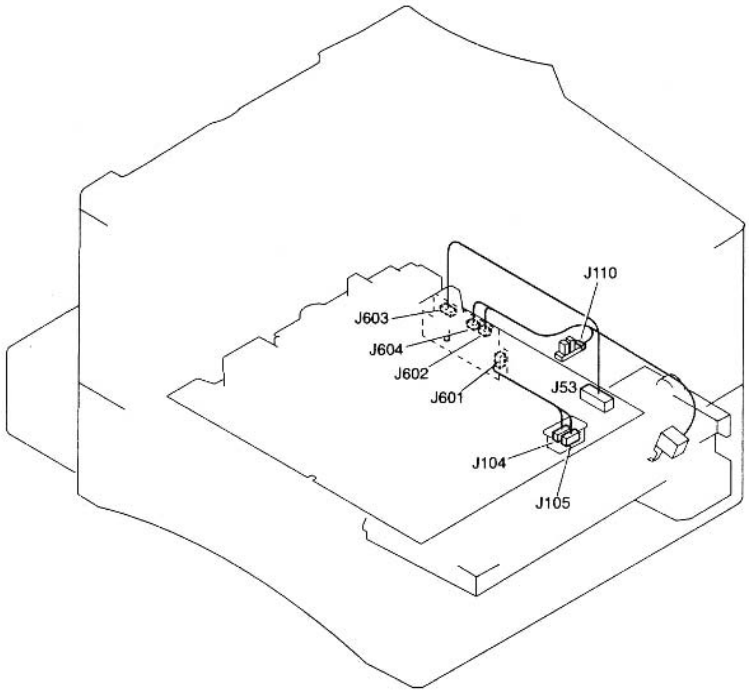

Figure 110. **Connectors (2 of 3)**

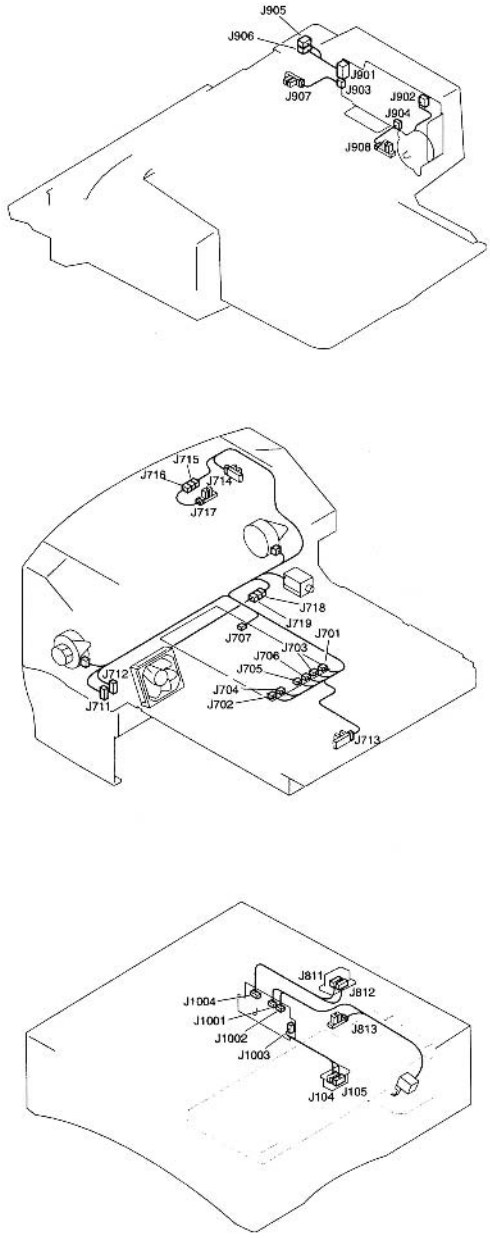

Figure 111. **Connectors (3 of 3)**

PCAs

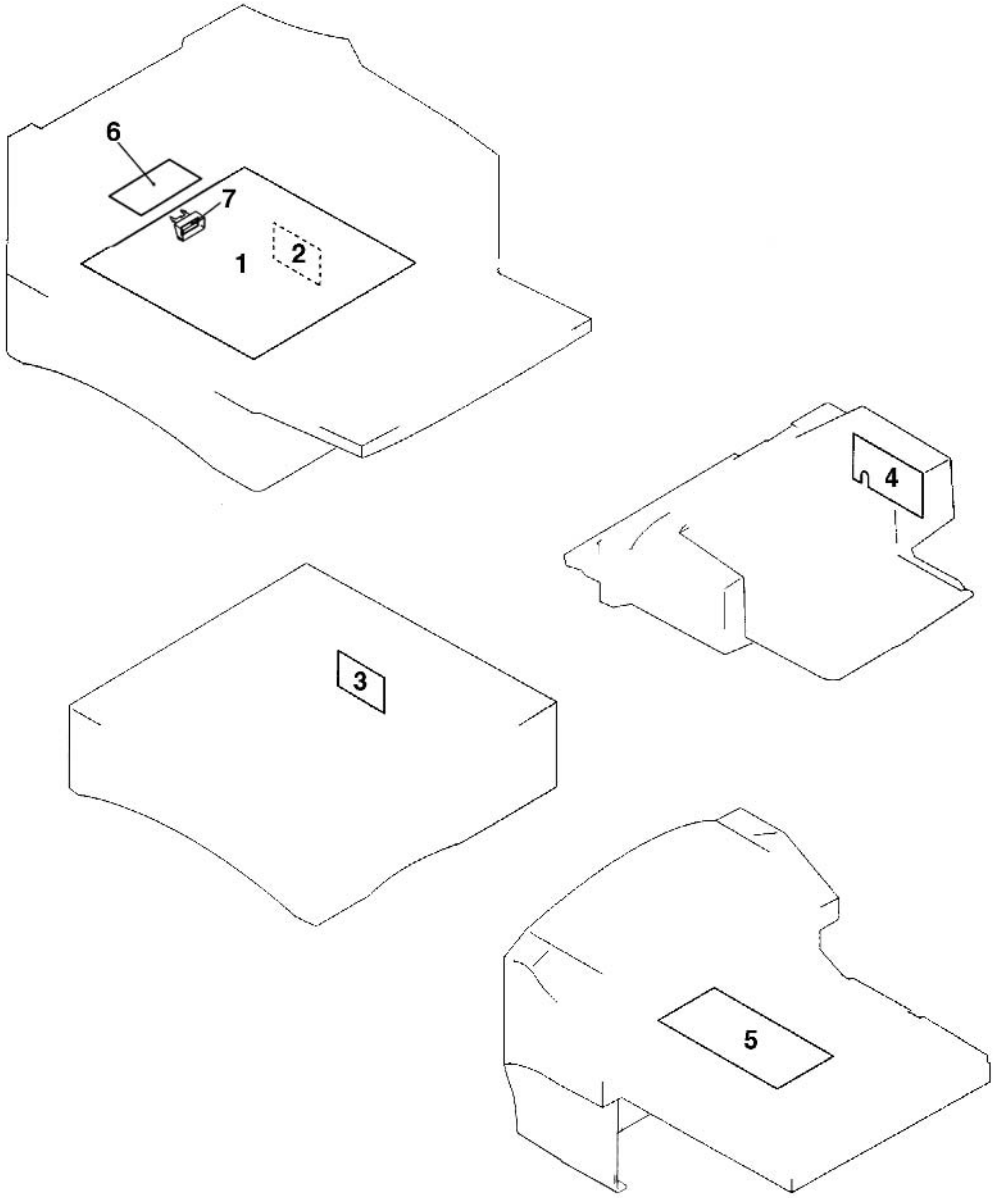

Figure 112. **Location of PCAs**

Table 49. Location of PCAs

1	Engine controller board	Sequence control, high-voltage output, DC output, and heater drive
2	Paper-size detection PCA (Tray 2)	Relay between sensors/solenoids and engine controller board, and paper size detection
3	Paper-feeder driver PCA (optional 500-sheet feeder)	Control and detection of solenoids in the optional 500-sheet paper feeder
4	Envelope-feeder driver PCA	Control and detection of solenoids in the envelope feeder
5	Duplexer driver PCA	Controls paper in the duplexer
6	Cartridge memory controller board	Receives read/write commands from the engine controller board for cartridge memory; sends error status messages to the engine controller board if an error occurs during the read/write process
7	Antenna PCB	Relay between the memory controller board and the engine controller board; permits read/write of the cartridge memory

Sensors, switches, and thermistors

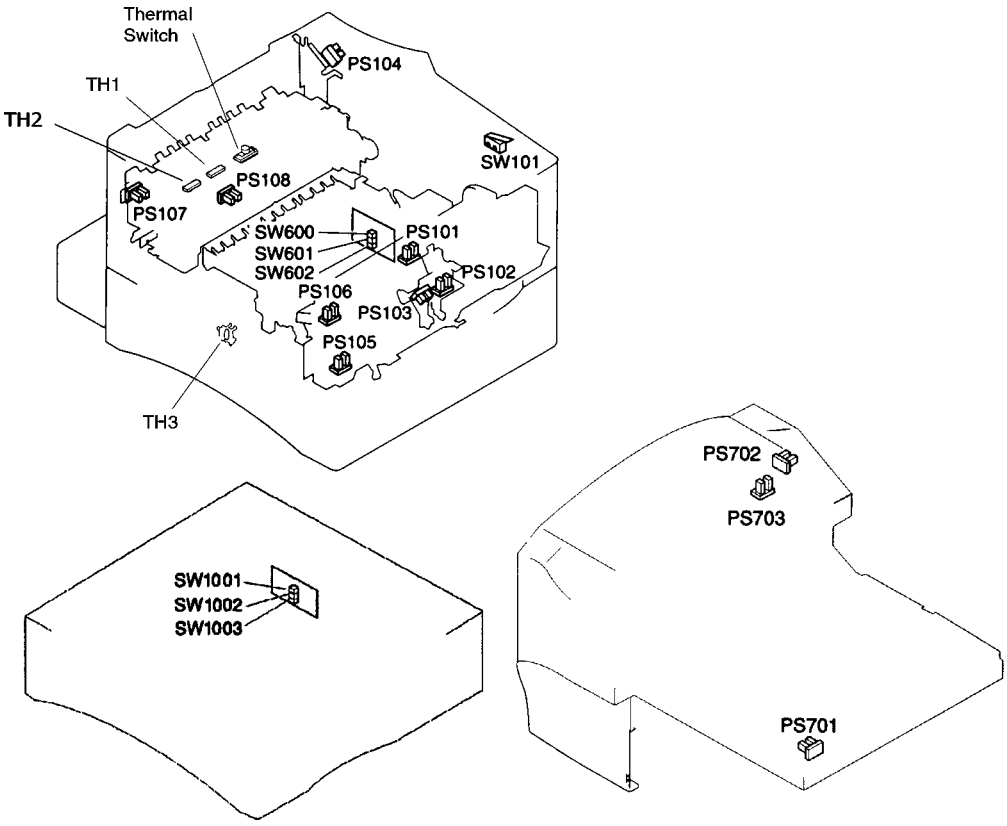

Figure 113. **Location of sensors, switches, and thermistors (1 of 2)**

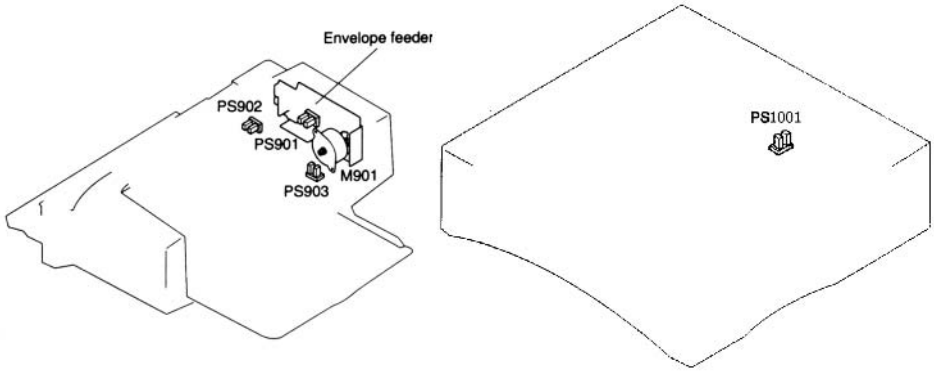

Figure 114. **Location of sensors, switches, and thermistor (2 of 2)**

Table 50. Sensors, switches, and thermistors

PS101	Tray 2 paper-out sensor
PS102	Prefeed sensor
PS103	Top-of-page sensor
PS104	Top output-bin-full sensor
PS105	Tray 1 paper-out sensor
PS106	Paper width sensor
PS107	Fuser paper delivery sensor 2
PS108	Fuser paper-delivery sensor 1
PS701	Duplex pickup paper sensor (duplexer)
PS702	Face-up sensor (duplexer)
PS703	Reversed-paper sensor (duplexer)
PS801	Paper feeder paper sensor (paper feeder)
PS901	Envelope sensor (envelope feeder)
PS902	Envelope multiple-feed sensor (envelope feeder)
PS903	Envelope width sensor (envelope feeder)
PS1001	Optional 500-sheet paper feeder paper-out sensor
SW1	Power switch (engine controller board)

Table 50. Sensors, switches, and thermistors

SW101	Door-open detection switch
SW501	Test print switch (engine controller board)
SW600	Tray 2 paper-size switch (paper size detection PCB)
SW601	Tray 2 paper-size switch (paper size detection PCB)
SW602	Tray 2 paper-size switch (paper size detection PCB)
SW1001	Optional 500-sheet paper feeder paper-size switch
SW1002	Optional 500-sheet paper feeder paper-size switch
SW1003	Optional 500-sheet paper feeder paper-size switch
TH1	Fuser heater detection thermistor 1
TH2	Fuser heater detection thermistor 2
TH3	Environment temperature detection thermistor
TH901	Fusing surface-temperature sensor

Solenoids and clutch

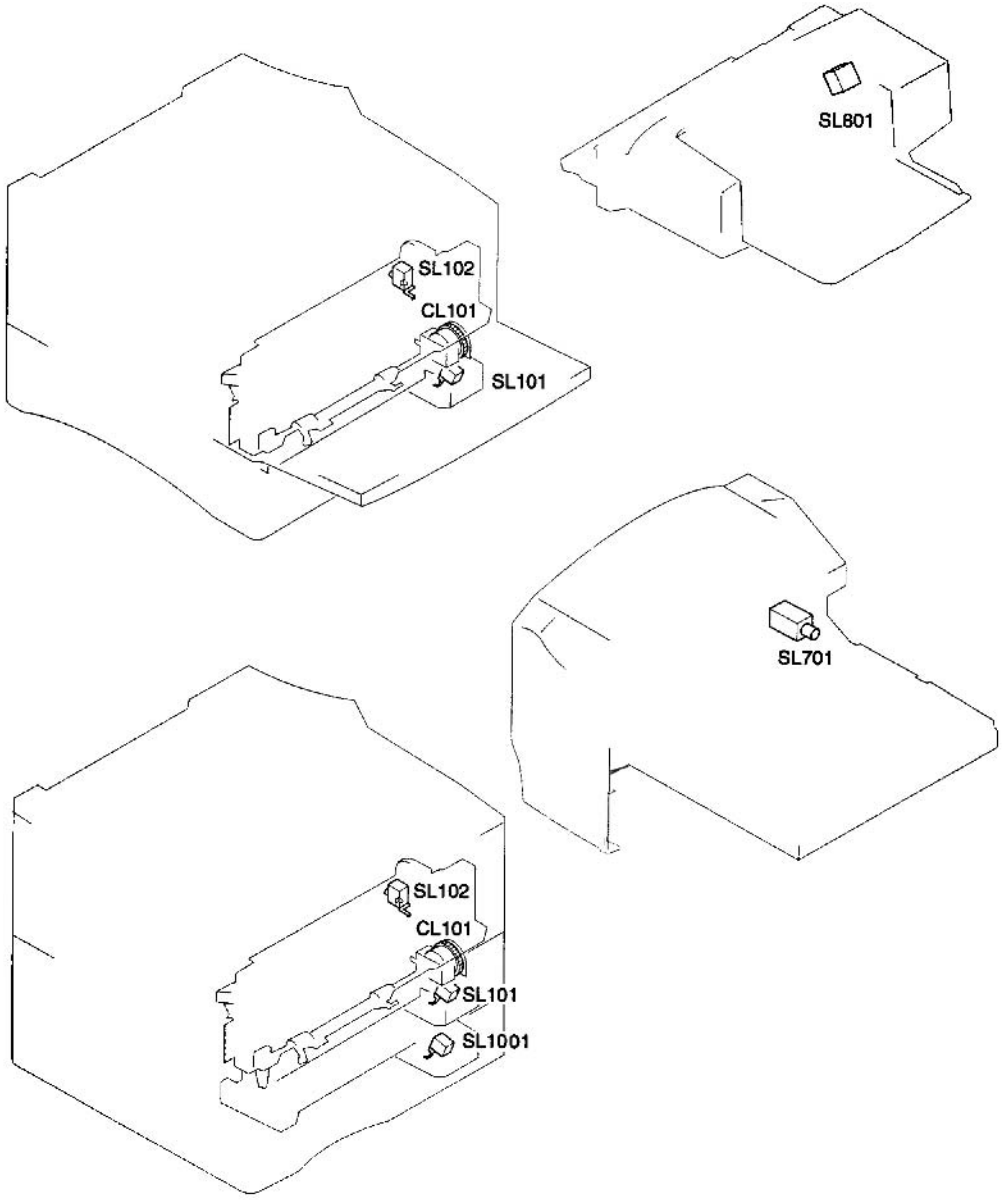

Figure 115. **Location of solenoids and clutch)**

Table 51. Solenoids and clutch

CL101	Paper feed guide clutch
SL101	Tray 2 pickup solenoid
SL102	Tray 1 pickup solenoid
SL1001	Optional 500-sheet feeder pickup solenoid
SL701	Duplexer solenoid (duplexer)
SL801	Envelope pickup solenoid (envelope feeder)

Timing

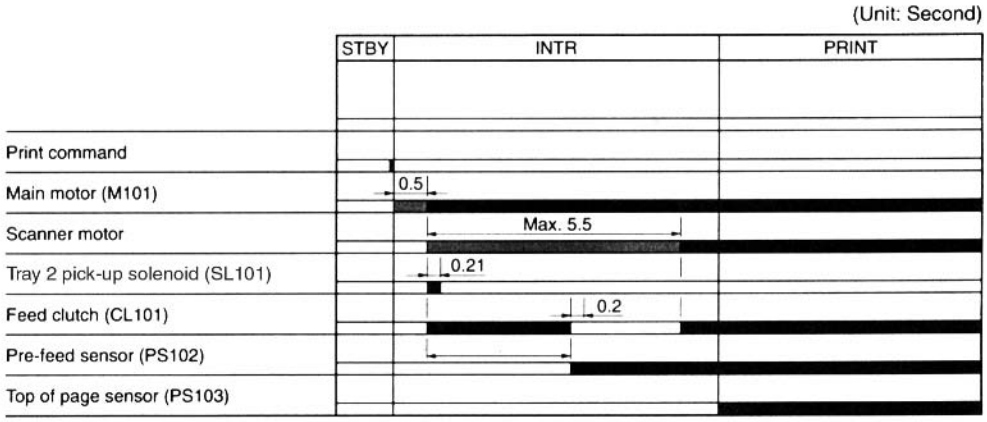

Figure 116. **Pickup timing for tray 2 (and lower trays)**

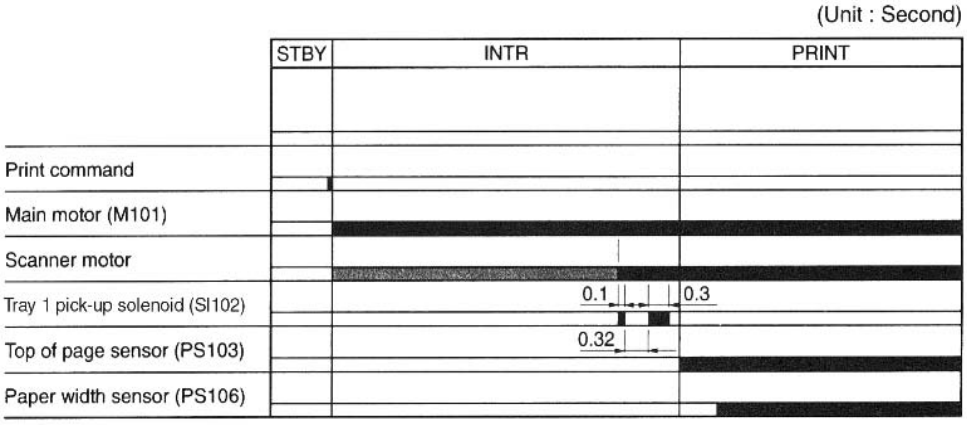

Figure 117. **Pickup timing for tray 1**

8 Parts and diagrams

Chapter contents

How to use the parts lists and diagrams

The figures in this chapter illustrate the major subassemblies in the printer and their component parts. A table accompanies each exploded-view diagram. Each table lists the item number for the replaceable part, the associated part number for the item, the quantity, and a description of the part.

CAUTION While looking for an electrical part number, pay careful attention to the voltage listed in the description column to ensure that the part number selected is for the correct model of the printer.

Ordering parts

All standard part numbers listed are stocked and can be ordered from HP's Customer Services and Support Center.

Hewlett-Packard Co.
Customer Services and Support Center
8050 Foothills Blvd.
Roseville, CA 95678
Parts Direct Ordering: (1) (800) 227-8164 (U.S. Only)

Hewlett-Packard Co.
Customer Services and Support Center
Wolf-Hirth Strasse 33
D-7030
Boblingen, Germany
(49 7031) 14-2253

Ordering consumables

Consumables and accessories such as those listed in table 52 can be ordered from Hewlett-Packard.

The phone numbers are:

U.S.: (1) (800) 538-8787
Canada: (1) (800) 387-3154
(Toronto) (516) 671-8383
United Kingdom: 0734-441212
Germany: 0130-3322

Contact your local HP Parts Coordinator for other phone numbers.

Note Parts that have no item number or part number listed are not field replacement parts and cannot be ordered.

Accessories and supplies

The following items are available through your local authorized HP dealer. To find a dealer near you, call the HP Customer Information Center at (1) (800) 752-0900.

Note See page 41 for documentation product numbers.

Table 52. Accessories and supplies

Description	Part no.	Exchange no.	Product no.
500-sheet paper feeder and tray	C8055-67901		C8055A
Envelope feeder		C8053-69001	C8053A
Duplexer		C8054-69001	C8054A
Standard 500-sheet tray (without the feeder)	C8056-67901		C8056A
HP multipurpose paper			HPM1120
HP LaserJet paper			HPJ1124
Toner cartridge (6,000 pages)			C8061A
Toner cartridge (10,000 pages)			C8061X
SDRAM DIMM 4 MB 8 MB 16 MB 32 MB 64 MB 128 MB	 C4140-67901 C4141-67901 C4142-67901 C4143-67901 C3913-67901 C9121-67901		 C4140A C4141A C4142A C4143A C3913A C9121A
Flash DIMM 2 MB 4 MB			 C4286A C4287A
Font DIMM (8 MB Asian MROM) Traditional Chinese Simplified Chinese Korean			 C4292A C4293A D4838A
FIR receiver			C4103A
EIO hard disk			J6054A
Parallel cables 2-meter IEEE-1284 cable 3-meter IEEE-1284 cable			 C2950A C2951A
Macintosh computer serial cable			92215S
Macintosh network cable kit			92215N
Enhanced I/O Cards Token Ring networks Fast Ethernet (10/100Base-TX single RJ-45 port) HP JetDirect Connectivity card (EIO) for USB, Serial, LocalTalk			 J4167A J4169A J4135A

Table 52. Accessories and supplies (continued)

Description	Part no.	Exchange no.	Product no.
Maintenance kit 110 V 220 V		 C8057-69001 C8058-69001	 C8057A C8058A

Common screws and replacement cables

Table 53. Screws used in the printer

Description	Part no.
Screw, M4x10, self-tapping	XA9-0870-000CN
Screw, M3x6, washer head, engine controller board	XA9-1016-000CN
Screw, M4x12, self-tapping, pan head	XB4-7401-207CN
Screw, M4x8.3, long, module	RB2-5013-000CN
Screw, M4x10, self-tapping	XA9-0606-000CN
Screw, TP, M3x8, main motor	XB6-7300-807CN
Screw, stepped, M4, formatter	XA9-1143-000CN
Screw, truss head w/washer, machine, grounding	FA9-1449-000CN
Screw, M4x10, self-tapping, feeder assembly	FA9-2753-000CN

Table 54. Replaceable cables

Description	Part no.	Table no.	Item no.
Cable and power receptacle 110 V 220 V	 RG5-5111-000CN RG5-5280-000CN	Table 58 on page 281	19
Cable, tray 1 sensor	RG5-5341-000CN	Table 58 on page 281	7
Cable, laser scanner	RG5-5348-000CN	Table 59 on page 283	7
Cable, envelope feeder connect	RG5-5344-000CN	Table 58 on page 281	9
Cable, top cover switch	RG5-5345-000CN	Table 58 on page 281	10
Cable, feed/registration sensors	RG5-5357-000CN	Table 59 on page 283	6
Cable, assembly, formatter	RG5-5351-000CN	Table 58 on page 281	12
Cable, main motor	RG5-5346-000CN	Table 58 on page 281	11
Cable, output bin sensor	RG5-5349-000CN	Table 59 on page 283	8
Cable, laser	RG5-5350-000CN	Table 59 on page 283	9
Cable, memory	RG5-5470-000CN	Table 59 on page 283	10
Cable, antenna	RG5-5471-000CN	Table 60 on page 285	9
Cable, duplexer	RG5-5358-000CN	Table 60 on page 285	10
Cable, paper feeder	RG5-3822-000CN	Table 70 on page 299	9
Cable, paper feeder w/ connector	RG5-3712-000CN	Table 61 on page 287	11
Cable, paper feeder sensor	RG5-3711-000CN	Table 61 on page 287	10

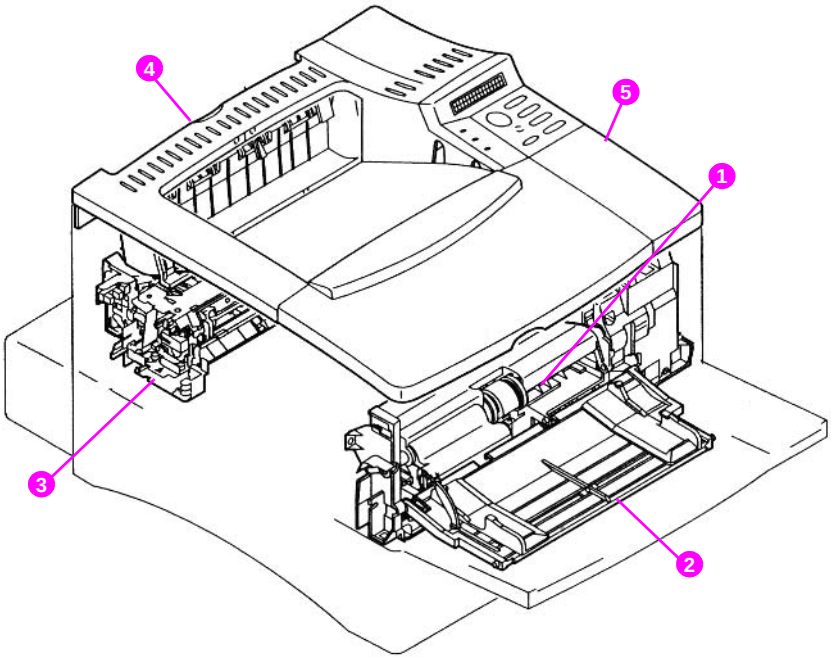

Figure 118. **Assembly location diagram (1 of 2)**

1 Tray 1 pickup assembly

2 Tray 1 assembly

3 Fuser assembly

4 Paper delivery assembly

5 Top cover assembly

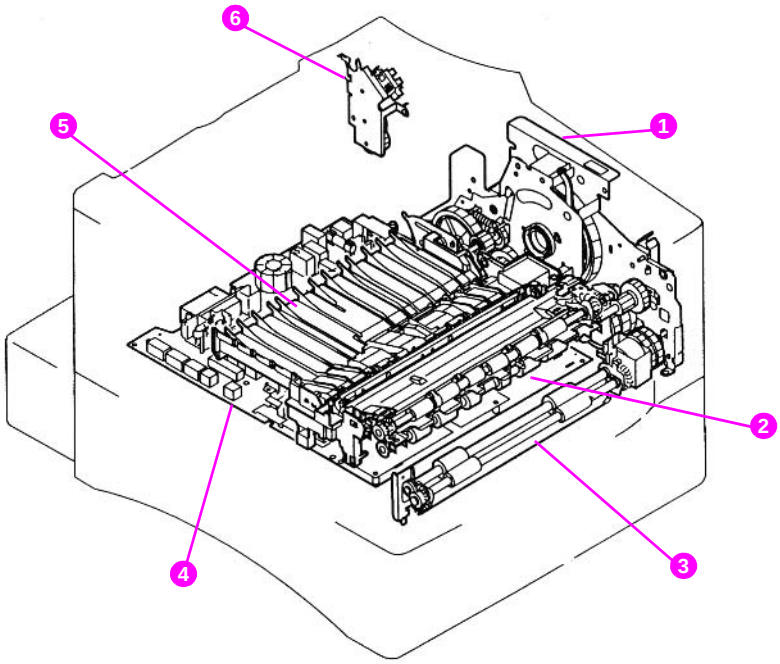

Figure 119. **Assembly location diagram (2 of 2)**

1 Main gear assembly

2 Registration assembly

3 Paper feed assembly

4 Engine controller board assembly

5 Paper guide assembly

6 Delivery drive assembly

Table 55. Assemblies (listed alphabetically) and their part numbers

Description	Part no.	Exchange no.	Exploded view in figure
Delivery drive assembly	RG5-5095-000CN		Figure 127 on page 289
EIO cover	5021-0349		N/A
Engine controller board	RG5-5361-000CN (110 V) RG5-5362-000CN (220 V)	C8049-69003 (110 V) C8049-69004 (220 V)	Figure 126 on page 288
Firmware DIMM kit[1]	C4168-67901		N/A
Formatter assembly[1]	C4169-67901	C4169-69001	N/A
Fuser	RG5-5063-000CN (110 V) RG5-5064-000CN (220 V)	C8049-69001 (110 V) C8049-69002 (220 V)	Figure 133 on page 296; Figure 134 on page 297
Laser scanner assembly	RG5-5100-000CN	C8049-69005	Figure 123 on page 282
Tray 1 assembly	RG5-2656-080CN		Figure 122 on page 280
Tray 1 pickup assembly	RG5-5084-000CN		Figure 130 on page 292
Paper delivery	RG5-5094-000CN		Figure 132 on page 295
Paper feed assembly	RG5-5086-000CN		Figure 124 on page 284
Paper feed guide assembly	RG5-5083-000CN		Figure 131 on page 294
Registration	RG5-5085-000CN		Figure 124 on page 284
Top cover	RG5-2663-080CN		Figure 121 on page 278

1. The formatter does not include onboard firmware; it requires a separate firmware DIMM.

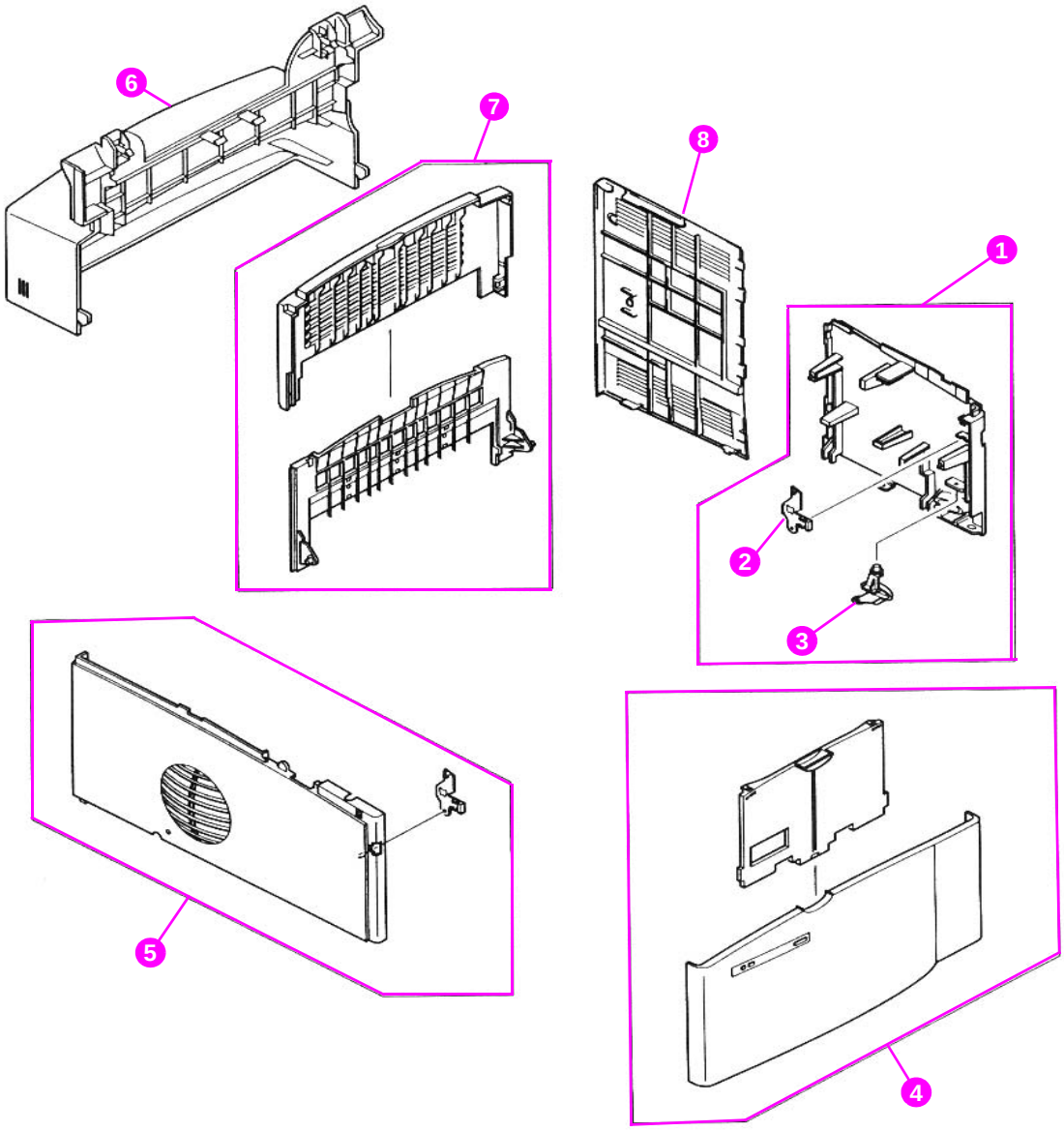

Figure 120. **External covers and panels**

Table 56. External covers and panels

Item no.	Part no.	Quantity	Description
1	RG5-2664-020CN	1	Cover assembly, right front
2	RB1-8860-000CN	1	Clip, right side panel
3	RB1-8849-000CN	1	Power switch button
4	RG5-2667-070CN	1	Tray 1 door assembly
5	RG5-5098-000CN	1	Cover assembly, left
6	RB2-4827-000CN	1	Cover, tray 2
7	RG5-5097-000CN	1	Tray assembly, rear
8	RB1-8858-000CN	1	Panel, formatter cover

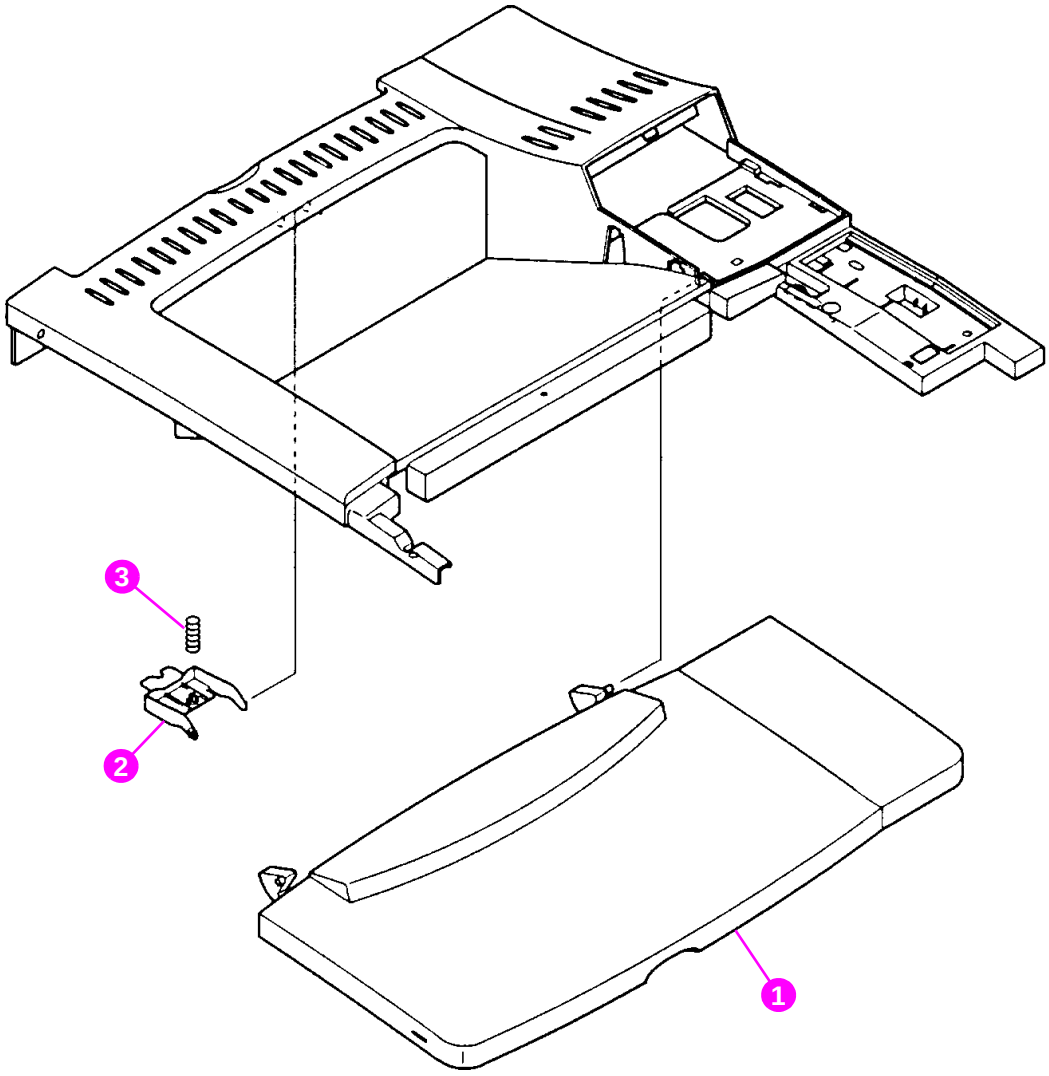

Figure 121. **Top cover assembly**

Table 57. Top cover assembly

Item no.	Part no.	Quantity	Description
	RG5-2663-080CN	1	Top cover assembly
1	RB1-8841-000CN	1	Panel, toner cartridge access
2	RB1-8846-000CN	1	Latch, rear tray
3	RB1-8847-000CN	1	Spring, rear tray latch

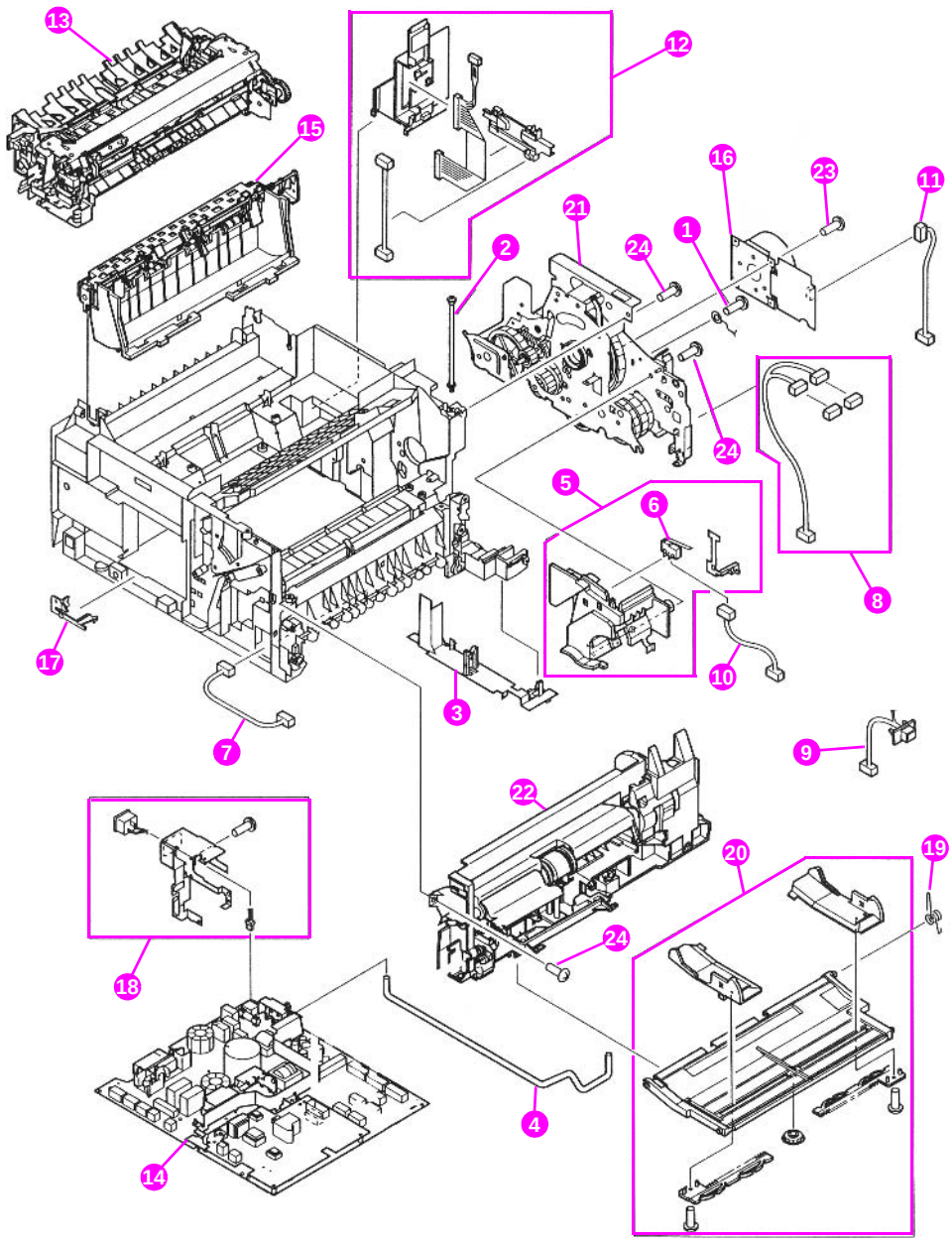

Figure 122. **Internal components (1 of 4)**

Table 58. Internal components (1 of 4)

Item no.	Part no.	Quantity	Description
1	FA9-1449-000CN	4	Screw, truss head, w/washer, grounding
2	RB2-5013-000CN	2	Screw, M4 x 8.3
3	RB1-8704-030CN	1	Guide, bottom cable
4	RB1-8851-000CN	1	Power switch rod
5	RG5-5274-000CN	1	Front inner cover assembly
6	WC4-5139-000CN	1	Switch, top cover interlock access
7	RG5-5341-000CN	1	Cable, tray 1 sensor
8	RG5-5343-000CN	1	Cable, paper feed/tray 1 pickup solenoid
9	RG5-5344-000CN	1	Cable, envelope feeder connect
10	RG5-5345-000CN	1	Cable, top cover switch
11	RG5-5346-000CN	1	Cable, main motor
12	RG5-5351-000CN	1	Cable, assembly, formatter
13	C8049-69001 C8049-69002	1 1	Fusing assembly (110 V) Fusing assembly (220 V)
14	C8049-69003 C8049-69004	1 1	Engine controller board (110 V) Engine controller board (220 V)
15	RG5-5094-000CN	1	Delivery assembly
16	RH7-1440-000CN	1	Main motor assembly
17	RB2-4986-000CN	1	Clip, fan
18	RG5-5111-000CN RG5-5280-000CN	1 1	AC, power receptacle (110 V) AC, power receptacle (220 V)
19	RB2-4122-000CN	1	Hinge spring, tray
20	RG5-2656-080CN	1	Tray 1 assembly
21	RG5-5087-000CN	1	Printer drive assembly
22	RG5-5084-000CN	1	Tray 1 pickup assembly
23	XB6-7300-807CN	4	Screw, TP, M3x8, main motor
24	XB4-7401-207CN	31	Screw, tapping, pan head, M4x12

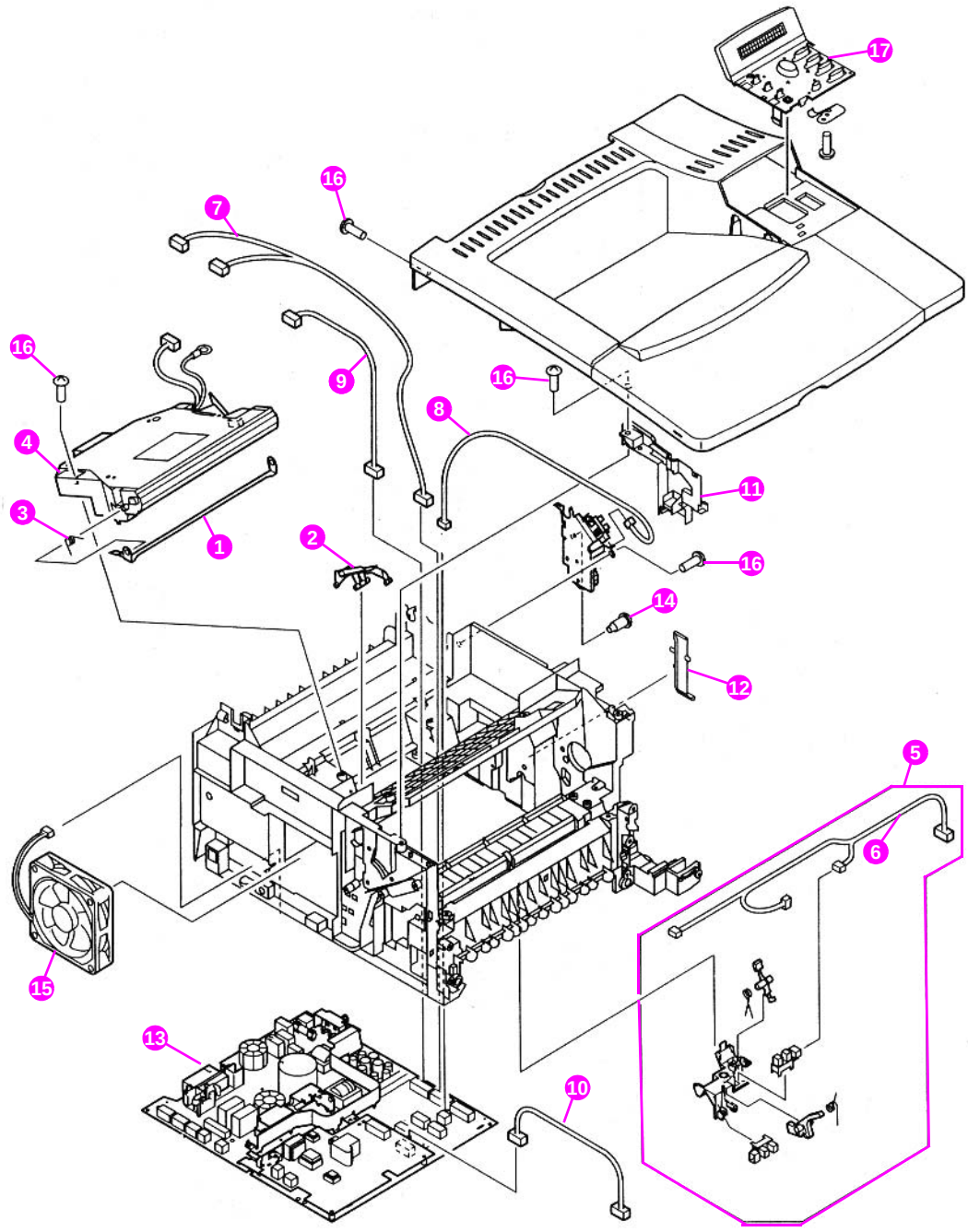

Figure 123. **Internal components (2 of 4)**

Table 59. Internal components (2 of 4)

Item no.	Part no.	Quantity	Description
1	RB1-8699-000CN	1	Shutter
2	RB1-8700-000CN	1	Laser shutter arm
3	RB1-8702-000CN	1	Spring, shutter
4	RG5-5100-000CN	1	Laser scanner assembly
5	RG5-5275-000CN	1	Registration/feed sensor assembly
6	RG5-5357-000CN	1	Cable, feed/registration sensors
7	RG5-5348-000CN	1	Cable, scanner
8	RG5-5349-000CN	1	Cable, output bin sensor
9	RG5-5350-000CN	1	Cable, laser
10	RG5-5470-000CN	1	Cable, memory
11	RB2-5003-000CN	1	Support, top cover, left
12	RB2-4992-000CN	1	Cable holder, formatter
13	C8049-69003 C8049-69004	1 1	Engine controller board (110 V) Engine controller board (220 V)
14	XA9-1143-000CN	2	Screw, stepped, M4, formatter
15	RH7-1442-000CN	1	Fan, main cooling
16	XB4-7401-207CN	31	Screw, tapping, pan head, M4x12
17	RG5-5372-040CN	1	Control panel, assembly

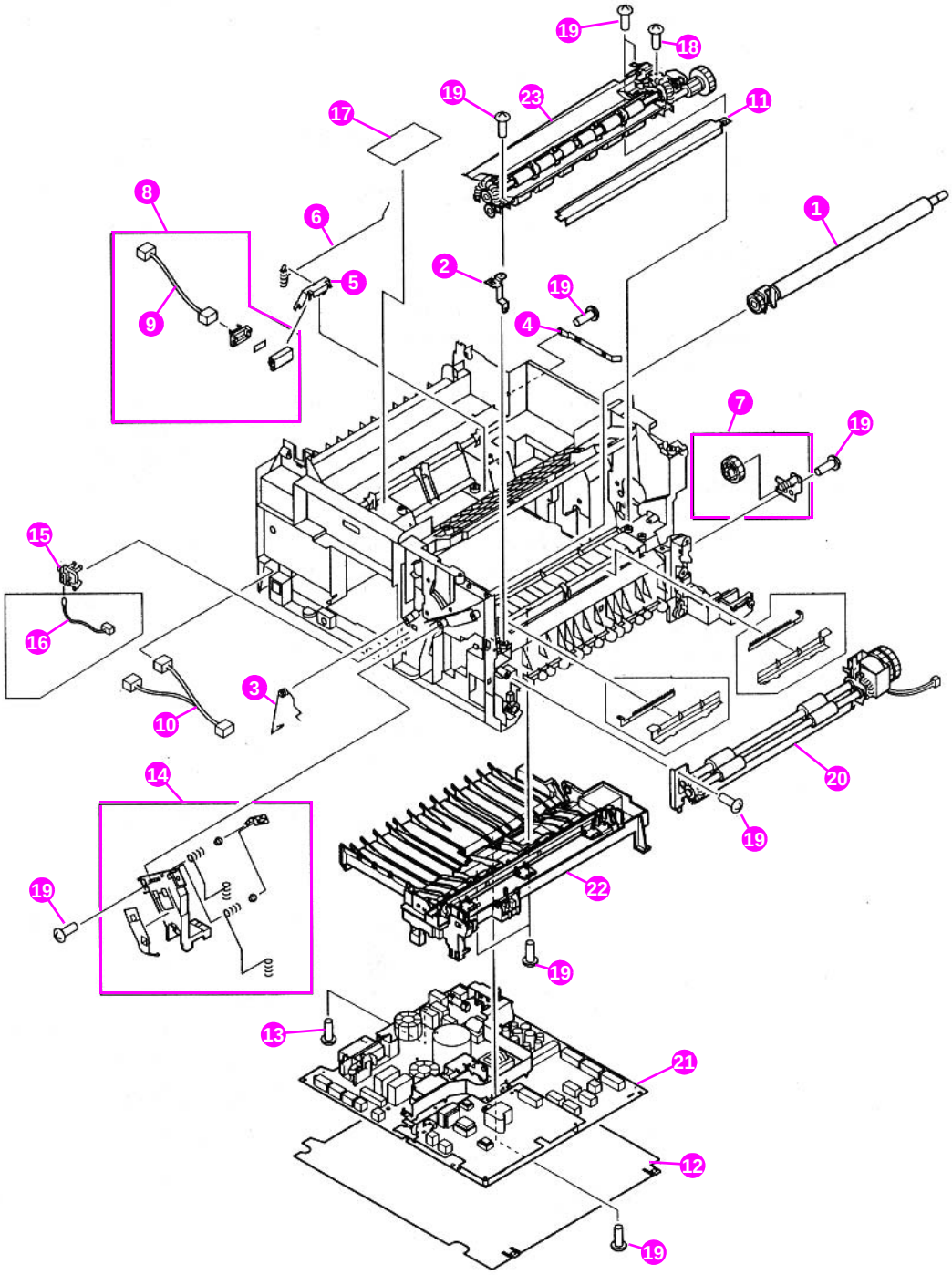

Figure 124. **Internal components (3 of 4)**

Table 60. Internal components (3 of 4)

Item no.	Part no.	Quantity	Description
1	RG5-5295-000CN	1	Transfer roller assembly
2	RB2-4969-000CN	1	Plate, registration ground
3	RB2-4997-000CN	1	Spring, toner cartridge ground
4	RB2-5002-000CN	1	Plate, continuity
5	RB2-5008-000CN	1	Cartridge memory antenna bracket
6	RB2-5009-000CN	1	Spring, cartridge memory assembly
7	RG5-3723-000CN	1	MP idler assembly
8	RG5-5276-000CN	1	Cartridge memory antenna assembly
9	RG5-5471-000CN	1	Antenna cable
10	RG5-5358-000CN	1	Cable, duplexer
11	RB2-5043-000CN	1	Lower transfer-roller guide
12	RB2-4975-000CN	1	Insulation, engine controller board
13	XA9-1016-000CN	3	Screw w/washer, M3x6, engine controller
14	RG5-5273-000CN	1	Antenna assembly
15	RB2-4996-000CN	1	Mount, thermistor
16	RH7-7116-000CN	1	Thermistor, environmental
17	RG5-5468-000CN	1	PCB, memory controller
18	FA9-1449-000CN	1	Screw, truss head, w/washer, grounding
19	XB4-7401-207CN	5	Screw, tapping, pan head, M4x12
20	RG5-5086-000CN	1	Paper feed assembly
21	C8049-69003 C8049-69004	1 1	Engine controller board (110 V) Engine controller board (220 V)
22	RG5-5083-000CN	1	Paper feed guide assembly
23	RG5-5085-000CN	1	Registration assembly

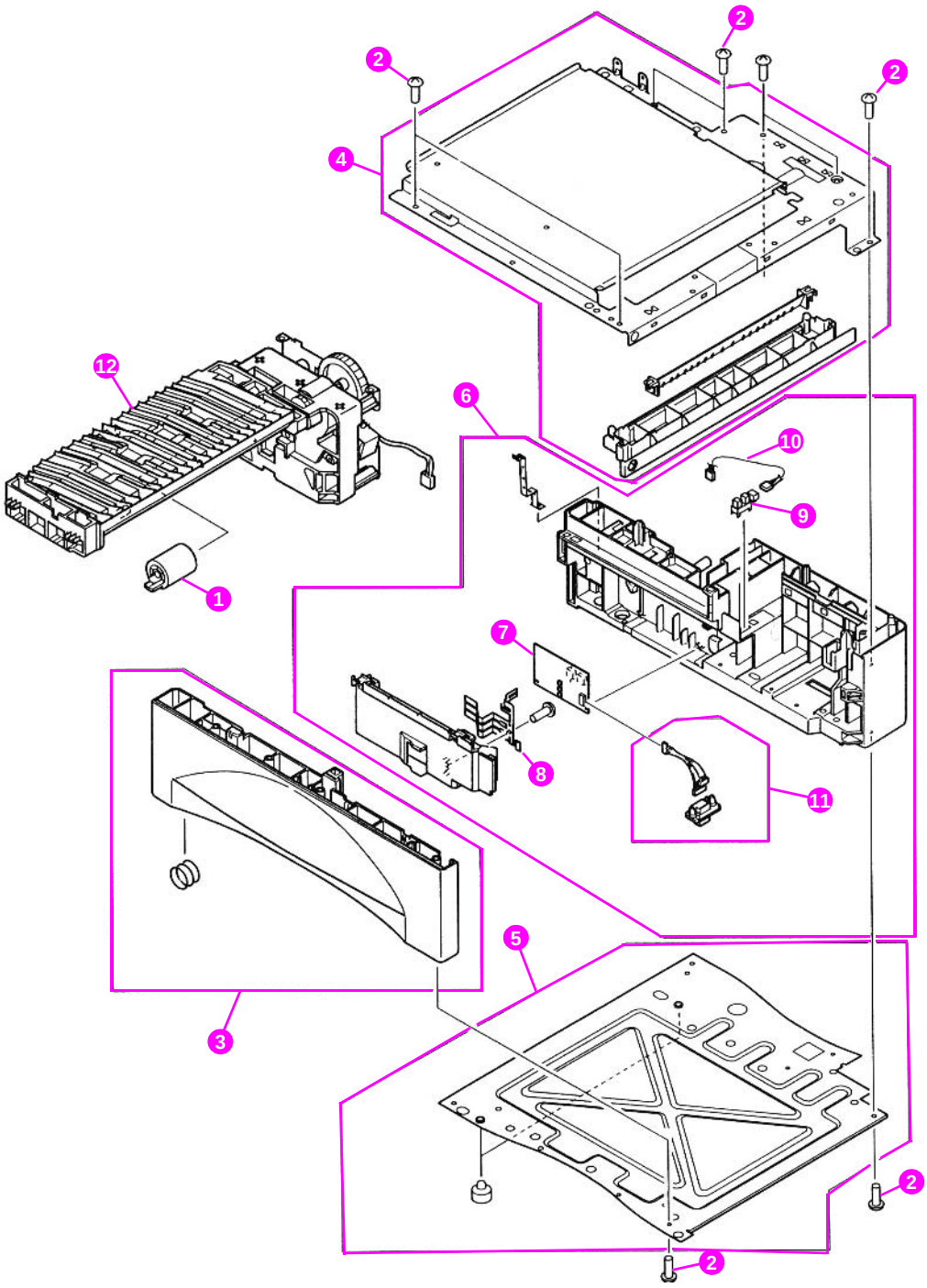

Figure 125. **Internal components (4 of 4)**

Table 61. Internal components (4 of 4)

Item no.	Part no.	Quantity	Description
1	RF5-3114-000CN	1	Roller, feed
2	XA9-0870-000CN	12	Screw, M4x10
3	RG5-2669-000CN	1	Left frame assembly, tray 2
4	RG5-5072-000CN	1	Upper frame assembly, tray 2
5	RG5-5271-000CN	1	Lower frame assembly
6	RG5-5278-000CN	1	Right frame assembly, tray 2
7	RG5-2673-004CN	1	Paper-size detection PCB assembly, tray 2
8	RB2-4837-000CN	1	Spring, leaf
9	WG8-5362-000CN	1	Photo-interrupter, TLP1241
10	RG5-3711-000CN	1	Cable, paper feeder sensor
11	RG5-3712-000CN	1	Cable, paper feed with connector
12	RG5-5277-000CN	1	Paper pickup guide assembly, tray 2 (figure 129 on page 291)

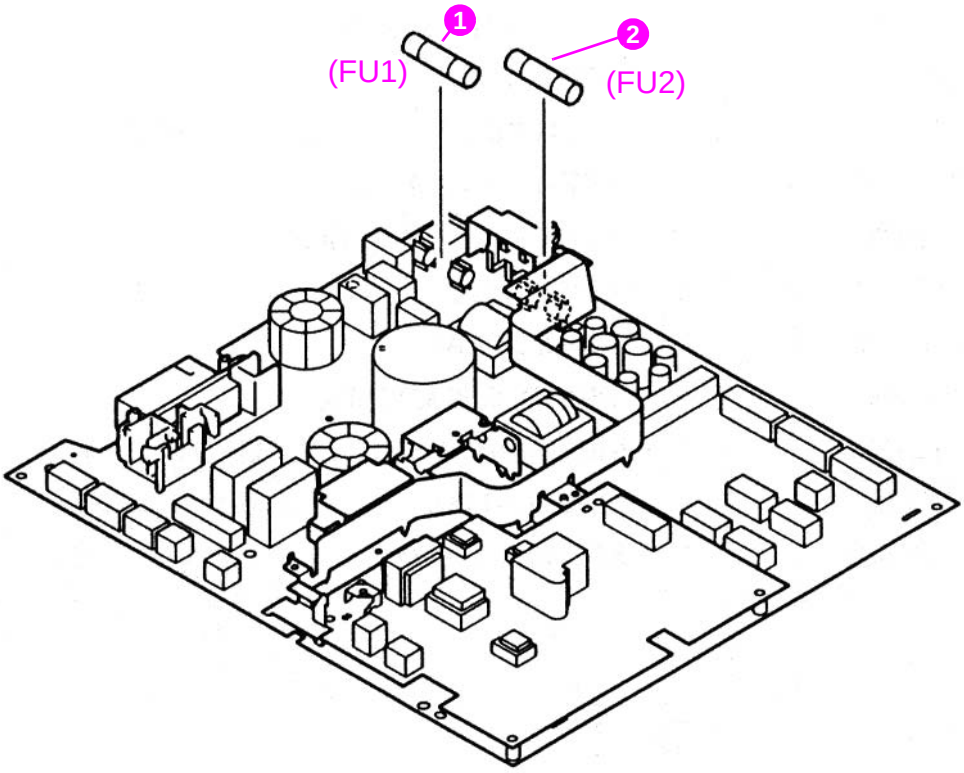

Figure 126. **Engine controller board assembly**

Table 62. Engine controller board assembly

Item no.	Part no.	Exchange no.	Quantity	Description
	RG5-5361-000CN	C8049-69003	1	Engine controller board assembly (110 V)
	RG5-5362-000CN	C8049-69004	1	Engine controller board assembly (220 V)
1	RH3-8006-000CN WD1-0268-000CN		1 1	Fuse, 220 V, Engine Board Fuse, 110 V, Engine Board
2	VD7-0256-001CN VD7-0643-151CN		1 1	Fuse, 110 V, Engine Fuse, 220 V, Engine

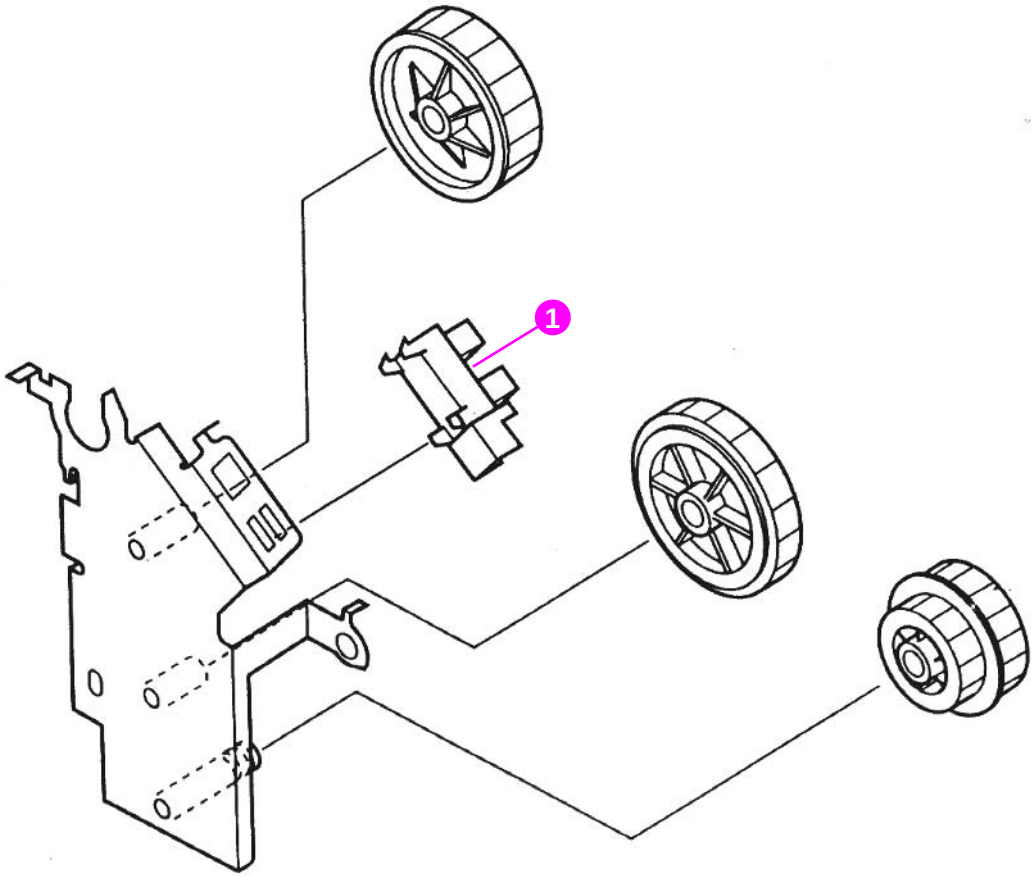

Figure 127. **Delivery drive assembly**

Table 63. Delivery drive assembly

Item no.	Part no.	Quantity	Description
	RG5-5095-000CN	1	Delivery drive assembly
1	WG8-5362-000CN	1	Sensor, optical, included in assembly

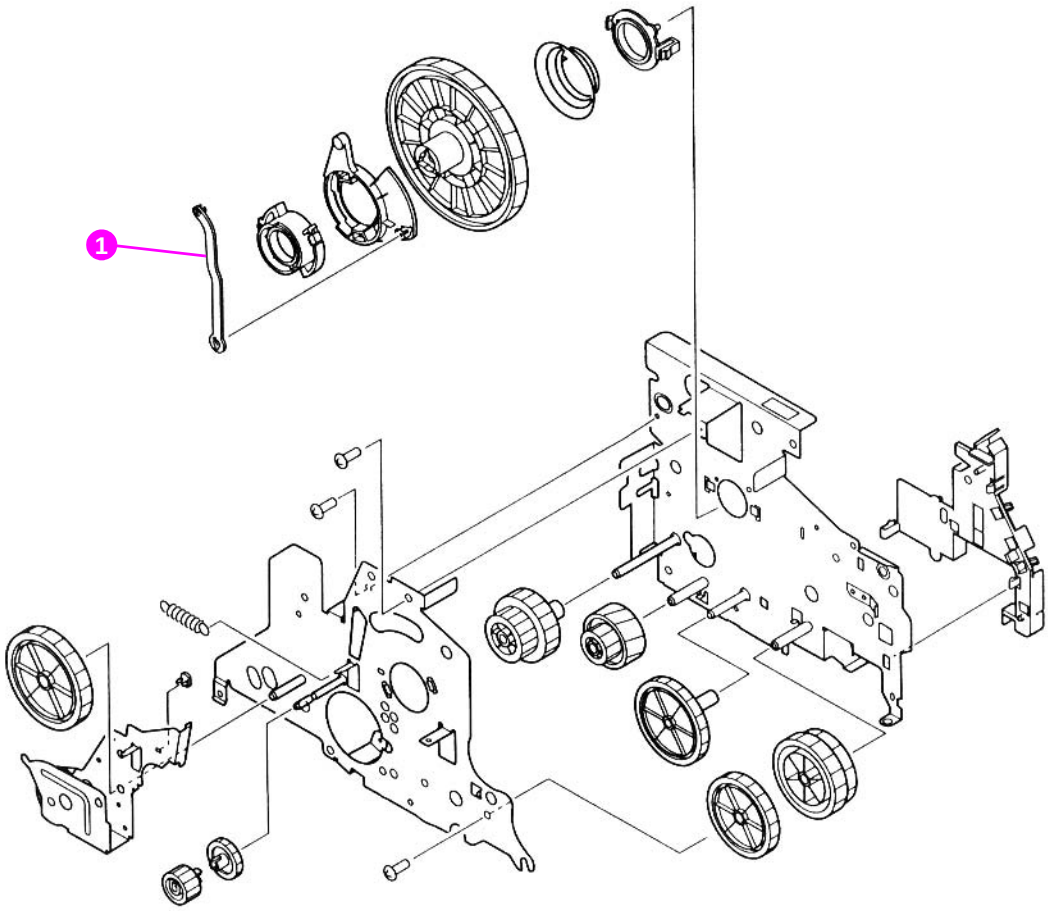

Figure 128. **Printer drive assembly**

Table 64. Printer drive assembly

Item no.	Part no.	Quantity	Description
	RG5-5087-000CN	1	Printer drive assembly
1	RB1-8756-000CN	1	Rod, toner drive, included in assembly

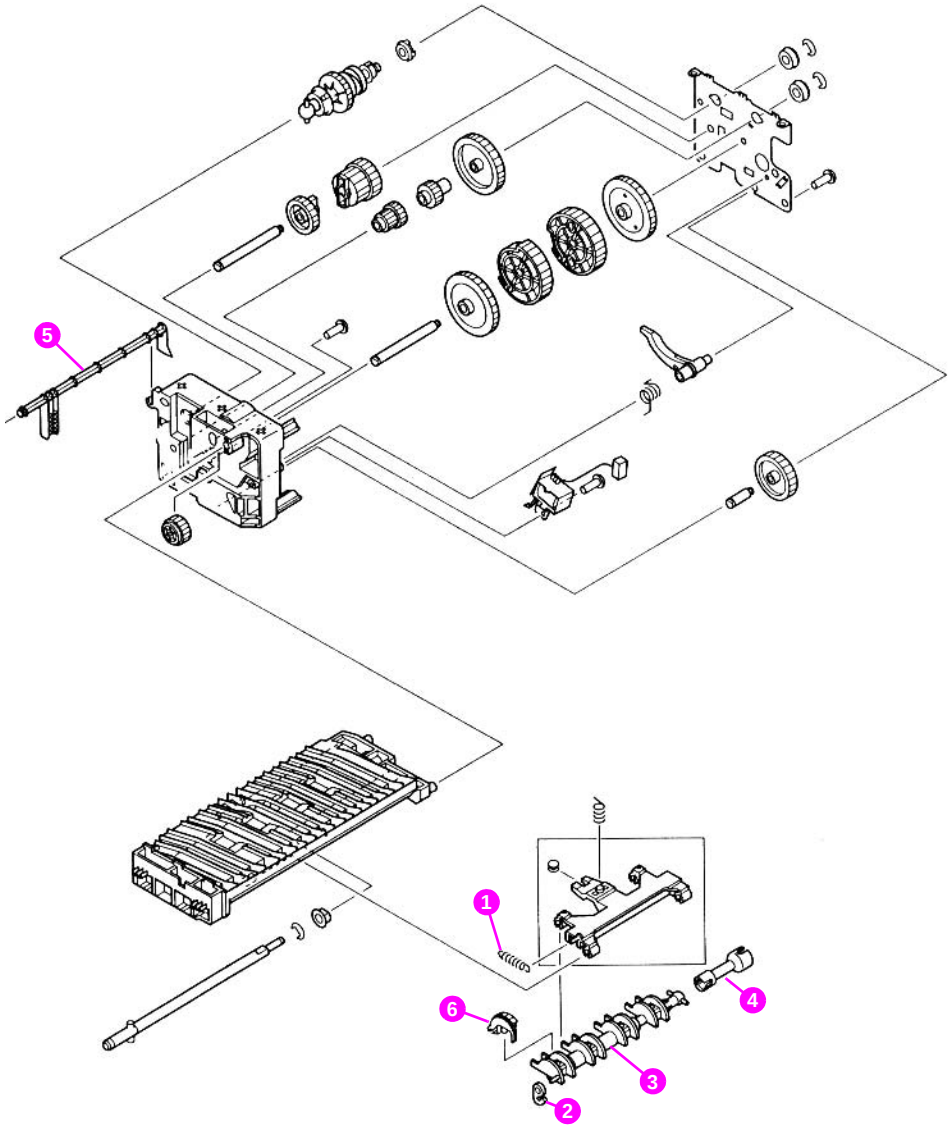

Figure 129. **Tray 2 paper pickup guide assembly**

Table 65. Paper pickup guide assembly

Item no.	Part no.	Quantity	Description
	RG5-5277-000CN	1	Paper pickup guide assembly, tray 2
1	RS5-2632-000CN	1	Spring, tension
2	RB1-2190-000CN	1	Clip, pickup spring
3	RB1-8867-000CN	1	Shaft, roller
4	RB1-8877-000CN	1	Joint
5	RB1-8879-000CN	1	Arm, tray sensing
6	RB1-8957-000CN	4	Pickup roller

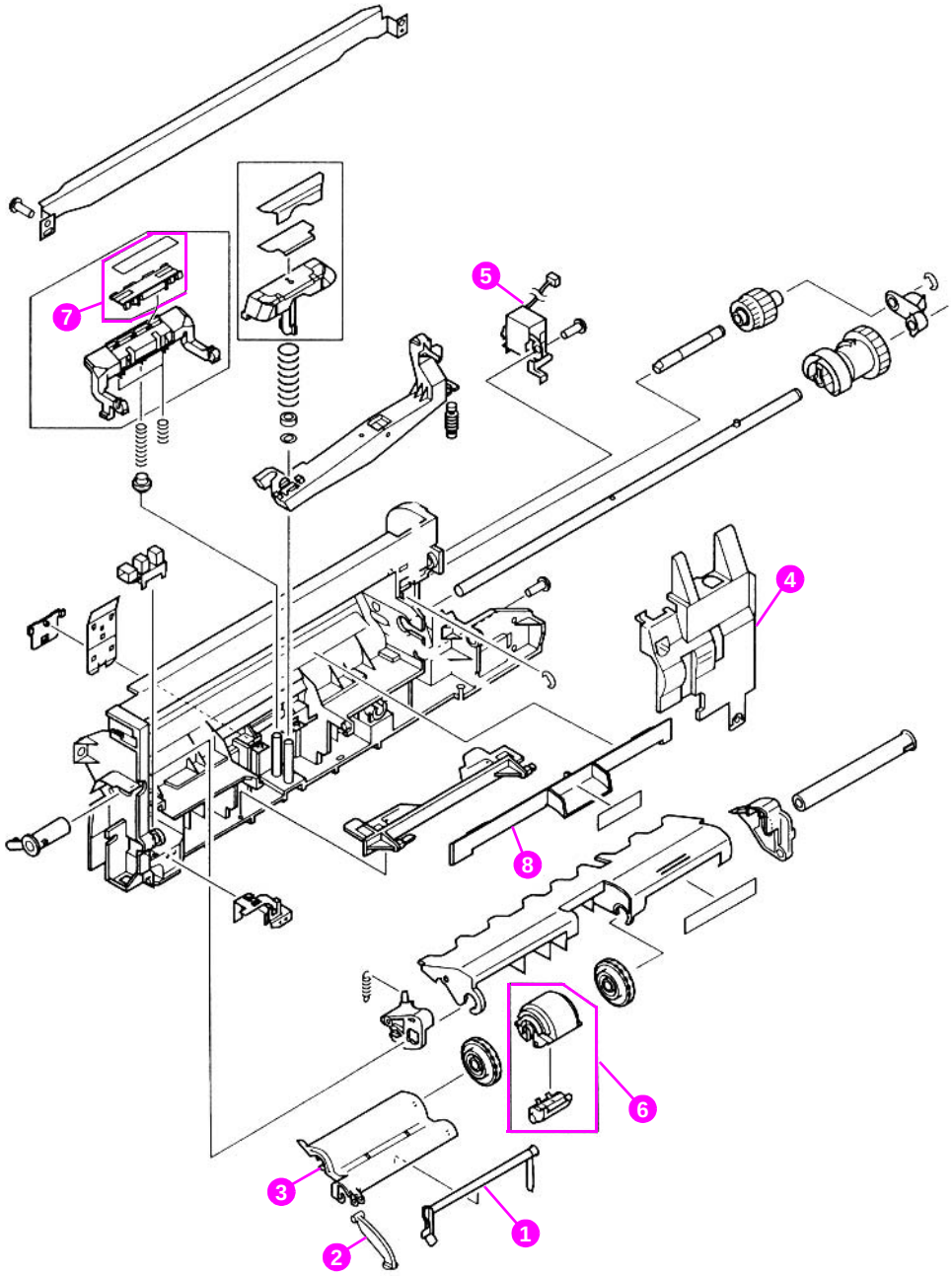

Figure 130. **Tray 1 pickup assembly**

Table 66. Tray 1 pickup assembly

Item no.	Part no.	Quantity	Description
	RG5-5084-000CN	1	Tray 1 pickup assembly
1	RB1-8787-050CN	1	Arm, tray 1 paper sensing
2	RB2-2387-000CN	1	Arm, tray 1 retaining
3	RB2-5040-000CN	1	Cover, tray 1 sensor arm
4	RB2-5019-000CN	1	Gear cover
5	RH7-5172-000CN	1	Solenoid, tray 1 drive
6	RG5-3718-000CN	1	Tray 1 pickup roller assembly
7	RF5-3086-000CN	1	Pad, separation
8	RB2-5037-000CN	1	Cover, envelope feeder

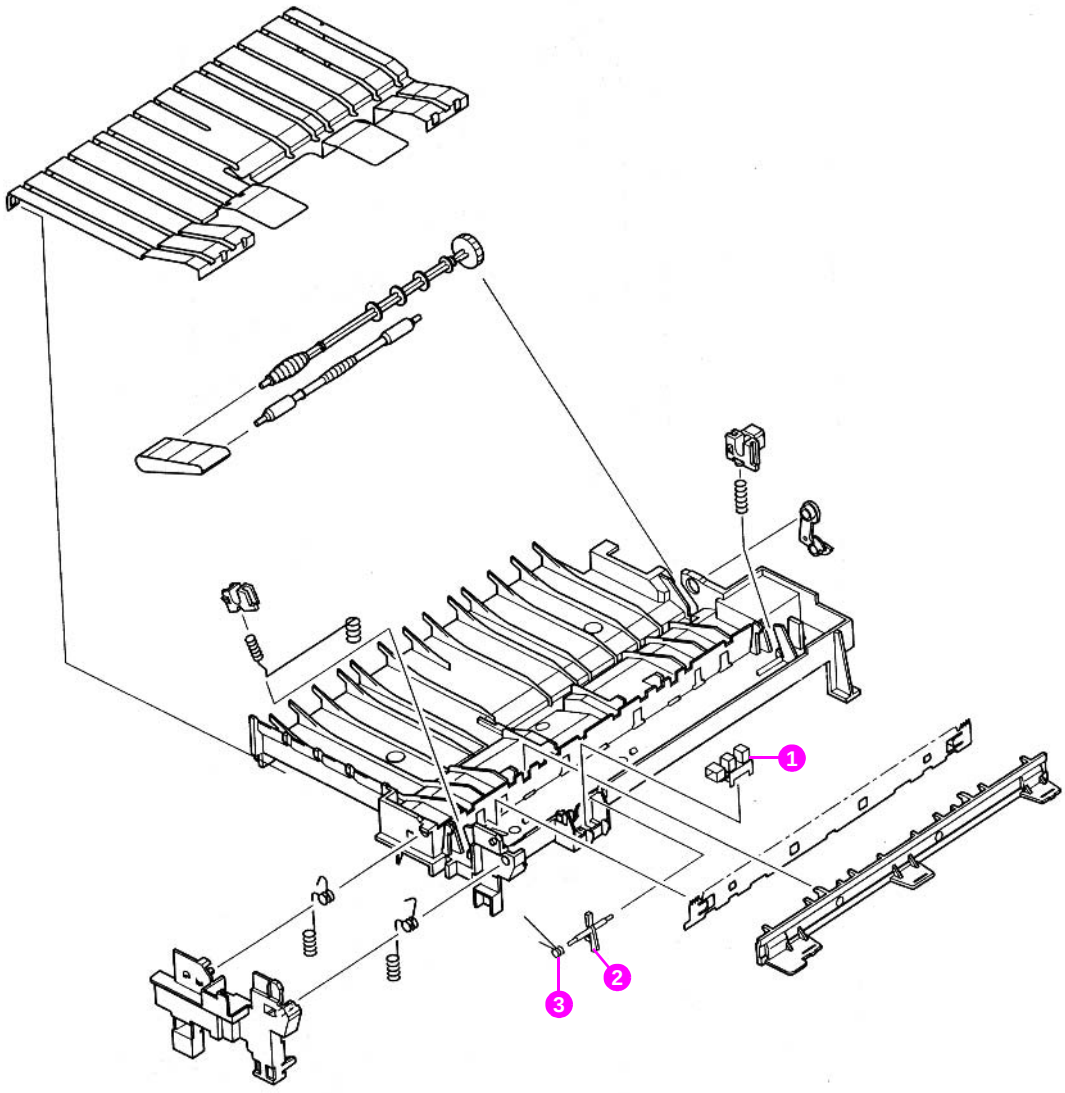

Figure 131. **Paper feed guide assembly**

Table 67. Paper feed assembly

Item no.	Part no.	Quantity	Description
	RG5-5083-000CN	1	Paper feed guide assembly
1	WG8-5362-000CN	1	Photo-interrupter
2	RB2-5034-000CN	1	Flag, sensor
3	RB2-5035-000CN	1	Spring, torsion

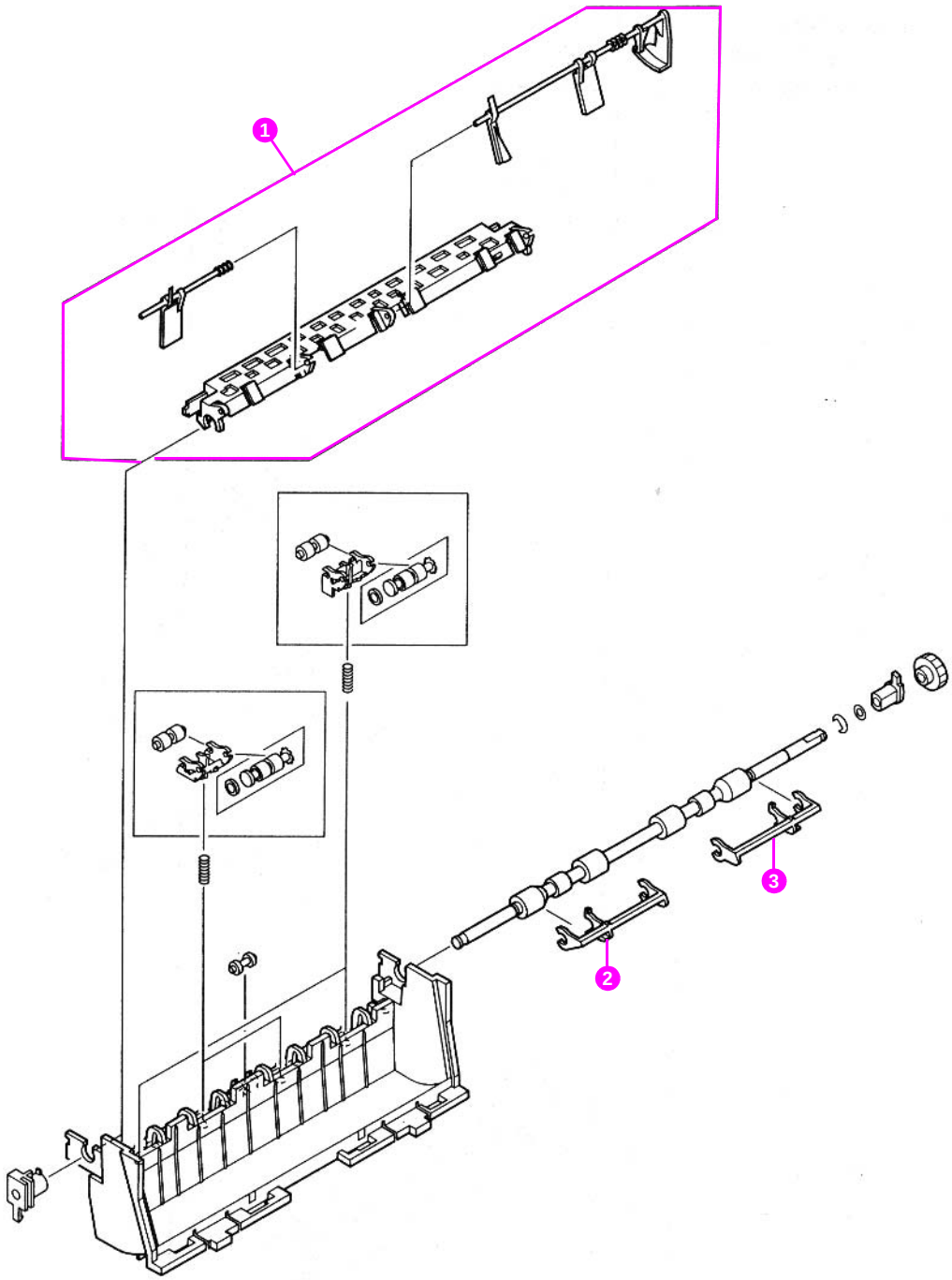

Figure 132. **Delivery assembly**

Table 68. Delivery assembly

Item no.	Part no.	Quantity	Description
	RG5-5094-000CN	1	Delivery assembly
1	RG5-5093-000CN	1	Delivery sensor arm assembly
2	RB2-4948-000CN	1	Arm, output kicker, left
3	RB2-4949-000CN	1	Arm, output kicker, right

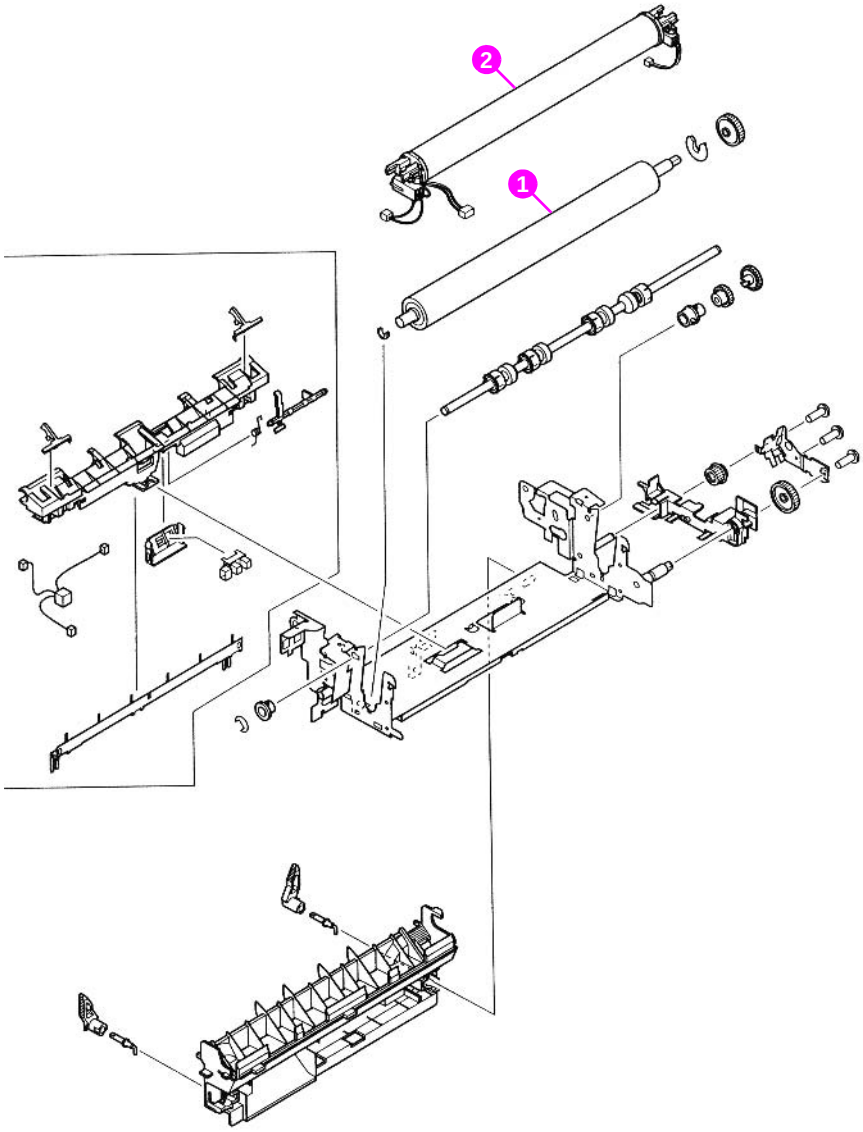

Figure 133. **Fuser assembly (1 of 2)**

Table 69. Fuser assembly

Item no.	Part no.	Exchange no.	Quantity	Description
	RG5-5063-000CN RG5-5064-000CN	C8049-69001 C8049-69002	1 1	Fuser (110 V) Fuser (220 V)
1	RB2-4919-000CN		1	Roller, pressure
2	RG5-5068-000CN RG5-5069-000CN		1 1	Fuser film assembly (110 V) Fuser film assembly (220 V)

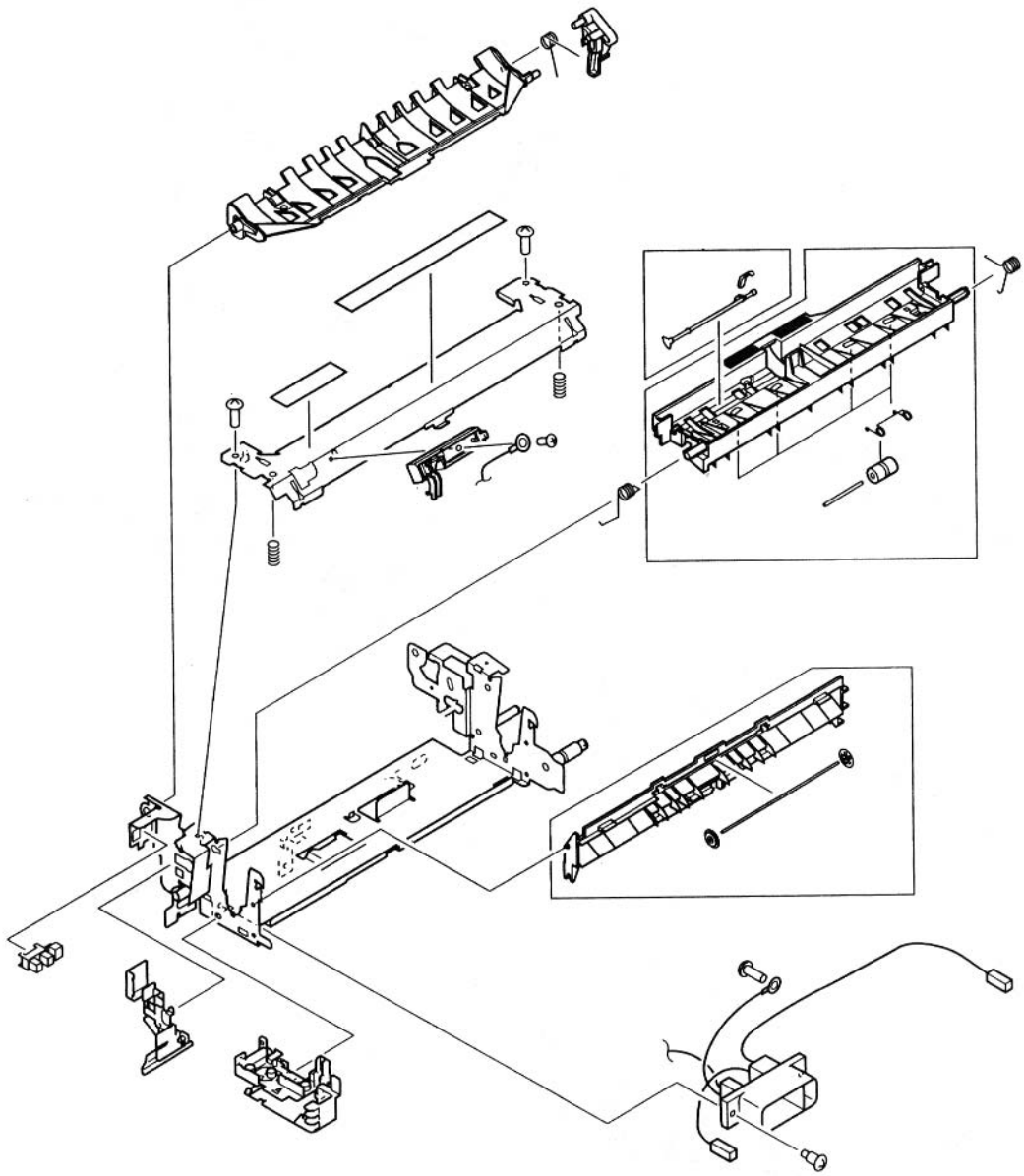

Figure 134. **Fuser assembly (2 of 2)**

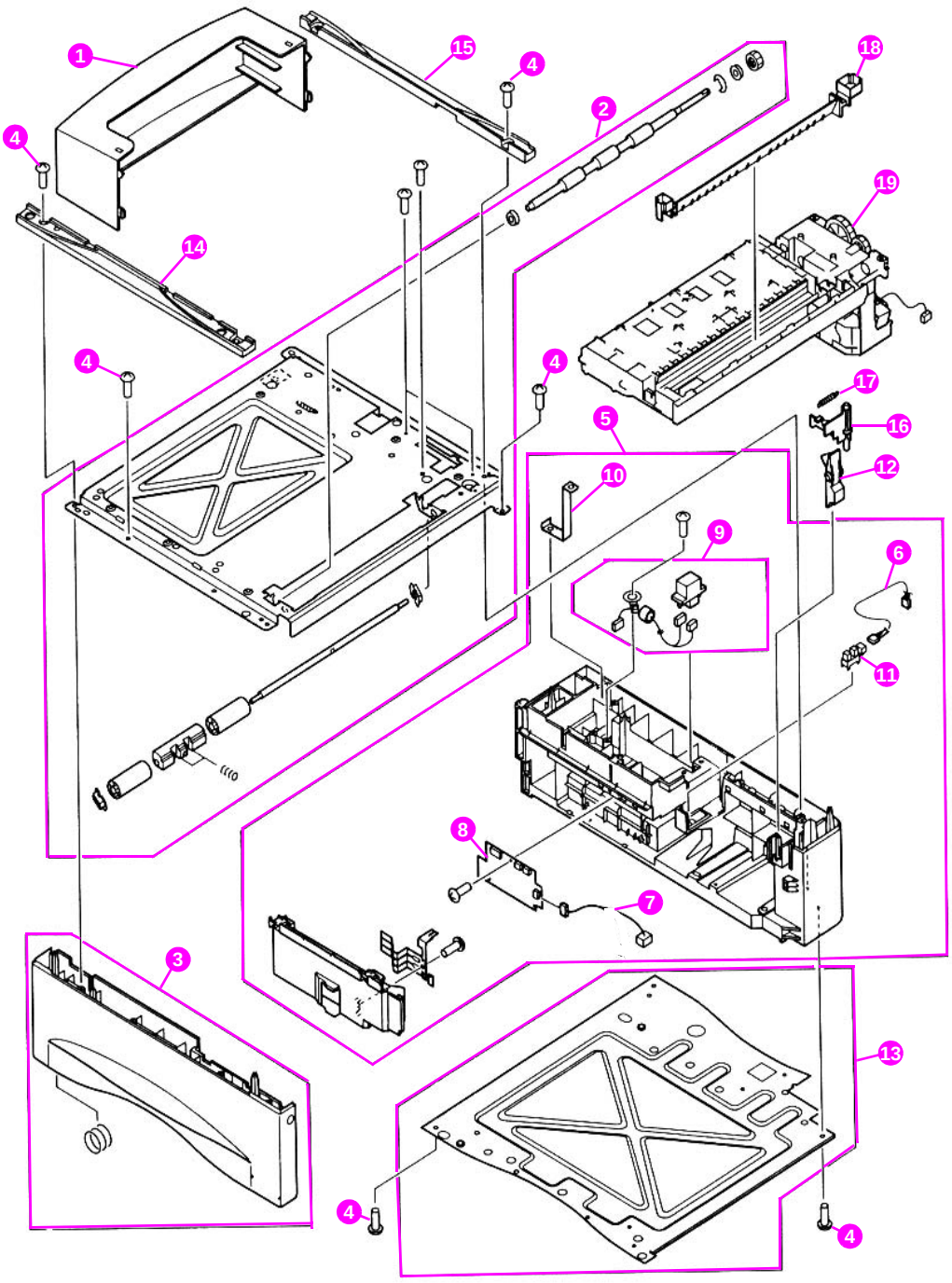

Figure 135. **Internal components of optional 500-sheet feeder**

Table 70. Internal components of optional 500-sheet feeder

Item no.	Part no.	Quantity	Description
1	RB2-4836-000CN	1	Cover, tray
2	RG5-2689-000CN	1	Upper frame assembly, optional 500-sheet feeder
3	RG5-5292-000CN	1	Left frame assembly, optional 500-sheet feeder
4	FA9-2753-000CN	19	Screw, M4x10
5	RG5-5291-000CN	1	Right frame assembly, optional 500-sheet feeder
6	RG5-3711-000CN	1	Paper sensor cable
7	RG5-3712-000CN	1	Paper feeder cable
8	RG5-5539-000CN	1	Paper feeder PCA, optional 500-sheet feeder
9	RG5-3822-000CN	1	Paper feeder cable
10	RB1-9397-000CN	1	Plate, grounding
11	WG8-5362-000CN	1	Photo-sensor
12	RB2-3497-000CN	1	Lever, release
13	RG5-5271-000CN	1	Lower frame assembly
14	RB1-8924-000CN	1	Cover, grip, left
15	RB1-9385-000CN	1	Cover, grip, right
16	RB2-2412-000CN	1	Lever
17	RS5-2658-000CN	1	Spring, tension
18	RB1-8914-000CN	1	Guide, paper
19	RG5-5293-000CN	1	Paper pickup guide assembly, optional 500-sheet feeder

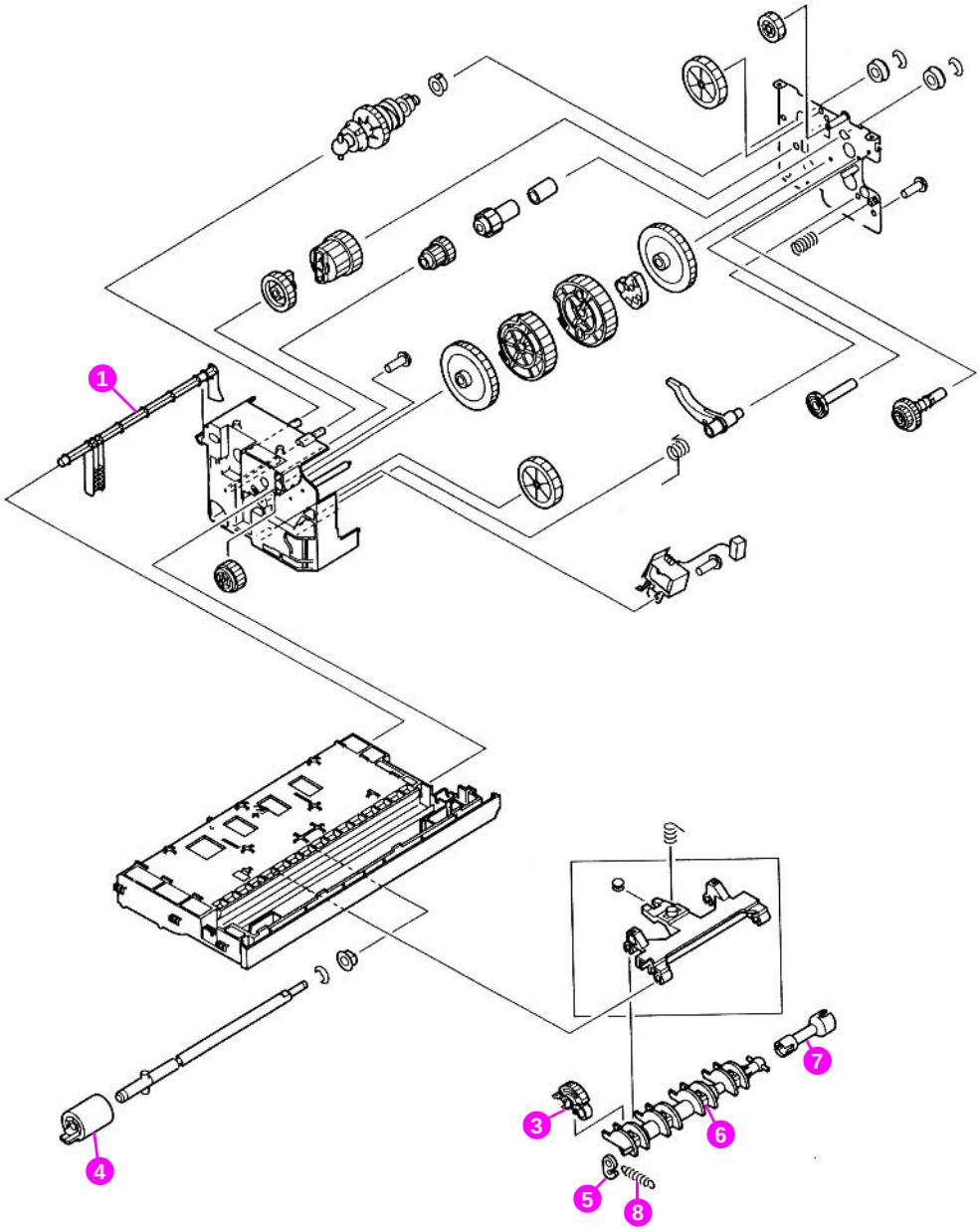

Figure 136. **Paper pickup guide assembly of optional 500-sheet feeder**

Table 71. Paper pickup guide assembly, optional 500-sheet feeder

Item no.	Part no.	Quantity	Description
	RG5-5293-000CN	1	Paper pickup guide assembly, optionl 500-sheet feeder
1	RB1-8879-000CN	1	Arm, tray sensing
3	RB1-8957-000CN	4	Roller, pickup
4	RF5-3114-000CN	1	Feed, roller
5	RB1-2190-000CN	1	Clip, pickup spring
6	RB1-8867-000CN	1	Shaft, roller
7	RB1-8877-000CN	1	Coupler, pickup
8	RS5-2632-000CN	1	Spring, tension

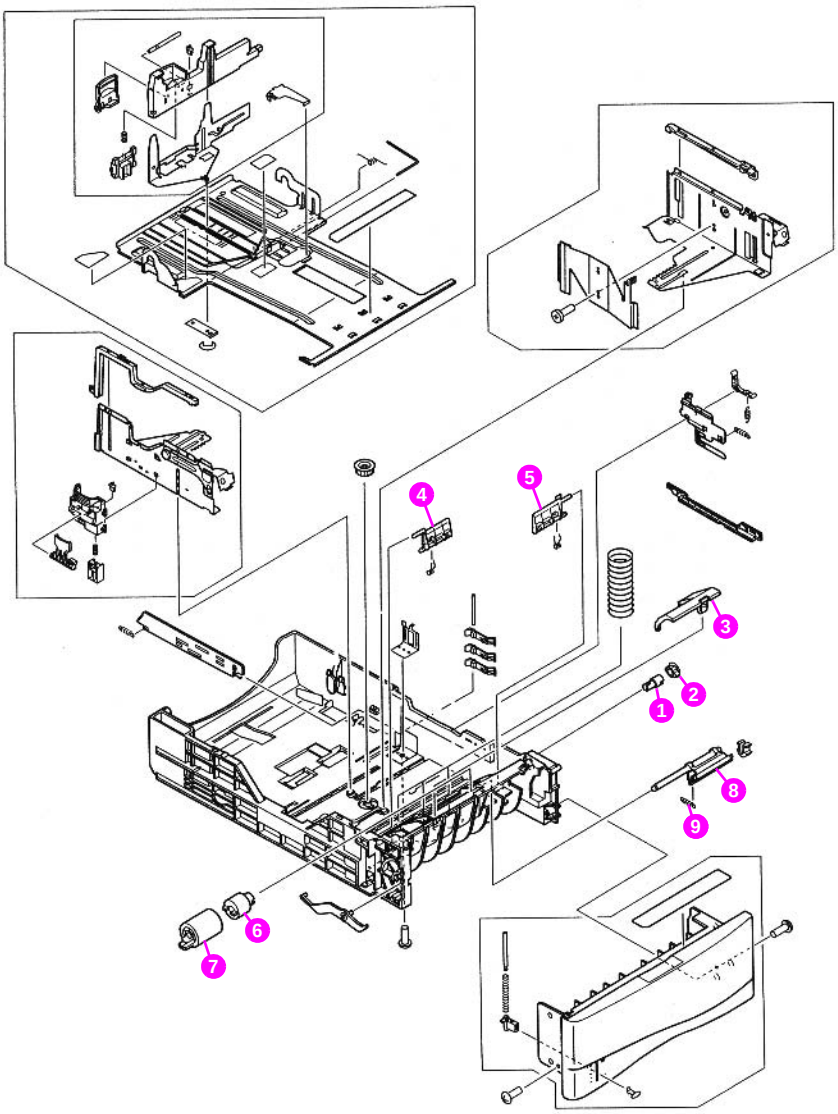

Figure 137. **500-sheet tray**

Table 72. 500-sheet tray

Item no.	Part no.	Quantity	Description
1	RB1-8945-000CN	1	Coupler, separation roller
2	RB1-8946-000CN	1	Bushing, separation roller
3	RB1-8947-000CN	1	Panel, roller access
4	RB1-8961-000CN	1	Left arm lifter
5	RB1-8962-000CN	1	Right arm lifter
6	RB1-8974-000CN	1	Torque limiter
7	RF5-3114-000CN	1	Roller, feed
8	RF5-2489-000CN	1	Mounting assembly separation roller
9	RS5-2622-020CN	1	Spring, separation roller tension

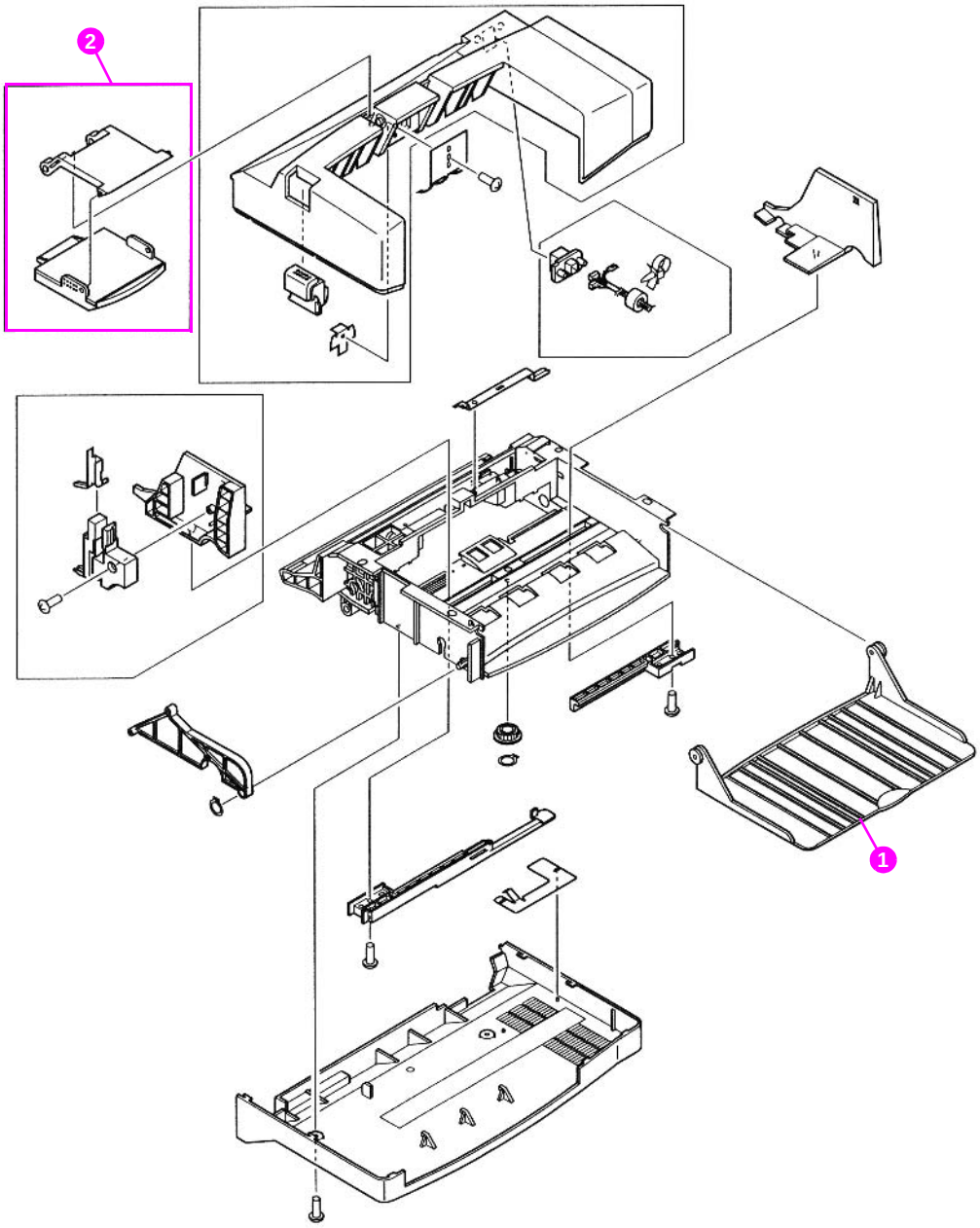

Figure 138. **Envelope feeder**

Table 73. Envelope feeder

Item no.	Part no.	Exchange no.	Quantity	Description
	C8053A	C8053-69001	1	Envelope feeder
1	RB2-4734-000CN		1	Tray, envelope feeder
2	RG5-2734-000CN		1	Weight assembly

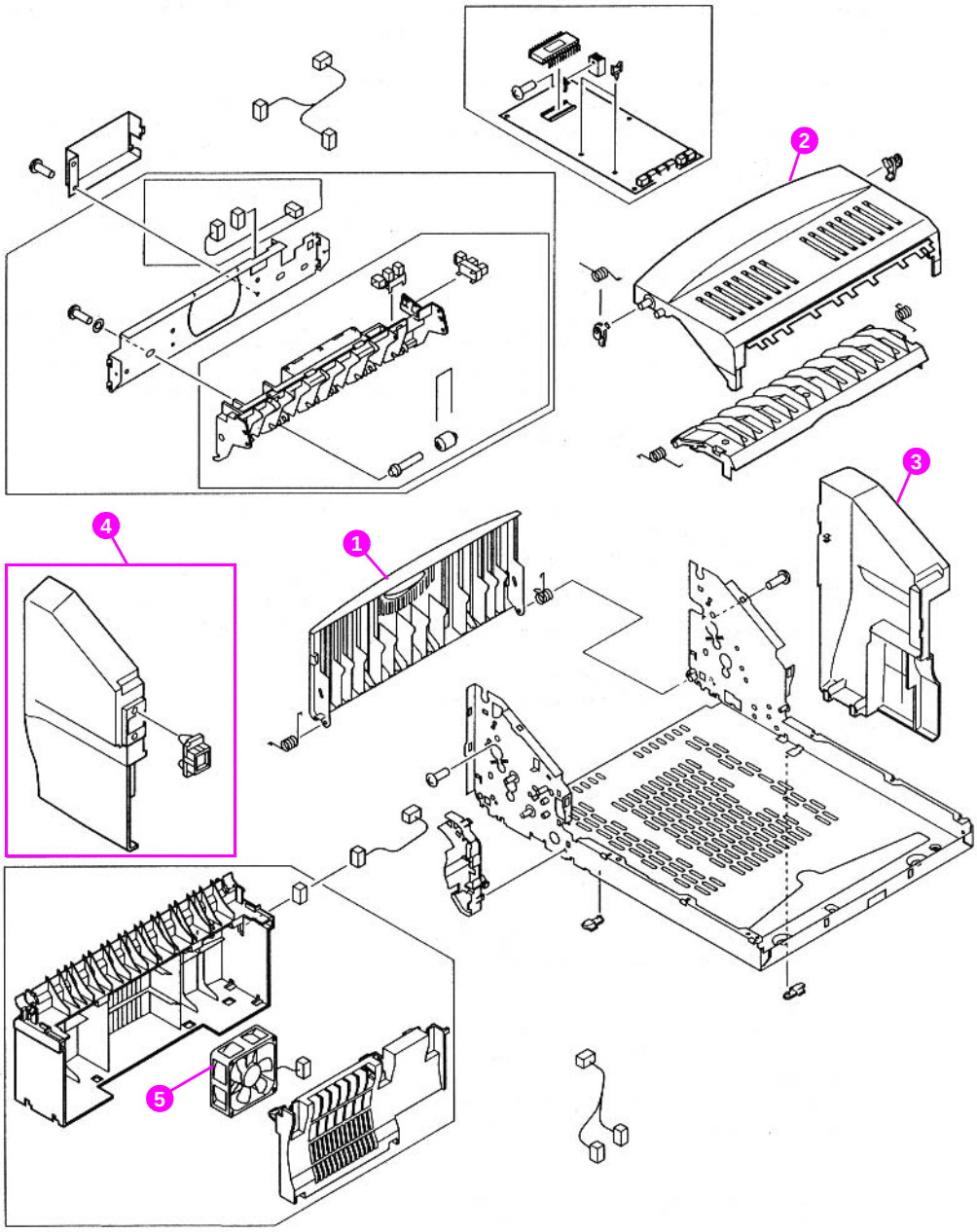

Figure 139. **Internal components of duplexer**

Table 74. Internal components of duplexer

Item no.	Part no.	Exchange no.	Quantity	Description
	C8054A	C8054-69001	1	Duplexer
1	RB1-9045-000CN		1	Panel, rear
2	RB2-4766-000CN		1	Cover, top
3	RB2-4768-000CN		1	Cover, right
4	RF5-3092-000CN		1	Cover, left
5	RH7-1443-000CN		1	Fan

Alphabetical parts list

Table 75. Alphabetical parts list

Description	Part number	Table number and page
500-sheet paper feeder and tray	C8055A	Table 52 on page 271
AC, power receptacle (110 V) AC, power receptacle (220 V)	RG5-5111-000CN RG5-5280-000CN	Table 58 on page 281
Antenna assembly	RG5-5273-000CN	Table 60 on page 285
Antenna cable	RG5-5471-000CN	Table 60 on page 285
Arm, output kicker, left	RB2-4948-000CN	Table 68 on page 295
Arm, output kicker, right	RB2-4949-000CN	Table 68 on page 295
Arm, tray 1 paper sensing	RB1-8787-050CN	Table 66 on page 293
Arm, tray 1 retaining	RB2-2387-000CN	Table 66 on page 293
Arm, tray sensing	RB1-8879-000CN	Table 65 on page 291 Table 71 on page 301
Bushing, separation roller	RB1-8946-000CN	Table 72 on page 302
Cable and power receptacle 110 V 220 V	 RG5-5111-000CN RG5-5280-000CN	Table 54 on page 273
Cable holder, formatter	RB2-4992-000CN	Table 59 on page 283
Cable, antenna	RG5-5471-000CN	Table 54 on page 273 Table 60 on page 285
Cable, assembly, formatter	RG5-5351-000CN	Table 54 on page 273 Table 58 on page 281
Cable, duplexer	RG5-5358-000CN	Table 54 on page 273 Table 60 on page 285
Cable, envelope feeder connect	RG5-5344-000CN	Table 54 on page 273 Table 58 on page 281
Cable, feed/registration sensors	RG5-5357-000CN	Table 54 on page 273 Table 59 on page 283
Cable, laser	RG5-5350-000CN	Table 54 on page 273 Table 59 on page 283
Cable, laser scanner	RG5-5348-000CN	Table 54 on page 273
Cable, main motor	RG5-5346-000CN	Table 54 on page 273 Table 58 on page 281
Cable, memory	RG5-5470-000CN	Table 54 on page 273 Table 59 on page 283
Cable, output bin sensor	RG5-5349-000CN	Table 54 on page 273
Cable, paper feed/tray 1 pickup solenoid	RG5-5343-000CN	Table 54 on page 273 Table 58 on page 281
Cable, paper feeder	RG5-3822-000CN	Table 54 on page 273 Table 70 on page 299
Cable, paper feeder sensor	RG5-3711-000CN	Table 54 on page 273 Table 61 on page 287

Table 75. Alphabetical parts list (continued)

Description	Part number	Table number and page
Cable, paper feeder w/ connector	RG5-3712-000CN	Table 54 on page 273 Table 61 on page 287
Cable, scanner	RG5-5348-000CN	Table 54 on page 273 Table 59 on page 283
Cable, top cover switch	RG5-5345-000CN	Table 54 on page 273 Table 58 on page 281
Cable, tray 1 sensor	RG5-5341-000CN	Table 54 on page 273 Table 58 on page 281
Clip, fan	RB2-4986-000CN	Table 58 on page 281
Clip, pickup spring	RB1-2190-000CN	Table 65 on page 291 Table 71 on page 301
Clip, right side panel	RB1-8860-000CN	Table 56 on page 277
Control panel, assembly	RG5-5372-040CN	Table 59 on page 283
Coupler, pickup	RB1-8877-000CN	Table 71 on page 301
Coupler, separation roller	RB1-8945-000CN	Table 72 on page 302
Cover assembly, left	RG5-5098-000CN	Table 56 on page 277
Cover assembly, right front	RG5-2664-020CN	Table 56 on page 277
Cover, envelope feeder	RB2-5037-000CN	Table 66 on page 293
Cover, grip, left	RB1-8924-000CN	Table 70 on page 299
Cover, grip, right	RB1-9385-000CN	Table 70 on page 299
Cover, left	RF5-3092-000CN	Table 74 on page 305
Cover, right	RB2-4768-000CN	Table 74 on page 305
Cover, top	RB2-4766-000CN	Table 74 on page 305
Cover, tray	RB2-4836-000CN	Table 70 on page 299
Cover, tray 1 sensor arm	RB2-5040-000CN	Table 66 on page 293
Cover, tray 2	RB2-4827-000CN	Table 56 on page 277
Delivery assembly	RG5-5094-000CN	Table 58 on page 281 Table 68 on page 295
Delivery drive assembly	RG5-5095-000CN	Table 55 on page 276 Table 63 on page 289
Delivery sensor arm assembly	RG5-5093-000CN	Table 68 on page 295
Duplexer	C8054A	Table 52 on page 271 Table 74 on page 305
EIO cover	5021-0349	Table 55 on page 276
EIO hard disk	J6054A	Table 52 on page 271
Engine controller board (110 V) Engine controller board (220 V)	RG5-5361-000CN RG5-5362-000CN	Table 55 on page 276 Table 58 on page 281 Table 62 on page 288
Engine controller board (110 V) Engine controller board (220 V)	C8049-69003 C8049-69004	Table 59 on page 283 Table 60 on page 285

Table 75. Alphabetical parts list (continued)

Description	Part number	Table number and page
Enhanced I/O Cards Token Ring networks Fast Ethernet (10/100Base-TX single RJ-45 port) HP JetDirect Connectivity card (EIO) for USB, Serial, LocalTalk	 J4167A J4169A J4135A	Table 52 on page 271
Envelope feeder	C8053A	Table 52 on page 271 Table 73 on page 303
Fan	RH7-1443-000CN	Table 74 on page 305
Fan, main cooling	RH7-1442-000CN	Table 59 on page 283
Feed, roller	RF5-3114-000CN	Table 71 on page 301
FIR receiver	C4103A	Table 52 on page 271
Firmware DIMM kit	C4168-67901	Table 55 on page 276
Flag, sensor	RB2-5034-000CN	Table 67 on page 294
Flash DIMM 2 MB 4 MB	 C4286A C4287A	Table 52 on page 271
Font DIMM (8 MB Asian MROM) Traditional Chinese Simplified Chinese Korean	 C4292A C4293A D4838A	Table 52 on page 271
Formatter	C4169-67901	Table 55 on page 276
Front inner cover assembly	RG5-5274-000CN	Table 58 on page 281
Fuse, 110 V, Engine Fuse, 220 V, Engine	VD7-0256-001CN VD7-0643-151CN	Table 62 on page 288
Fuse, 220 V, Engine Board Fuse, 110 V, Engine Board	RH3-8006-000CN WD1-0268-000CN	Table 62 on page 288
Fuser (110 V) Fuser (220 V)	RG5-5063-000CN RG5-5064-000CN	Table 55 on page 276 Table 69 on page 296
Fuser film assembly (110 V) Fuser film assembly (220 V)	RG5-5068-000CN RG5-5069-000CN	Table 69 on page 296
Fusing assembly (110 V) Fusing assembly (220 V)	C8049-69001 C8049-69002	Table 58 on page 281
Gear cover	RB2-5019-000CN	Table 66 on page 293
Guide, bottom cable	RB1-8704-030CN	Table 58 on page 281
Guide, paper	RB1-8914-000CN	Table 70 on page 299
HP LaserJet paper	HPJ1124	Table 52 on page 271
HP multi-purpose paper	HPM1120	Table 52 on page 271
Insulation, engine controller board	RB2-4975-000CN	Table 60 on page 285
Joint	RB1-8877-000CN	Table 65 on page 291
Laser cable	RG5-5350-000CN	Table 59 on page 283

Table 75. Alphabetical parts list (continued)

Description	Part number	Table number and page
Laser scanner assembly	RG5-5100-000CN	Table 55 on page 276 Table 59 on page 283
Laser shutter arm	RB1-8700-000CN	Table 59 on page 283
Latch, rear tray	RB1-8846-000CN	Table 57 on page 279
Left arm lifter	RB1-8961-000CN	Table 72 on page 302
Left frame assembly, optional 500-sheet feeder	RG5-5292-000CN	Table 70 on page 299
Left frame assembly, tray 2	RG5-2669-000CN	Table 61 on page 287
Lever	RB2-2412-000CN	Table 70 on page 299
Lever, release	RB2-3497-000CN	Table 70 on page 299
Lower frame assembly	RG5-5271-000CN	Table 61 on page 287 Table 70 on page 299
Lower transfer roller guide	RB2-5043-000CN	Table 60 on page 285
Macintosh computer serial cable	92215S	Table 52 on page 271
Macintosh network cable kit	92215N	Table 52 on page 271
Main motor assembly	RH7-1440-000CN	Table 58 on page 281
Maintenance kit 110 V 220 V	 C8057A C8058A	Table 52 on page 271
Cartridge memory antenna assembly	RG5-5276-000CN	Table 60 on page 285
Cartridge memory antenna bracket	RB2-5008-000CN	Table 60 on page 285
Mount, thermistor	RB2-4996-000CN	Table 60 on page 285
Mounting assembly separation roller	RF5-2489-000CN	Table 72 on page 302
MP idler assembly	RG5-3723-000CN	Table 60 on page 285
Pad, separation	RF5-3086-000CN	Table 66 on page 293
Panel, formatter cover	RB1-8858-000CN	Table 56 on page 277
Panel, rear	RB1-9045-000CN	Table 74 on page 305
Panel, roller access	RB1-8947-000CN	Table 72 on page 302
Panel, toner cartridge access	RB1-8841-000CN	Table 57 on page 279
Paper delivery	RG5-5094-000CN	Table 55 on page 276
Paper feed	RG5-5086-000CN	Table 55 on page 276
Paper feed guide assembly	RG5-5083-000CN	Table 60 on page 285 Table 67 on page 294
Paper feed guide	RG5-5086-000CN	Table 55 on page 276
Paper feeder cable	RG5-3712-000CN	Table 70 on page 299
Paper feeder cable	RG5-3822-000CN	Table 70 on page 299
Paper feeder PCA, optional 500-sheet feeder	RG5-5539-000CN	Table 70 on page 299

Table 75. Alphabetical parts list (continued)

Description	Part number	Table number and page
Paper pickup guide assembly, optionl 500-sheet feeder	RG5-5293-000CN	Table 71 on page 301
Paper pickup guide assembly, tray 2	RG5-5277-000CN	Table 65 on page 291
Paper sensor cable	RG5-3711-000CN	Table 70 on page 299
Paper-size detection PCB assembly, tray 2	RG5-2673-004CN	Table 61 on page 287
Parallel cables 2-meter IEEE-1284 cable 3-meter IEEE-1284 cable	 C2950A C2951A	Table 52 on page 271
PCB, memory controller	RG5-5468-000CN	Table 60 on page 285
Photo-sensor	WG8-5362-000CN	Table 61 on page 287 Table 63 on page 289 Table 67 on page 294 Table 70 on page 299 Table 74 on page 305
Pickup drive assembly	RG5-5298-000CN	Table 70 on page 299
Pickup roller	RB1-8957-000CN	Table 65 on page 291 Table 71 on page 301
Plate, continuity	RB2-5002-000CN	Table 60 on page 285
Plate, grounding	RB1-9397-000CN	Table 70 on page 299
Plate, registration ground	RB2-4969-000CN	Table 60 on page 285
Power switch activator	RB1-8851-000CN	Table 58 on page 281
Power switch button	RB1-8849-000CN	Table 56 on page 277
Printer drive assembly	RG5-5087-000CN	Table 58 on page 281 Table 64 on page 290
Registration	RG5-5085-000CN	Table 55 on page 276
Registration assembly	RG5-5085-000CN	Table 60 on page 285
Registration/feed sensor assembly	RG5-5275-000CN	Table 59 on page 283
Right arm lifter	RB1-8962-000CN	Table 72 on page 302
Right frame assembly, optional 500-sheet feeder	RG5-5291-000CN	Table 70 on page 299
Right frame assembly, tray 2	RG5-5278-000CN	Table 61 on page 287
Rod, toner drive, included in assembly	RB1-8756-000CN	Table 64 on page 290
Roller, feed	RF5-3114-000CN	Table 61 on page 287 Table 72 on page 302
Roller, pressure	RB2-4919-000CN	Table 69 on page 296
Screw, M3x6, washer head, engine controller board	XA9-1016-000CN	Table 53 on page 272 Table 60 on page 285
Screw, M4x10	FA9-2753-000CN	Table 70 on page 299

Table 75. Alphabetical parts list (continued)

Description	Part number	Table number and page
Screw, M4x10, self-tapping	XA9-0870-000CN	Table 53 on page 272 Table 61 on page 287
Screw, M4x10, self-tapping	XA9-0606-000CN	Table 53 on page 272
Screw, M4x10, self-tapping, feeder assembly	FA9-2753-000CN	Table 53 on page 272
Screw, M4x12, self-tapping, pan head	XB4-7401-207CN	Table 53 on page 272
Screw, M4x8.3, long, module	RB2-5013-000CN	Table 53 on page 272 Table 58 on page 281
Screw, stepped, M4, formatter	XA9-1143-000CN	Table 53 on page 272 Table 59 on page 283
Screw, tapping, pan head, M4x12	XB4-7401-207CN	Table 58 on page 281 Table 59 on page 283 Table 60 on page 285
Screw, tapping, truss head, M3x10	XB4-7301-006CN	Table 71 on page 301
Screw, TP, M3x8, main motor	XB6-7300-807CN	Table 53 on page 272 Table 58 on page 281
Screw, truss head w/washer, machine, grounding	FA9-1449-000CN	Table 53 on page 272 Table 58 on page 281 Table 60 on page 285
SDRAM DIMM 4 MB 8 MB 16 MB 32 MB 64 MB 128 MB	 C4140A C4141A C4142A C4143A C3913A C9121A	Table 52 on page 271
Sensor, optical, included in assembly	WG8-5362-000CN	Table 63 on page 289 Table 67 on page 294
Shaft, roller	RB1-8867-000CN	Table 65 on page 291 Table 71 on page 301
Shutter	RB1-8699-000CN	Table 59 on page 283
Solenoid, tray 1 drive	RH7-5172-000CN	Table 66 on page 293
Spring, leaf	RB2-4837-000CN	Table 61 on page 287
Spring, cartridge memory assembly	RB2-5009-000CN	Table 60 on page 285
Spring, rear tray latch	RB1-8847-000CN	Table 57 on page 279
Spring, separation roller tension	RS5-2622-020CN	Table 72 on page 302
Spring, shutter	RB1-8702-000CN	Table 59 on page 283
Spring, tension	RS5-2632-000CN	Table 65 on page 291 Table 71 on page 301
Spring, tension	RS5-2658-000CN	Table 70 on page 299
Spring, toner cartridge ground	RB2-4997-000CN	Table 60 on page 285

Table 75. Alphabetical parts list (continued)

Description	Part number	Table number and page
Spring, torsion	RB2-5035-000CN	Table 67 on page 294
Spring, tray	RB2-4122-000CN	Table 58 on page 281
Standard 500-sheet tray (without the feeder)	C8056A	Table 52 on page 271
Support, top cover, left	RB2-5003-000CN	Table 59 on page 283
Switch, top cover interlock access	WC4-5139-000CN	Table 58 on page 281
Thermistor, environmental	RH7-7116-000CN	Table 60 on page 285
Toner cartridge (10,000 pages)	C8061X	Table 52 on page 271
Toner cartridge (6,000 pages)	C8061A	Table 52 on page 271
Top cover assembly	RG5-2663-080CN	Table 55 on page 276 Table 57 on page 279
Torque limiter	RB1-8974-000CN	Table 72 on page 302
Transfer roller assembly	RG5-5295-000CN	Table 60 on page 285
Tray 1 assembly	RG5-2656-080CN	Table 55 on page 276 Table 58 on page 281
Tray 1 door assembly	RG5-2667-070CN	Table 56 on page 277
Tray 1 pickup assembly	RG5-5084-000CN	Table 55 on page 276 Table 58 on page 281 Table 66 on page 293
Tray 1 pickup roller assembly	RG5-3718-000CN	Table 66 on page 293
Tray assembly, rear	RG5-5097-000CN	Table 56 on page 277
Tray, envelope feeder	RB2-4734-000CN	Table 73 on page 303
Upper frame assembly, optional 500-sheet feeder	RG5-2689-000CN	Table 70 on page 299
Upper frame assembly, tray 2	RG5-5072-000CN	Table 61 on page 287
Weight assembly	RG5-2734-000CN	Table 73 on page 303

Numerical parts list

Table 76. Numerical parts list

Part number	Description	Table number and page
5021-0349	EIO cover	Table 55 on page 276
92215N	Macintosh network cable kit	Table 52 on page 271
92215S	Macintosh computer serial cable	Table 52 on page 271
C2950A C2951A	Parallel cables 2-meter IEEE-1284 cable 3-meter IEEE-1284 cable	Table 52 on page 271
J6054A	EIO hard disk	Table 52 on page 271
C4103A	FIR receiver	Table 52 on page 271
C4140A C4141A C4142A C4143A C3913A C9121A	SDRAM DIMM 4 MB 8 MB 16 MB 32 MB 64 MB 128 MB	Table 52 on page 271
C4168-67901	Firmware DIMM kit	Table 55 on page 276
C4169-67901	Formatter	Table 55 on page 276
C4286A C4287A	Flash DIMM 2 MB 4 MB	Table 52 on page 271
C4292A C4293A D4838A	Font DIMM (8 MB Asian MROM) Traditional Chinese Simplified Chinese Korean	Table 52 on page 271
C8049-69003 C8049-69004	Engine controller board (110 V) Engine controller board (220 V)	Table 58 on page 281 Table 59 on page 283 Table 60 on page 285
C8053A	Envelope feeder	Table 52 on page 271 Table 73 on page 303
C8054A	Duplexer	Table 52 on page 271 Table 74 on page 305
C8055A	500-sheet paper feeder and tray	Table 52 on page 271
C8056A	Standard 500-sheet tray (without the feeder)	Table 52 on page 271
C8057A C8058A	Maintenance kit 110 V 220 V	Table 52 on page 271
C8061A	Toner cartridge (6,000 pages)	Table 52 on page 271
C8061X	Toner cartridge (10,000 pages)	Table 52 on page 271
FA9-1449-000CN	Screw, truss head w/washer, machine, grounding	Table 53 on page 272 Table 58 on page 281 Table 60 on page 285

Table 76. Numerical parts list (continued)

Part number	Description	Table number and page
FA9-2753-000CN	Screw, M4x10, self-tapping, feeder assembly	Table 53 on page 272 Table 70 on page 299
HPJ1124	HP LaserJet paper	Table 52 on page 271
HPM1120	HP multi-purpose paper	Table 52 on page 271
J4167A J4169A J4135A	Enhanced I/O Cards Token Ring networks Fast Ethernet (10/100Base-TX single RJ-45 port) HP JetDirect Connectivity card (EIO) for USB, Serial, LocalTalk	Table 52 on page 271
RB1-2190-000CN	Clip, pickup spring	Table 65 on page 291 Table 71 on page 301
RB1-8699-000CN	Shutter	Table 59 on page 283
RB1-8700-000CN	Laser shutter arm	Table 59 on page 283
RB1-8702-000CN	Spring, shutter	Table 59 on page 283
RB1-8704-030CN	Guide, bottom cable	Table 58 on page 281
RB1-8756-000CN	Rod, toner drive, included in assembly	Table 64 on page 290
RB1-8787-050CN	Arm, tray 1 paper sensing	Table 66 on page 293
RB1-8841-000CN	Panel, toner cartridge access	Table 57 on page 279
RB1-8846-000CN	Latch, rear tray	Table 57 on page 279
RB1-8847-000CN	Spring, rear tray latch	Table 57 on page 279
RB1-8849-000CN	Power switch button	Table 56 on page 277
RB1-8851-000CN	Power switch activator	Table 58 on page 281
RB1-8858-000CN	Panel, formatter cover	Table 56 on page 277
RB1-8860-000CN	Clip, right side panel	Table 56 on page 277
RB1-8867-000CN	Shaft, roller	Table 65 on page 291 Table 71 on page 301
RB1-8877-000CN	Coupler, pickup/Joint	Table 65 on page 291 Table 71 on page 301
RB1-8879-000CN	Arm, tray sensing	Table 65 on page 291 Table 71 on page 301
RB1-8914-000CN	Guide, paper	Table 70 on page 299
RB1-8924-000CN	Cover, grip, left	Table 70 on page 299
RB1-8945-000CN	Coupler, separation roller	Table 72 on page 302
RB1-8946-000CN	Bushing, separation roller	Table 72 on page 302
RB1-8947-000CN	Panel, roller access	Table 72 on page 302
RB1-8957-000CN	Pickup roller	Table 65 on page 291 Table 71 on page 301
RB1-8961-000CN	Left arm lifter	Table 72 on page 302
RB1-8962-000CN	Right arm lifter	Table 72 on page 302

Table 76. Numerical parts list (continued)

Part number	Description	Table number and page
RB1-8974-000CN	Torque limiter	Table 72 on page 302
RB1-9045-000CN	Panel, rear	Table 74 on page 305
RB1-9385-000CN	Cover, grip, right	Table 70 on page 299
RB1-9397-000CN	Plate, grounding	Table 70 on page 299
RB2-2387-000CN	Arm, tray 1 retaining	Table 66 on page 293
RB2-2412-000CN	Lever	Table 70 on page 299
RB2-3497-000CN	Lever, release	Table 70 on page 299
RB2-4122-000CN	Spring, tray	Table 58 on page 281
RB2-4734-000CN	Tray, envelope feeder	Table 73 on page 303
RB2-4766-000CN	Cover, top	Table 74 on page 305
RB2-4768-000CN	Cover, right	Table 74 on page 305
RB2-4827-000CN	Cover, tray 2	Table 56 on page 277
RB2-4836-000CN	Cover, tray	Table 70 on page 299
RB2-4837-000CN	Spring, leaf	Table 61 on page 287
RB2-4919-000CN	Roller, pressure	Table 69 on page 296
RB2-4948-000CN	Arm, output kicker, left	Table 68 on page 295
RB2-4949-000CN	Arm, output kicker, right	Table 68 on page 295
RB2-4969-000CN	Plate, registration ground	Table 60 on page 285
RB2-4975-000CN	Insulation, engine controller board	Table 60 on page 285
RB2-4986-000CN	Clip, fan	Table 58 on page 281
RB2-4992-000CN	Cable holder, formatter	Table 59 on page 283
RB2-4996-000CN	Mount, thermistor	Table 60 on page 285
RB2-4997-000CN	Spring, toner cartridge ground	Table 60 on page 285
RB2-5002-000CN	Plate, continuity	Table 60 on page 285
RB2-5003-000CN	Support, top cover, left	Table 59 on page 283
RB2-5008-000CN	Cartridge memory antenna bracket	Table 60 on page 285
RB2-5009-000CN	Spring, cartridge memory assembly	Table 60 on page 285
RB2-5013-000CN	Screw, M4x8.3, long, module	Table 53 on page 272 Table 58 on page 281
RB2-5019-000CN	Gear cover	Table 66 on page 293
RB2-5034-000CN	Flag, sensor	Table 67 on page 294
RB2-5035-000CN	Spring, torsion	Table 67 on page 294
RB2-5037-000CN	Cover, envelope feeder	Table 66 on page 293
RB2-5040-000CN	Cover, tray 1 sensor arm	Table 66 on page 293
RB2-5043-000CN	Lower transfer roller guide	Table 60 on page 285

Table 76. Numerical parts list (continued)

Part number	Description	Table number and page
RF5-2489-000CN	Mounting assembly separation roller	Table 72 on page 302
RF5-3086-000CN	Pad, separation	Table 66 on page 293
RF5-3092-000CN	Cover, left	Table 74 on page 305
RF5-3114-000CN	Roller, feed	Table 61 on page 287 Table 71 on page 301 Table 72 on page 302
RG5-2656-080CN	Tray 1 assembly	Table 55 on page 276 Table 58 on page 281
RG5-2663-080CN	Top cover assembly	Table 55 on page 276 Table 57 on page 279
RG5-2664-020CN	Cover assembly, right front	Table 56 on page 277
RG5-2667-070CN	Tray 1 door assembly	Table 56 on page 277
RG5-2669-000CN	Left frame assembly, tray 2	Table 61 on page 287
RG5-2673-004CN	Paper-size detection PCB assembly, tray 2	Table 61 on page 287
RG5-2689-000CN	Upper frame assembly, optional 500-sheet feeder	Table 70 on page 299
RG5-2734-000CN	Weight assembly	Table 73 on page 303
RG5-3711-000CN	Cable, paper feeder sensor	Table 54 on page 273 Table 61 on page 287 Table 70 on page 299
RG5-3712-000CN	Cable, paper feeder w/ connector	Table 54 on page 273 Table 61 on page 287 Table 70 on page 299
RG5-3718-000CN	Tray 1 pickup roller assembly	Table 66 on page 293
RG5-3723-000CN	MP idler assembly	Table 60 on page 285
RG5-3822-000CN	Cable, paper feeder	Table 54 on page 273 Table 70 on page 299
RG5-5063-000CN RG5-5064-000CN	Fuser (110 V) Fuser (220 V)	Table 55 on page 276 Table 69 on page 296
RG5-5068-000CN RG5-5069-000CN	Fuser film assembly (110 V) Fuser film assembly (220 V)	Table 69 on page 296
RG5-5072-000CN	Upper frame assembly, tray 2	Table 61 on page 287
RG5-5084-000CN	Tray 1 pickup assembly	Table 55 on page 276 Table 58 on page 281 Table 66 on page 293
RG5-5085-000CN	Registration assembly	Table 55 on page 276 Table 60 on page 285
RG5-5086-000CN	Paper feed assembly	Table 55 on page 276 Table 60 on page 285 Table 67 on page 294
RG5-5087-000CN	Printer drive assembly	Table 58 on page 281 Table 64 on page 290

Table 76. Numerical parts list (continued)

Part number	Description	Table number and page
RG5-5093-000CN	Delivery sensor arm assembly	Table 68 on page 295
RG5-5094-000CN	Delivery assembly, paper	Table 55 on page 276 Table 58 on page 281 Table 68 on page 295
RG5-5095-000CN	Delivery drive assembly	Table 55 on page 276 Table 63 on page 289
RG5-5097-000CN	Tray assembly, rear	Table 56 on page 277
RG5-5098-000CN	Cover assembly, left	Table 56 on page 277
RG5-5100-000CN	Laser scanner assembly	Table 55 on page 276 Table 59 on page 283
RG5-5111-000CN RG5-5280-000CN	AC, power receptacle (110 V) AC, power receptacle (220 V)	Table 54 on page 273 Table 58 on page 281
RG5-5271-000CN	Lower frame assembly	Table 61 on page 287 Table 70 on page 299
RG5-5273-000CN	Antenna assembly	Table 60 on page 285
RG5-5274-000CN	Front inner cover assembly	Table 58 on page 281
RG5-5275-000CN	Registration/feed sensor assembly	Table 59 on page 283
RG5-5276-000CN	Cartridge memory antenna assembly	Table 60 on page 285
RG5-5277-000CN	Paper pickup guide assembly, tray 2	Table 65 on page 291
RG5-5278-000CN	Right frame assembly, tray 2	Table 61 on page 287
RG5-5291-000CN	Right frame assembly, optional 500-sheet feeder	Table 70 on page 299
RG5-5292-000CN	Left frame assembly, optional 500-sheet feeder	Table 70 on page 299
RG5-5293-000CN	Paper pickup guide assembly, optionl 500-sheet feeder	Table 71 on page 301
RG5-5295-000CN	Transfer roller assembly	Table 60 on page 285
RG5-5341-000CN	Cable, tray 1 sensor	Table 54 on page 273 Table 58 on page 281
RG5-5344-000CN	Cable, envelope feeder connect	Table 54 on page 273 Table 58 on page 281
RG5-5345-000CN	Cable, top cover switch	Table 54 on page 273 Table 58 on page 281
RG5-5346-000CN	Cable, main motor	Table 54 on page 273 Table 58 on page 281
RG5-5348-000CN	Cable, scanner	Table 54 on page 273 Table 59 on page 283
RG5-5349-000CN	Cable, output bin sensor	Table 54 on page 273 Table 59 on page 283
RG5-5350-000CN	Cable, laser	Table 54 on page 273 Table 59 on page 283

Table 76. Numerical parts list (continued)

Part number	Description	Table number and page
RG5-5351-000CN	Cable, assembly, formatter	Table 54 on page 273 Table 58 on page 281
RG5-5357-000CN	Cable, feed/registration sensors	Table 54 on page 273 Table 59 on page 283
RG5-5358-000CN	Cable, duplexer	Table 54 on page 273 Table 60 on page 285
RG5-5361-000CN RG5-5362-000CN	Engine controller board (110 V) Engine controller board (220 V)	Table 55 on page 276 Table 58 on page 281 Table 62 on page 288
RG5-5372-040CN	Control panel, assembly	Table 59 on page 283
RG5-5468-000CN	PCB, memory controller	Table 60 on page 285
RG5-5470-000CN	Cable, memory	Table 54 on page 273 Table 59 on page 283
RG5-5471-000CN	Cable, antenna	Table 54 on page 273 Table 60 on page 285
RG5-5539-000CN	Paper feeder PCA, optional 500-sheet feeder	Table 70 on page 299
RH3-8006-000CN WD1-0268-000CN	Fuse, 220 V, Engine Board Fuse, 110 V, Engine Board	Table 62 on page 288
RH7-1440-000CN	Main motor assembly	Table 58 on page 281
RH7-1442-000CN	Fan, main cooling	Table 59 on page 283
RH7-1443-000CN	Fan	Table 74 on page 305
RH7-5172-000CN	Solenoid, tray 1 drive	Table 66 on page 293
RH7-7116-000CN	Thermistor, environmental	Table 60 on page 285
RS5-2622-020CN	Spring, separation roller tension	Table 72 on page 302
RS5-2632-000CN	Spring, tension	Table 65 on page 291 Table 71 on page 301
RS5-2658-000CN	Spring, tension	Table 70 on page 299
VD7-0256-001CN VD7-0643-151CN	Fuse, 110 V, Engine Fuse, 220 V, Engine	Table 62 on page 288
WC4-5139-000CN	Switch, top cover interlock access	Table 58 on page 281
WG8-5362-000CN	Photo-sensor	Table 61 on page 287 Table 63 on page 289 Table 67 on page 294 Table 70 on page 299 Table 74 on page 305
XA9-0606-000CN	Screw, M4x10, self-tapping	Table 53 on page 272
XA9-0870-000CN	Screw, M4x10, self-tapping	Table 53 on page 272 Table 61 on page 287
XA9-1016-000CN	Screw w/washer, M3x6, engine controller	Table 53 on page 272 Table 60 on page 285
XA9-1143-000CN	Screw, stepped, M4, formatter	Table 53 on page 272 Table 59 on page 283

Table 76. Numerical parts list (continued)

Part number	Description	Table number and page
XB4-7401-207CN	Screw, M4x12, self-tapping, pan head	Table 53 on page 272
XB4-7401-207CN	Screw, tapping, pan head, M4x12	Table 58 on page 281 Table 59 on page 283 Table 60 on page 285
XB6-7300-807CN	Screw, TP, M3x8, main motor	Table 53 on page 272 Table 58 on page 281

Index

D

E

F

G

H

I

J

K

L

M

N

O

P

T

U

V

W

invent

http://www.hp.com/support/lj4100