2. Product specification and feature

2.1 Product Specifications

2.1.1 Product Special feature

The smallest and lightest Color Laser MFP
: Ideally suited for SOHO and home office use

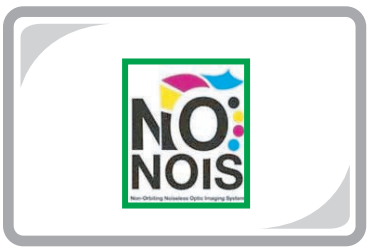

NO-NOIS™, : Quiet operation
(48 dBA)

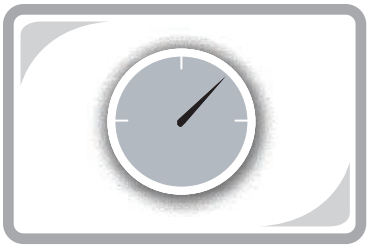

Short Warm up Time : 35sec
(ex:CLP-510 99sec)

FPOT (Black&White: 14sec, Color: 26sec)

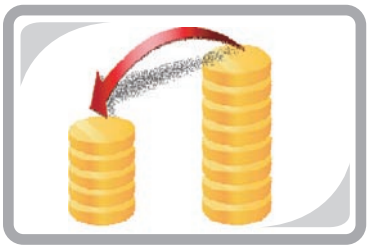

Low Cost per Page

Separate toner container

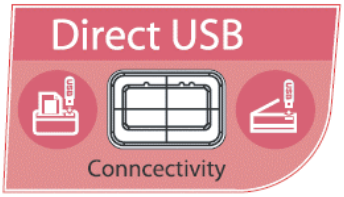

Direct Scanning / Printing
- Scan to USB Memory
- Just use Scan-to-USB to scan and save all that you needed.
  (* PDF, BMP, JPEG, TIFF)

TONER
www.tonerplus.com.ua

PictBrigde & USB Direct Print

Print from USB memory, Camera, Camera phone & Digital camcorder without PC.
(* TIFF, BMP, JPEG, PRN file only.)

Special Copy function

ID Card Copy

2.1.2 Specifications

• Product Specifications are subject to change without notice. See below for product specifications.

2.1.2.1 General

General Print Engine		CLX-2160	CLX-2160N
Engine Speed	Simplex	Up to 16 ppm in A4 (17 ppm in Letter) Up to 4 ppm in A4 (4 ppm in Letter)	Up to 16 ppm in A4 (17 ppm in Letter) Up to 4 ppm in A4 (4 ppm in Letter)
	Duplex	Manual	Manual
Warmup time		Less than 35 sec	Less than 35 sec
FPOT (B&W)	From Ready	Less than 14 sec	Less than 14 sec
	From Idle	Less than 45 sec	Less than 45 sec
	From Coldboot	Less than 45 sec	Less than 45 sec
FPOT (Color)	From Ready	Less than 26 sec	Less than 26 sec
	From Idle	Less than 57 sec	Less than 57 sec
	From Coldboot	Less than 57 sec	Less than 57 sec
Resolution	Optical	600 x 600 dpi	600 x 600 dpi
	Support	(Color & B&W) MAX: 2400 x 600 dpi effective output, 1200 x 600 dpi (default), 600 x 600 dpi	(Color & B&W) MAX: 2400 x 600 dpi effective output, 1200 x 600 dpi (default), 600 x 600 dpi
Acoustic Noise Level(Sound Power/Pressure)	Printing	Less than 48.0 dBA (Color printing) Less than 49.0 dBA (B/W printing)	Less than 48.0 dBA (Color printing) Less than 49.0 dBA (B/W printing)
	Copying	Less than 49 dBA	Less than 49 dBA
	Standby	Less than 35 dBA	Less than 35 dBA
	Sleep	Background noise level	Background noise level

TONER Samsung Electronics
www.tonerplus.com.ua

General Print Engine		CLX-2160	CLX-2160N
Input Voltages		100 ~ 127 VAC, 50/60 Hz	100 ~ 127 VAC, 50/60 Hz
		220-240 VAC, 50/60 Hz	220-240 VAC, 50/60 Hz
		Power Switch	Power Switch
Power Consumption	Ready	Less than 160W	Less than 160W
	AVG.	Less than 350W *Currency: 5A(110V) / 3A(220V)	Less than 350W *Currency: 5A(110V) / 3A(220V)
	Max/Peak	700W/1KW	700W/1KW
	Sleep	Less than 30W	Less than 30W
Dimension (W x D x H)	Set(mm)	413 X 364 X 333	413 X 364 X 333
	Consumables	- Imaging Unit: 304 x 264 x 150 mm (11.9 x 10.4 x 5.9) - Toner Cartridge(Color): 64 x 64 x 93 mm - Toner Carteidge(Black): 80 x 80 x 95 mm	- Imaging Unit: 304 x 264 x 150 mm (11.9 x 10.4 x 5.9) - Toner Cartridge(Color): 64 x 64 x 93 mm - Toner Carteidge(Black): 80 x 80 x 95 mm
	Consumables Packaging	- Imaging Unit: 492 x 384 x 227 mm (19.4 x 15.1 x 8.9) - Toner Cartridge(Color): 99 x 65 x 158 mm - Toner Cartridge(Black): 108 x 88 x 173 mm	- Imaging Unit: 492 x 384 x 227 mm (19.4 x 15.1 x 8.9) - Toner Cartridge(Color): 99 x 65 x 158 mm - Toner Cartridge(Black): 108 x 88 x 173 mm
Weight	Set (with consumables)	20.5 Kg (45.2 lbs)	20.5 Kg (45.2 lbs)
	Consumable	- Imaging Unit: 3.2 kg - Toner Cartridges (C/M/Y each): 0.102 kg - Toner Cartridge(Black): 0.176 kg	- Imaging Unit: 3.2 kg - Toner Cartridges (C/M/Y each): 0.102 kg - Toner Cartridge(Black): 0.176 kg
	Consumable Packing	- Imaging Unit: 4.0 kg - Toner Cartridges (C/M/Y each): 0.110 kg - Toner Cartridge(Black): 0.180 kg	- Imaging Unit: 4.0 kg - Toner Cartridges (C/M/Y each): 0.110 kg - Toner Cartridge(Black): 0.180 kg

2.1.2.2 Controller

Controller & S/W		CLX-2160	CLX-2160N
MPU		Samsung CHORUSm 300MHz	Samsung CHORUSm 300MHz
Memory	Std.	128 MB	128 MB
	Max.	128 MB	128 MB
Memory Expansion		N/A	N/A
Printer Languages		SPL-C (Samsung Printer Language Color)	SPL-C (Samsung Printer Language Color)
Fonts		Windows fonts	Windows fonts
Driver	Supporting OS	Windows 98SE/Me/2000/XP/2003/Vista	Windows 98SE/Me/2000/XP/2003/Vista
		Various Linux OS including Red Hat 8.0~9.0, Mandrake 9.2~10.1, SuSE 8.2~9.2 and Fedora Core 1~4	Various Linux OS including Red Hat 8.0~9.0, Mandrake 9.2~10.1, SuSE 8.2~9.2 and Fedora Core 1~4
		Mac OS X 10.3~10.5	Mac OS X 10.3~10.5
	Default Driver	SPL-C (Samsung Printer Language Color)	SPL-C (Samsung Printer Language Color)
	WHQL	Windows 2000/XP/Vista	Windows 2000/XP/Vista
Application	TWAIN	Yes(Windows, Mac, Linux)	Yes(Windows, Mac, Linux)
	TWA	Yes(Windows XP or Higher)	Yes(Windows, Mac, Linux)
	PSU	Yes(Windows, Mac, Linux)	Yes(Windows, Mac, Linux)
	Smart Panel	Yes(Windows, Mac, Linux)	Yes(Windows, Mac, Linux, Network)
	Network Management	N/A	Set IP, SynThru 4.5 (SWAS) (IE 5.0 or higher, Safari 1.3 or higher, Firefox 1.5 Win2000 or higher, Windows only)
	SmarThru	SmarThru 4(Windows only)	SmarThru 4(Windows only)

TONER
www.tonerplus.com.ua

2.1.2.3 Interface

Interface	CLX-2160	CLX-2160N
Parallel	N/A	N/A
USB	- USB 2.0 - USB Host 1.1 (PictBridge, Direct Printing, Scan to USB)	- USB 2.0 - USB Host 1.1 (PictBridge, Direct Printing, Scan to USB)
Network	N/A	Ethernet 10/100 Base TX
Wireless	N/A	N/A
Network Interface		
Protocol	N/A	TCP/IP, IPP, SNMPv2
Network OS	N/A	- Windows 98SE/Me/2000/XP/Vista - Mac OS X 10.3~10.5 ==> TCP/IP Printing Only- Various Linux OS including Red Hat 8 ~ 9, Fedora Core 1 ~ 4, Mandrake 9.2 ~ 10.1, and SuSE 8.2 ~ 9.2 - Unix HP-UX, Solaris, SunOS, SCO UNIX
User Interface		
LCD & Button	16 X 2 Line LCD(Iris), 11 keys(Direction 5, Special key 3, Stop/Color/Mono 3)	16 X 2 Line LCD(Iris), 11 keys(Direction 5, Special key 3, Stop/Color/Mono 3)
LED	4 LED for CMYK toners1 LED for status (Green/Red)	4 LED for CMYK toners1 LED for status (Green/Red)

2.1.2.4 Scan

Scan		CLX-2160	CLX-2160N
Scan method		Color CIS <== Eiger Scan Unit	Color CIS <== Eiger Scan Unit
Scan Speed	Linearity, Halftone	15 Sec(300dpi,USB2.0,P4 3.0GHz,512M)/Ltr	15 Sec(300dpi,USB2.0,P4 3.0GHz,512M)/Ltr
	Gray	30 Sec(300dpi,USB2.0,P4 3.0GHz,512M)/Ltr	30 Sec(300dpi,USB2.0,P4 3.0GHz,512M)/Ltr
	Color	75 Sec(300dpi,USB2.0,P4 3.0GHz,512M)/Ltr	75 Sec(300dpi,USB2.0,P4 3.0GHz,512M)/Ltr
Resolution	Optical	600*2,400ppi	600*2,400ppi
	Enhanced	4,800*4,800ppi	4,800*4,800ppi
Halftone		256levels	256levels
Scan Size	Max. Doc. Width	Max.216mm(8.5)	Max.216mm(8.5)
	Effiective Scan Width	Max 208mm(8.2inch)	Max 208mm(8.2inch)
Scan Depth	Color	24bits	24bits
	Mono	- 1bit for Linearity & Halftone - 8Bits for Gray scale	- 1bit for Linearity & Halftone - 8Bits for Gray scale
Compatibility		[Windows] - Windows 98SE/Me/2000/XP/Vista	[Windows] - Windows 98SE/Me/2000/XP/Vista
		Various Linux OS including Red Hat 8.0~9.0, Mandrake 9.2~10.1, SuSE 8.2~9.2 and Fedora Core 1~4	Various Linux OS including Red Hat 8.0~9.0, Mandrake 9.2~10.1, SuSE 8.2~9.2 and Fedora Core 1~4
		Mac OS X 10.3~10.5 and Universal Mac	Mac OS X 10.3~10.5 and Universal Mac

TONER Samsung Electronics
www.tonerplus.com

2.1.2.5 Copy

Copy		CLX-2160	CLX-2160N
Copy Speed	Simplex Copy Speed	@SDMC up to 16 cpm in A4 black (17 cpm in Letter) Up to 4 cpm in A4 color (4 cpm in Letter)	@SDMC up to 16 cpm in A4 black (17 cpm in Letter) Up to 4 cpm in A4 color (4 cpm in Letter)
	Duplex Copy Speed	N/A	N/A
FCOT (B&W)	From Ready	Less than 18 sec	Less than 18 sec
	From Idle	Less than 50 sec	Less than 50 sec
	From Coldboot	Less than 50 sec	Less than 50 sec
FCOT (Color)	From Ready	Less than 85 sec	Less than 85 sec
	From Idle	Less than 85 sec	Less than 85 sec
	From Coldboot	Less than 85 sec	Less than 85 sec
Zoom Range		25% to 400% for Platen	25% to 400% for Platen
Multi Copy		1~99	1~99
Preset		[Original(100%)] [A4 → A5(71%)] [LGL → LTR(78%)] [LGL → A4(83%)] [A4 → LTR(94%)] [EXE → LTR(104%)] [A5 → A4(141%)] 25%, 50%,150%, 200%, 400% [Custom: 25-400%]	[Original(100%)] [A4 → A5(71%)] [LGL → LTR(78%)] [LGL → A4(83%)] [A4 → LTR(94%)] [EXE → LTR(104%)] [A5 → A4(141%)] 25%, 50%,150%, 200%, 400% [Custom: 25-400%]
Original Type (Mono)	Text	Scan: 600x300dpi , Printing : 600x600dpi	Scan: 600x300dpi , Printing : 600x600dpi
	Text/Photo	Scan: 600x300dpi , Printing : 600x600dpi	Scan: 600x300dpi , Printing : 600x600dpi
	Photo	Scan : 600x600dpi, Printing : 1200x1200dpi	Scan : 600x600dpi, Printing : 1200x1200dpi
Original Type (Color)	Text	Scan: 600x300dpi , Printing : 600x600dpi	Scan: 600x300dpi , Printing : 600x600dpi
	Text/Photo	Scan: 600x300dpi , Printing : 600x600dpi	Scan: 600x300dpi , Printing : 600x600dpi
	Photo	Scan : 600x600dpi, Printing : 1200x1200dpi	Scan : 600x600dpi, Printing : 1200x1200dpi
Original Type	Factory Default	Text	Text
Automatic Background Suppression		Yes (Mono)	Yes (Mono)
Darkness Control		3 level	3 level
Collation Copy		N/A	N/A
Special Copy	ID Card Copy	Yes	Yes
	Auto fit	Yes	Yes
	Margin Shift	No	No
	Book Copy	No	No
	Auto Suppression	No	No
	Covers	No	No
	Transparencies	No	No
	Create Booklet	No	No
	N-up copy	2-up, 4-up	2-up, 4-up
	Clone	Yes	Yes
	Poster	Yes (X 9 only)	Yes (X 9 only)

TONER
www.tonerplus.com.ua

2.1.2.6 Paper Handling

Paper Handling		CLX-2160	CLX-2160N
Standard Capa.		150-sheet Cassette	150-sheet Cassette
Max. Capa.		150 sheets @75g/㎡	150 sheets @75g/㎡
Printing	Max. Size	216 x 356mm (8.5 x 14)	216 x 356mm (8.5 x 14)
	Min. Size	76 x 127 mm (3 x 5)	76 x 127 mm (3 x 5)
	Margin(T/B/L/R)	4 mm, 4 mm, 4 mm, 4 mm	4 mm, 4 mm, 4 mm, 4 mm
Multi-purpose tray			
Capacity		1 sheet	1 sheet
Media sizes		76 x 127 mm (3 x 5) ~ 216 x 356 mm (8.5 x 14)	76 x 127 mm (3 x 5) ~ 216 x 356 mm (8.5 x 14)
Media type		Envelopes, Labels, Card stock, Transparency film, Plain Papers	Envelopes, Labels, Card stock, Transparency film, Plain Papers
Media weight		16~43lb (60 to 163g/㎡)	16~43lb (60 to 163g/㎡)
Sensing		Paper detection sensor	Paper detection sensor
Standard Cassette Tray			
Capacity		150 sheets @ 75g/㎡	150 sheets @ 75g/㎡
Media sizes		76 x 127 mm (3 x 5) ~ 216 x 356 mm (8.5 x 14)	76 x 127 mm (3 x 5) ~ 216 x 356 mm (8.5 x 14)
Media types		Envelopes, Labels, Card stock, Transparency film, Plain Papers	Envelopes, Labels, Card stock, Transparency film, Plain Papers
Media weight		16~43lb (60 to 163g/㎡)	16~43lb (60 to 163g/㎡)
Size sensor		N/A	N/A
User Interface		No indicator	No indicator
Sensing		Paper empty sensor	Paper empty sensor
Optional Cassette Tray			
Capacity		N/A	N/A
Media sizes		N/A	N/A
Media types		N/A	N/A
Media weight		N/A	N/A
Size sensor		N/A	N/A
User Interface		N/A	N/A
Sensing		N/A	N/A
Output Stacking			
Capacity	FaceUp	N/A	N/A
	FaceDown	100 sheets @ 75g/㎡	100 sheets @ 75g/㎡
Output Full sensing		Yes	Yes
Duplex			
Supporting		Manual	Manual
Throughput		N/A	N/A
Media sizes		N/A	N/A
Media types		N/A	N/A
Media weight		N/A	N/A

TONER Samsung Electronics
www.tonerplus.com.ua

2.1.2.7 Comsumables and CRU

Consumables and CRU		CLX-2160	CLX-2160N
No. of CRUs		6 (C/M/Y/K toner, Imaging Unit, Waste toner container) K toner cartridge: CLX-K300A C toner cartridge: CLP-C300A M toner cartridge: CLP-M300A Y toner cartridge: CLP-Y300A Imaging unit : CLP-R300A Waste toner container: CLP-W300A	6 (C/M/Y/K toner, Imaging Unit, Waste toner container) K toner cartridge: CLX-K300A C toner cartridge: CLP-C300A M toner cartridge: CLP-M300A Y toner cartridge: CLP-Y300A Imaging unit : CLP-R300A Waste toner container: CLP-W300A
Toner	Black	2,000 A4/Letter pages, at 5% Coverage, (Ships with 1,500 pages Starter Toner Cartridge)	2,000 A4/Letter pages, at 5% Coverage, (Ships with 1,500 pages Starter Toner Cartridge)
	Color	1,000 A4/Letter pages, at 5% Coverage, (Ships with 700 pages Starter Toner Cartridge)	1,000 A4/Letter pages, at 5% Coverage, (Ships with 700 pages Starter Toner Cartridge)
	Key	Unique, Electronic key(CRUM)	Unique, Electronic key(CRUM)
	Life detect	Life detect Sensor(Toner level sensor) + dot counting 90% exhausted: warning message (sensored via Toner level sensor) 100% exhausted: empty message (sensored via Toner level sensor) 120% exhausted: hardstop (sensored via dot count)	Life detect Sensor(Toner level sensor) + dot counting 90% exhausted: warning message (sensored via Toner level sensor) 100% exhausted: empty message (sensored via Toner level sensor) 120% exhausted: hardstop (sensored via dot count)
	Replace method	CMY mechanical key 3 step for install / replacing	CMY mechanical key 3 step for install / replacing
Imaging Kit (OPC+Deve)	Yield	Approx. 20K black pages (or 12.5K color pages)	Approx. 20K black pages (or 12.5K color pages)
	Key	Unique, Electronic key(CRUM)	Unique, Electronic key(CRUM)
	Sensor	None, that would be traced via software	None, that would be traced via software
	Replace method	6 steps for install/replacing	6 steps for install/replacing
Waste Toner Container	Yield	1,250 sheets (Full Color 5% Image) or 5,000 images	1,250 sheets (Full Color 5% Image) or 5,000 images
	Key	Yes	Yes
FRU			
No. of FRUs		4 (ITB, Fuser, T2 roller, Pick-up roller)	4 (ITB, Fuser, T2 roller, Pick-up roller)
ITB	Yield	Approx. 100K black pages (or 25K color pages)	Approx. 100K black pages (or 25K color pages)
	Key	None	None
	Sensor	None	None
Fuser	Yield	100,000 sheets B&W or 50,000 sheets Color	100,000 sheets B&W or 50,000 sheets Color
	Key	None	None
T2 Roller	Yield	100,000 sheets, Replacable	100,000 sheets, Replacable
	Key	None	None
Pick-up Roller	Yield	50,000 sheets, Replacable	50,000 sheets, Replacable
	Key	None	None

TONER
www.tonerplus.com.ua

2.1.2.8 Reliability and Other

Reliability & Service		CLX-2160	CLX-2160N
Printing Volume(AMPV)		180 pages/180 pages(Mono/Color)	180 pages/280 pages(Mono/Color)
Max Monthly Duty		24,200 images (color 17,600 Mono 6,600 Total 24,200 image)	24,200 images (color 17,600 Mono 6,600 Total 24,200 image)
MPBF		40,000 images (color 29,091 Mono 10,909 Total 40,000 image)	40,000 images (color 29,091 Mono 10,909 Total 40,000 image)
MTTR		< 30 min.	< 30 min.
SET Life Cycle		200,000 image or 5 years whitchever comes first	200,000 image or 5 years whitchever comes first
Real-time Clock		None	None
System-record		Total image count Total page count (color/mono) Imaging unit life Fuser life Transfer Unit life Toner image count (CMYK) Tray roller life Cartridge Coverage	Total image count Total page count (color/mono) Imaging unit life Fuser life Transfer Unit life Toner image count (CMYK) Tray roller life Cartridge Coverage
Test Print		Configuration Sheet	Configuration SheetNetwork Configuration Sheet
RDC	Comm. Mode	N/A	N/A
	Operation	N/A	N/A
Temperature	Operating	10 ~ 32.5 (59 ~ 90.5F)	10 ~ 32.5 (59 ~ 90.5F)
	Storage	-20 ~ 40(-4 ~ 104F)	-20 ~ 40(-4 ~ 104F)
Humidity	Operating	20 ~ 80RH	20 ~ 80RH
	Storage	0 ~ 95RH	0 ~ 95RH
In-Box		Set C/M/Y/K to be installed Power cord USB cable (China, Korea, India, Russia) Driver CD (Driver, Application, manual) Quick installation Guide sheet Warranty Card	Set C/M/Y/K to be installed Power cord USB cable (China, Korea, India, Russia) Driver CD (Driver, Application, manual) Quick installation Guide sheet Warranty Card
Options			
Memory		N/A	N/A
Second Cassette		N/A	N/A
PostScript		N/A	N/A
Network		N/A	Built-in
Wireless Network		N/A	N/A
Hard Disk		N/A	N/A
Duplex Unit		N/A	N/A

TONER Samsung Electronics
www.tonerplus.com.ua

2.1.2.9 Periodic Replacing Parts

NO.	ITEM	Description	SEC_Code	Image	Life(Pages)
1	Fuser Unit	ELA UNIT-FUSER 220V	JC96-03609A		100K
		ELA UNIT-FUSER 110V	JC96-03609B		
2	ITB Unit	ELA UNIT-ITB_SET	JC96-03611A		60K
3	T2 Roller (Ass'y replacement)	MEA UNIT-T2 ROLLER	JC97-02628A		100K
4	Pick-up Roller	MEA UNIT-PICKUP ROLL	JC97-02647A		50K

2.1.2.10 Accessry Parts

NO.	ITEM	Description	SEC_Code	Image	QT'y
1	Power Code	CBF POWER CORD	-		1
2	CD's	S/W APPLICATION-CD	-	-	1
		NETWORK CD	-	CLX-2160N only	1
3	Manual's	NETWORK QUICK GUIDE	-	CLX-2160N only	1
		MANUAL-(CARD)WARRANTY CARD	-	-	1

2.1.2.11 Option Parts

NO.	ITEM	Description	SEC_Code	Image	QT'y
1	Memory	N(On basic 128 MB, Non extendable)	-	-	-
2	Second Cassette	N(On basic 150 sheets, Non second tray)	-	-	-

TONER
www.tonerplus.com.ua

2.1.3 Model Comparison Table

2.1.3.1 SEC Model

	Iris	Maple
Image	· 4-in-1, N/W · 3-in-1, N/W	· 3-in-1, N/W · 3-in-1, Basic
	CLX-3160 Series	CLX-2160 Series
Speed	16/4ppm	16/4ppm
ADF	YES (50 sheets)	N/A
Resolution	2,400 x 600 dpi	2,400 x 600 dpi
Emulation	SPL-C	SPL-C
Interface	N/W	N/W (Factory Opt.)
	USB 2.0	USB 2.0
Memory	128 MB	128 MB
Paper Capacity Paper Output	150 Cassette, 1 Manual 100 Face Down	150 Cassette, 1 Manual 70 Face Down
Dimension (WDH)	466 x 427 x 486 mm, 100%	413.2 x 364.5 x 333 mm, 52%
Weight	20.5 Kg	14.5 Kg
Toner	2K/1K	2K/1K
Other	CCD Color Copy Button	CIS (SCX-4200 Scanner common) ID Copy & Direct Printing

TONER Samsung Electronics
www.tonerplus.com.ua

2.1.3.2 Competitor Model

	Samsung CLX-2160	Samsung CLX-2160N	HP CM1015	Canon MF-8170C	EPSON CX-11N
Image					
Function	3-in-1	3-in-1, N/W	3-in-1	4-in-1, N/W	3-in-1, N/W
Print Speed	16/4 ppm	16/4 ppm	8/8 ppm	16/4 ppm	25/5 ppm
Copy Speed	16/4 ppm	16/4 ppm	8/8 ppm	16/4 ppm	25/5 ppm
Resolution	2,400 x600 dpi	2,400 x600 dpi	2,400 x600 dpi	2,400 x600 dpi	2,400 x600 dpi
Scan Resolution	1,200 X 1,200 (Max.19,200)	1,200 X 1,200 (Max.4,800)	1,200 X 1,200 (Max.19,200)	1,200 X 2,400 (Max. 9,600)	600 x 600 dpi (Max.9,600)
FPOT	14 sec / 57 sec	14 sec / 57 sec	20.7 sec	22 sec /46 sec	9 sec /17 sec
Processor	300 MHz	300 MHz	300 MHz	-	233 MHz
Memory (Max.)	128MB/128MB	128MB/128MB	96MB/224MB	128MB/128MB	128MB/576MB
Emulation	SPL-C	SPL-C	PCL, PS	GDI	GDI
Interface	USB 2.0	USB 2.0, N/W	USB 2.0	USB 2.0, N/W	USB 2.0, N/W
Paper Input	150 CST	150 CST, 1 Manual	250 CST, 1 Manual 250sheets SCF	250 CST, 125 MP ADF 50sheets	180 MP, ADF 50sheets
Toner	2K/1K	2K/1K	2.5K/2K	5K/4K	4K/(4K,1.5K)
Dim. (WDH)	413.2x363.5x333 43%	413.2x364.5x333 43%	437x508x525mm 100%	510x513x640mm 144%	460x467x592mm 109%

TONER
www.tonerplus.com.ua

2.2 Summary of Product

This chapter describes the functions and operating principal of the main component.

2.2.1 Printer Components

2.2.1.1 Front View

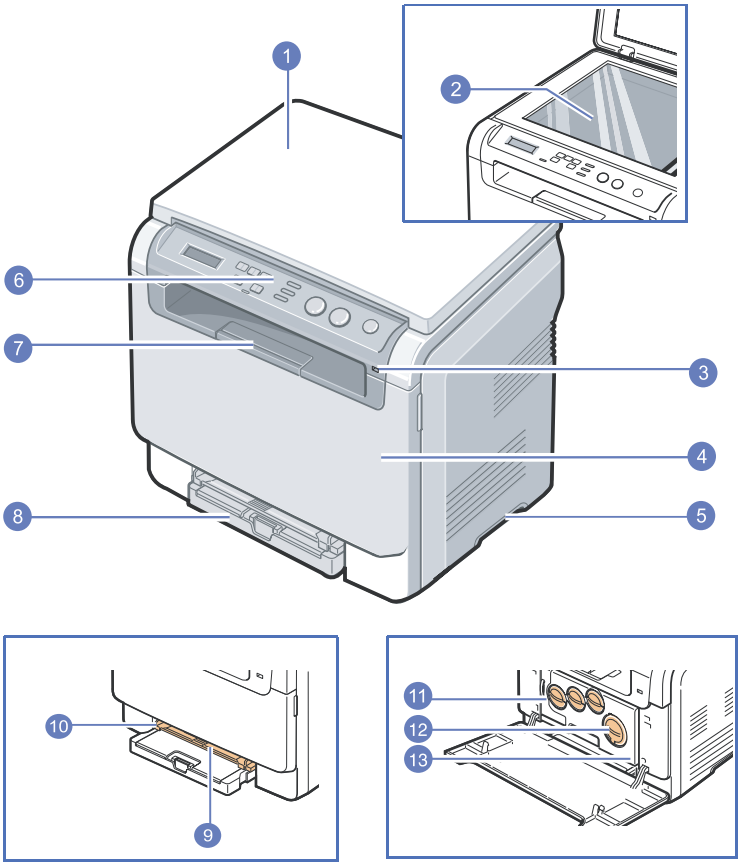

* The figure above shows an **CLX-2160N** with all available accessories.

1	scanner lid	10	manual feeder paper width guides
2	scanner glass	11	waste toner container
3	USB memory port	12	toner cartridges
4	front cover	13	imaging unit
5	handle		
6	control panel		
7	output support		
8	tray		
9	manual feeder		

TONER Samsung Electronics
www.tonerplus.com.ua

2.2.1.2 Rear View

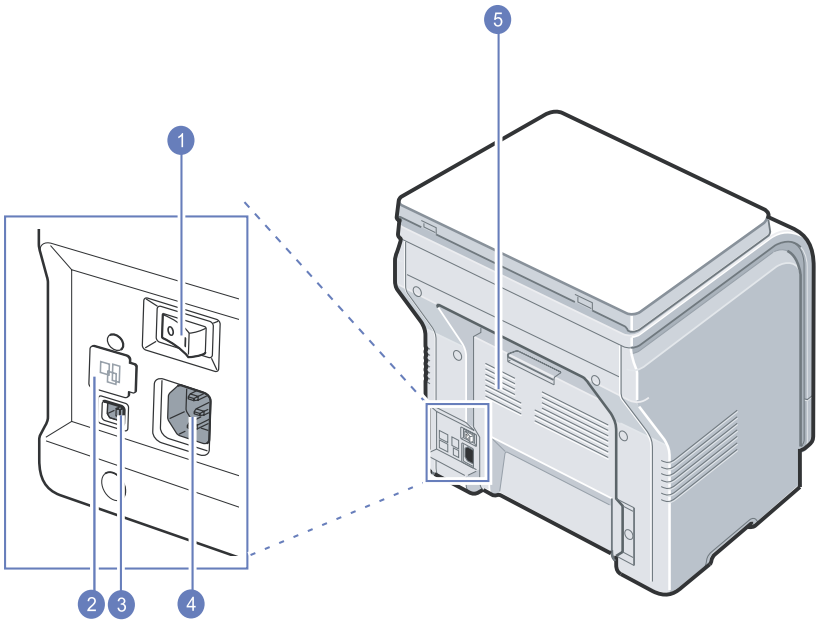

* The figure above shows an **CLX-2160N** with all available accessories.

1	power switch	4	power receptacle
2	network port	5	rear cover
3	USB port		

TONER
www.tonerplus.com.ua

2.2.2 System Layout (Paper path)

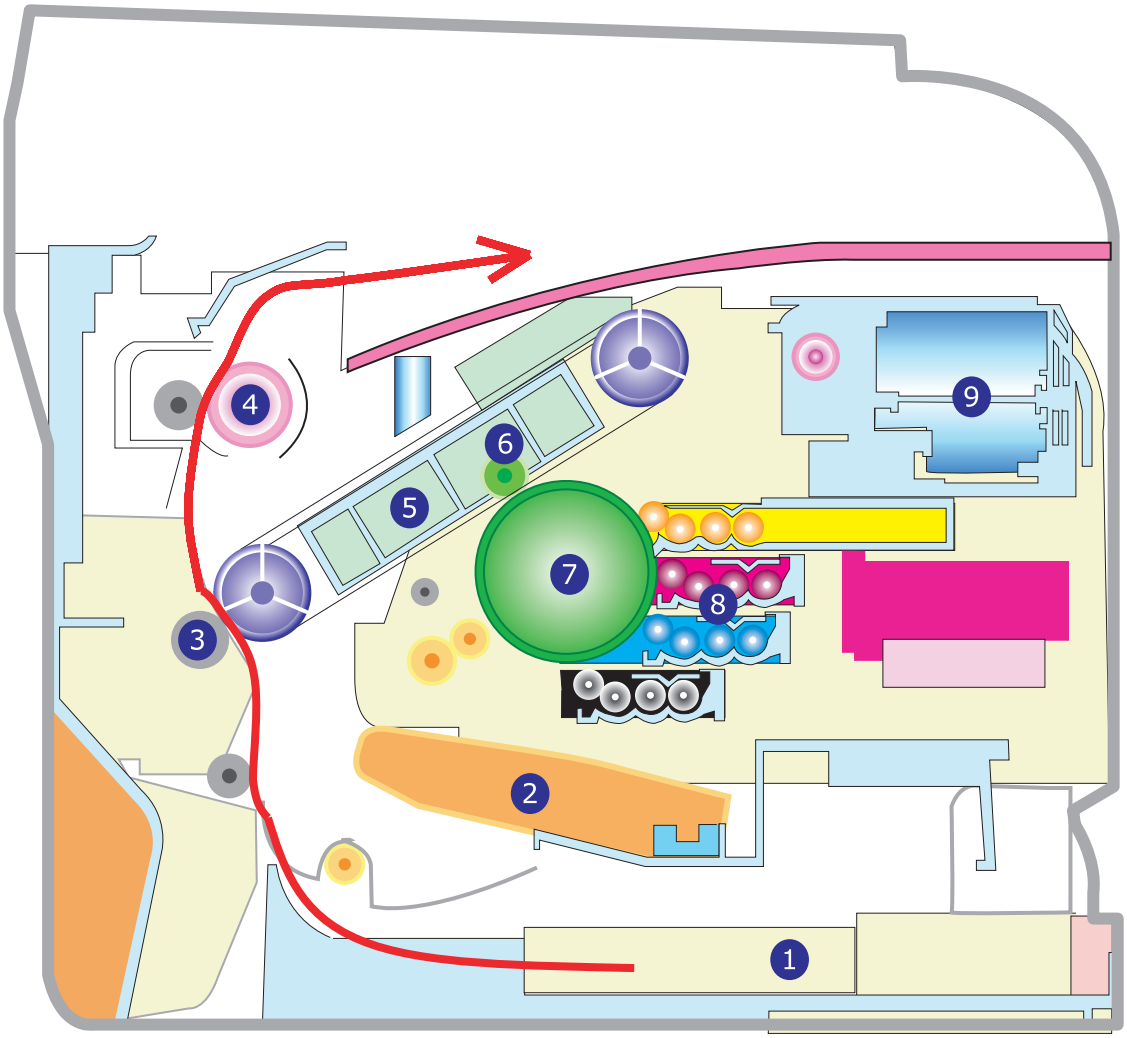

1. Paper Input (Cassette)
2. LSU (Laser Scanning Unit)
3. 2nd Transfer Roller
4. Fuser
5. ITB (Intermediate Transfer Belt)
6. 1st Transfer Roller
7. OPC (Organic Photo Conductor)
8. Developers (Y, M, C, & K)
9. Toner Kits (Y, M, C, & K)

TONER Samsung Electronics
www.tonerplus.com.ua

2.2.2.1 Cassette

- Feeding Method : Cassette Type
- Feeding Standard : Center Loading
- Feeding Capacity : Cassette 150 Sheets(75g/ß≥, 20lb Paper Standard)
  Manual Feeder 1 Sheet
- Paper Detecting Sensor : Photo Sensor (Empty, Registration, Exit)
- Paper Size Sensor : None

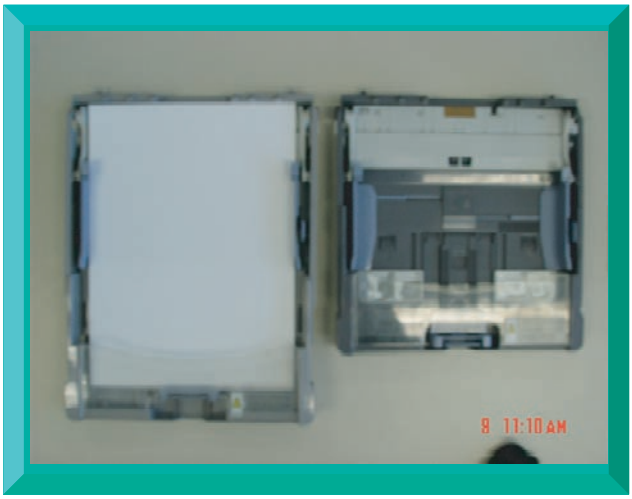

2.2.2.2 LSU(Laser Scan Unit)

- Consisted of LD(Laser Diode) and Polygon Motor Control.

Error	Phenomenon
Polygon Motor Error	The Rotation of Polygon Motor can not reach stable
H-sync Error	Though the rotation of Polygon Motor reach stable, the signal of H-sync is not occurred

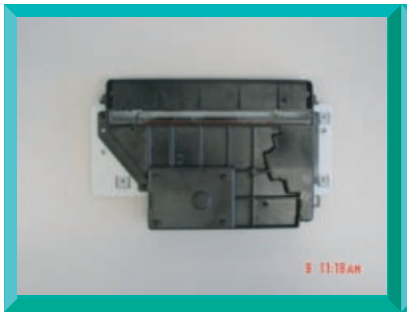

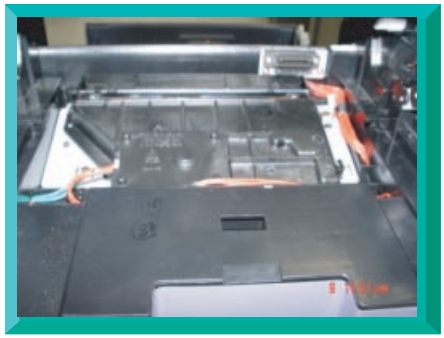

TONER
www.tonerplus.com.ua

2.2.2.3 2nd Transfer Ass'y

- The life span: Print over 100,000 sheets (in 15~30 ℃)
- Specification: Similar to Gogh(CLP-3XX) Ass'y.

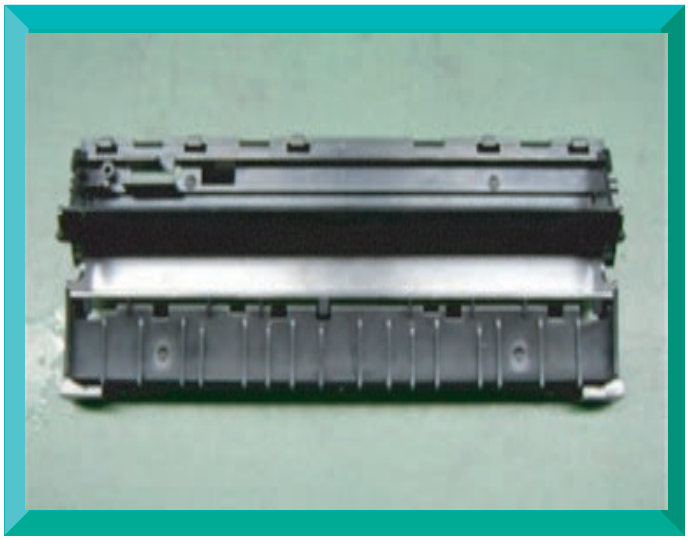

2.2.2.4 Fuser Ass'y

- Heat Lamp : New Part - Knuckle Type
- Heat Roller : Similar to Gogh.
- 2 Pressure Roller : One is similar to HummingBird, the Other is a new added part comparing with other Fuser
- Thermistor - Temperature-Measuring Device
- Thermostat - Critical Temperature-Detecting Device

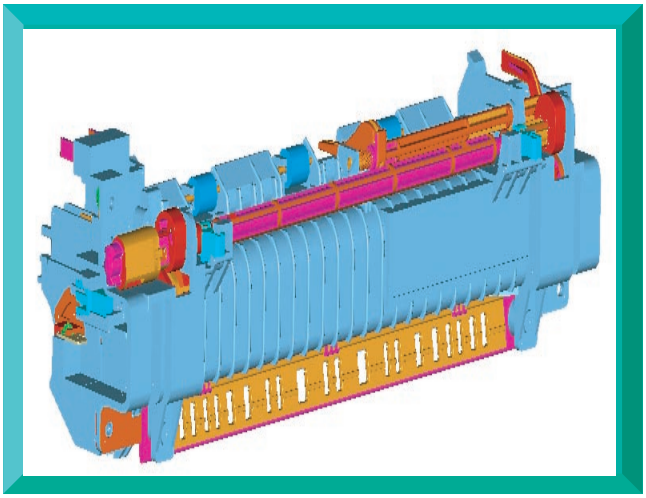

TONER Samsung Electronics
www.tonerplus.com.ua

2.2.2.5&6 ITB(Intermediate Transfer Belt) & 1st Transfer Roller

- The life span: Print over 100,000 Images
- The ITB unit includes 1st Transfer Roller

2.2.2.7&8 OPC(Organic Photo-Conductor) & Developer

- The life span: Print over 44,000 Images (Both)
- Imagine Unit consists of 4 kinds of Developer, OPC, and Deve, Main Frame

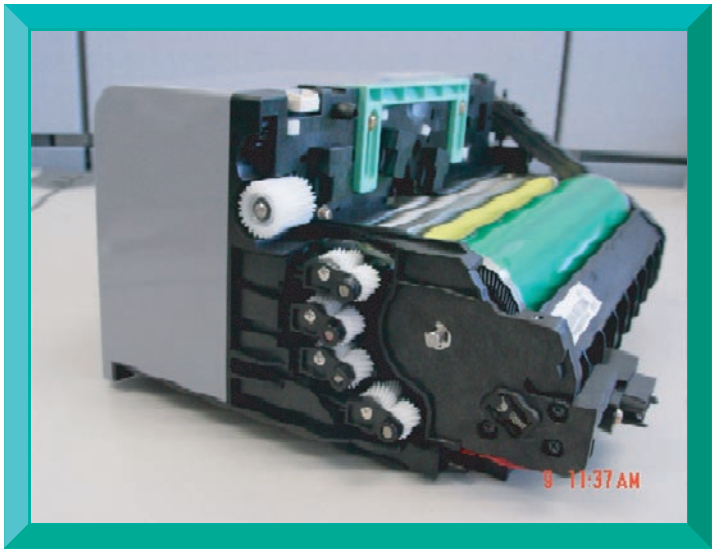

TONER
www.tonerplus.com.ua

2.2.2.9 Toner Kits

· The life span: Color -> 1000 images (Standard Coverage Print-Out)
Black -> 2000 images (Standard Coverage Print-Out)

2.2.2.10 Driver Ass'y

· It is a power delivery unit by gearing

· By driving the motor, it supplies the power to the feeding unit, the fusing unit, and the distributing unit.

· The Main Motor is similar to BigBang Main Motor.

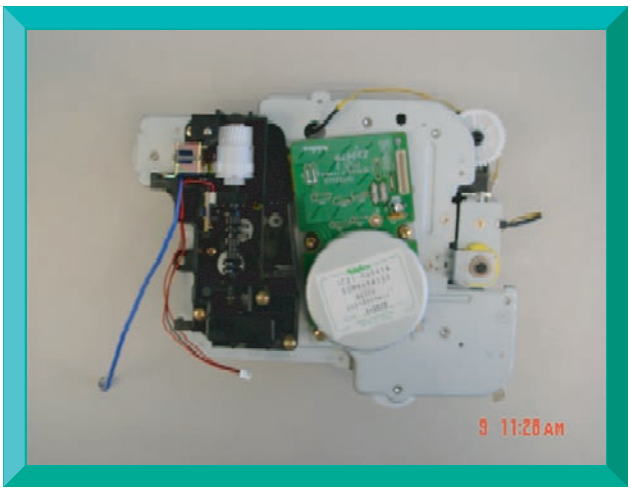

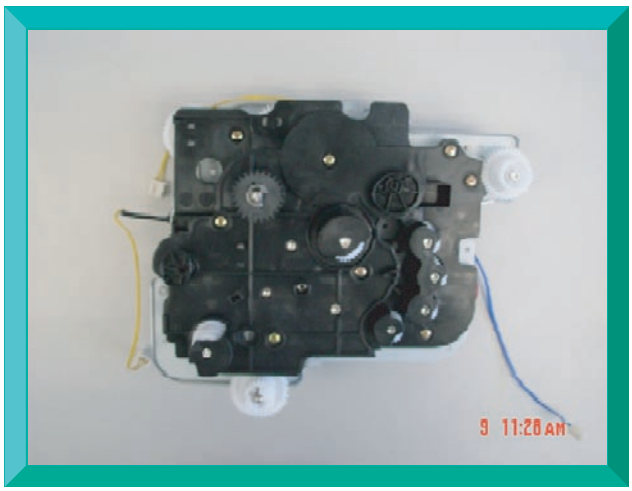

TONER Samsung Electronics
www.tonerplus.com.ua

2.2.2.11 Scan Ass'y

- 3 in 1 : CLX-2160
- Scanning Method: Color CIS (600 x 1200 dpi Optical)
- Copy speed : SDMC 16cpm/A4(B/W), 4cpm/A4(Color)

2.2.2.12 Manual Tray

- For customer convenience in managing special paper
- Capacity : 1 sheet

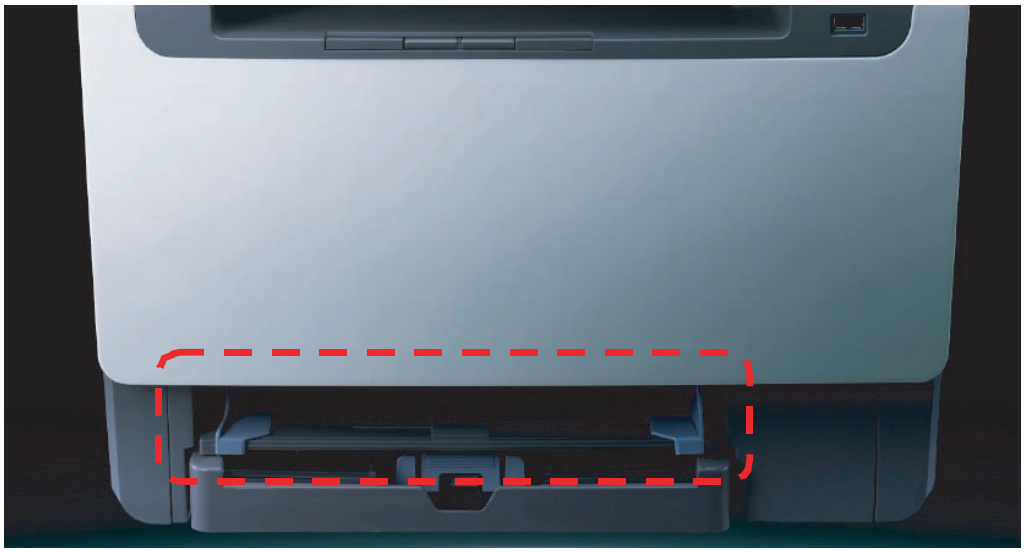

TONER
www.tonerplus.com.ua

2.2.3 Engine H/W Specifications

The CLX-2160(N) is roughly made up a Main Controller part, a Operation Panel part, a Scanner part, and a Power part. Each part is separated modules which focus on common and standard design of different kind products. The Main controller part is composed of one CPU and one Board and works to control all the parts for printing, copying, scanning, and networking. The Operation Panel part is for User's interface. The Scanner part is composed of a Platen and is connected with the Main Controller by Harnesses.

Model	CLP-300	CLP-300N	CLX-3160N	CLX-2160N	CLX-2160
Processor	Chorus M (SoC)	Chorus M(SoC)	Chorus M (SoC)	Chorus M(SoC)	Chorus M(SoC)
SDRAM	32MB	64M	128M	128M	128M
Flash ROM	2MB	4MB	4MB	8MB	8MB
EEPROM	8KB(24C64)	8KB(24C64)	8KB(24C64)	8KB(24C64)	8KB(24C64)
Compatibility	GDI(SPL-color)	GDI(SPL-color)	GDI(SPL-color)	GDI(SPL-color)	GDI(SPL-color)
Interfaces	USB2.0	USB2.0, LAN	USB2.0 USB Host 1.1 LAN	USB2.0 USB Host 1.1 LAN	USB2.0 USB Host 1.1
SCAN	-	-	Color CCD Optical 600X600	Color CIS Optical 600X1200	Color CIS Optical 600X1200
FAX	-	-	-	-	-
User.Interfaces	Only LED panel	Only LED panel	LCD Panel	LCD Panel	LCD Panel

■ H/W Configuration (Engine & Controller)

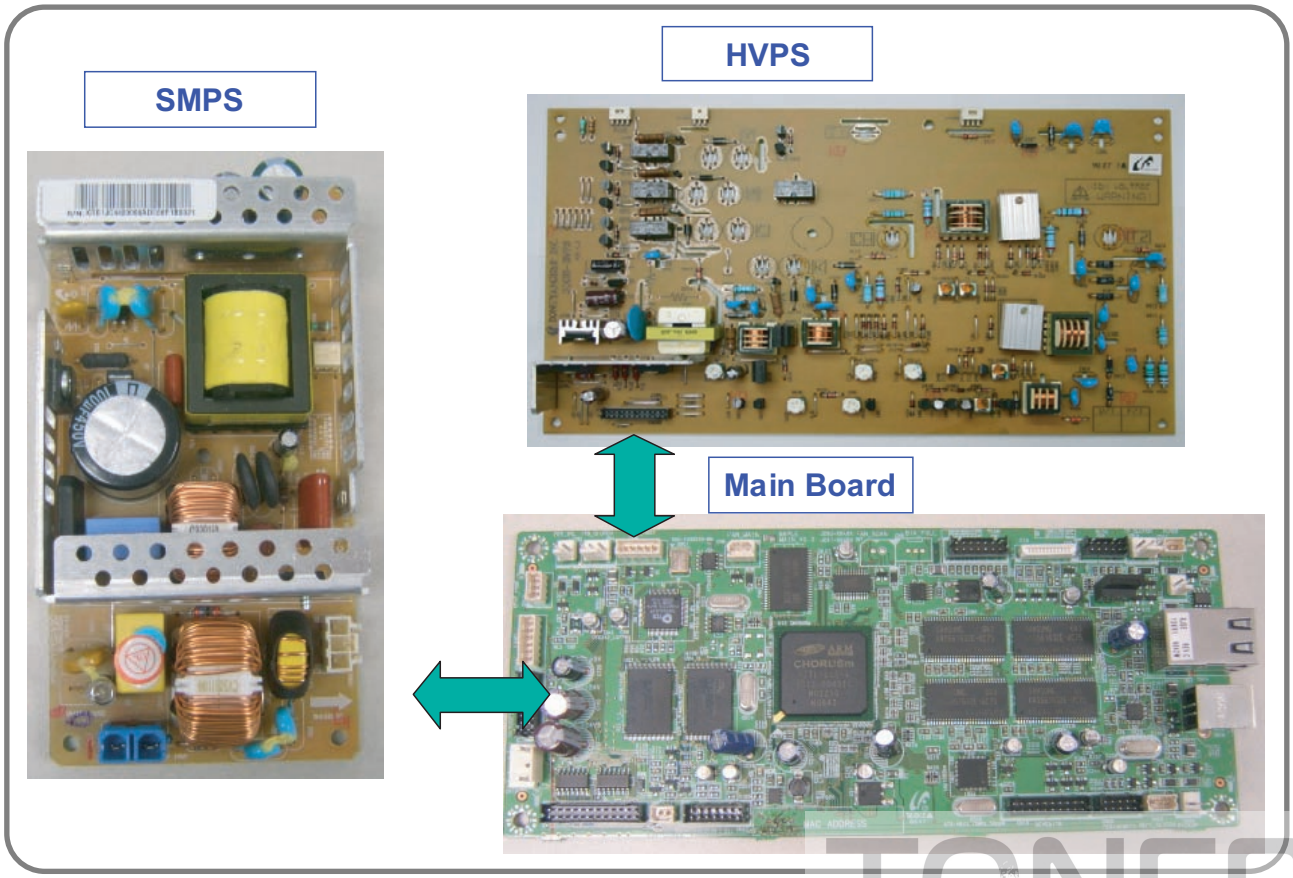

TONER
Samsung Electronics
www.tonerplus.com.ua

2.2.3.1 Main B'D Configuration

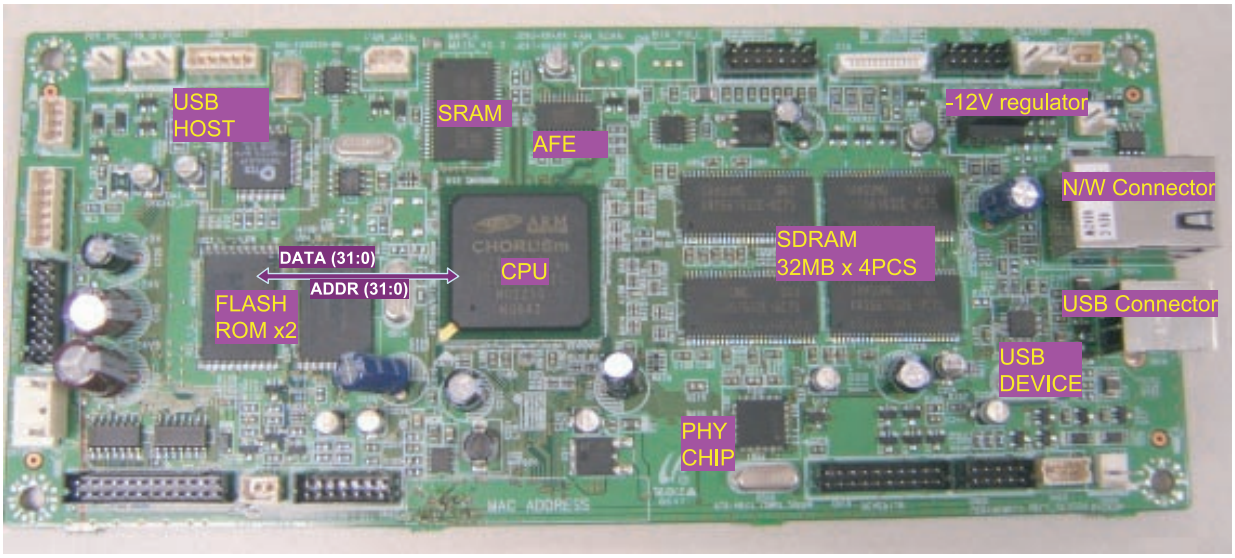

■ **CPU : Chorus M (SoC)**

■ **Memory :**
- RAM : 64MB (CLP-300N), 32MB(CLP-300), 128MB(CLX-2160, 3160)
- ROM : 2~4MB FLASH *2160(4MB)
- NVRAM : 8KB (4K : N/W Parameter (MAC Address))

■ **Peripherals :**
- USB 2.0
- USB Host (PictBridge, SCAN to USB, USB to Print°¶). CLX-2160 Series
- 10/100 Based N/W (MII Interface Phy Chip Used) CLX-2160N Only

■ **I/O :**
- Digital I/O Port : Basic I/O, PWM : Motor & HVPS Control
- UART : Panel Communication, Debug
- I2C : NVRAM & CRUM Interface (EEPROM : 24C64, 34C02)
- Analog I/O Port (ADC : Sensor Interface, DAC : LD Power Control)

■ **Chorus M Architecture**
- CPU Core : ARM920 T 300Mhz (I-Cache : 16KB, D-Cache : 16KB)
- SDRAM Controller : 5 Bank, 100Mhz System Bus
- ROM Controller : 4 Banks (2 Bank Used)
- NAND FLASH Controller : 8/16 Bits interface (Not used)
- I/O Controller : 6 Banks
- DMA Controller : 6 Channel
- HPVC : Dual / Single Beam
- PVC : Dual / Single Beam (Not Used)
- UART : 5 Channels (Debug 1 Channel used only)
- Interrupt : 6 External, 26 Internal
- TIMER : 6 System Timer (S/W use Only)

TONER
www.tonerplus.com.ua

■ I/O Interface

· USB
- High Speed USB 2.0 Device
- USB Host (PictBridge)

· N/W Embedded
- Chorus M With MII Interface

· FAX
- N/A

· PWM
- High Voltage Control With Duty
- Main Motor Clock

· I2C Interface
- NVRAM
- CRUM

■ Power Flow

· SMPS
- Type 2(Standard)
- +24V : For use Mechanical Part (Motor & Actuator (Solenoid, Clutch))
- +5V : Logic, Analog, Sensor,

· Main B'D
- Supply From SMPS +5V
- Power Supply with two Regulator (3.3V : LDO, 1.2V : Switching Regulator)
- 3.3V : I/O Operating (Digital & Analog)
- 1.2V : Chorus M Core Voltage

· HVPS
- High Voltage Source for EP Condition
- Supply From SMPS +24V
- Controlled By PWM Pulse & I/O

TONER
Samsung Electronics
www.tonerplus.com.ua

2.2.3.2 SMPS(Switching Mode Power Supply) PBA

SMPS is consisted of SMPS part which supplies DC power for driving system and AC Heat Control part which supplies power to Fuser. Standard Type3 III is used.

1) DC Output

· Main Controller PBA, OP Panel, BLDC, Sensors, Clutches, Other PBAs

2) AC Output

· Fuser Unit(Heat Lamp, Thermostat)

3) Output Voltage

CHANNEL	+5.0V	+24V	+24VF
V_out	+5.0V +/-5%	+24.0V +15%/-10%	+24.0V +15%/-10%
Load	MicroController, CMOS, LOGIC	LSU	MOTOR, CLUTCH, HVPS

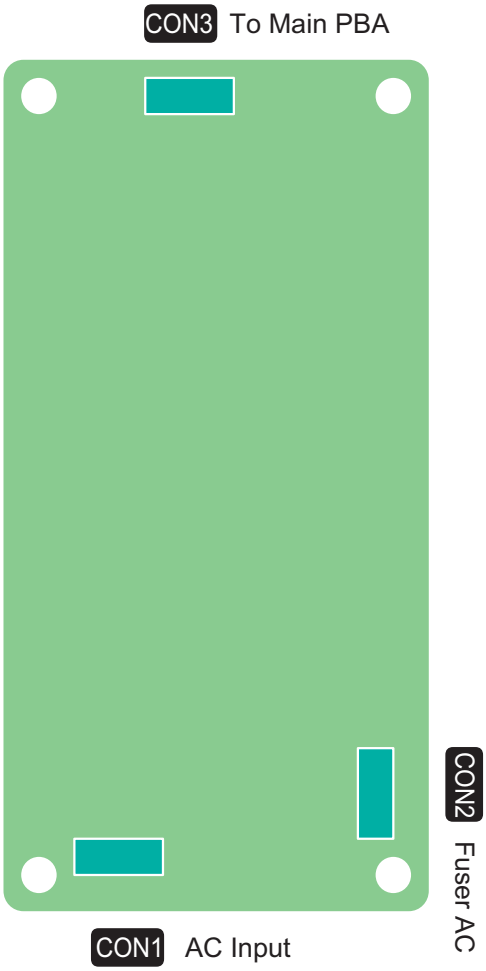

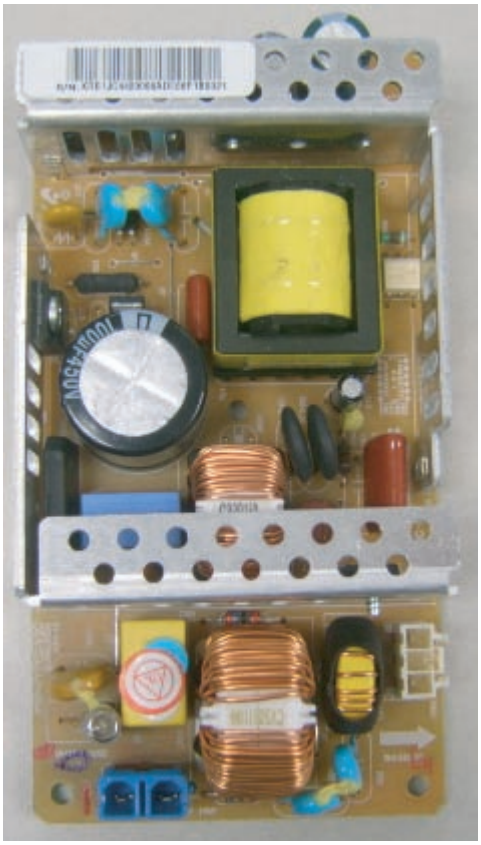

TONER
www.tonerplus.com.ua

PSP-TYPE2-V2C Power Supply Connector

DC Output Connector(CON3)					
Description	PIN NO	PIN ASSIGN		PIN NO	Description
Fuser ON (Active High)	Fuser ON	1	2	+24VS	Power (Photo Triac Bias)
Power	+24VS	3	4	GND	+24 Ground
Power	+24VS	5	6	GND	+24 Ground
Power	+24VS	7	8	GND	+24 Ground
Power	+24VS	9	10	GND	+24 Ground
Power	+5VS	11	12	GND	+5 Ground
Power	+5VS	13	14	GND	+5 Ground
Power	+5VS	15	16	GND	+5 Ground
Harness : 24AWG					

AC Intput Connector(CON1)		
PIN ASSIGN	PIN NO	Description
1	AC_L	AC Intput
2	AC_R	
KET MG640598(BLUE)		

SMPS → Heater Controller(CON2)		
PIN ASSIGN	PIN NO	Description
1	AC_L	AC Output for Heater
2	AC_N	
TYCO 3-176976-1		

TONER Samsung Electronics
www.tonerplus.com.ua

2.2.3.3 HVPS(High Voltage Power Supply) PBA

HVPS PBA generates high voltage of charger, supply, T1 and T2 which is supplied to Developer, ensuring optimum condition for image formation. HVPS receives input of 24V and generates high voltage, supplying it to Toner, OPC, Cartridge, ITB Unit and Transfer Roller.

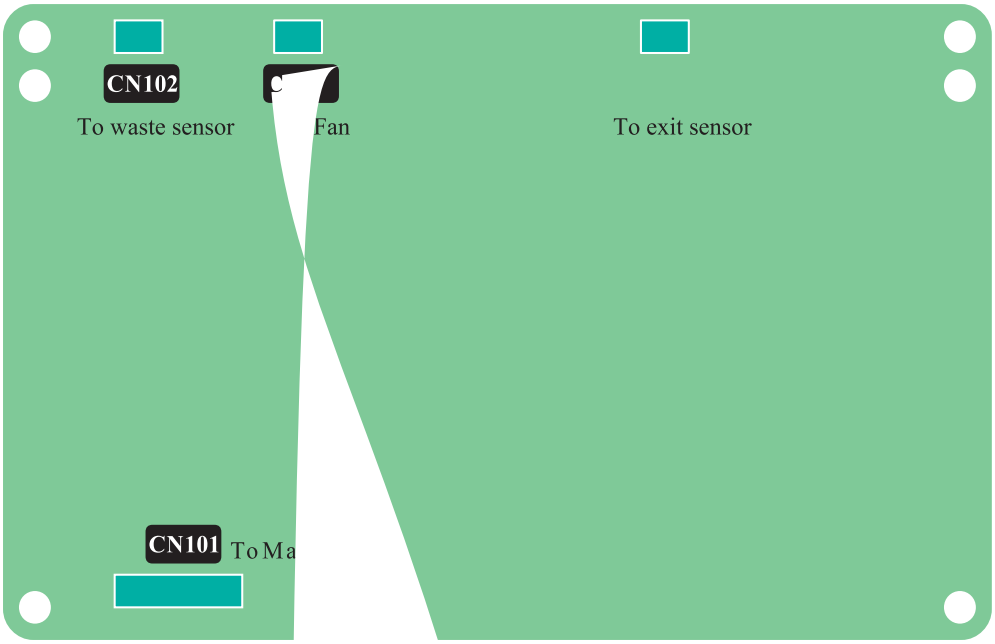

HVPS Connector

HVPS → Main Board					
Description	PIN NO	PIN ASSIGN		PIN NO	Description
Power	+24V	1	2	+24V	Power
Ground	Gnd	3	4	Gnd	Ground
	PWM_AC-Vpp	5	6	ENB_AC	
	PWM_DEVE	7	8	PWM_AC-DUTY	
	PWM_T2	9	10	PWM_T1	
	ENB_T2	11	12	PWM_CHARGE	
	READ_T2	13	14	READ_T1	
	EXIT_SENSOR	15	16	READ_CHARGE	
	DRV_SOL1	17	18	MOTOR_FAN	
	DRV_SOL3	19	20	DRV_SOL2	
	TEMP2	21	22	DRV_SOL4	
	5V	23	24	WASTE_LAMP	

Signal	Output	Remark
CHARGER	CHARGER Output	JUMPER WIRE
T1(+)	T1(+) Output	JUMPER WIRE
T2(+)/(-)	T2(+)/(-) Output	JUMPER WIRE
BOAS DC	Y, M, C, K BIAS AC	JUMPER WIRE
BOAS AC	Y, M, C, K BIAS AC	JUMPER WIRE
SUPPLY AC	Y, M, C, K SUPPLY AC	JUMPER WIRE

TONER Samsung Electronics
www.tonerplus.com.ua

1) Charger Voltage : Charger

· Function: voltage that charges OPC surface up to ?500V~ -800V.

· Output voltage: -1.0KV ~ -2.0KV DC ± 3%

· Error type: if the voltage fails to be output to Charger Roll, OPC surface will not be charged, and the toner on the developer roller will be transferred to OPC Drum, printing black paper.

2) 1st Transfer High Voltage : T1(+)

· Function: voltage necessary for transferring toner developed on OPC Drum surface onto ITB.

· Output voltage: Max +2.0KV ± 3%(Duty variable, no load)

· ERROR type: if T1(+) output fails, the toner on OPC drum will not be transferred to ITB normally and the image will be blurred.

3) 2nd Transfer High Voltage : T2(+)

· Function: voltage used to transfer the toner primarily transferred on ITB again onto paper.

· Output voltage: Max +5.0KV ± 3%(Duty variable, no load)

· ERROR type: if T2(+) output fails, the toner on ITB will not be transferred to paper normally and the image will be blurred.

4) T2 Cleaning Voltage : Clean : T2(-)

· Function: prevent reverse side of paper from being dirtied, by recovering the negatively charged toner remaining at Transfer Roller and sending it onto ITB.

· Output voltage: with no feedback control, output fixed voltage(-1300V +/- 15%)

· ERROR type: reverse side of paper will be dirtied.

5) Supplying Voltage : Supply AC+DC(-)

· Function: voltage that makes toner to develop on the area exposed by LSU by means of potential difference, output will be the voltage of AC+DC overlapped form.

· Output voltage: AC 600V ~ 2000V p-p +/-1.5%
DC -50V ~ -600V DC +/- 3%

· ERROR type: 1. if supply is GND, density will be extremely low.
2. if supply is floating (for insecure terminal contact), density will be down so slightly that it is impossible to make out with naked eyes.

6) Developing Voltage : Deve AC+DC(-)

· Function: voltage that supplies toner to Developing Roller

· Output voltage: AC 300V ~ 1700Vp-p ± 1.5% (supply voltage is connected to ZENER Diode 300V)
DC -50V ~ -600V DC +/- 3%

· ERROR type: 1. if Deve is GND, density will be extremely down.
2. if Deve is floating (for insecure terminal contact), density will be extremely down.

TONER
www.tonerplus.com.ua

2.2.3.4 CRUM

■ In the case of Refill Toner Install

1) Perception of Refill Cartridge (when power is on or the cover is closed)
End of Life / life span data initialization -> judge to be Refill Cartridge
End of Life / life exhausted (simple refill) -> stop printing caused by life exhaustion

2) Operating
It is impossible to control appropriate development parameters, for there's no toner specification data.
It runs with the setting of default development parameter. (Image quality will be degraded, for the lack of appropriate respond to the change of time and environment.)

3) Service Response
It is possible to response appropriately, for the information of cartridge life is saved at Back Up Area.

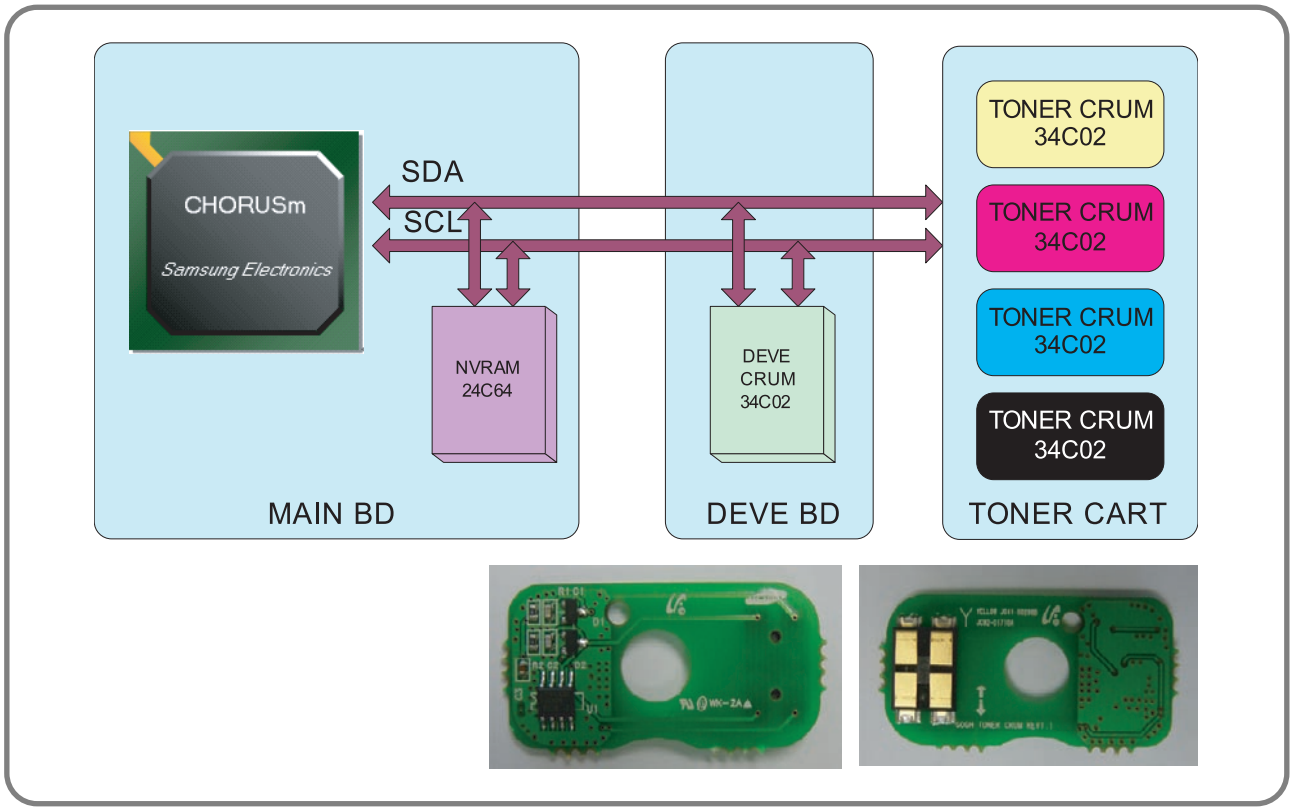

■ Process after CRU life expiration

1) Record the information of End of Life.
2) Copy the information of Operating Area into Back up Area.
3) Write-Protect Back up Area.
4) Clear some information of Operation Area.
-> Supplier/Model Name/MFC date/Serial Number (Manufacture Information)
-> Let cartridge refiller initialize manufacture information and life span information.

TONER Samsung Electronics
www.tonerplus.com.ua

■ CRUM Position

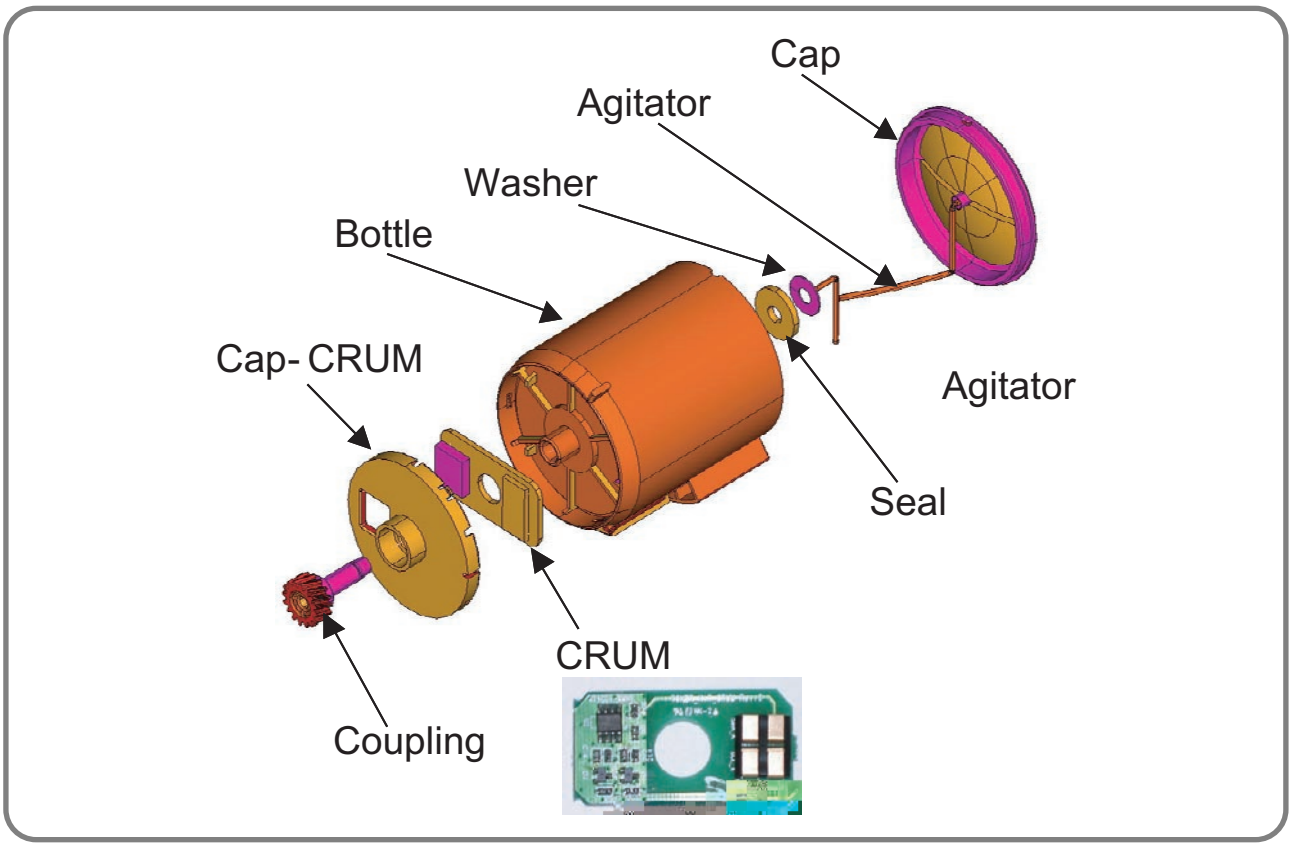

TONER
www.tonerplus.com.ua

2.2.4.5 Interfaces

The system supports the following standard interfaces:

· One USB port

- USB v.2.0 compliant
- Color-coded to meet WHQL requirements, connector must be Pantone 426C

· One 10/100 BaseT network connector

- The printer supports an internal Network Interface that can be installed pre-configured on the video controller board at the factory. This supports all of the major Network Operating Systems such as the Novell NetWare, TCP/IP, etc. Details of the network specification will be provided separately.

2.2.4.6 Control Panel

16 character x 2 Line LCD

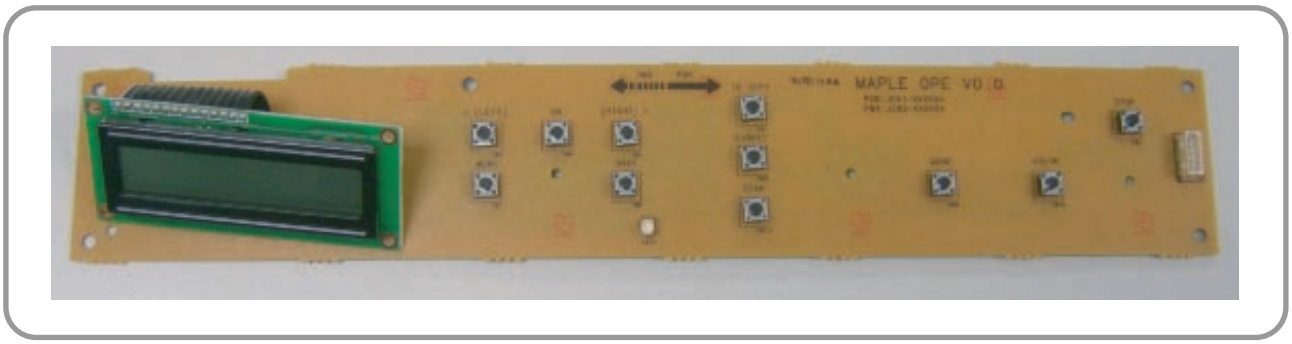

2.2.4.7 Periodic Replacing Parts

To avoid print quality and paper feed problems resulting from worn parts and to maintain your machine in top working condition the following items will need to be replaced at the specified number of pages or when the life span of each item has expired.

Item(s)	Yield (Average)
Transfer belt	Approx. 60,000 images
Transfer roller	Approx. 100,000 pages
Fuser unit	Approx. 100,000 black pages or 50,000 color pages
Tray rubber pad	Approx. 250,000 pages
Pickup roller	Approx. 50,000 pages

TONER
www.tonerplus.com.ua

2.2.4.8 Power Switch

The Switch is located at rear-side of printer and must be marked to indicate on and off.

2.2.4.9 Operator Panel

- LCD: 16 Charactor x 2 Line LCD
- Toner Cartridge Status LED
- ID Copy key, USB Print key, Scan to key, BLack key, Color key, Status key, Menu key, Scroll button, OK, Back, Stop/Clear key

2.2.4.10 Sensor

Paper empty (Cassette)

2.2.4.11 CRUMS

The CLP-300 Series engine will be equipped with electronics that can read and write data into NVRAMs otherwise known as CRUMs that reside within 1) C, M, Y, K Toner cartridges and 2) Imaging kit(Developer, OPC, ITB). The CRUM has a company ID, and Samsunga electronics logo.

The toner CRUM also identifies the type of toner cartridge (Standard or High Capacity). The CRUMs contain fixed data such as the low warning point, specified life point, and hard stop point (on toner, not on IBT unit) and also store the current life count (pages count, pixels count, images count) and % of usage (gas gauge) data.

2.2.4.12 LOW / OUT Behavior for consumables

The consumable low and out behavior on CLX-2160 Series engine is specified by SEC.

FP message	Device for life end detection	Law(90%)	Life(100%)	Hard stop	Reset to 0
Toner	CRUM	Yes	Yes	Yes(115%)	No
Imaging Kit	CRUM	Yes	Yes	No	No
Fuser	No	Yes	Yes	No	Yes
T2 Roller	No	Yes	Yes	No	Yes
Pick-up	No	No	No	No	No

TONER Samsung Electronics
www.tonerplus.com.ua

2.2.5 S/W Descriptions

2.2.5.1 Overview

The software of Dove system is constructed with

1) Host Software part that the application software operated in Window and Web Environment, and

2) Firmware parts that is a Embedded software controls printing job.

2.2.5.2 Architecture

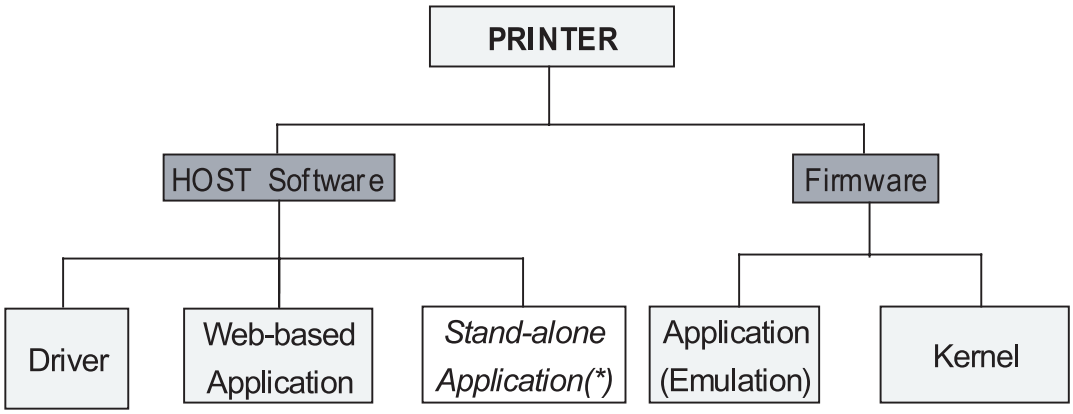

☞ (*) is job for common S/W team

Fig. 3.4-1 SW Tree Structure

Host Software is made up of

1. Graphic User Interface that offers the various editing functions to user in Host,
2. Driver that translates the received document to a Printing Command language which printer can understand and transfers data to spooler,
3. Stand-alone Application that offers the various printing application, DMS(Document Management System), RCP(Remote Control Panel), Printer Status Monitor, Network Management in Window system,
4. Web-based-Application that offers the same functions as Stand-alone Application and RDC(Remote Diagnosis Control) in Web environment.

Firmware is made up of

1. Application (Emulation) that is a interpreter translate data received from Host to a printing language (PCL, PS, GDI, etc.) to be able to make the user to take same output as originally one what composed in Host.
2. Kernel that control and management the whole procedure include of Control flow and Printing Job before transfer to Engine system.

TONER
www.tonerplus.com.ua

2.2.5.3 Data and Control Flow

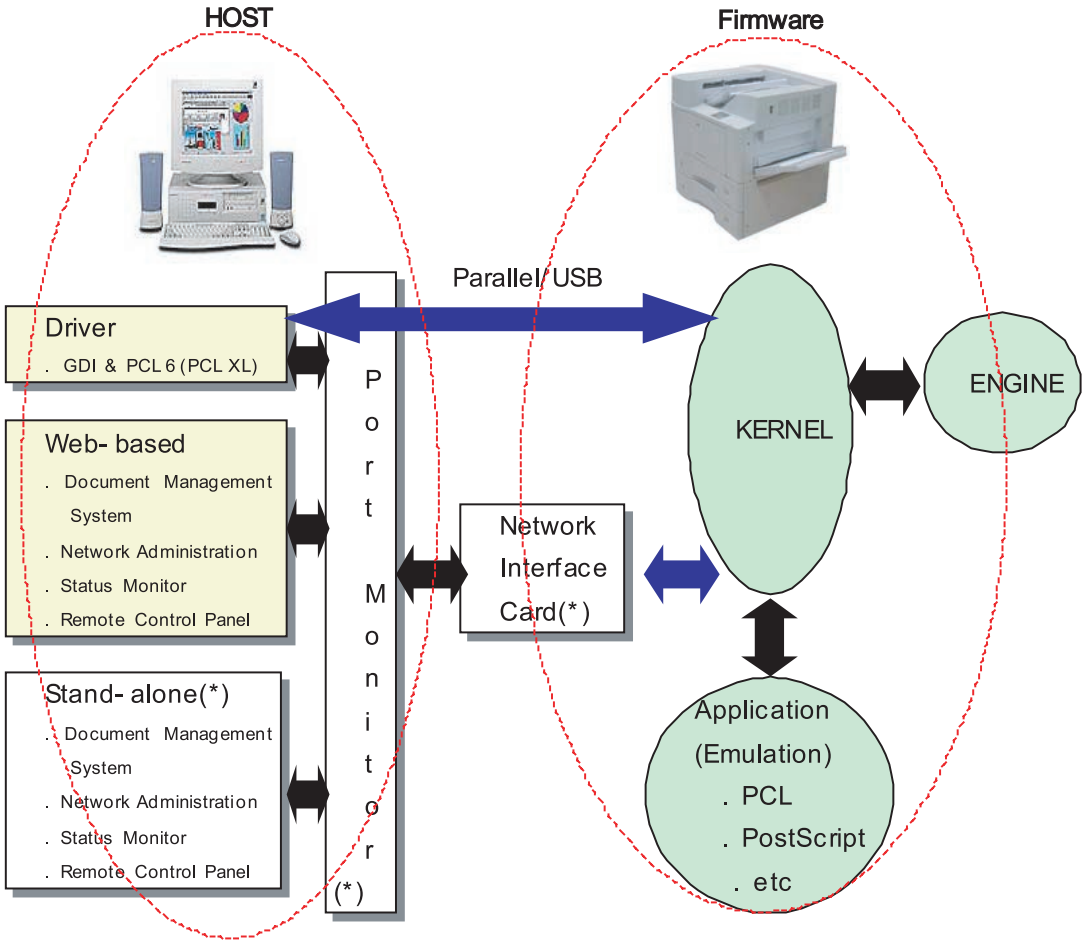

Note: (*) is role of N/W I/F

Fig. 3.4-2 Data and ControlFlow

The above Block Diagram is explained that:

Host Side is made up of

1. Driver that is Windows application software translate printed data to one of printer language and create spooler file,
2. Web-based Application that offer a various printer additional functions, management of printing job, printer administration, Status monitor to monitoring the printer status by real time in Web, independent environment on OS.
3. Stand-alone Application that is a similar Window software as same as above 2,
4. Port Monitor that manages the network communication between spooler and Network Interface Card, or various additional application and Network Interface Card,(this is, at first, make communication logical port, manage the data, transfer them from spooler to network port, and offer the result of printing).

TONER Samsung Electronics
www.tonerplus.com.ua

Firmware Side is made up of

1. Network Interface Card is that relay the communication between Host and kernel using various network protocol,
2. Kernel is that manages the flow control of emulation procedure, receiving data from Host or Network card and printing with engine & rendering job,
3. Emulation is that interprets the various output data from selected emulation,
4. Engine is that prints rendered bit-map data to paper with required size and type by Kernel.

And then, for Job Spooling function for Multi-User, Multi-Printing that is occurred in Network printing and various additional printing functions, this Kernel use max. 10 Queuing systems in a memory.

In Printing, the two procedures are

(1) Case of using Parallel or USB Port

① After user start to print the wanted document to PCL string or compressed GDI bit-map data, Driver translate the all graphic data of it and send data to host spooler. And then the spooler sends the data stream to the printer via parallel port or USB port.

② Kernel receives this data from Host, and then select emulation fit to data and start selected one. After emulation job end, Kernel sends the output bit-map data to Engine using Printer Video Controller (by clock type for LSU).

③ Engine print the received data to required paper with the sequential developing process.

(2) Case of using Network Interface Card

① After user start to print the wanted document to PCL string or compressed GDI bit-map data, Driver translate the all graphic data of it and send data to host spooler.

② If so, Port monitor managing network port receives data from spooler and sends a data stream to the Network Interface Card.

③ Network interface card receives it and send to Kernel part,

④ Kernel receives this data from Host, and then select emulation fit to data and start selected one. After emulation job end, Kernel sends the output bit-map data to Engine using Printer Video Controller (by clock type for LSU).

⑤ Engine print the received data to required paper with the sequential developing process.

The additional printing function are realized in

(1) Web environment

(2) Window environment.

On addition, Kernel informs a status of printing status and printer status to user made printing job with the Status Monitor.

TONER www.tonerplus.com.ua