4. Alignment & Troubleshooting

This chapter describes some of the main service procedures including;
- Clearing paper jams
- Using the Diagnostic mode
- How to firmware upgrade
- Troubleshooting. etc.

4.1 Alignment and Adjustments

4.1.1 Paper path

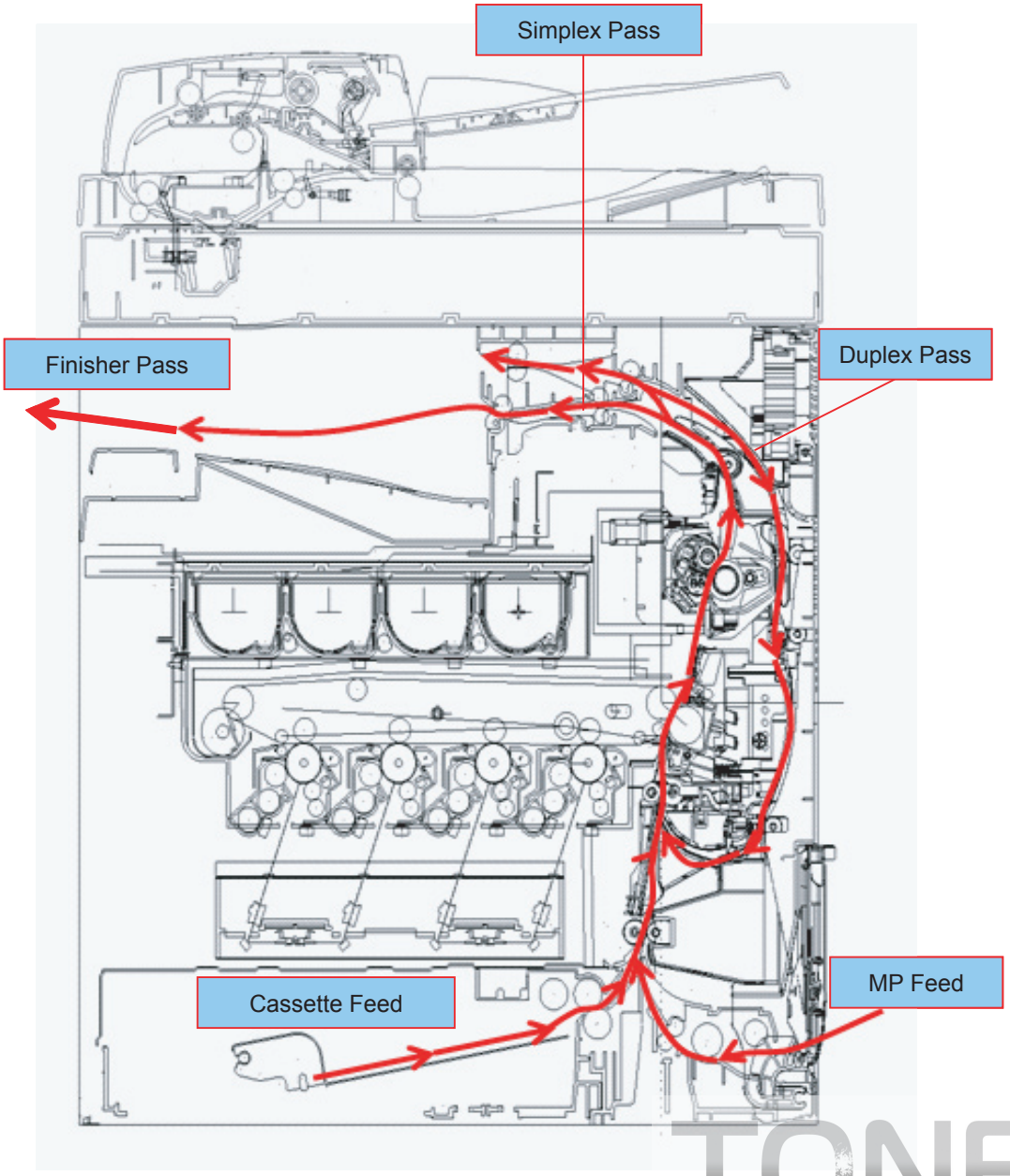

TONER
Samsung Electronics
www.tonerplus.com.ua

4.1.2 Clearing paper Jam

If a paper jam occurs an error message appears in the LCD display. Find and remove the jammed paper. If you don't see the paper, open the covers. Do not use a tweezers, pincers or other metal tools when clearing a paper jam. This could damage the internal mechanism causing print quality problems or possibly electrical shock.

■ JAM type

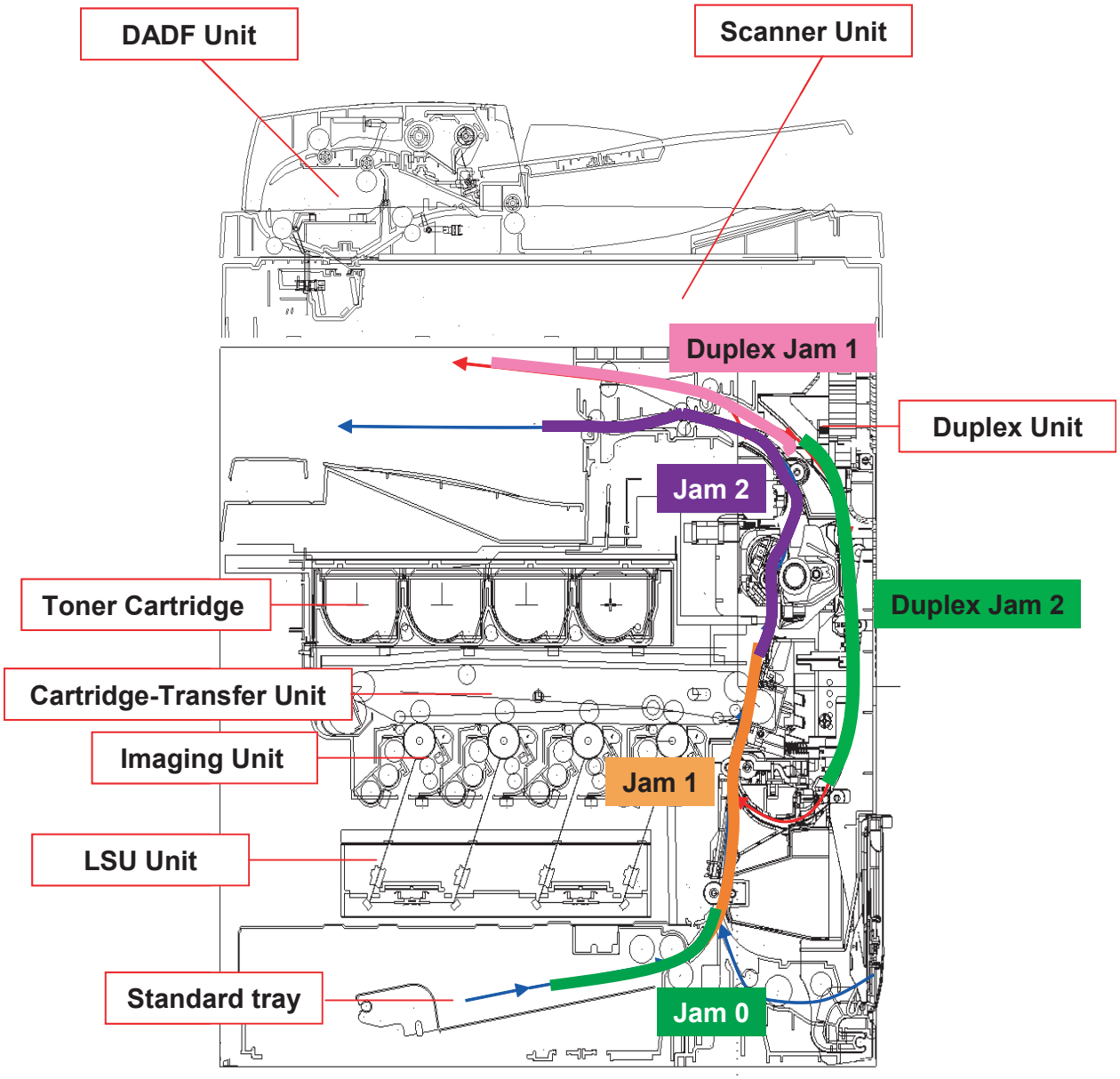

TONER
Samsung Electronics
www.tonerplus.com.ua

■ Description of JAM type

Jam 0

Case	Leading edge of media does not arrive at regi sensor within a certain time after pick-Up (If fails at a time, it tries pick-up again)
JAM Removal	1. Pull out cassette 2. Remove jammed paper Or 1. Open side cover 2. Lift up Frame-Feed_Idle_Roller 3. Remove jammed paper
JAM Layout	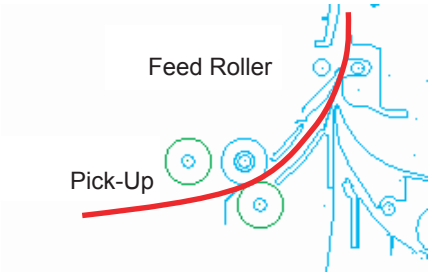
Photo	

JAM1 / Duplex JAM0

Case	Leading edge of media does not arrive at Exit Sensor within a certain time after regi sensor Or Leading edge of media does not arrive at Exit Sensor within a certain timeafter touching Duplex Ready Sensor
JAM Removal	1. Open side cover 2. Remove jammed paper
JAM Layout	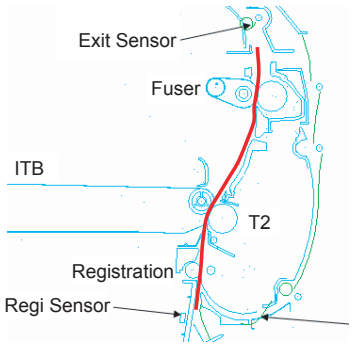 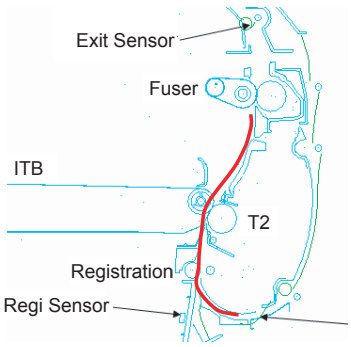
Photo	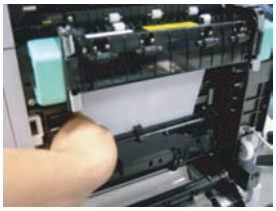

TONER
Samsung Electronics
www.tonerplus.com.ua

JAM 2

Case	Trailing edge of media does not leave Exit Sensor within a certain time after touching Regi Sensor
JAM Removal	1. Open side cover 2. Remove jammed paper Or 1. Remove jammed paper from exit
JAM Layout	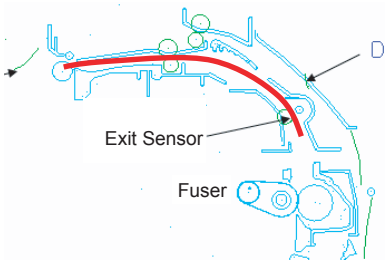
Photo	

DUPLEX JAM1

Case	Trailing edge of media leaves Exit Sensor, and does not arrive at Duplex Jam1 Sensor
JAM Removal	1. Open side cover 2. Remove jammed paper Or 1. Remove jammed paper from exit
JAM Layout	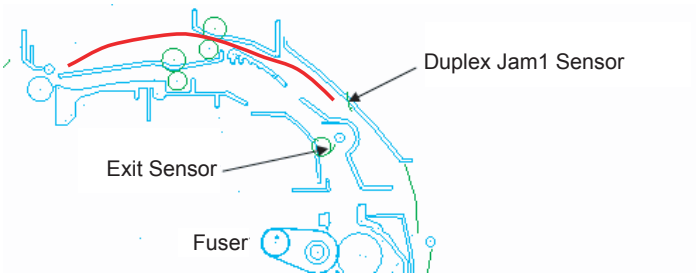
Photo	

TONER
Samsung Electronics
www.tonerplus.com.ua

DUPLEX JAM 2

Case	Trailing edge of media leaves Exit sensor, and does not leave duplex jam1 sensor within a certain time
JAM Removal	1. Open Side Cover 2. Remove jammed paper
JAM Layout	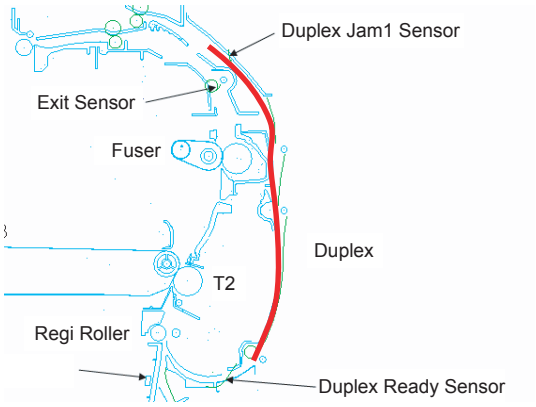
Photo	

TONER
Samsung Electronics
www.tonerplus.com.ua

4.1.2.1 Tips for avoiding paper jams

By selecting the correct media types, most paper jams can be avoided.

- Ensure that the adjustable guides are positioned correctly.
- Do not overload the tray. Ensure that the paper level is below the paper capacity mark on the inside of the tray.
- Do not remove paper from the tray while your machine is printing.
- Flex, fan, and straighten paper before loading.
- Do not use creased, damp, or highly curled paper.
- Do not mix paper types in a tray.
- Use only recommended print media.
- Ensure that the recommended side of the print media is facing up in the tray, or facing down in the multi-purpose tray.
- If paper jams occur frequently when you print on A5/B5-sized paper: Load the paper into the tray with the long edge facing the front of the tray. If load the paper this way, printing both sides of the paper (Duplex) is not supported.

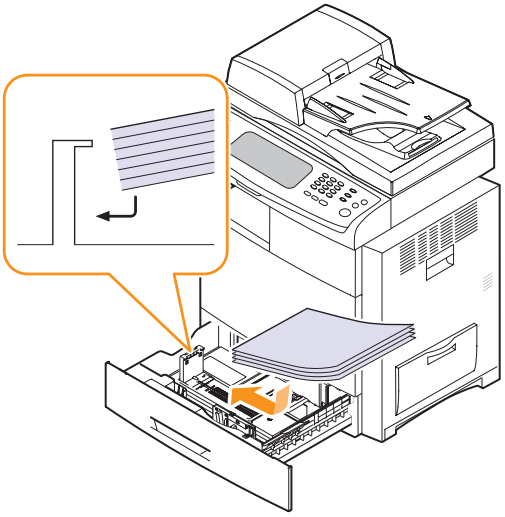

TONER
Samsung Electronics
www.tonerplus.com.ua

4.1.2.2 Clearing document jams

When an original jams while passing through the DADF, the warming message appears on the display screen.

1. Remove any remaining pages from the DADF.

2. Open the DADF cover.

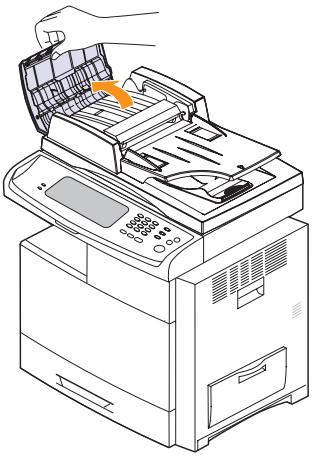

3. Gently remove the jammed paper from the DADF.

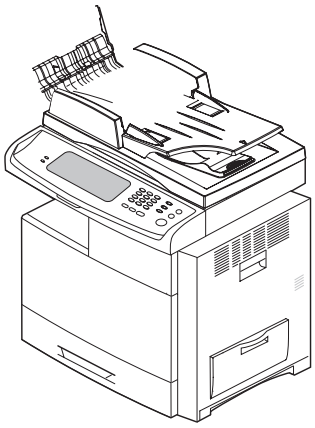

4. Close the DADF cover. Then reload the pages you removed, if any, in the DADF.

Misfeed of exiting paper

1. Remove the remaining documents from the DADF.

2. Open the DADF cover.

3. Open the document input tray upwards and pull the document gently out of the DADF.

4. Close the DADF cover and the document input tray. Then place the documents back in the DADF.

Roller misfeed

1. Open the scanner lid.

2. Grasp the misfed paper, and remove the paper from the feed area by carefully pulling it to the right using both hands.

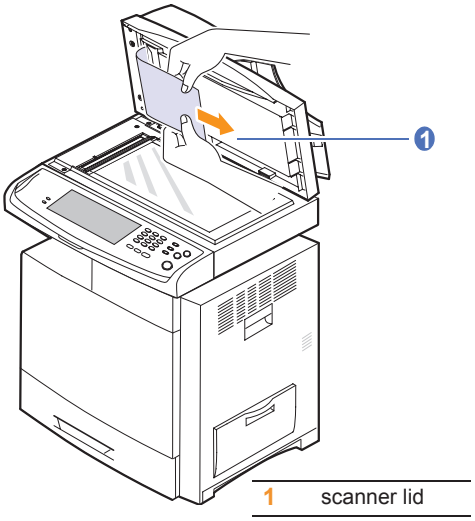

if you do not see the paper in this area, stop and go to step 3.

3. Open the white document background.

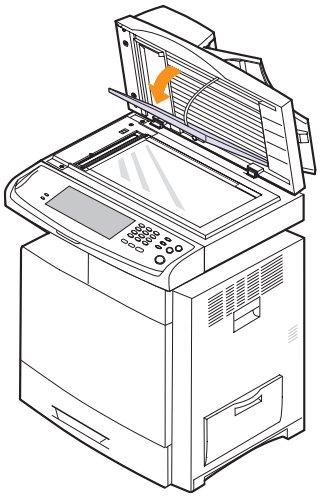

4. Remove the paper from the feed area by carefully pulling.

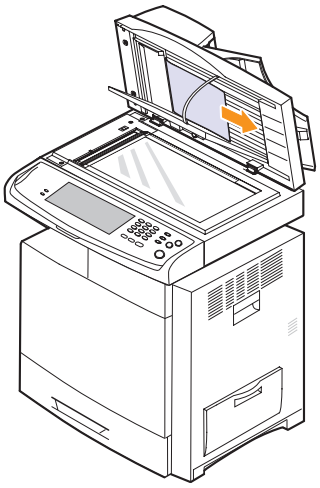

5. Close the white document background and the scanner lid. Then load the removed pages back into the DADF.

TONER
Samsung Electronics
www.tonerplus.com.ua

4.1.2.3 Clearing paper jams

When a paper jam occurs, the warming message appears on the display screen. Refer to the table below to locate and clear the paper jam.

Message	Location of jam
Paper Jam in tray 1 Paper Jam in tray2 Paper Jam in tray 2(HCF) Paper Jam in tray3 Paper Jam in MP tray	In the paper feed area (tray 1, optional tray, or multi-purpose tray)
Paper Jam in exit area	In the paper inside the machine
Paper Jam inside of machine	In the fuser area
Paper Jam at the bottom of duplex path Paper Jam at the top of duplex path Paper Jam inside of duplex path	In the duplex unit
Paper jam in front of finisher	Paper jammed in the stacker.
Paper jam inside finisher	
Paper jam at exit of finisher	Paper jammed in the stacker exit part.
Paper jam inside finisher's duplex	Paper jammed in the stacker.

In the tray 1

1. Open the side cover.

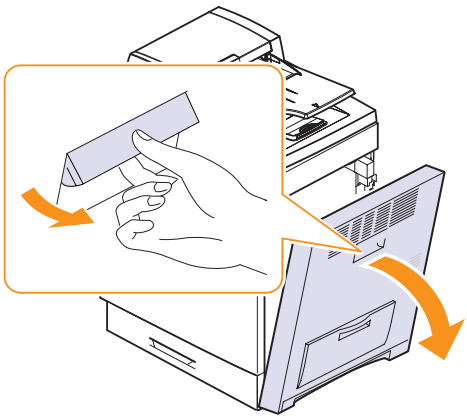

2. Open the guide in the direction shown.

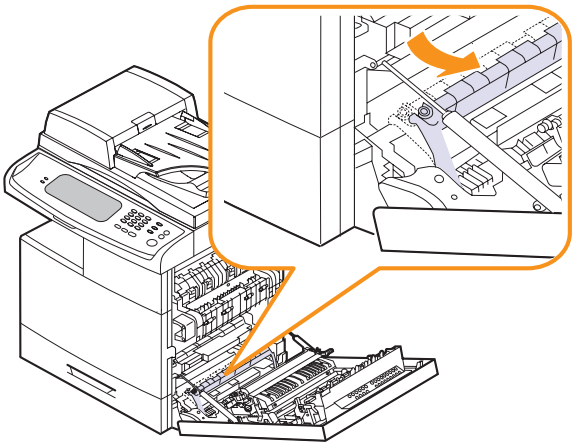

TONER Samsung Electronics www.tonerplus.com.ua

3. Carefully remove the misfed paper in the direction shown.

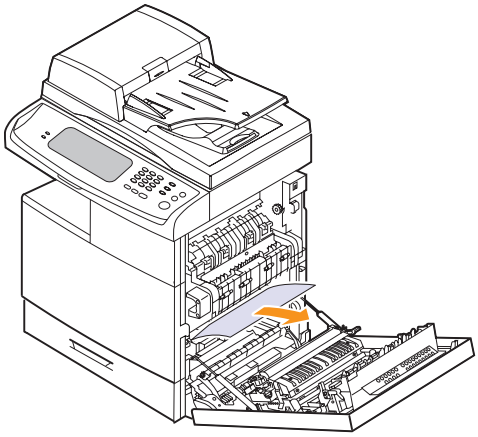

If the paper does not move when you pull, or if you do not see any paper in this area, stop and go to step 4.

4. Lift the front part of the tray up slightly to release the tray from the machine.

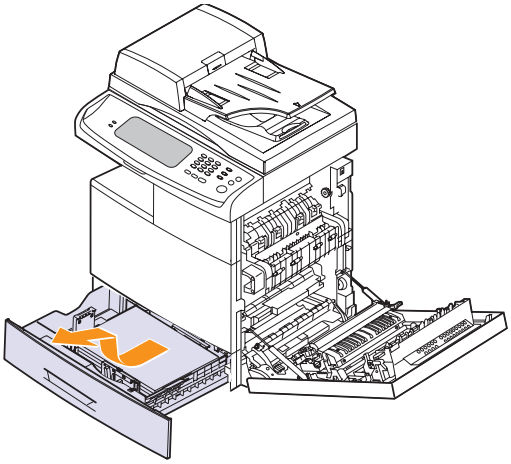

5. Remove the jammed paper by gently pulling it straight out.

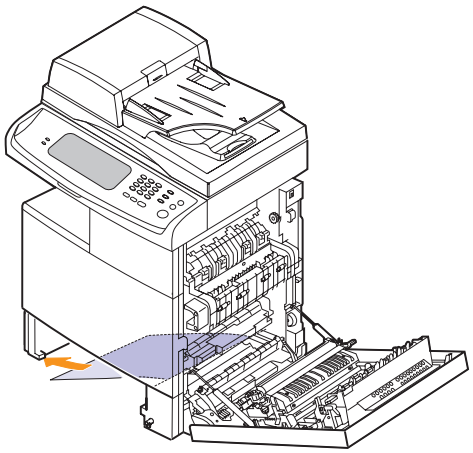

Once you remove the jammed paper here, open the side cover and then close it to clear the error message on the display.

6. Close the side cover and insert the paper tray. Lower the rear part of the Tray to align the rear edge with the corresponding slot of the machine, then insert it completely.

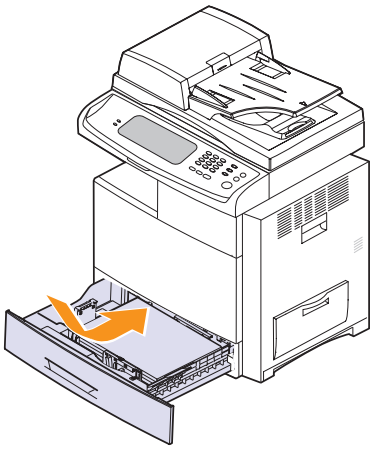

TONER
Samsung Electronics
www.tonerplus.com.ua

In the optional tray

1. Open the outer cover in tray 2.

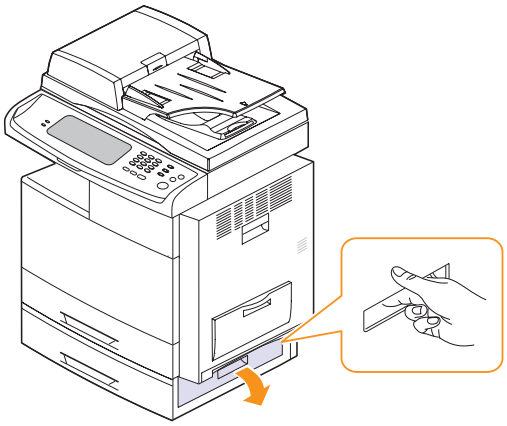

2. Open the inner cover of tray 2.

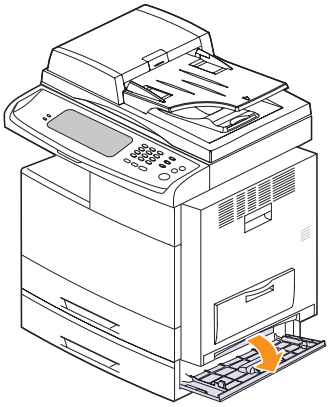

3. Pull the jammed paper out in the direction shown. To avoid tearing the paper, pull it out gently and slowly.

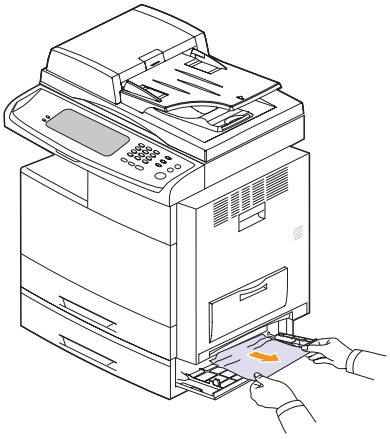

If the paper does not move when you pull, or if you do not see any paper in this area, stop and go to step 4.

4. Lift the front part of the tray slightly up to release the tray from the machine.

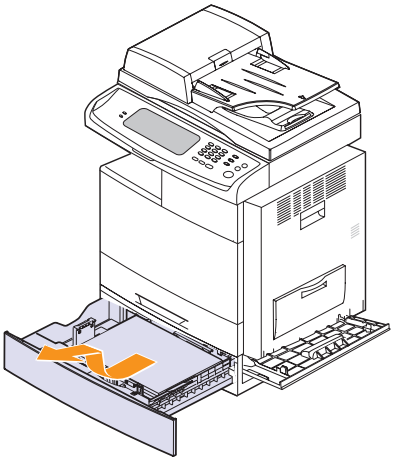

If the paper does not move when you pull, or if you do not see the paper in this area, stop and go to step 3.

5. Remove the paper in the direction shown. To avoid tearing the paper, pull it out gently and slowly.

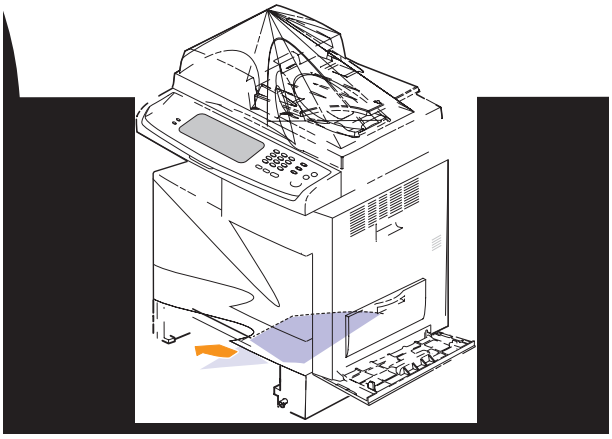

6. Insert the paper tray and close the two covers.

In the optional high capacity feeder

1. Open the outer cover of the high capacity feeder.

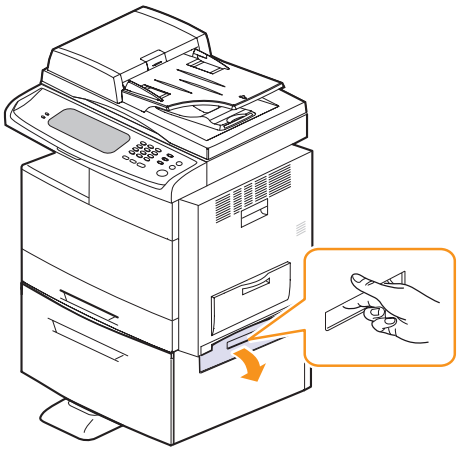

2. Open the inner cover of the high capacity feeder.

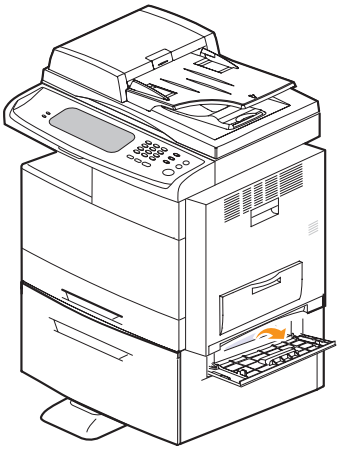

3. Pull the jammed paper out, in the direction shown, pulling gently and slowly in order to avoid tearing the paper.

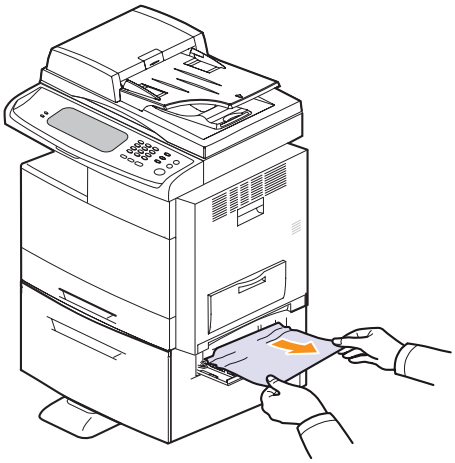

If the paper does not move when you pull, or if you do not see any paper in this area, stop and go to step 4.

4. Pull out the optional high capacity feeder.

5. Lift the front part of the tray slightly up to release the tray from the machine.

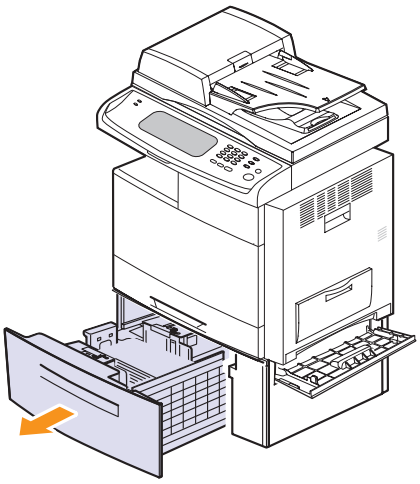

TONER
Samsung Electronics
www.tonerplus.com.ua

6. Remove the paper in the direction shown. Pull it out gently and slowly in order to avoid tearing the paper.

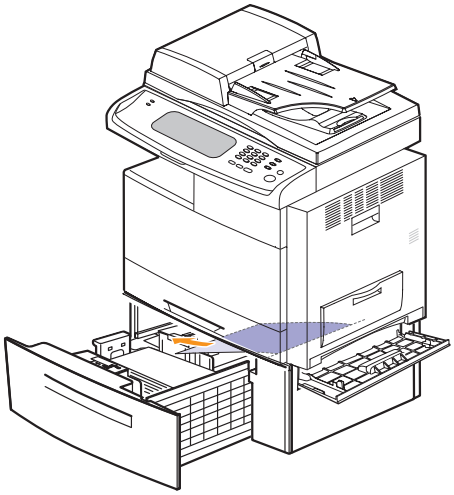

If the jammed paper is not visible, or if the paper is stuck, stop pulling and continue on to step 5.

7. Insert the paper tray and close the two covers.

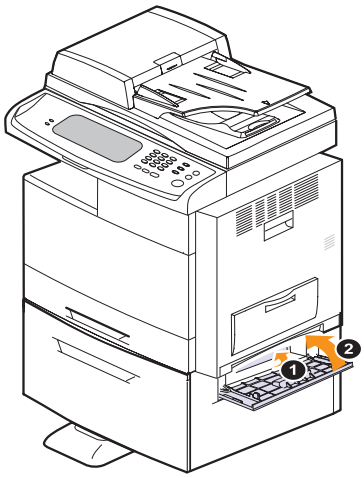

In the multi-purpose tray

1. If the paper is not feeding properly, pull the paper out of the machine.

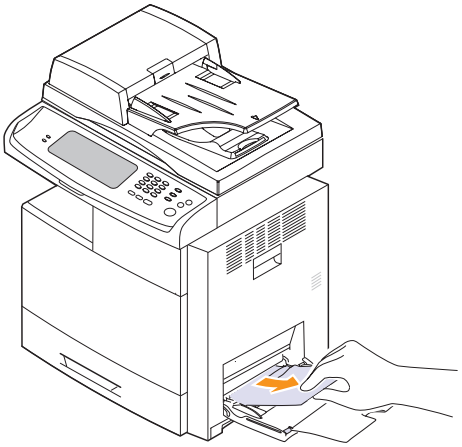

2. Open and close the side cover. Printing automatically resumes.

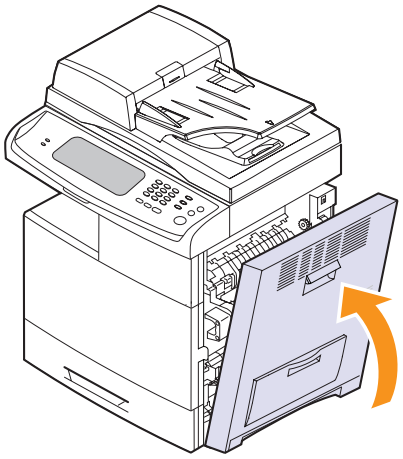

TONER
Samsung Electronics
www.tonerplus.com.ua

In the paper inside the machine

1. Open the side cover.

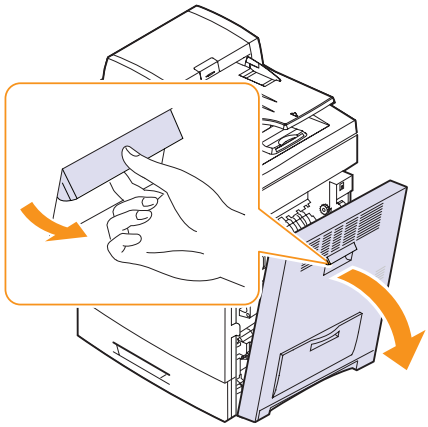

2. Remove the jammed paper, in the direction shown.

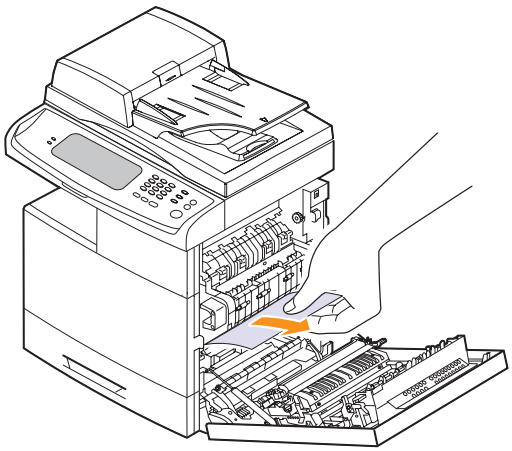

If you do not see any paper in this area, go to step 3.

3. Open the guide in the direction shown and pull the jammed paper gently out of the machine.

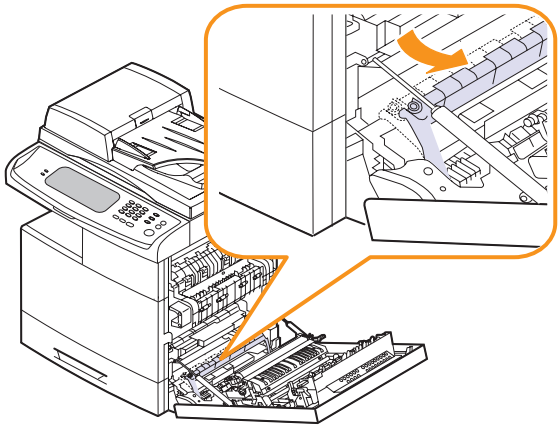

4. Open and close the front cover to resume printing.

TONER
Samsung Electronics
www.tonerplus.com.ua

In the fuser area

1. Open the side cover.

2. Remove the jammed paper, in the direction shown.

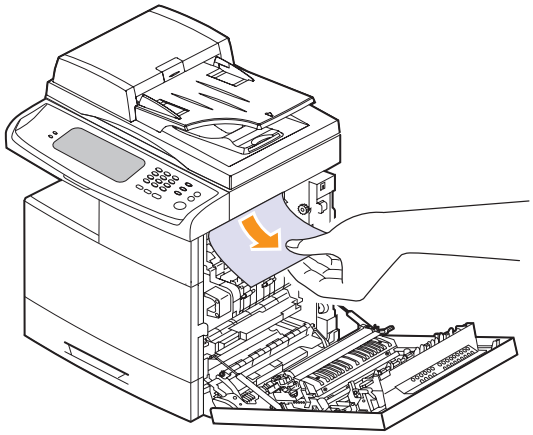

3. Close the side cover. Printing automatically resumes.

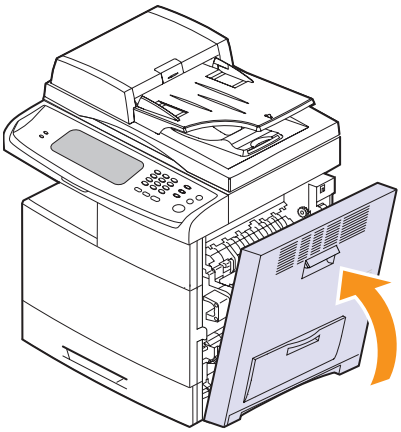

In the duplex unit area

If the duplex unit is not inserted correctly, paper jam may occur. Make sure that the duplex unit is inserted correctly.

1. Open the side cover.

2. Release the guide to pull the jammed paper easily.

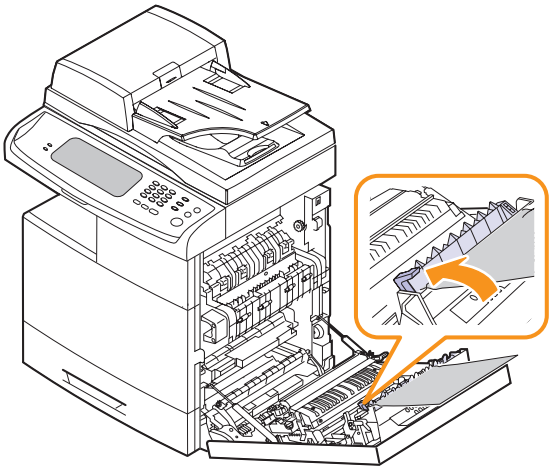

3. Remove the jammed paper.

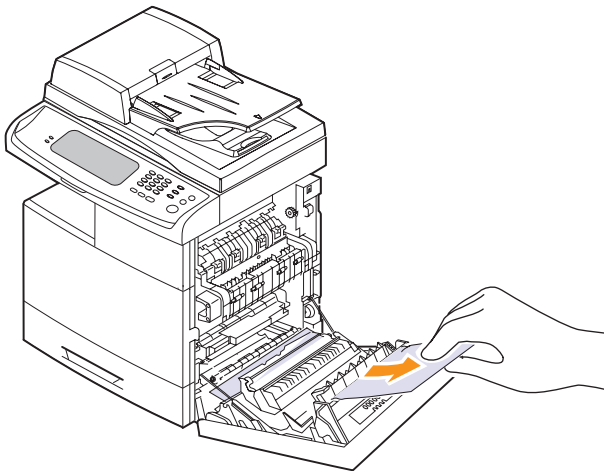

4. Close the side cover.

TONER
Samsung Electronics
www.tonerplus.com.ua

In the stacker (finisher)

Paper jam in front of finisher

1. Open the stacker front cover.

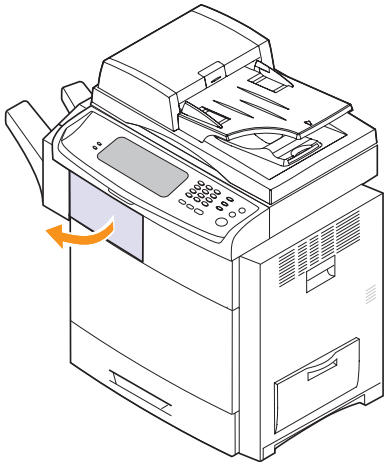

2. Press right of 1c lever and then push stacker to left.

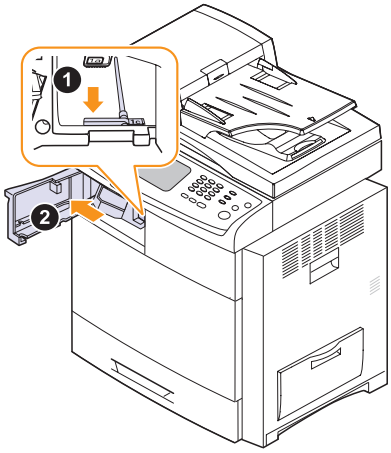

3. Remove the jammed paper.

4. Slide in the stacker until you hear the sound 'click'.

5. Close the stacker front cover.

Paper jam inside finisher, Paper jam inside finisher's duplex

1. Open the stacker front cover.

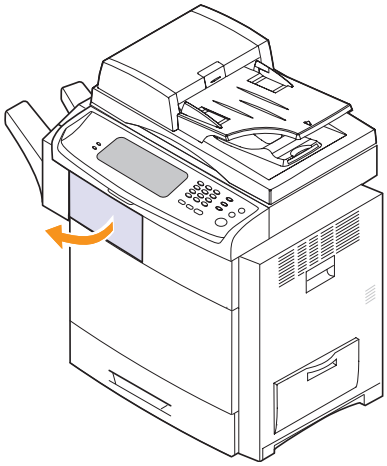

2. Pull the stacker lever 1a down. If necessary, pull the stacker lever 1b down as well.

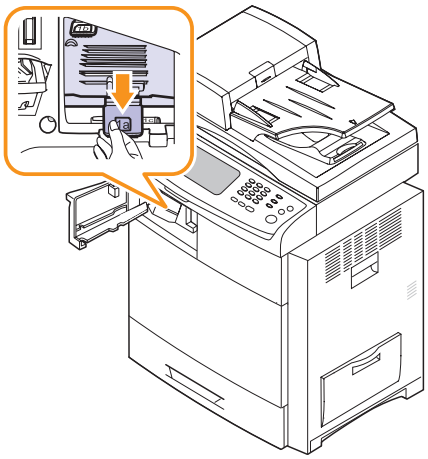

3. Remove the jammed paper.

TONER
Samsung Electronics
www.tonerplus.com.ua

4. Pull up on the stacker lever and then close the stacker front cover.

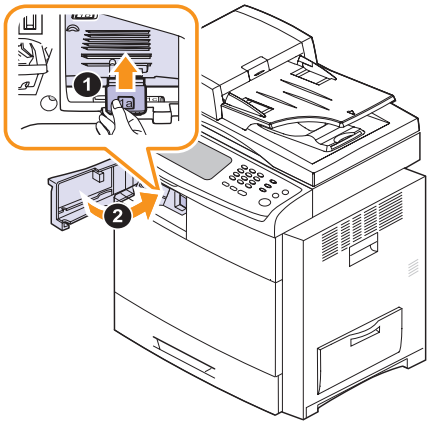

Paper jam at exit of finisher

1. Gently pull the paper out through the exit area.

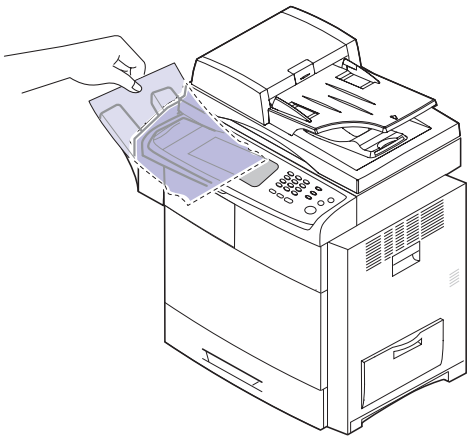

2. Close the side cover. Printing automatically resumes.

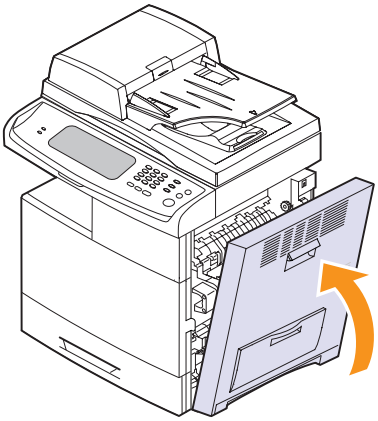

3. Remove the jammed paper.

TONER
Samsung Electronics
www.tonerplus.com.ua

4.1.3 Abnormal Image Printing and Defective Roller

If a mark or other printing defect occurs at regular intervals down the page, it may be caused by a damaged or contaminated roller. Make sure the repetition interval by consulting the table below.
If the roller is dirty, try to clean it. If the problem is still occurred after cleaning the roller, replace the part including the defective roller.

NO	Roller	Period (mm)	Phenomenon	Replace part
1	Pressure Roller	91.1	Offset, Spot, Line Burst	Fuser Unit
2	T2 Roller	88.0	White and Black Spot, Periodic Banding, Rear Side Paper Dirty	Transfer Roller
3	Registration Roller	59.7	Roll Mark	-
4	Pick-up Roller	72.3	Roll Mark	-
5	Drive Roller	77.8	Periodic Banding, Color Registration	Cartridge Transfer Unit
6	T1 Roller	44.0	White and Black Spot, Periodic Banding	Cartridge Transfer Unit
7	Exit Roller	47.1	Roll Mark, Vertical Scratch	-
8	OPC Drum	94.3	White and Black Spot, Periodic Banding, Ghost, Color Registration	Imaging Unit
9	Charger Roller	44.0	White and Black Spot, Periodic Banding	Imaging Unit
10	Magnetic Roller (YMCK)	35.3	Periodic Banding	Imaging Unit
11	Fuser Belt	127.7	Waving, Offset, Spot, Line Burst	Fuser Unit
12	Cartridge Transfer Unit	785.4	White and Black Spot, Periodic Banding	Cartridge Transfer Unit

TONER
www.tonerplus.com.ua

■ Repetitive defect Image check page

Print this page. Align the this page and the printed defect image and find the defective roller.

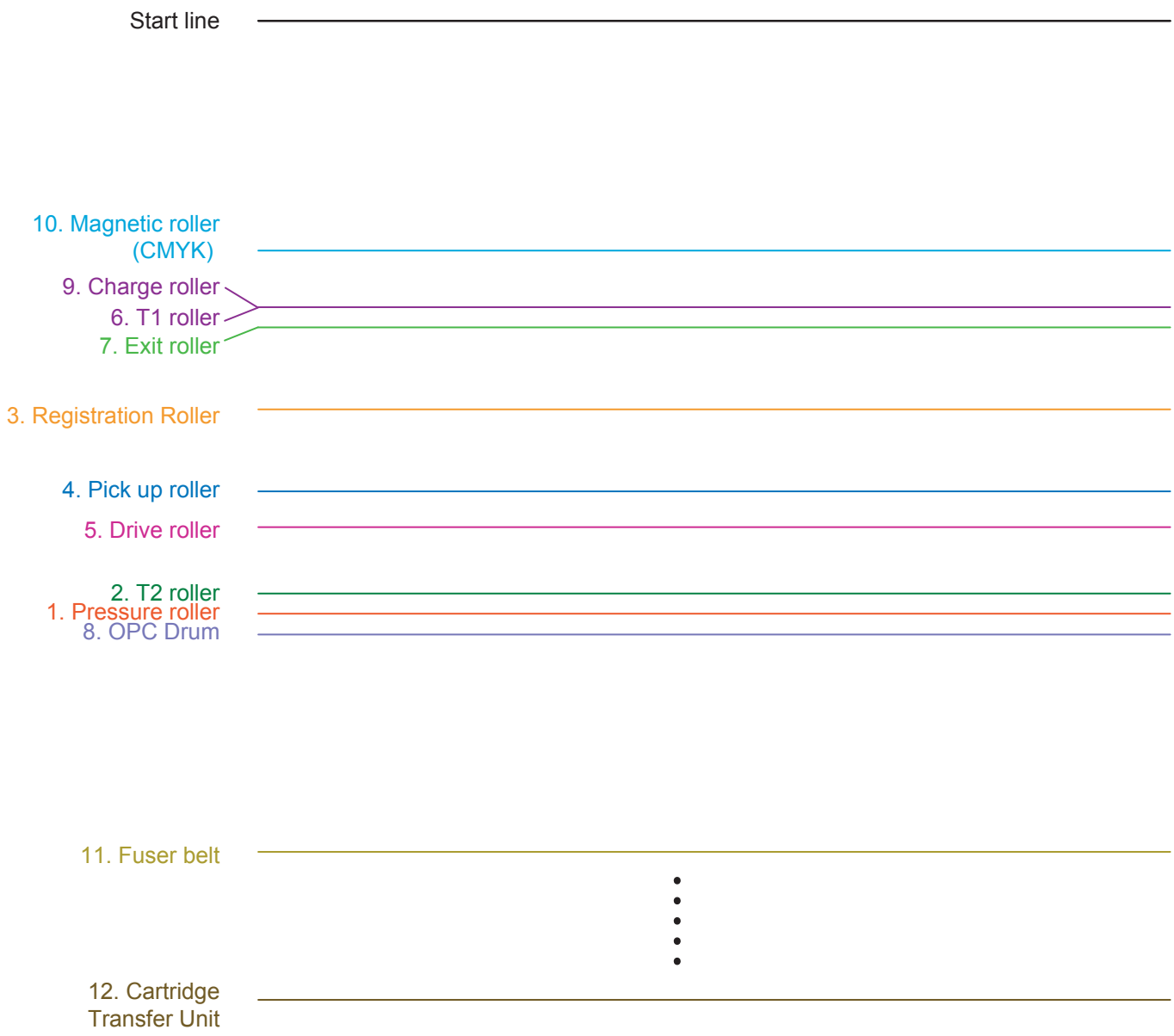

TONER
Samsung Electronics
www.tonerplus.com.ua

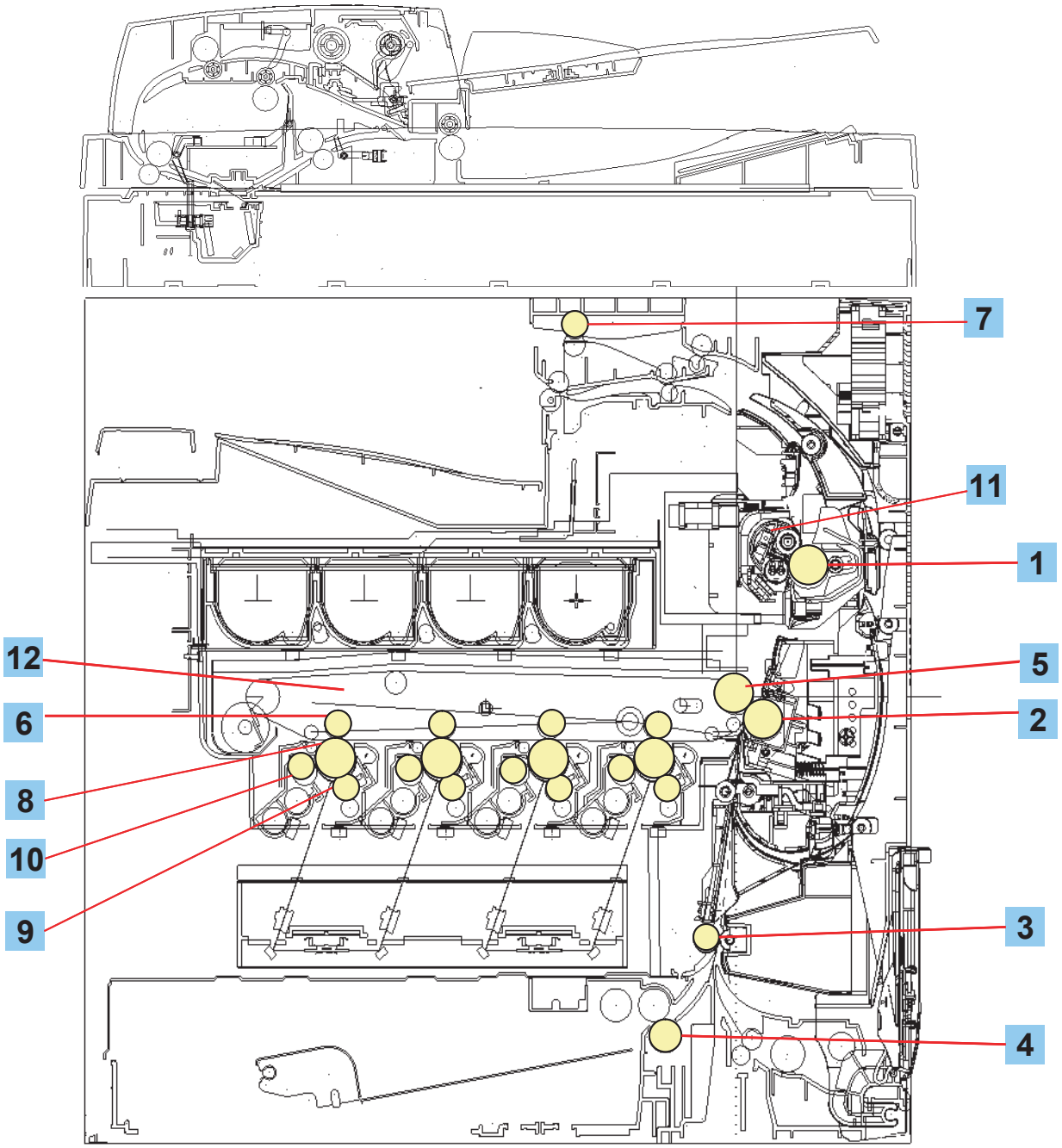

No	Description	No	Description
1	Pressure Roller	7	Exit Roller
2	T2 Roller	8	OPC Drum
3	Registration Roller	9	Charger Roller
4	Pick up Roller	10	Magnetic Roller (YMCK)
5	Drive Roller	11	Fuser Belt
6	T1 Roller	12	Cartridge Transfer Unit

TONER
Samsung Electronics
www.tonerplus.com.ua

4.1.4 Control Panel overview

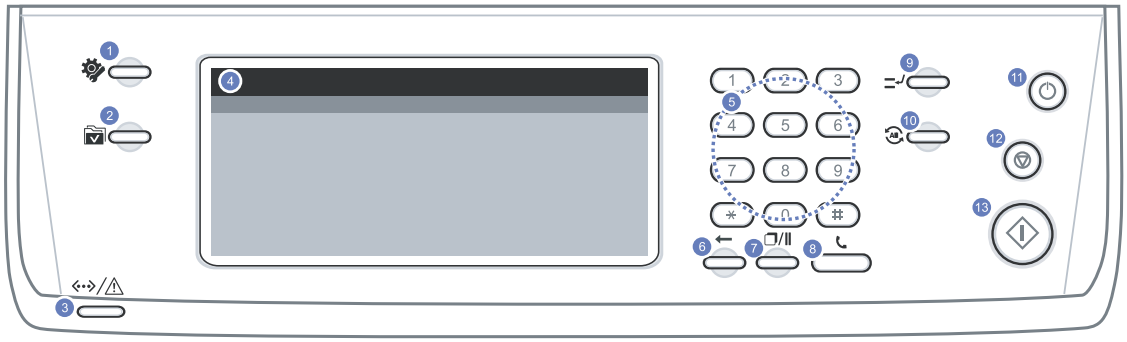

1		**Machine Setup**: Leads you to the machine setup and advanced settings.
2		**Job Status**: Shows the jobs currently running, queued jobs or completed jobs.
3		**Status**: Shows the status of your machine.
4		**Display screen**: Displays the current machine status and prompts during an operation. You can set menus easily using the touch screen.
5		**Numeric keypad**: Dials fax number, and enters the number value for document copies or other options.
6		**Clear**: Deletes characters in the edit area.
7		**Redial/Pause**: In standby mode, redials the last number, or in edit mode, inserts a pause into a fax number.
8		**On Hook Dial**: Engages the telephone line.
9		**Interrupt**: Stops a job in process to do an urgent copy job.
10		**Clear All**: Reverts the current settings to the default values.
11		**Power Saver**: Sends the machine into the power saver mode. You can also turn the power on and off with this button.
12		**Stop**: Stops an operation at any time. The pop up window appears on the screen showing the current job that the user can stop or resume.
13		**Start**: Starts a job.

TONER
Samsung Electronics
www.tonerplus.com.ua

4.1.4.1 Introducing the touch screen and useful buttons

Touch screen

The touch screen allows for user-friendly operation of the machine. Once you press the home icon ( ) on the screen, it shows the Main screen.

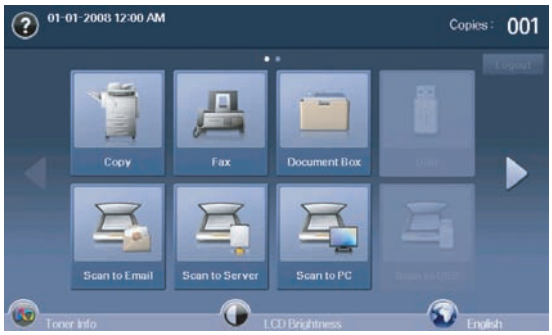

- : Shows Help. You can find the explanation by feature contents.
- Copy: Enters the Copy menu.
- Fax: Enters the Fax menu. (Optional)
- Scan: Enters Scan to Email, Scan To PC, Scan to Server menu.
- Stored Documents: Enters the Stored Documents menu.
- USB: When USB memory is inserted into the USB memory port on your machine, USB icon shows on the display screen.
- SmarThru Workflow: Enters the SmarThru Workflow menu. (Optional)
- Toner Info.: Shows amount of toner used.
- LCD Brightness: Adjusts the brightness of the touch screen.
- : You can change the display language.
- : Guides you to remove the USB memory devices from the machine. Follow the instruction on the LCD. This icon appears only when you connect an USB memory module.
- Logout: Logs out from the currently logged in account.

Machine Setup button

When you press Machine Setup button, you can browse current machine settings or change machine values.

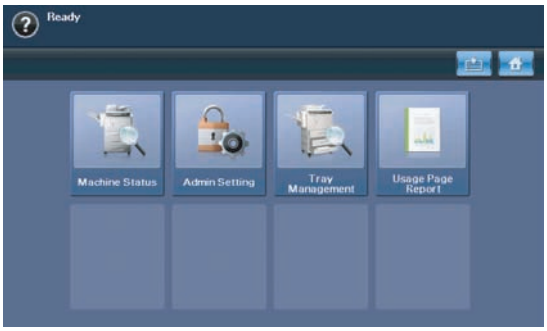

- This button allows you to move to Copy, Fax, Scan, Stored Documents menu directly.
- Machine Status: Shows the current status of the machine.
- Admin Setting: Allows an administrator to set up the machine.
- Usage Page Report:You can print the report on the amount of printouts depending on the paper size and type.
- Tray Management: You can change current tray setting such as paper size and paper type. Monitor current tray status as well.

TONER
Samsung Electronics
www.tonerplus.com.ua

Job Status button

When you press Job Status button, the screen shows the lists of currently running jobs, queued jobs and completed jobs.

- Current Job tab: Shows the list of jobs in progress and pending.
- Completed Job tab: Provides the list of completed jobs.
- Active Notice tab: Displays any error codes that have occurred.
- No.: Gives the order of jobs.
- Job Name: Shows job information like name and type.
- Status: Gives the current status of each job.
- User: Provides user name, mainly computer name.
- Job Type: Displays details of the active job, such as job type, recipient phone number and other information.
- Detail: Shows the detailed information of the selected option on the Current Job, Completed Job and Active Notice list.
- Delete: Removes the selected job from the list.
- Delete All: Removes all the jobs from the list.
- Close: Closes the job status window and switches to previous view.

Power Saver button

When the machine is not in use, save electricity with the provided power save mode. Pressing this button puts the machine into power save mode.
If you press Power Saver button for more than two seconds, a window appears, requesting that you turn the power off. If you choose Yes, the power is turned off.
This button can also be used to turn the button on.

Status		Description
Off		• The machine is not in the power save mode. • The machine is in the low power save mode.
Blue	On	machine is in the power save mode.
	Blink	The machine is in the ready power save mode.

Interrupt button

When you press Interrupt button, the machine goes into interrupt mode which means it stops a printing job for urgent copy job. When the urgent copy job completes, the previous printing job continues.

Status		Description
Off		The machine is not in interrupt printing mode.
Blue	On	The machine is in interrupt printing mode.

TONER
Samsung Electronics
www.tonerplus.com.ua

4.1.5 Understanding the Status LED

When the problem occurs, the Status LED indicates the machine's condition by the light color of it's action.

• Status

Status		Description
Off		• The machine is off-line. • The machine is in power save mode. When data is received, or any button is pressed, it switches to on-line automatically.
Green	On	The machine is on-line and can be used.
	Blinking	• When the backlight slowly blinks, the machine is receiving data from the computer. • When the backlight blinks rapidly, the machine is printing data.
Red	On	• The imaging unit is totally out of lifespan. Remove the old imaging unit and install a new one. • The toner cartridge is totally empty. Remove the old toner cartridge and install a new one. • A paper jam has occurred. • The cover is opened. Close the cover. • There is no paper in the tray. Load paper in the tray. • The machine has stopped due to a major error. Check the display message. • The waste toner container not installed in the machine, or full waste toner container.
	Blinking	• A minor error has occurred and the machine is waiting the error to be cleared. Check the display message. When the problem is cleared, the machine resumes. • The toner cartridge is near the end of its life. Order a new toner cartridge. You can temporarily improve print quality by redistributing the toner.

TONER
Samsung Electronics
www.tonerplus.com.ua

4.1.6 Menu overview

4.1.6.1 Menu Map

The control panel provides access to various menus to set up the machine or use the machine's functions. These menus can be accessed by pressing Machine Setup, Job Status or touching menus on the display screen. Refer to the following diagram.

Main screen

The Main screen is shown on the display screen on the control panel.
Some menus are grayed out depending on your model.

Copy
- Basic tab
  - Original Size
  - Reduce/Enlarge
  - Duplex
  - Output
  - Original Type
  - Color Mode
  - Darkness
  - Paper Supply
- Advanced tab
  - ID Copy
  - N-Up
  - Poster Copy
  - Clone Copy
  - Book Copy
  - Booklet
  - Covers
  - Transparencies
  - WaterMark
  - Overlay
  - AutoCrop
  - Multi-Bin
- Image tab
  - Erase Edge
  - Erase Background
  - Margin Shift
  - Scan Enhance
  - Adjust Backside Image

Fax (Optional)
- Basic tab
  - Address Book
  - Duplex
  - Resolution
- Advanced tab
  - Original Size
  - Delay Send
  - Priority Send
  - Polling
  - Mailbox
- Image tab
  - Original Type
  - Darkness
  - Erase Background
  - Color Mode

Documents Box
- User Box tab
  - Add
  - Delete
  - Edit
  - Detail
  - Search
  - Enter
- System Box tab
  - Detail
  - Enter

USB (Optional)
- USB Format
- USB Print
- Scan to USB
  - Basic tab
  - Advanced tab
  - Image tab
  - Output tab

Scan to Email
- From tab
- To tab
- Cc tab
- Bcc tab
- Subject tab
- Message tab
- Options tab

Scan to Server
- Basic tab
- Advanced tab
- Image tab
- Output tab

Scan to PC
- Basic tab
- Advanced tab
- Image tab
- Output tab

Scan to USB
- Basic tab
- Advanced tab
- Image tab
- Output tab

Machine Status
- Supplies Life tab
- Machine Info. tab

Admin Setting
- General tab
- Setup tab
- Print/Report tab

Tray Management
- Tray
- MP Tray
- Tray2
- Tray3

Usage Page Report
- Supplies Life
- Machine Info.

TONER
Samsung Electronics
www.tonerplus.com.ua

Machine Setup button

When you press the Machine Setup button on the control panel, the screen displays three menus. Machine Status shows the supplies life, billing, counters and reports. Admin Setting lets you set the advanced setup to use your machine in depth and conveniently. Usage Page Report can print the report on the amount of printouts depending on the paper size and type.

Machine Status

Supplies Life tab

- Toner Cartridge-C
- Toner Cartridge-M
- Toner Cartridge-Y
- Toner Cartridge-K
- Imaging Unit-C
- Imaging Unit-M
- Imaging Unit-Y
- Imaging Unit-K
- Fuser Kit
- Feed Roller Kit-Tray 1
- Feed Roller Kit-Tray 2
- Feed Roller Kit-Tray 3
- Feed Roller Kit - Bypass Tray
- Document Feeder Roller
- BTR Kit
- DADF Friction Pad Kit

Machine Info. tab

- Machine Details
  - Customer Support
  - Machine Serial Number
  - Hardware Options
    - Configuration
  - Software Versions
- Tray Status
  - Tray
  - Status
  - Paper Size
  - Paper Type
- Print/Report
  - System Report
  - Scan Report
  - Fax Report
- Usage Counters
  - Total Impressions
  - Black Impressions
  - Black Copied Impressions
  - Black Printed Impressions
  - Color Impressions
  - Color Copied Impressions
  - Color Printed Impressions
  - Sheets
  - Copied Sheets
  - Copied Sheets
  - Color Copied Sheets
  - Printed Sheets
  - Black Printed Sheets
  - Color Printed Sheets
  - 2 Sided Sheets
  - Copied 2 Sided Sheets
  - Black Copied 2-Sided Sheets
  - Color Copied 2-Sided Sheets
  - DADF Scan Page Counts
  - Platen Scan Page Counts
  - Printed 2 Sided Sheets
  - Black Printed 2-Sided Sheets
  - Color Printed 2-Sided Sheets
  - Analog Fax Sheets
  - Analog Fax 2-Sided Sheets
  - Fax Image Received
  - Analog Fax Images Sent
  - Analog Fax Images Received
  - Images Sent
  - Network Scanning Images Sent
  - Email Images Sent
  - Maintenance Impressions
  - Black Maintenance Impressions

TONER
Samsung Electronics
www.tonerplus.com.ua

Admin Setting

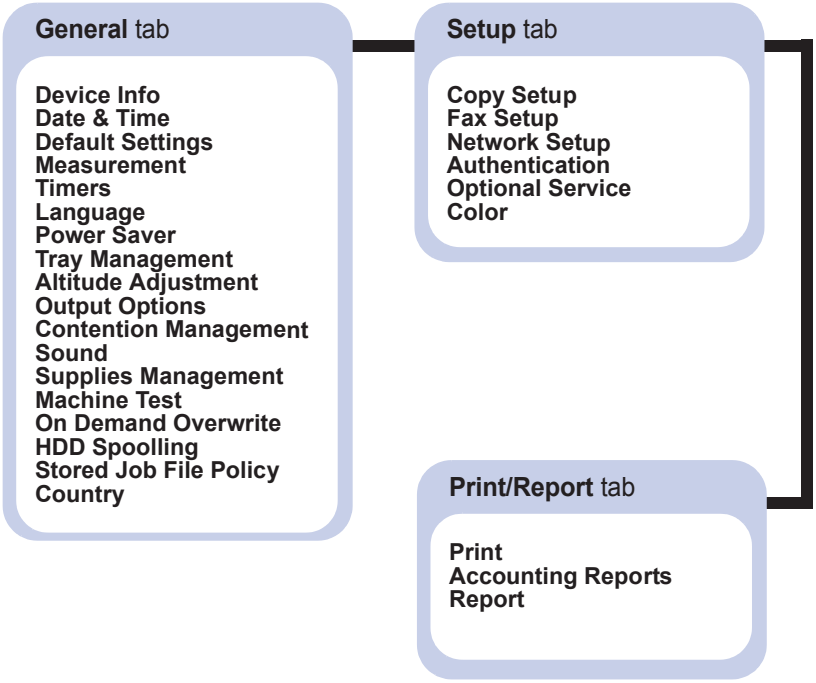

TONER
Samsung Electronics
www.tonerplus.com.ua

4.1.6.2 Understanding the Copy screen

When you press Copy on the Main screen, the Copy screen appears which has several tabs and lost of copying options. All the options are grouped by features so that you can configure your selections easily. If the screen displays an other menu, press Home button to go to the Main screen. If you want to know more information for copy screen, please consult the user manual.

Basic Tab

- Original Size : Selects the size of the originals.
- Reduce/Enlarge : Reduces or enlarges the size of a copied image.
- Duplex : Sets the machine to print copies on both sides of the paper.
- Output : Selects Collated or Uncollated copy options. If you install the optional stacker & stapler, then the staple related option appears.
- Text, Text/Photo, Photo, Magazine : Improves the copy quality by selecting the document type for the current copy job.
- Color, B/W, Auto : You can switch this copy mode among Color mode, B/W mode, Auto mode. Selects whether the user print copies in mono or color.
- Light, Dark : Adjusts the brightness level to make a copy that is easier to read, when the original contains faint markings and dark images.
- Paper Supply : Selects the paper supply tray.
- Erase Edge : Allows you to erase punch holes, staple marks, and fold creases along any of the four documents edges.
- Erase Background : Prints an image with no background.
- Margin Shift : Creates a binding edge for the document.
- Scan Enhance : Use this feature for the better quality of copyoutput.
- More : You can change the setting value for each menu.

TONER
Samsung Electronics
www.tonerplus.com.ua

Advanced Tab

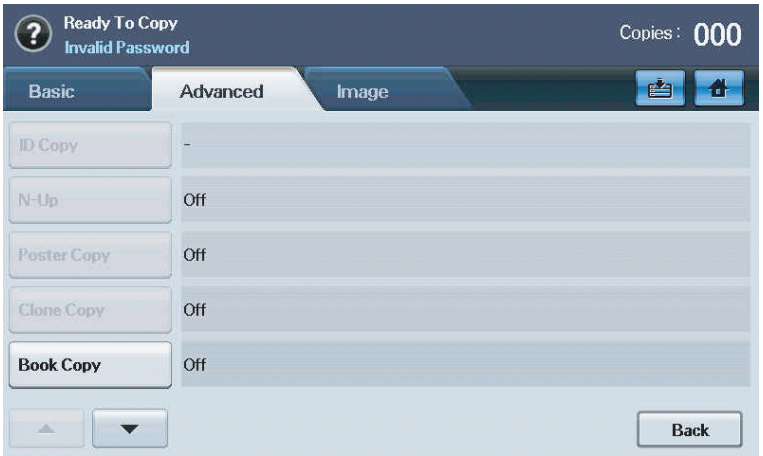

- ID Copy: Prints 2-sided originals on one sheet of paper. This feature is helpful for copying a small-sized item, such as a business card.
- N-Up: Prints 2 or 4 original images, reduced to fit onto one sheet of paper.
- Poster Copy: Prints a large image into divided 9 pages.
- Clone Copy: Prints multiple image copies from the original document on a single page.
- Book Copy: Allows you to copy an entire book.
- Booklet: Creates booklets from a sequential set of either 1-sided or 2-sided originals.
- Covers: Automatically adds covers to your copied set using stock taken from a different tray.
- Transparencies: Adds a blank or printed divider between transparencies within a set.
- WaterMark: Prints an image with the added watermark.
- Overlay: Prints an image with the image previously stored in your machine.
- Auto Crop: Prints only the image of an original after cropping the blank parts like the margin.
- Multi-Bin: Allows you to select the output mode.

Image Tab

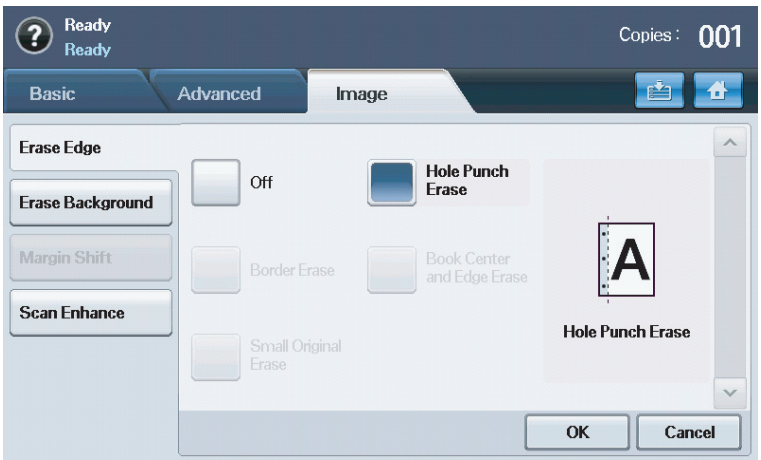

- Erase Edge: Allows you to erase punch holes, staple marks, and fold creases along any of the four documents edges.
- Erase Background: Prints an image with no background.
- Margin Shift: Creates a binding edge for the document.
- Scan Enhance: Use this feature for the better quality of copyoutput.
- Adjust Backside Image: Allows you to copy and image and remove the back-side image shown through.

TONER
www.tonerplus.com.ua

4.1.6.3 Understanding the FAX screen

When you press Fax on the Main screen, the Fax screen appears which has several tabs and lost of fax options. All the options are grouped by features so that you can configure your selections easily.If the screen displays an other menu, press Home button to go to the Main screen. If you want to know more information for Fax screen, please consult the user manual.

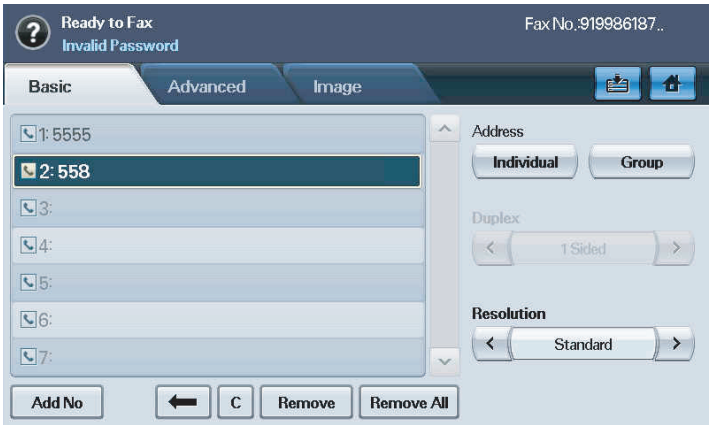

Basic Tab

- Fax number input area : Shows the recipient's fax number using the number keypad on the control panel. If you configured the phone book, press Individual or Group.
- Add No : Lets you add more destinations.
- ← : Deletes the last digit entered.
- C : Removes all digits of the selected entry.
- Remove : Removes the selected fax number entry.
- Remove All : Removes all the fax numbers in the input area.
- Address : Picks up the frequently used fax numbers directly from your machine or from SyncThru Web Service.
- Duplex : Selects whether the machine send faxes one side of the original, both sides of the original.
- Resolution : Adjusts the resolution options.

Advanced Tab

- Original Size: Selects the size of the original document. Press OK to update current setting.
- Delay Send: Sets the machine to send a fax at a later time without your intervention.
- Priority Send: Sends an urgent fax before reserved operations.
- Polling: Used when the receiver requests the document to be faxed remotely at sender's absence or vice versa. In order to use the polling function, the originals must be previously stored in the machine.
- Mailbox: Used to store a received fax or originals in the machine memory which are ready to be polled. You can use a mailbox on the same machine you are using, or the one on a remote machine. Each mailbox has a corresponding mailbox number, name and password.
- Back: Returns to the Basic tab.

Image Tab

- Original Type: Enhances the fax quality based on the type of the original document being scanned.
- Darkness: Adjusts the level of lightness or darkness of the fax.
- Erase Background: Reduces dark backgrounds or paper patterns as in newspaper originals.
- Color Mode: Selects whether the user sends the fax in mono or color.
- Back: Returns to the Basic tab.

TONER
Samsung Electronics
www.tonerplus.com.ua

4.1.6.4 Understanding the SCAN screen

To use the scanning feature, press Scan to Email, Scan to Server , Scan to PC on the Main screen. If the screen displays an other menu, press home button to go to the Main screen.

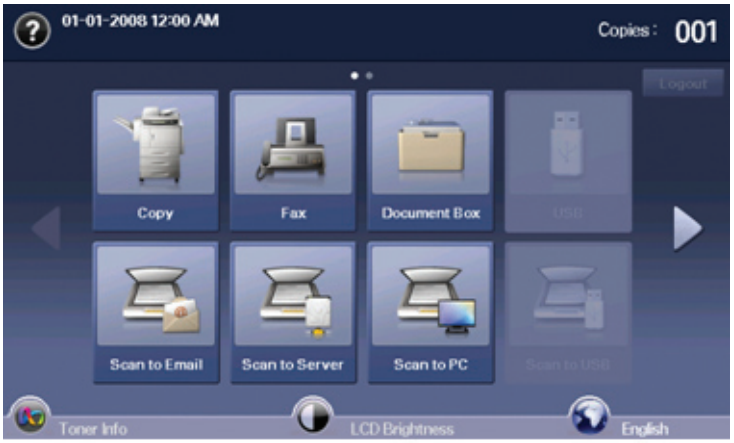

If the message asking Auth. ID and Password, it means the network administrator has set the authentication in SyncThru Web Service.

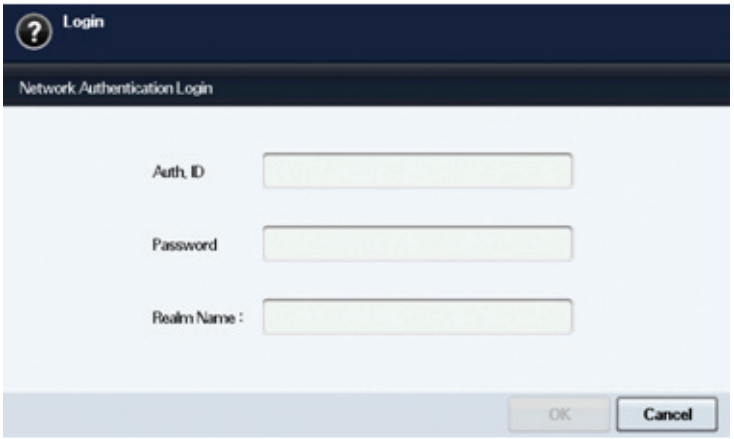

- Scan to Email: Scans and sends the scanned output to the destination by email.
- Scan to Server: Scans and sends the scanned output to the destination with SMB and FTP.
- Scan to PC: Scans and sends the scanned output to the destination with the Samsung Network Scan Manager program.

TONER
Samsung Electronics
www.tonerplus.com.ua

Scan to Email

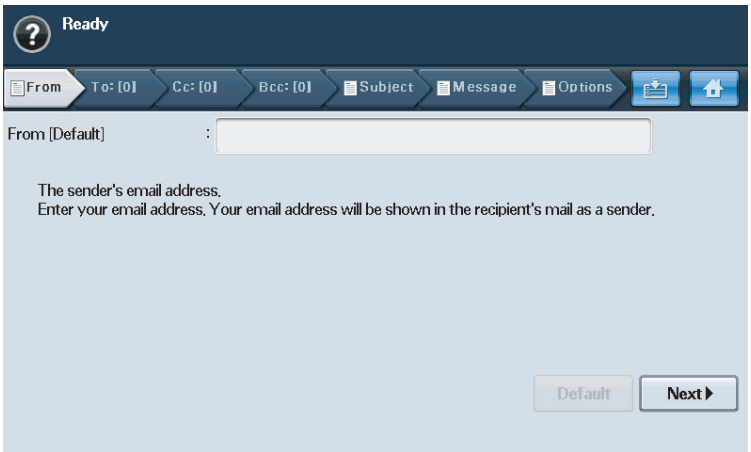

- From: Sender's email address.
- To/Cc/Bcc: Recipients' addresses. Cc is for copies to an additional recipient and Bcc is same as Cc but without their name being displayed in the email.
  - Address Book: Inputs the recipient's address just by pressing stored addresses. If you press Search, you can search the recipient's address. If you press Detail, you can see the detailed information of selected recipient. If you want to edit or delete a recipient, press Edit or Delete. Select recipient's address and click Apply. Press to return to the previous screen. You can store frequently used email addresses from your computer using the SyncThru Web Service.
- Subject/Message: Subject and message of the email.
- Options:
  - Original Size: Sets the originals to a specific fixed size.
  - Original Type: Selects whether the original is text or photo.
  - Color Mode: Adjusts the color options of the scan output. If the original is color and you want to scan in color, press Color Mode.
  - Darkness: Adjusts the degree of darkness of the scan output. Use left/right arrow to adjust the values.
  - Erase Background:Erases backgrounds like paper patterns.
  - Scan to Edge: Scans originals from edge-to-edge.
  - Quality: Adjusts the display quality of the scan output.
  - File Format: Selects the file format of the scan output.
  - Scan Preset: Automatically changes some scan options such as file format, resolution, and more. You can adjust options to fit each specific purpose.
  - Duplex: Selects whether the machine scans on one side of the paper (1 Sided), both sides of the paper (2 Sided), or both sides of paper but back is rotated 180 degrees (2 Sided, Rotate Side 2).
  - Resolution: Selects the scanning resolution value.
- Default: Puts the default message in the input field.
- Start: Sends email. This button will be enabled if you have filled from address and one of To/Cc/Bcc addresses.
- Next: Moves to the next screen.
- Previous: Returns to the previous screen. If the network authentication is enabled, the log off confirmation message popes up and closes Scan to Email.

TONER
Samsung Electronics
www.tonerplus.com.ua

Scan to Server

- Basic tab

• SMB: Sends the scanned file to SMB. Press SMB for that option.
• FTP: Sends the scanned file to FTP. Press FTP for that option.
• No.: Index number which you entered in SyncThru Web Service.
• Server: Alias name which you entered in SyncThru Web Service.
• Duplex: Selects whether the machine scans on one side of the paper (1 Sided), both sides of the paper (2 Sided), or both sides of paper but back is rotated 180 degrees (2 Sided, Rotate Side 2).
• Resolution: Selects the scanning resolution value.
• Back: Returns to the previous screen.

- Advanced tab

• Original Size: Sets the originals to a specific fixed size.
• Back: Returns to the previous screen.

TONER
Samsung Electronics
www.tonerplus.com.ua

- Image tab

- Original Type: Selects whether the original is text or photo.
- Color Mode: Adjusts the color options of the scan output. If the original is color and you want to scan in color, press Color Mode.
- Darkness: Adjusts the degree of darkness of the scan output. Use left/right arrow to adjust the values.
- Erase Background: Erases backgrounds like paper patterns.
- Scan to Edge: Scans originals from edge-to-edge.
- Back: Returns to the previous screen.

- Output tab

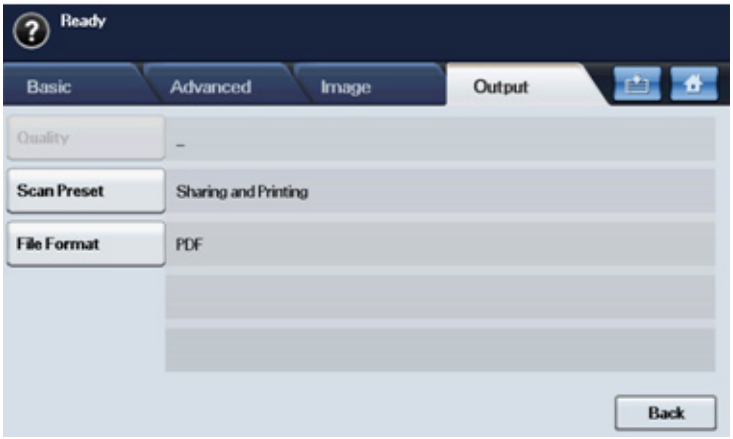

- Quality: Adjusts the display quality of the scan output.
- Scan Preset: Automatically changes some scan options such as file format, resolution, and more. You can adjust options to fit each specific purpose.
- File Format: Selects the file format of the scan output.
- Back: Returns to the previous screen.

TONER
www.tonerplus.com.ua

Scan to PC

- Basic tab

If the authentication for network appears, you have to enter user name and password to enter the Scan to PC screen. Then select an application and press Select to enter the Basic tab.

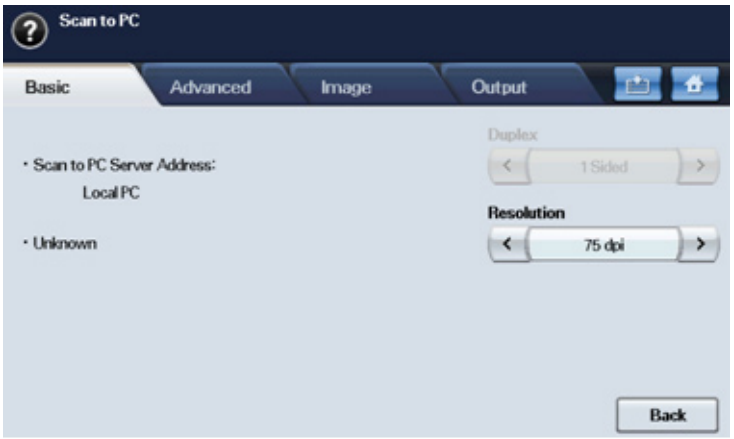

• Duplex: Selects whether the machine scans on one side of the paper (1 Sided), both sides of the paper (2 Sided), or both sides of paper but back is rotated 180 degrees (2 Sided, Rotate Side 2).
• Resolution: Selects the scanning resolution value.

- Image tab

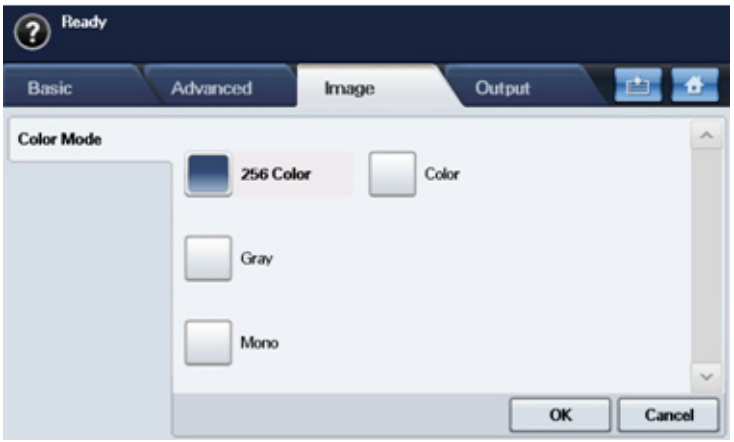

• Color Mode : Selects the color mode.

TONER
Samsung Electronics
www.tonerplus.com.ua

4.1.6.5 Understanding the Document Box screen

The machine shows the document box list of the print or fax job.
Press Document Box on the Main screen. If the screen displays an other menu, press to go to the Main screen.

- User Box tab: Create the box where you can save the document such as the file you have printed, sent by email or scanned. When you create a box, you can set the password to secure your box.
  The box with a password is called Secured Box, and without it, it is called public box.
- System Box tab: The machine provided default boxes, which you cannot modify them.
- Type: Shows the box is secured or not.
- Box Name: Shows the box name.
- Owner: Shows the user name of a box.
- Date: Shows the date of a box created.
- File: Shows the number of total files in the box.
- Add: Lets you add more boxes.
- Delete: Deletes the selected box.
- Edit: Lets you to modify a box name and an owner name.
- Detail: Shows box information.

TONER
Samsung Electronics
www.tonerplus.com.ua

4.1.6.6 Understanding the USB screen

When USB memory is inserted into the USB memory port on your machine, USB icon shows on the display

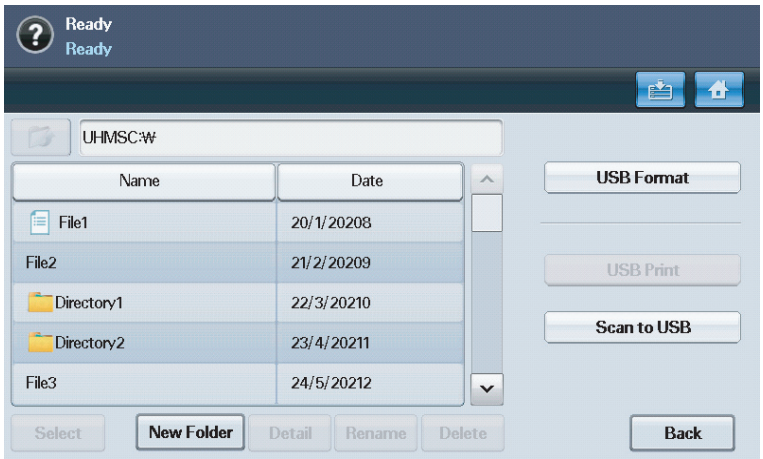

- USB Format: You can delete image files stored on an USB memory device one by one or all at once by reformatting the device.
- USB Print: You can directly print files stored on an USB memory device. You can print TIFF, BMP, JPEG, PDF, and PRN files.
- Scan to USB: You can specify image size, file format, or color mode for each scanning to USB job.

TONER
Samsung Electronics
www.tonerplus.com.ua

4.1.7 Firmware Upgrade

• USB and Network port are used to F/W upgrade.
• Network applications (SWAS, SWS) can be used for network port upgrade.

4.1.7.1. Using the common method

① Unplug the network cable and fax (Tel) cable.

② Download the firmware file in the temporary folder. And unzip the file.

③ Delete all current jobs from Job Status window

④ Connect USB cable in the machine (idle state)

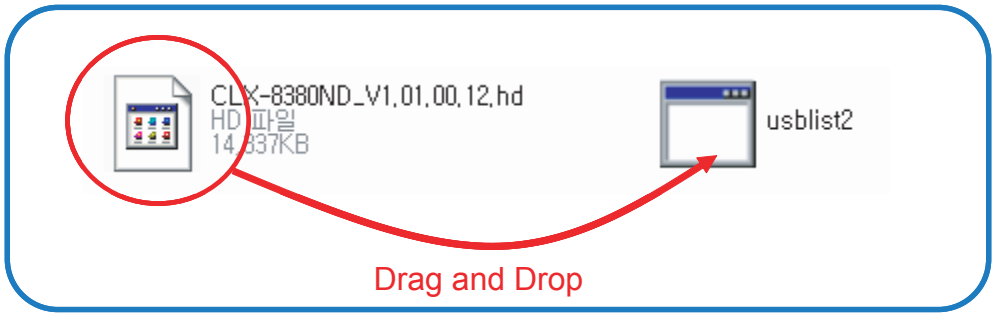

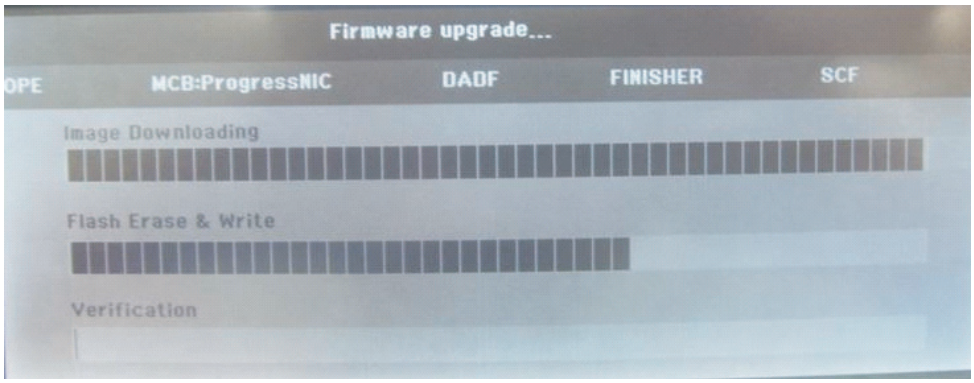

⑤ Send firmware file(*.hd) by usblist2
- Drag the f/w file and Drop down on the usbprn2.exe. And then f/w update will be started automatically.

⑥ Please wait until end reboot.

TONER
www.tonerplus.com.ua

4.1.7.2. F/W upgrade using SWAS (SyncThru Web Admin Service)

- Start the SWAS program.
  (Windows Start menu > Programs > Samsung Netowork Printer Utilities > SyncThru Web Admin Service)

① Firmware Upgrade → Upgrade (check device using IP address)

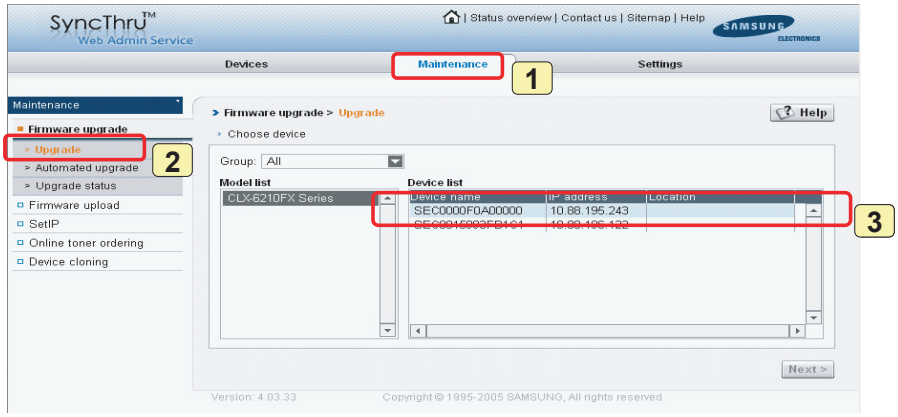

② Maintenance → Firmware upload (register firmware)

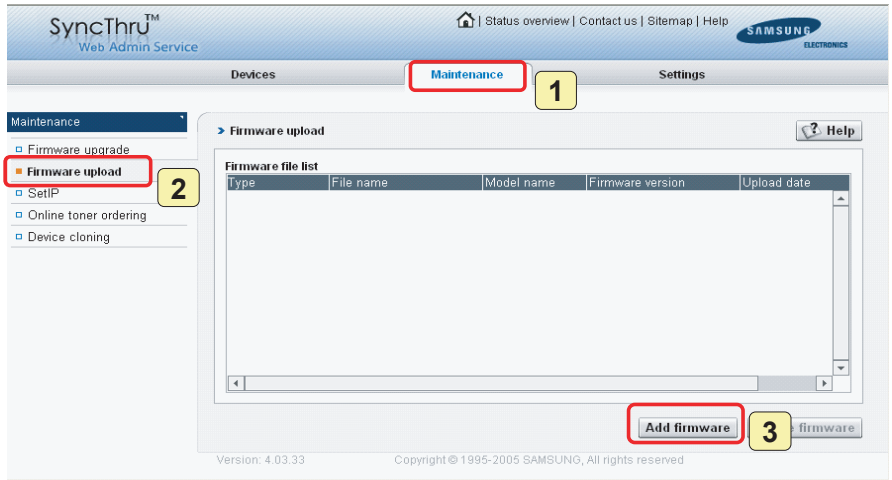

③ Maintenance → Firmware Upload (upload firmware)

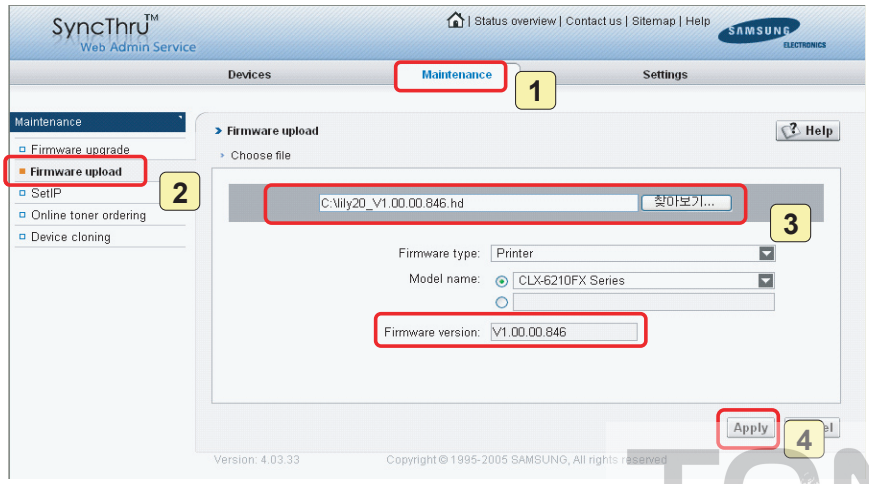

TONER
Samsung Electronics
www.tonerplus.com.ua

④ Maintenance → Firmware Upload (confirm uploaded firmware)

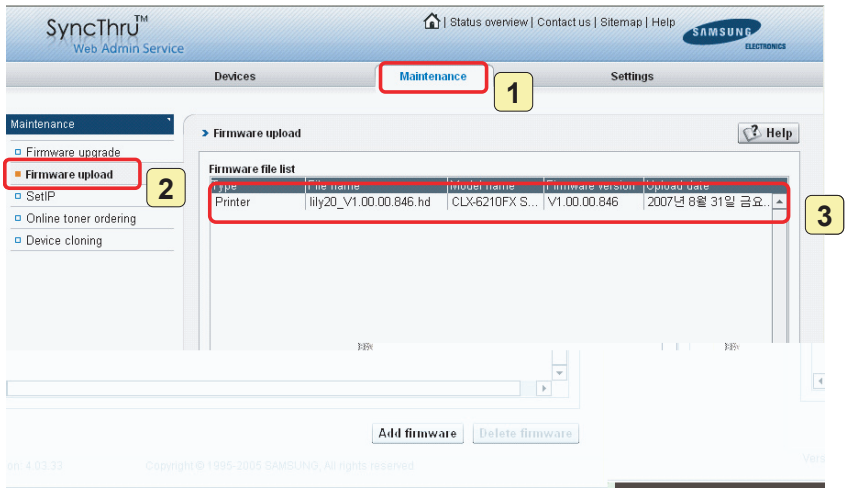

⑤ Maintenance → Firmware Upgrade → Upgrade (choose firmware)

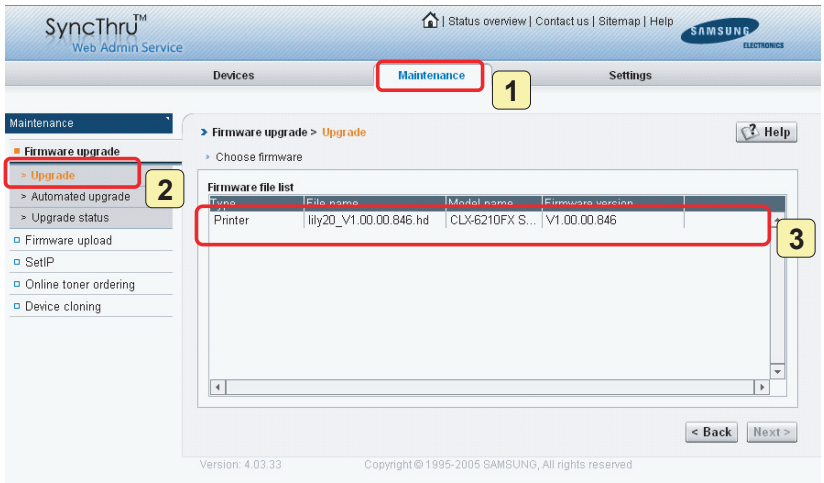

⑥ Maintenance → Firmware Upgrade → Upgrade (choose firmware)

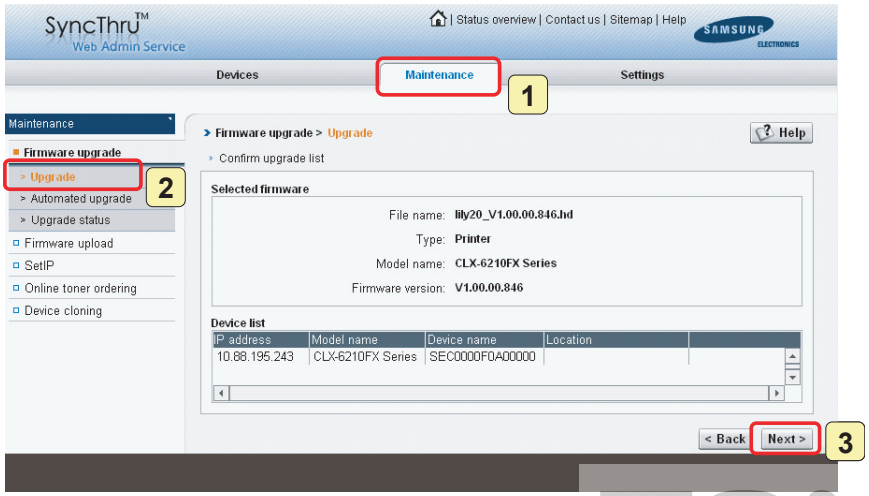

TONER
Samsung Electronics
www.tonerplus.com.ua

⑦ Maintenance → Firmware Upgrade → Upgrade

⑧ Maintenance → Firmware Upgrade → Upgrade (Done)

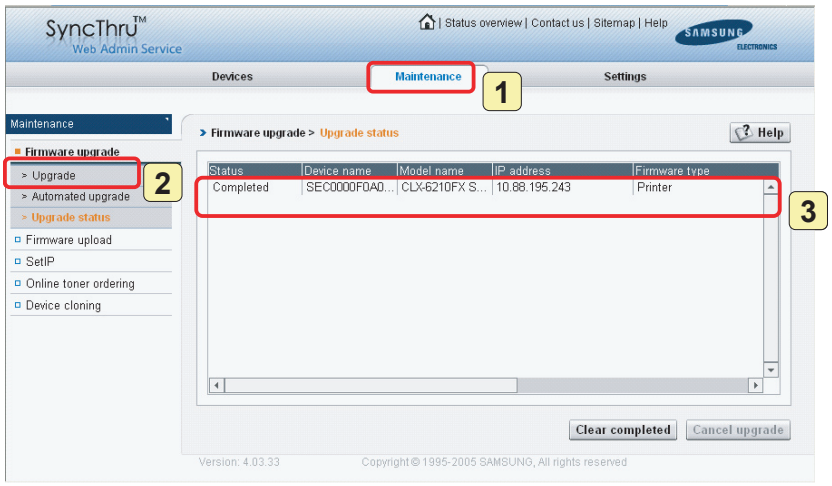

TONER
Samsung Electronics
www.tonerplus.com.ua

4.1.8 Diagnostics Mode (Tech Mode)

4.1.8.1 Introduction

This document will capture the behavior specifications for the GUI Windows for Diagnostics. Each section of this document describes one feature with a step window image and script.
However, used window image is not fixed image from the specification point of view. Acquire detail information from script. Window image is just example image will be implemented.

4.1.8.2 How to enter diagnostics mode

1. Press 1,2,3 buttons on numerical key simultaneously.
2. Enter password(1934).
3. Press ‘OK’ button.

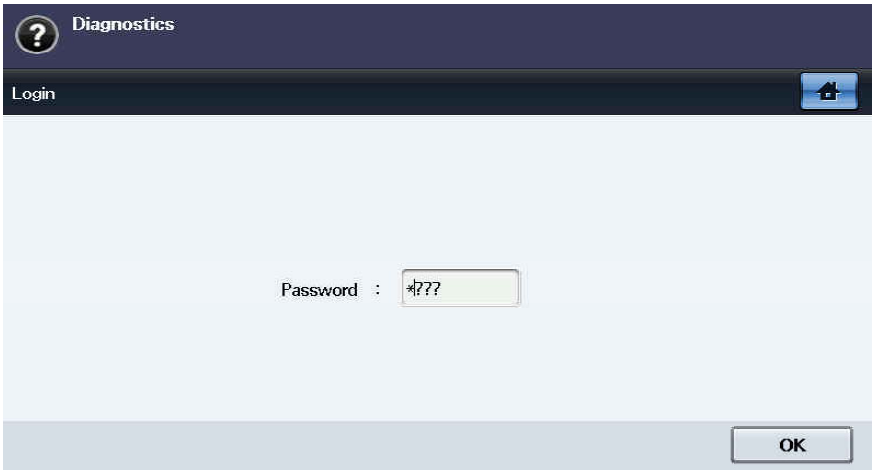

TONER
www.tonerplus.com.ua

4.1.8.3 How to exit diagnostics mode

By pressing the Home button, exit Diagnostics mode.
When exit Diagnostics mode, a popup window shall display.
By default, Reset Counters is No, Reboot Copier is Yes.

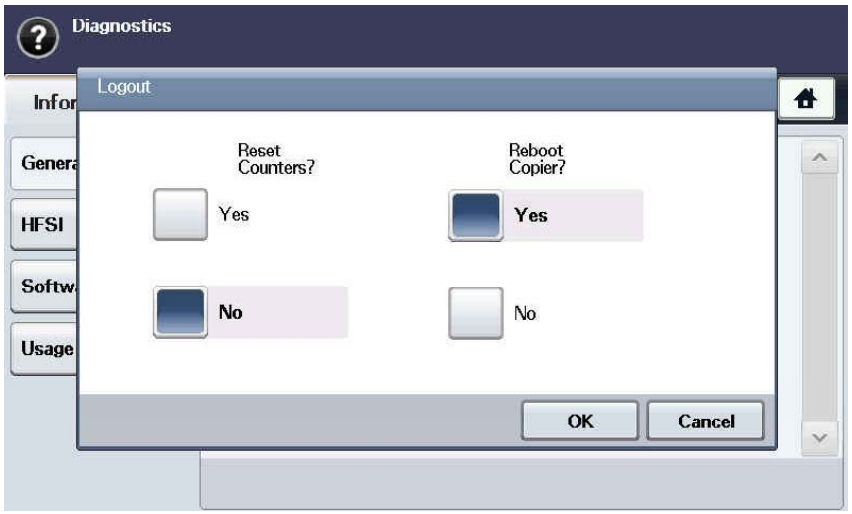

- Reset Counter
  If you select “Yes” for Reset counter, the count of Image since last call will reset. This item is to count the printed pages since last service.

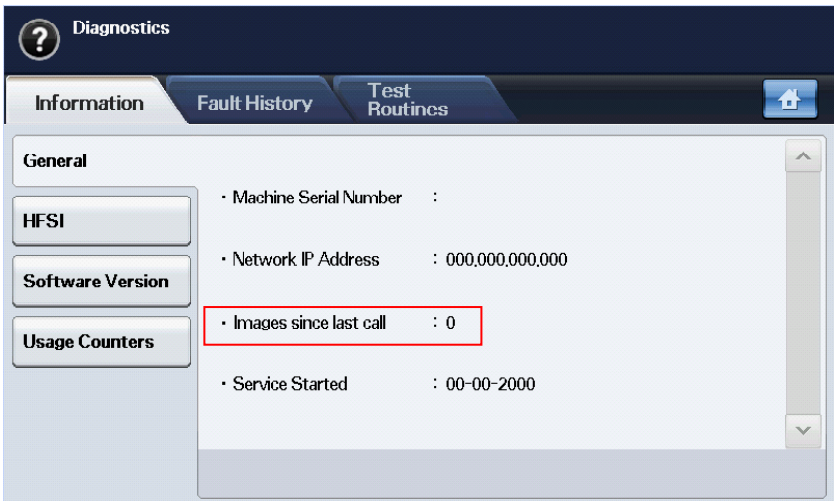

- Reboot Copier
  It doesn’t matter that you select “Yes” or “No”. The new settings in diagnostics mode will be applied to the product . It is not necessary to select “Yes”.

TONER
Samsung Electronics
www.tonerplus.com.ua

4.1.8.4 Diagnostics Menu Map

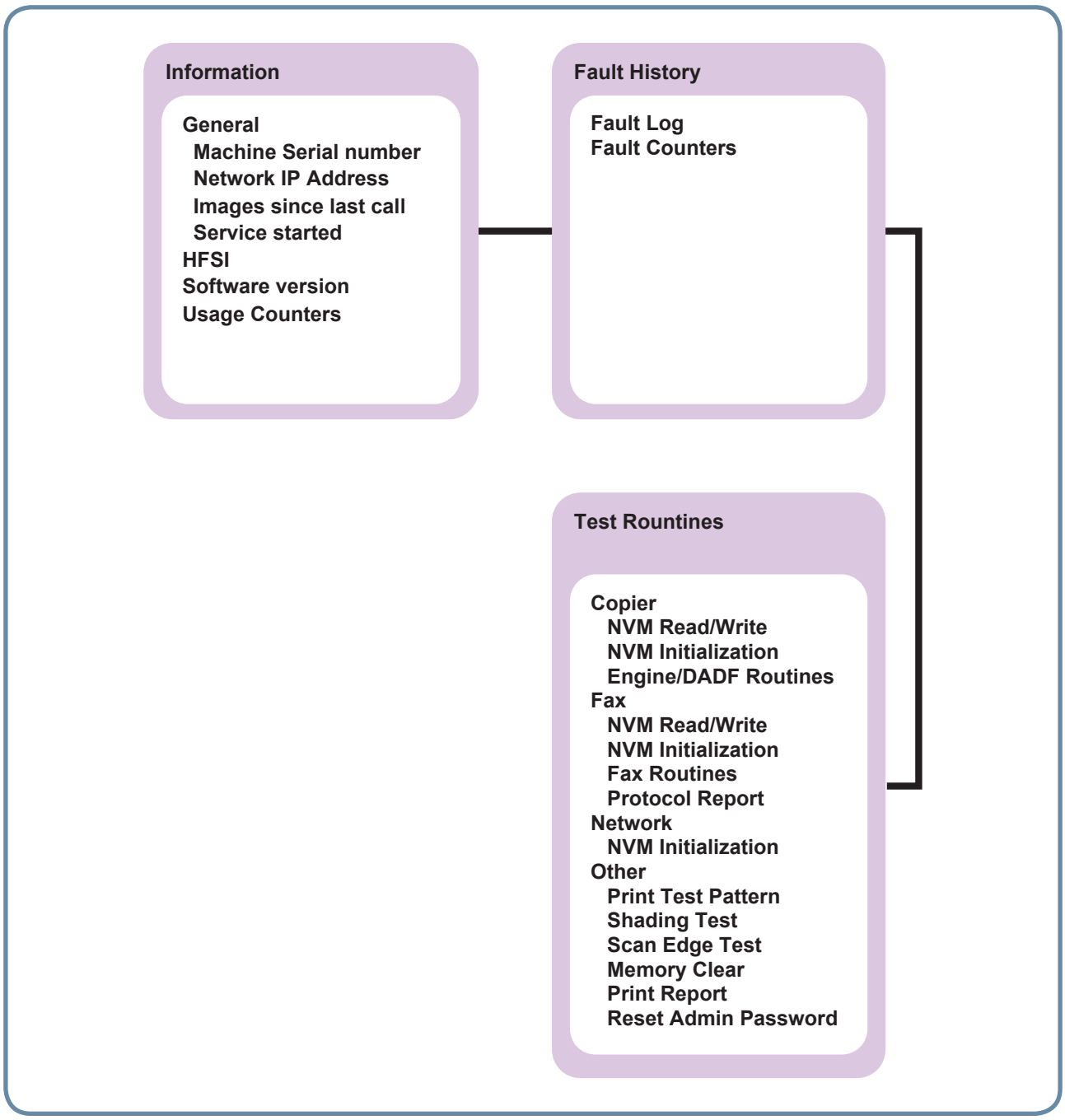

TONER
Samsung Electronics
www.tonerplus.com.ua

4.1.8.5 Information Tab

Information tab provides detail information of the machine.

General

• Diagnostics>Information>General

• When user selects General, OP displays Machine Serial Number, Network IP Address and Images since last call.

HFSI (High Frequency Service Items)

• Diagnostics>Information>HFSI

• When user selects General, OP displays the list of HFSI(High Frequency Service Items) read from the MCB.
In the list, there are " Item", "Status", "Actual", and "Max Life".

TONER
Samsung Electronics
www.tonerplus.com.ua

• User Behavior
- User can select one item in the list to reset the counter using “Reset” button or to edit the Max.Life and threshold value using “Edit” button.

• Items in this column are:
DADF Roller / Rubber Pad Life Page
T1/T2/T3 P-up Roller Life Page
Retard Roller Life Page
Bypass Rubber Pad Life page
Transfer Roller Life Page
Fuser Roller / Fuser Unit Life Page
Heat Roller Life Page
Pressure Roller Life Page

• Status
- The possible values in this column are ‘OK’, ‘Check’, ‘Negative’ and ‘Off’.
- OK : Actual counter is smaller than the threshold value
- Check : Actual counter is bigger than threshold value but smaller than Max.Life
- Off : Actual counter exceeds Max.Life
- Negative : There is no counter to display. In this case, it shall display ‘-‘ in the Status and Max Life column.

• Actual
- Values in this column are actual counts for HFSI usage

• Max. Life
Values in this column are maximum life limits set for HFSI.

• Reset
This button is used to reset the actual counter after replacing the HFSI unit.
This button is disabled before user select one item in the list and enabled once user select any of the items in the list.
Once user presses, a confirmation window shall display to user confirm again. The window is displayed as below.
If user confirms reset, it will reset the counter to 0.
If the counter of selected item is 0, ‘Reset’ button shall be disabled.

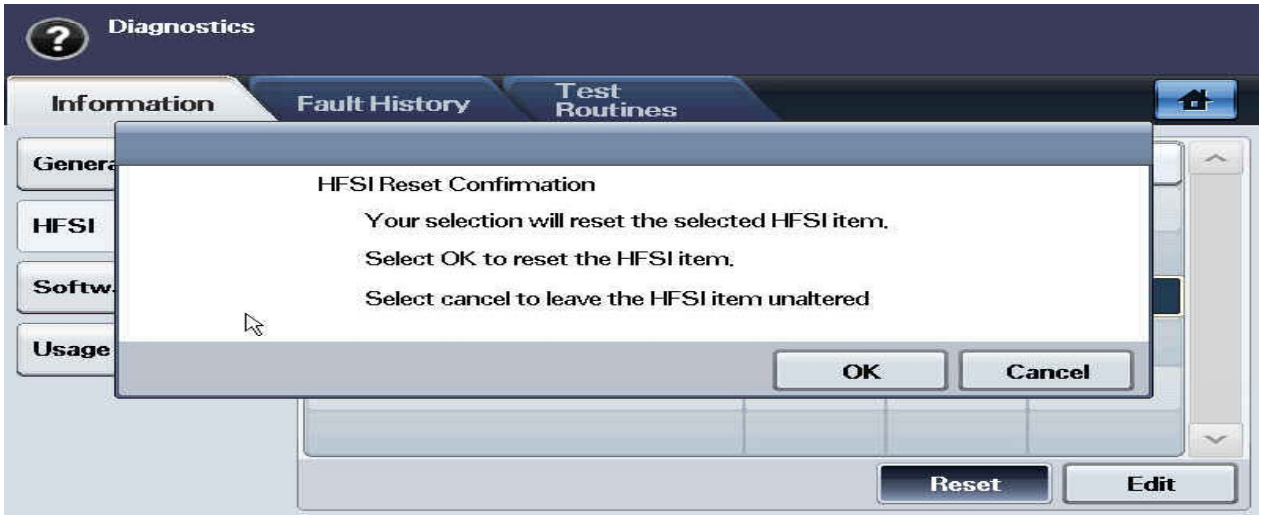

TONER
Samsung Electronics
www.tonerplus.com.ua

• Edit
“Edit” button is disabled until user select one item in the list.
Selecting “Edit” button causes edit window to be displayed.
There are two input filed for ‘Maximum Life’ and for ‘Threshold’.

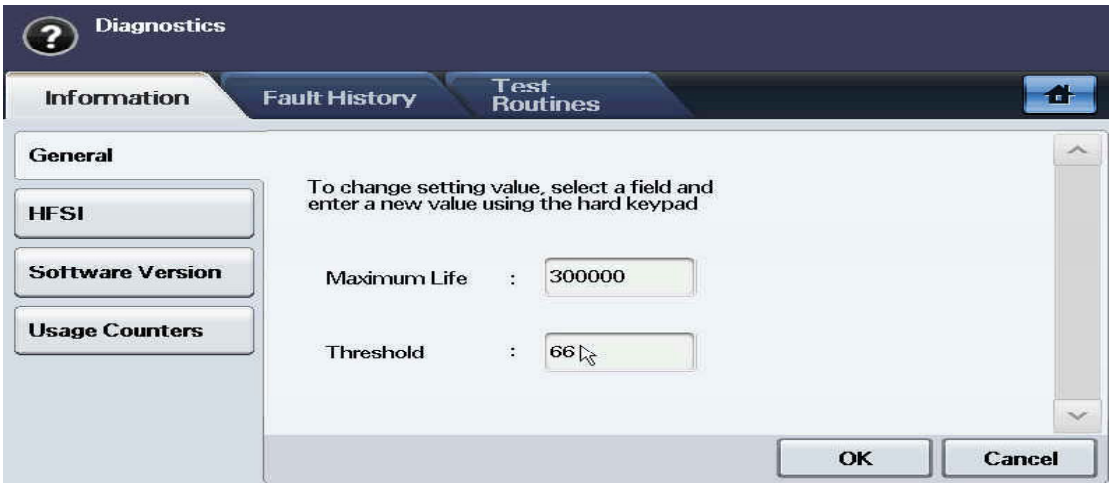

Each data field shall display default value or the last-saved value entered by the service engineer. The data field shall support the numeric characters of 0 to 9.
The hard keypad characters of ‘#’, ‘phone’ and ‘*’ are not supported and shall generate an invalid entry message if selected.
The hard keypad characters of ‘c’ shall delete all characters displayed within the selected data field. By selecting ‘Cancel’, window moves back to HSFI window without saving user’s setting. By selecting ‘OK’ button, window moves back to HSFI window saving user’s setting. Threshold value shall not be greater than Maximum Life.

Software Version

• Diagnostics>Information>Software Version
• When user selects Software version, OP displays the version of the Main Controller, Image Output Terminal, User Interface, Network Controller, Document Feeder, Tray 2 Firmware, Tray 3 Firmware

TONER
Samsung Electronics
www.tonerplus.com.ua

Usage Counter

• Diagnostics>Information>Usage Counter
• When user selects Usage Counter, OP displays the amount of the Items shown below.

- Total Impressions
- Black Impressions
- Black Copied Impressions
- Black Printed Impressions
- Color Impressions
- Color Copied Impressions
- Sheets
- Copied Sheets
- Black Copied Sheets
- Color Copied Sheets
- Printed Sheets
- Black Printed Sheets
- Color Printed Sheets
- 2 Sided Sheets
- Copied 2 Sided Sheets
- Black Copied 2 Sided Sheets
- Color Copied 2-Sided Sheets
- Printed 2 Sided Sheets
- Black Printed 2 Sided Sheets
- Color Printed 2 Sided Sheets
- Fax Images Received
- Images Sent
- Server Fax Images Sent
- Network Scanning Images Sent
- Email Images Sent
- Maintenance Impressions
- Black Maintenance Impressions
- Known Jams in the IOT
- Known Jams in Finishing Device(s)
- Attempted Sheet Feeds from Internal trays
- Actual sheet feeds from Internal trays
- Normal Level Power On Hours
- Power Save Hours
- Attempted Original Sheet Feeds in the DADF

※ IOT : Image Out Total

TONER
Samsung Electronics
www.tonerplus.com.ua

4.1.8.6 Fault History Tab

Fault History provides an error information occurred.

Fault Log

- Diagnostics>Fault History>Fault Log
- Fault log window shall display errors occurred while the product was operating.

- Diagnostics>Fault History>Fault Log>Clear
- When selecting “Clear” button, Pop-up will be displayed. If you want to delete the Fault history, touch the “OK” button.

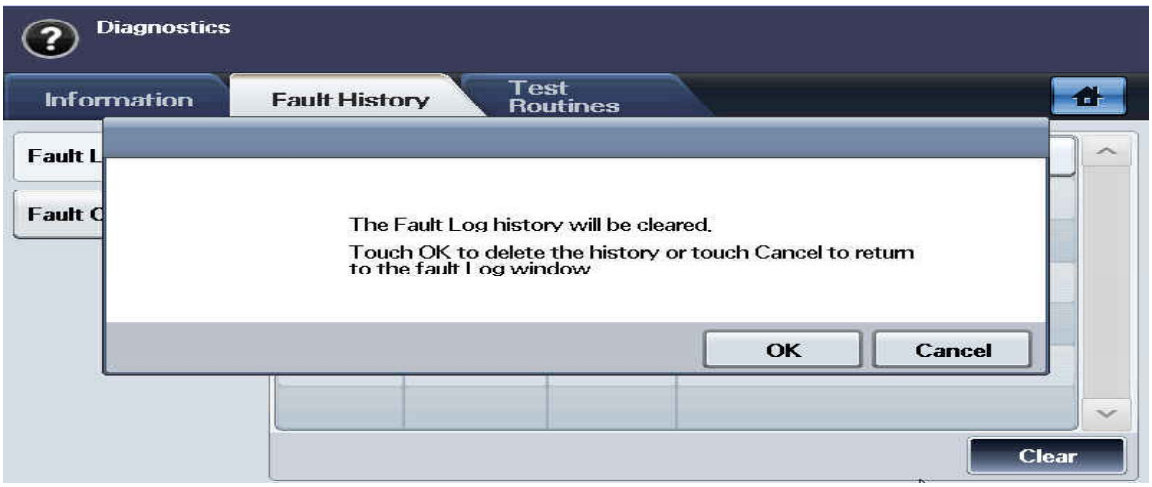

TONER
Samsung Electronics
www.tonerplus.com.ua

Fault Counters

- Diagnostics>Fault History>Fault Counters
- Fault counters window displays Fault group with number and name.
  They are

• 01 Feeder	• 09 FDI
• 02 Fuser	• 10 Controller
• 03 Motor Fan	• 11 Scanner
• 04 LSU	• 12 Mismatch Type
• 05 Option Interface	• 13 Network
• 06 CRU	• 14 Cloning
• 07 Finisher	• 18 Memory State
• 08 DADF	• 21 Tray
	• 24 MSOK

User shall select one item in the list at a time and multiple selection shall not supported. User can select ‘Non Zero’ or ‘All’. By default, ‘Non Zero’ shall be selected.
When press ‘OK’, Fault Counters Detail Window shall be displayed.

TONER
Samsung Electronics
www.tonerplus.com.ua

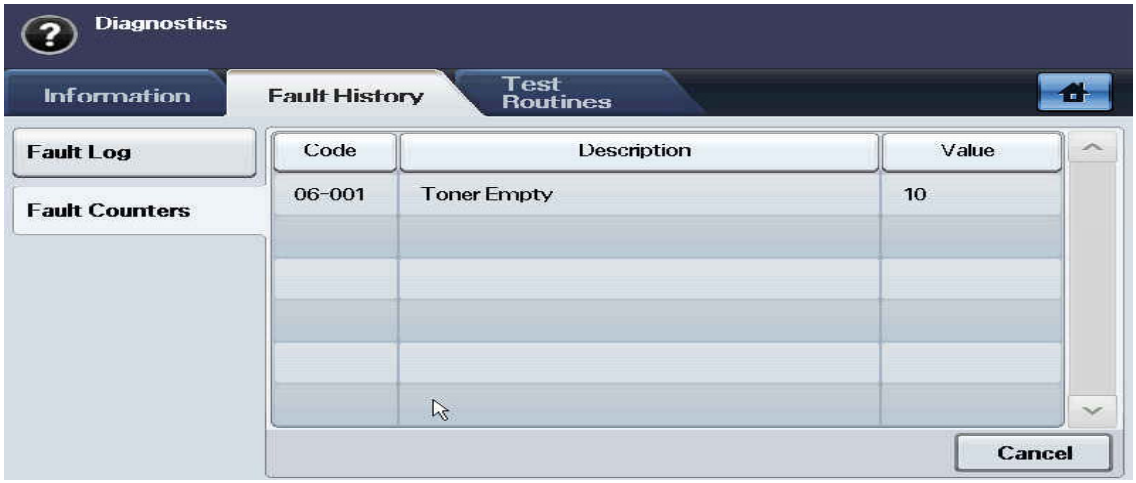

Fault Counters Detail window shall display Fault code, description and value (counter) among the selected Fault Group. Items of displayed Fault codes are different based on the selection of 'Non Zero' or 'All'. When selected 'Non Zero', Fault codes in the selected Fault Group having non zero counter shall be displayed. When selected 'All', all Fault codes in the selected Fault Group shall be displayed. Display order of Fault code is upward.

4.1.8.7 Test Routines Tab

4.1.8.7(a) Copier

NVM Read/Write

• Diagnostics>Test Routines>Copier>NVM Read/Write

"Edit" button shall be disabled until any NVM item is selected.
"Edit" button shall be disabled when read only NVM is selected. Search edit box has 00-000 as a default. User shall input the whole number to find a specific NVM by pressing Find button. (Refer to NVM Read/Write table) If matching NVM is found, the page including the specified NVM shall be displayed and the NVM is shown as selected. If matching NVM is not found, error message such as "Invalid NVM number" shall be displayed on the status area and search edit box displays default number.

TONER
Samsung Electronics
www.tonerplus.com.ua

• Diagnostics>Test Routines>Copier>NVM Read/Write>Edit

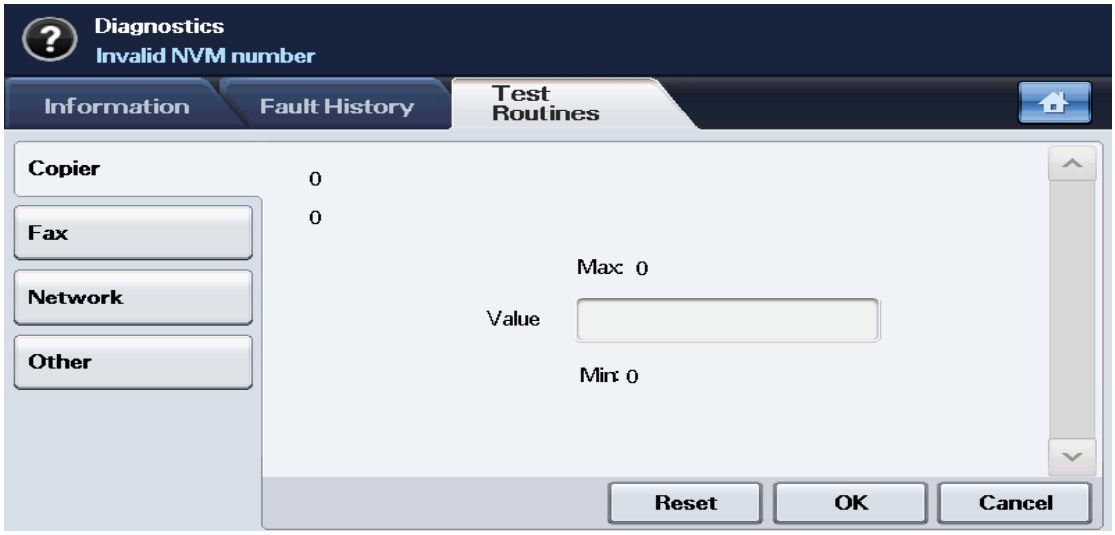

• NVRAM Read / Write code table

0~4	Reserved
5	DADF
6~19	Reserved
20	FAX
100	Engine(Motor)
101	Engine(Clutch & Actuator)
102	Engine(Paper Handling)
103	Engine(Timing)
104	Engine(Consumables)
105	Engine(Charger)
106	Engine(Developer)
107	Engine(Transfer)
108	**Engine(Environment)**
109	Engine(Fixing)
110	Engine(LSU)
111	Engine(Toner)
112	Engine(ACR)
113	Engine(Option/Finisher)
114	Engine(Option/SCF)
115	Engine(Option/Reserved)
116	Engine(Option/Reserved)
117	**Engine(CTD)**
118~255	Reserved

TONER
Samsung Electronics
www.tonerplus.com.ua

Code	NVM Description (GUI)	Default	Max / Min	Function Description
102-000	Top Registration Tray1 Simplex	3	6/0	* You can adjust the Top Margin of simplex copy image for each tray. * The input value is reflected to the real image and it is equal to mm. * In case, the value is more than 3 : Simplex copy top margin lengthen. For example, if the value is 6, top margin lengthen 3 mm. * In case, the value is less than 3 : Simplex copy top margin shorten. For example, if the value is 0, top margin shorten 3 mm.
102-010	Top Registration Tray2 Simplex	3	6/0	
102-020	Top Registration Tray3 Simplex	3	6/0	
102-040	Top Registration Bypass Simplex	3	6/0	
102-100	Top Registration Tray1 Dup_long (2nd side)	3	6/0	* You can adjust the Top Margin of duplex image of duplex copy for each tray. * The input value is reflected to the real image and it is same with mm size. * In case, the value is more than 3 : Top Margin of duplex image of duplex copy lengthen. For example, if the value is 6, top margin lengthen 3 mm. * In case, the value is less than 3 : Top Margin of duplex image of duplex copy shorten. For example, if the value is 0, top margin shorten 3 mm.
102-110	Top Registration Tray2 Dup_long (2nd side)	3	6/0	
102-120	Top Registration Tray3 Dup_long (2nd side)	3	6/0	
102-140	Top Registration Bypass Dup_long (2nd side)	3	6/0	
102-200	Top Registration Tray1 Duplex (1st side)	3	6/0	* You can adjust the Top Margin of simplex image of duplex copy for each tray. * The input value is reflected to the real image and it is same with mm size. * In case, the value is more than 3 : Simplex image top margin of duplex copy lengthen. For example, if the value is 6, top margin lengthen 3 mm. * In case, the value is less than 3 : Simplex image top margin of duplex copy shorten. For example, if the value is 0, top margin shorten 3 mm.
102-210	Top Registration Tray2 Duplex (1st side)	3	6/0	
102-220	Top Registration Tray3 Duplex (1st side)	3	6/0	
102-240	Top Registration Bypass Duplex (1st side)	3	6/0	
103-000	Pick Up Start Time	30	1000/0	* Pick up start time value * You can read the value only.
103-010	Regi Off Time	92	500/0	* Regi Off Time value * You can read the value only.
103-021	Option Clutch On Time	8	100/0	* Option clutch on time value * You can read the value only.
104-000	Pick up roller Life Page Counter	0	100000 /0	* Tray1 Pick up roller Page Counter value * When replacing a svc part, you can change the count to 0.
104-030	T2 Pick-Up Roller Life Page Counter	0	100000 /0	* Tray2 Pick up roller Page Counter value * When replacing a svc part, you can change the count to 0.
104-040	T3 Pick-Up Roller Life Page Counter	0	100000 /0	* Tray3 Pick up roller Page Counter value * When replacing a svc part, you can change the count to 0.

TONER
Samsung Electronics
www.tonerplus.com.ua

Code	NVM Description (GUI)	Default	Max / Min	Function Description
104-060	Bypass Rubber Pad Life Page Counter	0	100000 /0	* MP Tray Pick up roller Page Counter value * When replacing a svc part, you can change the count to 0.
105-000	MHV DC Yellow	425	1000 /100	* This value is to set the DC component in the charge voltage for charging the OPC surface. * Default 425 PWM is approximately -706V * The voltage changes +2.05v per +1 PWM. * In case of NN, the surface of OPC is charged by approximately -600V. * This value is to check the normal state of HVPS,LSU. * The value set on EDC manually is not applied to the real printing. * At real printing, the value is applied by the Look-Up Table considering the environment and life automatically.
105-010	MHV DC Magenta	425	1000 /100	
105-020	MHV DC Cyan	425	1000 /100	
105-030	MHV DC Black (MHV Bias Control)	425	1000 /100	
105-040	MHV DC Low Yellow	440	1000 /100	* In case of OPC idling, this value is to make the lower charge voltage on OPC surface. * Default 440 PWM is approximately -736V that makes approximately -100V charge voltage. * The voltage changes +2.05v per +1 PWM. * This value is to check the normal state of HVPS,LSU. * The value set on EDC manually is not applied to the real printing. * At real printing, the value is applied by the Look-Up Table considering the environment and life automatically.
105-050	MHV DC Low Magenta	440	1000 /100	
105-060	MHV DC Low Cyan	440	1000 /100	
105-070	MHV DC Low Black	440	1000 /100	
105-080	MHV VPP Yellow	134	250/30	* This value is to set the AC component in the charge voltage for charging the OPC surface. * Default 134 PWM is approximately -2.28KVpp * The voltage changes +13.5Vpp per +1 PWM. * This value is to check the normal state of HVPS,LSU. * The value set on EDC manually is not applied to the real printing. * At real printing, the value is applied by the Look-Up Table considering the environment and life automatically.
105-090	MHV VPP Magenta	134	250/30	
105-100	MHV VPP Cyan	134	250/30	
105-110	MHV VPP Black	134	250/30	
105-120	MHV AC Yellow	128	160/100	* This PWM value is to set +/- rate of AC component for charging the OPC surface. * Default 128 PWM is 50% Duty * This value is to check the normal state of HVPS,LSU. * The value set on EDC manually is not applied to the real printing. * At real printing, the value is applied by the Look-Up Table considering the environment and life automatically.
105-130	MHV AC Magenta	128	160/100	
105-140	MHV AC Cyan	128	160/100	
105-150	MHV AC Black	128	160/100	
106-000	Deve DC Yellow	152	200/90	* This PWM value is to set the develping DC that toner of magnetic roll is developed on OPC. * Default 152 PWM is approximately -500V. * The voltage changes +4.0V per +1 PWM. * This value is to check the normal state of HVPS,LSU. * The value set on EDC manually is not applied to the real printing. * At real printing, the value is applied by the Look-Up Table considering the environment and life automatically.
106-010	Deve DC Magenta	152	200/90	
106-020	Deve DC Cyan	152	200/90	
106-030	Deve DC Black (Deve Bias Control)	152	200/90	

TONER
Samsung Electronics
www.tonerplus.com.ua

Code	NVM Description (GUI)	Default	Max / Min	Function Description
107-000	Transfer1 High Voltage(THV) Yellow	65	100/50	* T1 Transfer current (Y,M,C,Bk-Pod) PWM Duty * This is the high voltage to transfer the toner image on OPC to the ITB. * When perfoming the CTD or ACR, it is the same for tranfering the compensating patch on ITB. * Current(T1) = 0.1736 * PWM - 3.1603 * This value is the only initial setting of default PWM Duty for the first transfer. * At real printing, the value is applied by the Look-Up Table considering the environment and life automatically.
107-010	Transfer1 High Voltage(THV) Magenta	65	100/50	
107-020	Transfer1 High Voltage(THV) Cyan	65	100/50	
107-030	Transfer1 High Voltage(THV) Black (THV Bias Control)	65	100/50	
107-040	Transfer1 High Voltage(THV) Low Yellow	53	100/50	* T1 Protection current (Y,M,C,Bk-Pod) PWM Duty * This is the high voltage to ensure the output stability of HVPS for no-image area on OPC. * Current(T1) = 0.1736 * PWM - 3.1603 * At real printing, the value is applied by the Look-Up Table considering the environment and life automatically. It never change.
107-050	Transfer1 High Voltage(THV) Low Magenta	53	100/50	
107-060	Transfer1 High Voltage(THV) Low Cyan	53	100/50	
107-070	Transfer1 High Voltage(THV) Low Black	53	100/50	
107-080	Transfer2 High Voltage(THV2)	140	160/65	* T2 transfer current (Simplex printing side) PWM Duty * This is the high voltage to transfer the toner image on ITB to the paper for second transfer. * This is the second transfer high voltage for simplex printing side that doesn't pass the fuser. * Current(T2) = 0.2654 x PWM - 9.0191 * The value set on EDC manually is not applied to the real printing. * At real printing, the value is applied by the Look-Up Table considering the environment and life automatically.
107-090	Transfer2 High Voltage(THV2) Duplex	80	160/65	* T2 transfer current (Duplex printing side) PWM Duty * This is the high voltage to transfer the toner image on ITB to the paper for second transfer. * This is the second transfer high voltage for duplex printing side that pass the fuser. * Current(T2) = 0.2654 x PWM - 9.0191
107-100	PreTransfer1 Duty	74	100/50	* T1 transfer system Load recognition current PWM Duty * This is the high voltage to recognize the total impedance of T1 transfer system that pass the T1 roller rubber, ITB, OPC. * Current(T1) = 0.1736 * PWM - 3.1603 * The value set on EDC manually is not applied to the real printing. * At real printing, the value is applied by the Look-Up Table considering the environment and life automatically.

TONER
Samsung Electronics
www.tonerplus.com.ua

Code	NVM Description (GUI)	Default	Max / Min	Function Description
107-110	PreTransfer2 Duty	105	160/65	* T2 transfer system Load recognition current PWM Duty This is the high voltage to recognize the total impedance of T2 transfer system that pass the T2 roller rubber, ITB, OPC * Current(T2) = 0.2654 x PWM - 9.0191 * The value set on EDC manually is not applied to the real printing. * At real printing, the value is applied by the Look-Up Table considering the environment and life automatically.
107-120	Saw Plate Duty (Detack Bias Control)	90	110/1	* Eraser high voltage PWM Duty of the rear paper * After second transfer, this high voltage erases the static electricity from the rear paper. * (Saw eraser Bias) = -8.4237 x (PWM) + 315.3 * The value set on EDC manually is not applied to the real printing. * At real printing, the value is applied by the Look-Up Table considering the environment and life automatically.
109-050	60 gms Temperature offset	7	14/0	* Fusing temperature variableness of Thin type paper * Default temperature : 170℃ * Range of variableness : 177 ~ 163℃ (170℃ +/- 7℃) * In case, the value is more than 7 : The fuser temperature increases (input value-7)℃ than 170℃ * In case, the value is less than 7 : The fuser temperature decreases (7-input value)℃ than 170℃
109-060	90 gms Temperature offset	7	14/0	* Fusing temperature variableness of Plain type paper * Default temperature : 175℃ * Range of variableness : 182 ~ 168℃ (175℃ +/- 7℃) * In case, the value is more than 7 : The fuser temperature increases (input value-7)℃ than 175℃ * In case, the value is less than 7 : The fuser temperature decreases (7-input value)℃ than 175℃
109-070	Bond Temperature offset	7	14/0	* Fusing temperature variableness of Bond type paper * Default temperature : 150℃ * Range of variableness : 157 ~ 143℃ (150℃ +/- 7℃) * In case, the value is more than 7 : The fuser temperature increases (input value-7)℃ than 150℃ * In case, the value is less than 7 : The fuser temperature decreases (7-input value)℃ than 150℃
109-080	Transparency Temperature offset	7	12/2	* Fusing temperature variableness of Transparency type paper * Default temperature : 150 ℃ * Range of variableness : 155 ~ 145℃ (150℃ +/- 5℃) * In case, the value is more than 7 : The fuser temperature increases (input value-7)℃ than 150℃ * In case, the value is less than 7 : The fuser temperature decreases (7-input value)℃ than 150℃

TONER
Samsung Electronics
www.tonerplus.com.ua

Code	NVM Description (GUI)	Default	Max / Min	Function Description
109-090	Cardstock Temperature offset	7	14/0	* Fusing temperature variableness of Cardstock type paper * Default temperature : 150 ℃ * Range of variableness : 157 ~ 143℃ (150℃ +/- 7℃) * In case, the value is more than 7 : The fuser temperature increases (input value-7)℃ than 150℃ * In case, the value is less than 7 : The fuser temperature decreases (7-input value)℃ than 150℃
109-100	Envelopes Temperature offset	7	14/0	* Fusing temperature variableness of Envelope type paper * Range of variableness : 157 ~ 143℃ (150℃ +/- 7℃) * In case, the value is more than 7 : The fuser temperature increases (input value-7)℃ than 150℃ * In case, the value is less than 7 : The fuser temperature decreases (7-input value)℃ than 150℃
109-110	Labels Temperature offset	7	14/0	* Fusing temperature variableness of Label type paper * Default temperature : 150℃ * Range of variableness : 157 ~ 143℃ (150℃ +/- 7℃) * In case, the value is more than 7 : The fuser temperature increases (input value-7)℃ than 150℃ * In case, the value is less than 7 : The fuser temperature decreases (7-input value)℃ than 150℃
109-120	Fuser Bias Duty	154	194/154	* Fuser Bias PWM * Read only * You can't chage this value. (HH condition : 194 / Other : 154)
109-130	Thick Temperature Offset	7	14/0	* Fusing temperature variableness of Label type paper * Default temperature : 150℃ * Range of variableness : 157 ~ 143℃ (150℃ +/- 7℃) * In case, the value is more than 7 : The fuser temperature increases (input value-7)℃ than 150℃ * In case, the value is less than 7 : The fuser temperature decreases (7-input value)℃ than 150℃
110-000	LD Power Yellow(Half)	88	250/10	* This PWM sets the laser intensity to be shoot on OPC. (This value is used at half speed that the process speed of OPC is the half of normal condition) * Default 88 PWM is approximately 0.223mW. * This value changes +0.0026mw per +1 PWM. * This value is to check the normal state of HVPS,LSU. * The value set on EDC manually is not applied to the real printing. * At real printing, the value is applied by the Look-Up Table considering the environment and life automatically.
110-010	LD Power Magenta(Half)	88	250 /10	
110-020	LD Power Cyan(Half)	88	250 /10	
110-030	LD Power Black(Half)	88	250 /10	

TONER
Samsung Electronics
www.tonerplus.com.ua

Code	NVM Description (GUI)	Default	Max / Min	Function Description
110-040	LD Power Yellow	100	250/10	* This PWM sets the laser intensity to be shoot on OPC. * Default 100, 95 PWM are approximately 0.254mW, 0.241mW. * This value changes +0.0026mw per +1 PWM. * This value is to check the normal state of HVPS,LSU. * The value set on EDC manually is not applied to the real printing. * At real printing, the value is applied by the Look-Up Table considering the environment and life automatically.
110-050	LD Power Magenta	95	250/10	
110-060	LD Power Cyan	95	250/10	
110-070	LD Power Black (LD Light Level Black)	95	250/10	
111-000	Toner Vcon Yellow	175	255/90	* This value is the TC sensor control voltage PWM to adjust the toner density. * Default is 175. But, if the new imaging unit is installed, PWM will be changed after TC Sensor Initialization. * Default 175 PWM is approximately 8.15V. * This value changes 0.01V per +1 PWM. * This value is to check the normal state of the toner density sensor output. * The value set on EDC manually is not applied to the real printing. * At real printing, the value is applied by the Look-Up Table considering the environment and life automatically.
111-010	Toner Vcon Magenta	175	255/90	
111-020	Toner Vcon Cyan	175	255/90	
111-030	Toner Vcon Black	175	255/90	
111-060	Toner T/C Upper Limit Yellow	5	100/0	* This value is the ADC to control the toner density. * 5 ADC (for initial toner only) is the target+0.5wt%(9.0wt%) * The more the value increase, the more the toner density increase.
111-070	Toner T/C Upper Limit Magenta	5	100/0	
111-080	Toner T/C Upper Limit Cyan	5	100/0	
111-090	Toner T/C Upper Limit Black	5	100/0	
111-100	Toner T/C Lower Limit Yellow	140	250/10	* This value is the ADC to contol the toner density. * 140 ADC(for initial toner only) is the Target -1wt% (7.5 wt%). * The more the value decrease, the more the toner density decrease.
111-110	Toner T/C Lower Limit Magenta	140	250/10	
111-120	Toner T/C Lower Limit Cyan	140	250/10	
111-130	Toner T/C Lower Limit Black	140	250/10	
111-140	Toner Target Yellow	128	250/10	* This value is the ADC to control the toner density. * In case of 128 ADC (for initial toner only), toner density is 8.5wt%. * The more the value increase, the more the toner density decrease. * The more the value decrease, the more the toner density increase. * You must input the value less than lower limit.
111-150	Toner Target Magenta	128	250/10	
111-160	Toner Target Cyan	128	250/10	
111-170	Toner Target Black	128	250/10	

TONER
www.tonerplus.com.ua

Code	NVM Description (GUI)	Default	Max / Min	Function Description
112-000	Total Condition On/Off for ACR	1 (TRUE)	1/0	* ACR ON/OFF * 1 (On) (Default) / 0 (OFF)
112-090	Inner Temperature for ACR	3	30/1	* ACR performance temperature condition for inside temperature changes of the product. (Unit : ℃) Ex) In case that the value is 3. -> If the inside temperatrue change 3℃, ACR will start. * The frequency of ACR performance is related to the regi error. * The more you operates ACR, the less the regi error decrease.
112-100	LSU Temperature for ACR	3	30/1	* ACR performance temperature condition for inside temperature changes of the LSU. (Unit : ℃) Ex) In case that the value is 3. -> If the inside temperatrue of LSU change 3℃, ACR will start. * The frequency of ACR performance is related to the regi error. * The more you operates ACR, the less the regi error decrease.
112-110	Page Count for ACR	500	5000 /200	ACR performance setting for printed pages. EX) In case that the value is 500 -> Whenever 500 pages are printed, ACR will start. * The frequency of ACR performance is related to the regi error. * The more you operates ACR, the less the regi error decrease.
112-120	Manual Color Regi X-offset Yellow	100	200/0	* Primary scanning direction offset compared with Black for yellow. (Unit : dot) * Primary scanning direction : Vertical direction for paper transfer * Offset value changes on the contrary because turning the polygon mirror of LSU is the oppsite between Y/C color and M/K color. * In case, the value is more than 100 : Primary scanning direction of yellow moves to left than black. * In case, the value is less than 100 : Primary scanning direction of yellow moves to right than black. 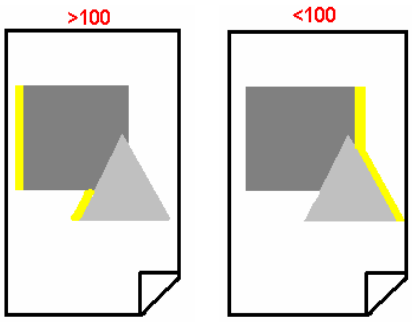
112-121	Reset All Offsets for ACR	100	200/0	Reset all offsets to default.

TONER
Samsung Electronics
www.tonerplus.com.ua

Code	NVM Description (GUI)	Default	Max / Min	Function Description
112-130	Manual Color Regi X-offset Magenta	100	200/0	* Primary scanning direction offset compared with Black for magenta. (Unit : dot) * In case, the value is more than 100 : Primary scanning direction of magenta moves to left than black. * In case, the value is less than 100 : Primary scanning direction of magenta moves to right than black. 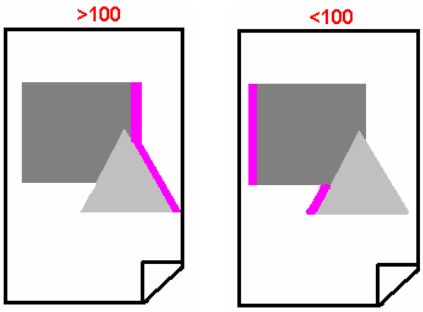
112-140	Manual Color Regi X-offset Cyan	100	200/0	* Primary scanning direction offset compared with Black for Cyan. (Unit : dot) * In case, the value is more than 100 : Primary scanning direction of cyan moves to left than black. * In case, the value is less than 100 : Primary scanning direction of cyan moves to right than black. 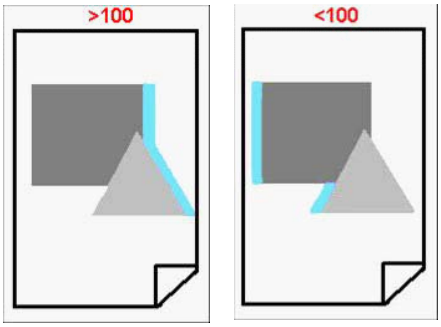
112-150	Manual Color Regi X-offset Black	100	100/100	* Black is a standard. So you can't change the value.

TONER
Samsung Electronics
www.tonerplus.com.ua

Code	NVM Description (GUI)	Default	Max / Min	Function Description
112-160	Manual Color Regi Y-offset Yellow	100	200/0	* Secondary scanning direction offset compared with Black for Yellow. (Unit : dot) * Secondary scanning direction : Horizontal direction for paper transfer * In case, the value is more than 100 : Secondary scanning direction of yellow moves to bottom than black. * In case, the value is less than 100 : Secondary scanning direction of yellow moves to top than black. 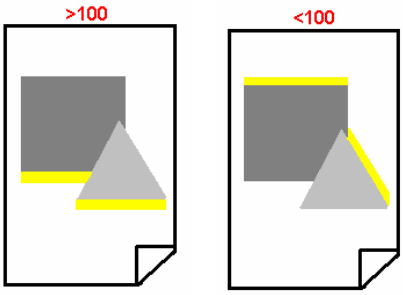
112-170	Manual Color Regi Y-offset Magenta	100	200/0	* Secondary scanning direction offset compared with Black for Magenta. (Unit : dot) * In case, the value is more than 100 : Secondary scanning direction of magenta moves to bottom than black. * In case, the value is less than 100 : Secondary scanning direction of magenta moves to top than black. 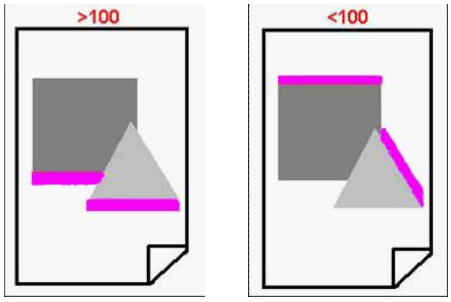

TONER
Samsung Electronics
www.tonerplus.com.ua

Code	NVM Description (GUI)	Default	Max / Min	Function Description
112-180	Manual Color Regi Y-offset Cyan	100	200/0	* Secondary scanning direction offset compared with Black for Cyan. (Unit : dot) * In case, the value is more than 100 : Secondary scanning direction of cyan moves to bottom than black. * In case, the value is less than 100 : Secondary scanning direction of cyan moves to top than black. 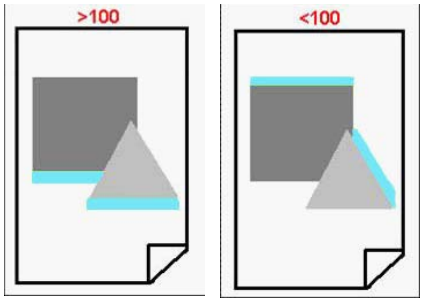
112-190	Manual Color Regi Y-offset Black	100	100/100	* Black is a standard. So you can't change the value.
112-200	Manual Color Regi Width Yellow	100	200/0	* This vaule adjusts the primary scanning direction width of Yellow color. It adjusts the left side based on the right of portrait (paper direction). * In case, the value is more than 100 : Primary scanning direction width of yellow increases. * In case, the value is less than 100 : Primary scanning direction width of yellow decreases. 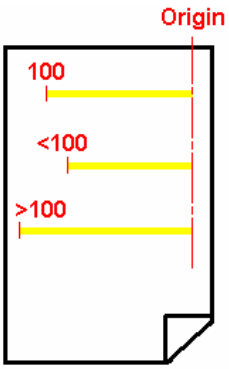

TONER
Samsung Electronics
www.tonerplus.com.ua

Code	NVM Description (GUI)	Default	Max / Min	Function Description
112-210	Manual Color Regi Width Magenta	100	200/0	* This vaule adjusts the primary scanning direction width of Magenta color. It adjusts the right side based on the left of portrait (paper direction). * In case, the value is more than 100 : Primary scanning direction width of magenta increases. * In case, the value is less than 100 : Primary scanning direction width of magenta decreases. 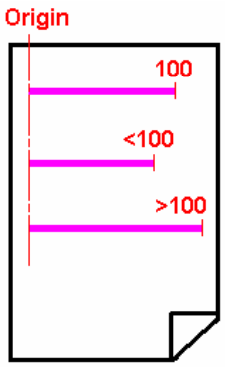
112-220	Manual Color Regi Width Cyan	100	200/0	* This vaule adjusts the primary scanning direction width of Cyan color. It adjusts the left side based on the right of portrait (paper direction). * In case, the value is more than 100 : Primary scanning direction width of cyan increases. * In case, the value is less than 100 : Primary scanning direction width of cyan decreases. 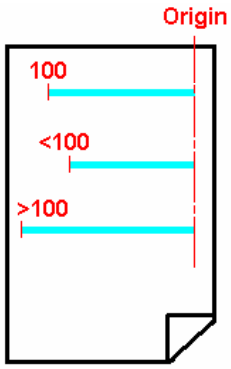

TONER
Samsung Electronics
www.tonerplus.com.ua

Code	NVM Description (GUI)	Default	Max / Min	Function Description
112-230	Manual Color Regi Width Black	100	200/0	* This vaule adjusts the primary scanning direction width of Black color. It adjusts the right side based on the left of portrait (paper direction). * In case, the value is more than 100 : Primary scanning direction width of black increases. * In case, the value is less than 100 : Primary scanning direction width of black decreases. 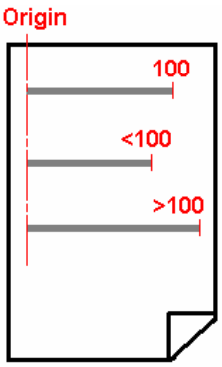
05-100	DADF Top Edge Erase	2	4/0	* This value sets the Top Skip at DADF Copy. * This value 1 means 1mm skip. * In case, the value is more than 2 : Top Skip at DADF copy increases. * In case, the value is less than 2 : Top Skip at DADF copy decreases.
05-110	DADF Bottom Edge Erase	2	4/0	* This value sets the Bottom Skip at DADF Copy. * This value 1 means 1mm skip. * In case, the value is more than 2 : Bottom Skip at DADF copy increases. * In case, the value is less than 2 : Bottom Skip at DADF copy decreases.
05-500	Platen Top Edge Erase	2	4/0	* This value sets the Top Skip at Platen Copy. * This value 1 means 1mm skip. * In case, the value is more than 2 : Top Skip at Platen copy increases. * In case, the value is less than 2 : Top Skip at Platen copy decreases.
05-510	Platen Bottom Edge Erase	2	4/0	* This value sets the Bottom Skip at Platen Copy. * This value 1 means 1mm skip. * In case, the value is more than 2 : Bottom Skip at Platen copy increases. * In case, the value is less than 2 : Bottom Skip at Platen copy decreases.

TONER
www.tonerplus.com.ua

Code	NVM Description (GUI)	Default	Max / Min	Function Description
05-700	ADF Roller Life Page Counter	0	100000 /0	* DADF Pick up roller Page Counter * When replacing a svc part, you can change the count to 0.
05-710	ADF Rubber Pad Life Page Counter	0	100000 /0	* DADF Rubber Pad Page Counter * When replacing a svc part, you can change the count to 0.

TONER
www.tonerplus.com.ua

NVM Initialization

- Diagnostics>Test Routines>Copier>NVM Initialization
- By default, none of items is selected and Initialize button shall be disabled.
  There shall be Back button.

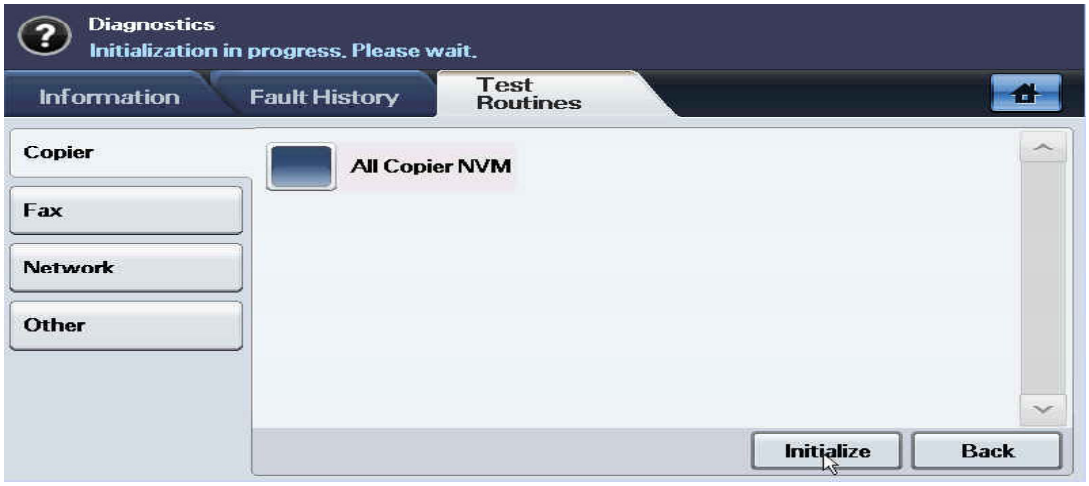

- Diagnostics>Test Routines>Copier>NVM Initialization>Initialize

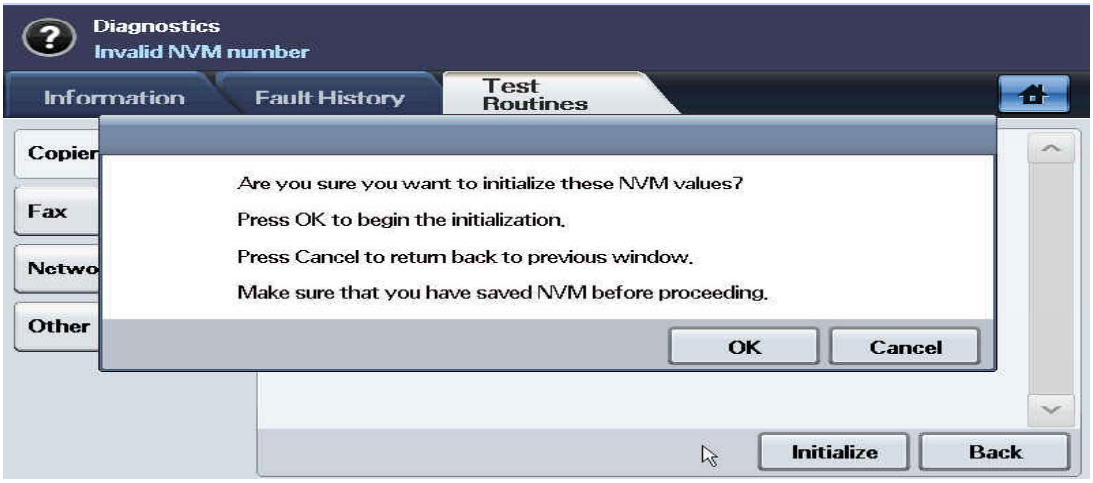

If you want to initialize the NVM values, press OK button.
When press OK button, SR shall show the initialization progress status and result.
When the result is get, pop up window shall be disappeared.

TONER
Samsung Electronics
www.tonerplus.com.ua

Engine/DADF Test Routines

• Diagnostics>Test Routines>Copier>Engine/DADF Test Routines.

When exit this window, OP shall send exit command. (CMD_COPY_COMP_EXITMODE)
By default, all Test routines will be displayed.
By default, search edit box has 00 .
OK/Reset button shall be disabled until any test routine is selected.
Maximum number of selection is 3.
Reset will deselect all selected test routines.
User select test routine by touching the row and deselect touching it again.
User input chain number in search edit box and only all test routines in the chain shall be displayed.

By default, Start/Stop/Stop All shall be disabled.
Start button shall be enabled when selected item is not running.
Multiple selection shall not be supported.
Stop shall be enabled only when the selected item is running.
Stop All shall be enabled when there is any running test item.
Back button shall be disable when there is any running test item.

TONER
www.tonerplus.com.ua

• Engine Diagnostic Contol(EDC) Menu

0~4	Reserved
5	DADF
6~19	Reserved
20	FAX
100	Engine(Motor)
101	Engine(Clutch & Actuator)
102	Engine(Paper Handling)
103	Engine(Timing)
104	Engine(Consumables)
105	Engine(Charger)
106	Engine(Developer)
107	Engine(Transfer)
108	**Engine(Environment)**
109	Engine(Fixing)
110	Engine(LSU)
111	Engine(Toner)
112	Engine(ACR)
113	Engine(Option/Finisher)
114	Engine(Option/SCF)
115	Engine(Option/Reserved)
116	Engine(Option/Reserved)
117	**Engine(CTD)**
118~255	Reserved

Code	Displayed Name	Meaning	Input / Output	State Displayed
100-000	Main BLDC Motor	Main BLDC Motor is On/Off	Output	On[Off]
100-010	Main BLDC Motor Ready	Detect if Main BLDC Motor runs at normal speed	Input	High[Low]
100-020	Black OPC/DEV Motor	Black OPC/DEV BLDC Motor is On/Off	Output	On[Off]
100-030	Black OPC/DEV Motor Ready	Detect if Black OPC/DEV BLDC Motor runs at normal speed	Input	High[Low]
100-040	Color OPC Motor	Color OPC BLDC Motor is On/Off	Output	On[Off]
100-050	Color OPC Motor Ready	Detect if Color DEV BLDC Motor runs at normal speed	Input	High[Low]
100-060	Color DEV Motor	Color DEV BLDC Motor is On/Off	Output	On[Off]
100-070	Color DEV Motor Ready	Detect if Color DEV BLDC Motor runs at normal speed	Input	High[Low]
100-080	T1 Engage Motor	T1 Engage Motor On/Off	Output	On[Off]
100-090	T1 Engae Sensor	Detect if the T1 Engage is On or Off.	Input	High[Low]
100-100	T2 Engage Motor	T2 Engage Motor On/Off	Output	On[Off]

TONER www.tonerplus.com.ua

Code	Displayed Name	Meaning	Input / Output	State Displayed
100-110	T2 Engae Sensor	Detect if the T1 Engage is On or Off.	Input	High[Low]
100-120	Exit Motor Forward Fast	Exit Motor Forward Fast On/Off	Output	On[Off]
100-130	Exit Motor Forward Slow	Exit Motor Forward Slow On/Off	Output	On[Off]
100-140	Duplex Motor Forward	Duplex Motor Forward On/Off	Output	On[Off]
100-150	Duplex Motor Backward	Duplex Motor Backward On/Off	Output	On[Off]
100-160	Duplex Fan1 Run	Start/Stop Duplex Fan1 run	Output	On[Off]
100-170	Duplex Fan2 Run	Start/Stop Duplex Fan2 run	Output	On[Off]
100-190	Dupelx Fan2 Run Ready	Detects if Duplex Fan2 runs at normal speed.	Input	High[Low]
100-240	Waste Toner Motor	Waste Toner Motor On/Off	Output	On[Off]
100-241	Waste Toner Led	Waste Toner Led On/Off	Output	On[Off]
100-250	Waste Toner Full Sensor	Detect if the waste toner is full or not.	Input	High[Low]
100-260	SMPS Fan Run	Start/Stop Deve. Fan run	Output	On[Off]
100-270	SMPS Fan Run Ready	Detects if Deve Fan runs at normal speed.	Input	High[Low]
101-000	Bypass Feed Clutch	Engages drive to pick up a paper from bypass Tray(MP Tray).	Output	On[Off]
101-010	T1 Pick-Up Clutch	Engages drive to pick up a paper from tray1.	Output	On[Off]
101-020	T2 Pick-Up Clutch	Engages drive to pick up a paper from tray2. (Optional)	Output	On[Off]
101-030	T3 Pick-Up Clutch	Engages drive to pick up a paper from tray3. (Optional)	Output	On[Off]
101-050	Registration Clutch	Engages drive to registartion rolls.	Output	On[Off]
101-060	Duplex Feed Clutch	Engages drive to feed a paper into duplex path.	Output	On[Off]
101-070	Duplex Gate Clutch	Engages drive to convert paper direction into duplex path.	Output	On[Off]
101-080	T1 Feed Clutch	T1 Feed Clutch On/Off	Output	On[Off]
101-170	Side Cover Interlock	Detect if the side cover is opened or closed.	Input	Opened/Closed
101-190	Out-Bin Full Sensor	Detect when a paper is at Duplex Ready sensor.	Input	High[low]
102-000	Tray1 Home Position	Detect when tray1 is closed.	Input	Closed[Opened]
102-010	T1 Paper Empty Sensor	Detect when paper is in Tray1.	Input	High[low]
102-020	T1 Size1 sensor	Detects whether auto size1 sensor of tray1 is high or low.	Input	High[low]
102-030	T1 Size2 sensor	Detects whether auto size2 sensor of tray1 is high or low.	Input	High[low]
102-040	T1 Size3 sensor	Detects whether auto size3 sensor of tray1 is high or low.	Input	High[low]
102-050	T1 Stack Height Sensor	Detects if paper in tray1 is elevated to the sensor.	Input	High[low]
102-060	T1 Paper Low Sensor	Detects when the stack height of tray1 is less than 25%.	Input	High[low]
102-070	Tray2 Home Position	Detect when tray2 is closed.	Input	Closed[Opened]
102-080	T2 Paper Empty Sensor	Detect when paper is in tray2.	Input	High[low]
102-090	T2 Size1 sensor	Detects whether auto size1 sensor of tray2 is high or low.	Input	High[low]
102-100	T2 Size2 sensor	Detects whether auto size2 sensor of tray2 is high or low.	Input	High[low]
102-110	T2 Size3 sensor	Detects whether auto size3 sensor of tray2 is high or low.	Input	High[low]

TONER
Samsung Electronics
www.tonerplus.com.ua

Code	Displayed Name	Meaning	Input / Output	State Displayed
102-120	T2 Stack Height Sensor	Detects if paper in tray2 is elevated to the sensor.	Input	High[low]
102-130	T2 Paper Low Sensor	Detects when the stack height of tray2 is less than 25%.	Input	High[low]
102-140	Tray3 Home Position	Detect when tray3 is closed.	Input	Closed[Opened]
102-150	T3 Paper Empty Sensor	Detect when paper is in tray3.	Input	High[low]
102-160	T3 Size1 sensor	Detects whether auto size1 sensor of tray3 is high or low.	Input	High[low]
102-170	T3 Size2 sensor	Detects whether auto size2 sensor of tray3 is high or low.	Input	High[low]
102-180	T3 Size3 sensor	Detects whether auto size3 sensor of tray3 is high or low.	Input	High[low]
102-190	T3 Stack Height Sensor	Detects if paper in tray3 is elevated to the sensor.	Input	High[low]
102-200	T3 Paper Low Sensor	Detects when the stack height of tray3 is less than 25%.	Input	High[low]
102-280	Bypass Paper Empty Sensor	Detects when paper is in Bypass Tray(MP Tray).	Input	High[low]
102-290	Feed Sensor	Detect when a paper is at Feed sensor.	Input	High[low]
102-360	Regi. Sensor	Detect when a paper is at Regi. sensor.	Input	High[low]
102-370	Exit Sensor	Detect when a paper is at Exit. sensor.	Input	High[low]
102-380	Duplex Jam1 Sensor	Detect when a paper is at Duplex Jam1 sensor.	Input	High[low]
102-390	Duplex Jam2 Sensor	Detect when a paper is at Duplex Jam2 sensor.	Input	High[low]
105-000	Yellow MHV Bias	Yellow MHV bias voltage on at normal drive level	Output	On[Off]
105-010	Magenta MHV Bias	Magenta MHV bias voltage on at normal drive level	Output	On[Off]
105-020	Cyan MHV Bias	Cyan MHV bias voltage on at normal drive level	Output	On[Off]
105-030	Black MHV Bias	Black MHV bias voltage on at normal drive level	Output	On[Off]
105-040	Yellow MHV Bias Read	Yellow Detect what the MHV value is on the MHV Roller	Output	Numeric 3 digits
105-050	Magenta MHV Bias Read	Magenta Detect what the MHV value is on the MHV Roller	Output	Numeric 3 digits
105-060	Cyan MHV Bias Read	Cyan Detect what the MHV value is on the MHV Roller	Output	Numeric 3 digits
105-070	Black MHV Bias Read	Black Detect what the MHV value is on the MHV Roller	Output	Numeric 3 digits
106-000	Yellow Dev Bias	Yellow Dev bias voltage on at normal drive level	Output	On[Off]
106-010	Magenta Dev Bias	Magenta Dev bias voltage on at normal drive level	Output	On[Off]
106-020	Cyan Dev Bias	Cyan Dev bias voltage on at normal drive level	Output	On[Off]
106-030	Black Dev Bias	Black Dev bias voltage on at normal drive level	Output	On[Off]
107-000	Yellow THV Bias	Yellow THV bias voltage on at normal drive level	Output	On[Off]
107-010	Magenta THV Bias	Magenta THV bias voltage on at normal drive level	Output	On[Off]
107-020	Cyan THV Bias	Cyan THV bias voltage on at normal drive level	Output	On[Off]
107-030	Black THV Bias	Black THV bias voltage on at normal drive level	Output	On[Off]
107-040	Yellow THV Bias Read	Detect what the THV value is on the THV Roller	Input	Numeric 3 digits
107-050	Magenta THV Bias Read	Detect what the THV value is on the THV Roller	Input	Numeric 3 digits
107-060	Cyan THV Bias Read	Detect what the THV value is on the THV Roller	Input	Numeric 3 digits
107-070	Black THV Bias Read	Detect what the THV value is on the THV Roller	Input	Numeric 3 digits
107-080	iTHV(+) Bias	iTHV plus bias voltage on at normal drive level	Output	On[Off]
107-090	iTHV Bias Read	Detect what the THV value is on the iTHV Roller		Numeric 3 digits

TONER www.tonerplus.com.ua

Code	Displayed Name	Meaning	Input / Output	State Displayed
107-100	iTHV(-) Bias	iTHV minus bias voltage on at normal drive level	Output	On[Off]
107-110	Detach Bias	Detack bias voltage on at normal drive level	Output	On[Off]
107-170	Saw Bias	Saw bias voltage on at normal drive level	Output	On[Off]
109-000	Fuser Temperature A	Detects what the temperature A is on fuser.	Input	Numeric 3 digits
109-010	Fuser Temperature B	Detects what the temperature B is on fuser.	Input	Numeric 3 digits
109-030	Fuser Motor Forward	Fuser Motor Forward On/Off	Output	On[Off]
109-110	Fuser Crum Read1	Detect if the life of fuser1 is exhausted.	Input	High[Low]
109-120	Fuser Crum Read2	Detect if the life of fuser2 is exhausted.	Input	High[Low]
109-150	Fuser Bias(+) Bias	Fuser Positive bias voltage on at normal drive level	Output	On[Off]
109-151	Fuser Bias(-) Bias	Fuser Negative bias voltage on at normal drive level	Output	On[Off]
110-000	LSU Motor1 Run Ready	Detects if LSU motor1 runs at normal speed.	Input	High[Low]
110-010	LSU Motor2 Run Ready	Detects if LSU motor2 runs at normal speed.	Input	High[Low]
110-020	LSU Fan1 Run Ready	Detects if LSU Fan Motor runs at normal speed.	Input	High[Low]
110-040	LSU Clean Motor	Detect if the LSU Clean Motor On/Off	Output	High[Low]
110-050	LSU Clean Sensor	Detect if the LSU Clean Motor is On or Off	Input	High[Low]
110-060	LSU Motor1 Run	LSU Motor1 On/Off	Output	On[Off]
110-070	LSU Motor2 Run	LSU Motor2 On/Off	Output	On[Off]
110-080	LSU LD Power1	LSU LD1 Power On/Off (yellow)	Output	On[Off]
110-090	LSU LD Power2	LSU LD2 Power On/Off (magenta)	Output	On[Off]
110-100	LSU LD Power3	LSU LD3 Power On/Off (cyan)	Output	On[Off]
110-110	LSU LD Power4	LSU LD4 Power On/Off (black)	Output	On[Off]
110-120	LSU Fan1 Run	Start/Stop LSU Fan Run	Output	On[Off]
111-000	Toner Dispense Motor Yellow	Toner Dispense(Supply) Motor On/Off	Output	On[Off]
111-010	Toner Dispense Motor Magenta	Toner Dispense(Supply) Motor On/Off	Output	On[Off]
111-020	Toner Dispense Motor Cyan	Toner Dispense(Supply) Motor On/Off	Output	On[Off]
111-030	Toner Dispense Motor Black	Toner Dispense(Supply) Motor On/Off	Output	On[Off]
111-040	Toner Sensor Yellow	TC sensor in developer tank.	Input	Numeric 3 digits
111-050	Toner Sensor Magenta	TC sensor in developer tank.	Input	Numeric 3 digits
111-060	Toner Sensor Cyan	TC sensor in developer tank.	Input	Numeric 3 digits
111-070	Toner Sensor Black	TC sensor in developer tank.	Input	Numeric 3 digits
111-100	ID Sensor(Vo1/S) Check	Display ID Sensor(Vo1,S) reading value	Input	Numeric 4 digits
111-110	ID Sensor(Vo2/P) Check	Display ID Sensor(Vo2,P) reading value	Input	Numeric 4 digits
113-000	Finisher Present Sensor	Detect if the Finisher is in place.	Input	Install[Not Install]
113-010	Entrance Motor	Entrance Motor run as IOT Speed <about 5 sec>	Output	On[Off]
113-020	Exit Motor	Exit Motor run as IOT Speed <about 5 sec>	Output	On[Off]
113-030	Paddle Motor	Paddling	Output	On
113-040	Front Jog Home	Front Jogger move Home	Output	On

TONER
Samsung Electronics
www.tonerplus.com.ua

Code	Displayed Name	Meaning	Input / Output	State Displayed
113-050	Front Jog Stand	Front Jogger move to Stand	Output	On
113-060	Rear Jog Home	Rear Jogger move Home	Output	On
113-070	Rear Jog Stand	Rear Jogger move to Stand	Output	On
113-080	Support Finger Home	Supporter move Home	Output	On
113-090	Support Finger Stand	Supporter move to Stand	Output	On
113-100	Ejector Motor	Ejecting	Output	On
113-110	Stacker Down	Stacker down to bottom	Output	On
113-120	Stacker Up	Stacker up to Stacking position	Output	On
113-130	Stapler	Staple when no cartridge	Output	On
113-140	Entrance Sensor	Detect paper at paper feeding area.	Input	High[Low]
113-150	Exit Sensor	Detect paper at paper exit area.	Input	High[Low]
113-160	Paddle Home Sensor	Detect Paddle Home position	Input	High[Low]
113-170	Front Jog Home Sensor	Detect Front Jog Home position	Input	High[Low]
113-180	Rear Jog Home Sensor	Detect Rear Jog Home position	Input	High[Low]
113-190	Support Finger Home Sensor	Detect Support-Finger Home position	Input	High[Low]
113-200	Ejector Home Sensor	Detect Ejector Home position	Input	High[Low]
113-210	Ejector Encoder Sensor	Detect Ejector Encoder sensor	Input	High[Low]
113-220	Stacker Top Sensor	Detect Stacker Top position	Input	High[Low]
113-230	Stacker Bottom Switch	Detect Staple Bottom position	Input	High[Low]
113-240	Staple Home Sensor	Detect Staple Home position	Input	High[Low]
113-250	Staple Ready Sensor	Detect Staple Ready to clinching.	Input	High[Low]
113-260	Low Staple Sensor	Detect Staple Low	Input	High[Low]
113-270	Paper Detector Sensor	Detect paper in stapler area	Input	High[Low]
113-280	Finisher Door Switch	Detect Finsher Door Open or Close	Input	High[Low]
113-290	IOT Set Sensor	Detect Finisher is connected with IOT.	Input	High[Low]
113-300	Duplex Paper Sensor	Deetct Duplex Paper feeding from IOT.	Input	High[Low]
05-100	DADF Doc. Detect Sensor		Input	High[Low]
05-110	DADF Paper Width Sensor		Input	High[Low]
05-120	DADF Paper Length Sensor		Input	High[Low]
05-130	DADF Registration Sensor		Input	High[Low]
05-140	DADF Scan Sensor		Input	High[Low]
05-150	DADF Gate Sensor		Input	High[Low]
05-160	DADF Door Open Sensor		Input	High[Low]
05-170	DADF Duplex Sensor		Input	High[Low]
05-180	DADF Exit Open Sensor		Input	High[Low]
05-200	DADF Scan Motor Forward		Output	On[Off]
05-210	DADF Duplex Motor Forward		Output	On[Off]

TONER
www.tonerplus.com.ua

Code	Displayed Name	Meaning	Input / Output	State Displayed
05-220	DADF Duplex Motor Backward		Output	On[Off]
05-300	DADF Pick-Up Clutch		Output	On[Off]
05-310	DADF Regi. Clutch		Output	On[Off]
05-400	DADF Platen Cover Switch		Input	High[Low]

TONER
www.tonerplus.com.ua

4.1.8.7(b) Fax

NVM Read/Write

• Diagnostics>Test Routines>Fax>NVM Read/Write

For the behavior, refer to Copier-NVM Read/Write.

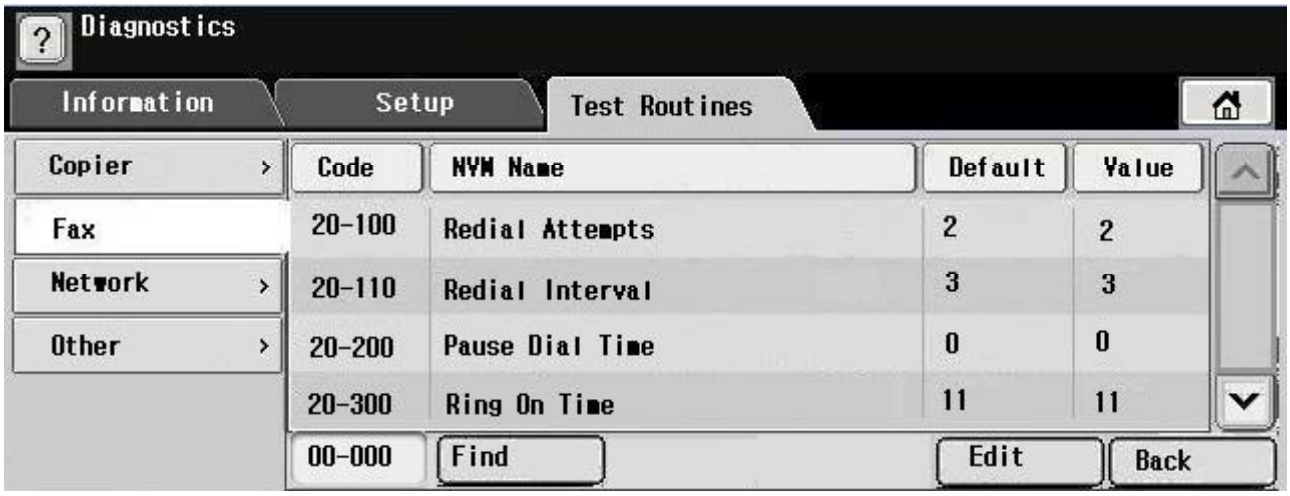

TONER
Samsung Electronics
www.tonerplus.com.ua

For the behavior, refer to Copier-NVM Read/Write-Edit.

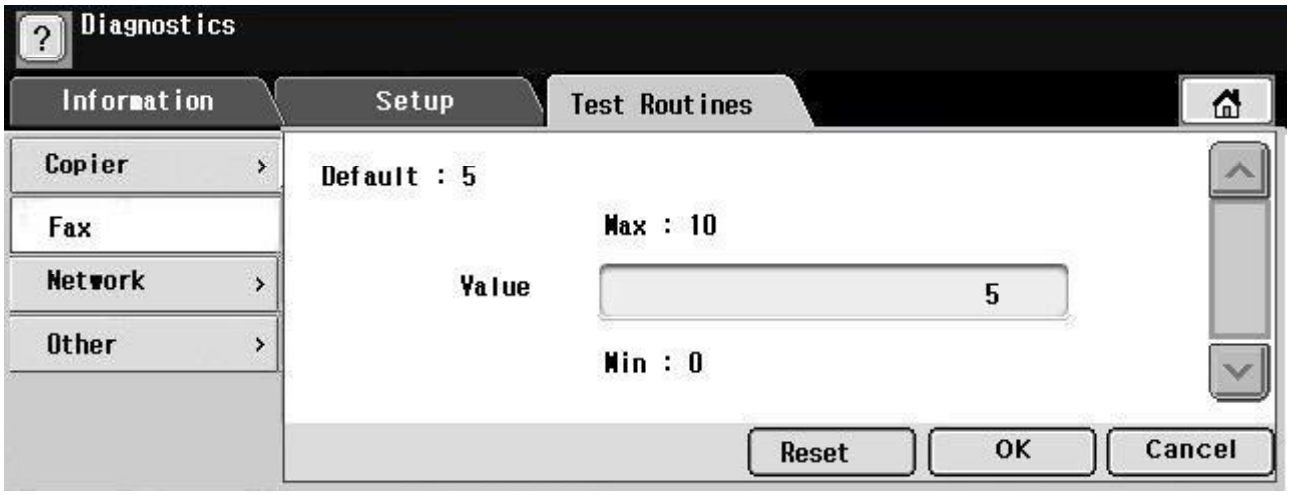

NVM Initialization

• Diagnostics>Test Routines>Fax>NVM Initialization
• By default, none of items is selected and Initialize button shall be disabled.
There shall be Back button.

TONER
Samsung Electronics
www.tonerplus.com.ua

• Diagnostics>Test Routines>Fax>NVM Initialization>Initialize

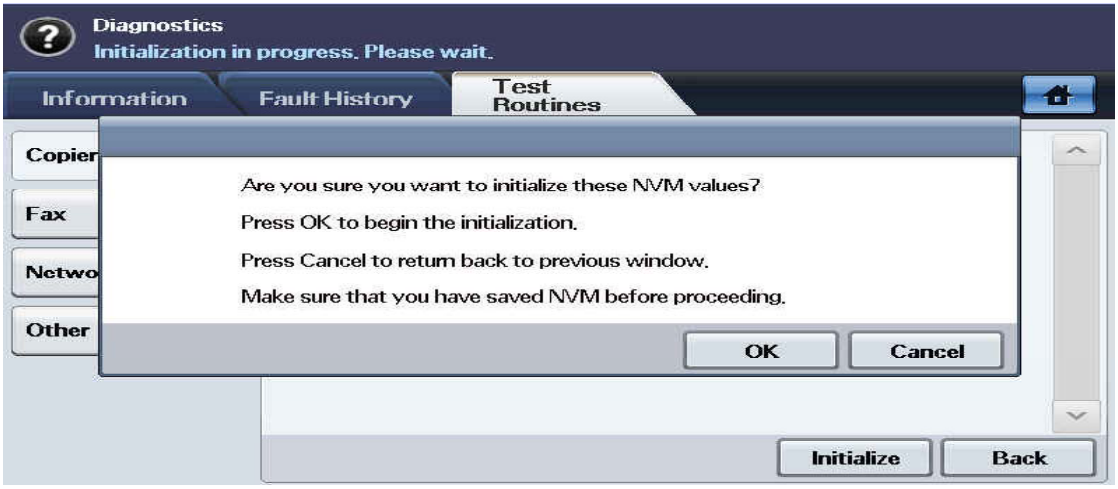

If you want to initialize the NVM values, press OK button.
When press OK button, SR shall show the initialization progress status and result.
When the result is get, pop up window shall be disappeared.

Protocol Report

• Diagnostics>Test Routines>Fax>Protocol Report
• When selecting Protocol Report, the sub-item will be displayed. By pressing the print, you can print the protocol report.

TONER
Samsung Electronics
www.tonerplus.com.ua

Fax Routines

• Diagnostics>Test Routines>Fax> Fax Routines
• For the behavior, refer to Engine/DADF Test Routines

4.1.8.7(c) Network

NVM Initialization

• Diagnostics>Test Routines>Network>NVM Initialization

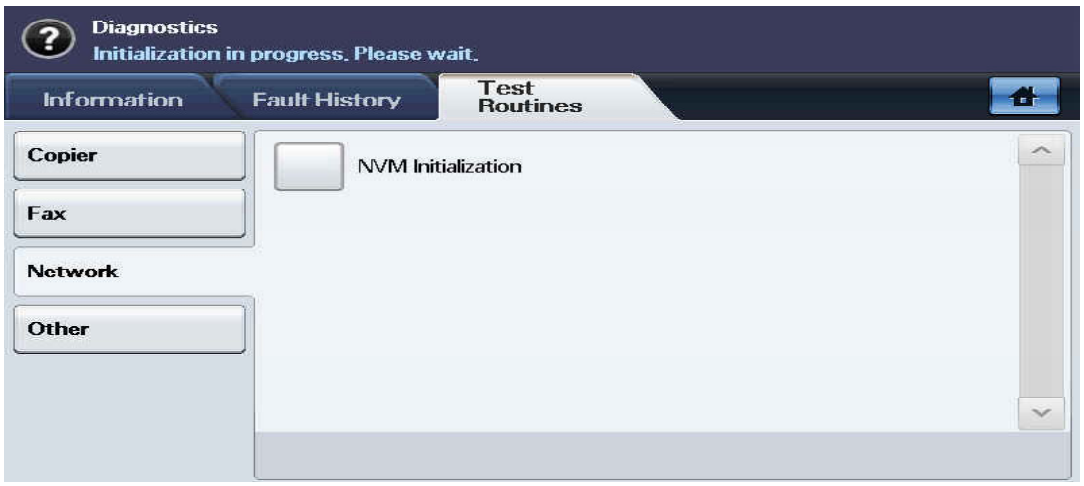

TONER
Samsung Electronics
www.tonerplus.com.ua

• Diagnostics>Test Routines>Network>NVM Initialization>Initialize

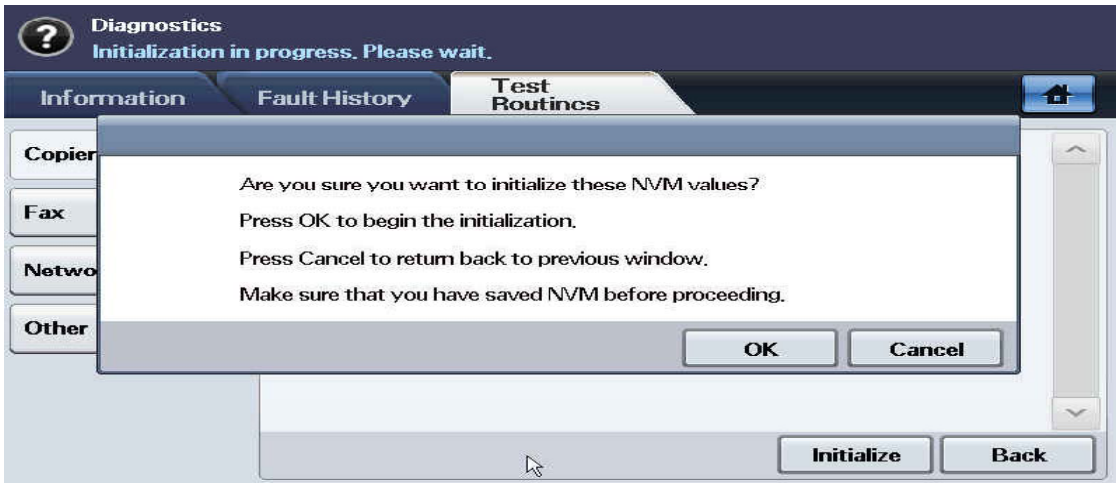

If you want to initialize the NVM values, press OK button.
When press OK button, SR shall show the initialization progress status and result.
When the result is get, pop up window shall be disappeared.

TONER
Samsung Electronics
www.tonerplus.com.ua

4.1.8.7(d) Other

• Diagnostics>Test Routines>Other

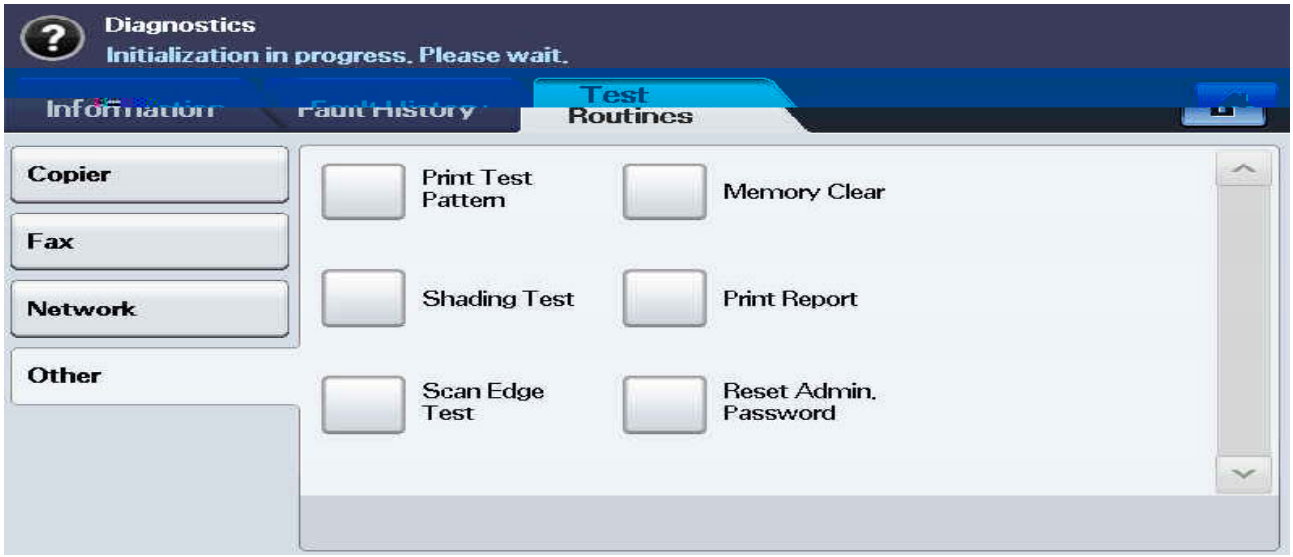

• Diagnostics>Test Routines>Other>Print Test Pattern

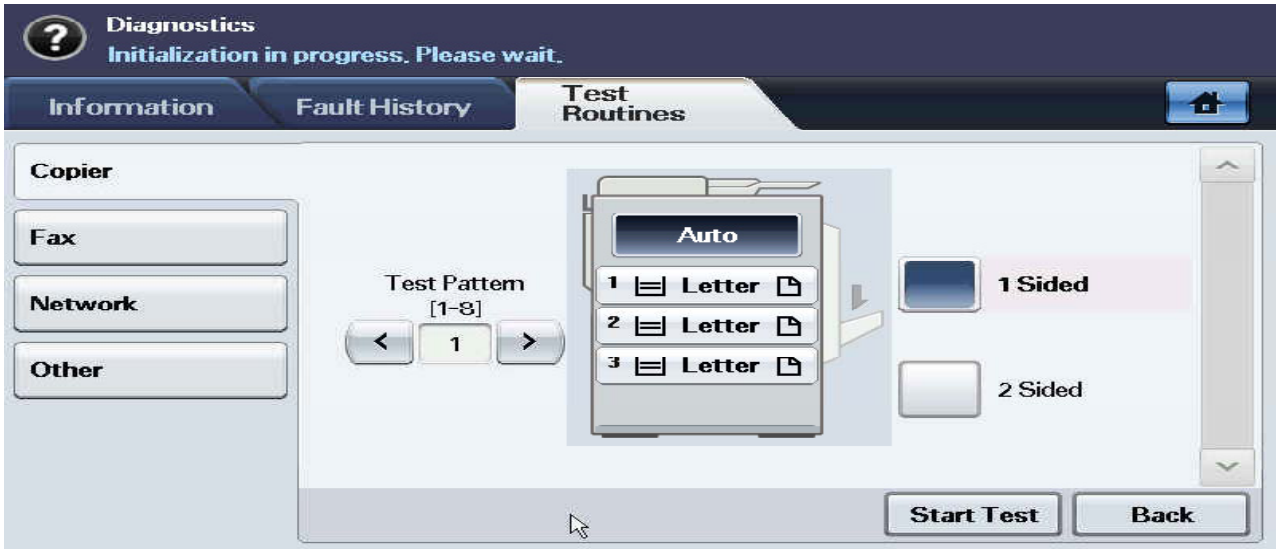

You can print the test pattern by pressing the start test button.
By default, Test Pattern number shall be 1.
You can select paper source by selecting tray of the image.
You can select simplex/duplex printing option by selecting 1 sided /2 sided button.

TONER
www.tonerplus.com.ua

• Diagnostics>Test Routines>Other>Shading Test

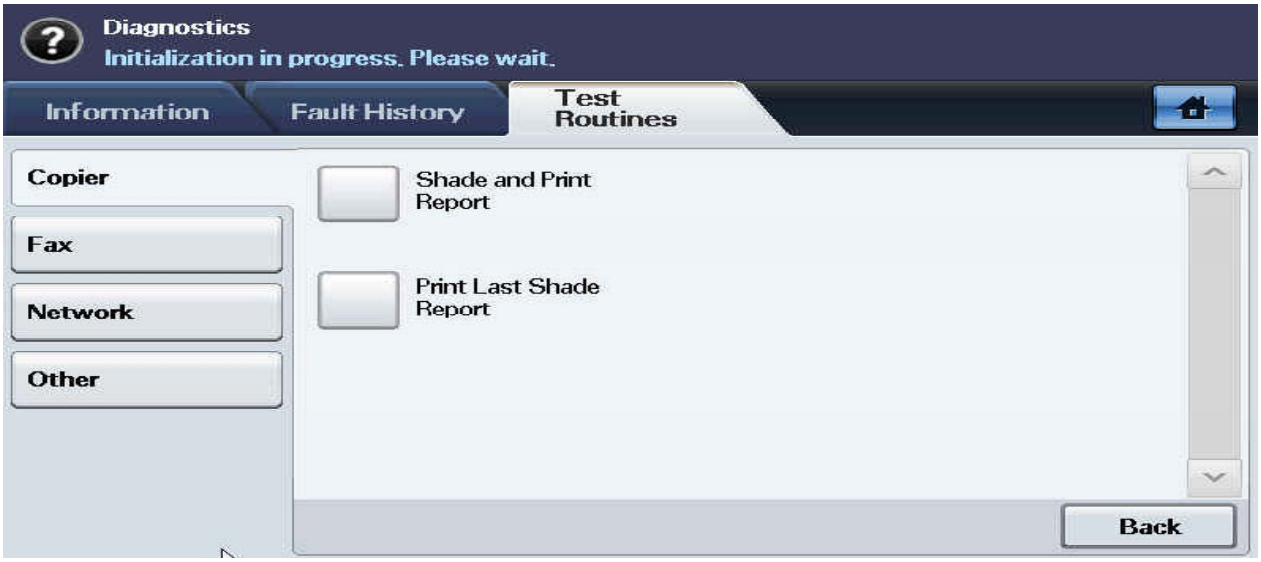

The function is used to set the optimum scan quality determined by the specific characteristics of the CCD (Charge Coupled Device). If copy image quality is poor perform this function to check the condition of the CCD unit.

• Diagnostics>Test Routines>Other>Scan Edge Test

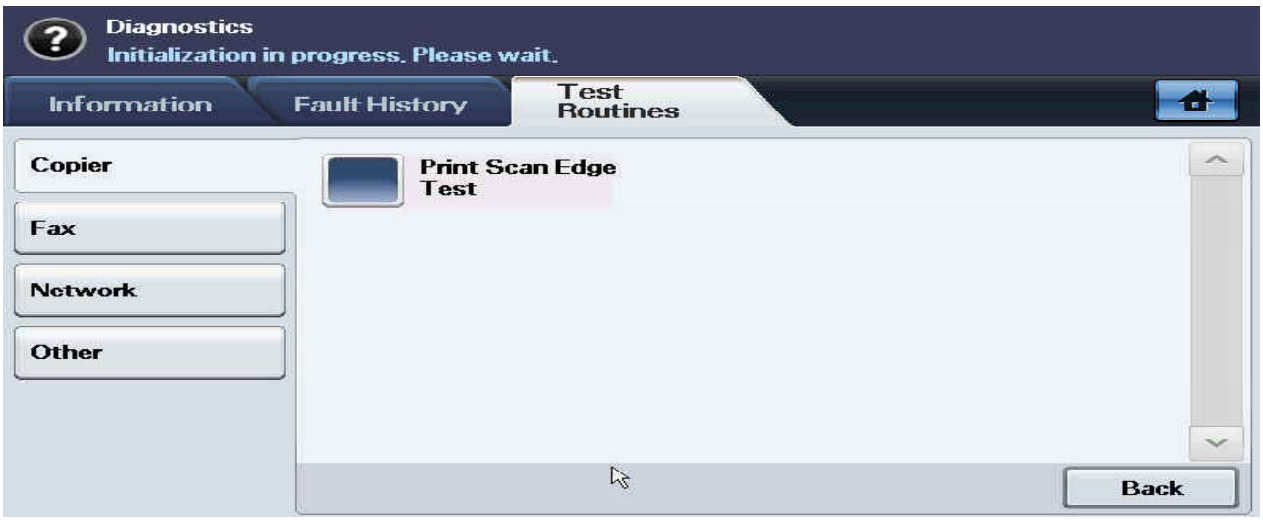

TONER
www.tonerplus.com.ua

• Diagnostics>Test Routines>Other>Memory Clear

The function resets the system to factory default settings.
This function is used to reset the system to the initial value when the product is functioning abnormally. All the values are returned to the default values, and all the information which was set by the user will be erased.
When select memory clear, user can select the country.

• Diagnostics>Test Routines>Other>Print Report

TONER
Samsung Electronics
www.tonerplus.com.ua

• Diagnostics>Test Routines>Other>Reset Admin. password

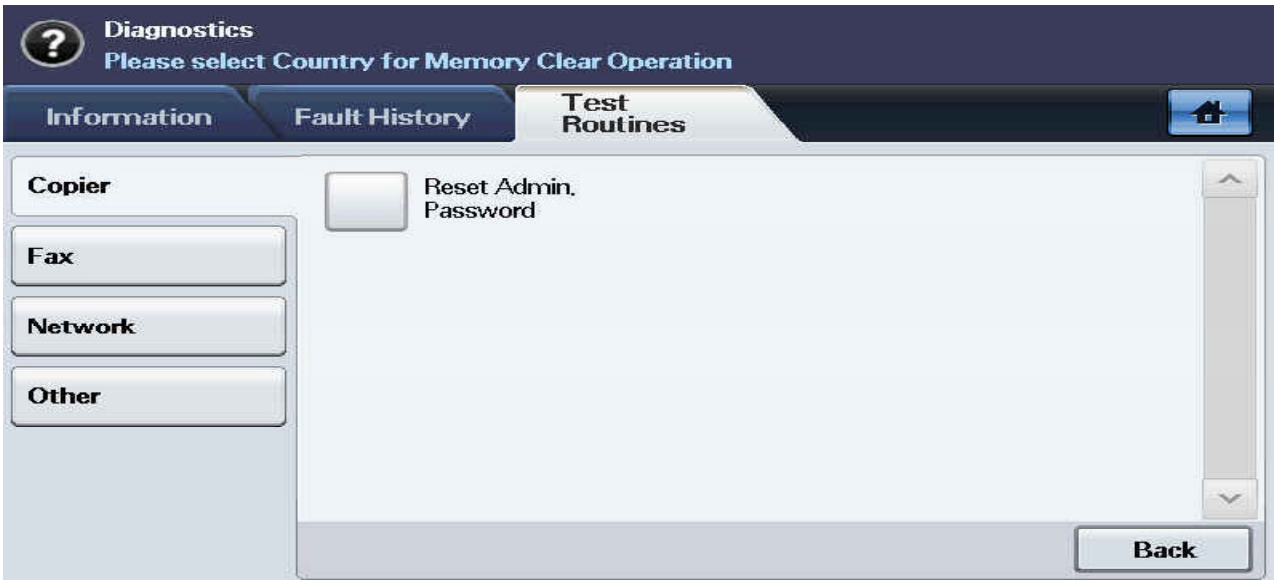

TONER
Samsung Electronics
www.tonerplus.com.ua

4.2 Troubleshooting

4.2.1 Procedure of Checking the Symptoms

Before attempting to repair the printer first obtain a detailed description of the problem from the customer.

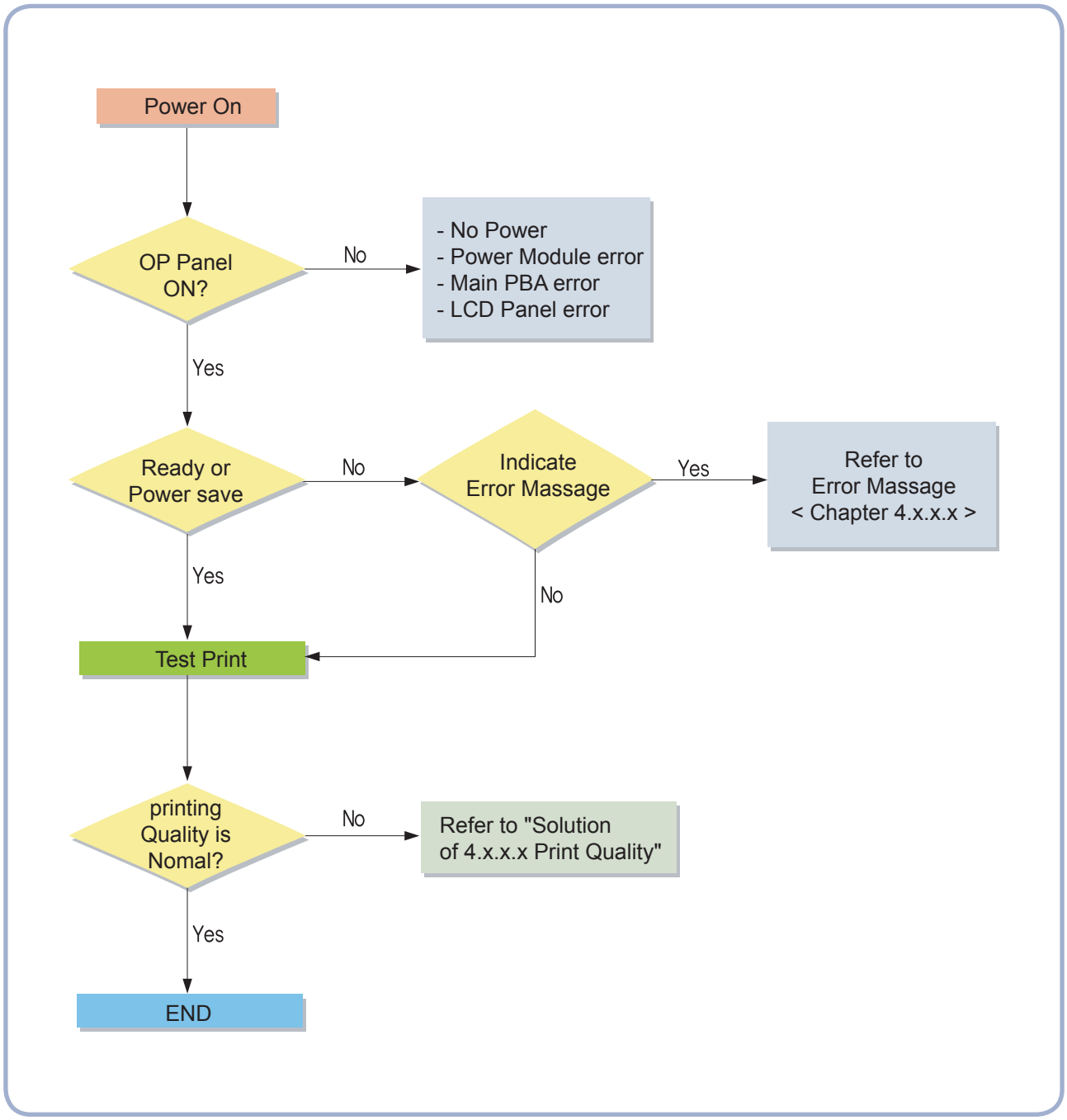

TONER
Samsung Electronics
www.tonerplus.com.ua

4.2.2 Display Meassage Troubleshooting

Messages appear on the Smart Panel program window or on the control panel display to indicate machine status or errors. Refer to the tables
below to understand the messages meaning to correct the problem, if necessary.

TECH-MODE (Diagnostics) : Press 1/2/3 Keys in the same time & Login Password is “1934”
EDC-TEST : Diagnostics >> Test Routines >> Copier >> Engine/DADF Test Routines
EDC-DATA : Diagnostics >> Test Routines >> Copier >> NVM Read/Write

Message	Meaning	Suggested Solutions
{Color} toner is low. Order new toner cartridge	Toner Cartridge is almost empty.	Replace a new toner cartridge. (Refer to Page 3-4~5 . Replacing the toner cartridge)
{Color} imaging unit is not compatible. Check user's guide	The imaging unit you have installed is not for your machine.	Install a Samsung gunuine Imaging Unit, designed for your machine.
{Color} imaging unit is not installed. Install it	The imaging unit is not tinstalled, or the CRUM in the cartridge is not connected.	1. Install the imaging unit. If it is already installed, try to reinstall the imaging unit. 2. If the problem persists, check the connection between imaging unit CRUM connnector and SET. Take out the imaging unit and check the modular jack from the rear of it.
{Color} imaging unit is worn. Replace with new one	The imaging unit is at the end of its life.	Replace a new Imaging unit. (Refer to Page 3-5~6)
{Color} toner cartridge is not compatible. Check user's guide	The toner cartridge you have installed is not for your machine.	Install a samsung gunuine toner cartridge, designed for your machine.
{Color} toner cartridge is not installed. Install it	The toner cartridge is not installed or the CRUM in the cartridege is not properly connected.	1. Try to reinstall the toner cartridge. 2. Check the connection between toner cartridge CRUM connnector and SET. Take out the toner cartridge and check the modular jack from the rear of it.
{Color} toner cartridge is worn. Replace with new one	The toner cartridge has run out. The machine stops printing.	Replace a new toner cartridge.
{Color} toner is empty. Replace toner cartridge	The lifespan of the color toner cartridge which the arrow indicates is reached.	Replace a new toner cartridge.
{Side/Main} Door is open. Close it	The side door or main door is open.	1. Open and close the door. If the message is not disappeared, check the below steps. 2. Check that the door switch(Parts Catalog 21. no 13) on side of SET is pushed. 3. Check that the UI message is chagned by door switch action. 4. If the door switch has any problem, replace it.

TONER
Samsung Electronics
www.tonerplus.com.ua

Message	Meaning	Suggested Solutions
Communication problem occurred with tray2 or Communication problem occurred with tray2(HCF)	Tray2 or HCF is not installed.	1. Check the connection between Set and Tray2(HCF). (Parts Catalog 47-5. no.6) 2. If there is any problem, replace the tray2 (HCF) board(Product Overview 2-36, Parts Catalog 47-3. no.8). 3. If the problem persists, replace the Engine PBA or check the connection between the Engine PBA and SCF.
Communication problem occurred with network Connection	Communication error with Network Connection.	1. Check that the network cable is connected to network port. (Product Overview 2-19 no.7 Network port): Status LED(Yellow) should be blinking and connectivity LED(Green) should be turning on. 2. If the problem persists, replace the Video PBA.
Communication problem occurred with scanner unit	Communication error with scanner unit	Check the Scanner connection. If there is any problem, replace the wrong parts, harness(Parts Catalog 33. no.2-40) or scanner board (Parts Catalog 33. no.2-15, Product Overview 2-19 scan_IF_PBA). If the problem persists, replace the main board.
DC motor does not operate: #03-010. Please turn off then on	DC motor for transfer belt does not operate.	Replace the Engage motor(Parts Catalog 28. no.24) or Engage check sensor(Parts Catalog 28. no.30) for transfer belt.
DC motor does not operate: #03-011. Please turn off then on	DC motor for transfer roller does not operate.	Replace the Engage motor(Parts Catalog 28. no.24) or Engage check sensor(Parts Catalog 28. no.30) for transfer belt.
Did not supply enough {Color} toner. Remove seal tape & reinstall	Did not supply enough {black} toner.	Remove the seal tape of the imaging unit.
Did not supply enough {Color} toner. Please open/close door	Not supplied toner to the imaging unit.	1. Check the Toner supply Motor is driving(Parts Catalog 12. no.35 Toner Drive) 2. Check the toner supply shutter is working out properly. 3. Check the toner supply entrance is closed. 4. Check the Toner supply pipe(Parts Catalog 12. no.34 Duct Toner) is closed. 5. Check the TC sensor. [EDC-TEST:111-040~070] 6. Check TC sensor ADC of the Engine PBA
Exit door of scanner is open	DADA exit door is open	1. Close the DADF exit door(Product Overview 2-3 ①DADF Cover).
Fan does not operate: #03-002 #03-003 #03-004 #03-005 Please turn off then on	Fan does not operate.	#03-002 : LSU Fan(Parts Catalog 1. no.39-2) . Replace it. #03-003 : Duplex Fan(Parts Catalog 4. no.27) . Replace it. #03-004 : Duplex Fan(Parts Catalog 4. no.28) . Replace it. #03-005 : SMPS Fan(Parts Catalog 1. no.14) Replace it.

TONER
Samsung Electronics
www.tonerplus.com.ua

Message	Meaning	Suggested Solutions
Fax unit error: #10-002. Please turn off then on	1. Fax card is not installed. 2. Fax card is not installed properly. 3. Fax card is out of order. 4. In case that you didn't modem install after installing fax card	1. Remove the Fax unit and re-install it. 2. Check that the Fax card is connected to fax connector (Product Overview 2-23. FAX IF) properly. 3. If the problem persists , replace the new Fax unit.
Finisher door is open. Close it	Finisher door is open.	Close the finisher door.
Finisher error: #07-000. Please turn off then on	[Finisher Jam 0] Paper jammed in Finisher.	Open Front Cover in Finhsher and remove jammed paper in Finisher or Fuser area, or uninstall finisher and remove jammed paper.
Finisher error: #07-001. Please turn off then on	[Finisher Jam 1] Paper jammed in Finisher.	Open Front Cover in Finisher and remove jammed paper in Finisher. Open front door, lower guied 1a or 1b then clear
Finisher error: #07-002. Please turn off then on	[Finisher Jam 2] Paper jammed in Finisher.	Pull out jammed paper from Finisher exit
Finisher error: #07-003. Please turn off then on	[Finisher Duplex Jam] Paper jammed in Finisher.	Open Front Cover in Finiser, lower Guide1a or 1b, and remove jammed paper.
Finisher error: #07-004. Please turn off then on	[Finisher Bin Full] Finisher Stack full	Remove printed material from Finisher Stack Check empty/full Sensor
Finisher error: #07-005. Please turn off then on	[Install Staple Cartridge] Staple Cartridge not installed	Install the staple cartridge following the steps explained on the back of the finisher door. If you want to continue the print job and disregard of this error message, go to Admin Setting to adjust the option.
Finisher error: #07-006. Please turn off then on	[Close Finisher Door] Finisher Door open	Close Finisher Door
Finisher error: #07-007. Please turn off then on	[Finisher Interface Error] Communication error between Engine and Finisher	Check/Connect Interface connector.
Finisher error: #07-008. Please turn off then on	[Paddle Fault] Paddle unit s not operational	Open Finisher Door and check the Finisher, and close the Door If fault persists, Power Off/Power On
Finisher error: #07-009 Please turn off then on	[Front Jogger Fault] Front Jogger unit s not operational	Open Finisher Door and check the Finisher, and close the Door If fault persists, Power Off/Power On
Finisher error: #07-010. Please turn off then on	[Rear Jogger Fault] Rear Jogger unit s not operational	Open the finisher door and clear any jammed paper (if there is). If this error message shows on the screen again, cycle power.
Finisher error: #07-011. Please turn off then on	[Support Finger Fault] Rear Jogger unit s not operational	Remove paper from the output tray (finisher). If this error message shows on the screen again, cycle power.
Finisher error: #07-012. Please turn off then on	[Ejector Fault] Ejector unit s not operational	Remove paper from the output tray (finisher). If this error message shows on the screen again, cycle power.
Finisher error: #07-013. Please turn off then on	[Stapler Fault] Stapler is not operational	Remove paper from the output tray (finisher) and open the finisher door to clear the jammed paper. If this error message shows on the screen again, cycle power.

TONER
Samsung Electronics
www.tonerplus.com.ua

Message	Meaning	Suggested Solutions
Finisher error: #07-014. Please turn off then on	[Stacker Fault] Stacker unit s not operational	Remove paper from the output tray (finisher). If this error message shows on the screen again, cycle power.
Fuser error: #02-001 #02-002 Please turn off then on	The Fuser unit has a problem. * Over Heat Error * Low Heat Error * Fuser Open Error	1. Check whether the Lamp(Parts Catalog 25. no.52) is short or not. If it is defective, replace it. 2. Check resistance of thermistors. If the resistance value is infinite or much high (Mohm), replace the thermistor or Fuser Unit. 3. Check resistance of thermostats(Parts Catalog 25. no.51). If the resistance value is infinite or much high (Mohm), replace the thermostat or Fuser Unit. 4. Check the AC connector(Parts Catalog 25. no.26). If the the resistance value of AC connector is below 10 ohm, replace the Fuser Unit. 5. Check Lamp 1 signal (Con. No.2) , Relay on signal (Con. No.5) on FDB PBA (Parts Catalog 1. no.13). If there is any problem, replace the FDB PBA. 6. If there is no problems in the above checks, and the error is continuously displayed, replace Engine PBA. If the Heat On signal is not occurred from SMPS, replace it.
Hard disk drive error: #10-003. Please turn Off then On	1. Hard disk is not installed 2. Hard disk is out of order.	1. Turn off the power. And reconnect the connector of the Hard disk.(Product Overview 2-23 picture 'SATA IF') 2. If the error message is still displayed, replace the Hard disk. 3. If the problem persists, replace the Engine PBA.
Imaging unit error: #06-013~16. Please turn off then on	Imaging unit error	1. Check the T/C sensor Harness connection.(DEVE_CRUM_IF B'd(8P), JC39-00728A) 2. Check the output wave form of the T/C sensor. 3. Check the Engine PBA TC Sensor ADC
LSU error: #04-000 #04-002 #04-003 #04-006 #04-009. Please turn off then on	LSU motor does not operate. (LSU Polygon Motor Error)	1. Start to run LSU Polygon Motors [EDC-TEST:110-060~070]. 2. If there is no motor rotating noise, check connections between LSU and Engine PBA. 3. If the connections are OK, reinstall LSU. 4. If the problem is not fixed after reinstall LSU, replace the LSU. 5. If there is any motor rotating noise, turn off and on the machine. 6. If the problem is not fixed after reinstall LSU, replace the LSU.

TONER
Samsung Electronics
www.tonerplus.com.ua

Message	Meaning	Suggested Solutions
LSU error: #04-001 #04-004 #04-007 #04-010 Please turn off then on	After LD on, the Laser beam detect signal is not occurred or irregular.(Error on LD/ BD in LSU) * BD : Beam Detect	1. Turn off and on the machine. 2. If the problem is not fixed, start to run LSU Polygon Motors [DEC-TEST:110-060~070]. 3. If there is no motor rotating noise, check connections between LSU and Engine PBA. 4. If the connections are OK, replace and reinstall LSU. 5. If the problem is not fixed after reinstall LSU, replace the Engine PBA.
Memory failure: #10-001. Please turn off then on	At system booting, the memory is not read.	Replace the memory.(Product Overview 2-22 picture 'DIMM', 2-23 'SODIMM')
Motor does not operate: #03-000. Please turn off then on	[Main BLDC Motor Error] 1. High Torque Loaded on ITB and/or Paper Feeding Unit 2. Motor Signal is Abnormal	[1. High Torque Loaded on ITB and/or Paper Feeding Unit] 1.1) Check the torques of the ITB and/or Paper Feeding Unit by rotating the Unit manually. 1.2) If the torque is very high. replace the ITB and/or Paper Feeding Unit. [2. Motor Signal is Abnormal] 1.1) Check the wire connection from motor to Engine PBA. 1.2) If the connection is wrong, correct it . 1.3) If the connection is OK , replace the Main Motor(Product Overview 2-41 'Main Motor').
Motor does not operate: #03-006. Please turn off then on	[Black OPC & Developing BLDC Motor Error] 1. High Torque Loaded on Black OPC and/or Imaging Unit 2. Motor Signal is Abnormal	[1. High Torque Loaded on Black OPC and/or Imaging Unit] 1.1) Check the torques of the Black OPC and/or Imaging Unit by rotating the Unit manually. 1.2) If the torque is very high. replace the Black Imaging Units. [2. Motor Signal is Abnormal] 1.1) Check the wire connection from motor to Engine PBA. 1.2) If the connection is wrong, correct it . 1.3) If the connection is OK , replace the Black OPC/ Imaging Unit Motor(Product Overview 2-41 'BK Motor').
Motor does not operate: #03-007. Please turn off then on	[Color OPC BLDC Motor Error] High Torque Loaded on OPC Unit	[1. High Torque Loaded on Color OPC Units] 1.1) Check the torques of the Color OPC Unit by rotating the Unit manually. 1.2) If the torque is very high. replace the Color OPC Units. [2. Motor Signal is Abnormal] 1.1) Check the wire connection from motor to Engine PBA. 1.2) If the connection is wrong, correct it. 1.3) If the connection is OK , replace the Color OPC Unit Motor(Product Overview 2-41 'Color OPC Motor').

TONER
Samsung Electronics
www.tonerplus.com.ua

Message	Meaning	Suggested Solutions
Motor does not operate: #03-008. Please turn off then on	[Color Developing BLDC Motor Error] High Torque Loaded on Imaging Unit	[1. High Torque Loaded on Color Imaging Units] 1.1) Check the torques of the Color Imaging Unit by rotating the Unit manually. 1.2) If the torque is very high. replace the Color Imaging Unit. [2. Motor Signal is Abnormal] 1.1) Check the wire connection from motor to Engine PBA. 1.2) If the connection is wrong, correct it. 1.3) If the connection is OK , replace the Color Imaging Unit Motor(Product Overview 2-41 'Color DEVE Motor').
Motor does not operate: #03-009. Please turn off then on	[Fuser BLDC Motor Error] High Torque	[1. High Torque Loaded on Fuser Unit] 1.1) Check the torque Fuser Unit 1.2) If the torque is very high. replace Fuser Unit [2. Motor Signal is abnormal] 1.1) Check the wire connection from motor to Engine PBA. 1.2) If the connection is wrong , correct it. 1.3) If the connection is right , replace motor (Product Overview 2-41 'Fuser Motor') and/or harness .
Original paper does not feed in scanner	The lead edge of the document failed to actuate the scan sensor within the correct time after actuating the registration sensor.	Remove the jammed paper. (Refer to 4.1.2 Clearing paper jams. Page 4-7~8)
Original paper is too long for scanner. Check size	Oversized document or double-feeding of originals.	Remove the jammed paper. (Refer to 4.1.2 Clearing paper jams. Page 4-7~8)
Original paper jam in front of scanner duplex path	Paper has jammed during duplex printing in the DADF.	Remove the jammed paper. (Refer to 4.1.2 Clearing paper jams. Page 4-7~8)
Original paper jam in front of scanner	The originals are jammed in DADF	Remove the jammed paper. (Refer to 4.1.2 Clearing paper jams. Page 4-7~8)
Original paper jam inside of scanner duplex path	1. The lead edge of the document failed to actuate the reverse stack sensor within the correct time after actuating the gate sensor. 2. The edge of the document failed to actuate the reverse stack sensor.	Remove the jammed paper. (Refer to 4.1.2 Clearing paper jams. Page 4-7~8)
Original paper jam inside of scanner	The lead edge of the document failed to actuate the gate sensor within the correct time after actuating the scan sensor. When the machine is on, jammed paper is detected in the DADF.	Remove the jammed paper. (Refer to 4.1.2 Clearing paper jams. Page 4-7~8)

TONER
www.tonerplus.com.ua

Message	Meaning	Suggested Solutions
Original paper jam inside of scanner	After power on and initializing, the original is sensed by DADF inner sensor(Regi, Scan, Gate, Duplex, Reverse Stack)	Remove the jammed paper. (Refer to 4.1.2 Clearing paper jams. Page 4-7~8)
Original paper jam while reversing paper in scanner	The lead edge of the document failed to actuate the duplex sensor within the correct time when the document was fed the wrong way.	Remove the jammed paper. (Refer to 4.1.2 Clearing paper jams. Page 4-7~8)
Paper jam at exit of finisher	Paper jammed in the stacker.	Remove the jammed paper. (Refer to 4.1.2 Clearing paper jams. Page 4-16~17)
Paper Jam at the bottom of duplex path	Paper has jammed during duplex printing.	Remove the jammed paper. (Refer to 4.1.2 Clearing paper jams. Page 4-3~5)
Paper Jam at the top of duplex path	Paper has jammed during duplex printing.	Remove the jammed paper. (Refer to 4.1.2 Clearing paper jams. Page 4-3~5)
Paper Jam in exit area	Paper has jammed in the fuser area.	Remove the jammed paper. (Refer to 4.1.2 Clearing paper jams. Page 4-3~5)
Paper jam in front of finisher	Paper jammed in the stacker.	Remove the jammed paper. (Refer to 4.1.2 Clearing paper jams. Page 4-3~5)
Paper Jam in MP tray	Paper misfed from multi-purpose tray.	1. Remove the jammed paper (Refer to 4.1.2 Clearing paper jams. Page 4-13) 2. If the error message is not disappear after removing the jammed paper, check the following. 3. If pick up roller(Parts Catalog 10. no.6) does not rotate , check the pick up clutch(Parts Catalog 8. no.23). 4. If Pickup roller is rotating but the paper is not feeding, replace the pick up rubber(Parts Catalog 10. no.12). 5. Check the feed sensor(Parts Catalog 6. no.8). If it is defective, replace it.
Paper Jam in tray1	Paper has jammed in the feeding area of the tray.	1. Remove the jammed paper (Refer to 4.1.2 Clearing paper jams. Page 4-9~10) 2. If the error message is not disappear after removing the jammed paper, check the following. 3. If pick up roller(Parts Catalog 10. no.6) does not rotate , check the pick up clutch. 4. If Pickup roller is rotating but the paper is not feeding, replace the pick up rubber(Parts Catalog 10. no.12). 5. Check the feed sensor(Parts Catalog 6. no.8). If it is defective, replace it.

TONER
Samsung Electronics
www.tonerplus.com.ua

Message	Meaning	Suggested Solutions
Paper Jam in tray2 or Paper Jam in tray2(HCF).	Paper has jammed in the feeding area of the tray.	1. Remove the jammed paper (Refer to 4.1.2 Clearing paper jams. Page 4-9~10) 2. If the error message is not disappear after removing the jammed paper, check the following. 3. If pick up roller(Parts Catalog 10. no.6) does not rotate , check the pick up clutch. 4. If Pickup roller is rotating but the paper is not feeding, replace the pick up rubber(Parts Catalog 10. no.12). 5. Check the feed sensor(Parts Catalog 6. no.8). If it is defective, replace it.
Paper Jam in tray3 or Paper Jam in tray3(HCF)	Paper has jammed in the feeding area of the tray.	1. Remove the jammed paper (Refer to 4.1.2 Clearing paper jams. Page 4-11~13) 2. If the error message is not disappear after removing the jammed paper, check the following. 3. If pick up roller(Parts Catalog 10. no.6) does not rotate , check the pick up clutch. 4. If Pickup roller is rotating but the paper is not feeding, replace the pick up rubber(Parts Catalog 10. no.12). 5. Check the feed sensor(Parts Catalog 6. no.8). If it is defective, replace it.
Paper jam inside finisher	Paper jammed in the stacker.	Remove the jammed paper. (Refer to 4.1.2 Clearing paper jams. Page 4-16~17)
Paper jam inside finisher's duplexer	Paper jammed in the stacker.	Remove the jammed paper. (Refer to 4.1.2 Clearing paper jams. Page 4-16~17)
Paper Jam inside of duplex path	Paper has jammed during duplex printing.	Remove the jammed paper. (Refer to 4.1.2 Clearing paper jams. Page 4-3~5)
Paper Jam inside of machine	Paper has jammed in the registration area	1. Open the Side door and remove the jammed paper. (Refer to 4.1.2 Clearing paper jams. Page 4-14) 2. If there is not jammed paper but the error is occured, replace the Registration Sensor(Parts Catalog 14. no.13) 3. If the paper stopped after actuating the Exit sensor, replace the Exit sensor(Parts Catalog 22. no.6)
Scanner locking switch is locked or another problem occurred	The CCD lock has been locked. the CCD does not detect its home location or move.	1. Unlock the CCD lock.(Installation. Page 7-5) 2. Check that CCD is moving when power on. If CCD does not move, reconnect the CCD module flat cable or replace the CCD module. 3. If CCD moves, reconnect the connector between the Scan motor(Parts Catalog 33. no.2-5) and SCAN_IF PBA(Parts Catalog 33. no 2-15). 4. Check that the belt or gear in the scan unit is worn away. If necessary, replace the defective part. 5. If the problem persists, replace the engine PBA.
Sensor failure: #10-012. Call for service	Sensor error.	Check the external temperature sensor(Parts Catalog 12. no.18) and engine board. If it is defective, replace it.

TONER www.tonerplus.com.ua

Message	Meaning	Suggested Solutions
Shake {Color} toner cartridge	The toner supply is low	Thoroughly roll the new cartridge five or six times to distribute the toner evenly inside the cartridge.
Staple cartridge is empty. Replace it	Stapler is run out.	Replace the staple cartridge(Parts Catalog 45-4. no.2).
Staple cartridge is not installed. Install it in finisher	Staple cartridge is not installed	Install the staple cartridge(Parts Catalog 45-4. no.2).
Supplying and mixing toner to {Color} imaging unit... Please wait	Supplying and mixing toner to {black} imaging unit	Wait until the message is disappeared.
System error: #02-000. Please turn off then on	1. At warm up, the temperature is less than reference temperature for 20 sec. 2. Abnormal ADC has occurred. 3. ZeroCross Signal detect error has occurred.	1. Check halogen lamp(Parts Catalog 25. no.52) resistance. It should be in few ohms not hundreds more. If it is defective, replace the Fuser unit(Product Overview 2-22 picture). 2. In case of meaning 3, replace the Engine contol board(Product Overview 2-22 picture 'Engine PBA') or Fuser control board(Product Overview 2-22 picture 'FDB') or SMPS(Product Overview 2-22 picture 'SMPS').
System error: #02-003. Please turn off then on	The communication error of the MEGA88 Micom	Replace the Engine controller(Product Overview 2-22 picture 'Engine PBA')
System error: #10-004. Please turn off then on	Communication error with UI	Check the UI connector(Product Overview 2-23 picture 'UI_IF'). If there is any problem, replace the UI board(Product Overview 2-22 picture 'OP Main PBA'). If the problem persists, replace the main board(Product Overview 2-22 picture 'Video PBA').
This IP address conflicts with an IP address already in use. Check it	The IP address is used in other place elsewhere.	Check the IP address or obtain a new IP address.
Toner cartridge: #06-006. Please turn off then on	Toner Cartridge Error	1. Reinstall the toner cartridge. 2. Reconnect the harness(JC39-00698A,ENGINE B'd (4P,CN101)).
Toner cartridge: #06-007. Please turn off then on	Toner Cartridge Error	1. Reinstall the toner cartridge. 2. Reconnect the harness(JC39-00698A,ENGINE B'd (4P,CN101)).
Too much paper in finisher stacker. Remove printed paper	The stacker is full of printouts.	Remove the printed paper.
Too much paper in output bin tray. Remove printed paper	The printed papers are full on the output tray.	1. Remove the paper on the output tray. 2. Check the Outbin Full Sensor (Parts Catalog 24. no.24) [EDC-TEST : 101-190]. If it is defective, replace it.
Top door of scanner is open	1. DADF door is open during DADF driving. 2. Platen Door is open during DADF driving.	1. Remove the jammed paper. (Refer to page 4-7~8) 2. Open the ReverseStack door(Parts Catalog 36. no.2) and remove the jammed paper. 3. Open the DADF door and remove the jammed paper.
Top door of scanner is open	DADF door is open	Close the DADF door.

TONER www.tonerplus.com.ua

Message	Meaning	Suggested Solutions
Tray2 door is open. Close it Tray2(HCF) door is open. Close it	Tray2 or HCF door is open.	1. Open and close the door. If the message is not disappeared, check the below steps. 2. Check that the door switch is pushed. 3. Check that the UI message is chaged by door switch action. 4. If necessary, replace the door switch.
Tray3 door is open. Close it	Tray3 door is open.	1. Open and close the door. If the message is not disappeared, check the below steps. 2. Check that the door switch is pushed. 3. Check that the UI message is chaged by door switch action. 4. If necessary, replace the door switch.

TONER
www.tonerplus.com.ua

4.2.3 Image Quality Problems and Troubleshooting

EDC-TEST / EDC-DATA described in this section mean Test Routines / NVM Read/Write in diagnostics mode. The method to enter this menu is the following.

* TECH-MODE (Diagnostics Mode) : Press 1/2/3 Keys in the same time & Login Password is “1934”
* EDC-TEST : Diagnostics >> Test Routines >> Copier >> Engine/DADF Test Routines
* EDC-DATA : Diagnostics >> Test Routines >> Copier >> NVM Read/Write

No	Defective Image	Troubleshooting Page
1	Low Image Density for a Particular Color	4-96 page
2	Low Image Density for All Colors	4-97 page
3	Vertical Irregular Image Density for a Particular Color	4-97 page
4	Vertical Irregular Image Density for All Colors	4-98 page
5	Image Density Difference between Right and Left Sides for a Particular Color	4-99 page
6	Image Density Difference between Right and Left Sides for All Colors	4-99 page
7	Horizontal White Line(s)	4-100 page
8	Horizontal Sharp Line(s) for a Particular Color	4-101 page
9	Horizontal Sharp Line(s) for Multiple Colors of 78mm gap	4-102 page
10	Horizontal Thick Band(s) for a Particular Color	4-103 page
11	Horizontal Dark Band	4-104 page
12	Horizontal Periodic Micro Jitter (sub-1mm Pitch) for a Particular Color	4-105 page
13	Horizontal Periodic Jitter (2~3mm Pitch) for YMC Color	4-106 page
14	Vertical White Band	4-107 page
15	Vertical Moving White Band	4-108 page
16	Vertical White Band for Copy Job	4-108 page
17	Vertical Band for a Particular Color	4-109 page
18	Vertical Dark Band	4-110 page
19	Vertical Random Streak	4-110 page
20	Full Solid Black/Color Image	4-111 page
21	Foggy Backgrounds for a Particular Color	4-112 page
22	Periodic White/Black/Color Spots	4-113 page
23	White Spot on Solid Image	4-114 page
24	Dot Size Black/Color Spots	4-115 page
25	Offset Image (after-image on OPC)	4-116 page
26	Auger Marks (thick slanted white band)	4-117 page
27	Carriers on Printed Image	4-118 page
28	Toner Supply Error	4-119 page
29	Early Toner Empty	4-120 page
30	Toner Contamination on Printed Image	4-120 page

TONER
www.tonerplus.com.ua

No	Defective Image	Troubleshooting Page
31	Toner Contamination on the Lead Edge of the paper	4-121 page
32	Toner Contamination on the Back of the Paper	4-121 page
33	Dragged Image	4-122 page
34	Broken Lines on Image	4-122 page
35	Insufficient Toner Fixing on Printed Image	4-123 page
36	No Image Output at Printing	4-124 page
37	Inaccurate Color Registration	4-125 page
38	Failure in Auto Color Registration	4-126 page

TONER
www.tonerplus.com.ua

● Symptom : Low Image Density for a Particular Color
● Sample Image
● Possible Cause: 1. Low Toner Concentration 2. High OPC Surface Potential 3. Poor T1 Transferring
● Troubleshooting method : [1. Low Toner Concentration] 1.1) Print out a demo page [Machine Status >> Machine Info >> Print/Report >> Demo Page] or any test patterns [Admin. Setting >> General >> Machine Test >> Image Quality Test Patterns]. 1.2) If the output has low toner concentration, execute tone adjustment [Admin. Setting >> Setup >> Color >> Auto Color Tone Adjustment >> Color Tone Adjustment] [2. High OPC Surface Potential] 2.1) Check and confirm MHV Bias for the color [EDC-DATA:105-000~150]. 2.2) If there is any wrong value, change the value [EDC-DATA:105-000~150]. 2.3) Turn on the Charging Bias for the color [EDC-TEST:105-000~030] 2.4) Read the MHV value for the color [EDC-TEST:105-040~070] 2.5) If any mis-reading on the MHV value, replace HVPS-L PBA. [3. Poor T1 Transferring] 3.1) Check and confirm THV1 Bias for the color [EDC-DATA:107-000~070] 3.2) If there is any wrong value, check and confirm the contact point between the rear side of Cartridge Transfer Unit and frame. 3.3) Read the THV1 value for the color [EDC-TEST:107-000~030] 3.4) If any mis-reading on the MHV value, replace HVPS-L PBA.

TONER
Samsung Electronics
www.tonerplus.com.ua

● **Symptom : Low Image Density for All Colors**
● Sample Image
● Possible Cause : Poor T2 Transfer
● Troubleshooting method : 1) Check and confirm THV2 Bias for the color [EDC-DATA:107-080~090] 2) If there is any wrong value, check and confirm the contact point of T2 driving roller in side unit. 3) Read the THV2 value for the color [EDC-TEST:107-040~070] 4) If any mis-reading on the THV2 value, replace HVPS-L PBA.

● **Symptom : Vertical Irregular Image Density for a Particular Color**
● Sample Image
● Possible Cause : 1. Unbalanced Metering Blade Gap 2. Unbalanced Developer Distribution at Developing Gap
● Troubleshooting method : [1. Unbalanced Developer] 1.1) Caused by unbalanced developer distribution on the deve roller or unbalanced metering blade gap in the imaging unit. 1.2) Replace the Imaging Unit.

TONER
Samsung Electronics
www.tonerplus.com.ua

● **Symptom : Vertical Irregular Image Density for All Colors**
● Sample Image
● Possible Cause : Unbalanced T2 Transfer
● Troubleshooting method : 1) Check the THV2 value [EDC-DATA:107-080/090]. 2) If there is any wrong value, replace the HVPS-L. 3) Check the T2 Engage/Disengage Motor [EDC-TEST:100-100]. 4) If there is any defective, replace the T2 Engage Motor. 5) Check the T2 Engage/Disengage sensor [EDC-TEST:100-110]. 6) If there is any defective, replace the sensor. 7) When checking T2 Engage/Disengage Motor [EDC-TEST:100-100]. 8) Check that the T2 Roller work or not. If not work, replace the T2 Unit. 9) Check the Cartridge Transfer Unit Drive Roller Ground, and If the ground resistive value is larger than 100 ohm, replace the Cartridge Transfer Unit.

TONER
www.tonerplus.com.ua

● Symptom : Image Density Difference between Right and Left Sides for a Particular Color
● Sample Image
● Possible Cause : Unbalanced T1 Transfer Roller Nip
● Troubleshooting method : 1) Check that the Front Cover is locked correctly. 2) Take off the Cartridge Transfer Unit and check the T1 roller conditions. 3) If there is any defective, replace the Cartridge Transfer Unit.

● Symptom : Image Density Difference between Right and Left Sides for All Colors
● Sample Image
● Possible Cause : Unbalanced T2 Transfer Roller Nip
● Troubleshooting method : 1) Check that the Side Cover is locked correctly. 2) Check the T2 Engage/Disengage Motor [EDC-TEST:100-100]. 3) If there is any defective, replace the T2 Engage Motor. 4) Check the T2 Engage/Disengage sensor [EDC-TEST:100-110]. 5) If there is any defective, replace the sensor. 6) When checking T2 Engage/Disengage Motor [EDC-TEST:100-100]. 7) Check that the T2 Roller work or not. If not work, replace the T2 Unit. 8) Check the Cartridge Transfer Unit Drive Roller Ground, and If the ground resistive value is larger than 100 ohm, replace the Cartridge Transfer Unit.

TONER
www.tonerplus.com.ua

● **Symptom : Horizontal White Line(s)**
● Sample Image
● Possible Cause : 1. Mis-Contact on T1 and/or MHV Bias 2. Electrostatic Noise
● Troubleshooting method : [1. Mis-Contact on T1 and/or MHV Bias] 1.1) Take off the Cartridge Transfer Unit and check the T1 roller conditions. 1.2) If there is any defective, replace the Cartridge Transfer Unit. 1.3) Check and confirm MHV Bias for the color [EDC-DATA:105-000~150]. 1.4) If there is any wrong number, check the MHV contact point of the corresponding color. 1.5) Turn on the MHV Bias for the color [EDC-TEST:105-000~030] 1.6) Read the MHV value for the color [EDC-DATA:105-040~070] 1.7) If any mis-reading on the MHV value, replace HVPS-L PBA. 1.8) Check the OPC grounding, and If the ground resistive value is larger than 100 ohm, replace the Imaging unit. 1.9) Check the Cartridge Transfer Unit grounding, and If the ground resistive value is larger than 100 ohm, replace the Cartridge Transfer Unit unit [2. Electrostatic Noise] 2.1) Check and confirm Dev Bias for the color [EDC-DATA:106-000~030]. 2.2) If there is any wrong value, check the Dev Bias contact point of the corresponding color. 2.3) Check the connection state between the Imaging unit and Bias harness. 2.4) Check the Dev Bias for the color [EDC-TEST:106-000~030]. 2.5) If the value has any noise, replace the HVPS-S.

TONER
www.tonerplus.com.ua

● Symptom : Horizontal Sharp Line(s) for a Particular Color
● Sample Image
● Possible Cause : 1. Mis-Contact on Charging Bias 2. Unstable T1 Transfer Bias
● Troubleshooting method : [1. Mis-Contact on Charging Bias] 1.1) Check and confirm MHV Bias for the color [EDC-DATA:105-000~150]. 1.2) If there is any wrong value, check the MHV contact point of the corresponding color. 1.3) Turn on the Charging Bias for the color [EDC-TEST:105-000~030] 1.4) Read the MHV value for the color [EDC-TEST:105-040~070] 1.5) If any mis-reading on the MHV value, replace HVPS-L PBA. 1.6) Check the OPC grounding, and If the ground resistive value is larger than 100 ohm, replace the Imaging unit. [2. Unstable T1 Transfer Bias] 1.1) Take out the Cartridge Transfer Unit and check the T1 roller conditions. 1.2) If there is any defective, replace the Cartridge Transfer Unit. 1.3) Check and confirm THV Bias for the color[EDC-DATA:107-000~070], If there is any wrong value, check the T1 contact point of the corresponding color. 1.4) Read the THV Bias value[EDC-TEST:107-000~030]. 1.5) If any mis-reading on the THV value, replace HVPS PBA. 1.6) Check the Cartridge Transfer Unit grounding, and If the ground resistive value is larger than 100 ohm, replace the Cartridge Transfer Unit unit.

TONER
Samsung Electronics
www.tonerplus.com.ua

● **Symptom : Horizontal Sharp Line(s) for Multiple Colors of 78mm gap**
● Sample Image
● Possible Cause : Unstable T2 Transfer Bias Contact
● Troubleshooting method : 1) Check the connection harness of THV2 Bias. 2) Check the THV2 value [EDC-DATA:107-080/090]. 3) If there is any wrong value, replace the HVPS-L. 4) Read the THV2 bias [EDC-TEST:107-080/090]. 5) If there is defective, replace the HVPS-L. 6) Check the Cartridge Transfer Unit drive roller grounding, and If the ground resistive value is larger than 100 ohm, replace the Cartridge Transfer Unit unit.

TONER
www.tonerplus.com.ua

● Symptom : Horizontal Thick Band(s) for a Particular Color
● Sample Image
● Possible Cause : 1. Unstable Charging Bias 2. Unstable Transfer Bias
● Troubleshooting method : [1. Unstable MHV/THV Bias] 1.1) Check and confirm MHV Bias for the color [EDC-DATA:105-000~150]. 1.2) If there is any wrong value, check the MHV contact point of the corresponding color. 1.3) Check and confirm the MHV Bias [EDC-TEST:105-000~030]. 1.4) If there is a noise, Check the Cartridge Transfer Unit grounding, and If the ground resistive value is larger than 100 ohm, replace the Cartridge Transfer Unit unit. 1.5) Check the THV/THV2 Bias [EDC-DATA:107-000~090], 1.6) If there is any wrong value, check the THV/THV2 contact point of the corresponding color, or replace the HVPS-L. 1.7) Check the THV/MHV Bias Harness. 1.8) If all of the above check lists are OK, replace the Imaging unit.

TONER
www.tonerplus.com.ua

● **Symptom : Horizontal Dark Band**
● Sample Image
● Possible Cause : 1. High Transfer Voltage 2. Low Image Density
● Troubleshooting method : [1. High Transfer Voltage] 1.1) Check the THV/THV2 Bias [EDC-DATA:107-000~090]. 1.2) If there is any wrong value, check the THV/THV2 contact point of the corresponding color, or replace the HVPS-L. 1.3) Check the THV/MHV Bias Harness. 1.4) If all of the above check lists are OK, replace the Imaging unit. [2. Low Image Density] 2.1) Check the T/C control value [EDC-DATA:111-060~130]. 2.2) If there is any wrong value, change the value. 2.3) Check image density using a demo page [Machine Status >> Machine Info >> Print/Report >> Demo Page] or any test patterns [Admin. Setting >> General >> Machine Test >> Image Quality Test Patterns]. 2.4) If the image density is still low, execute tone adjustment [Admin. Setting >> Setup >> Color >> Auto Color Tone Adjustment >> Color Tone Adjustment], and check image density again. 2.5) If the density is not increasing, execute manual color adjust [Admin. Setting >> Setup >> Color >> Custom Color >> Manual Adjust]

TONER
www.tonerplus.com.ua

● **Symptom : Horizontal Periodic Micro Jitter (sub-1mm Pitch) for a Particular Color**
● Sample Image
● Possible Cause : Unbalanced MHV Bias
● Troubleshooting method : 1) It is caused by unbalanced MHV Bias. 2) Check the external temperature sensor and the humidity sensor. 3) Check and confirm MHV Bias for the color [EDC-DATA:105-000~150]. 4) If there is any wrong value, check the MHV contact point of the corresponding color. 5) Check and confirm the MHV Bias [EDC-TEST:105-000~030]. 6) If there is any unstable values, check the Cartridge Transfer Unit grounding, and If the ground resistive value is larger than 100 ohm, replace the Cartridge Transfer Unit unit. 7) If the MHV Bias is defective, replace the HVPS. 8) If the MHV Bias is OK, replace the Imaging unit.

TONER
www.tonerplus.com.ua

● **Symptom : Horizontal Periodic Jitter (2~3mm Pitch) for YMC Color**
● Sample Image
● Possible Cause : High Torque loaded on Waste Auger in Developing Unit
● Troubleshooting method : [1. High Torque loaded on Waste Auger in Developing Unit] 1.1) It is caused by increase of the drive load in imaging unit. 1.2) Check the drive torque of the OPC coupling. 1.3) If the drive torque is high, check the waste toner overflow in imaging unit. 1.4) If the overflow is occured, replace the imaging unit. 1.5) Check the drive torque of the Deve Roller coupling. 1.6) If the drive torque is high, shake the imaging unit slowly in order to make even the developer placed in the imaging unit.

TONER
www.tonerplus.com.ua

● **Symptom : Vertical White Band**
● Sample Image
● Possible Cause : 1. Contaminations on LSU Outer Window 2. Partially No Developer on Developing Roller 3. Vertical Damage on Cartridge Transfer Unit
● Troubleshooting method : [1. Contaminations on LSU Outer Window] 1.1) Check contamination of the LSU windows. 1.2) Check any contamination on the optical path of the Imaging unit. [2. Partially No Developer on Developing Roller] 2.1) Check any unexpected impurities between Deve roller and Dr. Blade in Imaging unit. 2.2) Remove the impurities or replace the imaging unit. [3. Vertical Damage on Cartridge Transfer Unit] 3.1) Check the surface of Cartridge Transfer Unit. 3.2) If there is any damages on the surface, replace the Cartridge Transfer Unit.

TONER
www.tonerplus.com.ua

● **Symptom : Vertical Moving White Band**
● Sample Image
● Possible Cause : Contaminations on Doctor Blade Gap
● Troubleshooting method : 1) Check any unexpected impurities between Deve roller and Dr. Blade in Imaging unit. 2) Remove the impurities or replace the imaging unit.

● **Symptom : Vertical White Band for Copy Job**
● Sample Image
● Possible Cause : 1. Contaminations on CCDM or Scanning Window 2. Image Cell Error on CCDM
● Troubleshooting method : [1. Contaminations on CCDM or Scanning Window] 1.1) If the vertical band occurs only in copy job, and the width of a vertical white band is not a sharp line, check any contaminations on the CCD sensor module or on the scan glass window. [2. Image Cell Error on CCDM] 2.1) If the vertical band occurs only in copy job, and the width of a vertical white band is a sharp line and the band is repeated on the same position, replace the CCDM.

TONER
www.tonerplus.com.ua

● Symptom : Vertical Band for a Particular Color
● Sample Image
● Possible Cause : 1. OPC Scratch 2. OPC Cleaning Fail 3. Contaminations on OPC or Charging Roller
● Troubleshooting method : [1. OPC Scratch] 1.1) Check any scratches on the OPC in the Imaging Unit of the particular color. 1.2) If there is a scratch on the OPC, replace the Imaging Unit. [2. OPC Cleaning Fail] 2.1) Check any vertical black lines on the OPC after printing job. 2.2) If there is any damage in the OPC cleaning blade, The OPC cleaning can not be performed, replace the Imaging Unit. [3. Contaminations on OPC or Charging Roller] 3.1) Open the side cover when the set executes a printing. 3.2) Check the image on the OPC. 3.3) If there is any contaminations on the charging roller, the image on the OPC includes image defect. 3.4) Replace the Imaging Unit.

TONER
www.tonerplus.com.ua

● **Symptom : Vertical Dark Band**
● Sample Image
● Possible Cause : Contaminations on Charging Roller
● Troubleshooting method : 1) Open the side cover when the set executes a printing. 2) Check the image on the OPC. 3) If there is any contaminations on the charging roller, the image on the OPC includes image defect. 4) Replace the Imaging Unit.

● **Symptom : Vertical Random Streak**
● Sample Image
● Possible Cause : OPC Scratch
● Troubleshooting method : 1) Check any scratches on the OPC in the Imaging Unit of the particular color. 2) If there is a scratch on the OPC, replace the Imaging Unit.

TONER
www.tonerplus.com.ua

● **Symptom : Full Solid Black/Color Image**
● Sample Image
● Possible Cause : 1. Mis-Contact on Charging Bias 2. Wrong Charging Bias from HVPS
● Troubleshooting method : [1. Mis-Contact on Charging Bias] 1.1) Check and confirm MHV Bias for the color [EDC-DATA:105-000~150]. 1.2) If there is any wrong number, check the MHV contact point of the corresponding color. 1.3) If there is any contaminations on the MHV contact point, remove the contamination. 1.4) If the MHV contact point is OK, check the Cartridge Transfer Unit contact point inn the rear side of the Cartridge Transfer Unit. 1.5) If there is any contaminations on the Cartridge Transfer Unit contact point, remove the contamination. [2. Wrong Charging Bias from HVPS] 2.1) Turn on the MHV Bias for the color [EDC-TEST:105-000~030] 2.2) Read the MHV Bias value for the color [EDC-DATA:105-040~070] 2.3) If any mis-reading on the MHV value, replace HVPS-L PBA. 2.4) If the MHV values are OK, check any contaminations of the MHV Bias contacts, and remove the contaminations.

TONER
www.tonerplus.com.ua

● **Symptom : Foggy Backgrounds for a Particular Color**
● Sample Image
● Possible Cause : Low Charging Bias
● Troubleshooting method : [1. Low Charging Bias] 1.1) Check and confirm MHV Bias for the color [EDC-DATA:105-000~150]. 1.2) If there is any wrong number, check the MHV contact point of the corresponding color. 1.3) Turn on the MHV Bias for the color [EDC-TEST:105-000~030] 1.4) Read the MHV Bias value for the color [EDC-DATA:105-040~070] 1.5) If any mis-reading on the MHV value, replace HVPS-L PBA. 1.6) If the MHV values are OK, check any contaminations of the MHV Bias contacts, and remove the contaminations. 1.7) Check the OPC Ground, and If the ground resistive value is larger than 20 ohm, replace the Imaging Unit.

TONER
www.tonerplus.com.ua

● **Symptom : Periodic White/Black/Color Spots**
● Sample Image
● Possible Cause : 1. Damage/Contamination on OPC 2. Damage/Contamination Charging Roller
● Troubleshooting method : [1. Damage/Contamination on OPC] 1.1) Check any damages on the printed Image. 1.2) If the damages on the image appear at the every 94mm period, check any damages or spots on the OPC surface. 1.3) I there is any damage on the OPC, replace the Imaging Unit. [2. Damage/Contamination Charging Roller] 1.1) Check any damages on the printed Image. 1.2) If the damages on the image appear at the every 44mm period, check any damages or spots on the charger roller. 1.3) I there is any damage on the charger roller, replace the Imaging Unit.

TONER
www.tonerplus.com.ua

● Symptom : White Spot on Solid Image
● Sample Image
● Possible Cause : 1. Unstable T2 Transfer Roller Nip 2. High T2 Transfer Voltage
● Troubleshooting method : [1. Unstable T2 Transfer Roller Nip] 1.1) Check the T2 Engage/Disengage Motor [EDC-TEST:100-100]. 1.2) If there is any defective, replace the T2 Engage Motor. 1.3) Check the T2 Engage/Disengage sensor [EDC-TEST:100-110]. 1.4) If there is any defective, replace the sensor. 1.5) When checking T2 Engage/Disengage Motor [EDC-TEST:100-100]. 1.6) Check that the T2 Roller work or not. If not work, replace the T2 Unit. 1.7) Check the Cartridge Transfer Unit Drive Roller Ground, and If the ground resistive value is larger than 100 ohm, replace the Cartridge Transfer Unit. [2. High T2 Transfer Voltage] 2.1) Check and confirm THV2 Bias for the color [EDC-DATA:107-080~090] 2.2) If there is any wrong value, check and confirm the contact point of T2 driving roller in side unit. 2.3) Read the THV2 value for the color [EDC-TEST:107-040~070] 2.4) If any mis-reading on the THV2 value, replace HVPS-L PBA. 2.5) Check the Cartridge Transfer Unit Drive Roller Ground, and If the ground resistive value is larger than 100 ohm, replace the Cartridge Transfer Unit.

TONER
www.tonerplus.com.ua

● **Symptom : Dot Size Black/Color Spots**
● Sample Image
● Possible Cause : 1. Developer Leakage 2. Unstable MHV Bias
● Troubleshooting method : [1. Developer Leakage] 1.1) Remove the Imaging Unit and shake the Imaging Unit slowly in the horizontal direction. 1.2) Install the Imaging Unit and print out 5~10 full solid images. 1.3) If the problem does not fixed, replace the Imaging Unit. [2. Unstable MHV Bias] 2.1) It is caused by unstable MHV Bias. 2.2) Check the external temperature sensor and the humidity sensor. 2.3) Check and confirm MHV Bias for the color [EDC-DATA:105-000~150]. 2.4) If there is any wrong value, check the MHV contact point of the corresponding color. 2.5) Check and confirm the MHV Bias [EDC-TEST:105-000~030]. 2.6) If there is any unstable values, check the Cartridge Transfer Unit grounding, and If the ground resistive value is larger than 100 ohm, replace the Cartridge Transfer Unit unit. 2.7) If the MHV Bias is defective, replace the HVPS. 2.8) If the MHV Bias is OK, replace the Imaging unit.

TONER
www.tonerplus.com.ua

● **Symptom : Offset Image (after-image on OPC)**
● Sample Image
● Possible Cause : Poor Mechanical Cleaning
● Troubleshooting method : 1) Remove the Imaging Unit after printing job. 2) Check OPC surface if any toner remains on the OPC surface. 3) Rotate the OPC, and check the remaining toner on the OPC is removed by 1leaning blade. 4) If the remaining toner is not removed, replace the Imaging Unit.

TONER
Samsung Electronics
www.tonerplus.com.ua

● **Symptom : Auger Marks (thick slanted white band)**
● Sample Image
● Possible Cause : 1. Low Toner Concentration after high-coverage image printing 2. Unbalanced Developer
● Troubleshooting method : [1. Low Toner Concentration after high-coverage image printing] 1.1) Print out any 10 low-coverage images. 1.2) If the auger marks do not disappear, execute tone adjustment [Admin. Setting >> Setup >> Color >> Auto Color Tone Adjustment >> Color Tone Adjustment] 1.3) If the problem is not fixed, check the T/C control setting value EDC-DATA: 111-060~130). 1.4) If any the setting value is wrong, increase the value. [2. Unbalanced Developer] 2.1) Remove the Imaging Unit and shake the Imaging Unit slowly in the horizontal direction. 2.2) Install the Imaging Unit and print out 5~10 full solid images. 2.3) If the problem does not fixed, replace the Imaging Unit.

TONER
Samsung Electronics
www.tonerplus.com.ua

● **Symptom : Carriers on Printed Image**
● Sample Image
● Possible Cause : High OPC Surface Potential
● Troubleshooting method : 1) Check and confirm MHV Bias for the color [EDC-DATA:105-000~150]. 2) If there is any wrong value, check the MHV contact point of the corresponding color. 3) Check and confirm DEV Bias for the color [EDC-DATA:106-000~030]. 4) If there is any wrong value, check the DEV contact point of the corresponding color. 5) Check and confirm the MHV Bias [EDC-TEST:105-000~030] and the DEV Bias [EDC-TEST:106-000~030]. 6) If any the MHV Bias or the DEV Bias is defective, replace the HVPS. 7) If the MHV Bias and DEV Bias are OK, replace the Imaging unit.

TONER
www.tonerplus.com.ua

● **Symptom : Toner Supply Error**
● Sample Image
● Possible Cause : Toner Supply Path is blocked
● Troubleshooting method : [1. Toner Supply Path is blocked by Developer] 1.1) Check the Toner Supply Shutter in the Imaging Unit. 1.2) If there is any damage, replace the Imaging Unit. 1.3) Check the Toner Supply Motor [EDC-TEST:111-000~030] 1.4) If the motor does not work correctly, replace the toner supply motor. 1.5) Start Main Motor [EDC-TEST:100-000] , Black OPC/DEVE Motor [EDC-TEST:100-020], Color OPC Motor [[EDC-TEST:100-040], and Color Deve BLDC Motor [EDC-TEST:100-060] for a moment, check the T/C Sensor Output [EDC-TEST:111-040-070]. 1.6) If there is any wrong value, clean up the toner supply tube.

TONER
Samsung Electronics
www.tonerplus.com.ua

● **Symptom : Early Toner Empty**
● Sample Image
● Possible Cause : High Image Density
● Troubleshooting method : [1. High Image Density] 1.1) Execute tone adjustment [Admin. Setting >> Setup >> Color >> Auto Color Tone Adjustment >> Color Tone Adjustment] 1.2) If the problem is not fixed, check the T/C control setting value EDC-DATA: 111-060~130). 1.3) If any the setting value is wrong, decrease the value. 1.4) If the Image density is still high, change the target toner density setting [Admin. Setting >> Setup >> Color >> Custom Color >> Manual Adjust].

● **Symptom : Toner Contamination on Printed Image**
● Sample Image
● Possible Cause : Toner Contamination of the Internal Mechanism
● Troubleshooting method : Clean up the inside of the machine, specially on the imaging units and paper path.

TONER
Samsung Electronics
www.tonerplus.com.ua

● **Symptom : Toner Contamination on the Lead Edge of the paper**
● Sample Image
● Possible Cause : Toner Contamination on Paper Path
● Troubleshooting method : Clean up the paper path in the machine.

● **Symptom : Toner Contamination on the Back of the Paper**
● Sample Image
● Possible Cause : Toner Contamination on Paper Path and/or on the T2 Roller
● Troubleshooting method : Clean up the paper path, T2 roller, and T2 Unit in the machine.

TONER
Samsung Electronics
www.tonerplus.com.ua

● **Symptom : Dragged Image**
● Sample Image
● Possible Cause : Motor Error of the Developing Unit
● Troubleshooting method : 1) Check Main Motor [EDC-TEST:100-000] , Black OPC/DEVE Motor [EDC-TEST:100-020], Color OPC Motor [[EDC-TEST:100-040], and Color Deve BLDC Motor [EDC-TEST:100-060] working correctly. 2) If any undesired operating for the motors, replace the motor.

● **Symptom : Broken Lines on Image**
● Sample Image
● Possible Cause : Line burst on Fuser Unit
● Troubleshooting method : 1) Check the toner density by printing out an image. 2) If the toner density is high, execute tone adjustment [Admin. Setting >> Setup >> Color >> Auto Color Tone Adjustment >> Color Tone Adjustment] 3) If the problem is not fixed, check the T/C control setting value [EDC-DATA: 111-060~130]. 4) If any the setting value is wrong, decrease the value. 5) If the Image density is still high, change the target toner density setting [Admin. Setting >> Setup >> Color >> Custom Color >> Manual Adjust].

TONER
www.tonerplus.com.ua

● **Symptom : Insufficient Toner Fixing on Printed Image**
● Sample Image
● Possible Cause : 1. Low Fusing Temperature 2. High Toner Density
● Troubleshooting method : [1. Low Fusing Temperature] 1.1) Check the temperature of the Fuser Unit. 1.2) If the temperature is low, replace the Fuser Unit. [2. High Toner Density] 2.1) Execute tone adjustment [Admin. Setting >> Setup >> Color >> Auto Color Tone Adjustment >> Color Tone Adjustment] 2.2) If the problem is not fixed, check the T/C control setting value EDC-DATA: 111-060~130). 2.3) If any the setting value is wrong, decrease the value. 2.4) If the Image density is still high, change the target toner density setting [Admin. Setting >> Setup >> Color >> Custom Color >> Manual Adjust].

TONER
www.tonerplus.com.ua

● **Symptom : No Image Output at Printing**
● Sample Image
● Possible Cause : 1. Fail to Open LSU Cover 2. No High Voltage Output from HVPS
● Troubleshooting method : [1. Fail to Open LSU Cover] 1.1) Check the LSU Cleaning DC Motor and LSU Cleaning Sensor [EDC-TEST:110-040~050]. 1.2) Start to rotate the LSU Cleaning DC Motor [EDC-TEST:110-040] and Read the sensing value of the LSU Cleaning Sensor [EDC-TEST:110-050]. 1.3) If there is any motor rotating noise, and the sensor reading value is toggled correctly, remove the LSU and check the LSU Cover. 1.4) If there is any motor rotating noise, and the sensor reading value is not toggled correctly, check the mechanical part of the LSU Cleaning Motor and gear. 1.5) If there is no motor rotating noise, check and replace the LSU Cleaning Motor. [2. No High Voltage Output from HVPS] 2.1) Check and confirm MHV Bias for the color [EDC-DATA:105-000~150]. 2.2) If there is any wrong value, check the MHV contact point of the corresponding color. 2.3) Check and confirm DEV Bias for the color [EDC-DATA:106-000~030]. 2.4) If there is any wrong value, check the DEV contact point of the corresponding color. 2.5) Check and confirm the MHV Bias [EDC-TEST:105-000~030] and the DEV Bias [EDC-TEST:106-000~030]. 2.6) If any the MHV Bias or the DEV Bias is defective, replace the HVPS. 2.7) If the MHV Bias and DEV Bias are OK, replace the Imaging unit.

TONER
Samsung Electronics
www.tonerplus.com.ua

● **Symptom : Inaccurate Color Registration**
● Sample Image
● Possible Cause : Failure in Auto Color Registration Process
● Troubleshooting method : 1) Execute Manual Auto Color Registration [Admin Setting >> Setup >> Color >> Auto Color Registration >> Execute Now]. 2) If the color registration is still inaccurate, print and check the ACR report [Diagnostics >> Test Routines >> Others >> Print Report >> Auto Color Registration Report]. 3) If there is any ACR fail history, execute ACR sensor calibration [Diagnostics >> Test Routines >> Others >> ACR Sensor Calibration]. 4) Execute Manual Auto Color Registration again [Admin Setting >> Setup >> Color >> Auto Color Registration >> Execute Now]. 5) If the color registration is still inaccurate, replace the ACR sensors.

TONER
Samsung Electronics
www.tonerplus.com.ua

● **Symptom : Failure in Auto Color Registration**
● Sample Image
● Possible Cause : 1.The Contamination of ACR Sensor 2. The Abnormality of ACR Pattern Image 3. Fail to Obtain the ACR Sensing Data
● Troubleshooting method : [1.The Contamination of ACR Sensor] 1.1) Check any contamination of ACR sensors. 1.2) If there is any contamination on the ACR Sensors, make them clean. [2. The Abnormality of ACR Pattern Image] 2.1) Print out and check any images. 2.2) If the toner density on the printed image is low, increase the Toner density by execute tone adjustment [Admin. Setting >> Setup >> Color >> Auto Color Tone Adjustment >> Color Tone Adjustment]. 2.3) If the toner density is not enough yet, check the T/C control setting value [EDC-DATA: 111-060~130]. 2.4) If any the setting value is wrong, decrease the value. 2.5) If the Image density is still low, change the target toner density setting [Admin. Setting >> Setup >> Color >> Custom Color >> Manual Adjust]. [3. Fail to Obtain the ACR Sensing Data] 3.1) Check the ACR sensor connections. 3.2) Execute ACR sensor calibration [Diagnostics >> Test Routines >> Others >> ACR Sensor Calibration]. 3.3) Execute Manual Auto Color Registration again [Admin Setting >> Setup >> Color >> Auto Color Registration >> Execute Now]. 3.4) If the color registration is still inaccurate, replace the ACR sensors.

TONER
Samsung Electronics
www.tonerplus.com.ua

4.2.4 Other Error

● Symptom : No booting / No power **Engine is not warming up and LCD does not display anything on.**
● Possible Cause : 1. Power Out 2. Fail to Initialize Video PBA
● Troubleshooting method : [1. Power Out] 1.1) Check the power cord and power inlet. 1.2) Check whether the LED on video PBA is flickered on. If the LED is off, go to next step. 1.3) Check and confirm 5V/ 24V output from SMPS. 5V : 1,3,5 Pin 24V : 1,3,5,7 Pin If there is a defect, replace the SMPS board.   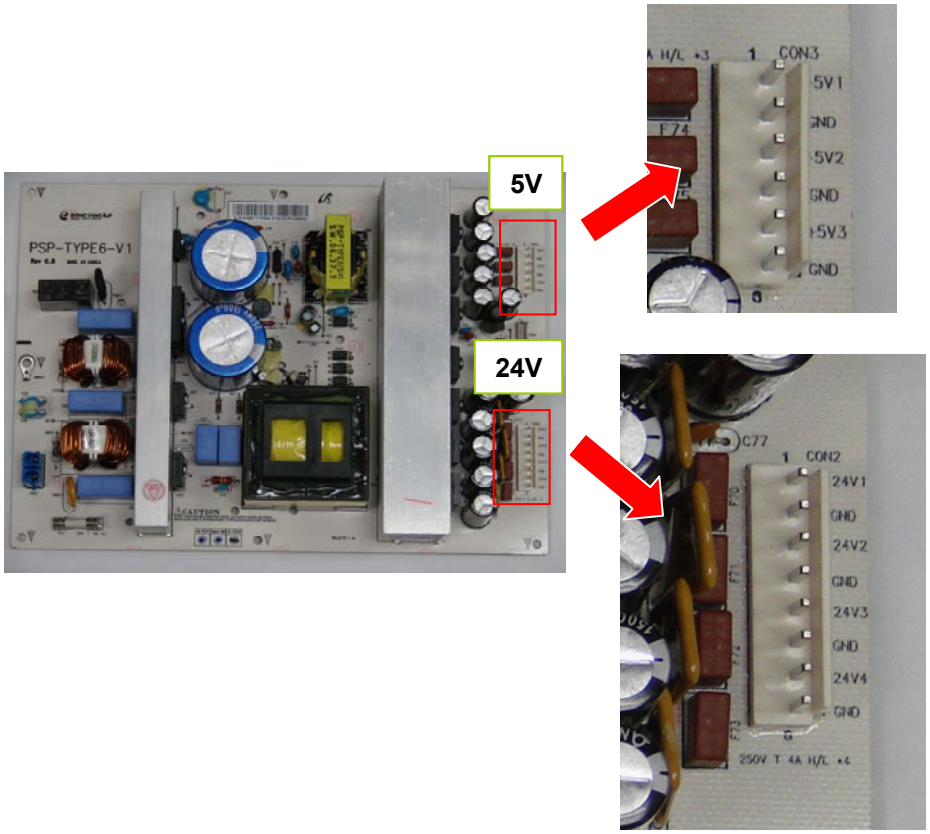   1.4) Check power wire connections from SMPS to Engine PBA. 1.5) Check core voltages in Video/Engine PBA. Replace the Engine PBA. [2. Fail to Initialize Video PBA] 2.1) Check the connections of DIMM Memory, HDD, and GUI interface harness. 2.2) Reboot the set. 2.3) If the set is not initialized, replace the Video PBA.

TONER
www.tonerplus.com.ua

● **Symptom : 1. Continuous Logo Display at Initial State** **2. No display on LCD**
● Possible Cause : Fail to Initialize Communication Port between Video PBA & OPE PBA
● Troubleshooting method : 1) Check +5V on OPE PBA. (7,8,9 Pin of Main IF (power) / Refer to Page 2-29) Check the flexible pcb harness connecting between OPE PBA and LCD panel. If there is a defect, replace the OPE PBA or LCD panel. 2) Check the connection between Video PBA (UI_IF on Page 2-23) and OPE PBA. 3) Reboot the set. 4) Send any printing command. 5) If the printing job works, replace OPE PBA. 6) If the printing job does not work, replace Video PBA.

TONER
www.tonerplus.com.ua