10. Finisher Unit

10.1 Summary of the Finisher Unit

10.1.1 Product summary

(1) High Speed System : 35ppm with minimized skip-pitches.

(2) Heavy Duty Design : 50 sheets stapling / 500 sheets stacking / 1,000K Life

(3) Paper Spec. : Length (148~357mm)°øWidth (98-216mm) (60~163gsm)

(4) Staple Cartridge : 5,000 staples / cartridge

(5) Configuration : Embed type

10.1.2 Appearance

10.2 System Configuration

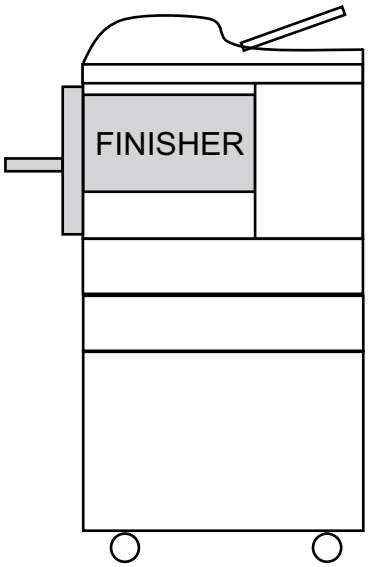

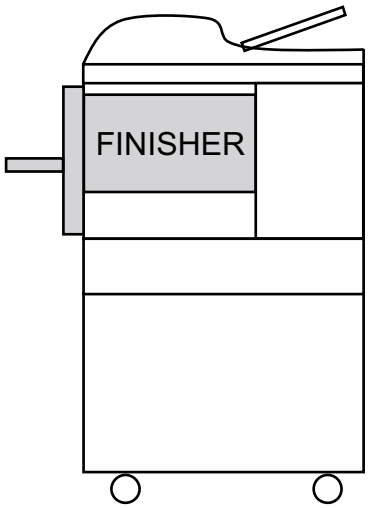

10.3 SPECIFICATION

10.3.1 Physical

(1) Size : Without Stacker : W 498 X D 390 X H 284 (mm)
With Stacker : W 726 P(eFL498 f~9RLX f~9RLD f~9RL390 f~9RLXC7L0 f~9RL(mm)f]TJt~C7Wbb.~97VFX.TJt~ø7

10.3.4 Media

(1) Paper orientation

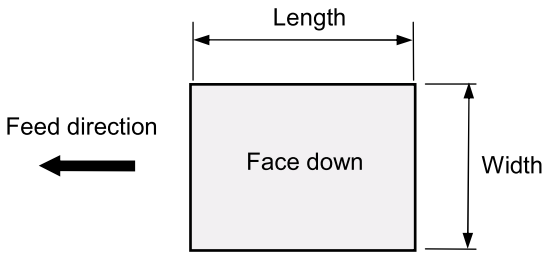

(2) Paper Size : Length (148.357mm) ×Width (98.216mm)

(3) Paper Weight : 60.163g/㎡ (16.53lb)

< Operating Mode Table >

	Stack	Staple	Offsetting	
Width 98C ~ 182mm	O	X	X	60C ~ 163g/㎡ 16C ~ 53lb
Width 182mC ~216mm	O	O	O	60C ~ 163g/㎡ 16C ~ 53lb
Multi media	O	X	X	(Note1)

Note1) Multi-Media are not guaranteed for the performance(No dropping, No miss-Ordering)

(4) Paper Type : PPC paper (Coefficient of sliding friction: Max. 0.6)

Note1) Tracing paper / Label / OHP / Envelope are not guaranteed for the performance (No dropping, No miss-Ordering)

Note2) Pre punched PPC paper is not guaranteed for the performance

(5) Standard Test Paper (based on Finisher Core Media List from Samsung)

	Type	***Size***	***Weight***	***Manufacturer***
1	Xerox 4024 DP	Letter	20lb	Xerox
2	Xerox Premier	A4	80 g/㎡	Xerox
3	Samsung Premier	A4	75 g/㎡	Samsung

10.4 PERFORMANCE

10.4.1 Input paper conditions

- Paper delivery from Engine :
  - Printing : Simplex / Duplex
  - Output : Face Down
    - Note) Odd pages should be face down exit at duplex print mode.
  - Page order : 1 to N
  - Registration : Feeding Center

- Engine speed : 35.45ppm
  - · Feed Speed (Engine to Finisher)

Conditions	***Value***	***Note***
Feed speed from Engine	Max. 282.75mm/sec	
Inter-gap A	Min.1.333sec	
Inter-gap B	Min. 0.3466 sec	

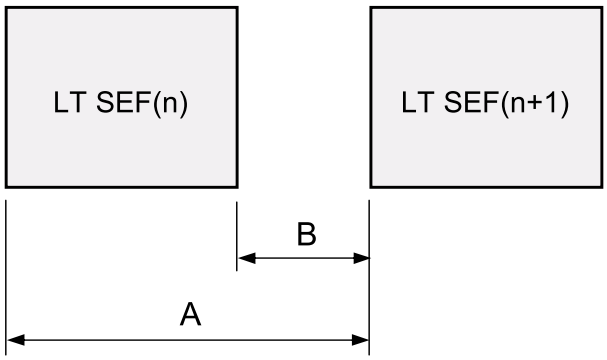

Note) Skip pitch insertion is required between previous and next job at stapling mode, and 1 sheet ejecting with offset .

10.4.2 Curl amount from Engine

(1) Allowance of curl : |A MAX| ≦12.7 mm (1/2")
R ≧80 mm
(Guarantee feeding function, sensing)
(2) Standard condition of curl : |A MAX| ≦7 mm
R ≧40 mm
(Guarantee functions, performance, and reliability)

1) This curl condition insures the stacking performance.
2) Ignore any trouble due to the paper curl of the located the top position in the bunch of sheets without stapled.
3) It is out of spec that paper curl increasing by the time passing.

<Curl measurement method >
Media : Test paper
Environment : Test environment
Method : Measure the curl of 10 sheets on the flat board (grass) immediately after printed out,

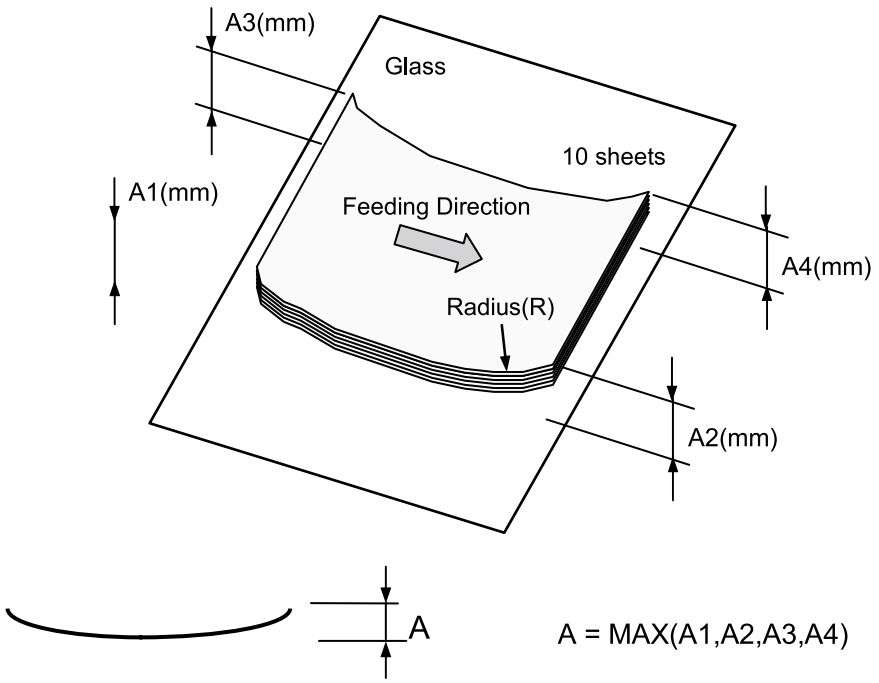

10.4.3 Electric static charge amount from Engine

: ≦0.5 kV per sheet
(Simplex / Duplex)

- Registration and skew from Engine
  : A ≦3.0 mm

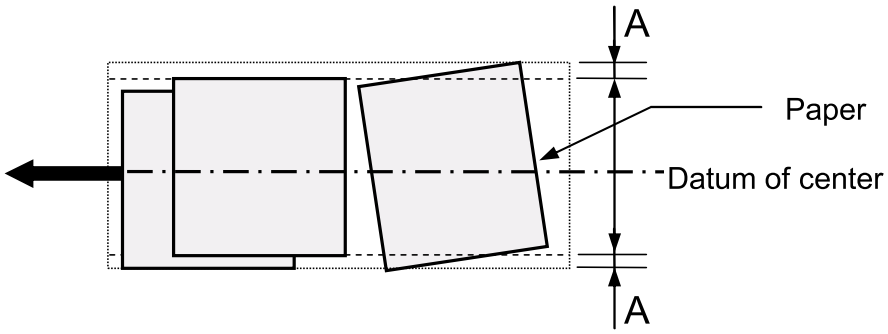

- Standard test pattern of printing : Samsung's Printing Pattern

10.4.4 Stapling

10.4.4.1 Printing orientation

(This finisher can't staple on a suitable position if printing direction is not as follows.)

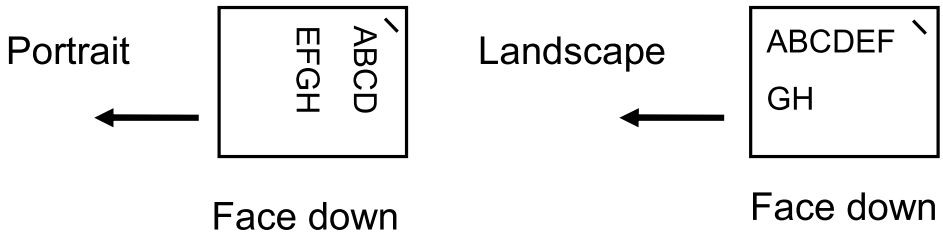

10.4.4.2 Position of stapling

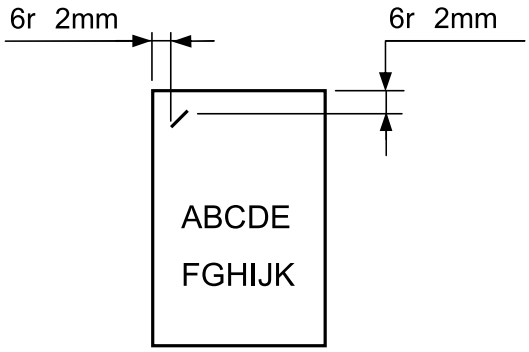

10.4.5 Machine life

: 1,000,000 sheets or 5 years
(Excluding Periodical replacement part)