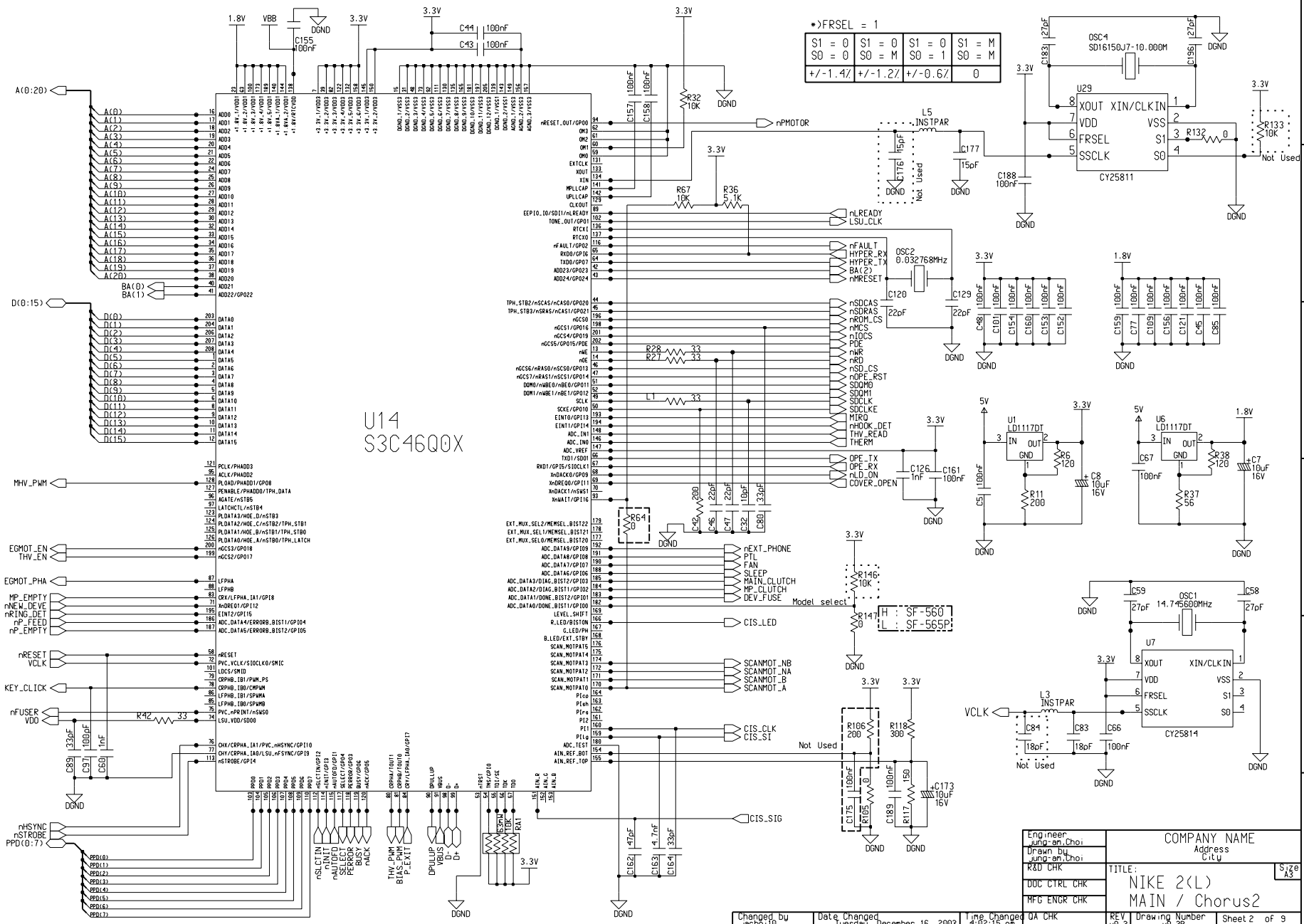

U14
S3C46Q0X
*)FRSEL = 1
S1 = 0 S0 = 0 +/-1.4%
S1 = 0 S0 = M +/-1.2%
S1 = 0 S0 = 1 +/-0.6%
S1 = M S0 = M 0
OSC4 SD16150J7-10.000M
U29 CY25811
XOUT XIN/CLKIN VDD VSS FRSEL S1 SSCLK S0
L5 INSTPAR
OSC2 0.032768MHz
U1 LD1117DT
U6 LD1117DT
OSC1 14.745600MHz
U7 CY25814
L3 INSTPAR
Model select
H : SF-560
L : SF-565P
Not Used
A(0:20)
D(0:15)
MHV_PWM
EGMOT_EN
THV_EN
EGMOT_PHA
MP_EMPTY
nNEW_DEVE
nRING_DET
nP_FEED
nP_EMPTY
nRESET
VCLK
KEY_CLICK
nFUSER
VDO
nHSYNC
nSTROBE
PPD(0:7)
nPMOTOR
nLREADY
LSU_CLK
nFAULT
HYPER_RX
HYPER_TX
BA(2)
nMRESET
nSDCAS
nSDRAS
nROM_CS
nMCS
nIOCS
PDE
nWR
nRD
nSD_CS
nOPE_RST
SDQM0
SDQM1
SDCLK
SDCLKE
MIRQ
nHOOK_DET
THV_READ
THERM
OPE_TX
OPE_RX
nLD_ON
COVER_OPEN
nEXT_PHONE
PTL
FAN
SLEEP
MAIN_CLUTCH
MP_CLUTCH
DEV_FUSE
CIS_LED
SCANMOT_NB
SCANMOT_NA
SCANMOT_B
SCANMOT_A
CIS_CLK
CIS_SI
CIS_SIG
VCLK
Engineer jung-am,Choi
Drawn by jung-am,Choi
R&D CHK
DOC CTRL CHK
MFG ENGR CHK
COMPANY NAME
Address
City
TITLE:
NIKE 2(L)
MAIN / Chorus2
Size A3
Changed by jachoi10
Date Changed Tuesday, December 16, 2003
Time Changed 4:02:15 pm
QA CHK
REV v0.3
Drawing Number v0.3B
Sheet 2 of 9

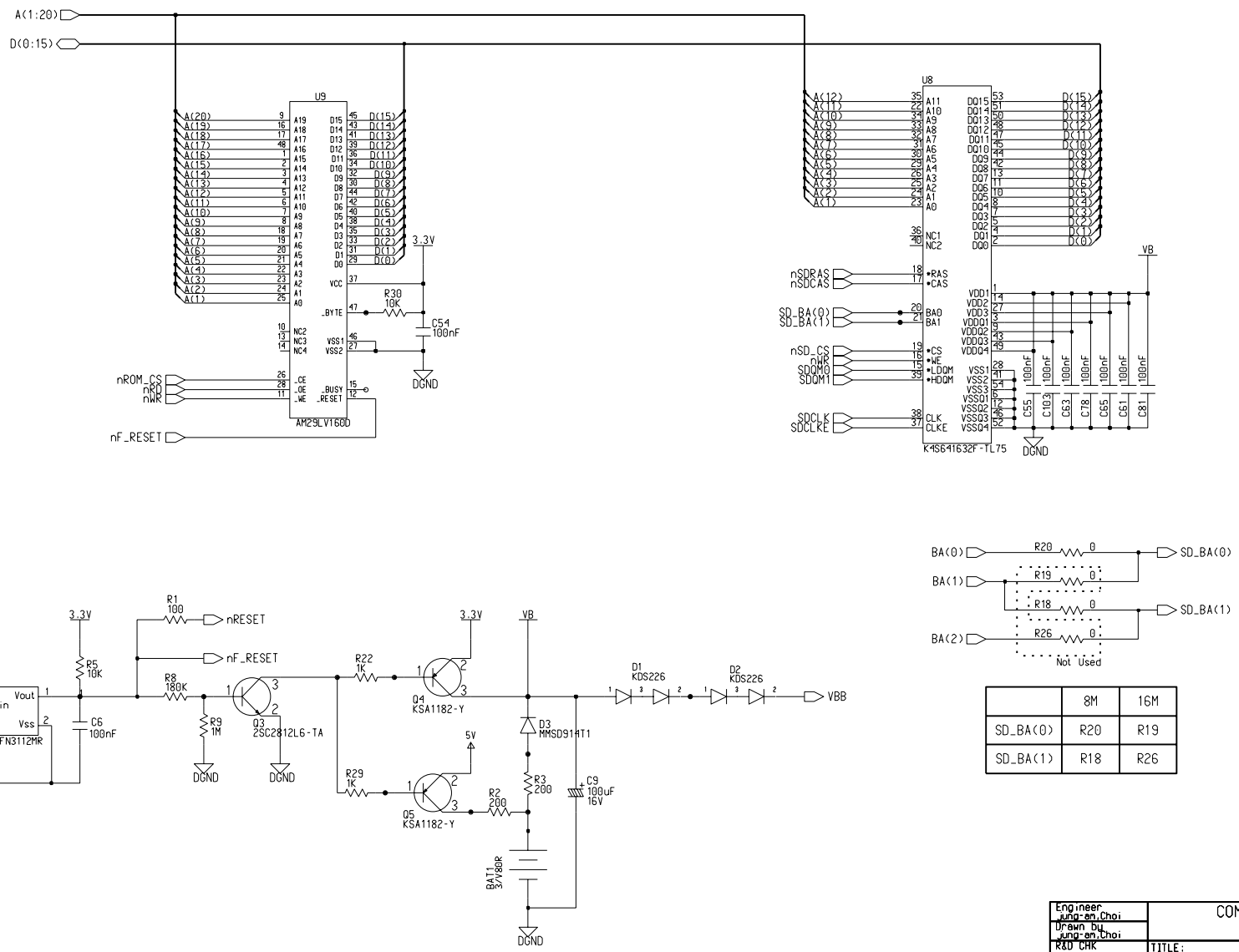

	8M	16M
SD_BA(0)	R20	R19
SD_BA(1)	R18	R26

Engineer	jung-am,Choi
Drawn by	jung-am,Choi
R&D CHK	
DOC CTRL CHK	
MFG ENGR CHK	

COMPANY NAME
Address
City

TITLE: NIKE 2(L)
MAIN / RESET&ROM&RAM

Size A3

Changed by	Date Changed	Time Changed	QA CHK	REV	Drawing Number	Sheet
jachoi10	Tuesday, December 16, 2003	4:02:45 pm		v0.3	v0.3B	Sheet 3 of 9

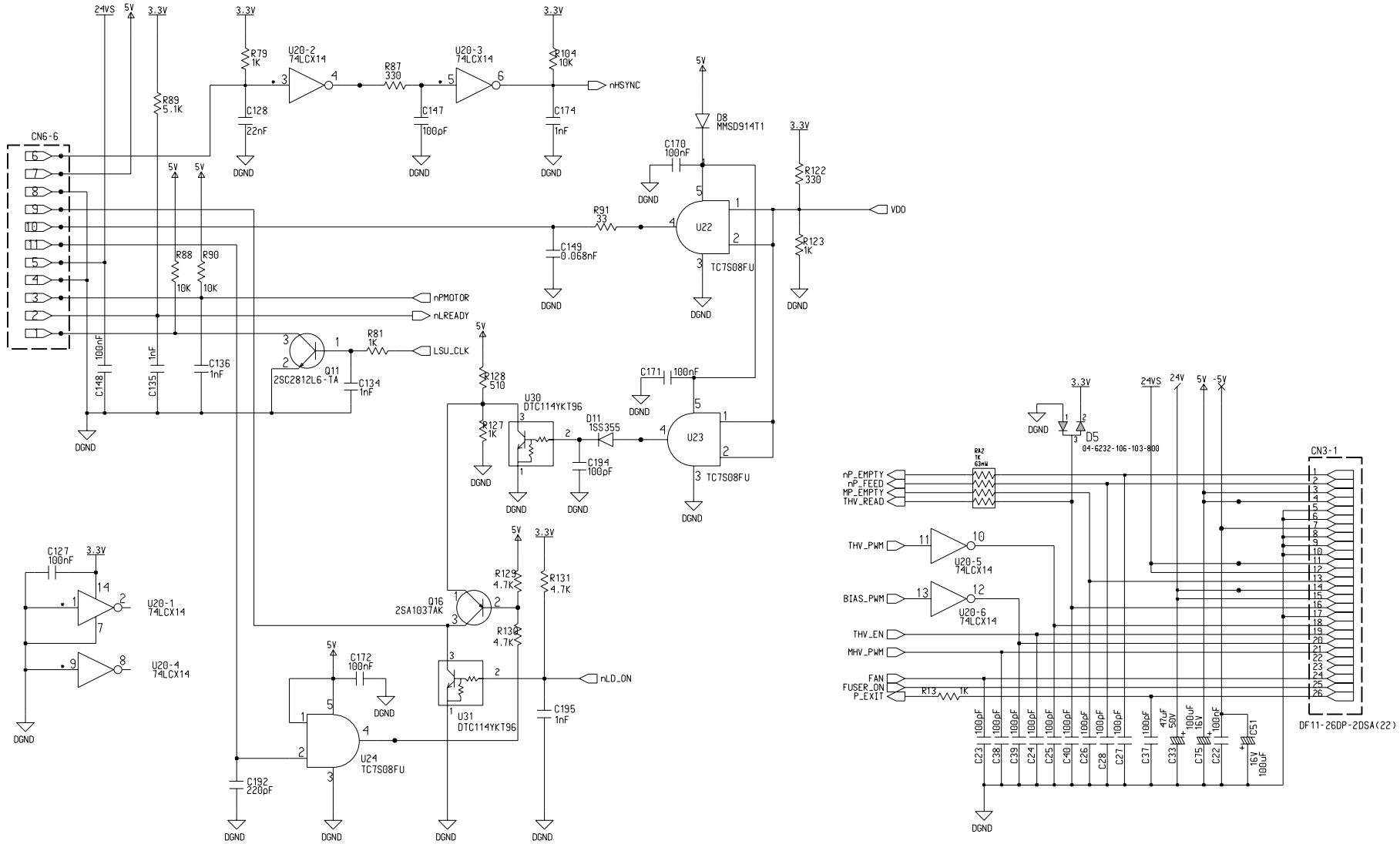

Engineer	jung-am,Choi
Drawn by	jung-am,Choi
R&D CHK	
DOC CTRL CHK	
MFG ENGR CHK	

COMPANY NAME
Address
City

TITLE: NIKE 2(L)
MAIN / LSU&PWRCONN

Size A3

Changed by	Date Changed	Time Changed	QA CHK	REV	Drawing Number	Sheet
jachoi10	Tuesday, December 16, 2003	4:03:06 pm		v0.3	v0.38	4 of 9

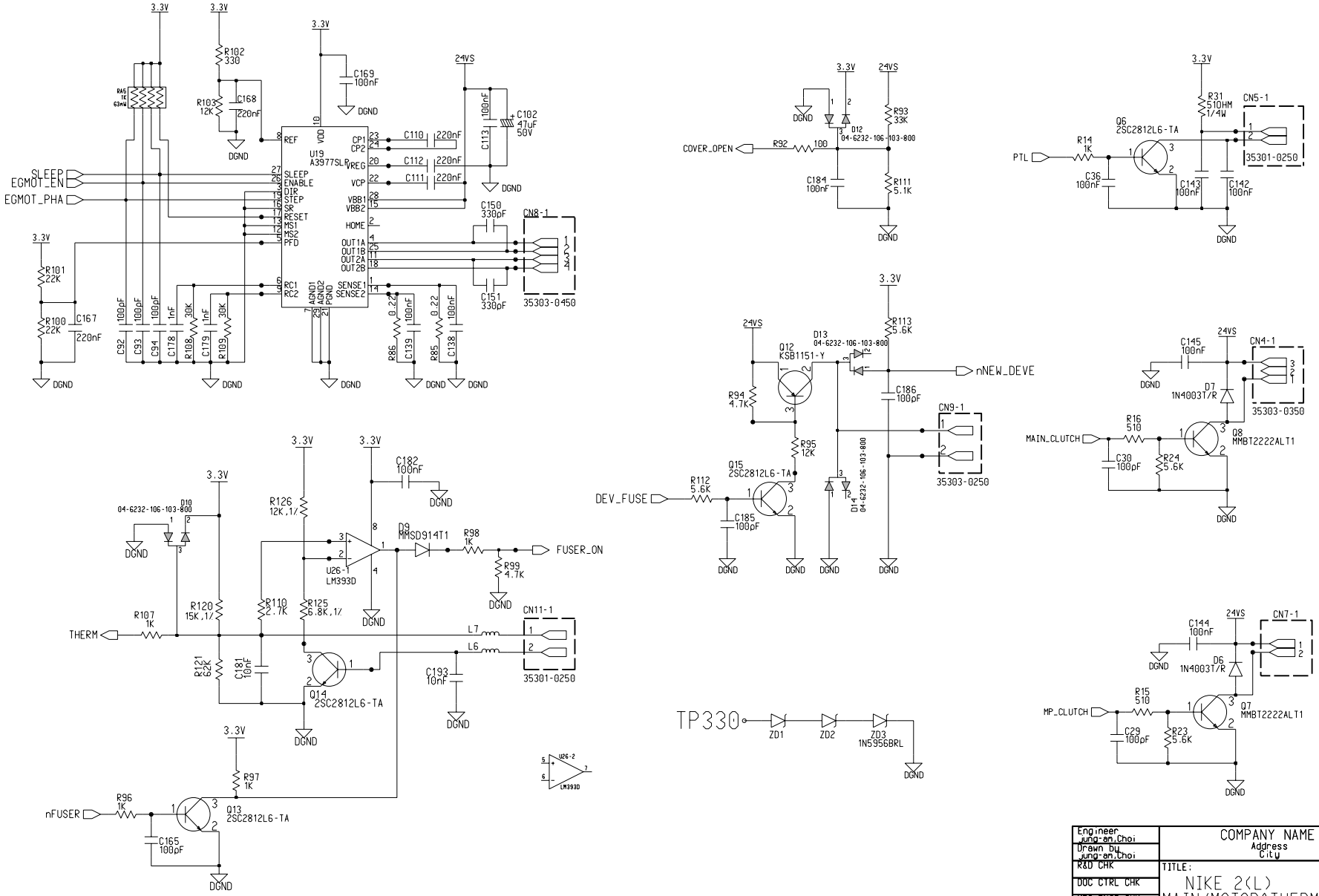

Engineer	Jung-am,Choi
Drawn by	Jung-am,Choi
R&D CHK	
DOC CTRL CHK	
MFG ENGR CHK	
QA CHK	

COMPANY NAME
Address
City

TITLE: NIKE 2(L)
MAIN/MOTOR&THERM&ENG

Size A3

Changed by	Date Changed	Time Changed	REV	Drawing Number	Sheet
jachoi10	Tuesday, December 16, 2003	4:03:23 pm	v0.3	v0.3B	Sheet 5 of 9

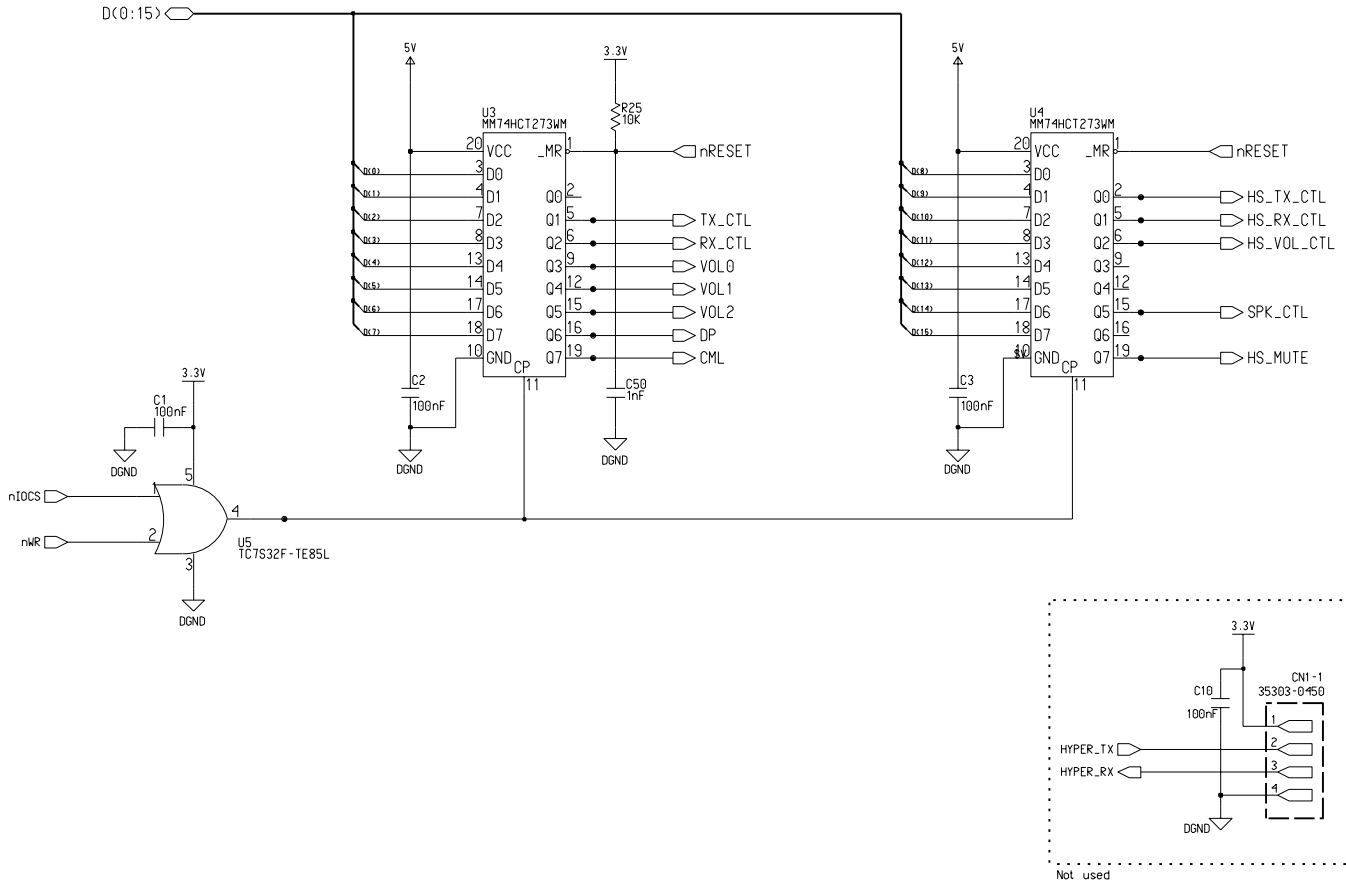

Engineer jung-am,Choi	COMPANY NAME				
Drawn by jung-am,Choi	Address				
R&D CHK	City				
DOC CTRL CHK	TITLE: NIKE 2(L) MAIN / EXT GPIO				Size A3
MFG ENGR CHK					
Changed by jachoi10	Date Changed Tuesday, December 16, 2003	Time Changed 3:38:35 pm	QA CHK	REV v0.3	Drawing Number v0.3B	Sheet 6 of 9

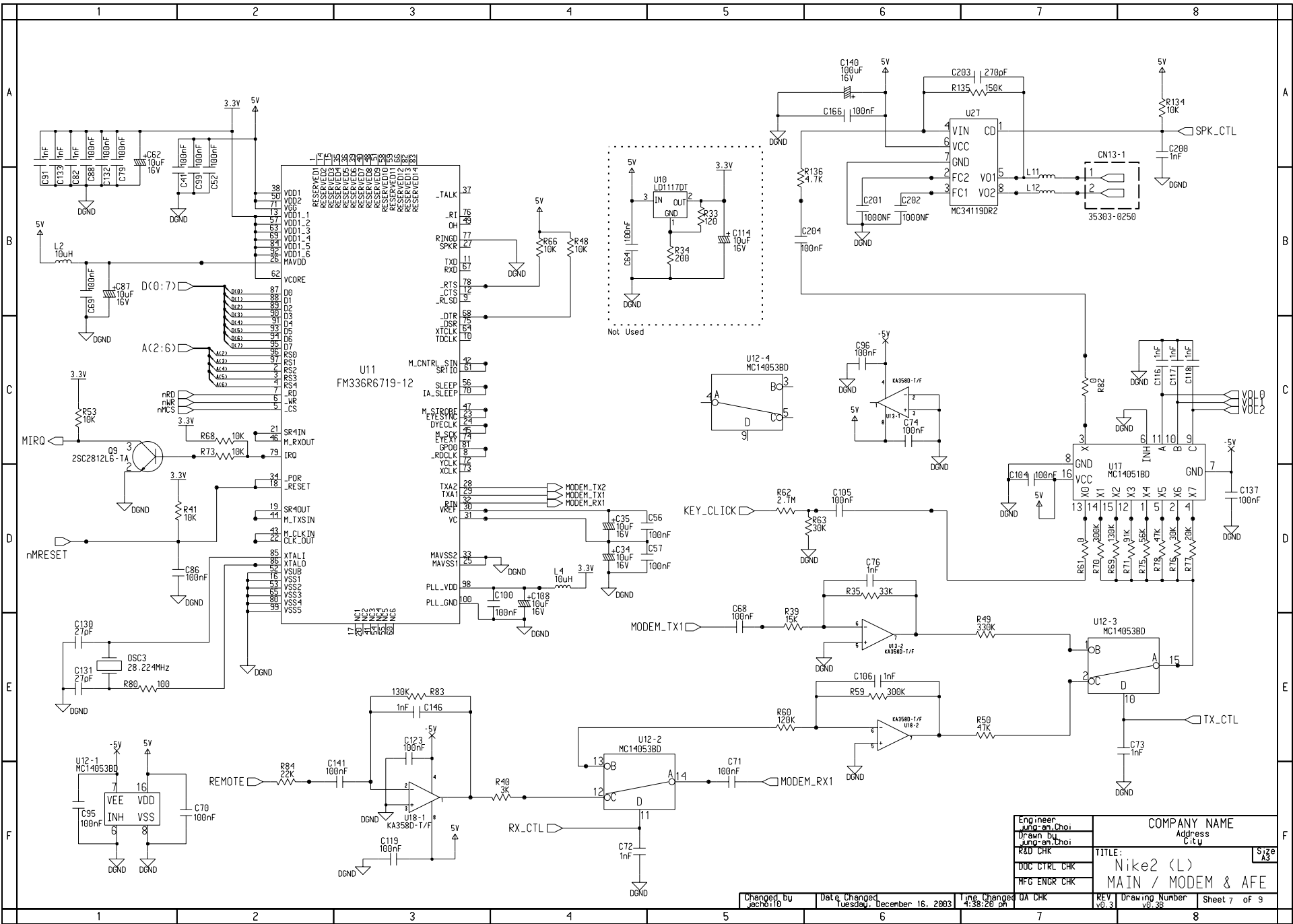

Engineer	Jung-am,Choi
Drawn by	Jung-am,Choi
R&D CHK	
DOC CTRL CHK	
MFG ENGR CHK	

COMPANY NAME
Address
City

TITLE: Nike2 (L)
MAIN / MODEM & AFE

Size A3

Changed by	Date Changed	Time Changed	QA CHK	REV	Drawing Number	Sheet
jachoi10	Tuesday, December 16, 2003	4:38:20 pm		v0.3	v0.38	7 of 9

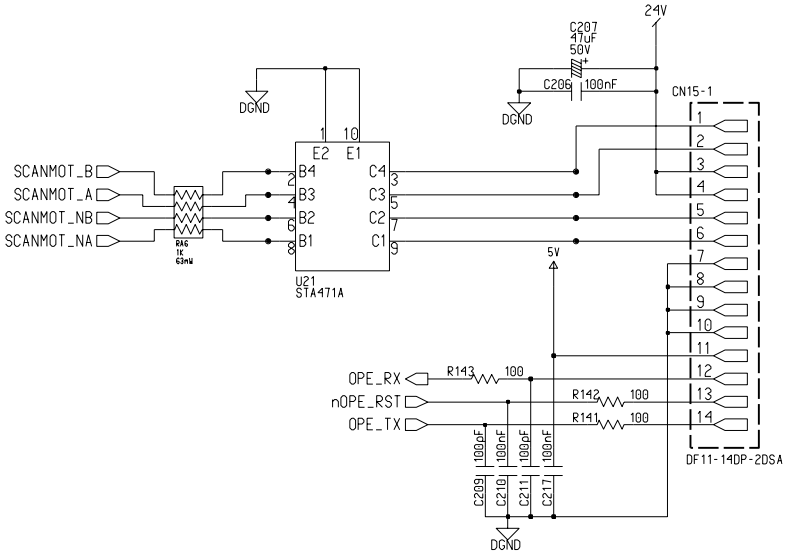

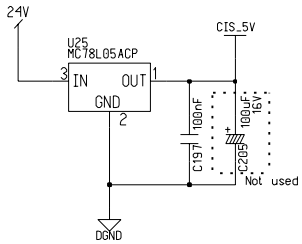

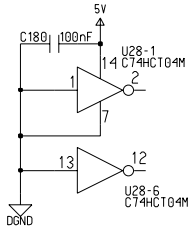

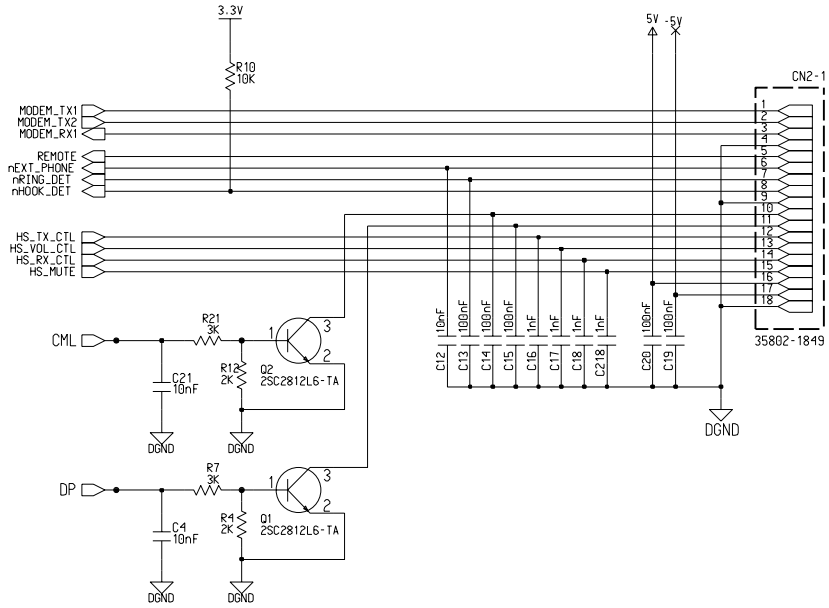

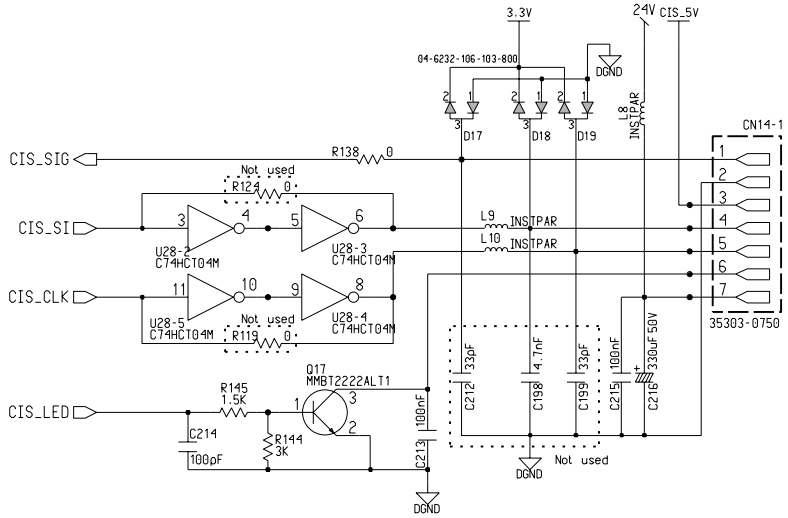

Engineer	jung-am.Choi
Drawn by	jung-am.Choi
R&D CHK	
DOC CTRL CHK	
MFG ENGR CHK	
QA CHK	

COMPANY NAME
Address
City

TITLE: NIKE 2(L)
MAIN / SCAN & LIU

Size A3

Changed by	Date Changed	Time Changed	REV	Drawing Number	Sheet
jachoi10	Tuesday, December 16, 2003	4:44:05 pm	v0.3	v0.3B	8 of 9

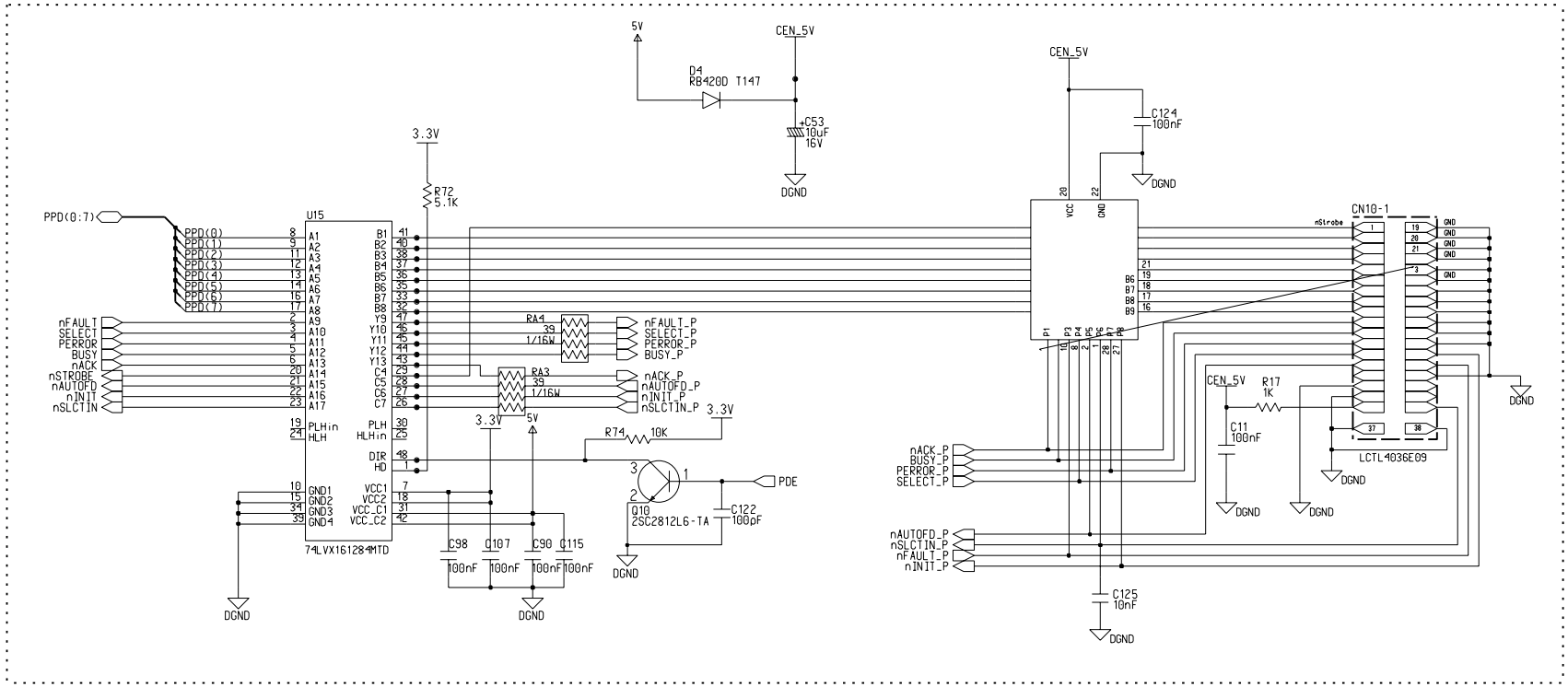

SF-565P only

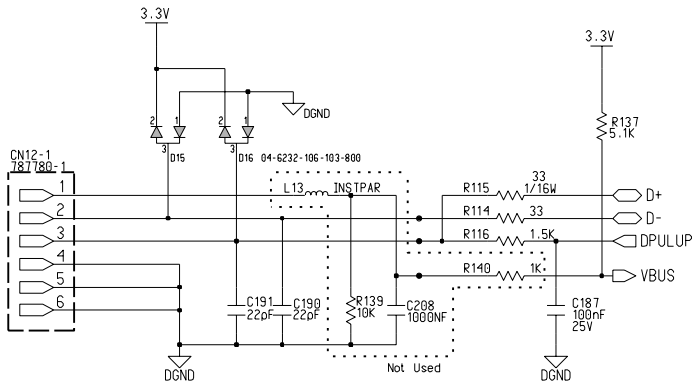

Changed by jachoi10	Date Changed Tuesday, December 16, 2003	Time Changed 3:34:12 pm	QA CHK	REV v0.3	Drawing Number v0.3B	Sheet 9 of 9

Engineer jachoi10	COMPANY NAME
Drawn by jachoi10	Address City
R&D CHK	TITLE: NIKE 2(L) MAIN / PC INTERFACE
DOC CTRL CHK	Size A3
MFG ENGR CHK	

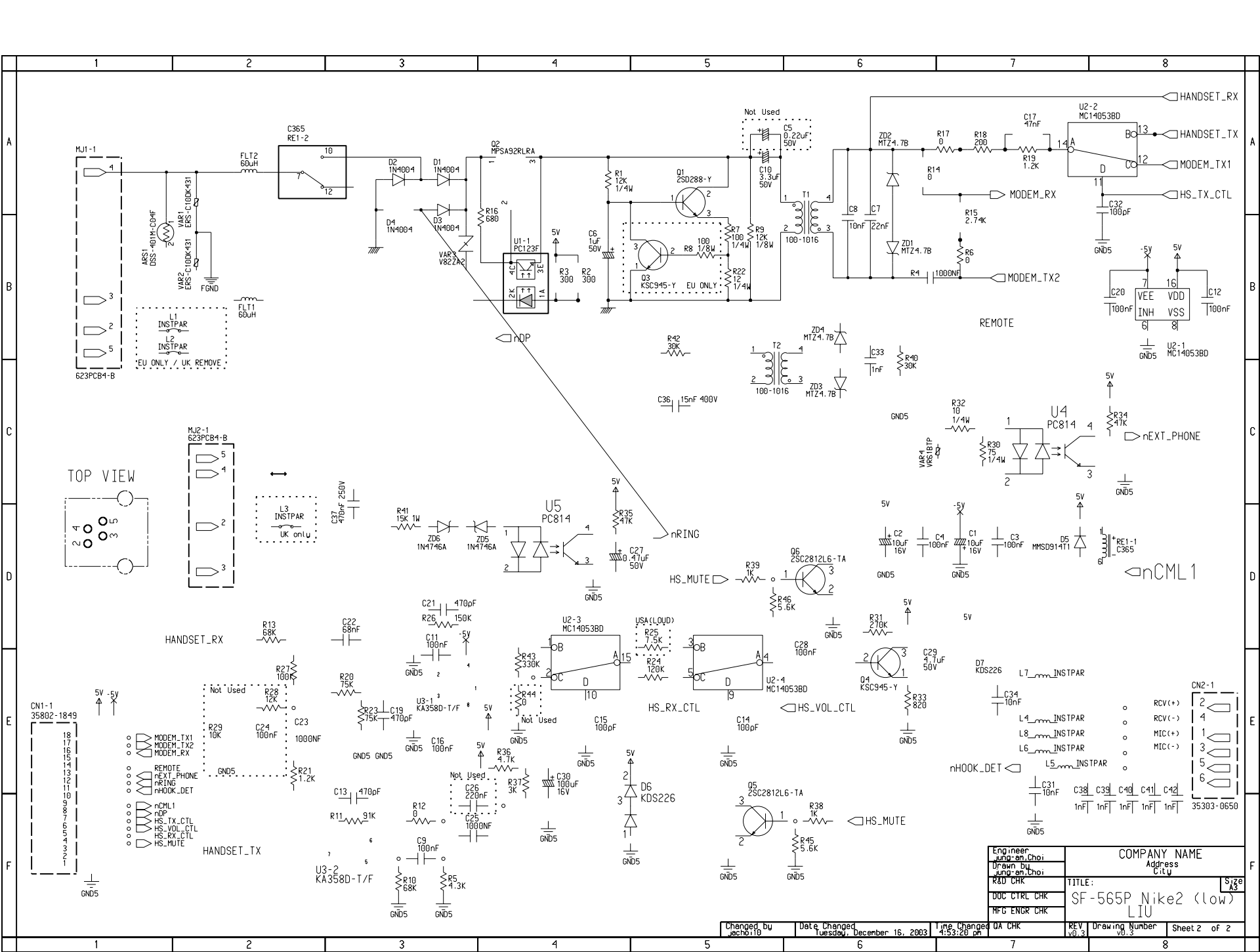
HANDSET_RX
HANDSET_TX
MODEM_TX1
MODEM_RX
HS_TX_CTL
MODEM_TX2
REMOTE
nEXT_PHONE
nRING
nDP
nCML1
HS_MUTE
HS_RX_CTL
HS_VOL_CTL
nHOOK_DET
HANDSET_TX
TOP VIEW
623PCB4-B
U2-2 MC14053BD
U2-1 MC14053BD
U3-1 KA358D-T/F
U3-2 KA358D-T/F
U2-3 MC14053BD
U2-4 MC14053BD
U4 PC814
U5 PC814
U1-1 PC123F
Q1 2SD288-Y
Q2 MPSA92RLRA
Q3 KSC945-Y EU ONLY
Q4 KSC945-Y
Q5 2SC2812L6-TA
Q6 2SC2812L6-TA
T1 100-1016
T2 100-1016
D1 1N4004
D2 1N4004
D3 1N4004
D4 1N4004
D5 MMSD914T1
D6 KDS226
D7 KDS226
ZD1 MTZ4.7B
ZD2 MTZ4.7B
ZD3 MTZ4.7B
ZD4 MTZ4.7B
ZD5 1N4746A
ZD6 1N4746A
VAR1 ERS-C10DK431
VAR2 ERS-C10DK431
VAR3 V82ZA2
VAR4 VR61B1P
ARS1 DSS-401M-C04F
FLT1 60uH
FLT2 60uH
L1 INSTPAR
L2 INSTPAR
L3 INSTPAR
L4 INSTPAR
L5 INSTPAR
L6 INSTPAR
L7 INSTPAR
L8 INSTPAR
C365 RE1-2
RE1-1 C365
CN1-1 35802-1849
CN2-1 35303-0650
MJ1-1
MJ2-1 623PCB4-B
Not Used
USA(LOUD)
RCV(+)
RCV(-)
MIC(+)
MIC(-)
GND5
5V
-5V
Engineer jung-am,Choi
Drawn by jung-am,Choi
R&D CHK
DOC CTRL CHK
MFG ENGR CHK
COMPANY NAME
Address
City
TITLE: SF-565P Nike2 (low) LIU
Size A3
Changed by jachoi10
Date Changed Tuesday, December 16, 2003
Time Changed 4:53:20 pm
QA CHK
REV v0.3
Drawing Number v0.3
Sheet 2 of 2

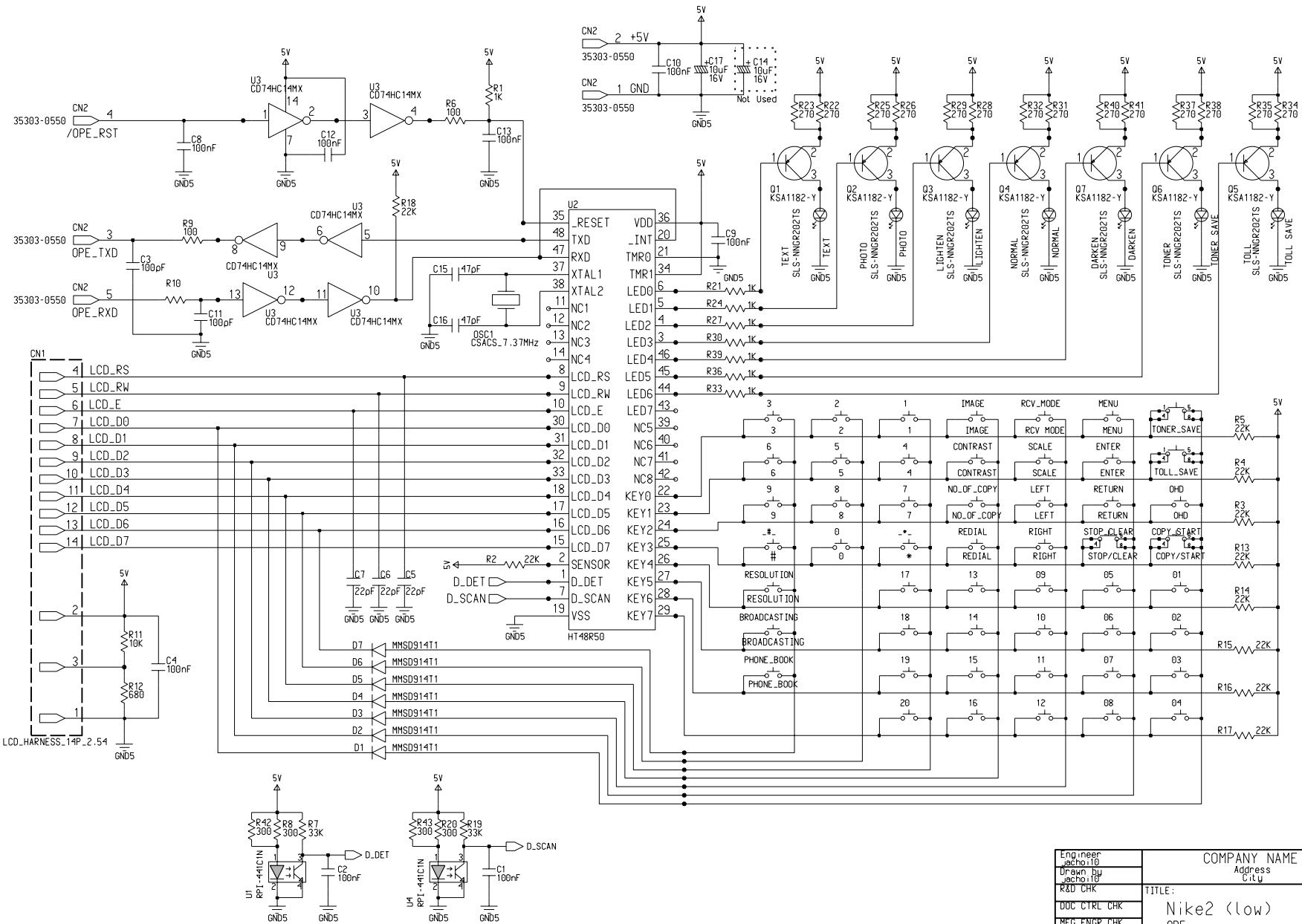
CN2
35303-0550
/OPE_RST
OPE_TXD
OPE_RXD
U3
CD74HC14MX
R1 1K
R6 100
R9 100
R10
R18 22K
C3 100pF
C8 100nF
C11 100nF
C12 100nF
C13 100nF
5V
GND5
CN2 2 +5V
CN2 1 GND
C10 100nF
C17 10uF 16V
C14 10uF 16V
Not Used
U2
HT48R50
_RESET
TXD
RXD
XTAL1
XTAL2
NC1
NC2
NC3
NC4
VDD
_INT
TMR0
TMR1
LED0
LED1
LED2
LED3
LED4
LED5
LED6
LED7
NC5
NC6
NC7
NC8
KEY0
KEY1
KEY2
KEY3
KEY4
KEY5
KEY6
KEY7
SENSOR
D_DET
D_SCAN
VSS
C9 100nF
C15 47pF
C16 47pF
OSC1
CSACS_7.37MHz
R21 1K
R24 1K
R27 1K
R30 1K
R39 1K
R36 1K
R33 1K
R2 22K
C7 22pF
C6 22pF
C5 22pF
CN1
LCD_RS
LCD_RW
LCD_E
LCD_D0
LCD_D1
LCD_D2
LCD_D3
LCD_D4
LCD_D5
LCD_D6
LCD_D7
LCD_HARNESS_14P_2.54
R11 10K
R12 680
C4 100nF
D7 MMSD914T1
D6 MMSD914T1
D5 MMSD914T1
D4 MMSD914T1
D3 MMSD914T1
D2 MMSD914T1
D1 MMSD914T1
Q1 KSA1182-Y
Q2 KSA1182-Y
Q3 KSA1182-Y
Q4 KSA1182-Y
Q7 KSA1182-Y
Q6 KSA1182-Y
Q5 KSA1182-Y
R23 270
R22 270
R25 270
R26 270
R29 270
R28 270
R32 270
R31 270
R40 270
R41 270
R37 270
R38 270
R35 270
R34 270
TEXT SLS-NNGR202TS
PHOTO SLS-NNGR202TS
LIGHTEN SLS-NNGR202TS
NORMAL SLS-NNGR202TS
DARKEN SLS-NNGR202TS
TONER SLS-NNGR202TS
TOLL SLS-NNGR202TS
IMAGE
RCV_MODE
MENU
CONTRAST
SCALE
ENTER
NO_OF_COPY
LEFT
RETURN
OHD
REDIAL
RIGHT
STOP_CLEAR
COPY_START
RESOLUTION
BROADCASTING
PHONE_BOOK
TONER_SAVE
TOLL_SAVE
R5 22K
R4 22K
R3 22K
R13 22K
R14 22K
R15 22K
R16 22K
R17 22K
U1
RPI-441CIN
U4
RPI-441CIN
R42 300
R8 300
R7 33K
R43 300
R20 300
R19 33K
C2 100nF
C1 100nF
D_DET
D_SCAN
Engineer jachoi10
Drawn by jachoi10
R&D CHK
DOC CTRL CHK
MFG ENGR CHK
COMPANY NAME
Address
City
TITLE:
Nike2 (low)
OPE
Size A3
Changed by jachoi10
Date Changed Thursday, October 9, 2003
Time Changed 5:41:58 pm
QA CHK
REV v0.2
Drawing Number v0.2
Sheet 1 of 1

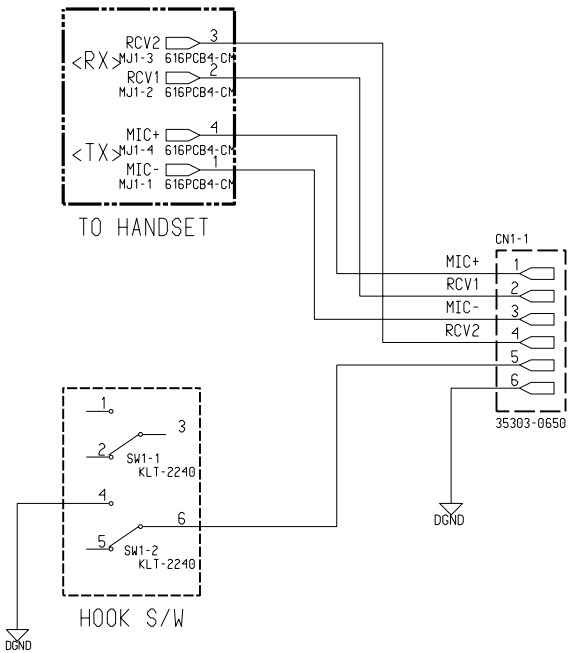

Normal : 4 - 6 (OFF_HOOK)
Push : 5 - 6 (ON_HOOK)

Changed by jachoi10	Date Changed Monday, October 6, 2003	Time Changed 1:38:26 pm	QA CHK	REV v0.2	Drawing Number	Sheet 1 of 1	

Engineer jachoi10	COMPANY NAME
Drawn by jachoi10	Address
R&D CHK	City
DOC CTRL CHK	TITLE: NIKE2(L) HOOK / HANDSET M/J
MFG ENGR CHK	Size A3

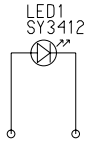

Changed by jachoi10	Date Changed Monday, January 26, 2004	Time 5:01:54 pm	QA CHK	REV	Drawing Number

Engineer jachoi10	COMPANY NAME Address City	
Drawn by jachoi10		
R&D CHK	TITLE	Size: A4
DOC CTRL CHK	PTL_V1.1	
MFG CTRL CHK		

Sheet of

NIKE2L - V1

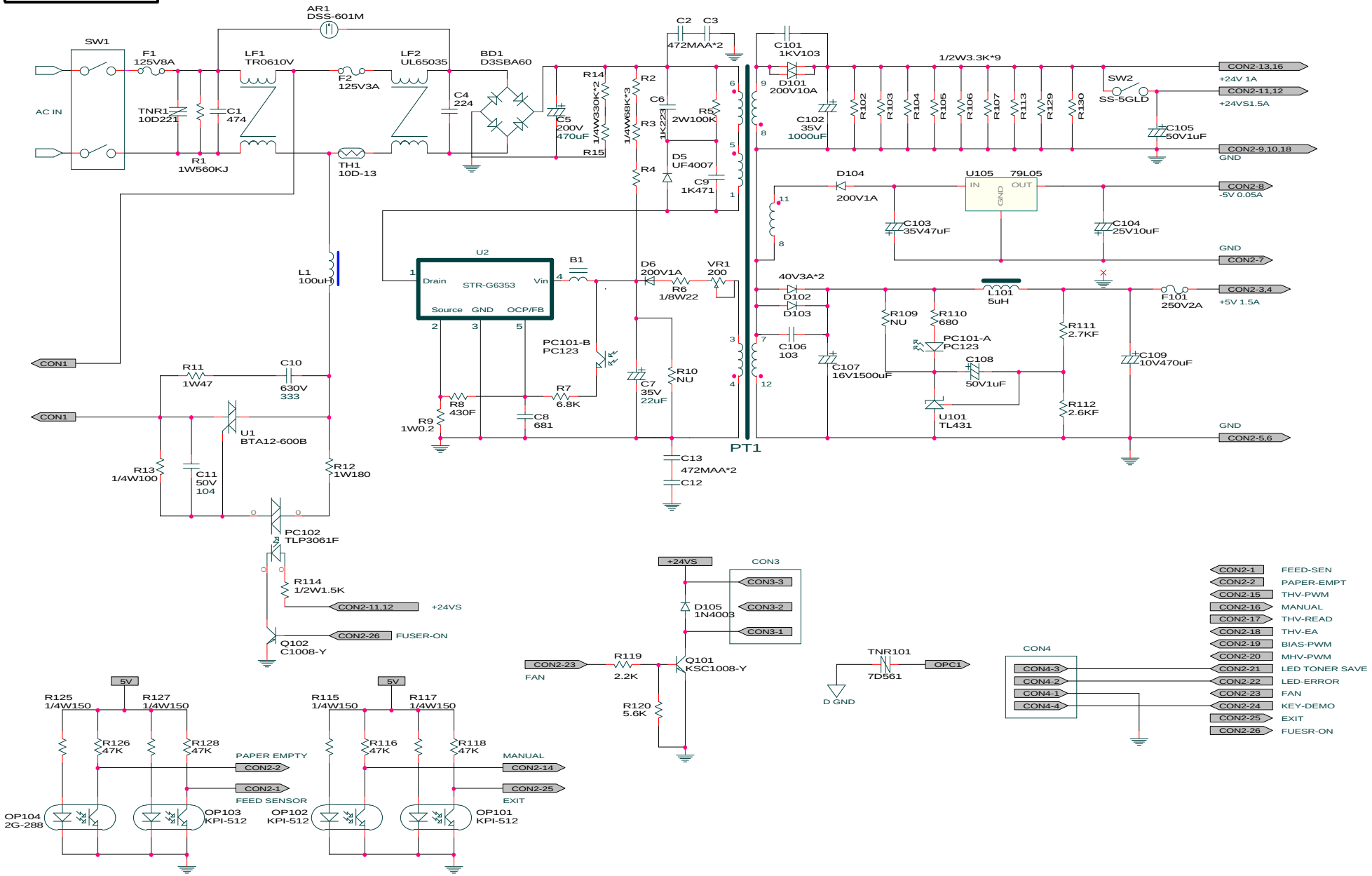
AR1
DSS-601M
SW1
AC IN
F1
125V8A
TNR1
10D221
C1
474
R1
1W560KJ
LF1
TR0610V
F2
125V3A
TH1
10D-13
LF2
UL65035
C4
224
BD1
D3SBA60
C5
200V
470uF
R14
1/4W330K*2
R15
R2
1/4W68K*3
R3
C6
1K223
R4
R5
2W100K
D5
UF4007
C9
1K471
C2
C3
472MAA*2
C101
1KV103
D101
200V10A
1/2W3.3K*9
R102
R103
R104
R105
R106
R107
R113
R129
R130
C102
35V
1000uF
SW2
SS-5GLD
C105
50V1uF
CON2-13,16
+24V 1A
CON2-11,12
+24VS1.5A
CON2-9,10,18
GND
D104
200V1A
U105
79L05
IN
OUT
GND
CON2-8
-5V 0.05A
C103
35V47uF
C104
25V10uF
GND
CON2-7
L1
100uH
U2
Drain
STR-G6353
Vin
Source
GND
OCP/FB
B1
D6
200V1A
R6
1/8W22
VR1
200
40V3A*2
D102
D103
L101
5uH
F101
250V2A
CON2-3,4
+5V 1.5A
R109
NU
R110
680
PC101-A
PC123
R111
2.7KF
C106
103
C107
16V1500uF
C108
50V1uF
C109
10V470uF
U101
TL431
R112
2.6KF
GND
CON2-5,6
PC101-B
PC123
R10
NU
C7
35V
22uF
R7
6.8K
R8
430F
R9
1W0.2
C8
681
C13
472MAA*2
C12
PT1
CON1
R11
1W47
C10
630V
333
U1
BTA12-600B
R13
1/4W100
C11
50V
104
R12
1W180
PC102
TLP3061F
R114
1/2W1.5K
CON2-11,12
+24VS
Q102
C1008-Y
CON2-26
FUSER-ON
+24VS
CON3
CON3-3
CON3-2
CON3-1
D105
1N4003
CON2-23
FAN
R119
2.2K
Q101
KSC1008-Y
R120
5.6K
TNR101
7D561
OPC1
D GND
CON4
CON4-3
CON4-2
CON4-1
CON4-4
CON2-1
FEED-SEN
CON2-2
PAPER-EMPT
CON2-15
THV-PWM
CON2-16
MANUAL
CON2-17
THV-READ
CON2-18
THV-EA
CON2-19
BIAS-PWM
CON2-20
MHV-PWM
CON2-21
LED TONER SAVE
CON2-22
LED-ERROR
CON2-23
FAN
CON2-24
KEY-DEMO
CON2-25
EXIT
CON2-26
FUESR-ON
5V
R125
1/4W150
R127
1/4W150
R126
47K
R128
47K
PAPER EMPTY
CON2-2
CON2-1
FEED SENSOR
OP104
2G-288
OP103
KPI-512
5V
R115
1/4W150
R117
1/4W150
R116
47K
R118
47K
MANUAL
CON2-14
CON2-25
EXIT
OP102
KPI-512
OP101
KPI-512

NIKE2L - V2C

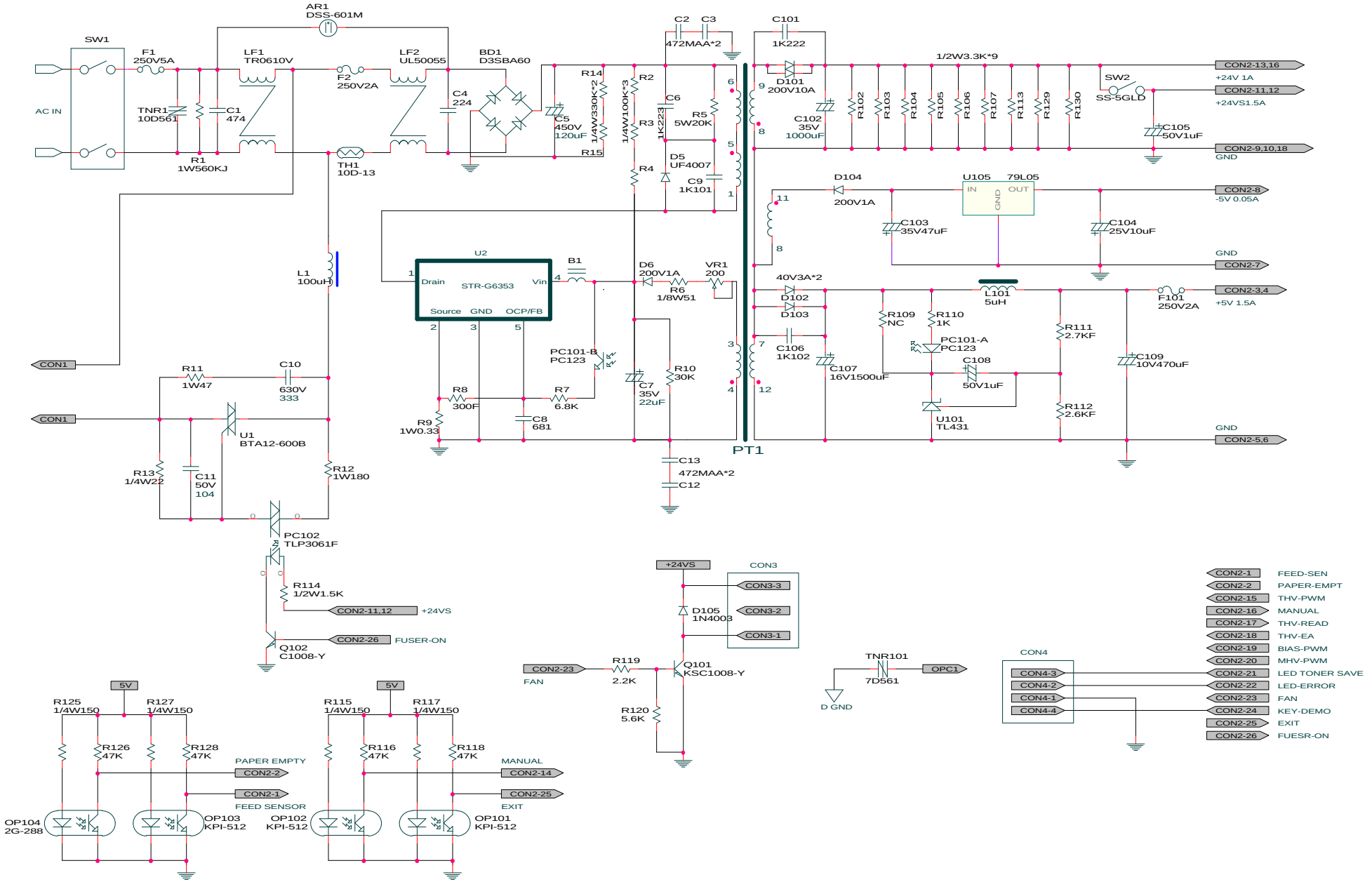
AR1
DSS-601M
SW1
AC IN
F1
250V5A
LF1
TR0610V
F2
250V2A
LF2
UL50055
BD1
D3SBA60
C4
224
TNR1
10D561
C1
474
R1
1W560KJ
TH1
10D-13
C5
450V
120uF
R14
1/4W330K*2
R15
C2
C3
472MAA*2
R2
1/4W100K*3
R3
1K223
C6
R5
5W20K
R4
D5
UF4007
C9
1K101
C101
1K222
D101
200V10A
C102
35V
1000uF
1/2W3.3K*9
R102
R103
R104
R105
R106
R107
R113
R129
R130
SW2
SS-5GLD
C105
50V1uF
CON2-13,16
+24V 1A
CON2-11,12
+24VS1.5A
CON2-9,10,18
GND
D104
200V1A
U105
79L05
IN
GND
OUT
CON2-8
-5V 0.05A
C103
35V47uF
C104
25V10uF
GND
CON2-7
L1
100uH
U2
Drain
STR-G6353
Vin
Source
GND
OCP/FB
B1
D6
200V1A
R6
1/8W51
VR1
200
40V3A*2
D102
D103
L101
5uH
F101
250V2A
CON2-3,4
+5V 1.5A
R109
NC
R110
1K
PC101-A
PC123
R111
2.7KF
C106
1K102
C107
16V1500uF
C108
50V1uF
C109
10V470uF
U101
TL431
R112
2.6KF
GND
CON2-5,6
PC101-B
PC123
R10
30K
C7
35V
22uF
R8
300F
R7
6.8K
C8
681
R9
1W0.33
PT1
C13
472MAA*2
C12
CON1
R11
1W47
C10
630V
333
U1
BTA12-600B
R13
1/4W22
C11
50V
104
R12
1W180
PC102
TLP3061F
R114
1/2W1.5K
CON2-11,12
+24VS
CON2-26
FUSER-ON
Q102
C1008-Y
+24VS
CON3
CON3-3
CON3-2
CON3-1
D105
1N4003
CON2-23
FAN
R119
2.2K
Q101
KSC1008-Y
R120
5.6K
TNR101
7D561
OPC1
D GND
CON4
CON4-3
CON4-2
CON4-1
CON4-4
CON2-1 FEED-SEN
CON2-2 PAPER-EMPT
CON2-15 THV-PWM
CON2-16 MANUAL
CON2-17 THV-READ
CON2-18 THV-EA
CON2-19 BIAS-PWM
CON2-20 MHV-PWM
CON2-21 LED TONER SAVE
CON2-22 LED-ERROR
CON2-23 FAN
CON2-24 KEY-DEMO
CON2-25 EXIT
CON2-26 FUESR-ON
5V
R125
1/4W150
R127
1/4W150
R126
47K
R128
47K
PAPER EMPTY
CON2-2
CON2-1
FEED SENSOR
OP104
2G-288
OP103
KPI-512
5V
R115
1/4W150
R117
1/4W150
R116
47K
R118
47K
MANUAL
CON2-14
CON2-25
EXIT
OP102
KPI-512
OP101
KPI-512

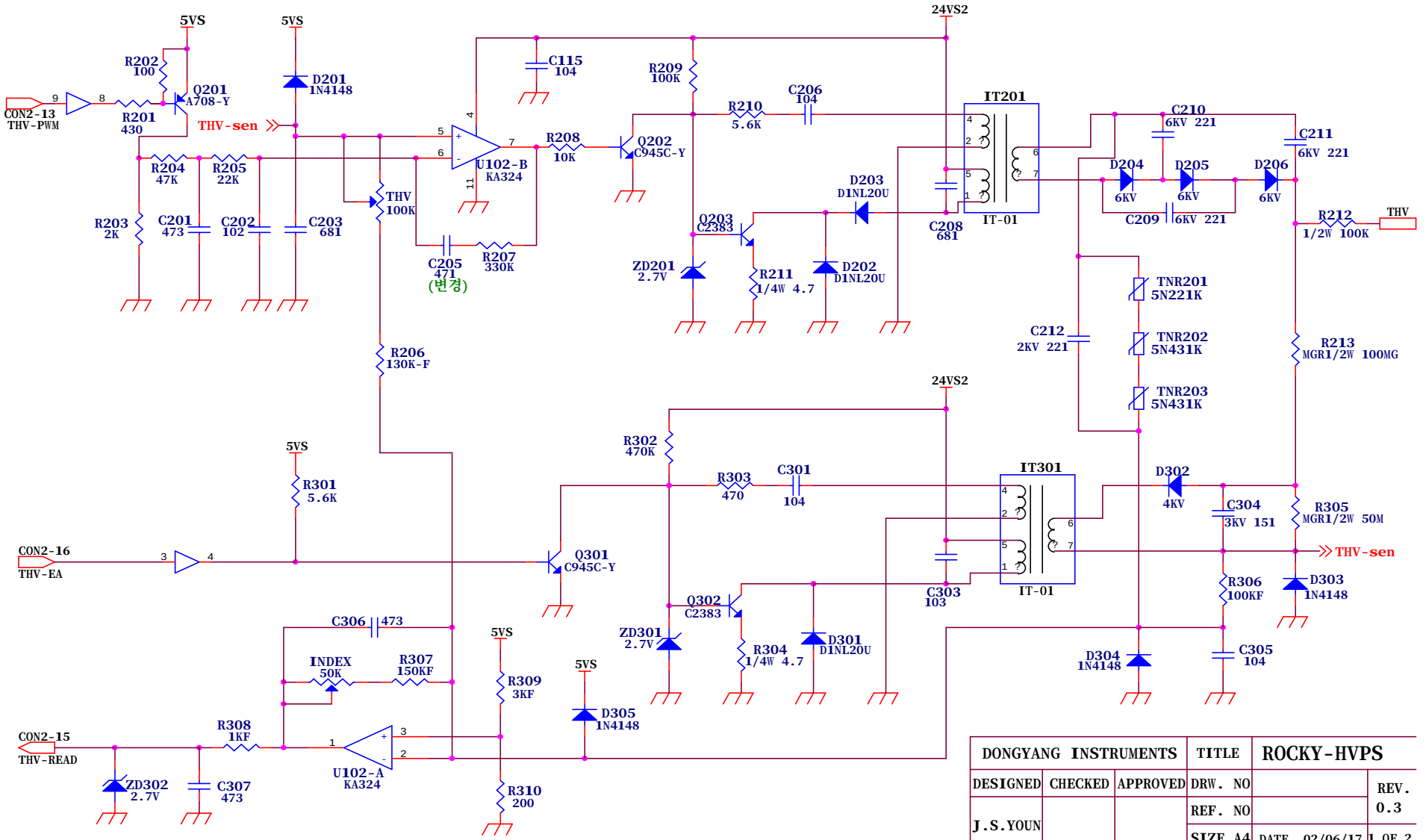

DONGYANG INSTRUMENTS			TITLE	ROCKY-HVPS
DESIGNED	CHECKED	APPROVED	DRW. NO	REV. 0.3
J.S.YOUN			REF. NO	
			SIZE A4	DATE 02/06/17 1 OF 2

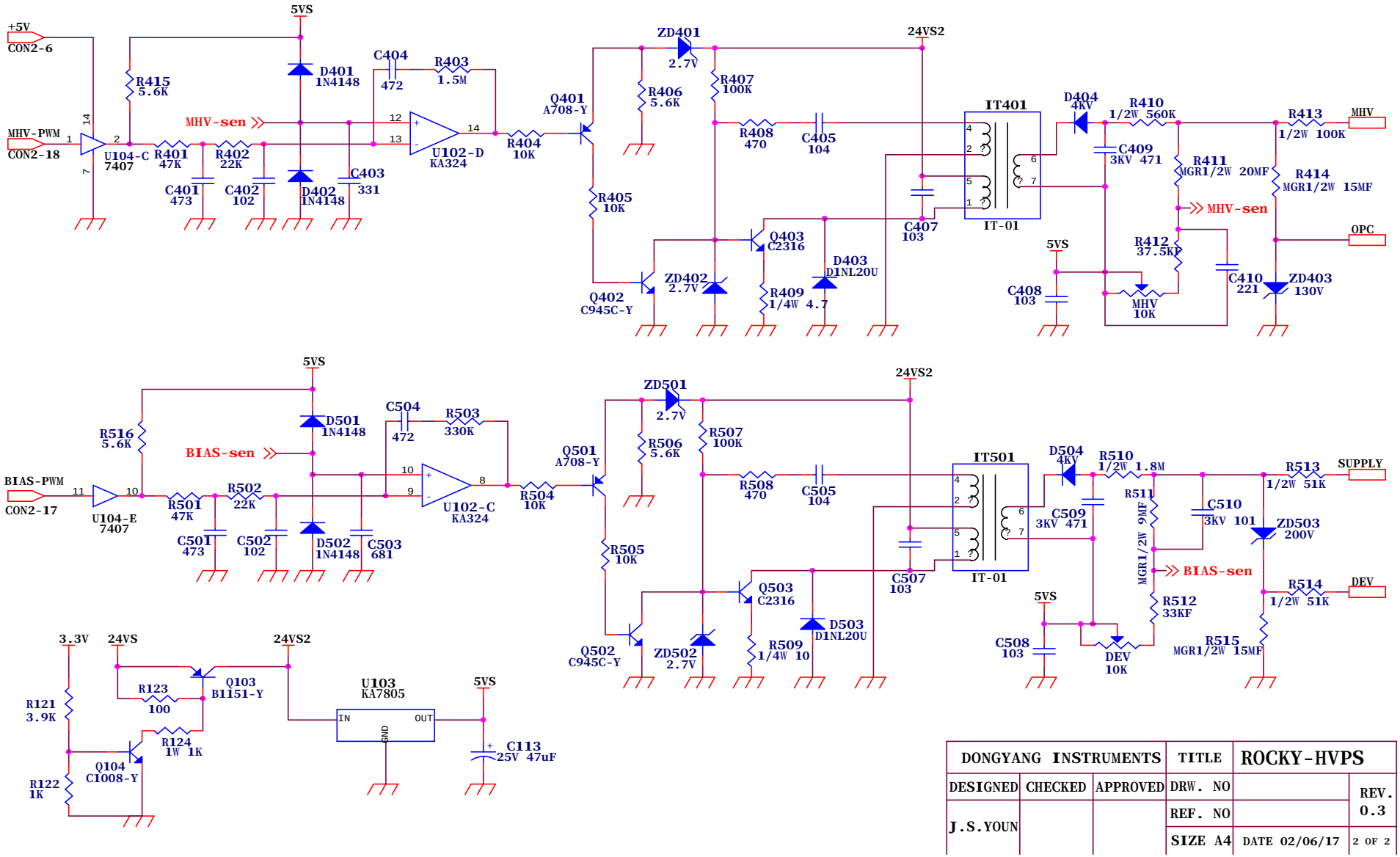

DONGYANG INSTRUMENTS			TITLE	ROCKY-HVPS	
DESIGNED	CHECKED	APPROVED	DRW. NO		REV. 0.3
J.S.YOUN			REF. NO		
			SIZE A4	DATE 02/06/17	2 OF 2