Brother Color Laser MFC
SERVICE MANUAL

MODEL: DCP-9055CDN/9270CDN
MFC-9460CDN/9465CDN
MFC-9560CDW/9970CDW

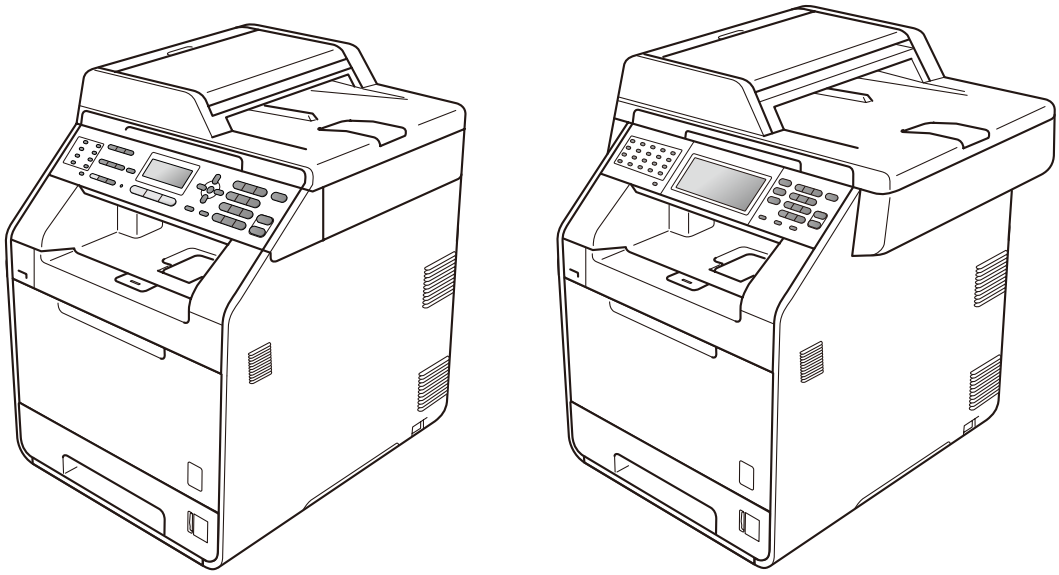

Read this manual thoroughly before maintenance work.
Keep this manual in a convenient place for quick and easy reference at all times.

August 2010
SM-FAX118
8CE301 (4)

TRADEMARKS

The Brother logo is a registered trademark of Brother Industries, Ltd.

Apple and Macintosh are trademarks of Apple Inc., registered in the United States and other countries.

PCL is either a trademark or a registered trademark of Hewlett-Packard Company in the United States and other countries.

Windows Vista is either a registered trademark or a trademark of Microsoft Corporation in the United States and/or other countries.

Microsoft, Windows, Windows Server and Internet Explorer are registered trademarks of Microsoft Corporation in the United States and/or other countries.

Linux is a registered trademark of Linus Torvalds in the United States and other countries.

PostScript and PostScript3 are either registered trademarks or trademarks of Adobe Systems Incorporated in the United States and/or other countries.

ENERGY STAR is a U.S. registered mark.

Citrix and MetaFrame are registered trademarks of Citrix Systems, Inc. in the United States.

Intel, Intel Xeon and Pentium are trademarks or registered trademarks of Intel Corporation.

AMD, AMD Athlon, AMD Opteron and combinations thereof, are trademarks of Advanced Micro Devices, Inc.

PictBridge is a trademark.

Each company whose software title is mentioned in this manual has a Software License Agreement specific to its proprietary programs.

All other trademarks are the property of their respective owners.

The function comparative table for models as described in this Service manual are shown blow.

Model	DCP-9055CDN	DCP-9270CDN	MFC-9460CDN	MFC-9465CDN	MFC-9560CDW	MFC-9970CDW
Duplex Scanning	---	√	---	√	√	√
LAN	Wired	Wired	Wired	Wired	Wired/ Wireless	Wired/ Wireless
Touch Panel	---	√	---	---	---	√
Scanning Size	A4	Legal	A4	A4	A4	Legal
USB host	---	√	√	√	√	√

CONTENTS

CHAPTER 3 DISASSEMBLY AND ASSEMBLY

CHAPTER 4 ADJUSTMENTS AND UPDATING OF SETTINGS, REQUIRED AFTER PARTS REPLACEMENT

CHAPTER 5 SERVICE FUNCTIONS

CHAPTER 6 CIRCUIT DIAGRAMS & WIRING DIAGRAM

CHAPTER 7 PERIODICAL MAINTENANCE

APPENDIX 1. SERIAL NUMBERING SYSTEM

APPENDIX 2. DELETION OF USER SETTING INFORMATION, ETC.

APPENDIX 3. INSTALLING THE MAINTENANCE DRIVER

REGULATION

■ Approval Information (MFC only)

THIS EQUIPMENT IS DESIGNED TO WORK WITH A TWO WIRE ANALOGUE PSTN LINE FITTED WITH THE APPROPRIATE CONNECTOR.

Brother advises that this product may not function correctly in a country other than where it was originally purchased, and does not offer any warranty in the event that this product is used on public telecommunication lines in another country.

■ Declaration of Conformity (Europe only) (MFC-9460CDN/MFC-9465CDN only)

We, Brother Industries, Ltd.

15-1, Naeshiro-cho, Mizuho-ku, Nagoya 467-8561 Japan

declare that this product is in compliance with the essential requirements of Directives 1999/5/EC and 2005/32/EC.

The Declaration of Conformity (DoC) is on our Website.

Please go to http://solutions.brother.com/.

- choose region (eg. Europe)
- choose country
- choose your model
- choose “Manuals”
- choose Declaration of Conformity (Select Language when required.)

■ Declaration of Conformity (Europe only) (DCP-9055CDN only)

We, Brother Industries, Ltd.

15-1, Naeshiro-cho, Mizuho-ku, Nagoya 467-8561 Japan

declare that this product is in compliance with the essential requirements of Directives 2004/108/EC, 2006/95/EC and 2005/32/EC.

The Declaration of Conformity (DoC) is on our Website.

Please go to http://solutions.brother.com/.

- choose region (eg. Europe)
- choose country
- choose your model
- choose “Manuals”
- choose Declaration of Conformity (Select Language when required.)

■ IEC60825-1:2007 Specification (For 220-240V models only)

This product is a Class 1 laser product as defined in IEC60825-1:2007 specifications.
The label shown below is attached in countries where required.

This product has a Class 3B Laser Diode which emits invisible laser radiation in the document scanner unit. The document scanner unit should not be opened under any circumstances.

Internal laser radiation

Wave length: 770 - 800 nm
Output: 20 mW max.
Laser Class: Class 3B

WARNING

Use of controls, adjustments or performance of procedures other than those specified in this manual may result in hazardous radiation exposure.

■ Disconnect Device

This product must be installed near an electrical socket that is easily accessible. In case of emergencies, you must disconnect the power cord from the electrical socket to shut off power completely.

■ Wiring Information (U.K. only)

If you need to replace the plug fuse, fit a fuse that is approved by ASTA to BS1362 with the same rating as the original fuse.

Always replace the fuse cover. Never use a plug that does not have a cover. If in any doubt, call a qualified electrician.

Warning -This product must be earthed.

The wires in the mains lead are coloured in line with the following code:

- Green and Yellow: Earth
- Blue: Neutral
- Brown: Live

■ LAN Connection (Network models only)

CAUTION

DO NOT connect this product to a LAN connection that is subject to over-voltages.

■ Radio Interference

This product complies with EN55022 (CISPR Publication 22)/Class B.

■ EU Directive 2002/96/EC and EN50419

European
Union only

This equipment is marked with the above recycling symbol. It means that at the end of the life of the equipment you must dispose of it separately at an appropriate collection point and not place it in the normal domestic unsorted waste stream. This will benefit the environment for all. (European Union only)

For USA and Canada

■ Federal Communications Commission (FCC) Declaration of Conformity (For USA)

Responsible Party: Brother International Corporation

100 Somerset Corporate Boulevard

P.O. Box 6911

Bridgewater, NJ 08807-0911

USA

Telephone: (908) 704-1700

declares, that the products

Product name: Color MFC
DCP-9055CDN/9270CDN
MFC-9460CDN/9465CDN/9560CDW/9970CDW

Product option: Lower Tray Unit LT-300CL

complies with Part 15 of the FCC Rules. Operation is subject to the following two conditions: (1) This device may not cause harmful interference, and (2) this device must accept any interference received, including interference that may cause undesired operation.

This equipment has been tested and found to comply with the limits for a Class B digital device, pursuant to Part 15 of the FCC Rules. These limits are designed to provide reasonable protection against harmful interference in a residential installation. This equipment generates, uses, and can radiate radio frequency energy and, if not installed and used in accordance with the instructions, may cause harmful interference to radio communications. However, there is no guarantee that interference will not occur in a particular installation.
If this equipment does cause harmful interference to radio or television reception, which can be determined by turning the equipment off and on, the user is encouraged to try to correct the interference by one or more of the following measures:

- Reorient or relocate the receiving antenna.
- Increase the separation between the equipment and receiver.
- Connect the equipment into an outlet on a circuit different from that to which the receiver is connected.
- Consult the dealer or an experienced radio/TV technician for help.

(Wireless network models only)
This transmitter must be co-located or operated in conjunction with any other antenna or transmitter.

Important

A shielded interface cable should be used to ensure compliance with the limits for a Class B digital device. Changes or modifications not expressly approved by Brother Industries, Ltd. could void the user's authority to operate the equipment.

■ Industry Canada Compliance Statement (For Canada)

This Class B digital apparatus complies with Canadian ICES-003.

Cet appareil numérique de la classe B est conforme à la norme NMB-003 du Canada.

■ Laser Safety (110 to 120 volt model only)

This machine is certified as a Class 1 laser product under the USA. Department of Health and Human Services (DHHS) Radiation Performance Standard according to the Radiation Control for Health and Safety Act of 1968. This means that the machine does not produce hazardous laser radiation.

Since radiation emitted inside the machine is completely confined within protective housings and external covers, the laser beam cannot escape from the machine during any phase of user operation.

■ FDA Regulations (110 to 120 volt model only)

The USA Food and Drug Administration (FDA) has implemented regulations for laser products manufactured on and after August 2, 1976. Compliance is mandatory for products marketed in the United States. The following label on the back of the machine indicates compliance with the FDA regulations and must be attached to laser products marketed in the United States.

MANUFACTURED:
Brother Technology (Shenzhen) Ltd.
NO6 Gold Garden Ind., Nanling Buji, Longgang, Shenzhen, China
This product complies with FDA performance standards for laser products except for deviations pursuant to Laser Notice No.50, dated June 24, 2007.

■ Internal laser radiation

Maximum radiation power:	20 mW
Wave length:	770 - 800 nm
Laser class:	Class 3B

SAFETY INFORMATION

■ Definitions of Warnings, Cautions, Notes and Memos

The following conventions are used in this manual:

Mark	Contents
	Warnings tell you what to do to prevent possible personal injury.
	Electrical Hazard icons alert you to a possible electrical shock.
	Hot Surface icons warn you not to touch machine parts that are hot.
	Cautions specify procedures you must follow or avoid to prevent possible damage to the machine or other objects.
Note	Notes tell you useful tips when servicing the machine.
Memo	Memo tells you bits of knowledge to help understand the machine.

■ Safety Precautions

Listed below are the various kinds of “WARNING” messages included in this manual.

WARNING

There are high voltage electrodes inside the machine. Before you clean the inside of the machine or replace parts, make sure that you have turned off the power switch and unplugged the machine from the AC power outlet.

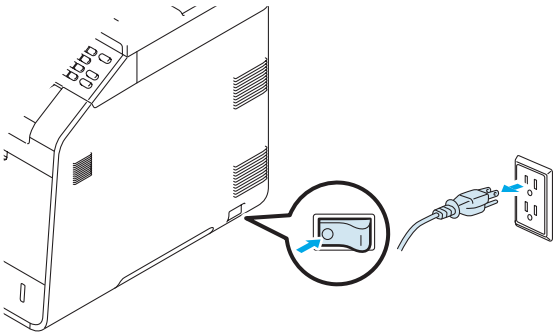

DO NOT handle the plug with wet hands. Doing this might cause an electrical shock.

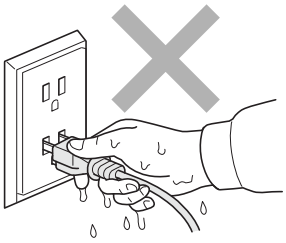

The fuser unit becomes extremely hot during operation. Wait until it has cooled down sufficiently before replacing consumable items. DO NOT remove or damage the caution label located on or around the fuser.

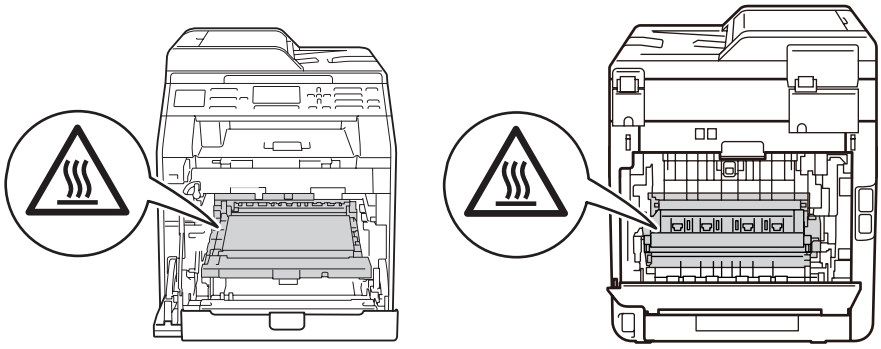

WARNING

DO NOT touch the shaded parts shown in the illustration. These rollers may be rotating at high speed and can pinch or entrap your hand.

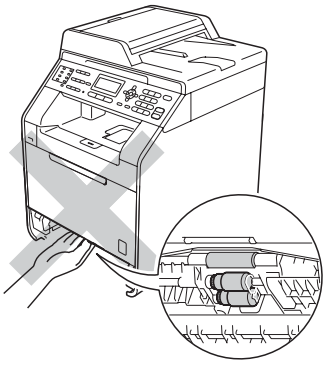

Languages on the label may vary depending on your country.

DO NOT use flammable substances, any type of spray or any organic solvent/liquids contains alcohol or ammonia to clean the inside or outside of the machine. Doing this may cause a fire or electrical shock.

If the machine becomes hot, blows smoke, or generates obscure odor, immediately turn off the power switch and unplug the machine from the AC power outlet.

If metal objects, water or other liquids get inside the machine, immediately turn off the power switch and unplug the machine from the AC power outlet.

This machine is heavy and weighs approximately 28.0 kg (61.7 lb). To prevent injuries when moving or lifting this machine, make sure to use at least two people. Be careful not to pinch your fingers when you set the machine back down.

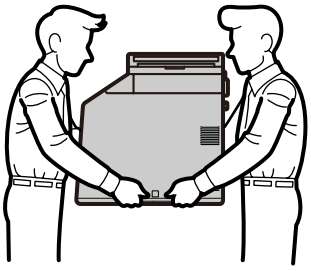

CAUTION
Lightning and power surges can damage this product! We recommend that you use a quality surge protection device on the AC power line, or unplug the machine during a lightning storm.
Violently closing the front cover without mounting the toner cartridge and the drum unit can damage this product.

■ Caution for Laser Product (WARNHINWEIS fur Laser drucker)

CAUTION: When the machine during servicing is operated with the cover open, the regulations of VBG 93 and the performance instructions for VBG 93 are valid.

CAUTION: In case of any trouble with the laser unit, replace the laser unit itself. To prevent direct exposure to the laser beam, do not try to open the enclosure of the laser unit.

ACHTUNG: Im Falle von Störungen der Lasereinheit muß diese ersetzt werden. Das Gehäuse der Lasereinheit darf nicht geöffnet werden, da sonst Laser-strahlen austreten können.

<Location of the scanner windows>

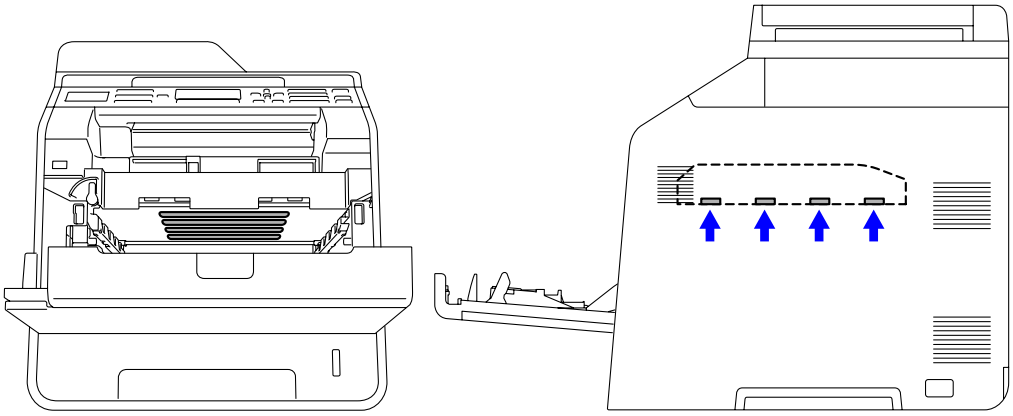

■ Additional Information

When servicing the optical system of the machine, be careful not to place a screwdriver or other reflective object in the path of the laser beam. Be sure to take off any personal accessories such as watches and rings before working on the machine. A reflected beam, though invisible, can permanently damage the eyes.

Since the beam is invisible, the following caution label is attached on the laser unit.

CHAPTER 1
SPECIFICATIONS

CHAPTER 1
SPECIFICATIONS

This chapter lists the specifications of each model.

CONTENTS

1. SPECIFICATIONS LIST

1.1 General

		→	

Model		MFC-9460CDN	MFC-9465CDN	MFC-9560CDW	MFC-9970CDW
Noise Level	Sound pressure	Printing: 57 dB (A) Ready: 33 dB (A)			
	Sound power	Printing (Mono): 6.74 B (A) Printing (Color): 6.82 B (A) Ready: 4.8 B (A)			Printing (Mono): 6.88 B (A) Printing (Color): 6.94 B (A) Ready: 4.8 B (A)
Environment	Temperature	Operating: 10 to 32.5 °C Storage: 0 to 40 °C			
	Humidity	Operating: 20 to 80 % Storage: 10 to 90 %			
Dimensions (W x D x H)	Carton Size	585 x 676 x 660 mm (23.0 x 26.6 x 26.0 inch)			663 x 699 x 694 mm (26.1 x 27.5 x 27.3 inch)
	Machine Size	410 x 503 x 492 mm (16.1 x 19.8 x 19.4 inch)			490 x 526 x 530 mm (19.3 x 20.7 x 20.9 inch)
Weights	With Carton	32.0 kg / 70.5 lb			34.0 kg / 75.0 lb
	Without Carton, With toner/drum	26.5 kg / 58.4 lb			28.5 kg / 62.8 lb
	Without Carton and toner/drum	21.0 kg / 46.3 lb			23.0 kg / 50.7 lb
LCD Size		Except for China: 22 Characters x 5 lines For China: 15 Characters x 5 lines			5 inch Color Touch Panel

Specifications are subjected to change without notice.

<Computer requirements>

Computer platform & operating system version		Processor Speed	Minimum RAM	Recom-mended RAM	Available Hard Disk Space		Supported PC Interface*2
					For Drivers	For Applications	
Windows® Operating System	Windows® 2000 Profes-sional*3	Intel® Pentium® II or equivalent	64 MB	256 MB	150 MB	500 MB	USB, 10BASE-T/ 100BASE-TX Ethernet, Wireless 802.11 b/g
	Windows® XP Home*1 *4 Windows® XP Profes-sional*1 *4		128 MB				
	Windows® XP Profes-sional X64 Edition*1 *4	64-bit (Intel® 64 or AMD64) supported CPU	256 MB	512 MB			
	Windows Vista® *4	Intel® Pentium® 4 Or equivalent 64-bit (Intel® 64 or AMD64) supported CPU	512 MB	1 GB	500 MB	1.2 GB	
	Windows®7 *4		1 GB (32-bit) 2 GB (64-bit)	1 GB (32-bit) 2 GB (64-bit)	650 MB		
	Windows Server® 2003 (print only via network)	Intel® Pentium® III or equivalent	256 MB	512 MB	50 MB	N/A	10BASE-T/ 100BASE-TX Ethernet, Wireless 802.11 b/g
	Windows Server® 2003 x 64 Edition (print only via network)	64-bit (Intel® 64 or AMD64) supported CPU					
	Windows Server® 2008 (print only via network)	Intel® Pentium® 4 Or equivalent 64-bit (Intel® 64 or AMD64) supported CPU	512 MB	2 GB			
	Windows Server® 2008 R2 (print only via network)	64-bit (Intel® 64 or AMD64) supported CPU					

Specifications are subject to change without notice.

Computer platform & operating system version		Processor Speed	Minimum RAM	Recom-mended RAM	Available Hard Disk Space		Supported PC Interface*2
					For Drivers	For Applications	
Macintosh Operating System	Mac OS X 10.4.11 10.5.x	PowerPC® G4/G5 Intel® Core™ Processor	512 MB	1GB	80 MB	400 MB	USB, 10BASE-T/ 100BASE-TX Ethernet, Wireless 802.11 b/g
	Mac OS X 10.6.x	Intel® Core™ Processor	1GB	2GB			

*1 For WIA, 1200 x 1200 resolution. Brother Scanner Utility enables to enhance up to 19200 x 19200 dpi.

*2 Third-party USB ports are not supported.

*3 PaperPort™ 11SE supports Microsoft® SP4 or higher for Windows® 2000.

*4 PaperPort™ 12SE supports Microsoft® SP3 or higher for Windows® XP and SP2 or higher for Windows Vista® and Windows®7.

Specifications are subject to change without notice.

1.2 Network Connectivity

Model		DCP-9055CDN	DCP-9270CDN
Wired network	Network node type	NC-6900h type2	
	Network type	10BASE-T/100BASE-TX Ethernet	
	Network security	APOP, POP before SMTP, SMTP-AUTH, SSL/TLS (IPPS, HTTPS, SMTP, POP), SNMP v3, 802.1x (EAP-MD5, EAP-FAST, PEAP, EAP-TLS, EAP-TTLS), Kerberos	
Wireless network	Network node type	N/A	
	RF channels	N/A	
	Communication mode	N/A	
	Network security	N/A	

Specifications are subject to change without notice.

Model		MFC-9460CDN	MFC-9465CDN	MFC-9560CDW	MFC-9970CDW
Wired network	Network node type	NC-6900h type2			
	Network type	10BASE-T/100BASE-TX Ethernet			
	Network security	APOP, POP before SMTP, SMTP-AUTH, SSL/TLS (IPPS, HTTPS, SMTP, POP), SNMP v3, 802.1x (EAP-MD5, EAP-FAST, PEAP, EAP-TLS, EAP-TTLS), Kerberos			
Wireless network	Network node type	N/A		IEEE802.11b/g (Infrastructure Mode/Adhoc mode)	
	RF channels	N/A		For U.S.A/Canada: 1-11 Except For U.S.A/Canada: 1-13	
	Communication mode	N/A		Infrastructure, Ad-hoc	
	Network security	N/A		WEP 64/128 bit, WPA-PSK (TKIP/AES), WPA2-PSK (AES), APOP, POP before SMTP, SMTP-AUTH, SSL/TLS (IPPS, HTTPS, SMTP, POP), SNMP v3, 802.1x (LEAP, EAP-FAST, PEAP, EAP-TLS, EAP-TTLS), Kerberos	

Specifications are subject to change without notice.

1.3 Service Information

Part		Approximate life
Machine life		Approximately 200,000 pages (A4/Letter) or 5 years
Machine life (ADF)		50,000 pages or 5 years
Machine life (Document scanner unit)		50,000 pages or 5 years
MTBF		4,000 hours
MTTR		0.5 hours
Maximum monthly print volume		Touch panel model: 60,000 pages Non Touch panel model: 40,000 pages
Periodical replacement parts	Fuser unit	100,000 pages or 5 years
	Laser unit	
	Paper feeding kit1	
	Paper feeding kit2	
	Paper feeding kit MP	50,000 pages or 5 years

* As for replacement of the periodical replacement parts, refer to "PERIODICAL MAINTENANCE" in Chapter 7.

Specifications are subject to change without notice.

1.4 Supplies

Consumables		Approximate life
Toner cartridge	Starter Toner *2	Black: Approximately 2,500 pages/cartridge Yellow, Magenta, Cyan: Approximately 1,500 pages/cartridge
	Standard Toner *1	Black: Approximately 2,500 pages/cartridge Yellow, Magenta, Cyan: Approximately 1,500 pages/cartridge
	High Capacity Toner *1	Black (For Europe): Approximately 4,000 pages/cartridge Black (Except for Europe): N/A Yellow, Magenta, Cyan : Approximately 3,500 pages/cartridge
	Super High Capacity Toner *1	Black (For U.S.A, Asia Pacific): Approximately 6,000 pages/cartridge Black (Except for U.S.A, Asia Pacific): N/A Yellow, Magenta, Cyan: Approximately 6,000 pages/cartridge
* When printing A4/Letter size one sided pages in accordance with ISO/IEC 19798. Shelf life: 2 years without opening (6 months after opening)		
Drum unit		Life expectancy: Approximately 25,000 pages/drum unit The life expectancy varies according to the use condition. (Refer to Display of the machine log (Function code 80 in Chapter 5.) * When printing A4/Letter size one sided pages in accordance with ISO/IEC 19798. Shelf life: 2 years without opening
The shelf life of toner cartridge and drum unit is guaranteed under the normal condition as below; (Temperature) Normal condition: 0 to 40 °C * Storage condition at the temperature of 40 to 50 °C: Up to 5 days * Storage condition at the temperature of -20 to 0°C: Up to 5 days (Humidity) Normal condition: 35 to 85 % * Storage condition at the humidity of 85 to 95 %: Up to 5 days * Storage condition at the humidity of 10 to 35 %: Up to 5 days		
Belt unit		Life expectancy: Approximately 50,000 pages/belt unit The life expectancy varies according to use the condition.
Waste toner box		Life expectancy: Approximately 50,000 pages/waste toner box

*1 Separately sold consumable toner

*2 Toner supplied with the machine.

Specifications are subject to change without notice.

1.5 Paper

1.5.1 Paper handling

Model		All models
Paper Input	Paper tray 1	250 sheets
	Paper tray 2	500 sheets
	MP tray	50 sheets
	ADF	Legal model: 50 sheets A4 model: 35 sheets
Paper Output	Face-down	150 sheets
	Face-up	1 sheet (Straight paper path)
Auto Duplex		Yes

Specifications are subject to change without notice.

1.5.2 Media specifications

Model		All models
Media type	Paper tray 1	Plain Paper, Thin Paper, Recycled Paper
	Paper tray 2	Plain Paper, Thin Paper, Recycled Paper
	MP tray	Plain Paper, Thin Paper, Thick Paper, Thicker Paper, Recycled Paper, Bond, Label, Envelope, Env. Thin, Env.Thick, Glossy Paper[*1]
	Duplex	Plain Paper, Thin Paper, Recycled Paper, Glossy Paper
	ADF	Plain Paper, Recycled Paper
Media weight	Paper tray 1	60 to 105 g/m^2 (16 to 28 lb)
	Paper tray 2	60 to 105 g/m^2 (16 to 28 lb)
	MP tray	60 to 163 g/m^2 (16 to 43 lb)
	Duplex	60 to 105 g/m^2 (16 to 28 lb)
	ADF	64 to 90 g/m^2 (17 to 24 lb)
Media size	Paper tray 1	A4, Letter, B5(ISO), A5, A5(Long Edge), B6(ISO), A6, Executive, Legal[*2], Folio
	Paper tray 2	A4, Letter, B5(ISO), A5, B6(ISO), Executive, Legal[*2]
	MP tray	Width: 69.8 to 216 mm (2.75 to 8.5 inch) Length: 116 to 406.4 mm (4.57 to 16 inch)
	Duplex	For U.S.A: Letter, Legal[*2], Folio Except for U.S.A: A4
	ADF	Width: 147.3 to 215.9 mm (5.8 to 8.5 inch) Length: 147.3 to 356.0 mm (5.8 to 14 inch)

[*1] When you print on glossy paper, set only a single sheet on the MP tray.

[*2] Legal size paper is not available in some regions outside U.S.A and Canada.

Specifications are subject to change without notice.

1.6 Unprintable Area

Portrait

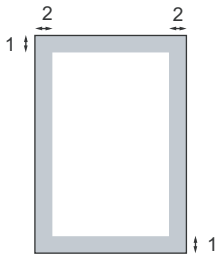

Landscape

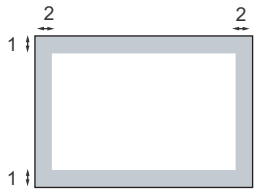

	Windows® printer driver and Macintosh printer driver BRScript printer driver for Windows® and Macintosh
1	4.23 mm (0.16 inch)
2	4.23 mm (0.16 inch)

Note:

The area that cannot be printed on may vary depending on the paper size and the printer driver you are using. The unprintable area shown above is for Letter size paper.

1.7 Telephone

Model	All models
Handset	N/A

Specifications are subject to change without notice.

1.8 FAX (Only for the models with FAX function)

Model		MFC-9460CDN	MFC-9465CDN	MFC-9560CDW	MFC-9970CDW
Modem Speed		33,600 bps (FAX)			
Transmission speed		Approximately 2.5 seconds (ITU-Test Chart, Std resolution, JBIG)			
ITU-T group		Super G3			
Color FAX	Sending	Yes (Not available for saving the data into the Memory)			
	Receiving	Yes (Not available for saving the data into the Memory)			
Internet FAX (ITU T.37 simple mode)		Yes (Download only)			Yes

Specifications are subject to change without notice.

1.9 Copy

Model		DCP-9055CDN	DCP-9270CDN
Copy Speed simplex (FB/ADF)	Monochrome	Up to 24/25 cpm (A4/Letter)	Up to 28/30 cpm (A4/Letter)
	Color		
First copy out time	Monochrome	Less than 19 seconds (from Ready mode and standard Tray)	
	Color	Less than 21 seconds (from Ready mode and standard Tray)	
Resolution (Optical)		Up to 1200 (main scanning) x 600 dpi (sub scanning)	
Auto duplex scanning copy		N/A	Yes

Specifications are subject to change without notice.

Model		MFC-9460CDN	MFC-9465CDN	MFC-9560CDW	MFC-9970CDW
Copy Speed simplex (FB/ADF)	Monochrome	Up to 24/25 cpm (A4/Letter)			Up to 28/30 cpm (A4/Letter)
	Color				
First copy out time	Monochrome	Less than 19 seconds (from Ready mode and standard Tray)			
	Color	Less than 21 seconds (from Ready mode and standard Tray)			
Resolution (Optical)		Up to 1200 x 600 dpi			
Auto duplex scanning copy		N/A	Yes		

Specifications are subject to change without notice.

1.10 Scanner

Model		DCP-9055CDN	DCP-9270CDN
Resolution (Optical)	FB	Maximum scanning 1,200 (main scanning) x 2,400 dpi (sub scanning)	
	ADF	Maximum scanning 1,200 (main scanning) x 600 dpi (sub scanning)	
Resolution (Interpolated)		Maximum scanning 19,200 (main scanning) x 19,200 dpi (sub scanning)	
Scanning speed	Monochrome/ Color	A4: 2.12 seconds Letter: 1.99 seconds	A4: 1.79 seconds Letter: 1.68 seconds

Specifications are subject to change without notice.

Model		MFC-9460CDN	MFC-9465CDN	MFC-9560CDW	MFC-9970CDW
Resolution (Optical)	FB	Maximum scanning 1,200 (main scanning) x 2,400 dpi (sub scanning)			
	ADF	Maximum scanning 1,200 (main scanning) x 600 dpi (sub scanning)			
Resolution (Interpolated)		Maximum scanning 19,200 (main scanning) x 19,200 dpi (sub scanning)			
Scanning speed	Monochrome/ Color	A4: 2.12 seconds Letter: 1.99 seconds			A4: 1.79 seconds Letter: 1.68 seconds

Specifications are subject to change without notice.

1.11 Unscannable Area

The scannable area depends on the settings in the application you are using. The figures below show unscannable areas.

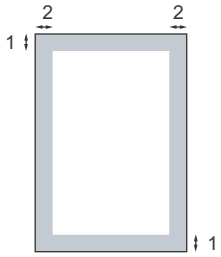

Usage	Document Size	Top (1) Bottom (1)	Left (2) Right (2)
Fax	Letter	3 mm (0.12 inch)	3.95 mm (0.15 inch)
	A4	3 mm (0.12 inch)	3 mm (0.12 inch)
Copy	Letter	4 mm (0.16 inch)	3.96 mm (0.15 inch)
	A4	4 mm (0.16 inch)	3 mm (0.12 inch)

Note:

(For copies) This unprintable area shown above is for a single copy or a 1 in 1 copy using A4 size paper. The area that cannot be printed on may vary depending on the paper size.

1.12 USB Direct Interface

Model	DCP-9055CDN	DCP-9270CDN
PictBridge	N/A	
Direct print	N/A	PDF version1.7, JPEG, Exif+JPEG, PRN (created by own printer driver) TIFF(scanned by Brother model), XPS version 1.0

Specifications are subject to change without notice.

Model	MFC-9460CDN	MFC-9465CDN	MFC-9560CDW	MFC-9970CDW
PictBridge	N/A			
Direct print	PDF version1.7, JPEG, Exif+JPEG, PRN(created by own printer driver) TIFF(scanned by Brother model), XPS version 1.0			

Specifications are subject to change without notice.

CHAPTER 2

ERROR INDICATION AND TROUBLESHOOTING

CHAPTER 2
ERROR INDICATION AND TROUBLESHOOTING

This chapter details error messages and codes which the incorporated self-diagnostic function of the machine will display if any error or malfunction occurs. If any error message appears, refer to this chapter to find which parts should be checked or replaced.

The latter half of this chapter provides sample problems which could occur in the main sections of the machine and related troubleshooting procedures.

CONTENTS

1. INTRODUCTION

Troubleshooting is the countermeasure procedures that the service personnel should follow if an error or malfunction occurs with the machine. It is impossible to anticipate all of the possible troubles which may occur in future and determine the troubleshooting procedures, so this chapter covers some sample troubles. However, those samples will help the service personnel pinpoint and repair other defective elements.

1.1 Precautions

Be sure to observe and follow all the precautions to prevent any secondary problems from happening during troubleshooting.

(1) Always turn off the power and unplug the power cable before removing any covers or PCBs, adjusting the machine and so on. If you need to take voltage measurements with the power switched on, take the greatest of care not to receive an electric shock.

(2) When connecting or disconnecting cable connectors, make sure that you hold the connector body and not the cables.

(3) Static electricity charged in your body may damage electronic parts.
Before handling the PCBs, touch a metal portion of the machine to discharge static electricity charged in your body. When transporting PCBs, be sure to wrap them in conductive sheets.
When replacing the PCBs, put on a grounding wrist band and perform the job on a conductive mat. Also take care not to touch the conductor sections on the flat cables.

(4) Follow the warning by all means.

WARNING

The fuser unit becomes extremely hot during operation. Wait until it has cooled down sufficiently before replacing consumable items. DO NOT remove or damage the caution label located on or around the fuser.

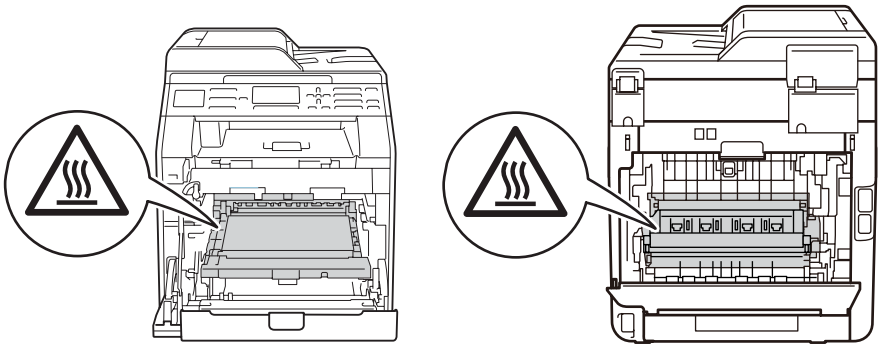

WARNING

DO NOT use flammable substances, any type of spray or any organic solvent/liquids contains alcohol or ammonia to clean the inside or outside of the machine. Doing this may cause a fire or electrical shock.

(5) Verify again that the repaired portion works properly.

1.2 Initial Check

Check the following items before attempting to repair the machine.

■ Operating environment

(1) Put your machine on a flat, stable surface such as a desk that is free of vibration and shocks.

(2) Use the machine in a well-ventilated room; use the machine within the following ranges of temperature and humidity: temperature between 10 °C and 32.5 °C (50 °F to 90.5 °F), and the relative humidity is maintained between 20 % and 80 %.

(3) Ensure the machine is not exposed to direct sunlight, excessive heat, moisture, or dust.

(4) Keep the machine horizontal when you carry it. To prevent injuries when moving or lifting this machine, make sure to use at least two people.

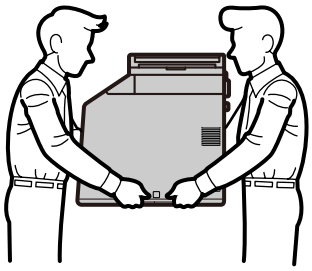

Fig. 2-1

■ Power supply

(1) The AC input power supply described on the rating plate of the machine should be within ±10 % of the rated voltage.

(2) The AC input power supply is within the regulated value.

(3) The cables and harnesses are connected correctly.

(4) The fuses are not blown.

■ Paper

(1) A recommended type of paper is being used. (Refer to User's guide.)

(2) The paper is not damp.

(3) The paper is not short-grained paper or acid paper.

■ Consumable parts

(1) The drum unit (including the toner cartridge) is installed correctly.

(2) The belt unit and waste toner box are installed correctly.

■ Others

(1) Condensation

When the machine is moved from a cold place into a warm room, condensation may occur inside the machine, causing various problems as listed below.

- Condensation on the surface of optical devices such as the scanner windows, lens, reflecting mirror, and protection glass, etc, may cause light print image.
- If the exposure drum is cold, the electrical resistance of the photosensitive layer is increased, making it impossible to obtain the correct contrast when printing.
- Condensation on the charge unit may cause corona charge leakage.
- Condensation on the plate and separation pad may cause paper feed problems.

If condensation has occurred, leave the machine for at least two hours to allow it to reach room temperature.

If the drum unit is unpacked soon after it is moved from a cold place to a warm room, condensation may occur inside the unit which may cause incorrect images. Instruct the user to allow the unit to come to room temperature before unpacking it. This will take one or two hours.

(2) Low temperature

The motor may not drive normally under the low temperature environment. This is due to there being too much load to drive each unit. In this case, the "**Low Temperature/ Increase room temperature to allow the machine to operate**" message will appear on the LCD. Increase the room temperature when the above message is indicated.

■ Cleaning

Use a soft dry lint-free cloth.

WARNING

DO NOT use flammable substances, any type of spray or any organic solvent/liquids contains alcohol or ammonia to clean the inside or outside of the machine. Doing this may cause a fire or electrical shock.

2. OVERVIEW

2.1 Cross-section Drawing

■ Printer part

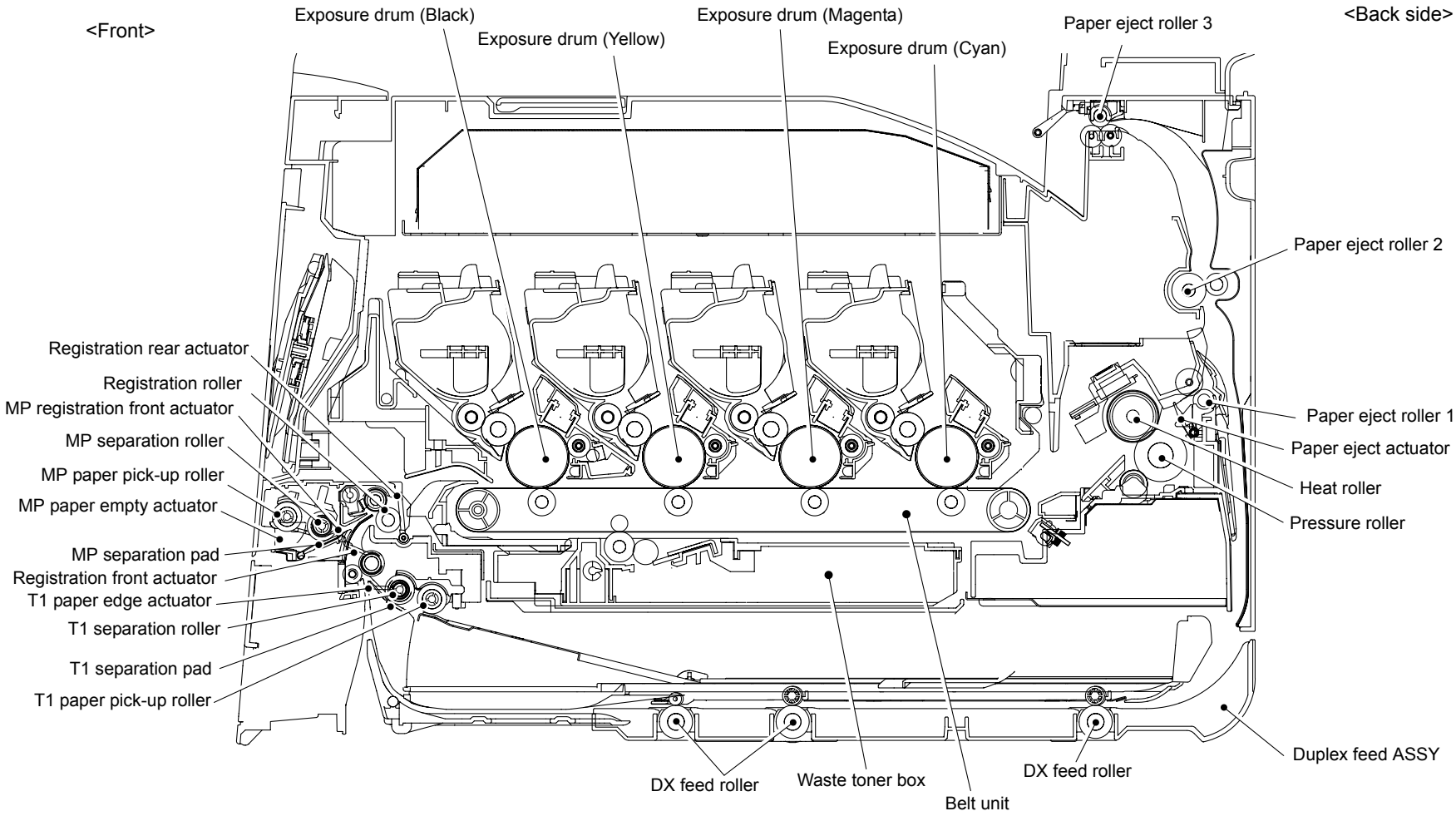

Fig. 2-2

■ ADF part (A4 model)

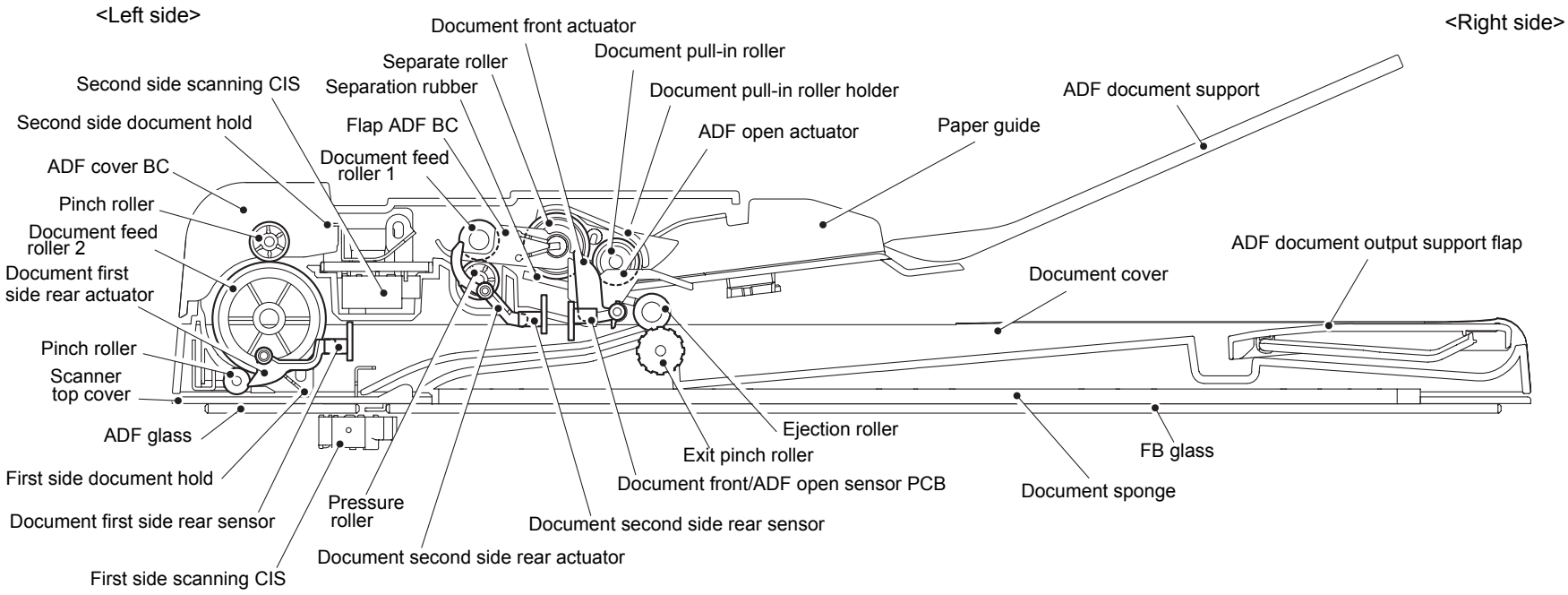

Fig. 2-3

■ ADF part (Legal model)

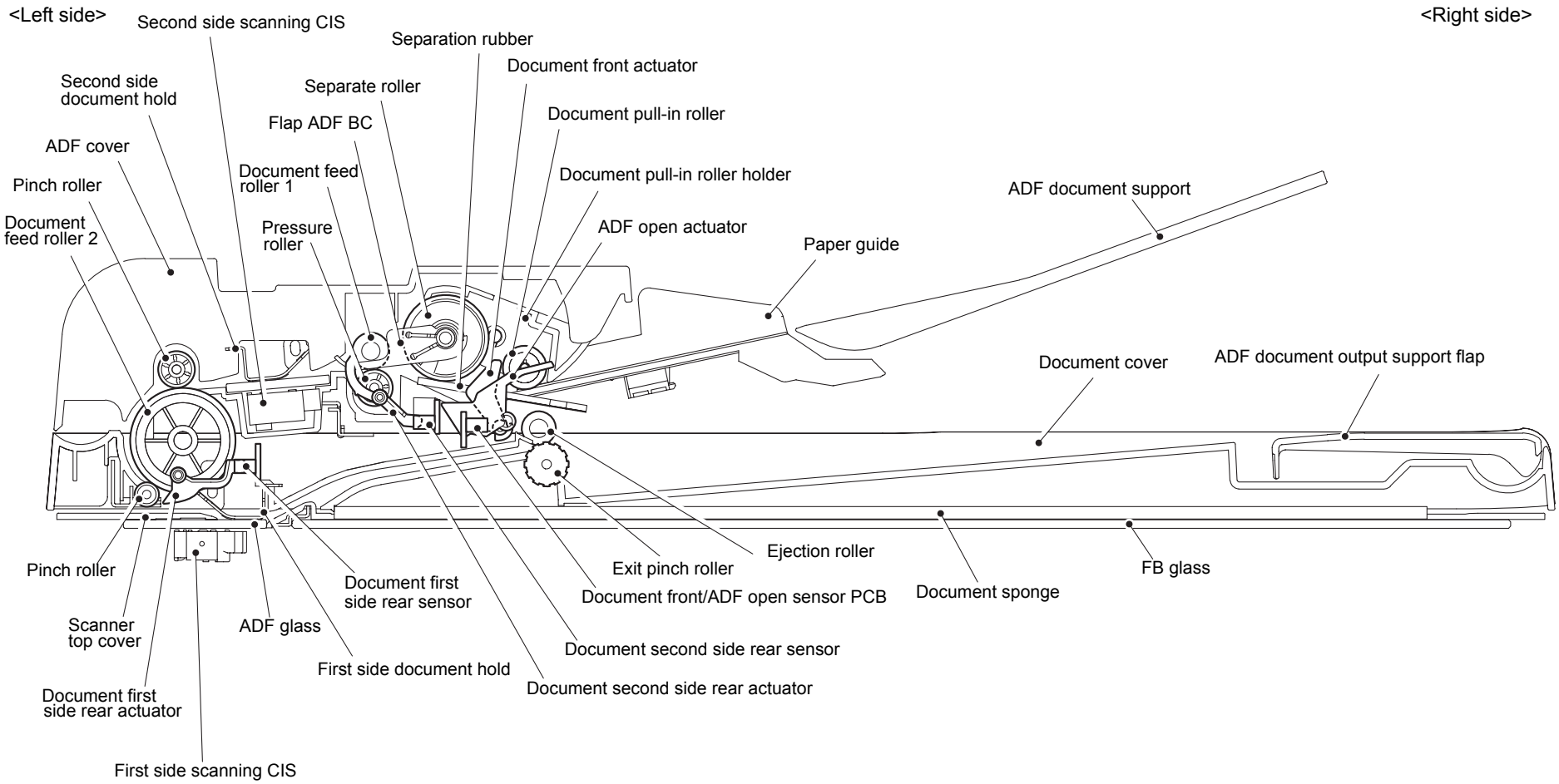

Fig. 2-4

2.2 Paper Feeding

■ Printer part

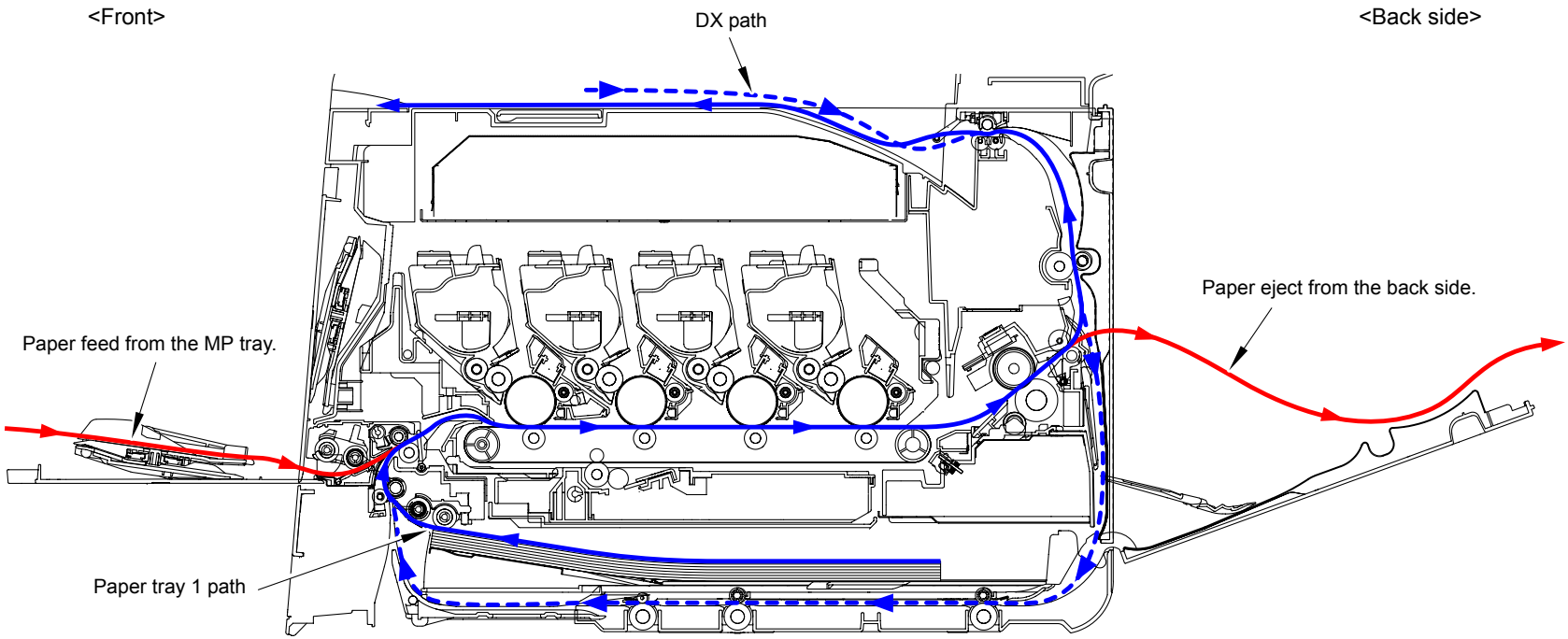

Fig. 2-5

■ ADF part (A4 model)

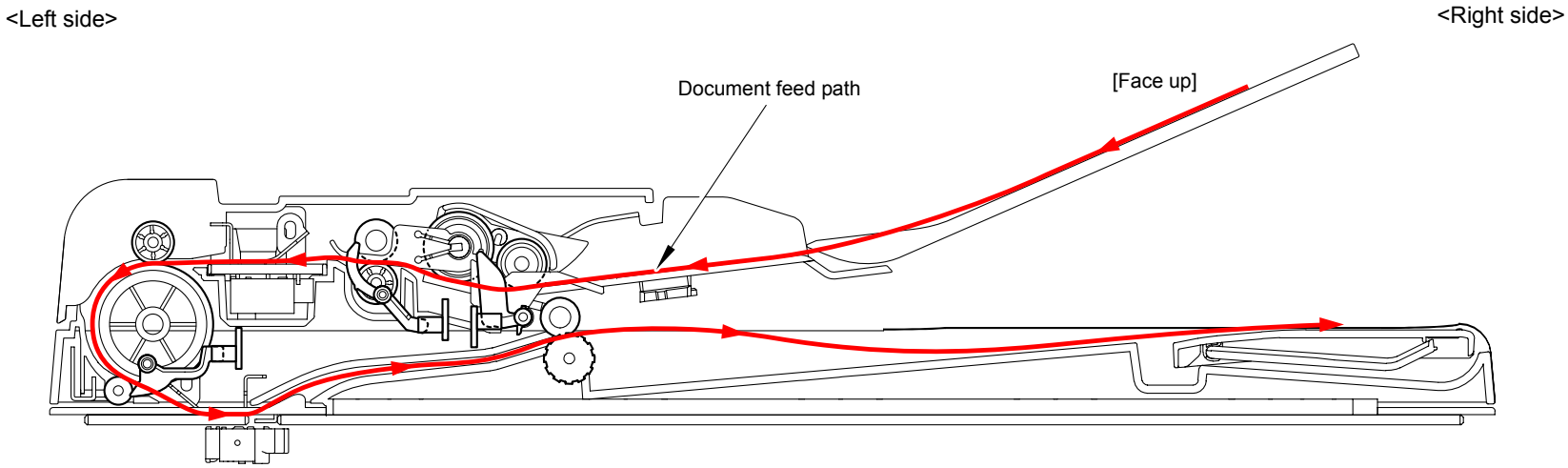

Fig. 2-6

■ ADF part (Legal model)

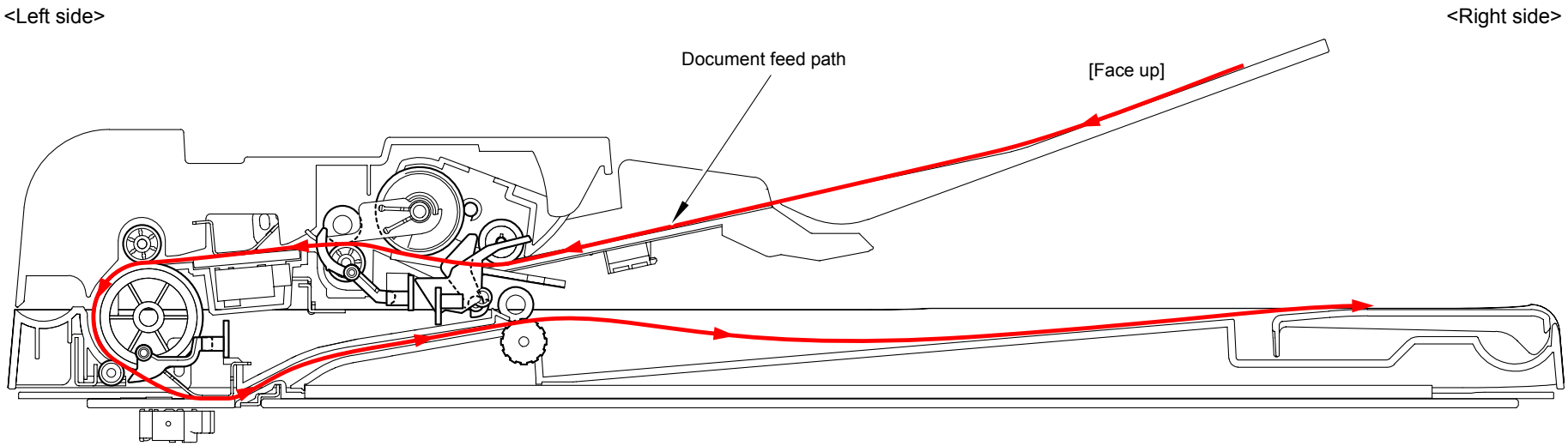

Fig. 2-7

2.3 Operation of Each Part

■ Printer part

Part name	Operation
T1 paper pick-up roller	Feed the paper from the paper tray 1.
T1 separation roller, T1 separation pad	Separate into single sheet from the paper tray 1.
T1 paper edge actuator	Detect whether or not the paper tray 1 is installed. Detect whether or not paper is loaded. Detect the paper jam of front part.
Registration front actuator	Detect the front edge of paper and control the drive of the registration roller. Detect the paper jam of front part.
Registration roller	When the front edge of the paper hit the stopped registration roller and the inclination of the paper is corrected. After correction is made, the registration roller rotates to feed the paper to the belt unit.
Registration rear actuator	Detect the passage of paper and adjust the starting position for writing on a sheet of paper. Detect the paper jam of center part. Detect the rear edge of paper and identify the paper size.
Belt unit	Feed the paper to the drum unit for each color and transfer toner on the paper.
Heat roller, Pressure roller	Fuse and fix the toner transferred on paper by heat and pressure, and feed the paper to the paper eject roller 1.
Paper eject actuator	Detect whether or not paper is ejected from the fuser unit. In the case of the duplex printing, detect the rear edge of paper and adjust the timing of the paper eject roller 2 and 3 switching.
Paper eject roller 1	Feed the paper ejected from the fuser unit to the paper eject roller 2.
Paper eject roller 2	Feed the paper to the paper eject roller 3. In the case of the duplex printing, after the paper is fed from the eject roller 3 up to a certain point with the front of the sheet printed, the eject roller 3 rotates conversely and feeds the paper to the duplex tray.
Paper eject roller 3	Eject the paper to the face-down output tray. In the case of the duplex printing, after the paper is fed from the eject roller 3 up to a certain point with the front of the sheet printed, the eject roller 3 rotates conversely and feeds the paper to the duplex tray.
DX feed roller	Feed the paper passed in the duplex tray to the registration roller.
MP paper pick-up roller	Feed the paper from the MP tray.
MP separation roller, MP separation pad	Separate into single sheet from the MP tray.
MP paper empty actuator	Detect whether paper is loaded in the MP tray.
MP registration front actuator	Detect the front edge of paper from MP tray and control the drive of the registration roller. Detect the paper jam of MP part.

■ ADF part

Part name	Operation
Document front actuator	Detect whether or not documents are loaded in the ADF document support.
ADF open actuator	Detect when the ADF cover is opened or closed.
Document pull-in roller	Feed the documents loaded in the ADF document support.
Separate roller, Separation rubber	Separate the documents fed by the document pull-in roller into a single paper.
Document second side rear actuator	Detect the front edge of the paper and adjust the scanning position of the second side. Detect paper jam in the ADF.
Document feed roller	Feed the paper to the CIS unit (first side).
Document first side rear actuator	Detect the front edge of the paper and adjust the scanning position of the first side. Detect paper jam in the ADF.
Ejection roller	Eject the paper of which the first side has been scanned to the document cover.

2.4 Block Diagram

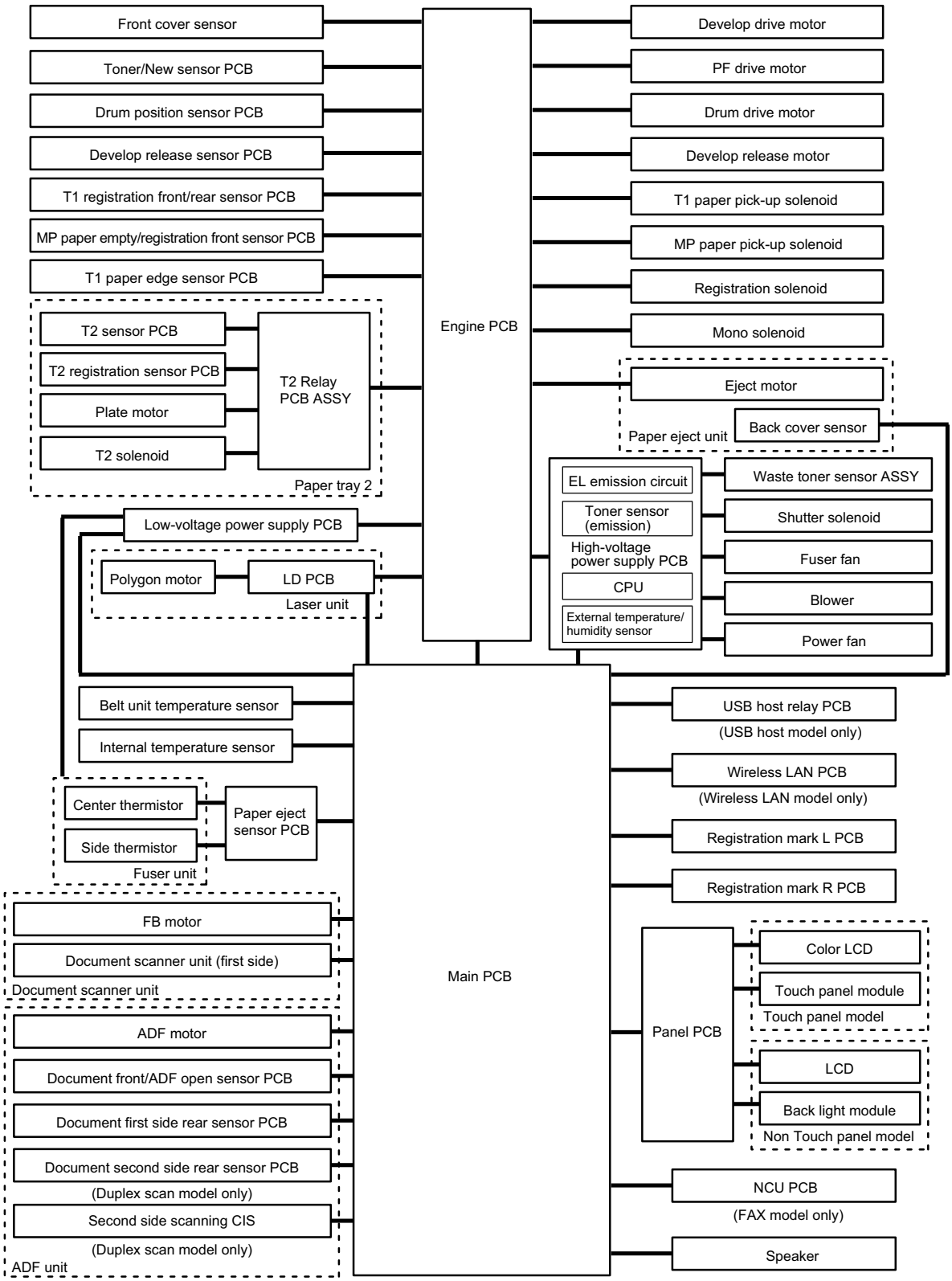

Fig. 2-8

2.5 Components

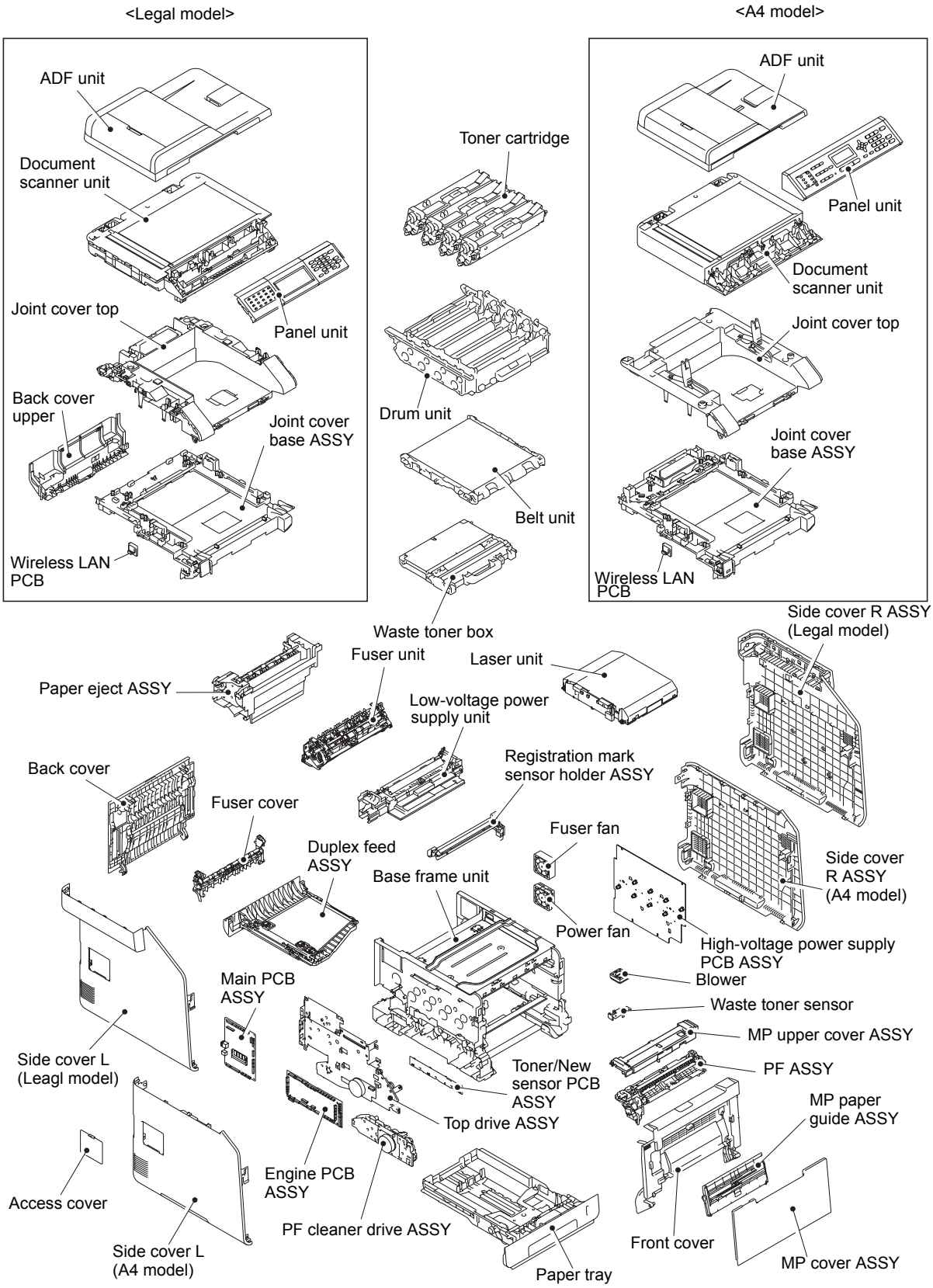

Fig. 2-9

2.6 Life of Toner Cartridge and Drum Unit

■ Life of toner cartridge

<Method of detecting toner life>

Toner life can be detected by toner sensor and by rotation rates of the develop roller. “Replace Toner” is displayed on the LCD when the toner sensor detects that toner runs out, or when the number of rotations of the develop roller reaches the cartridge life end.

- Detection by the toner sensor
  This machine has a function to detect the remaining toner by checking the level at which toner in a cartridge interrupts light using a transmissive light sensor.
- Detection by means of rotation rates of the developer roller reached its upper limit
  This machine has a function to detect when the number of rotations reaches the upper limit before the developer roller is worn out and becomes unusable.

<Relationship between printable pages of the toner cartridge and remaining toner>

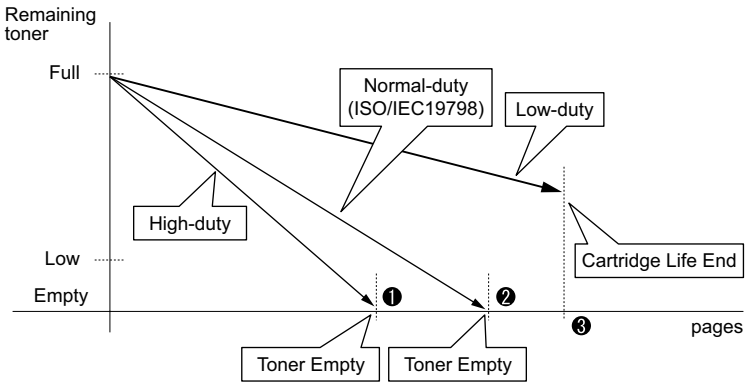

Memo:
When the number of rotations of the developer roller reaches the cartridge life end, “Replace Toner” is displayed even if toner remains.

The life of toner cartridges when making prints of the print pattern specified by ISO/IEC 19798 is shown in the table below. (At the point of ❷ in the figure above)

Toner cartridge		Number of printable pages
Standard	Black	2,500 pages
	Yellow, Magenta, Cyan	1,500 pages
High	Black	4,000 pages
	Yellow, Magenta, Cyan	3,500 pages
Super High	Black	6,000 pages
	Yellow, Magenta, Cyan	6,000 pages

To avoid problems caused by the worn-out of the developer roller surface and deterioration of the toner ceiling, “Replace Toner” message is displayed and the print operation is prohibited when the number of the rotations of the developer roller reaches the upper limit even if toner remains. The upper limit of the number of the rotations of the developer roller is shown in the table below.

Toner cartridge		Upper limit of rotations of the developer roller
Standard	Black	72,450 rotations
	Yellow, Magenta, Cyan	43,470 rotations
High	Black	115,920 rotations
	Yellow, Magenta, Cyan	101,430 rotations
Super High	Black	173,880 rotations
	Yellow, Magenta, Cyan	173,880 rotations

<Cartridge life>

The cartridge life (at the point of ❸ in the figure above), which depends on the upper limit of the number of rotations of the developer roller, varies according to the average number of print pages per job. (See the table below.) The number of printable pages is larger when making continuous prints in one job because deterioration of the developer roller is low.

Memo:

- The number of rotations of the developer roller per A4-size page*:

	Color	Monochrome
First page	42.5 rotations (K, Y, M, C roller)	42.5 rotations (K roller only)
Second page and after (in the case of continuous printing)	11.3 rotations (K, Y, M, C roller)	11.3 rotations (K roller only)

- The number of rotations of the developer roller for each operation*:

	K roller	Y, M, C roller
Warm-up operation	37.0 rotations	35.0 rotations
Adjustment of color registration	83.0 rotations	67.7 rotations
Adjustment of color calibration	142.0 rotations	111.3 rotations
Number of idling rotation when the machine is turned ON (Worst value)	262.0 rotations	214.0 rotations

* Since the number of rotations varies according to individual differences between machines and the environment, consider it as a reference value.

Note:

The numeral values provided in this page are as of August 2010. These values are subject to change without prior notice.

<Relationship between average print page per 1 job and life of toner cartridges>

Average print page (page/job)	1	2	3	4	5	6	7	8
Cartridge life (Standard-K)	1,750	2,762	3,421	3,885	4,229	4,494	4,705	4,876
Cartridge life (Standard-YMC)	1,050	1,640	2,018	2,281	2,474	2,622	2,739	2,834
Cartridge life (High-K)	2,800	4,419	5,474	6,216	6,766	7,190	7,528	7,802
Cartridge life (High-YMC)	2,450	3,827	4,708	5,322	5,773	6,118	6,392	6,613
Cartridge life (Super High-K)	4,200	6,628	8,211	9,324	10,149	10,785	11,291	11,703
Cartridge life (Super High-YMC)	4,200	6,560	8,071	9,123	9,896	10,488	10,957	11,337

The developer roller also rotates for the warm-up operation, color registration adjustment operation, and developing bias adjustment operation when the power is turned ON and when the cover is opened or closed. Therefore, when these operations are frequently performed, the life of toner cartridges is shortened. (The table below shows the worst case in which the warm-up operation, color registration adjustment, and developing bias adjustment are performed when the power is turned ON.)

<Cartridge life in the case that the power is turned OFF/ON and adjustment is performed before printing>

Average print page (page/job)	1	2	3	4	5	6	7	8
Cartridge life (Standard-K)	244	470	681	877	1,061	1,233	1,395	1,547
Cartridge life (Standard-YMC)	167	319	459	588	708	818	921	1,017
Cartridge life (High-K)	390	752	1,089	1,403	1,697	1,973	2,232	2,475
Cartridge life (High-YMC)	389	745	1,072	1,373	1,651	1,909	2,149	2,373
Cartridge life (Super High-K)	585	1,128	1,633	2,105	2,546	2,959	3,347	3,713
Cartridge life (Super High-YMC)	667	1,277	1,837	2,353	2,831	3,273	3,684	4,067

■ Life of drum unit

<How to read the drum unit life>

- It initially indicates 100% and gradually decreases.
- It indicates 10% when the “Replace Parts Drum” appears on the LCD.

<How to calculate the drum unit life>

The drum unit life is based on the “drum counter” or the “number of drum rotations.” The drum counter is based on the total printed pages on each drum unit. This total printed pages should be reset every time you replace the drum unit with a new one. (Refer to “2.2 Parts Life Reset Function” in Chapter 5.) Basically this amount is equal to the assured printable pages of the drum unit. If the developing bias voltage correction or color registration adjustment is performed frequently, however, only the number of drum rotations increases, and the “page counter based on the number of drum rotation” exceeds the “drum counter” based on the total printed page.
Refer to the calculation of the drum unit life based on the number of drum rotation below;

<How to calculate the page counter>

The number of drum rotations for the first page printed is about 24.
The number of drum rotations per one page for the second or later page printed (continuous printing) is 3.6.
Page counter based on the number of drum rotations = {Number of drum rotations for the first page printed + [Number of drum rotations per one page for the second or later page printed x (Number of pages in continuous printing - 1)]} / 24
(* The number of drum rotations per one page continuous printing.)
Example: Starts to print when the machine is in the Ready state.

Continuous printing	Page counter based on the number of drum rotations (Pages)
1 page/job	{24 + [3.6 x (1 - 1)]} / 24 = 1
2 pages/job	{24 + [3.6 x (2 - 1)]} / 24 = 1.15
18 pages/job	{24 + [3.6 x (18 - 1)]} / 24 = 3.55

If you leave the machine without printing for a long time, the number of drum rotations is increasing because the developing bias voltage correction and the color registration are performed. If you print one page per one job every time after leaving the machine without printing for a long time, the drum unit life is shorter than usual.
The number of drum rotations required for the developing bias voltage correction = 68 rotations.
Example: Performs the developing bias voltage correction and starts to print after leaving the machine without printing for a long time.

Continuous printing	Page counter based on the number of drum rotations (Pages)
1 page/job	{68 + 24 + [3.6 x (1 - 1)]} / 24 = 3.83
2 pages/job	{68 + 24 + [3.6 x (2 - 1)]} / 24 = 3.98
18 pages/job	{68 + 24 + [3.6 x (18 - 1)]} / 24 = 5.38

The number of drum rotations required for the color registration = 35 rotations
Example: Performs the color registration adjustment and starts to print after leaving the machine without printing for a long time.

Continuous printing	Page counter based on the number of drum rotations (Pages)
1 page/job	{35 + 24 + [3.6 x (1 - 1)]} / 24 = 2.45
2 pages/job	{35 + 24 + [3.6 x (2 - 1)]} / 24 = 2.61
18 pages/job	{35 + 24 + [3.6 x (18 - 1)]} / 24 = 5.03

3. ERROR INDICATIONS

3.1 Error Codes

3.2 Error Messages

Access Error			
Calibrate (Calibrate Failed)			
Cartridge Error			
Condensation			
Connection Error Connection Fail			
Cooling Down			
Cover is Open			
DIMM Error			
Disconnected			
Document Jam			
Drum Error			
Drum Stop			
Duplex Disabled			

Fuser Error			
Ignore Data			
Jam Duplex			
Jam Inside			
Jam MP Tray			
Jam Rear			
Jam Tray 1			
Jam Tray 2			
Log Access Error			
Low temperature			
No Belt Unit			
No Drum Unit			
No HUB Support			
No Paper			
No Toner			

Error message	Description	Error codes	Refer to:
No Tray	The paper tray 1 is not installed before printing. (The cassette of the T1 paper edge sensor is open.)	17	2-35
	The paper tray 1 is not installed.	85	2-67
	The paper tray 2 is not installed before printing. (The cassette of the T2 paper edge sensor is open.)	18	2-35
	The paper tray 2 is not installed.	86	2-67
No Waste Toner	The waste toner box is not installed.	CE	2-91
Out of Memory	Insufficient memory.	C7	2-88
	RAM area for secure data full.	C8	2-88
Registration (Registration Failed)	Inter-color position alignment adjustment failure. (Error, which cannot be recorded, occurs.)	10	2-33
	Inter-color position alignment adjustment failure. (Toner of the color which is being used reached the end of life.)	11	2-33
	Inter-color position alignment adjustment failure. (Incorrect measurement value of inter-color position alignment adjustment.)	12	2-34
	Error in the adjustment of inter-color position alignment result when implementing it.	8E	2-72
	Detection of incorrect registration sensor measurement value when implementing adjustment of inter-color position alignment.	9D	2-75
	Toner of the color which is being used reaches the end of life when implementing adjustment of inter-color position alignment.	9E	2-75
Replace Belt	Belt unit is at the end of life. (The operation is stopped.)	7E	2-64
Replace Drum	Drum unit is at the end of life.	19	2-36

Replace Parts	**Belt Unit**			
	Drum Unit			
	Fuser Unit			
	Laser Unit			
	PF Kit MP			
	PF Kit 1			
	PF Kit 2			
Replace Toner				
Replace WT Box				
Scan Unable XX				
Self-Diagnostic				
Short paper				
Size Error DX				
Small paper				
Storage Full				
Toner Error				
Too Many Files				
Tray 2 Error				
Unable to Update				

Unusable Device			
Unusable File			
WT Box End Soon			

3.3 Communications Error Code

Code 1	Code 2	Cause	Refer to:
32	14	The available memory space of the remote terminal is less than that required for reception of the confidential or relay broad-casting instruction.	2-138
32	18	Remote terminal not equipped with color function.	2-138
40	02	Illegal coding system requested.	2-138
40	03	Illegal recording width requested.	2-138
40	05	ECM requested although not allowed.	2-138
40	06	Polled while not ready.	2-138
40	07	No document to send when polled.	2-138
40	10	Nation code or manufacturer code not correct.	2-138
40	13	Polled by any other manufacturers' terminal while waiting for secure polling.	2-138
40	17	Invalid resolution selected.	2-138
40	20	Invalid full color mode selected.	2-138
50	01	Vertical resolution capability changed after compensation of background color.	2-138
63	01	Password plus “lower 4 digits of telephone number” not coincident.	2-138
63	02	Password not correct.	2-138
63	03	Polling ID not correct.	2-138
74		DCN received.	2-138
80	01	Fallback impossible.	2-138
90	01	Unable to detect video signals and commands within 6 seconds after CFR is transmitted.	2-138
90	02	Received PPS containing invalid page count or block count.	2-138
A0	03	Error correction sequence not terminated even at the final transmission speed for fallback.	2-138
A0	11	Receive buffer empty. (5-second time-out)	2-138
A0	12	Receive buffer full during operation except receiving into memory.	2-138
A0	13	Decoding error continued on 500 lines or more.	2-138
A0	14	Decoding error continued for 15 seconds or more.	2-138
A0	15	Time-out: 13 seconds or more for one-line transmission.	2-138
A0	16	RTC not found or carrier OFF detected for 6 seconds.	2-138
A0	17	RTC found but no command detected for 60 seconds or more.	2-138
A0	19	No video data to be sent.	2-138

		Stop/Exit	
		Stop/Exit	

3.4 Error Cause and Remedy

User Check

■ Error code 0B

Error code 0E

<User Check>

■ Error code 0F

Duplex Disabled **Close the Back Cover of the machine.**

<User Check>

■ Error code 10

(Non Touch panel model) **Registration** **Registration failed. Press Start, and try again.**
(Touch panel model) **Registration failed** **Press Start, and try again.**

■ Error code 11

(Non Touch panel model) **Registration** **Registration failed. Press Start, and try again.**
(Touch panel model) **Registration failed** **Registration failed. Press Start, and try again.**

<User Check>

■ Error code 12

(Non Touch panel model) **Registration** **Registration failed. See Troubleshooting chapter in User's Guide.**
(Touch panel model) **Registration failed** **Registration failed. See Troubleshooting chapter in User's Guide.**

<User Check>

■ Error code 16

Duplex Disabled **Reload paper, then press Start.**

<User Check>

■ Error code 17

(Non Touch panel model) **No Tray** **A Tray is not detected, install Tray #1.**
(Touch panel model) **No Tray** **The paper tray cannot be detected, re-install Tray#1.**

<User Check>

■ Error code 18

(Non Touch panel model) **No Tray** **A Tray is not detected, install Tray #2.**
(Touch panel model) **No Tray** **The paper tray cannot be detected, re-install Tray#2.**

<User Check>

■ Error code 19

Replace Drum **Open the Front Cover, replace the Drum Unit. Refer to the User's Guide for instructions.**

<User Check>

■ Error code 1A

Condensation **Leave switched ON. Fully open the front cover. Wait 30 minutes, switch OFF and close cover, then switch ON.**

<User Check>

■ **Error code 1B (C)**

Drum Stop **We cannot guarantee the print quality. Replace the Drum Unit. Refer to the User's Guide for instructions.**

Error code 1C (M)

Drum Stop **We cannot guarantee the print quality. Replace the Drum Unit. Refer to the User's Guide for instructions.**

Error code 1D (Y)

Drum Stop **We cannot guarantee the print quality. Replace the Drum Unit. Refer to the User's Guide for instructions.**

<User Check>

■ **Error code 1E**

Replace Parts **Drum**

<User Check>

■ **Error code 1F**

Too Many Trays. **Maximum number of optional tray is one. Remove additional trays.**

<User Check>

■ **Error code 20 (K)**

Print Unable 20 **Turn the power off and then back on again.**

Error code 21 (Y)

Print Unable 21 **Turn the power off and then back on again.**

Error code 22 (M)

Print Unable 22 **Turn the power off and then back on again.**

Error code 23 (C)

Print Unable 23 **Turn the power off and then back on again.**

<User Check>

■ **Error code 24**

Print Unable 24 **Turn the power off and then back on again.**

■ Error code 25

Print Unable 25
Turn the power off and then back on again.

<User Check>

■ Error code 26

Print Unable 26
Turn the power off and then back on again.

<User Check>

■ Error code 27

Print Unable 27
Turn the power off and then back on again.

<User Check>

■ Error code 28

Print Unable 28 **Turn the power off and then back on again.**

<User Check>

■ Error code 29

Print Unable 29 **Turn the power off and then back on again.**

<User Check>

■ Error code 2A

Print Unable 2A **Turn the power off and then back on again.**

<User Check>

■ Error code 2B

Print Unable 2B **Turn the power off and then back on again.**

<User Check>

■ **Error code 2C (K)**

Print Unable 2C **Turn the power off and then back on again.**

Error code 2D (Y)

Print Unable 2D **Turn the power off and then back on again.**

Error code 2E (M)

Print Unable 2E **Turn the power off and then back on again.**

Error code 2F (C)

Print Unable 2F **Turn the power off and then back on again.**

■ **Error code 30**

Print Unable 30 **Turn the power off and then back on again.**

<User Check>

■ Error code 31

Print Unable 31
Turn the power off and then back on again.

■ Error code 32

Print Unable 32
Turn the power off and then back on again.

<User Check>

■ Error code 33

Print Unable 33
Turn the power off and then back on again.

Error code 34

Print Unable 34
Turn the power off and then back on again.

<User Check>

■ Error code 35

Print Unable 35
Turn the power off and then back on again.

<User Check>

■ Error code 36

Print Unable 36
Turn the power off and then back on again.

■ Error code 37

Print Unable 37
Turn the power off and then back on again.

■ Error code 38

Print Unable 38
Turn the power off and then back on again.

Error code 39

Print Unable 39
Turn the power off and then back on again.

■ Error code 3A

Print Unable 3A
Turn the power off and then back on again.

■ Error code 3B

Print Unable 3B **Turn the power off and then back on again.**

■ Error code 3C

Print Unable 3C **Turn the power off and then back on again.**

Error code 3D

Print Unable 3D **Turn the power off and then back on again.**

Error code 3E

Print Unable 3E **Turn the power off and then back on again.**

<User Check>

■ Error code 3F

Print Unable 3F **Turn the power off and then back on again.**

<User Check>

■ Error code 40

Print Unable 40 **Turn the power off and then back on again.**

Error code 42

Print Unable 42 **Turn the power off and then back on again.**

■ Error code 43

Print Unable 43 **Turn the power off and then back on again.**

<User Check>

■ **Error code 44 (K)**

No Toner **Open the Front Cover, then install Toner Cartridge. Black (K)**

Error code 45 (Y)

No Toner **Open the Front Cover, then install Toner Cartridge. Yellow (Y)**

Error code 46 (M)

No Toner **Open the Front Cover, then install Toner Cartridge. Magenta (M)**

Error code 47 (C)

No Toner **Open the Front Cover, then install Toner Cartridge. Cyan (C)**

<User Check>

■ **Error code 48**

Replace Drum (K)

Error code 49

Replace Drum (Y)

Error code 4A

Replace Drum (M)

Error code 4B

Replace Drum (C)

Error code 4C

Drum End Soon (K)

Error code 4D

Drum End Soon (Y)

Error code 4E

Drum End Soon (M)

Error code 4F

Drum End Soon (C)

<User Check>

■ Error code 50

Replace Parts
Drum Unit

Error code 51

Replace Parts
PF Kit MP

Error code 52

Replace Parts
PF Kit 1

Error code 53

Replace Parts
PF Kit 2

Error code 54

Replace Parts
Fuser Unit

Error code 55

Replace Parts
Laser Unit

■ Error code 56

Cover is Open **Close the Fuser Cover which can be found behind the Back Cover of the machine.**

<User Check>

■ Error code 57

(Non Touch panel model) **Jam Duplex** **Pull out Tray 1 completely. Check inside the machine or open the Back Cover to remove the jammed paper.**
(Touch panel model) **Animation is displayed.**

<User Check>

■ Error code 58

Fuser Error
Turn the power off, then on again. Leave the machine for 15 min.

Error code 59

Self-Diagnostic
Will Automatically Restart within 15 minutes.

■ Error code 5A

Print Unable 5A
Turn the power off and then back on again.

<User Check>

■ Error code 5B

Short paper **Open the Back Cover and then press Start.**

Error code 5C

Small paper **Open the Back Cover and then press Start.**

<User Check>

■ Error code 5D

Replace Parts **Belt Unit**

<User Check>

■ Error code 5E

Replace Parts **Belt Unit**

<User Check>

■ Error code 5F

(Non Touch panel model) **WT Box End Soon**
(Touch panel model) **Replace Parts** **WT Box End Soon**

<User Check>

■ **Error code 60 (C)**

(Non Touch panel model) **Replace Toner** **Open the Front Cover, replace Toner Cartridge. Cyan (C)**
(Touch panel model) **Animation is displayed.**

Error code 61 (M)

(Non Touch panel model) **Replace Toner** **Open the Front Cover, replace Toner Cartridge. Magenta (M)**
(Touch panel model) **Animation is displayed.**

Error code 62 (Y)

(Non Touch panel model) **Replace Toner** **Open the Front Cover, replace Toner Cartridge. Yellow (Y)**
(Touch panel model) **Animation is displayed.**

Error code 63 (K)

(Non Touch panel model) **Replace Toner** **Open the Front Cover, replace Toner Cartridge. Black (K)**
(Touch panel model) **Animation is displayed.**

<User Check>

■ **Error code 64 (C)**

Toner Low (C) **Prepare New Cyan (C) Toner Cartridge.**

Error code 65 (M)

Toner Low (M) **Prepare New Magenta (M) Toner Cartridge.**

Error code 66 (Y)

Toner Low (Y) **Prepare New Yellow (Y) Toner Cartridge.**

Error code 67 (K)

Toner Low (K) **Prepare New Black (K) Toner Cartridge.**

<User Check>

■ **Error code 68**

Print Unable 68 **Turn the power off and then back on again.**

Error code 69

Print Unable 69 **Turn the power off and then back on again.**

<User Check>

■ Error code 6A

Print Unable 6A
Turn the power off and then back on again.

Error code 6B

Print Unable 6B
Turn the power off and then back on again.

Error code 6C

Print Unable 6C
Turn the power off and then back on again.

Error code 6D

Print Unable 6D
Turn the power off and then back on again.

■ Error code 6E

Print Unable 6E
Turn the power off and then back on again.

<User Check>

■ Error code 6F

Print Unable 6F
Turn the power off and then back on again.

■ Error code 70

Print Unable 70
Turn the power off and then back on again.

<User Check>

■ Error code 71

Print Unable 71
Turn the power off and then back on again.

Error code 72

Print Unable 72
Turn the power off and then back on again.

Error code 73

Print Unable 73
Turn the power off and then back on again.

<User Check>

■ Error code 74

Replace Toner
Open the Front Cover, replace Toner Cartridge.

<User Check>

■ Error code 75

Cooling Down **Wait for a while**

<User Check>

■ Error code 76

Print Unable 76 **Turn the power off and then back on again.**

Error code 78

Print Unable 78 **Turn the power off and then back on again.**

■ Error code 7A

Print Unable 7A **Turn the power off and then back on again.**

<User Check>

■ Error code 7B

Print Unable 7B **Turn the power off and then back on again.**

■ Error code 7C

Print Unable 7C **Turn the power off and then back on again.**

<User Check>

■ Error code 7D

(Non Touch panel model) **Drum Error** **Slide the Green tab on Drum Unit in each color. Refer to the User's Guide for the procedures.**
(Touch panel model) **Animation is displayed.**

<User Check>

■ Electrodes location of the drum unit and toner cartridge

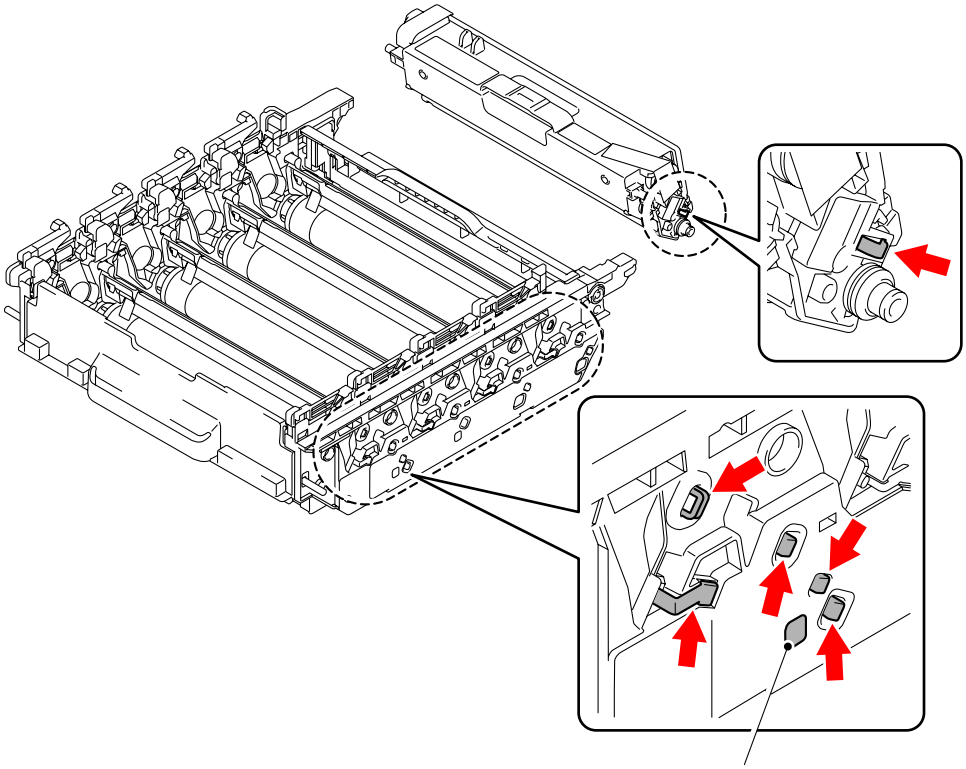

Fig. 2-10

■ Electrodes location of the belt unit

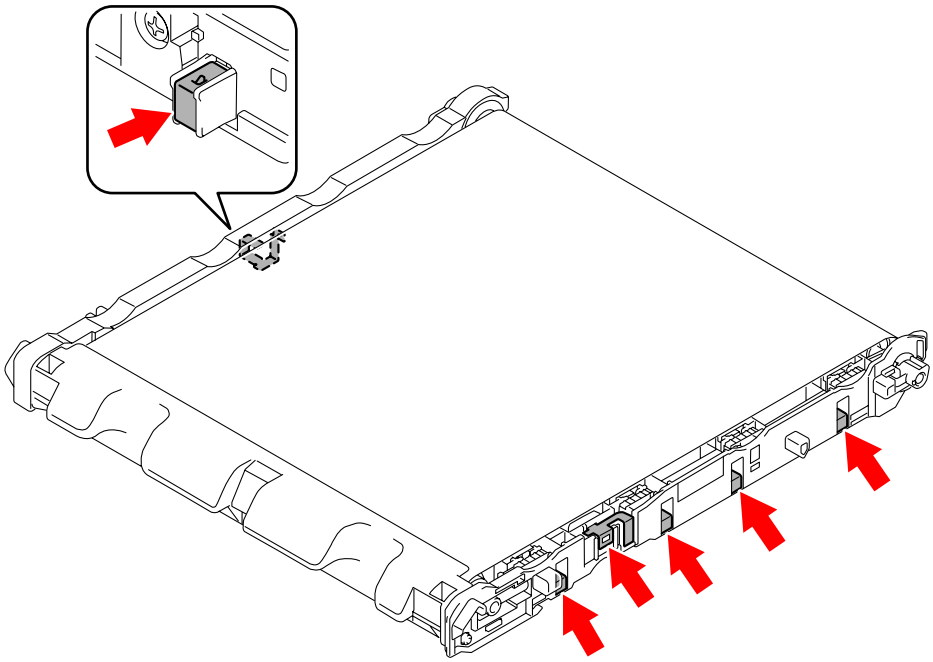

Fig. 2-11

■ Electrodes location of waste toner box

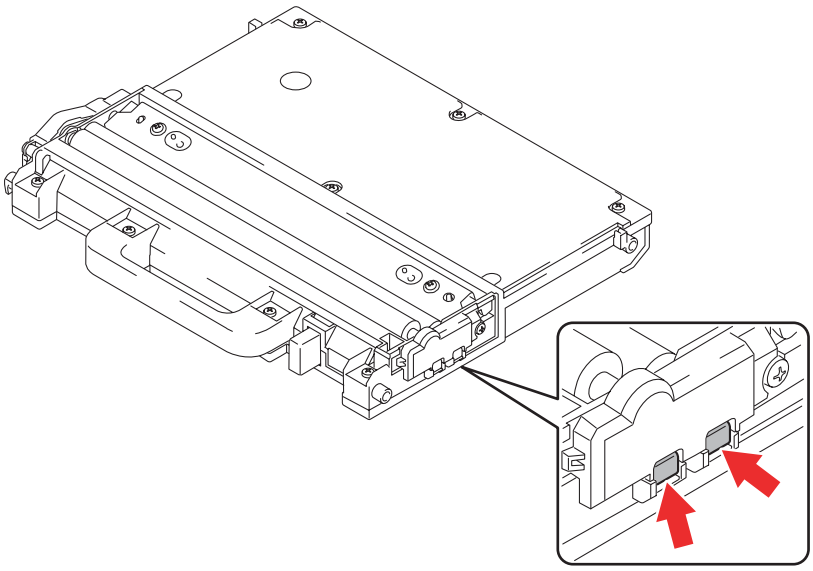

Fig. 2-12

■ Electrodes location of main body

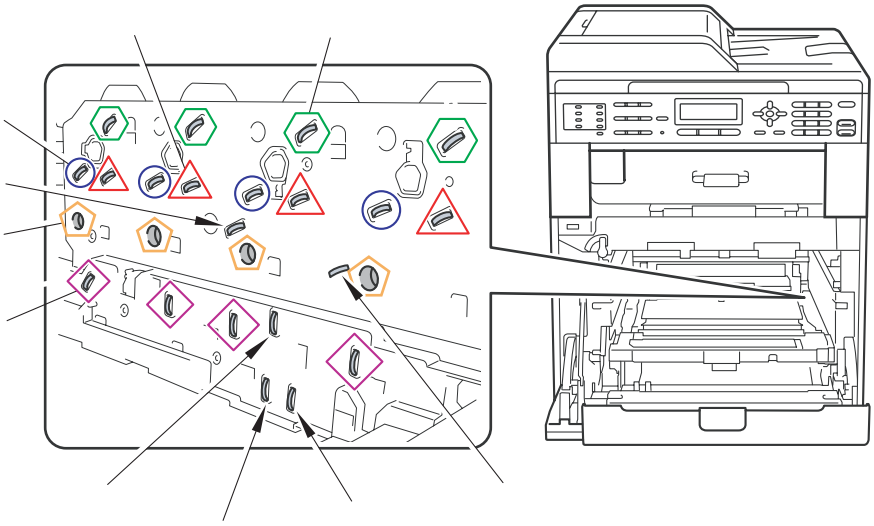

Fig. 2-13

<How to clean the electrodes>

■ Error code 7E

Replace Belt **Open the Front Cover, replace the Belt Unit.**

<User Check>

■ Error code 7F

Size mismatch **FAX received. Set correct paper size in menu.**

<User Check>

■ Error code 80

Size mismatch **Reload correct paper.**

<User Check>

■ Error code 81

(Non Touch panel model) **Calibrate** **Calibration failed. See Troubleshooting chapter in User's Guide.**
(Touch panel model) **Calibration failed** **Calibration failed. See Troubleshooting chapter in User's Guide.**

Error code 82

(Non Touch panel model) **Calibrate** **Calibration failed. Press Start, and try again.**
(Touch panel model) **Calibration failed** **Calibration failed. Press Start, and try again.**

<User Check>

■ Error code 83

Drum Stop **Replace the Drum Unit. Refer to the instructions in the carton of new drum.**

<User Check>

■ Error code 84

(Non Touch panel model) **Jam Rear** **Open the Back Cover and remove the jammed paper.**
(Touch panel model) **Animation is displayed.**

<User Check>

■ Error code 85

(Non Touch panel model) **No Tray** **A Tray is not detected, install #1.**
(Touch panel model) **No Tray** **The paper tray cannot be detected, re-install Tray#1.**

<User Check>

■ Error code 86

(Non Touch panel model) **No Tray** **A Tray is not detected, install #2.**
(Touch panel model) **No Tray** **The paper tray cannot be detected, re-install Tray#2.**

<User Check>

■ Error code 87

(Non Touch panel model) **Calibrate** **Calibration failed. Insufficient Toner for Calibration.**
(Touch panel model) **Calibration failed** **Calibration failed. Insufficient Toner for Calibration.**

<User Check>

■ Error code 88

(Non Touch panel model) **Jam Inside** **Open the Front Cover, pull out the Drum Unit completely and remove the jammed paper.**
(Touch panel model) **Animation is displayed.**

<User Check>

■ Error code 89

Size Error DX **Specify the correct paper and press Start.**

<User Check>

■ Error code 8A

(Non Touch panel model) **Jam Tray 1** **Remove the jammed paper from Tray 1.**
(Touch panel model) **Animation is displayed.**

<User Check>

■ Error code 8B

(Non Touch panel model) **Jam Tray 2** **Remove the jammed paper from Tray 2.**
(Touch panel model) **Animation is displayed.**

<User Check>

■ Error code 8C

(Non Touch panel model) **Jam MP Tray** **Remove the jammed paper from Multi Purpose Tray and press Start.**
(Touch panel model) **Animation is displayed.**

<User Check>

■ Error code 8D

Cover is Open **Make sure there is no paper jammed inside the machine and close the Back Cover, then press Start.**

<User Check>

■ Error code 8E

(Non Touch panel model) **Registration** **Registration failed. Press Start, and try again.**
(Touch panel model) **Registration failed** **Registration failed. Press Start, and try again.**

<User Check>

■ Error code 8F

Registration **Registration failed. See Troubleshooting chapter in User's Guide.**

<User Check>

■ **Error code 90**

Size Mismatch **Reload correct paper.**

Error code 91

Size Mismatch **Reload correct paper.**

Error code 92

Size Mismatch **Reload correct paper.**

Error code 93

No Paper **Reload paper in MP Tray.**

Error code 94

No Paper **Reload paper in Tray 1.**

Error code 95

No Paper **Reload paper in Tray 2.**

Error code 96

No Paper **Load <size> paper in Tray.**

<User Check>

■ **Error code 97**

Size mismatch **Reload correct paper.**

Error code 98

Size mismatch **Reload correct paper.**

Error code 99

Size mismatch DX **Press Job Cancel. Specify the correct paper and load the same size paper as the machine driver setting.**

Error code 9A

Manual Feed **Load Paper**

<User Check>

■ Error code 9D

(Non Touch panel model) **Registration** **Registration failed. See Troubleshooting chapter in User's Guide.**
(Touch panel model) **Registration failed** **Registration failed. See Troubleshooting chapter in User's Guide.**

<User Check>

■ Error code 9E

(Non Touch panel model) **Registration** **Registration failed. Insufficient Toner for Registration.**
(Touch panel model) **Registration failed** **Registration failed. Insufficient Toner for Registration.**

<User Check>

■ Error code 9F

■ Error code A0

Scan Unable
Remove the original document. Turn the power off, then on again.

■ Error code A1

Cover is Open **Close the Front Cover.**

<User Check>

■ Error code A2

(Non Touch panel model) **Document Jam** **Clear the scanner jam, then press the Stop Key.**
(Touch panel model) **Animation is displayed.**

<User Check>

■ Error code A3

(Non Touch panel model) **Document Jam** **Clear the scanner jam, then press the Stop Key.**
(Touch panel model) **Animation is displayed.**

<User Check>

■ Error code A4

Cover is Open **Close the ADF Cover, then press the Stop Key.**

<User Check>

■ Error code A5

Scan Unable
Remove the original document. Turn the power off, then on again.

<User Check>

■ Error code A6

Scan Unable A6
See Troubleshooting and routine maintenance chapter in User's Guide.

■ Error code A7

Scan Unable A7
See Troubleshooting and routine maintenance chapter in User's Guide.

Error code A8

Scan Unable A8
See Troubleshooting and routine maintenance chapter in User's Guide.

■ Error code A9

Scan Unable A9

■ Error code AA

<User Check>

■ Error code AB

Scanner Error

<User Check>

■ Error code AC

Scan Unable
Remove the original document. Turn the power off, then on again.

■ Error code AD

Scan Unable
Remove the original document. Turn the power off, then on again.

■ Error code AE

Scanner Locked
Open the Document Cover and release scanner lock lever. Press Stop key.

<User Check>

■ Error code AF

Scanner Unable AF
See Troubleshooting and routine maintenance chapter in User's Guide.

■ Error code B0

Scanner Error

■ **Error code B1**

Scanner Error

Error code B2

Scanner Error

Error code B3

Scanner Error

Error code B4

Scanner Error

■ **Error code B5**

Scanner Error

Error code B6

Scanner Error

<User Check>

■ Error code B7

Scanner Error

Error code B8

Scanner Error

■ Error code B9

Scanner Error

■ Error code BA

Scanner Error

<User Check>

■ Error code BB

Scanner Error

■ Error code BC

Scanner Unable BC **See Troubleshooting and routine maintenance chapter in User's Guide.**

■ Error code BD

Scanner Error

■ Error code BE

Scanner Error

<User Check>

■ Error code BF

Scan Unable
Document is too long for duplex scanning. Press Stop Key.

<User Check>

■ Error code C0 (K)

Cartridge Error
Put the Black (K) Toner Cartridge back in.

Error code C1 (Y)

Cartridge Error
Put the Yellow (Y) Toner Cartridge back in.

Error code C2 (M)

Cartridge Error
Put the Magenta (M) Toner Cartridge back in.

Error code C3 (C)

Cartridge Error
Put the Cyan (C) Toner Cartridge back in.

<User Check>

■ Error code C4

Tray 2 Error **Take out Tray 2 and push it back in firmly.**

<User Check>

■ Error code C5

<User Check>

■ Error code C6

Toner Error **One or more Toner Cartridges are not detected. Pull out and reinsert all 4 Toner Cartridges.**

<User Check>

■ Error code C7

Out of Memory **Press job cancel.**

<User Check>

■ Error code C8

Out of Memory **Secure Print Data is full. Press Cancel and delete the previously stored data.**

<User Check>

■ Error code C9

DIMM Error

<User Check>

■ Error code CA

Unusable Device **Remove the Device. Turn the power off and back on again.**

<User Check>

■ Error code CB

No Belt Unit **Open the Front Cover, pull out the Drum Unit completely and install the Belt Unit.**

<User Check>

■ Error code CC

No Fuser Unit **Install the Fuser Unit.**

<User Check>

■ Error code CD

No Drum Unit **Install the Drum unit.**

<User Check>

■ Error code CE

No Waste Toner **Install the Waste Toner Box. Refer to the User's Guide for instructions.**

<User Check>

■ Error code CF

(Non Touch panel model) **Replace WT Box** **Replace the Waste Toner Box. Refer to the User's Guide for instructions.**
(Touch panel model) **Animation is displayed.**

<User Check>

■ Error code D0

■ Error code D1

Print Unable D1
See Troubleshooting and routine maintenance chapter in User's Guide.

<User Check>

■ Error code D2-DC

Machine Error **(D2-DC)

<User Check>

■ Error code DE

Print Unable DE
Turn the power off and then back on again.

■ Error code DF

Machine Error
Unplug machine, then call Brother.

<User Check>

■ Error code E0

Print Unable E0
Turn the power off and then back on again.

■ Error code E1

Print Unable E1
Turn the power off and then back on again.

■ Error code E2

Print Unable E2
Turn the power off and then back on again.

■ Error code E3

Print Unable E3
Turn the power off and then back on again.

■ Error code E4

<User Check>

■ Error code E6

Print Unable E6 **Turn the power off and then back on again.**

■ Error code E7

<User Check>

■ Error code E8

<User Check>

■ Error code E9

Print Unable E9 **Turn the power off and then back on again.**

■ Error code EA

<User Check>

■ Error code EB

Print Unable EB
Turn the power off and then back on again.

■ Error code EC

Print Unable EC
Turn the power off and then back on again.

■ Error code ED

Print Unable ED
Turn the power off and then back on again.

■ Error code EE

Print Unable EE
Turn the power off and then back on again.

Unavailability of communication after connecting to the wireless LAN PCB is detected.
(Wireless LAN model only)

Step	Cause	Remedy
1	Harness connection failure of wireless LAN PCB	Check the harness connection of the wireless LAN PCB and reconnect it.
2	Wireless LAN PCB failure	Replace the wireless LAN PCB.
3	Main PCB failure	Replace the main PCB ASSY.

■ Error code EF

Print Unable EF
Turn the power off and then back on again.

The supplied power is unstable.

<User Check>

- Turn OFF the power switch, and turn it ON again after a while.

Step	Cause	Remedy
1	The irregular power supply is detected	Replace the low-voltage power supply PCB ASSY. Reset the irregular power supply detection counter following the procedure described in "5. IF THE MACHINE ERROR EF IS DETECTED AND THE LOW-VOLTAGE POWER SUPPLY PCB ASSY IS REPLACED" in Chapter 4.
2	Main PCB failure	Replace the main PCB ASSY.

Note:
The irregular power supply detection error (Machine Error EF) occurs when there is a large distortion of the power supply voltage supplied to the machine.
In this case, if the same power supply is used, the same error might occur again even if the low-voltage power supply PCB ASSY is replaced. For this reason, be sure to ask the user to rearrange the installation environment.

■ Error code F0

Print Unable **Turn the power off and then back on again.**

<User Check>

■ Error code F1

<User Check>

■ Error code F2

(Non Touch panel model) **WT Box End Soon**
(Touch panel model) **Replace Parts** **Waste Toner Box**

<User Check>

■ Error code F3

Error code F4

High Temperature
Decrease room temperature and humidity to allow the machine to operate.

Error code F5

Error code F6

Error code F8

<User Check>

■ Error code F9

Machine Error F9

■ Error code FA (K)

No Toner **Open the Front Cover, then install Toner Cartridge.**

Error code FB (C)

No Toner **Open the Front Cover, then install Toner Cartridge.**

Error code FC (M)

No Toner **Open the Front Cover, then install Toner Cartridge.**

Error code FD (Y)

No Toner **Open the Front Cover, then install Toner Cartridge.**

<User Check>

■ Error code FE

Calibrate **Calibration failed. Press Start, and try again.**

<User Check>

■ Error code FF

Unusable Device **Remove the Device. Turn the power off and back on again.**

<User Check>

3.5 Paper Feeding Problems

3.5.1 No feeding

■ **Paper fails to be supplied from the paper tray 1 (Error code 27, etc)**

<User Check>

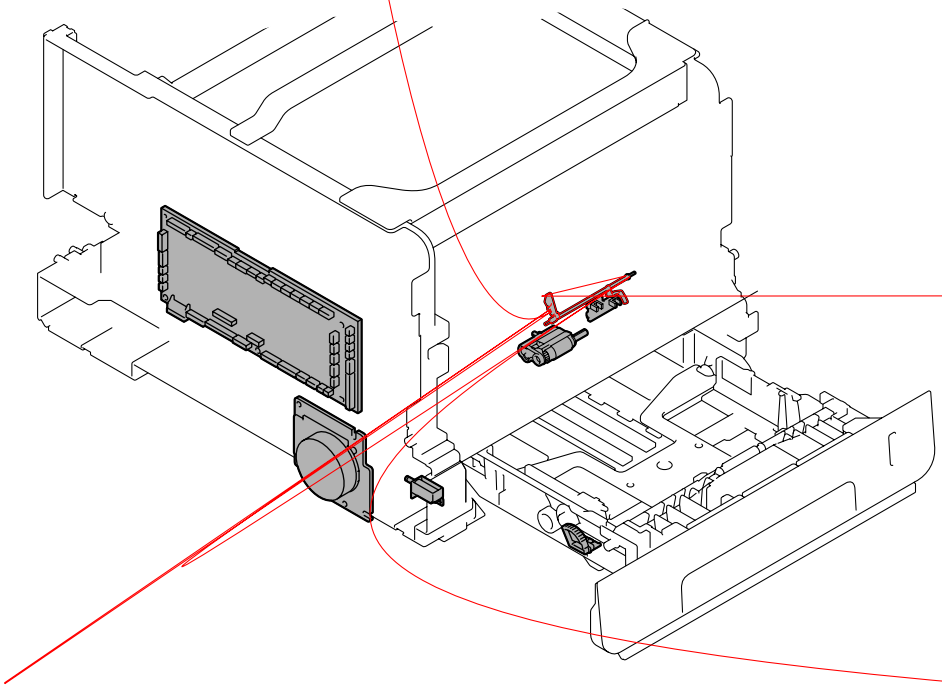

Fig. 2-14

■ **Paper fails to be supplied from the paper tray 2 (Error code 27, etc)**

<User Check>

■ **Paper fails to be supplied from the MP tray (Error code 27, etc)**

3.5.2 Double feeding

<User Check>

3.5.3 Paper jam

■ **Paper jam at the paper tray 1 (Error code 8A)**

<User Check>

■ Paper jam at the paper tray 2 (Error code 8B, etc)

<User Check>

■ Paper jam at the MP tray (Error code 8C)

<User Check>

■ Paper jam around the belt unit (Error code 88, etc.)

<User Check>

■ **Paper jam in the back cover and paper eject section (Error code 84, etc.)**

■ **Paper jam during duplex printing (Error code 57, etc.)**

<User Check>

3.5.4 Dirt on paper

<User Check>

3.5.5 Wrinkles on paper

<User Check>

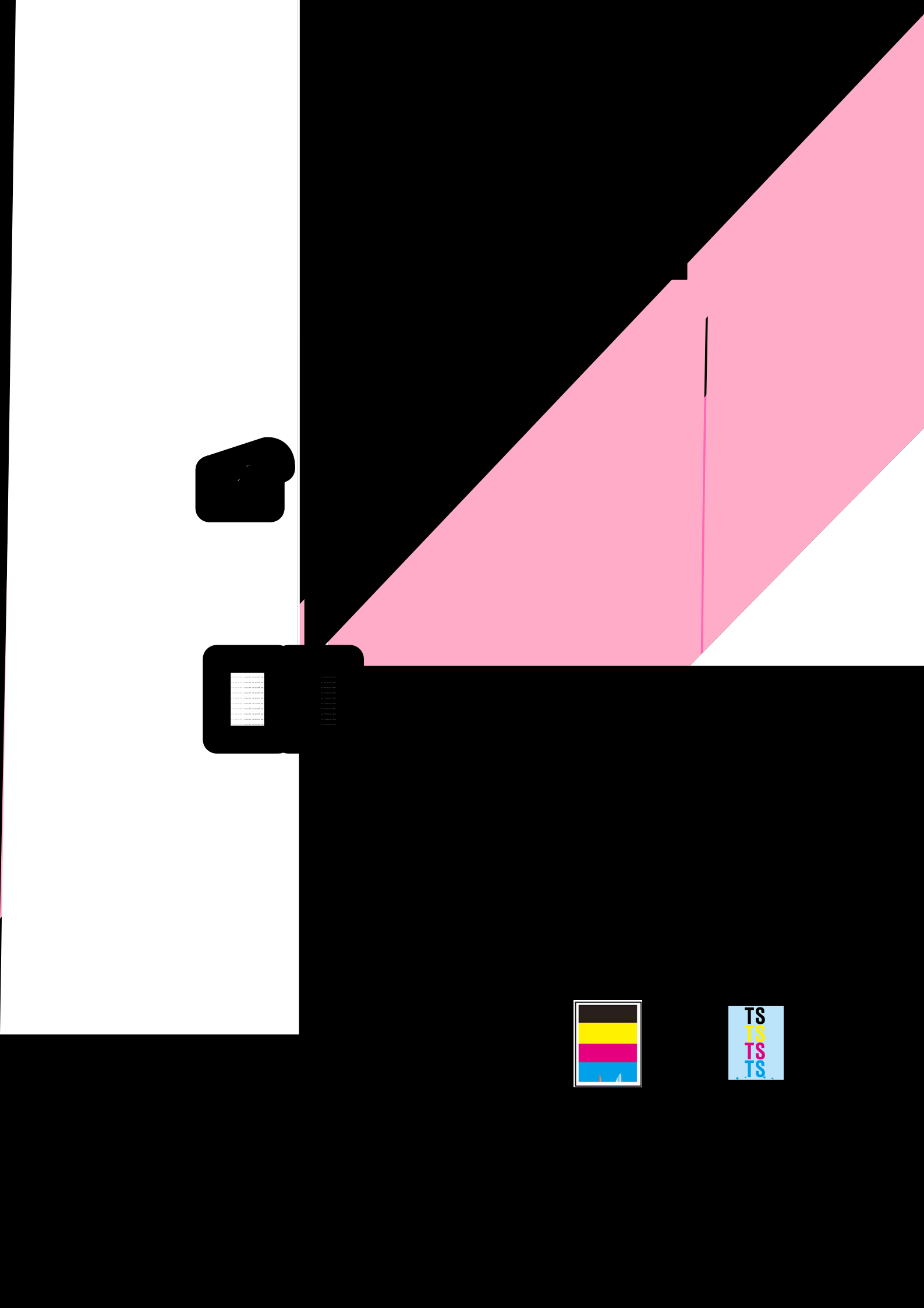

3.6.2 Pitch indicated in roller image

3.6.3 Troubleshooting image defect

■ **Light on the whole page**

<User Check>

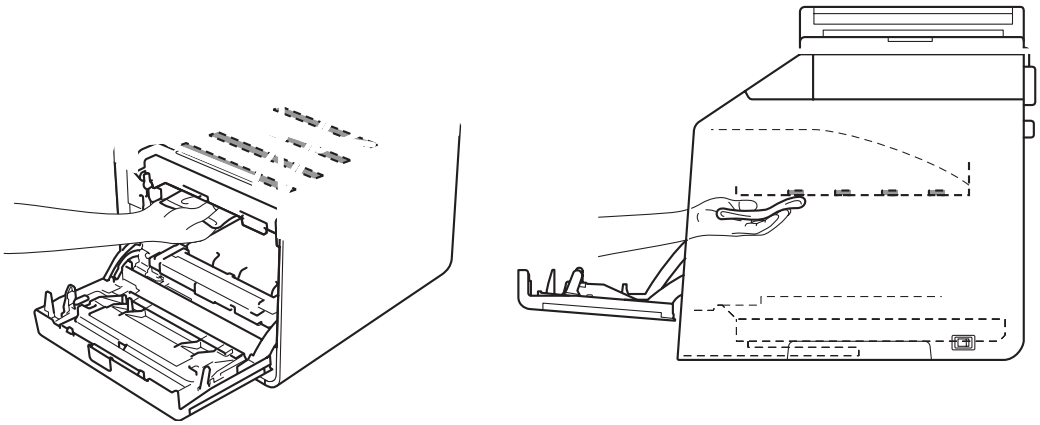

Fig. 2-16

■ **One color is light**

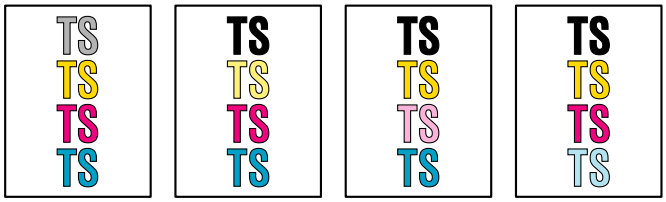

<User Check>

■ Faulty registration

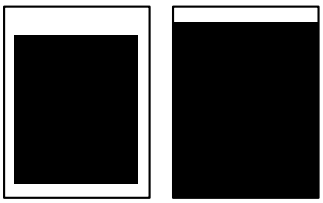

Step	Cause	Remedy
1	Registration rear actuator catching on some position	Correct catching of the registration rear actuator.
2	Engine PCB failure	Replace the engine PCB ASSY.

■ Dark

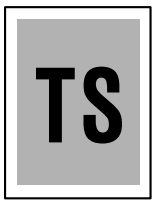

<User Check>

- Check the machine's environment. High temperature and high humidity or low temperature and low humidity conditions can cause this problem.
- Clean the corona wire.
- Replace the toner cartridge or drum unit with a new one.
- Adjust the color density from the control panel.

Step	Cause	Remedy
1	Corona wire conduction failure	Clean the electrodes of the drum unit and main body. (Refer to Fig. 2-10 (P2-62) and Fig. 2-13 (P2-63))
2	Dirt on belt unit electrode	Clean the electrodes of the belt unit and main body. (Refer to Fig. 2-11 (P2-62) and Fig. 2-13 (P2-63))
3	High-voltage power supply PCB failure	Replace the high-voltage power supply PCB ASSY.
4	Engine PCB failure	Replace the engine PCB ASSY.
5	Main PCB failure	Replace the main PCB ASSY.
6	Laser unit failure	Replace the laser unit.
7	Registration mark sensor PCB failure	Replace the registration mark sensor holder ASSY.
8	Toner/New sensor PCB failure	Replace the Toner/New sensor PCB ASSY.

■ Poor fixing

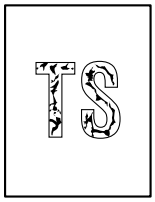

<User Check>

Memo

■ Completely blank

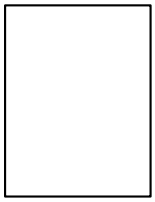

<User Check>

■ Image distortion

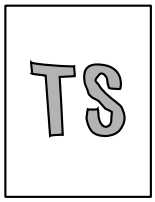

<User Check>

■ All one color

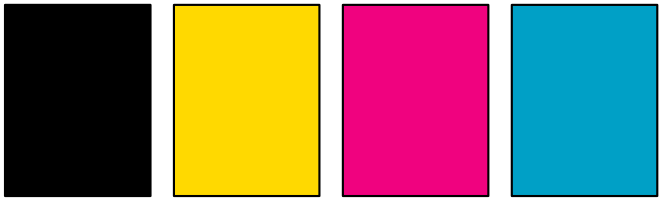

<User Check>

Memo

■ Dirt on back side of paper

<User Check>

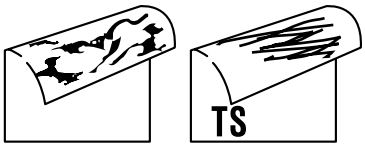

■ Vertical streaks

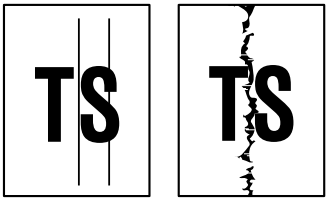

<User Check>

Memo

Note:

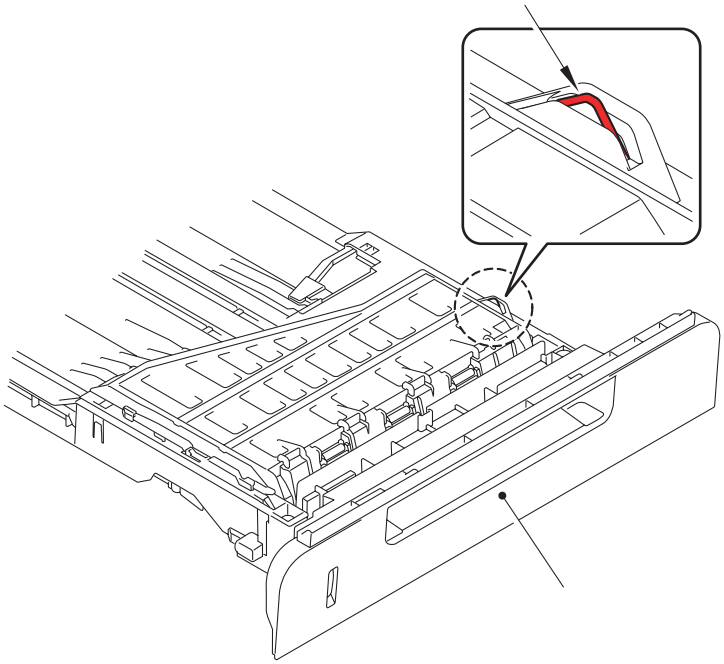

Fig. 2-17

■ Horizontal stripes

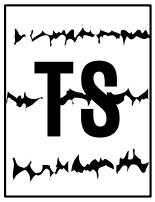

<User Check>

■ White vertical streaks on one color image

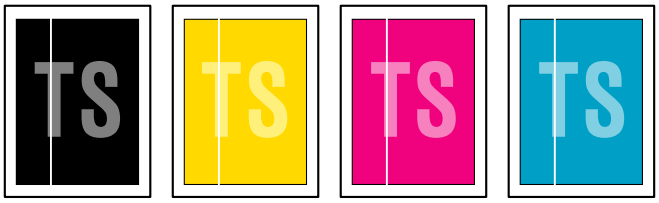

<User Check>

■ White horizontal stripes on one color image

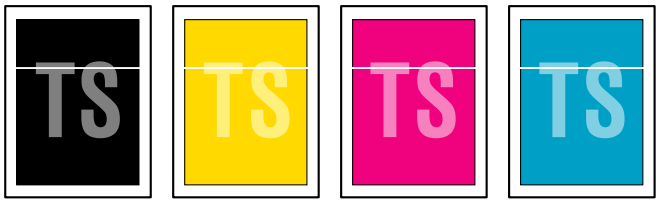

<User Check>

■ Faint print

<User Check>

■ White spots on one color image

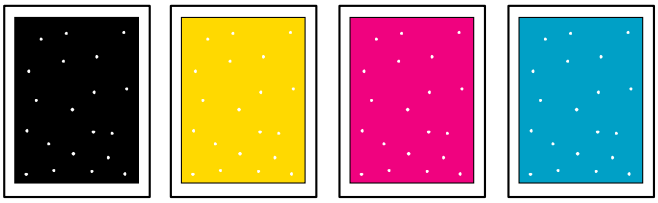

<User Check>

■ Pinch roller cleaning procedure

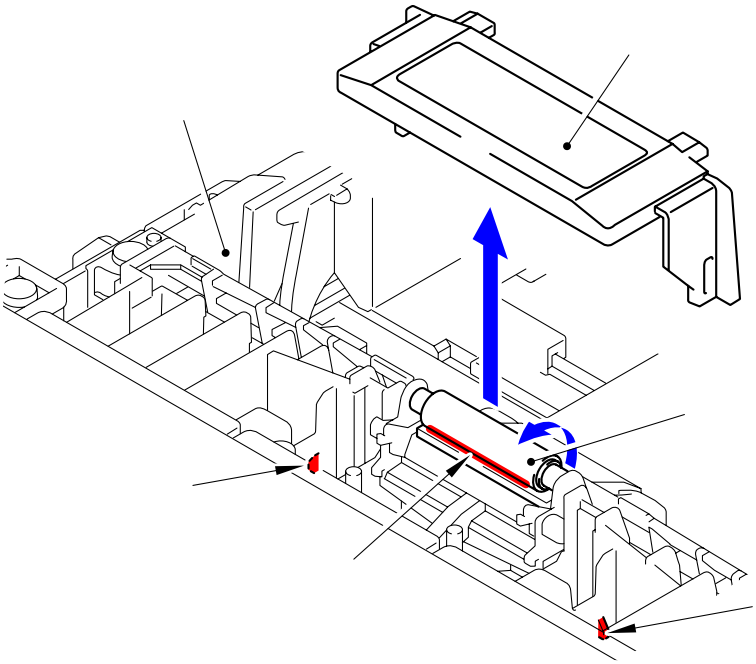

Fig. 2-18

■ One color spots or dirt

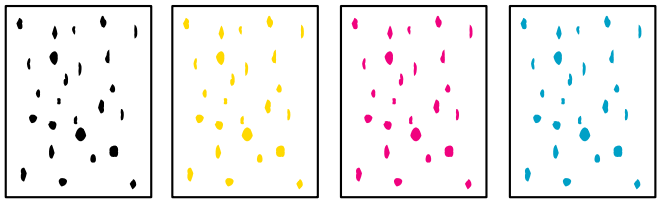

<User Check>

■ One color band

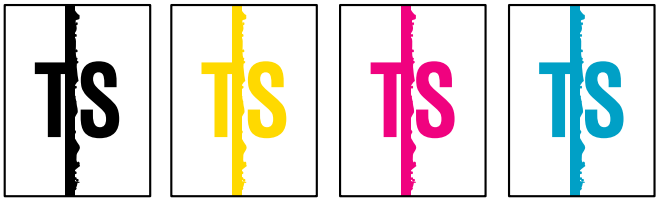

<User Check>

■ Downward fogging of solid color

<User Check>

■ Horizontal lines

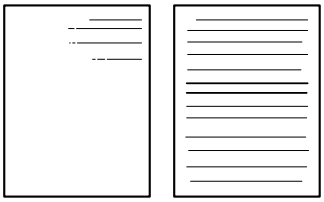

<User Check>

■ Ghost

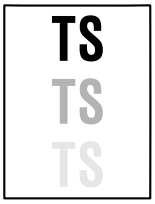

<User Check>

■ Inter-color position alignment

<User Check>

■ Fogging

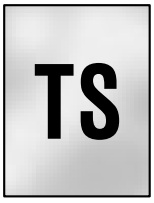

<User Check>

Note:

■ Unstable color density

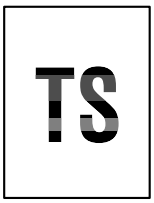

<User Check>

■ Hollow print

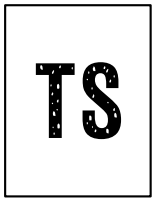

<User Check>

■ Print crease

<User Check>

■ Spots at the rear edge of paper

<User Check>

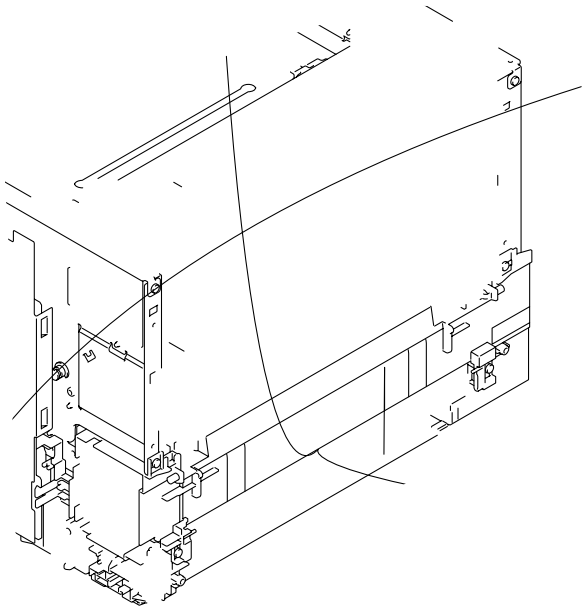

Fig. 2-19

3.7 Software Setting Problems

3.7.1 Cannot print data

<User Check>

3.8 Network Problems

3.8.1 Cannot make a print through network connection (Error code ED, EE)

<User Check>

3.9 Document Feeding Problems

3.9.1 No feeding

<User Check>

3.9.2 Double feeding

<User Check>

3.9.3 Paper jam

■ **Paper jam in the ADF cover (Error code A3, etc)**

<User Check>

■ **Paper jam in the ADF (Error code A2, etc)**

<User Check>

■ **Paper jam in the paper eject section**

3.9.4 Wrinkles

<User Check>

3.10 Scanning Image Defect Troubleshooting

3.10.1 Image defect examples

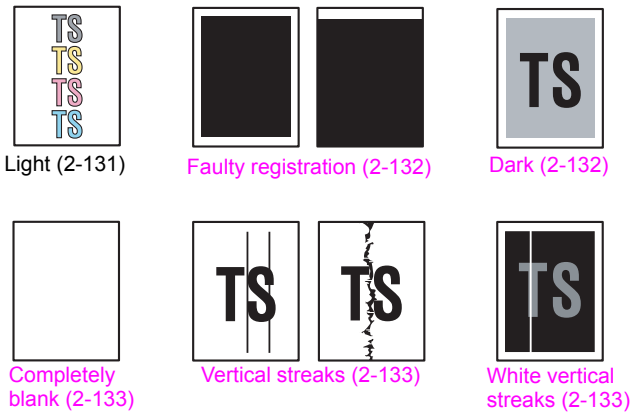

Fig. 2-20

3.10.2 Troubleshooting image defect

■ Light on the page (Error code BB, BC, etc)

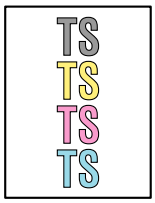

<User Check>

- Check whether the setting of the contrast does not become light.
- Clean the document table glass or ADF glass.
- Clean the CIS glass of the ADF.

Step	Cause	Remedy
1	White level data failure	Perform the acquisition of white level data. (Function code 55)
2	Document scanner unit (First side) failure	Replace the document scanner unit (First side).
3	Second side scanning CIS failure	Replace the second side scanning CIS.
4	Main PCB failure	Replace the main PCB ASSY.

■ Faulty registration (Error code B3, B4, BE, BF, etc)

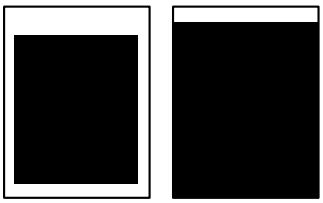

<User Check>

- Check that the position of the document on the flatbed is correct.

- ADF

Step	Cause	Remedy
1	Fine adjustment of scan start position misalignment	Perform the fine adjustment of scan start position. (Function code 54)
2	Document first side rear actuator catching on some position	Correct catching of the document first side rear actuator.
3	Document second side rear actuator catching on some position	Correct catching of the document second side rear actuator.
4	Fine adjustment of print start position misalignment	Perform the fine adjustment of print start position. (Function code 45) (Adjustment upon second side print only.)

- Document table

Step	Cause	Remedy
1	Fine adjustment of scan start position misalignment	Perform the fine adjustment of scan start position. (Function code 54)
2	Document scanner unit failure	Replace the document scanner unit.

■ Dark (Error code BB, BC, etc)

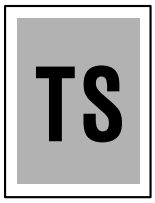

<User Check>

- Check whether the setting of the contrast does not become dark.
- Check whether the document hold of the ADF is not dirty. If it is dirty clean it.

Step	Cause	Remedy
1	Coming off of the shading film in the ADF unit (Second side only)	Re-assemble the shading film in the ADF unit.
2	White level data failure	Perform the acquisition of white level data. (Function code 55)
3	CIS unit failure	Replace the document scanner unit.
4	Second side scanning CIS failure	Replace the second side scanning CIS.
5	Main PCB failure	Replace the main PCB ASSY.

■ Completely blank

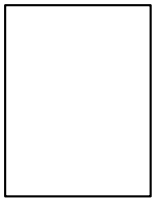

<User Check>

■ Vertical streaks

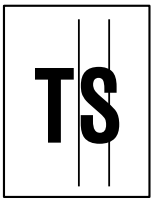

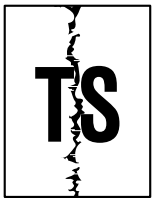

<User Check>

■ White vertical streaks

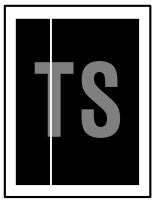

<User Check>

3.11 Troubleshooting of the Control Panel

3.11.1 Nothing is displayed on the LCD

<User Check>

- Verify if the power switch is turned off.
- Check if the machine is in the Deep Sleep mode. (Touch panel model)

Step	Cause	Remedy
1	AC cord failure	Replace the AC cord.
2	Connection between main PCB and panel PCB	Connect the connector between the main PCB ASSY and panel PCB ASSY correctly.
3	Connection between main PCB and low-voltage power supply PCB	Connect the connector between the main PCB ASSY and low-voltage power supply PCB ASSY correctly.
4	Inlet Harness ASSY failure	Replace the inlet harness ASSY.
5	LCD or LCD unit failure	Replace the LCD or LCD unit.
6	Panel PCB failure	Replace the panel PCB ASSY.
7	High-voltage power supply PCB failure	Replace the high-voltage power supply PCB ASSY.
8	Low-voltage power supply PCB failure	Replace the low-voltage power supply PCB ASSY.
9	Main PCB failure	Replace the main PCB ASSY.

3.11.2 The control panel does not work

<User Check>

- Check whether the function lock is not set.
- Turn OFF and ON the power switch.

Step	Cause	Remedy
1	Assembling failure of the panel unit	Re-assemble the panel unit.
2	Connection between main PCB and panel PCB	Connect the connector between the main PCB ASSY and panel PCB ASSY correctly.
3	Rubber key failure	Replace with the normal rubber key.
4	Fine adjustment of touch panel misalignment (for models with a touch panel)	Perform the fine adjustment of touch panel. (Function code 61)
5	Panel PCB failure	Replace the panel PCB ASSY.
6	Main PCB failure	Replace the main PCB ASSY.

3.11.3 Lamp malfunction

3.11.4 The touch panel does not work (Touch panel model only)

3.12 Troubleshooting of FAX Functions

3.12.1 FAX can't send it

<User Check>

3.12.2 Speed dialing and One-touch dialing can't be used

<User Check>

3.12.3 FAX cannot be received.

<User Check>

3.12.4 No bell ring

<User Check>

3.12.5 Speaker is silent during On-hook dialing

3.12.6 Dialing function does not switch between “Tone” and “Pulse”

3.12.7 A communication error occurs

3.12.8 Reception mode cannot be changed

3.12.9 Caller ID are not displayed

3.13 Others Problems

3.13.1 The machine is not turned ON, or the LCD indication does not appear

Step	Cause	Remedy
1	AC cord failure	Replace the AC cord.
2	Harness connection failure of panel PCB ASSY	Reconnect the panel PCB ASSY harness.
3	Harness connection failure of LCD	Reconnect the LCD harness.
4	LCD failure	Replace the LCD unit.
5	Inlet Harness ASSY failure	Replace the inlet harness ASSY.
6	Low-voltage power supply PCB failure	Replace the low-voltage power supply PCB ASSY.
7	Panel PCB failure	Replace the panel PCB ASSY.
8	Engine PCB failure	Replace the engine PCB ASSY.
9	High-voltage power supply PCB failure	Replace the high-voltage power supply PCB ASSY.
10	Main PCB failure	Replace the main PCB ASSY.

3.13.2 The fan does not work (Error code 2B, EC)

Step	Cause	Remedy
1	Harness connection failure of the appropriate fan	Reconnect the harness of the appropriate fan correctly.
2	Failure of the appropriate fan	Replace the appropriate fan.
3	Engine PCB failure	Replace the engine PCB ASSY.
4	High-voltage power supply PCB failure	Replace the high-voltage power supply PCB ASSY.
5	Low-voltage power supply PCB failure	Replace the low-voltage power supply PCB ASSY.
6	Main PCB failure	Replace the main PCB ASSY.

3.13.3 The USB direct interface does not work (Error code CA, etc)

<User Check>

3.13.4 The room temperature is high or low

<User Check>

3.13.5 Paper is not fed from the specified tray

<User Check>

CHAPTER 3
DISASSEMBLY AND ASSEMBLY

CHAPTER 3
DISASSEMBLY AND ASSEMBLY

This chapter describes procedures for disassembling and assembling the machine with relates notes. The provided disassembly order flow enables you to take in the quickest way to get an involved part at a glance.
At the start of disassembling, you can check the disassembly order flow which guides you through a shortcut to get to the part.
This chapter also covers screw tightening torques and lubrication points where the specified lubrication should be applied when the machine is assembled.

CONTENTS

1. SAFETY PRECAUTIONS

To avoid creating secondary problems by mishandling, follow the warnings and precautions below during maintenance work.

WARNING

Some parts inside the machine are extremely hot immediately after the machine is used. When opening the front cover or back cover to access any parts inside the machine, never touch the shaded parts shown in the following figures.

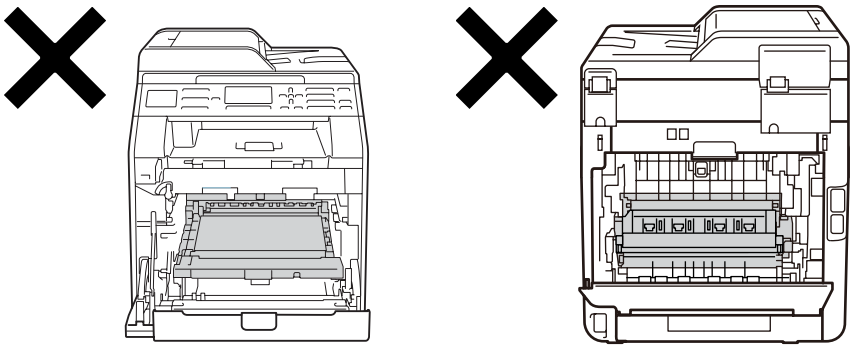

Caution:

- Be careful not to lose screws, washers, or other parts removed.
- Be sure to apply grease to the gears and applicable positions specified in this chapter.
- When using soldering irons or other heat-generating tools, take care not to accidentally damage parts such as wires, PCBs and covers.
- Static electricity charged in your body may damage electronic parts. When transporting PCBs, be sure to wrap them in conductive sheets.
- When replacing the PCB and all the other related parts, put on a grounding wrist band and perform the job on a static mat. Also take care not to touch the conductor sections on the flat cables or on the wire harness.
- After disconnecting flat cables, check that each cable is not damaged at its end or shortcircuited.
- When connecting flat cables, do not insert them at an angle. After insertion, check that the cable are not at an angle.
- When connecting or disconnecting cable connectors, hold the connector body, not the cables. If the connector has a lock, release the connector lock first to release it.
- After a repair, check not only the repaired portion but also all connectors. Also check that other related portions are functioning properly before operational checks.
- Violently closing the front cover without mounting the toner cartridge and the drum unit can damage this product.
- After assembling is finished, it is recommended to perform the dielectric voltage withstand test and conductivity test.

2. PACKING

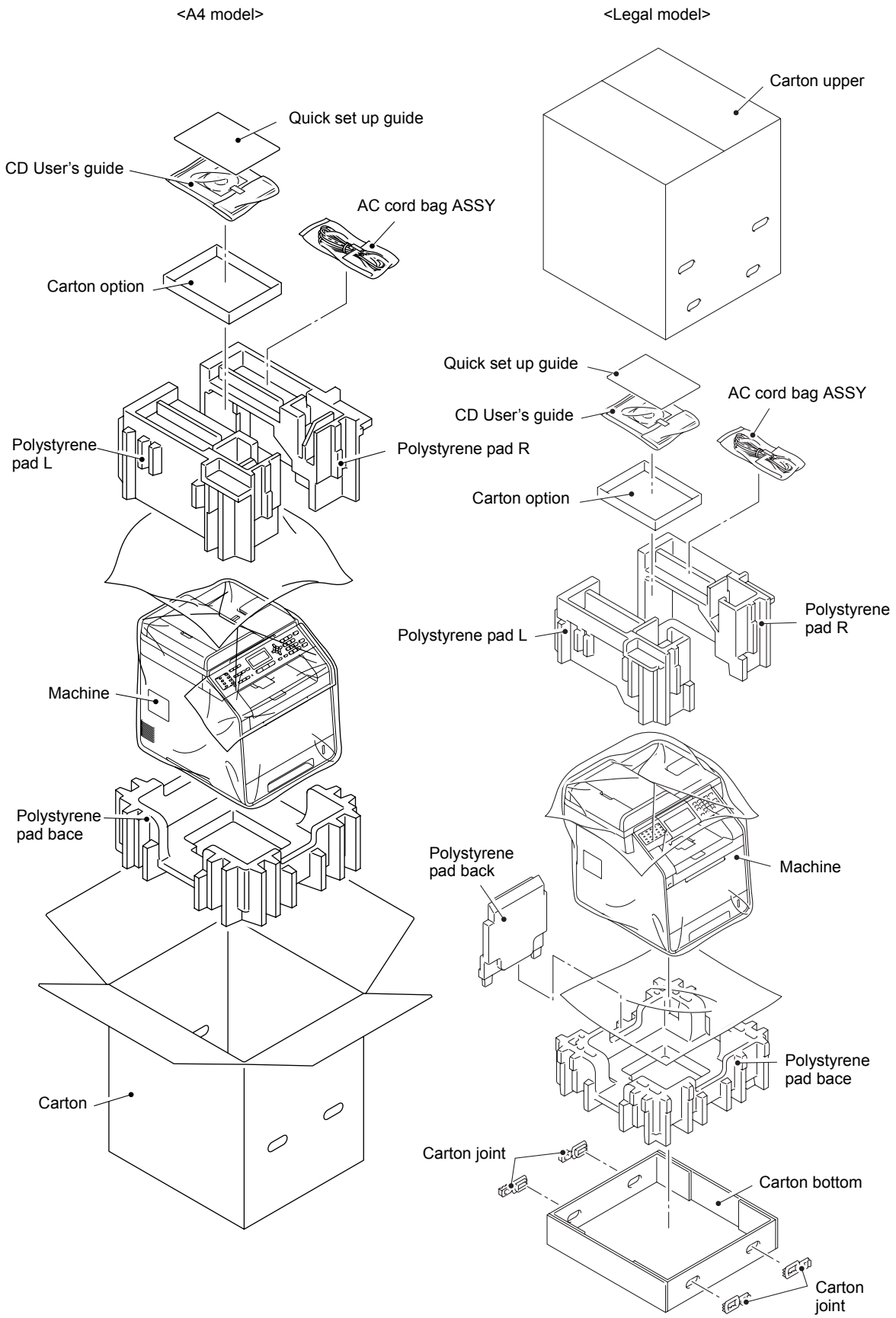
<A4 model>
<Legal model>
Quick set up guide
CD User's guide
AC cord bag ASSY
Carton option
Polystyrene pad L
Polystyrene pad R
Machine
Polystyrene pad bace
Carton
Carton upper
Quick set up guide
CD User's guide
AC cord bag ASSY
Carton option
Polystyrene pad L
Polystyrene pad R
Polystyrene pad back
Machine
Polystyrene pad bace
Carton joint
Carton bottom
Carton joint

3. SCREW CATALOGUE

Taptite bind B

Taptite bind B M3x8	
Taptite bind B M3x10	
Taptite bind B M3x12	
Taptite bind B M4x12	

Taptite bind S

Taptite bind S M3x6	
Taptite bind S M3x8	

Taptite cup B

Taptite cup B M3x8	
Taptite cup B M3x10	

Taptite cup S

Taptite cup S M3x12	
Taptite cup S M3x6 SR	
Taptite cup S M3x6	
Taptite cup S M3x8	

Taptite flat B

Taptite flat B M3x10	

Screw bind

Screw bind M3x4	

Shoulder screw

Shoulder screw	

Taptite pan

Taptite pan B M4x14	

Screw flanged

Screw flanged M3x3.5	

Screw pan (S/P washer)

Screw pan (S/P washer) M3x6	
Screw pan (S/P washer) M3.5x6	
Screw pan (S/P washer) M4x8	
Screw pan (S/P washer) M4x8 DB	

Taptite pan (washer)

Taptite pan (washer) B M4x12 DA	

Screw cup

Screw cup M3x6	

4. SCREW TORQUE LIST

Note:
For verifying the shape of each screw, refer to "3. SCREW CATALOGUE" in this chapter.

Location of screw	Screw type	Q' ty	Tightening torque N•m(kgf•cm)
Fuser cover L	Taptite bind S M3x8	1	0.70±0.10 (7±1)
Fuser cover R	Taptite bind S M3x8	1	0.70±0.10 (7±1)
Fuser unit	Taptite pan B M4x14	2	0.80±0.10 (8±1)
Side cover L	Taptite bind S M3x8	3	0.70±0.10 (7±1)
	Taptite bind B M4x12	1	0.90±0.10 (9±1)
Side cover L Upper	Taptite bind B M4x12	2	0.80±0.10 (8±1)
Side cover R ASSY	Taptite bind S M3x8	3	0.70±0.10 (7±1)
	Taptite bind B M4x12	1	0.90±0.10 (9±1)
Side cover R Upper	Taptite bind B M4x12	2	0.80±0.10 (8±1)
Duplex feed ASSY	Taptite cup B M3x12	2	0.40±0.05 (4±0.5)
Front cover arm L	Taptite bind B M4x12	1	0.70±0.10 (7±1)
Front cover arm R	Taptite bind B M4x12	1	0.70±0.10 (7±1)
Main shield cover plate ASSY	Taptite cup S M3x6 SR	7	0.70±0.10 (7±1)
FB FG harness ASSY	Taptite cup S M3x6 SR	1	0.70±0.10 (7±1)
ADF FG harness ASSY	Taptite cup S M3x6 SR	1	0.70±0.10 (7±1)
Document scanner unit	Taptite bind B M4x12	2	0.80±0.10 (8±1)
Hinge ASSY L	Taptite cup S M3x12	3	0.80±0.10 (8±1)
Hinge R	Taptite cup B M3x10	1	0.50±0.10 (5±1)
Hinge arm R	Taptite cup B M3x10	3	0.50±0.10 (5±1)
Upper document chute ASSY	Taptite cup B M3x10	6	0.50±0.10 (5±1)
Lower chute ASSY	Taptite cup B M3x10	6	0.50±0.10 (5±1)
	Taptite cup S M3x6	1	0.80±0.10 (8±1)
ADF motor	Screw pan (S/P washer) M3x6	1	0.70±0.10 (7±1)
Grip cover	Taptite cup B M3x10	2	0.50±0.10 (5±1)
Panel unit generic	Taptite cup B M3x10	4	0.50±0.10 (5±1)
Joint cover top	Taptite bind B M4x12	8	0.80±0.10 (8±1)
NCU FG harness ASSY	Screw pan (S/P washer) M3.5x6	1	0.40±0.05 (4±0.5)
NCU unit	Taptite bind B M4x12	2	0.80±0.10 (8±1)
NCU shield cover	Screw pan (S/P washer) M3.5x6	1	0.40±0.05 (4±0.5)
NCU PCB ASSY	Taptite cup S M3x6 SR	2	0.50±0.05 (5±0.5)
Back cover upper	Taptite bind B M4x12	4	0.80±0.10 (8±1)
Joint cover	Taptite bind B M4x12	1	0.80±0.10 (8±1)
	Taptite cup S M3x6 SR	1	0.70±0.10 (7±1)
USB host relay PCB ASSY	Taptite bind B M4x12	2	0.60±0.05 (6±0.5)

Location of screw	Screw type	Q' ty	Tightening torque N•m(kgf•cm)
Joint cover base ASSY	Taptite cup S M3x8	7	0.70±0.10 (7±1)
	Taptite bind B M4x12	2	0.80±0.10 (8±1)
Main PCB ASSY	Taptite cup S M3x6 SR	4	0.70±0.10 (7±1)
Engine PCB ASSY	Taptite cup S M3x6 SR	3	0.70±0.10 (7±1)
Main shield plate	Taptite cup S M3x6 SR	3	0.70±0.10 (7±1)
Top beam	Taptite cup S M3x6 SR	2	0.70±0.10 (7±1)
Scanner holder	Taptite cup S M3x6 SR	5	0.70±0.10 (7±1)
Develop release motor	Taptite bind S M3x6 SR	2	0.70±0.10 (7±1)
Panel cable rack	Taptite cup S M3x6 SR	1	0.70±0.10 (7±1)
Grand plate	Taptite cup S M3x6 SR	1	0.70±0.10 (7±1)
	Taptite pan (washer) B M4x12DA	1	0.50±0.05 (5±0.5)
Top drive ASSY	Taptite cup S M3x6 SR	9	0.70±0.10 (7±1)
	Taptite bind B M4x12	1	0.80±0.10 (8±1)
Drum drive motor	Screw bind M3x4	3	0.50±0.05 (5±0.5)
Registration solenoid ASSY	Taptite cup S M3x6 SR	1	0.70±0.10 (7±1)
Top drive cover	Taptite cup S M3x6 SR	3	0.70±0.10 (7±1)
Mono solenoid ASSY	Taptite cup S M3x6 SR	1	0.70±0.10 (7±1)
Fuser develop motor ASSY	Taptite cup S M3x6 SR	4	0.70±0.10 (7±1)
PF plate ASSY	Taptite bind B M4x12	3	0.60±0.10 (6±1)
	Taptite cup S M3x6 SR	1	0.80±0.10 (8±1)
PF cleaner drive ASSY	Taptite bind B M4x12	2	0.60±0.10 (6±1)
T1 solenoid ASSY	Taptite bind B M3x8	1	0.35±0.05 (3.5±0.5)
Paper eject ASSY	Taptite cup S M3x6 SR	5	0.70±0.10 (7±1)
Eject duct	Taptite bind B M4x12	1	0.80±0.10 (8±1)
Paper eject motor	Taptite bind S M3x6	2	0.70±0.10 (7±1)
AC inlet	Taptite flat B M3x10	1	0.50±0.10 (5±1)
Low-voltage power supply unit	Screw pan (S/P washer) M4x8	2	0.90±0.10 (9±1)
	Taptite cup S M3x8	2	0.70±0.10 (7±1)
	Taptite cup B M3x12	2	0.40±0.05 (4±0.5)
	Taptite pan (washer) B M4x12DA	4	0.90±0.10 (9±1)
	Screw pan (S/P washer) M4x8	1	0.90±0.10 (9±1)
Low-voltage power supply PCB ASSY	Screwe cup M3x6	4	0.35±0.05 (3.5±0.5)
Registration mark sensor holder ASSY	Taptite bind B M3x10	2	0.40±0.05 (4±0.5)
Shutter solenoid	Taptite bind B M3x10	1	0.55±0.05 (5.5±0.5)
MP upper cover ASSY	Taptite bind B M3x8	2	0.40±0.10 (4±1)
MP paper empty/registration front sensor PCB ASSY	Taptite bind B M3x8	1	0.40±0.10 (4±1)
PF ASSY	Taptite bind B M4x12	2	0.80±0.10 (8±1)
	Shoulder screw	1	0.70±0.10 (7±1)

Location of screw	Screw type	Q' ty	Tightening torque N•m(kgf•cm)
T1 registration front/rear sensor PCB holder	Taptite bind B M3x10	1	0.50±0.10 (5±1)
MP sector solenoid	Taptite bind B M3x8	1	0.40±0.10 (4±1)
MP drive frame	Taptite bind B M3x10	3	0.50±0.10 (5±1)
High-voltage power supply shield ASSY	Taptite cup S M3x6 SR	2	0.50±0.10 (5±1)
T2 cover rear	Taptite cup S M3x10 SR	2	0.80±0.10 (8±1)
T2 cover left	Taptite cup S M3x6 SR	2	0.80±0.10 (8±1)
T2 cover right	Taptite cup S M3x6 SR	2	0.80±0.10 (8±1)
T2 relay PCB ASSY	Taptite cup S M3x6 SR	1	0.80±0.10 (8±1)
T2 solenoid holder ASSY	Taptite cup S M3x6 SR	1	0.80±0.10 (8±1)
T2 solenoid holder	Screw flanged M3x3.5	1	0.50±0.10 (5±1)
T2 beam F ASSY	Taptite cup S M3x6 SR	5	0.80±0.10 (8±1)
T2 beam front	Taptite cup S M3x6 SR	2	0.80±0.10 (8±1)
T2 beam rear	Taptite cup S M3x6 SR	4	0.80±0.10 (8±1)
T2 frame L unit	Taptite bind B M4x10	1	0.80±0.10 (8±1)

5. LUBRICATION

The kind of the lubricating oil (Maker name)	Lubrication point	Quantity of lubrication
MOLYKOTE PG-661 (W) (Dow Corning)	ER shaft bush	1 mm dia. ball (PG1)
BDX313 (A) (Kanto Kasei)	Hinge ASSY L	2 mm dia. ball (BDX2)
FLOIL GE-676 (Kanto Kasei)	Separate roller shaft	1.5 mm dia. ball (GE1.5)
	Document feed roller shaft	1.5 mm dia. ball (GE1.5)

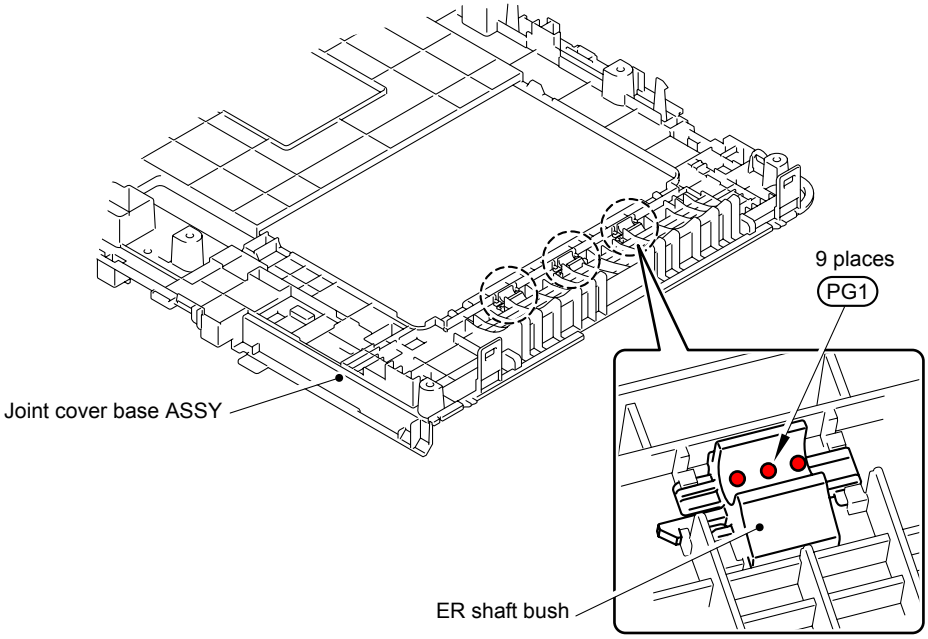

PG1: MOLYKOTE PG-661 (W) (1 mm dia. ball)

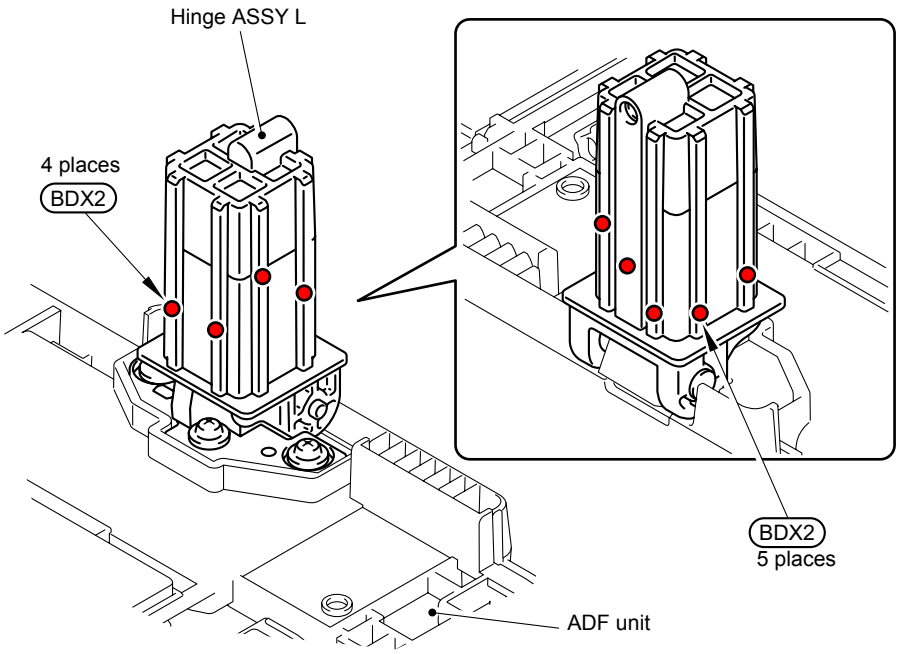

BDX2: BDX313 (A) (2 mm dia. ball)

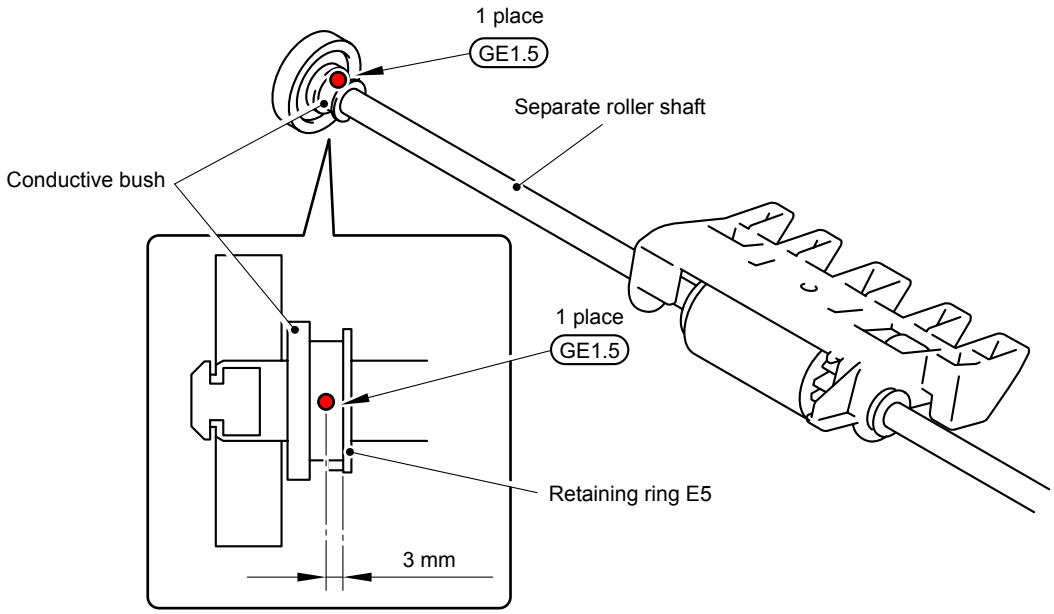

GE1.5: FLOIL GE-676 (1.5 mm dia. ball)

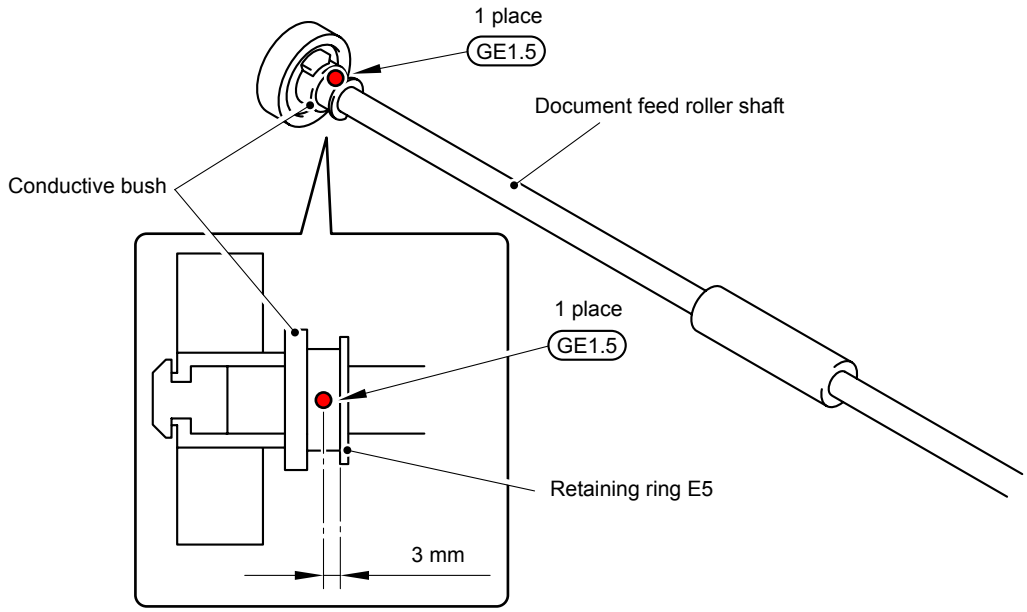

GE1.5: FLOIL GE-676 (1.5 mm dia. ball)

6. OVERVIEW OF GEARS

When ordering spare parts, please refer to Parts reference list.

■ Top drive ASSY

<Layout view>

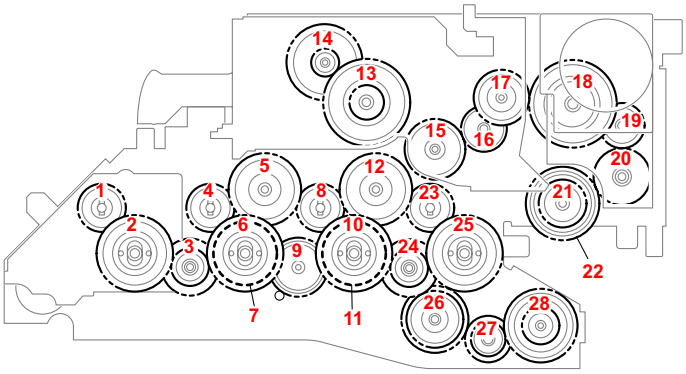

<Development view>

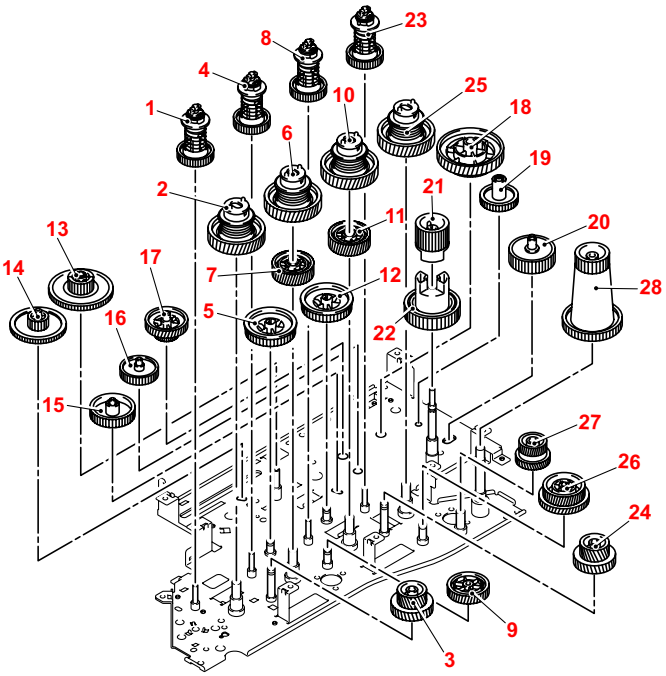

<Name of gears>

1	LY0192	Develop joint gear Z48	15	LY0213	Gear Z60
2	LY0196	Drum coupling gear Z52	16	LY0217	Gear Z50
3	LY0197	Drum double idle gear Z64-26	17	LY0214	Gear Z63-30
4	LY0192	Develop joint gear Z48	18	LY0231	Gear Z100-47
5	LY0194	Develop idle gear Z66	19	LY0212	Gear Z37
6	LY0196	Drum coupling gear Z52	20	LY0211	Gear Z45
7	LY0198	Drum idle gear Z64	21	LY0233	Fuser drive gear Z25
8	LY0192	Develop joint gear Z48	22	LY0216	Gear Z55
9	LY0199	Drum idle gear Z64 first	23	LY0192	Develop joint gear Z48
10	LY0196	Drum coupling gear Z52	24	LY0197	Drum double idle gear Z64-26
11	LY0198	Drum idle gear Z64	25	LY0196	Drum coupling gear Z52
12	LY0194	Develop joint gear Z48	26	LY0203	Belt idle gear Z64-75
13	LY0220	Gear Z54-18	27	LY0202	Belt idle gear Z52-40
14	LY0219	Gear Z90-18	28	LY0201	Belt drive gear 25-80

* These parts are subject to change without notice.

■ PF ASSY

<Layout view>

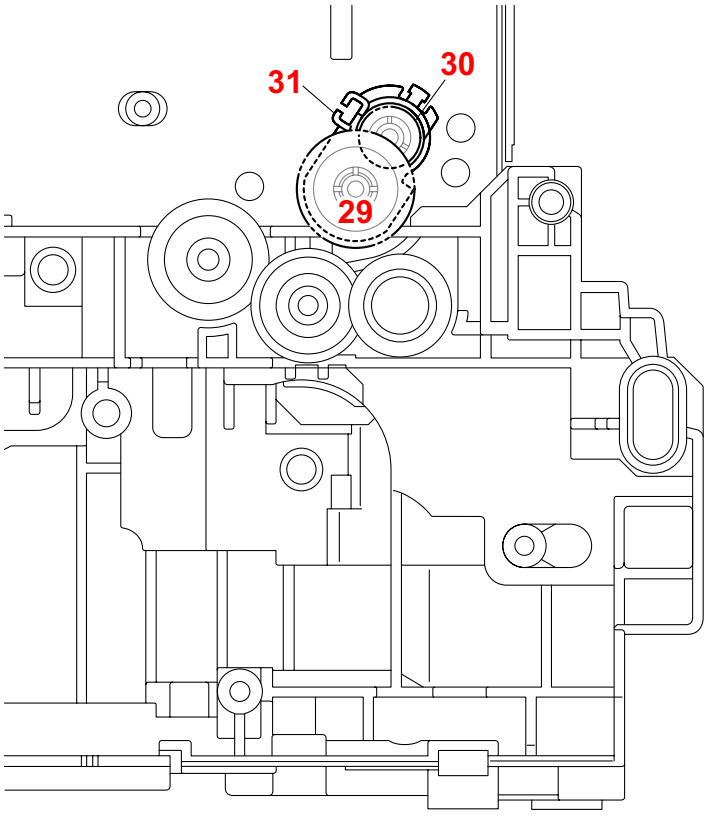

<Development view>

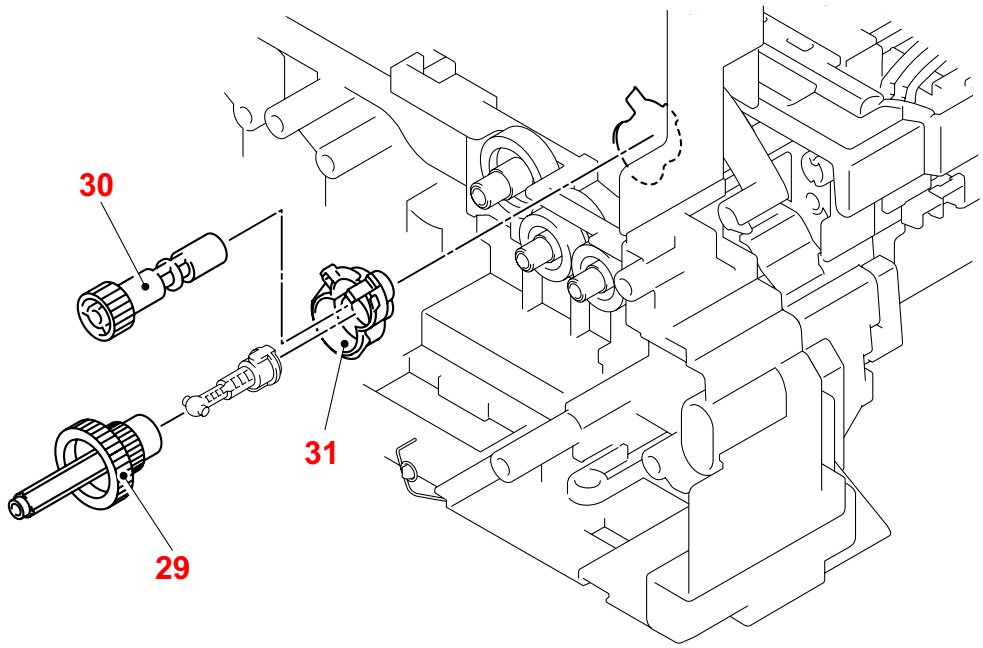

<Name of gears>

29	LU5132	Registration gear	31	LY0298	Registration/Pinch roller gear bush
30	LY0299	Pinch roller drive gear			

* These parts are subject to change without notice.

7. HARNESS ROUTING

1 Laser Unit

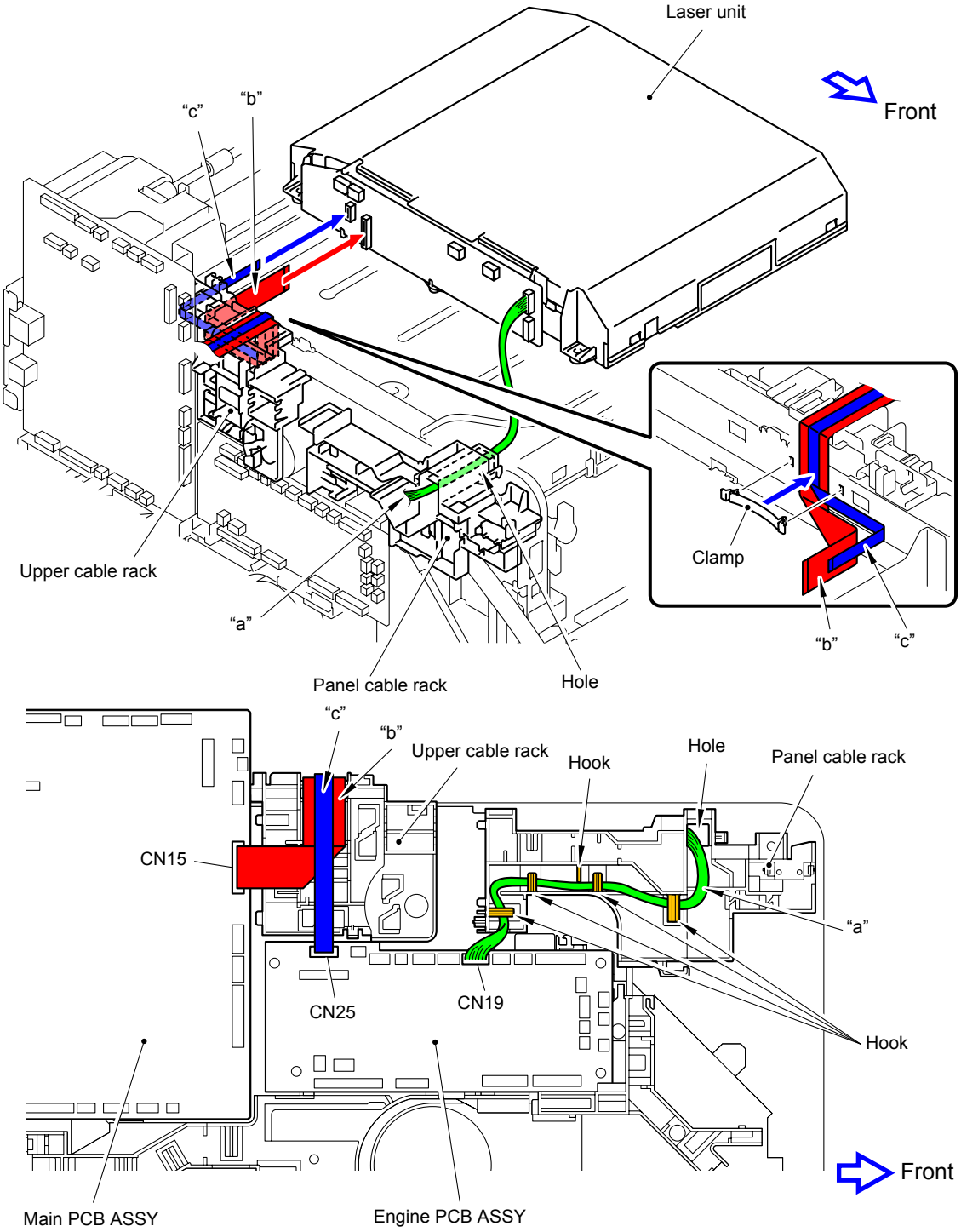

2 Develop Release Motor

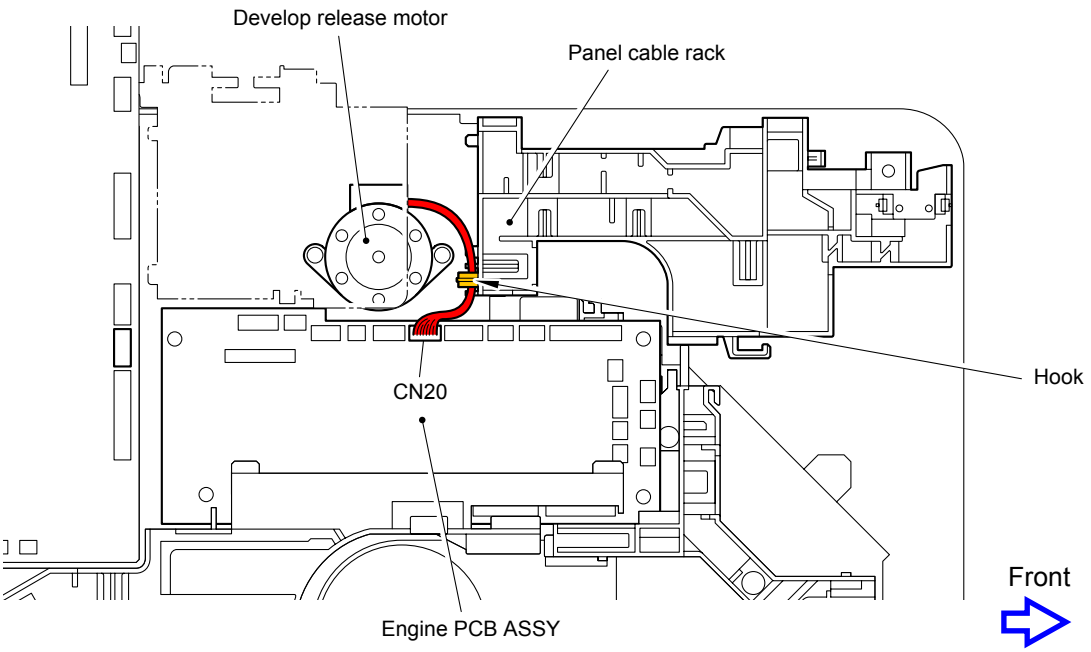

3 Front Cover Sensor

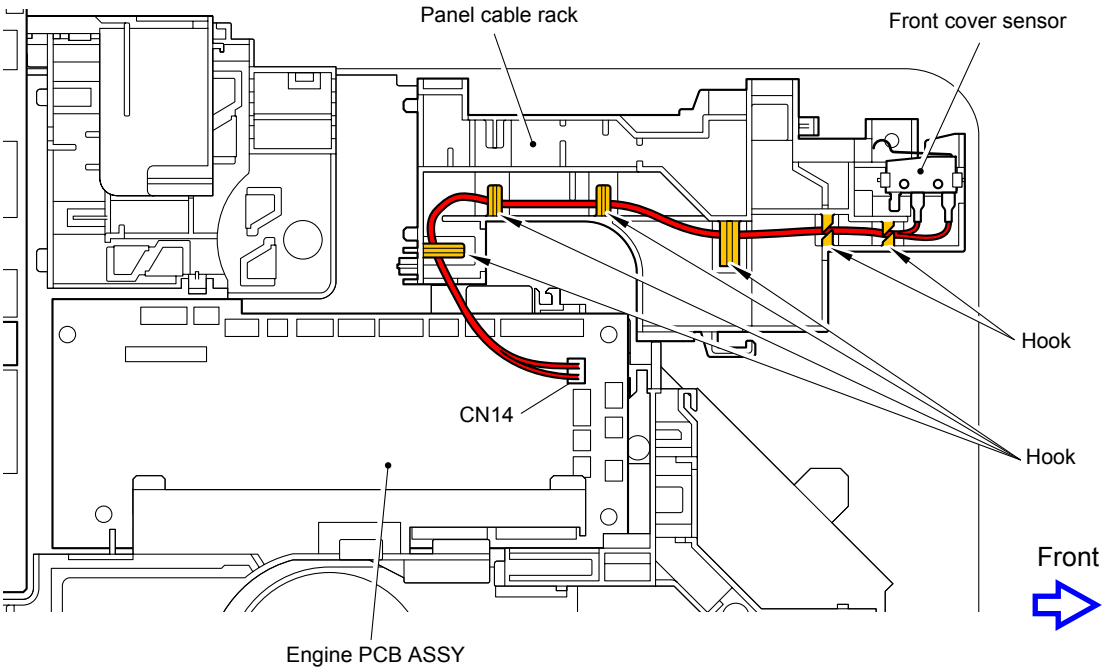

4 Top Drive ASSY

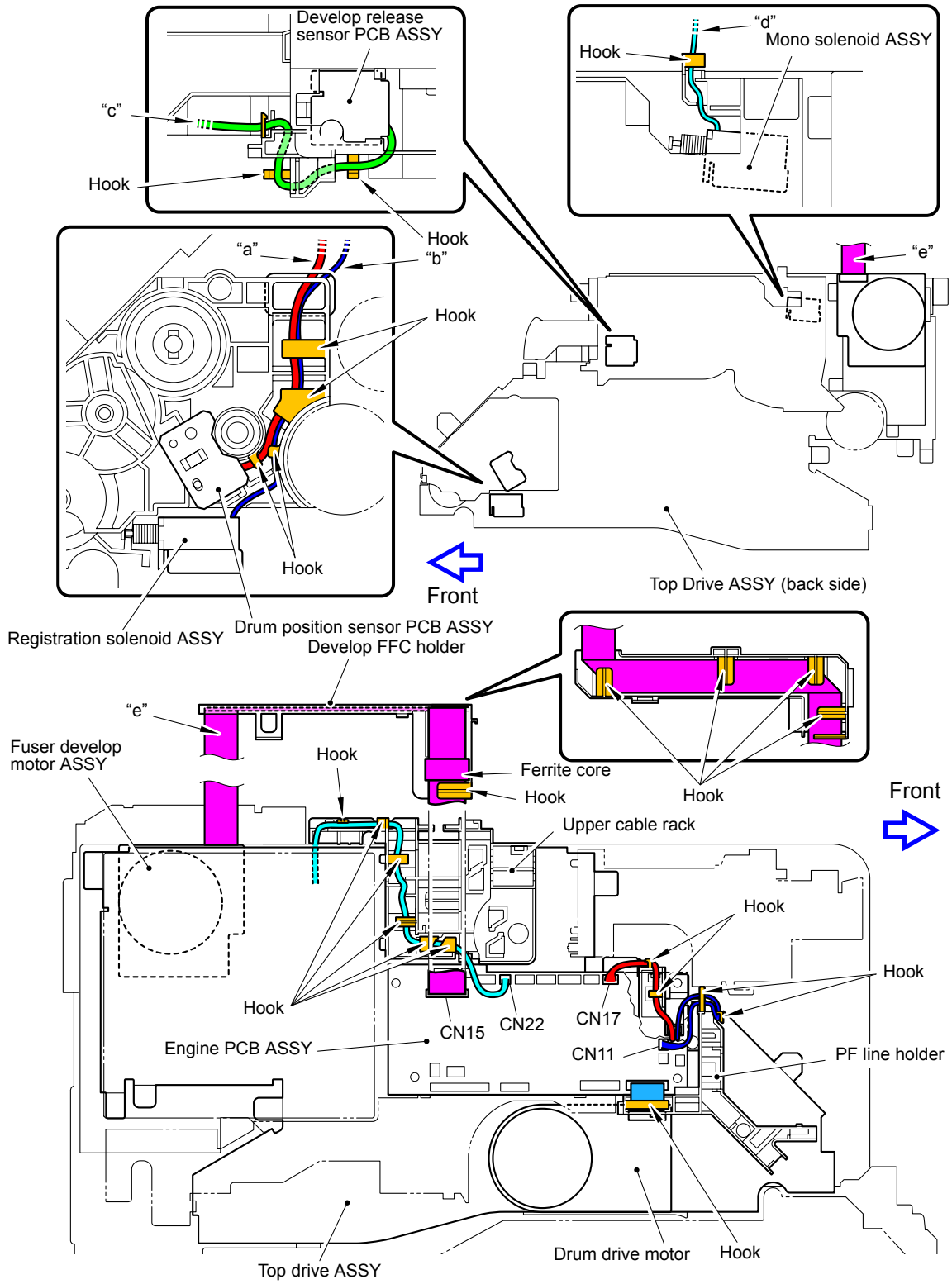

5 PF Plate ASSY

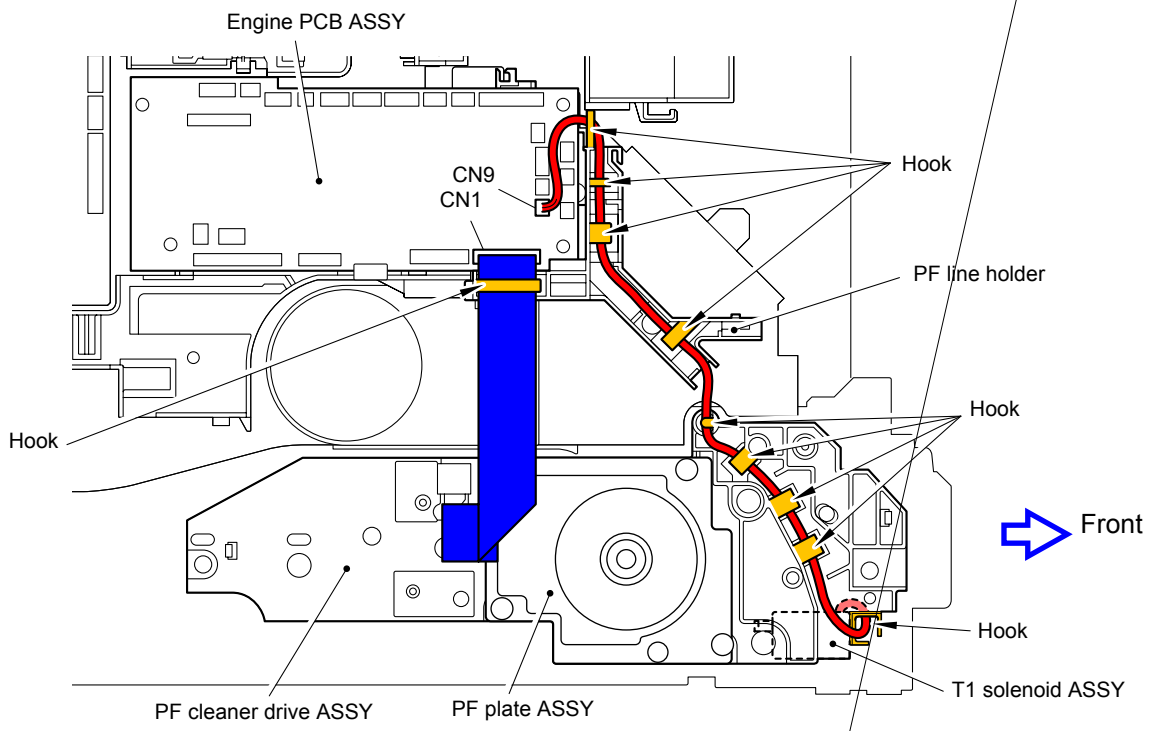

6 Toner/New Sensor PCB ASSY

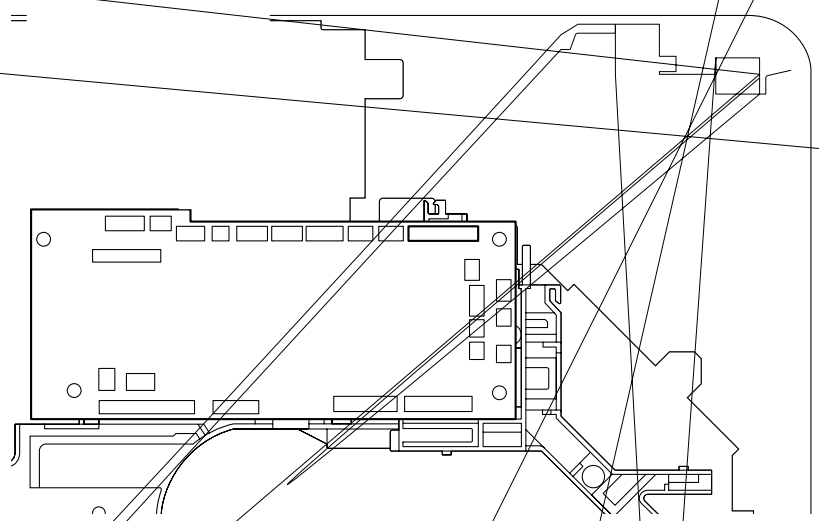

7 Low-voltage Power Supply PCB ASSY

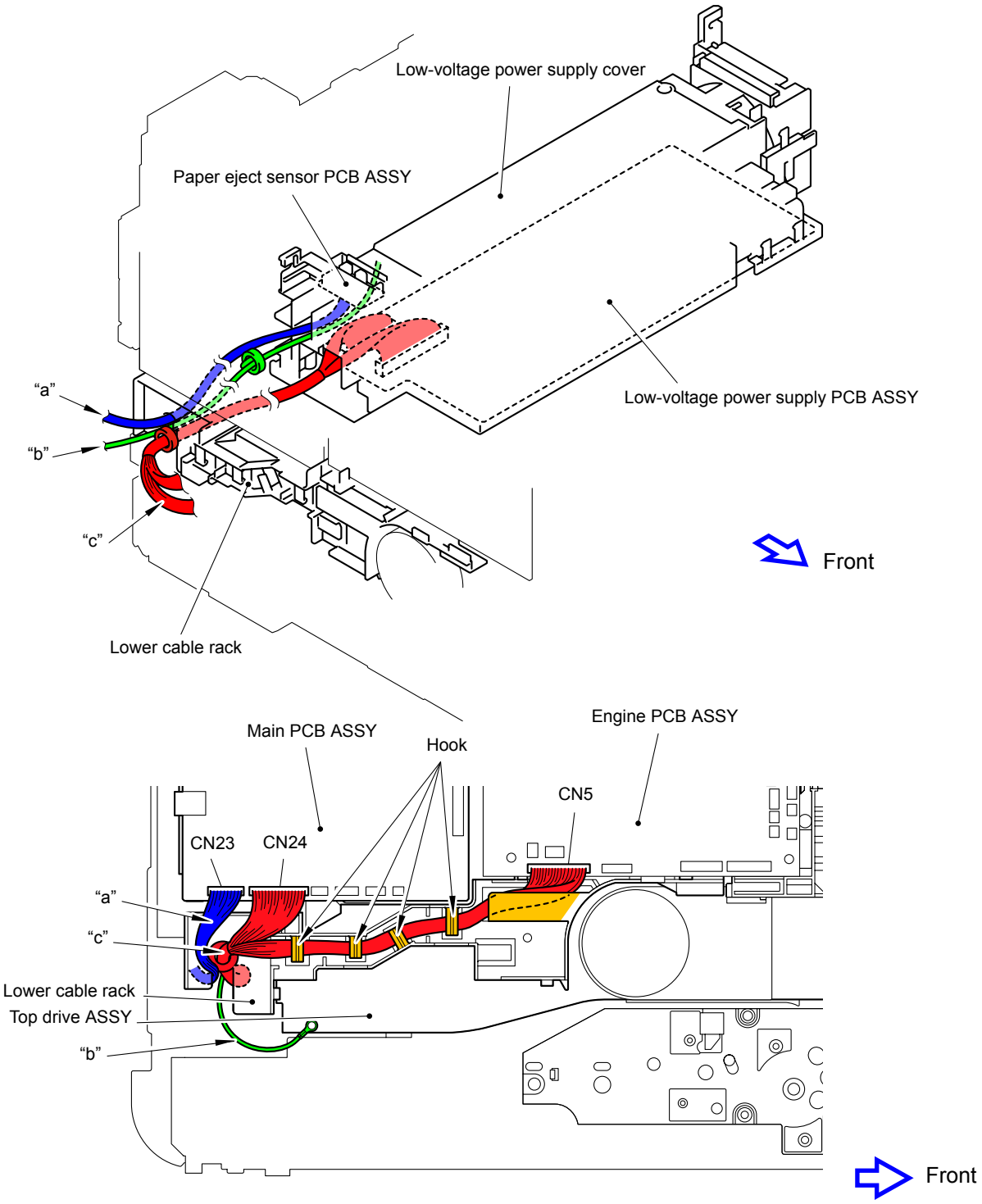

8 Paper Eject ASSY

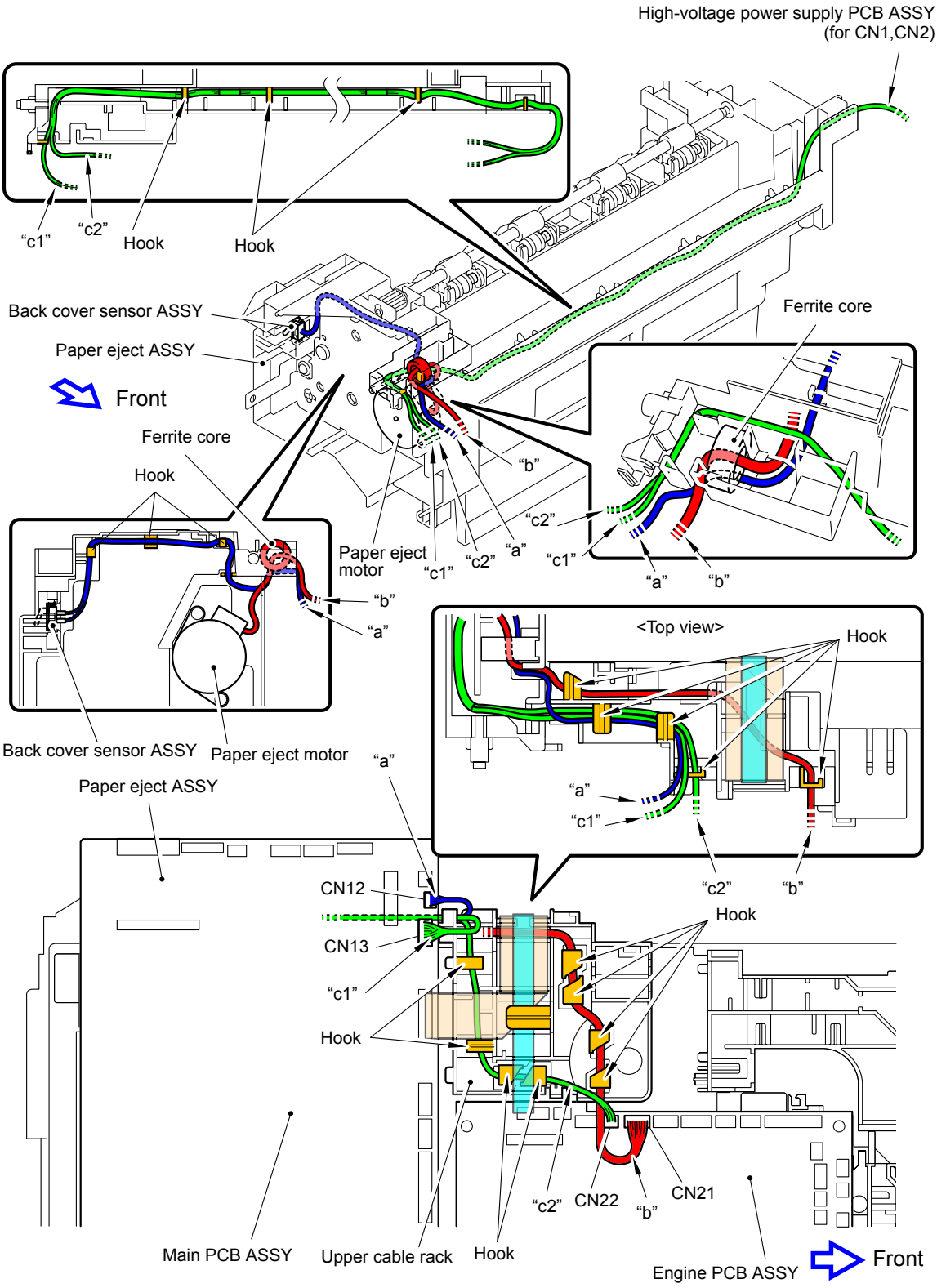

9 Registration Mark Sensor Holder ASSY

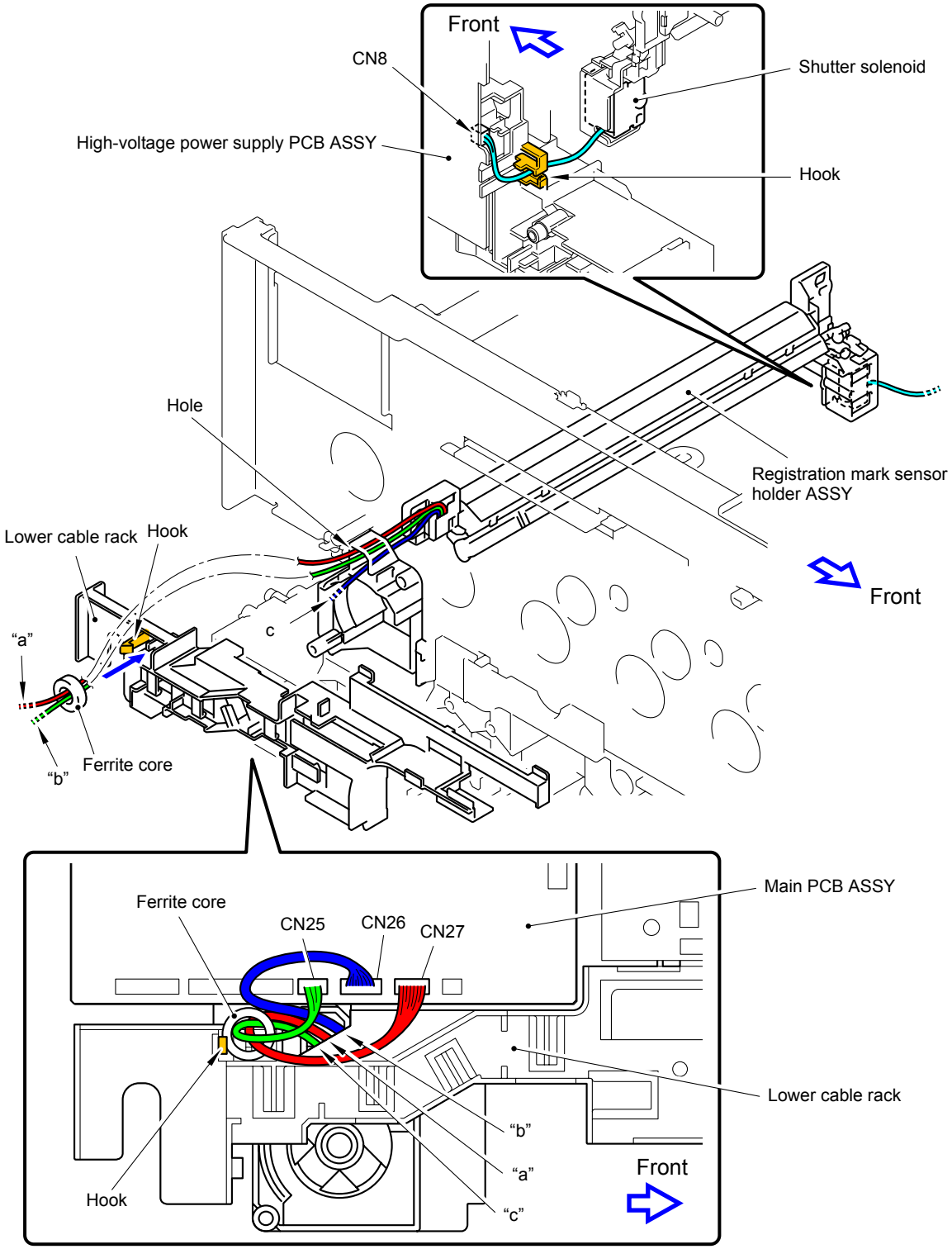

10 MP Paper Empty/Registration Front Sensor PCB ASSY

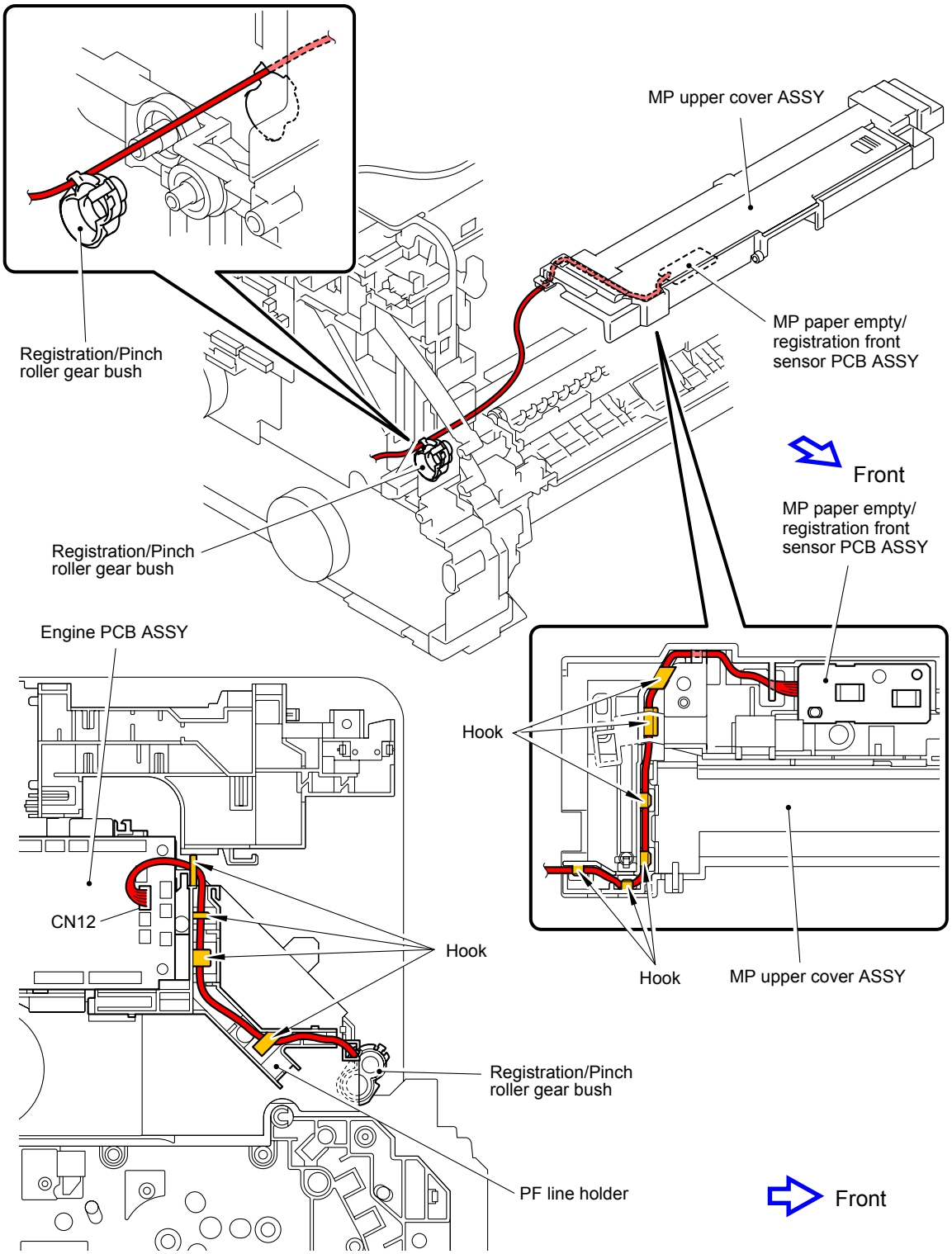

11 PF ASSY

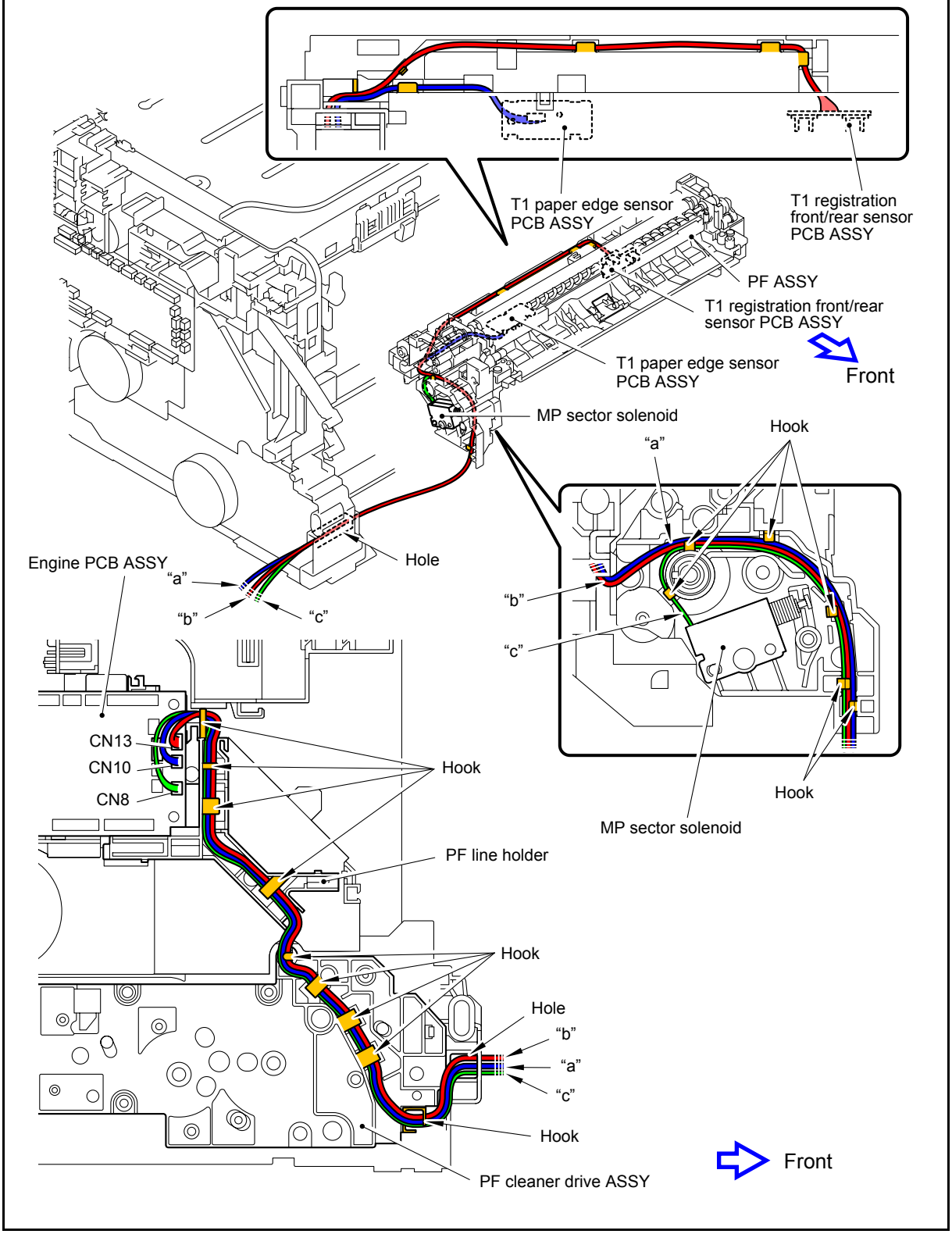
T1 paper edge sensor PCB ASSY
T1 registration front/rear sensor PCB ASSY
PF ASSY
T1 registration front/rear sensor PCB ASSY
T1 paper edge sensor PCB ASSY
Front
MP sector solenoid
Hook
"a"
Engine PCB ASSY
"a"
"b"
"c"
Hole
"b"
"c"
CN13
CN10
CN8
Hook
Hook
MP sector solenoid
PF line holder
Hook
Hole
"b"
"a"
"c"
Hook
PF cleaner drive ASSY
Front

12 ADF (A4 model)

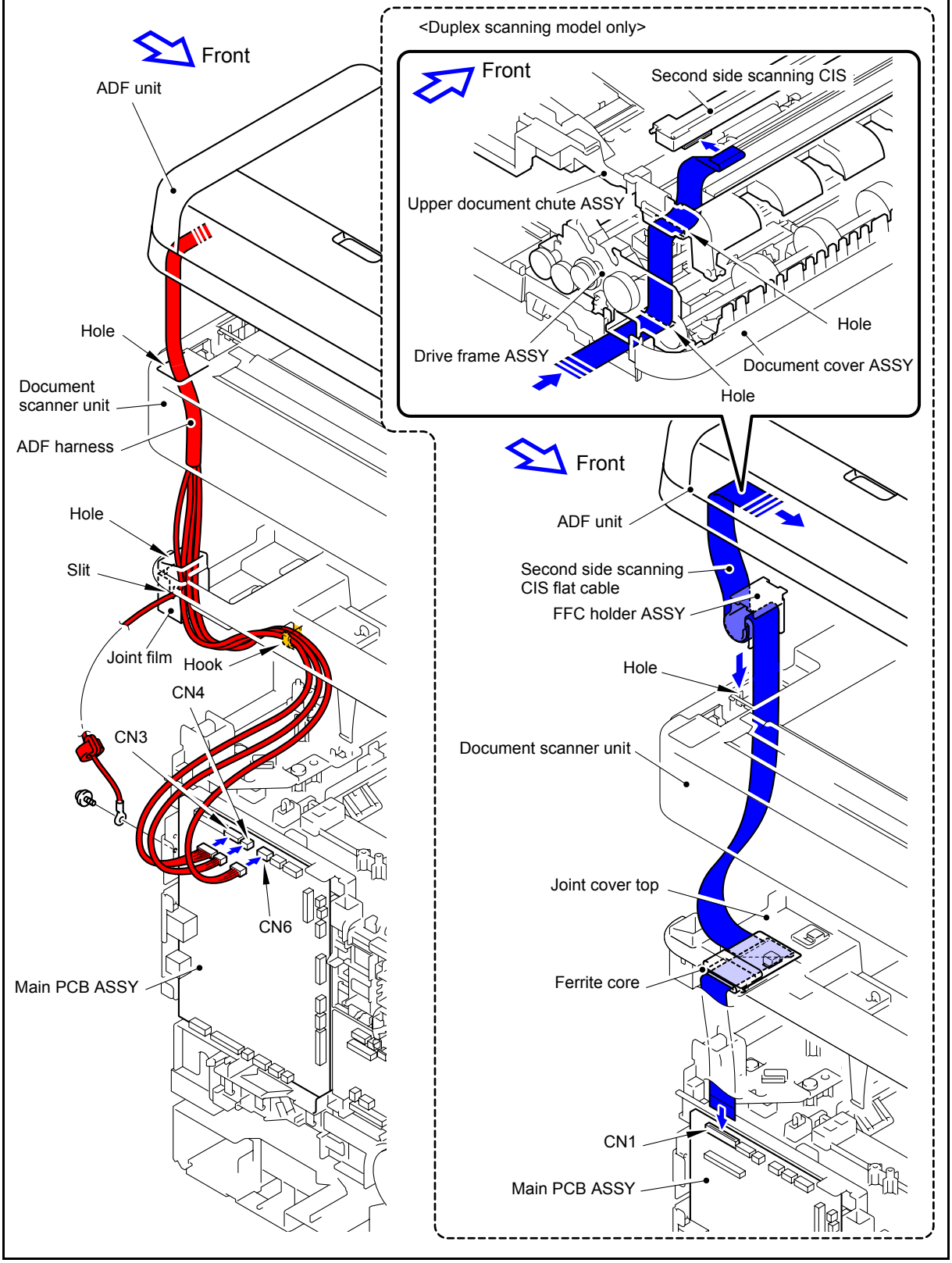

13 ADF (Legal model)

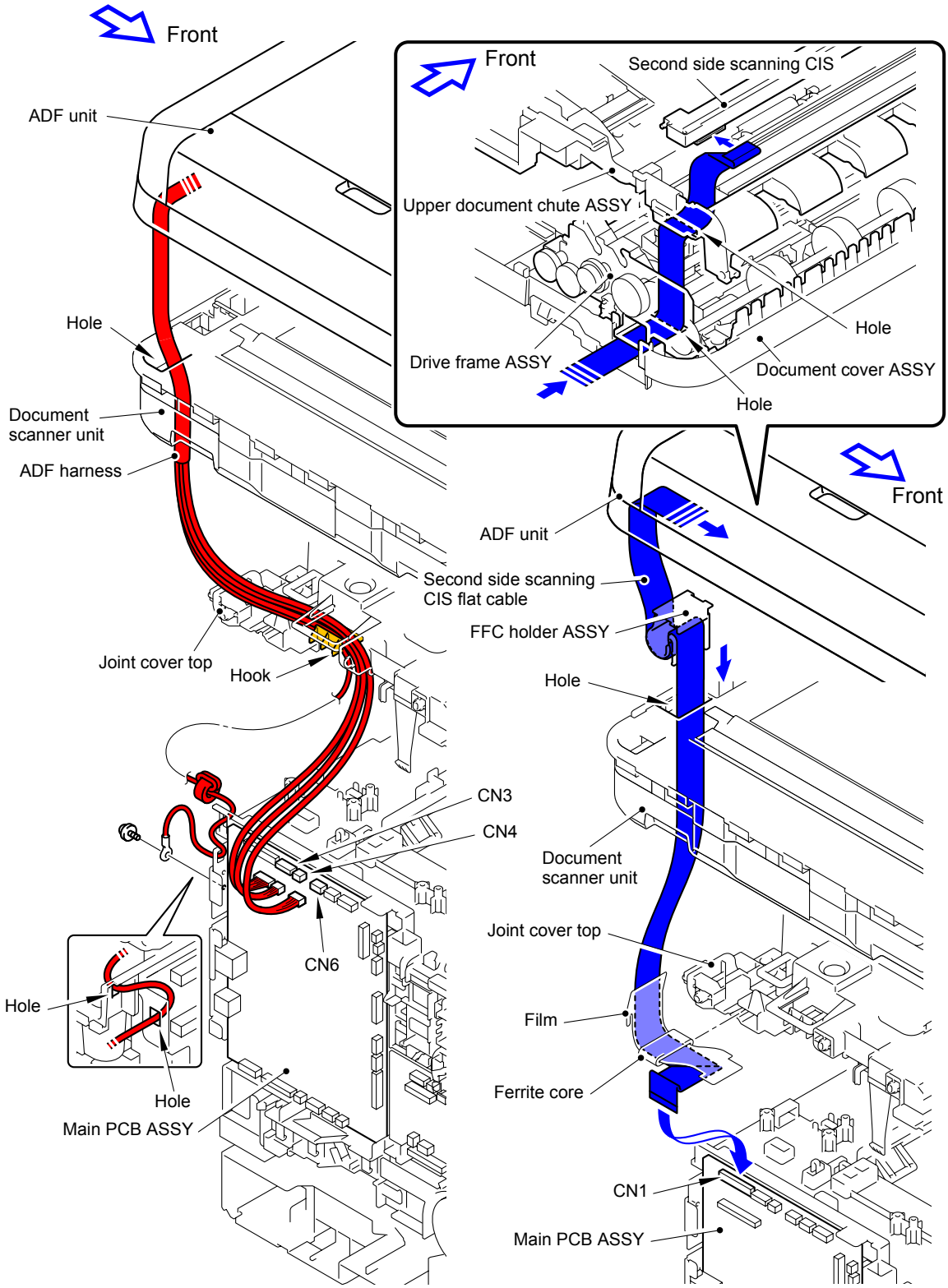

14 Document Scanner Unit (A4 model)

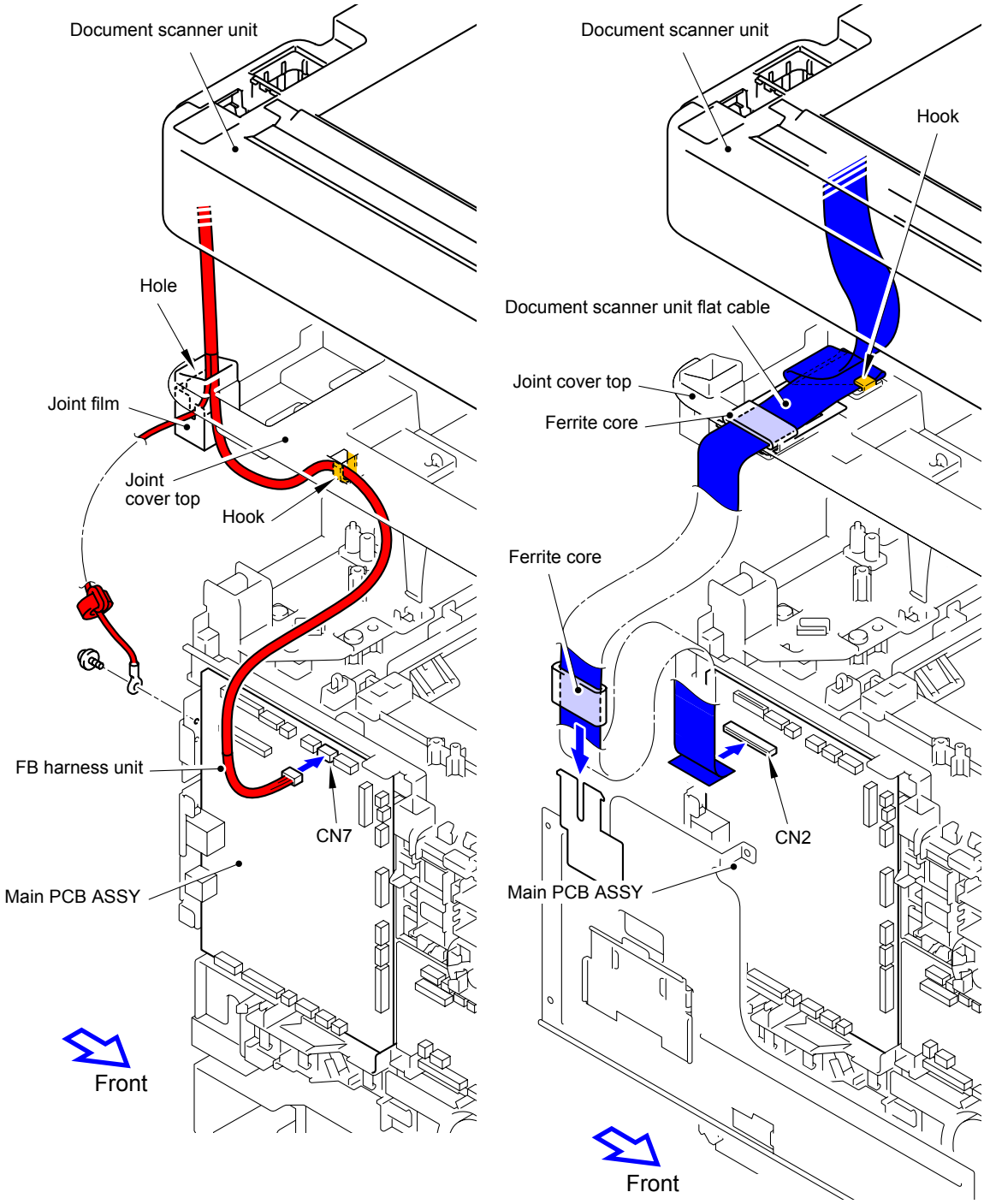

15 Document Scanner Unit (Legal model)

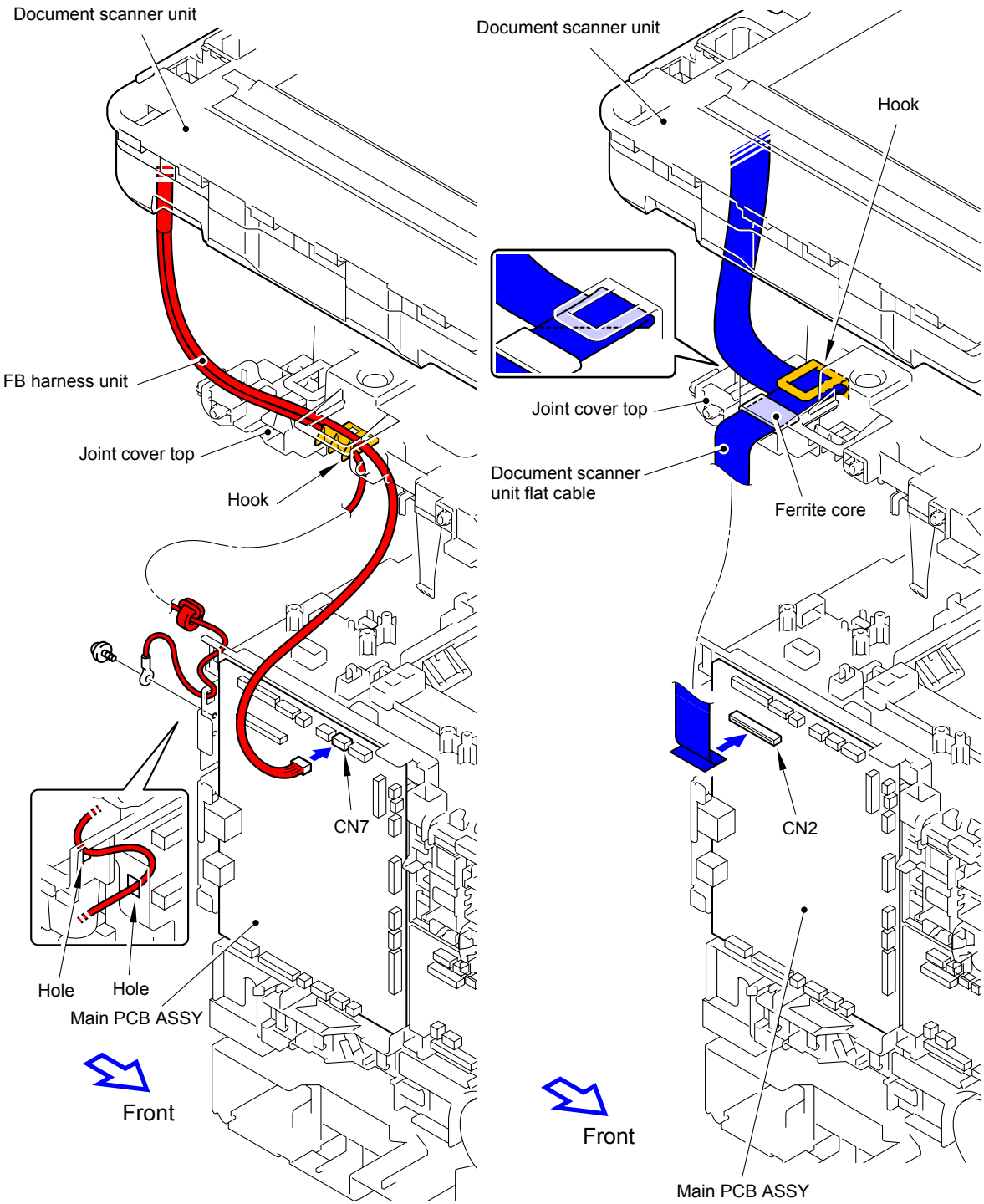

16 Panel Unit (A4 model)

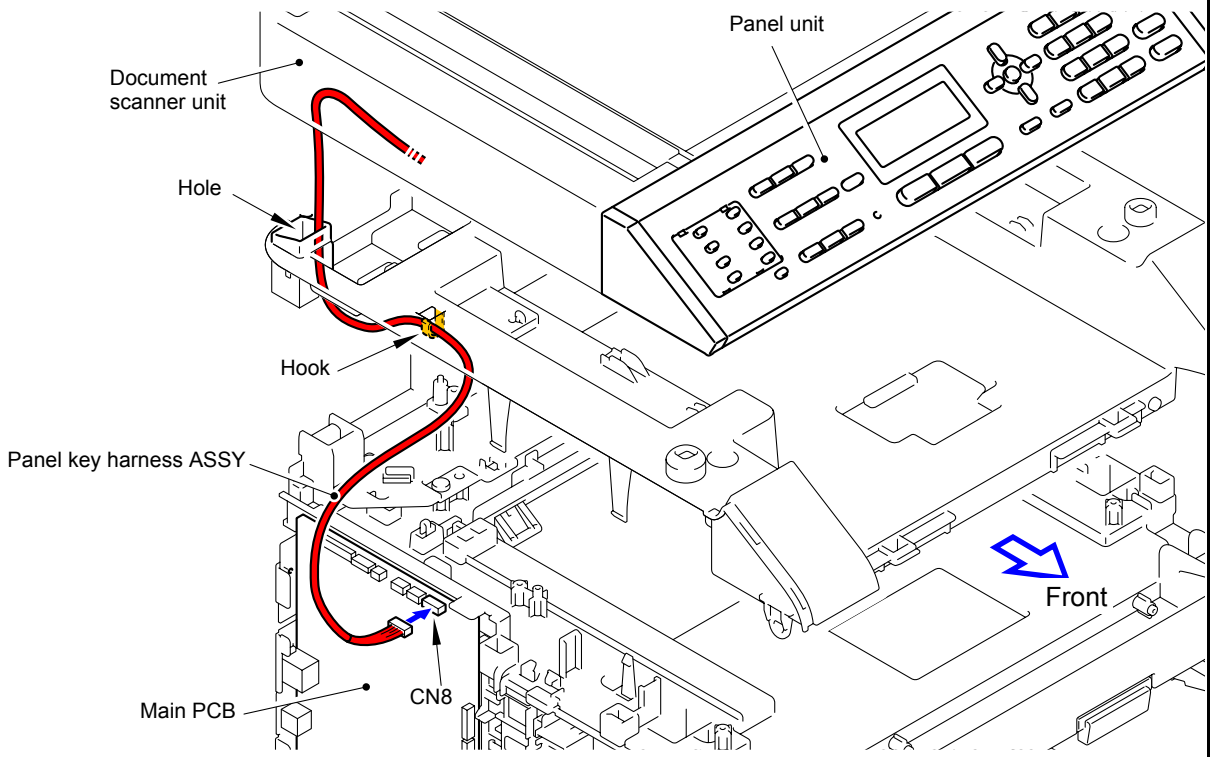

17 Panel Unit (Legal model)

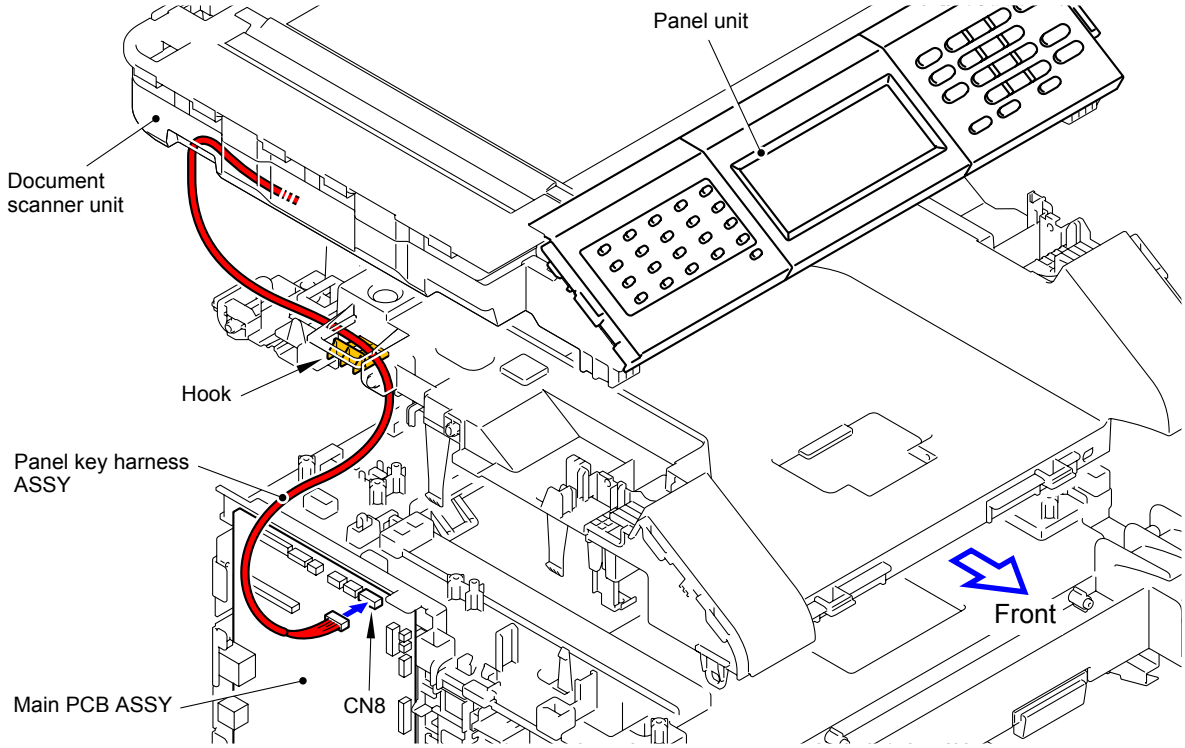

18 NCU (A4 model)

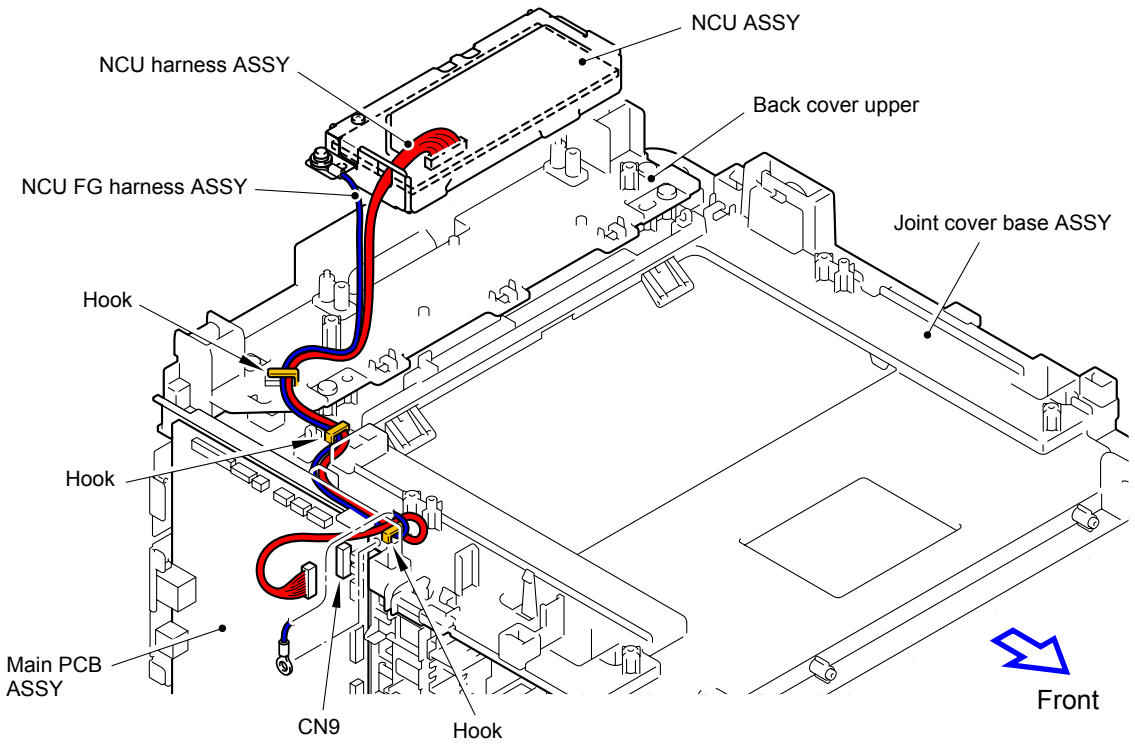

19 NCU (Legal model)

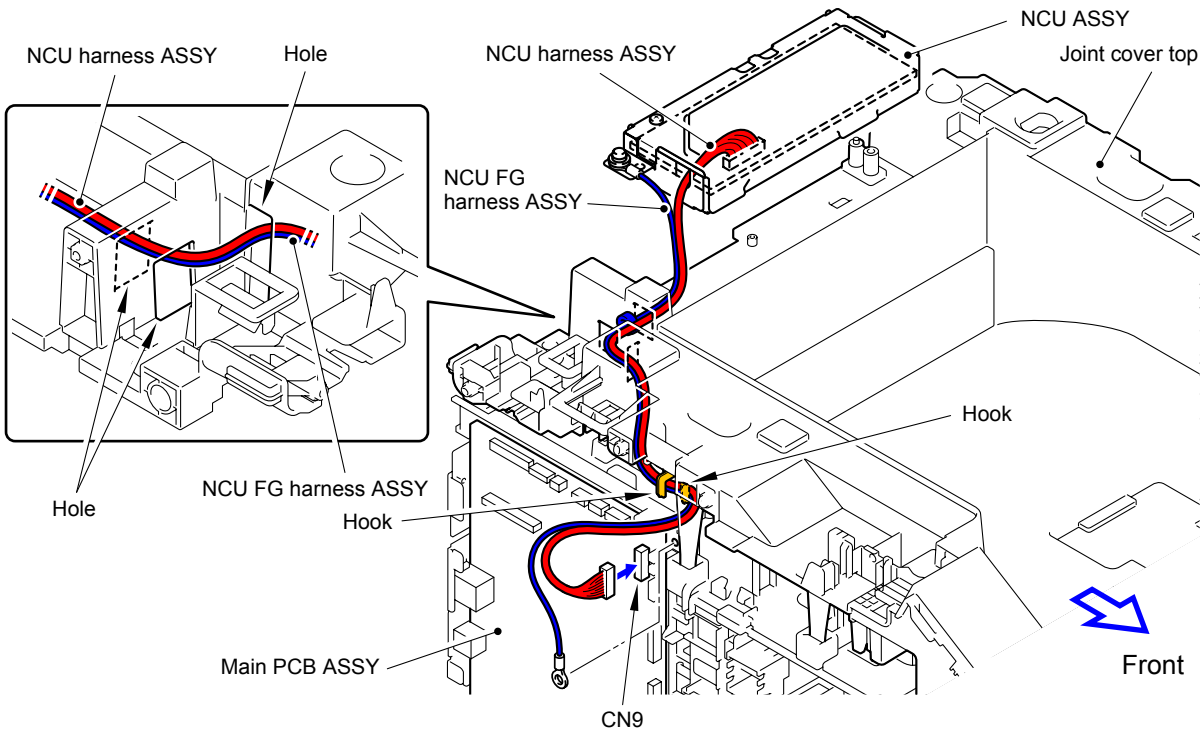

20 USB

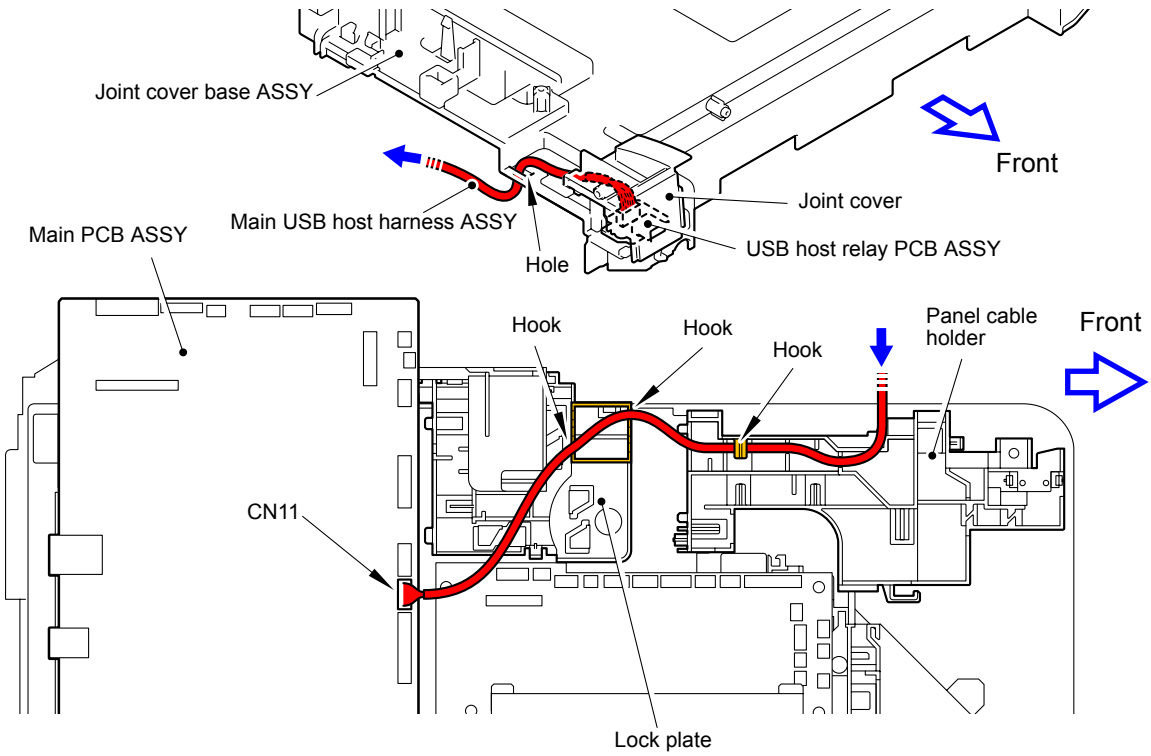

21 Wireless LAN PCB

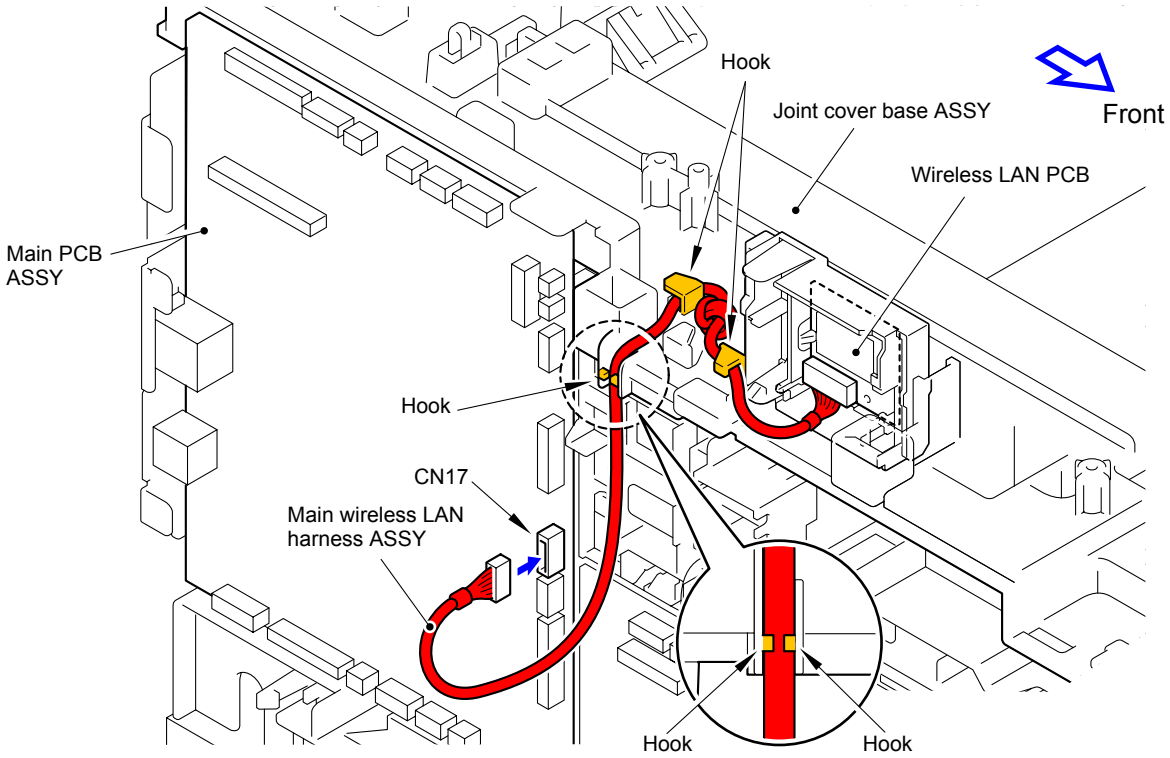

22 Speaker

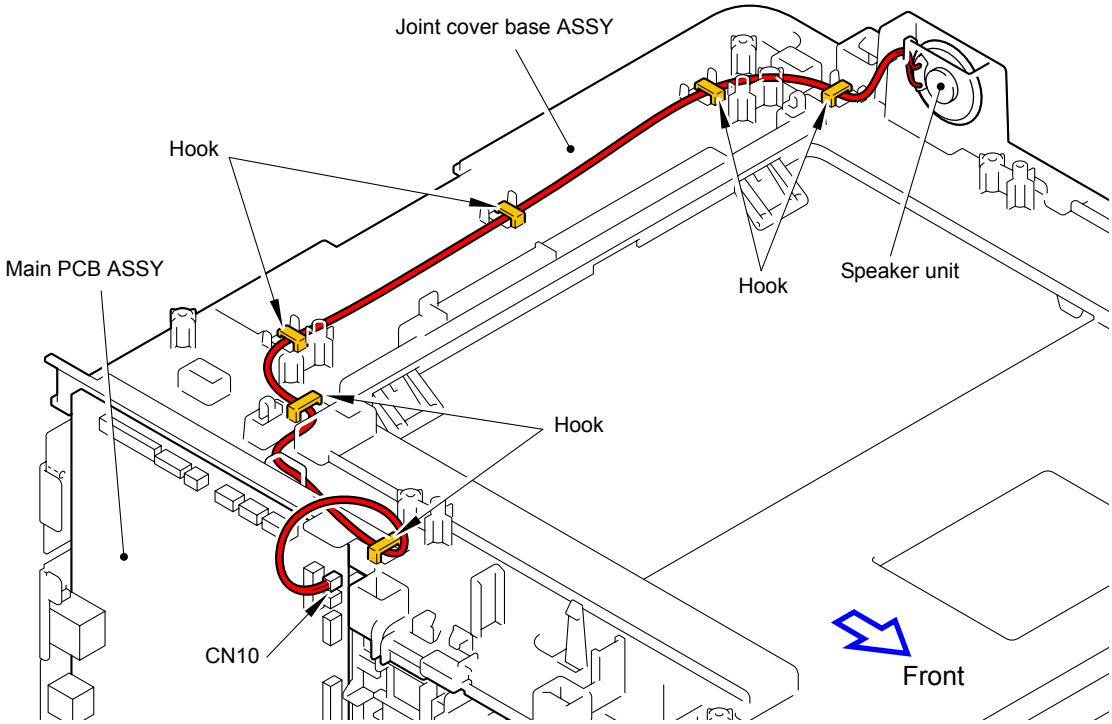

23 Internal Temperature Thermistor

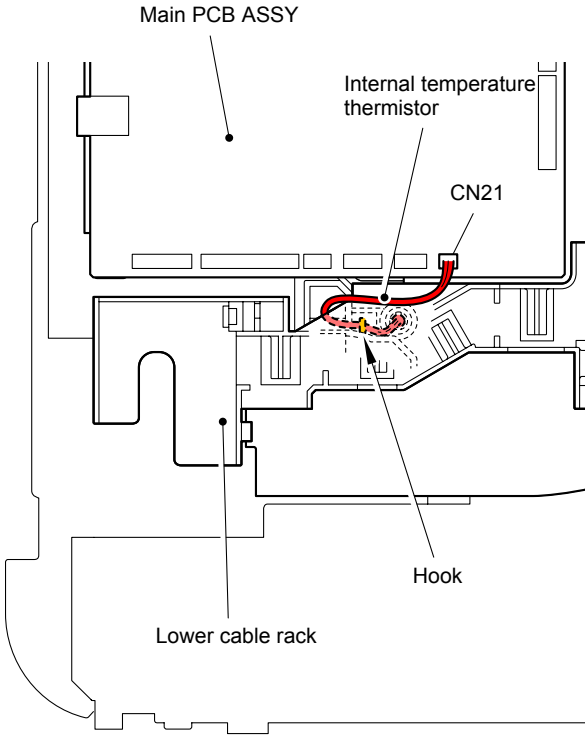

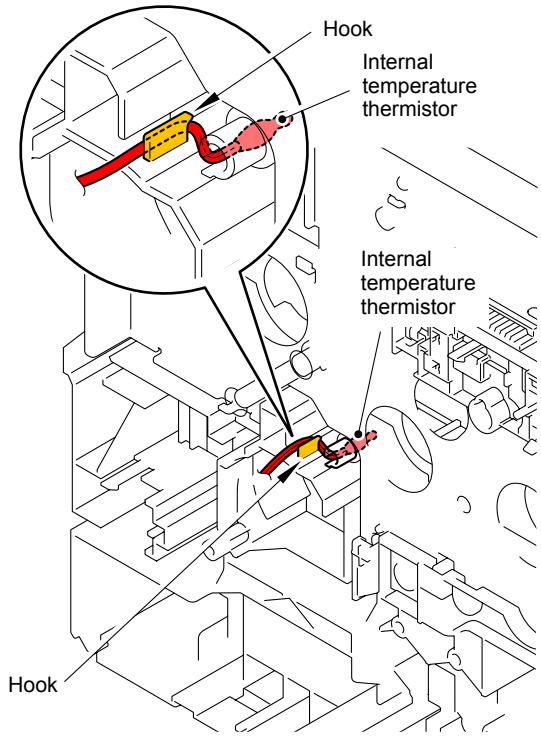

8. DISASSEMBLY FLOW

Disassembly / Re-Assembly (second)

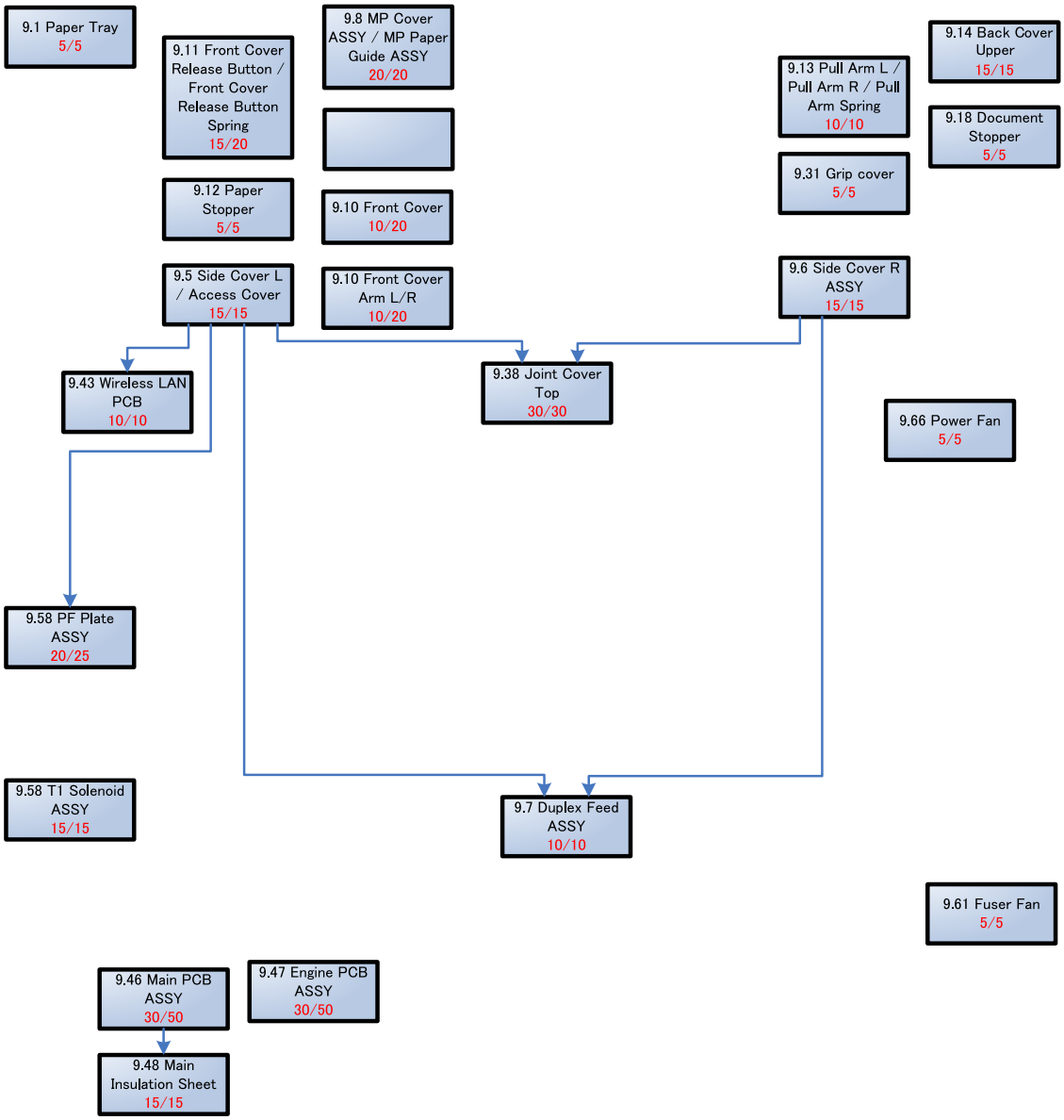

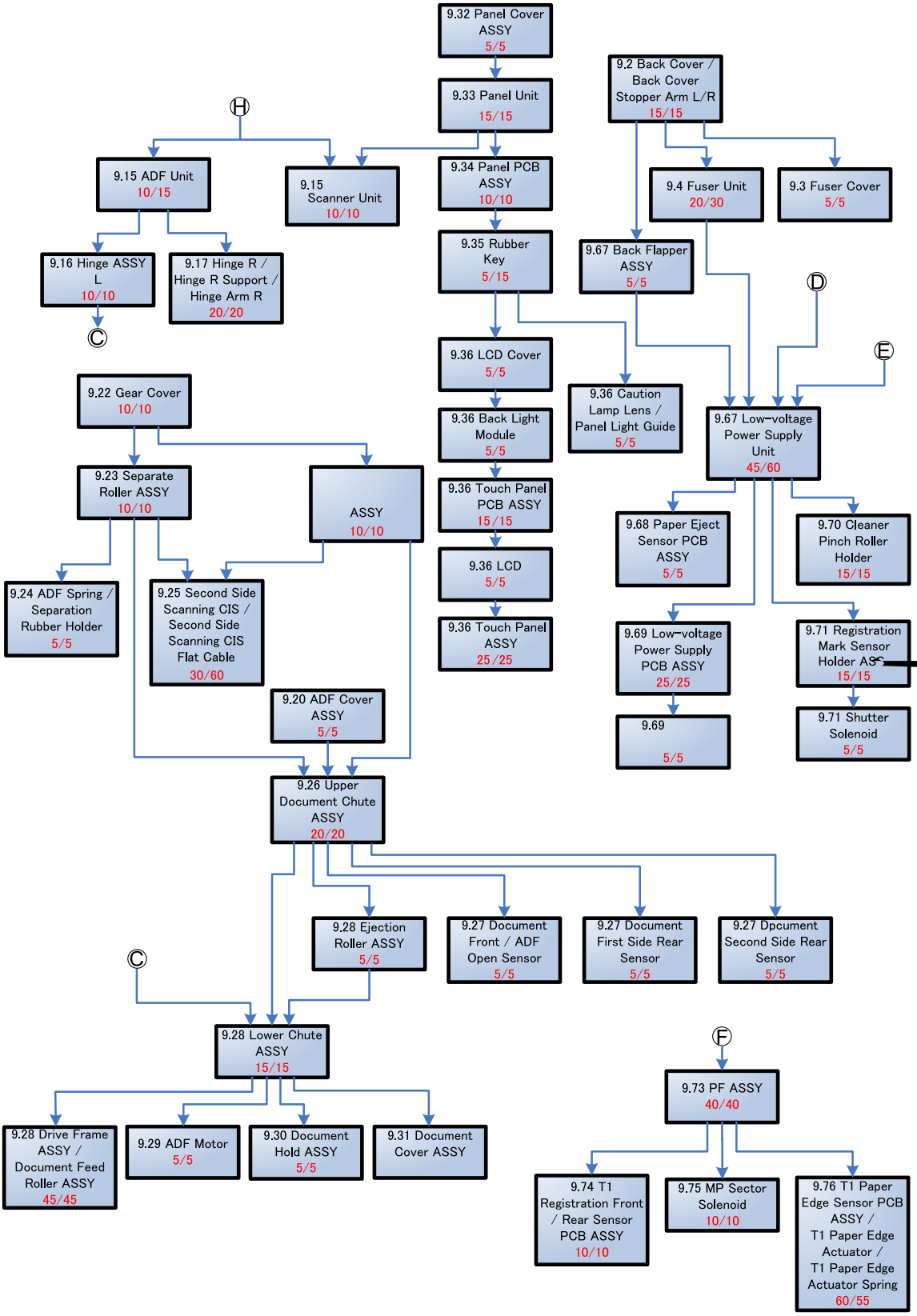
9.32 Panel Cover ASSY 5/5
9.33 Panel Unit 15/15
9.2 Back Cover / Back Cover Stopper Arm L/R 15/15
H
9.15 ADF Unit 10/15
9.15 Scanner Unit 10/10
9.34 Panel PCB ASSY 10/10
9.4 Fuser Unit 20/30
9.3 Fuser Cover 5/5
9.35 Rubber Key 5/15
9.67 Back Flapper ASSY 5/5
9.16 Hinge ASSY L 10/10
9.17 Hinge R / Hinge R Support / Hinge Arm R 20/20
D
C
9.36 LCD Cover 5/5
E
9.22 Gear Cover 10/10
9.36 Caution Lamp Lens / Panel Light Guide 5/5
9.36 Back Light Module 5/5
9.67 Low-voltage Power Supply Unit 45/60
9.23 Separate Roller ASSY 10/10
ASSY 10/10
9.36 Touch Panel PCB ASSY 15/15
9.68 Paper Eject Sensor PCB ASSY 5/5
9.70 Cleaner Pinch Roller Holder 15/15
9.24 ADF Spring / Separation Rubber Holder 5/5
9.25 Second Side Scanning CIS / Second Side Scanning CIS Flat Cable 30/60
9.36 LCD 5/5
9.36 Touch Panel ASSY 25/25
9.69 Low-voltage Power Supply PCB ASSY 25/25
9.71 Registration Mark Sensor Holder ASSY 15/15
9.20 ADF Cover ASSY 5/5
9.69 5/5
9.71 Shutter Solenoid 5/5
9.26 Upper Document Chute ASSY 20/20
9.28 Ejection Roller ASSY 5/5
9.27 Document Front / ADF Open Sensor 5/5
9.27 Document First Side Rear Sensor 5/5
9.27 Dpcument Second Side Rear Sensor 5/5
C
9.28 Lower Chute ASSY 15/15
F
9.73 PF ASSY 40/40
9.28 Drive Frame ASSY / Document Feed Roller ASSY 45/45
9.29 ADF Motor 5/5
9.30 Document Hold ASSY 5/5
9.31 Document Cover ASSY
9.74 T1 Registration Front / Rear Sensor PCB ASSY 10/10
9.75 MP Sector Solenoid 10/10
9.76 T1 Paper Edge Sensor PCB ASSY / T1 Paper Edge Actuator / T1 Paper Edge Actuator Spring 60/55

9. DISASSEMBLY PROCEDURE

Note:
If the disassembly procedure is common, the figures for the A4 model are used.

■ Preparation

<Transferring Received FAX Data>

When the machine at the user site requires to be repaired, unplugging the power cord from the electrical outlet for sending the machine for repair will lose received FAX data if left in the machine.

To prevent such data loss, the service personnel should instruct end users (e.g., by telephone) to transfer data to another facsimile machine or PC using the procedure below.

Note:
The number of files that can be transferred at a time is 99. To transfer 100 files or more, carry out the following procedure more than one time.

TIP:
If there are both color and monochrome data in a file to be transferred, the monochrome data will be transferred first. If the receiver machine does not support the color function, the sender machine cannot transfer color data, resulting in an error.

Transferring faxes to another fax machine

■ Operating Procedure

(1) Press the **Stop/Exit** button to interrupt the error (if displayed) temporarily.

(2) Press the **Menu** button.

(3) Press the ▲ or ▼ button to choose "Service."

(4) Press the **OK** button.

TIP:
For models with touch panel, you may press the **Service** button.

(5) Press the ▲ or ▼ button to choose "Data Transfer."

(6) Press the **OK** button.

TIP:
For models with touch panel, you may press the **Data Transfer** button.

(7) Press the ▲ or ▼ button to choose "Fax Transfer."

(8) Press the **OK** button.

TIP:
For models with touch panel, you may press the **Fax Transfer** button.

(9) If "No Data" appears on the LCD, there are no faxes left in the machine's memory.
Then press the **Stop/Exit** button.
If a fax number entry screen appears, there are faxes in the machine's memory.
Then enter the fax number to which faxes will be forwarded

(10) Press the **Start/Black** button.

<Disconnecting Cables and Removing Accessories>

Prior to proceeding with the disassembly procedure,

(1) Unplug

- the AC cord,
- the USB cable, if connected,
- the LAN cable, if connected, and
- USB flash memory drive, if connected.
- LAN port cap

(2) Remove

- the Paper tray,
- the Toner cartridge,
- the Drum unit,
- the Belt unit, and
- the Waste toner box.

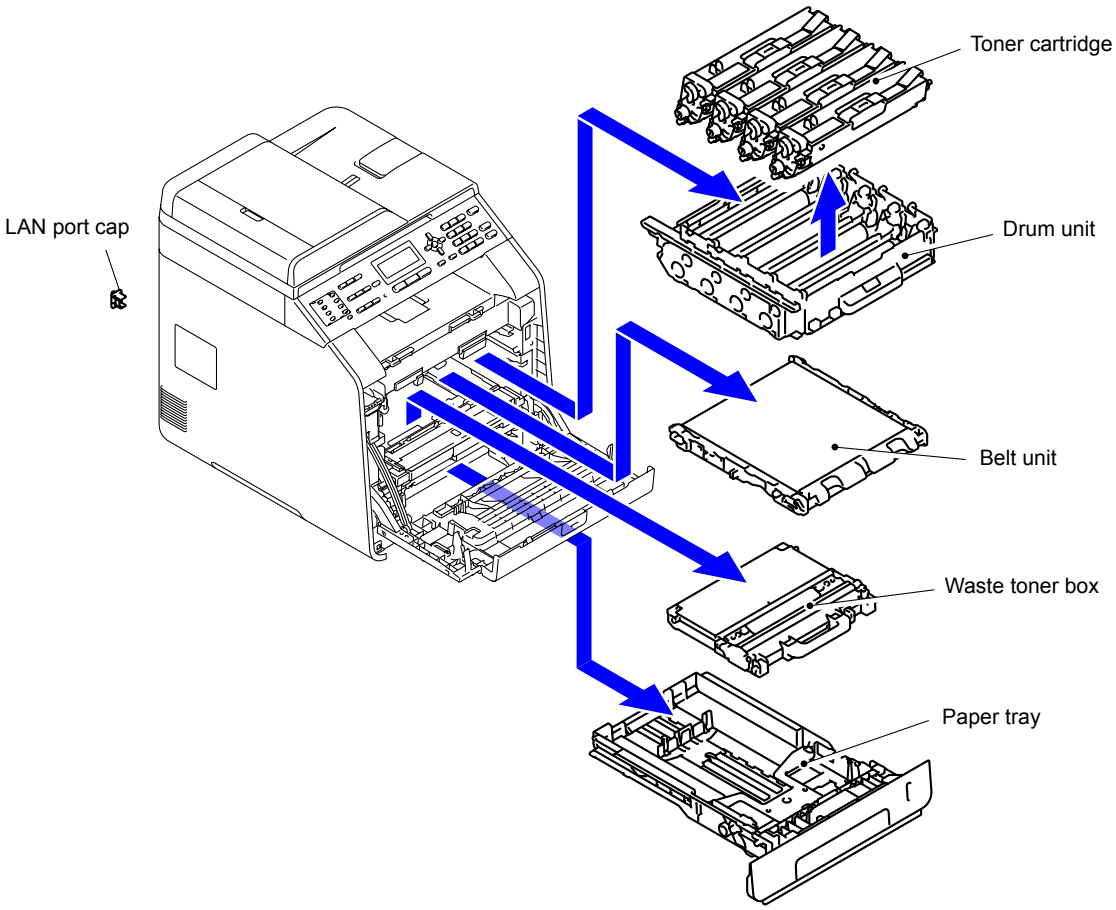

9.1 Paper Tray

(1) Release the Hook to remove the T1 separation pad holder ASSY from the Paper tray.

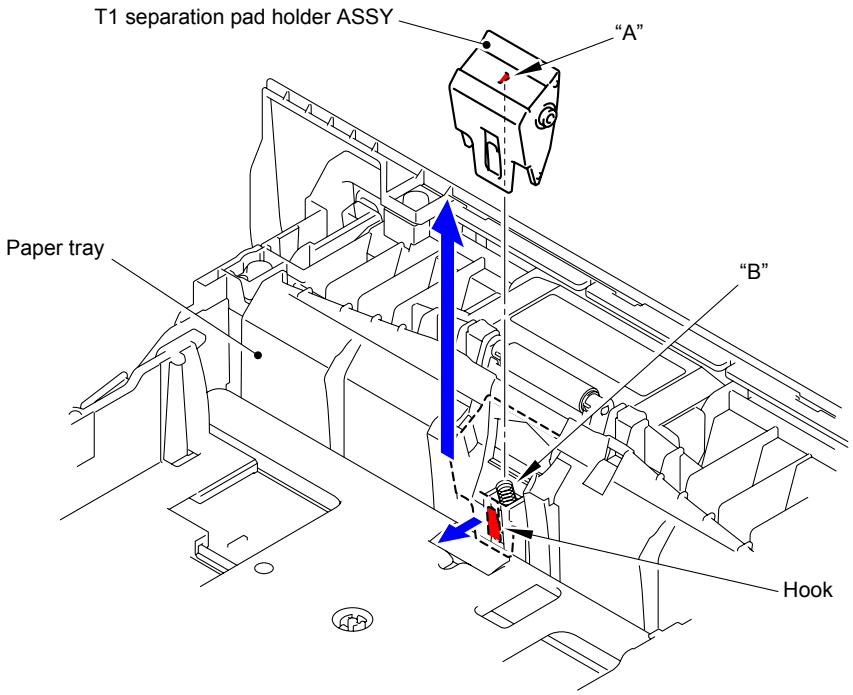

Fig. 3-1

Assembling Note:
Mount the T1 separation pad holder ASSY in a way that "A" of the T1 separation pad holder ASSY is inserted into "B" of the T1 separation pad spring.

(2) Remove the T1 separation pad spring from the Paper tray.

Note:
Be careful not to lose the T1 separation pad spring.

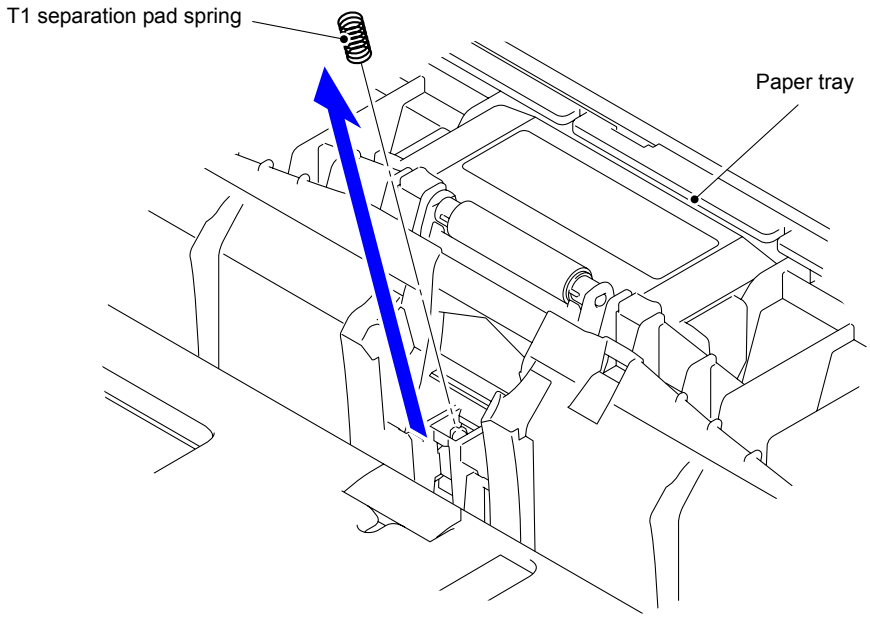

Fig. 3-2

9.2 Back Cover/Back Cover Stopper Arm L/R

(1) Open the Back cover.

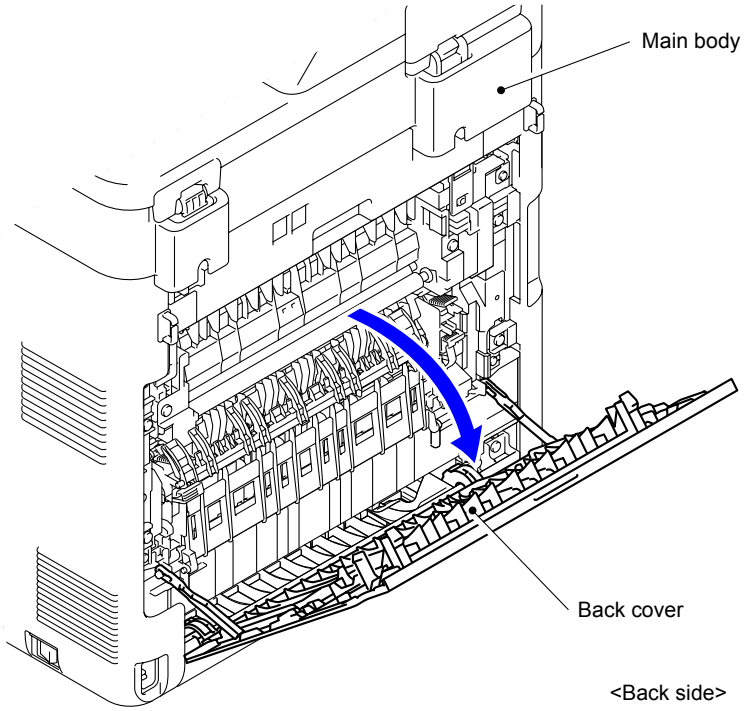

Fig. 3-3

(2) Remove the Back cover stopper arm L and R from the Main body.

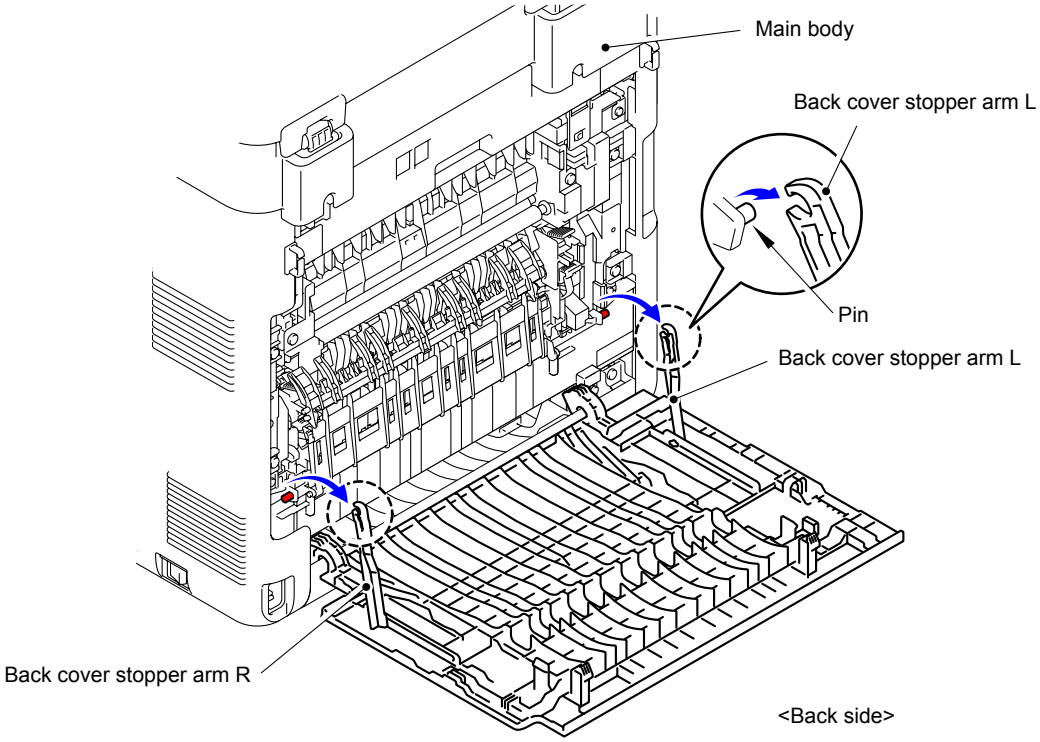

Fig. 3-4

(3) Remove the Shaft of the Back cover from the Bush on the right side of the Main body.

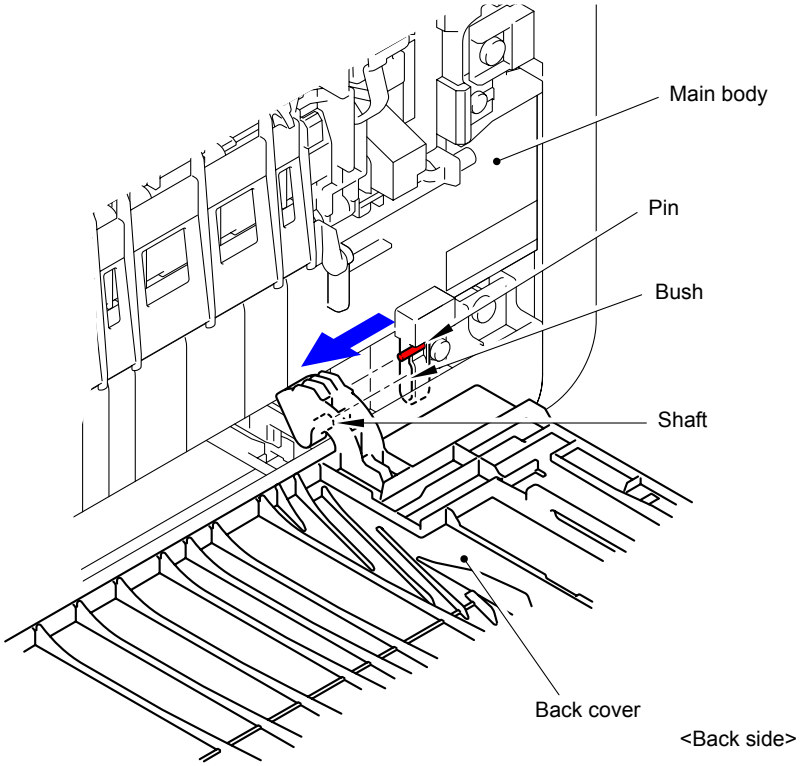

Fig. 3-5

(4) Remove the Back cover.

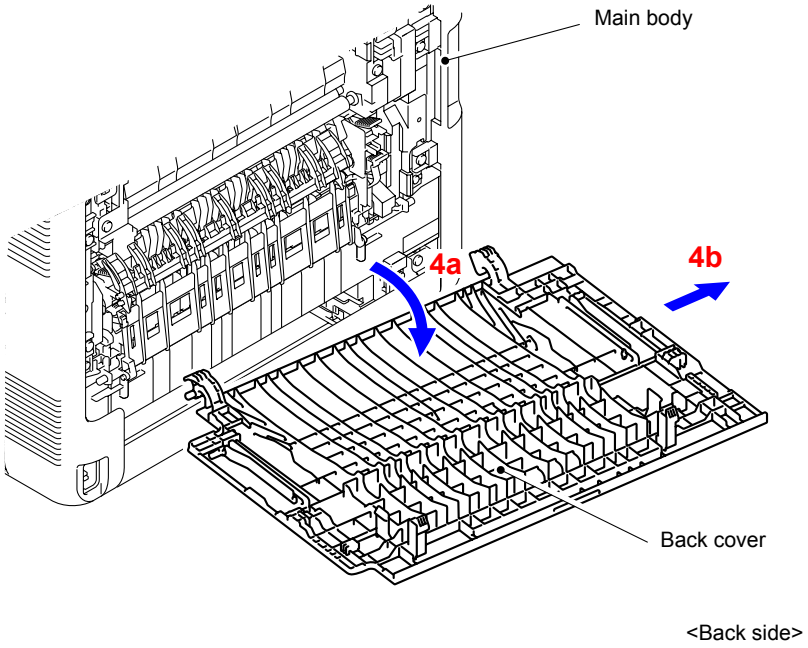

Fig. 3-6

(5) Remove the Back cover stopper arm L and R from the Back cover.

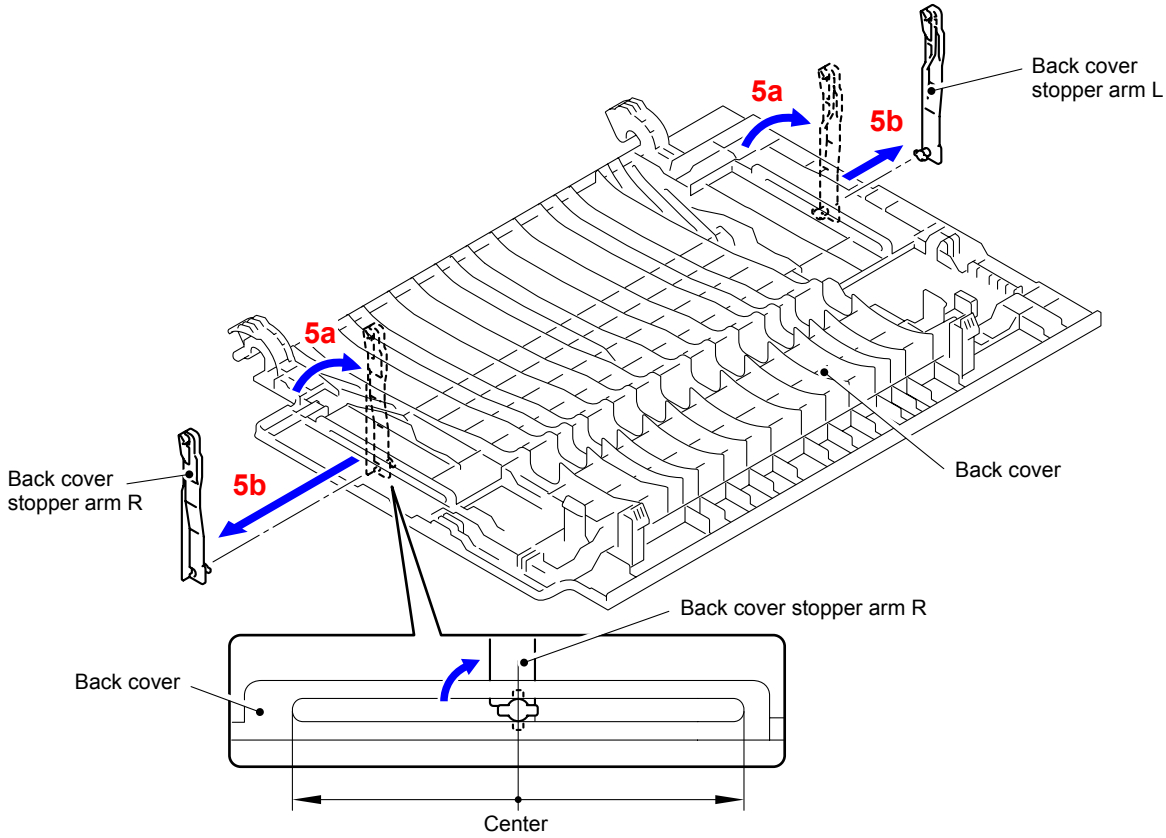

Fig. 3-7

9.3 Fuser Cover

(1) Open the Back flapper ASSY.

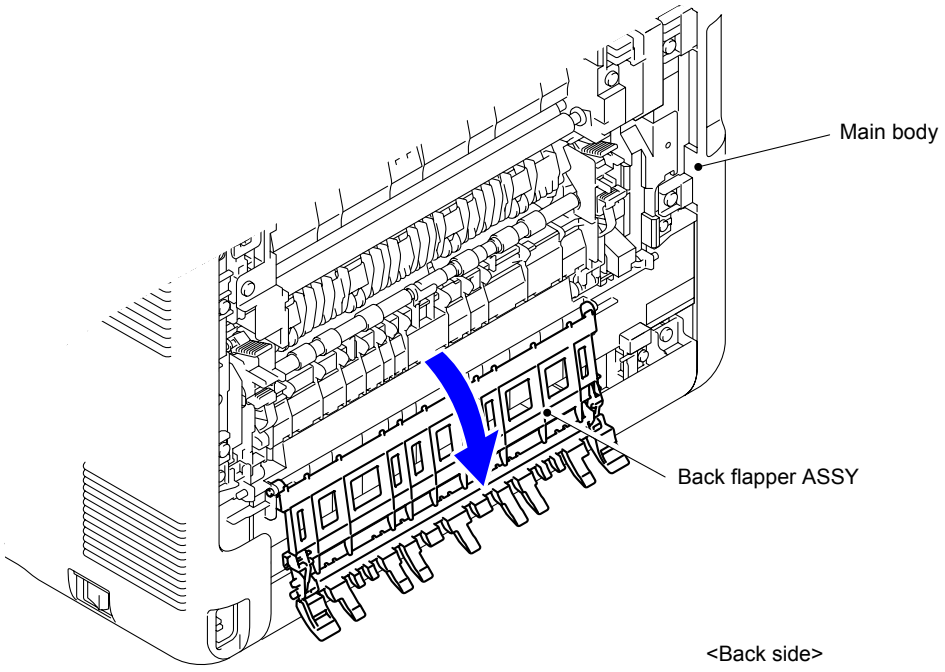

Fig. 3-8

(2) Release of the Fuser cover lock lever L and R and open the Fuser cover ASSY.

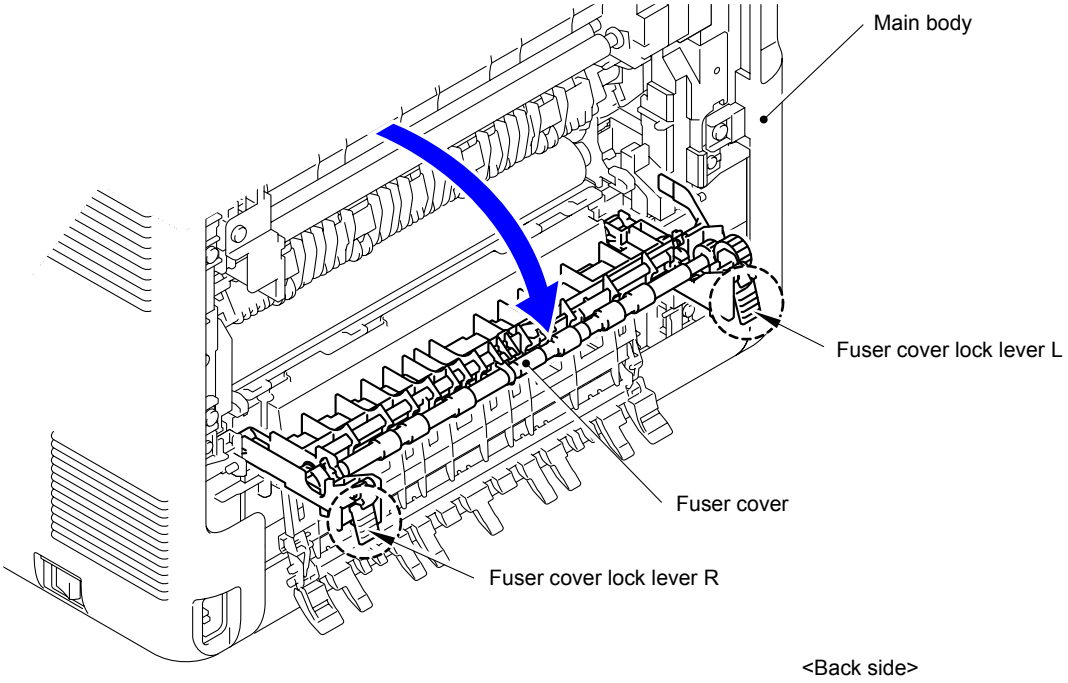

Fig. 3-9

(3) Remove the Taptite bind S M3x8 screw from the Fuser cover L.

(4) Release the Hook to remove the Fuser cover L from the Main body.

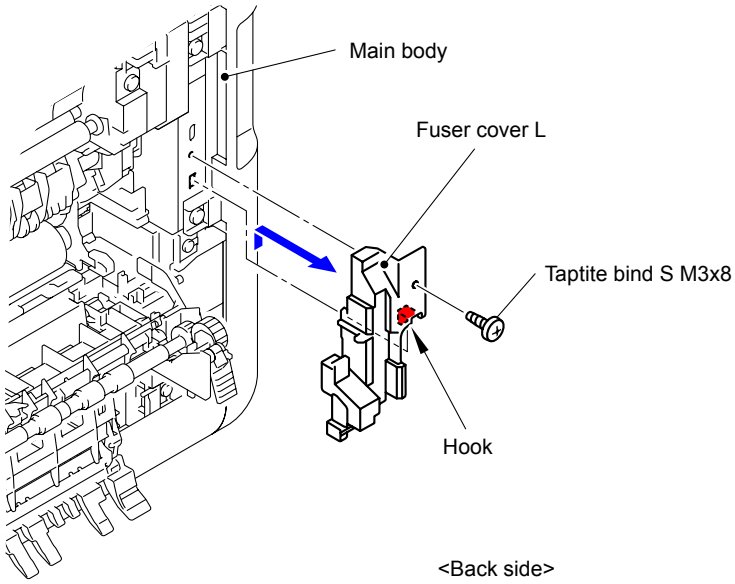

Fig. 3-10

(5) Slide the Fuser cover in the direction of the arrow 5a to remove it to the front.

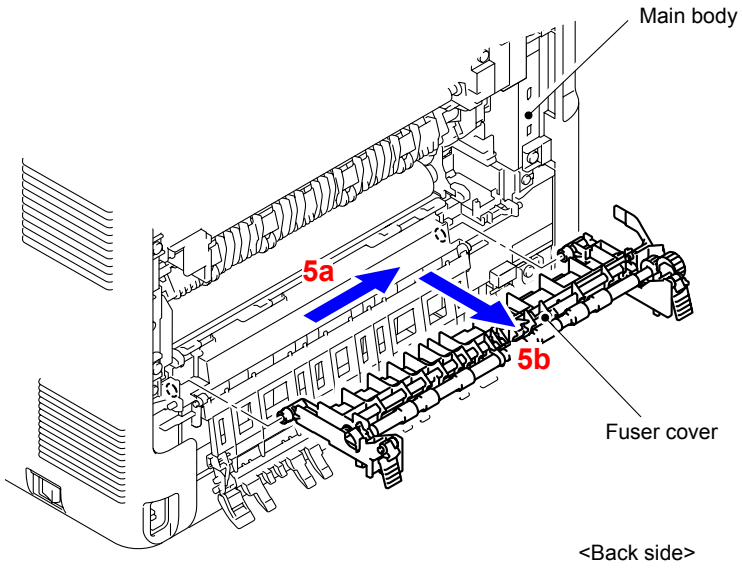

Fig. 3-11

9.4 Fuser Unit

(1) Remove the Taptite bind S M3x8 screw from the Fuser cover R.

(2) Release the Hook to remove the Fuser cover R from the Main body.

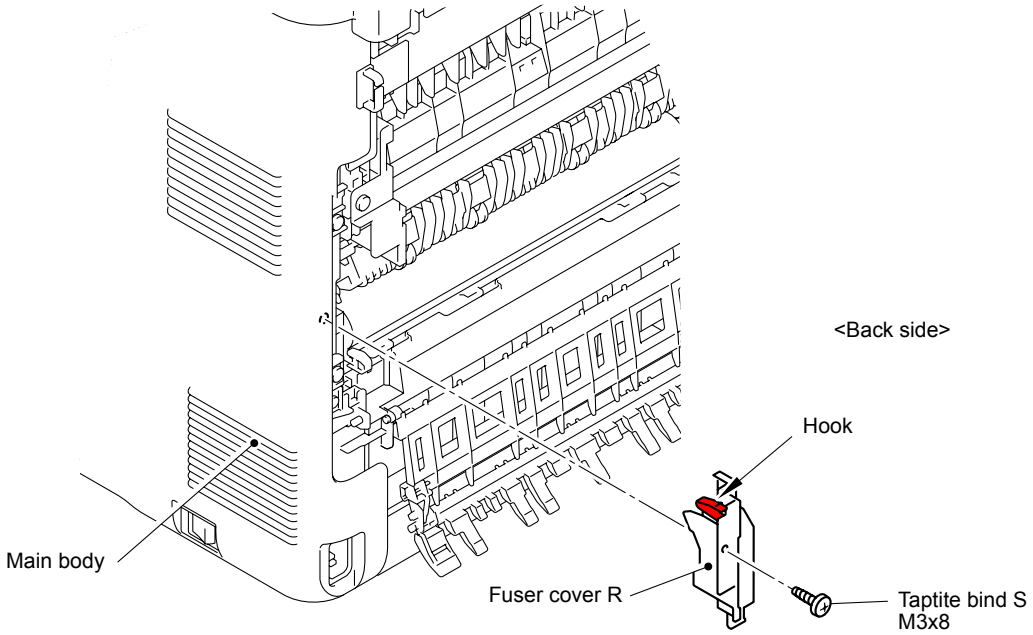

Fig. 3-12

(3) Disconnect the two Connectors (CN1, CN2) from the Paper eject sensor PCB ASSY.

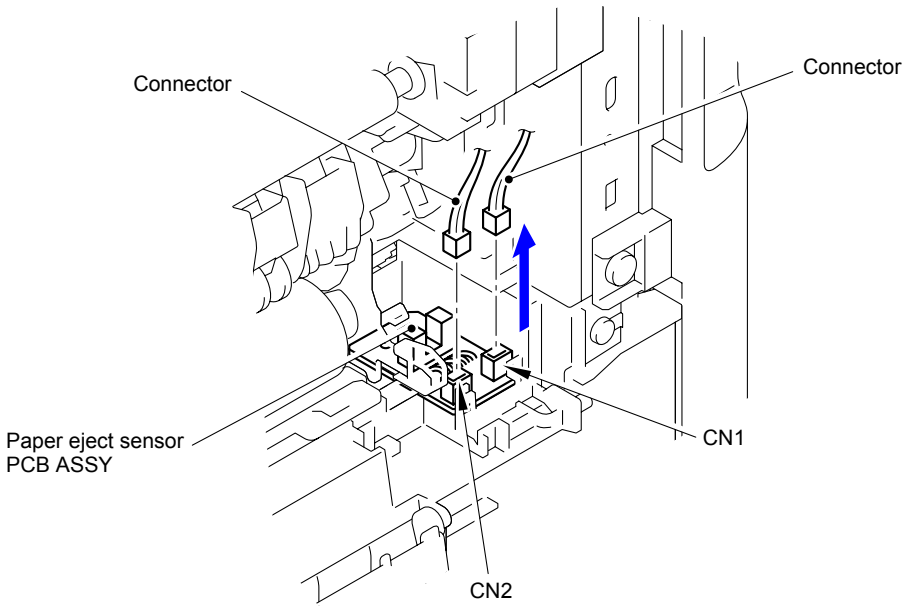

Fig. 3-13

(4) Disconnect the Electrode terminal from the Fuser unit.

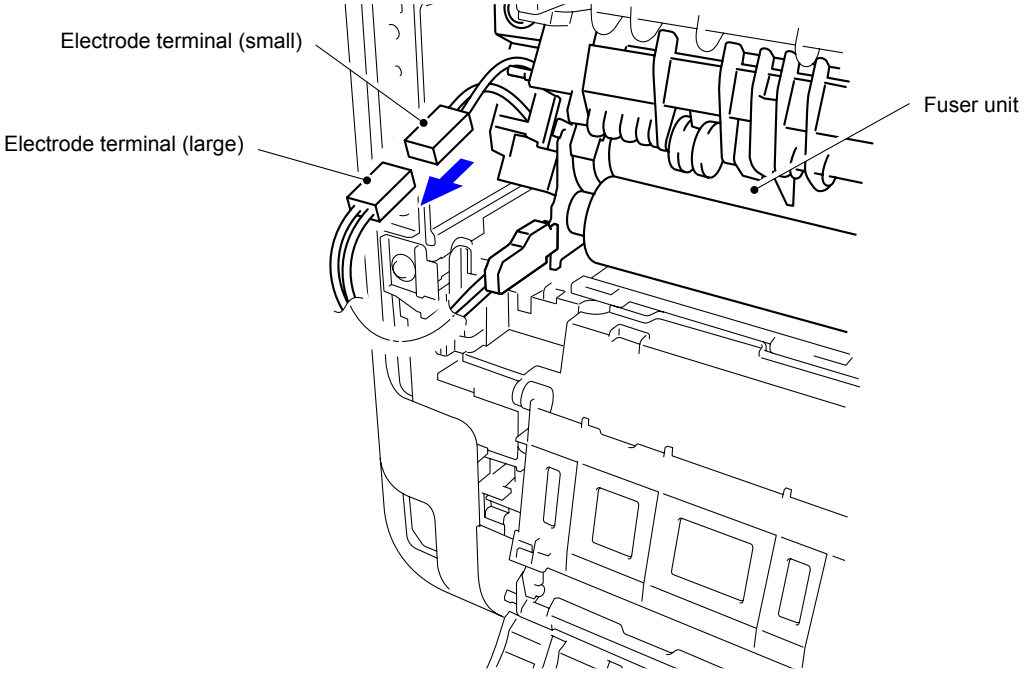

Fig. 3-14

(5) Remove the two Taptite pan B M4x14 screws to remove the Fuser unit from the Main body.

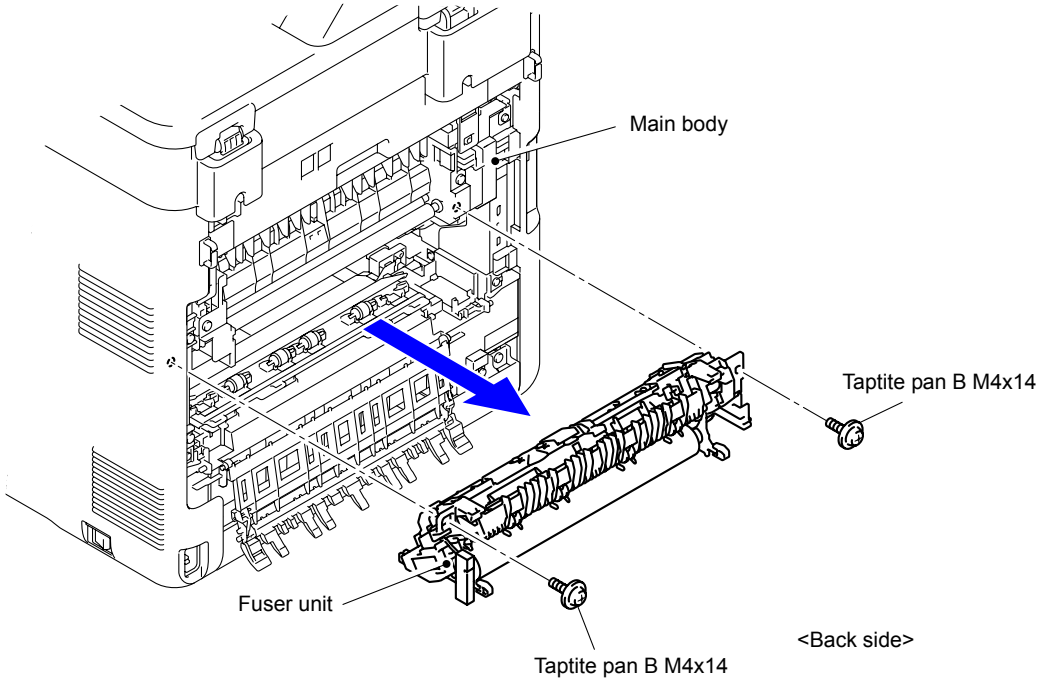

Fig. 3-15

Note:

- Do not apply a physical impact or vibration to the Fuser unit.
- Do not touch the roller and electrodes as shown in the figure below to prevent breakage of the Fuser unit.

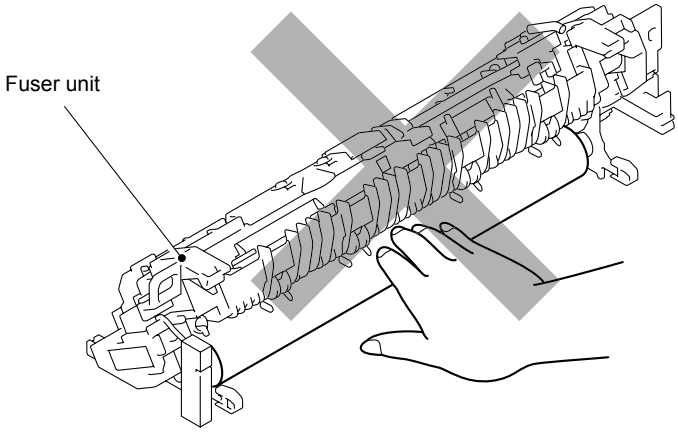

Fig. 3-16

9.5 Side Cover L/Access Cover

(1) Remove the Cord hook.

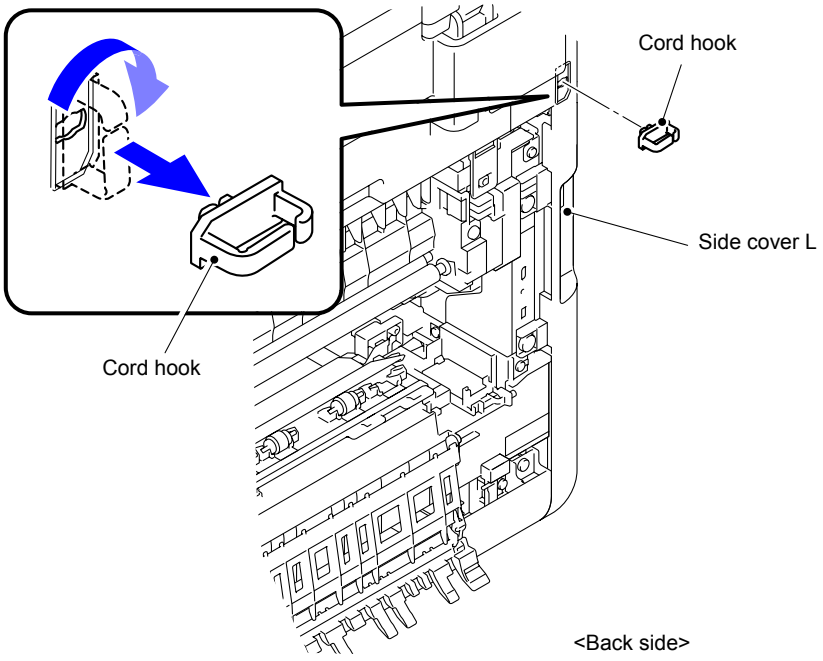

Fig. 3-17

(2) Open the Front cover.

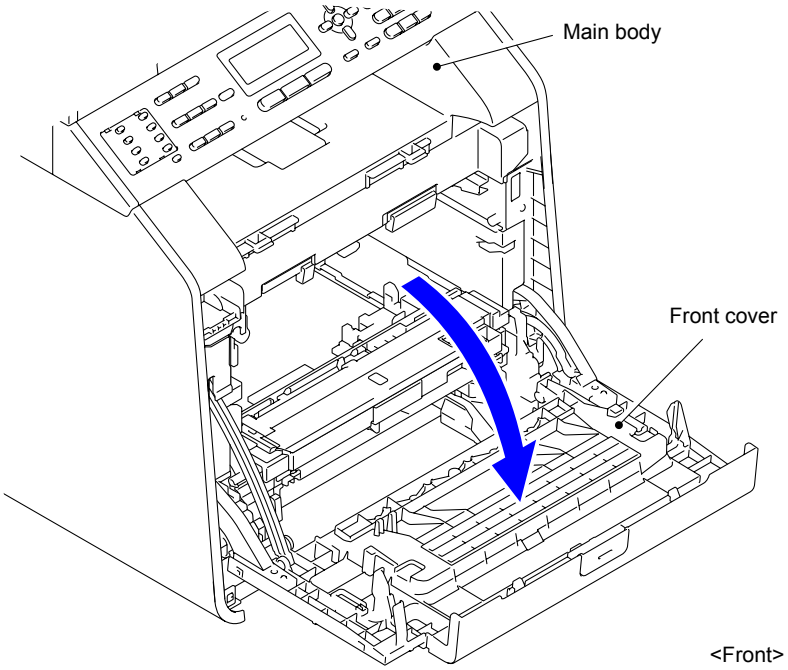

Fig. 3-18

(3) Remove the Taptite bind S M3x8 screw from the front of the Side cover L.

(4) Remove the Taptite bind B M4x12 screw from the side of the Side cover L.

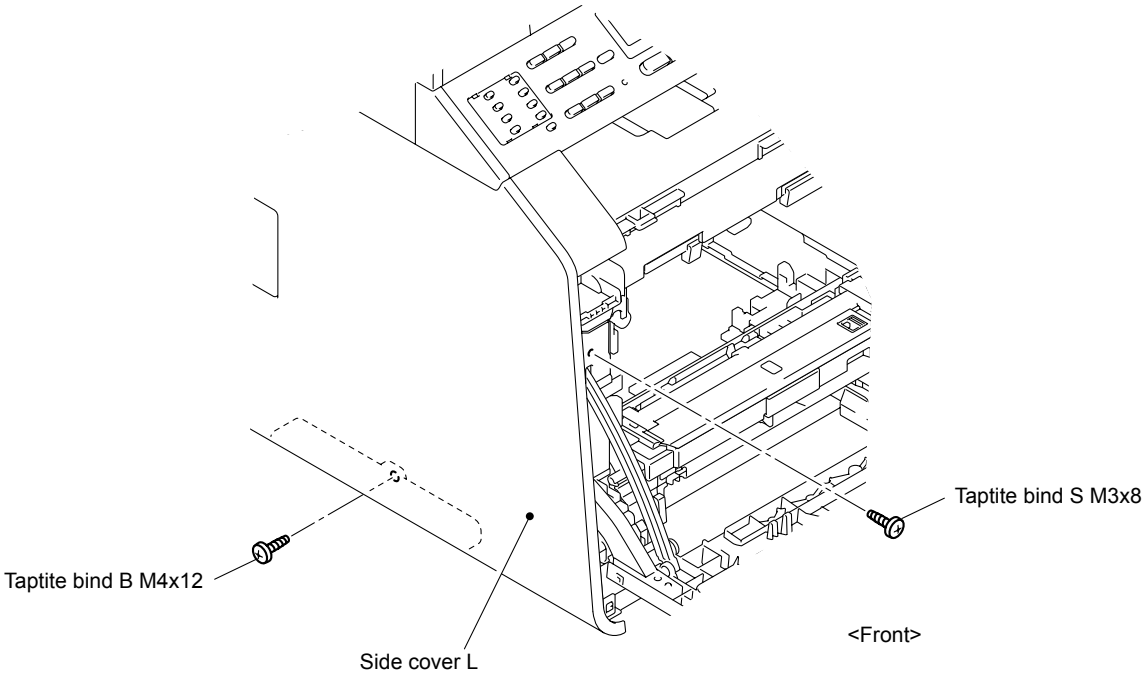

Fig. 3-19

(5) Remove the two Taptite bind S M3x8 screws from the back of the Side cover L.

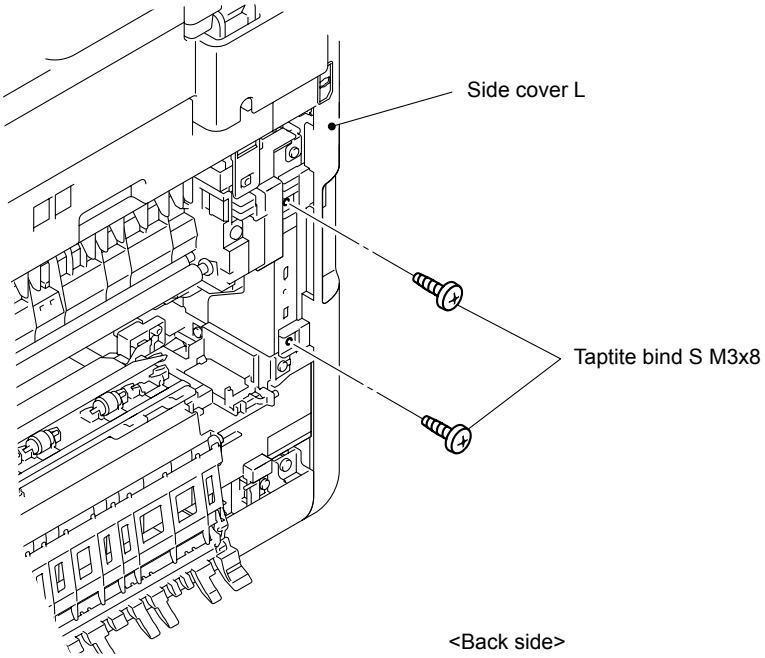

Fig. 3-20

■ A4 model

(6) Release the Hooks 1 and 2 at the same time, and then release the Hooks 3 to 6 in numerical order. Release the Hook 7. Release the Hooks 8 and 9 to remove the Side cover L from the Main body.

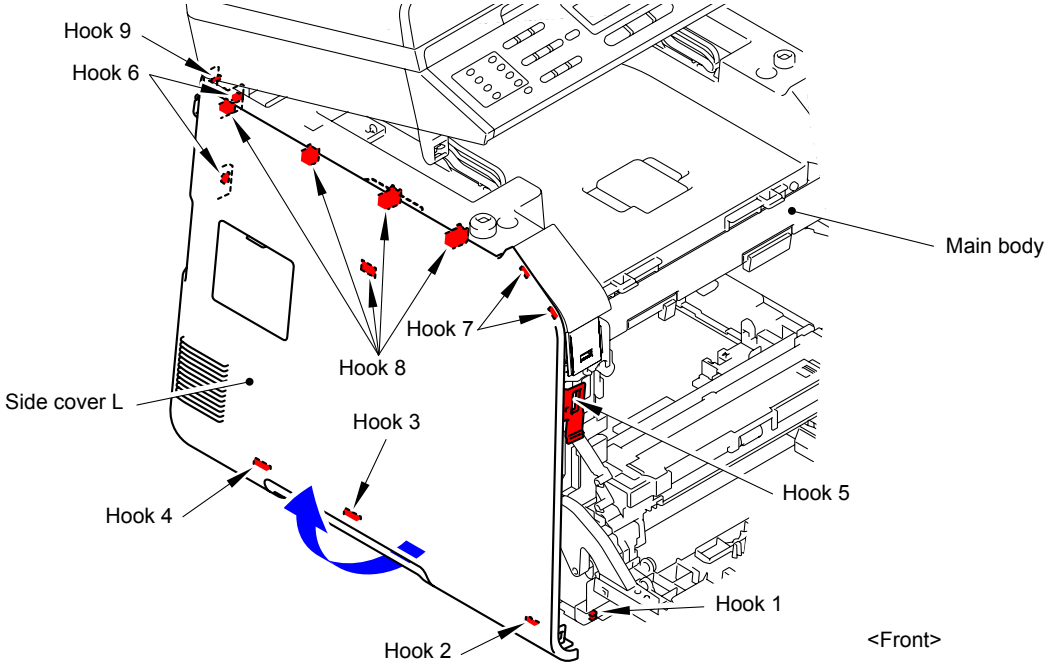

Fig. 3-21

* Inside of Side cover L

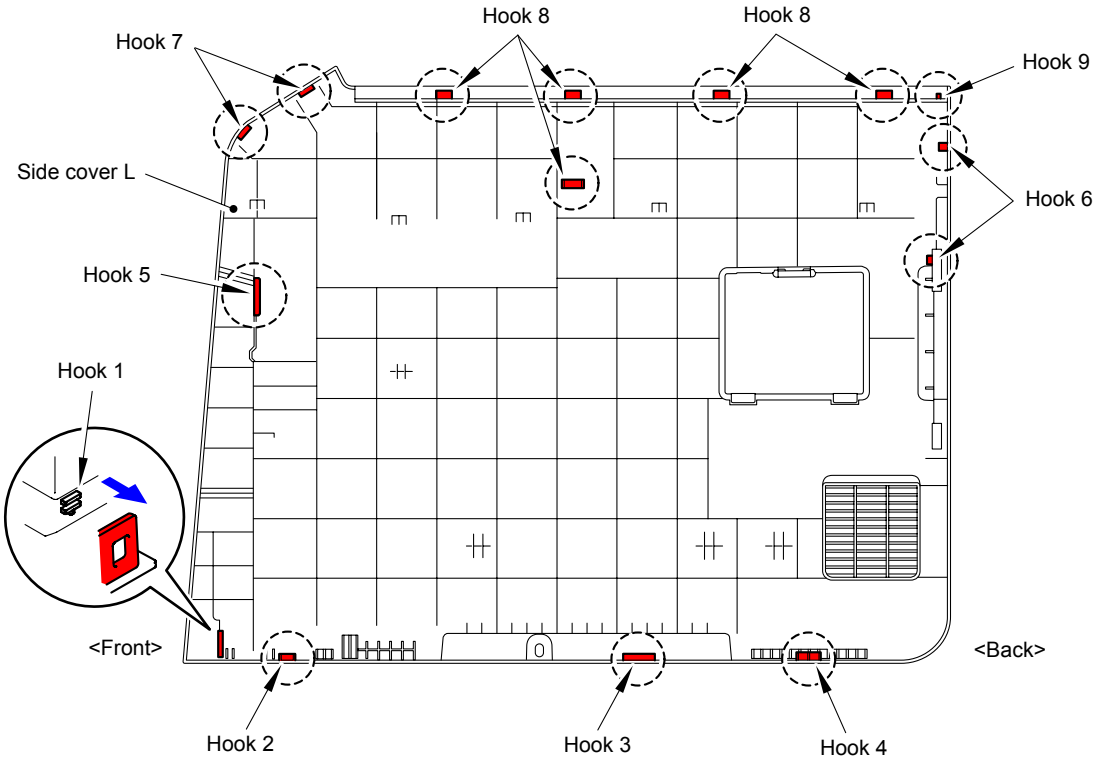

Fig. 3-22

■ Legal model

(6) Release the Hooks 1 and 2 at the same time, and then release the Hooks 3 to 6 in numerical order. Release the Hook 7. Release the Hook 8 to remove the Side cover L from the Main body.

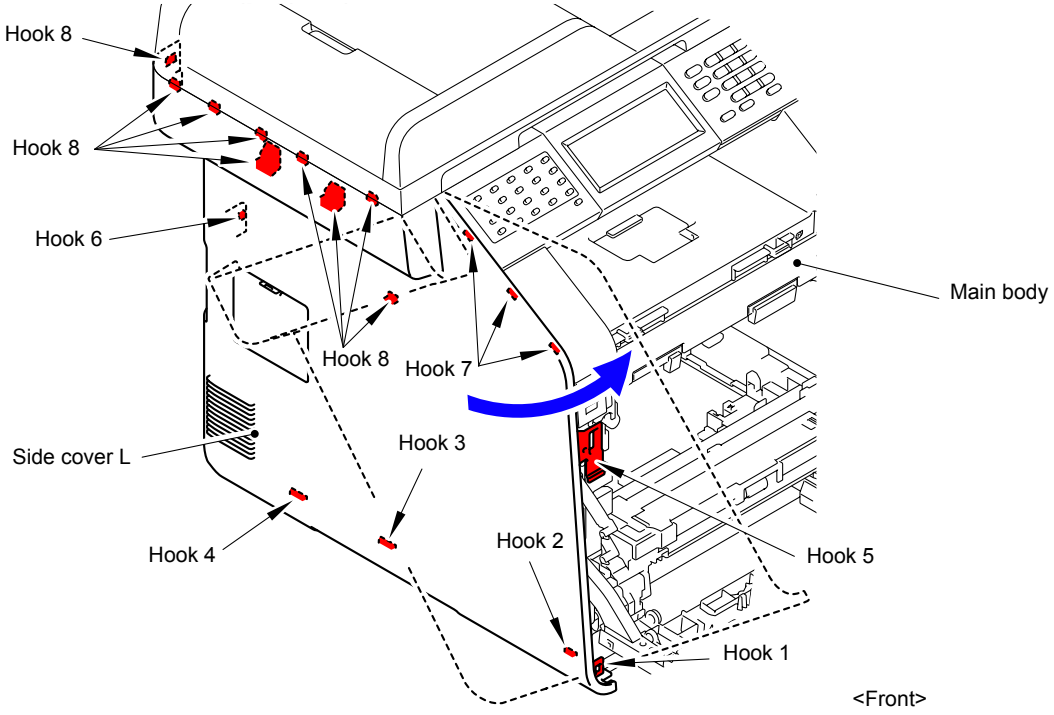

Fig. 3-23

* Inside of Side cover L

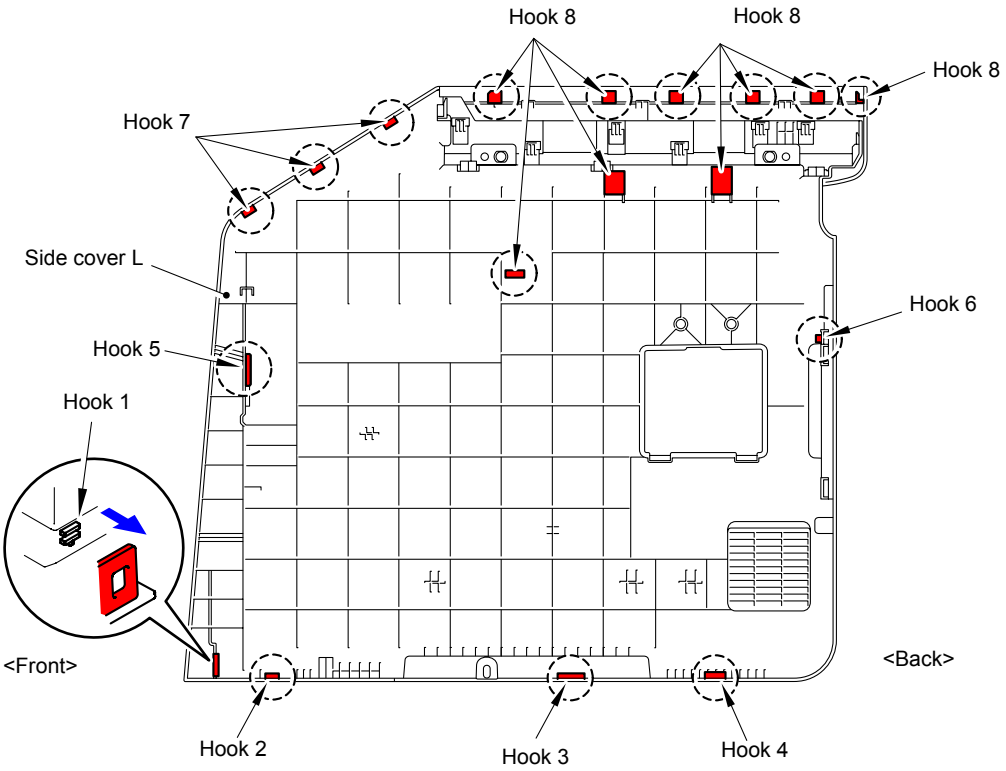

Fig. 3-24

(7) Remove the two Taptite bind B M4x12 screws from the Side cover L.

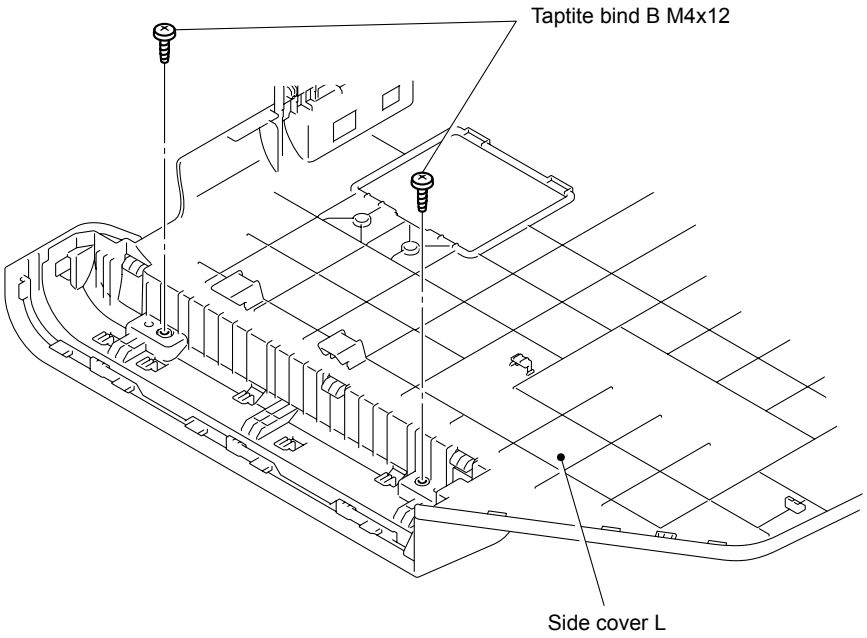

Fig. 3-25

(8) Release the ten Hooks and two Bosses. Remove the Side cover L upper from the Side cover L.

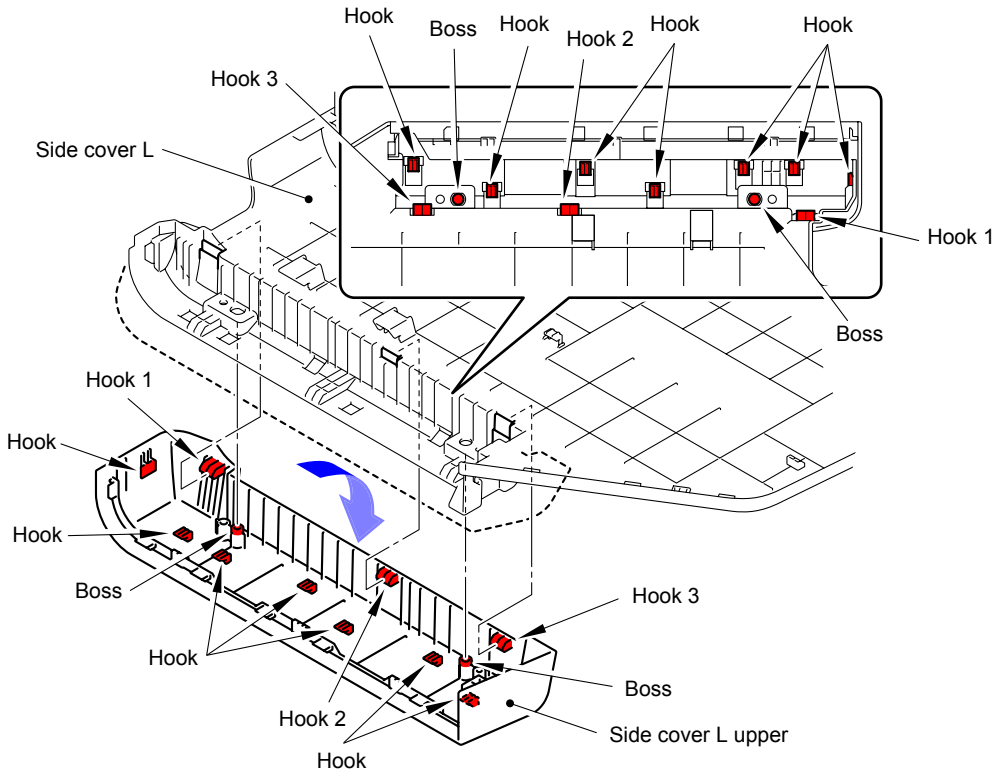

Fig. 3-26

(9) Remove the Access cover from the Side cover L. (A4 model/Legal model)

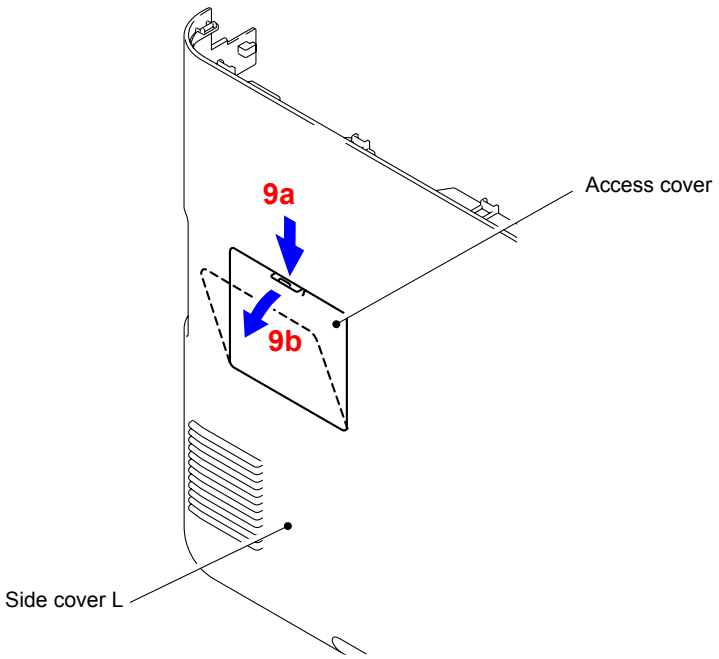

Fig. 3-27

9.6 Side Cover R ASSY

(1) Removee the Cord hook.

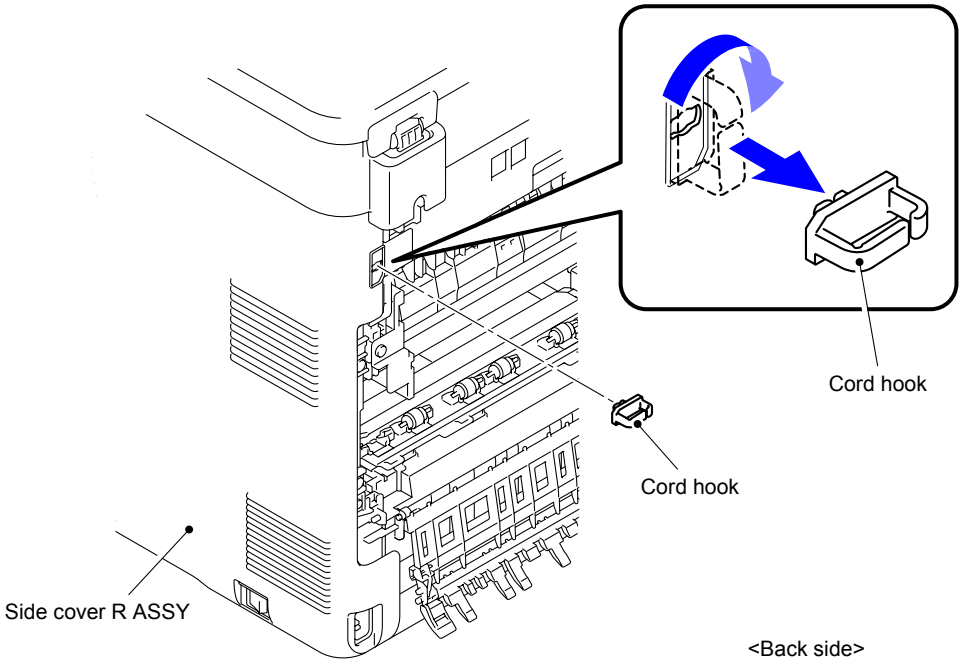

Fig. 3-28

(2) Remove the Taptite bind S M3x8 screw from the front of the Side cover R ASSY.

(3) Remove the Taptite bind B M4x12 screw from the side of the Side cover R ASSY.

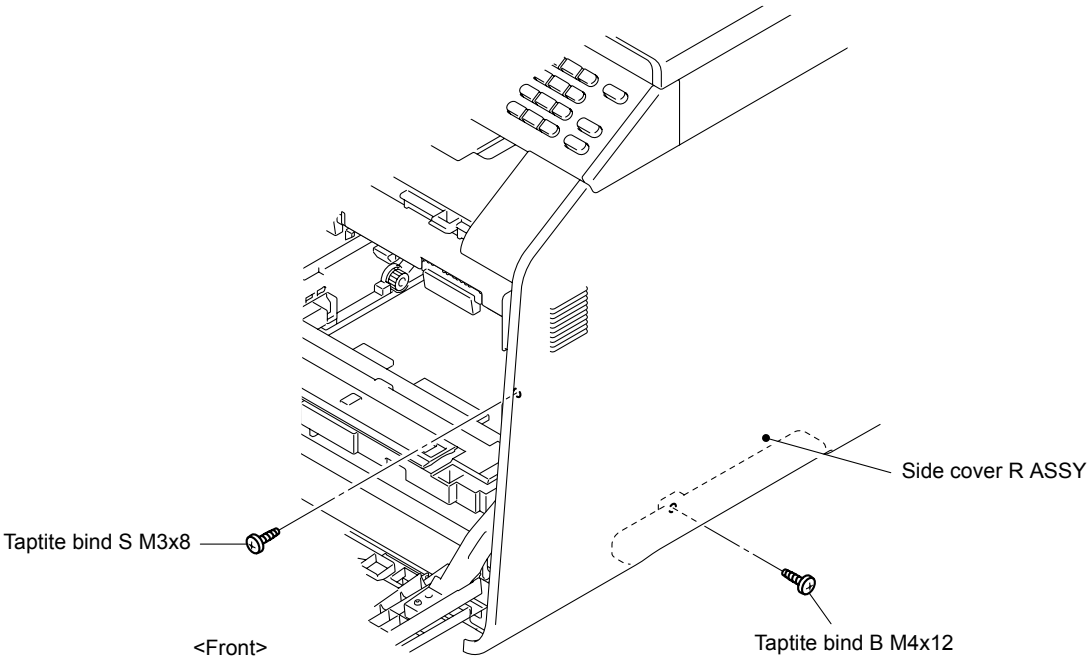

Fig. 3-29

(4) Remove the two Taptite bind S M3x8 screws from the back of the Side cover R ASSY.

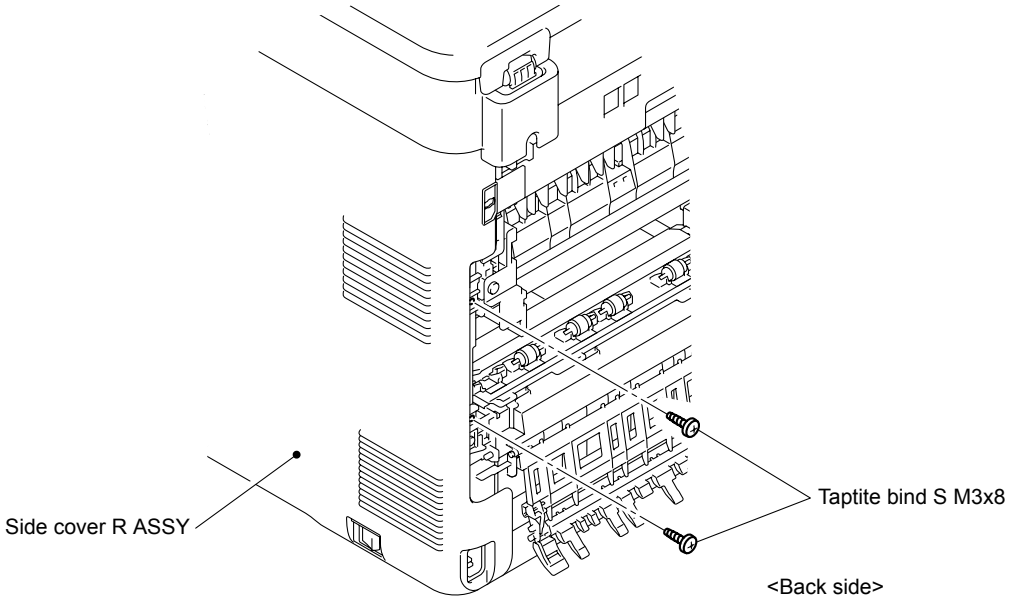

Fig. 3-30

■ A4 model

(5) Release the Hooks 1 and 2 at the same time, and then release the Hooks 3 to 6 in numerical order. Release the Hook 7. Release the Hooks 8 and 9 to remove the Side cover R ASSY from the Main body.

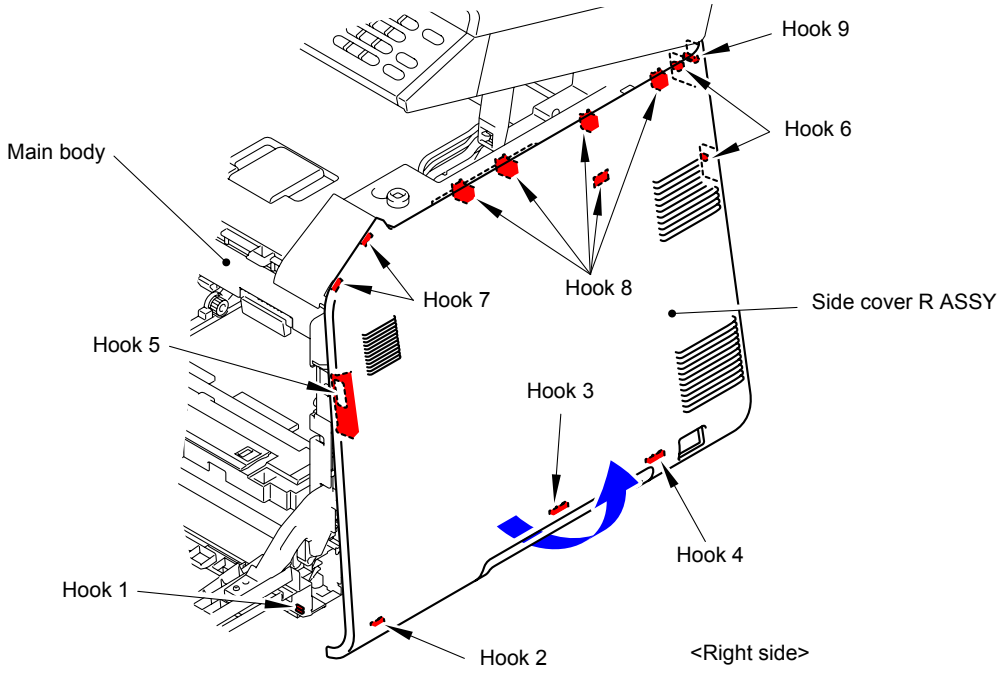

Fig. 3-31

* Inside of Side cover R ASSY

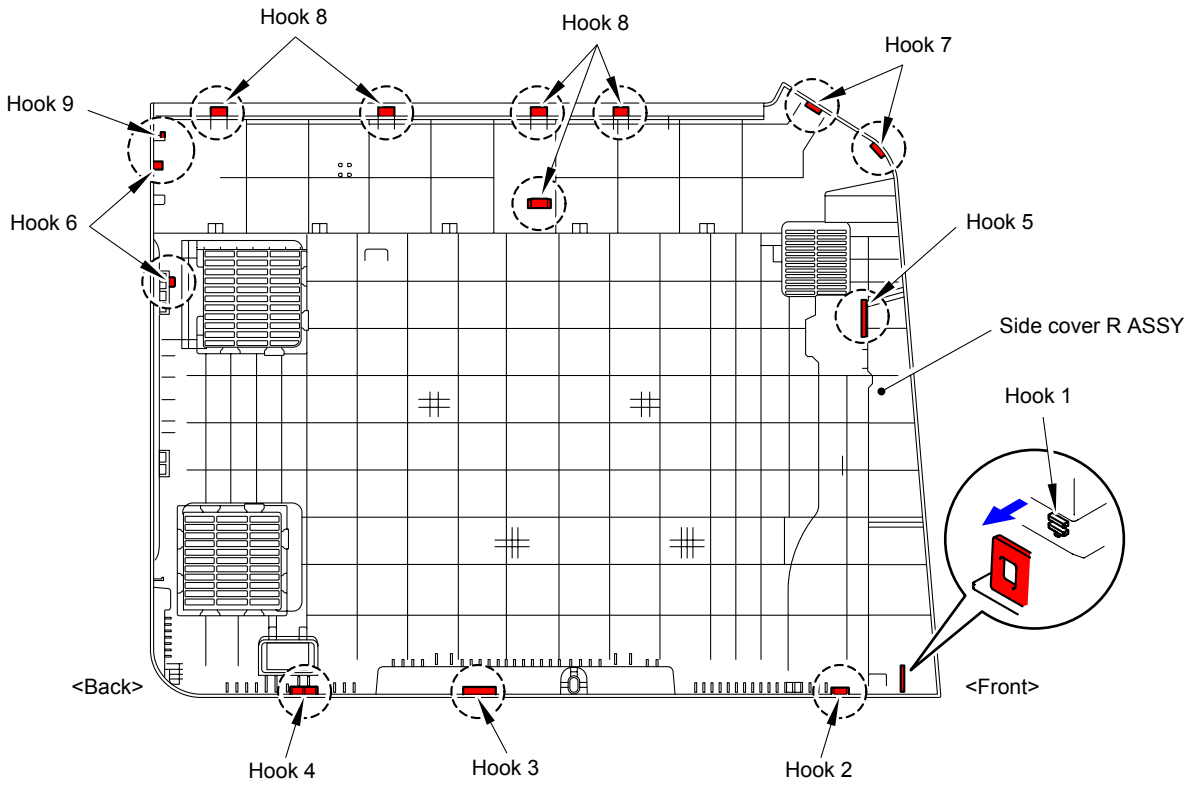

Fig. 3-32

■ Legal model

(5) Release the Hooks 1 and 2 at the same time, and then release the Hooks 3 to 6 in numerical order. Release the Hook 7. Release the Hook 8 to remove the Side cover R ASSY from the Main body.

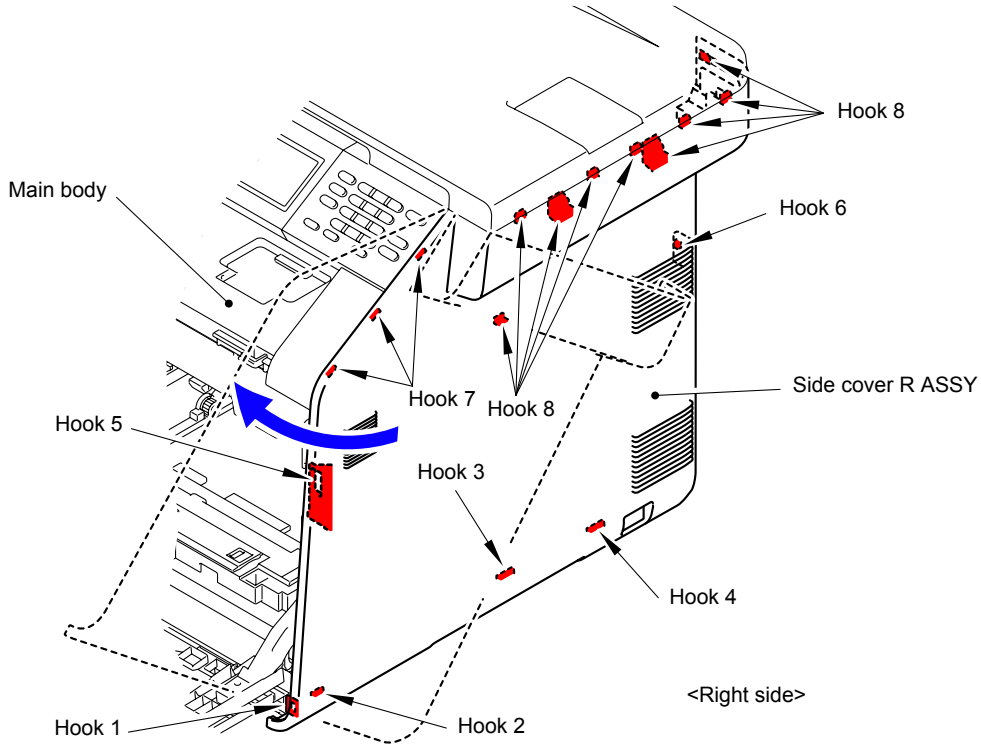

Fig. 3-33

* Inside of Side cover R ASSY

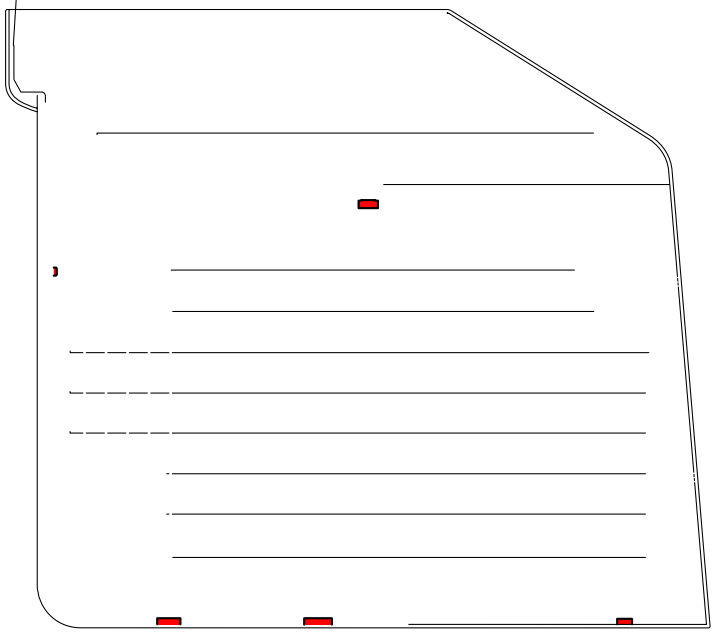

Fig. 3-34

(6) Remove the two Taptite bind B M4x12 screws from the Side cover R ASSY.

Fig. 3-35

(7) te

SY.

Hoo

9.7 D

(1

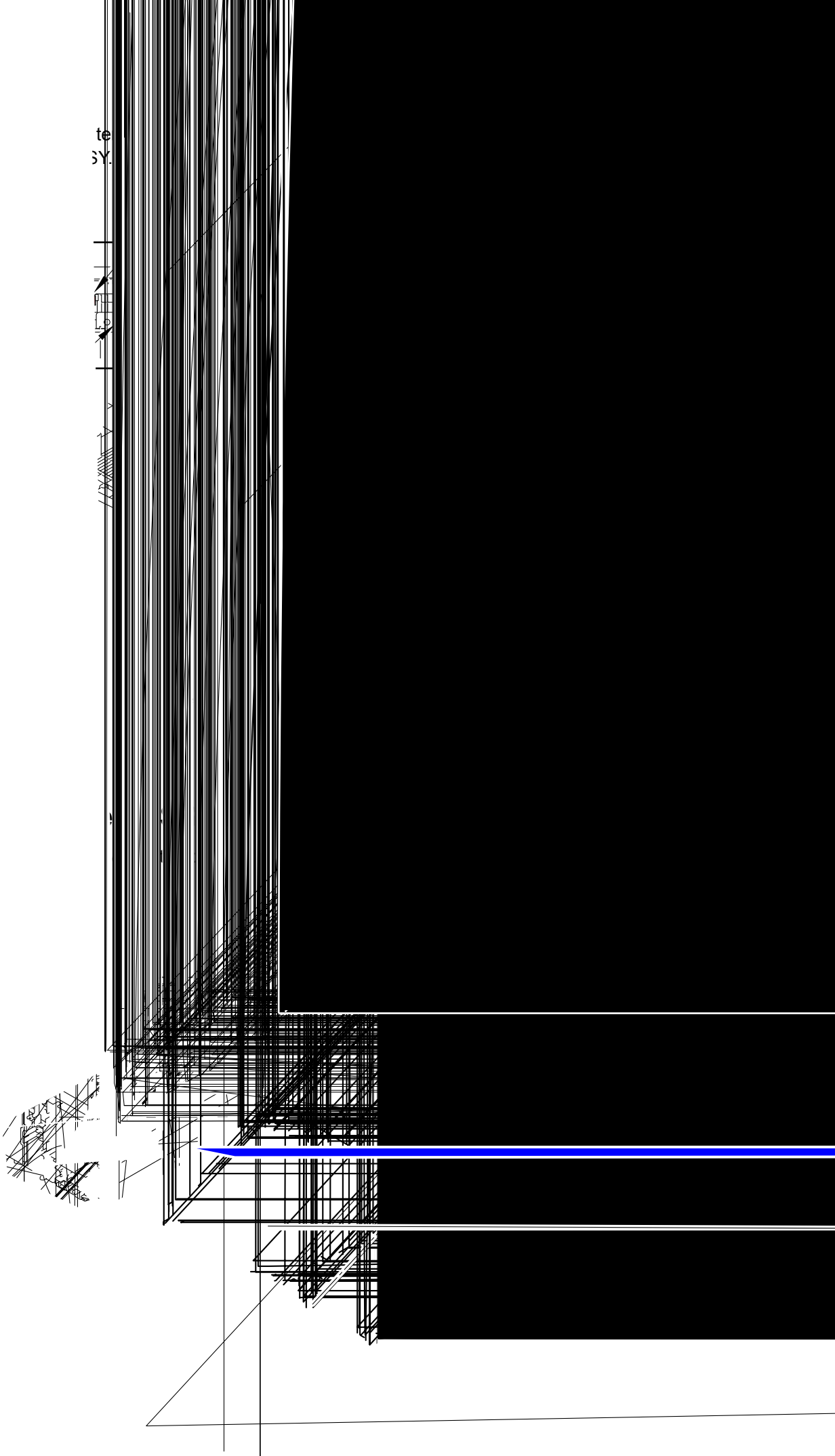

9.8 MP Cover ASSY/MP Paper Guide ASSY

(1) Close the Front cover.

(2) Open the MP cover ASSY.

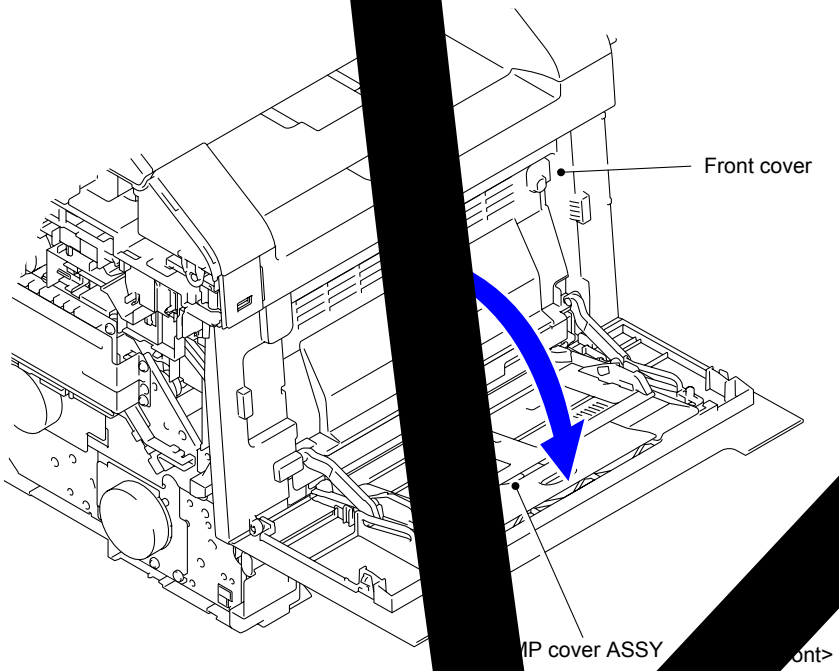

Fig. 3-3

(3) Remove the Pin of the MP link L and R fro ASSY.

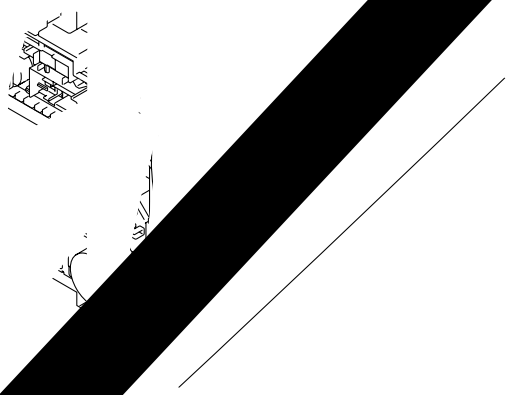

Fig. 3-39

(4) Remove the Pin of the MP link L and R from the MP paper guide ASSY.

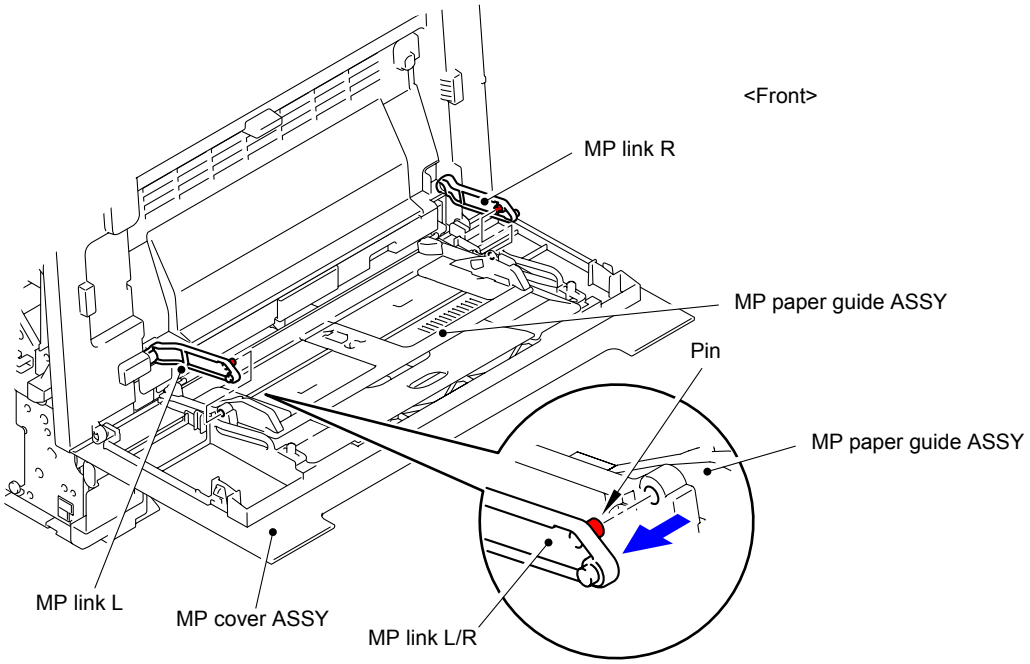

Fig. 3-40

(5) Slide the MP paper guide ASSY in the direction of the arrow to remove from MP cover ASSY.

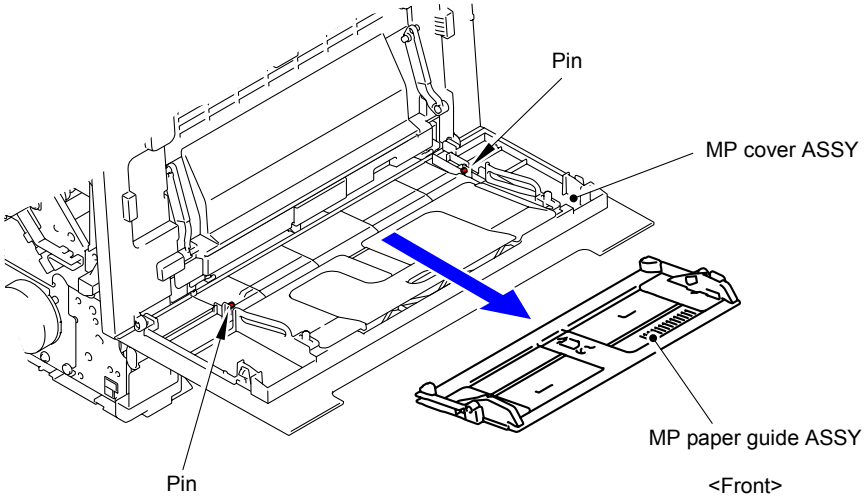

Fig. 3-41

(6) Remove the two Pins to remove the MP cover ASSY from the Front cover.

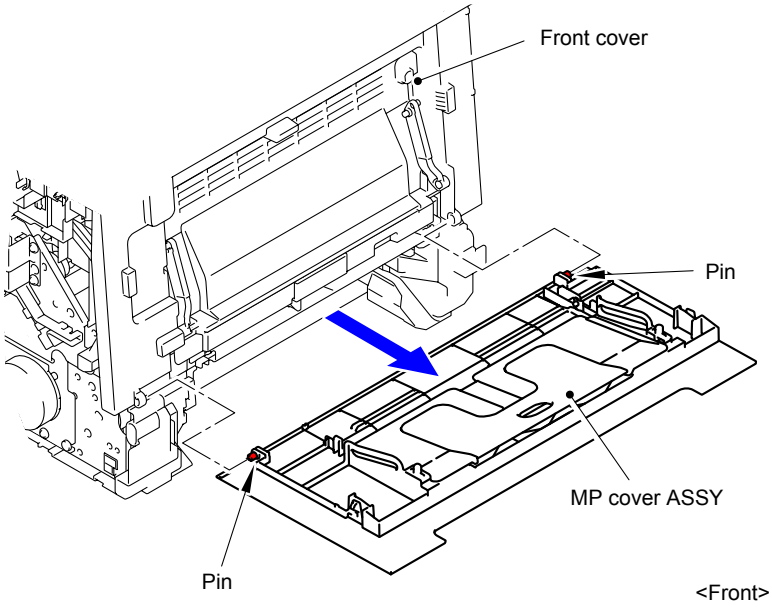

Fig. 3-42

9.9 MP Link L/R

(1) Remove the MP link L and R from the Front cover.

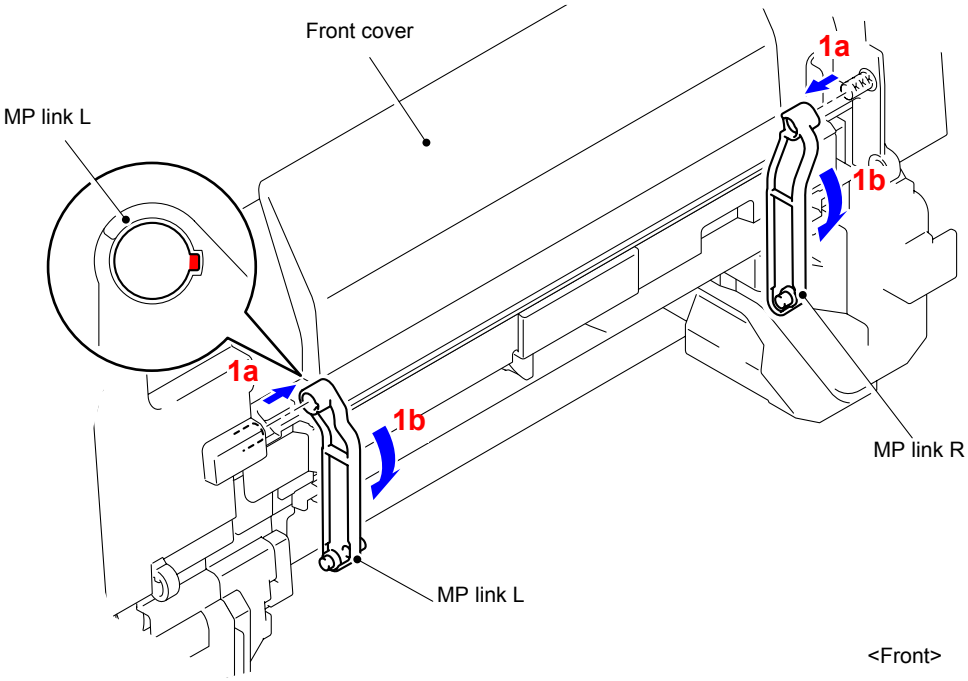

Fig. 3-43

9.10 Front Cover Arm L/R

(1) Open the Front cover.

(2) Release the Hook to remove the Forced develop release link from the Front cover.

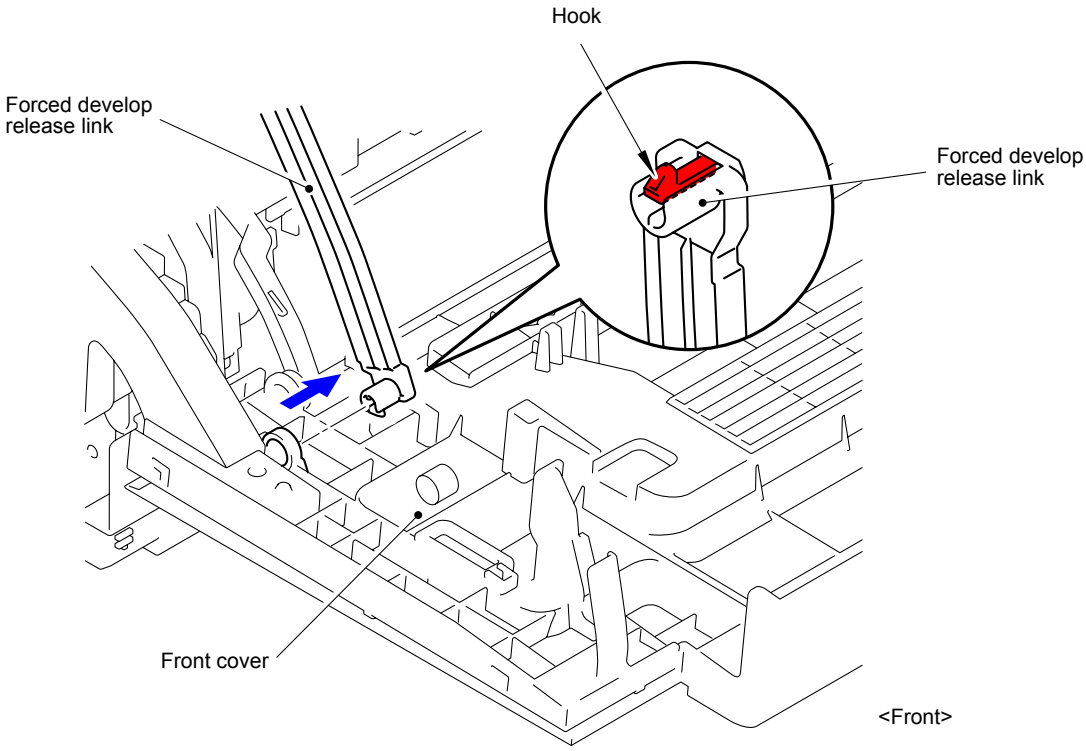

Fig. 3-44

(3) Release the Hook to remove the Joint release link from the Front cover.

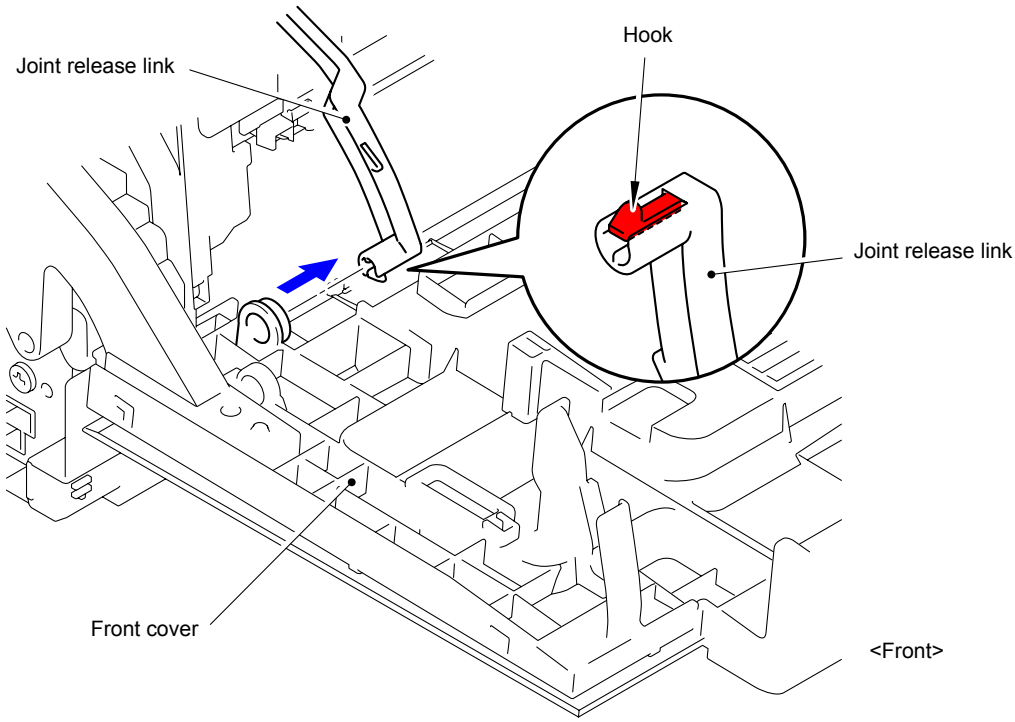

Fig. 3-45

(4) Remove the Front cover from the Main body.

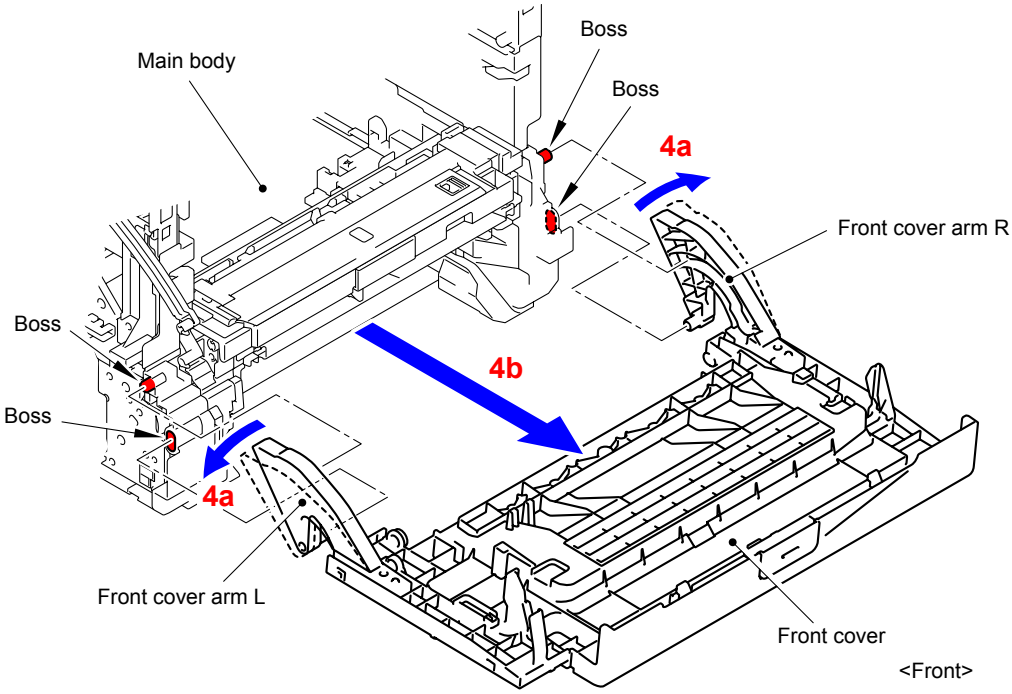

Fig. 3-46

(5) Remove the Taptite bind B M4x12 screw from the Front cover arm L.

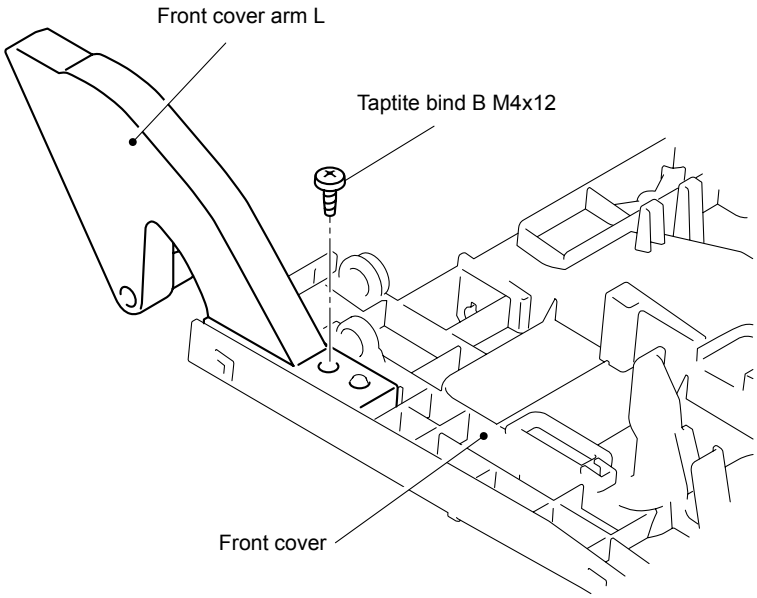

Fig. 3-47

(6) Release the Hook to remove the Front cover arm L from the Front cover.

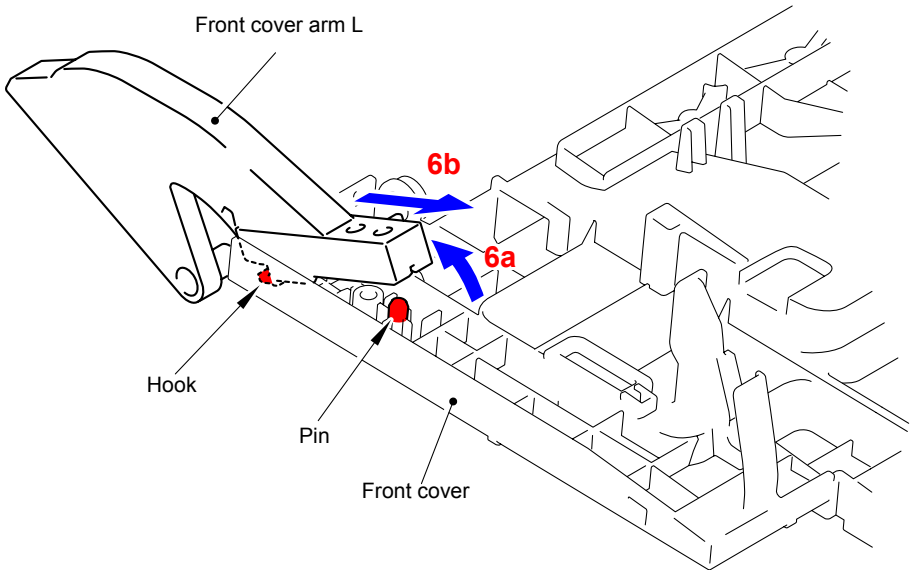

Fig. 3-48

(7) Remove the Taptite bind B M4x12 screw from the Front cover arm R.

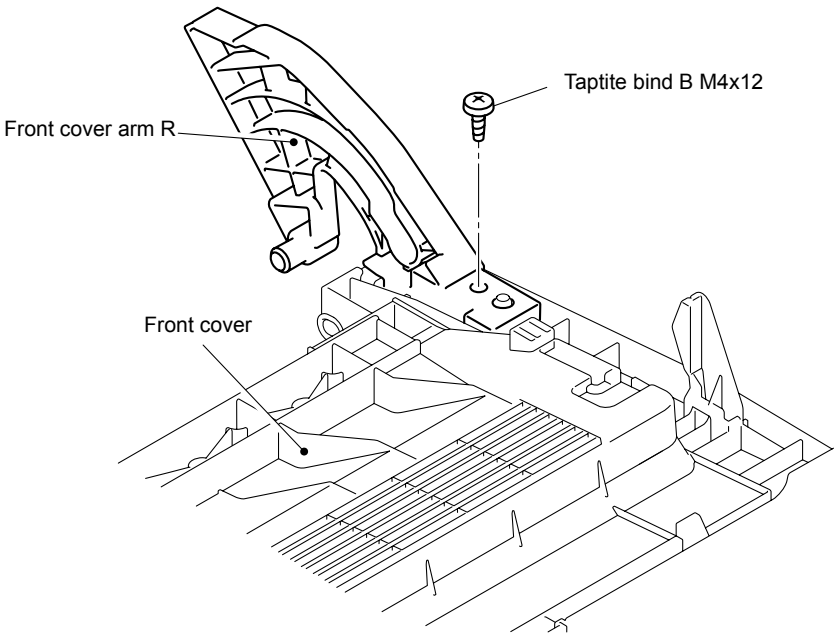

Fig. 3-49

(8) Release the Hook to remove the Front cover arm R from the Front cover.

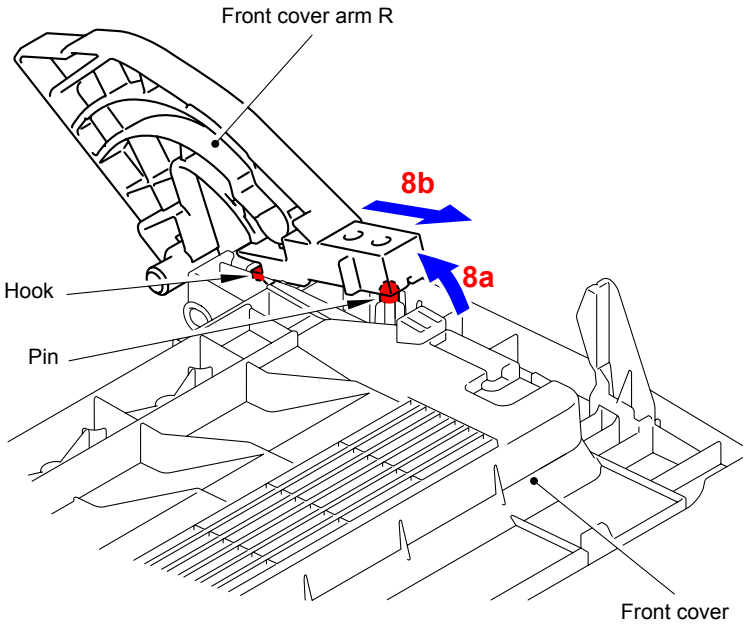

Fig. 3-50

9.11 Front Cover Release Button/Front Cover Release Button Spring

(1) Fasten the Hook of the Front cover release button to the Rib of the Front cover.

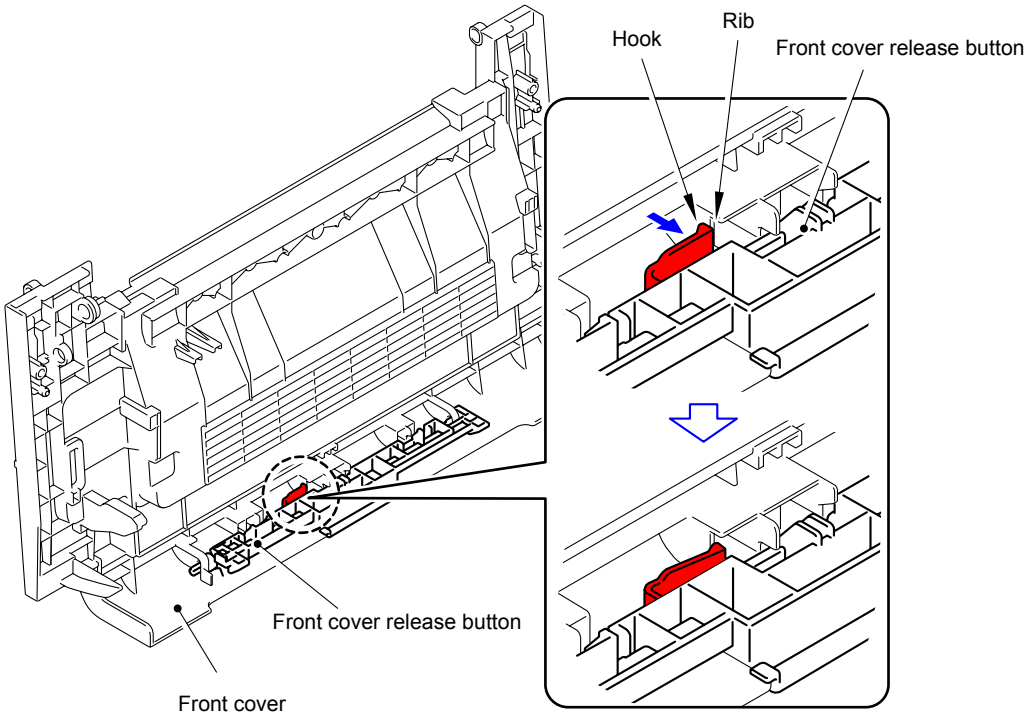

Fig. 3-51

(2) Tilt the Front cover release button in the direction of the arrow 2.

(3) Slide it in the direction of the arrow 3 to remove the shaft, and then remove the Front cover release button from the Front cover.

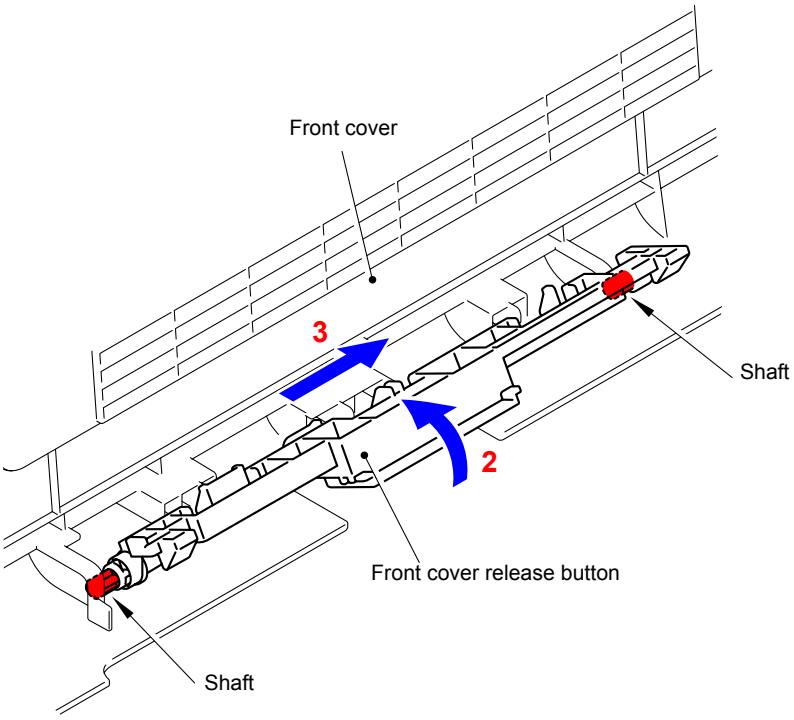

Fig. 3-52

(4) Remove the Front cover release button spring from the Front cover release button.

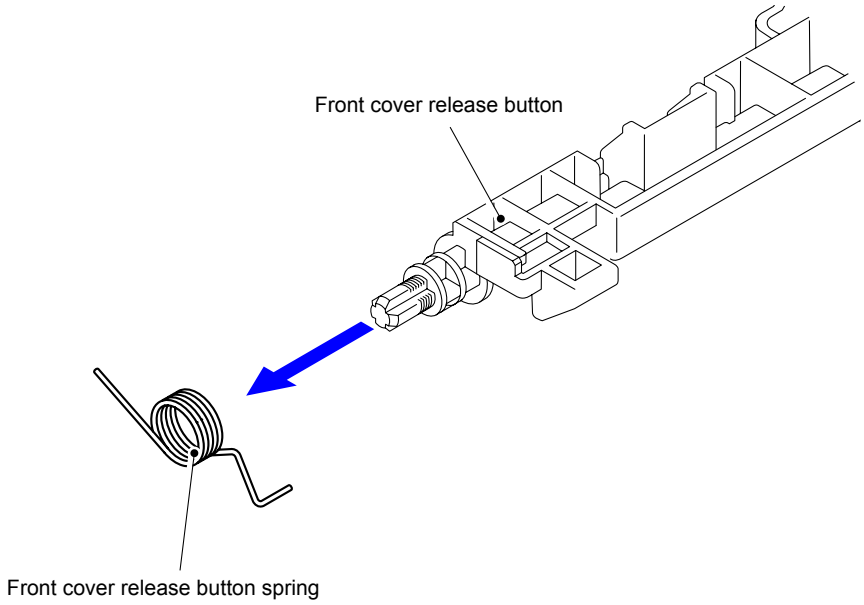

Fig. 3-53

Assembling Note:
When assembling the Front cover release button spring, assemble “A” and “B” as shown in the figure.

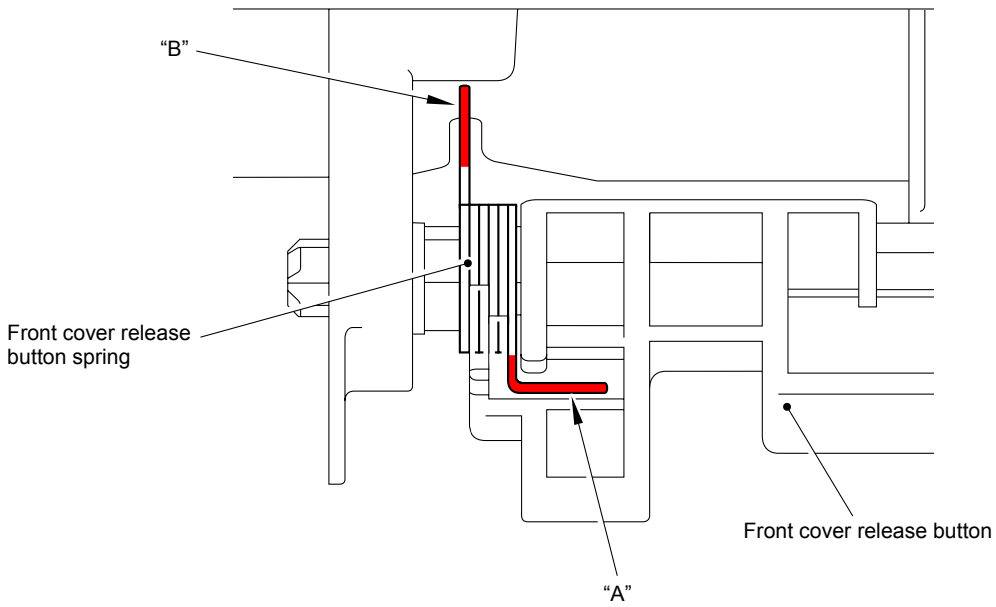

Fig. 3-54

9.12 Paper Stopper

Memo:
Follow the procedure (2) only in the case of the Legal model.

(1) Open the Document scanner unit.

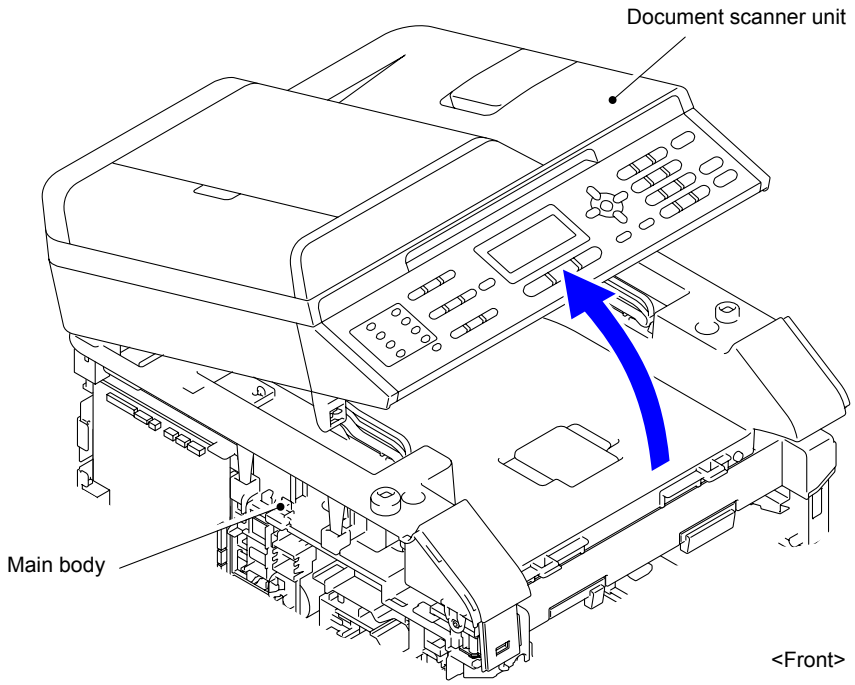

Fig. 3-55

(2) Remove the two Pins to remove the Paper stopper from the Joint cover top.

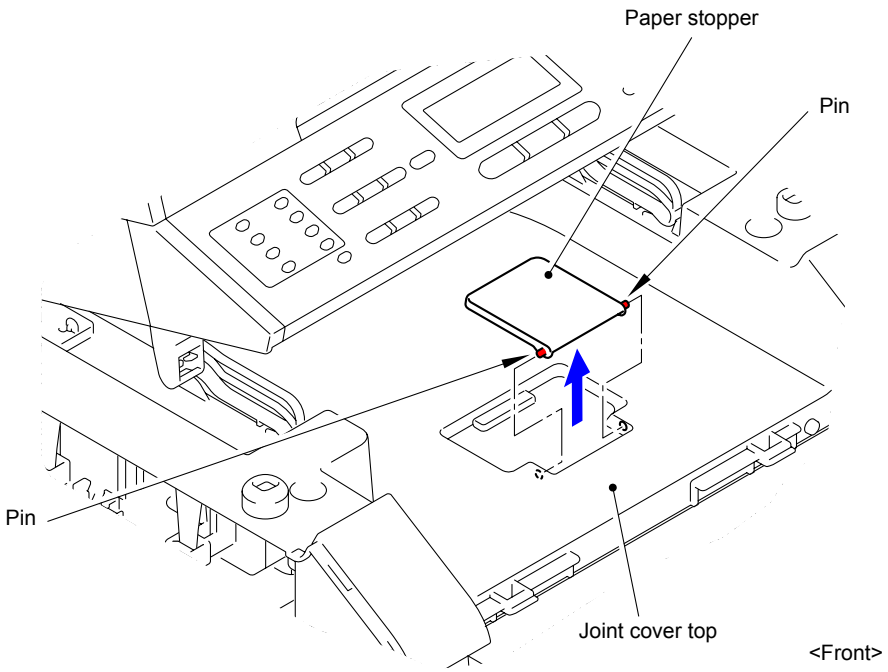

Fig. 3-56

9.13 Pull Arm L/Pull Arm R/Pull Arm Spring (A4 Model Only)

(1) Open the Pull arm L and Pull arm R to release the Hooks from the joint of the Document scanner unit.

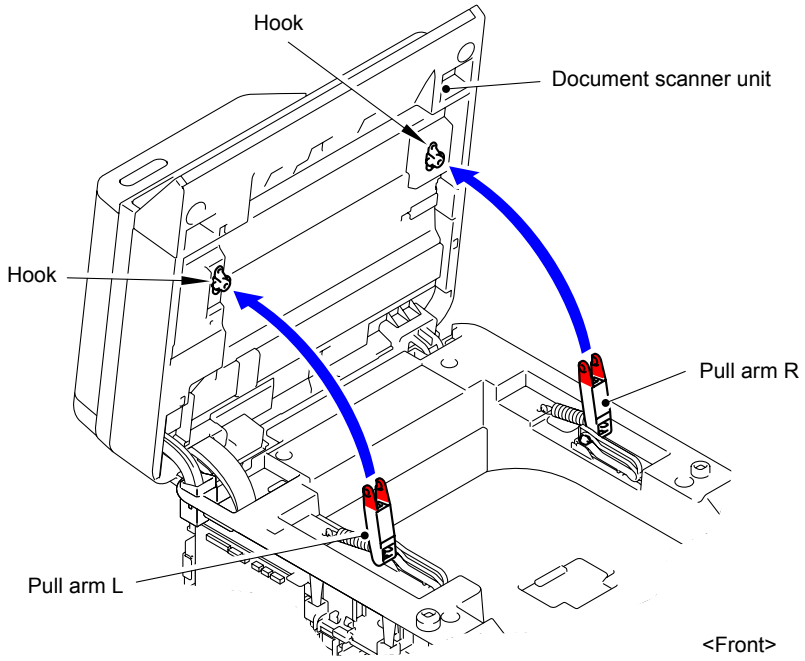

Fig. 3-57

(2) Remove the Pull arm L and Pull arm spring from the Pull arm guide L.

(3) Remove the Pull arm R and Pull arm spring from the Pull arm guide R.

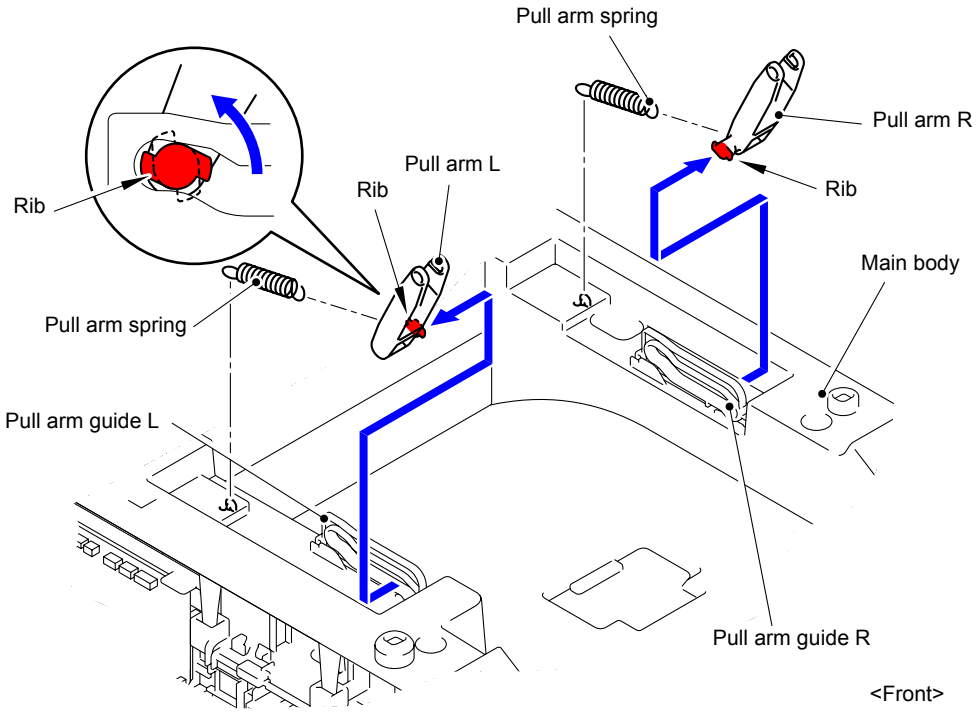

Fig. 3-58

9.14 Back Cover Upper (Legal Model Only)

(1) Remove the two Taptite bind B M4x12 screws from the Back cover upper.

(2) Release the four Hooks to remove the Back cover upper from the Main body.

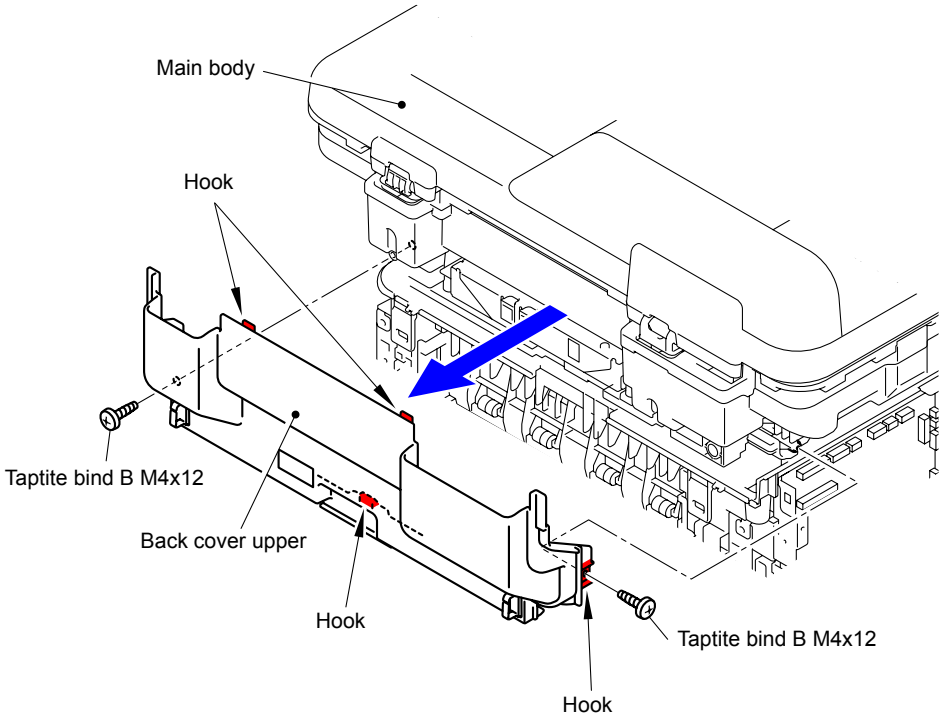

Fig. 3-59

9.15 ADF Unit

(1) Remove the Ferrite core 1 from the FFC film. (A4 model only)

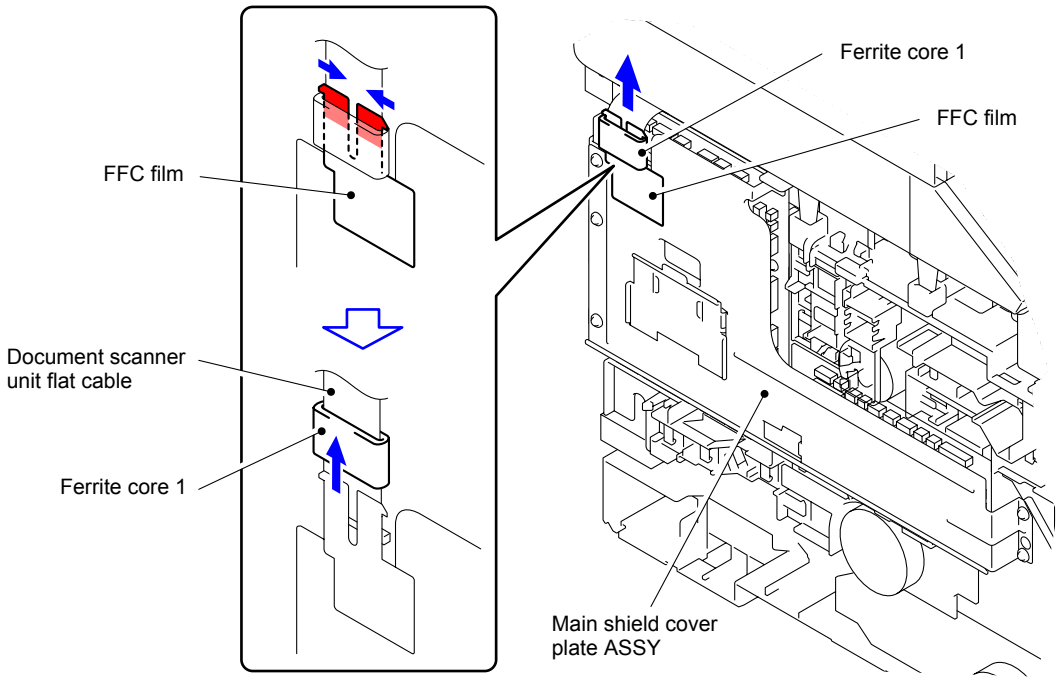

Fig. 3-60

(2) Remove the seven Taptite cup S M3x6 SR screws to remove the Main shield cover plate ASSY from the Main body.

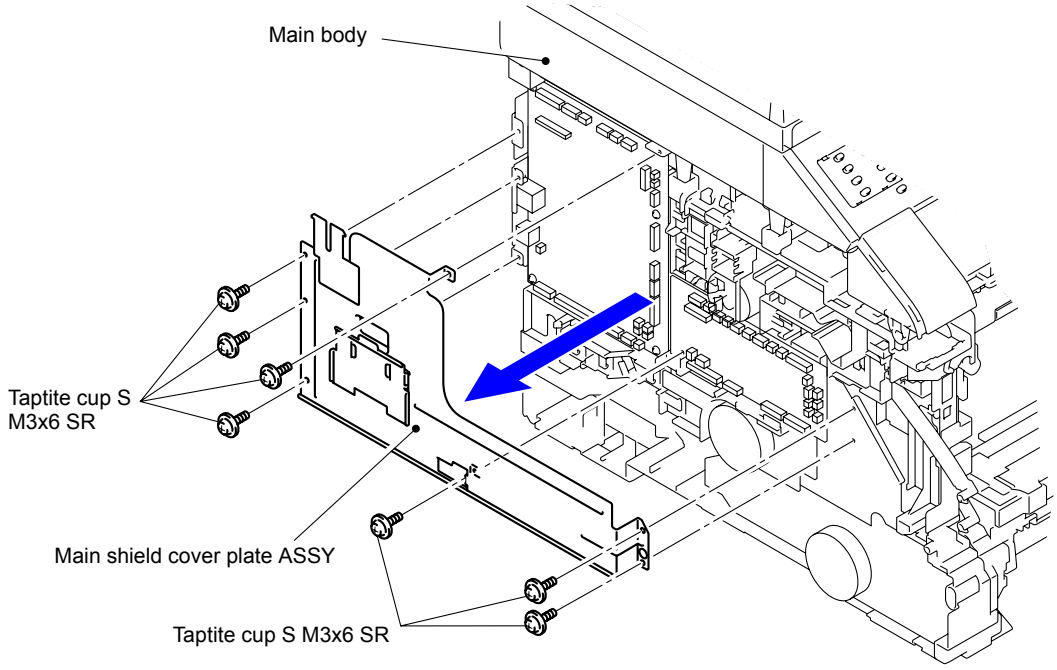

Fig. 3-61

(3) Remove one Taptite cup S M3x6 SR screw each for the FB FG harness ASSY and ADF FG harness ASSY to remove them from the Main body.

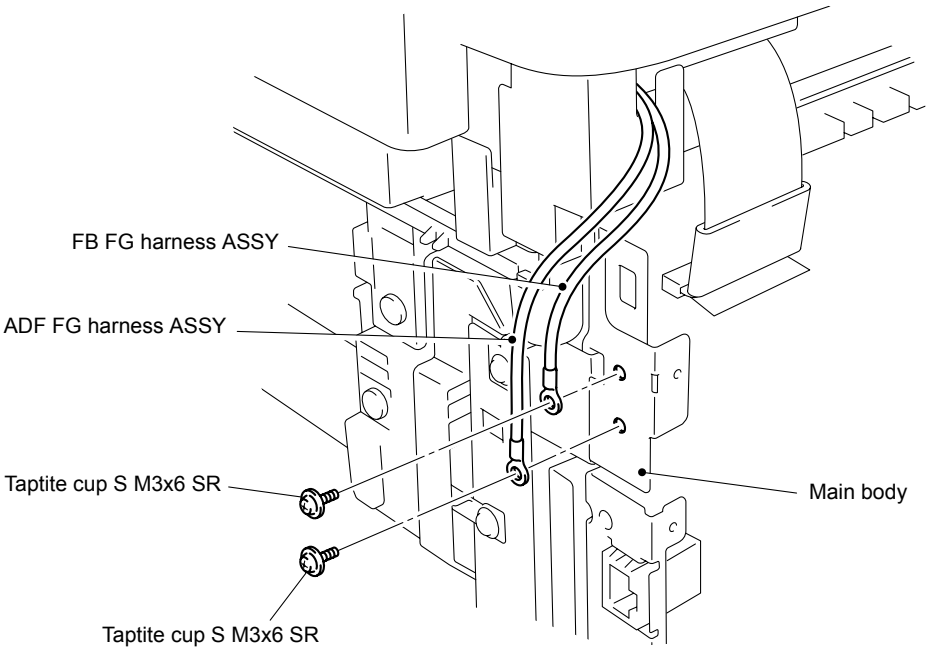

Fig. 3-62

(4) Disconnect the five Connectors (CN3, CN4, CN6, CN7, and CN8) and two Flat cables (CN1 and CN2) from the Main PCB ASSY.

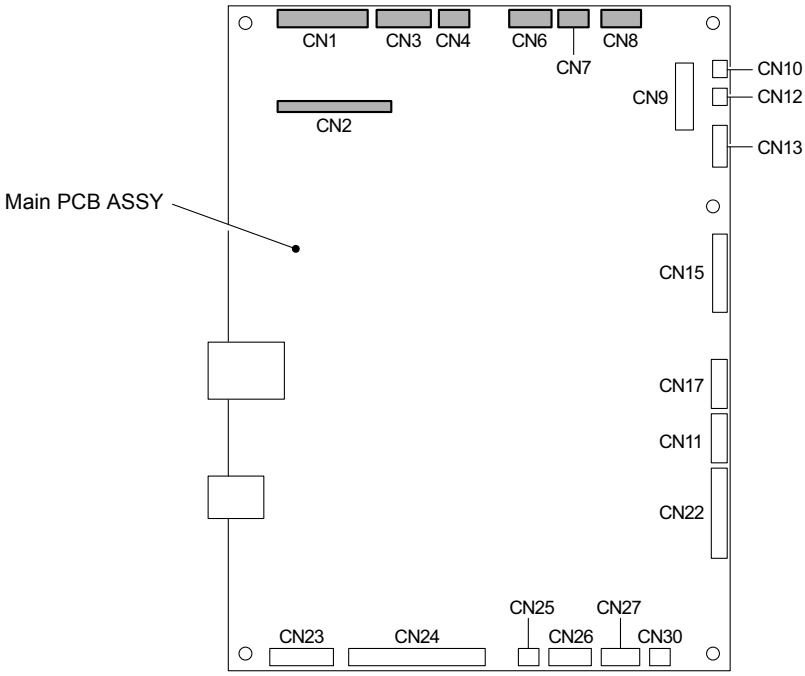

Fig. 3-63

■ A4 model

(5) Open the Document scanner unit. Remove the Ferrite core 1 from the Document scanner unit flat cable.

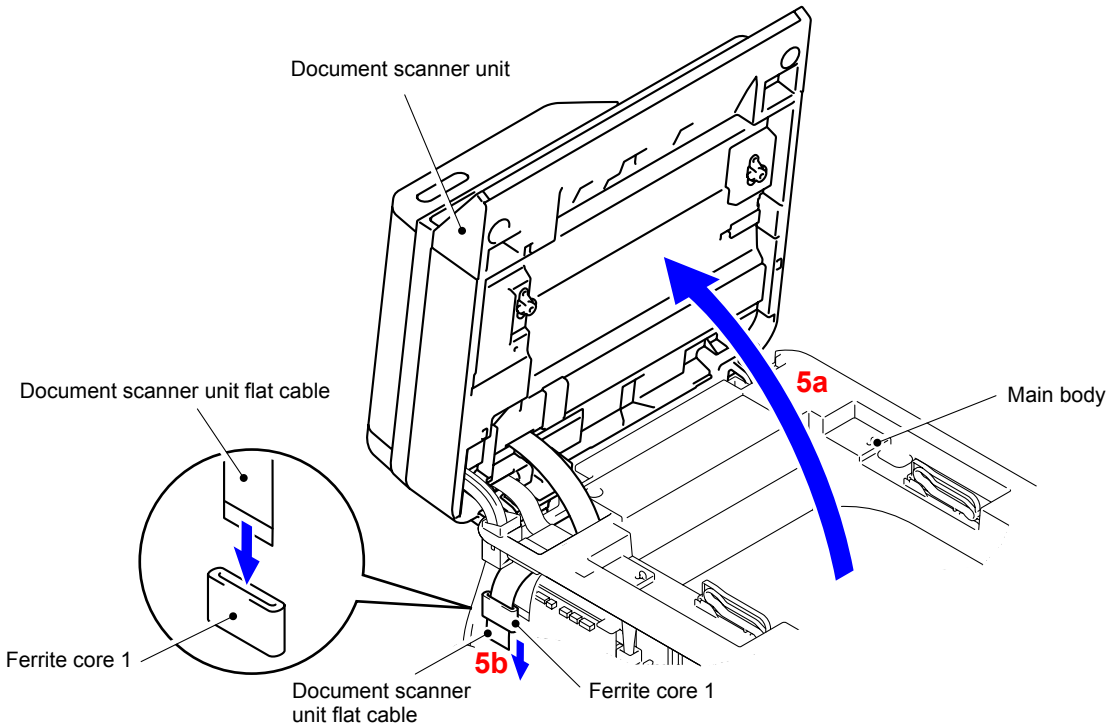

Fig. 3-64

(6) Remove the Document scanner unit flat cable and Second side scanning CIS flat cable from the Ferrite core 2 and 3 attached to the Film.

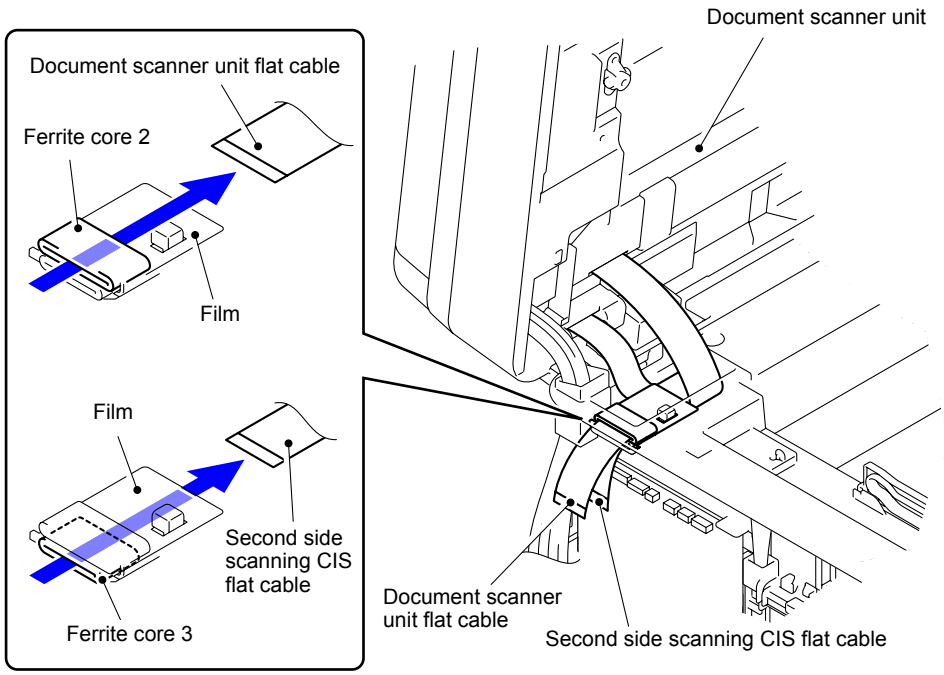

Fig. 3-65

(7) Remove the Harness from the Hook to take it out from the Hole in the Joint cover top.

(8) Take out the FB FG harness ASSY and ADF FG harness ASSY from the Hole in the Joint cover top.

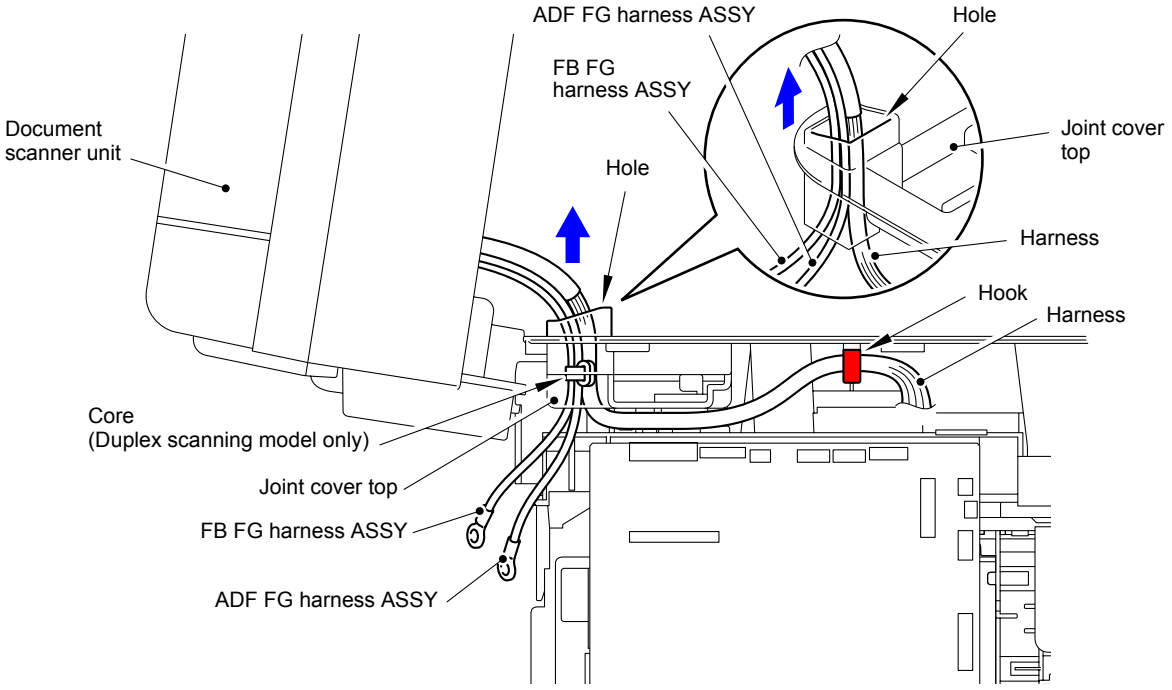

Fig. 3-66

(9) Change the angle of the Document scanner unit as shown in the figure to remove it from the Main body.

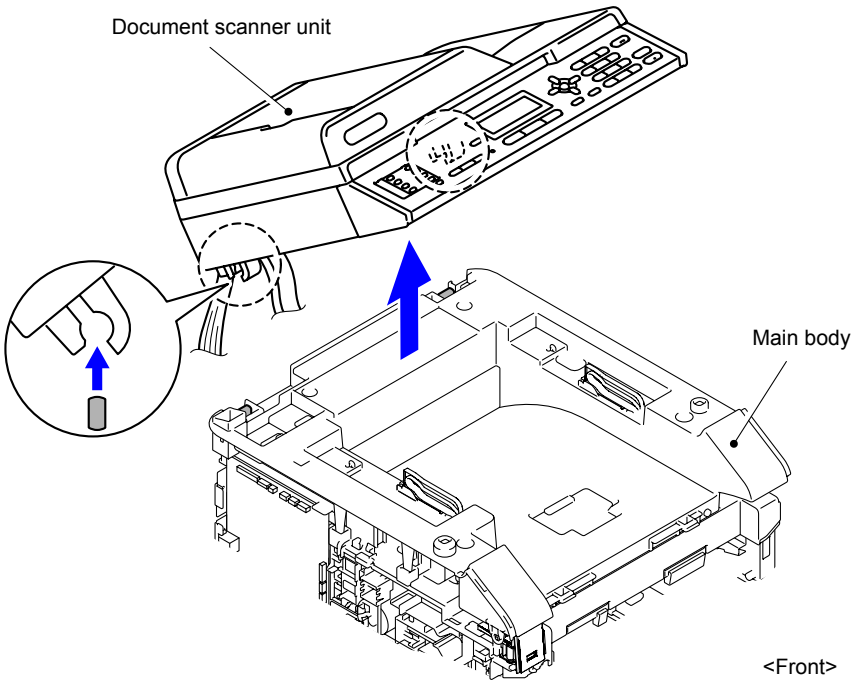

Fig. 3-67

(10) Remove the two Taptite bind B M4x12 screws.

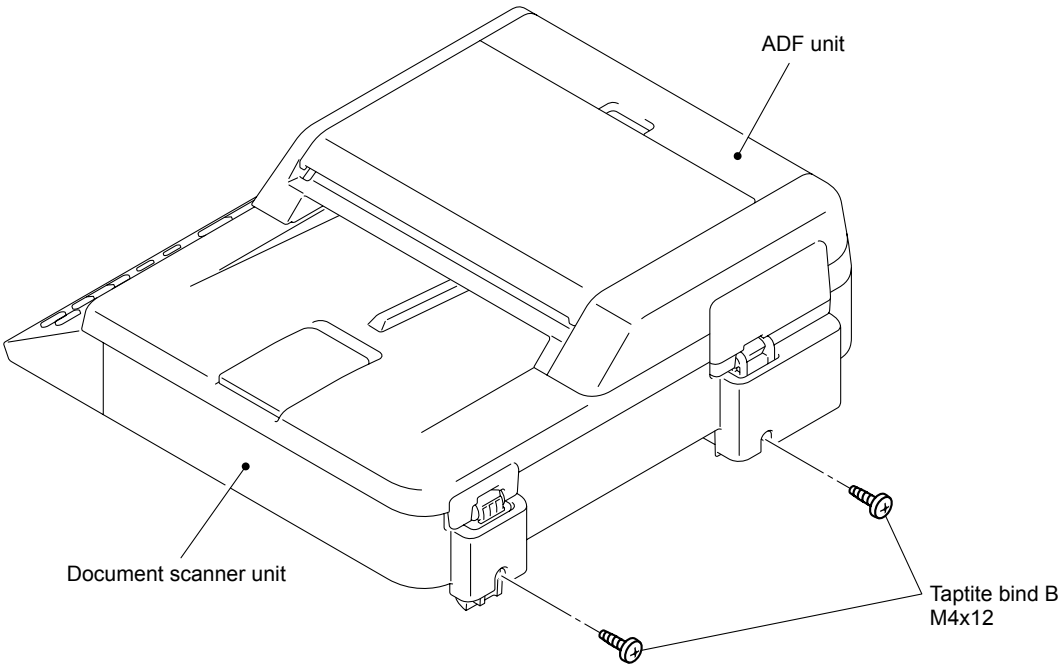

Fig. 3-68

(11) Open the ADF unit.

(12) Lift the ADF unit until the Hinge ASSY L and Hinge R are removed from the Document scanner unit.

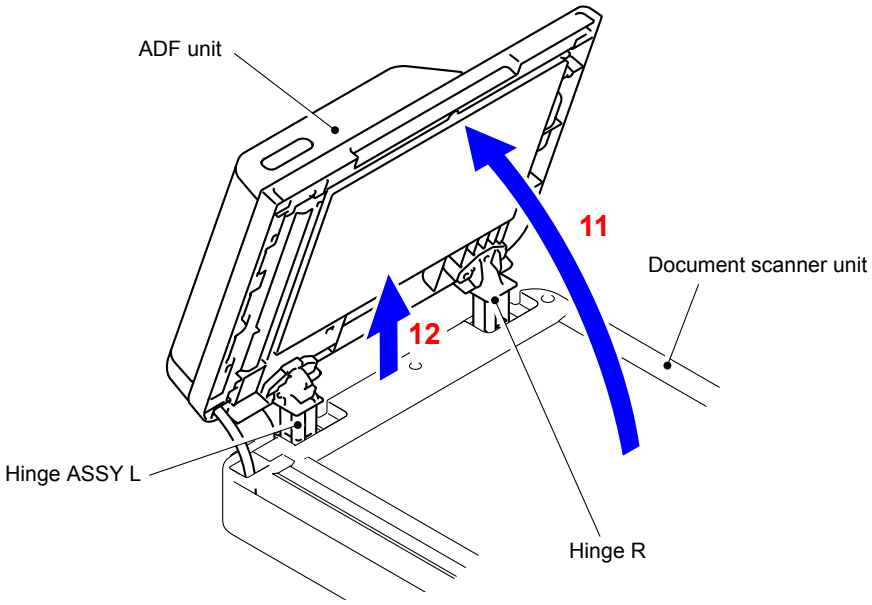

Fig. 3-69

(13) Release the three Hooks to remove the FFC holder ASSY from the Document scanner unit.

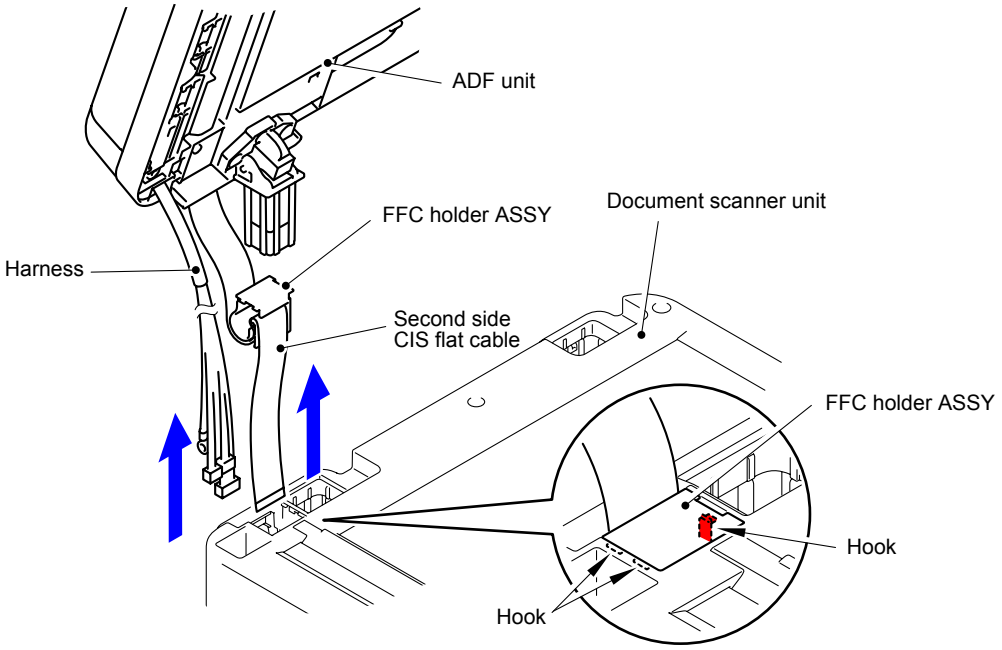

Fig. 3-70

Assembling Note:
When the Document scanner unit is replaced, be sure to fold and assemble the Document scanner unit flat cable as shown in the figure.

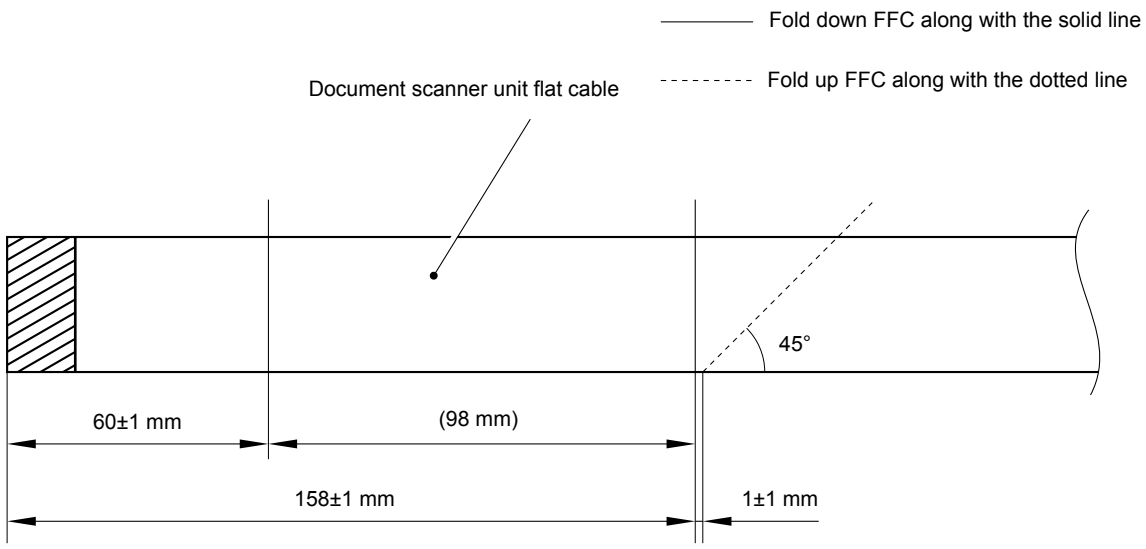

Fig. 3-71

Harness routing: Refer to " 12 ADF", " 14 Document Scanner Unit", and " 16 Panel Unit"

■ Legal model

(5) Disconnect the wiring of the Second side scanning CIS flat cable from the Main body.

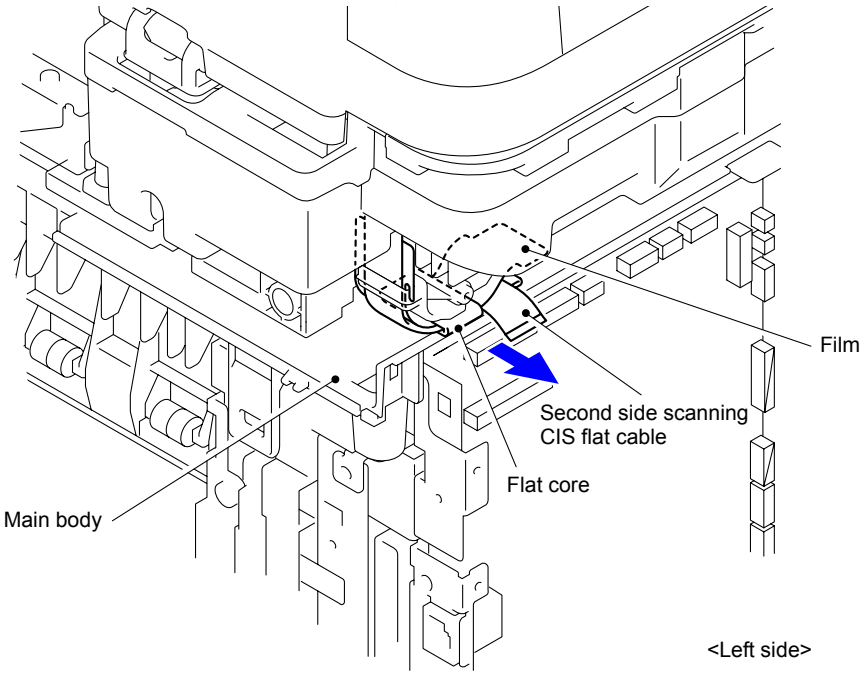

Fig. 3-72

Assembling Note:

When attaching the Second side scanning CIS flat cable, be sure to attach the Film as shown in the figure below.

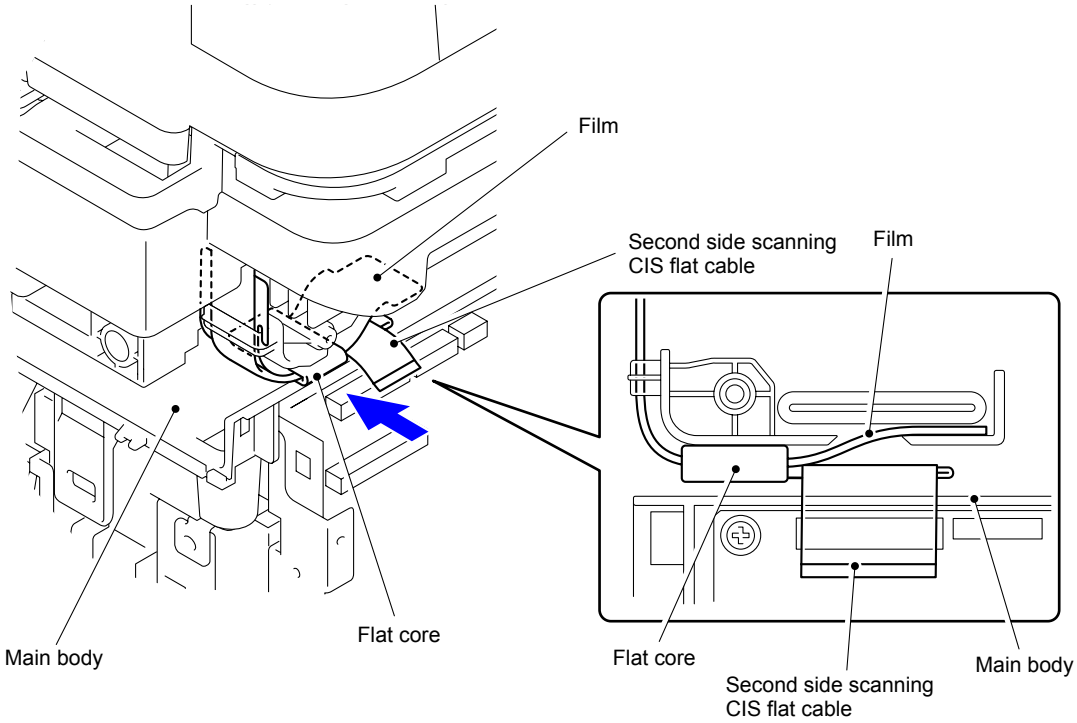

Fig. 3-73

(6) Remove the Flat core and Film.

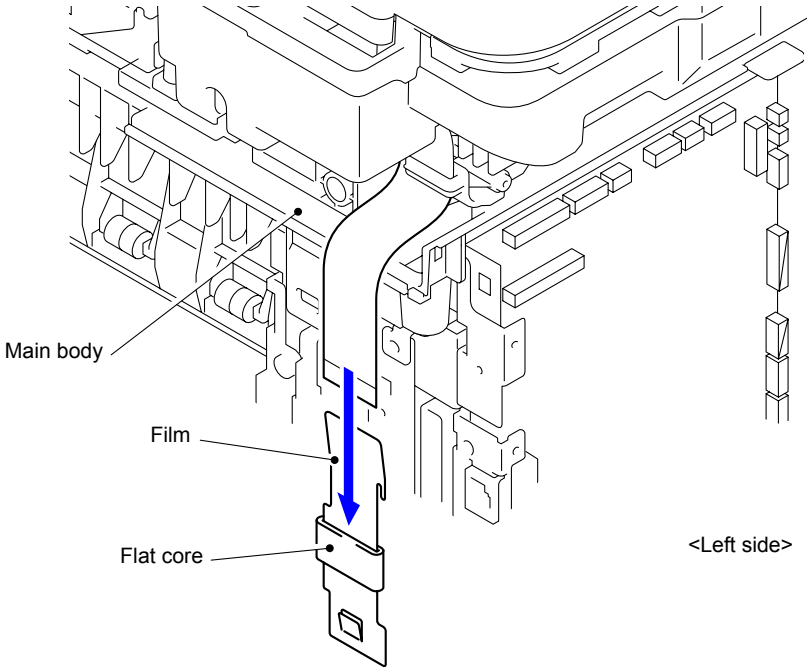

Fig. 3-74

(7) Remove the two Taptite bind B M4x12 screws and Taptite cup S M3x6 SR screw from the right side of the Main body. Some products are not equipped with the Ground plate. In that case, there is no need to remove the Taptite cup S M3x6 SR screw.

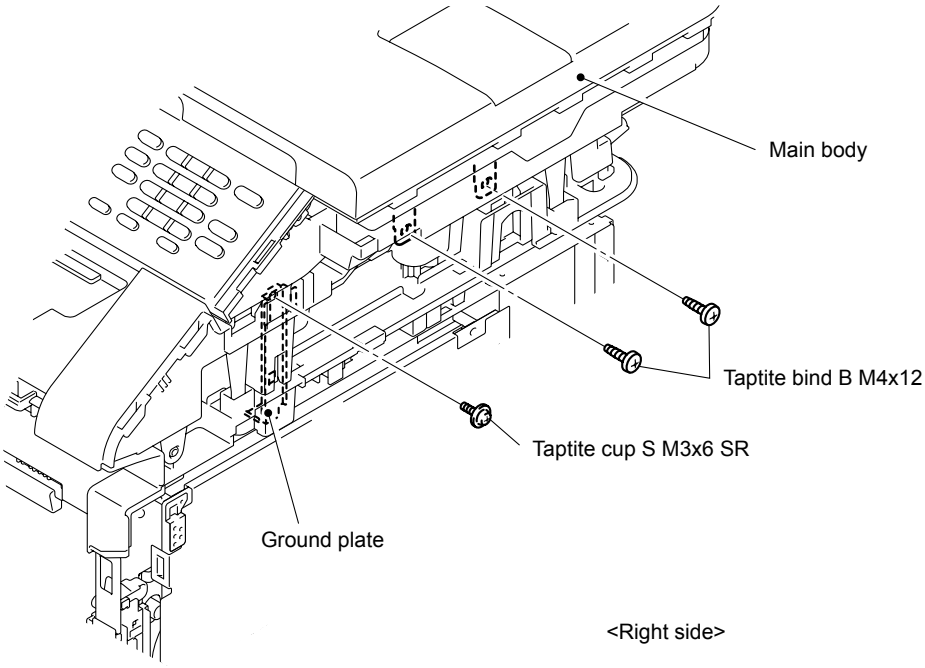

Fig. 3-75

(8) Remove the two Taptite bind B M4x12 screws and Taptite cup S M3x6 SR screw from the left side of the Main body.

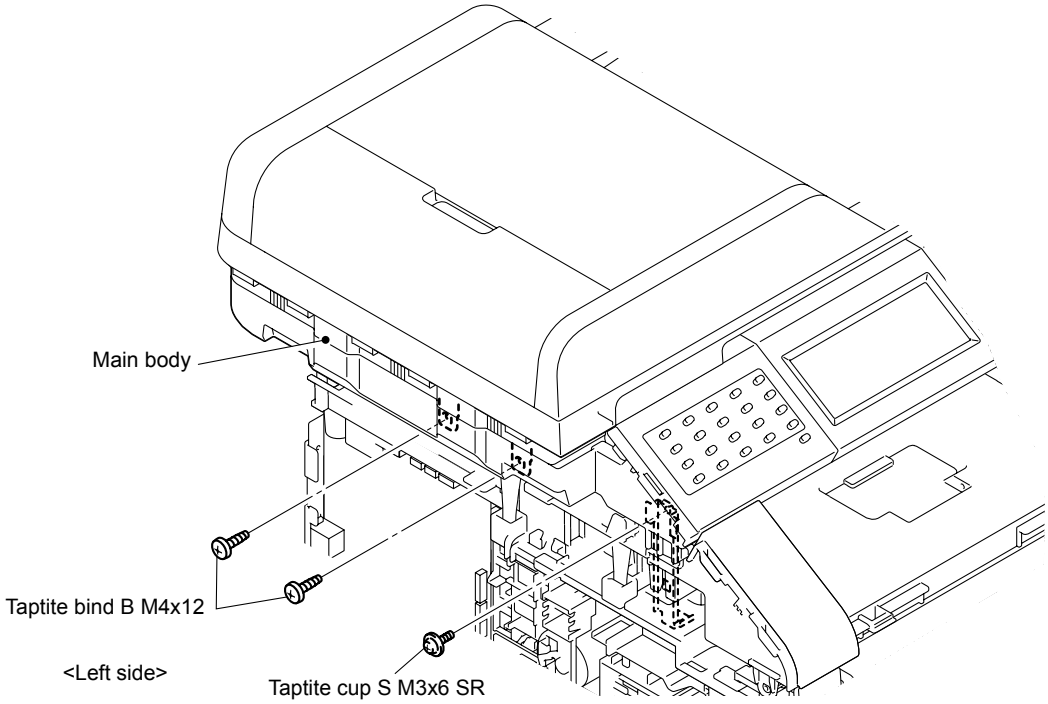

Fig. 3-76

(9) Remove the two Taptite bind B M4x12 screws from the back of the Main body.

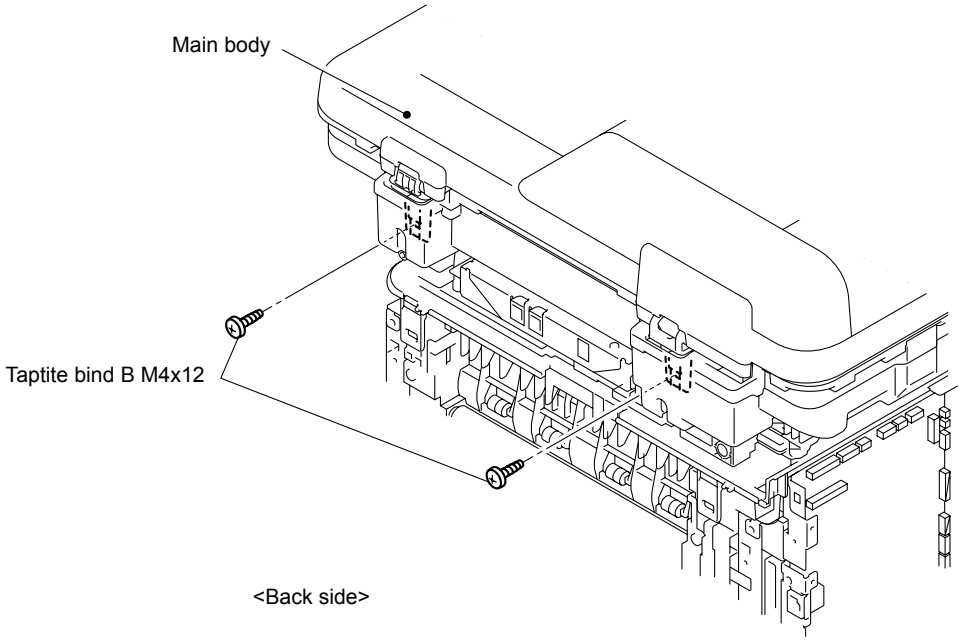

Fig. 3-77

(10) Release the eight Hooks to remove the Document scanner unit from the Main body.

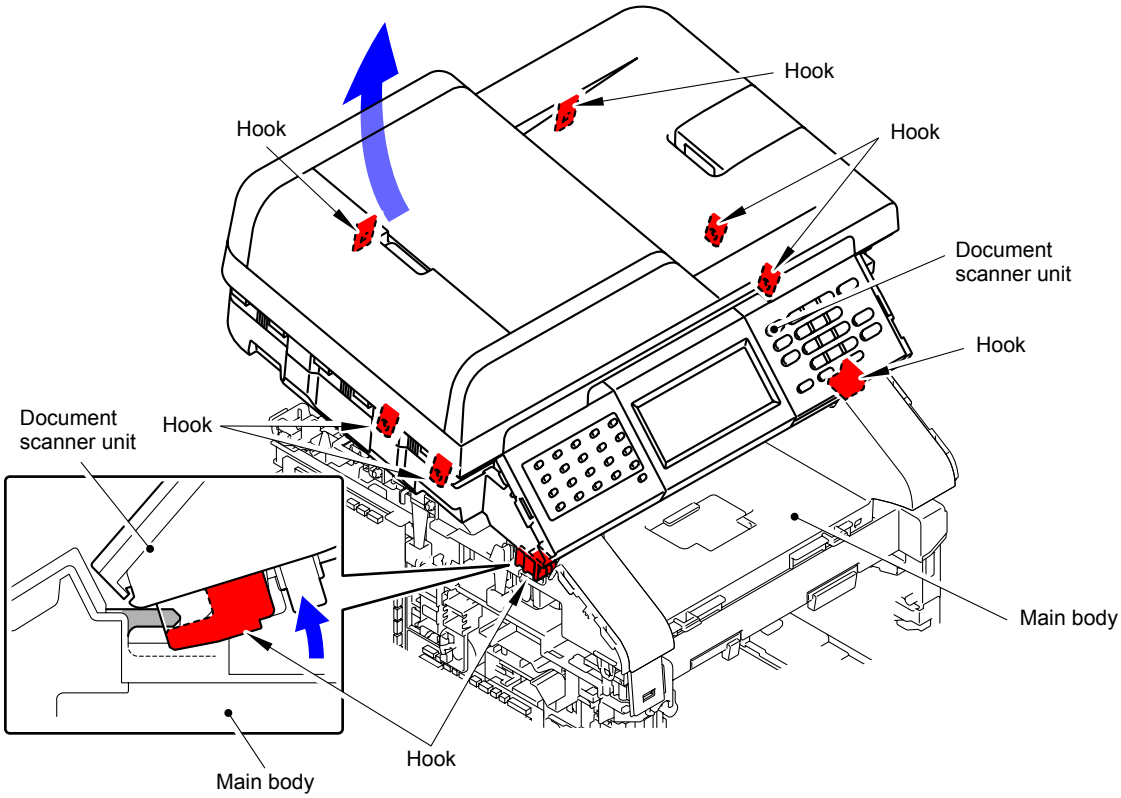

Fig. 3-78

(11) Take out the Document scanner unit flat cable from the Flat core of the Main body as lifting the Document scanner unit.

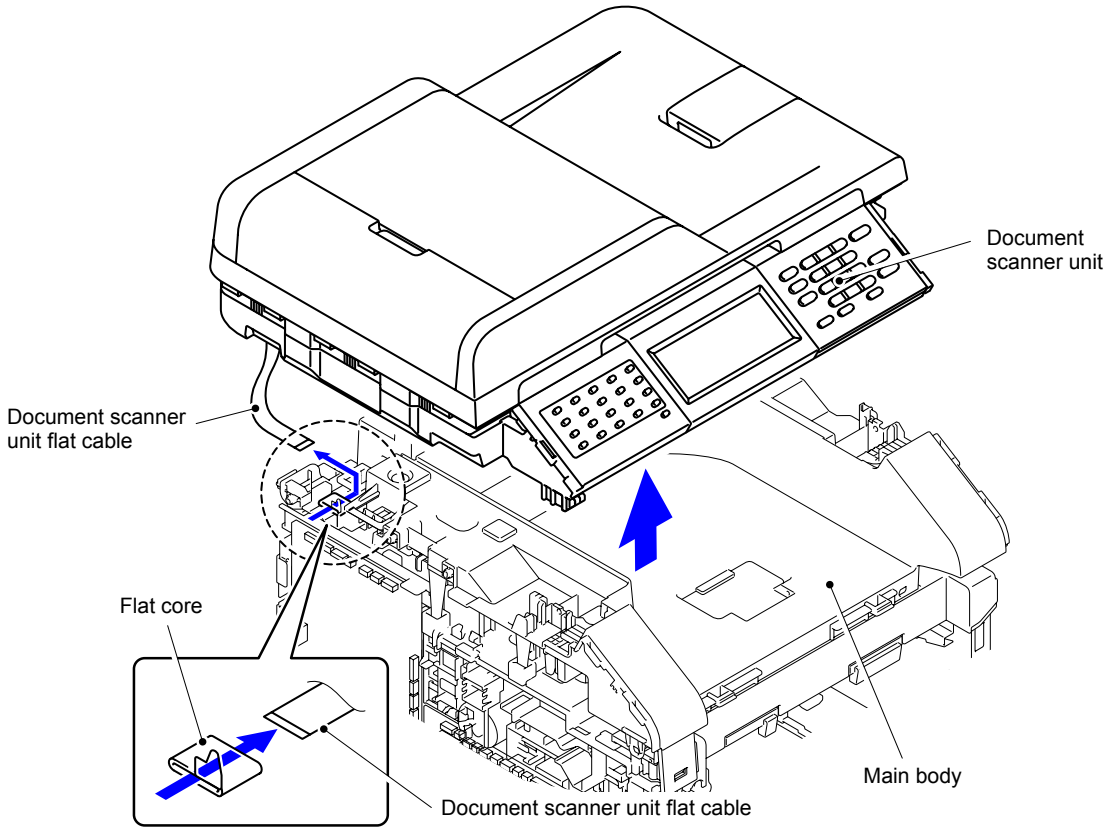

Fig. 3-79

(12) Remove the two Taptite bind B M4x12 screws.

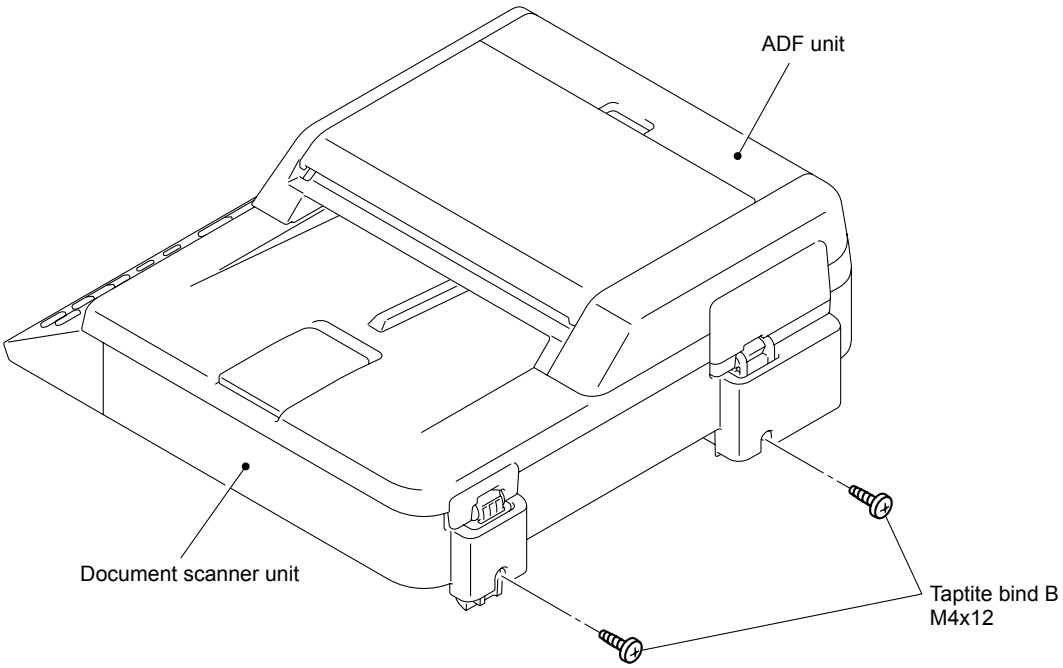

Fig. 3-80

(13) Open the ADF unit.

(14) Lift the ADF unit until the Hinge ASSY L and Hinge R are removed from the Document scanner unit.

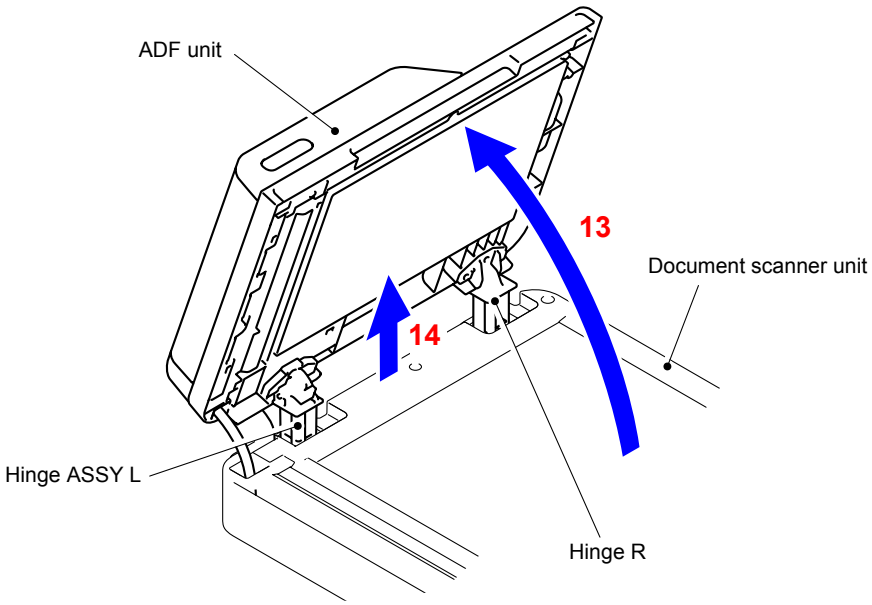

Fig. 3-81

(15) Release the three Hooks to remove the FFC holder ASSY from the Document scanner unit.

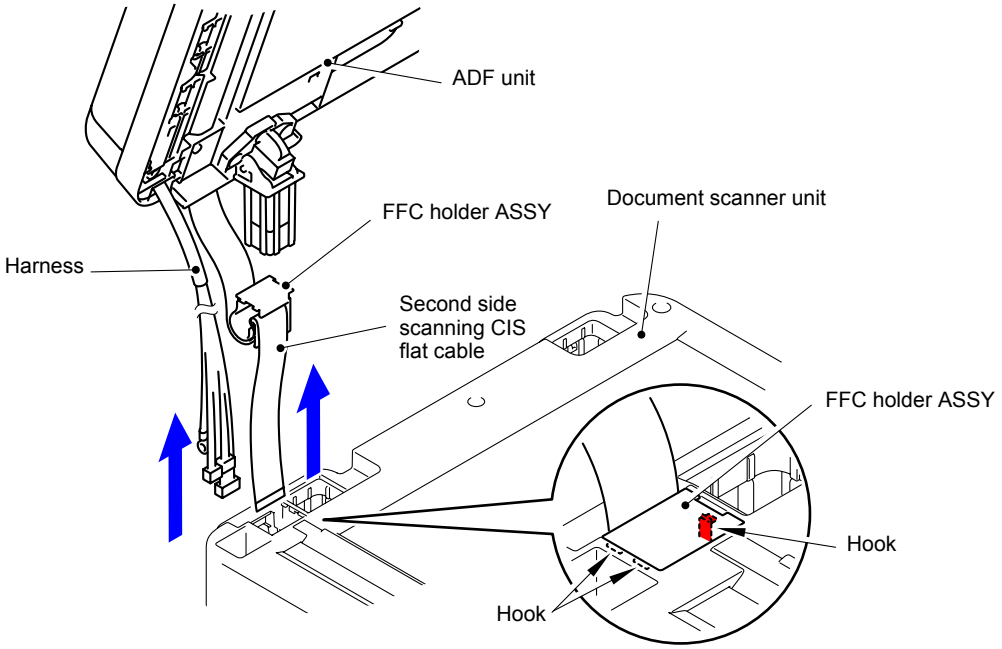

Fig. 3-82

Assembling Note:
When the Document scanner unit is replaced, be sure to fold and assemble the Document scanner unit flat cable as shown in the figure.

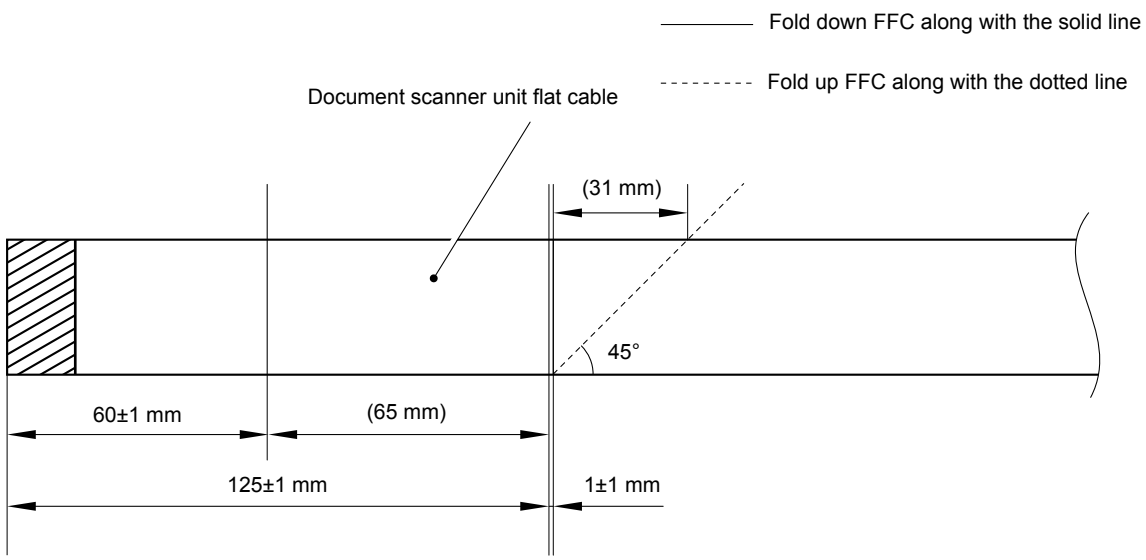

Fig. 3-83

Harness routing: Refer to " 13 ADF", " 15 Document Scanner Unit", and " 17 Panel Unit"

9.16 Hinge ASSY L

(1) Turn the ADF unit upside down.

(2) Remove the three Taptite cup S M3x12 screws to remove the Hinge ASSY L from the ADF unit.

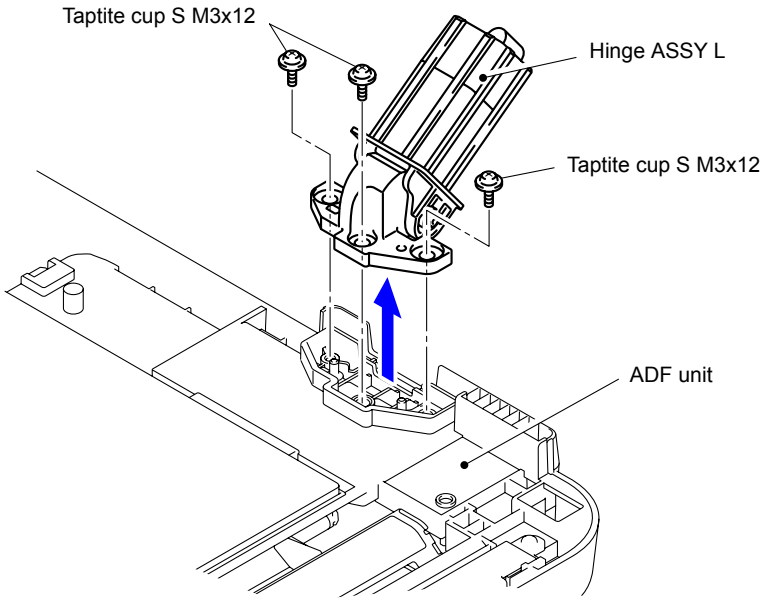

Fig. 3-84

9.17 Hinge R/Hinge R Support/Hinge Arm R

(1) Remove the Taptite cup B M3x10 screw to remove the Hinge R and Hinge R support from the ADF unit.

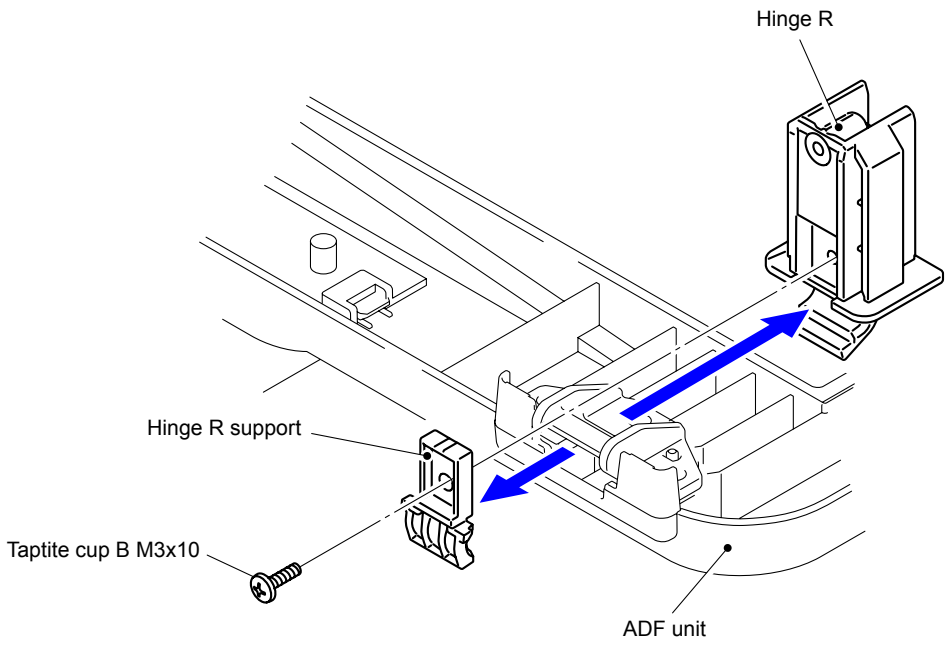

Fig. 3-85

(2) Remove the three Taptite cup B M3x10 screws to remove the Hinge arm R from the ADF unit.

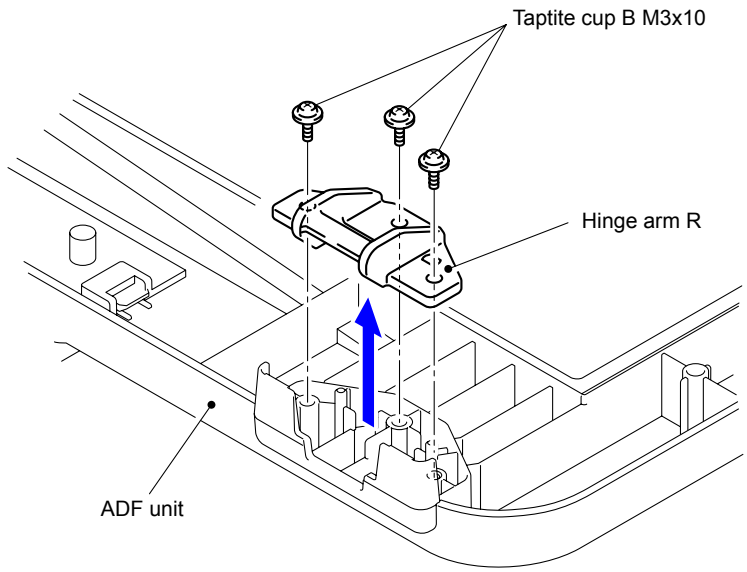

Fig. 3-86

9.18 Document Stopper

(1) Return the ADF unit to the original position.

(2) Remove the two Pins to remove the Document stopper from the ADF unit.

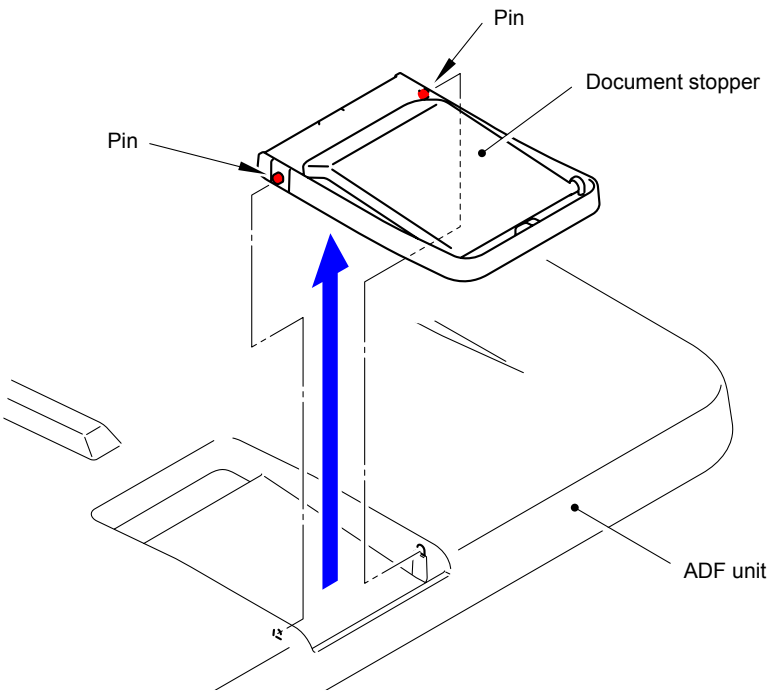

Fig. 3-87

9.19 Document Sub Tray

(1) Open the Document sub tray.

(2) Remove the two Pins to remove the Document sub tray from the ADF unit.

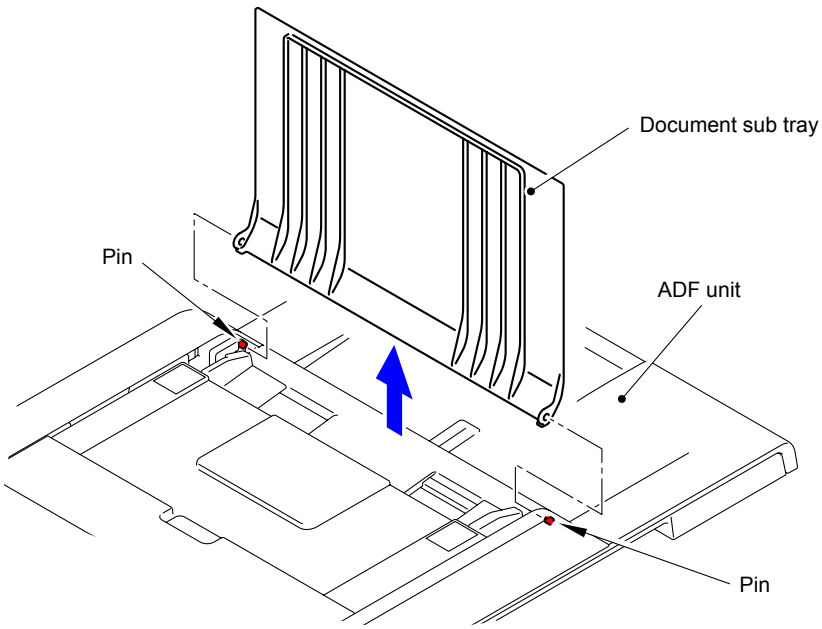

Fig. 3-88

9.20 ADF Cover ASSY

(1) Open the ADF cover ASSY.

(2) Remove the two Pins to remove the ADF cover ASSY from the ADF unit.

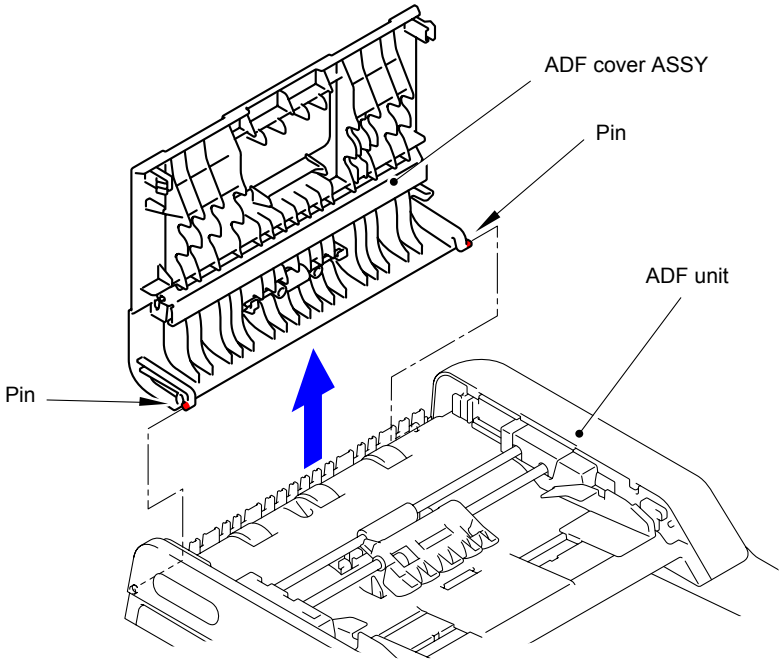

Fig. 3-89

9.21 Document Hold ASSY/Earth Spring

Memo:
Follow the procedures (2) and (3) in the case of the Legal model.

(1) As pressing the Document hold ASSY, slide it in the direction of the arrow 1b.

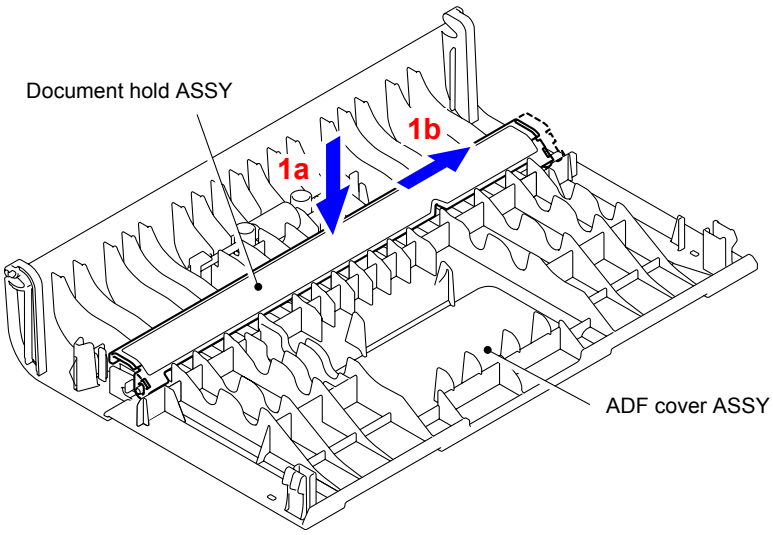

Fig. 3-90

■ A4 model

(2) Remove the Pin "a" from the Hook of the Document hold ASSY to remove the Document hold ASSY from the ADF cover ASSY.

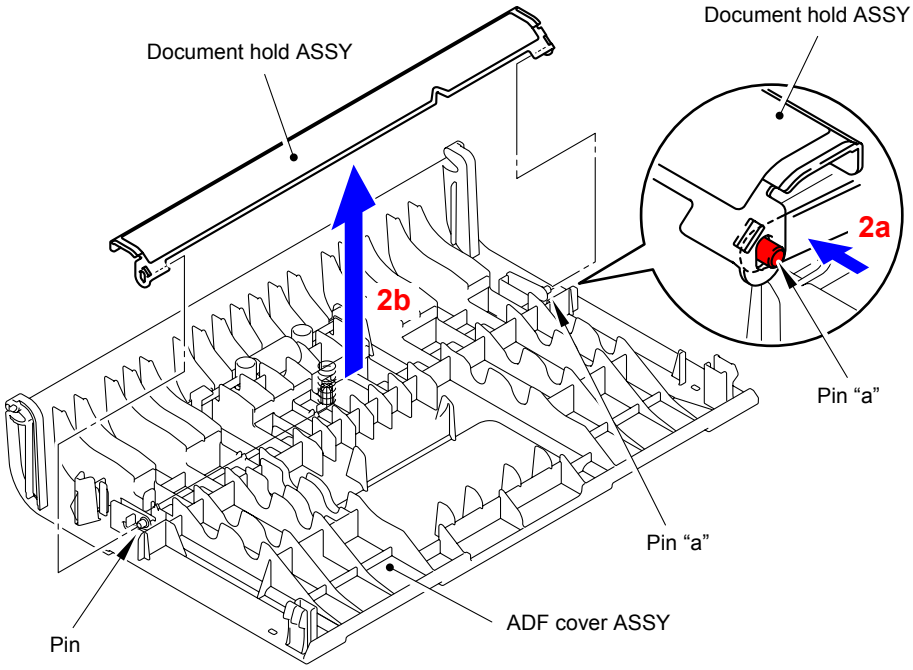

Fig. 3-91

■ Legal model

(2) Remove the Pin "a" from the Hook of the Document hold ASSY to remove the Document hold ASSY from the ADF cover ASSY.

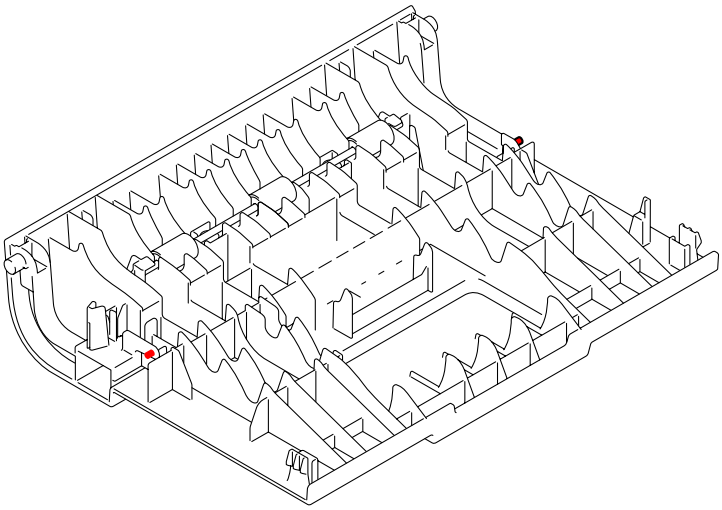

Fig. 3-92

(3) Remove the Earth spring from the ADF cover ASSY.

Fig. 3-93

Assembling Note:
When assembling the Earth spring, be sure to assemble it as shown in the figure below.

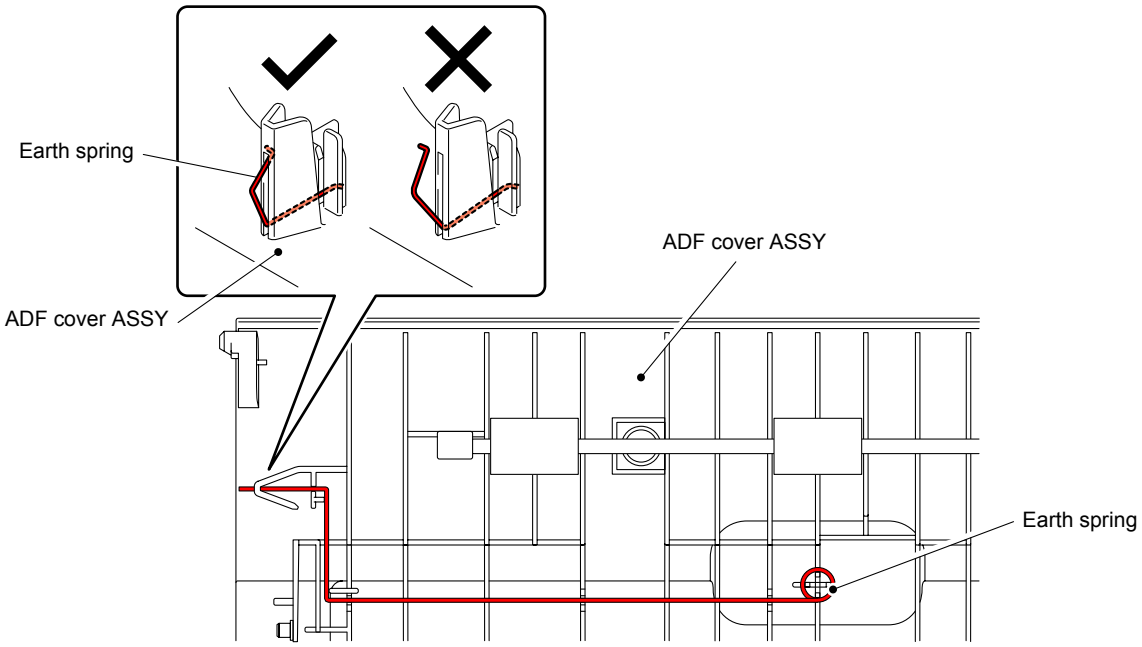

Fig. 3-94

9.22 Gear Cover

(1) Release the two Hooks of the ADF unit.

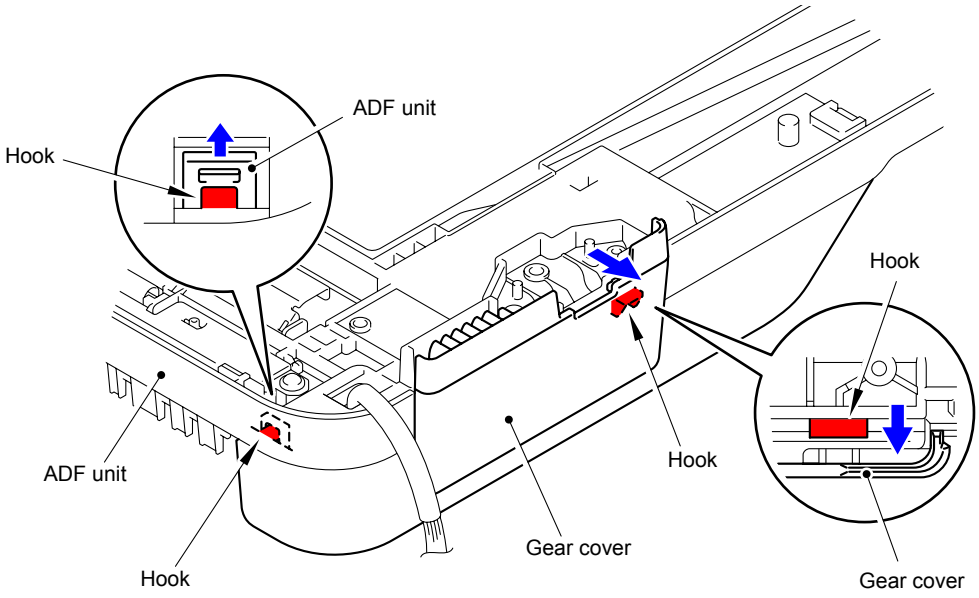

Fig. 3-95

(2) Remove the Gear cover from the ADF unit.

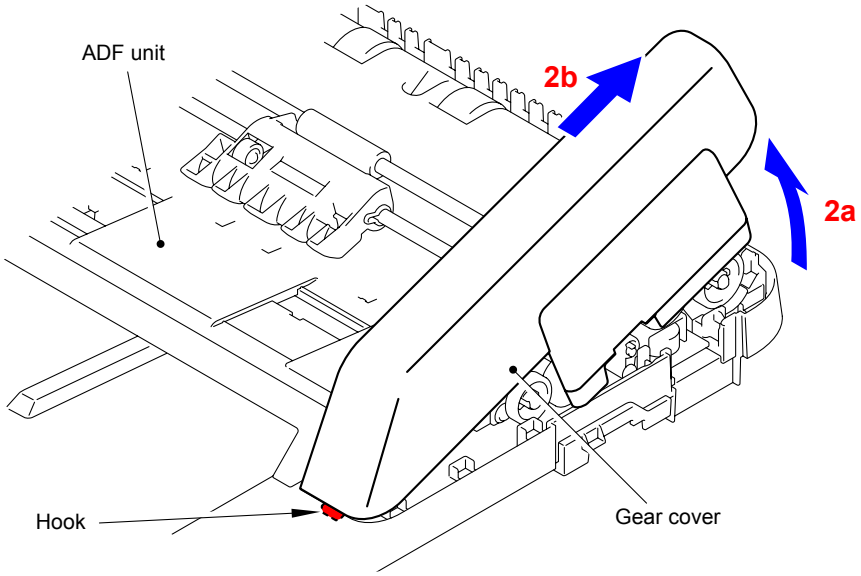

Fig. 3-96

9.23 Separate Roller ASSY

(1) Rotate the Conductive bush to release the lock.

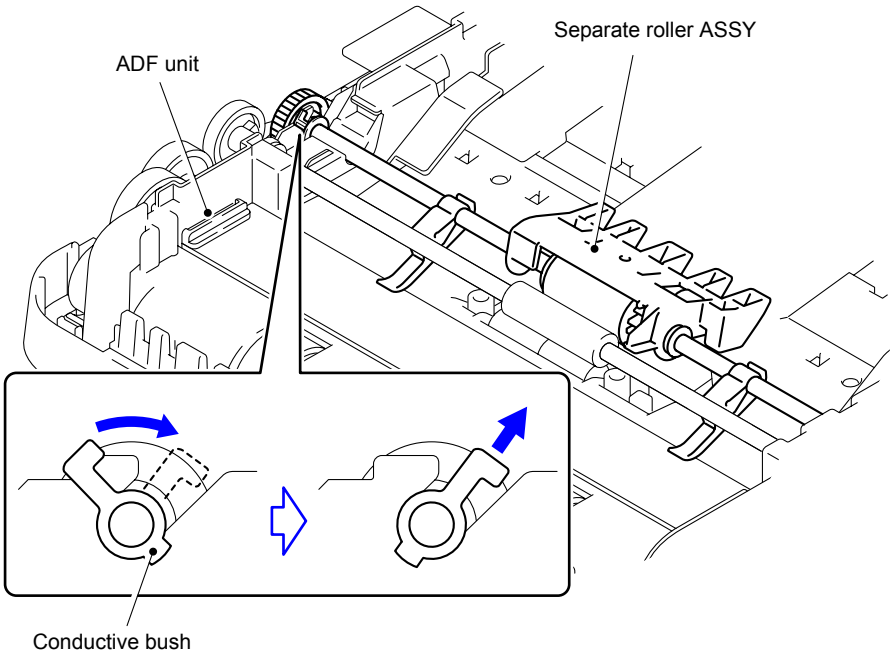

Fig. 3-97

(2) Remove the shaft end at the opposite side to remove the Separate roller ASSY from the ADF unit.

> **Note:**
> When removing the Separate roller ASSY, be careful not to damage the Flap ADF.

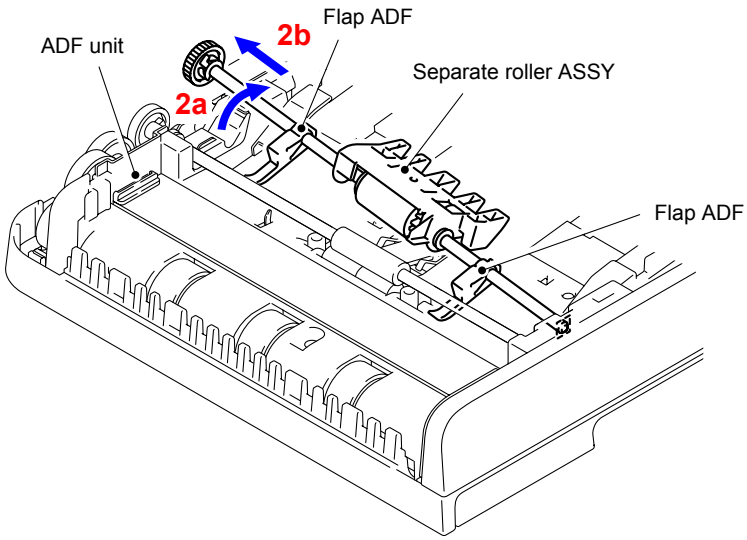

Fig. 3-98

Assembling Note:

When assembling the Separate roller ASSY, be sure to assemble it in a way that the Flap ADF comes under the Document feed roller S ASSY.

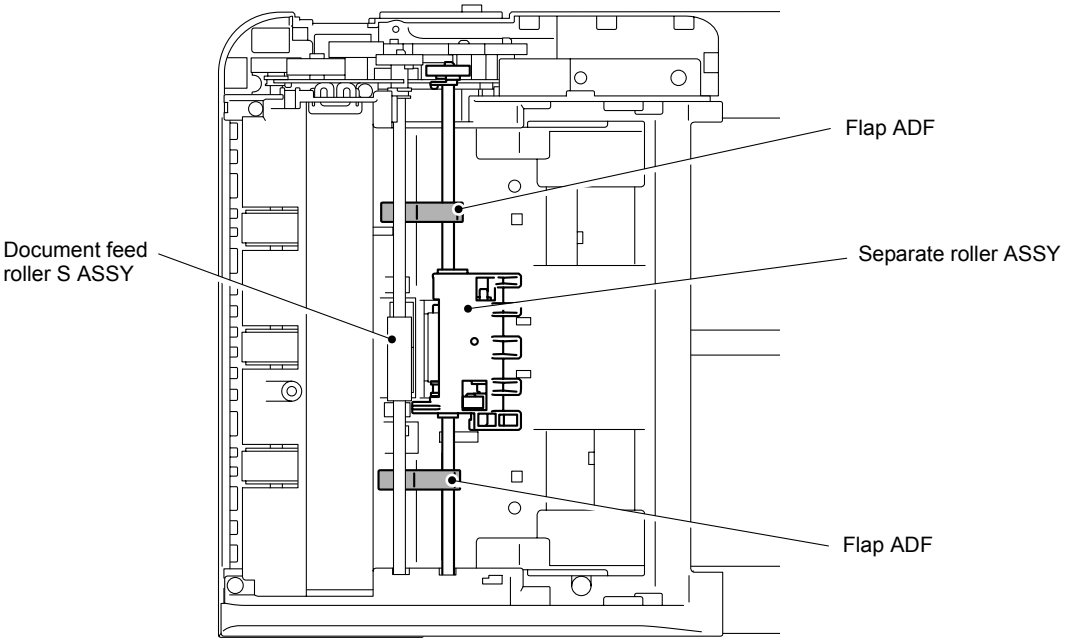

Fig. 3-99

9.24 ADF Spring/Separation Rubber Holder

■ A4 model

(1) Remove the two Pins to remove the Separation rubber holder ASSY from the Upper document chute ASSY.

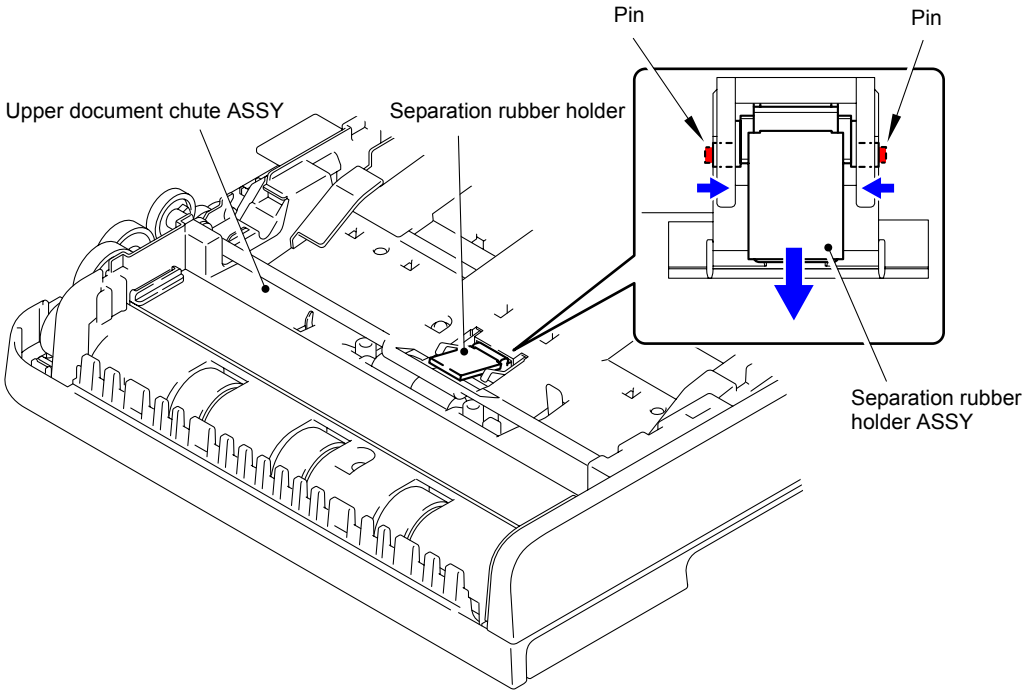

Fig. 3-100

(2) Remove the ADF spring from the Upper document chute ASSY.

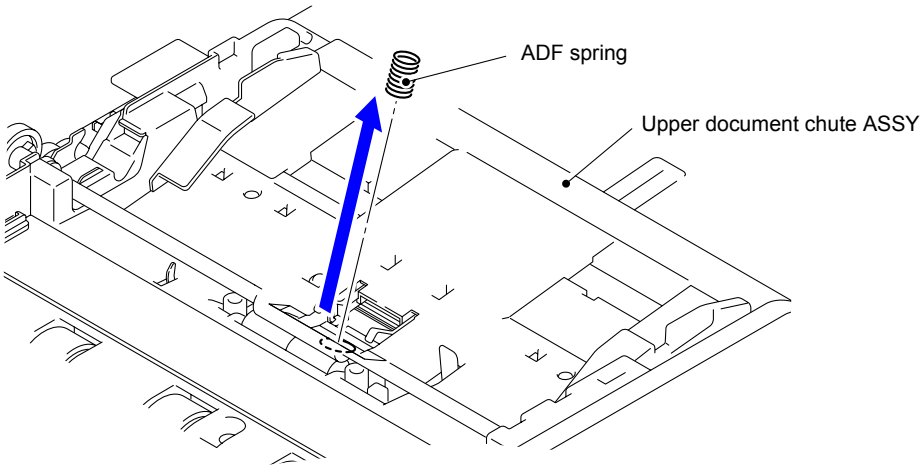

Fig. 3-101

Assembling Note:

There are cases where the ADF spring enters the Upper document chute ASSY from the mounting hole of the Separation rubber holder ASSY. In this case, remove the Upper document chute ASSY from the ADF unit and take out the ADF spring. In the case that the Upper document chute ASSY has been removed, be sure to assemble the ADF spring and Separation rubber first, and then assemble the Upper document chute ASSY to the ADF unit.

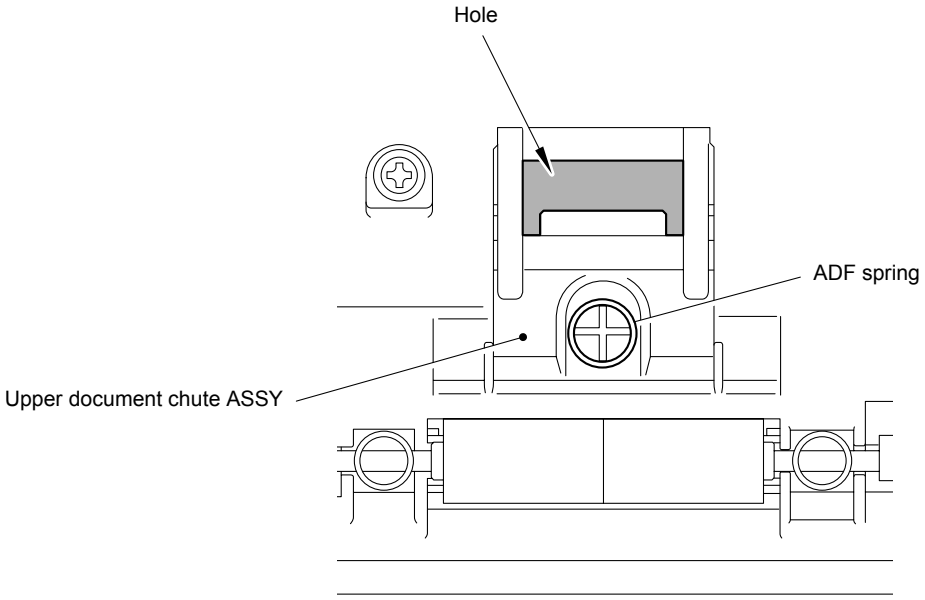

Fig. 3-102

■ Legal model

(1) Remove the Taptite cup B M3x10 screw from the Upper document chute ASSY.

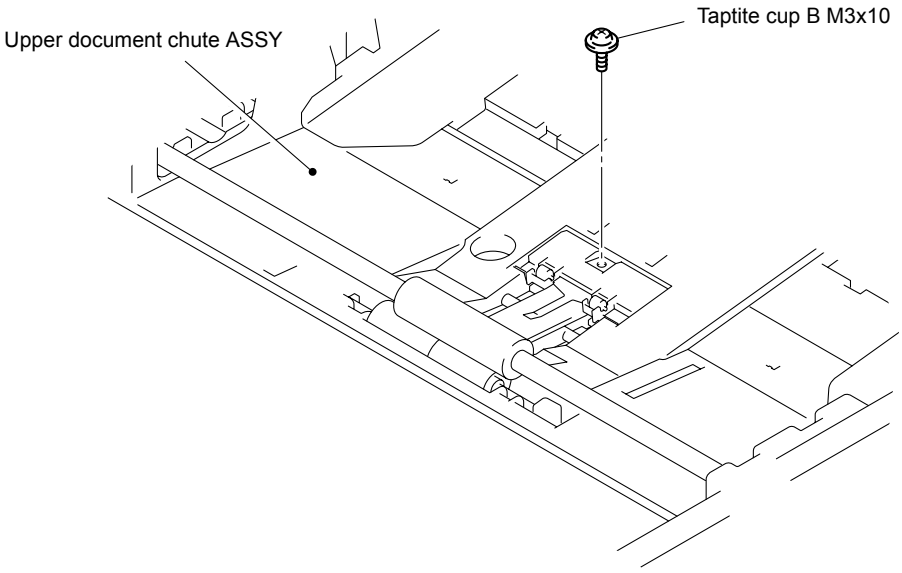

Fig. 3-103

(2) Release the two Hooks to remove the Separation rubber holder from the Upper document chute ASSY.

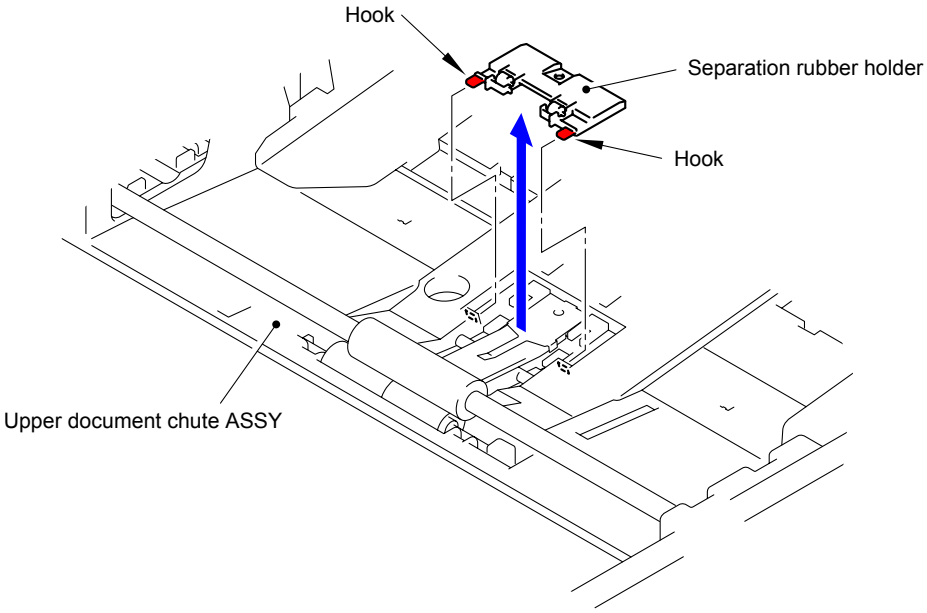

Fig. 3-104

(3) Remove the Separate support film and Separation rubber from the Upper document chute ASSY.

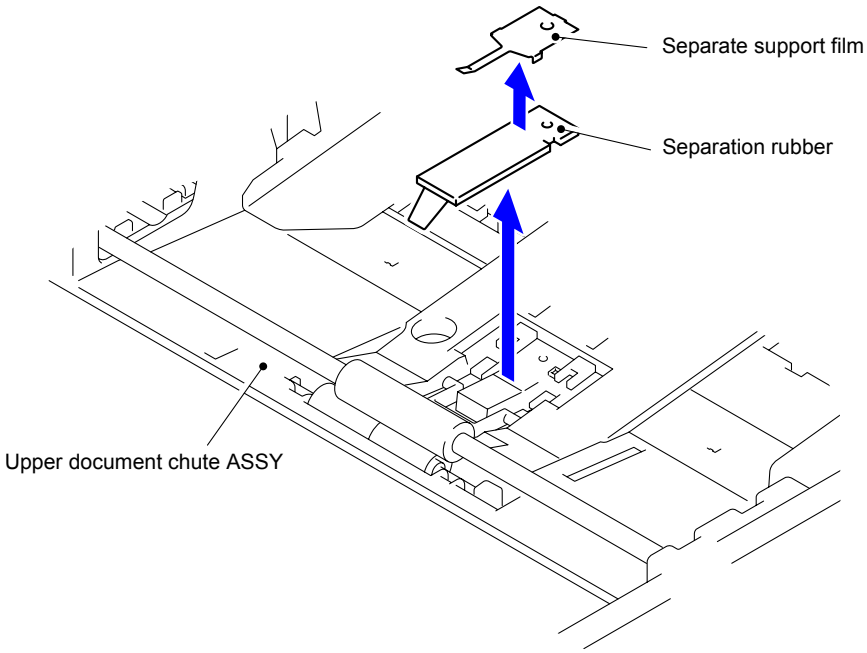

Fig. 3-105

Assembling Note:

If the edge of the Support film protrudes from the Upper document chute ASSY, it causes noise.

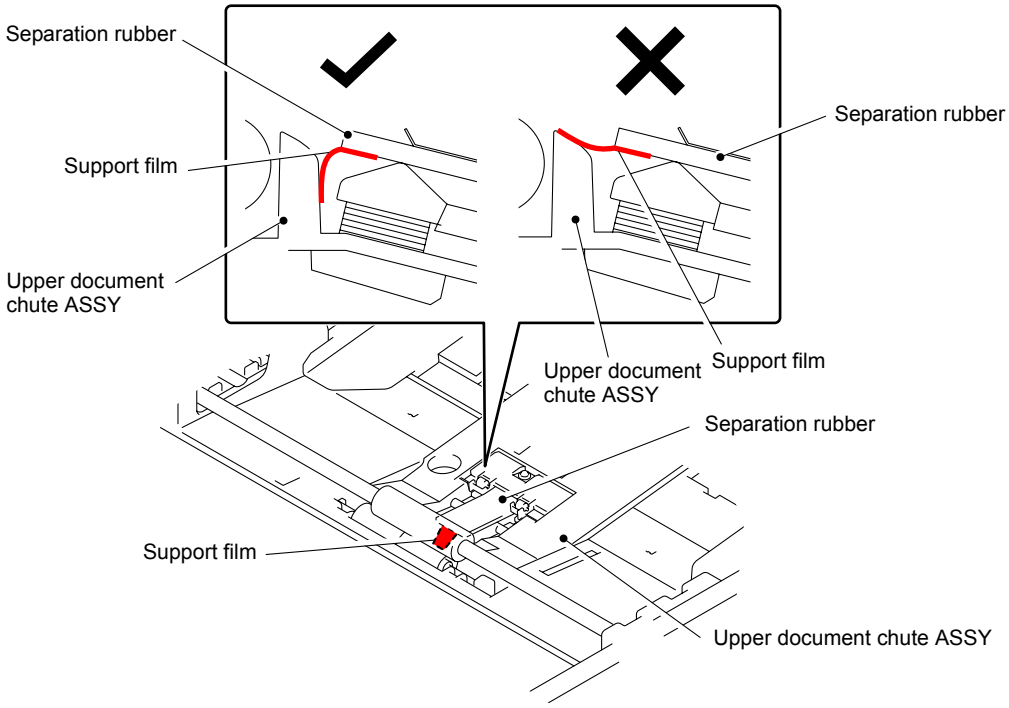

Fig. 3-106

(4) Remove the Support film from the Separation rubber.

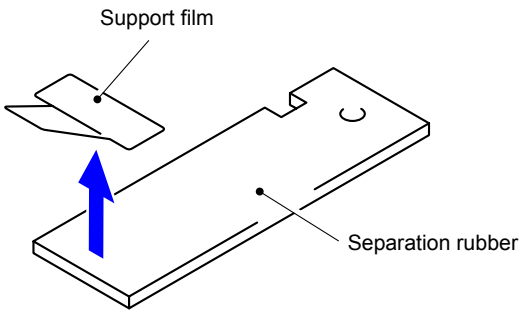

Fig. 3-107

Note:

When the Separation rubber is replaced, the Support film need to be replaced.

(5) Release the Hook of the ADF spring holder.

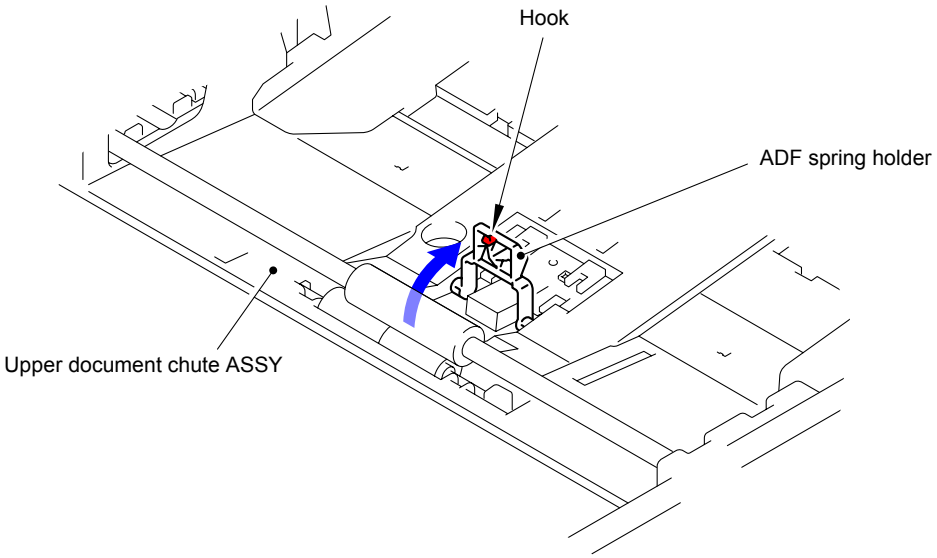

Fig. 3-108

(6) Remove the two Pins to remove the ADF spring holder from the Upper document chute ASSY.

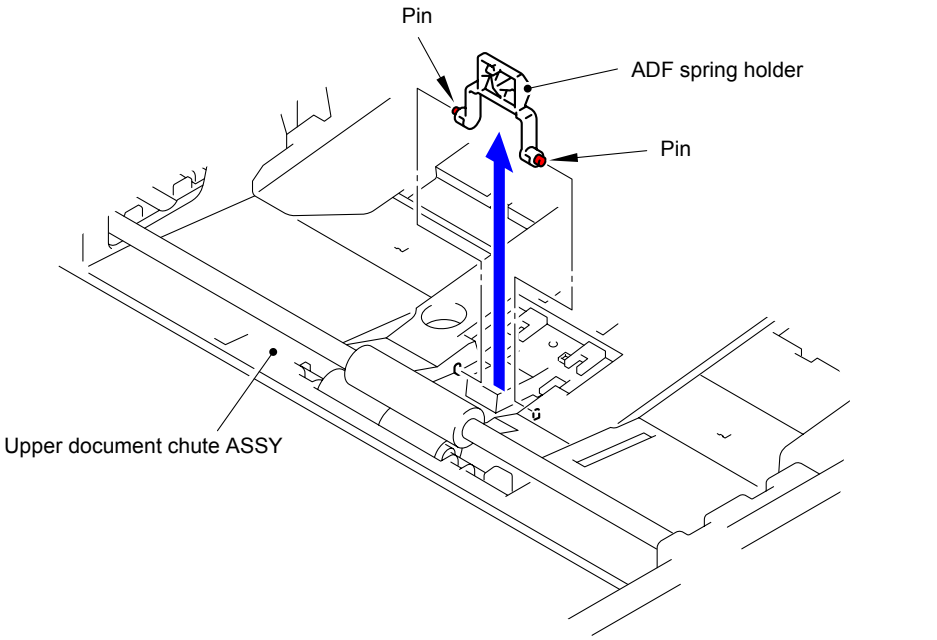

Fig. 3-109

(7) Remove the ADF spring from the Upper document chute ASSY.

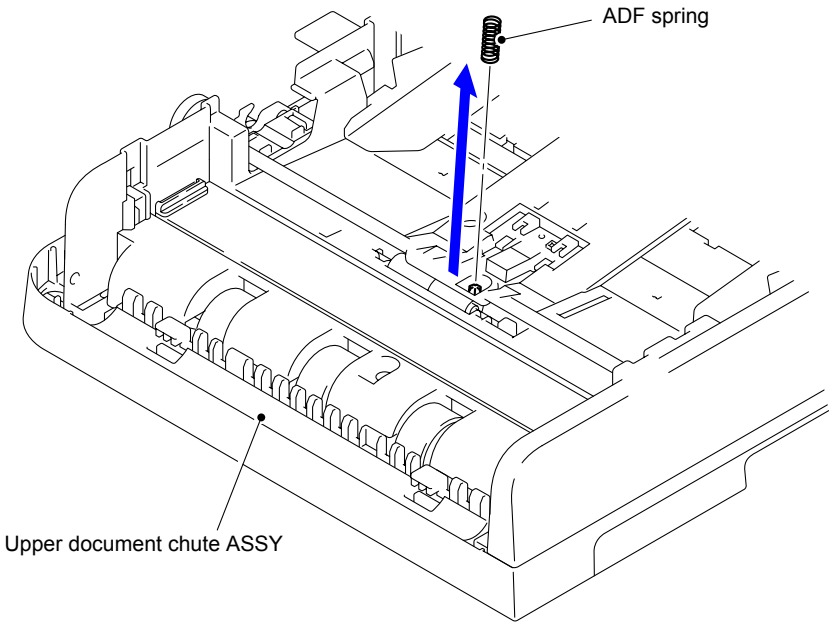

Fig. 3-110

9.25 Second Side Scanning CIS/ Second Side Scanning CIS Flat Cable

Note:
Disassemble it in a place without dust.

(1) Rotate the Conductive bush to release the lock.

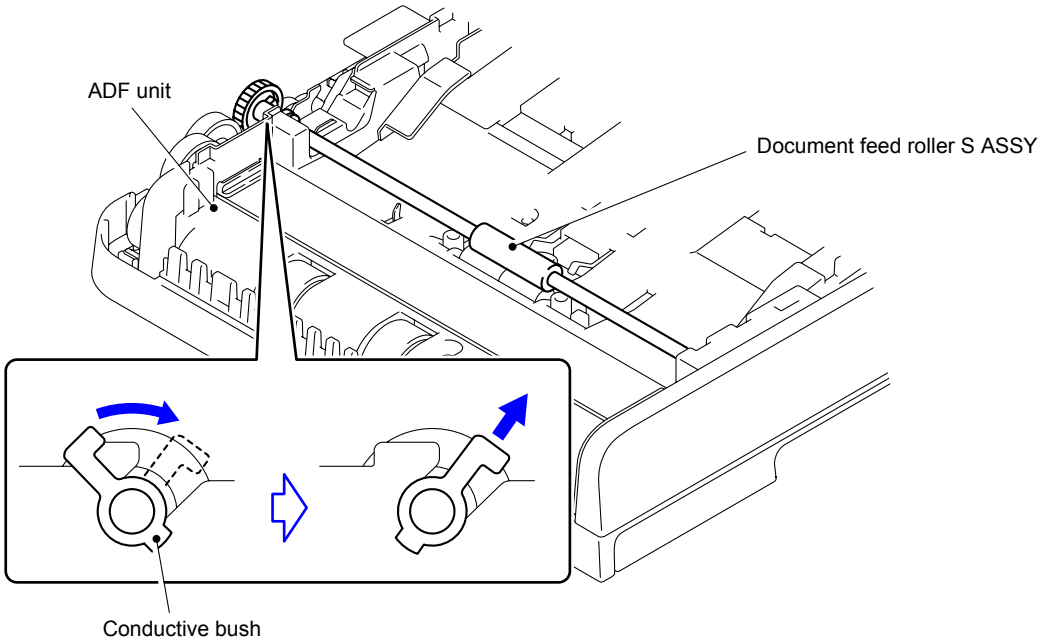

Fig. 3-111

(2) Remove the shaft end at the opposite side to remove the Document feed roller S ASSY from the ADF unit.

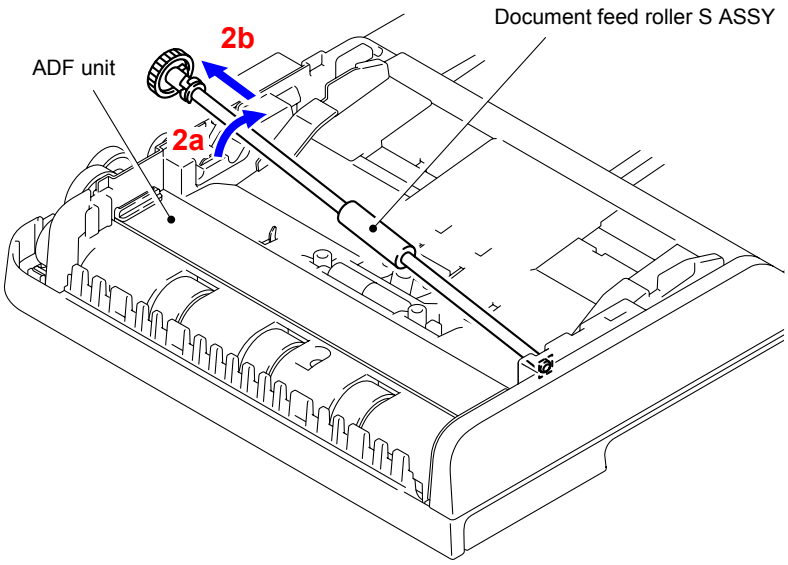

Fig. 3-112

(3) Release the two Hooks to remove the CIS glass stopper from the ADF unit.

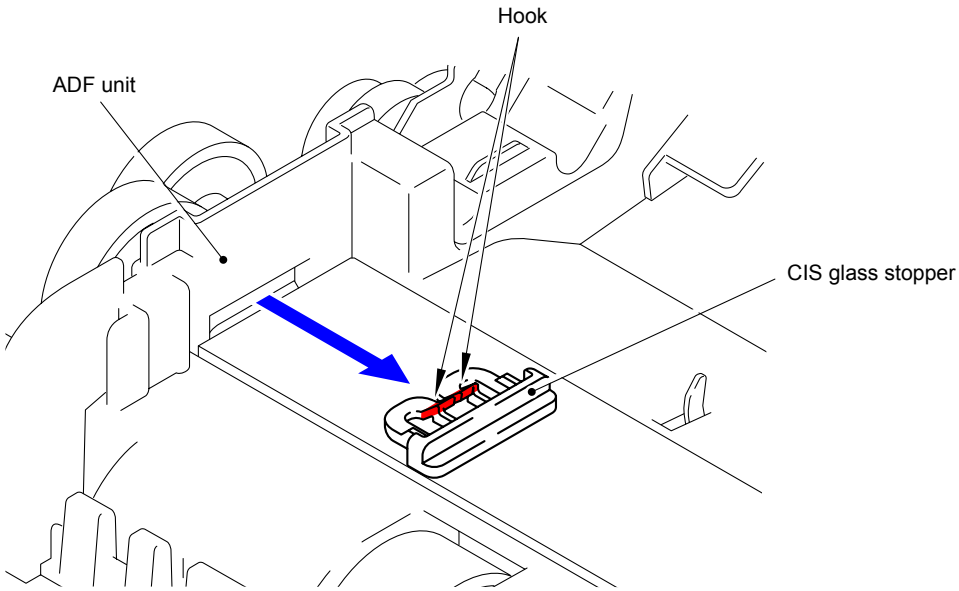

Fig. 3-113

(4) Remove the CIS glass from the ADF unit.

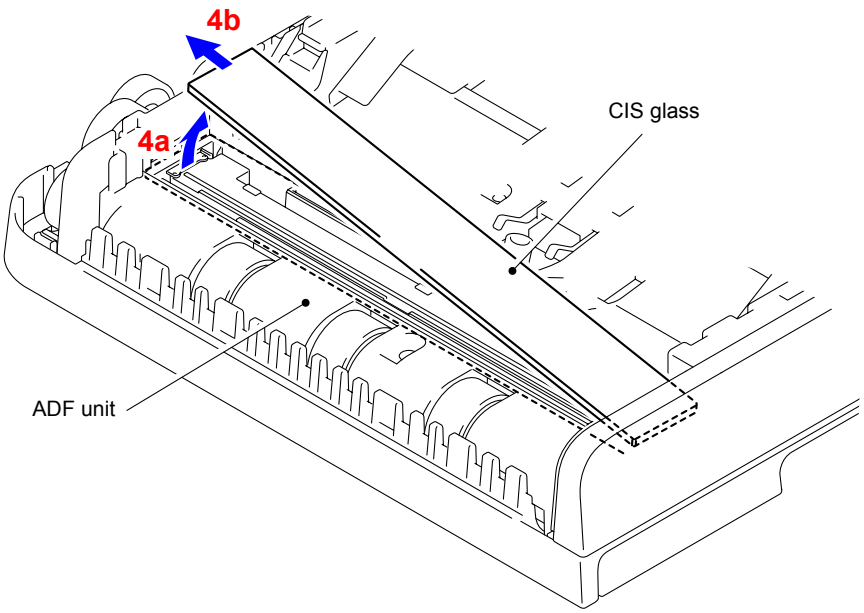

Fig. 3-114

(5) Remove the CIS spacer from the both ends of the Second side scanning CIS.

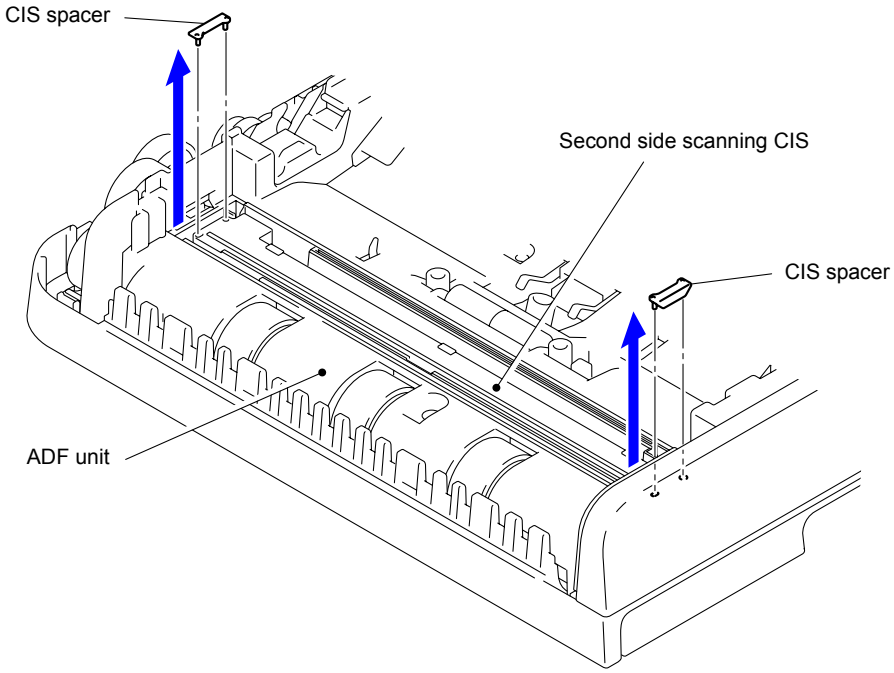

Fig. 3-115

(6) Lift the Second side scanning CIS to remove the Second side scanning CIS flat cable.

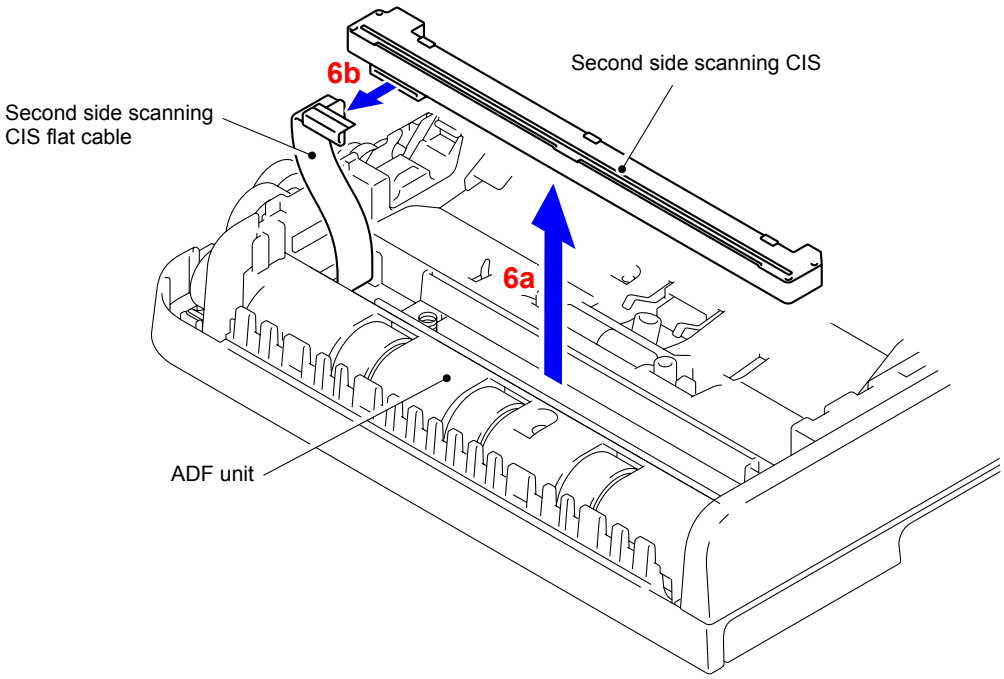

Fig. 3-116

(7) Remove the two CIS spring from the ADF unit.

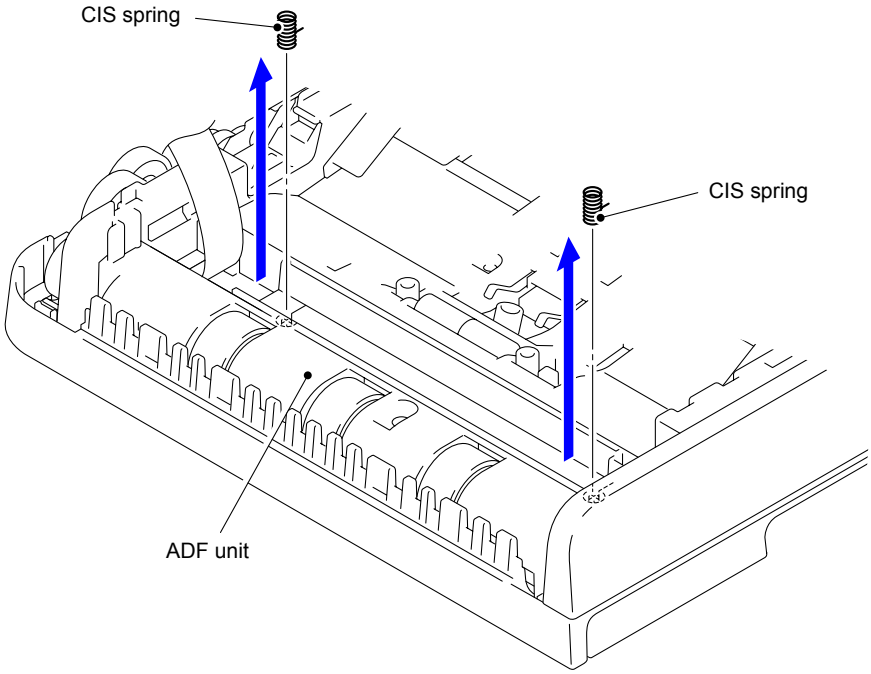

Fig. 3-117

(8) Remove the Second side scanning CIS flat cable from the ADF unit.

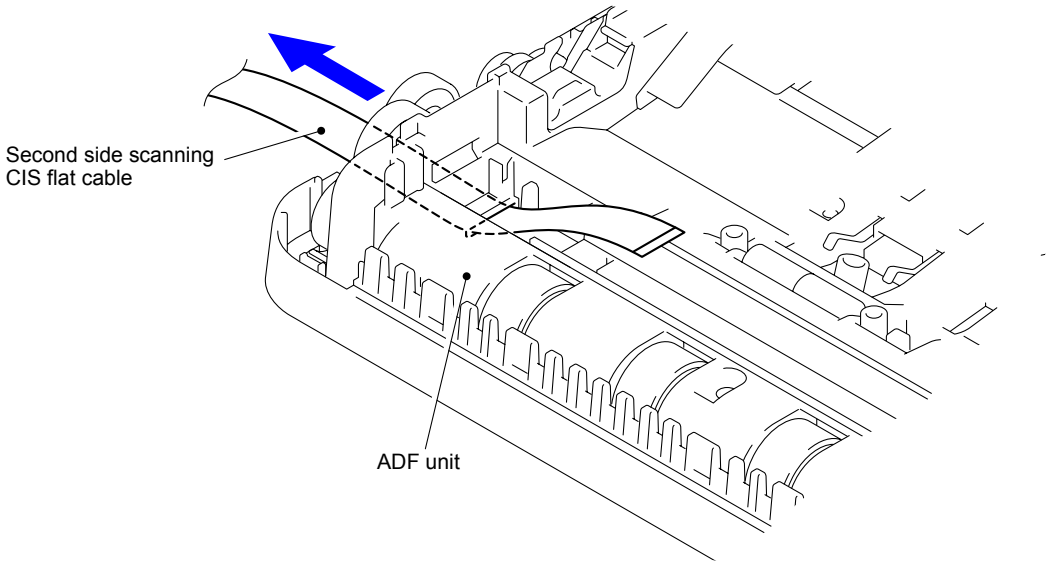

Fig. 3-118

Assembling Note:

Since the Second side scanning CIS flat cable might be broken when you remove it from the FFC holder ASSY, be sure to replace it with a new Second side scanning CIS flat cable. When assembling a new Second side scanning CIS flat cable, be sure to assemble it in accordance with the following procedure.

< Installing procedure>

(1) Fold the Second side scanning CIS flat cable at the Second side scanning CIS side as shown in the how-to-fold figure below.

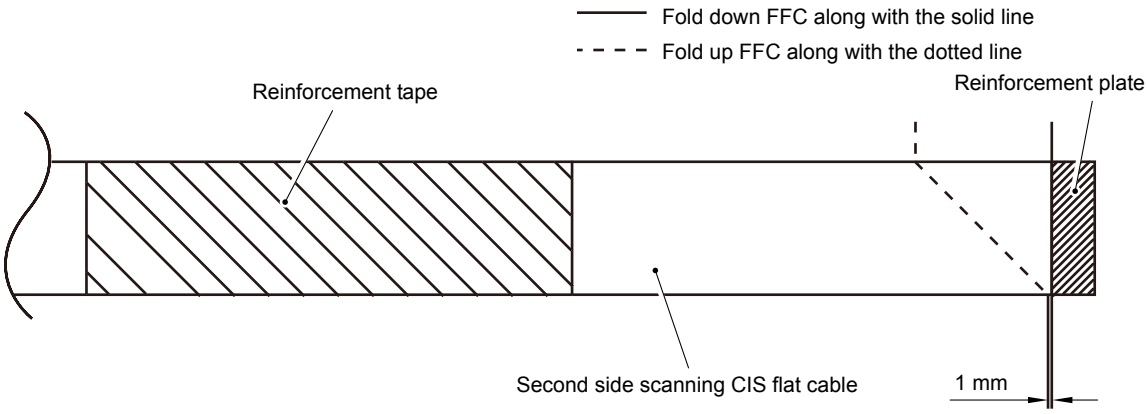

Fig. 3-119

(2) Mount the Second side scanning CIS flat cable at the Second side scanning CIS side to the Second side scanning CIS.

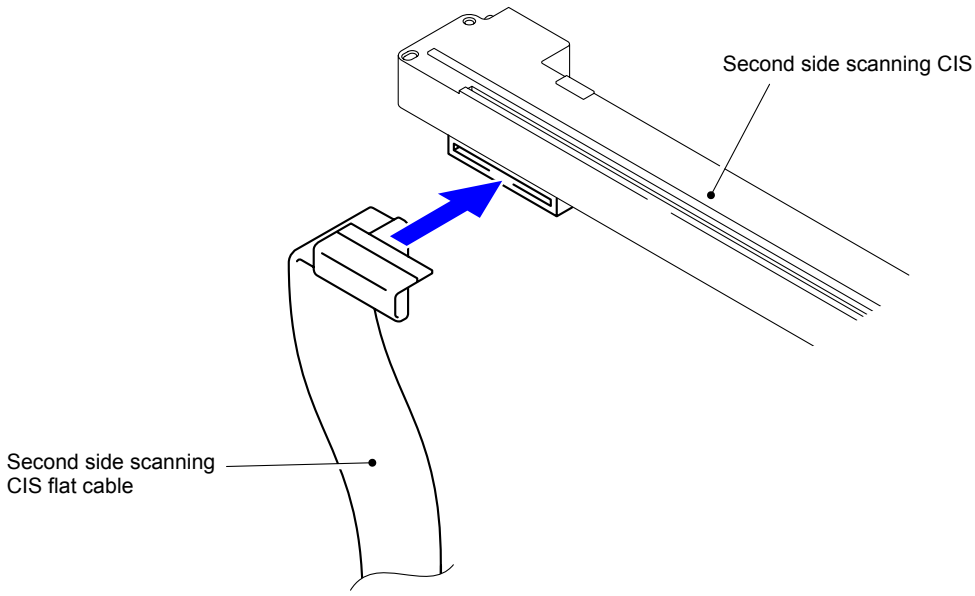

Fig. 3-120

(3) Pass the Second side scanning CIS flat cable through the ADF unit.

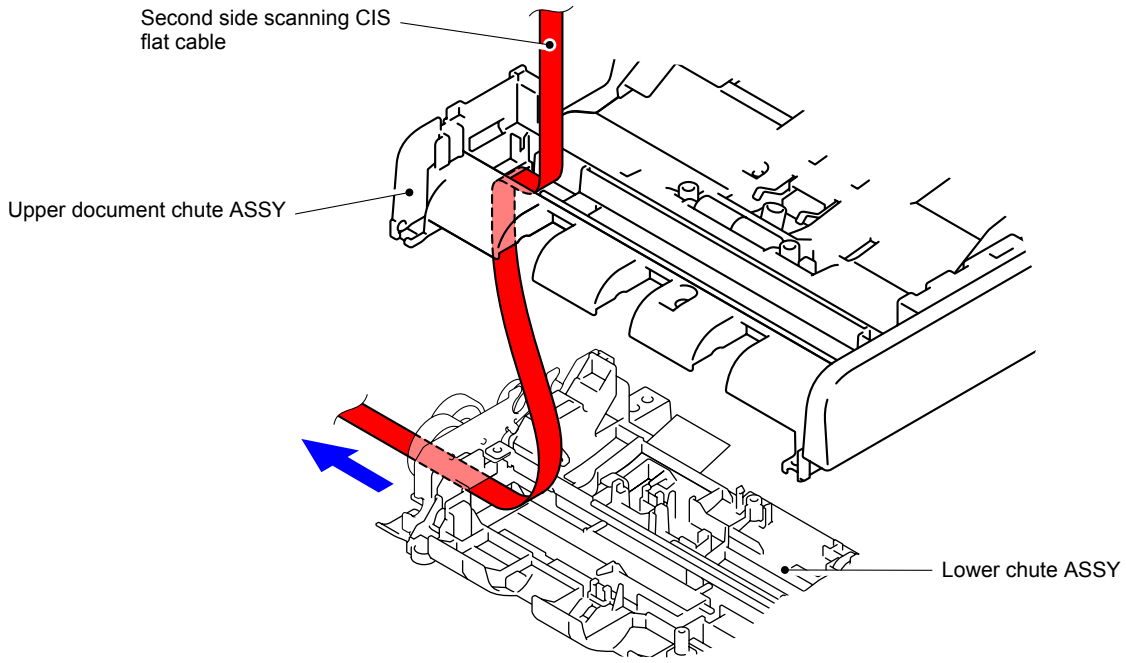

Fig. 3-121

(4) Affix double-sided adhesive tape to the FFC holder ASSY as shown in the figure below. (If the double-sided adhesive tape has already been affixed, be sure to remove it, and then affix new double-sided adhesive tape.)

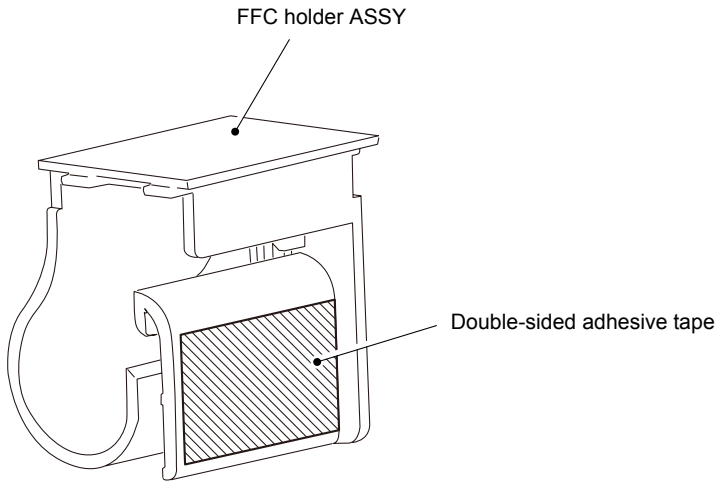

Fig. 3-122

(5) Fold the Second side scanning CIS flat cable at the position 200 mm away from the Second side scanning CIS side.

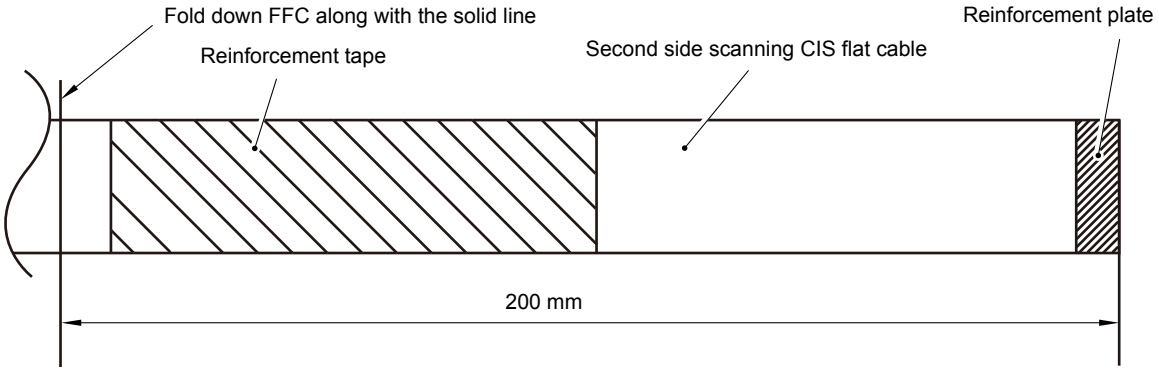

Fig. 3-123

(6) Align the Second side scanning CIS flat cable to the angle of the Rib of the FFC holder ASSY and pass it through the FFC holder ASSY as shown in the figure below, and then affix it to the double-sided adhesive tape affixed to the FFC holder ASSY.

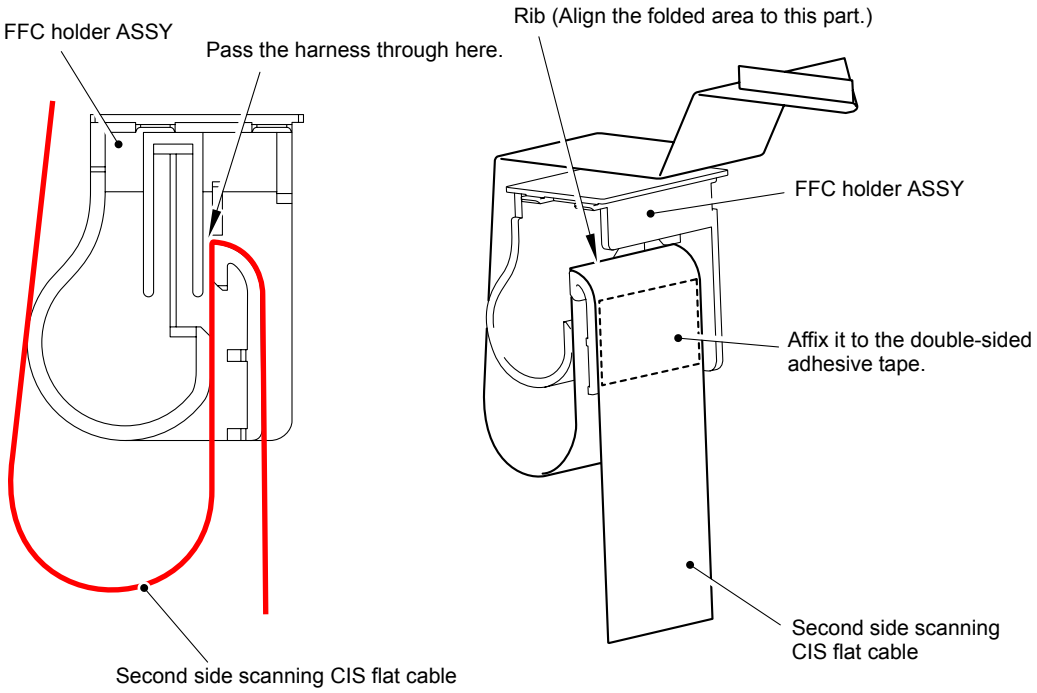

Fig. 3-124

(7) Pass the Second side scanning CIS flat cable through the Document scanner unit.

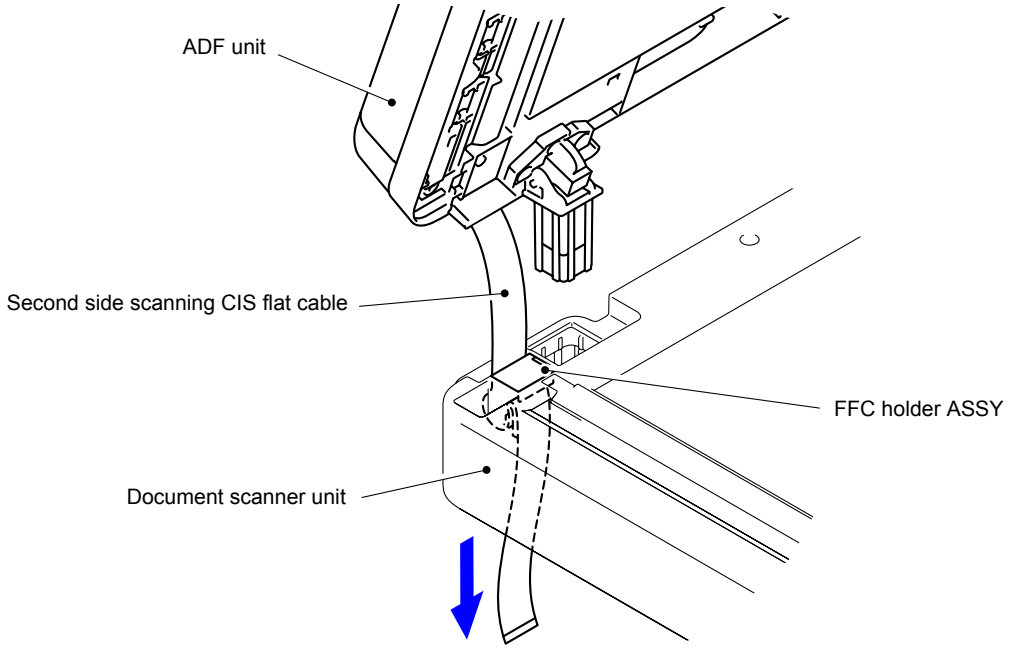

Fig. 3-125

(8) Fold the Second side scanning CIS flat cable at the Main PCB ASSY side.

■ A4 model

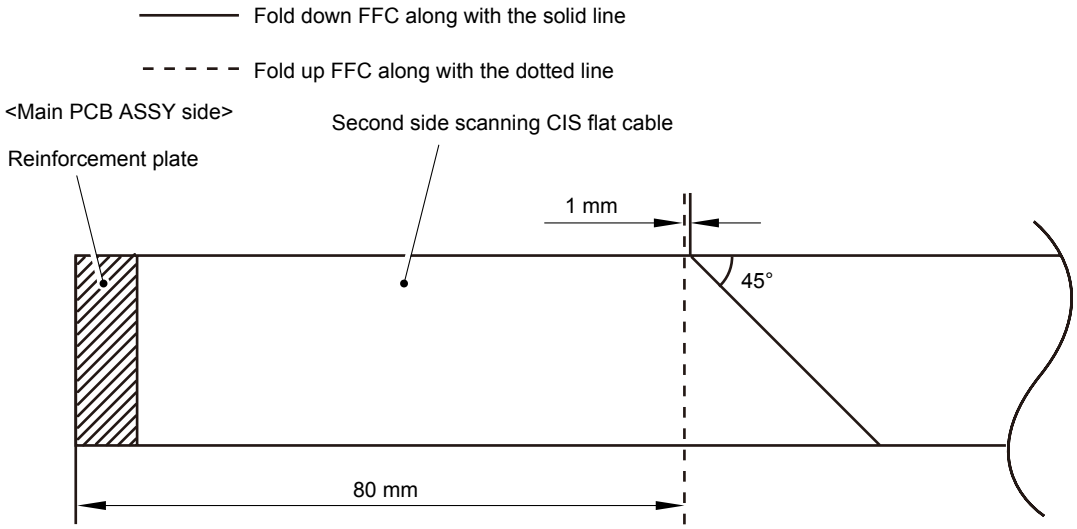

Fig. 3-126

■ Legal model

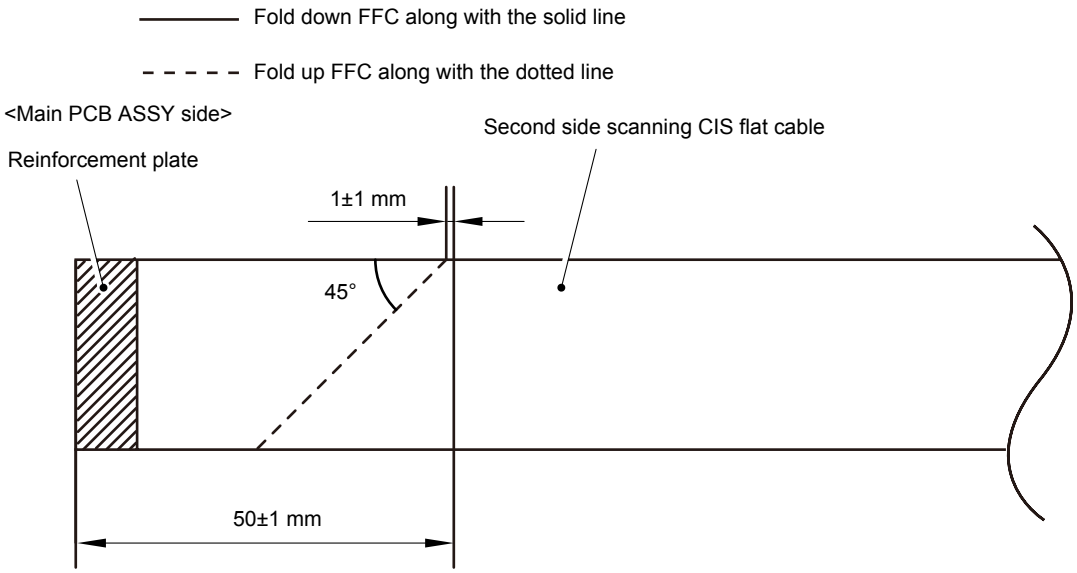

Fig. 3-127

(9) Mount the Second side scanning CIS flat cable at the Main PCB ASSY side to the Main PCB ASSY.

9.26 Upper Document Chute ASSY

(1) Turn the ADF unit upside down.

(2) Remove the Taptite cup B M3x10 screw from the ADF unit.

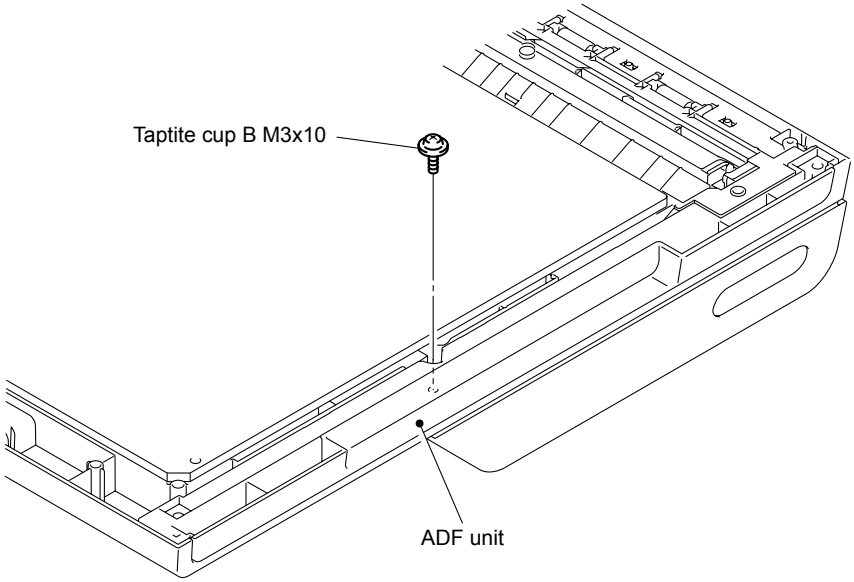

Fig. 3-128

(3) Return the ADF unit to the original position.

(4) Remove the five Taptite cup B M3x10 screws from the Upper document chute ASSY.

(5) Remove the Upper document chute ASSY from the ADF unit.

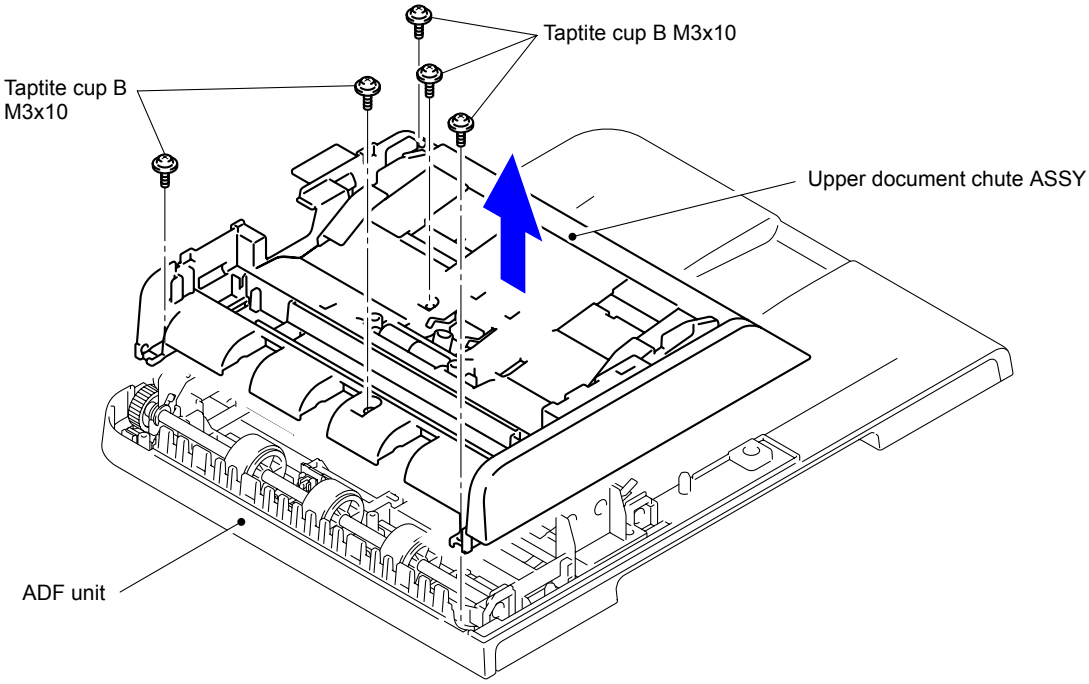

Fig. 3-129

9.27 Document Front/ADF Open Sensor/ Document First Side Rear Sensor/ Document Second Side Rear Sensor

Memo:
This part can be replaced without disassembling Second side scanning CIS.

(1) Shift the Upper document chute ASSY to the position shown in the figure so that it will not interfere with the work.

Note:
Be careful not to damage the Flat cable.

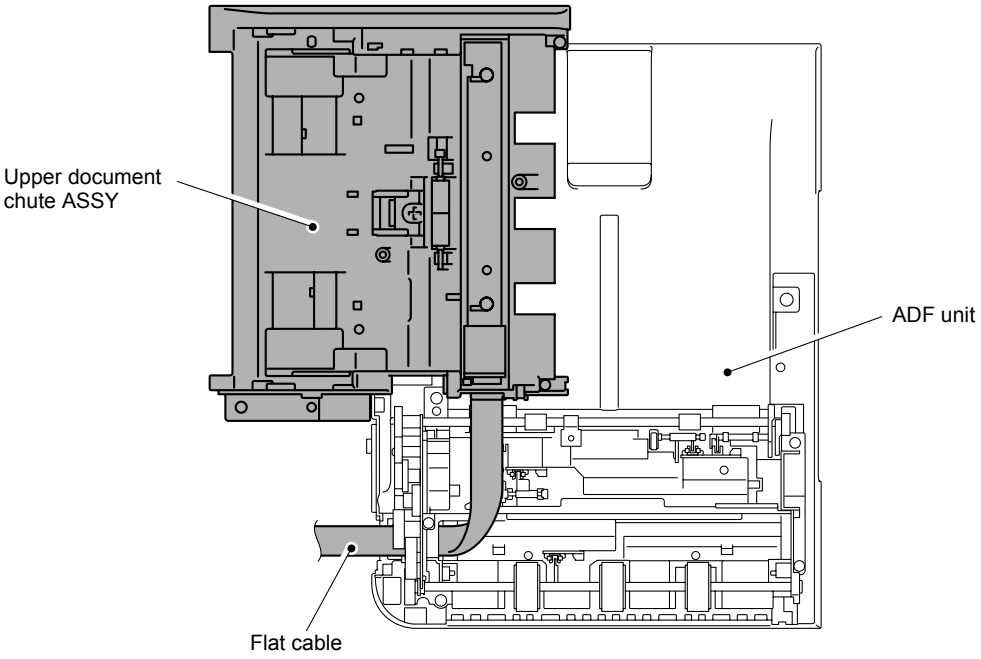

Fig. 3-130

■ A4 model

(2) Push and open the Rib to remove the Document front/ADF open sensor from the Lower document chute.

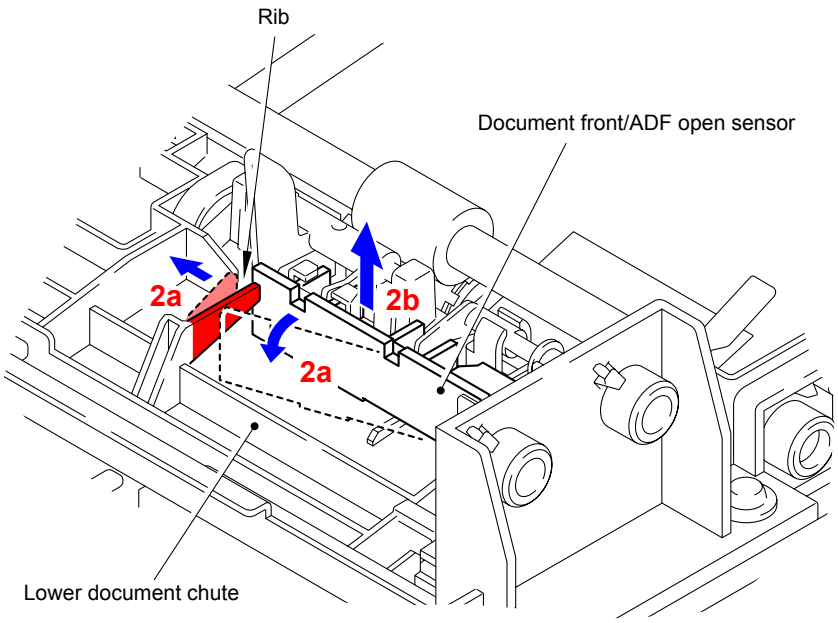

Fig. 3-131

■ Legal model

(2) Lift the film, and then push and open the Rib to remove the Document front/ADF open sensor from the Lower document chute.

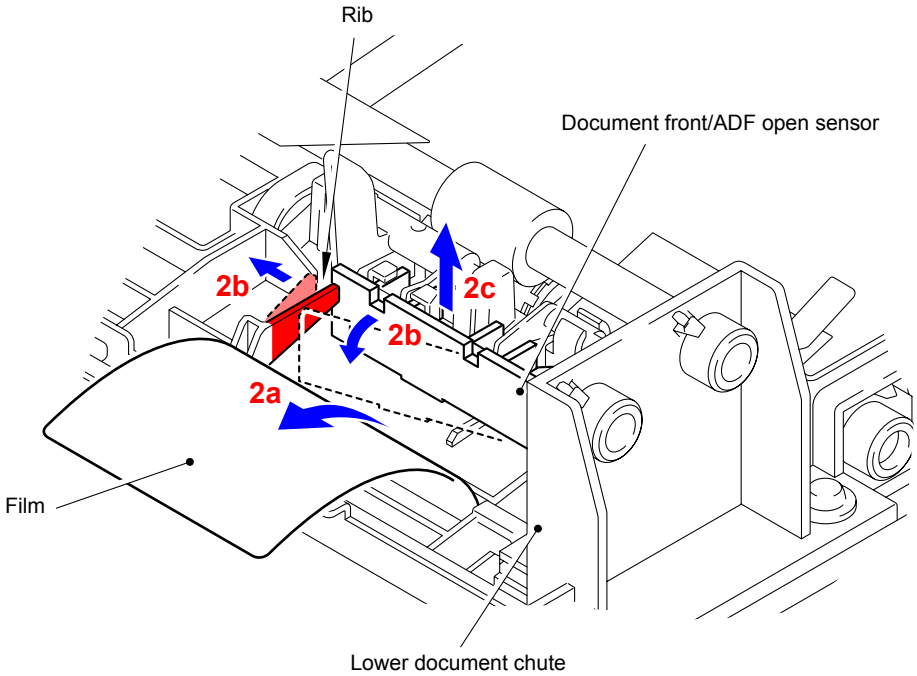

Fig. 3-132

(3) Disconnect the Connector from the Document front/ADF open sensor.

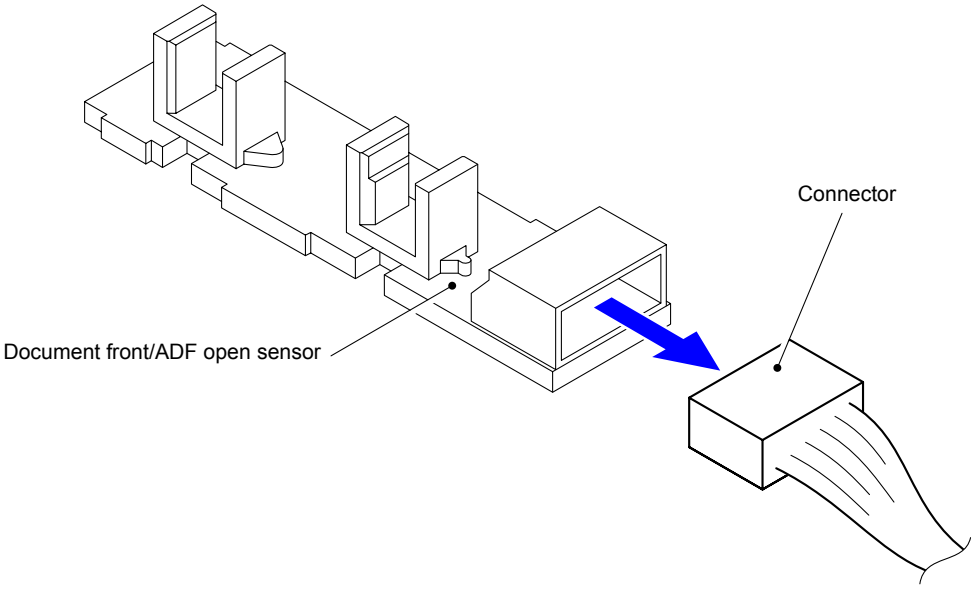

Fig. 3-133

■ A4 model

(4) Lift the film, and then push and open the Rib to remove the Document second side rear sensor from the Lower document chute.

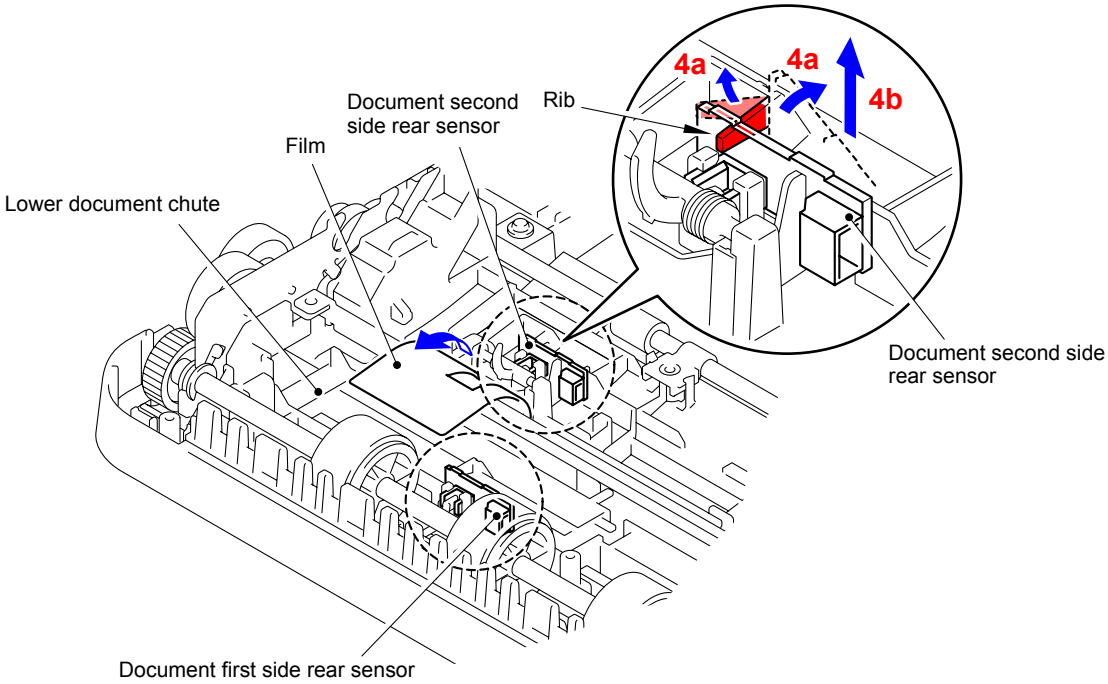

Fig. 3-134

■ Legal model

(4) Push and open the Rib to remove the Document second side rear sensor from the Lower document chute.

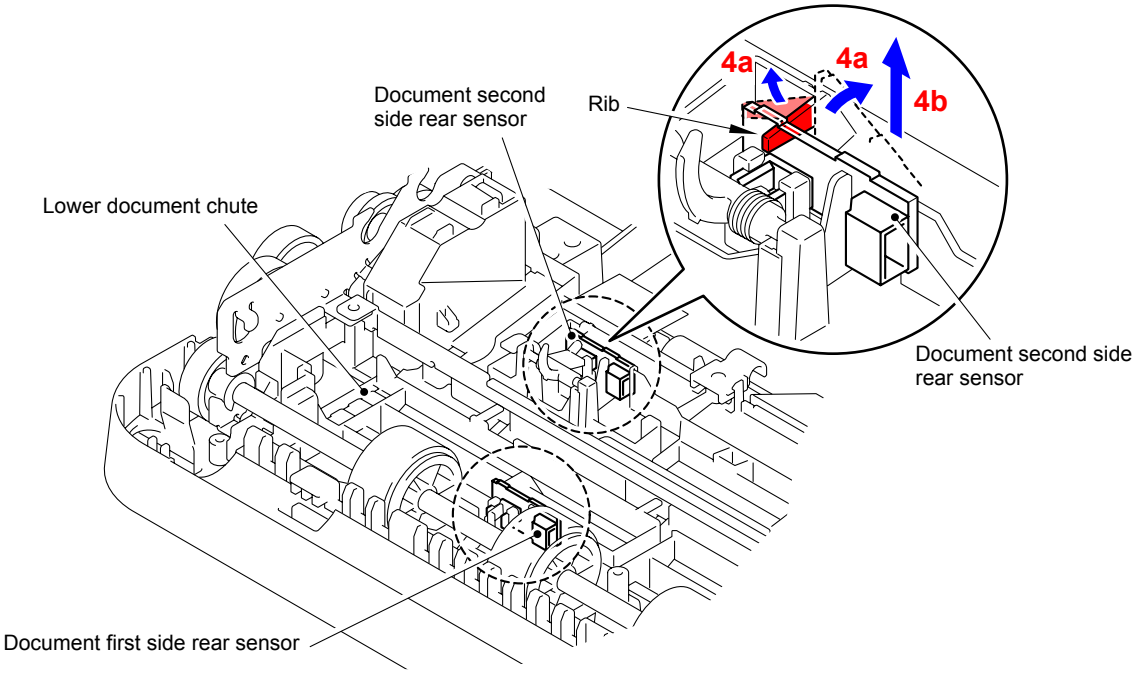

Fig. 3-135

(5) Disconnect the Connector from the Document second side rear sensor.

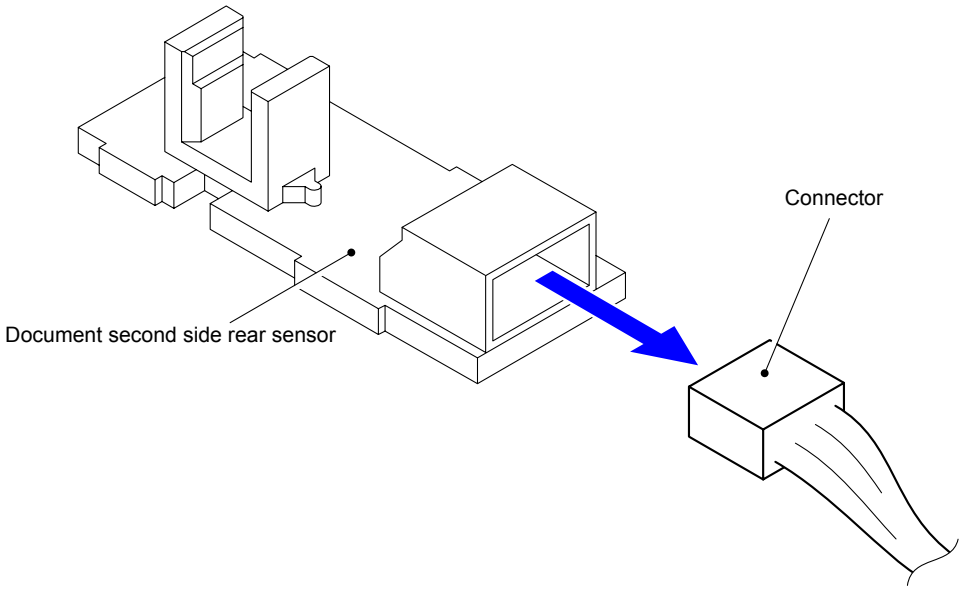

Fig. 3-136

(6) Disconnect the Connector from the Document first side rear sensor in the same way.

9.28 Drive Frame ASSY/Document Feed Roller ASSY

(1) Release the two Hooks to remove the Ejection roller bush from the Ejection roller ASSY.

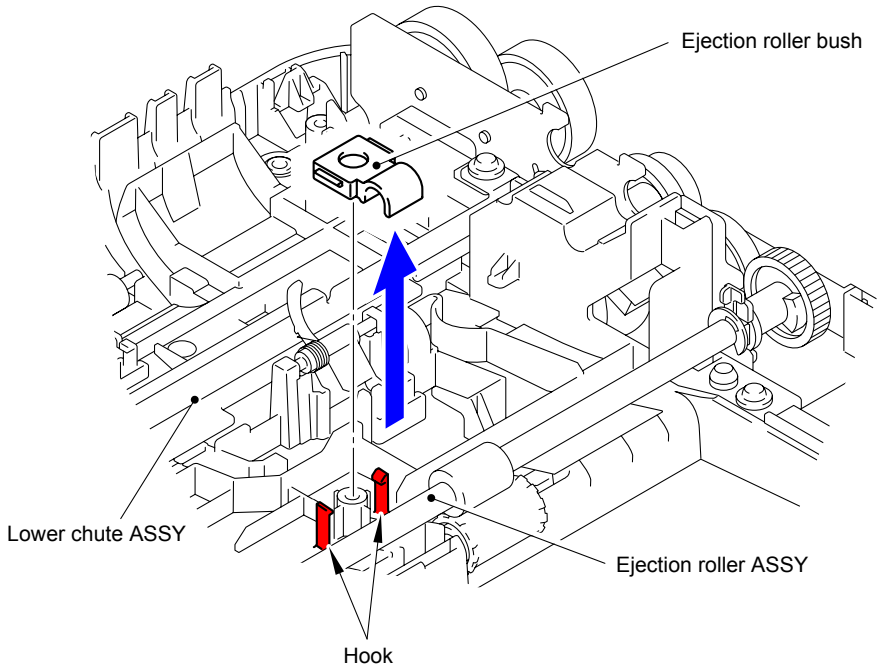

Fig. 3-137

(2) Rotate the Conductive bush to release the lock.

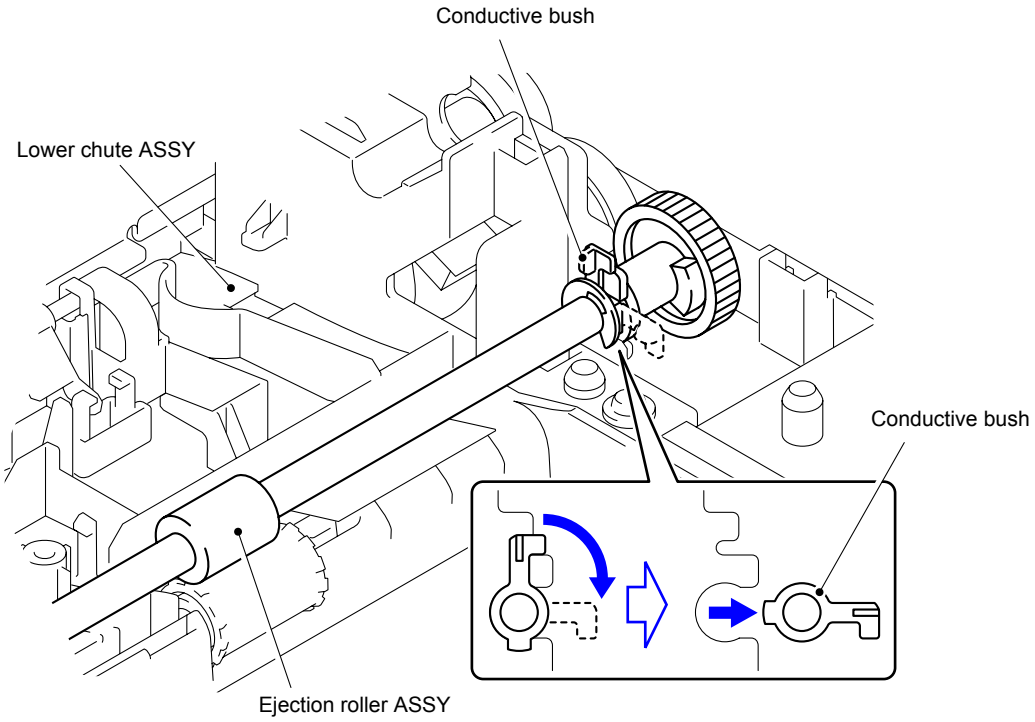

Fig. 3-138

(3) Remove the shaft end at the opposite side to remove Ejection roller ASSY from the Lower chute ASSY.

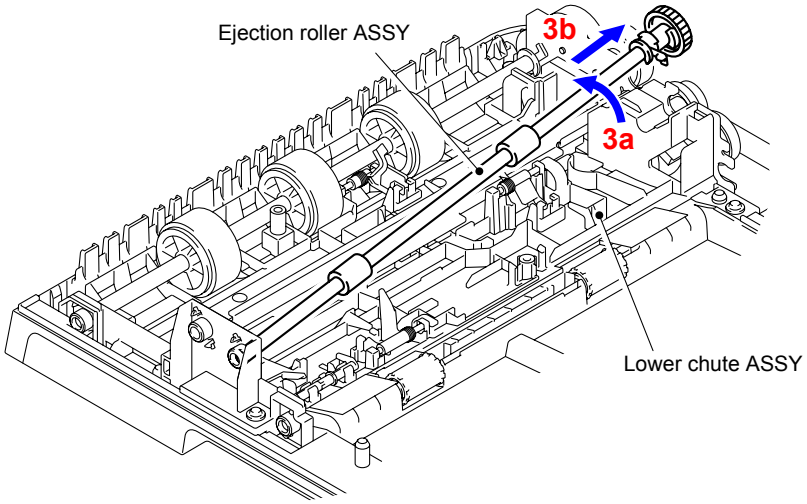

Fig. 3-139

(4) Remove the three Taptite cup B M3x10 screws from the Lower chute ASSY.

(5) Release the Hook to remove the Lower chute ASSY from the Document cover ASSY.

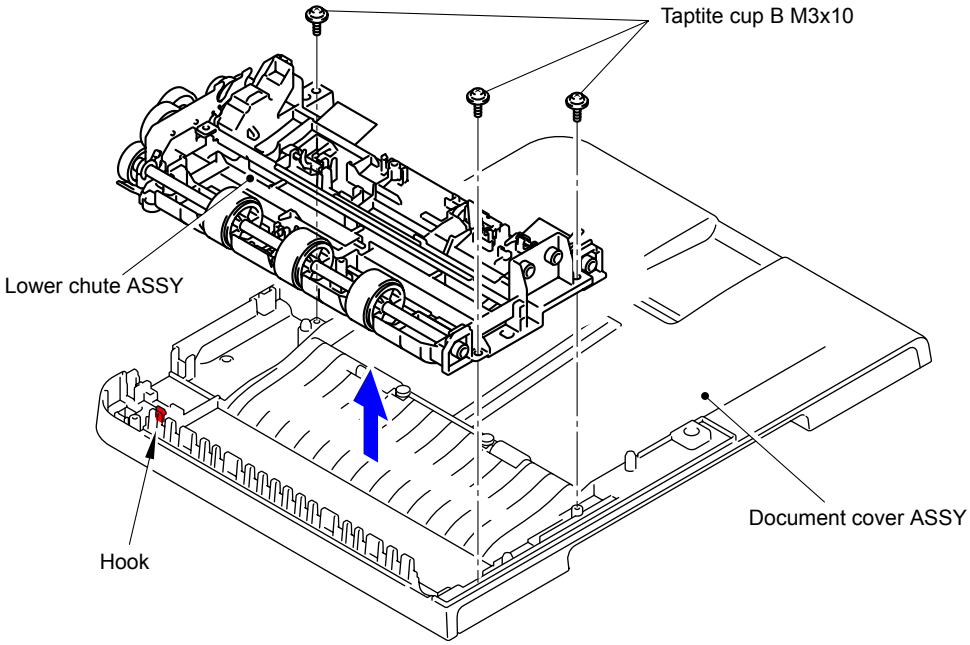

Fig. 3-140

(6) Release the Pin of the Conductive bush and rotate it to the position shown in the figure.

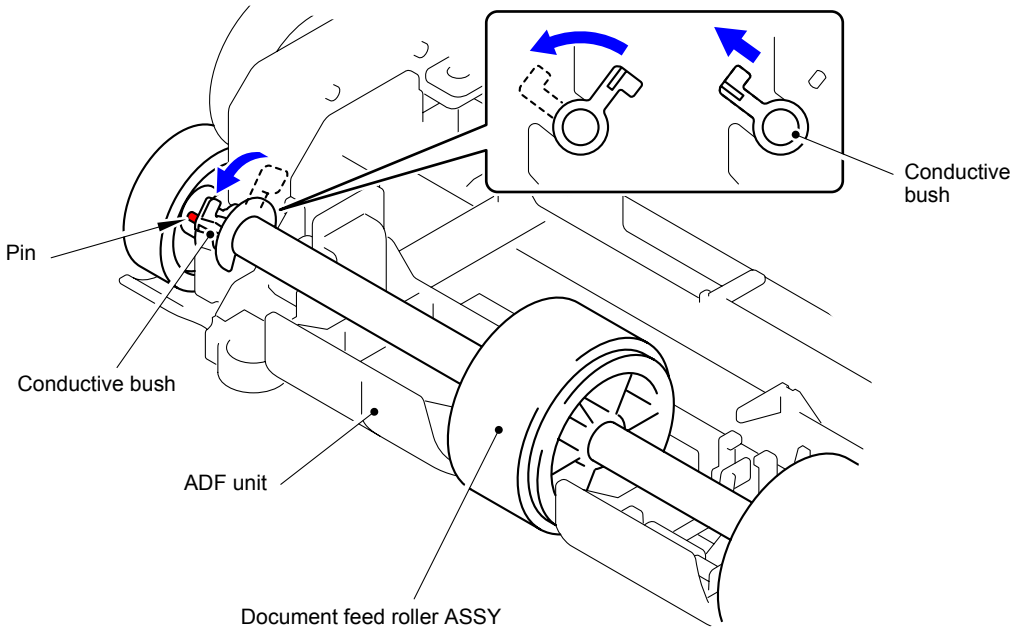

Fig. 3-141

(7) Remove the shaft end at the opposite side to remove the Document feed roller ASSY from the Lower chute ASSY.

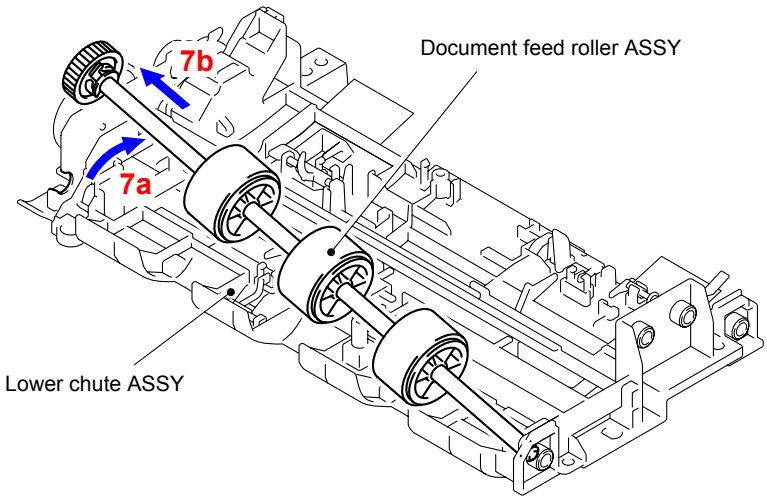

Fig. 3-142

(8) Remove the Taptite cup S M3x6 screw from the Lower chute ASSY.

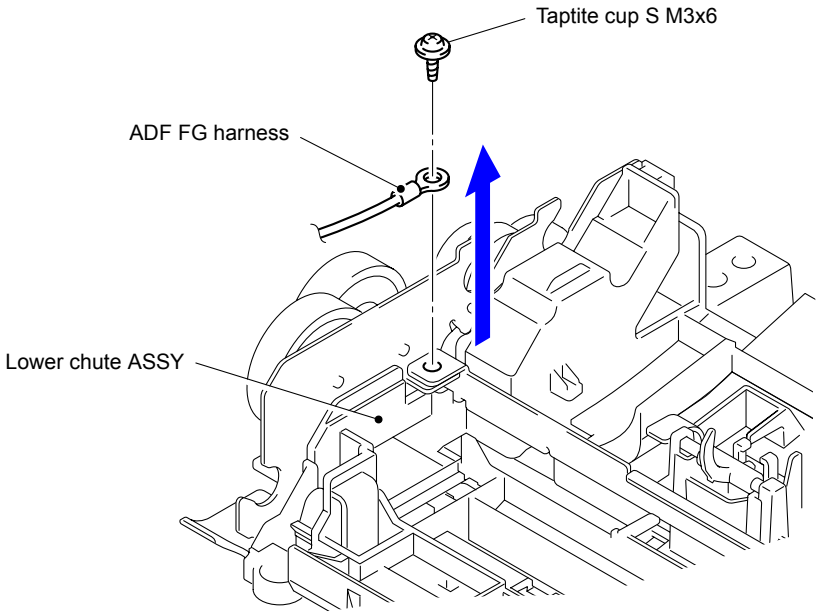

Fig. 3-143

(9) Remove the three Taptite cup B M3x10 screws to remove the Drive frame ASSY from the Lower chute ASSY.

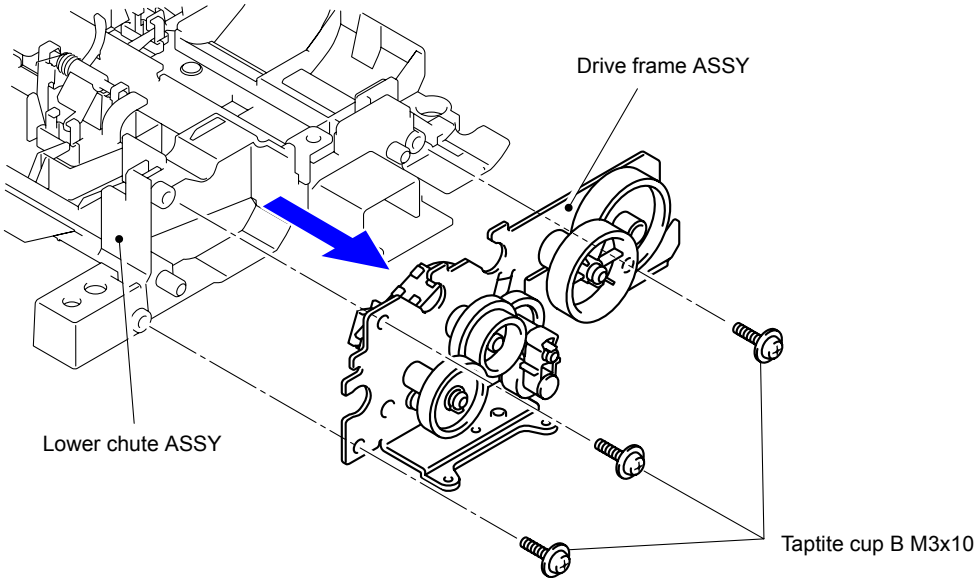

Fig. 3-144

Assembling Note:

When asembling the Drive frame ASSY, ensure that the Arm ASSY L2 are placed in the positions as shown in the figure below.

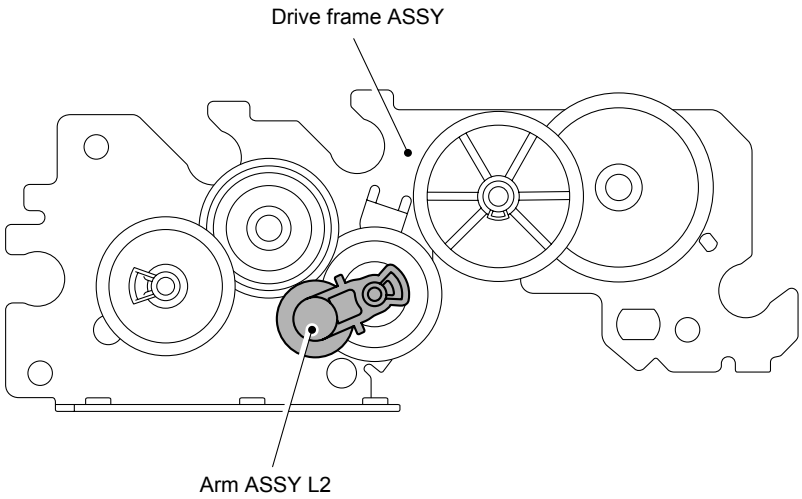

Fig. 3-145

(10) Disconnect the Connector from the ADF motor.

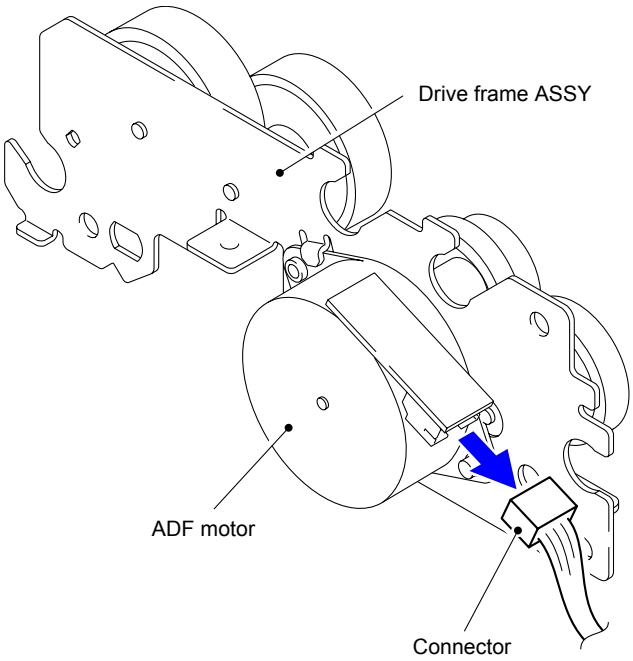

Fig. 3-146

9.29 ADF Motor

(1) Release the Hook to remove the Gear 43 from the Drive frame ASSY.

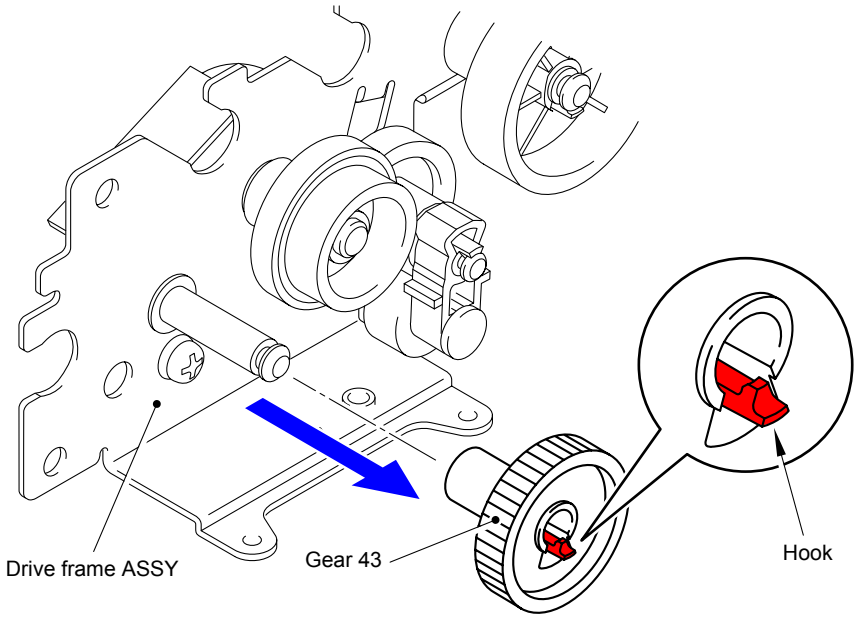

Fig. 3-147

(2) Remove the Screw pan (S/P washer) M3x6 screw to remove the ADF motor from the Drive frame ASSY.

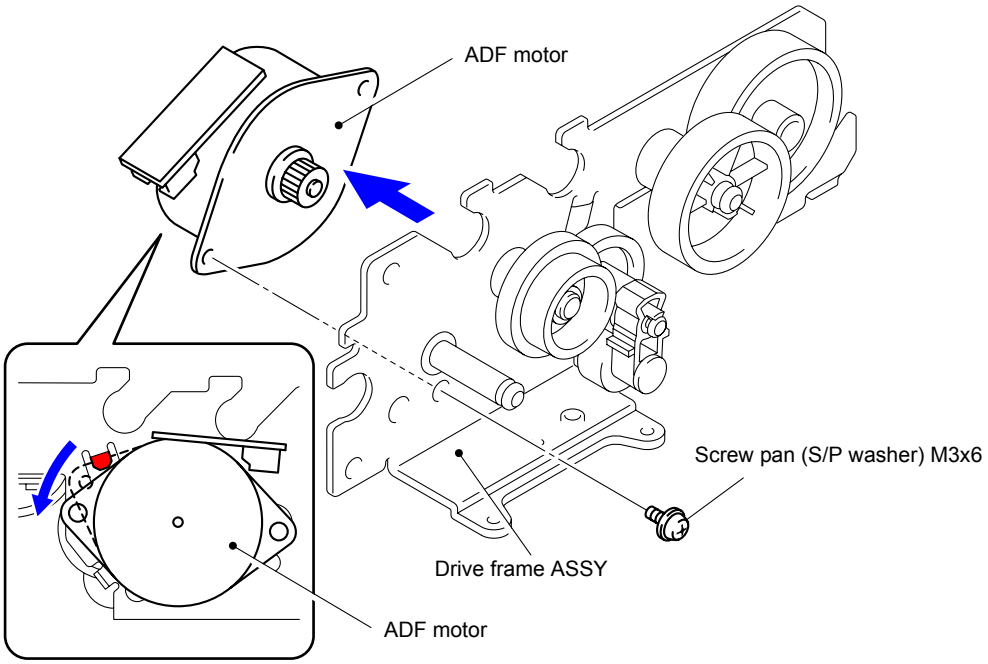

Fig. 3-148

9.30 Document Hold ASSY

(1) Turn the Lower chute ASSY upside down.

(2) Remove the two Pins to remove the Document hold ASSY from the Lower chute ASSY.

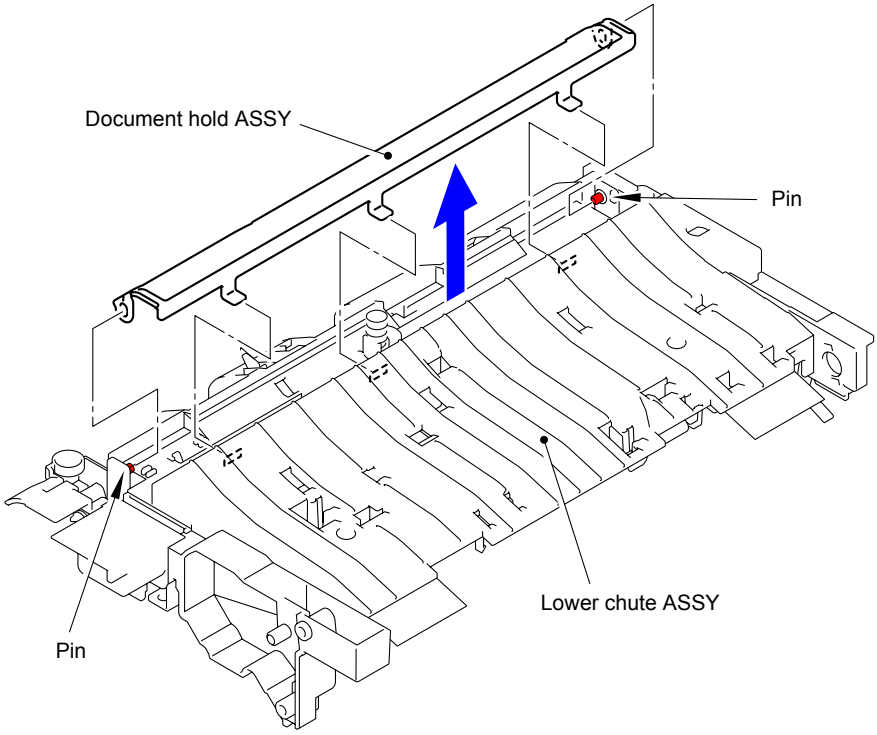

Fig. 3-149

9.31 Document Cover ASSY/Grip Cover

(1) Remove the three LF2 spring shafts and three LF2 pinch rollers.

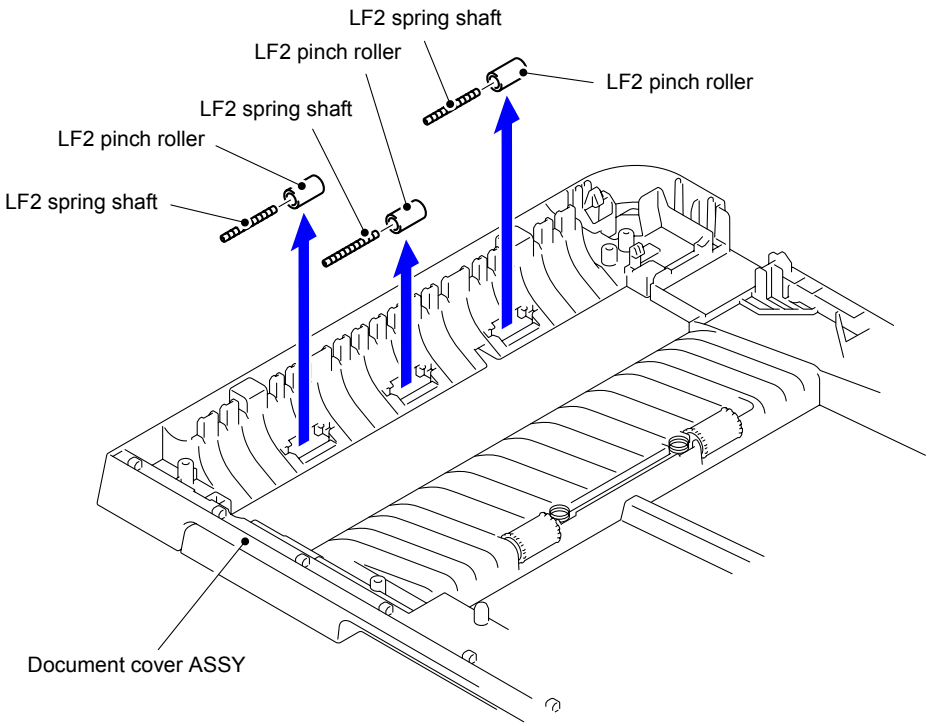

Fig. 3-150

(2) Turn the Document cover ASSY upside down.

(3) Remove the two Taptite cup B M3x10 screws to remove the Grip cover from the Document cover ASSY.

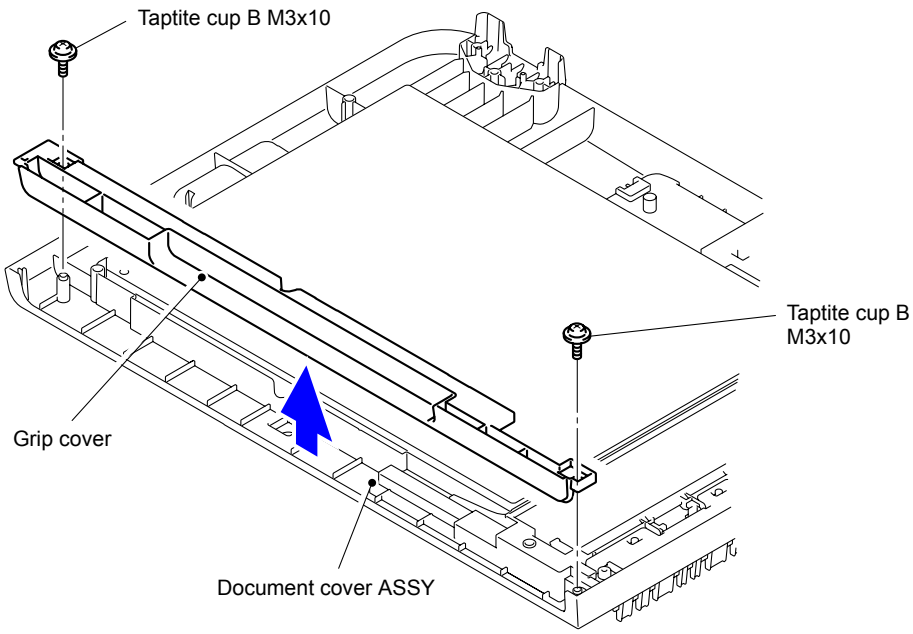

Fig. 3-151

9.32 Panel Cover ASSY

■ A4 model

(1) Release the eight Hooks to remove the Panel cover ASSY from the Document scanner unit.

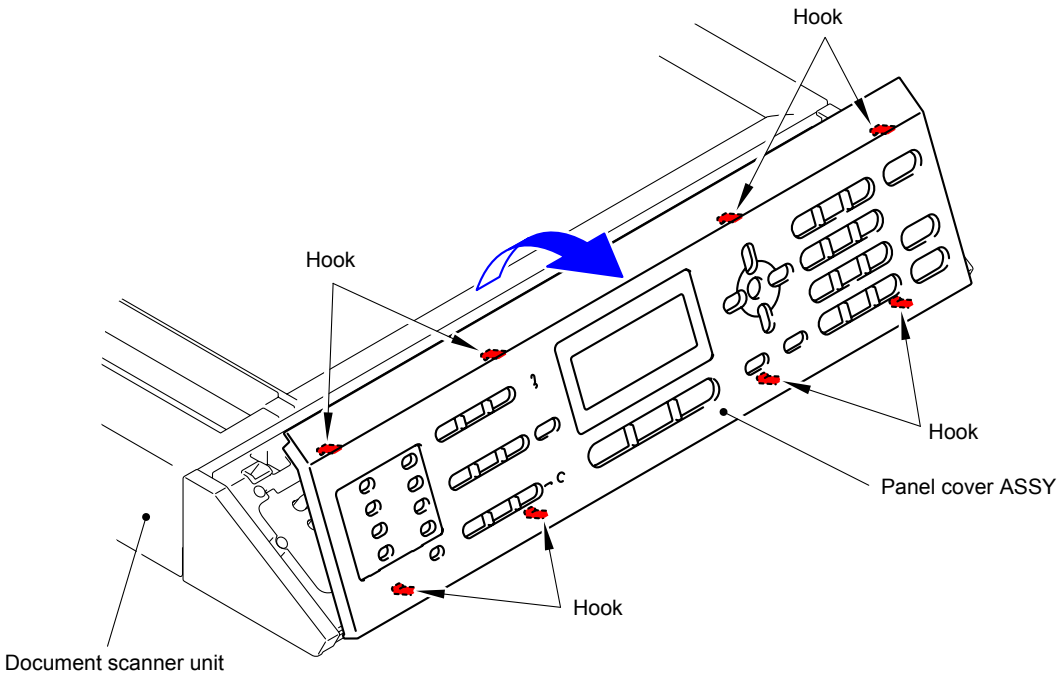

Fig. 3-152

■ Legal model

(1) Release the four Hooks to remove the Panel cover ASSY from the Panel unit.

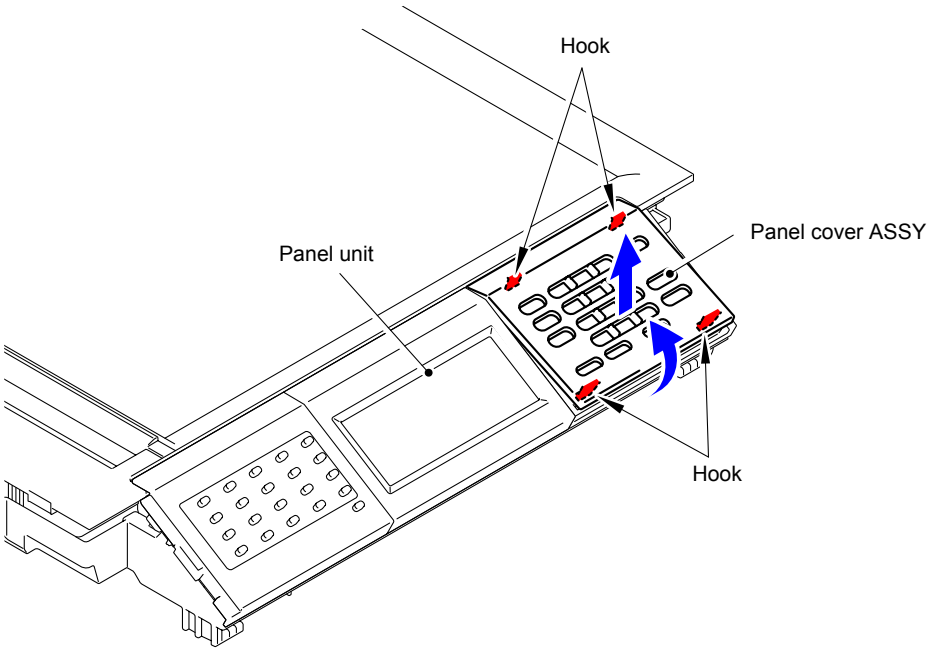

Fig. 3-153

9.33 Panel Unit

■ A4 model

(1) Remove the four Taptite cup B M3x10 screws from the Panel unit.

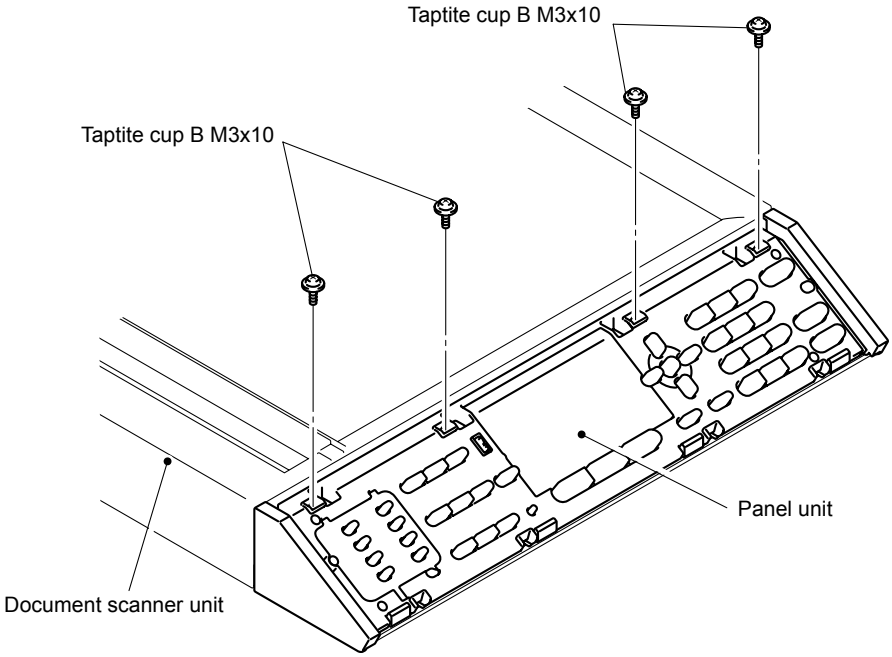

Fig. 3-154

(2) Release the four Hooks to remove the Panel unit from the Document scanner unit.

Note:
Be careful not to pull the Panel unit strongly because the Harness is connected to it.

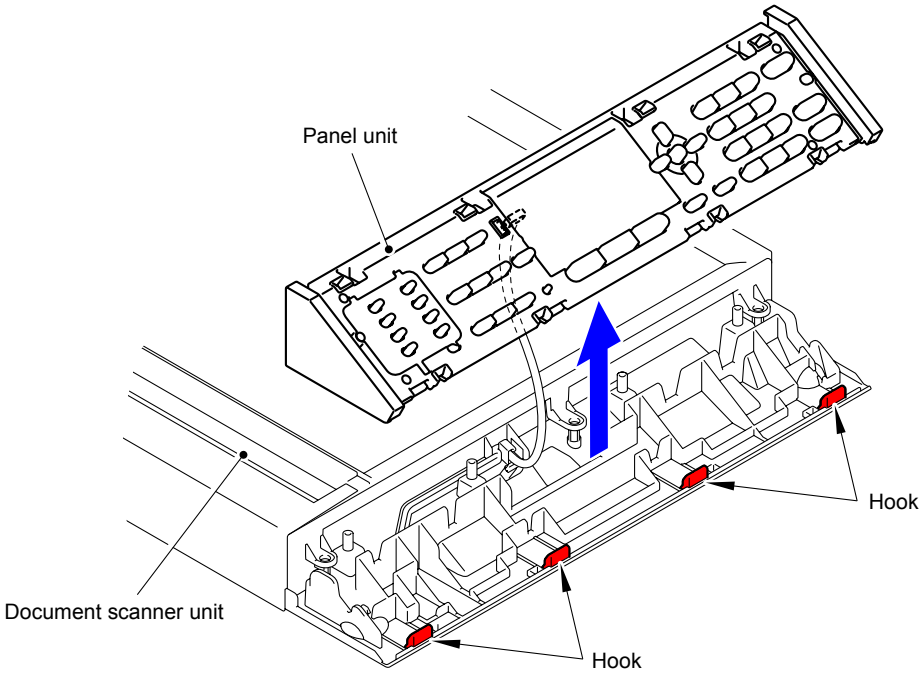

Fig. 3-155

(3) Disconnect the Connector (CN4) from the Panel PCB ASSY.

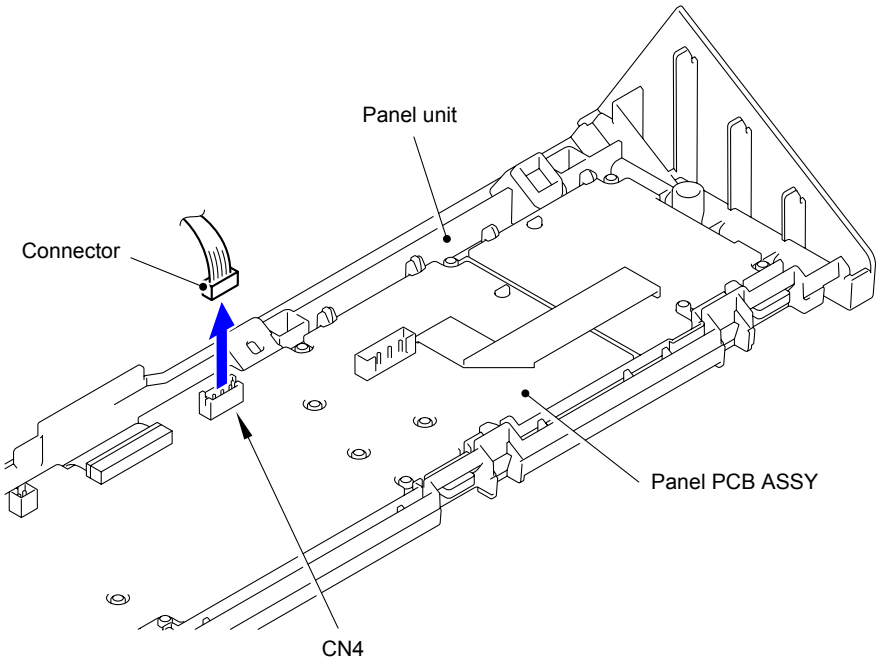

Fig. 3-156

■ Legal model

(1) Remove the three Taptite cup B M3x10 screws from the Panel unit.

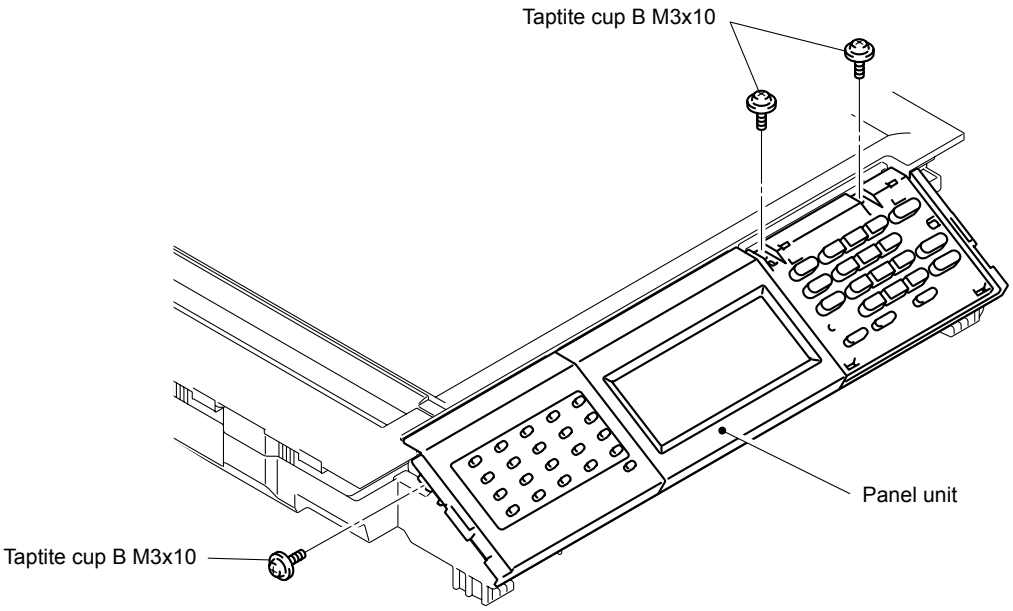

Fig. 3-157

(2) Release the six Hooks to remove the Panel unit from the Main body.

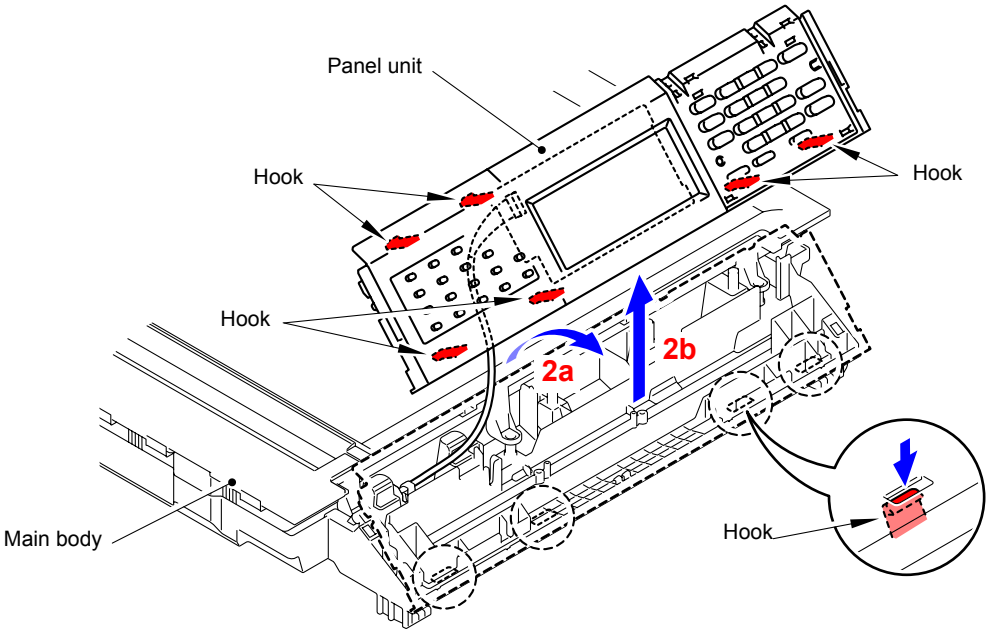

Fig. 3-158

Note:
Be careful not to pull the Panel unit strongly because the Harness is connected to it.

(3) Disconnect the Connector (CN1) from the Touch panel PCB.

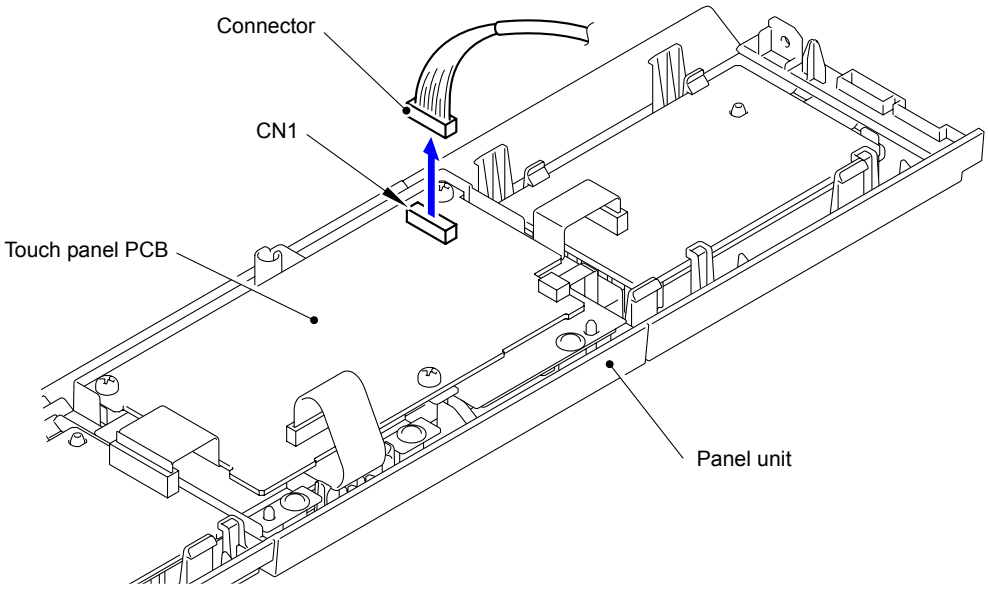

Fig. 3-159

9.34 Panel PCB ASSY

■ A4 model

(1) Disconnect the Connector (CN2) and Flat cable (CN3) from the Panel PCB ASSY.

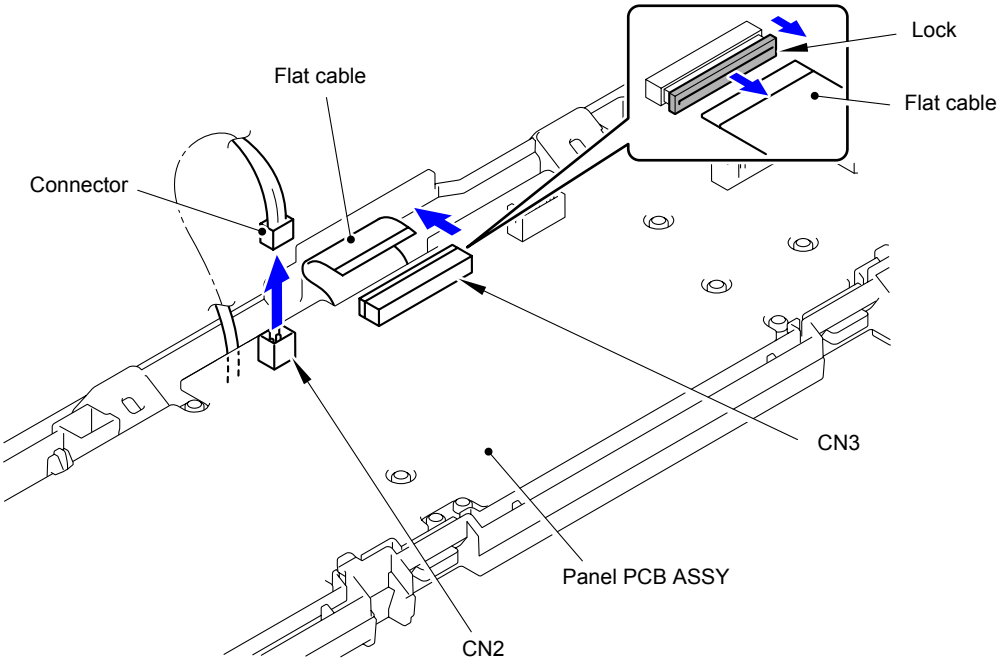

Fig. 3-160

(2) Release the ten Hooks to remove the Panel PCB ASSY from the Panel unit.

> **Note:**
> The Panel PCB ASSY consists of two PCBs, and they are connected with a Flat cable. Be sure to remove the two PCBs at the same time because the Flat cable might get broken if you remove the PCBs.

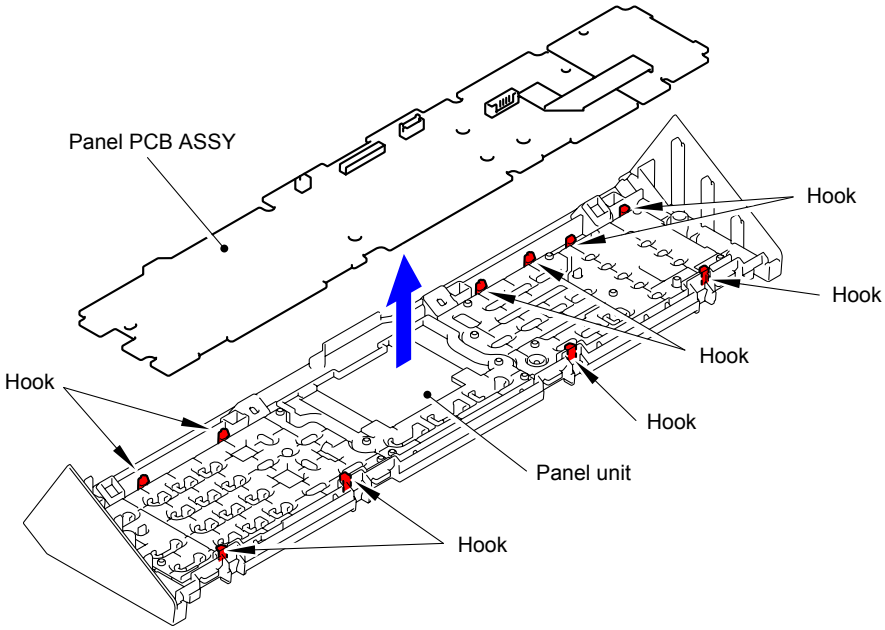

Fig. 3-161

■ Legal model

(1) Disconnect the Flat cable (CN1) from the Panel PCB ASSY L.

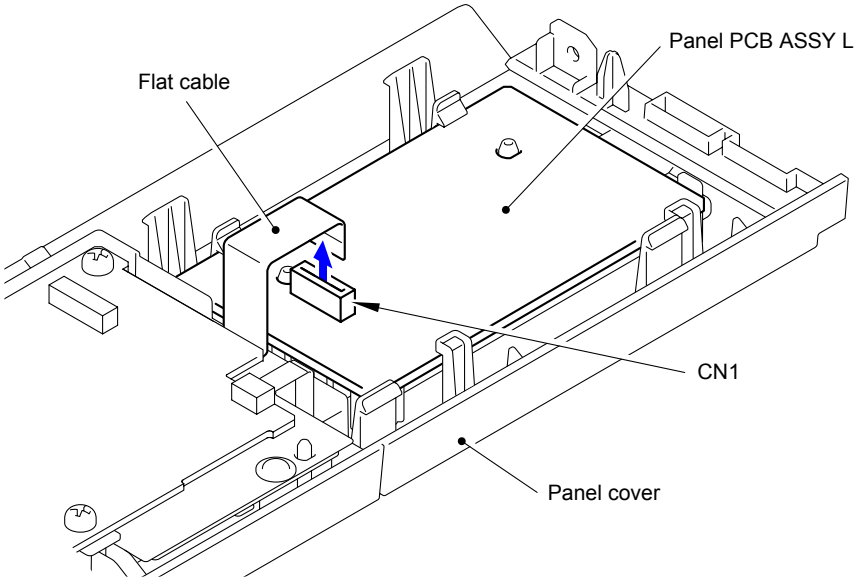

Fig. 3-162

(2) Release the four Hooks to remove the Panel PCB ASSY L from the Panel cover.

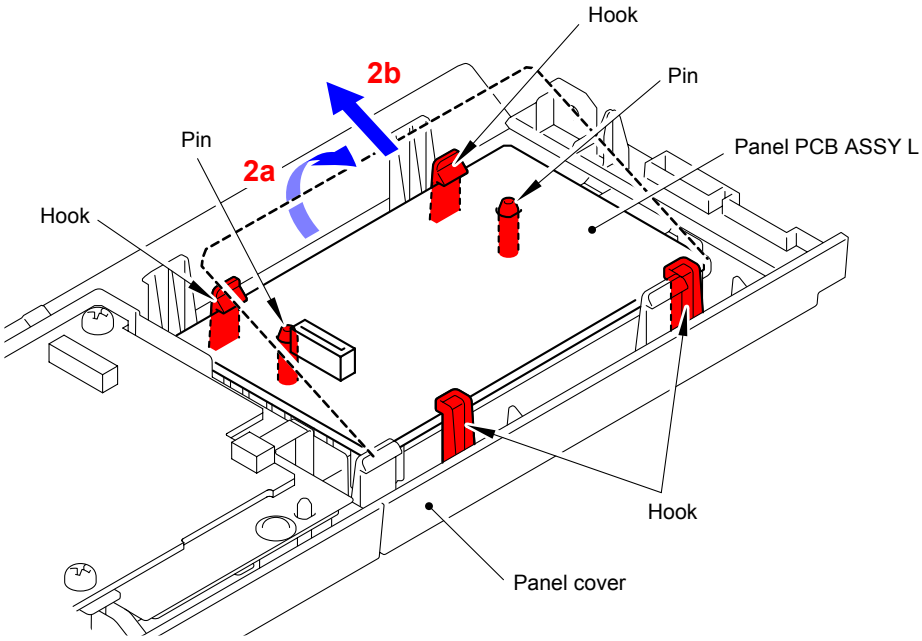

Fig. 3-163

(3) Disconnect the Flat cable (CN1) from the Panel PCB ASSY R.

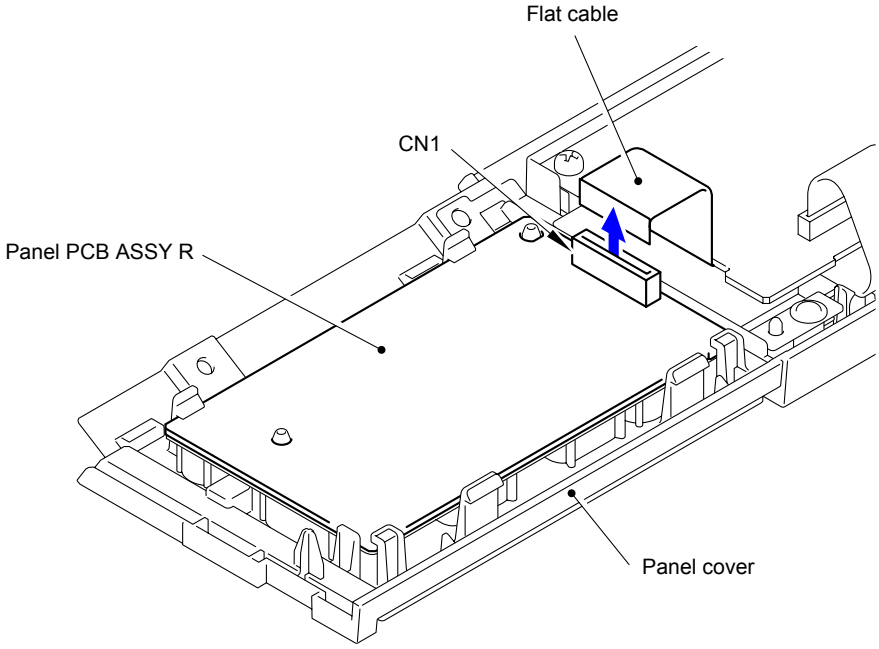

Fig. 3-164

(4) Release the four Hooks to remove the Panel PCB ASSY R from the Panel cover.

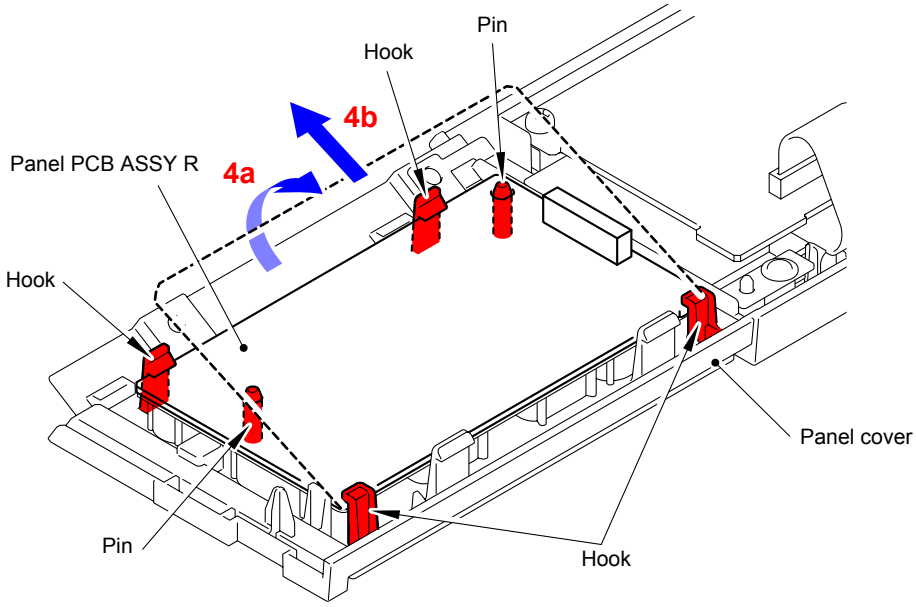

Fig. 3-165

9.35 Rubber Key

■ A4 model

(1) Remove the Printed rubber key C from the Panel cover.

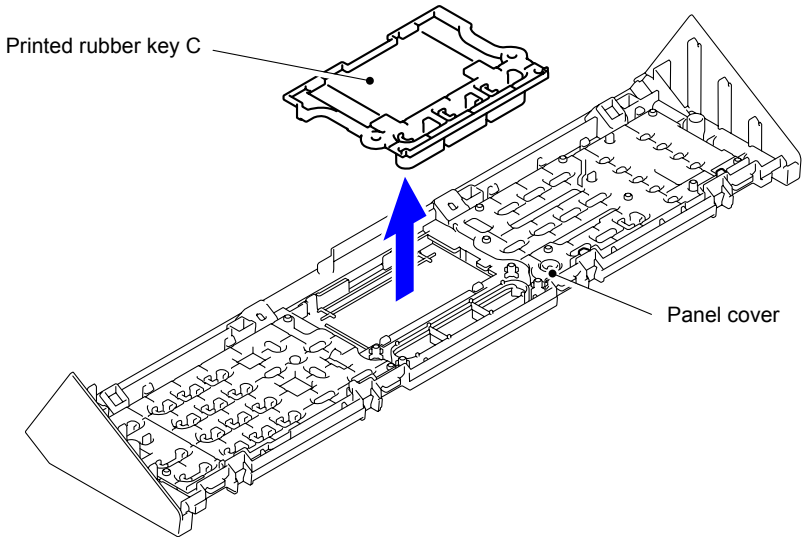

Fig. 3-166

(2) Remove the Printed rubber key L and R from the Panel cover.

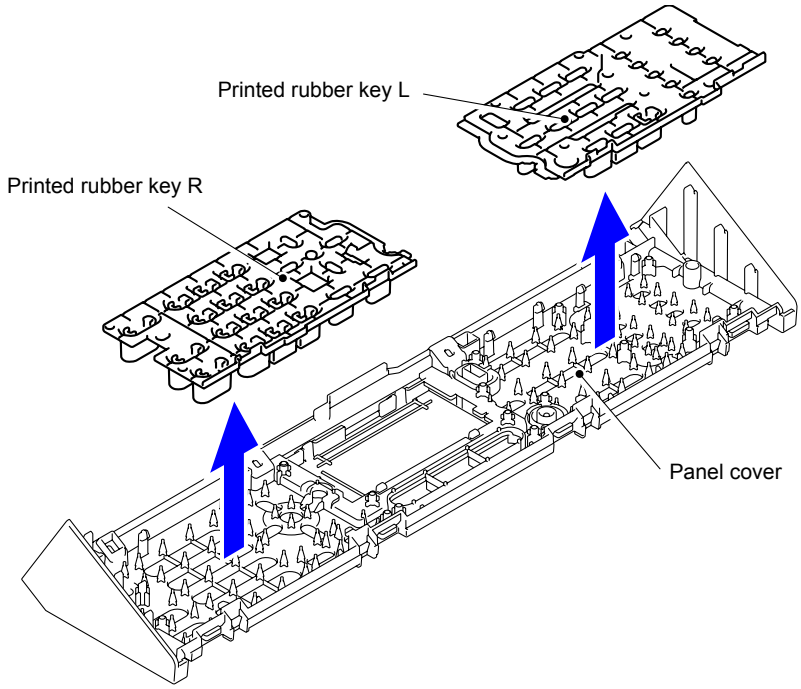

Fig. 3-167

Assembling Note:

- Upon assembling, assemble the Printed rubber key L and Printed rubber key R first, and then assemble the Printed rubber key C.
- Check if it is firmly inserted into the Positioning pin.

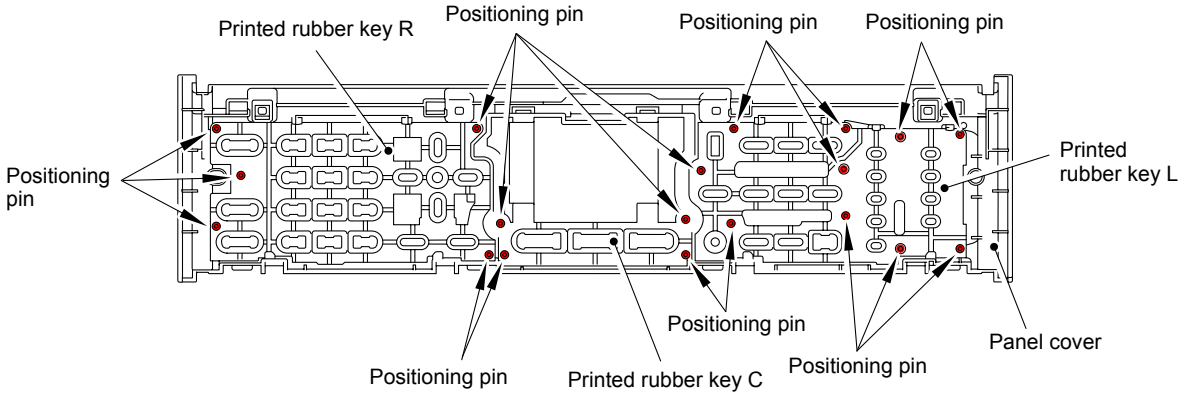

Fig. 3-168

■ Legal model

(1) Remove the Rubber key L from the Panel cover.

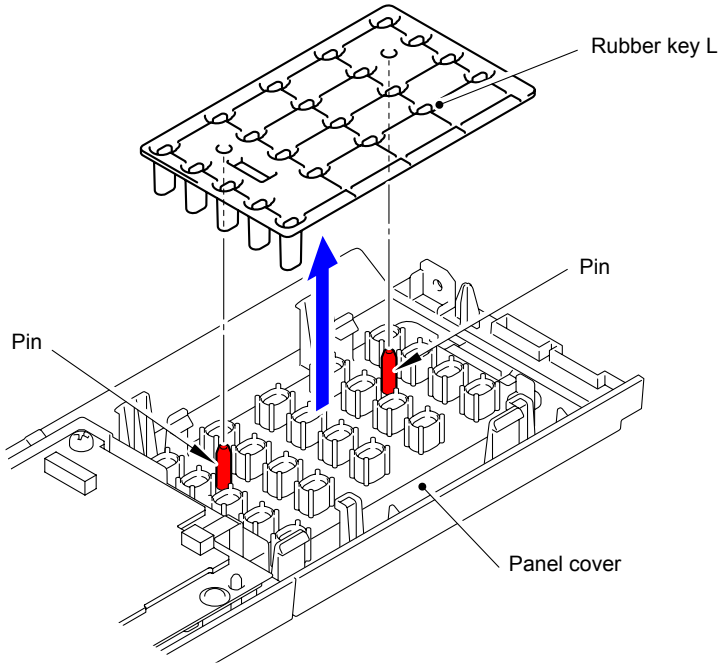

Fig. 3-169

(2) Remove the Rubber key R from the Panel cover.

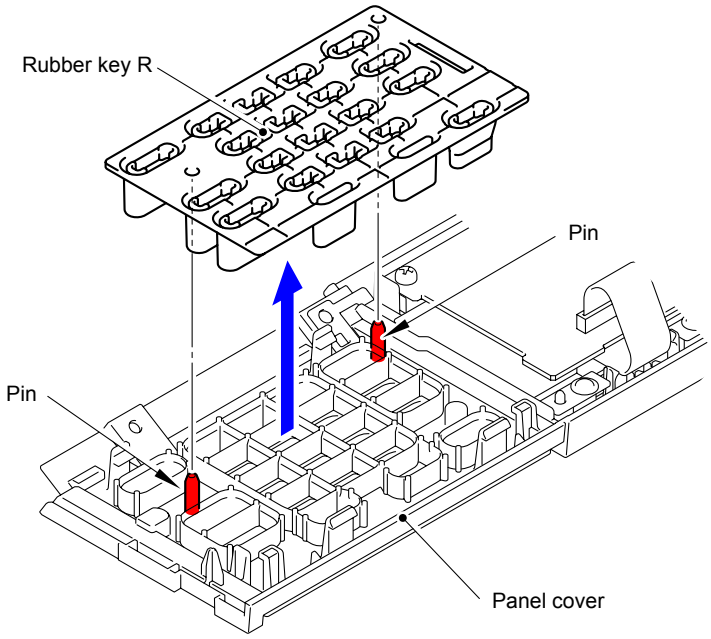

Fig. 3-170

9.36 LCD/Back Light Module/Touch Panel PCB ASSY/ Touch Panel ASSY

■ A4 model

(1) Remove the Panel light guide and Caution lamp lens from the Panel cover.

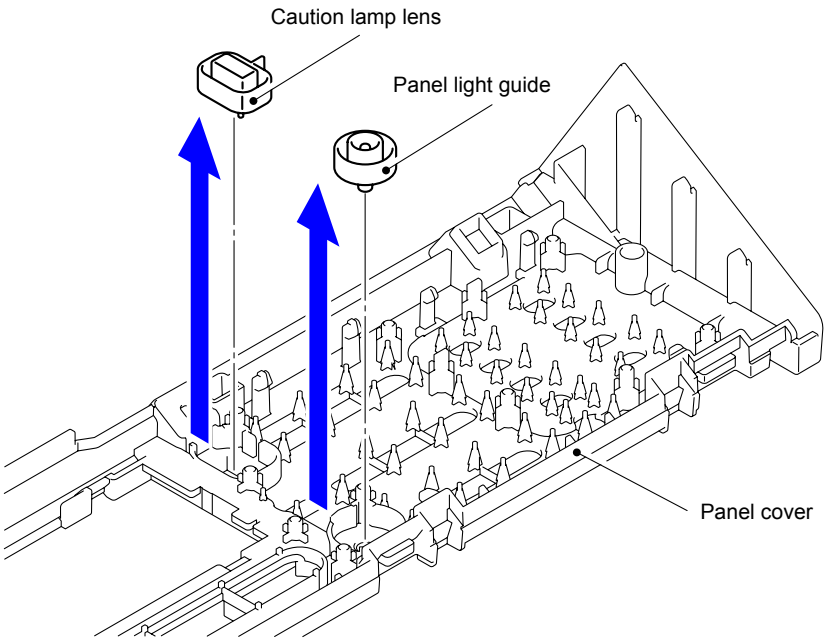

Fig. 3-171

(2) Release the four Hooks to remove the LCD cover from the Panel cover.

> **Note:**
> Be careful because there are cases where the LCD and Back light module come off at the same time.

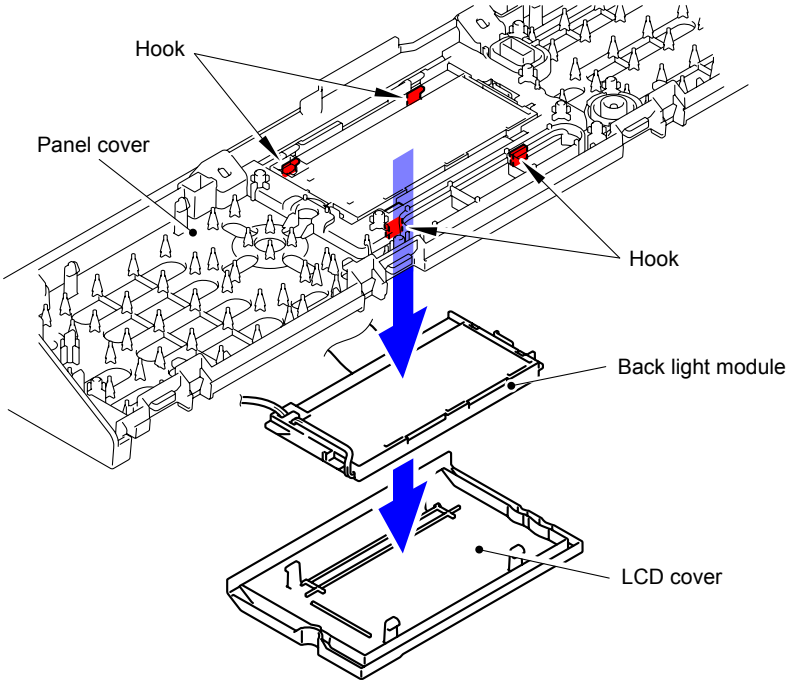

Fig. 3-172

(3) Remove the LCD from the Back light module.

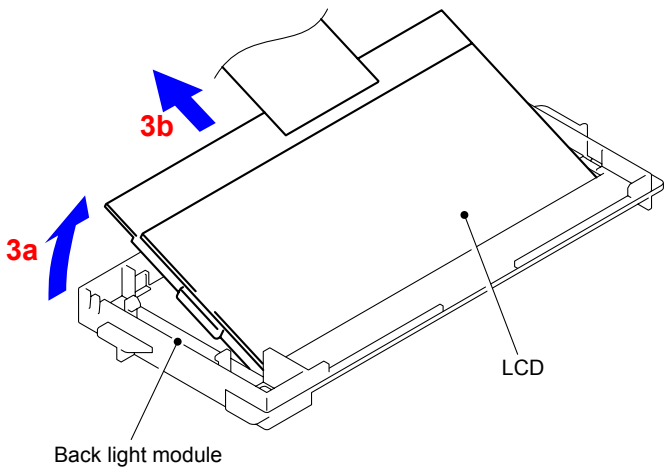

Fig. 3-173

■ Legal model

(1) Disconnect the Flat cables (CN2 and CN7) from the Touch panel PCB ASSY.

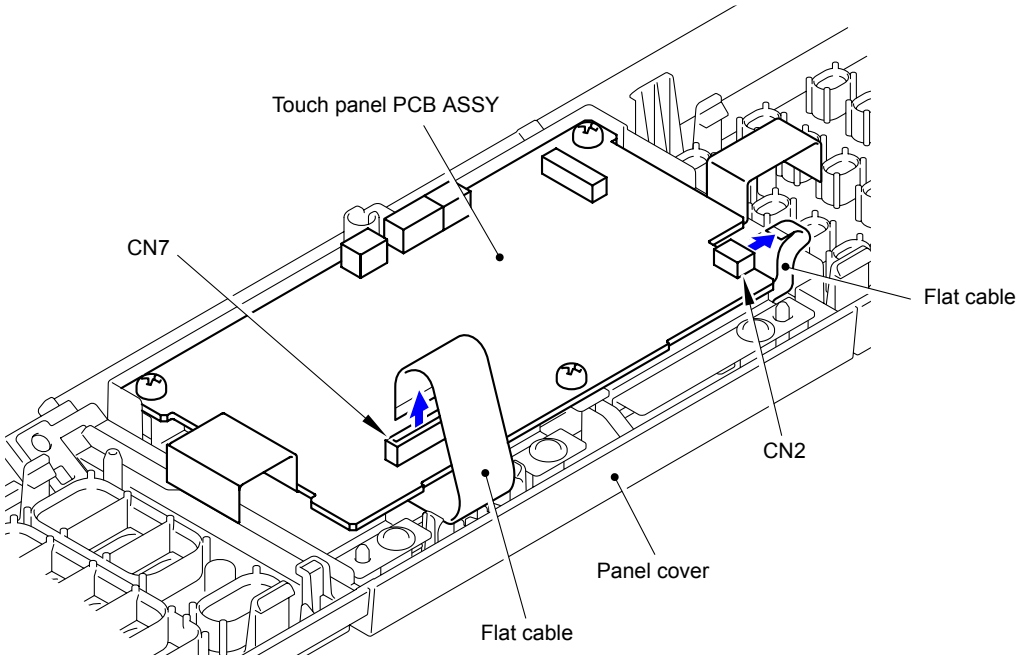

Fig. 3-174

(2) Remove the three Screw pan (S/P washer) M3x6 screws to remove the Touch panel PCB ASSY from the Panel cover.

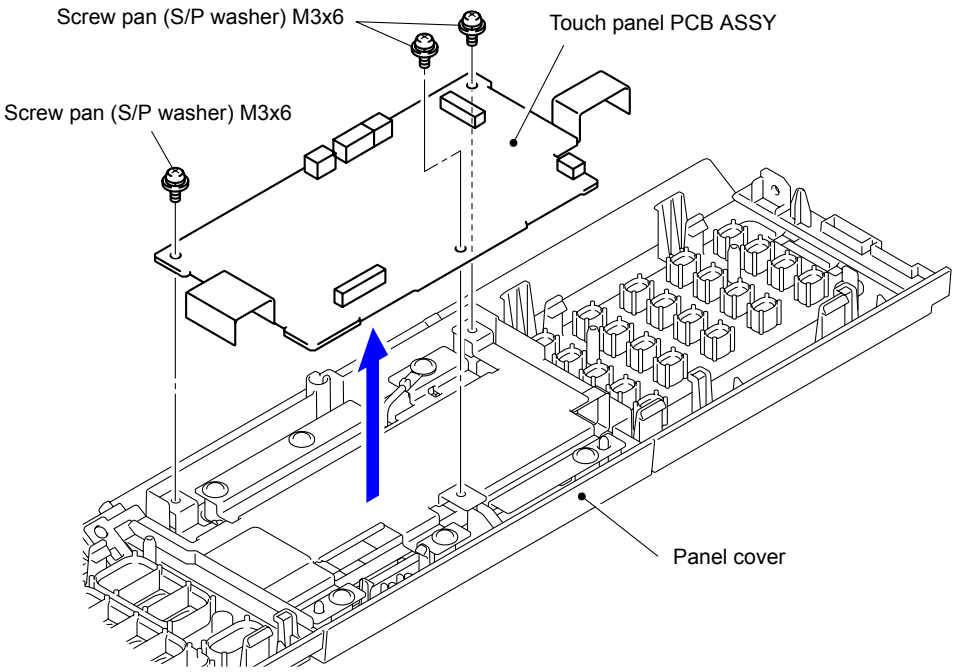

Fig. 3-175

(3) Lift the Touch panel PCB insulation sheet L, and remove the six Taptite cup B 3x8 screws and FG harness.

(4) Remove the Touch panel PCB shield plate ASSY from the Panel cover.

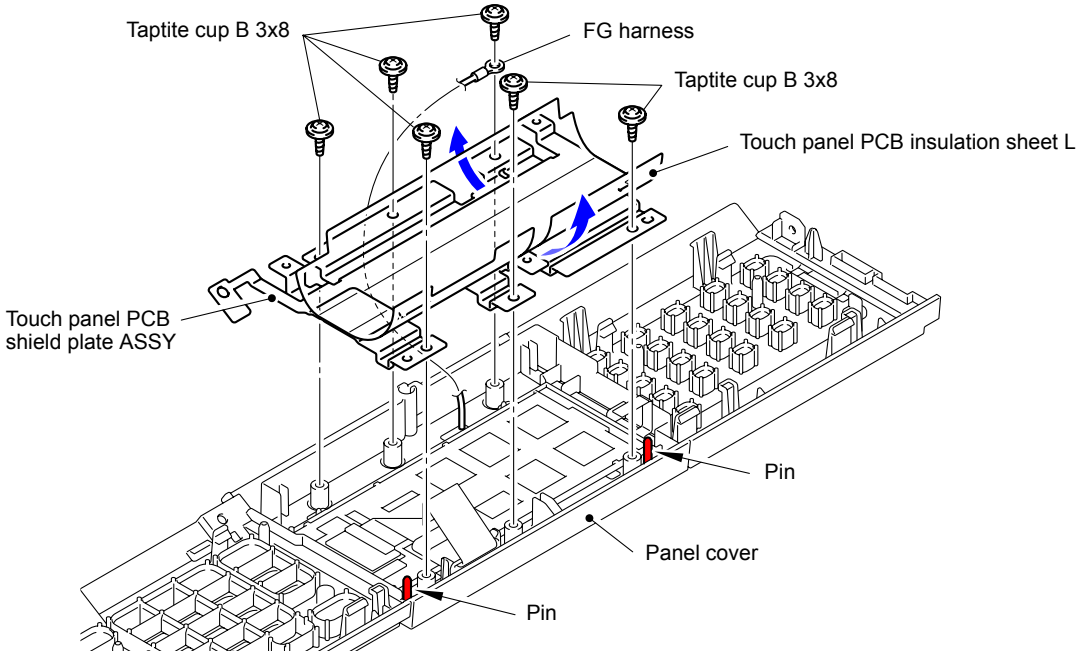

Fig. 3-176

Assembling Note:

When assembling the Touch panel PCB shield plate ASSY, be sure to install the screws in the order of the numbers marked on the Touch panel PCB shield plate ASSY.

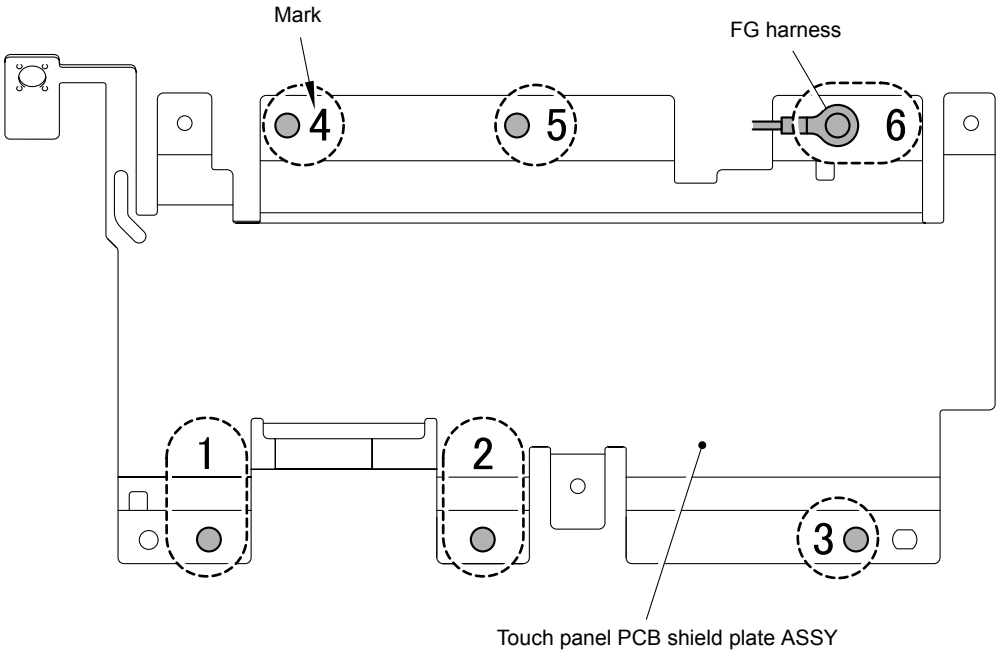

Fig. 3-177

(5) Remove the LCD from the Panel cover.

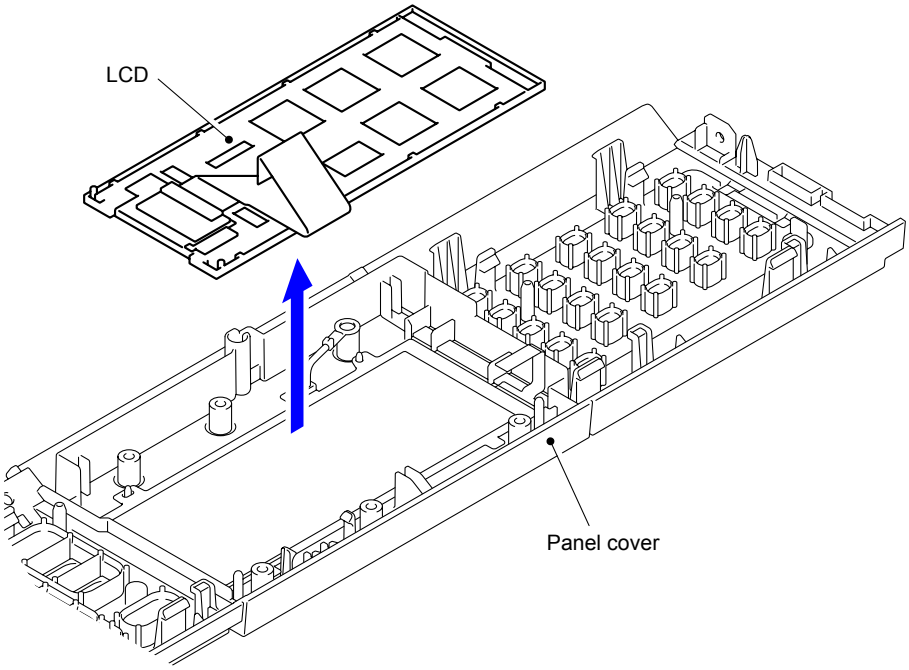

Fig. 3-178

(6) Remove the Touch panel ASSY from the Panel cover.

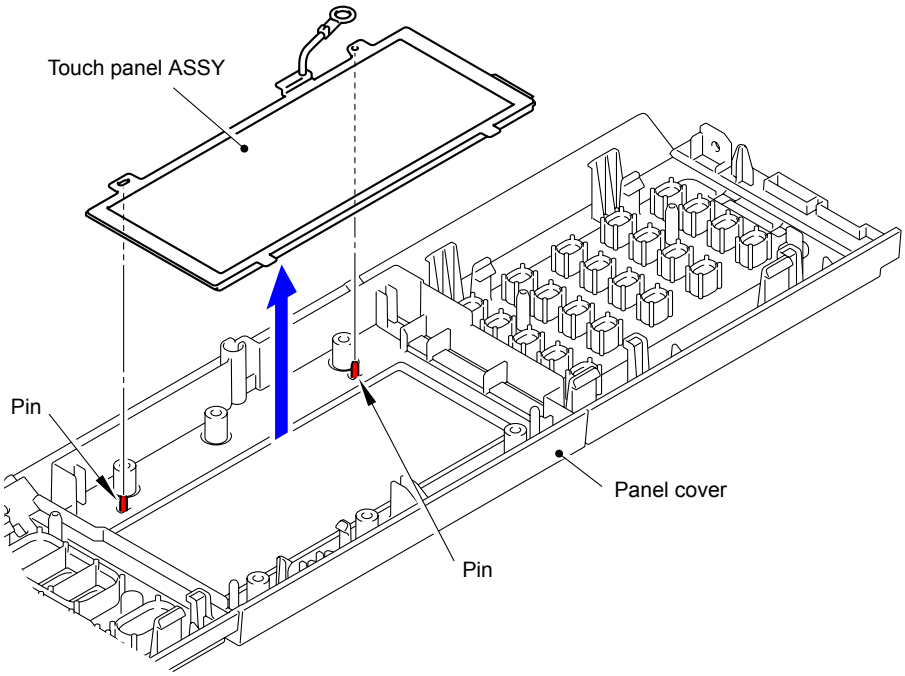

Fig. 3-179

9.37 Pull Arm Guide/Lock Claw (A4 Model Only)

(1) Remove the Lock claw to remove the Pull arm guide from the Joint cover top.

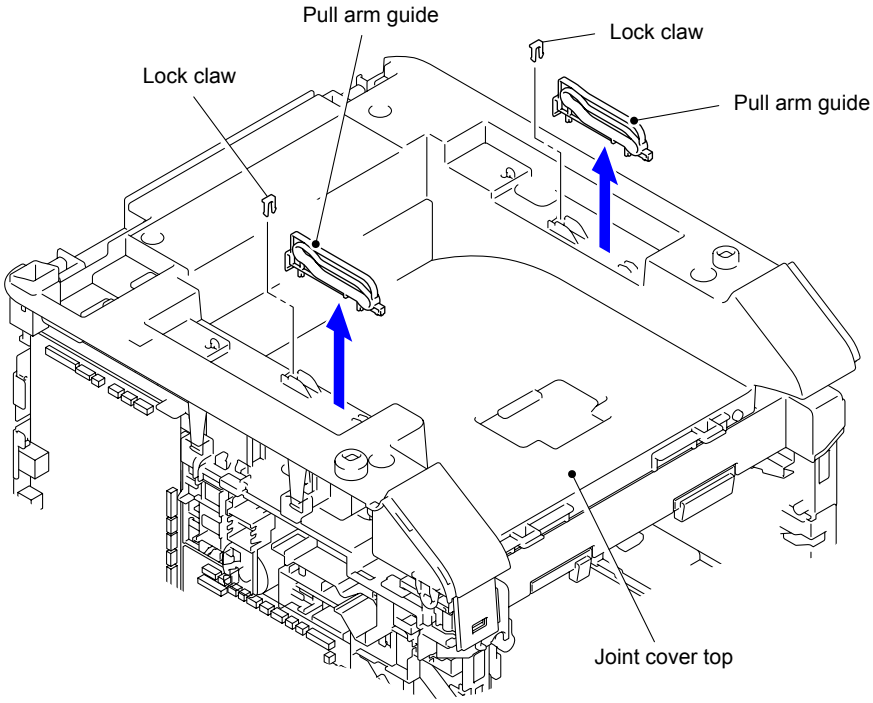

Fig. 3-180

9.38 Joint Cover Top

■ A4 model

(1) Remove the Joint film from the Joint cover top.

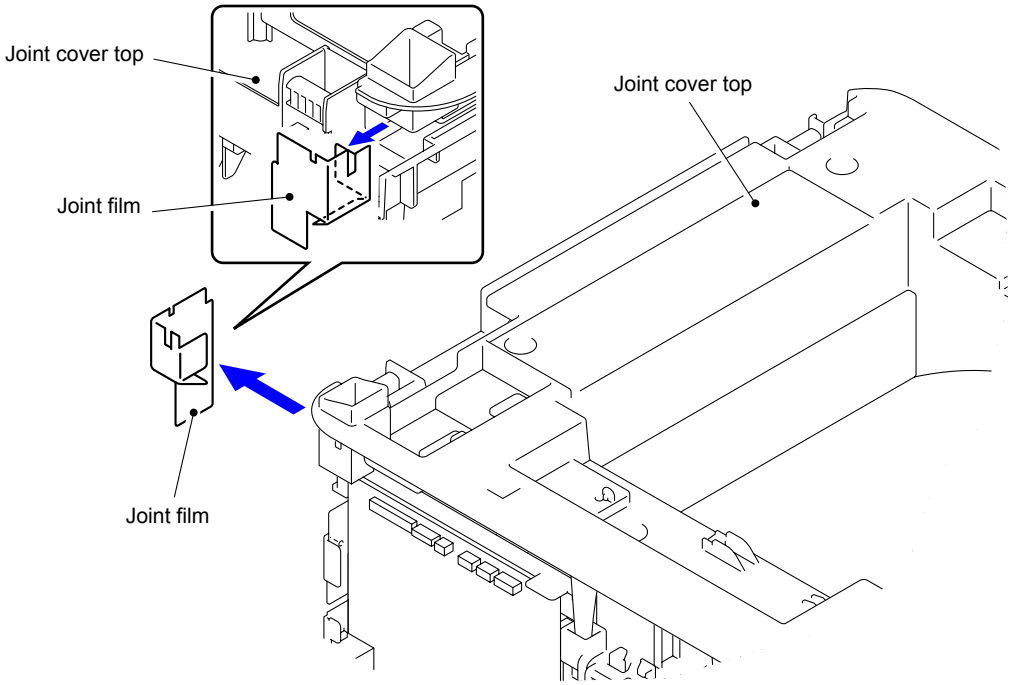

Fig. 3-181

(2) Remove the eight Taptite bind B M4x12 screws from the Joint cover top.

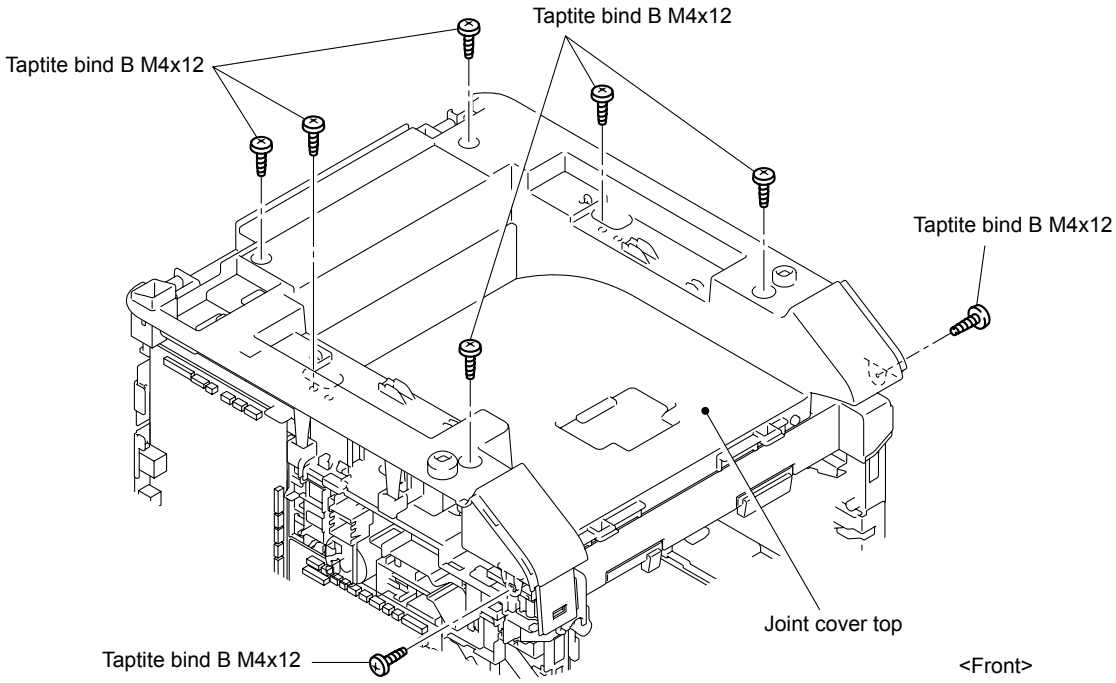

Fig. 3-182

(3) Release the eight Hooks to remove the Joint cover top from the Main body.

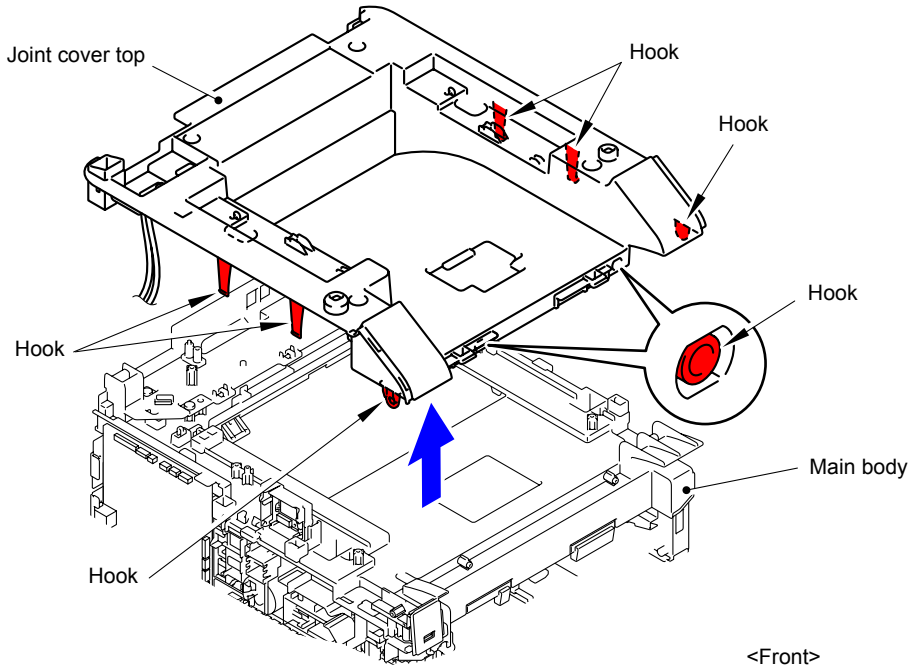

Fig. 3-183

Assembling Note:
When affixing the Joint film, be sure to affix it to the Joint cover top as shown in the figure below.

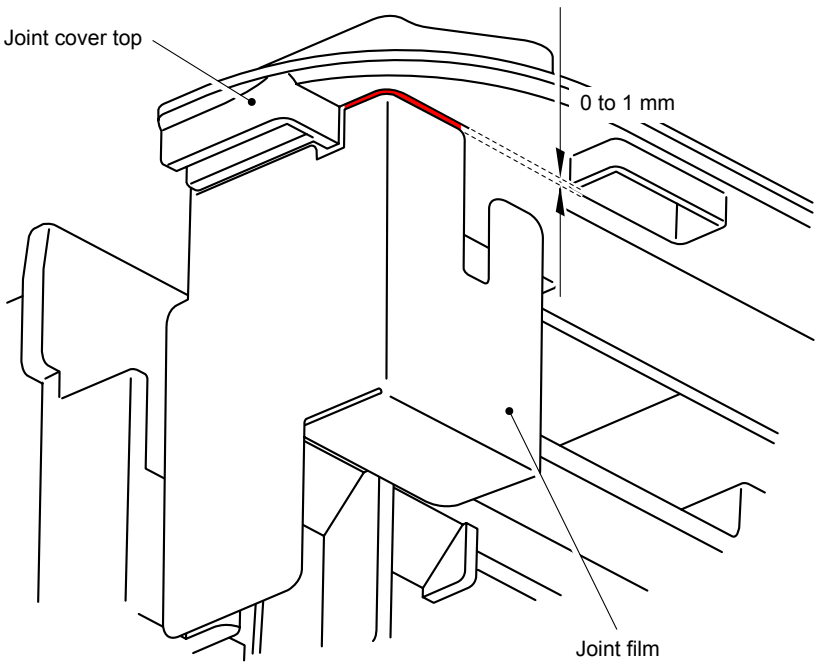

Fig. 3-184

■ Legal model

(1) Remove the Screw pan (S/P washer) M3.5x6 screw to remove the NCU FG harness ASSY from the Main body.

(2) Disconnect the Connector (CN9) from the Main PCB ASSY.

(3) Disconnect the wiring from the Main PCB ASSY.

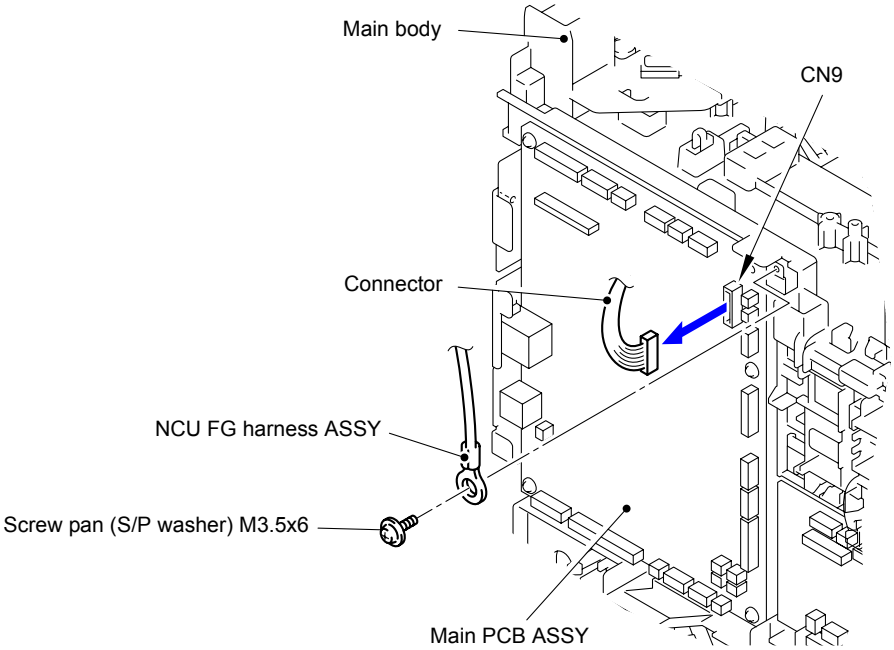

Fig. 3-185

(4) Remove the eight Taptite bind B M4x12 screws and two Taptite cup S M3x6 SR screws from the Joint cover top.

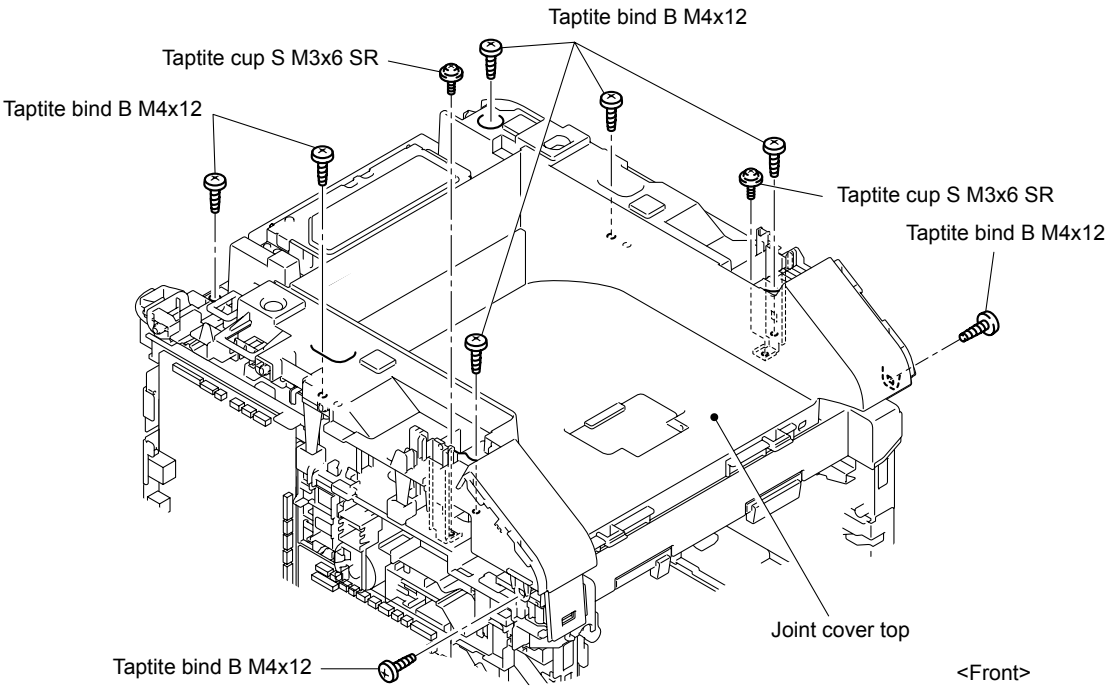

Fig. 3-186

(5) Release the four Hooks of the front.

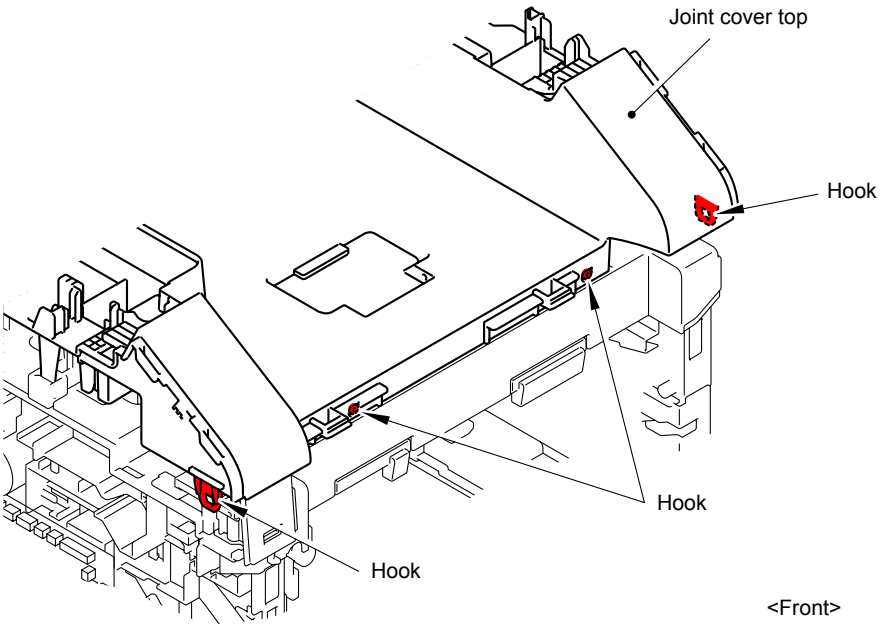

Fig. 3-187

(6) Release the eight Hooks to remove the Joint cover top from the Main body.

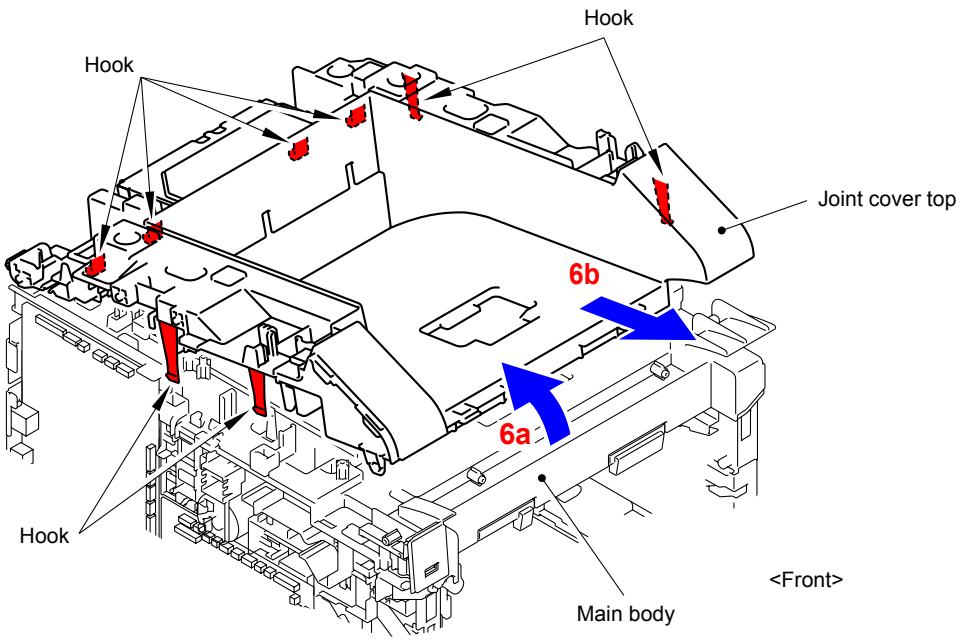

Fig. 3-188

(7) Remove the two Taptite bind B M4x12 screws to remove the NCU unit from the Joint cover top.

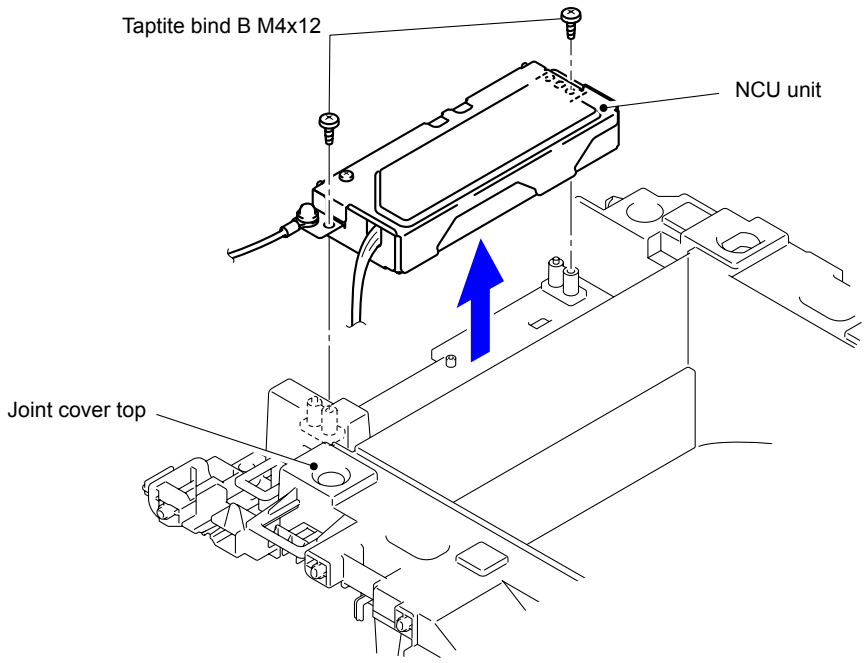

Fig. 3-189

Harness routing: Refer to " 19 NCU"

9.39 NCU PCB ASSY

Memo:
Follow the procedures (5) to (7) in the case of the Legal model.

(1) Remove the Screw pan (S/P washer) M3.5x6 screw to remove the NCU FG harness ASSY from the Main body.
(2) Disconnect the Connector (CN9) from the Main PCB ASSY.
(3) Disconnect the wiring from the Main PCB ASSY.

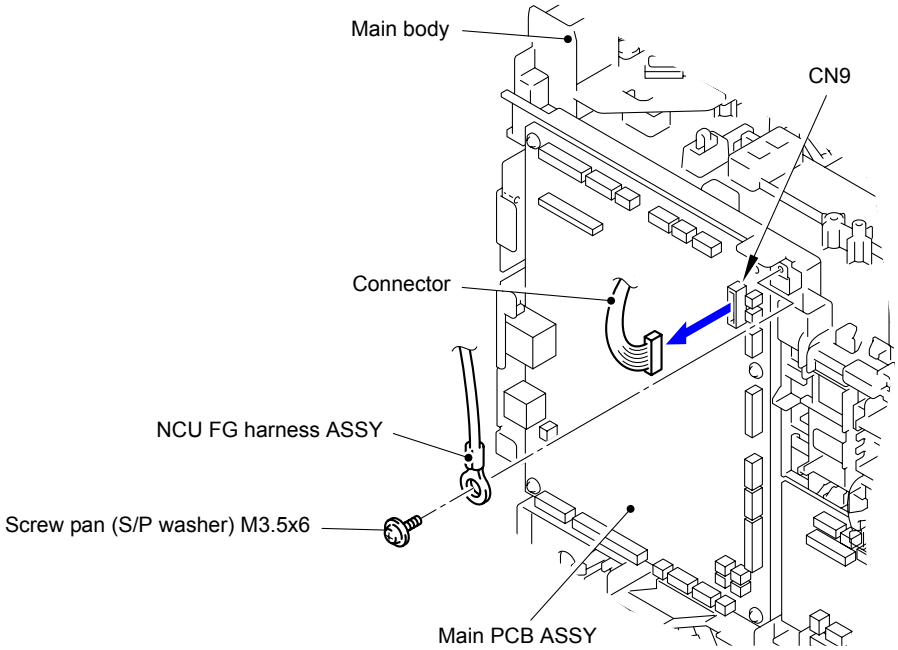

Fig. 3-190

(4) Remove the two Taptite bind B M4x12 screws to remove the NCU unit from the Main body.

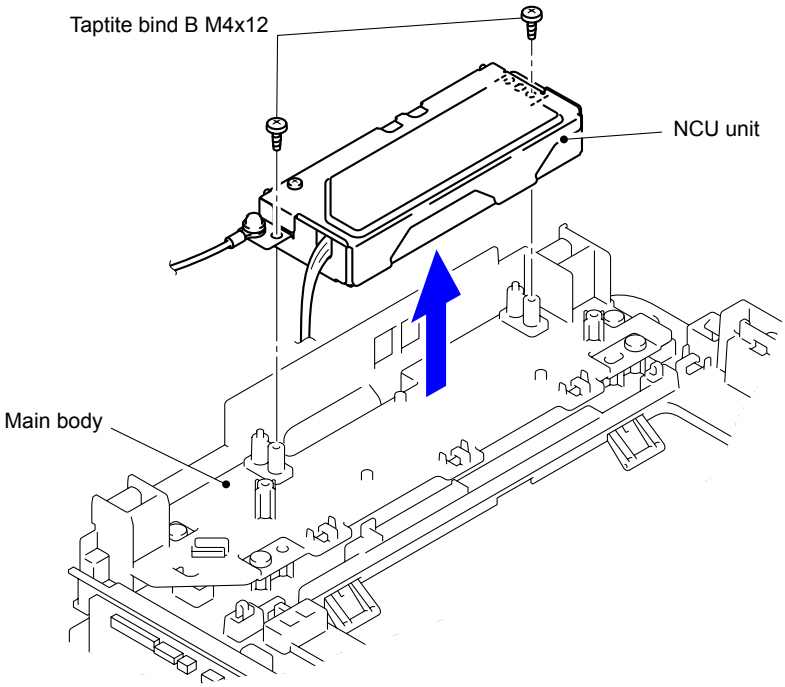

Fig. 3-191

(5) Remove the Screw pan (S/P washer) M3.5x6 screw to remove the NCU shield cover from the NCU unit.

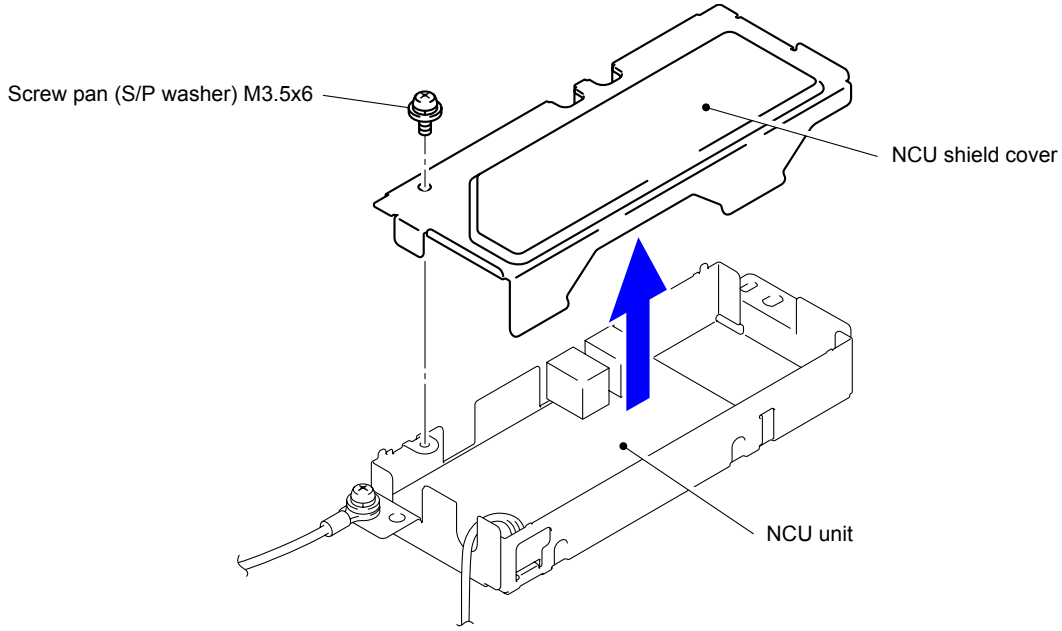

Fig. 3-192

(6) Remove the two Taptite cup S M3x6 SR screws to remove the NCU PCB ASSY from the NCU shield plate.

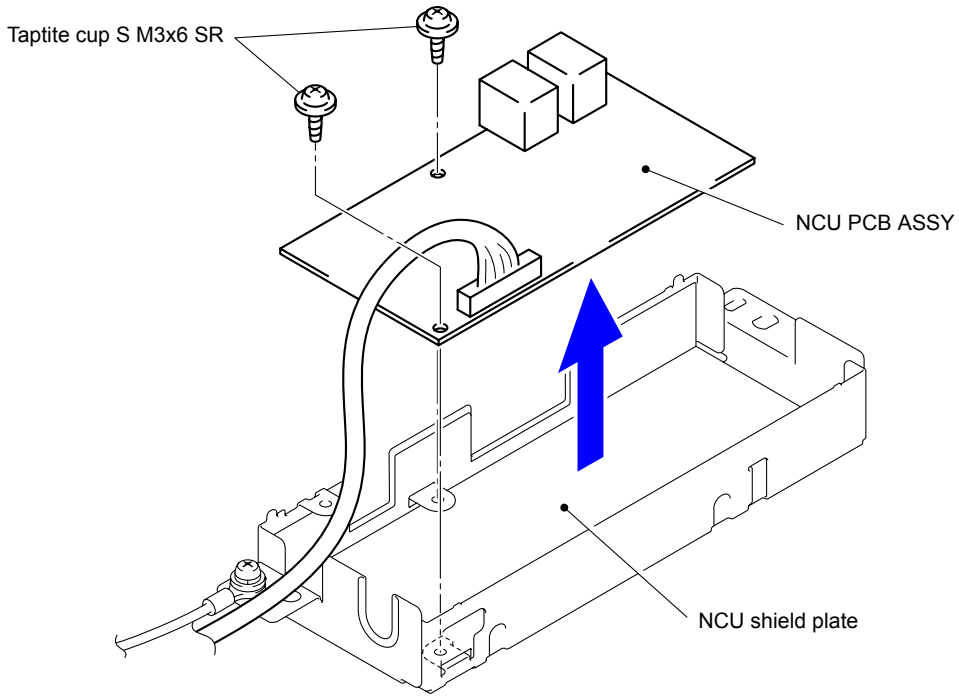

Fig. 3-193

(7) Remove the NCU harness ASSY from the NCU PCB ASSY.

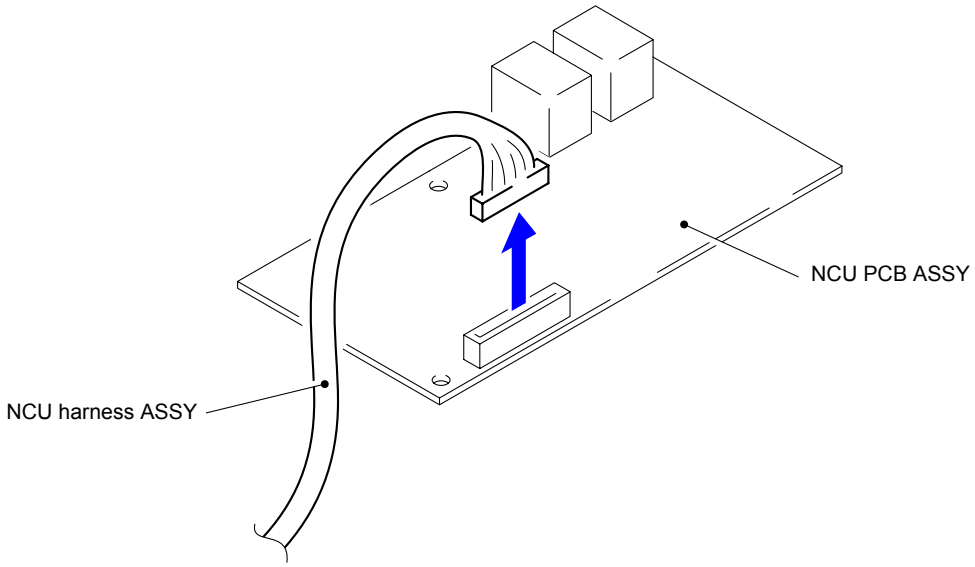

Fig. 3-194

Harness routing: Refer to " 18 NCU"

9.40 Back Cover Upper (A4 Model Only)

(1) Remove the four Taptite bind B M4x12 screws from the Back cover upper.

(2) Release the two Hooks to remove the Back cover upper from the Main body.

Fig. 3-195

9.41 Joint Cover FL ASSY

(1) Disconnect the Connector (CN11) and cables from the Main PCB ASSY.

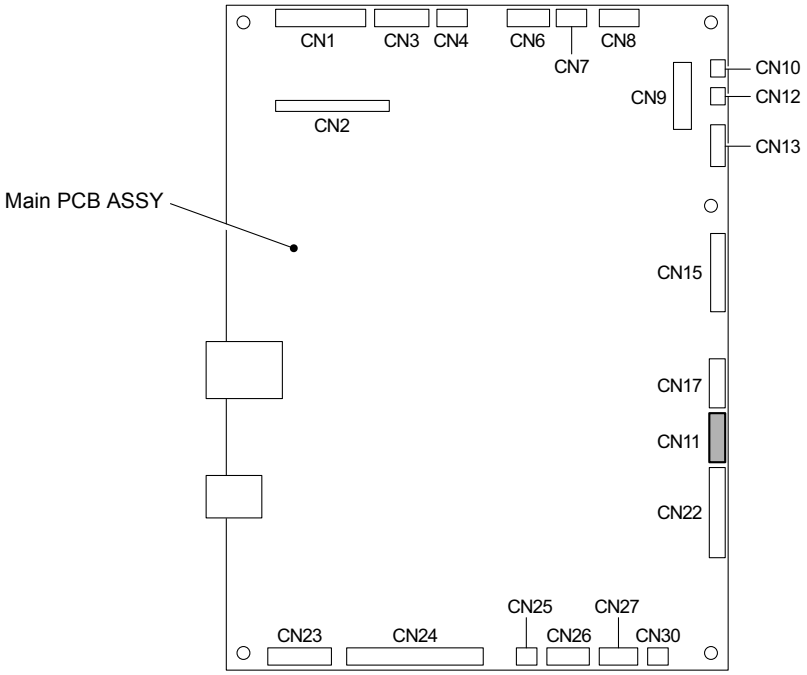

Fig. 3-196

(2) Remove the Taptite bind B M4x12 screw and Taptite cup S M3x6 SR screw from the Main body.

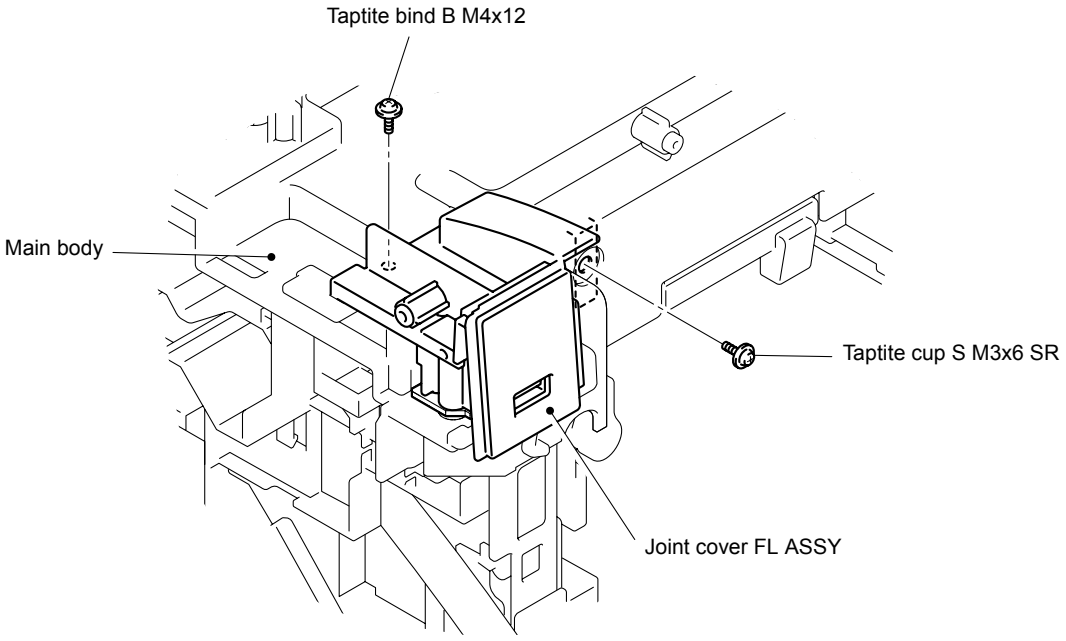

Fig. 3-197

(3) Release the two Hooks to remove the Joint cover FL ASSY from the Main body.

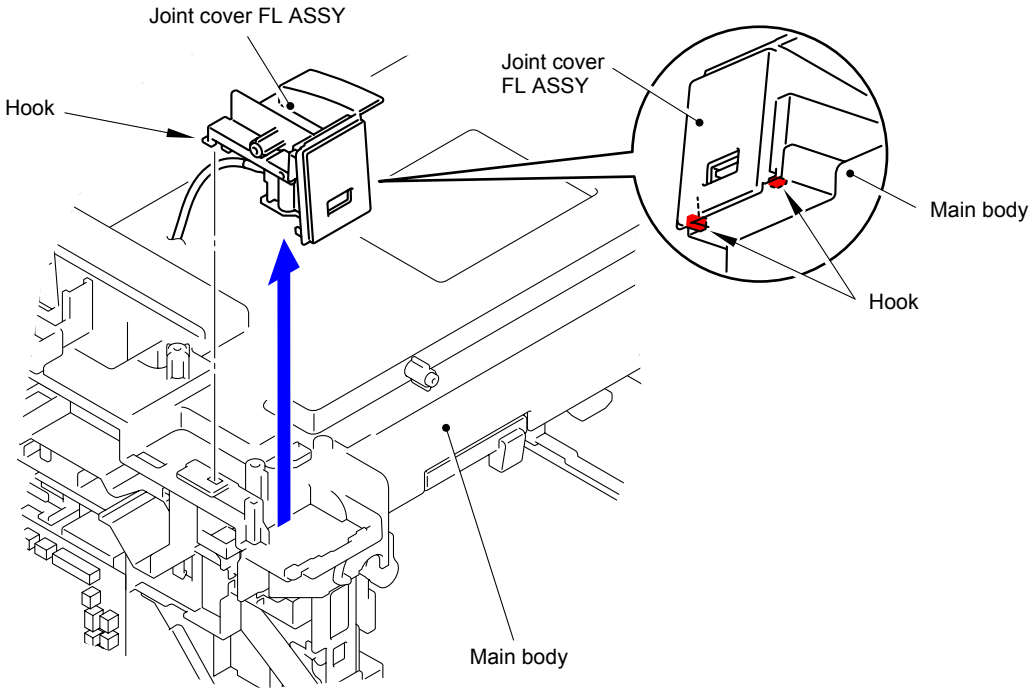

Fig. 3-198

Harness routing: Refer to " 20 USB"

9.42 USB Host Relay PCB ASSY

(1) Remove the two Taptite bind B M4x12 screws to remove the USB host relay PCB ASSY from the Joint cover FL ASSY.

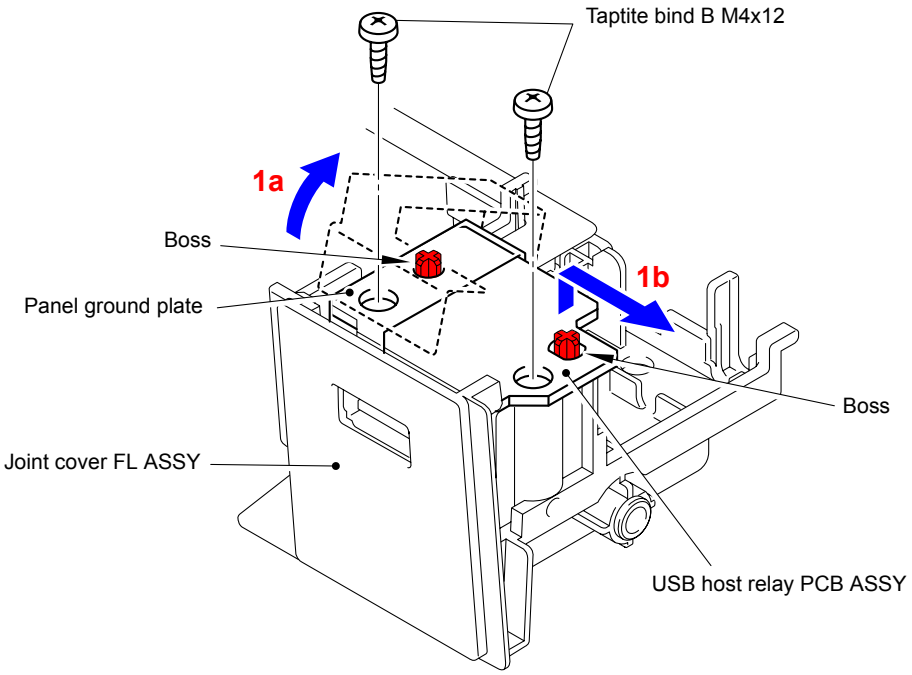

Fig. 3-199

(2) Disconnect the Connector (CN2) of Main USB host harness ASSY from the USB host relay PCB ASSY.

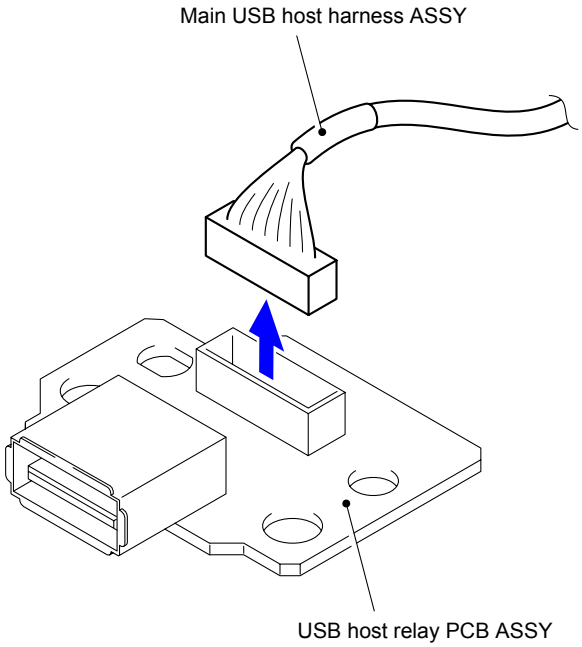

Fig. 3-200

9.43 Wireless LAN Holder/Wireless LAN PCB

(1) Disconnect the Connector (CN17) and cables from the Main PCB ASSY.

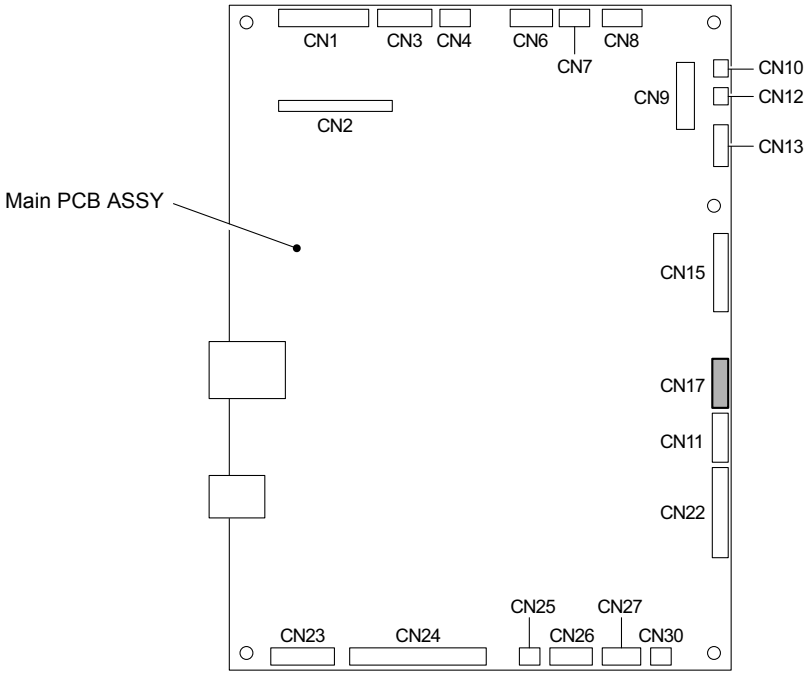

Fig. 3-201

(2) Release the Hook to remove the Wireless LAN holder from the Main body.

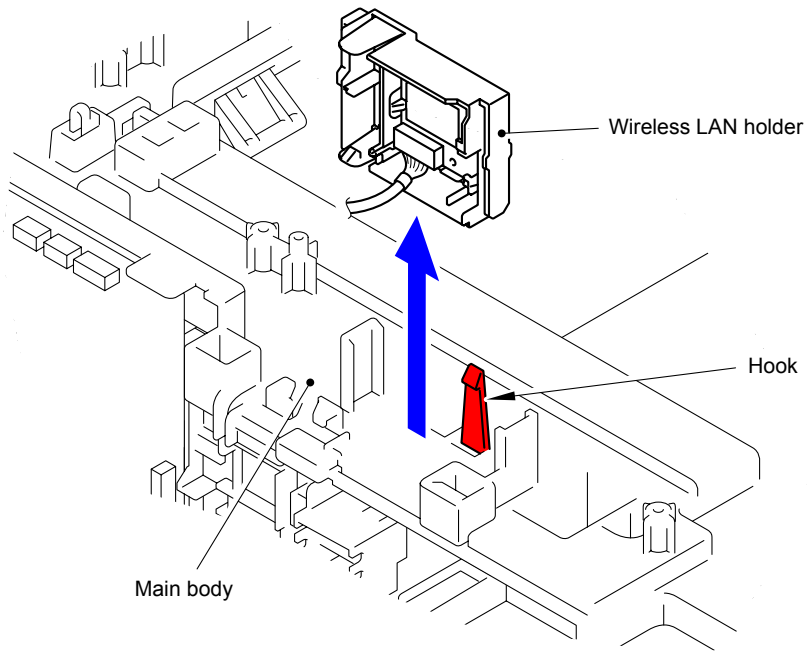

Fig. 3-202

(3) Release the three Hooks to remove the Wireless LAN PCB from the Wireless LAN holder.

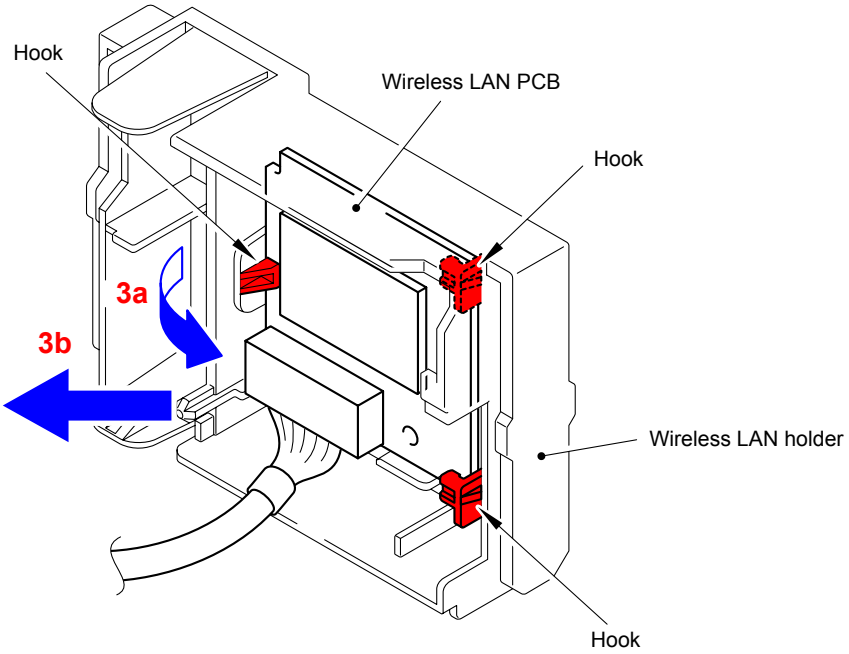

Fig. 3-203

(4) Disconnect the Connector of Main wireless LAN harness ASSY from the Wireless LAN PCB.

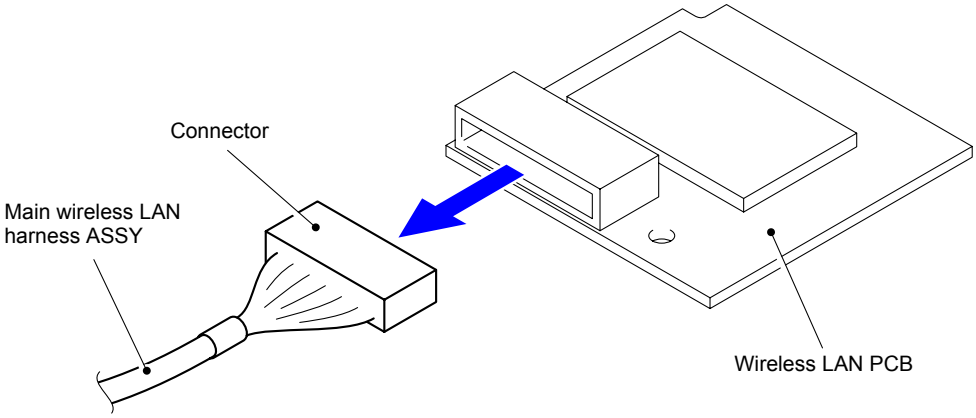

Fig. 3-204

Harness routing: Refer to " 21 Wireless LAN PCB"

9.44 Speaker Unit/Speaker Hold Spring

(1) Disconnect the Connector (CN10) and cables from the Main PCB ASSY.

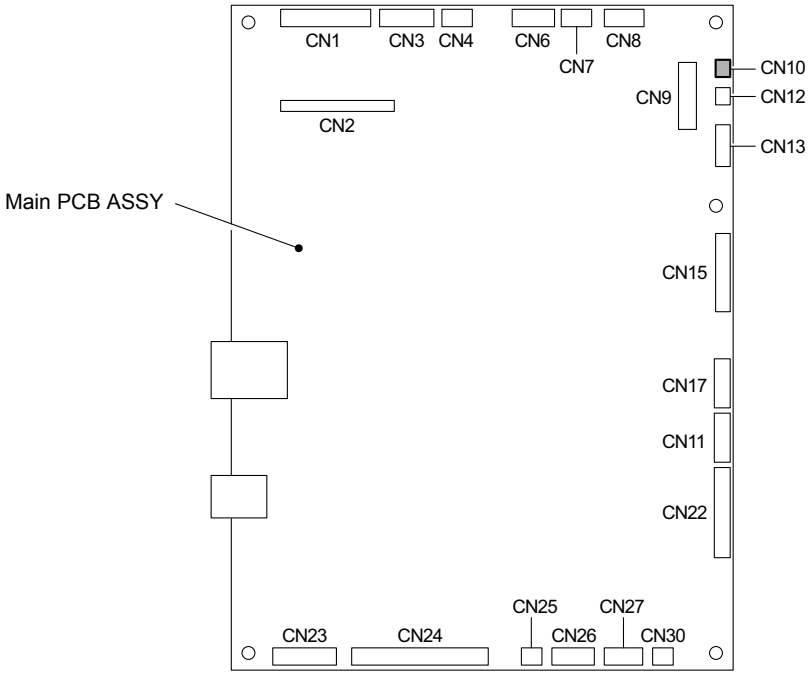

Fig. 3-205

(2) Release the Hook to remove the Speaker hold spring from the Main body.

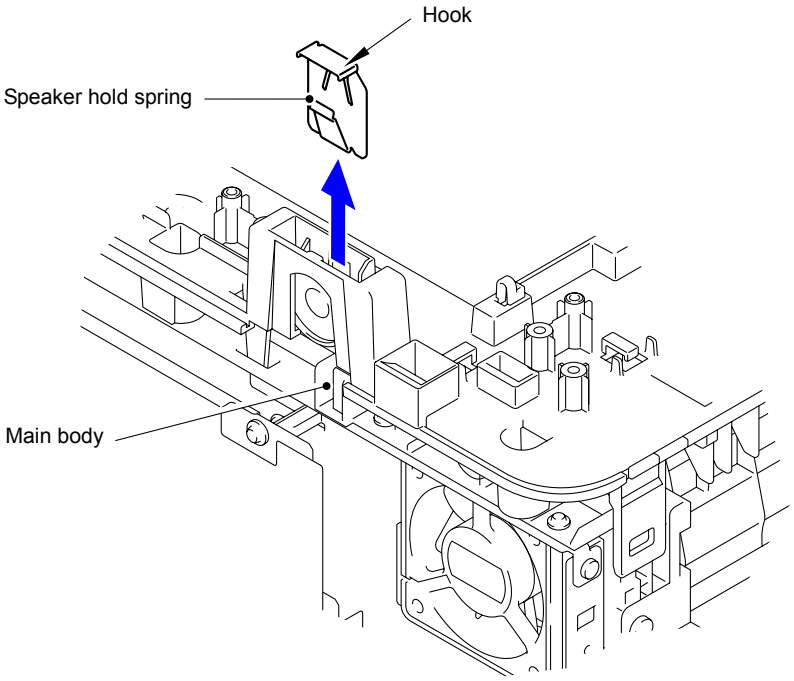

Fig. 3-206

(3) Remove the Speaker unit from the Main body.

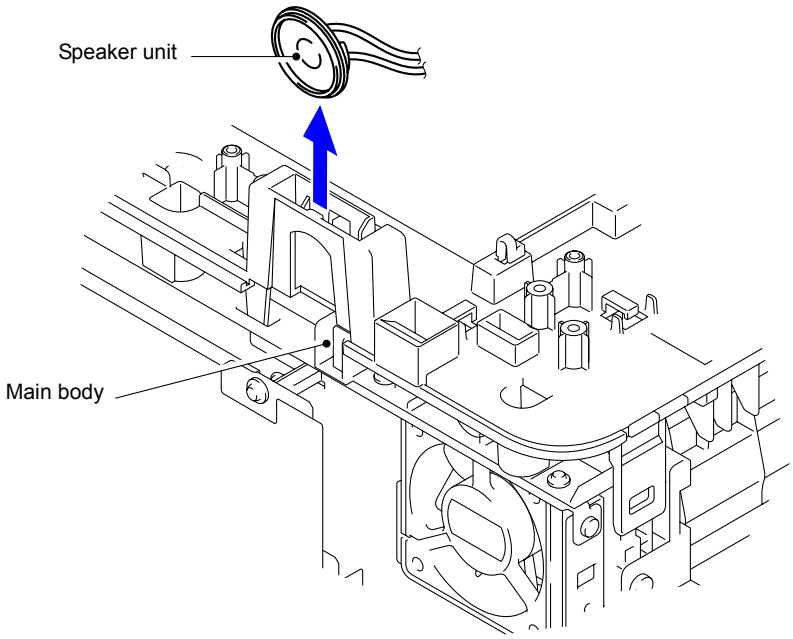

Fig. 3-207

Harness routing: Refer to " 22 Speaker"

9.45 Joint Cover Base ASSY

(1) Remove the seven Taptite cup S M3x8 screws from the Joint cover base ASSY.

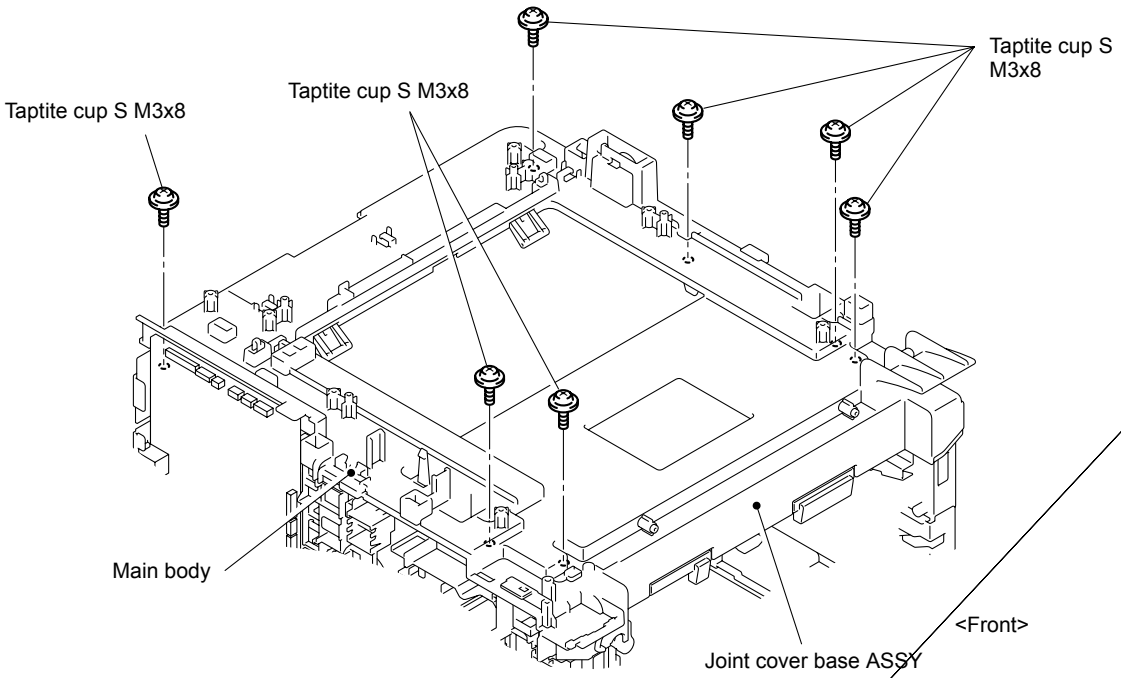

Fig. 3-208

(2) Remove the two Taptite bind B M4x12 screws from the Joint cover base ASSY.

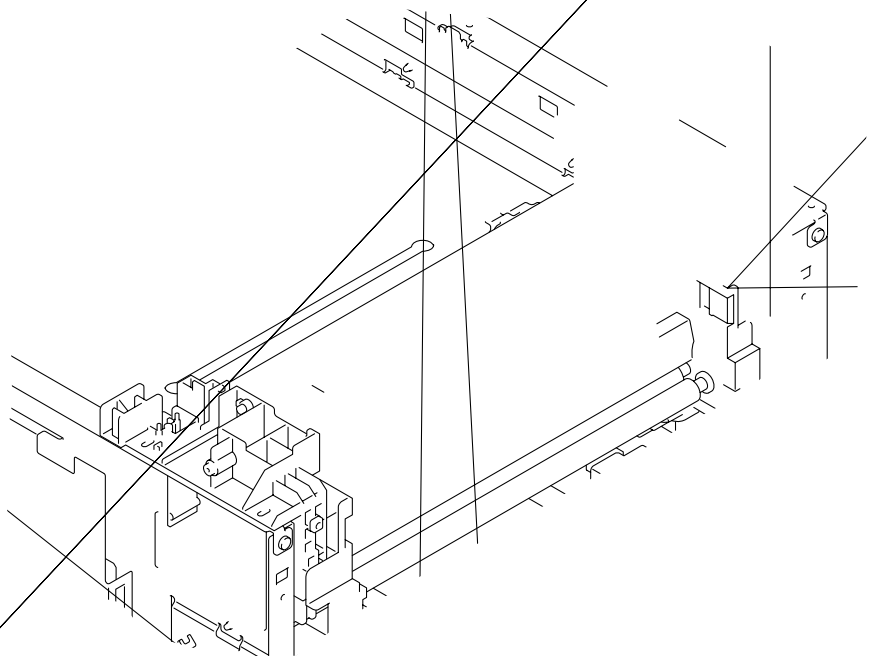

Fig. 3-209

(3) Release the ten Hooks to remove the Joint cover base ASSY from the Main body.

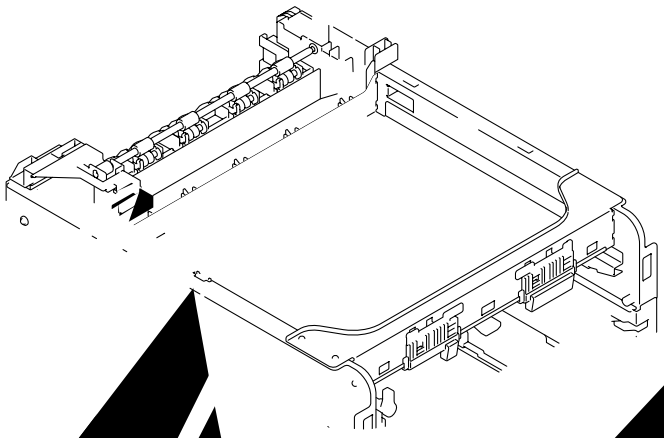

Fig. 3-210

9.46 Main PCB ASSY

(1) Disconnect the eight Connectors (CN12, CN13, CN23, CN24, CN25, CN26, CN27, and CN30) and two Flat cables (CN15 and CN22) from the Main PCB ASSY.

Note:

- After disconnecting flat cable(s), check that each cable is not damaged at its end or shortcircuited.
- When connecting flat cable(s), do not insert them at an angle. After insertion, check that the cable are not at an angle.

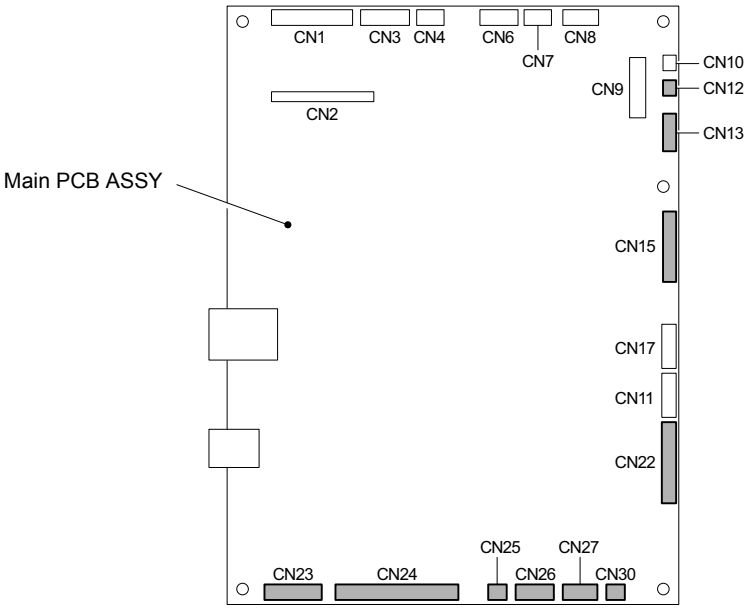

Fig. 3-211

(2) Remove the four Taptite cup S M3x6 SR screws to remove the Main PCB ASSY from the Top drive ASSY.

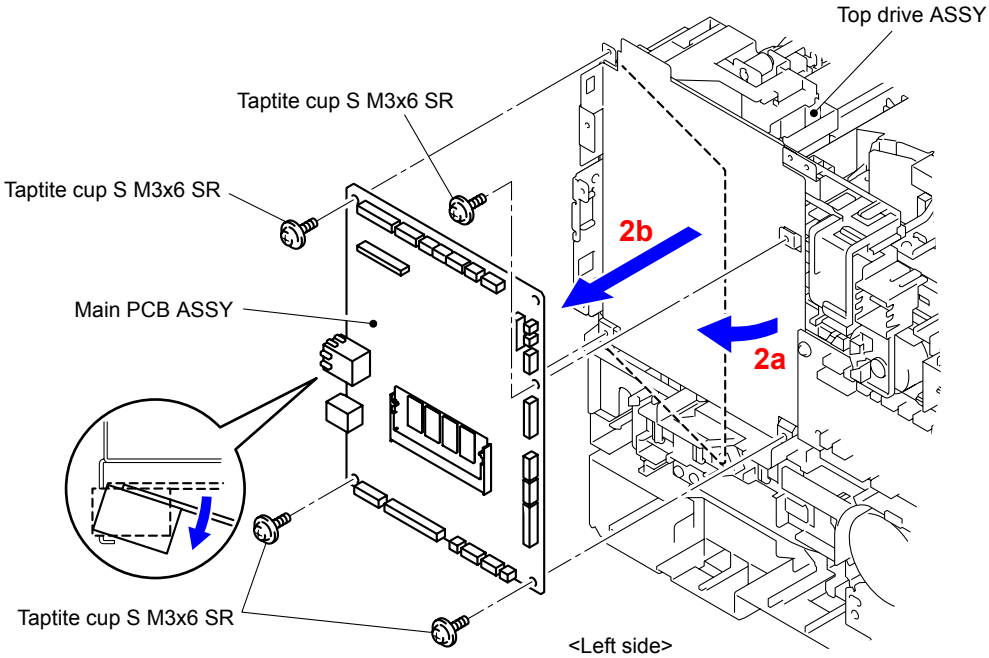

Fig. 3-212

9.47 Engine PCB ASSY

(1) Disconnect the seventeen Connectors (CN3, CN5, CN8, CN9, CN10, CN11, CN12, CN13, CN14, CN16, CN17, CN18, CN19, CN20, CN21, CN22, and CN23) and four Flat cables (CN1, CN2, CN15, and CN25) from the Engine PCB ASSY.

Note:

- After disconnecting flat cable(s), check that each cable is not damaged at its end or shortcircuited.
- When connecting flat cable(s), do not insert them at an angle. After insertion, check that the cable are not at an angle.

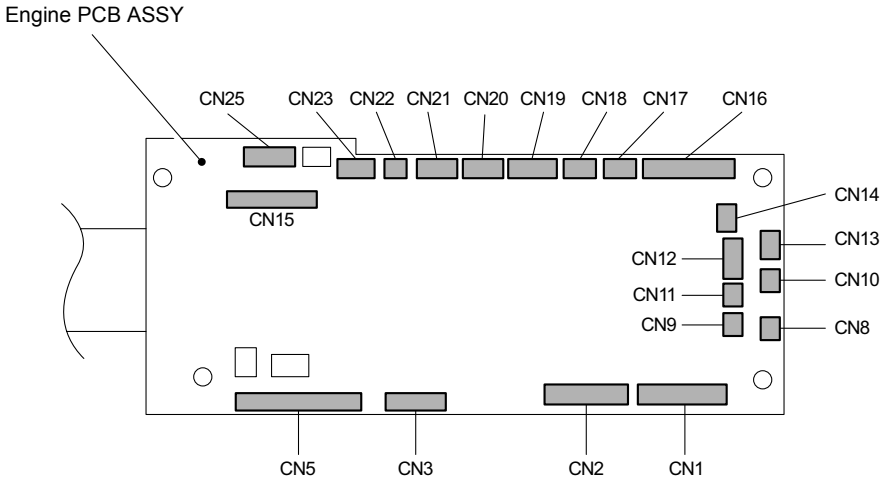

Fig. 3-213

(2) Remove the three Taptite cup S M3x6 SR screws to remove the Engine PCB ASSY from the Top drive ASSY.

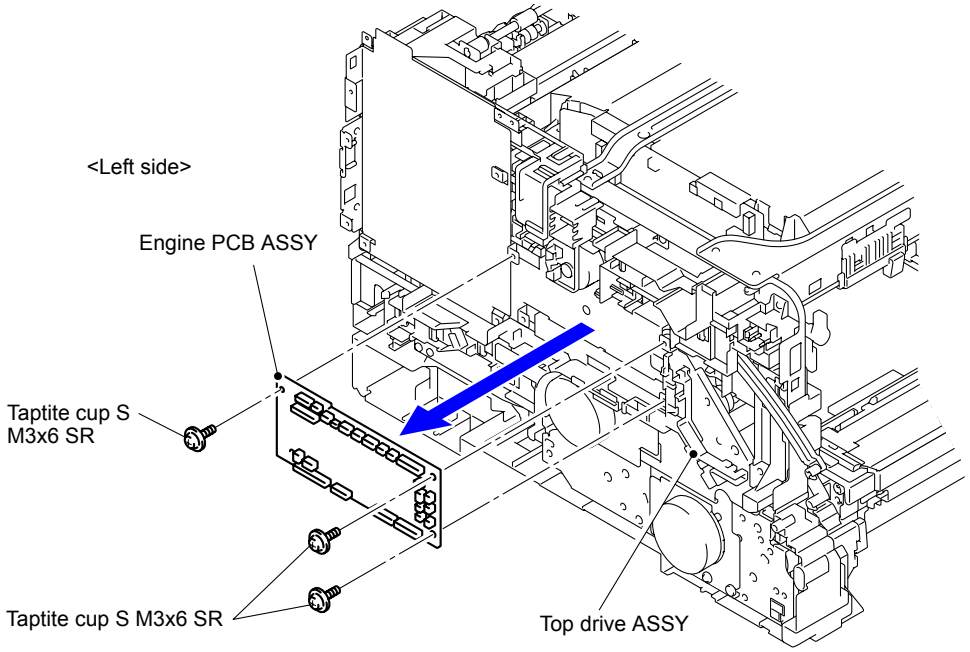

Fig. 3-214

9.48 Laser Unit

(1) Remove the Main insulation sheet from the Top drive ASSY.

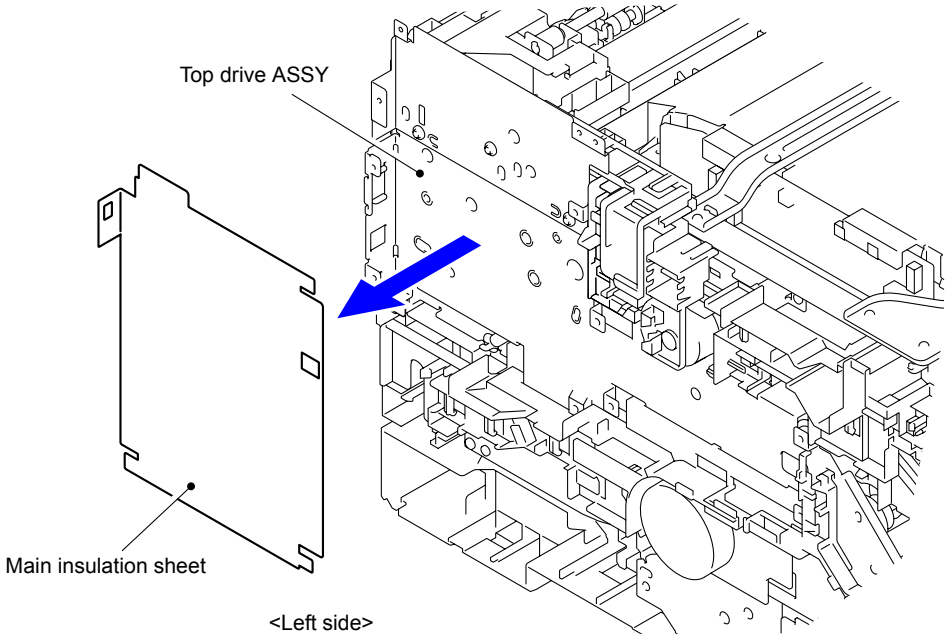

Fig. 3-215

(2) Remove the three Taptite cup S M3x6 SR screws to remove the Main shield plate from the Top drive ASSY.

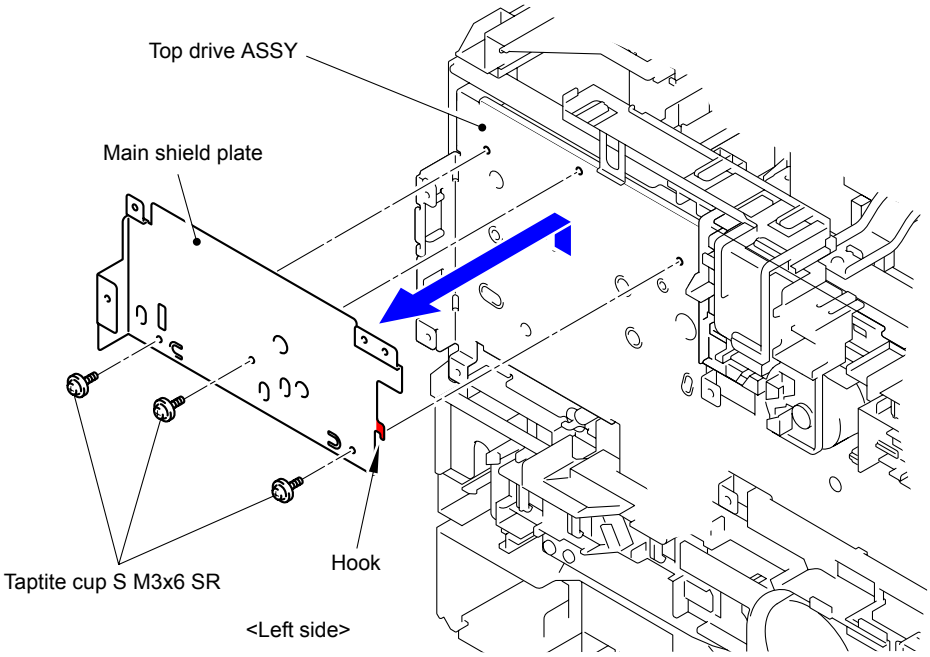

Fig. 3-216

(3) Disconnect the wiring of the Fuser develop motor flat cable from the Develop FFC holder.

(4) Release the two Hooks to remove the Develop FFC holder from the Upper cable rack.

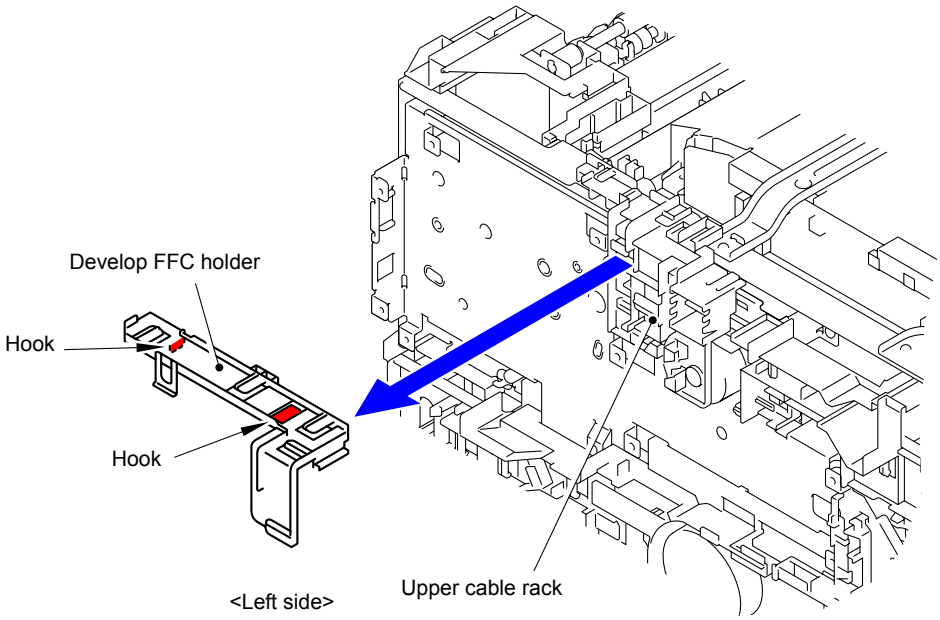

Fig. 3-217

(5) Disconnect the wiring of the Laser unit-Engine flat cable and Laser unit-Main flat cable from the Upper cable rack.

(6) Release the four Hooks to remove the Upper cable rack from the Base frame unit.

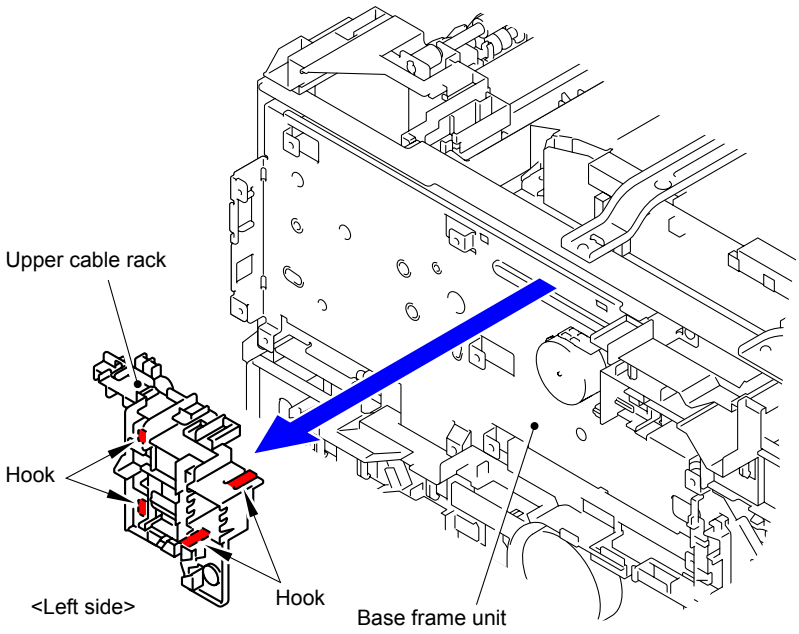

Fig. 3-218

(7) Remove the two Taptite cup S M3x6 SR screws to remove the Top beam from the Base frame unit.

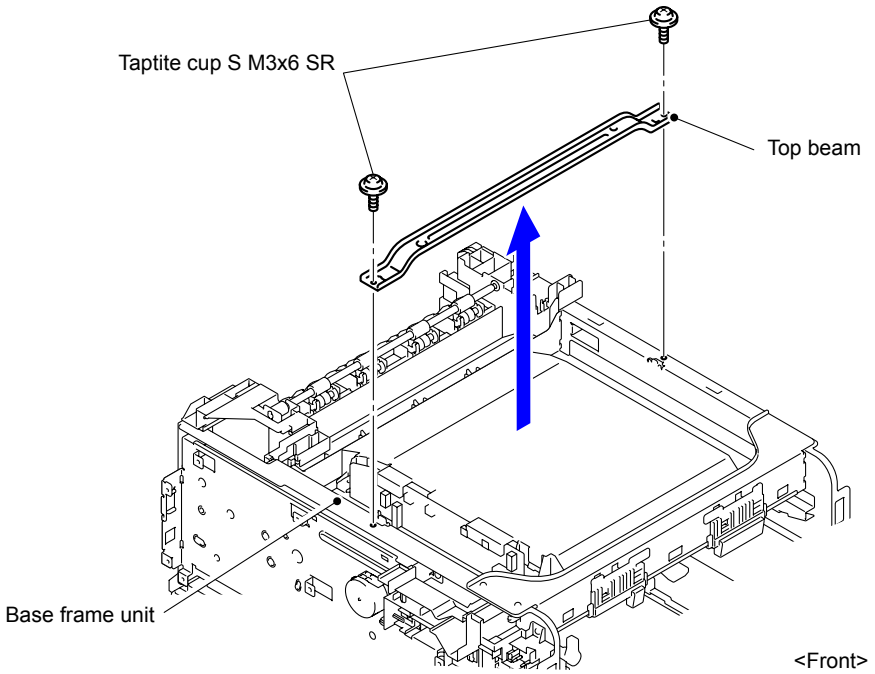

Fig. 3-219

(8) Remove the five Taptite cup S M3x6 SR screws to remove the four Scanner holders.

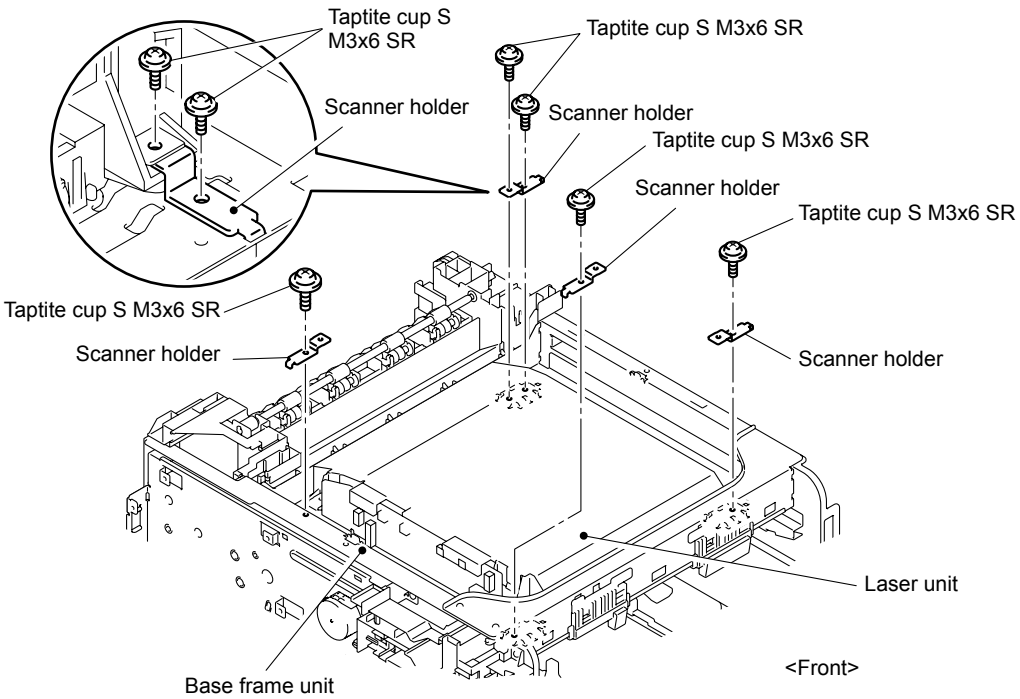

Fig. 3-220

(9) Disconnect the Connector (CN8) and two Flat cables from the Laser unit to remove the Laser unit from the Base frame unit.

Note:

After disconnecting flat cables, check that each cable is not damaged at its end or shortcircuited.

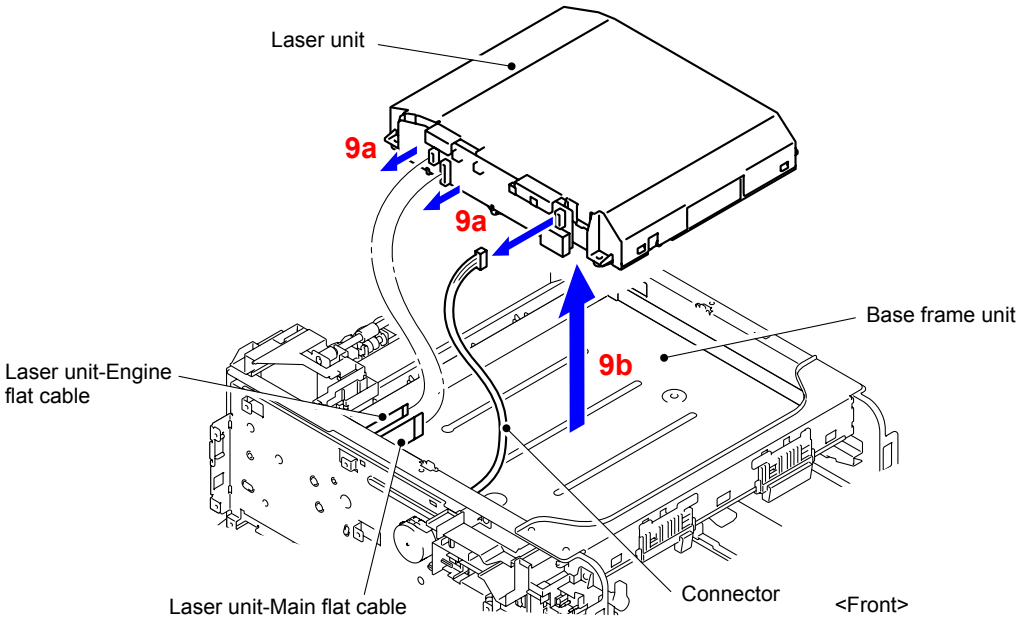

Fig. 3-221

Assembling Note:

- When connecting flat cables, do not insert them at an angle. After insertion, check that the cables are not at an angle.
- When the flat cables of the Laser unit are replaced, be sure to fold and assemble the Flat cable as shown in the figure.

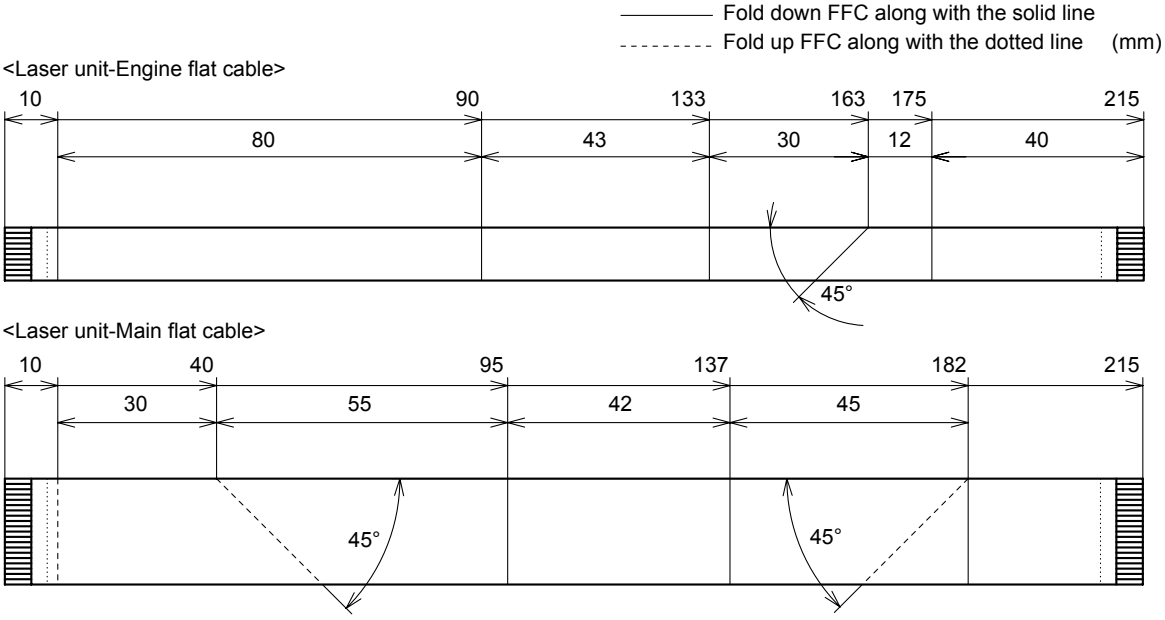

Fig. 3-222

Harness routing: Refer to " 1 Laser Unit"

9.49 Develop Release Motor

(1) Remove the two Taptite bind S M3x6 screws.

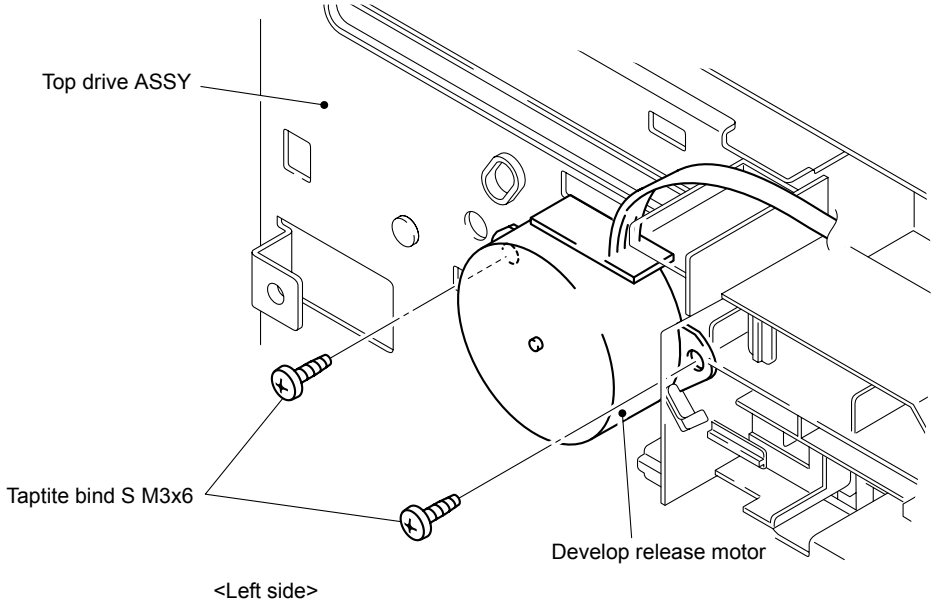

Fig. 3-223

(2) Rotate the Develop release motor counterclockwise to release the Hook to remove the Develop release motor from the Top drive ASSY.

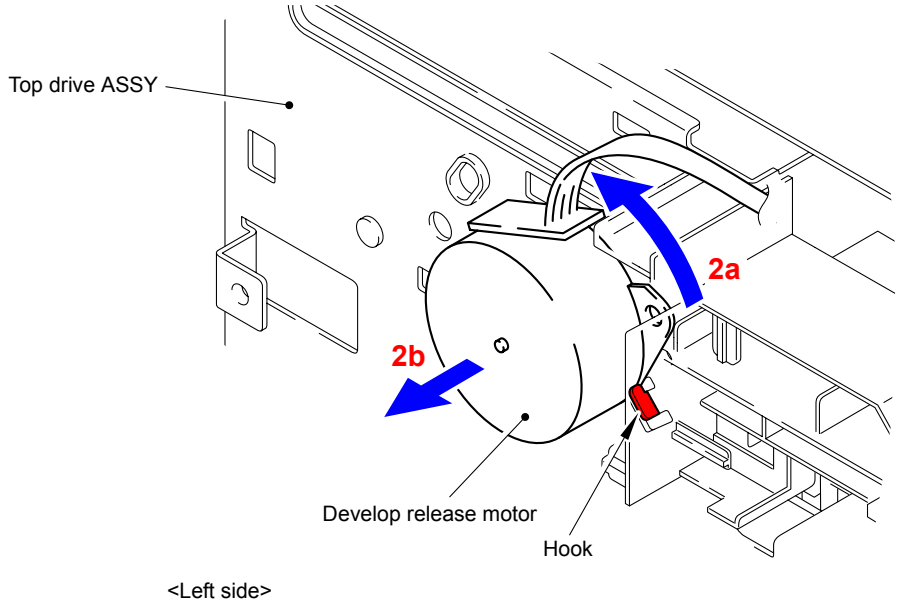

Fig. 3-224

Harness routing: Refer to " 2 Develop Release Motor"

9.50 Front Cover Sensor

(1) Disconnect the wiring of the Front cover sensor from the Panel cable rack.

(2) Release the two Hooks to remove the Front cover sensor.

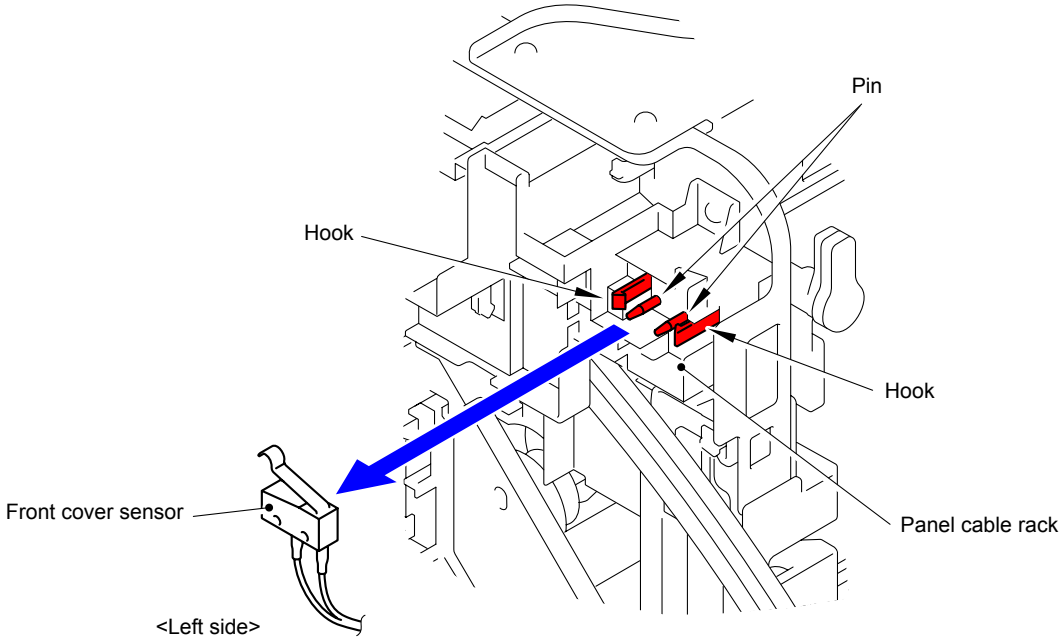

Fig. 3-225

Harness routing: Refer to " 3 Front Cover Sensor"

9.51 Top Drive ASSY

(1) Disconnect cables from the Lower cable rack.

(2) Release the four Hooks to remove the Lower cable rack from the Top drive ASSY.

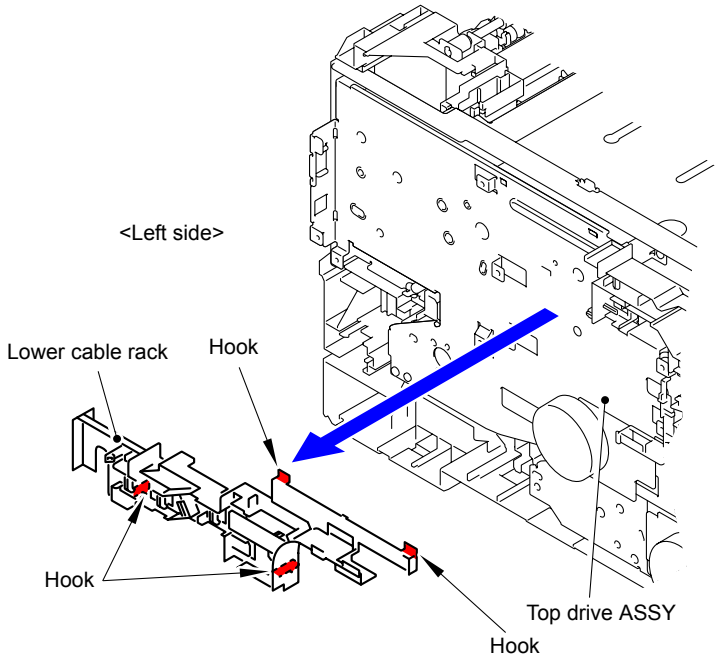

Fig. 3-226

(3) Disconnect cables from the PF line holder.

(4) Release the three Hooks to remove the PF line holder from the Top drive ASSY.

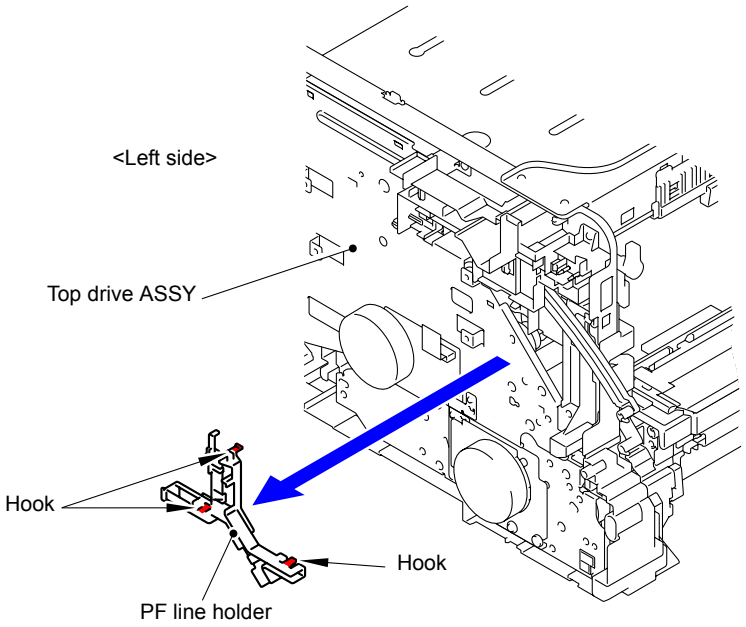

Fig. 3-227

(9) Remove the nine Taptite cup S M3x6 SR screws and Taptite bind B M4x12 screw from the Top drive ASSY.

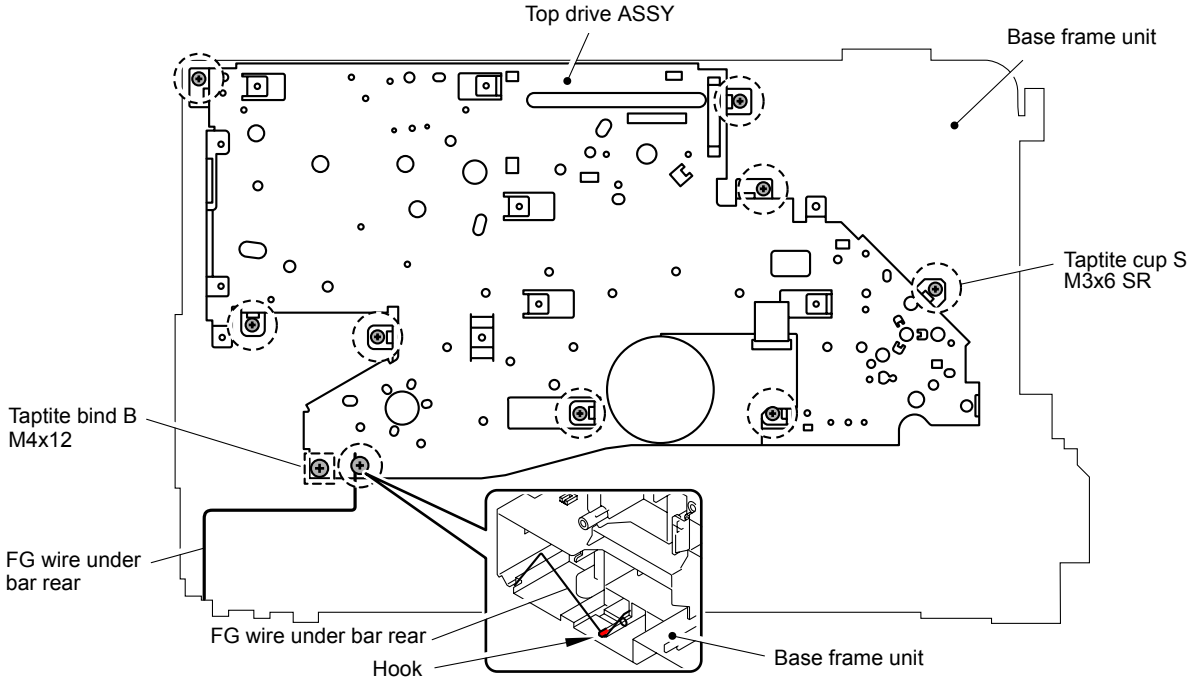

Fig. 3-230

Note:

- When removing and installing the Top drive ASSY, be sure to hang the FG wire under bar rear on the Hook of the Base frame unit as shown in the figure before removing and installing the Top drive ASSY.
- Be sure to install the FG wire under bar rear in the Top drive ASSY when installing the Top drive ASSY.

(10) Remove the Forced develop release link from the Develop forced release part.

(11) Release the two Hooks to remove the Top drive ASSY from the Base frame unit.

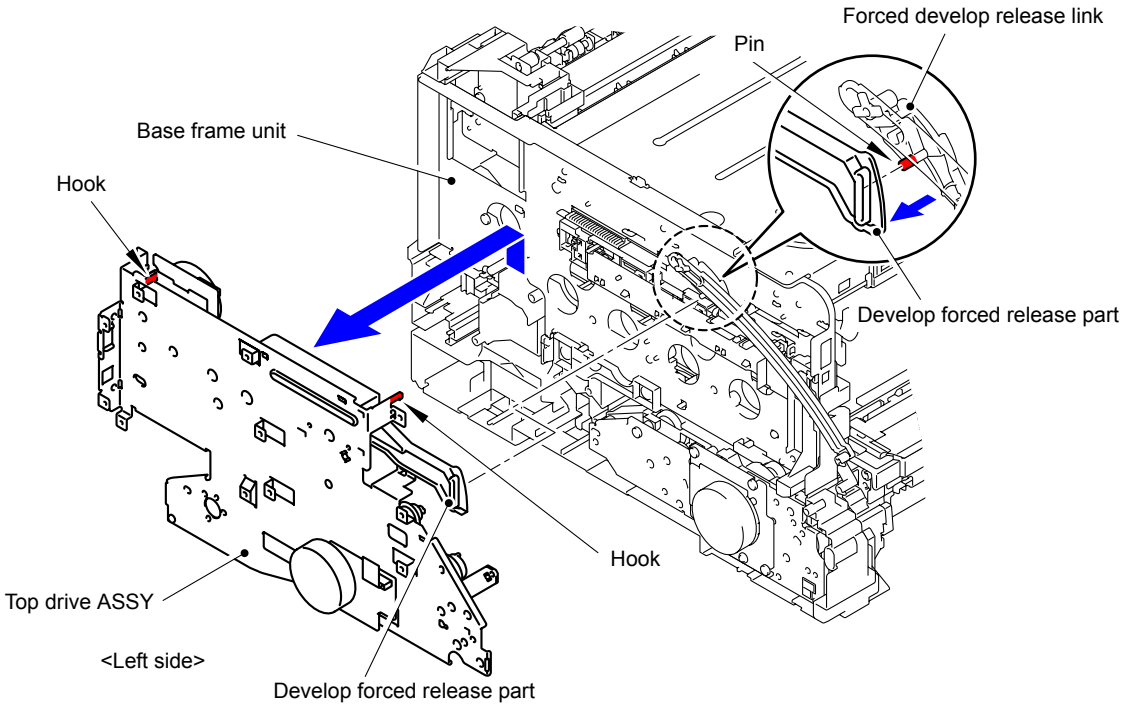

Fig. 3-231

(12) Disconnect the Fuser develop motor flat cable.

Assembling Note:
When the Fuser develop motor flat cable is replaced, be sure to fold and assemble the flat cable as shown in the figure.

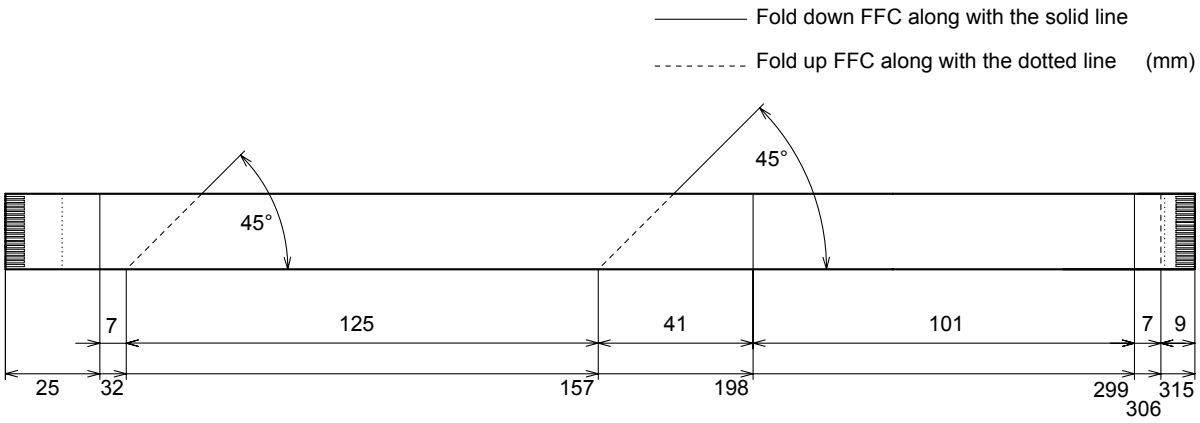

Fig. 3-232

Harness routing: Refer to " 4 Top Drive ASSY"

9.52 Forced Develop Release Link

(1) Remove the Forced develop release link from the Forced develop release cam.

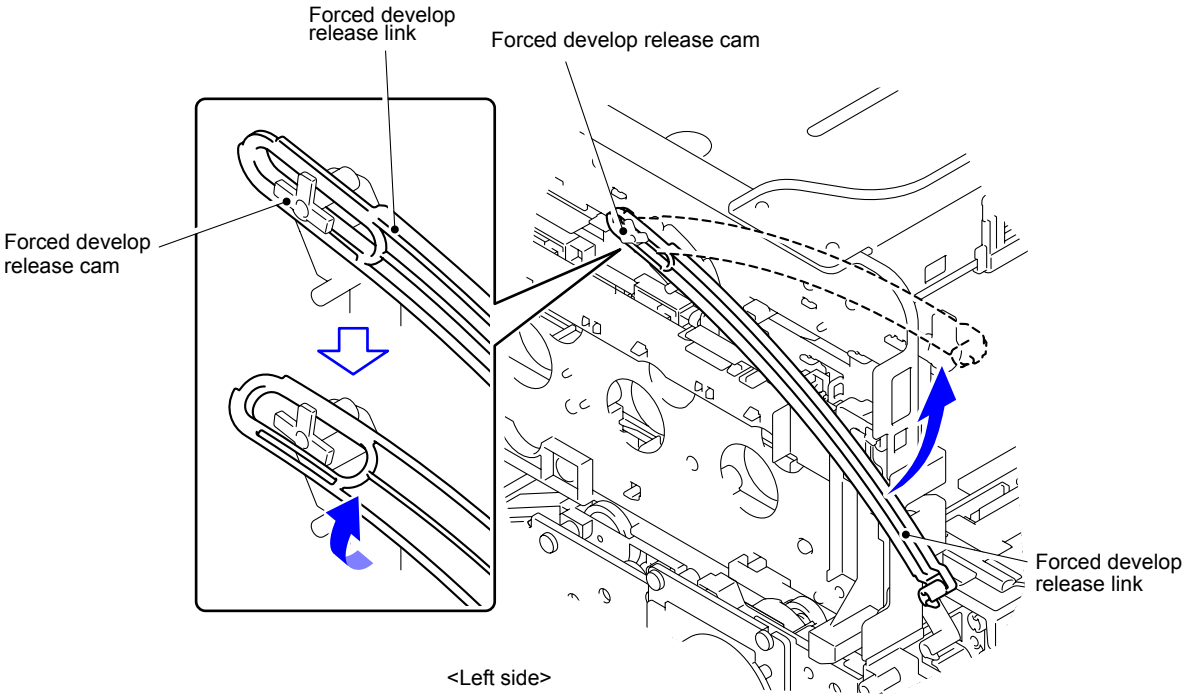

Fig. 3-233

9.53 Drum Drive Motor

(1) Remove the two Drum coupling gear Z52 from the Top drive ASSY.

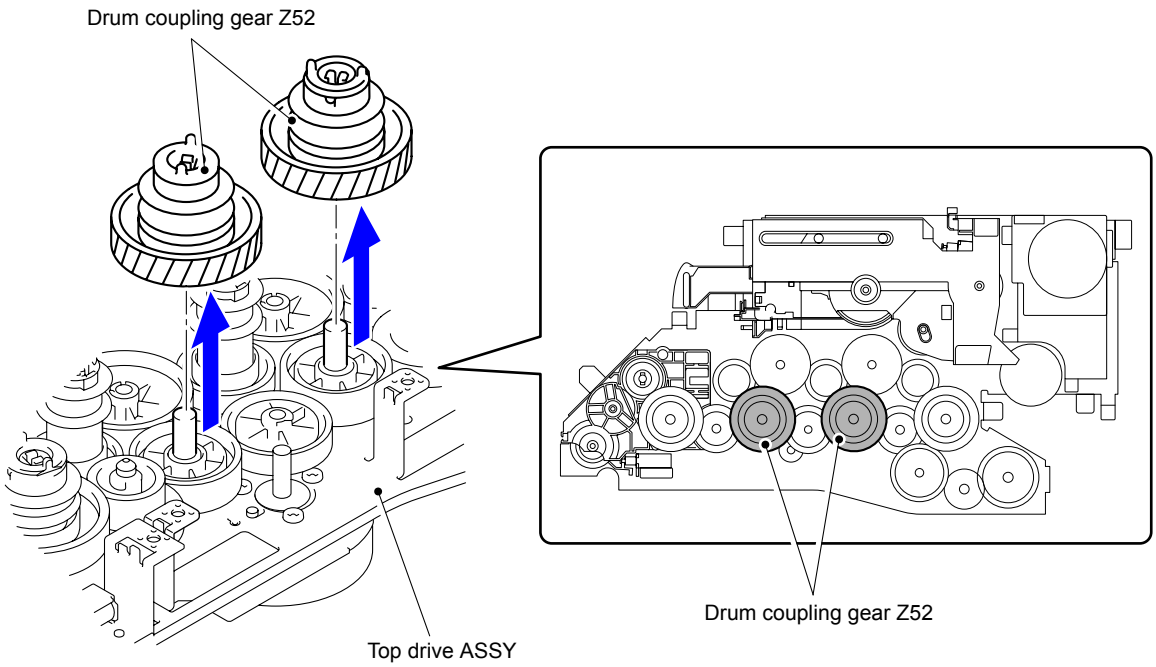

Fig. 3-234

Gear position: Refer to "■ Top drive ASSY."

(2) Remove the two Drum idle gear Z64 from the Top drive ASSY.

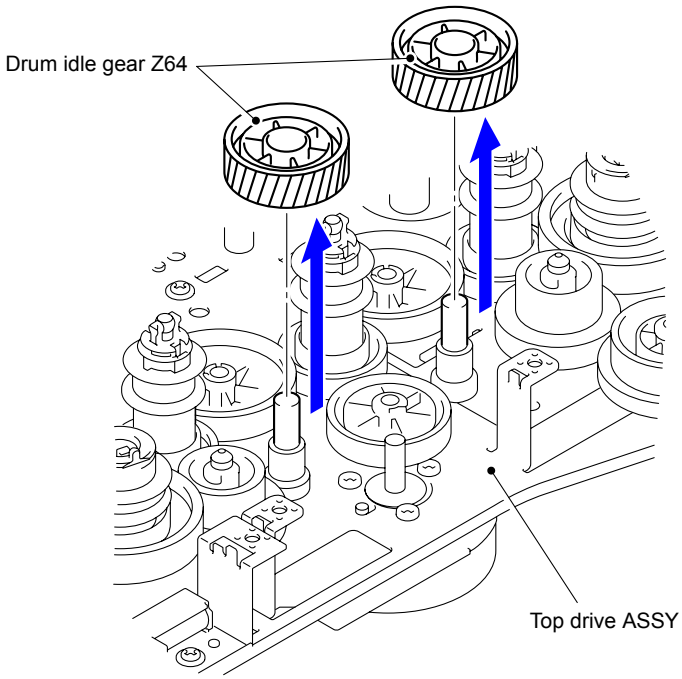

Fig. 3-235

Gear position: Refer to "■ Top drive ASSY."

(3) Remove the Collar 6 from the Drum idle gear Z64 first.

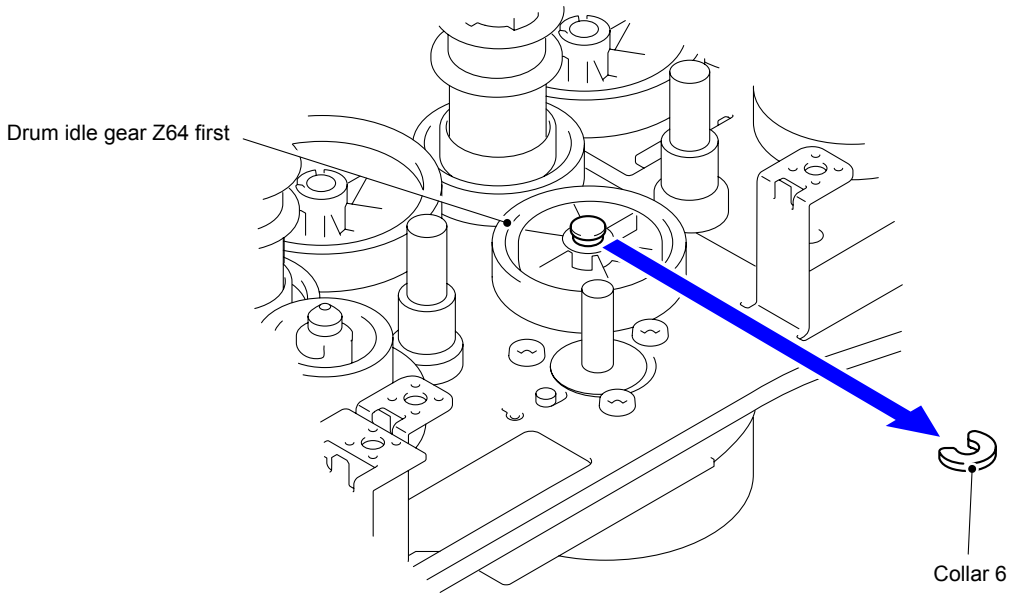

Fig. 3-236

(4) Remove the Drum idle gear Z64 first from the Top drive ASSY.

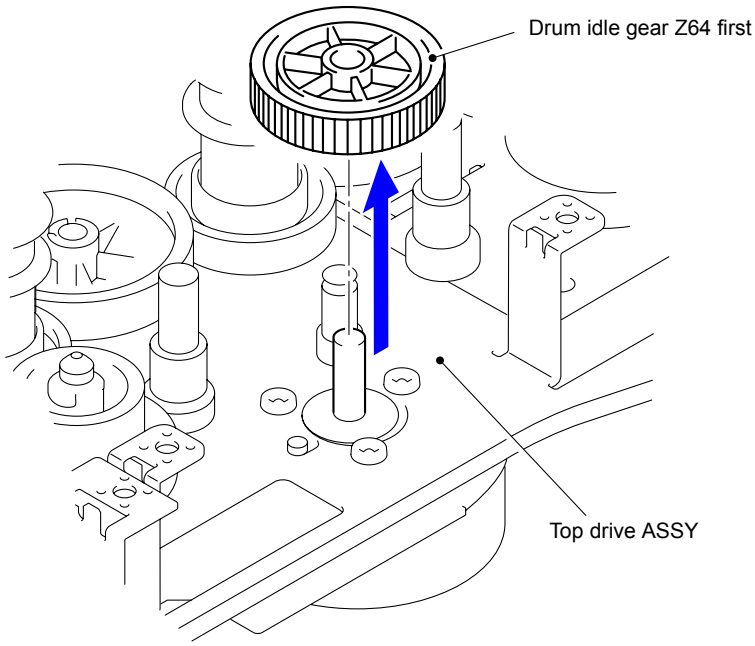

Fig. 3-237

Gear position: Refer to "■ Top drive ASSY."

(5) Remove the three Screw bind M3x4 screws to remove the Drum drive motor from the Top drive ASSY.

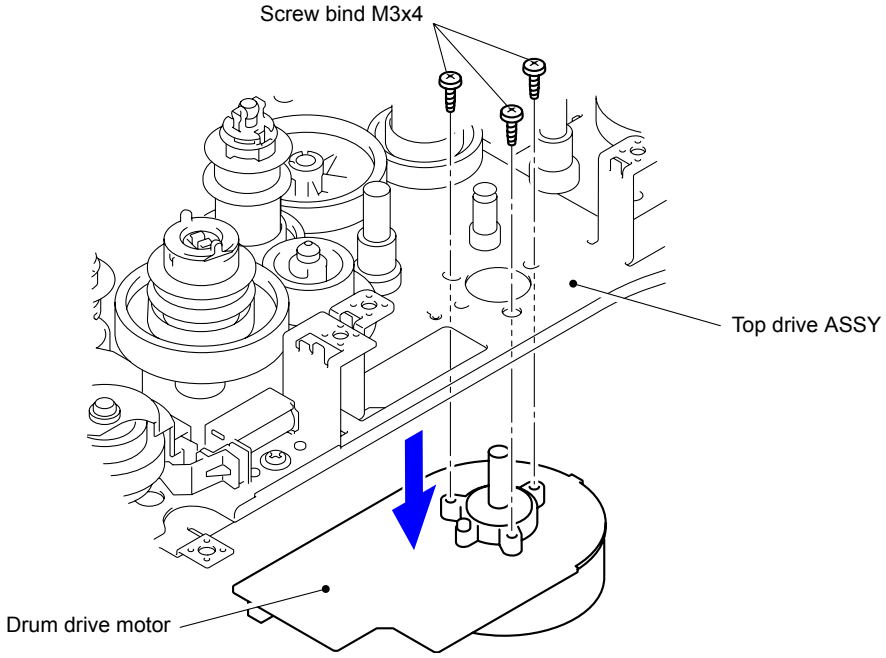

Fig. 3-238

Assembling Note:
Align the phase of the Drum idle gear Z64, Drum idle gear Z64 first, and Drum coupling gear Z52. (Refer to "6. IF YOU REPLACE THE DRUM DRIVE MOTOR" in Chapter 4.)

Harness routing: Refer to " 4 Top Drive ASSY"

9.54 Drum Position Sensor PCB ASSY

(1) Remove the Drum coupling gear Z52 from the Top drive ASSY.

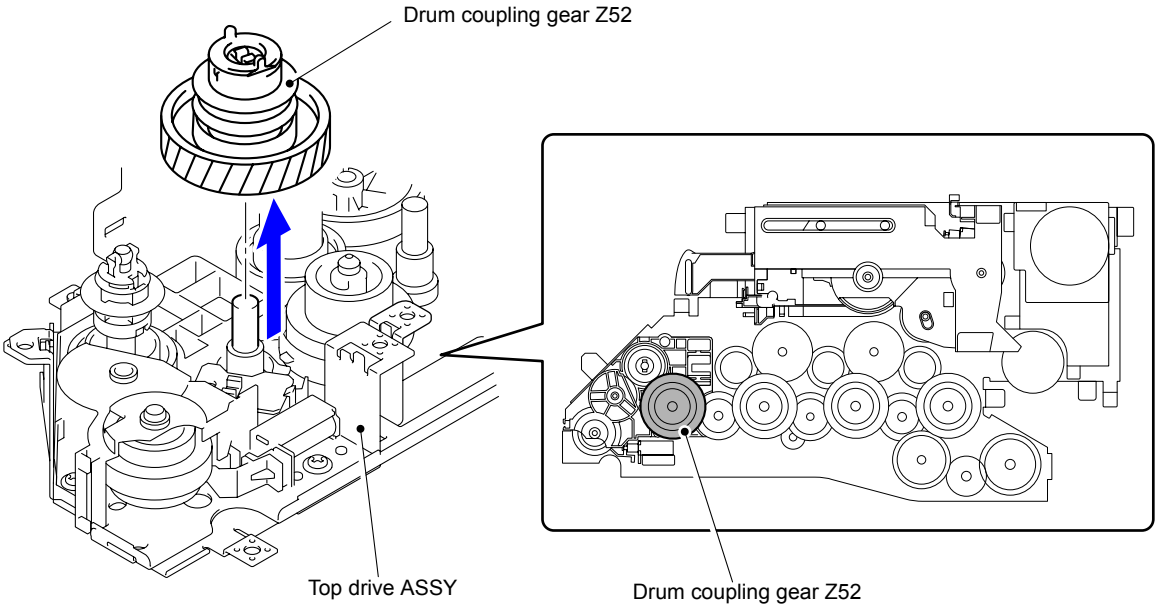

Fig. 3-239

Gear position: Refer to "■ Top drive ASSY."

> **Note:**
> Be sure to align the phase before removing the gear.

(2) Disconnect the wiring of the Drum position sensor PCB ASSY.

(3) Release the two Hooks to remove the Drum position sensor PCB ASSY from the Top drive ASSY.

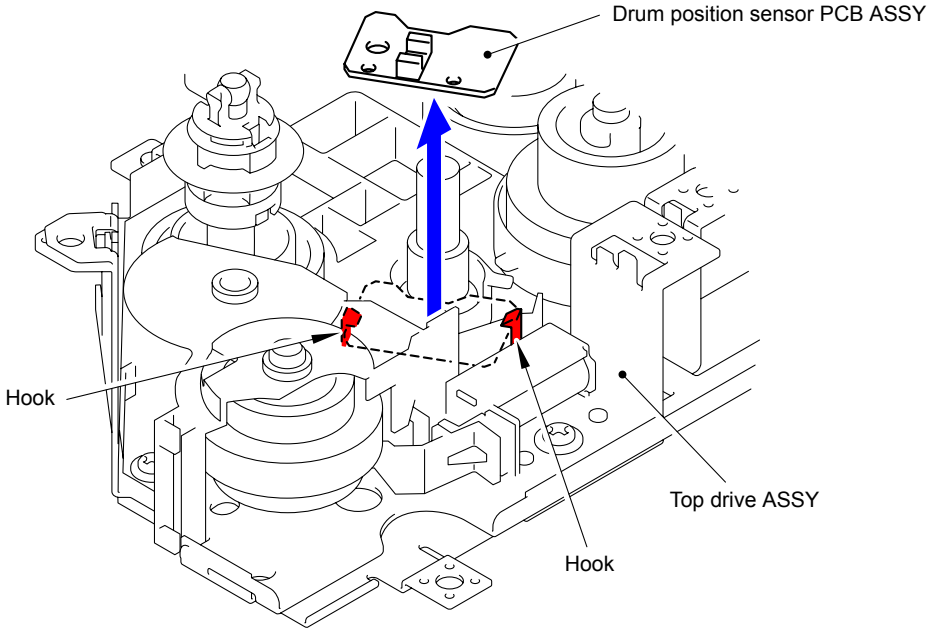

Fig. 3-240

Harness routing: Refer to " 4 Top Drive ASSY"

9.55 Registration Solenoid ASSY

(1) Disconnect the wiring of the Registration solenoid ASSY.

(2) Remove the Taptite cup S M3x6 SR screw to remove the Registration solenoid ASSY and Registration solenoid spring from the Top drive ASSY.

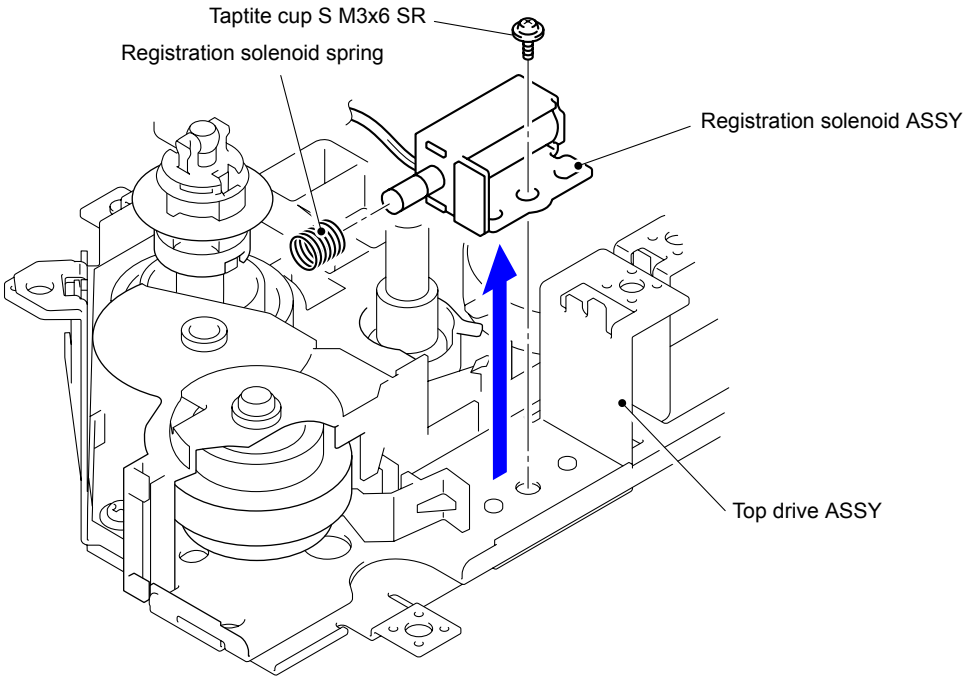

Fig. 3-241

Harness routing: Refer to " 4 Top Drive ASSY"

9.56 Develop Release Sensor PCB ASSY/Mono Solenoid ASSY

(1) Remove the three Taptite cup S M3x6 SR screws to remove the Top drive cover from the Top drive ASSY.

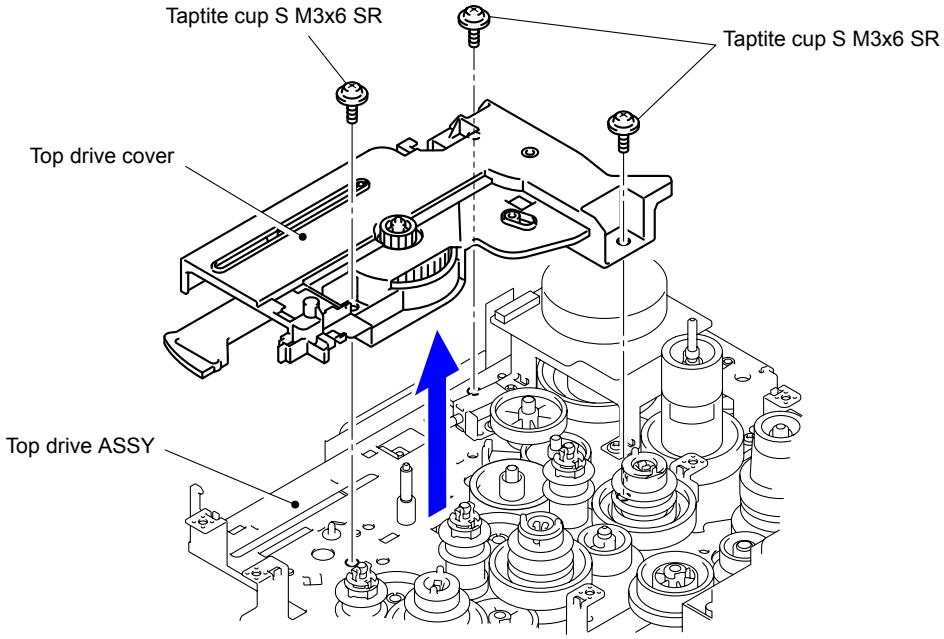

Fig. 3-242

(2) Turn the Top drive cover upside down and disconnect the wiring of the Develop release sensor PCB ASSY.

(3) Release the Hook to remove the Develop release sensor PCB ASSY from the Top drive cover.

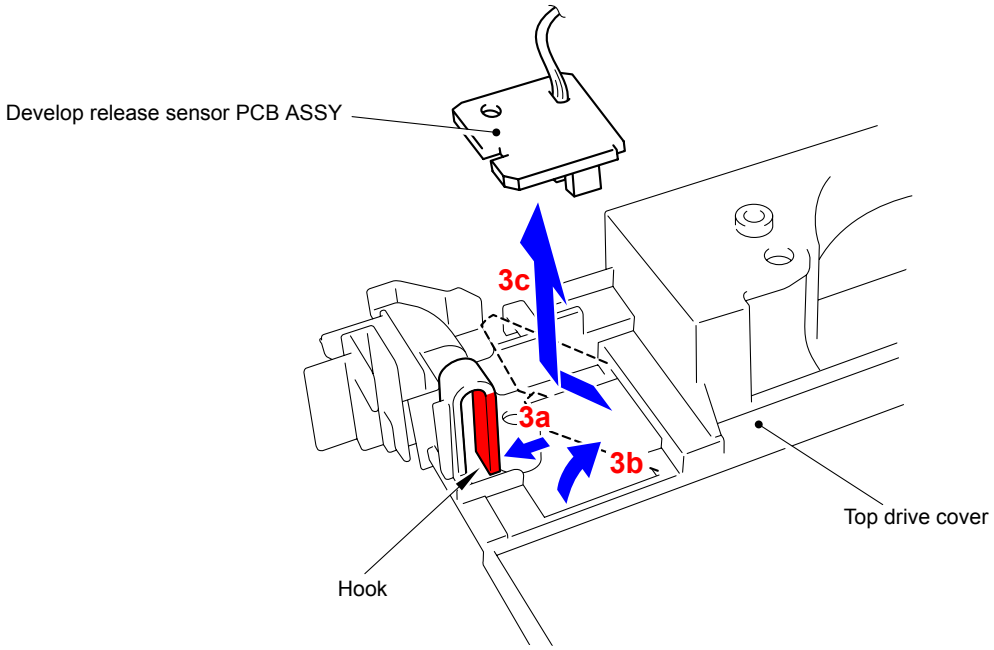

Fig. 3-243

(4) Remove the Gear Z63-30 from the Top drive ASSY.

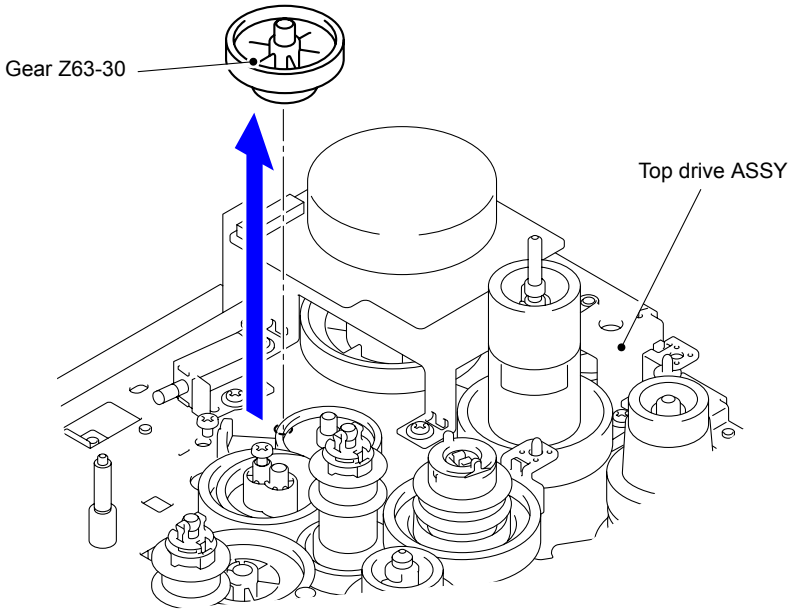

Fig. 3-244

Gear position: Refer to "■ Top drive ASSY."

(5) Remove the Taptite cup S M3x6 SR screw to remove the Mono solenoid ASSY and Mono solenoid spring from the Top drive ASSY.

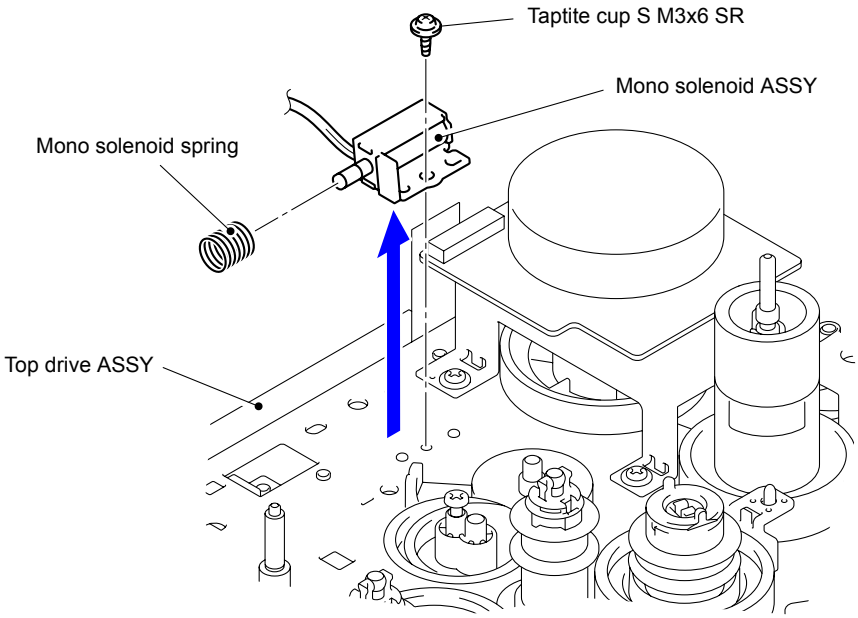

Fig. 3-245

Harness routing: Refer to " 4 Top Drive ASSY"

9.57 Fuser Develop Motor ASSY

(1) Remove the four Taptite cup S M3x6 SR screws to remove the Fuser develop motor ASSY from the Top drive ASSY.

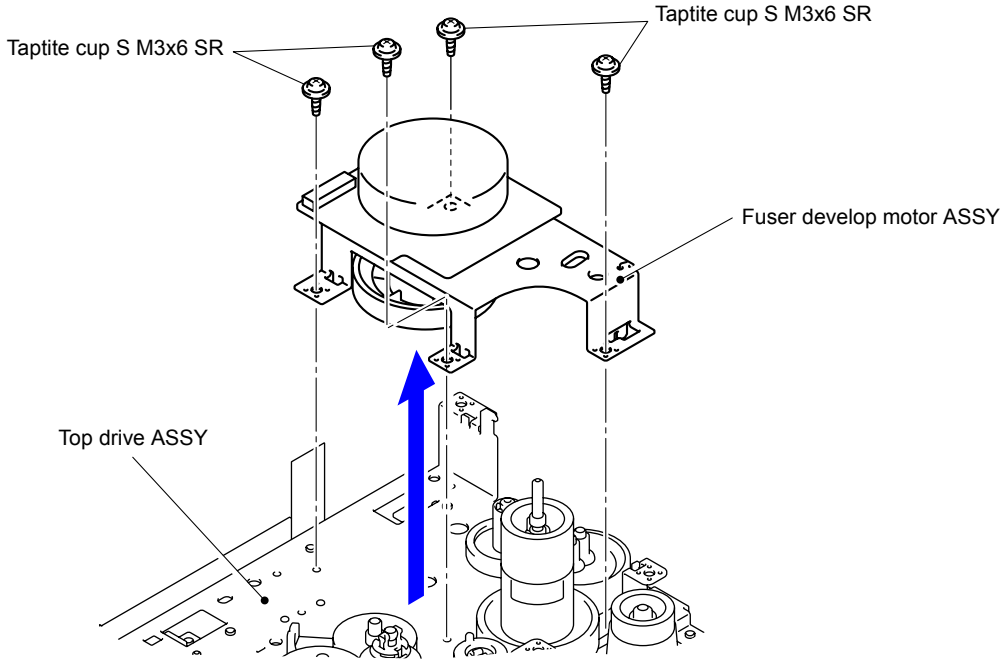

Fig. 3-246

Harness routing: Refer to " 4 Top Drive ASSY"

9.58 PF Plate ASSY/T1 Solenoid ASSY

(1) Remove the three Taptite bind B M4x12 screws and Taptite cup S M3x6 SR screw. Remove the PF plate ASSY from the PF cleaner drive ASSY. Release the FG wire under bar.

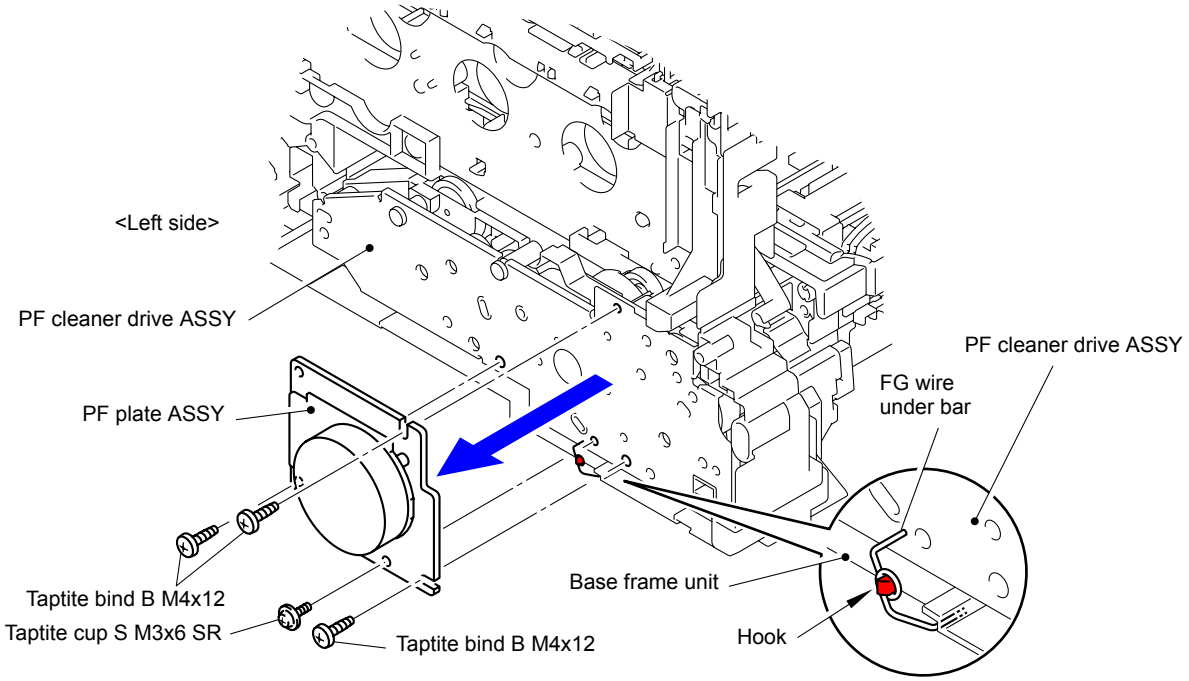

Fig. 3-247

Note:

- When removing and installing the PF plate ASSY, be sure to hang the FG wire under bar on the Hook of the Base frame unit as shown in the figure before removing and installing the PF plate ASSY.
- Be sure to install the FG wire under bar in the PF plate ASSY when installing the PF plate ASSY.

(2) Disconnect the wiring on the PF cleaner drive ASSY.

(3) Remove the two Taptite bind B M4x12 screws to remove the PF cleaner drive ASSY from the Base frame unit.

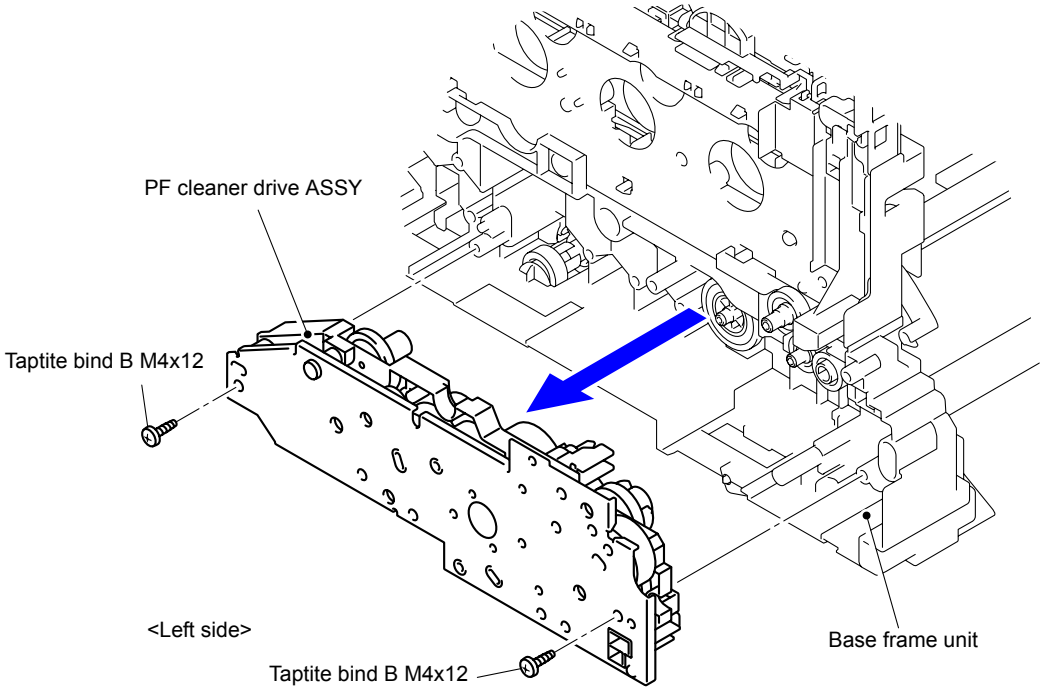

Fig. 3-248

Note:
Some of the gears on the PF cleaner drive ASSY easily come off, and thus be careful not to lose them.

(4) Remove the Taptite bind B M3x8 screw to remove the T1 solenoid ASSY and T1 registration solenoid spring from the PF cleaner drive ASSY.

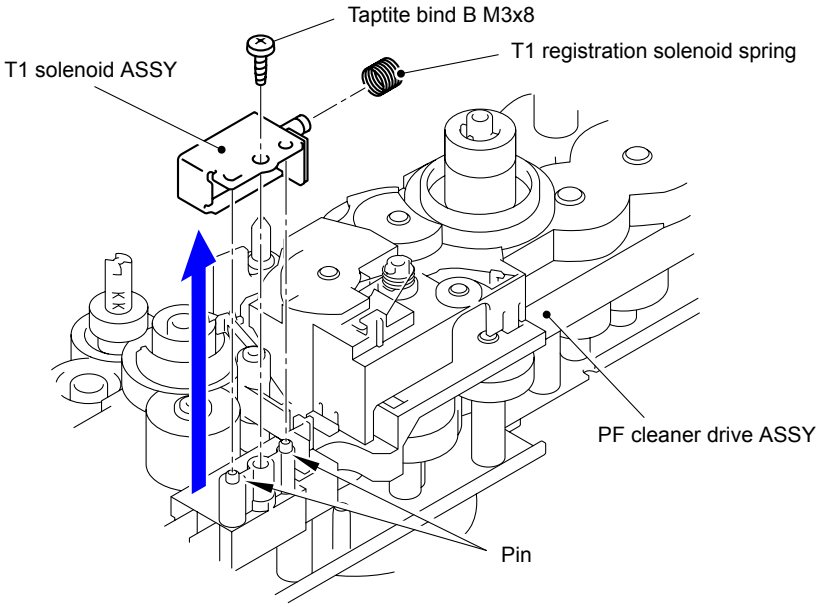

Fig. 3-249

Harness routing: Refer to " 5 PF Plate ASSY"

9.59 Toner/New Sensor PCB ASSY

(1) Release the two Hooks to remove the TE sensor protect film from the Toner reset holder.

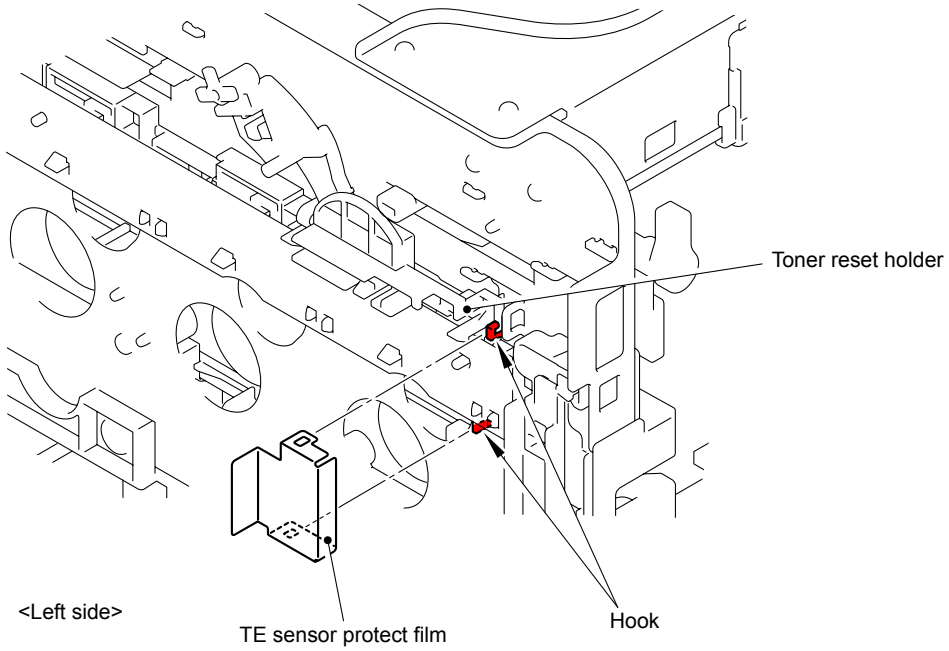

Fig. 3-250

(2) Release the six Hooks to remove the Toner/New sensor PCB ASSY from the Toner reset holder.

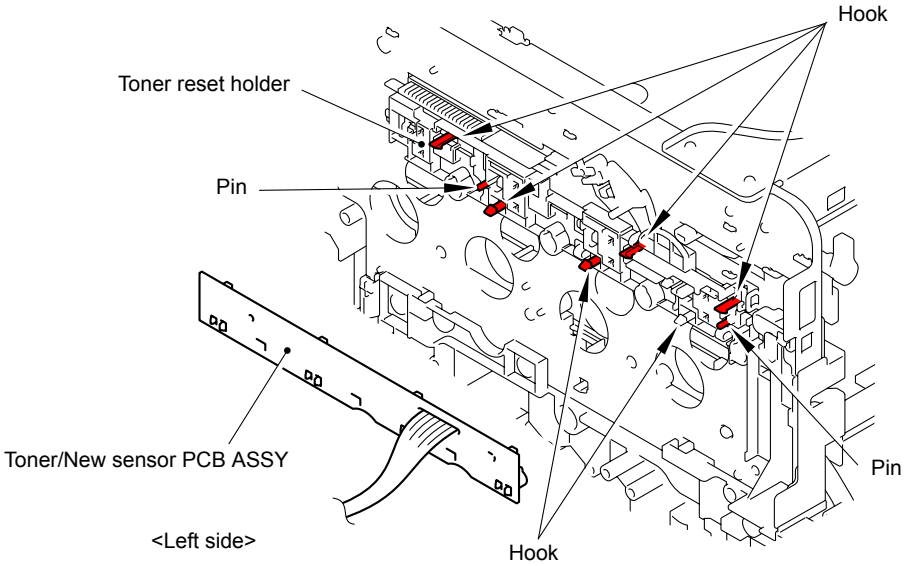

Fig. 3-251

Harness routing: Refer to " 6 Toner/New Sensor PCB ASSY"

9.60 Internal Temperature Thermistor

(1) Remove the Internal temperature thermistor from the Main body.

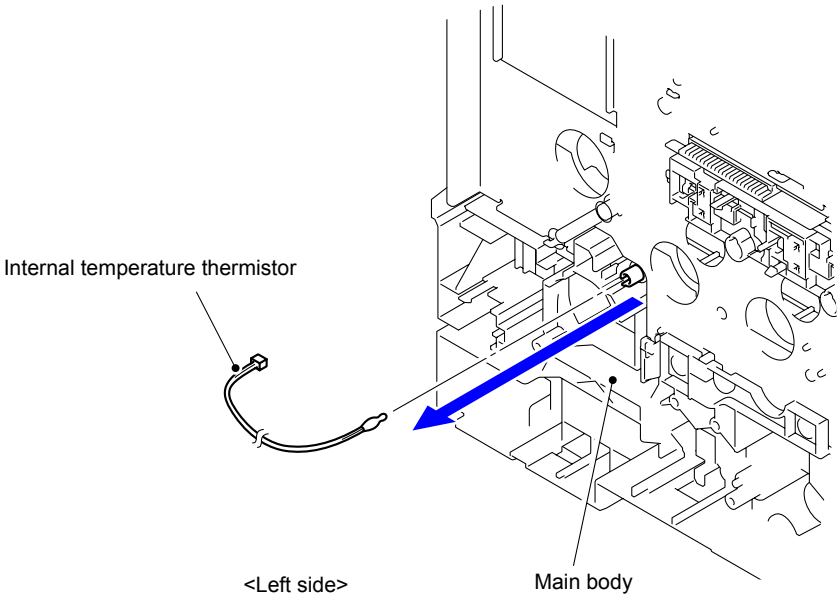

Fig. 3-252

Assembling Note:

- Insert the tip of the Internal temperature thermistor firmly into the Insertion hole until it reaches the end of the Hole.
- After inserting the Internal temperature thermistor, hang the Harness on the Hook.

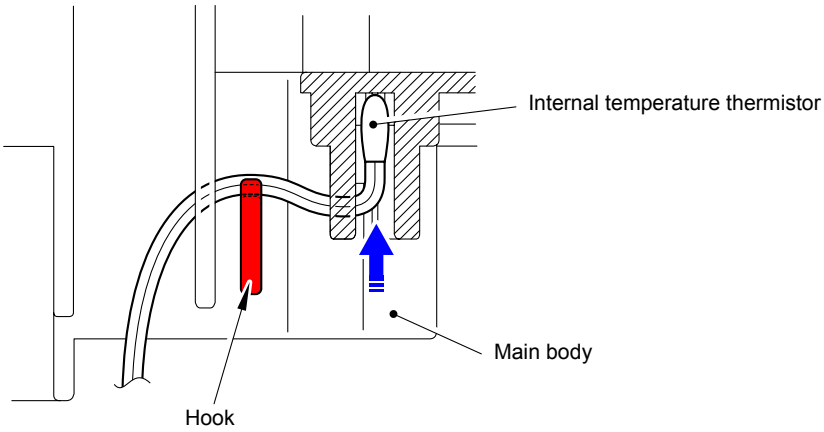

Fig. 3-253

Harness routing: Refer to " 23 Internal Temperature Thermistor"

9.61 Fuser Fan

(1) Disconnect the Connector (CN4) from the High-voltage power supply PCB ASSY.

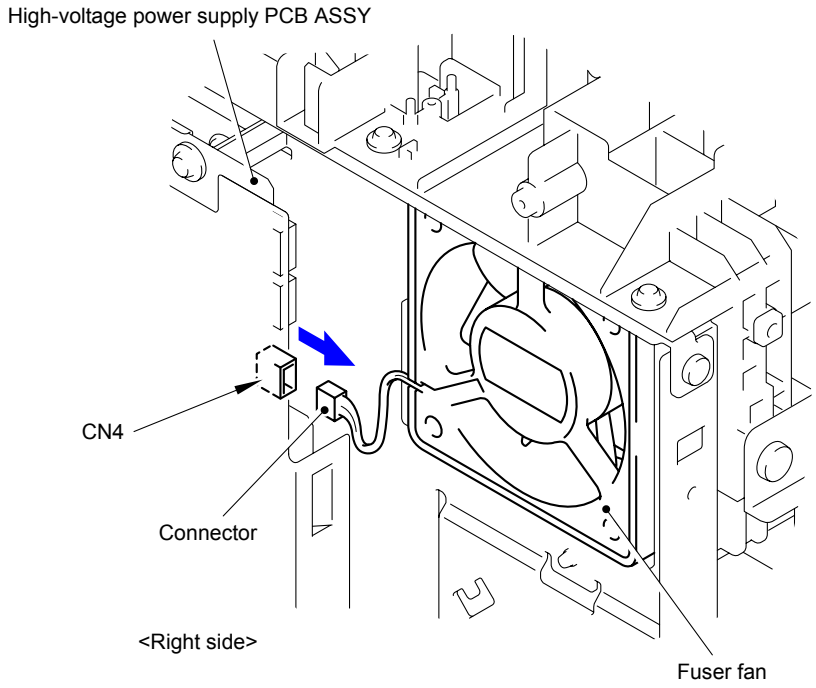

Fig. 3-254

(2) Pull out the Fuser fan from the Paper eject ASSY by slightly rotating it in the arrow direction in the figure below.

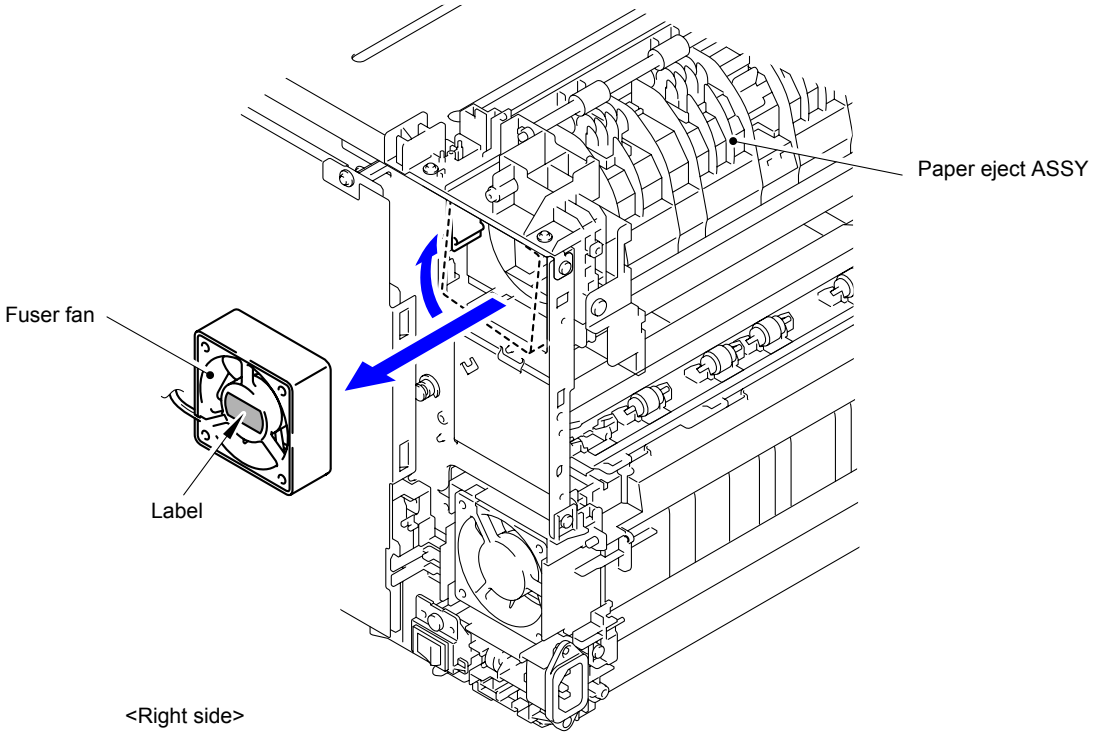

Fig. 3-255

Assembling Note:

When assembling the Fuser fan, be sure to assemble it in a way that the label side faces out.

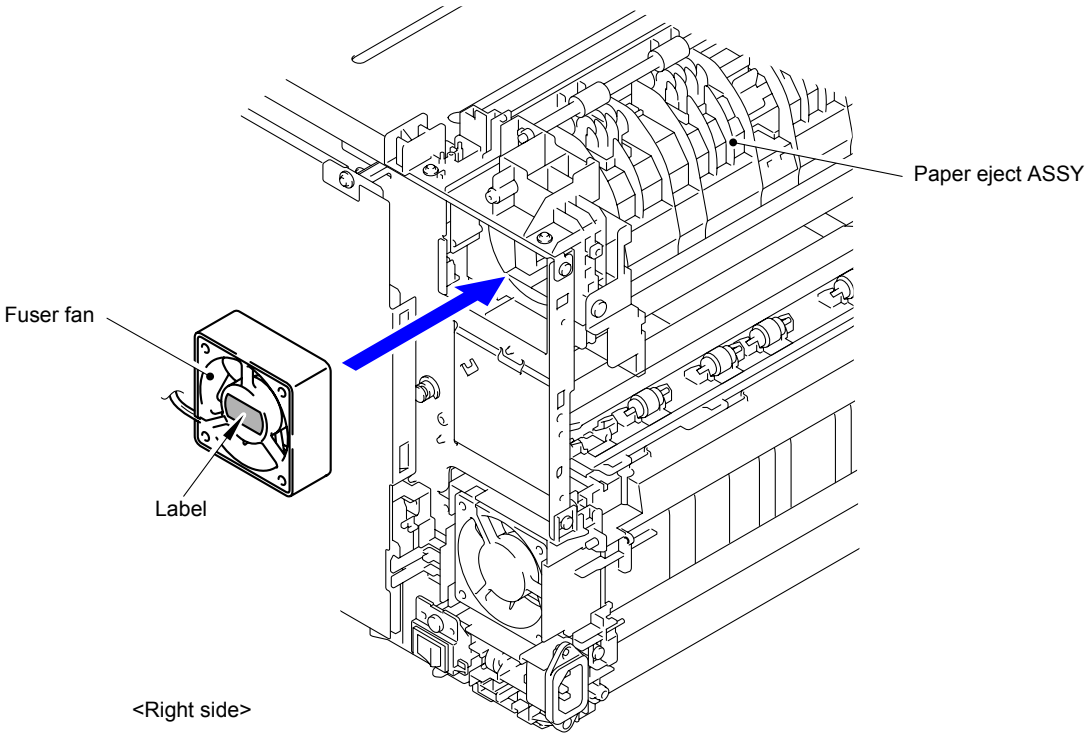

Fig. 3-256

9.62 Paper Eject ASSY

(1) Disconnect the wiring of the harness from the High-voltage power supply PCB ASSY.

(2) Remove the five Taptite cup S M3x6 SR screws to remove the Paper eject ASSY from the Base frame unit.

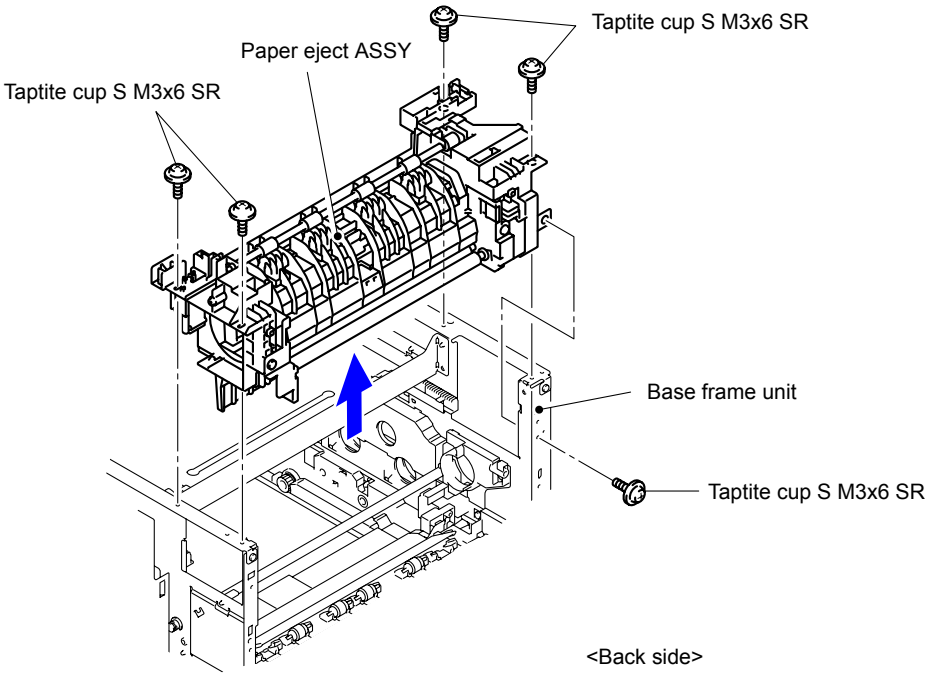

Fig. 3-257

Harness routing: Refer to " 8 Paper Eject ASSY"

9.63 Filter ASSY

(1) Remove the Toner filter ASSY from the Paper eject ASSY.

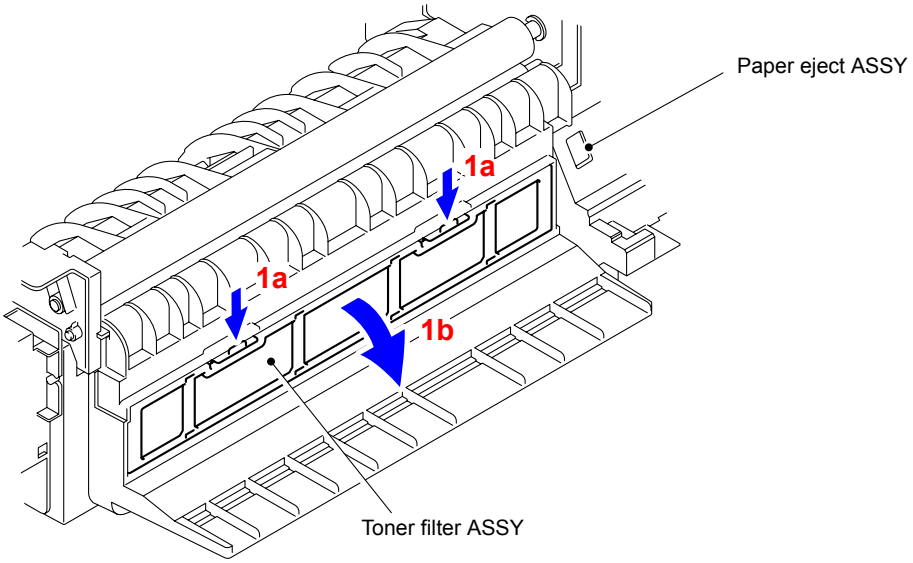

Fig. 3-258

(2) Remove the Taptite bind B M4x12 screw to remove the Eject duct from the Paper eject ASSY.

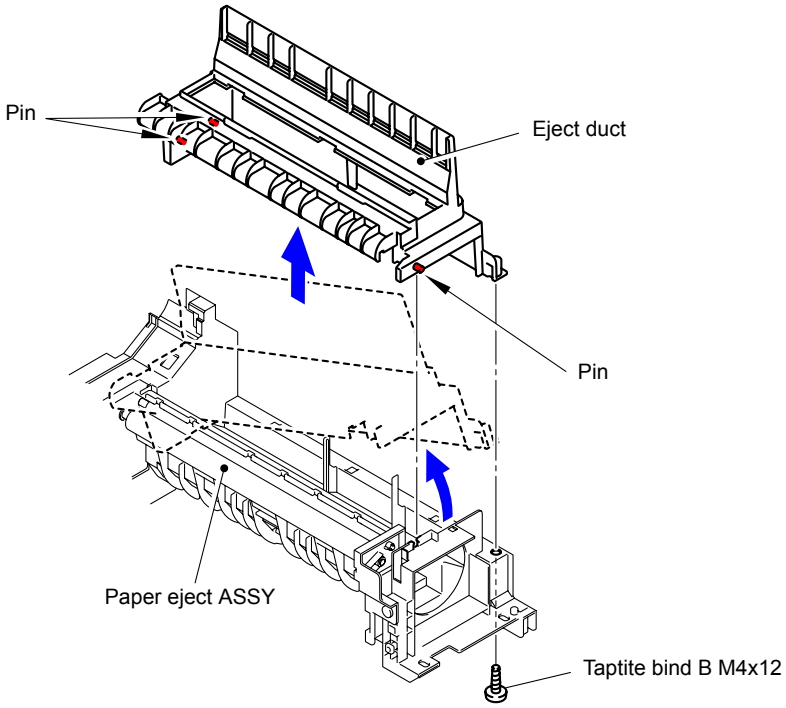

Fig. 3-259

(3) Remove the Filter ASSY from the Eject duct.

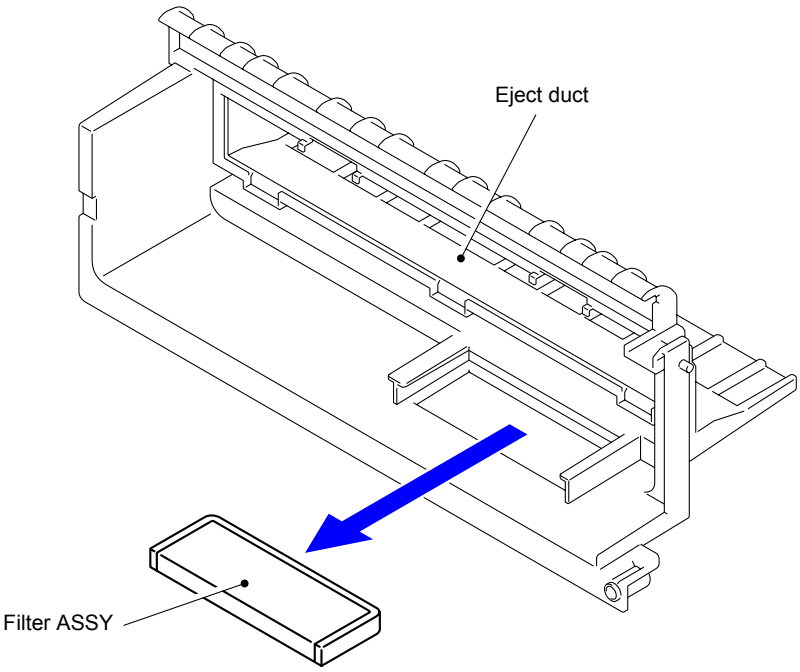

Fig. 3-260

9.64 Paper Eject Motor

(1) Remove the two Taptite bind S M3x6 screws to remove the Paper eject motor from the Paper eject ASSY.

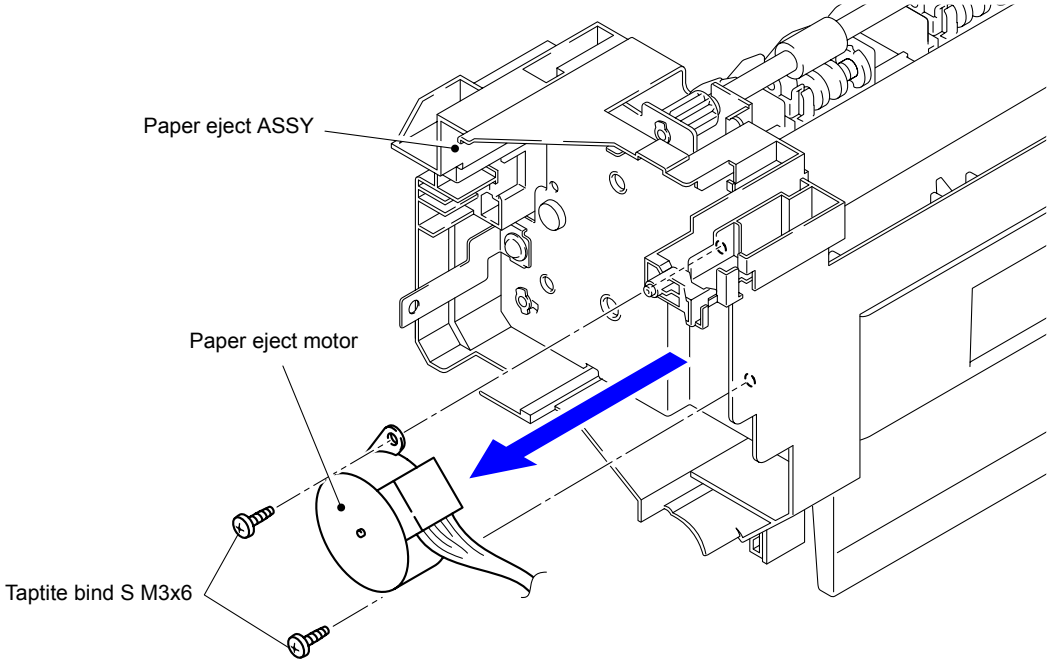

Fig. 3-261

Harness routing: Refer to " 8 Paper Eject ASSY"

9.65 Back Cover Sensor ASSY

(1) Release the two Hooks to remove the Back cover sensor ASSY from the Paper eject ASSY.

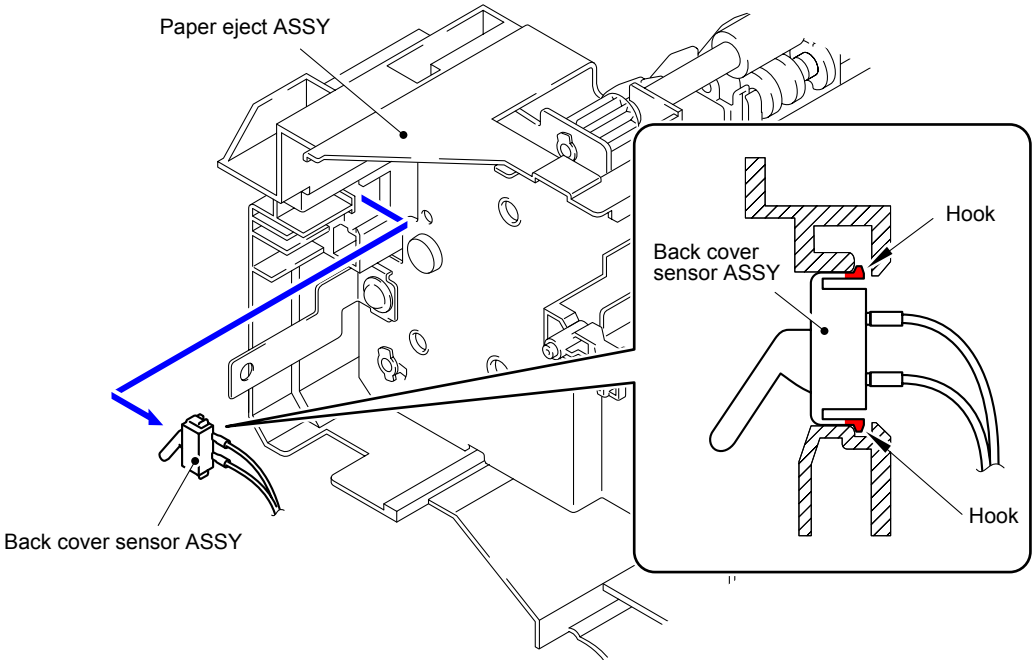

Fig. 3-262

Harness routing: Refer to " 8 Paper Eject ASSY"

9.66 Power Fan

(1) Disconnect the Connector (CN5) from the High-voltage power supply PCB ASSY.

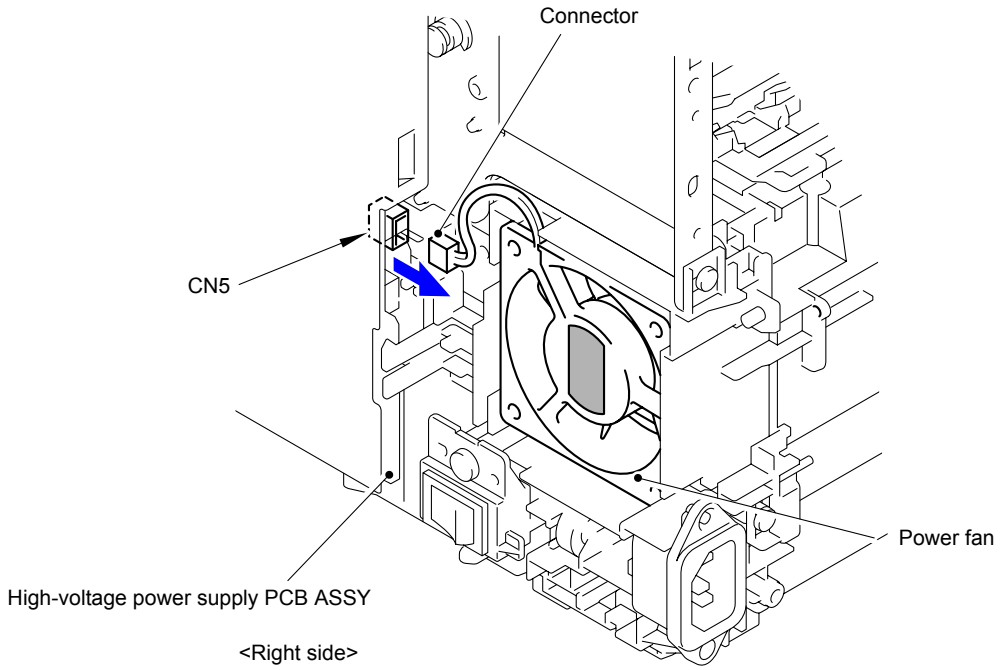

Fig. 3-263

(2) Remove the Power fan from the Base frame unit.

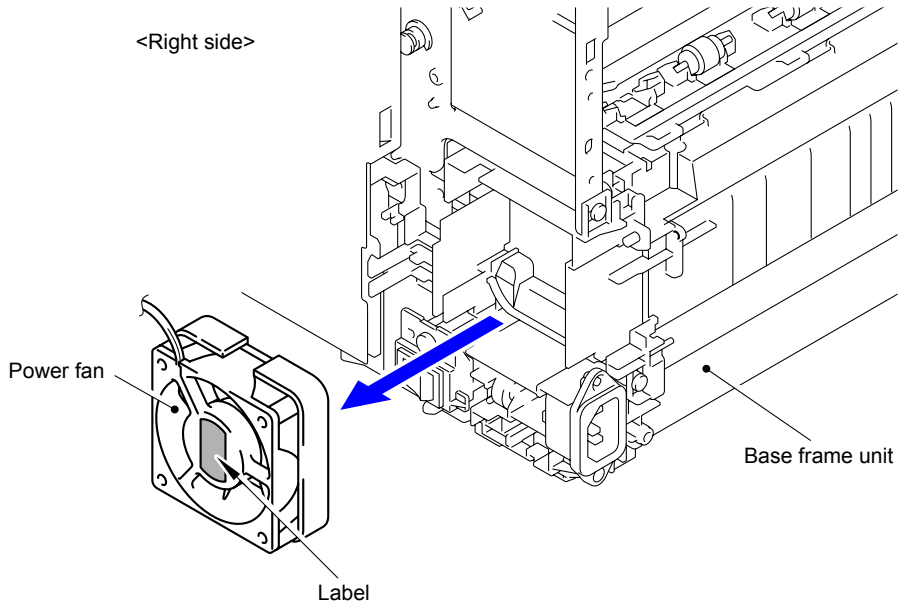

Fig. 3-264

Assembling Note:

When assembling the Power fan, be sure to assemble it in a way that the label side faces out.

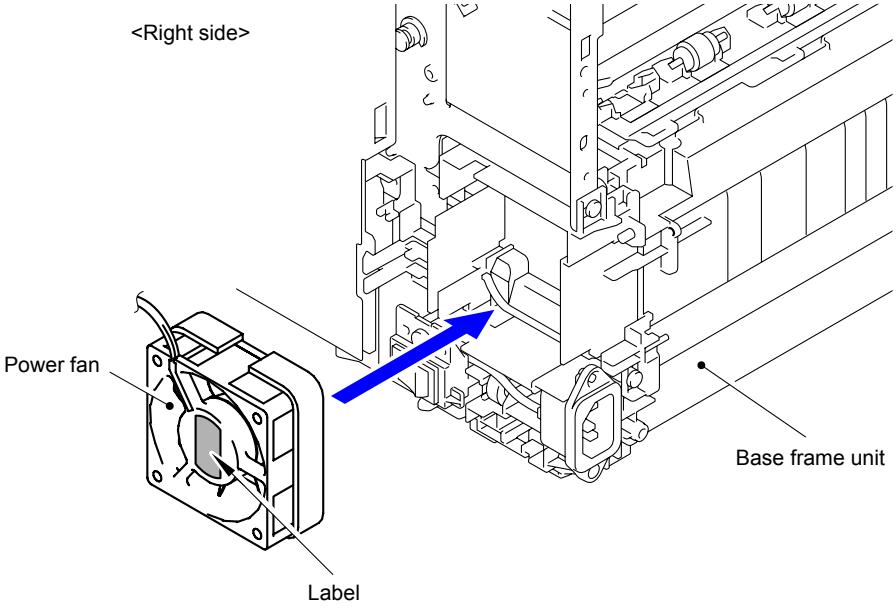

Fig. 3-265

9.67 Low-voltage Power Supply Unit

(1) Remove the two Pins to remove the Back flapper ASSY from the Low-voltage power supply cover.

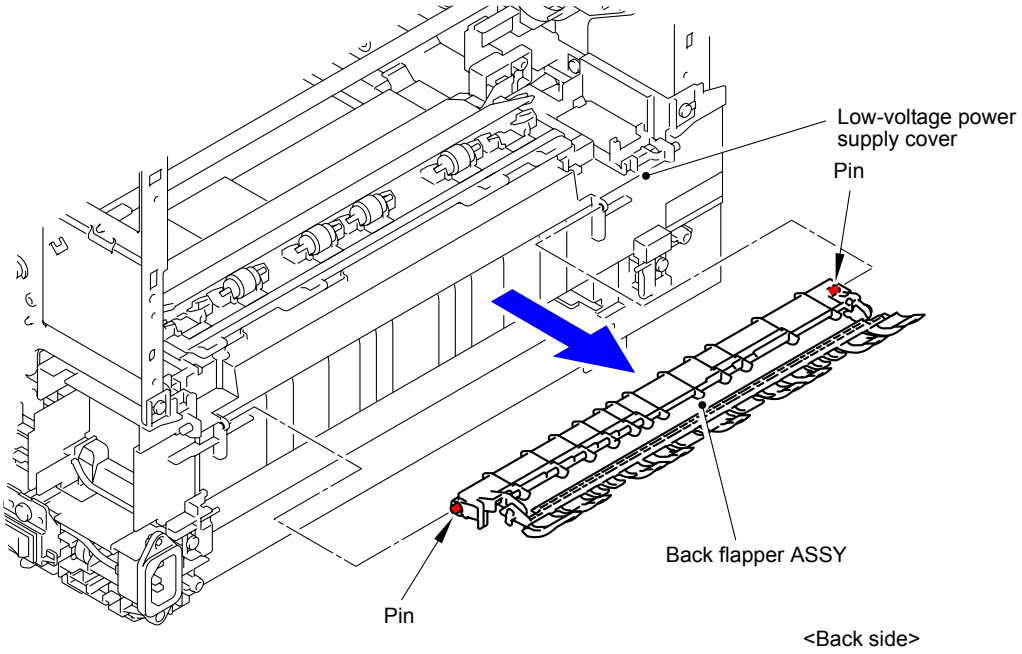

Fig. 3-266

(2) Release the two Hooks to remove the Switch holder from the Base frame unit.

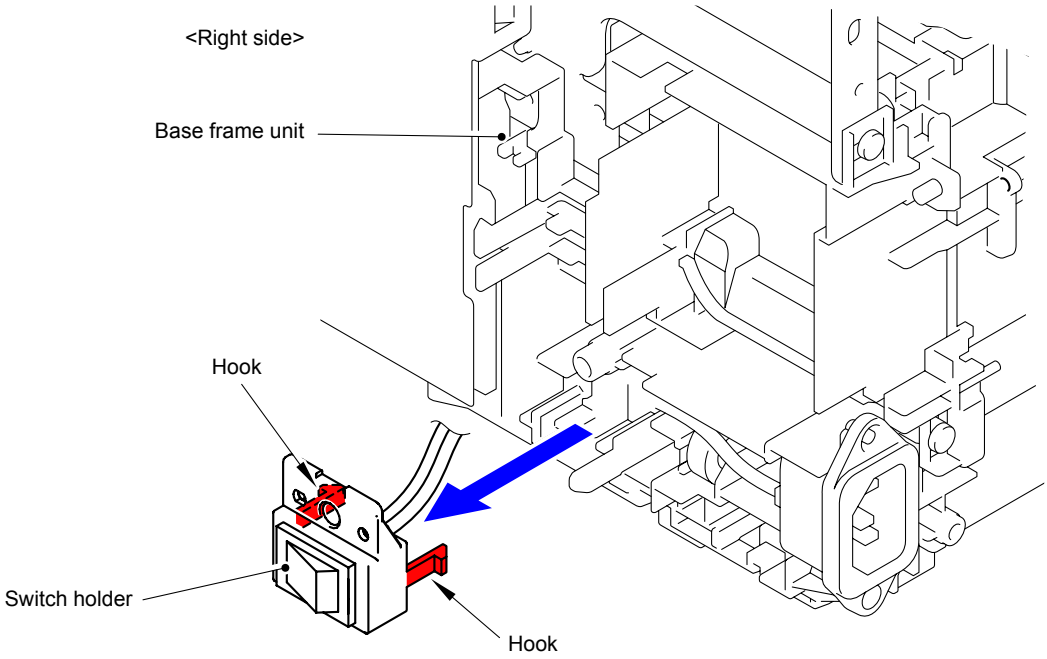

Fig. 3-267

(3) Remove the Taptite flat B M3x10 screw to remove the AC inlet from the Low-voltage power supply unit.

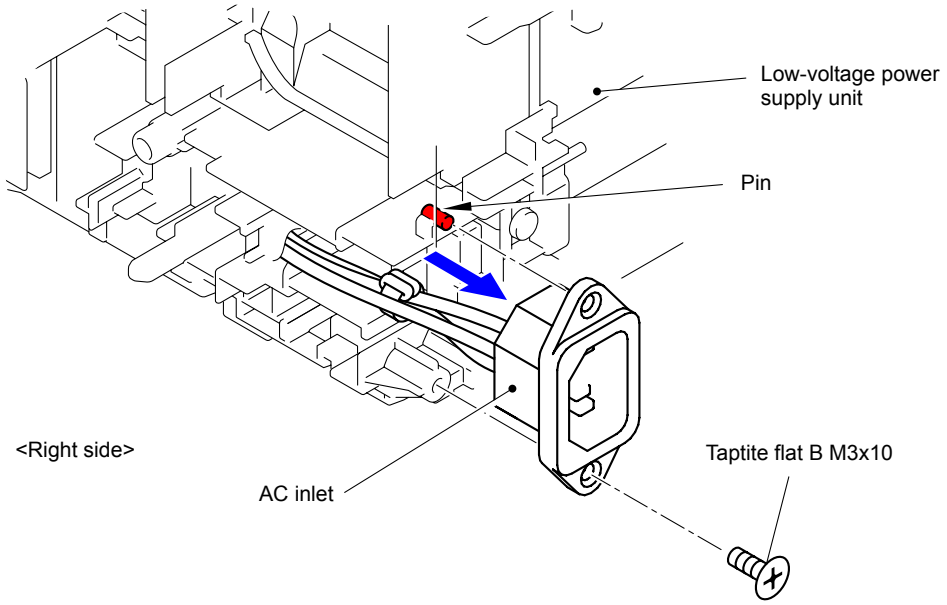

Fig. 3-268

(4) Remove the screw “a” of the Screw pan (S/P washer) M4x8 from the Low-voltage power supply unit to remove the ground terminal.

Note:
When removing the screws of the Screw pan (S/P washer) M4x8, be sure to remove the screw “a” first and then screw “b”.

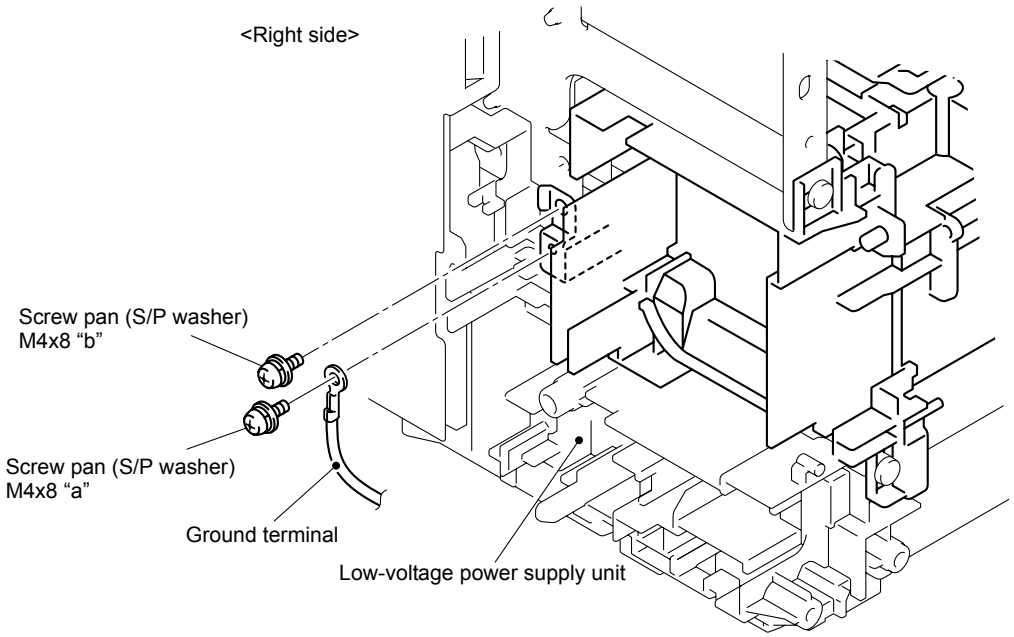

Fig. 3-269

Assembling Note:
When assembling the screws of the Screw pan (S/P washer) M4x8, be sure to assemble the screw “b” first and then screw “a”.

(5) Remove the two Taptite cup S M3x8 screws and two Taptite cup B M3x12 screws to remove the Low-voltage power supply unit from the Base frame unit.

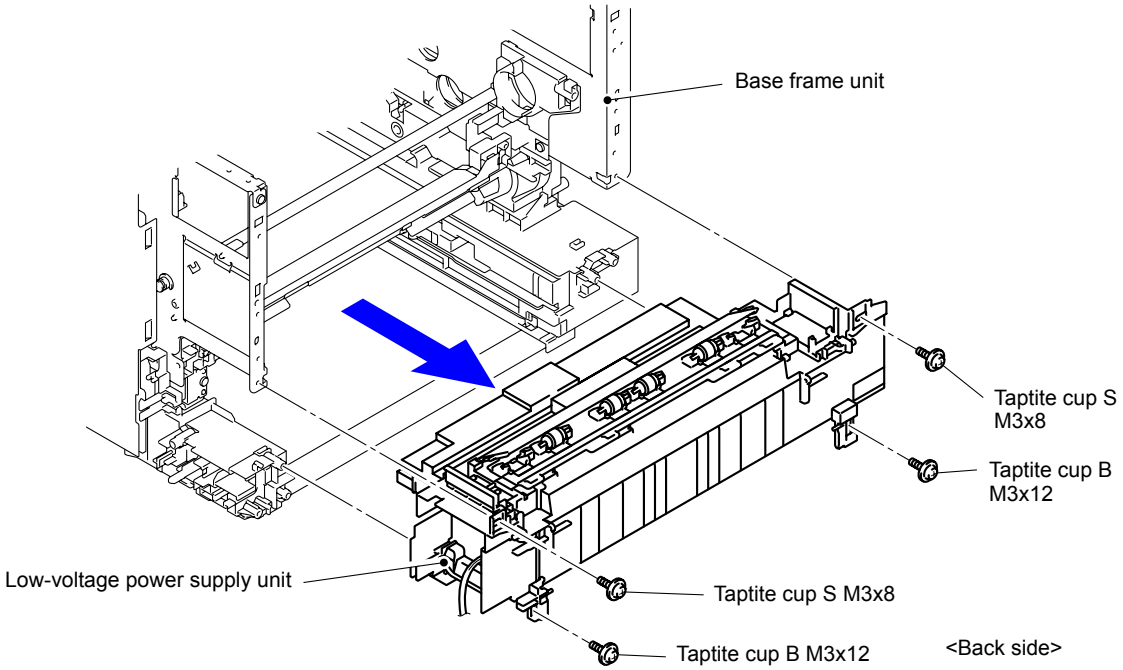

Fig. 3-270

Harness routing: Refer to " 7 Low-voltage Power Supply PCB ASSY"

9.68 Paper Eject Sensor PCB ASSY

(1) Release the Hook to remove the Paper eject sensor PCB ASSY from the Low-voltage power supply cover.

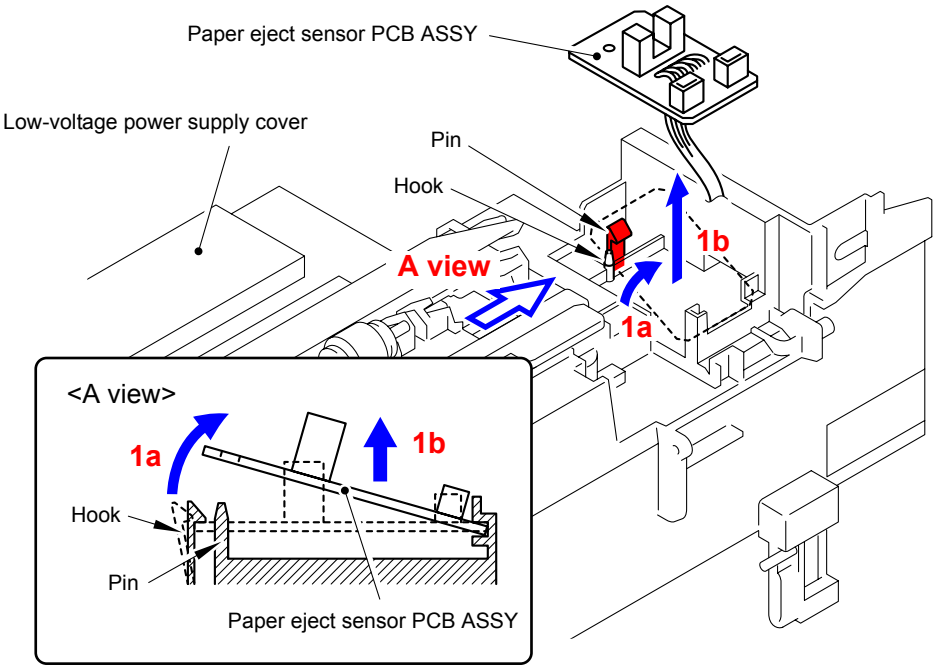

Fig. 3-271

Harness routing: Refer to " 7 Low-voltage Power Supply PCB ASSY"

9.69 Low-voltage Power Supply PCB ASSY/ Inlet Harness ASSY

(1) Disconnect the Harness from Hooks.

(2) Remove the four Taptite pan (washer) B M4x12DA screws, one Screw pan (S/P washer) M4x8 screw, and the Low-voltage power supply ground plate, and then remove the Low-voltage power supply plate from the Low-voltage power supply cover.

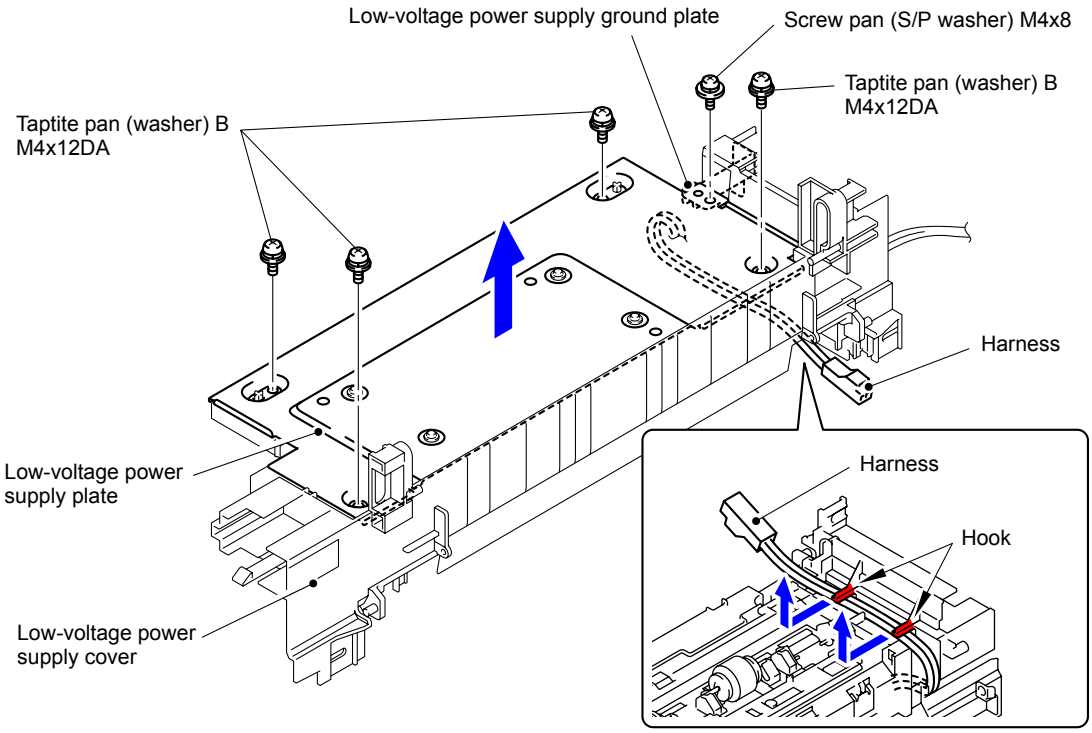

Fig. 3-272

(3) Disconnect the Connector (CN1) to remove the Inlet harness ASSY from the Low-voltage power supply PCB ASSY.

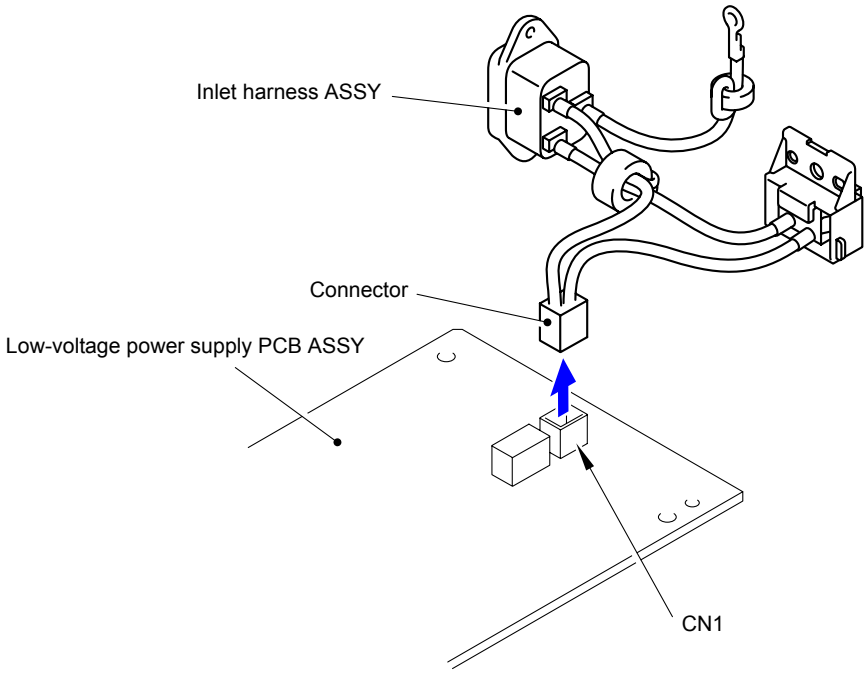

Fig. 3-273

(4) Disconnect the Connector (CN2) from the Low-voltage power supply PCB ASSY.

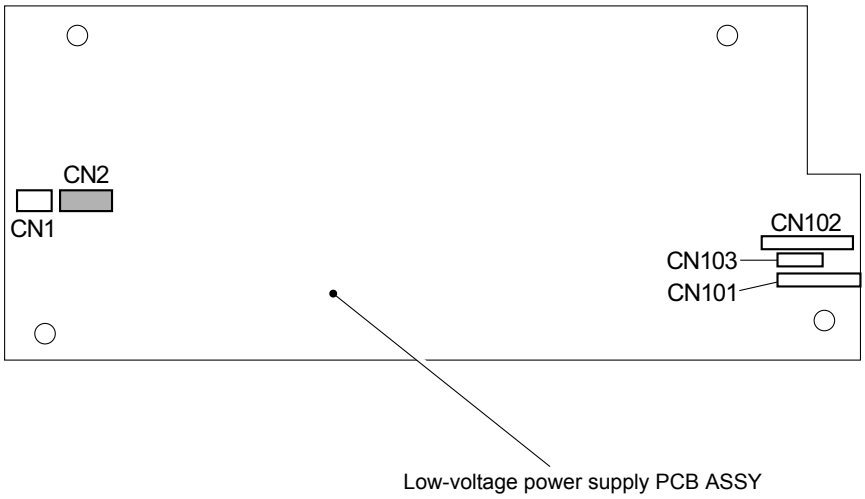

Fig. 3-274

(5) Release the two Hooks to remove the Power switch from the Power switch holder.

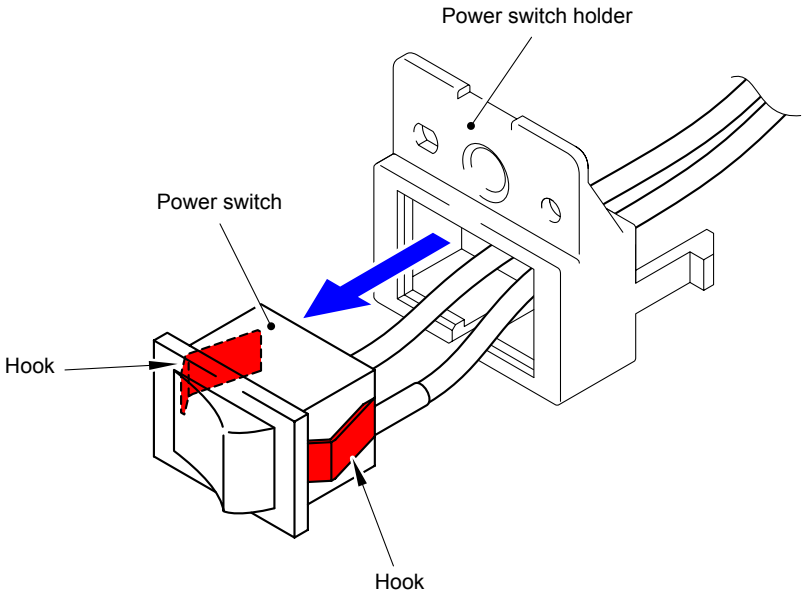

Fig. 3-275

(6) Remove the four Screw cup M3x6 screws to remove the Low-voltage power supply PCB ASSY from the Low-voltage power supply plate.

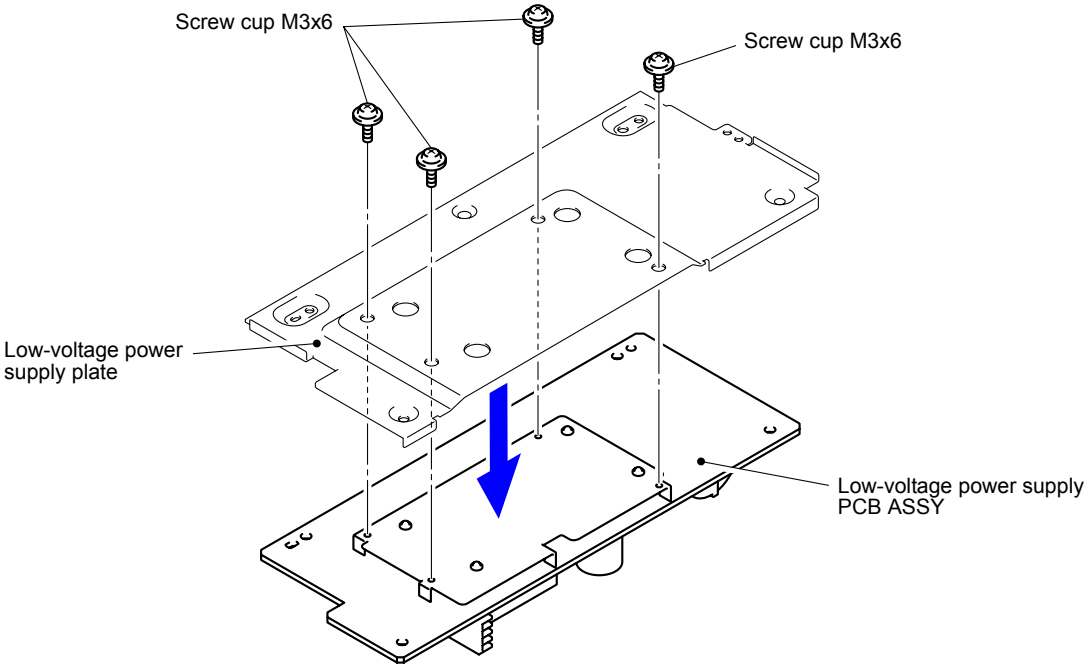

Fig. 3-276

9.70 Cleaner Pinch Roller Holder

(1) Remove the two Pins and release the one Hook to remove the Front chute flapper and two Flapper springs from the Low-voltage power supply unit.

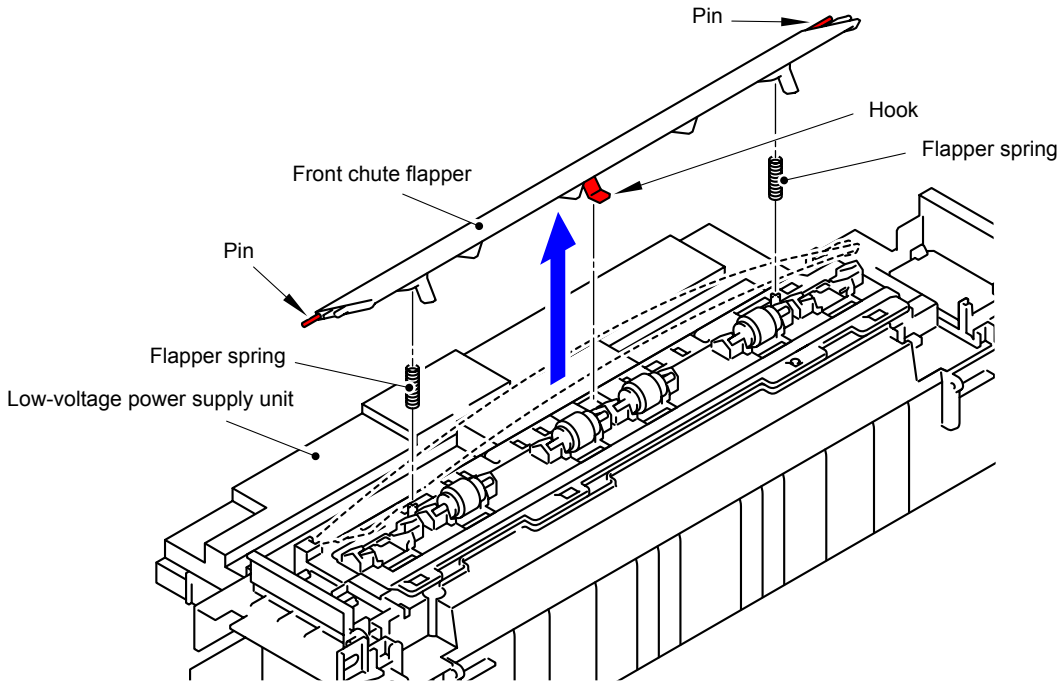

Fig. 3-277

(2) Press the stopper, and then slide the Cleaner pinch roller to remove it from the Low-voltage power supply unit.

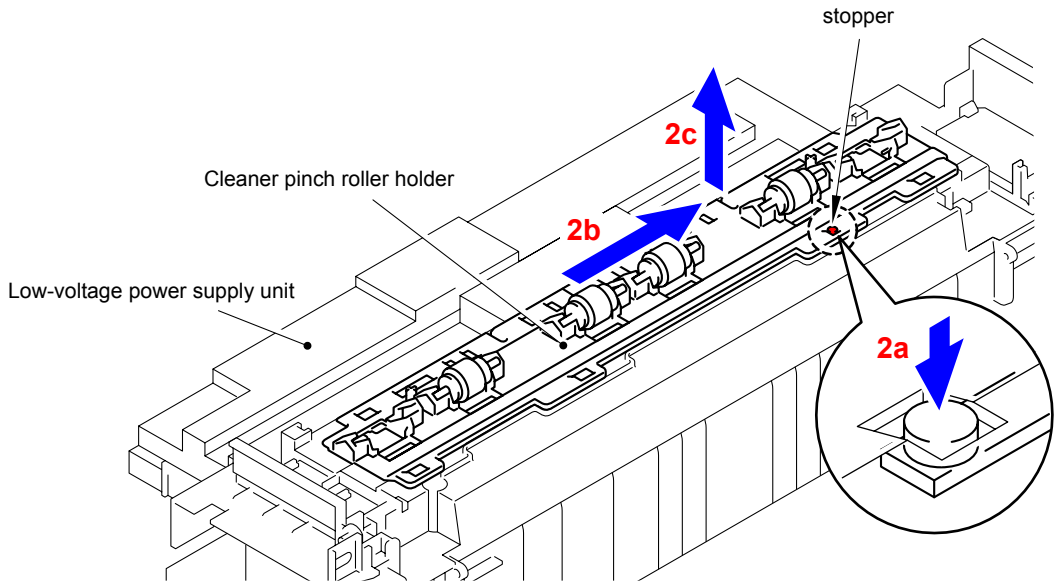

Fig. 3-278

(3) Hold down the Cleaner spring of the Cleaner pinch roller holder to remove the Cleaner pinch roller ASSY.

(4) Remove the other three Cleaner pinch roller ASSY in the same way.

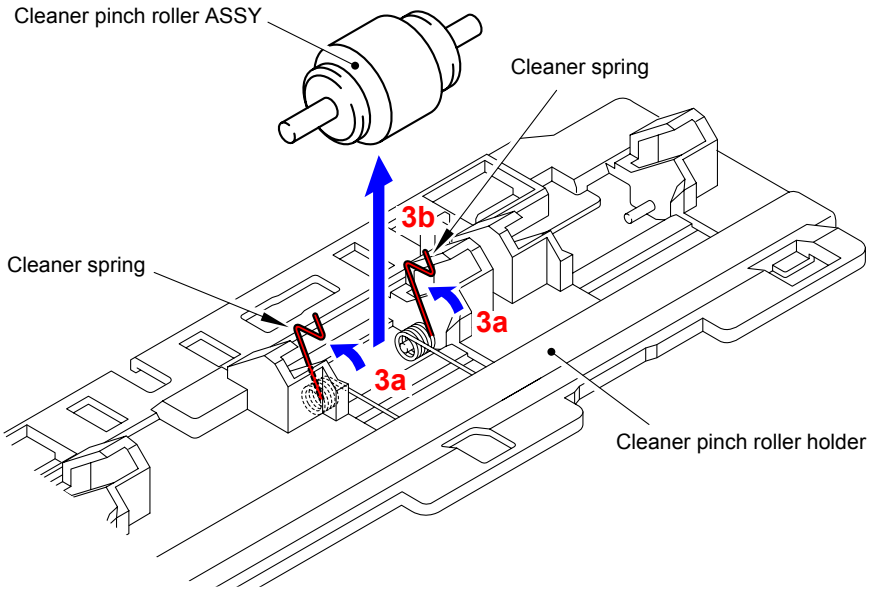

Fig. 3-279

9.71 Registration Mark Sensor Holder ASSY/ Shutter Solenoid

(1) Disconnect the Connector (CN8) from the High-voltage power supply PCB ASSY.

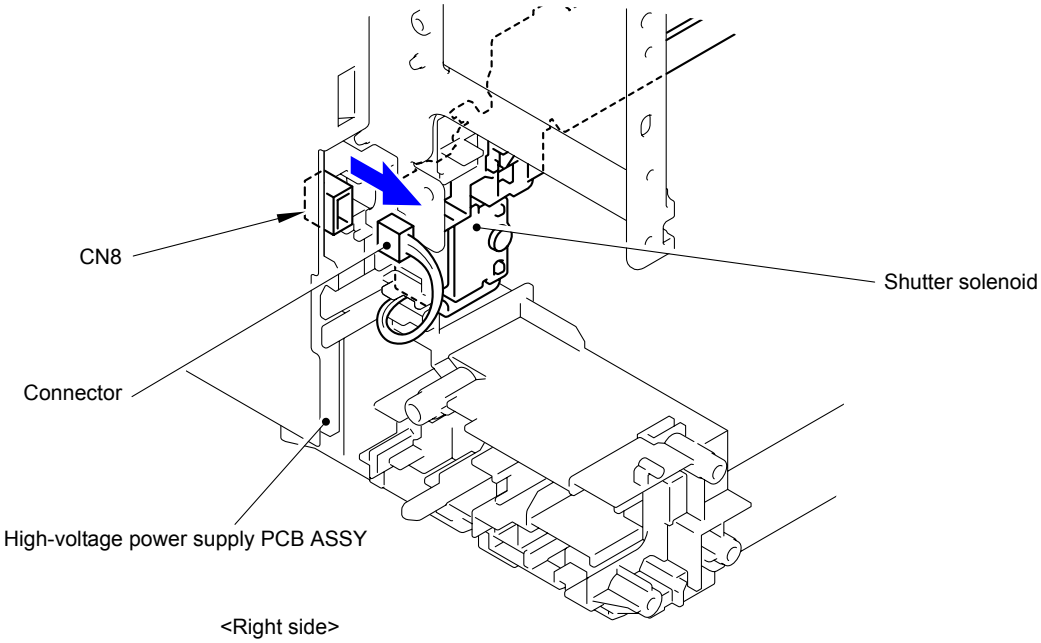

Fig. 3-280

(2) Remove the Core from the Harness of the Registration mark R PCB and Belt temperature sensor.

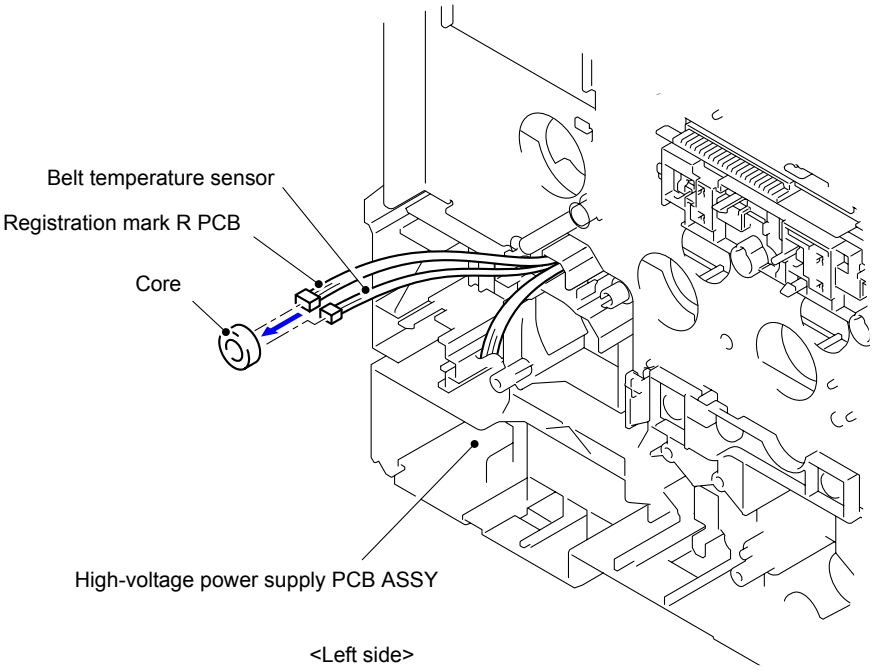

Fig. 3-281

(3) Remove the two Taptite bind B M3x10 screws to remove the Registration mark sensor holder ASSY from the Base frame unit.

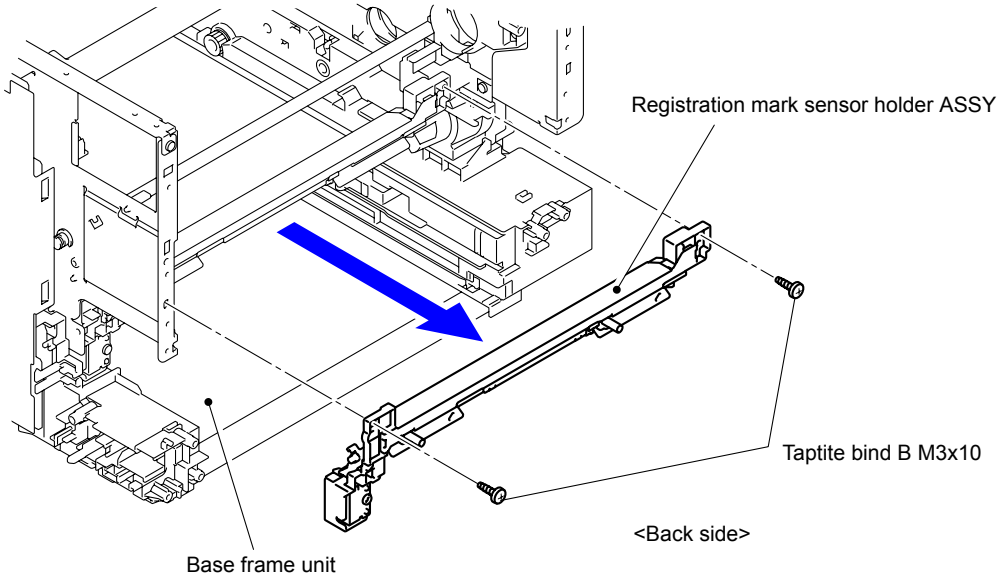

Fig. 3-282

(4) Remove the Taptite bind B M3x10 screw to remove the Shutter solenoid from the Registration mark sensor holder ASSY.

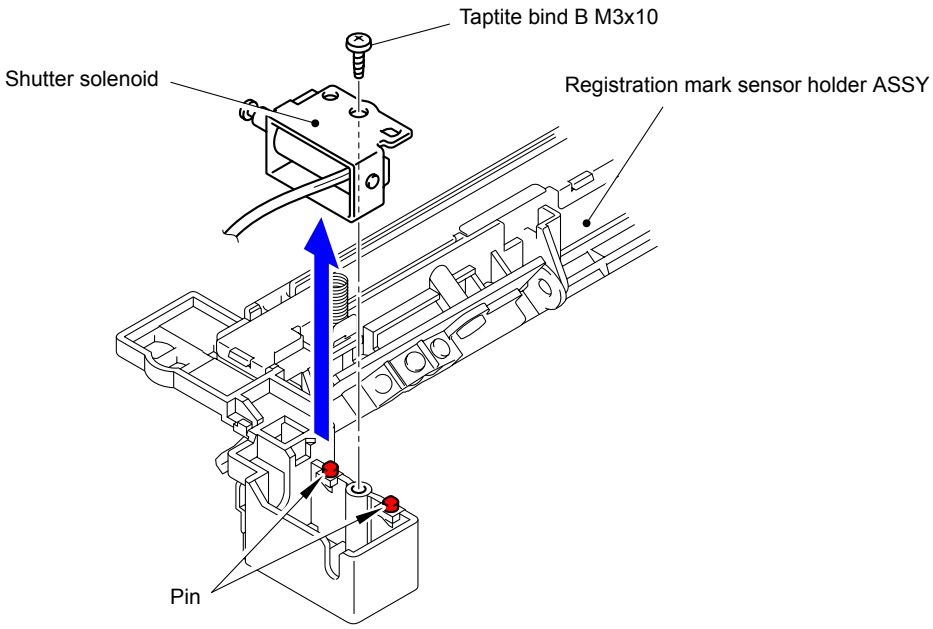

Fig. 3-283

Assembling Note:

Be sure to firmly insert the tip of the Pin of the Shutter solenoid into "A" of the Registration mark sensor shutter.

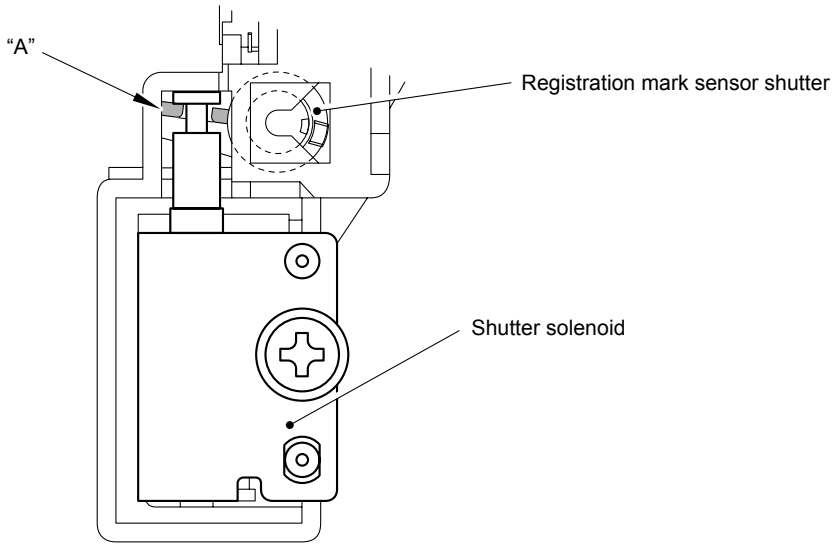

Fig. 3-284

Harness routing: Refer to " 9 Registration Mark Sensor Holder ASSY"

9.72 MP Paper Empty/Registration Front Sensor PCB ASSY

(1) Press "A" to release the Hook and then remove the MP upper frame cover from the MP upper cover ASSY.

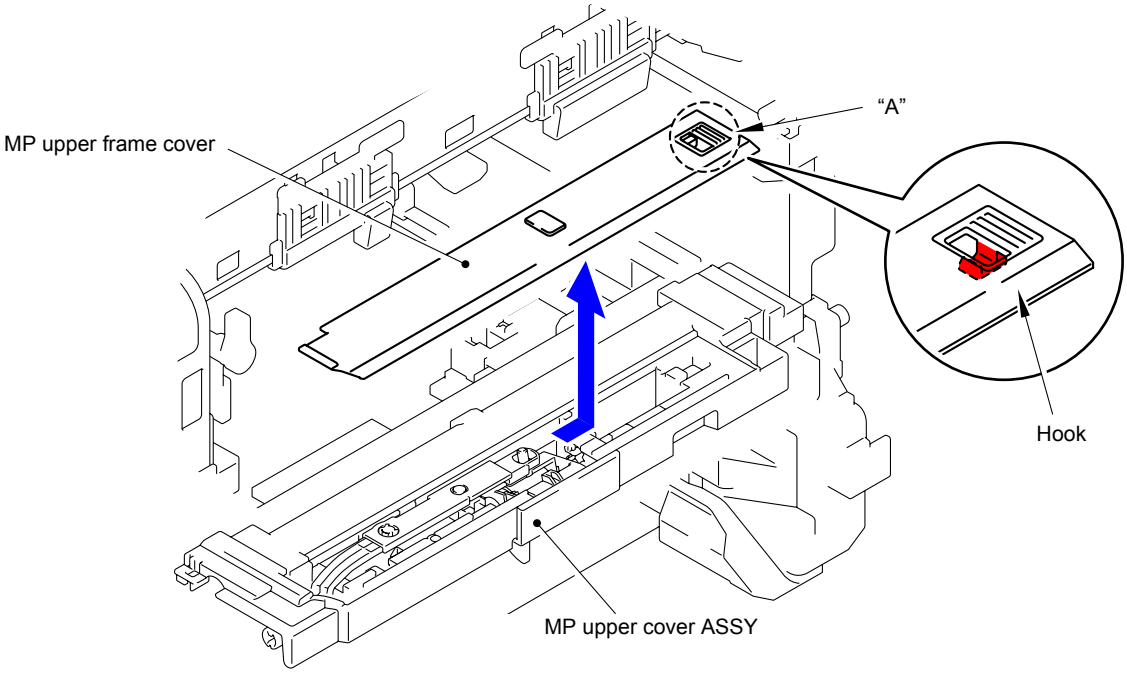

Fig. 3-285

(2) Remove the MP lift arm B from the MP upper cover ASSY.

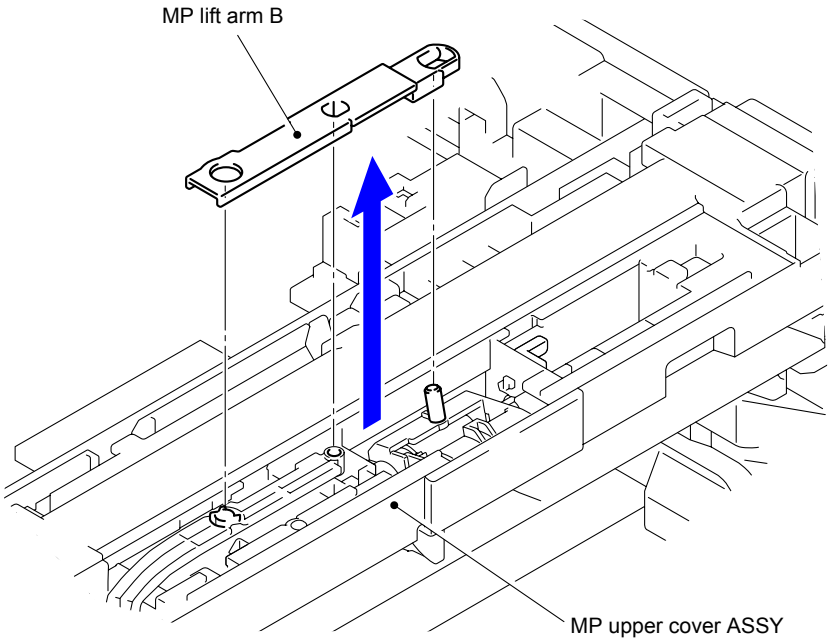

Fig. 3-286

(3) Release the Hook to remove the MP holder bush from the MP upper cover ASSY.

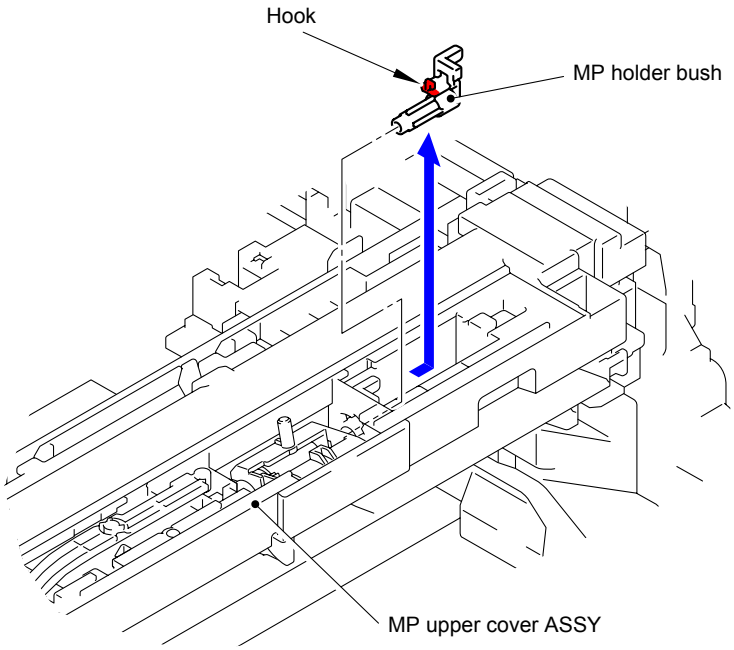

Fig. 3-287

(4) Remove the MP roller holder ASSY from the MP upper cover ASSY.

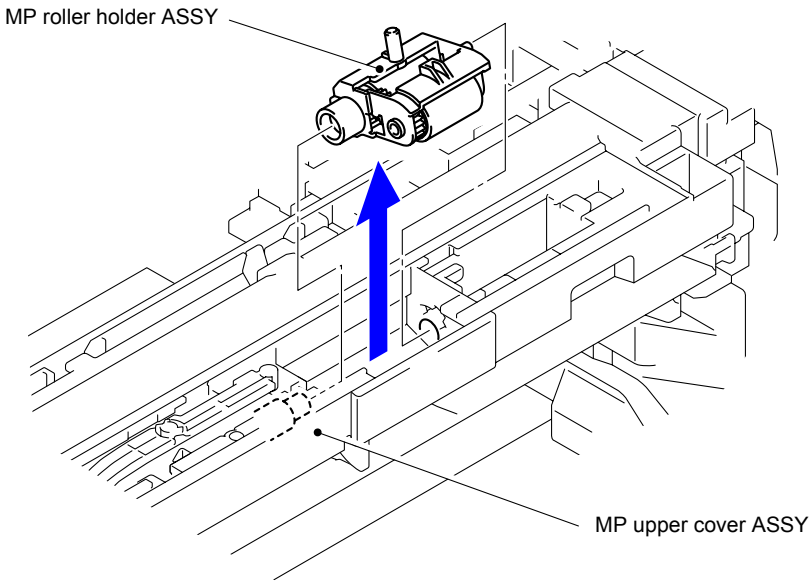

Fig. 3-288

(5) Remove the Registration gear from the Base frame unit.

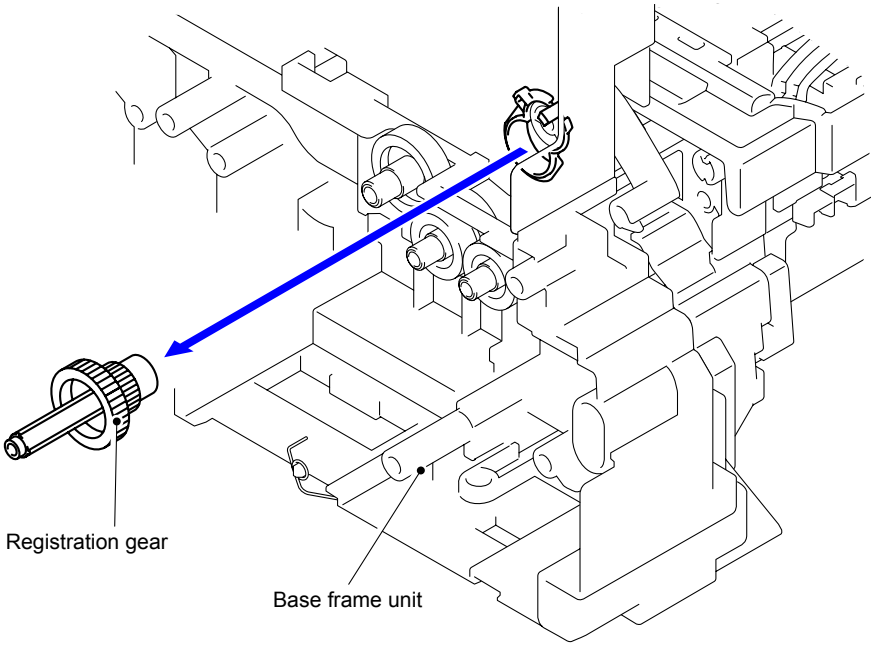

Fig. 3-289

Gear position: Refer to "■ PF ASSY."

(6) Remove the Pinch roller drive gear from the Base frame unit.

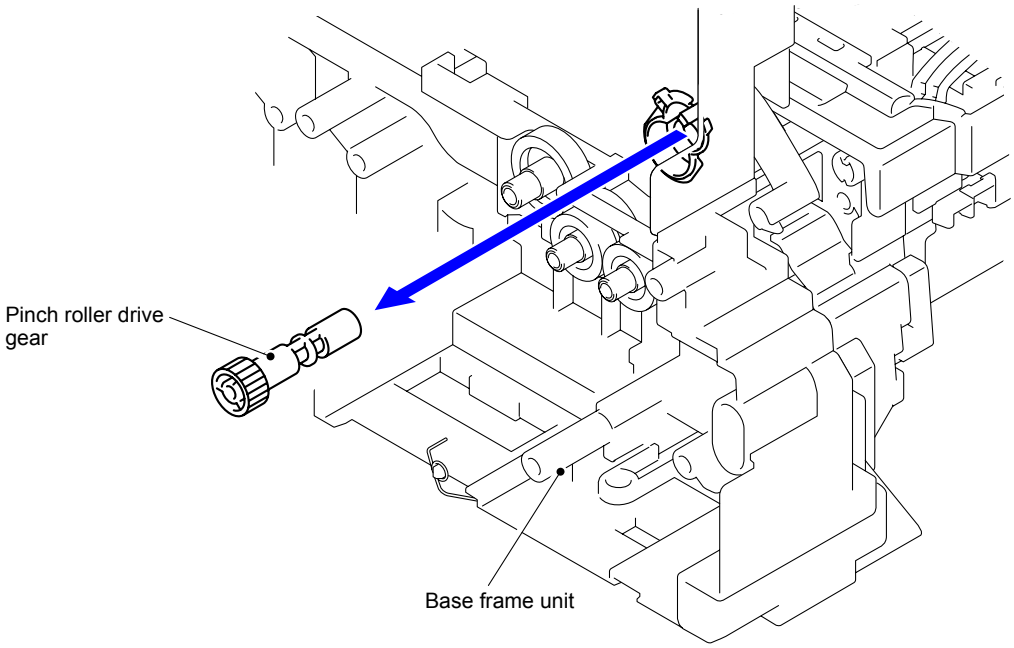

Fig. 3-290

Gear position: Refer to "■ PF ASSY."

(7) Release the Hook to remove the Registration/Pinch roller gear bush from the Base frame unit.

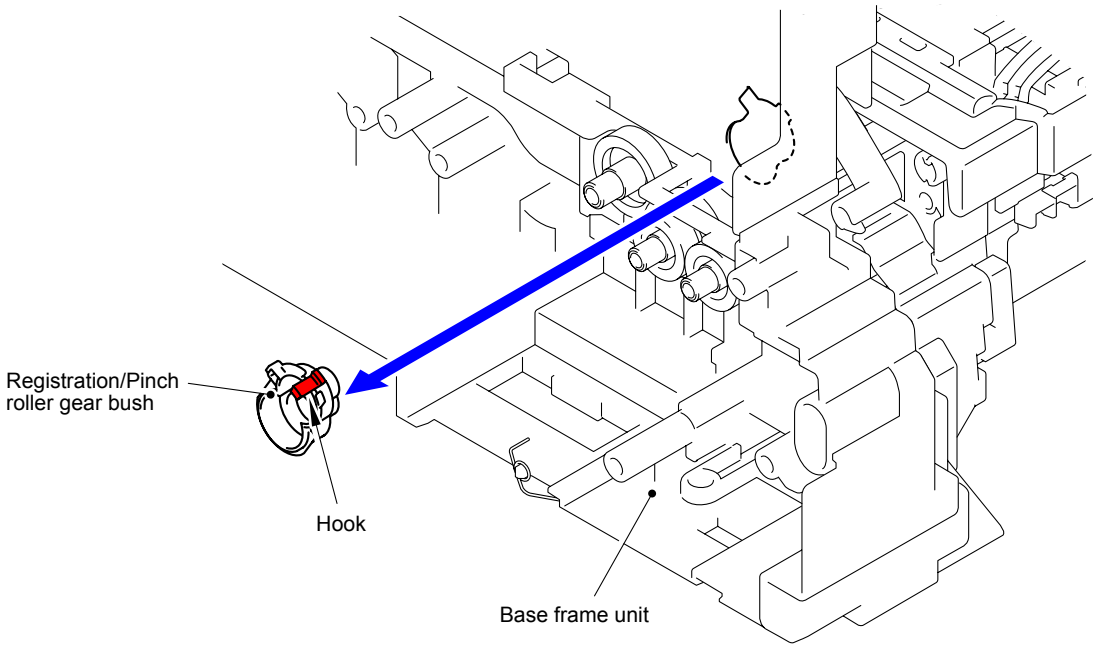

Fig. 3-291

Gear position: Refer to "■ PF ASSY."

(8) Remove the two Taptite bind B M3x10 screws. Slide the MP drive shaft as shown in the figure. Remove the MP upper cover ASSY from the PF ASSY.

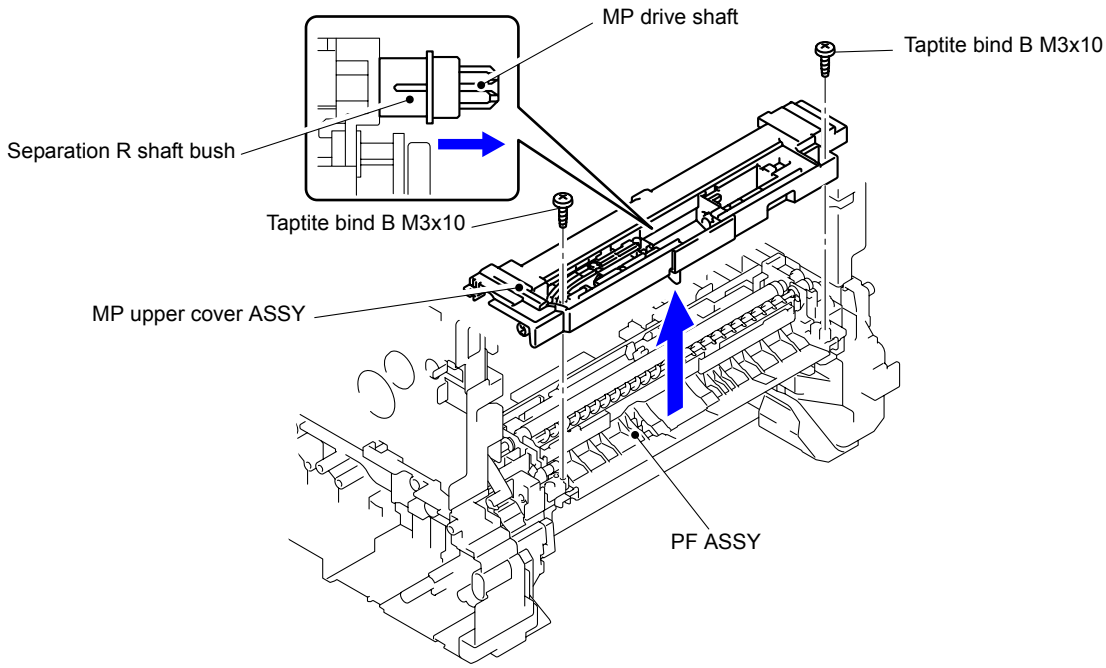

Fig. 3-292

(9) Release the five Hooks to remove the Sensor cover MP from the MP upper cover ASSY.

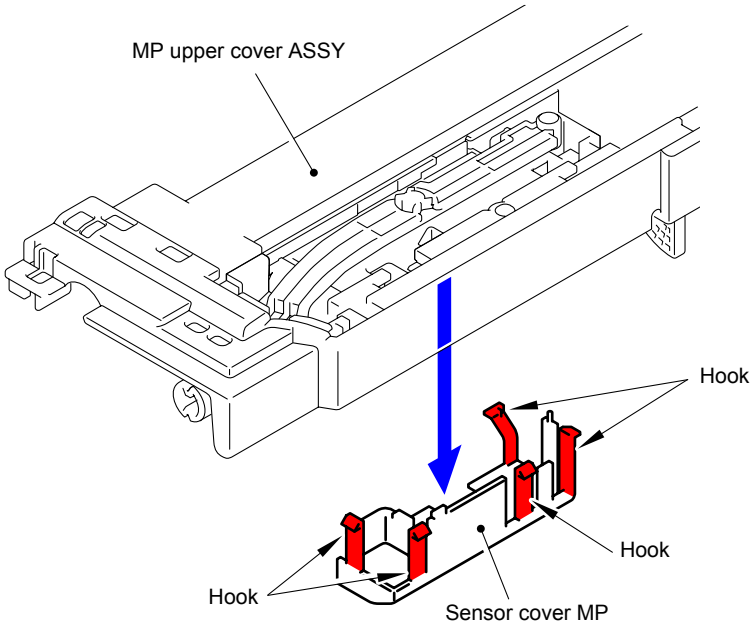

Fig. 3-293

(10) Release the two Hooks to remove the MP paper empty actuator A ASSY from the MP upper cover ASSY.

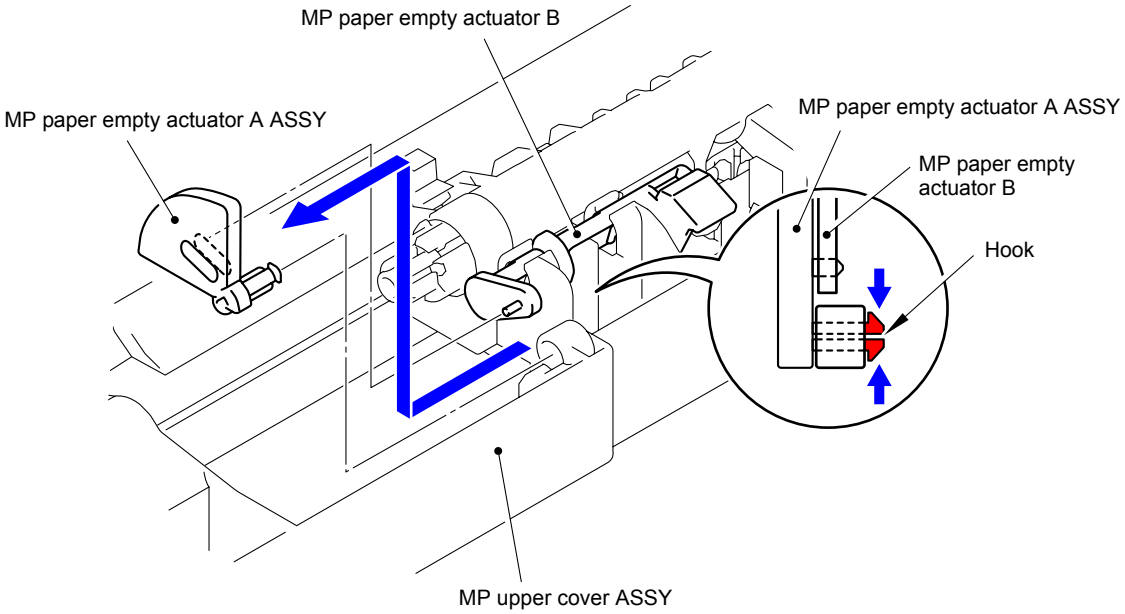

Fig. 3-294

(11) Release the Hook to remove the MP paper empty actuator B from the MP upper cover ASSY.

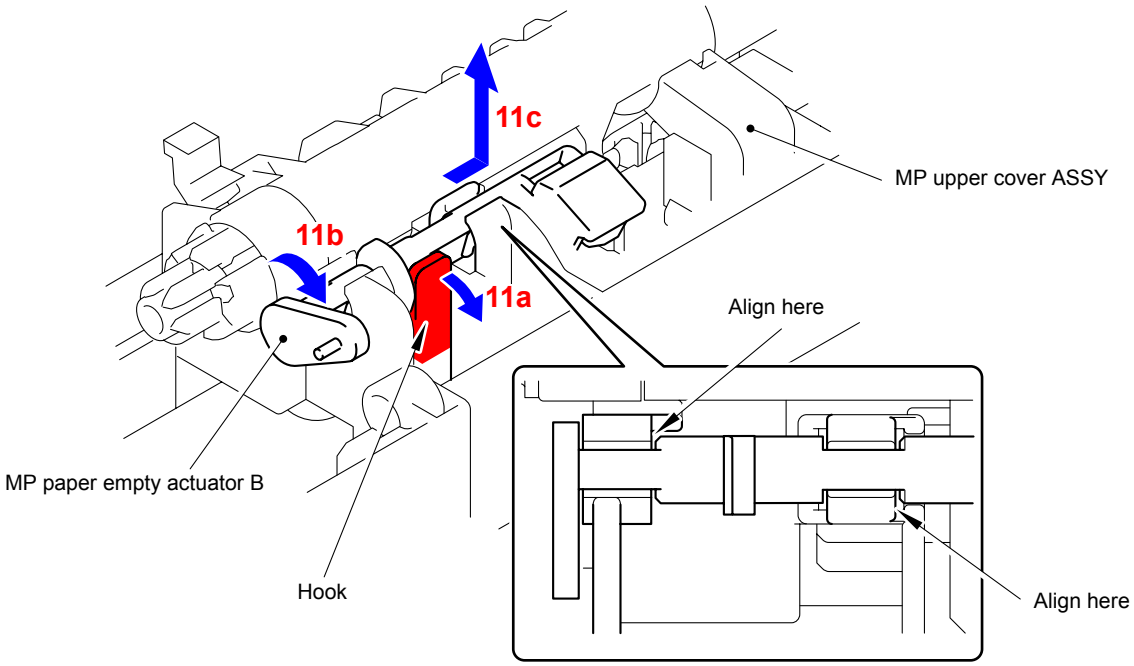

Fig. 3-295

(12) Release the Hook to remove the Separation R shaft bush from the MP drive shaft.

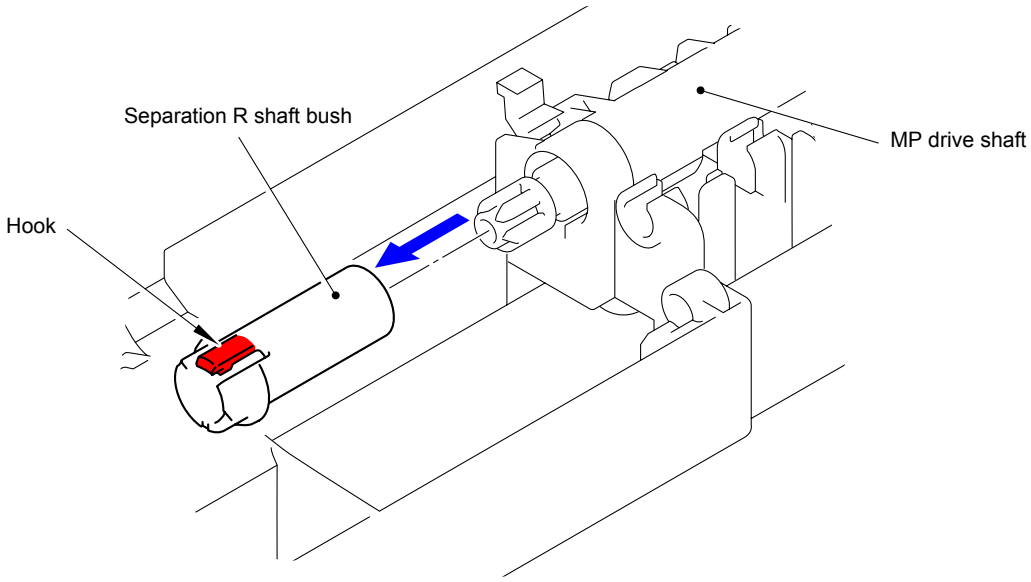

Fig. 3-296

(13) Remove the MP registration front actuator spring from the MP registration front actuator.

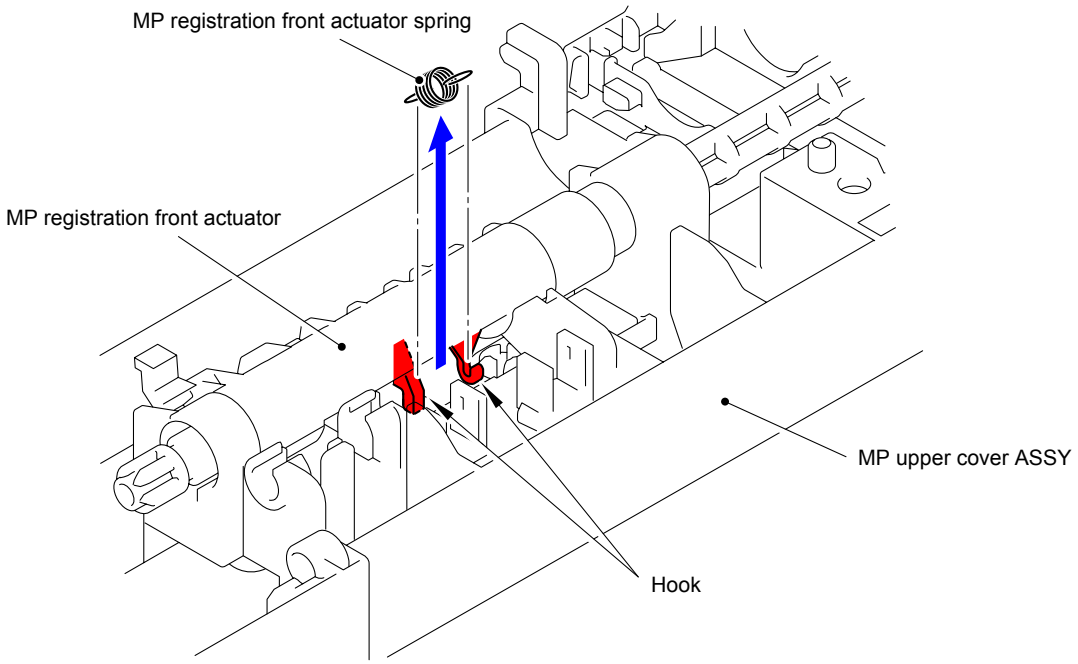

Fig. 3-297

(14) Take out the MP drive shaft, and then remove the MP registration actuator front from the MP upper cover ASSY.

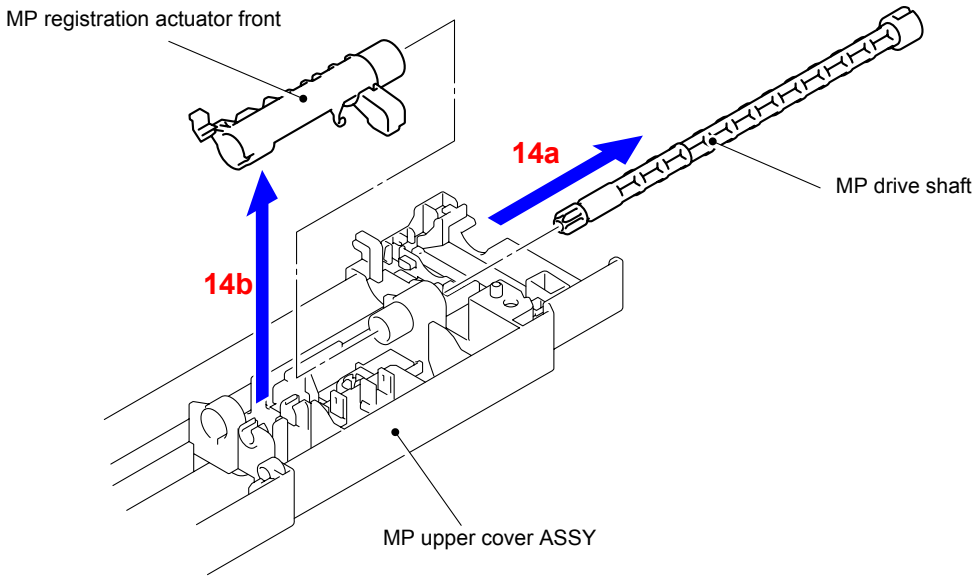

Fig. 3-298

(15) Disconnect the wiring of the MP paper empty/registration front sensor PCB ASSY.

(16) Remove the Taptite bind B M3x8 screw, and then remove the MP paper empty/registration front sensor PCB ASSY from the MP upper cover ASSY.

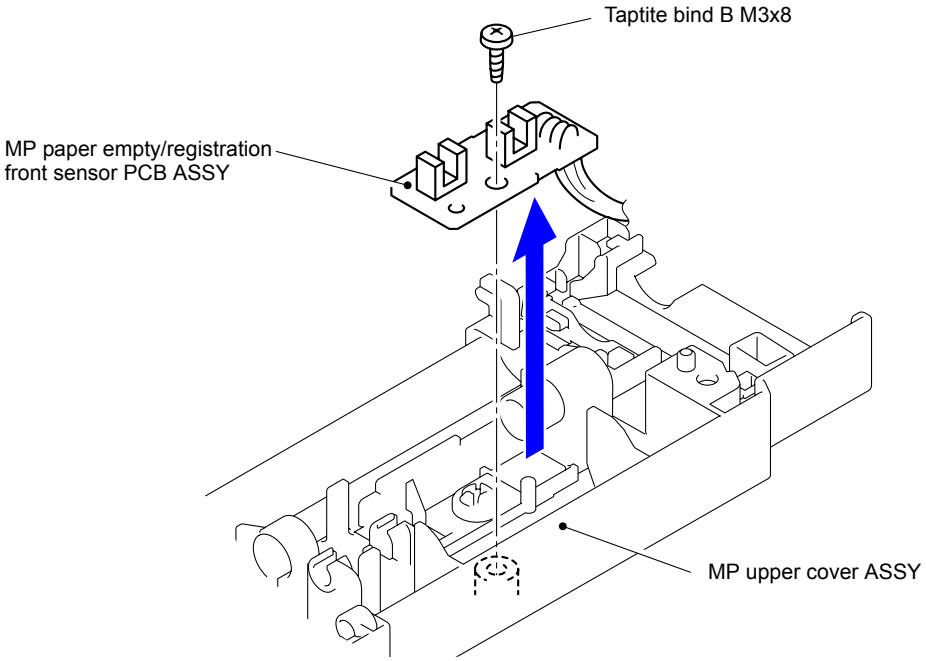

Fig. 3-299

Harness routing: Refer to " 10 MP Paper Empty/Registration Front Sensor PCB ASSY"

9.73 PF ASSY

(1) Push the T1 lift arm to the back to remove “B” of the Roller holder ASSY from “A” of the T1 lift arm.

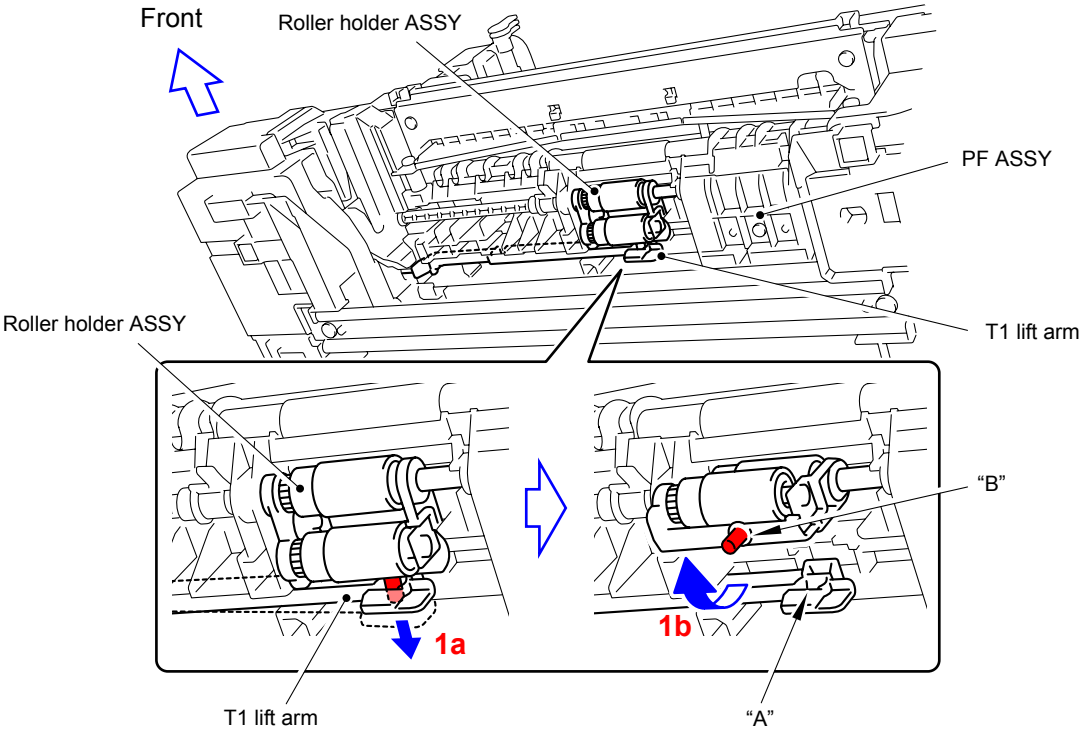

Fig. 3-300

(2) Slide the Roller holder ASSY in the direction of the arrow 2 to remove it from the “C” of the PF ASSY.

(3) Slide the Roller holder ASSY in the direction of the arrow 3a and 3b in this order to remove it.

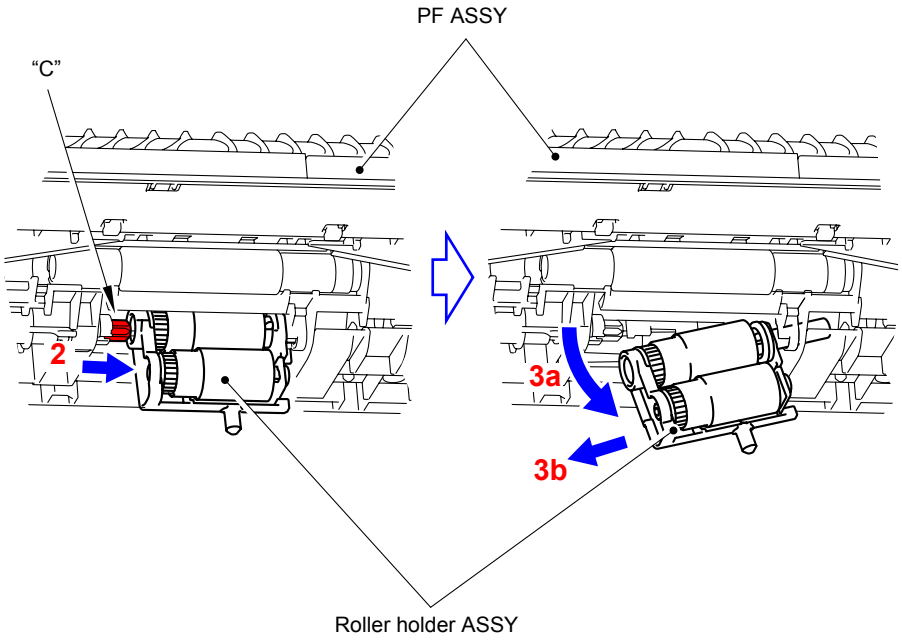

Fig. 3-301

Assembling Note:

Align the Shaft of the roller holder ASSY to the hole of the PF ASSY and insert it into the hole.

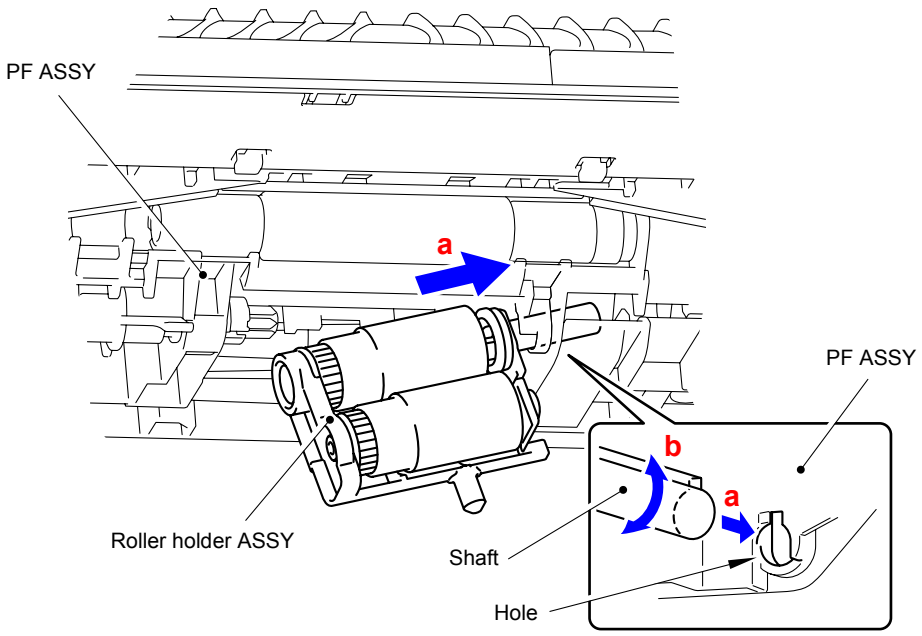

Fig. 3-302

(4) Move the T1 lift arm in the direction of the arrow 4b as bending it in the direction of the arrow 4a to remove it from the Boss of the PF ASSY.

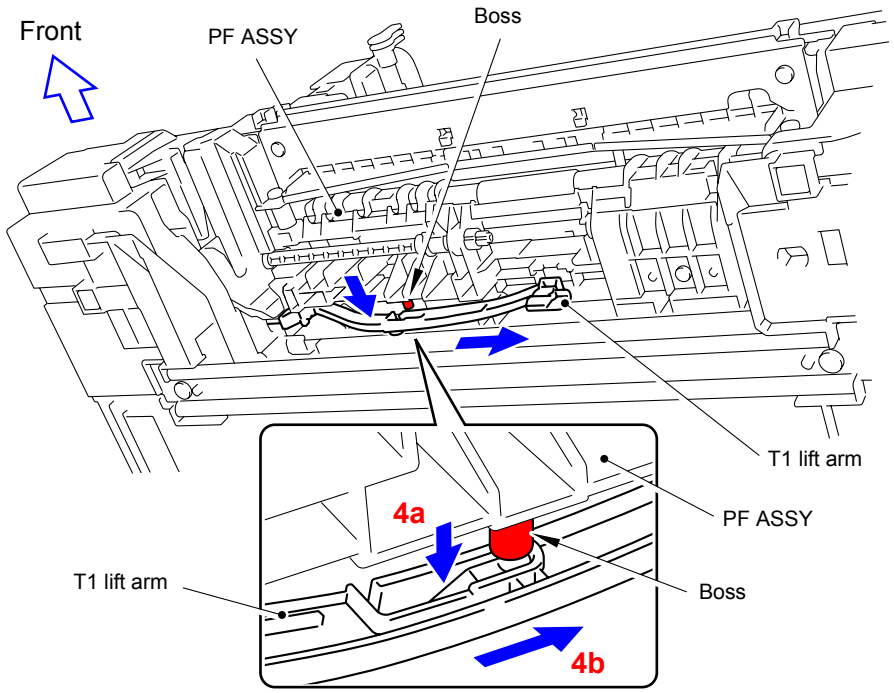

Fig. 3-303

Harness rou

9.74 T1 Registration Front/Rear Sensor PCB ASSY

(1) Disconnect the wiring of the T1 registration front/rear sensor PCB ASSY.

(2) Remove the Taptite bind B M3x10 screw to remove the T1 registration front/rear sensor PCB holder from the PF ASSY.

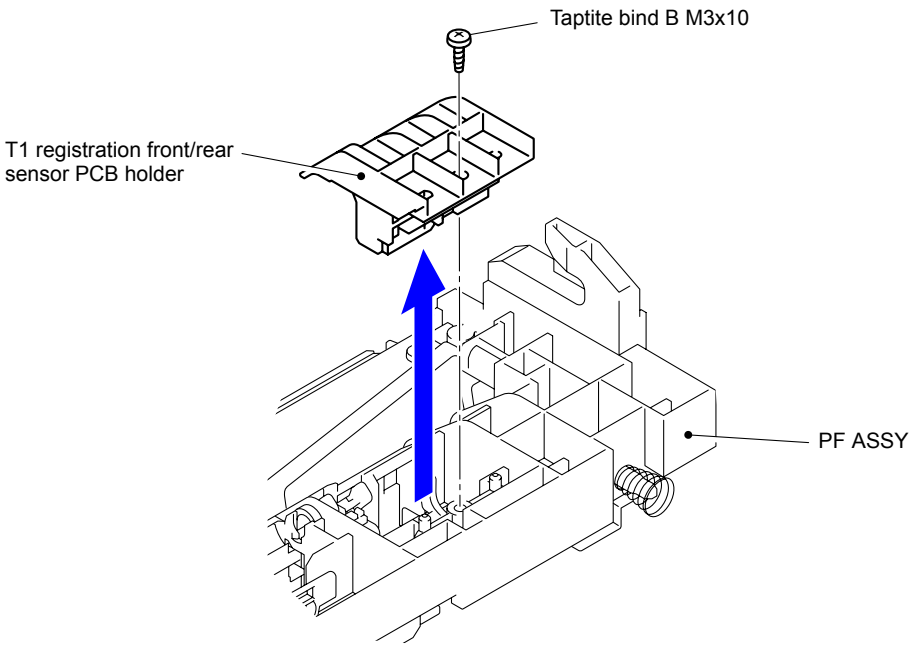

Fig. 3-305

(3) Release the three Hooks to remove the T1 registration front/rear sensor PCB ASSY from the T1 registration front/rear sensor PCB holder.

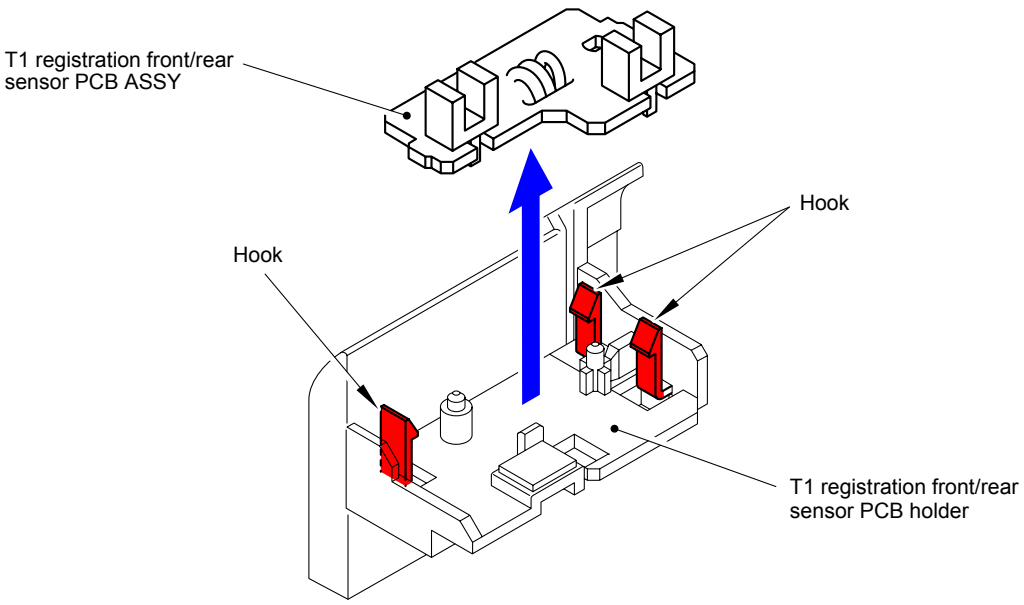

Fig. 3-306

Harness routing: Refer to " 11 PF ASSY"

9.75 MP Sector Solenoid

(1) Disconnect the wiring of the MP sector solenoid.

(2) Remove the Taptite bind B M3x8 screw. Remove the MP sector solenoid and Solenoid spring MP from the PF ASSY.

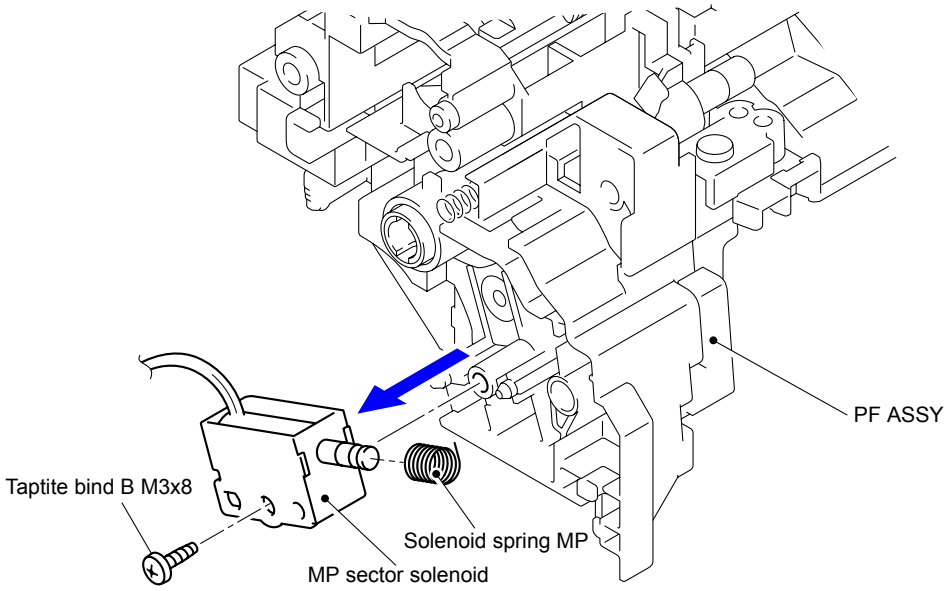

Fig. 3-307

Assembling Note:
When assembling the MP sector solenoid, be sure to assemble it as shown in the figure below.

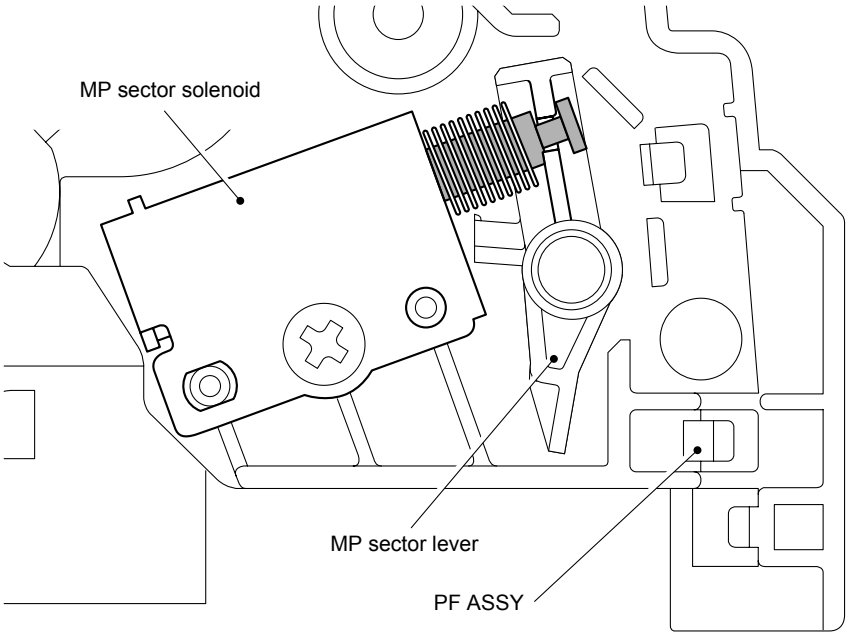

Fig. 3-308

Harness routing: Refer to " 11 PF ASSY"

9.76 T1 Paper Edge Sensor PCB ASSY/ T1 Paper Edge Actuator/ T1 Paper Edge Actuator Spring

(1) Remove the three Taptite bind B M3x10 screws from the MP drive frame.

(2) Remove “A” of the Registration roller ground wire.

(3) Remove the MP drive frame from the PF ASSY.

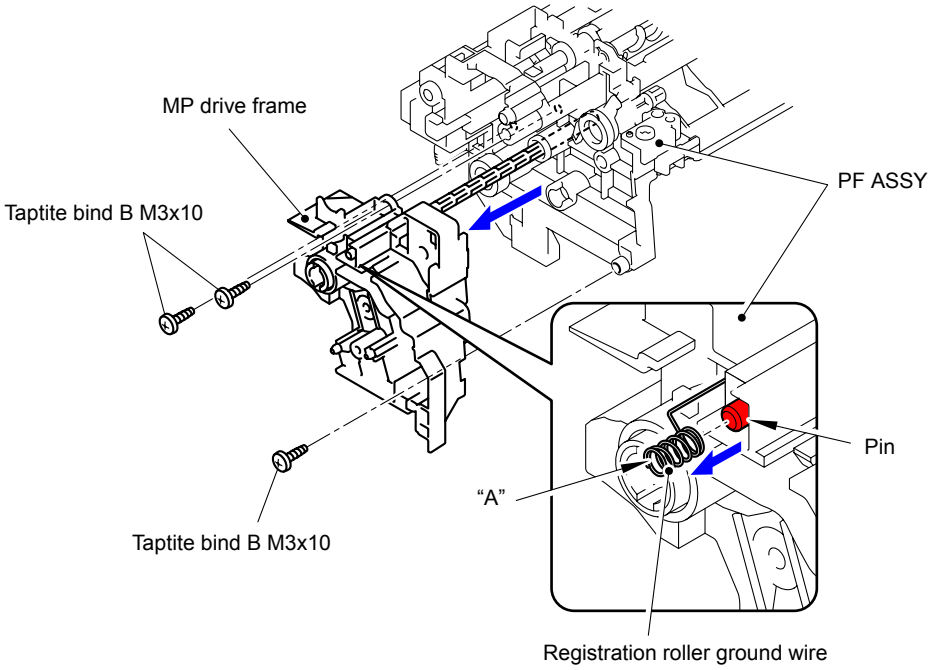

Fig. 3-309

(4) Release the Hook to remove the Separation R shaft bush from the T1 drive shaft gear Z17M07.

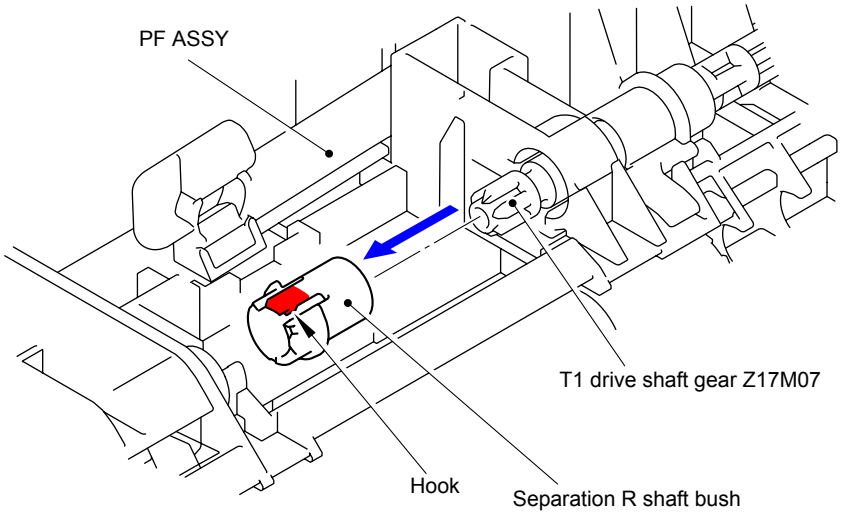

Fig. 3-310

(5) Remove the T1 paper edge actuator spring from the Hook of the PF ASSY and the Hook of the T1 paper edge actuator.

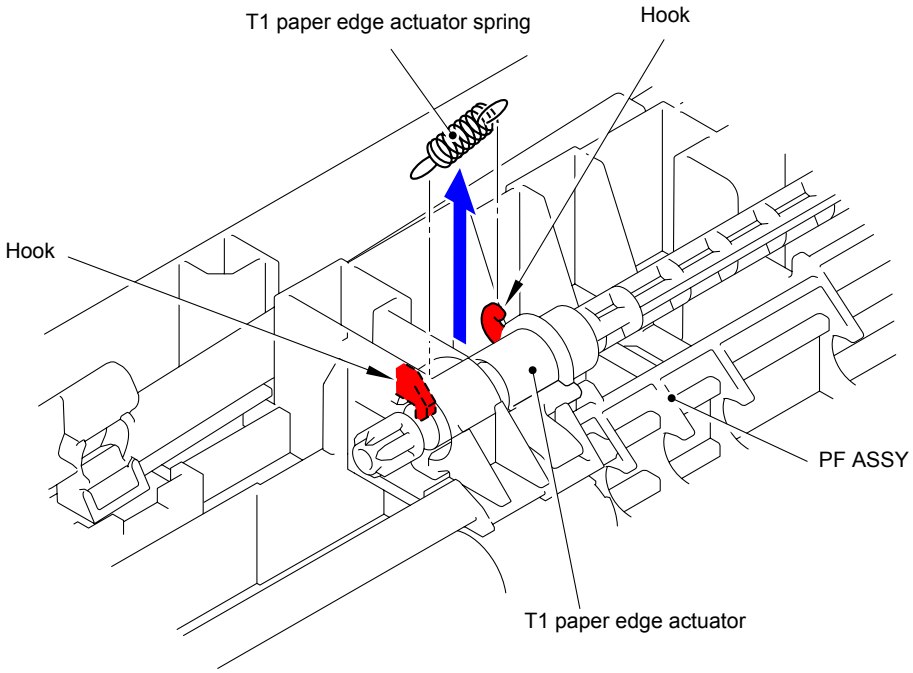

Fig. 3-311

(6) Take out the T1 drive shaft gear Z17M07 from the PF ASSY, and then remove the T1 paper edge actuator.

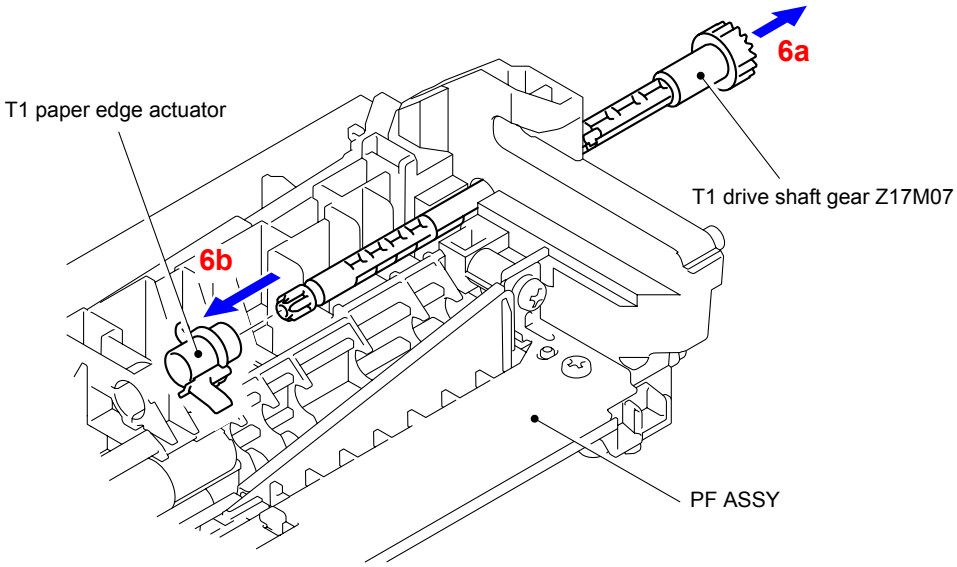

Fig. 3-312

(7) Disconnect the wiring of the T1 paper edge sensor PCB ASSY.

(8) Release the three Hooks to remove the T1 paper edge sensor PCB ASSY from the PF ASSY.

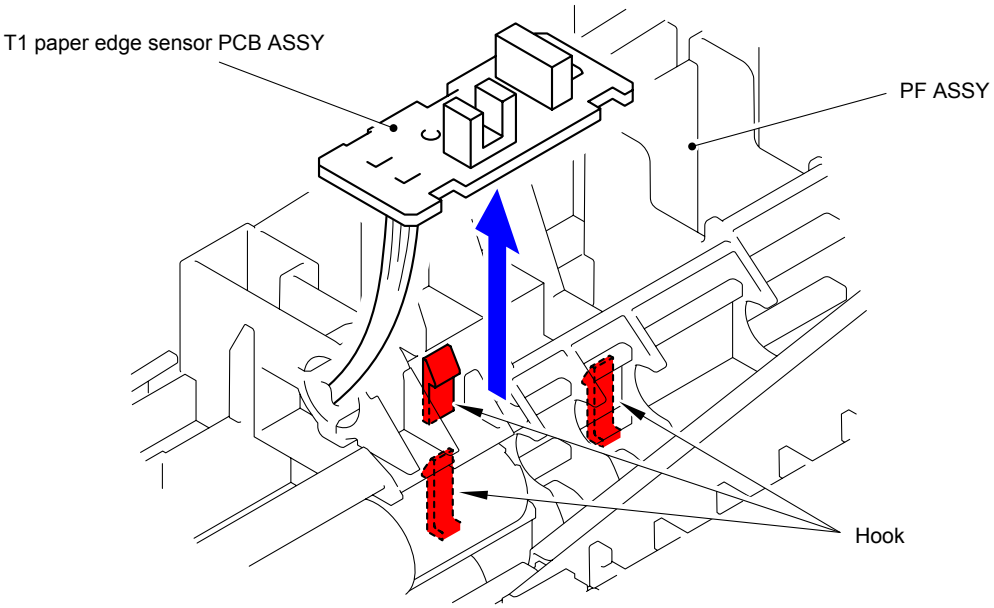

Fig. 3-313

Harness routing: Refer to " 11 PF ASSY"

9.77 Cleaner Drive Gear 15

(1) Press the Hook of the Cleaner drive gear 15, and then remove it from the Main body.

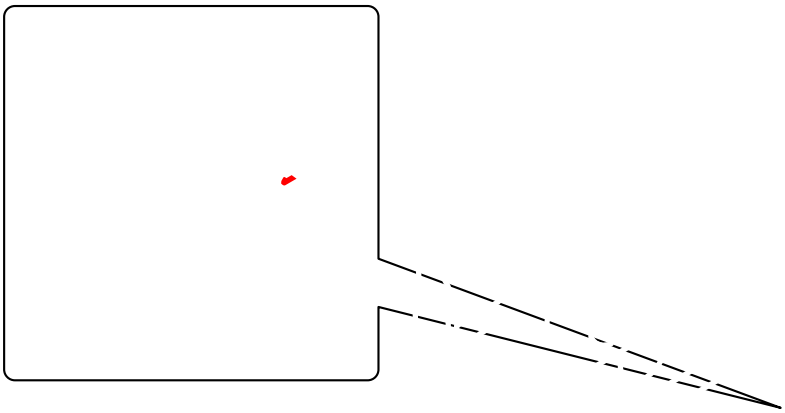

Fig. 3-314

9.78 High-voltage Power Supply PCB ASSY

(1) Remove the High-voltage power supply protect film from the Base frame unit.

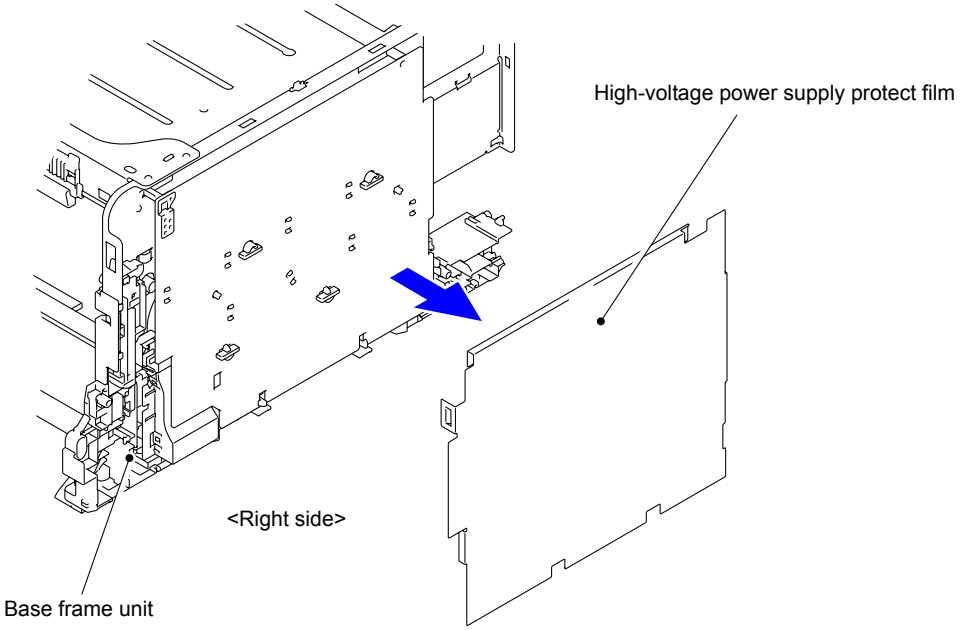

Fig. 3-315

(2) Remove the four Spacers from the Base frame unit.

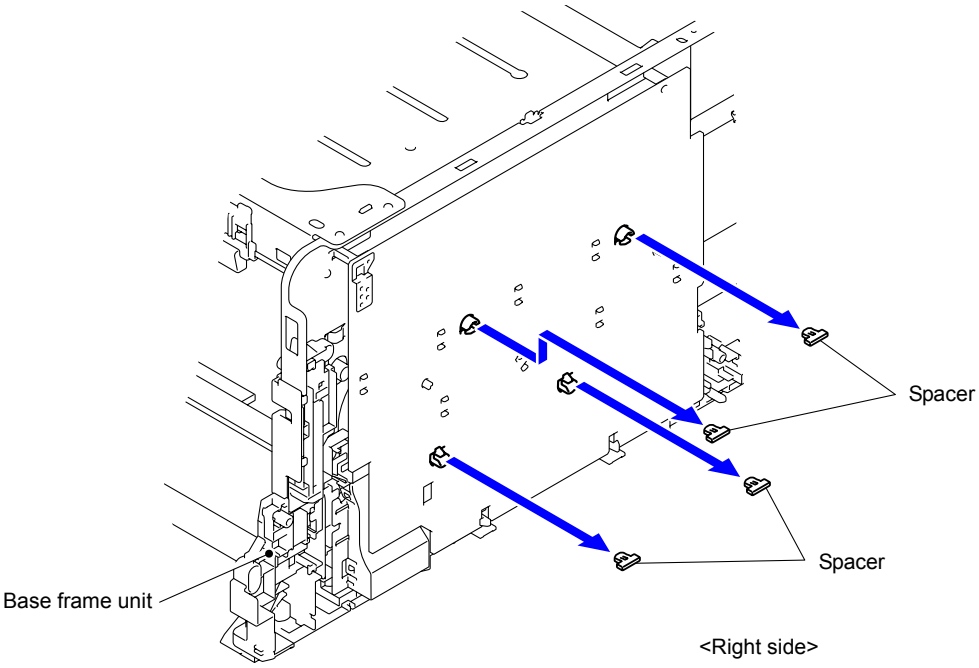

Fig. 3-316

(3) Disconnect the two Connectors (CN1, CN2) from the High-voltage power supply PCB ASSY.

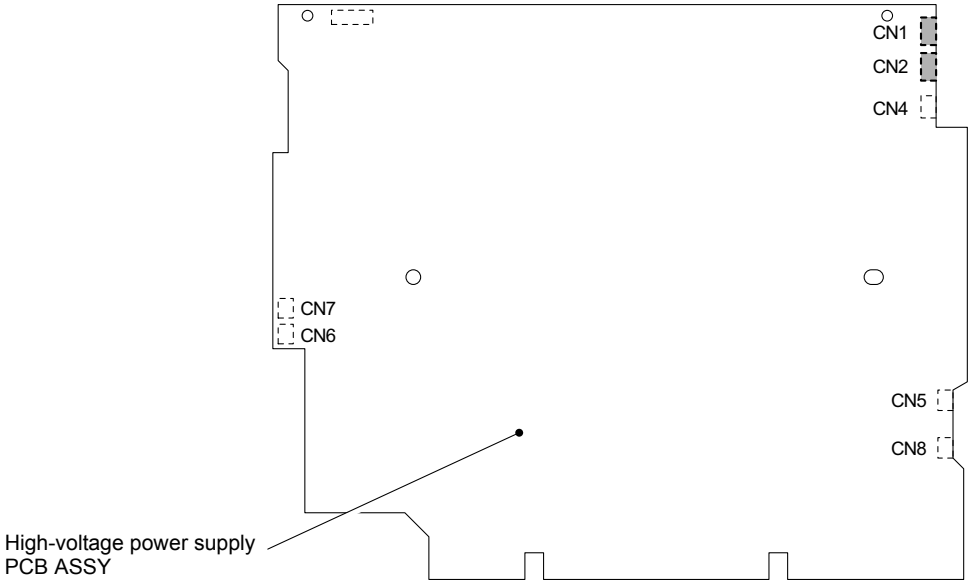

Fig. 3-317

(4) Remove the two Taptite cup S M3x6 SR screws.

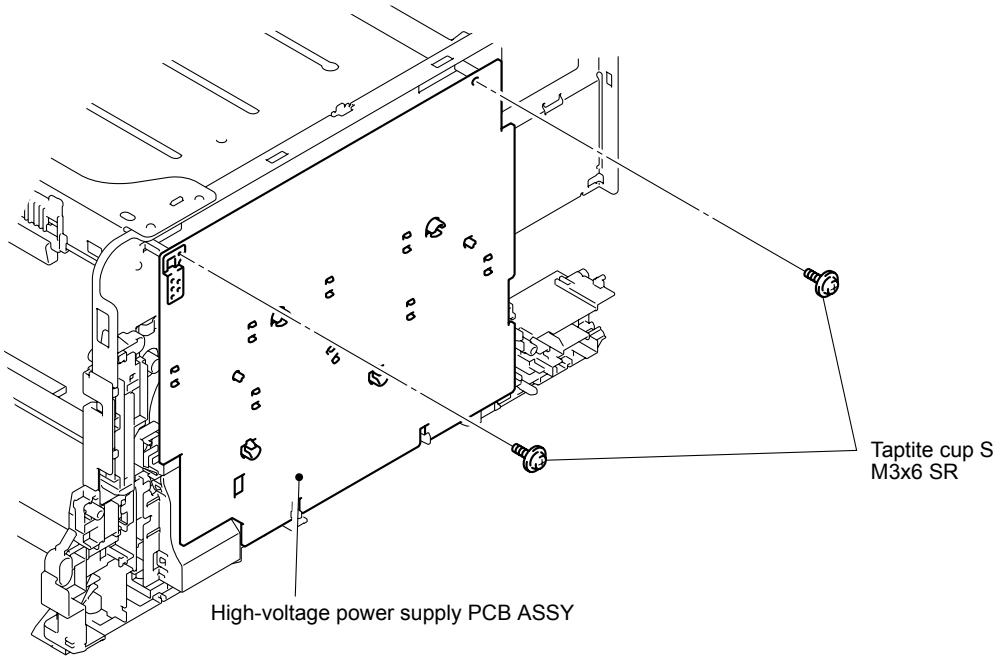

Fig. 3-318

(5) Release the eight Hooks to remove the High-voltage power supply PCB ASSY from the Base frame unit.

(6) Disconnect the two Connectors (CN6, CN7).

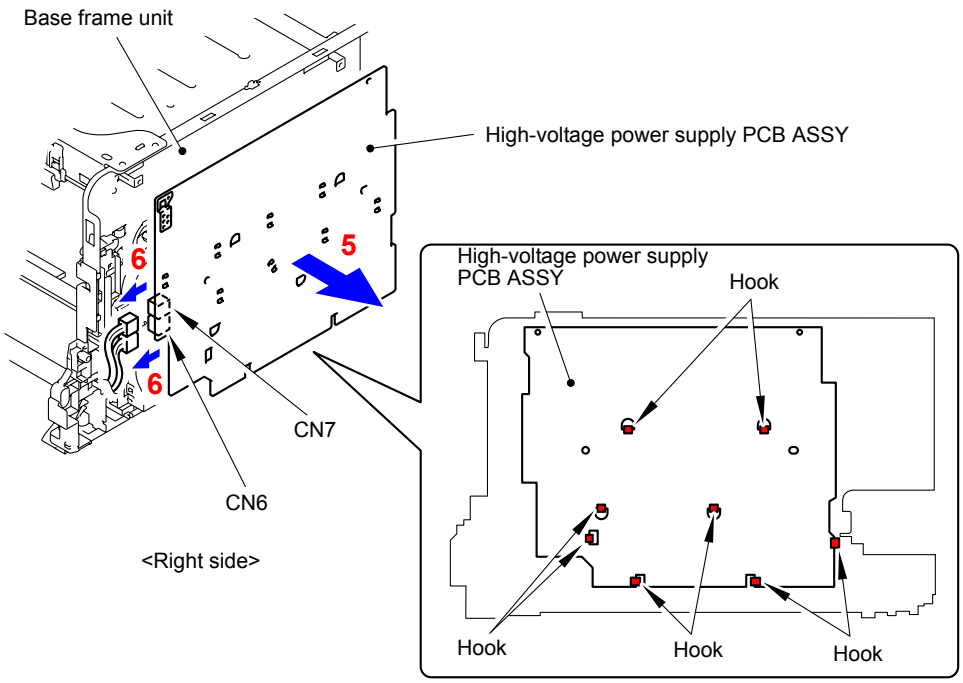

Fig. 3-319

(7) Release the Hook to remove the High-voltage power supply shield ASSY from the High-voltage power supply PCB ASSY.

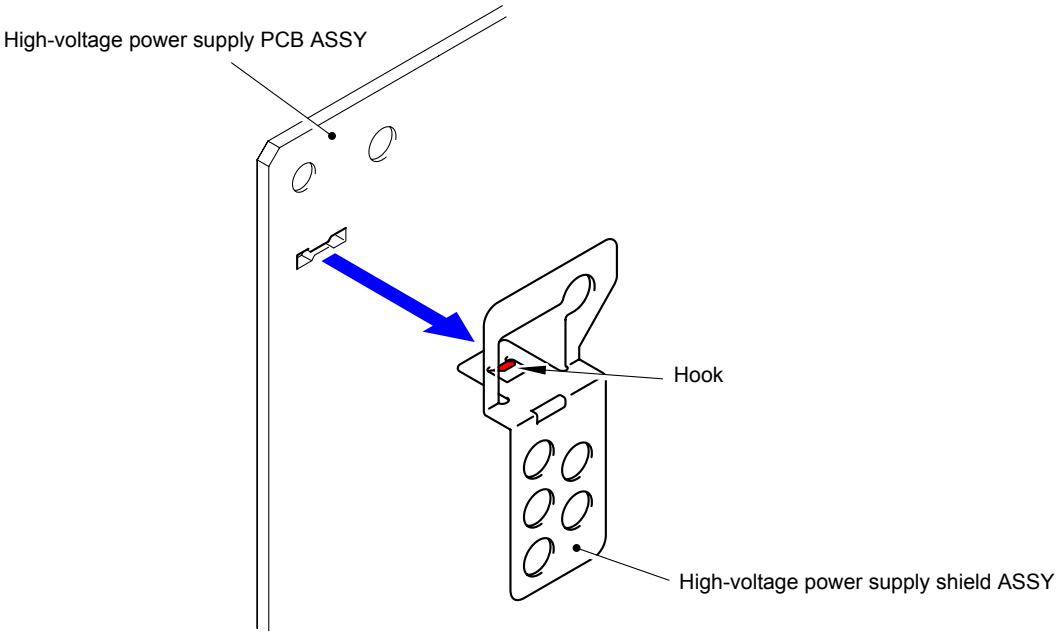

Fig. 3-320

9.79 Waste Toner Sensor

(1) Release the two Hooks to remove the Waste toner sensor cover from the Base frame unit.

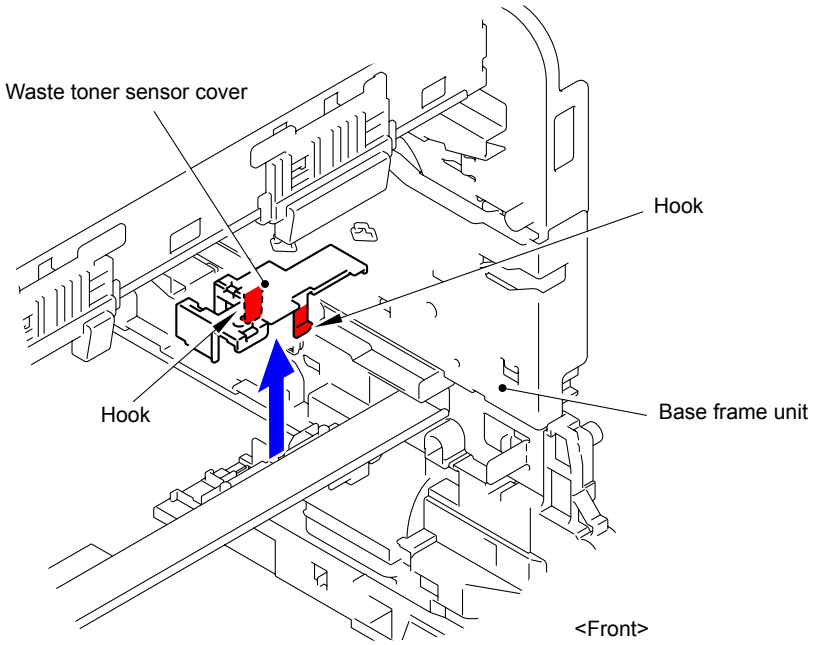

Fig. 3-321

(2) Release the three Hooks to remove the Waste toner sensor from the Base frame unit.

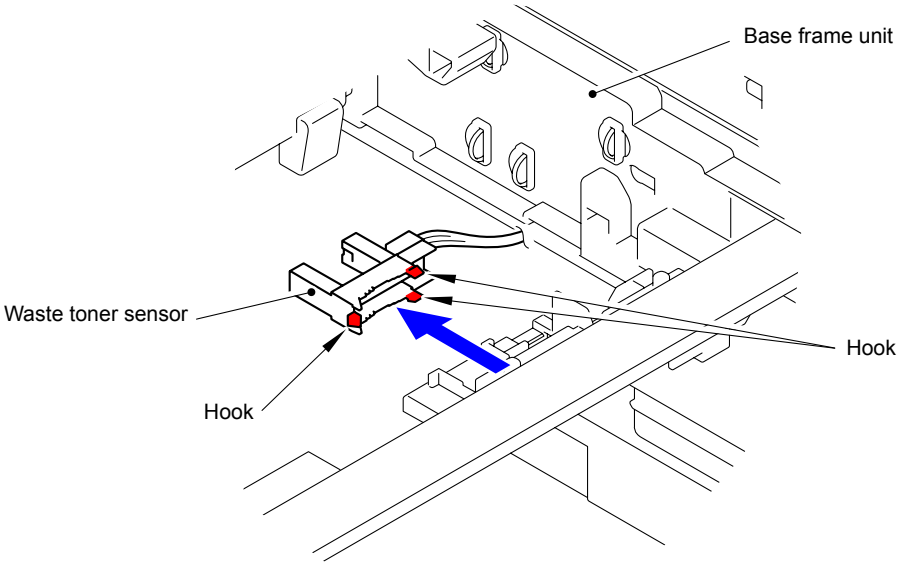

Fig. 3-322

(3) Disconnect the Connector from the Waste toner sensor.

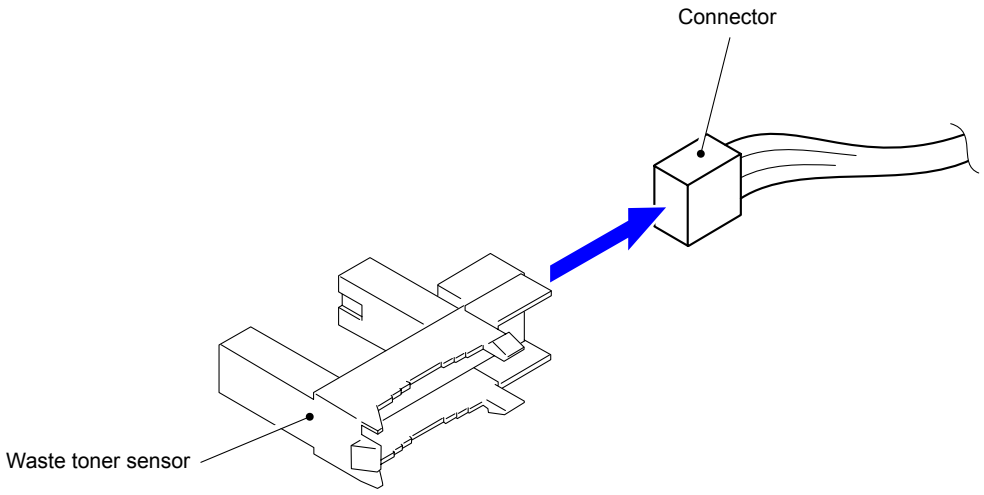

Fig. 3-323

9.80 Air Duct Cover/Blower

(1) Release the four Hooks to remove the Air duct cover from the Base frame unit.

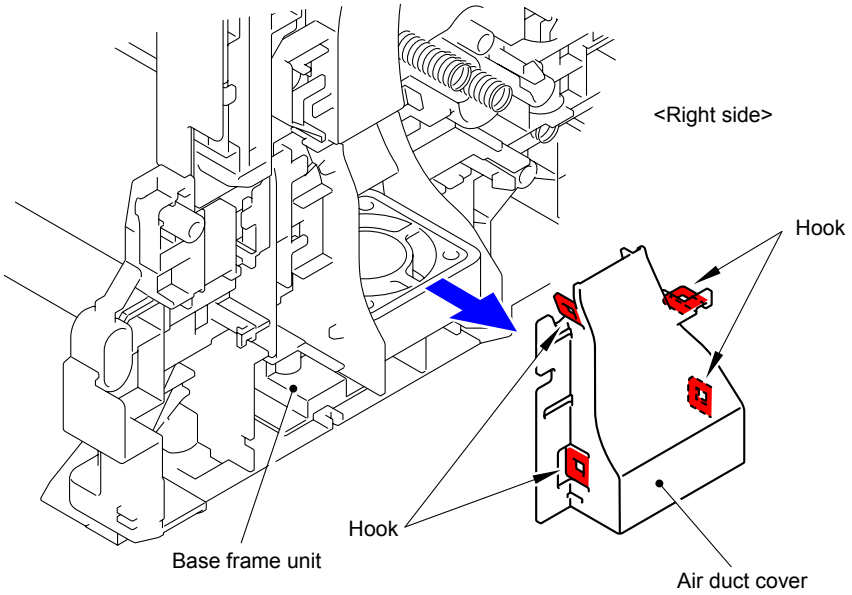

Fig. 3-324

(2) Disconnect the wiring of the Blower.

(3) Remove the Blower from the Base frame unit.

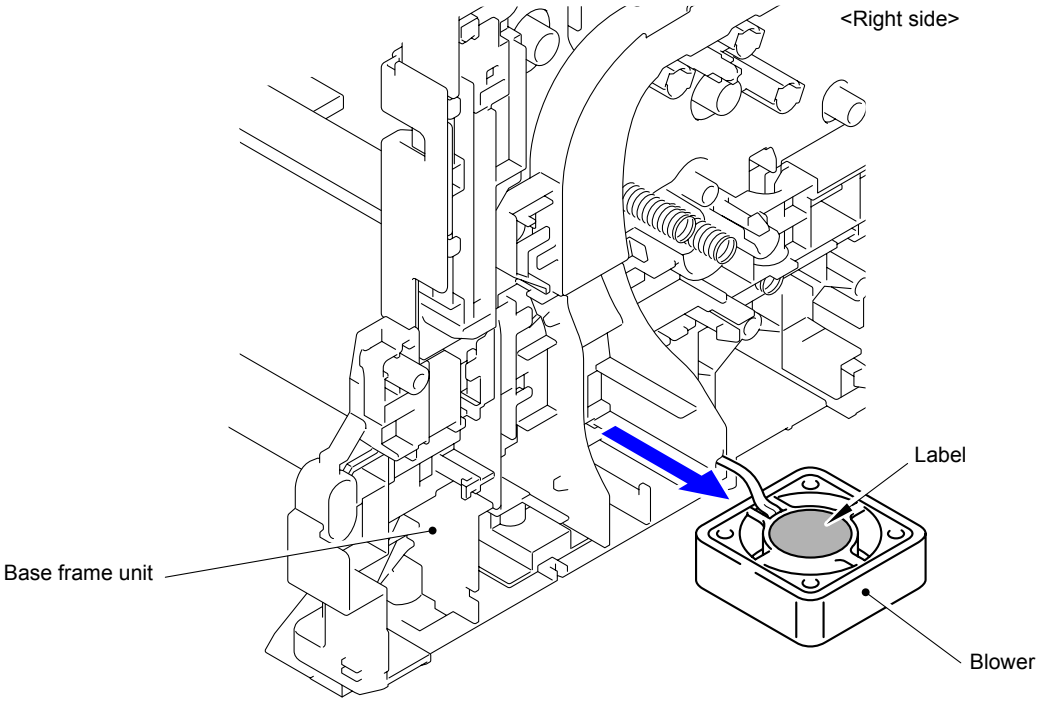

Fig. 3-325

Assembling Note:
When assembling the Blower, be sure to assemble it in a way that the label side faces up.

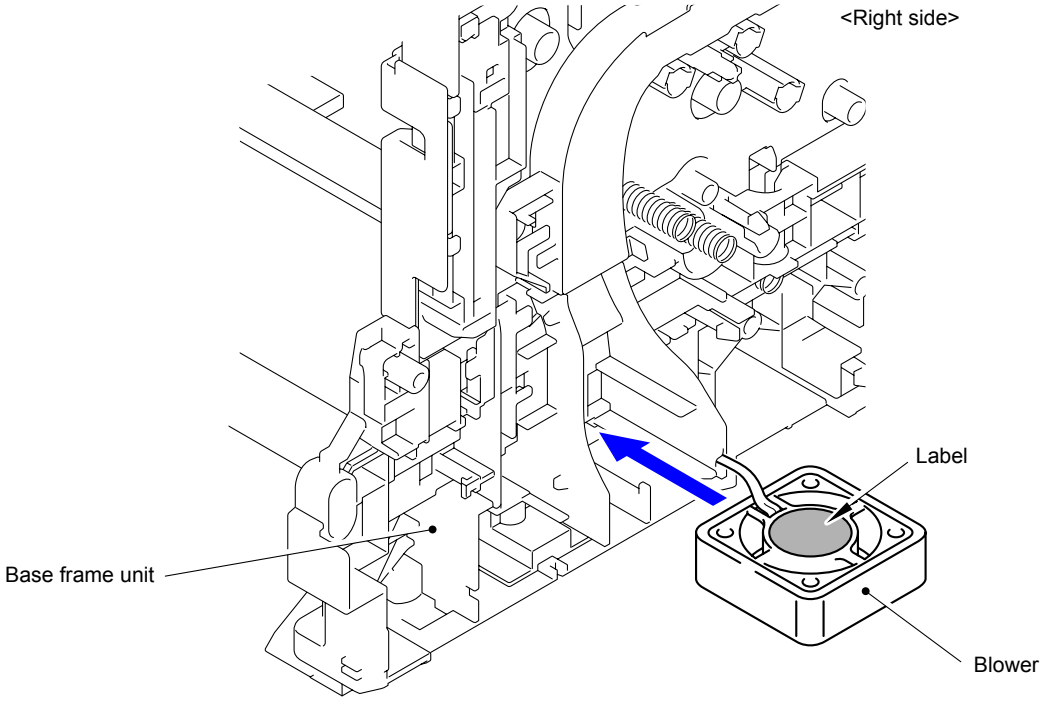

Fig. 3-326

10. DISASSEMBLY PROCEDURE (LT-300CL)

10.1 T2 Paper Tray Unit

(1) Take out the T2 paper tray unit from the main body.

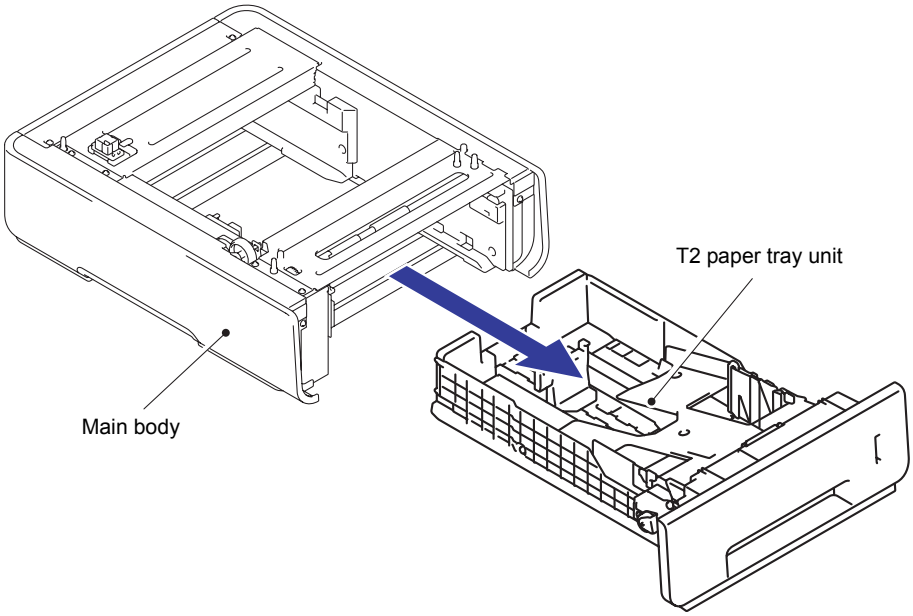

Fig. 3-327

(2) Release the two Hooks of the T2 separation pad ASSY to remove them in the upward direction.

> **Note:**
> Be careful not to loose the T2 separation pad spring.

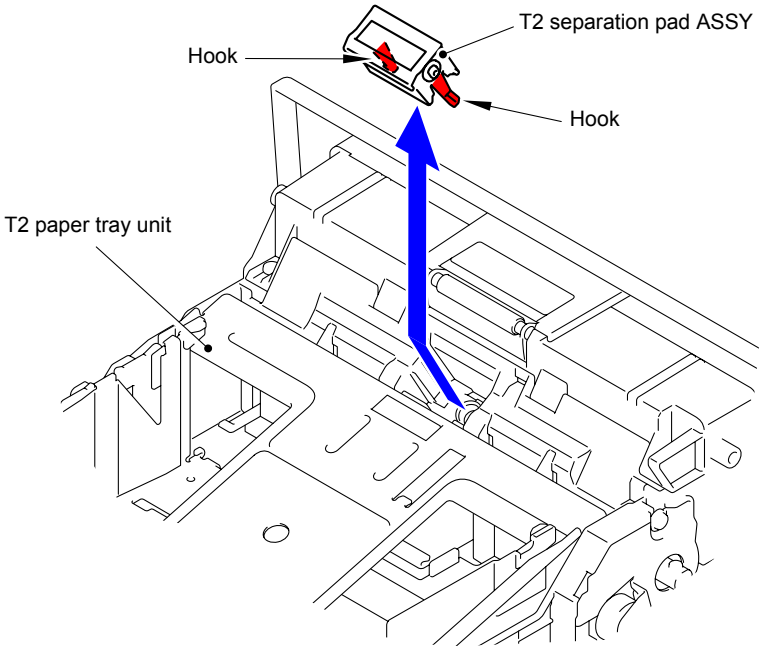

Fig. 3-328

(3) Remove the T2 separation pad spring from the T2 separation pad ASSY.

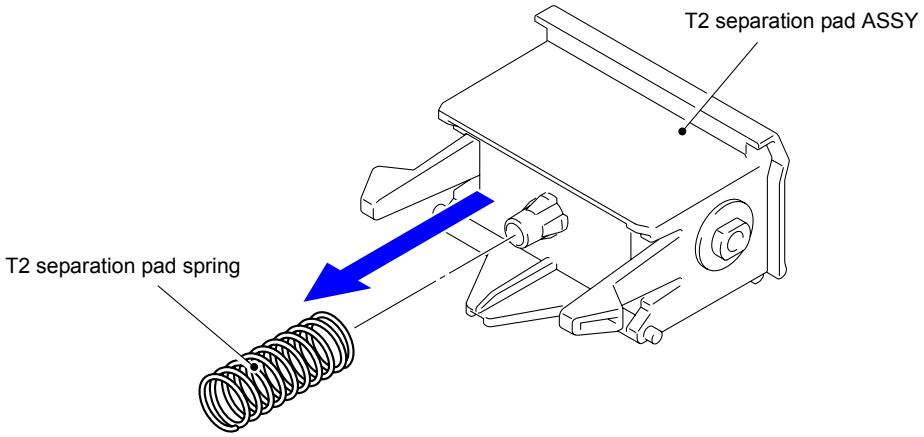

Fig. 3-329

10.2 T2 Separation Roller ASSY/Feed Roller ASSY

(1) Release the Hook and slide the T2 separation roller ASSY in the direction of the arrow 1.

(2) Remove the T2 separation roller ASSY in the direction of the arrow 2b as rotating it in the direction of the arrow 2a.

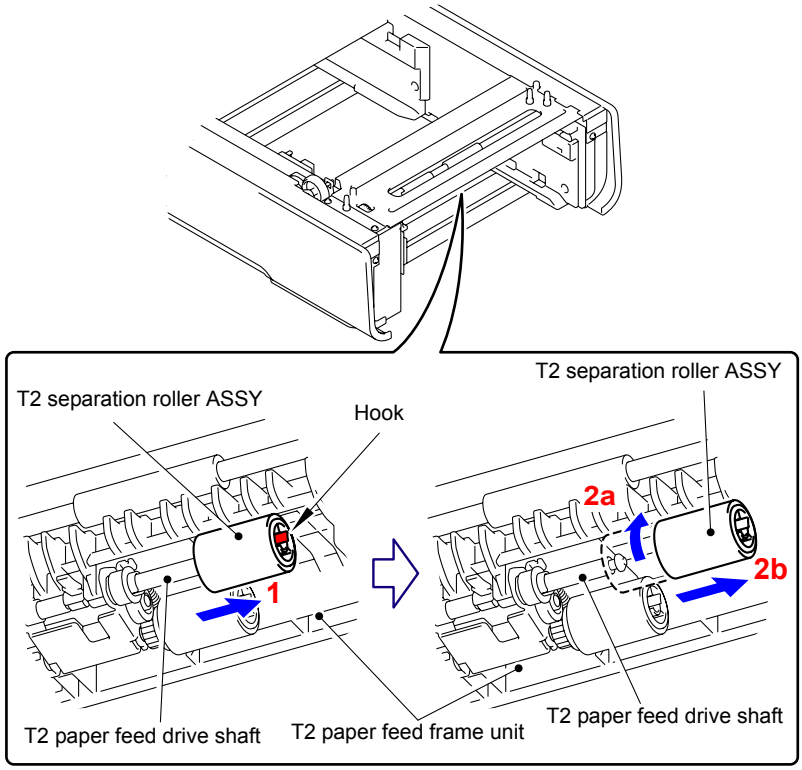

Fig. 3-330

Assembling Note:

When assembling the T2 separation roller ASSY, be sure to assemble it by sliding it in the direction of the arrow b as rotating the T2 separation roller ASSY in the direction of the arrow a.

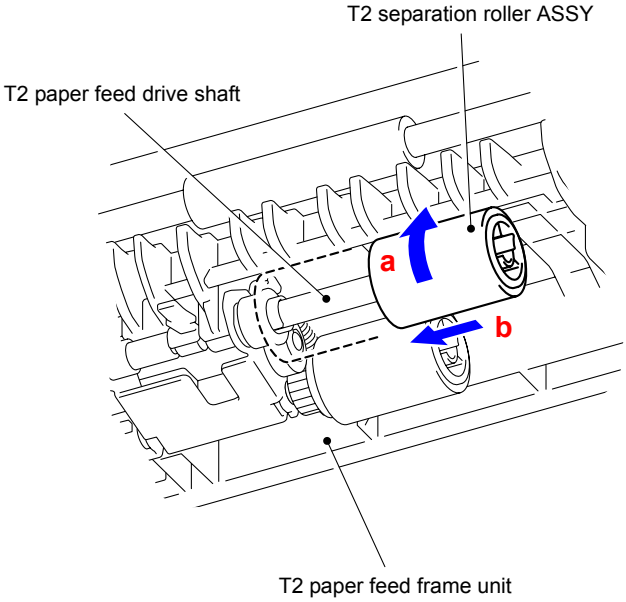

Fig. 3-331

(3) Release the Hooks to remove the Feed roller ASSY from the Paper feed shaft.

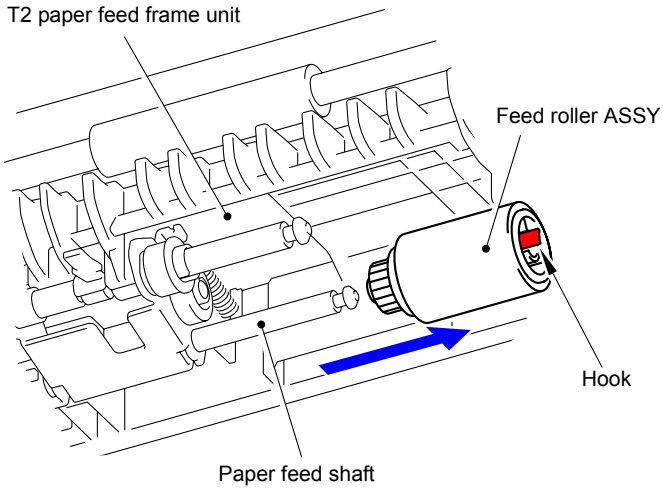

Fig. 3-332

10.3 T2 Cover Rear

(1) Remove the two Taptite cup S M3x10 SR screws from the T2 cover rear.

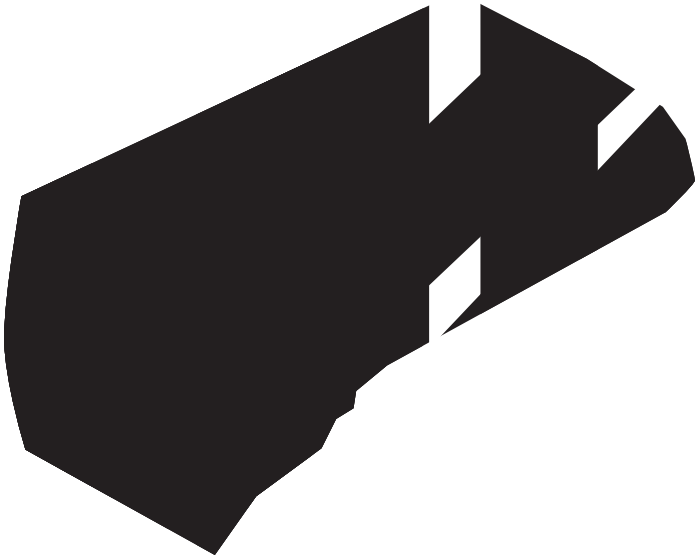

Fig. 3-333

(2) Remove the two Pins to remove the T2 cover rear from the Main body.

Fig. 3-334

10.4 T2 Cover Left

(1) Remove the two Taptite cup S M3x6 SR screws from the T2 cover left.

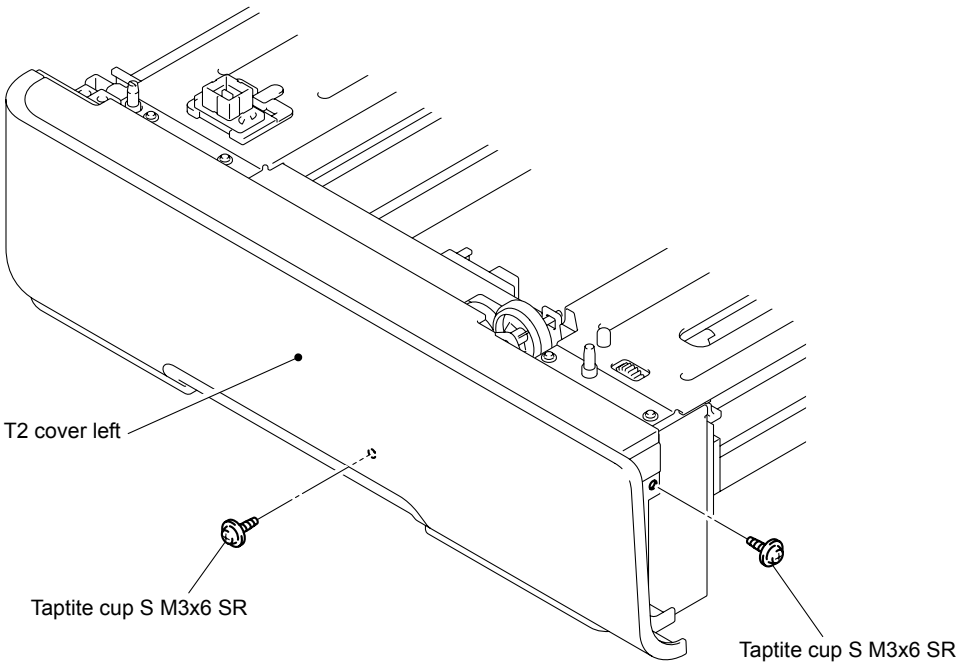

Fig. 3-335

(2) Remove the one Pin, and then release the two Hooks at the top.

(3) Release the two Hooks at the bottom to remove the T2 cover left from the T2 frame L unit.

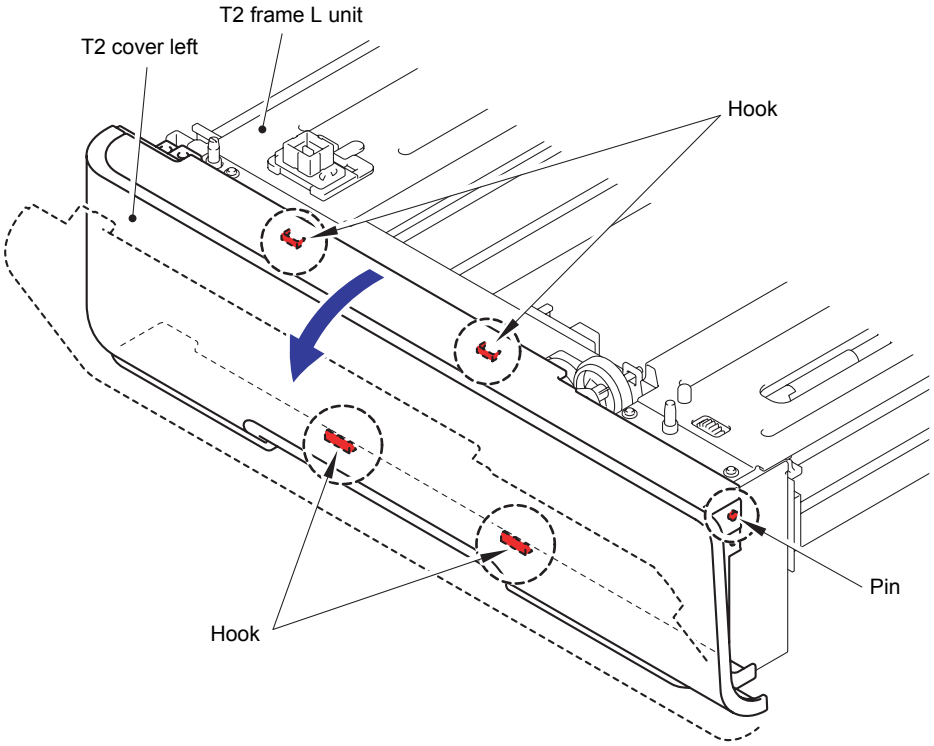

Fig. 3-336

10.5 T2 Cover Right

(1) Remove the two Taptite cup S M3x6 SR screws from the T2 cover right.

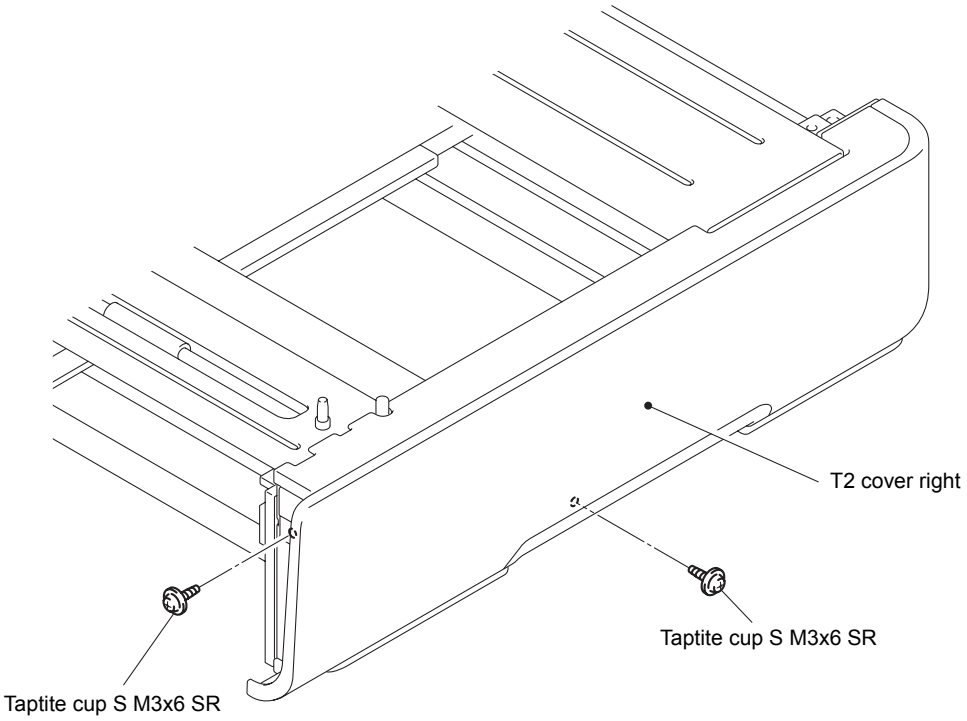

Fig. 3-337

(2) Remove the one Pin, and then release the two Hooks at the top.

(3) Release the three Hooks at the bottom to remove the T2 cover right from the T2 frame L unit.

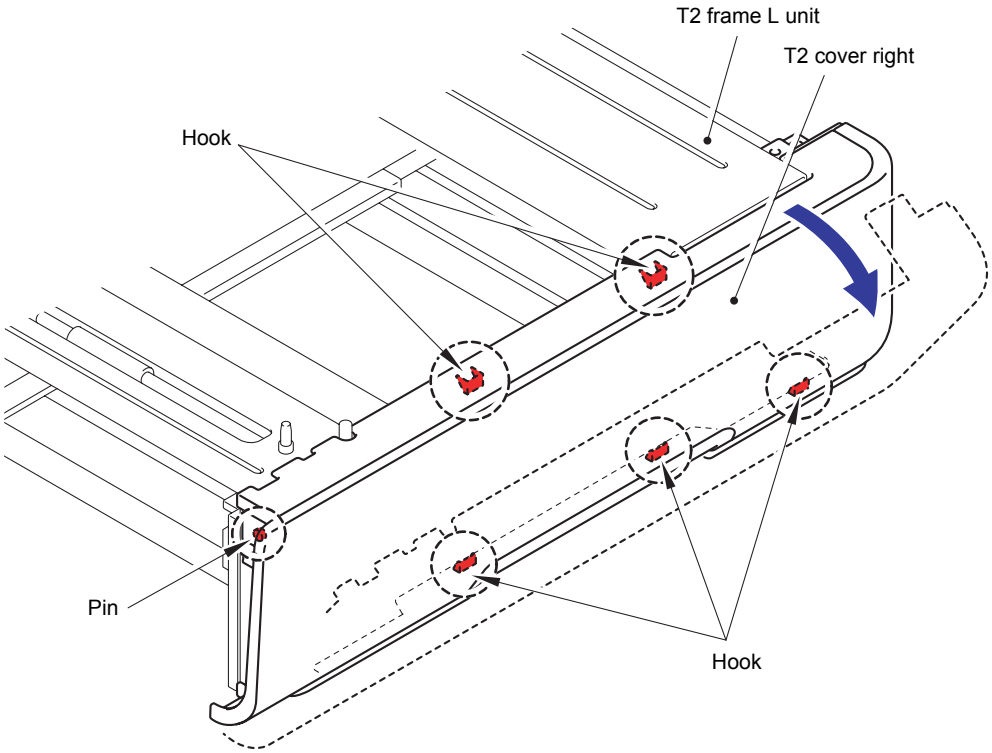

Fig. 3-338

10.6 T2 Relay PCB ASSY

(1) Disconnect the all Connectors from the T2 relay PCB ASSY.

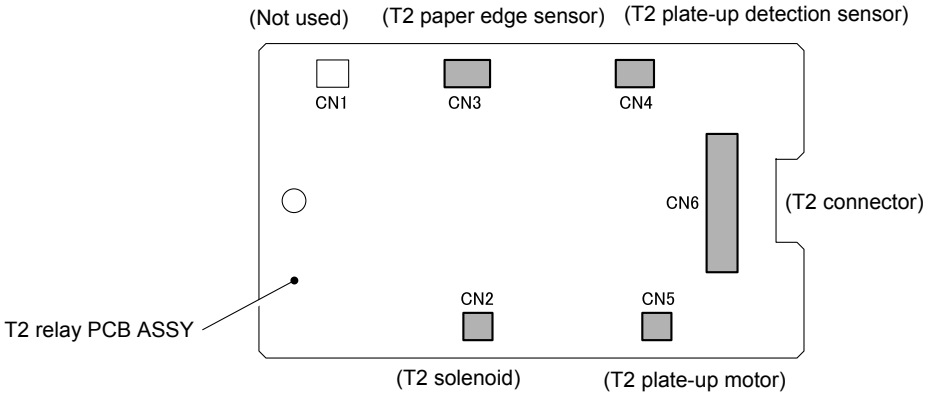

Fig. 3-339

(2) Remove the Taptite cup S M3x6 SR screw to remove the T2 relay PCB ASSY from the T2 frame L unit.

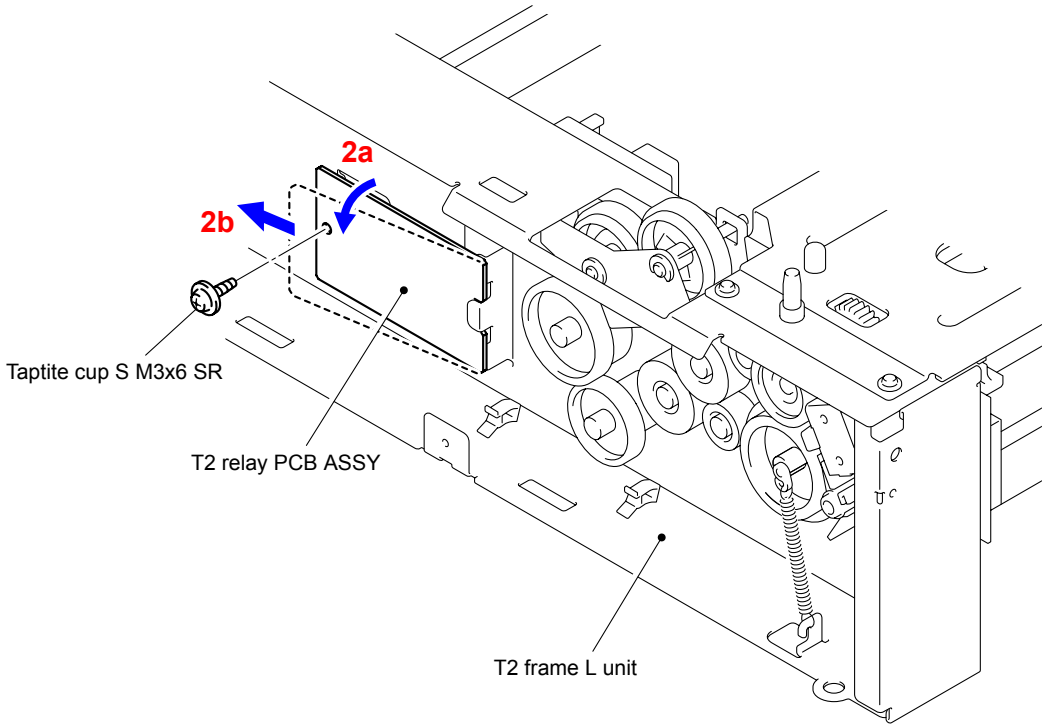

Fig. 3-340

10.7 T2 Solenoid ASSY

(1) Remove the Taptite cup S M3x6 SR screw to remove the T2 solenoid holder ASSY from the T2 frame L unit.

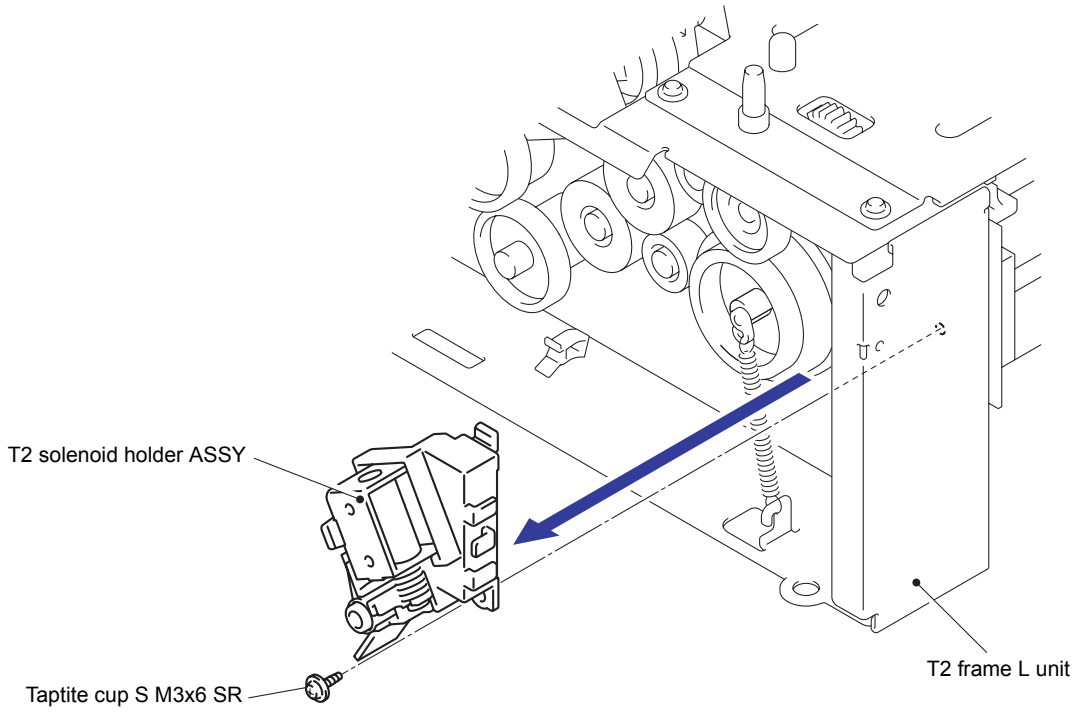

Fig. 3-341

(2) Remove the Screw flanged M3x3.5 screw to remove the T2 solenoid ASSY and T2 solenoid spring MP from the T2 solenoid holder.

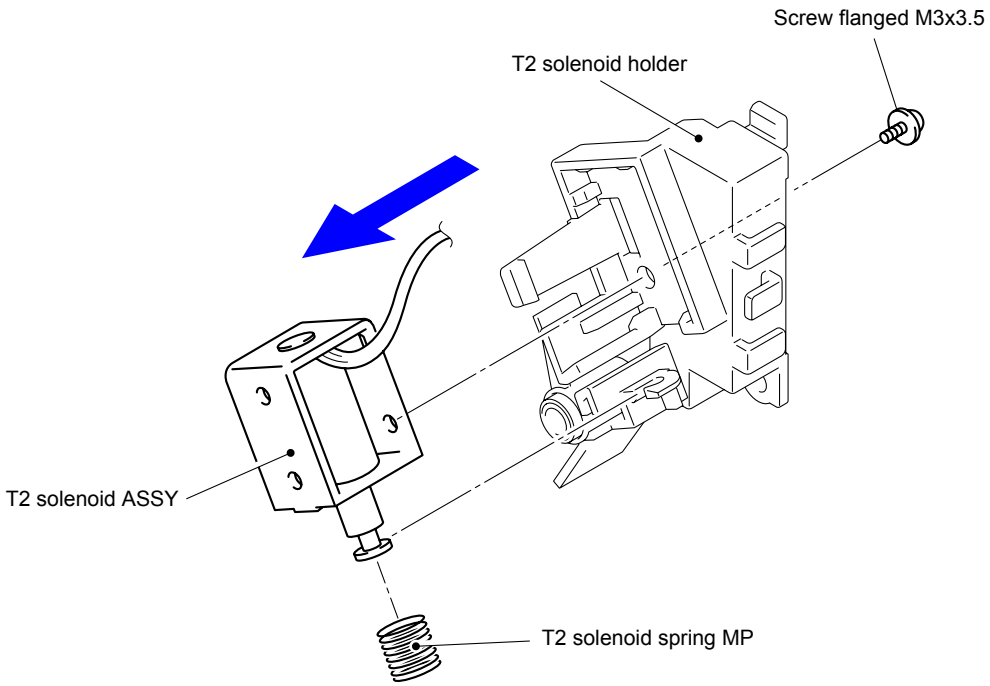

Fig. 3-342

10.8 Collar 6

(1) Remove the two pieces of the Collar 6 from the Fittings shaft.

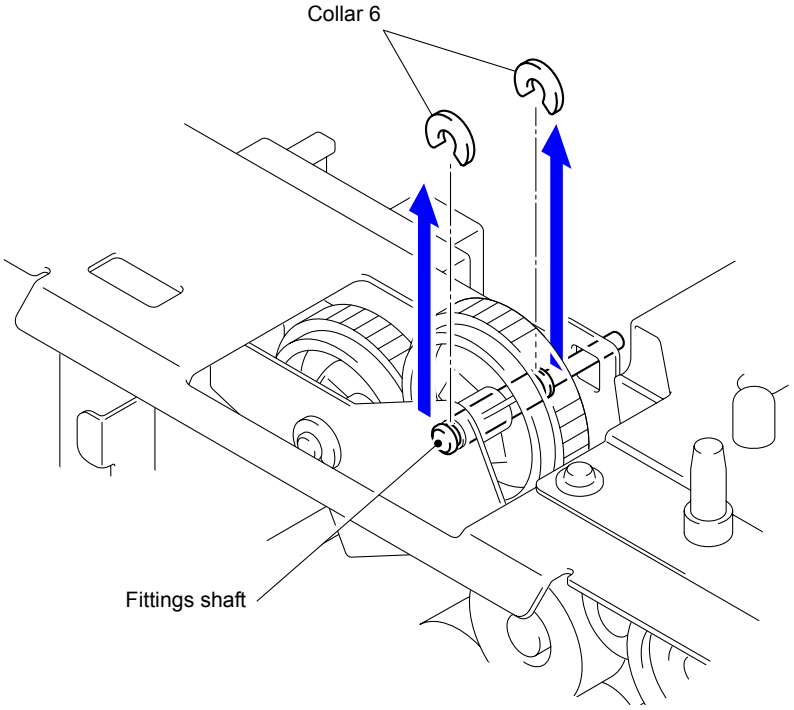

Fig. 3-343

10.9 T2 Paper Feed Frame Unit

(1) Remove the Clutch spring from the Clutch arm ASSY.

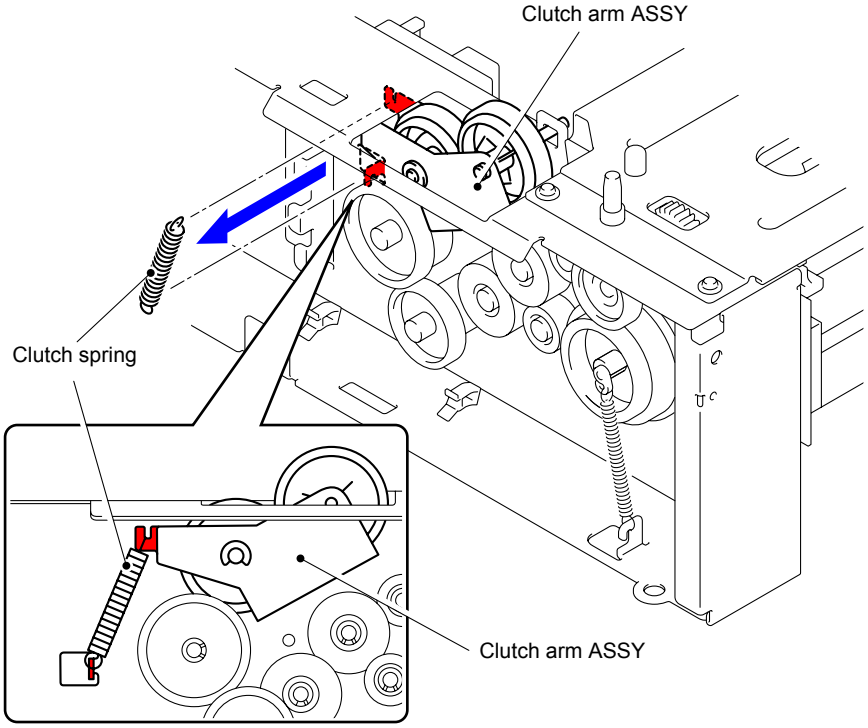

Fig. 3-344

(2) Release the Hook to remove the Gear 45/40 from the T2 frame L unit.

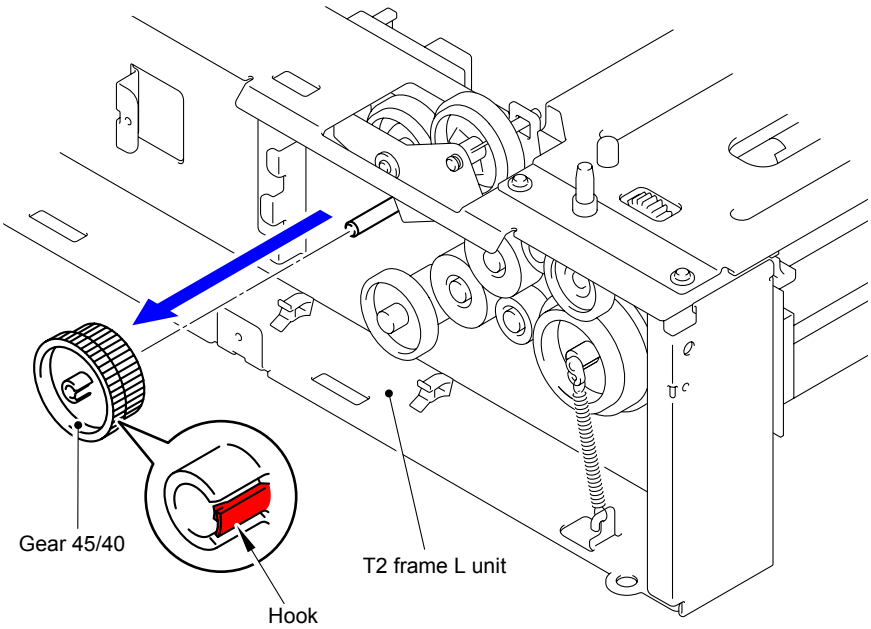

Fig. 3-345

(3) Remove the Collar 6 from the Clutch arm ASSY.

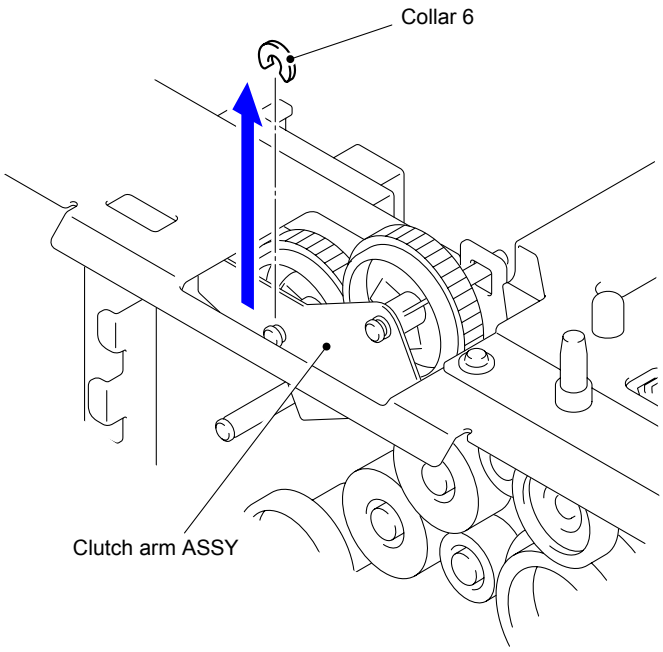

Fig. 3-346

(4) Remove the Clutch arm ASSY from the T2 frame L unit.

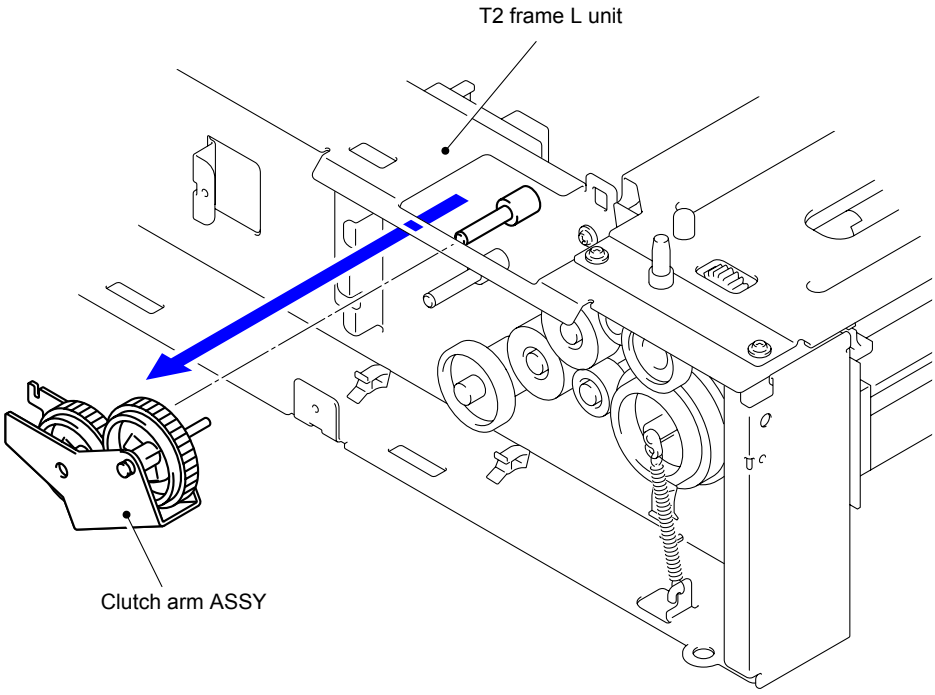

Fig. 3-347

(5) Remove the five Taptite cup S M3x6 SR screws to remove the T2 beam F ASSY from the T2 frame L unit.

Fig. 3-348

(6) Remove the Retaining ring E4 from the F roller, and then remove the Gear 24 and FR bush.

Fig. 3-349

(7) Remove the Retaining ring E3 from the F roller, and then remove the FR bush TR.

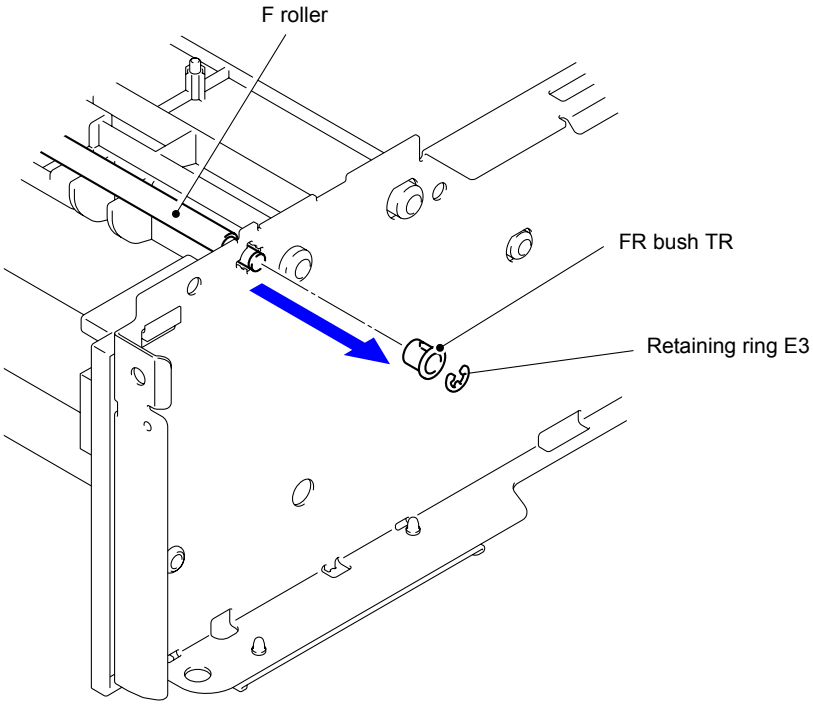

Fig. 3-350

(8) Remove the Lift spring from the Hook of the Lift lever A.

(9) Remove the F roller from the T2 frame L unit in the directions of the arrows 9a, 9b, and 9c in this order.

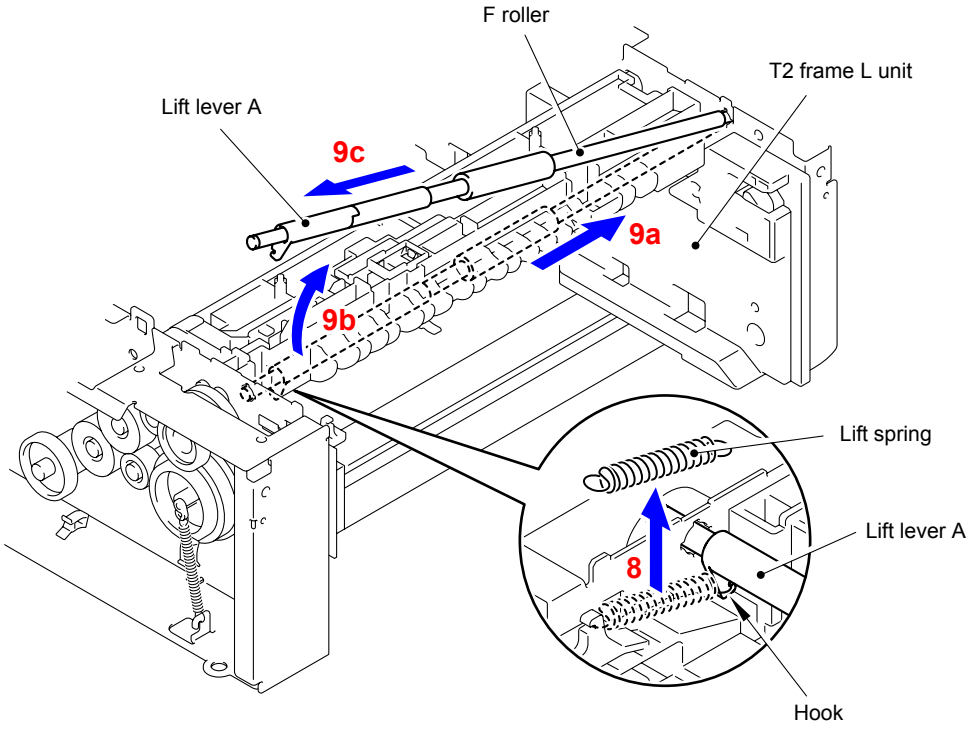

Fig. 3-351

Assembling Note:

When assembling the F roller, be sure to assemble it in a way that the Rib of the T2 paper feed frame unit comes between "A" and "B" of the Lift lever B, and the lever of the T2 paper feed holder unit comes in front of "B".

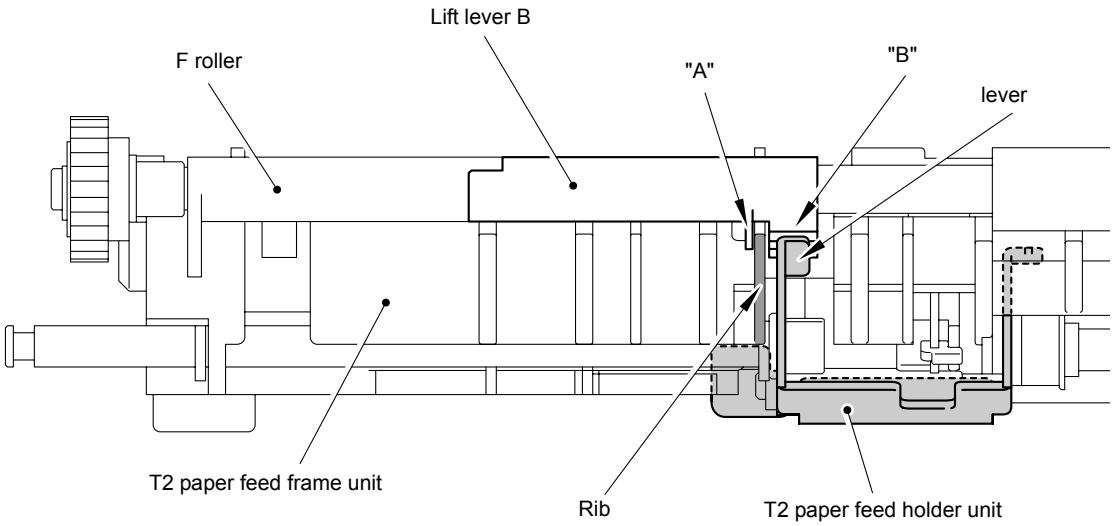

Fig. 3-352

(10) Release the Hook to remove the Gear 20A from the T2 frame L unit.

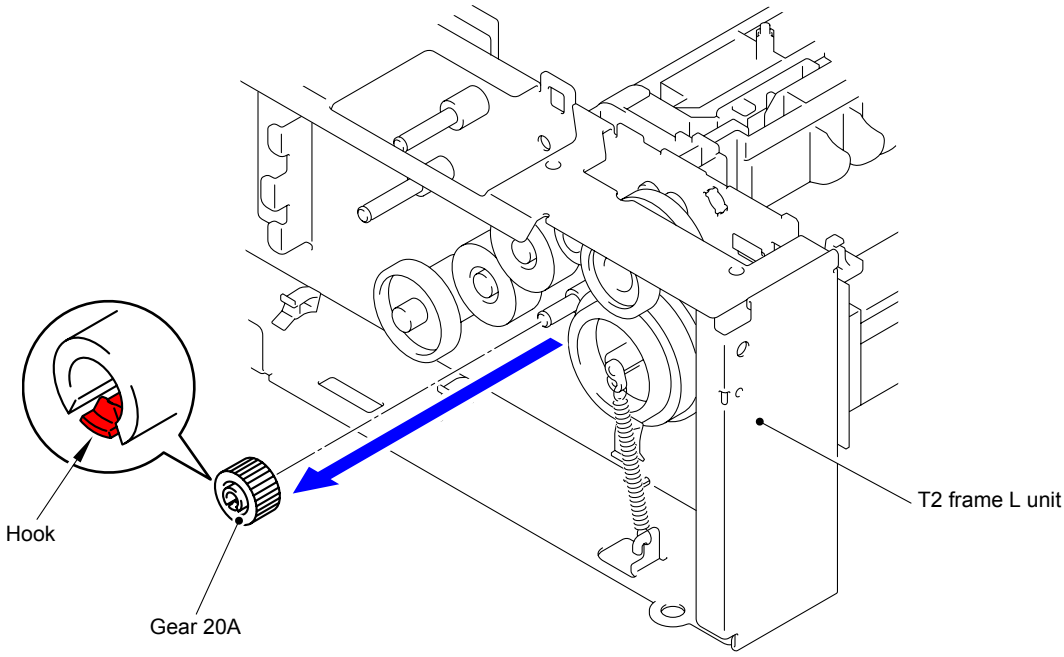

Fig. 3-353

(11) Release the Hook to remove the Gear 33 from the T2 frame L unit.

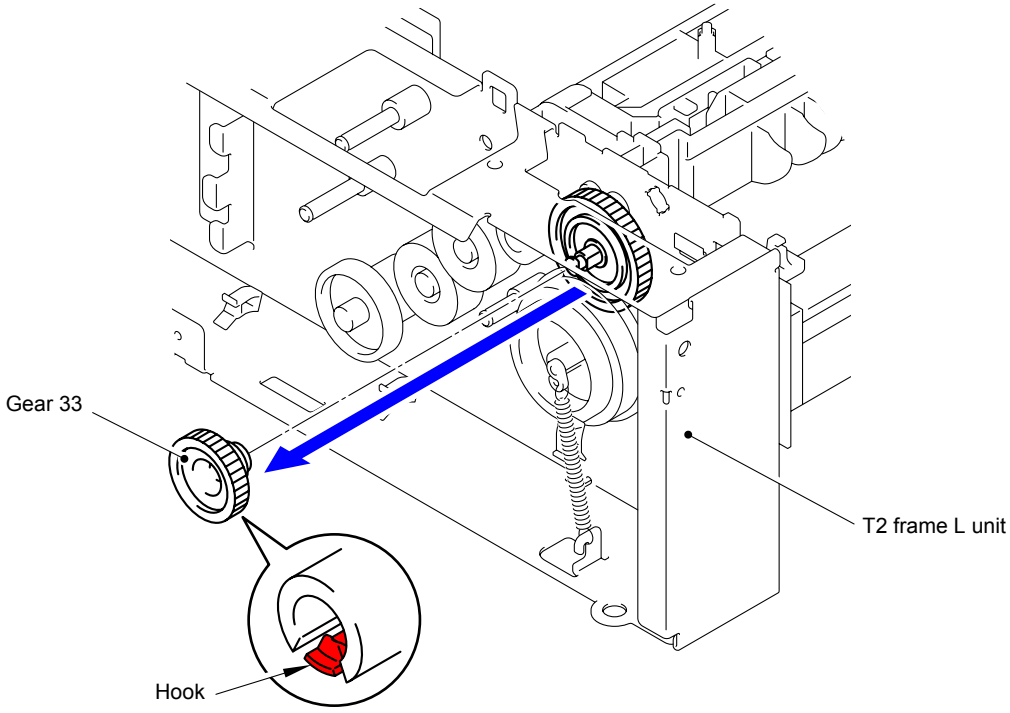

Fig. 3-354

(12) Remove the Extension spring from the Spring hook.

(13) Release the Hook to remove the Gear 46/55 from the T2 frame L unit.

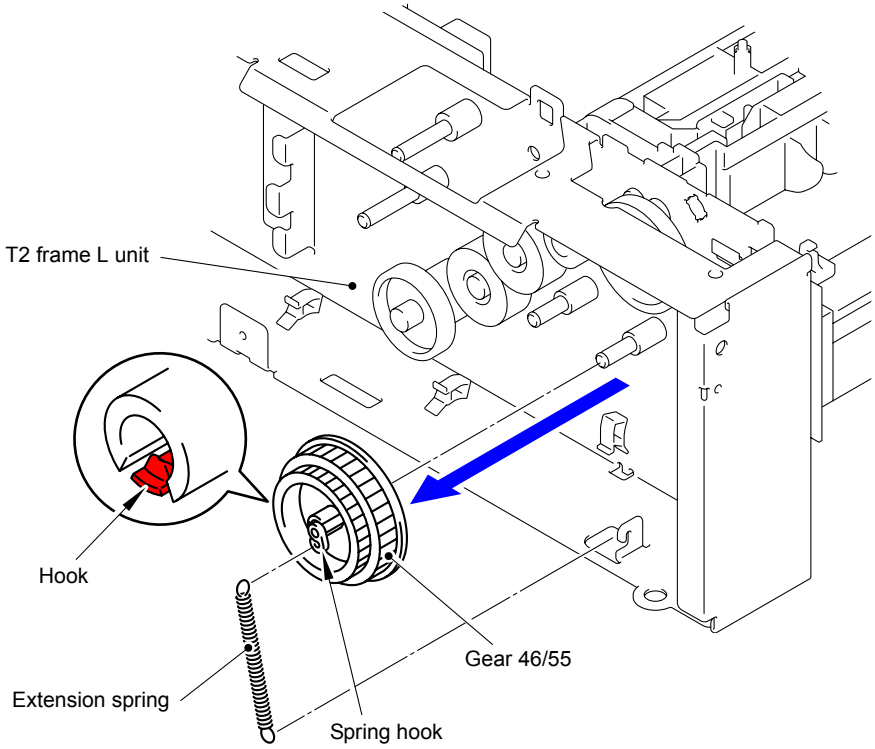

Fig. 3-355

(14) Remove the Gear 46 from the T2 frame L unit.

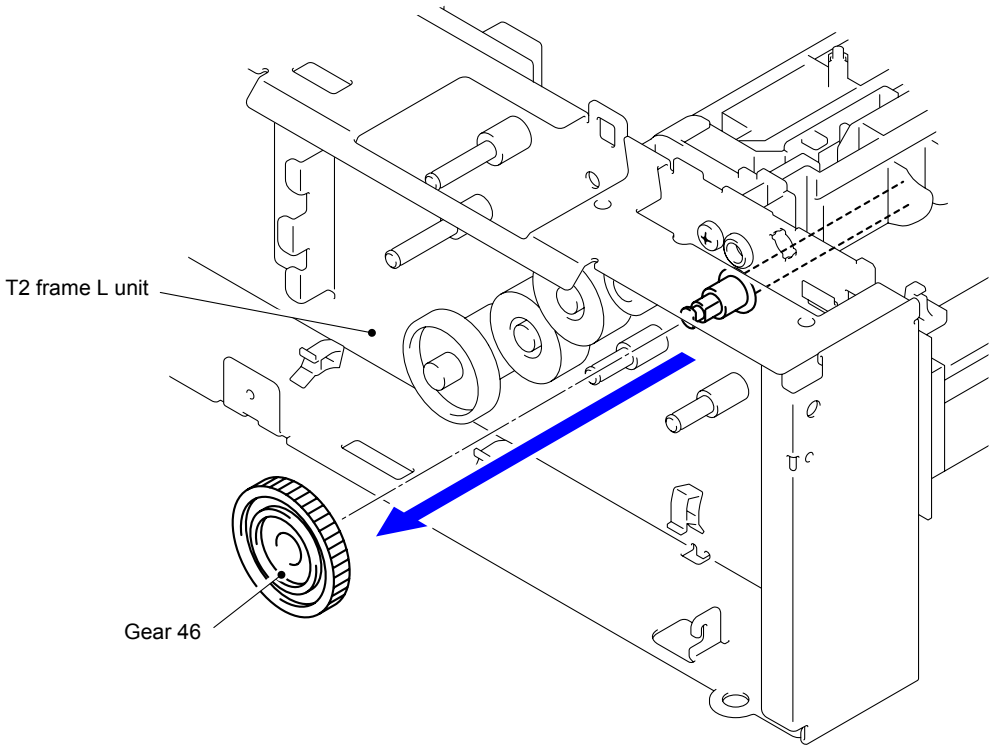

Fig. 3-356

(15) Turn the T2 frame L unit upside down.

(16) Remove the two Taptite cup S M3x6 SR screws from the T2 beam front.

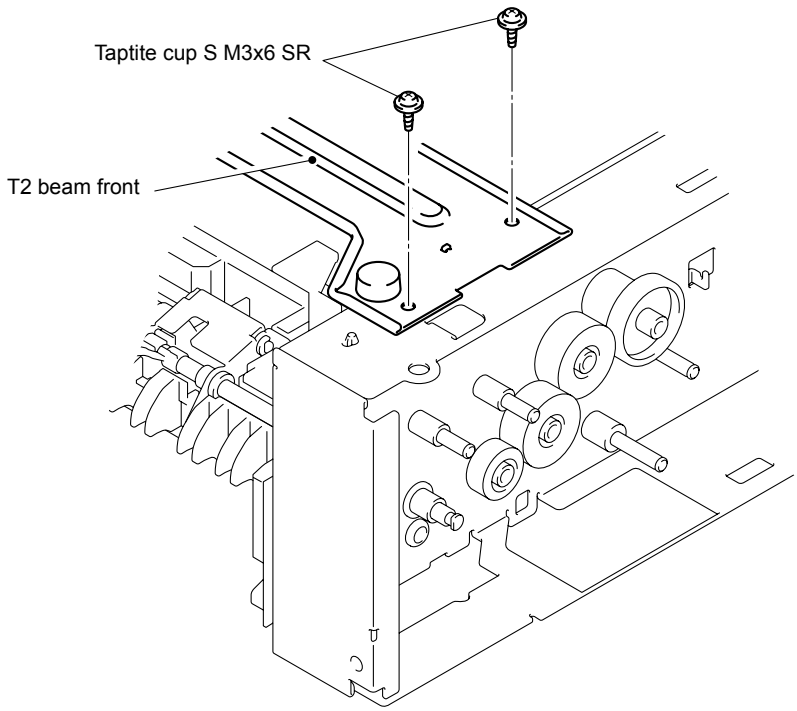

Fig. 3-357

(17) Return the T2 frame L unit to the original position.

(18) Remove the two Taptite cup S M3x6 SR screws from the T2 beam rear.

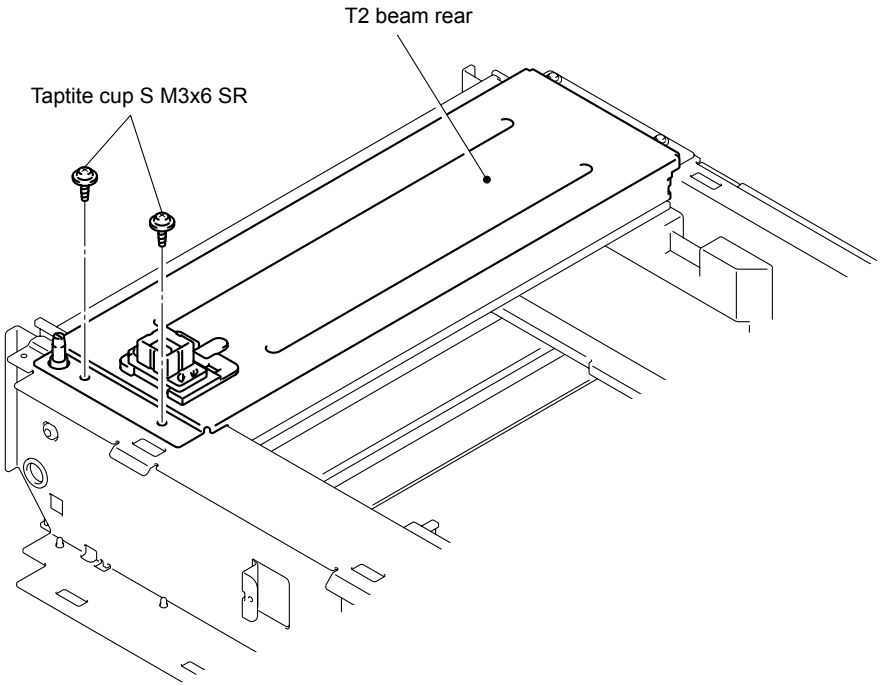

Fig. 3-358

(19) Remove the two Taptite cup S M3x6 SR screws from the T2 beam rear.

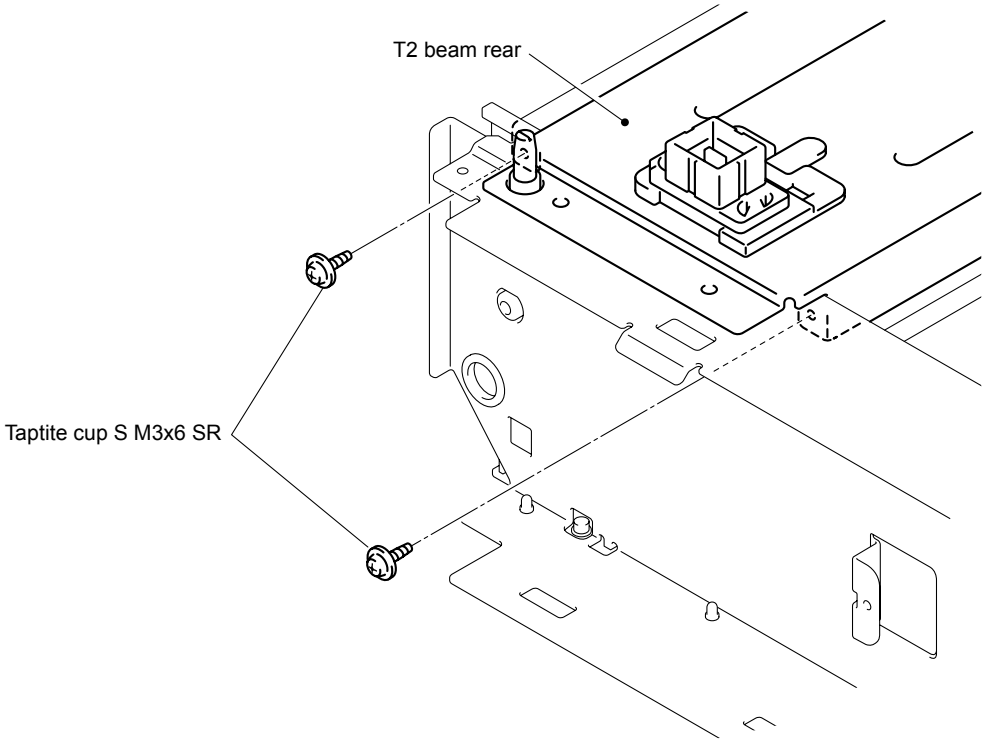

Fig. 3-359

(20) Remove the Taptite bind B M4x10 screw and Bush.

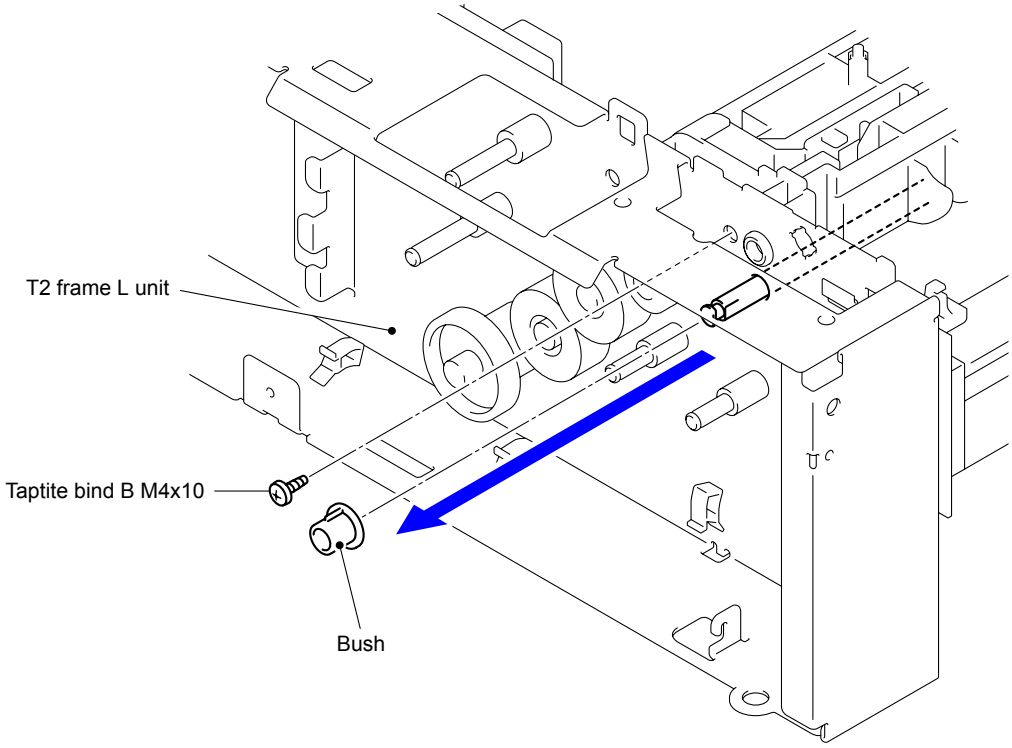

Fig. 3-360

(21) Remove the T2 paper feed frame unit from the T2 frame L unit in the direction of the arrows 21a and 21b in this order.

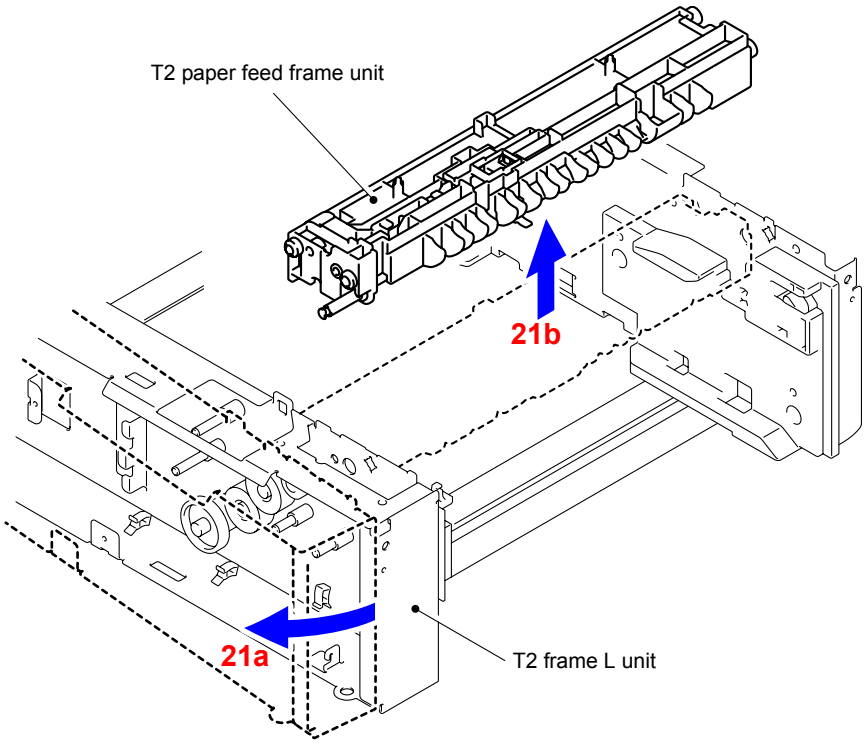

Fig. 3-361

CHAPTER 4

ADJUSTMENTS AND UPDATING OF SETTINGS, REQUIRED AFTER PARTS REPLACEMENT

CHAPTER 4
ADJUSTMENTS AND UPDATING OF SETTINGS, REQUIRED AFTER PARTS REPLACEMENT

This chapter describes adjustments and updating of settings, which are required if the main PCB ASSY and some other parts have been replaced. This chapter also covers how to update the firmware.

CONTENTS

1. IF YOU REPLACE THE MAIN PCB ASSY

<What to do when replacing the main PCB ASSY>

- Rewriting the firmware (Panel firmware, Sub firmware, Main firmware)
- Initialization of EEPROM of main PCB ASSY (Maintenance mode: code 01)
- Setting by country (Maintenance mode: code 74)
- Setting the serial number
- Sensitivity adjustment of density sensor (Maintenance mode: code 72)
- Performing the developing bias voltage correction (Maintenance mode: code 83)
- Performing the adjustment of inter-color position alignment (Maintenance mode: code 66)
- Acquisition of white level data (Maintenance mode: code 55)
- Adjustment of touch panel (Maintenance mode: code 61) (Touch panel model only)
- Operational check of sensors (Maintenance mode: code 32)

Note:
Since the counters are reset when the main PCB ASSY is replaced, the consumables and/or periodical replacement parts might reach the end of the life before the message is displayed.

<What you need to prepare>

(1) A USB cable

(2) A USB flash memory drive

(3) Computer (Windows® XP/2000 or later)
Create a temporary folder on the C drive, for example.

(4) The maintenance tool (brusbn.zip)
Copy it into the temporary folder that has been created in the C drive. Extract the copied file and execute "brusbsn.exe" file by double-clicking it.

(5) The download utility (FILEDG32.EXE)
Copy it into the temporary folder that has been created in the C drive.

(6) The Brother maintenance USB printer driver (Maintenance_Driver.zip)
Copy it into the temporary folder that has been created in the C drive. Extract the copied file.

(7) The firmware

Panel firmware	LZXXXX_$.djf or LZXXXX_$.upd*
Sub firmware	LZXXXX_$.djf or LZXXXX_$.upd*
Main firmware	LZXXXX_$.djf or LZXXXX_$.upd*
LZXXXX: First six digits are a parts number of the firmware. $: Alphabet representing the revision of the firmware.	

* upd: Used to rewrite the firmware via a computer.
djf: Used to rewrite the firmware using a USB flash memory.

(8) Installing the maintenance driver. (Refer to APPENDIX 3.)

1.1 Rewriting the firmware (Panel firmware, Sub firmware, Main firmware)

The following two methods are available for rewriting the firmware (Sub firmware and Main firmware).

- Rewriting using a computer
- Rewriting using USB flash memory

1.1.1 Checking firmware version

■ Non Touch panel model

Check if the firmware written on the main PCB ASSY is the latest version or not. If it is the latest version, there is no need to write the firmware. If it is not, make sure to write the firmware to the main PCB ASSY in accordance with "1.1.2 Rewriting the firmware using computer" or "1.1.3 Rewriting the firmware using USB flash memory" in this chapter.

■ Touch panel model

Check if the firmware written on the Main PCB and the firmware written in the Panel PCB are the latest versions. If they are the latest versions, there is no need to rewrite the firmware.
If either of the firmware is not the latest version, make sure to rewrite the firmware which is not the latest version in accordance with "1.1.2 Rewriting the firmware using computer" or "1.1.3 Rewriting the firmware using USB flash memory" in this chapter.

<How to check firmware version>

Press the **2** and **5** buttons in this order in the initial state of the maintenance mode. Then, the firmware version information is displayed on the LCD.

1.1.2 Rewriting the firmware using computer

Note:

- It is recommendable to rewrite 1) Panel firmware, 2) Sub firmware and 3) Main firmware in this order.
- DO NOT unplug the power cord of the machine or your computer or disconnect the USB cable while rewriting the program files.

<Procedures>

(1) Turn the power switch of the machine off. Turn on the power as pressing the **5** button. Check that " ▮▮▮▮▮▮▮▮ " appears on the LCD.

(2) Connect the computer to the machine with the USB cable.

(3) Double-click the "FILEDG32.EXE" to start. The following screen appears. Select the "Brother Maintenance USB Printer."

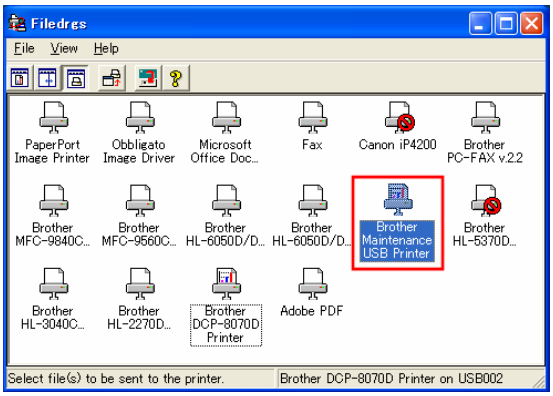

(4) Drag and drop a program file that you want to rewrite (for instance, LZXXXX_$.upd) onto the Brother Maintenance USB Printer icon in the screen shown above.

Note:

After rewriting Panel firmware, Sub firmware or Main firmware is completed, the machine returns to the ready state. To continue rewriting the other program files, turn off the power switch of the machine, and turn it on again as pressing the **5** buttons. Check that " ▮▮▮▮▮▮▮▮ " appears on the LCD and start rewriting.

(5) Upon completion of rewriting, the machine restarts and returns to the ready state automatically.

(6) Disconnect the USB cable from the machine.

1.1.3 Rewriting the firmware using USB flash memory

If you save the program files in the USB flash memory drive and plug it into the USB direct interface, you can rewrite the firmware.

Note:

- You cannot write the firmware using USB flash memory in the Deep Sleep mode. Press the **Start/Black** button to clear the Deep Sleep mode before rewriting the firmware.
- Make sure that the USB flash memory drive has enough space to save the program file.
- It is recommendable to rewrite 1) Panel firmware, 2) Sub firmware and 3) Main firmware in this order.
- If rewriting the firmware using a USB flash memory fails and an error message appears on the LCD, or no message appears on the LCD, it will be necessary to rewrite the firmware from a computer using the FILEDG32.EXE. (Refer to "1.1.2 Rewriting the firmware using computer" in this chapter.)
- (Touch panel model only)

  If the Main firmware is the latest version but the Panel firmware is not the latest version, the error code 0F is displayed on the LCD, and rewriting of the firmware using USB flash memory becomes impossible. In this case, rewrite the firmware in accordance with "1.1.2 Rewriting the firmware using computer" in this chapter.

<Procedures>

(1) Save the program files (such as LZXXXX_$.djf) which are necessary for rewriting the firmware to the USB flash memory.

(2) While the machine is in the ready state, connect the USB flash memory drive to the USB direct interface on the front of the machine.

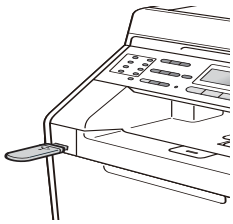

Fig. 4-1

Non Touch panel model

(3) When the machine recognizes the USB flash memory, the names of the files stored in the USB flash memory are displayed. Select an appropriate file using the ▲ or ▼ button, and then press the **OK** button.

Memo:

To print and check the list of data stored in the USB flash memory, display the LCD, select Index Print using the ▲ or ▼ button, and then press the **OK** button.

(4) "Program Update/Press Start" appears on the LCD. Press the **OK** or **Start/Black** button to start. "Program Updating" message appears on the LCD with Data LED blinking while rewriting the firmware. DO NOT turn off the machine.

Touch panel model

(3) Press the **Direct Print** button on the LCD. The files in the USB flash memory are displayed on the LCD.

(4) Press the program file you want to update. Then, press the **Start/Black** button. When "Program Update/Press START" appears on the LCD, press the **OK** button to execute update. While the data is being updated, the **Print Data** button is blinking and "Program Updating" is displayed. Be sure not to turn OFF the power of the machine.

(5) When the rewrite is finished, the machine automatically restarts.

(6) If you continue to rewrite other firmware and no file names are displayed, wait for a while, and take out the USB flash memory and insert it again. When file names are displayed, select the program files which need to be rewritten, and repeat the above procedures (3) to (5) to rewrite all the selected program files.

(7) When the rewrite of the main firmware is finished, the machine automatically restarts.

(8) Remove the USB flash memory drive from the USB direct interface once the update have finished.

1.2 Initialization of EEPROM of Main PCB ASSY (Maintenance Mode: Code 01)

Initialize the EEPROM in accordance with "1.4.1 EEPROM parameter initialization" in Chapter 5.

1.3 Setting by Country (Maintenance Mode: Code 74)

Make appropriate settings by country in accordance with "1.4.26 Setting by country" in Chapter 5.

1.4 Setting the Serial Number

<Procedures>

(1) Connect the PC and machine with the USB cable.

(2) Double-click the brusbsn.exe file which has been copied in the temporary folder to start.

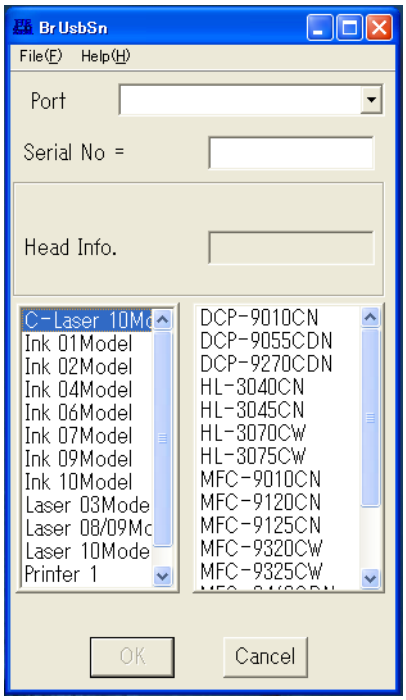

(3) Click the C-Laser 10Model.

(4) In Port on the brusbsn screen, select the port number assigned to the Brother Maintenance USB Printer. If the port number is unknown, follow steps below.

1) Click Start | Settings | Printers.

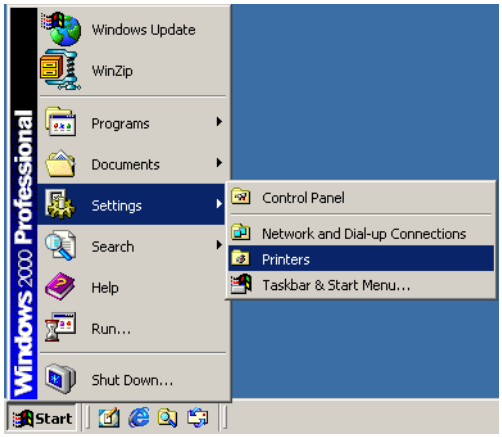

The Printers window appears as shown below.

2) Right-click the Brother Maintenance USB Printer icon.

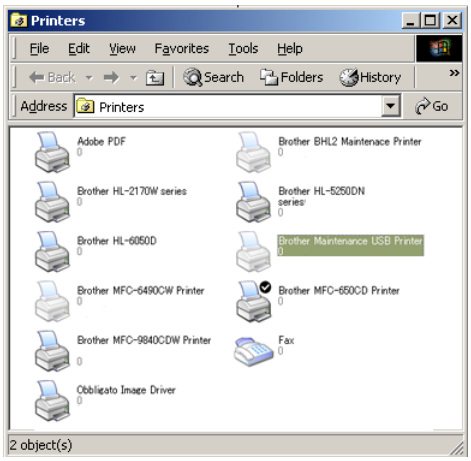

3) Click Properties.

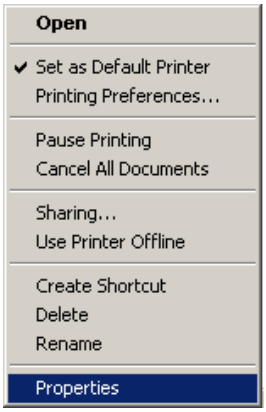

The Brother Maintenance USB Printer Properties window appears as shown below.

4) Click the Ports tab.

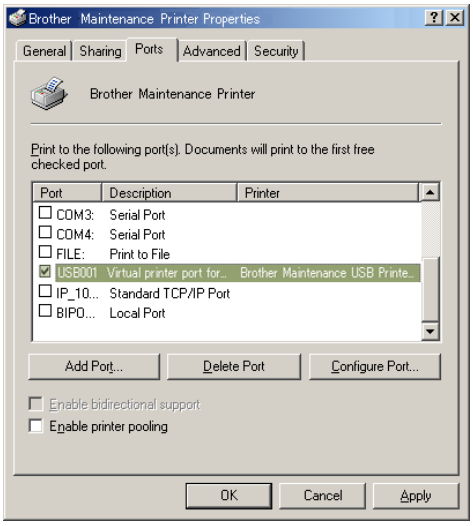

In this example, the port number assigned to the Brother Maintenance USB Printer is USB001.

(5) Enter the serial number (the fifteen digits) of the machine into the box on the “Serial No”.

(6) Click the [**OK**] button. The serial number is written in the machine.

Memo

Refer to APPENDIX 1 to know how to read the serial number of the machine.

1.5 Sensitivity Adjustment of Density Sensor (Maintenance Mode: Code 72)

Make sensitivity adjustments of the density sensor in accordance with "1.4.25 Sensitivity adjustment of density sensor" in Chapter 5.

1.6 Performing the Developing Bias Voltage Correction (Maintenance Mode: Code 83)

Perform developing bias voltage correction in accordance with "1.4.31 Developing bias voltage correction" in Chapter 5.

1.7 Performing the Adjustment of Inter-color Position Alignment (Maintenance Mode: Code 66)

Perform adjustment of inter-color position alignment in accordance with "1.4.19 Adjustment of inter-color position alignment" in Chapter 5.

1.8 Acquisition of White Level Data (Maintenance Mode: Code 55)

Acquire the white level data in accordance with "1.4.17 Acquisition of white level data" in Chapter 5.

1.9 Adjustment of Touch Panel (Maintenance Mode: Code 61) (Touch Panel Model Only)

Check performance of the LCD in accordance with "1.4.18 Adjustment of touch panel" in Chapter 5.

1.10 Operation Check of Sensors (Maintenance Mode: Code 32)

Check performance of the sensors in accordance with "1.4.10 Operational check of sensors" in Chapter 5.

2. IF YOU REPLACE THE REGISTRATION MARK SENSOR HOLDER ASSY

<What to do when replacing the registration mark sensor holder ASSY>

- Sensitivity adjustment of density sensor (Maintenance mode: code 72)
- Performing the developing bias voltage correction (Maintenance mode: code 83)
- Performing the adjustment of inter-color position alignment (Maintenance mode: code 66)

2.1 Sensitivity Adjustment of Density Sensor (Maintenance Mode: Code 72)

Make sensitivity adjustments of the density sensor in accordance with "1.4.25 Sensitivity adjustment of density sensor" in Chapter 5.

2.2 Performing the Developing Bias Voltage Correction (Maintenance Mode: Code 83)

Perform developing bias voltage correction in accordance with "1.4.31 Developing bias voltage correction" in Chapter 5.

2.3 Performing the Adjustment of Inter-color Position Alignment (Maintenance Mode: Code 66)

Perform adjustment of inter-color position alignment in accordance with "1.4.19 Adjustment of inter-color position alignment" in Chapter 5.

3. IF YOU REPLACE THE HIGH-VOLTAGE POWER SUPPLY PCB ASSY

<What to do when replacing the high-voltage power supply PCB ASSY>

- Sensitivity adjustment of density sensor (Maintenance mode: code 72)
- Performing the developing bias voltage correction (Maintenance mode: code 83)
- Performing the adjustment of inter-color position alignment (Maintenance mode: code 66)

3.1 Sensitivity Adjustment of Density Sensor (Maintenance Mode: Code 72)

Make sensitivity adjustments of the density sensor in accordance with "1.4.25 Sensitivity adjustment of density sensor" in Chapter 5.

3.2 Performing the Developing Bias Voltage Correction (Maintenance Mode: Code 83)

Perform developing bias voltage correction in accordance with "1.4.31 Developing bias voltage correction" in Chapter 5.

3.3 Performing the Adjustment of Inter-color Position Alignment (Maintenance Mode: Code 66)

Perform adjustment of inter-color position alignment in accordance with "1.4.19 Adjustment of inter-color position alignment" in Chapter 5.

4. IF YOU REPLACE THE LASER UNIT

<What to do when replacing the laser unit>

- Sensitivity adjustment of density sensor (Maintenance mode: code 72)
- Performing the developing bias voltage correction (Maintenance mode: code 83)
- Performing the adjustment of inter-color position alignment (Maintenance mode: code 66)

4.1 Sensitivity Adjustment of Density Sensor (Maintenance Mode: Code 72)

Make sensitivity adjustments of the density sensor in accordance with "1.4.25 Sensitivity adjustment of density sensor" in Chapter 5.

4.2 Performing the Developing Bias Voltage Correction (Maintenance Mode: Code 83)

Perform developing bias voltage correction in accordance with "1.4.31 Developing bias voltage correction" in Chapter 5.

4.3 Performing the Adjustment of Inter-color Position Alignment (Maintenance Mode: Code 66)

Perform adjustment of inter-color position alignment in accordance with "1.4.19 Adjustment of inter-color position alignment" in Chapter 5.

5. IF YOU REPLACE THE LOW-VOLTAGE POWER SUPPLY PCB ASSY

5.1 Reset of Irregular Power Supply Detection Counter

The irregular power supply detection counter is counted up when the machine detects irregular power supply. If the counter reaches to the limit, the machine shows the service error to replace the low-voltage power supply PCB because it might be damaged by recursive irregular power supply. In this case, if the same power supply is used, the same error might occur again even if the low-voltage power supply PCB ASSY is replaced. For this reason, be sure to ask the user to rearrange the installation environment.

Note:
The maintenance driver must have been installed. (Refer to APPENDIX 3.)

(1) Press the **Menu** button and then the **Start**/**Black** button while the machine is in the ready state. Next, press the ▲ button four times to enter the maintenance mode.
The machine displays ▮▮ MAINTENANCE ▮▮▮ on the LCD,

(2) Connect the PC to the machine with the USB cable.

(3) Start the “FILEDG32.EXE” and select the “Brother Maintenance USB Printer”.

(4) Click the “Brother Maintenance USB Printer” icon to select. Drag the SQWAVE.PJL and drop it.

6. IF YOU REPLACE THE DRUM DRIVE MOTOR

<What to do when replacing the drum drive motor>

- Alignment of gear phase

When replacing the drum drive motor, the gears listed below are removed. Align the phase of each gear in accordance with the table and figure given below when mounting these gears so that the phases of each drum is aligned. Failing this could cause the color misregistration.

<Gear names>

1, 2	LY0197001	Drum idle gear Z64-26
3	LY0198001	Drum idle gear Z64
4	LY0199001	Drum idle gear Z64 first
5	LY0198001	Drum idle gear Z64
6 to 9	LY0196001	Drum coupling gear Z52

<Gear phase alignment procedure>

(1) When assembling Nos. 1 and 2 LY0197001 Drum idle gear Z64-26, be sure to assemble them by aligning the phase as shown in the figure below.

- Align the mark of the Drum idle gear Z64-26 with the shaft direction of the Drum coupling gear Z52.

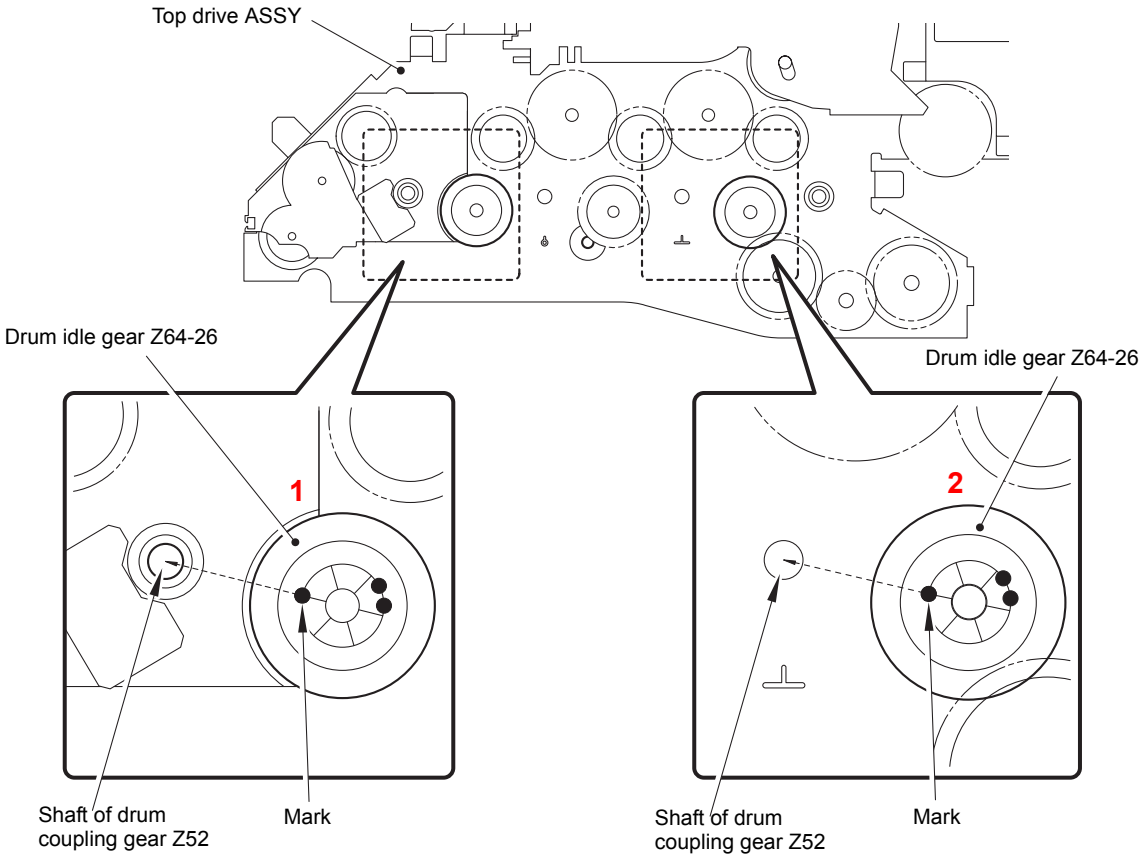

Fig. 4-2

(2) When mounting LY0198001 Drum idle gear Z64 and LY0199001 Drum idle gear Z64 first of Nos. 3 to 5, mount them by aligning their phases as shown in the figure below.

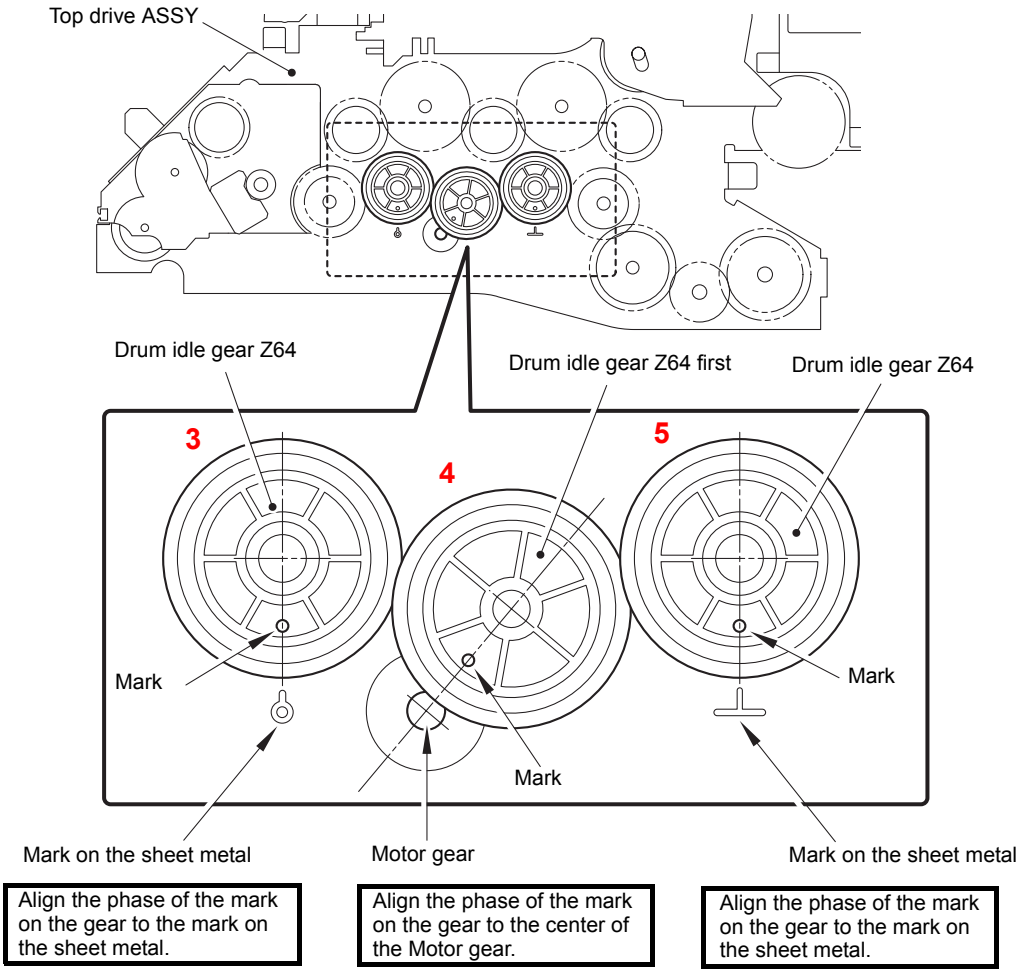

Fig. 4-3

(3) When assembling Nos. 6 to 9 LY0196001 Drum coupling gear Z52, be sure to assemble them by aligning the phase as shown in the figure below.

- Align the mark (▲) of the Drum coupling gear Z52 of No. 6 with the mark (●) of the Drum idle gear Z64-26.
- Align the mark (●) of the Drum coupling gear Z52 of No. 7 at the center between the two marks (●) of the Drum idle gear Z64-26.
- Align the mark (▲) of the Drum coupling gear Z52 of No. 8 with the mark (●) of the Drum idle gear Z64-26.
- Align the mark (◆) of the Drum coupling gear Z52 of No. 9 at the center between the two marks (●) of the Drum idle gear Z64-26.

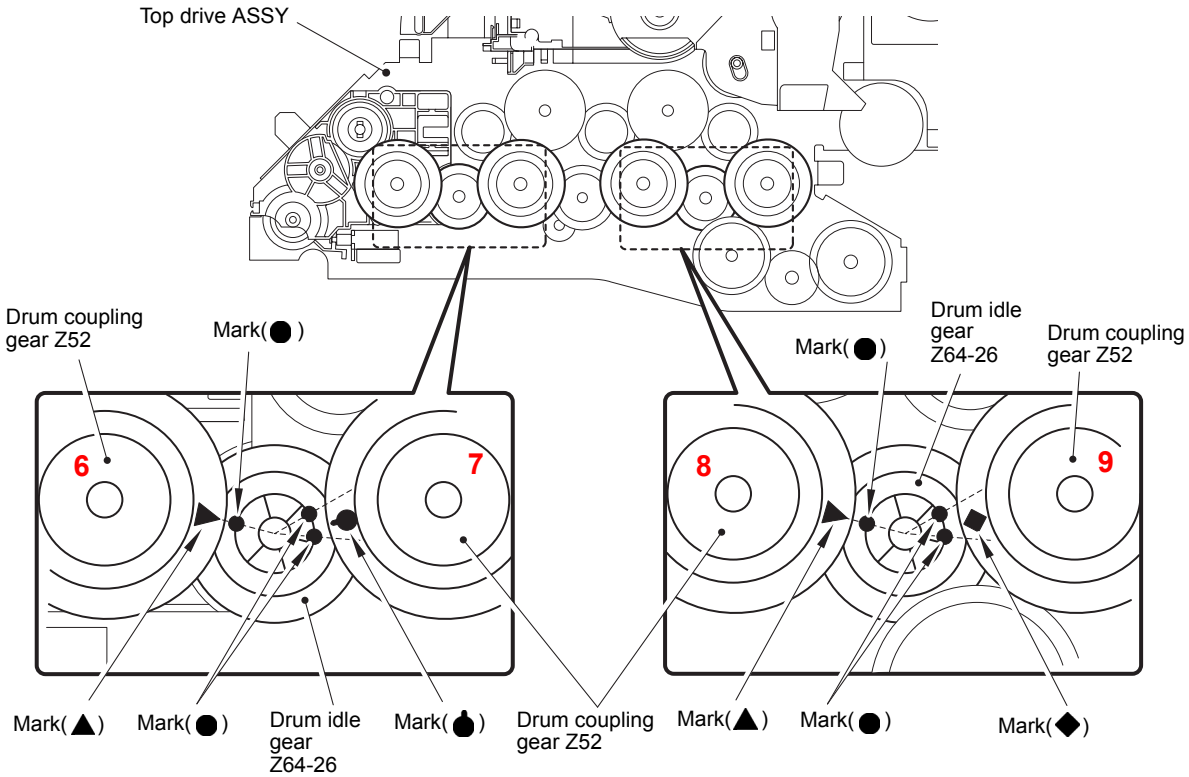

Fig. 4-4

Note:
Since the teeth of the gears are oriented at an angle in the shaft direction, be careful when aligning the phase upon mounting the gears.

7. IF YOU REPLACE THE DOCUMENT SCANNER UNIT

<What to do when replacing the document scanner unit>

- Acquisition of white level data (Maintenance mode: code 55)
- Scanning and printing check
- Placement of document scanner unit in position for transportation (Maintenance mode: code 06)

7.1 Acquisition of White Level Data (Maintenance Mode: Code 55)

Perform the acquisition of white level data and scanner area setting in accordance with "1.4.17 Acquisition of white level data" in Chapter 5.

7.2 Scanning and Printing Check

Scan the test chart TC-023 with ADF, and make sure there are no problem of the printed image.
Make sure there are no problem of the ADF, document scanner unit and the performance of recording part.

7.3 Placement of Document Scanner Unit in Position for Transportation (Maintenance Mode: Code 06)

Perform the placement of document scanner unit in the position for transportation in accordance with "1.4.3 Placement of document scanner unit in position for transportation" in Chapter 5.

8. IF YOU REPLACE THE PANEL UNIT OR RELATED PARTS

<What to do when replacing the panel unit or related parts >

- Rewriting panel firmware using computer (Touch panel model)
- Operation check of LCD (Maintenance mode: code 12)
- Operation check of control panel button (Maintenance mode: code 13)

8.1 Rewriting Panel Firmware Using Computer (Touch Panel Model)

Check if the firmware written on the Main PCB and the firmware written in the Panel PCB are the latest versions. If they are the latest versions, there is no need to rewrite the firmware.
If either of the firmware is not the latest version, make sure to rewrite the firmware which is not the latest version in accordance with "1.1.2 Rewriting the firmware using computer" or "1.1.3 Rewriting the firmware using USB flash memory" in this chapter.

8.2 Operation Check of LCD (Maintenance Mode: Code 12)

Check performance of the LCD in accordance with "1.4.7 Operational check of LCD" in Chapter 5.

8.3 Operation Check of Control Panel Button (Maintenance Mode: Code 13)

Check performance of the control panel button in accordance with "1.4.8 Operational check of control panel button" in Chapter 5.

9. IF YOU REPLACE THE LCD UNIT

<What to do when replacing the LCD unit >

- Operation check of LCD (Maintenance mode: code 12)

9.1 Operation Check of LCD (Maintenance Mode: Code 12)

Check performance of the LCD in accordance with "1.4.7 Operational check of LCD" in Chapter 5.

10. IF YOU REPLACE THE TOUCH PANEL ASSY (TOUCH PANEL MODEL)

<What to do when replacing the touch panel ASSY>

- Rewriting panel firmware using computer
- Adjustment of touch panel (Maintenance mode: code 61)

10.1 Rewriting Panel Firmware Using Computer

Check if the firmware written on the Main PCB and the firmware written in the Panel PCB are the latest versions. If they are the latest versions, there is no need to rewrite the firmware.
If either of the firmware is not the latest version, make sure to rewrite the firmware which is not the latest version in accordance with "1.1.2 Rewriting the firmware using computer" or "1.1.3 Rewriting the firmware using USB flash memory" in this chapter.

10.2 Adjustment of Touch Panel (Maintenance Mode: Code 61) (Touch Panel Model Only)

Perform adjustment of touch panel in accordance with "1.4.18 Adjustment of touch panel" in Chapter 5.

11. IF YOU REPLACE THE SECOND SIDE SCANNING CIS (DUPLEX SCANNING MODEL)

<What to do when replacing the second side scanning CIS>

- Acquisition of white level data (Maintenance mode: code 55)
- Scanning and printing check
- Placement of document scanner unit in position for transportation (Maintenance mode: code 06)

11.1 Acquisition of White Level Data (Maintenance Mode: Code 55)

Perform the acquisition of white level data and scanner area setting in accordance with "1.4.17 Acquisition of white level data" in Chapter 5.

11.2 Scanning and Printing Check

Scan the test chart TC-023 with ADF, and make sure there are no problem of the printed image.
Make sure there are no problem of the ADF, document scanner unit and the performance of recording part.

11.3 Placement of Document Scanner Unit in Position for Transportation (Maintenance Mode: Code 06)

Perform the placement of document scanner unit in the position for transportation in accordance with "1.4.3 Placement of document scanner unit in position for transportation" in Chapter 5.

12. IF YOU REPLACE THE ADF UNIT

<What to do when replacing the ADF unit>

- Acquisition of white level data (Maintenance mode: code 55)
- Scanning and printing check

12.1 Acquisition of White Level Data (Maintenance Mode: Code 55)

Perform the acquisition of white level data and scanner area setting in accordance with "1.4.17 Acquisition of white level data" in Chapter 5.

12.2 Scanning and Printing Check

Scan the test chart TC-023 with ADF, and make sure there are no problem of the printed image.
Make sure there are no problem of the ADF, document scanner unit and the performance of recording part.

CHAPTER 5
SERVICE FUNCTIONS

CHAPTER 5
SERVICE FUNCTIONS

Describes the maintenance mode which is exclusively designed for the purpose of checking the settings and adjustments using the buttons on the control panel.
This chapter also covers not-disclosed-to-users function menus, which activate settings and functions or reset the parts life.

CONTENTS

1. MAINTENANCE MODE

The maintenance mode is exclusively designed for the checking, setting and adjustments of the machine by using the buttons on the control panel. The EEPROM can be customized according to the destination of the machine. Moreover, the operational check of the LCD, operation panel board, and sensors, print test, display of the log information and error codes, and change of the worker switches (WSW) can be performed.

1.1 How to Enter the Maintenance Mode

■ Non Touch panel model

<Operating procedure>

(1) Press the **Menu** button and then the **Start/Black** button while the machine is in the ready state. Next, press the ▲ button four times to enter the maintenance mode.

> **Memo:**
> Operation using **Menu**, *****, **2**, **8**, **6** and **4** buttons is also available.

(2) The machine beeps for one second and displays "▮▮ MAINTENANCE ▮▮▮" on the LCD, indicating that it is placed in the initial state of the maintenance mode, a mode in which the machine is ready to accept entry from the buttons.

(3) To select any of the maintenance mode functions shown in the next page, enter the maintenance mode that you want to use using the ten-key pad.

> **Memo:**
> - To exit from the maintenance mode and switch to ready state, press the **9** button twice in the initial state of the maintenance mode.
> - When the **Stop/Exit** button is pressed, the machine beeps for one second and returns to the initial state of the maintenance mode.
> - When an incorrect maintenance mode is entered, the machine beeps for one second and returns to the initial state of the maintenance mode.

■ Touch panel model

<Operating procedure>

(1) While the machine is in the ready state, press the **COPY** and **SCAN** buttons at the same time, and then press the *****, **2**, **8**, **6** and **4** buttons in this order.

(2) The machine beeps for about one second and displays "▮▮ MAINTENANCE ▮▮▮" on the touch panel, indicating that the machine enters the initial state of the maintenance mode.

(3) To select any of the maintenance mode functions shown in the next page, enter the maintenance mode that you want to use using the ten-key pad.

> **Memo:**
> - To exit from the maintenance mode and switch to ready state, press the **9** button twice in the initial state of the maintenance mode.
> - When the **Stop/Exit** button is pressed, the machine beeps for one second and returns to the initial state of the maintenance mode.
> - In the maintenance mode, the functions are assigned to the buttons on the operation panel as shown in the table below.

Button on operation panel	Assigned function
Pressing the **SCAN** and **COPY** buttons at the same time	**Menu** button
SCAN button	▲ button
COPY button	▼ button
Print Data button	**OK** button

Since the buttons assigned to these functions are not included in the detailed description of each maintenance mode for the touch panel model, be sure to check the above table to use the assigned buttons.

1.2 How to Enter the End User-accessible Maintenance Mode

Basically, the maintenance-mode functions listed in the next page should be accessed by service personnel only. However, you can allow end users to access some of these under the guidance of service personnel by phone, for example.
The end user-accessible functions are **shaded** in the table given on the next page.(codes 06, 09, 10, 11, 12, 25, 43, 45, 52, 53, 54, 66, 68, 71, 72, 77, 80, 82, 87, 88 and 91)
Function code 10 accesses the firmware switches, each of which has eight selectors.
The service personnel should instruct end users to follow the procedure given below.

■ Non Touch panel model

<Operating procedure>

(1) Press the **Menu**, **Start/Black**, **Menu** and ▲ buttons in this order when the machine is in the ready state. "MAINTENANCE 06" appears on the LCD.

(2) Press the ▲ or ▼ button to display the desired maintenance code on the LCD. Then press the **OK** button.

To switch the machine back to the ready state, press the **Stop/Exit** button. When each of the user-accessible functions is completed, the machine automatically returns to the ready state.

■ Touch panel model

<Operating procedure>

(1) While the machine is in the ready state, press the **COPY** and **SCAN** buttons at the same time, and press the **Start/Black** button, then press the **COPY** and **SCAN** buttons at the same time. "0" is displayed on the LCD.

(2) Enter the maintenance mode that you want to use using the ten-key pad.

To switch the machine back to the ready state, press the **Stop/Exit** button. When each of the user-accessible functions is completed, the machine automatically returns to the ready state.

1.3 List of Maintenance-mode Functions

Function code	Function	Refer to:
01	EEPROM parameter initialization	1.4.1 (5-4)
05	Printout of scanning compensation data	1.4.2 (5-5)
06	Placement of document scanner unit in position for transportation	1.4.3 (5-11)
08	ADF performance test	1.4.4 (5-11)
09	Monochrome image quality test pattern	1.4.5 (5-12)
10	Worker switch (WSW) setting	1.4.6 [1] (5-13)
11	Printout of worker switch data	1.4.6 [2] (5-16)
12	Operation check of LCD	1.4.7 (5-17)
13	Operational check of control panel button	1.4.8 (5-19)
25	Software version check	1.4.9 (5-21)
32	Operational check of sensors	1.4.10 (5-22)
33	LAN connection status display	1.4.11 (5-26)
43	PC print function	1.4.12 (5-27)
45	Not-disclosed-to-users functions	1.4.13 (5-30)
52	EEPROM customizing (User-accessible: Non Touch panel model only)	1.4.14 (5-35)
53	Received data transfer function	1.4.15 (5-36)
54	Fine adjustment of scan start/end positions	1.4.16 (5-38)
55	Acquisition of white level data	1.4.17 (5-40)
61	Adjustment of touch panel	1.4.18 (5-41)
66	Adjustment of inter-color position alignment	1.4.19 (5-42)
67	Continuous print test	1.4.20 (5-46)
68	Laser unit test pattern print	1.4.21 (5-49)
69	Frame pattern print (One-sided)	1.4.22 (5-50)
70	Frame pattern print (Two-sided)	1.4.23 (5-51)
71	Color test pattern	1.4.24 (5-52)
72	Sensitivity adjustment of density sensor	1.4.25 (5-54)
74	Setting by country	1.4.26 (5-55)
77	Printout of maintenance information	1.4.27 (5-57)
78	Operational check of fans	1.4.28 (5-58)
80	Display of machine history (log)	1.4.29 (5-59)
82	Error code indication	1.4.30 (5-64)
83	Developing bias voltage correction	1.4.31 (5-65)
87	Sending communication error list	1.4.32 (5-66)
88	Counter reset after replacing the fuser unit and paper feeding kit	1.4.33 (5-66)
91	EEPROM parameter initialization	1.4.1 (5-4)
99	Exit from the maintenance mode	1.4.34 (5-67)

*The functions shaded in the table above are user-accessible.

1.4 Detailed Description of Maintenance-mode Functions

1.4.1 EEPROM parameter initialization (Function code 01, 91)

<Function>

This function initializes the setting values of the operation parameters, user switches, and worker switches (WSW) registered in the EEPROM.
Entering function code 01 initializes almost all of the EEPROM areas, but entering 91 does not initialize some areas, as listed below.

<table>
<tr><th>Data item</th><th>Function code 01</th><th>Function code 91</th></tr>
<tr><td>Counter information</td><td rowspan="3">These will not be initialized.</td><td rowspan="7">These will not be initialized.</td></tr>
<tr><td>Error History</td></tr>
<tr><td>MAC Address (Ethernet Address)</td></tr>
<tr><td>Operation lock of the control panel password</td><td rowspan="8">These will be initialized.</td></tr>
<tr><td>Secure Function Lock</td></tr>
<tr><td>Telephone function registration
One-touch dialing
Speed dialing
Group dialing</td></tr>
<tr><td>User switches (Items to be initialized when resetting to the factory default settings)</td><td rowspan="5">These will be initialized.</td></tr>
<tr><td>Worker switch</td></tr>
<tr><td>Function settings except user switches (Items except the factory default settings)
- Languages
- Reprint
- Secure Print
- Interfaces</td></tr>
<tr><td>LAN area (Network settings)</td></tr>
<tr><td>PCL core area
(Emulation settings)</td></tr>
</table>

<Operating procedure>

(1) Press the **0** and **1** buttons (or the **9** and **1** buttons according to your need) in this order in the initial state of the maintenance mode. The "PARAMETER INIT" appears on the LCD.

(2) Upon completion of parameter initialization, the machine returns to the initial state of the maintenance mode.

Note:
Function code 01 is for service personnel. Function code 91 is for user support.

1.4.2 Printout of scanning compensation data (Function code 05)

<Function>

The machine prints out the brightness level data for scanning compensation.

<Operating procedure>

Note:

- Be sure to execute this operating procedure not immediately after the power is turned ON, but after conducting the document scanning operation at least once in duplex scanning. Since the machine initializes the brightness level data and obtains the standard value for document scanning compensation when starting scanning the document, the correct data for compensation cannot be printed out even if this operation is implemented without scanning the document.
- The print result varies depending on whether implementing color scanning or black and white scanning immediately before this operating procedure. Make sure the brightness level data you want to print and implement the operation below.

(1) For white and black scanning, copy the document. For color scanning, implement color copy of the document.

(2) Press the **0** and **5** buttons in this order in the initial state of the maintenance mode. The "1. Front 2. Back" will appear on the LCD.

(3) When the **1** button or **2** button is selected, the equipment prints out the scanning compensation data list (Refer to Fig. 5-1, Fig. 5-2, Fig. 5-3 and Fig. 5-4) containing the following:

■ **Black and white/color scanning (First side) (Front)**

Note:

In the case of the black and white scanning, the output data (B) and (R) are invalid.

a)	Black and white data graph	by previous scanning pixel count
b)	LED CURRENT DATA	1 Byte
c)	LED pulse data 1(UP) (G)	2 Bytes
d)	LED pulse data 1(DOWN) (G)	2 Bytes
e)	LED pulse data 1(UP) (B)	2 Bytes
f)	LED pulse data 1(DOWN) (B)	2 Bytes
g)	LED pulse data 1(UP) (R)	2 Bytes
h)	LED pulse data 1(DOWN) (R)	2 Bytes
i)	LED pulse data 2(UP) (G)	2 Bytes
j)	LED pulse data 2(DOWN) (G)	2 Bytes
k)	LED pulse data 2(UP) (B)	2 Bytes
l)	LED pulse data 2(DOWN) (B)	2 Bytes
m)	LED pulse data 2(UP) (R)	2 Bytes
n)	LED pulse data 2(DOWN) (R)	2 Bytes
o)	OFFSET (AFE parameter)	1 Byte
p)	GAIN (AFE parameter)	2 Bytes
q)	Background color compensated data	1 Byte
r)	Black level data	by previous scanning pixel count
s)	White level data (G)	by previous scanning pixel count
t)	White level data (B)	by previous scanning pixel count
u)	White level data (R)	by previous scanning pixel count

■ Black and white/color scanning (Second side) (Back)

Note:
In the case of the black and white scanning, the output data (B) and (R) are invalid.

a)	Black and white data graph	by previous scanning pixel count
b)	LED CURRENT DATA	1 Byte
c)	LED pulse data 1(UP) (G)	2 Bytes
d)	LED pulse data 1(DOWN) (G)	2 Bytes
e)	LED pulse data 1(UP) (B)	2 Bytes
f)	LED pulse data 1(DOWN) (B)	2 Bytes
g)	LED pulse data 1(UP) (R)	2 Bytes
h)	LED pulse data 1(DOWN) (R)	2 Bytes
i)	LED pulse data 2(UP) (G)	2 Bytes
j)	LED pulse data 2(DOWN) (G)	2 Bytes
k)	LED pulse data 2(UP) (B)	2 Bytes
l)	LED pulse data 2(DOWN) (B)	2 Bytes
m)	LED pulse data 2(UP) (R)	2 Bytes
n)	LED pulse data 2(DOWN) (R)	2 Bytes
o)	RLCV (AFE parameter)	1 Byte
p)	OFFSET (AFE parameter)	1 Byte
q)	GAIN (AFE parameter)	2 Bytes
r)	Background color compensated data	1 Byte
s)	Black level data	by previous scanning pixel count
t)	White level data (G)	by previous scanning pixel count
u)	White level data (B)	by previous scanning pixel count
v)	White level data (R)	by previous scanning pixel count

(4) When printing of the correction data is finished, the machine beeps for one second and returns to the initial state of the maintenance mode.

Note:
- If any data is abnormal, its code will be printed in inline style.
- Regarding the black and white level data after monochrome reading is done, only the G data is printed, and R and B data are not printed.
- The white level data and black level data are imported in 10/16 bits, and the data in the upper 8 bits are printed.

■ Black and white scanning (First side) (Front)

```
LED CURRENT :01
LED PLS1UP G:017e
LED PLS1DN G:0982
LED PLS1UP
LED PLS1DN
LED PLS1UP
LED PLS1DN
LED PLS2UP
LED PLS2DN
LED PLS2UP
LED PLS2DN
LED PLS2UP
LED PLS2DN
AFE OFFSET
AFE GAIN
BACK DATA
```

```
4f4f4e00 :   00 00 00 00 00 00 00 00 00 00 00 00 00 00 00 00 00 00
4f4f4e20 :   00 00 00 00 00 00 00 00 00 00 00 00 00 00 00 00 00 00
4f4f4e40 :   00 00 00 00 00 00 00 00 00 00 00 00 00 00 00 00 00 00
4f4f4e60 :   00 00 00 00 00 00 00 00 00 00 00 00 00 00 00 00 00 00
```

```
4f4f2e00 :   05 05 05 05 05 05 05 05 05 05 05 05 05 05 05 05 05 05
4f4f2e20 :   05 05 05 05 05 05 05 05 05 05 05 05 05 05 05 05 05 05
4f4f2e40 :   05 05 05 05 05 05 05 05 05 05 05 05 05 05 05 05 05 05
4f4f2e60 :   05 05 05 05 05 05 05 05 05 05 05 05 05 05 05 05 05 05
4f4f2e80 :   05 05 05 05 05 05 05 05 05 05 04 04 05 05 05 05 05 05
4f4f2ea0 :   04 05 04 04 05 05 05 04 04 05 04 05 04 05 04 05 04 05
4f4f2ec0 :   05 04 04 05 05 05 04 04 04 05 04 05 04 04 04 05 05 05
4f4f2ee0 :   04 04 04 05 04 05 05 05 04 04 04 04 04 04 04 04 04 05
4f4f2f00 :   04 04 04 05 04 05 04 04 [illegible] 04
4f4f2f20 :   04 04 04 04 04 04 [illegible]
4f4f2f40 :   04 04 04 04 04 [illegible] 01 01 00 01 00 00 00
4f4f2f60 :   04 04 04 03 [illegible] 00 00 00 00 00 01 00 00 00 00 00
4f4f2f80 :   03 03 [illegible] 00 00 00 00 00 00 00 00 00 00 00 00 00
[illegible] 00 00 01 00 01 00 00 00 00 00 00 00 00
[illegible] 03 03 03 03 03 03 03 03 03 03 03 03 03 03 03 03 03 03
4f4f47e0 :   03 03 03 03 03 03 03 03 03 03 03 03 03 03 03 02 03
4f4f4800 :   03 03 03 03 02 03 03 03 03 03 02 03 02 03 03 03
4f4f4820 [illegible]
4f4f4840 [illegible]
4f4f4860 [illegible]
4f4f4880 [illegible]
4f4f48a0 [illegible]
4f4f48c0 [illegible]
4f4f48e0 [illegible]
4f4f4900 [illegible]
4f4f4920 [illegible]
4f4f4940 [illegible]
4f4f4960 [illegible]
4f4f4980 [illegible]
4f4f49a0 [illegible]
4f4f49c0 [illegible]
4f4f49e0 [illegible]
4f4f4a00 [illegible]
4f4f4a20 [illegible]
4f4f4a40 [illegible]
4f4f4a60 [illegible]
4f4f4a80 [illegible]
4f4f4aa0 [illegible]
4f4f4ac0 [illegible]
4f4f4ae0 [illegible]
4f4f4b00 [illegible]
4f4f4b20 [illegible]
4f4f4b40 [illegible]
4f4f4b60 [illegible]
4f4f4b80 [illegible]
4f4f4ba0 [illegible]
4f4f4bc0 [illegible]
4f4f4be0 [illegible]
4f4f4c00 [illegible]
4f4f4c20 [illegible]
4f4f4c40 [illegible]
4f4f4c60 [illegible]
4f4f4c80 [illegible]
4f4f4ca0 [illegible]
4f4f4cc0 [illegible]
4f4f4ce0 [illegible]
4f4f4d00 [illegible]
4f4f4d20 [illegible]
4f4f4d40 [illegible]
4f4f4d60 [illegible]
4f4f4d80 [illegible]
4f4f4da0 [illegible]
4f4f4dc0 [illegible]
4f4f4de0 [illegible]
```

```
4f4f2600 :   05 05 05 05 05 05 05 05 05 05 05 05 05 05 05 05 05 05
4f4f2620 :   05 05 05 05 05 05 05 05 05 05 05 05 05 05 05 05 05 05
4f4f2640 :   05 05 05 05 05 05 05 05 05 05 05 05 05 05 05 05 05 05
4f4f2660 :   05 05 05 05 05 05 05 05 05 05 05 05 05 05 05 05 05 05
4f4f2680 :   05 05 05 05 05 05 05 05 05 05 05 05 05 05 05 05 05 05
4f4f26a0 :   04 05 05 05 05 05 05 05 05 05 05 05 05 05 05 05 05 05
4f4f26c0 :   04 05 05 05 05 05 04 05 05 05 05 04 05 05 05 05 05 05
4f4f26e0 :   05 05 05 04 04 05 05 05 05 05 05 04 04 04 05 05 04 05
4f4f2700 :   05 05 04 05 04 05 04 05 04 05 04 05 04 05 05 04 04 05
4f4f2720 :   04 05 05 04 04 05 04 04 04 04 04 04 04 04 04 04 04 04
4f4f2740 :   04 04 04 04 04 04 04 04 04 04 05 05 04 04 04 04 04 04
4f4f2760 :   04 05 04 04 04 04 04 04 04 04 04 05 04 04 04 04 04 04
4f4f2780 :   04 04 04 04 04 04 04 04 04 04 04 04 04 04 04 04 04 04
4f4f27a0 :   04 04 04 04 04 04 04 04 04 04 04 04 04 04 04 04 04 04
4f4f27c0 :   04 04 04 04 04 04 04 04 04 04 04 04 04 04 04 04 04 04
4f4f27e0 :   04 04 04 04 04 04 04 04 04 04 04 04 04 04 04 04 04 04
4f4f2800 :   04 04 04 04 04 04 04 04 04 04 04 04 04 04 04 04 04 04
4f4f2820 :   04 04 04 04 04 04 04 04 04 04 04 04 04 04 04 04 04 04
4f4f2840 :   04 04 04 04 04 04 04 03 04 04 04 04 04 04 04 04 03 04
4f4f2860 :   04 04 04 04 04 04 04 04 04 03 04 03 04 03 04 03 04 04
4f4f2880 :   03 03 03 04 03 03 03 03 03 03 03 03 03 03 03 03 03 03
4f4f28a0 :   03 03 03 03 03 03 03 03 03 03 03 03 03 03 03 03 03 03
4f4f28c0 :   03 03 03 03 03 03 03 03 03 02 03 03 03 03 03 03 03 03
4f4f28e0 :   03 03 03 03 03 03 03 03 03 03 03 03 02 03 03 03 03 03
4f4f2900 :   02 03 02 03 02 03 03 03 03 03 02 02 03 03 02 02
4f4f2920 :   03 03 02 02 03 03 03 03 03 02 02 02 03 03 02 03
4f4f2940 :   02 03 02 03 03 03 02 03 03 02 02 03 03 03 02 03
4f4f2960 :   06 06 06 06 06 06 06 06 06 06 06 06 06 06 06 06
4f4f2980 :   06 06 06 06 06 06 06 06 06 06 06 06 06 06 05 05
4f4f29a0 :   06 06 06 06 06 06 06 05 06 06 06 06 05 06 06 05
4f4f29c0 :   06 05 05 05 05 05 05 05 05 05 06 05 05 06 05 05
4f4f29e0 :   05 05 05 06 05 05 05 06 05 05 05 05 05 05 05 05
4f4f2a00 :   05 05 05 05 05 05 05 05 05 05 05 05 05 05 05 05
4f4f2a20 :   05 05 05 05 05 05 05 05 05 05 05 05 05 05 05 05
4f4f2a40 :   05 05 05 05 05 05 05 05 05 05 05 05 05 05 05 05
4f4f2a60 :   05 05 05 05 05 05 05 05 05 05 05 05 05 05 05 05
4f4f2a80 :   05 05 05 05 05 05 05 05 05 05 05 05 05 05 05 05
4f4f2aa0 :   05 05 05 05 05 05 05 05 05 05 05 05 05 05 05 05
4f4f2ac0 :   05 05 05 05 05 05 05 05 05 05 05 05 05 05 05 05
4f4f2ae0 :   05 05 05 05 05 05 05 05 05 05 05 05 05 05 05 05
4f4f2b00 :   05 05 05 05 05 05 05 05 05 05 05 05 05 05 05 05
4f4f2b20 :   05 05 05 05 05 05 05 05 05 05 05 05 05 05 04 05
4f4f2b40 :   05 05 05 05 05 05 05 05 05 05 05 05 05 05 04 05
4f4f2b60 :   05 05 05 05 05 05 05 05 05 05 05 05 05 05 05 05
4f4f2b80 :   05 05 05 05 05 05 04 05 05 05 04 04 05 05 04 05
4f4f2ba0 :   04 05 04 05 04 04 04 04 04 04 05 04 04 04 04 04 04
4f4f2bc0 :   04 05 04 04 04 04 04 04 04 04 04 04 04 04 04 04 04
4f4f2be0 :   04 04 04 04 04 04 04 04 04 04 04 04 04 04 04 04 04
4f4f2c00 :   04 04 04 04 04 04 04 04 03 04 04 04 03 04 03 04
4f4f2c20 :   03 03 03 03 03 03 03 04 03 03 03 03 03 03 03 03
4f4f2c40 :   03 03 03 03 03 03 03 03 03 03 03 03 03 03 03 03
4f4f2c60 :   03 03 03 03 03 03 03 03 03 03 03 03 03 03 03 03
4f4f2c80 :   03 03 03 03 03 03 03 03 03 03 03 03 03 03 03 03
4f4f2ca0 :   03 03 03 03 03 03 03 03 03 03 03 03 03 03 03 03
4f4f2cc0 :   06 06 06 06 06 06 06 06 05 06 05 06 06 06 05 06
4f4f2ce0 :   06 06 06 05 06 06 06 05 05 06 06 06 05 06 05 05
4f4f2d00 :   05 05 05 06 05 06 05 06 05 05 05 05 05 05 05 05
4f4f2d20 :   05 05 05 05 06 05 05 05 05 05 05 05 05 05 05 06
4f4f2d40 :   05 05 05 05 05 05 05 05 05 05 05 05 05 05 05 05
4f4f2d60 :   05 05 05 05 05 05 05 05 05 05 05 05 05 05 05 05
4f4f2d80 :   05 05 05 05 05 05 05 05 05 05 05 05 05 05 05 05
4f4f2da0 :   05 05 05 05 05 05 05 05 05 05 05 05 05 05 05 05
4f4f2dc0 :   05 05 05 05 05 05 05 05 05 05 05 05 05 05 05 05
4f4f2de0 :   05 05 05 05 05 05 05 05 05 05 05 05 05 05 05 05
```

Fig. 5-1

■ Black and white scanning (Second side) (Back)

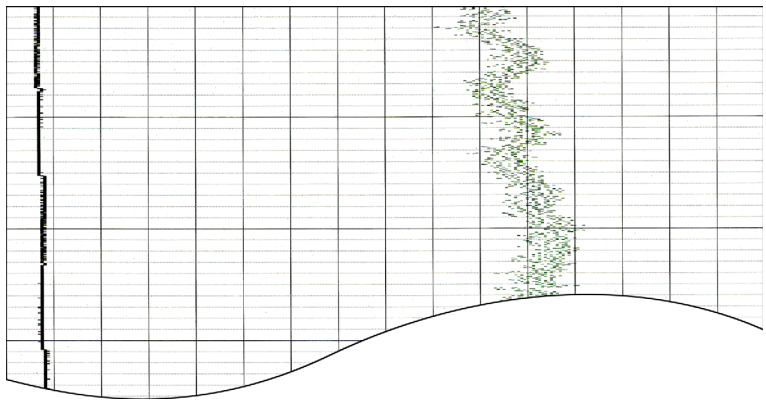

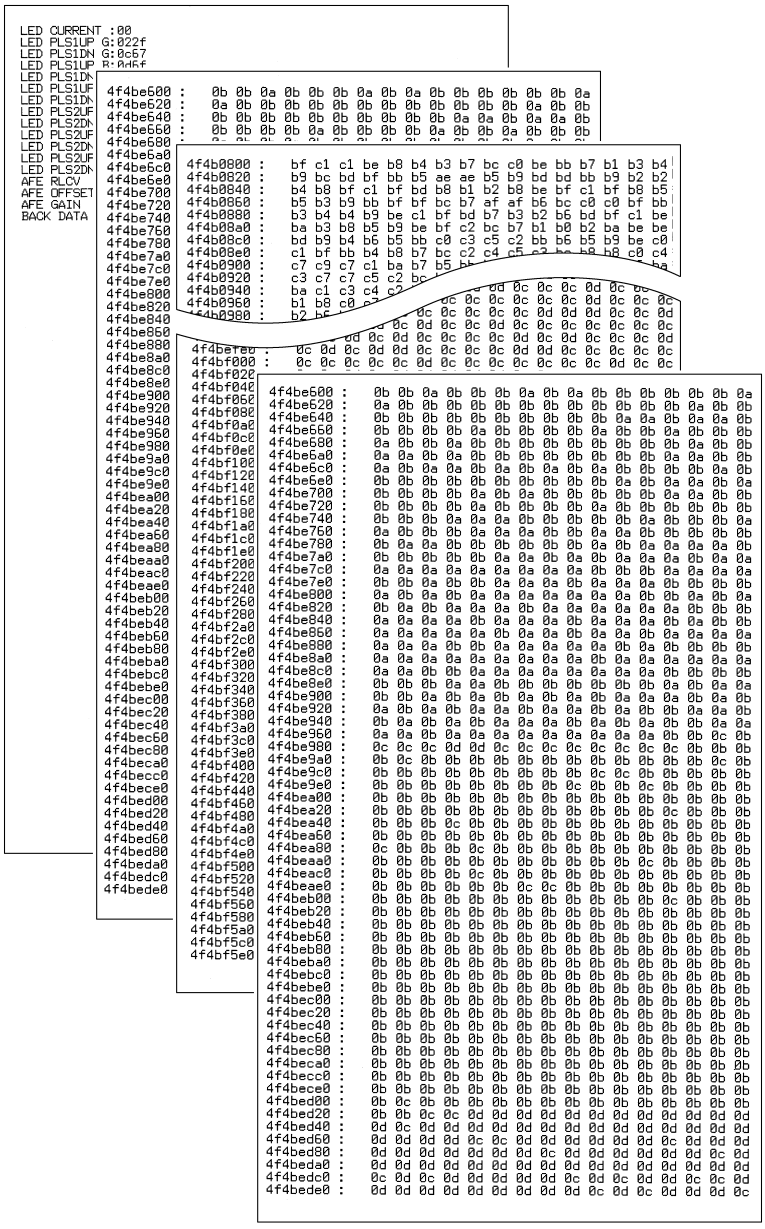

Fig. 5-2

■ Color scanning (First side) (Front)

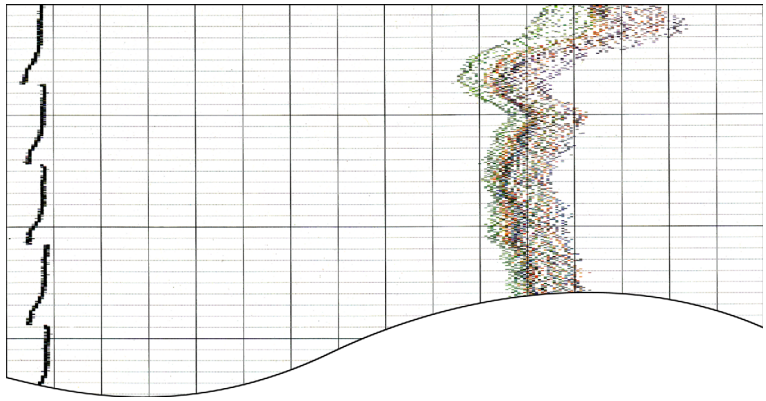

```
LED CURRENT :05
LED PLS1UP G:0046
LED PLS1DN G:06e5
LED PLS1UP
LED PLS1DN
LED PLS1UP
LED PLS1DN
LED PLS2UP
LED PLS2DN
LED PLS2UP
LED PLS2DN
LED PLS2UP
LED PLS2DN
AFE OFFSET
AFE GAIN
BACK DATA
```

```
4f4efc00 :   dd e4 e1 d8 d0 ce d4 dc e3 e0 d6 cc cc cc d2 dd
4f4efc20 :   de d5 cb c7 c8 cd da d9 d1 c6 c3 c1 c5 cf d3 d0
4f4efc40 :   c1 bb bb bd c6 ce c6 bb b6 b4 b7 bc c4 c2 b8 b0
4f4efc60 :   ad ae b5 bc b9 b1 a8 a5 a6 aa b2 b2 ac a0 90 8b
```

```
4f4f2e00 :   0c 0d 0c 0c 0c 0c 0d 0c 0c 0d 0c 0c 0d 0d 0c 0d
4f4f2e20 :   0c 0d 0c 0c 0c 0d 0d 0c 0d 0d 0c 0d 0c 0c 0c 0c
4f4f2e40 :   0c 0c 0c 0c 0c 0d 0c 0c 0c 0c 0d 0c 0d 0c 0c 0d
4f4f2e60 :   0c 0c 0c 0d 0c 0d 0c 0c 0c 0c 0d 0d 0c 0c 0c 0c
4f4f2e80 :   0d 0d 0c 0c 0c 0c 0c 0c 0c 0c 0c 0c 0c 0c 0c 0c
4f4f2ea0 :   0b 0c 0b 0c 0c 0c 0c 0c 0c 0c 0c 0c 0b 0c 0c 0b
4f4f2ec0 :   0c 0b 0c 0c 0c 0c 0c 0b 0c 0c 0c 0c 0b 0b 0b 0c
4f4f2ee0 :   0b 0b 0b 0b 0b 0c 0c 0b 0b 0b 0b 0b 0c 0b 0b 0b
4f4f2f00 :   0b 0b 0a 0c 0b 0c 0b 0a
4f4f2f20 :   0b 0b 0a 0b 0a 0b
4f4f2f40 :   09 0a 0a 0a
4f4f2f60 :   09 0a 09 0a
4f4f2f80 :   08 0a
```

```
4f4f2600 :   0c 0d 0c 0c 0d 0c 0c 0c 0c 0c 0c 0c 0c 0d 0c 0c
4f4f2620 :   0c 0c 0c 0d 0c 0c 0c 0c 0c 0c 0c 0c 0c 0c 0c 0c
4f4f2640 :   0c 0c 0c 0c 0c 0c 0b 0c 0c 0c 0c 0c 0c 0c 0c 0c
4f4f2660 :   0b 0b 0c 0c 0c 0c 0c 0c 0c 0c 0c 0c 0c 0c 0c 0c
4f4f2680 :   0c 0c 0c 0c 0c 0c 0c 0c 0c 0c 0c 0c 0c 0c 0c 0b
4f4f26a0 :   0b 0c 0c 0c 0b 0c 0c 0c 0b 0b 0b 0b 0c 0b 0b 0c
4f4f26c0 :   0b 0c 0c 0b 0c 0b 0b 0c 0b 0c 0b 0c 0c 0c 0c 0c
4f4f26e0 :   0b 0b 0c 0b 0b 0c 0b 0c 0c 0c 0b 0c 0c 0b 0c 0c
4f4f2700 :   0c 0c 0b 0b 0b 0b 0b 0c 0b 0c 0b 0b 0c 0c 0c 0c
4f4f2720 :   0b 0c 0c 0b 0b 0c 0b 0c 0b 0c 0b 0c 0c 0b 0c 0b
4f4f2740 :   0b 0c 0c 0b 0b 0b 0b 0c 0c 0c 0c 0c 0b 0b 0c
4f4f2760 :   0b 0c 0b 0b 0b 0b 0b 0c 0b 0b 0b 0c 0b 0c 0c 0b
4f4f2780 :   0b 0b 0b 0c 0b 0c 0b 0c 0b 0c 0c 0c 0b 0c 0c 0b
4f4f27a0 :   0b 0c 0b 0b 0b 0c 0b 0c 0c 0b 0b 0c 0b 0c 0b 0b
4f4f27c0 :   0b 0b 0b 0b 0b 0b 0b 0b 0b 0b 0c 0b 0b 0b 0b
4f4f27e0 :   0b 0b 0b 0b 0b 0b 0b 0b 0b 0b 0b 0b 0b 0b 0b 0b
4f4f2800 :   0b 0b 0b 0b 0a 0b 0a 0a 0a 0b 0a 0b 0a 0a 0a 0b
4f4f2820 :   0a 0a 0a 0b 0b 0a 0a 0a 0a 0a 0a 0b 0a 0a 0a 0a
4f4f2840 :   0a 0a 0a 0a 0a 0a 09 0a 09 0a 09 0a 0a 09 09 0a
4f4f2860 :   0a 0a 09 0a 09 0a 09 09 09 0a 09 09 09 0a 09 09
4f4f2880 :   09 09 08 09 09 09 09 08 08 08 08 08 08 08 08 08
4f4f28a0 :   08 08 08 08 08 08 08 07 08 08 08 07 07 08 07 07
4f4f28c0 :   07 08 07 07 07 07 07 07 07 07 07 07 07 07 07 07
4f4f28e0 :   07 07 07 07 07 07 07 07 07 07 06 06 07 07 07
4f4f2900 :   07 07 06 07 06 07 07 07 07 07 06 07 06 07 06 07
4f4f2920 :   07 07 06 06 06 07 06 07 07 07 06 06 07 07 06 07
4f4f2940 :   06 05 06 07 07 07 05 06 06 06 06 06 06 06 05 06
4f4f2960 :   0d 0c 0c 0d 0b 0c 0c 0d 0c 0d 0c 0d 0c 0d 0d 0d
4f4f2980 :   0d 0d 0d 0d 0d 0d 0d 0d 0d 0d 0d 0d 0d 0d 0d 0d
4f4f29a0 :   0d 0d 0d 0d 0c 0d 0d 0d 0d 0d 0d 0d 0d 0d 0e 0d
4f4f29c0 :   0d 0d 0d 0d 0d 0d 0d 0d 0c 0d 0d 0d 0d 0d 0d 0d
4f4f29e0 :   0d 0d 0d 0d 0d 0d 0d 0d 0d 0c 0d 0c 0c 0d 0d 0d
4f4f2a00 :   0d 0d 0c 0d 0d 0d 0c 0c 0c 0d 0d 0d 0c 0d 0d 0d
4f4f2a20 :   0c 0d 0d 0d 0d 0c 0c 0d 0d 0d 0d 0c 0d 0d 0c 0c
4f4f2a40 :   0c 0d 0c 0d 0d 0d 0d 0c 0c 0c 0c 0c 0c 0d 0c 0d
4f4f2a60 :   0c 0d 0c 0d 0c 0c 0c 0d 0c 0c 0d 0d 0c 0d 0c 0d
4f4f2a80 :   0c 0c 0d 0d 0c 0d 0c 0c 0c 0d 0c 0c 0c 0c 0c 0d
4f4f2aa0 :   0d 0c 0c 0d 0c 0c 0c 0d 0d 0d 0c 0d 0d 0c 0d 0c
4f4f2ac0 :   0c 0c 0c 0d 0c 0c 0d 0d 0d 0c 0c 0c 0c 0c 0c 0d
4f4f2ae0 :   0c 0d 0c 0c 0c 0c 0c 0c 0d 0c 0c 0d 0c 0d 0d 0c
4f4f2b00 :   0c 0c 0c 0d 0c 0c 0d 0d 0c 0c 0d 0c 0c 0d 0c 0c
4f4f2b20 :   0c 0c 0c 0c 0c 0c 0c 0d 0c 0c 0c 0c 0c 0c 0c 0c
4f4f2b40 :   0c 0c 0c 0c 0c 0c 0c 0c 0b 0c 0c 0c 0c 0c 0b 0c
4f4f2b60 :   0c 0c 0c 0c 0b 0c 0c 0b 0c 0c 0c 0c 0c 0c 0b
4f4f2b80 :   0b 0b 0c 0c 0c 0b 0b 0c 0b 0b 0b 0b 0b 0b 0b 0c
4f4f2ba0 :   0b 0c 0a 0b 0b 0b 0b 0a 0b 0b 0b 0b 0b 0b 0b 0a
4f4f2bc0 :   0a 0b 0b 0b 0a 0a 0a 0a 0b 0a 0a 0a 0a 0a 0a 0a
4f4f2be0 :   0a 0a 0a 0a 0a 0a 09 0a 0a 0a 0a 09 09 0a 09 0a
4f4f2c00 :   09 0a 09 09 09 09 09 09 09 09 09 09 09 09 09 09
4f4f2c20 :   08 08 08 09 08 09 08 08 08 08 08 08 08 08 08 08
4f4f2c40 :   08 08 07 08 08 08 08 08 08 08 08 08 08 08 08 08
4f4f2c60 :   08 08 08 07 07 08 08 08 08 08 08 07 07 07 08 08
4f4f2c80 :   08 07 07 08 08 08 08 07 08 08 08 07 08 08 08 08
4f4f2ca0 :   07 06 08 08 07 07 06 08 08 07 07 07 08 08 07 07
4f4f2cc0 :   0c 0c 0c 0c 0c 0c 0c 0c 0c 0c 0c 0d 0d 0d 0d 0d
4f4f2ce0 :   0d 0c 0d 0d 0d 0d 0d 0d 0d 0d 0d 0e 0d 0d 0d 0d
4f4f2d00 :   0d 0d 0c 0d 0d 0d 0d 0d 0c 0d 0d 0d 0d 0d 0d 0d
4f4f2d20 :   0d 0d 0d 0d 0d 0d 0d 0d 0d 0d 0d 0d 0c 0d 0d 0d
4f4f2d40 :   0d 0d 0d 0c 0c 0d 0c 0d 0d 0c 0c 0d 0d 0d 0d 0d
4f4f2d60 :   0d 0d 0c 0d 0d 0c 0d 0d 0c 0c 0c 0c 0d 0d 0c 0d
4f4f2d80 :   0c 0d 0c 0c 0c 0c 0d 0d 0c 0d 0c 0c 0c 0c 0c 0c
4f4f2da0 :   0c 0c 0c 0c 0c 0d 0c 0d 0d 0c 0c 0c 0c 0d 0c 0d
4f4f2dc0 :   0c 0c 0c 0d 0c 0c 0c 0d 0c 0c 0c 0d 0c 0d 0c 0c
4f4f2de0 :   0c 0c 0c 0c 0c 0c 0d 0d 0c 0d 0c 0c 0c 0c 0c 0d
```

Fig. 5-3

■ Color scanning (Second side) (Back)

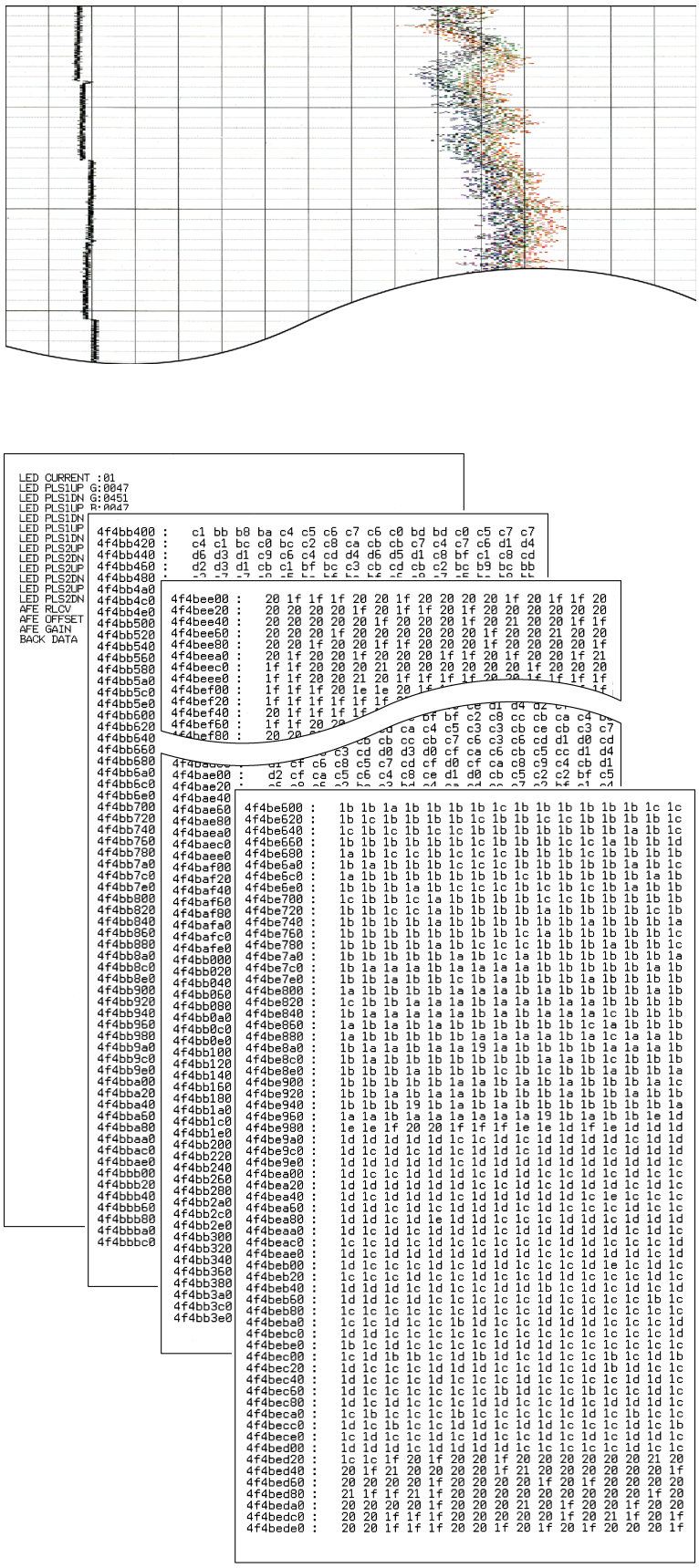

Fig. 5-4

1.4.3 Placement of document scanner unit in position for transportation (Function code 06)

<Function>

This function is to move the document scanner unit in position for transportation located at the left end. When you fix the machine and check its operation, you need to perform this function last before packing and shipping.

> **Note:**
> Please instruct end users to perform this function if possible before packing and shipping their FAX machine to a sales agent or a service dealer for the purpose of repair. (For information on the procedure to make the user operate the maintenance mode, refer to "1.2 How to Enter the End User-accessible Maintenance Mode" in this chapter.)

<Operating procedure>

(1) Press the **0** and **6** buttons in this order in the initial state of the maintenance mode. The document scanner unit moves to the designated position for transportation located at the left end. The "MAINTENANCE 06" is displayed until the document scanner unit is placed in position. When the document scanner unit is placed in the position, the "SCAN LOCKED" appears on the LCD.

(2) When the **Stop/Exit** button is pressed, the machine beeps for one second and returns to the initial state of the maintenance mode.

> **Note:**
> - When the document scanner unit fails to move to the transport position or when the maintenance mode: code 06 is executed while a reading error occurs, "SCAN LOCK ERROR" appears.
> - After moving the document scanner unit to the transport position, you cannot perform the scanning operation such as copy.

1.4.4 ADF performance test (Function code 08)

<Function>

The machine counts the documents fed by the automatic document feeder (ADF) and counts the scanned document pages and displays the result on the LCD.

<Operating procedure>

(1) Load documents. (Do not exceed the paper capacity of the ADF.) "DOC.READY" is displayed on the LCD.

(2) Press the **0** and **8** buttons in this order.

(3) While counting the documents, the machine feeds them in and out, displaying the number of pages on the LCD as shown below.

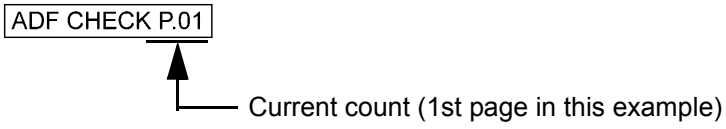

> **Note:**
> In the case of a duplex scanning model, 1 sheet is counted as 2 pages.

(4) When the **Stop/Exit** button is pressed, the machine beeps for one second and returns to the initial state of the maintenance mode.

1.4.5 Monochrome image quality test pattern (Function code 09)

<Function>

This function allows you to print various monochrome test patterns and check the quality and if there is any image loss.

<Operating procedure>

(1) Press the **0** and **9** buttons in this order in the initial state of the maintenance mode.

(2) Printing of the monochrome image quality test pattern (see the figure below) starts, and when printing is finished, the machine beeps for one second and returns to the initial state of the maintenance mode.

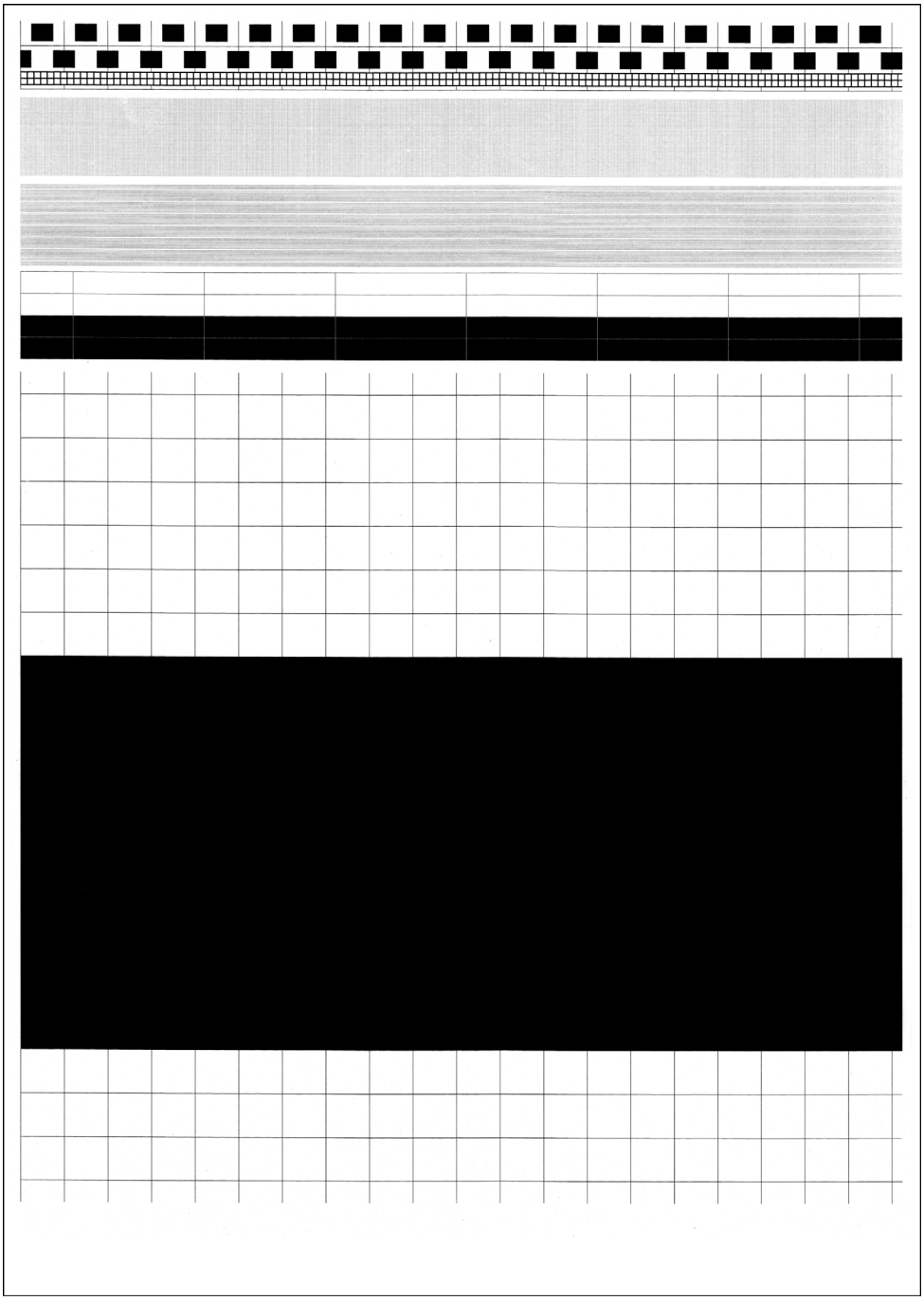

Fig. 5-5

1.4.6 Worker switch (WSW) setting and printout (Function code 10, 11)

[1] Worker switch setting (Function code 10)

The machine incorporates the following worker switch functions which may be activated with the procedures using the buttons on the control panel. The worker switches have been set at the factory in conformity to the codes of each country. Do not disturb them unless necessary. Some of these switches are disabled according to the model and specifications.

■ **Worker switch**

WSW No.	Function
WSW01	Dial pulse setting
WSW02	Tone signal setting
WSW03	PABX mode setting
WSW04	Transfer facility setting
WSW05	1st dial tone and busy tone detection
WSW06	**Redial/Pause** button setting and 2nd dial tone detection
WSW07	Dial tone setting 1
WSW08	Dial tone setting 2
WSW09	Protocol definition 1
WSW10	Protocol definition 2
WSW11	Busy tone setting
WSW12	Signal detection condition setting
WSW13	Modem setting
WSW14	AUTO ANS facility setting
WSW15	Redial facility setting
WSW16	Function setting 1
WSW17	Function setting 2
WSW18	Function setting 3
WSW19	Transmission speed setting
WSW20	Overseas communications mode setting
WSW21	TAD setting 1
WSW22	ECM and call waiting caller ID
WSW23	Communications setting
WSW24	TAD setting 2
WSW25	TAD setting 3
WSW26	Function setting 4
WSW27	Function setting 5
WSW28	Function setting 6
WSW29	Function setting 7
WSW30	Function setting 8

WSW No.	Function
WSW31	Function setting 9
WSW32	Function setting 10
WSW33	Function setting 11
WSW34	Function setting 12
WSW35	Function setting 13
WSW36	Function setting 14
WSW37	Function setting 15
WSW38	V.34 transmission settings
WSW39	V.34 transmission speed
WSW40	V.34 modem settings
WSW41	ON-duration of the scanning light source
WSW42	Internet mail settings
WSW43	Function setting 16
WSW44	Speeding up scanning-1
WSW45	Speeding up scanning-2
WSW46	Monitor of power ON/OFF state and parallel port kept at high
WSW47	Switching between high-speed USB and full-speed USB
WSW48	USB setup latency
WSW49	End-of-copying beep
WSW50	SDAA settings
WSW51	Function setting 17
WSW52	Function setting 18
WSW53	Function setting 19
WSW54	Function setting 20
WSW55	Interval of time required for the developing bias voltage correction
WSW56	Function setting 21
WSW57	Function setting 22
WSW58	Function setting 23
WSW59	Function setting 24
WSW60	Function setting 25
WSW61	Scanning light intensity to judge to be stable 1
WSW62	Scanning light intensity to judge to be stable 2
WSW63	Function setting 26
WSW64	Setting the language/Default paper size
WSW65	Setting the paper support
WSW66	Reserved (Change of the setting is prohibited)
WSW67	Reserved (Change of the setting is prohibited)

WSW No.	Function
WSW68	Reserved (Change of the setting is prohibited)
WSW69	Reserved (Change of the setting is prohibited)
WSW70	Reserved (Change of the setting is prohibited)
WSW71	Reserved (Change of the setting is prohibited)
WSW72	Reserved (Change of the setting is prohibited)
WSW73	Reserved (Change of the setting is prohibited)
WSW74	ADF stop control
WSW75	Paper feeding parameter for turning the document counter when the machine takes action duplex scanning
WSW76	The limited number of the documents in reverse for paper ejection of the simplex scanning from ADF
WSW77	The limited number of the documents in reverse for paper ejection of the duplex scanning from ADF
WSW78	Recording stop function when the drum reaches the end of life
WSW79	Function setting 27

* For more information on the worker switch, refer to Appendix.

<Operating procedure>

(1) Press the **1** and **0** buttons in this order in the initial state of the maintenance mode. The machine displays "WSW00" on the LCD and becomes ready to accept a worker switch number.

(2) Enter the desired number from the worker switch numbers (01 through 78). The following appears on the LCD.

Selector 1 ↓ Selector 8 ↓

WSWXX = 0 0 0 0 0 0 0 0

(3) Enter a value to be set (0 or 1) using the **0** and **1** buttons.

(4) Press the **OK** button. This operation saves the newly entered selector values onto the EEPROM and readies the machine for accepting a worker switch number.

(5) Repeat steps (2) through (4) until the modification for the desired worker switches is completed.

(6) When the **Stop/Exit** button is pressed, the machine beeps for one second and returns to the initial state of the maintenance mode.

Memo:

- To cancel this operation and return to the machine to the initial state of the maintenance mode during the above procedure, press the **Stop/Exit** button.
- If there is a pause of more than one minute after a single-digit number is entered for double-digit worker switch numbers, the machine will automatically return to the initial state of the maintenance mode.

[2] Printout of worker switch data (Function code 11)

<Function>

The machine prints out the setting items of the worker switches and their contents specified.

<Operating procedure>

(1) Press the **1** button twice in the initial state of the maintenance mode.
The "PRINTING" will appear on the LCD.

(2) Printing of CONFIGURATION LIST (see the figure below) starts, and when printing is finished, the machine beeps for one second and returns to the initial state of the maintenance mode.

```
CONFIGURATION LIST

                                                    MODEL : 8CE-315
                                                    TIME  : 02/11/2011 13:27
                                                    REV.  : U1003080947VER.U
                                                    PCI   : 5.00
                                                    SUM   : D72A
                                                    SER.# : X12345C0J000484

WSW01 = 00000010
  1-2. DIAL FORMAT                                  : NORMAL
  3-4. BREAK TIME                                   : 50 MS
  5-6. INTERDIGIT PAUSE                             : 800 MS
  7.   DP/PB CHANGE IN USER SW                      : NO
  8.   DP/PB FIXING SELECTION                       : PB
WSW02 = 11111010
  1-2. ON TIME                                      : 100 MS
  3-4. OFF TIME                                     : 140 MS
  5-8. LINE BEEP ATTENUATOR                         : 10 DB
WSW03 = 10110000
  1.   PARA. CNG DETECTION1                         : B
  2-4. NOT USED
  5.   PARA. CNG DETECTION2                         : A
  6-8. NOT USED
WSW04 = 00010110
  1-4. NOT USED
  5.   OGM DELAY +4SEC                              : OFF
  6-8. FLASHING TIME                                : 500 MS
WSW05 = 00000110
  1-3. DIAL TONE DETECTION                          : 3.5 SEC WAITING
  4.   REMOTE ID DETECTION TIMEOUT                  : 2 SEC
  5-6. BUSY TONE DETECTION (CALLING)                : AFTER DIALING
  7.   BUSY TONE DETECTION (CALLED)                 : OFF
  8.   NOT USED
WSW06 = 00101100
  1-3. PAUSE KEY                                    : 3.5 SEC WAITING
  4-6. 2ND DT DETECTION TIME                        : 620 MS
  7.   2ND DT DETECTION CYCLE                       : 1 CYCLE
  8.   2ND DT INTERRUPT DETECTION TIME              : 30 MS
WSW07 = 01001100
  1-2. FREQUENCY RANGE                              : INITIAL DATA
  3.   NOT USED
  4-6. 2ND DT DETECTION LEVEL                       : -30 DBM
  7.   1ST DT INTERRUPT DETECTION TIME              : 30 MS
  8.   NOT USED
WSW08 = 01100111
  1-3. 1ST DT DETECTION TIME                        : 620 MS
  4-5. 1ST/2ND DT TIME OUT                          : 10 SEC
  6-8. 1ST DT DETECTION LEVEL                       : -42 DBM
WSW09 = 00000000
  1.   ECM FRAME                                    : 256 OCTET
  2.   NON STANDARD FACILITIES                      : ON
  3-4. TIMES OF FALL BACK                           : 4
  5.   T5 TIMER                                     : 300 SEC
  6.   T1 TIMER                                     : 35 SEC
  7-8. CALLING TIMEOUT                              : 55 SEC
WSW10 = 00010100
  1.   NOT USED
  2.   TIMING OF LAST DIGIT-MODEM CHANGE            : 100 MS
  3.   TIMING OF CML ON CNG TRANSMISSION            : 2 SEC
  4.   TIMING OF CML ON CED TRANSMISSION            : 2 SEC
  5-6. TRAINING RETRIES                             : 2
  7.   CODING METHOD MR                             : ON
  8.   CODING METHOD MMR                            : ON
WSW11 = 01011000
  1-2. FREQUENCY RANGE                              : INITIAL DATA
  3-8. ON/OFF TIME                                  : 175 - 600 / 175 - 600 MS
WSW12 = 10011011
  1-2. OFF DETECTION TIME                           : 700 MS
  3-4. AUTO ANS OFF DETECTION TIME                  : 7 SEC
  5-6. ON DETECTION TIME                            : 250 MS
  7-8. NOT USED
```

Fig. 5-6

Note:
The function names specific to machines are printed in CONFIGURATION LIST for convenience of program development. They are invalid in this product and should be ignored.

1.4.7 Operational check of LCD (Function code 12)

<Function>

This function allows you to check whether the LCD on the control panel works normally.

<Operating procedure>

(1) Press the **1** and **2** buttons in this order in the initial state of the maintenance mode. The LCD shows.

(2) Each time you press the **Start/Black** button, the LCD cycles through the displays as shown below.

(3) When the **Stop/Exit** button is pressed regardless of the display, the machine cancels the operation, beeps for one second and returns to the initial state of the maintenance mode.

Non Touch panel model

<Display 1>	
Backlight	: ON
LCD	: Display of all dots ON
Data LED	: ON
Error LED	: ON
<Display 2>	
Backlight	: ON
LCD	: Display of all dots OFF
Data LED	: ON
Error LED	: ON
<Display 3>	
Backlight	: OFF
LCD	: Display of all dots ON
Data LED	: ON
Error LED	: ON
<Display 4>	
Backlight	: OFF
LCD	: Display of all dots OFF
Data LED	: ON
Error LED	: ON

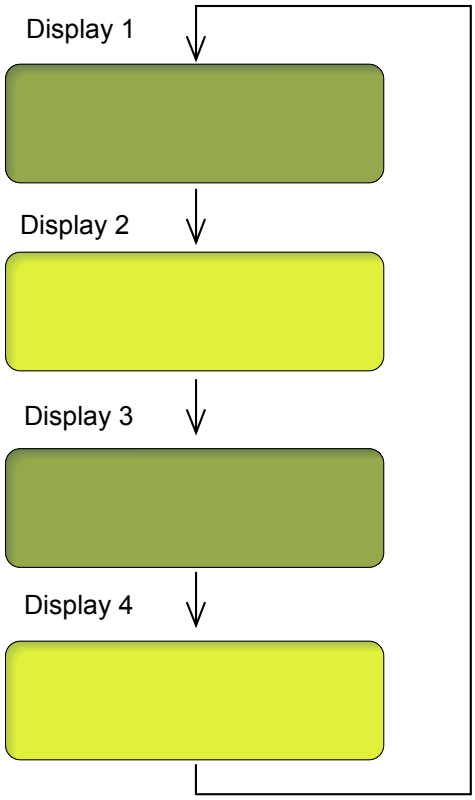

Fig. 5-7

Touch panel model

Every time the LCD display is switched, the buttons blink in the following order.

MFC model: **FAX** button → **SCAN** button → **COPY** button → **Print Data** button
DCP model: **SCAN** button → **COPY** button → **Print Data** button

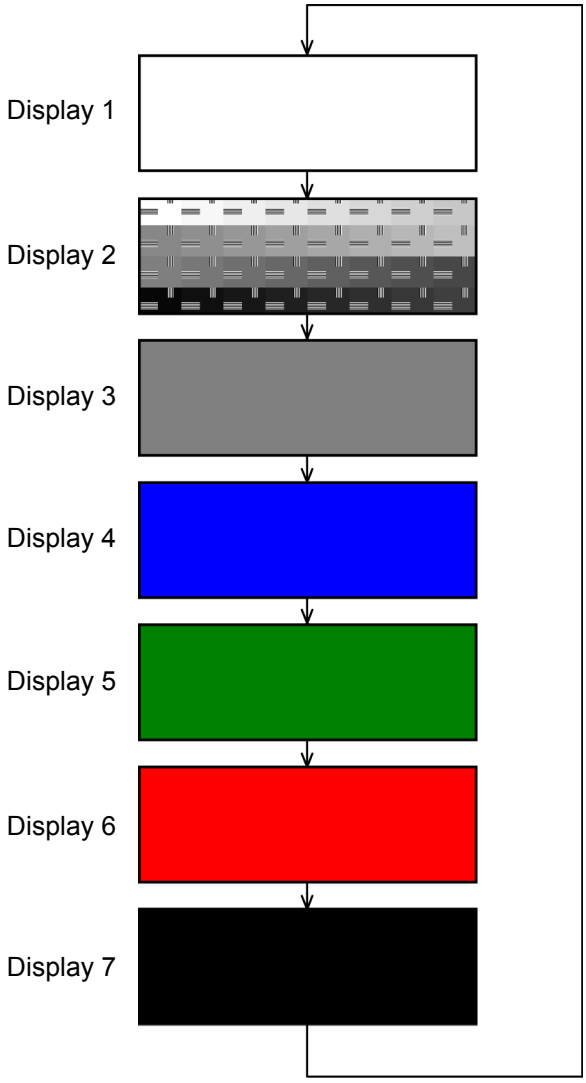

Fig. 5-8

1.4.8 Operational check of control panel button (Function code 13)

<Function>

This function allows you to check if the buttons on the control panel work properly.

<Operating procedure>

(1) Press the **1** and **3** buttons in this order in the initial state of the maintenance mode. The "00" will appear on the LCD.

(2) Press the buttons in the order designated in the illustration shown below. The LCD shows the corresponding number in decimal notation each time a button is pressed. Check that the displayed number is correct by referring to the illustration below.

When the buttons are pressed in an incorrect order, a warning beep goes off and "INVALID OPERATE" appears on the LCD at the same time. Press the **Stop/Exit** button, and the press the correct buttons.

(3) After the last number button is pressed, the machine beeps for one second and returns to the initial state of the maintenance mode.

Memo: Memo

When the **Stop/Exit** button is pressed, the machine beeps for one second and returns to the initial state of the maintenance mode.

■ MFC-9460CDN/9465CDN/9560CDW

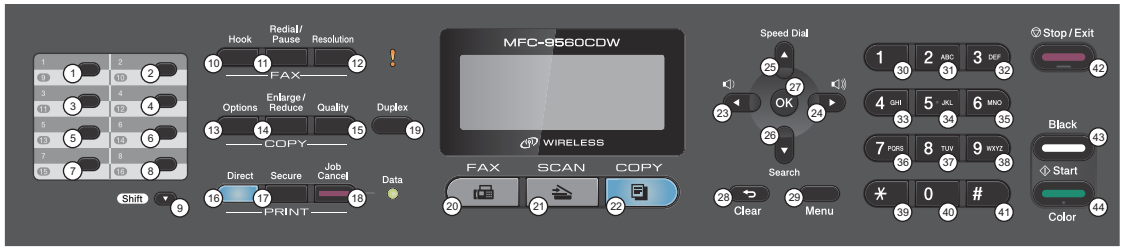

Fig. 5-9

■ DCP-9055CDN

Fig. 5-10

■ MFC-9970CDW

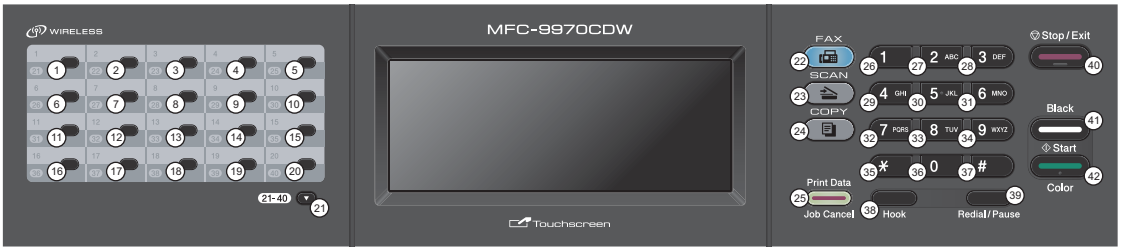

Fig. 5-11

■ DCP-9270CDN

Fig. 5-12

1.4.9 Software version check (Function code 25)

<Function>

This function allows you to check the management information of the software programs such as version information, check sum.

<Operating procedure>

(1) Press the **2** and **5** buttons in this order in the initial state of the maintenance mode. The machine displays each of items described below on the LCD.

(2) Press the ▲ or ▼ button to check the next item.

(3) When the **Stop/Exit** button is pressed regardless of the display, the machine cancels the operation, beeps for one second and returns to the initial state of the maintenance mode.

LCD	Description
TOTAL: Ver A*1	Main firmware version information(A): Revision information
PCL: Ver 1.00(P)*1	Sub firmware (PCL/PS) version information
ENG: Ver1.00*1	Engine firmware version information
NET: Ver 1.00	Network program version information
HV: Ver 1.00	High voltage CPU program version and PCB information
PANEL:A08103015	Panel firmware version information
PNL_B:110050615	Panel boot firmware version information
i0801170900:0000	I-FAX firmware version information
B09014151027:AF57*1	Boot program creation date
U09040911553:A668*1	Main firmware creation date
D09041191021:2E8F*1	Demo firmware data creation date
P09040031122:FC00*1	Sub firmware (PCL/PS) creation date
ROM Check Sum	Check sum self-diagnosis function*2

*1 How to display the check sum information
Press the **OK** button when its version information is displayed on the LCD to display the check sum information. Press the **OK** button again to go back to the version information display. Press the ▲ or ▼ button to check the next item.

> **Note:**
> Regarding the version information (Network, HVPS, Engine, Panel Boot, Panel and I-FAX) of which check sum information cannot be obtained, the check sum information is not displayed even if you press the **OK** button.

*2 There are two types of check sum information which can be checked with this function. This function checks if these two types of check sum information are matched each other. When you press the **OK** button while "ROM Check Sum" is displayed, check is automatically conducted for each ROM of each software part. When the check sum is matched, "OK" is displayed on the LCD. When all ROMs result in OK, "ROM Check Sum OK" is displayed at the end, and the operation is finished. When the check sum of any ROM is not matched, "NG" is displayed, and the display stops.

1.4.10 Operational check of sensors (Function code 32)

<Function>

This function allows you to check each of the sensors.

<Operating procedure>

(1) Press the **3** and **2** buttons in this order in the initial state of the maintenance mode.

(2) The machine beeps 1,100 Hz and 400 Hz tones cyclically through the following volumes for testing the speaker. To stop beeping, press the **OK** button.

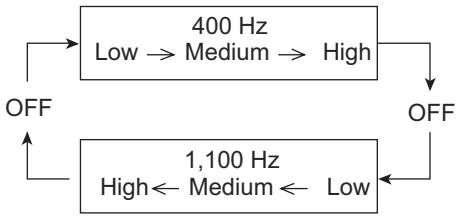

Fig. 5-13

If the sensing status are as listed below, the LCD will show "C1C2L2T2**" when paper tray 2 is installed. "C1********" appears on the LCD when paper tray 2 is not installed. Press the **Start/Black** button to check the next item.
Given below is the relationship between the LCD indication, sensor name and sensor state.

LCD	Sensors	Sensing status (OK/NG)
C1	T1 paper edge sensor	Paper tray 1 not installed/installed
C2	T2 paper edge sensor	Paper tray 2 not installed/installed
L2	T2 plate-up detection sensor	Plate down/Plate up
T2	T2 connector	Paper tray 2 installed/not installed
MP	MP paper empty sensor	MP tray paper not detected/detected
MR	MP registration front sensor	MP tray paper not detected/detected
CV	Front cover sensor	Front cover closed/open
RC	Back cover sensor	Back cover closed/open
RM	Registration front sensor	Paper not detected/detected
RA	Registration rear sensor	Paper not detected/detected
PO	Paper eject sensor	Paper not detected/detected
FW	Waste toner sensor	OFF/ON
NK	New toner sensor Black	OFF/ON
NY	New toner sensor Yellow	OFF/ON
NM	New toner sensor Magenta	OFF/ON
NC	New toner sensor Cyan	OFF/ON
KC	Toner sensor Black	Toner (K) detected/not detected
YC	Toner sensor Yellow	Toner (Y) detected/not detected
MC	Toner sensor Magenta	Toner (M) detected/not detected
CC	Toner sensor Cyan	Toner (C) detected/not detected

Note:
- The "--" appears on the LCD if there is no display.
- The "**" appears on the LCD if the parts are not installed or there is no item.

LCD	Sensors	Sensing status (OK/NG of temperature/humidity)
TMP	External temperature/humidity sensor	XX °C/NG
HUM	External temperature/humidity sensor	XX %/NG
MAC	Internal temperature sensor	XX °C/NG
BT	Belt unit temperature sensor	XX °C/NG

LCD	Sensors	Sensing status (OK/NG)
DF	Document front sensor	Without documents/With document
DR	Document first side rear sensor	Without documents/With document
AC	ADF cover sensor	Close/Open
DB	Document second side rear sensor	Without documents/With document

Note:
- The "--" appears on the LCD if there is no display.
- The "**" appears on the LCD if the parts are not installed or there is no item.

(3) Check that the display on the LCD is changed when the detection condition of each sensor is changed. For instance, insert paper to the document front (rear) sensor or the registration front (rear) sensor, open the front cover or the back cover, take out the toner cartridge, make a jam at the paper outlet, and insert paper from the manual feed slot, etc.

(4) When the **Stop/Exit** button is pressed, the machine beeps for one second and returns to the initial state of the maintenance mode.

■ Location of sensors

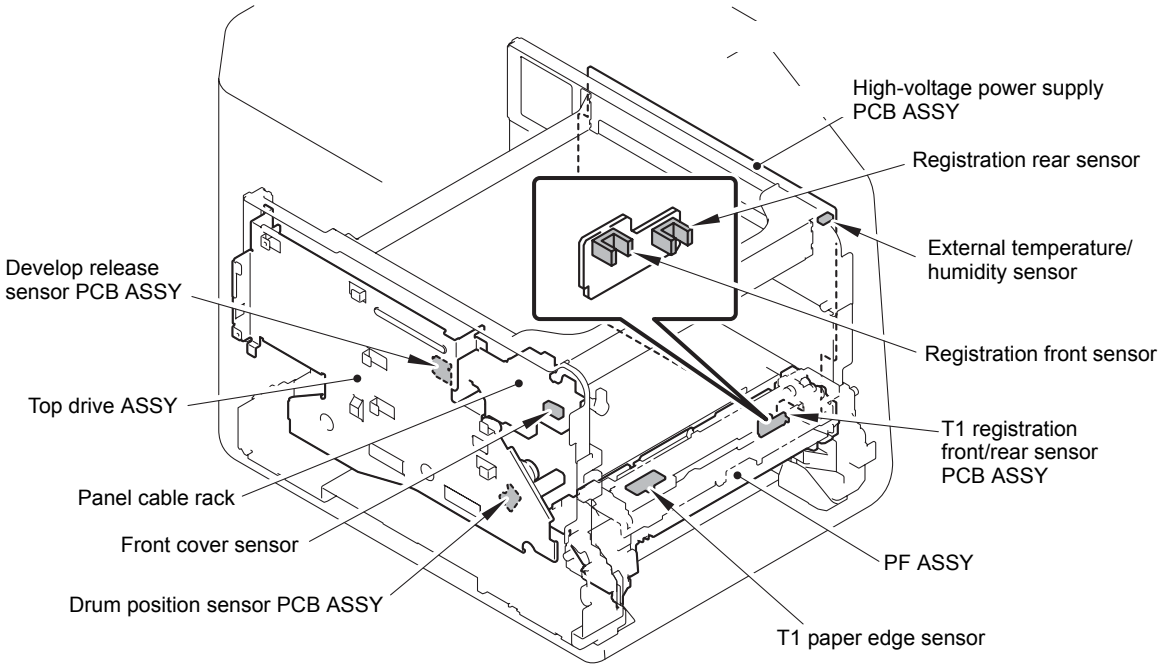

Fig. 5-14

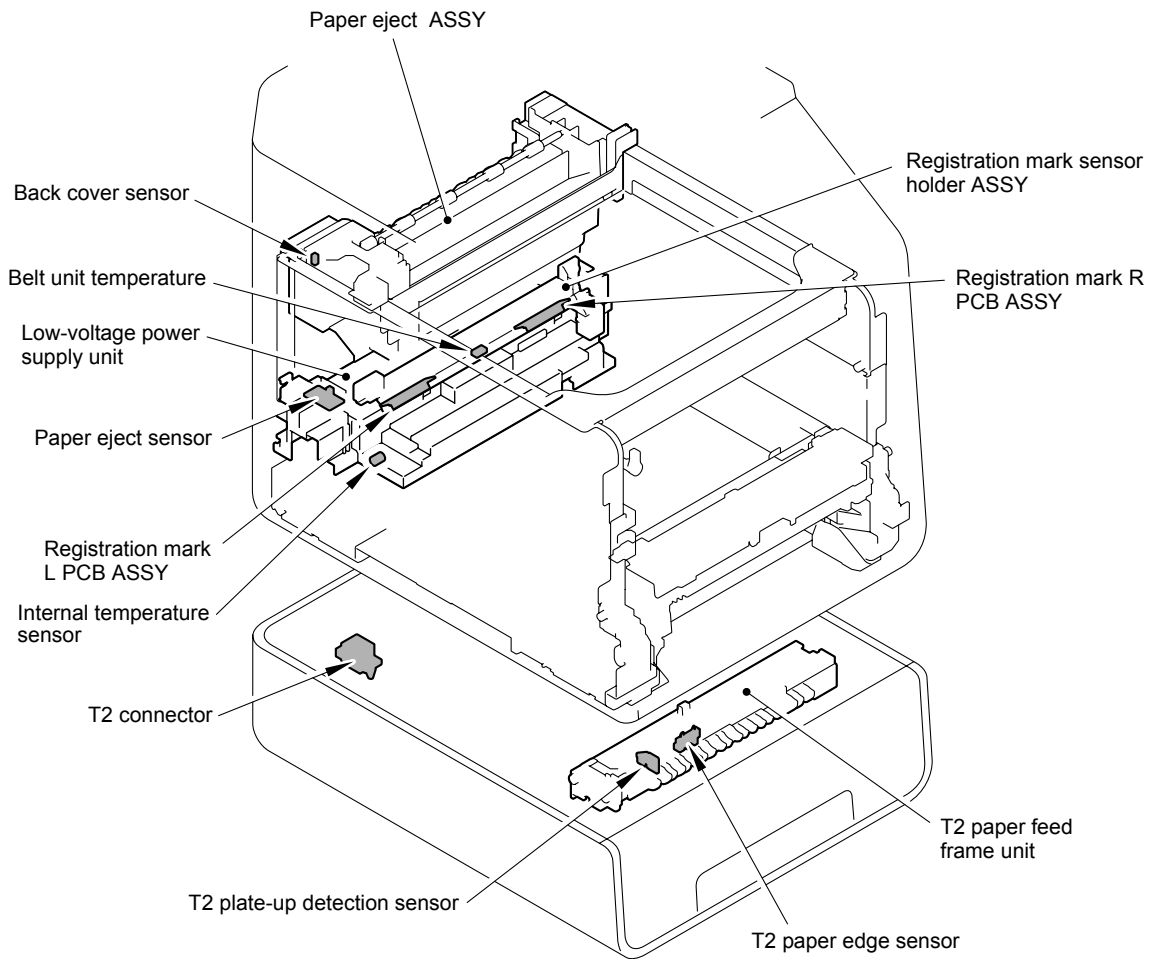

Fig. 5-15

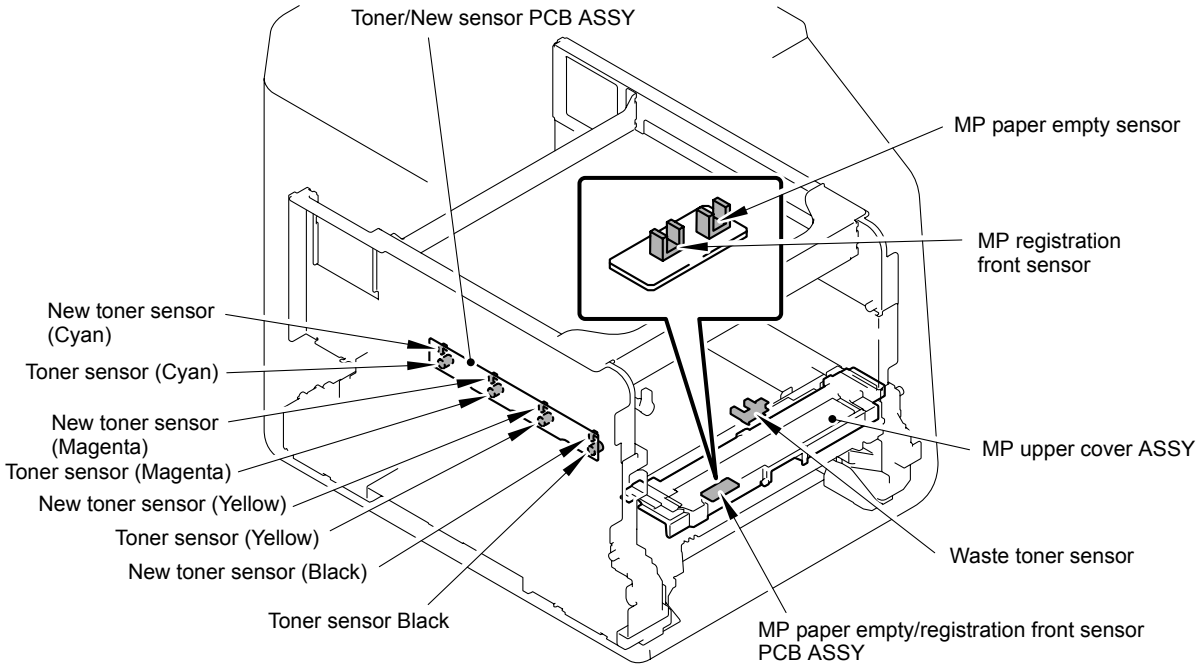

Fig. 5-16

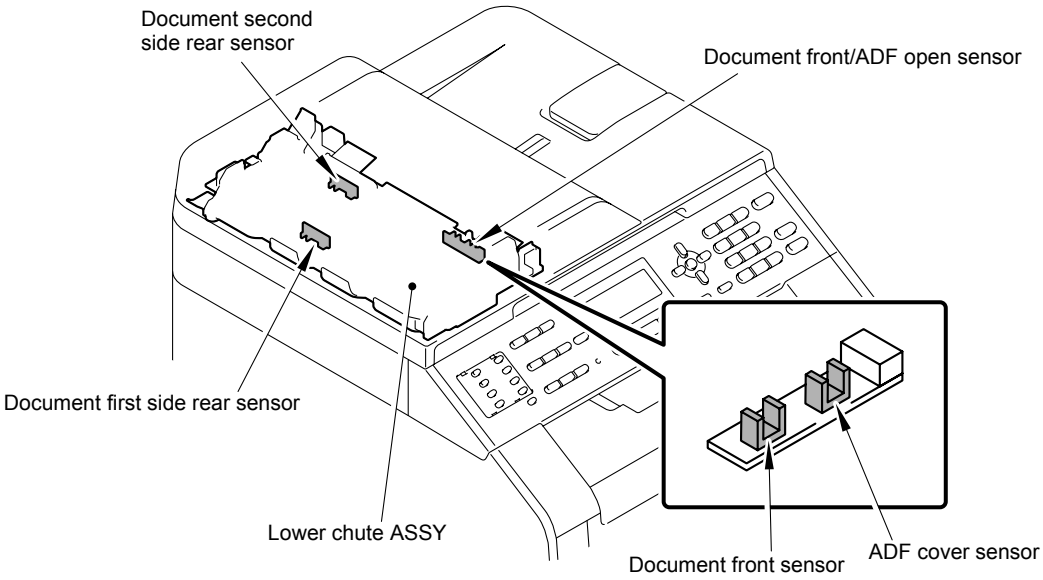

Fig. 5-17

1.4.11 LAN connection status display (Function code 33)

<Function>

This function allows you to check the status of the wired LAN connection. The display items are shown in the table below.

LCD	LAN connection status
Active 100B-FD	100BASE-T Full Duplex
Active 100B-HD	100BASE-T Half Duplex
Active 10B-FD	10BASE-T Full Duplex
Active 10B-HD	10BASE-T Half Duplex
Inactive	Not connected.

<Operating procedure>

(1) Press the **3** button twice in the initial state of the maintenance mode.

(2) The display items in the table above are displayed.

(3) Press the **Stop/Exit** button to return to the machine to the initial state of the maintenance mode.

1.4.12 PC print function (Function code 43)

<Function>

This function allows the machine change that the setting of each computer printing function indicated to the following function settings.

<Operating procedure>

(1) Press the **4** and **3** buttons in this order in the initial state of the maintenance mode.
The "Manual Feed" will appear on the LCD.

(2) Press the ▲ or ▼ button to select the function you want to set and press the **OK** button.

(3) When select the unchanging (On/Off) parameter, press the ▲ or ▼ button, or change the parameter using the numeric buttons. And press the **OK** button.
When you select a parameter to input a numeric value, directly input a numeric value from the ten-key pad and press the **OK** button.

(4) Press the **Stop/Exit** button so that the buzzer for one second and returns to the initial state of the maintenance mode.

■ Function setting

LCD	Description	Set value	Initial value
Manual Feed	Switching of the Manual Feed	On/Off	Off
Resolution	Resolution to print	300/600/1,200 dpi	600
Toner Save	Switching of the Toner Save	On/Off	Off
Density	Switching of the Density level	-6 to 6	0
JB-Can Time	Setting of the time until the host time-out at the Job Cancel	0 to 225 (seconds)	4
Sleep Time	Setting of the time until enter the Sleep Mode	0 to 99 (minutes)	5
Pege Protection	Switching of the protection of the page memory	Off/Letter/A4/Legal/Auto	Off
Emulation	Switching of the emulation	Auto/HP/PS	Auto
Auto I/F Time	Switching of the I/F open time	1 to 99 (seconds)	5
Media Type	Switching of the recording paper type	Thin/Plain/Thick/Thicker/ Trancparency/Recycled/ Bond/Envlopes/EnvThin/ EnvThick	Plain or Thin
Paper Size	Switching of the area of develop the image	Letter/Legal/A4/ Executive/B5/JISB5/A5/ B6/A6/Monarch/C5/ COM10/DL/DLL/A4Long / PostCard/Folio	Letter or A4
Copies	Switching of the print copies	1 to 99 (pages)	1
Orientation	Switching of the print direction	PortLait/Landscape	Portlait
P-Pos X-Offset	Switching of the offset print position of the landscape orientation	-500 to 500 (1/300 dpi)	0
P-Pos Y-Offset	Switching of the offset print position of the portrait orientation	-500 to 500 (1/300 dpi)	0

LCD	Description	Set value	Initial value
AutoFF	Switching of the auto form feed	On/Off	Off
AutoFF Time	Switching of the time-out period of the auto form feed	1 to 99 (seconds)	5
FF Surpress	Switching of the FF Suppress	On/Off	Off
Auto LF	Switching of the auto LF	On/Off	Off
Auto CR	Switching of the auto CR	On/Off	Off
Auto WRAP	Switching of the auto CRLF at the print width	On/Off	Off
Auto Skip	Switching of the Skip at the backend/tip of the paper	On/Off	On
Left Margin	Switching of the margin at the left end	0 to 145 (columus)	0
Right Margin	Switching of the margin at the right end	10 to 155 (columus)	80
Top Margin	Switching of the margin at the upper end	0 to 2.00 (inches)	0.5
Bottom Margin	Switching of the margin at the bottom end	0 to 2.00 (inches)	0.5
Lines	Number of the text lines in the page	5 to 128 (lines)	60
Error Print	Switching of the ErrorPrint of the PostScript	On/Off	On

■ Detail description

LCD	Detail description
Manual Feed	Effective for the print from the computer, or for the print of the NetWorkConfig/TestPrint/Fontlist/Configuration from the panel. When select the tray on the computer, the setting becomes effective. And this setting is ignored.
Resolution	Effective only for the print from the computer. When set the Resolution on the computer, the setting becomes effective. And this setting is ignored.
Toner Save	Effective for all print, and change the setting of the Function Menu. However, as for the Copy, this setting becomes invalid. When set the Toner Save or the computer, the setting becomes effective. And this setting is ignored.
Density	Effective for the print from the computer, or for the print of the NetWorkConfig/TestPrint/FontList/Configuration from the panel. Link the setting of the Toner Save. Judge the both setting, and decide the density. When set the Density or the computer, the setting becomes effective. And this setting is ignored.
JB-Can Time	Configure the setting for until the host time-out at the Job Cancel. The setting value is the second time scale.
Sleep Time	Configure the setting for the time until shift to the Sleep Time. Change the setting of the Function Menu.

LCD	Detail description
Page Protection	Configure the setting to protect the page memory, when recording in computer. Set in the PCL-Core. There is not the influence of the memory management problem of the MFC.
Emulation	Configure the setting for the Emulation. Change the setting of the Function Menu. When the data include the ENTER LANGUAGE, the setting becomes effective. And this setting is ignored.
Auto I/F Time	Configure the setting for the interface open time. The function is in the PC-Print. When the PC-Scan/Remote-SetUp works on the way, the setting becomes invalid.
Media Type	Effective for the print from the computer. When set the type of the recording paper on the computer, the setting becomes effective. And this setting is ignored. The default value is different by the country setting. China is the Thin, and others are the Plain.
Paper Size	Switching of the area of develop the image. Does not set the Paper Size of the Menu, set the drawing size of the PC-Print. When set the size of the recording paper on the computer, the setting becomes effective. And this setting is ignored. The default value is different by the country setting. U.S.A/Canada are the Letter, and others are the A4.
Copies	Effective for the print from the computer. When set the number of the copies on the computer, the setting becomes effective. And this setting is ignored.
Orientation	Configure the switching for the print direction. Effective for the print from the computer.
P-Pos X-Offset	Configure the setting for the offset print position of the landscape orientation. Effective for the print from the computer. When set the X-Offset on the computer, the setting becomes effective. And this setting is ignored.
P-Pos Y-Offset	Configure the setting for the offset print position of the portrait orientation. Effective for the print from the computer. When set the Y-Offset on the computer, the setting becomes effective. And this setting is ignored.
AutoFF	Configure the setting for the ON/OFF of the Auto Form Feed. Effective for the print from the computer.
AutoFF Time	Configure the setting for the Time Out, when the Auto Form Feed is ON.
FF Surpress	Configure the setting for the skip of the blank page. Effective for the print from the computer. The blank data in the Copy/Fax cannot be turned ON/OFF in this setting.
Auto LF	Configure the setting for the auto line feed.
Auto CR	Configure the setting for the auto Carriage Return.
Auto WRAP	Configure the setting for the auto CRLF at the print width.
Auto Skip	Configure the setting for the skip at the back-end/tip of the recording paper and add the blank space.
Left Margin	Configure the setting for the column space at the left end.
Right Margin	Configure the setting for the column space at the right end.
Top Margin	Configure the setting for the space at the upper end.
Bottom Margin	Configure the setting for the space at the bottom end.
Lines	Configure the setting for the number of the lines in the PCL.
Error Print	Configure the setting for the Error Print of the BR-Script 3.

1.4.13 Not-disclosed-to-users functions (Function code 45)

Regarding the not-disclosed-to-users functions, the function setting can be executed by a simple panel operation.

■ Changing return value of USB No.

<Function>

When the OS of the computer is Windows Vista®, and the computer is connected to a device through USB 2.0 full speed, the OS might fail to get the serial No. of the USB device depending on the computer and USB device. When the OS fails to get the serial No., the return value may continue to increase every time the device is connected to the computer. To avoid this problem, the return value of the serial No. is dropped to "0".

LCD	Description
USBNo. =ON	Returns the serial No. of the device. (default)
USBNo. =OFF	Returns "0".

"*" is displayed at the end of the currently specified function in the LCD display.

<Operating procedure>

(1) Press the **4** and **5** buttons in this order in the initial state of the maintenance mode. The "USBNo." will appear on the LCD. Then, press the **OK** button.

(2) Press the ▲ or ▼ button to select "USB No. = ON" or "USB No. = OFF," and then press the **OK** or **Start/Black** button.

(3) "Accepted" is displayed on the LCD, and the product goes back to the initial state of the maintenance mode.

(4) Turn the power switch of the machine OFF.

Note:
This mode is enabled when the power of the machine is turned OFF and ON.

■ Switching Dither Pattern

<Function>

This function is to switch the dither pattern when printed letters and/or slanted lines are not smooth, and thin lines are rough or uneven.

LCD	Description
PS.DitherType=0	Dither Pattern 0 is selected. (A dither pattern which improves roughness of letters and slanted lines) (default)
PS.DitherType=1	Dither Pattern 1 is selected. (A dither pattern which alleviates banding)

"*" is displayed at the end of the currently specified function in the LCD display.

<Operating procedure>

(1) Press the **4** and **5** buttons in this order in the initial state of the maintenance mode. The "USBNo." will appear on the LCD.

(2) Press the ▲ or ▼ button to display "PS.DitherType" and then press the **OK** or **Start/Black** button.

(3) Press the ▲ or ▼ button to select "PS.DitherType=0" or "PS.DitherType=1," and then press the **OK** or **Start/Black** button.

(4) "Accepted" is displayed on the LCD, and the machine goes back to the initial state of the maintenance mode.

■ Switching of ON/OFF of DirectPrint Color mode-Improve Gray Color

<Function>

This function is to switch ON/OFF of the print control for the gray color when other colors are slightly blended in the gray color or the gray color is uneven upon printing.

LCD	Description
DP.ImpGray=ON	DirectPrint Color mode - Improve Gray Color. (Print control for gray color) ON (Improves the symptom that other colors are slightly blended in the gray color.) (default)
DP.ImpGray=OFF	DirectPrint Color mode - Improve Gray Color. (Print control for gray color) OFF (Improves the unevenness of the gray color.)

"*" is displayed at the end of the currently specified function in the LCD display.

<Operating procedure>

(1) Press the **4** and **5** buttons in this order in the initial state of the maintenance mode. The "USBNo." will appear on the LCD.

(2) Press the ▲ or ▼ button to display "DP.ImpGray" and then press the **OK** or **Start/Black** button.

(3) Press the ▲ or ▼ button to select "DP.ImpGray=ON" or "DP.ImpGray=OFF," and then press the **OK** or **Start/Black** button.

(4) "Accepted" is displayed on the LCD, and the product goes back to the initial state of the maintenance mode.

■ Switching of timing to execute Auto Registration

<Function>

Relative displacement between Cyan, Magenta, Yellow, and Black is detected using the registration mark sensor, and the Auto Registration is executed at the timing when the displacement value exceeds the stipulated threshold value.

This is a function to switch the threshold value which is used as the timing to execute Auto Registration.

The threshold value can be switched in three phases between High, Mid, and Low.

LCD	Description
Regi Freq=Mid	The frequency to execute Auto Registration is middle. (default)
Regi Freq=High	The frequency to execute Auto Registration is high.
Regi Freq=Low	The frequency to execute Auto Registration is low.

“*” is displayed at the end of the currently specified function in the LCD display.

Note:
It can be set regardless of the Auto Registration switching function in the function menu. Even if this function is switched, it does not affect the timing to execute Auto Registration in the function menu.

<Operating procedure>

(1) Press the **4** and **5** buttons in this order in the initial state of the maintenance mode. The "USBNo." will appear on the LCD.

(2) Press the ▲ or ▼ button to display "Regi Freq" and then press the **OK** or **Start/Black** button.

(3) Select "Regi Freq = Mid", "Regi Freq = High", or "Regi Freq = Low" by pressing the ▲ or ▼ button, and press the **OK** or **Start/Black** button.

(4) "Accepted" is displayed on the LCD, and the product goes back to the initial state of the maintenance mode.

■ Adjusting left-end print start position on second side in duplex printing

<Function>

This function is to adjust the left-end print start position on the second side in the left and right direction if it is displaced in duplex printing.

The adjustable range is -100 to 750 (unit: 300 dpi) (The minus direction means the left direction.)

<Operating procedure>

(1) Press the **4** and **5** buttons in this order in the initial state of the maintenance mode. The "USBNo." will appear on the LCD.

(2) Press the ▲ or ▼ button to display "DX.XAdjust=**" and then press the **OK** or **Start/ Black** button.

(3) To move the print start position to the left, press the ▲ button and decrease the value. To move the print start position to the right, press the ▼ button and increase the value.

(4) When the value is changed to the adjustment value, press the **OK** button. "Accepted" is displayed on the LCD, and the product goes back to the initial state of the maintenance mode.

■ Switching ON/OFF of Deep Sleep function

<Function>

This function is to switch whether or not to permit the machine to go into Deep Sleep when StoreData (Secure) exists in the main body.

LCD	Description
DpSlp.StrDt =ON	Even when StoreData (Secure) exists, the Deep Sleep function operates.
DpSlp.StrDt =OFF	When StoreData (Secure) exists, the Deep Sleep function does not operate. (default)

“*” is displayed at the end of the currently specified function in the LCD display.

Note:
This function is enabled when the Deep Sleep function is set to ON.

<Operating procedure>

(1) Press the **4** and **5** buttons in this order in the initial state of the maintenance mode. The "USBNo." will appear on the LCD.

(2) Press the ▲ or ▼ button to display "DpSlp.StrDt =***" and then press the **OK** or **Start/ Black** button.

(3) Select "DpSlp.StrDt =ON" or "DpSlp.StrDt =OFF" by pressing the ▲ or ▼ button, and press the **OK** or **Start/Black** button.

(4) "Accepted" is displayed on the LCD, and the machine goes back to the initial state of the maintenance mode.

■ Change of the transfer current setting (Only for Japanese hagaki printing)

<Function>

Dots appeared when hagaki printing is performed can be alleviated by changing the transfer current setting.

<Operating procedure>

(1) Press the **4** and **5** buttons in this order in the initial state of the maintenance mode.
The "Special Printing" appears on the LCD.

(2) Press the ▲ or ▼ button to change the setting, and press the **OK** or **Start/Black** button.
There are four setting options: "Default", "HAGAKI1", "HAGAKI2", and "HAGAKI3".
(“*” is displayed at the end of the currently specified function in the LCD display.
The initial value is “Default”.)

(3) "Accepted" is displayed on the LCD, and the machine goes back to the initial state of the maintenance mode.

(4) Perform hagaki printing again to check if the dot symptom is alleviated.

(5) If not, repeat the steps (1) and (2) to set an optimum option, and then perform hagaki printing.

1.4.14 EEPROM customizing (User-accessible) (Function code 52)

<Function>

This function allows users to customize the EEPROM settings such as language, function settings or worker switch settings.

> **Note:**
> This function is applicable to France and surrounding countries, Pan-Nordic, East Europe, Oceania and Iberia areas only.

<Operating procedure>

Non Touch panel model

(1) Press the **Menu**, **Start/Black** and **Menu** buttons in this order in the ready state. The "0" will appear on the LCD.

(2) Press the **5** and **2** buttons in this order. The "Set Country/Press OK" will appear on the LCD.

(3) Press the **OK** button. The country name will appear on the LCD.

Touch panel model

(1) Press the **5** and **2** buttons in this order in the initial state of the maintenance mode. "Set Country" will appear on the LCD, and the corresponding country names shown in the table below will appear under "Set Country".

(2) Press the country name of the user. The setting is saved, and the machine returns to the ready state.

> **Note:**
> The country name indicated on the LCD varies depending on the area (code input in Function code 74) as shown in the table below.

France and surrounding countries	Oceania	Pan-Nordic	Iberia	East Europe
France	Australia	Norge	España	österreich
België / Belgique	New Zealand	Suerige	Portugal	Ceska republika
Nederland		Suomi		Magyarorazág
		Danmark		Polska
		Others		България
				România
				Slovensko
				Others

(3) Press the ▲ or ▼ button to display the country name where the machine is used. Press the **OK** button while the country name is being indicated. The EEPROM is customized, and the machine returns to the ready state.

1.4.15 Received data transfer function (Function code 53) (FAX model only)

<Function>

This function transfers received FAX data to another machine. It is useful when the machine cannot print received data due to the printing mechanism being defective. It also transfers the maintenance information of the machine via FAX.

Note:

- This function transfers received FAX file to another machine. It is useful when the machine cannot print received FAX file due to the printing mechanism being defective.
- If there are both color and monochrome data in a FAX file to be transferred, the monochrome data will be transferred first. If the receiver machine does not support the color function, the sender machine cannot transfer color data, resulting in an error.

<Operating procedure>

(1) Press the **5** and **3** buttons in this order in the initial state of the maintenance mode. The "FAX TRANSFER" appears on the LCD.

- To check the number of received files, press the **1** button. The "1.NO. OF JOBS" appears on the LCD.Press the **OK** button, and the number of received files appears, just as "NO. OF. JOBS: 10."
- To transfer the activity report only, press the **2** button. The "2.ACTIVITY" appears on the LCD.
- To transfer received files (together with the activity report), press the **3** button. The "3.DOCUMENTS" appears on the LCD. Note that if there is no received file, the "NO DOCUMENTS" appears.
- To transfer the communication list for the latest communication, press the **4** button. The "4.COM.LIST (NEW)" appears.
- To transfer the communication list for last three errors, press the **5** button. The "5.COM.LIST (ERR3)" appears on the LCD.
- To transfer the maintenance information (the list in Function code 77), press the **6** button. The "6.MNT77 LIST" appears on the LCD.

(2) With the "2.ACTIVITY," "3.DOCUMENTS," "4.COM.LIST (NEW)," "5.COM.LIST (ERR3)" or "6.MNT77 LIST" being displayed, press the **OK** button. The "ENTER NO & SET" appears on the LCD.

(3) Enter the telephone number of the receiver machine and press the **OK** button again.

(4) The machine displays the "ACCEPTED" for approximately two seconds and starts dialing to transfer data.

Note:

- Be sure to type the telephone number with the numerical buttons. No one-touch dialing is allowed in this procedure.
- No station ID will be attached. A cover page and end page as shown on the next page will be automatically attached, instead.

■ Cover page sample

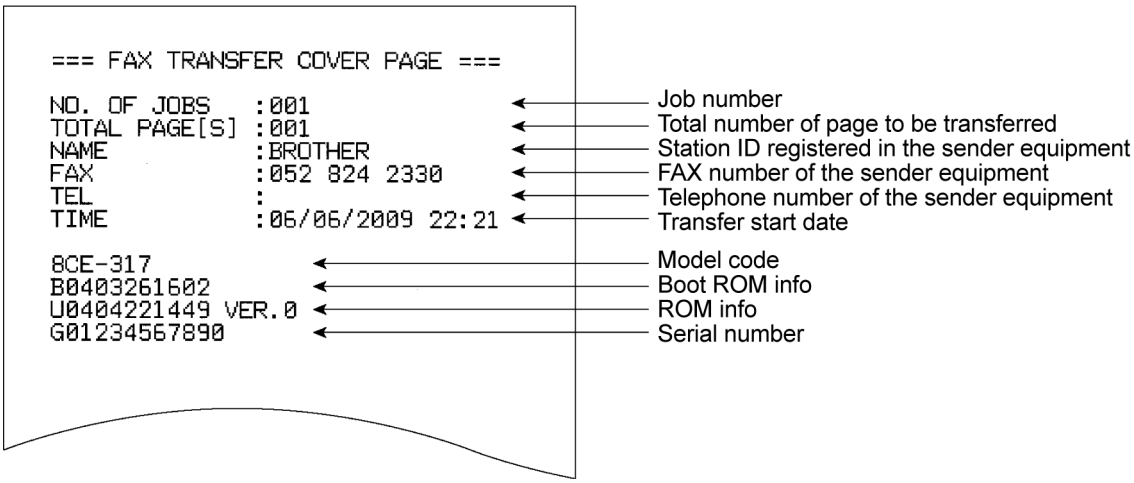

Fig. 5-18

■ End page sample

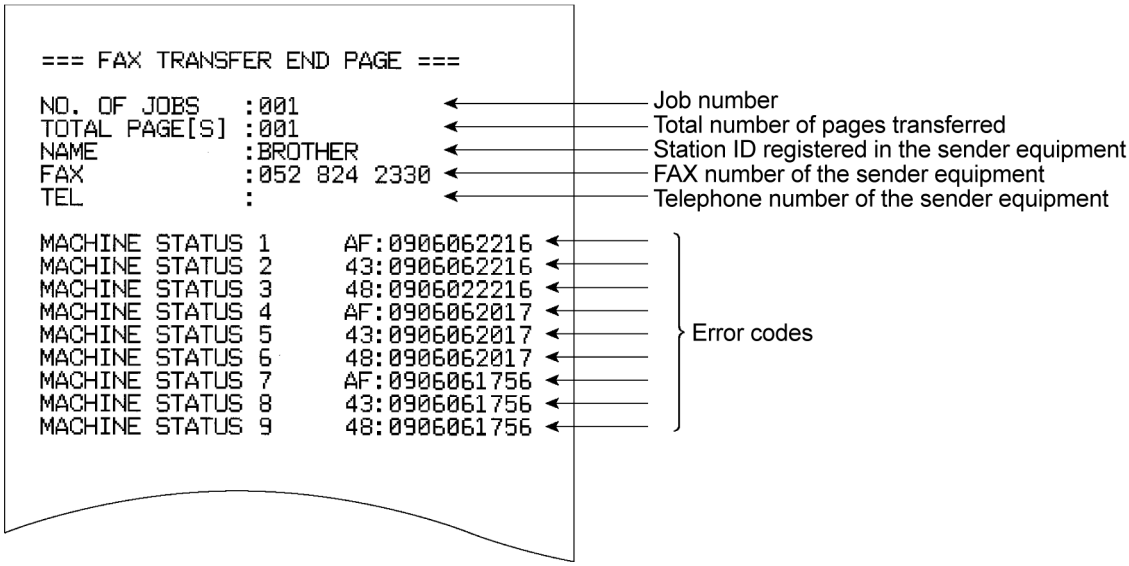

Fig. 5-19

1.4.16 Fine adjustment of scan start/end positions (Function code 54)

<Function>

This function allows you to adjust the scan start/end positions on the ADF and FB unit.

■ Simplex scanning model

<Operating procedure>

(1) Press the **5** and **4** buttons in this order in the initial state of the maintenance mode. The "SCAN START ADJ." will appear on the LCD.

(2) The " ▲ : ADF ▼ : FB" will appear after two seconds. Select one of them that you want to adjust the start position. If you want to adjust the start position of the ADF, press ▲ button, and if you want to adjust that of the FB unit, press ▼ button.

(3) Press the ▲ or ▼ button to display the present compensation level for the start position. Compensation levels can be adjusted in 11 steps from +5 to -5 (mm).

(4) Press the ▲ button to increase the correction value and the ▼ button to lower it. When the **Stop/Exit** button is pressed, the machine beeps for one second and returns to the initial state of the maintenance mode.

(5) Set the compensation level and press the **OK** button. The "ACCEPTED" will appear on the LCD. One second later, the machine " ▲ : ADF ▼ : FB" will appear on the LCD.

(6) Press the **Stop/Exit** button when finish the adjustment. The machine beeps for one second and returns to the initial state of the maintenance mode.

The correlation between the scan start/end positions and compensation levels is shown below.

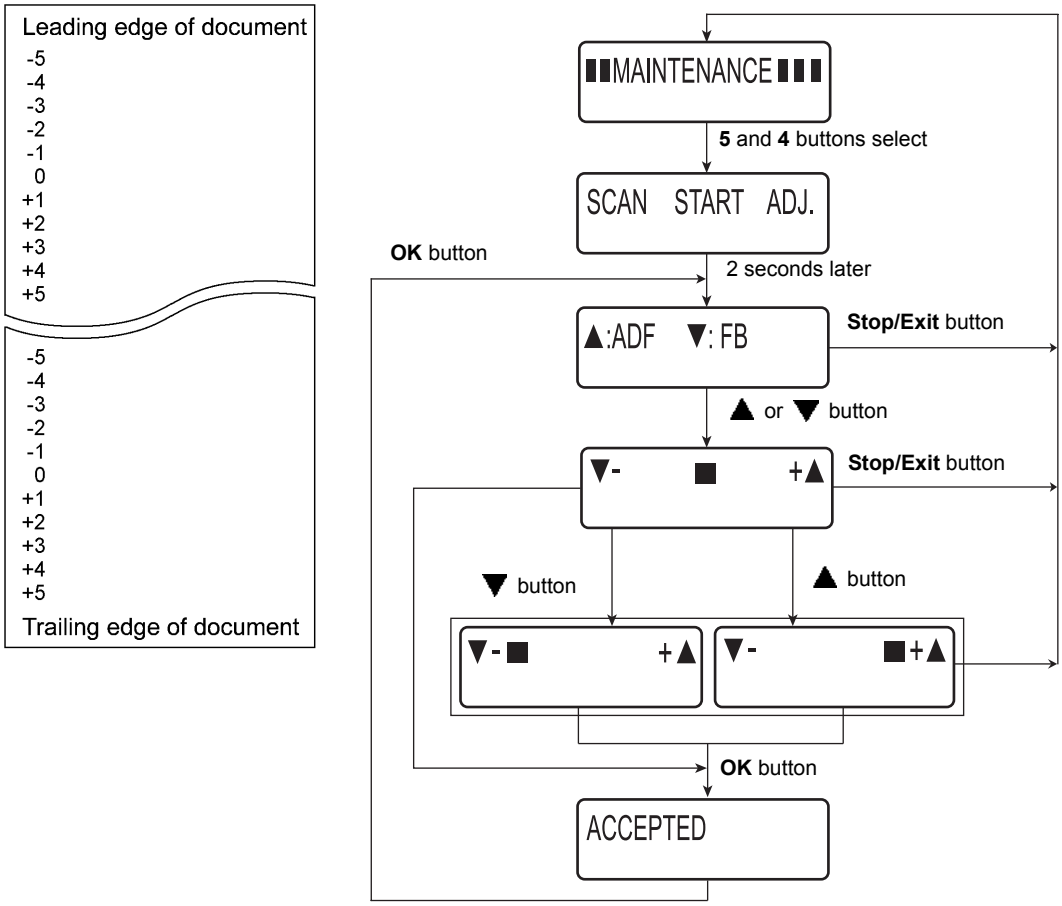

Fig. 5-20

■ Duplex scanning model

<Operating procedure>

(1) Press the **5** and **4** buttons in this order in the initial state of the maintenance mode. The "SCAN START ADJ." will appear on the LCD.

(2) The " ▲ : ADF ▼ : FB" will appear after two seconds. Select one of them that you want to adjust the start position. If you want to adjust the start position of the ADF, press ▲ button, and if you want to adjust that of the FB unit, press ▼ button. When ADF is selected, " ▲ : FRONT ▼ : BACK" will appear on the LCD. (FRONT: First side; BACK: Second side)

(3) Press the ▲ or ▼ button to display the present compensation level for the start position. Compensation levels can be adjusted in 11 steps from +5 to -5 (mm).

(4) Press the ▲ button to increase the correction value and the ▼ button to lower it. When the **Stop/Exit** button is pressed, the machine beeps for one second and returns to the initial state of the maintenance mode.

(5) Set the compensation level and press the **OK** button. The "ACCEPTED" will appear on the LCD. One second later, the machine " ▲ : ADF ▼ : FB" will appear on the LCD.

(6) Press the **Stop/Exit** button when finish the adjustment. The machine beeps for one second and returns to the initial state of the maintenance mode.

The correlation between the scan start/end positions and compensation levels is shown below.

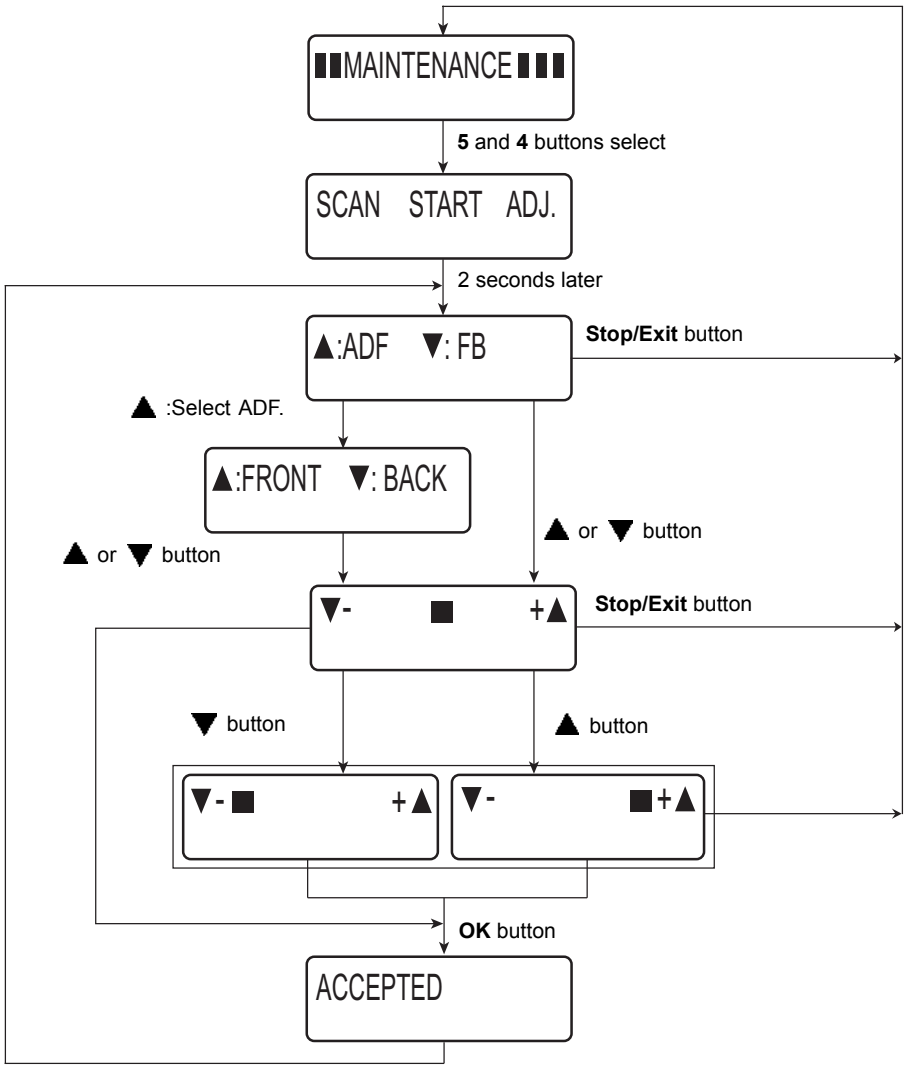

Fig. 5-21

1.4.17 Acquisition of white level data (Function code 55)

<Function>

This function allows you to acquire the white level of the document scanner unit and save it to the EEPROM of the main PCB.

The duplex scanning model obtains also white level data for the second side scanning CIS.

<Operating procedure>

(1) Press the **5** button twice in the initial state of the maintenance mode.

(2) The "Press START" will appear on the LCD. Press the **Start/Black** button.
The "SCANNER AREA SET" will appear on the LCD.

(3) After a few seconds, the machine saves the compensation of the white level data/ scanning width in the EEPROM, beeps for one second, and returns to the initial state of the maintenance mode.

1.4.18 Adjustment of touch panel (Function code 61) (Touch panel model only)

<Function>

This function adjusts the detection area on the touch panel.

Note:

The adjustment procedure requires a stylus with a thin tip. A commercially available stylus designed for electronic dictionaries or personal digital assistance (PDA) can be used. If you do not have it on hand, order the "STYLUS" from the Brother's parts list.

<Operating procedure>

(1) Press the **6** and **1** buttons in this order in the initial state of the maintenance mode. The adjustment screens shown below appear on the LCD.

(2) Touch the symbols on the touch panel with a stylus in the order of top-left, bottom-left, bottom-right, top-right, and the center. After a symbol touched disappears, touch the next one.

Note:

- Do not use tools other than a pen designed for touch panels. Especially, never use a pointed one, e.g., a screwdriver. Using such a tool damages the touch panel.
- Do not touch the touch panel with fingers. The contact area of a finger is too large to adjust the touch panel precisely.
- If the **Stop/Exit** button is pressed, the machine returns to the initial stage of the maintenance mode.

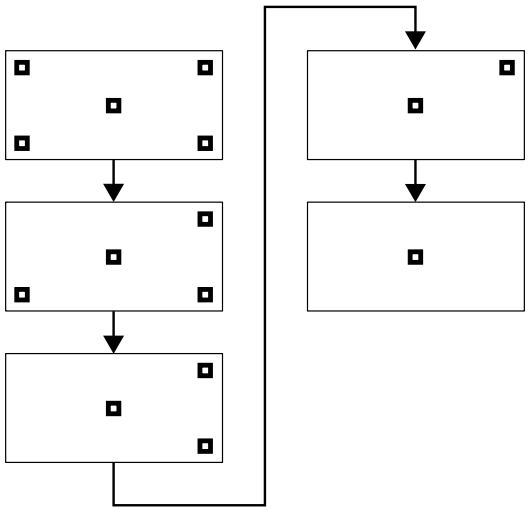

Fig. 5-22

When you press the symbol at the center (the 5th symbol), "OK" appears if the specified area is correctly adjusted. Then, the machine returns to the initial state of the maintenance mode in approximately 3 seconds.

Note:

If the way to press the symbol is wrong, or if a wrong place is pressed, “ERROR” appears on the LCD, and the machine returns to the screen in step (2) when the **Start/Black** button or **Start/Color** button is pressed. Be sure to press the symbols from the upper left in the order shown above.

In the case of "NG", repeat this operation 2 to 3 times. If "NG" remains displayed even after the operation is repeated, check if there is harness connection failure in the touch panel, disconnection, short-circuit, or entry of foreign objects in the touch panel frame. Although any of these problems is not observed, if "NG" is displayed, replace the touch panel ASSY.

1.4.19 Adjustment of inter-color position alignment (Function code 66)

<Function>

This function allows a service man to forcibly activate the inter-color position alignment adjustment function, which is usually executed automatically in a specified condition. If adjustment of inter-color position alignment (auto) fails because toner reaches its life, etc., you can adjust inter-color position alignment manually. The end user is allowed to execute reset of inter-color position alignment adjustment (manual) only.

Note:

If an error occurs after executing Maintenance Mode 66, upgrade the firmware to the latest one. (Refer to "1.1 Rewriting the Firmware (Panel Firmware, Sub Firmware, Main Firmware)" in Chapter 4.) After upgrading the firmware, execute Maintenance Mode 66 again.

■ Adjustment of inter-color position alignment (auto)

<Operating procedure>

(1) Press the **6** button twice in the initial state of the maintenance mode. "REGISTRATION" is displayed on the LCD.

(2) Press the **OK** button. "PLEASE WAIT" is displayed on the LCD, and adjustment of inter-color position alignment is automatically done.

(3) When this operation is completed without an error, "COMPLETED" is displayed on the LCD.

(4) Press the **Stop/Exit** button to return to the machine to the initial state of the maintenance mode.

When an error message is displayed on the LCD, take the measures described in the table below.

Error message	Measure
FAILED	Press the **Start/Black** button to clear the error. Adjust inter-color position alignment manually in accordance with the procedure for adjustment of inter-color position alignment (manual) given next page.
TONER EMPTY # *1	Replace the empty toner cartridge and press the **Start/Black** button to clear the error. Conduct adjustment of inter-color position alignment (auto) again.
NG*L : c080 R : M105	Press the **Start/Black** button to clear the error. Conduct adjustment of inter-color position alignment (auto) again.
NG R-L : C030	
NG PWM L120 R180	
NG PWM R-L : 080	
NG CNT R100 L100	
NG S-POSI R : 080	
NG SKEW C : 050	
Cover is Open	Close the front cover.
No Paper	Replenish paper of the A4-size paper specified in the display on the tray. Conduct adjustment of inter-color position alignment (auto) again.
Jam Tray 1	Remove the jammed paper, and press the **Start/Black** button to clear the error.
Jam Rear	

*1 # indicates the toner color (Y, M, or C) of which cartridge became empty.

Memo:

Although adjustment of inter-color position alignment (auto) is executed several times and the result of inter-color position alignment adjustment chart (P5-41) does not fall within the range of ±4, readjust it according to the following procedures.

<Operating procedure after adjustment inter-color position alignment (auto) fails>

1) Press the **6** button twice in the initial state of the maintenance mode. "REGISTRATION" is displayed on the LCD. Load paper on the tray.
2) Press the ▲ or ▼ button to display "PRINT CHART" on the LCD, and then press the **OK** button.
3) Display "PRINTING" on the LCD, and print the inter-color position alignment adjustment chart. After printing, "PRINT CHART" is displayed again.
4) Press the ▲ or ▼ button to display "OFFSET ADJUST" on the LCD, and then press the **OK** button. "1. MAGENTA = 0" is displayed on the LCD.
5) With the printed inter-color position alignment adjustment chart, check the numeric value where the color is the darkest among the pattern ❶ (Magenta Left). Press the ▲ or ▼ button to display that numeric value, and then press the **OK** button.
6) Enter the numeric value of the patterns ❷ to ❸ and ❼ to ❾ in the same way.
7) When you enter the numeric value of the pattern ❾ (Yellow Right), "COMPLETED" is displayed.
8) Press the **Stop/Exit** button to return to the machine to the initial state of the maintenance mode.

■ Adjustment of inter-color position alignment (manual)

<Operating procedure>

(1) Press the **6** button twice in the initial state of the maintenance mode. "REGISTRATION" is displayed on the LCD. Load paper on the tray.

(2) Press the ▲ or ▼ button to display "PRINT CHART" on the LCD, and then press the **OK** button.

(3) Display "PRINTING" on the LCD, and print the inter-color position alignment adjustment chart. After printing, "PRINT CHART" is displayed again.

(4) Press the ▲ or ▼ button to display "SET REGISTRATION" on the LCD, and then press the **OK** button. "1. MAGENTA = 0" is displayed on the LCD.

(5) With the printed inter-color position alignment adjustment chart, check the numeric value where the color is the darkest among the pattern ❶ (Magenta Left). Press the ▲ or ▼ button to display that numeric value, and then press the **OK** button.

(6) Enter the numeric value of the patterns ❷ to ❾ in the same way.

(7) When you enter the numeric value of the pattern ❾ (Yellow Right), "COMPLETED" is displayed.

(8) Press the **Stop/Exit** button to return to the machine to the initial state of the maintenance mode.

■ Inter-color position alignment adjustment chart

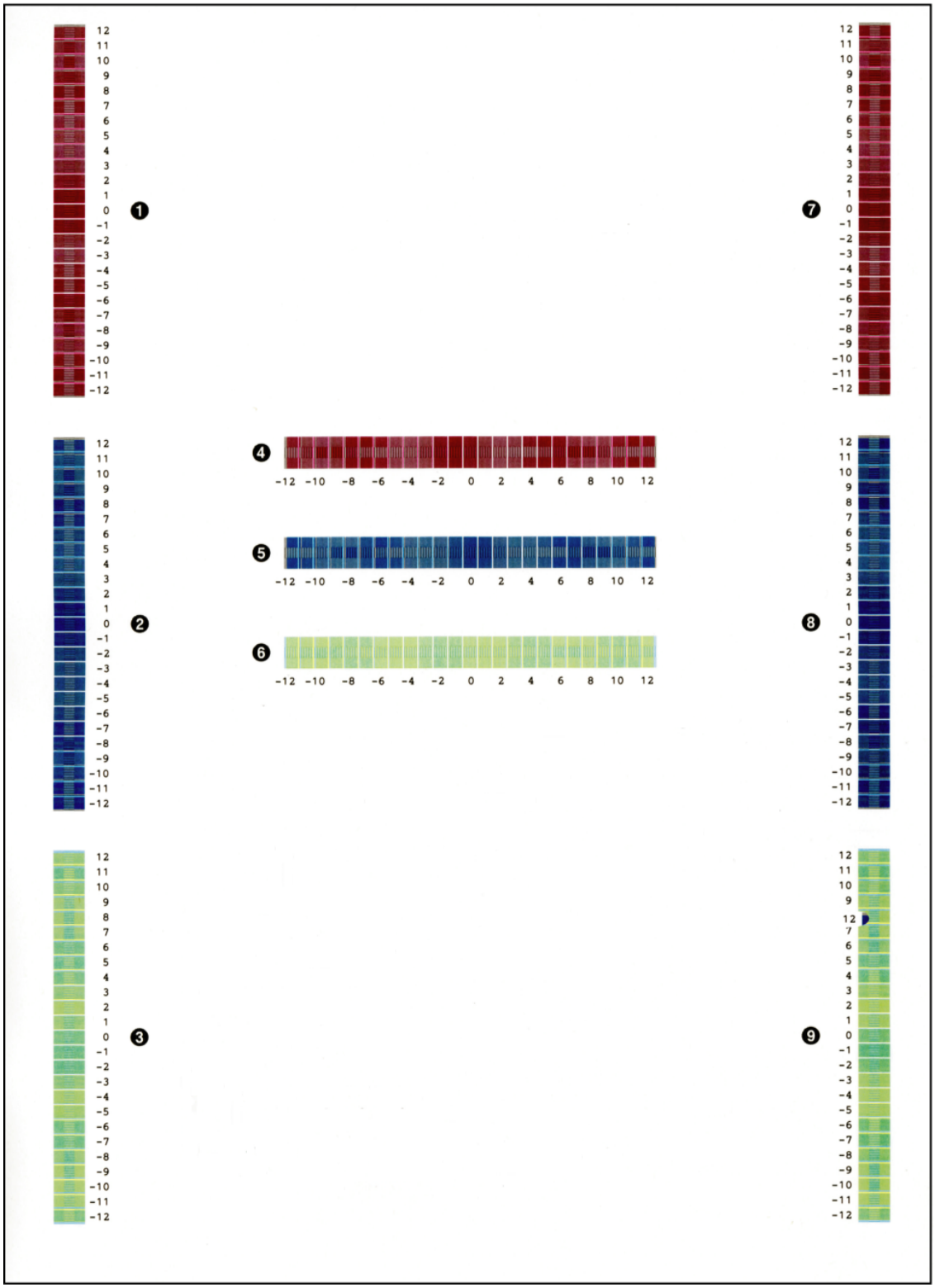

Fig. 5-23

■ Reset of inter-color position alignment adjustment (manual)

If adjustment of inter-color position alignment (both auto and manual) cannot be executed because an incorrect value is inputted in adjustment of inter-color position alignment (manual), etc., you can clear the input value for adjustment of inter-color position alignment (manual).

<Operating procedure>

(1) Press the **6** button twice in the initial state of the maintenance mode. "REGISTRATION" is displayed on the LCD.

(2) Press the ▲ or ▼ button to display "MANUAL REG RESET" on the LCD, and then press the **OK** button.

(3) Display "PLEASE WAIT" on the LCD.

If you want to perform adjustment of inter-color position alignment again, you may as well conduct adjustment of inter-color position alignment (auto) of Function code 66.

1.4.20 Continuous print test (Function code 67)

<Function>

This function allows you to conduct the pick-up and delivery test as printing patterns.

<Operating procedure>

(1) Press the **6** and **7** buttons in this order in the initial state of the maintenance mode.

(2) When "SELECT: K 100%" is displayed on the LCD, select a relevant continuous print pattern using ▲ or ▼ button and then press the **OK** button.

The available continuous print patterns are shown below.

LCD
SELECT: K 100%
SELECT: C 100%
SELECT: M 100%
SELECT: Y 100%
SELECT: R 100%
SELECT: G 100%
SELECT: B 100%
SELECT: KCMY1%*
SELECT: KCMY5%*
SELECT: Lattice

* * KCMY1% and KCMY5% are available only for A4 and Letter.

(3) When "SELECT: A4" is displayed on the LCD, select a relevant paper size using ▲ or ▼ button, and then press the **OK** button.

The available paper sizes are shown below.

LCD
SELECT: A4
SELECT: LETTER
SELECT: LEGAL
SELECT: A5
SELECT: B6
SELECT: A6

(4) When "SELECT: TRAY1" is displayed on the LCD, press the ▲ or ▼ button to select the print format, and press the **OK** button.

The available print formats are shown below.

LCD
SELECT: TRAY1
SELECT: TRAY2
SELECT: MP
SELECT: TRAY1 DX
SELECT: TRAY2 DX
SELECT: MP DX

(5) The "PAPER FEED TEST" appears on the LCD, and print of the continuous print pattern with the selected pick-up test items starts.

(6) Press the **Stop/Exit** button to return to the machine to the initial state of the maintenance mode.

Note:

- The test printing is stopped until there is no paper in a tray. Press the **Stop/Exit** button to stop if you check the paper feeding and ejecting operations. (Printing is resumed when paper is loaded in the tray.)
- In the case that the error occurs during test printing, the continuous print is terminated. (If you do not press the **Cancel** button, printing is resumed when the error is cleared.)
- To clear the error, remove the error factors, and then press the **Start/Black** button.

■ Continuous print pattern

SELECT: K 100%

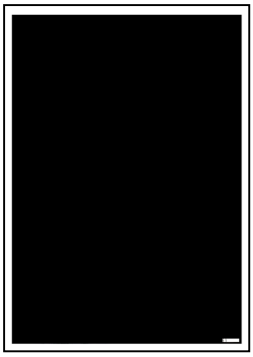

SELECT: C 100%

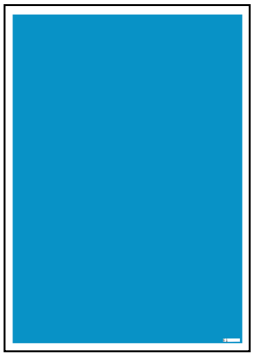

SELECT: M 100%

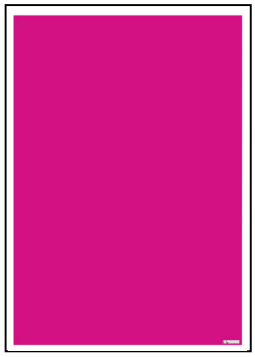

SELECT: Y 100%

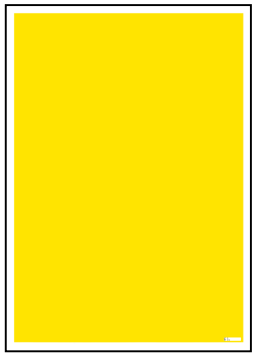

SELECT: R 100%

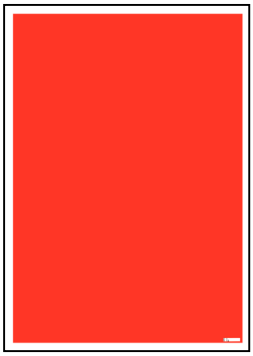

SELECT: G 100%

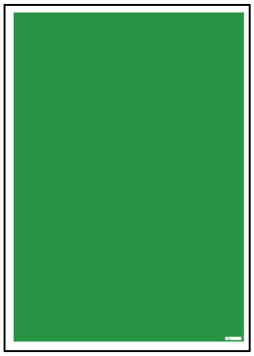

SELECT: B 100%

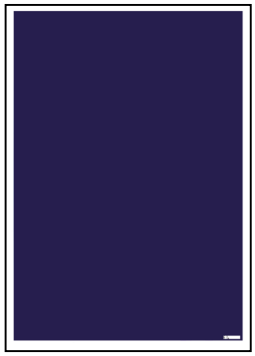

SELECT: KCMY1%

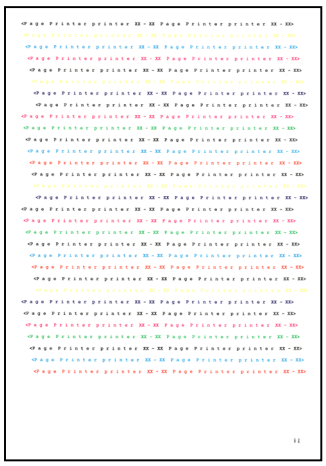

SELECT: KCMY5%

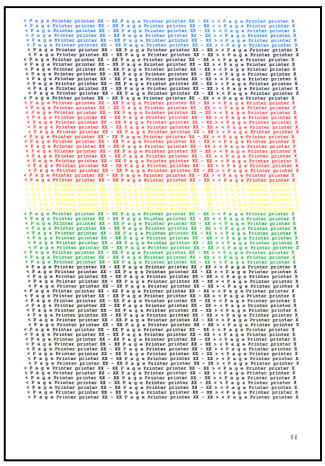

SELECT: Lattice

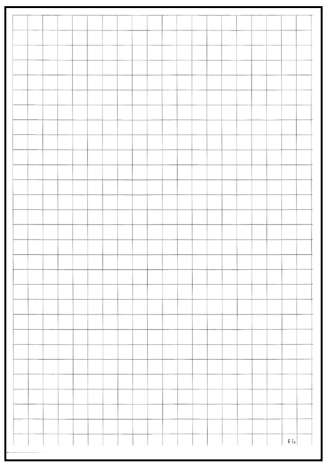

Fig. 5-24

1.4.21 Laser unit test pattern print (Function code 68)

<Function>

This function allows you to print the laser unit test patterns and check if there is any failure in the laser unit.

<Operating procedure>

(1) Press the **6** and **8** buttons in this order in the initial state of the maintenance mode. "PRINTING" is displayed on the LCD, and one laser unit test pattern (refer to the figure below) is printed.

> **Note:**
> When printing fails, a relevant error is displayed on the LCD. When the error factors are removed and the **Start/Black** button is pressed, the machine automatically recovers to the re-executable state. "PRINTING" is displayed on the LCD, and the laser unit test pattern is printed on a sheet.

(2) When this operation is completed without an error, "SCANNER CHECK" is displayed on the LCD.

(3) Press the **Stop/Exit** button to return to the machine to the initial state of the maintenance mode.

When an error message is displayed on the LCD, take the measures described in the table below.

Error message	Measure
TONER EMPTY # *	Replace the empty toner cartridge and press the **Start/Black** button to clear the error.
Cover is Open	Close the front cover.
No Paper	Replenish paper of the A4-size paper specified in the display on the tray. Press the **Start/Black** button to clear the error.
Jam Tray1	Remove the jammed paper, and press the **Start/Black** button to clear the error.
Jam Rear	

* # indicates the toner color (K, Y, M, or C) of which cartridge became empty.

■ Laser unit test pattern

Fig. 5-25

1.4.22 Frame pattern print (One-sided) (Function code 69)

<Function>

This function allows you to print one page of the frame pattern of the external circumference in one-sided printing and check if there is any deviation or omission of print.

<Operating procedure>

(1) Load Letter-size paper on the paper tray.

(2) Press the **6** and **9** buttons in this order in the initial state of the maintenance mode. "PRINTING" is displayed on the LCD, and one page of the frame pattern (refer to the figure below) in one-sided printing. When print is completed, "WAKU SX" is displayed on the LCD.

> **Note:**
> When printing fails, a relevant error is displayed on the LCD. Remove the cause of error and press the **Start/Black** button, and the product automatically goes back to the executable state, and "WAKU SX" is displayed on the LCD. Press the **OK** button, and "PRINTING" is displayed on the LCD, and one page of the frame pattern is printed in one-sided printing.

(3) Press the **Stop/Exit** button to return to the machine to the initial state of the maintenance mode.
When an error message is displayed on the LCD, take the measures described in the table below.

Error message	Measure
TONER EMPTY # *	Replace the empty toner cartridge and press the **Start/Black** button to clear the error.
Cover is Open	Close the front cover.
No Paper	Replenish the letter-size paper in the tray and press the **Start/Black** button to clear the error.
Jam Tray1	Remove the jammed paper, and press the **Start/Black** button to clear the error.
Jam Rear	

* # indicates the toner color (K, Y, M, or C) of which cartridge became empty.

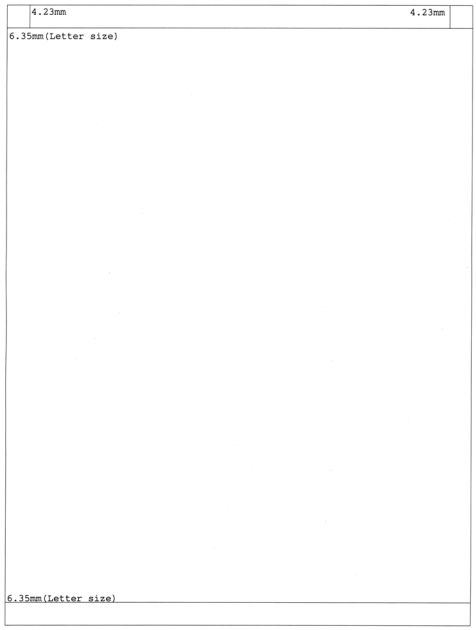

Fig. 5-26

1.4.23 Frame pattern print (Two-sided) (Function code 70)

<Function>

This function allows you to print one page of the frame pattern of the external circumference in two-sided printing and check if there is any deviation or omission of print.

<Operating procedure>

(1) Load Letter-size paper on the paper tray.

(2) Press the **7** and **0** buttons in this order in the initial state of the maintenance mode. "PRINTING" is displayed on the LCD, and one page of the frame pattern (refer to the figure below) in two-sided printing. When print is completed, "WAKU DX" is displayed on the LCD.

> **Note:**
> When printing fails, a relevant error is displayed on the LCD. Remove the cause of error and press the **Start/Black** button, and the product automatically goes back to the executable state, and "WAKU DX" is displayed on the LCD. Press the **OK** button, and "PRINTING" is displayed on the LCD, and one page of the frame pattern is printed in two-sided printing.

(3) Press the **Stop/Exit** button to return to the machine to the initial state of the maintenance mode.
When an error message is displayed on the LCD, take the measures described in the table below.

Error message	Measure
TONER EMPTY # *	Replace the empty toner cartridge and press the **Start/Black** button to clear the error.
Cover is Open	Close the front cover.
No Paper	Replenish the letter-size paper in the tray and press the **Start/Black** button to clear the error.
Jam Tray1	Remove the jammed paper, and press the **Start/Black** button to clear the error.
Jam Rear	

* # indicates the toner color (K, Y, M, or C) of which cartridge became empty.

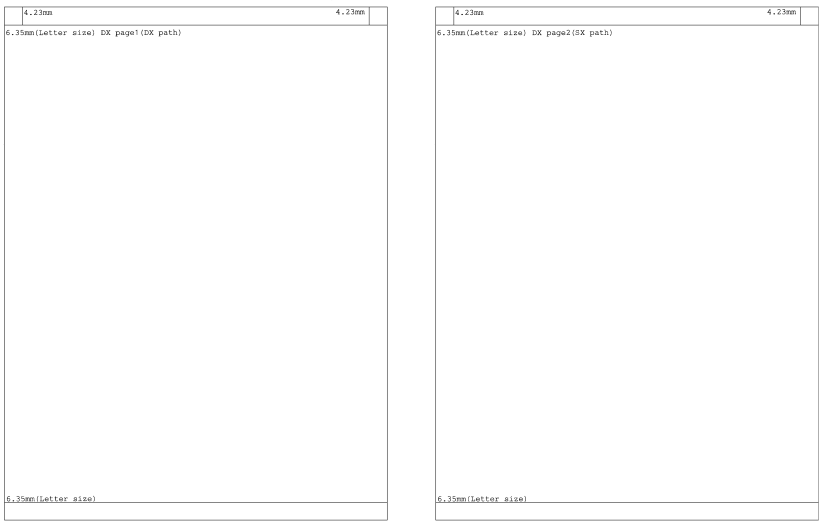

(First side) (Second side)

Fig. 5-27

1.4.24 Color test pattern (Function code 71)

<Function>

This function allows you to print the pattern of each color and check if there is any smear on or failure in the belt unit, develop roller, and exposure drum, etc.

<Operating procedure>

(1) Press the **7** and **1** buttons in this order in the initial state of the maintenance mode.

(2) When "2D3S YCMK_ _A" is displayed on the LCD, press the ▲ or ▼ button to select an appropriate print pattern, and press the **OK** button.

(3) "PRINTING" is displayed on the LCD, and the color test pattern (Refer to the next page) is printed.

The available print patterns are shown below.

LCD	Description	
2D3S YCMK_ _A	One sheet for each color with full page print mode*	Total 4 sheet
2D3S MCYK	4-color horizontal band	Total 1 sheet
2D3S Y	Yellow	Total 1 sheet
2D3S C	Cyan	Total 1 sheet
2D3S M	Magenta	Total 1 sheet
2D3S K	Black	Total 1 sheet

* In the full page print mode, the cleaning operation is performed between printing of Magenta and Black.

Note:
When printing fails, a relevant error is displayed on the LCD. When the error factors are removed and the **Start/Black** button is pressed, the machine automatically recovers to the re-executable state. "PRINTING" is displayed on the LCD, and the color test pattern is printed.

(4) When printing is finished, the screen returns to the print pattern display. To print the solid color test pattern again, press the **OK** button.

(5) Press the **Stop/Exit** button to return to the machine to the initial state of the maintenance mode.

When an error message is displayed on the LCD, take the measures described in the table below.

Error message	Measure
TONER EMPTY # *	Replace the empty toner cartridge and press the **Start/Black** button to clear the error.
Cover is Open	Close the front cover.
No Paper	Replenish paper of the A4-size paper specified in the display on the tray. Press the **Start/Black** button to clear the error.
Jam Tray1	Remove the jammed paper, and press the **Start/Black** button to clear the error.
Jam Rear	

* # indicates the toner color (K, Y, M, or C) of which cartridge became empty.

■ Color test pattern

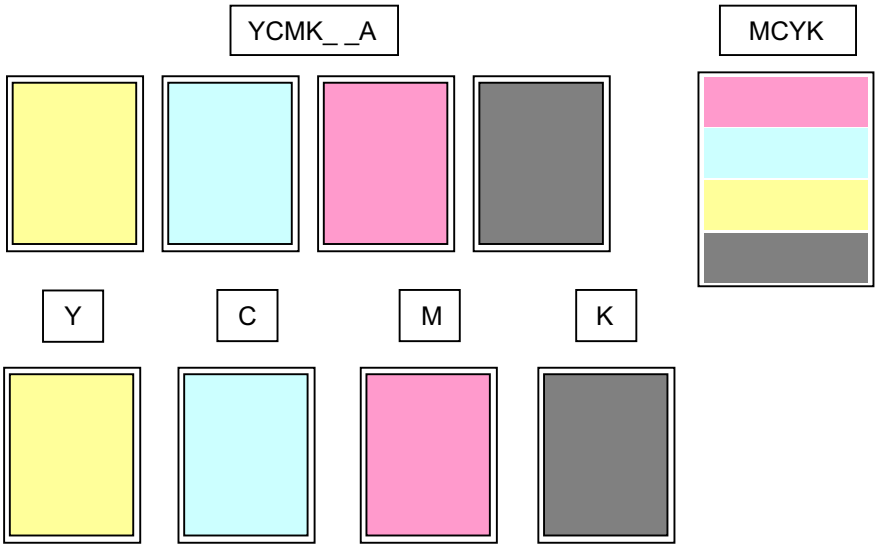

Fig. 5-28

1.4.25 Sensitivity adjustment of density sensor (Function code 72)

<Function>

This function allows you to print the patch data for density sensor sensitivity adjustment on the belt unit and measure the density with the density sensor. The characteristics of the density sensor are calculated based on the value measured by the density sensor, and the parameter is adjusted upon color density adjustment.

<Operating procedure>

(1) Press the **7** and **2** buttons in this order in the initial state of the maintenance mode. "PLEASE WAIT" is displayed on the LCD.

(2) When the parameter is obtained without errors, the machine returns to the initial state of the maintenance mode.

When an error message is displayed on the LCD, take the measures described in the table below.

Error message	Measure
FAILED	Remove the error factors with the following operations and press the **Start/Black** button to clear the error. - Re-insert the toner cartridge in the correct position. - Replace the toner cartridge. - Replace the drum unit. - Replace the waste toner box. - Replace the belt unit. - Replace the registration mark sensor holder ASSY.
TONER EMPTY # *	Replace the empty toner cartridge and press the **Start/Black** button to clear the error. Perform the sensitivity adjustment of the density sensor again.
Cover is Open	Close the front cover.
Replace Toner	Replace the black toner cartridge and press the **Start/Black** button to clear the error. Perform the sensitivity adjustment of the density sensor again.

* # indicates the toner color (Y, M, or C) of which cartridge became empty.

1.4.26 Setting by country (Function code 74)

<Function>

This function allows you to customize the machine according to language, function settings, and worker switch settings.

> **Note:**
> When you replace the main PCB ASSY and rewrite the firmware forcibly, be sure to carry out this procedure.

<Operating procedure>

(1) Press the **7** and **4** buttons in this order in the initial state of the maintenance mode. The present country code is displayed.

(2) Enter the desired country code (e.g., MFC-9560CDW (U.S.A): 0301). The newly entered code appears.

> **Note:**
> The machine does not work properly when an incorrect code is entered.

(3) Press the **Start/Black** button. The machine saves the setting and displays the "PARAMETER INIT" on the LCD. The machine beeps for one second and returns to the initial state of the maintenance mode.

> **Memo: Memo**
> When the **Stop/Exit** button is pressed, or when no button is pressed for one second procedure during the above procedure, the machine cancels the above, beeps for one second and returns to the initial state of the maintenance mode. In this case, the modified setting data is not saved.

■ Setting by country code list

Country	DCP-9055CN	DCP-9270CDN	MFC-9460CDN	MFC-9465CDN	MFC-9560CDW	MFC-9970CDW
U.S.A	---	---	0101	---	0301	0101
Canada	---	---	0102	---	0302	0102
Brazil	---	---	0142	---	---	---
Argentina/ Chile	---	---	---	---	---	0136
Germany	1004	1004	0103	0203	---	0103
UK	1004	1004	0104	0204	---	0104
France	1005(1055)	1005(1055)	0105(0155)	0205(0255)	---	0105(0155)
Belgium	1008(1055)	1008(1055)	0108(0155)	0208(0255)	---	0108(0155)
Netherlands	1009(1055)	1009(1055)	0109(0155)	0209(0255)	---	0109(0155)
Spain	1015(1066)	1015(1066)	0115(0165)	0215(0265)	---	0115(0166)
Italy	1004(1066)	1004(1066)	0116	0216	---	0116(0166)
Portugal	1004(1066)	1004(1066)	0118(0165)	0218(0265)	---	0118(0166)
Switzerland	1004	1004	0110	0210	---	0110
Norway	1004	1004	0107(0157)	0207(0257)	---	0107(0157)
Sweden	1004	1004	0126(0157)	0226(0257)	---	0126(0157)
Finland	1004	1004	0112(0157)	0212(0257)	---	0112(0157)
Denmark	1004	1004	0113(0157)	0213(0257)	---	0113(0157)
Slovakia	1004	1004	0130(0188)	---	---	---
Bulgaria	1004	1004	0132(0188)	---	---	---
Rumania	1004	1004	0133(0188)	---	---	---
Czech	1004	1004	0137(0188)	---	---	---
Hungary	1004	1004	0138(0188)	---	---	---
Poland	1004	1004	0139(0188)	---	---	---
Russia	---	---	---	0248	---	---
EEU General	---	---	0150	0250	---	0150
South Africa	---	---	0124(0174)	---	---	0124(0174)
Turkey	---	---	0125(0174)	---	---	0125(0174)
Australia	0040	---	0106(0156)	---	---	0106(0156)
New Zealand	0040	---	0127(0156)	---	---	0127(0156)
Singapore/ Hong Kong/ Gulf	0040	---	0140	---	---	0140
Korea	---	---	0140	---	---	---
China	0020	---	---	0220	---	---

* Country codes are subject to change without notice.

Note:

The information in this page is as of August 2010.
For information on the latest code settings, see the ROM/firmware information provided by Brother.

1.4.27 Printout of maintenance information (Function code 77)

<Function>

This function is to print out log information.

<Operating procedure>

(1) Press the **7** button twice in the initial state of the maintenance mode.
The “MAINTENANCE 77” will appear on the LCD.

(2) The machine prints out a list of log information. Upon completion of printing, the machine returns to the initial state of the maintenance mode. The example of the log information is shown below.

■ Maintenance information

```
MAINTENANCE
MFC-9970CDW,          Serial No.=X12345J0J001122  Model=8CE-317 Country=0101  SW CheckSum=EB
Main ROM: Ver.X U1009091008      ROM ChkSum: 862B                NG00  0000  01010101
Sub ROM: Ver.1.04 P1006301255    RTC Check: OK                   OKNG  000000
Boot ROM: B1006211316            RTC BackUp: OK                  0000000000000000
HV ROM: 1.00B4C5                 Before BackUp: 21:28            0010000000000000      00000000
Panel Main ROM: Y10090910        After BackUp: 00:00             0004 0003 0001
Panel Boot ROM: 010072719        USB Prod.ID: 0246               0003 0003 00
Memory Version: a
RAM Size = 256Mbyte
Remaining life of :
*Toner Cartridge                          **Drum Unit: 24962 (100%)  Belt Unit: 49894 (100%)
 Cyan(C): 96%          Yellow(Y): 96%     PF Kit MP: 50000 (100%)    Fuser Unit: 99963 (100%)
 Magenta(M): 96%       Black(K): 96%      PF Kit 1: 99965 (100%)     Laser Unit: 99963 (100%)

<Device Status>                           <Error History (last 10 errors)>
 Total Page Count: 37                      1: E1:Print Unable E1      01/17/11 03:53 Page: 29
 Color Page Count: 8                       2:
 Monochrome Page Count: 29                 3:
 Image Count Total: 61                     4:
  Cyan(C): 8           Yellow(Y): 8       5:
  Magenta(M): 8        Black(K): 37       6:
 Copy Count: 3                             7:
  Color: 3             Monochrome: 0      8:
 PC-Print Count: 8                         9:
  Color: 5             Monochrome: 3     10:
 List/FAX Count: 26
  Color: 0             Monochrome: 26    <Replace Count>
                                          Toner Cartridge                Belt Unit: 0
***Average Coverage(Total)                 Cyan(C): 0       00/00/00    Fuser Unit: 0
  Cyan(C): 2.67%       Yellow(Y): 2.65%   Magenta(M): 0    00/00/00    Laser Unit: 0
  Magenta(M): 2.51%    Black(K): 4.11%    Yellow(Y): 0     00/00/00    PF Kit MP: 0
***Average Coverage(Current)*             Black(K): 0      00/00/00    PF Kit 1: 0
  Cyan(C): 2.67%       Yellow(Y): 2.65%   Drum Unit: 0
  Magenta(M): 2.51%    Black(K): 4.11%    Waste Toner: 0

<Drum Information>                        <Total Pages Printed>
 Drum Page Count: 38                       Current Toner          Previously Used Toner
 Drum Count: 935                            Cyan(C): 8             Cyan(C): 0
                                            Magenta(M): 8          Magenta(M): 0
<Developing Roller Count>                   Yellow(Y): 8           Yellow(Y): 0
  Cyan(C): 1454        Yellow(Y): 1454      Black(K): 37           Black(K): 0
  Magenta(M): 1454     Black(K): 2398     Waste Toner: 37

<Total Pages Printed>                     <Scan Count>
 MP Tray: 0            Duplex: 2           SX Page Count: 0         DX Page Count: 2
 Tray 1: 35                                FB Page Count: 0
                                           ADF Jam SX: 0            ADF Jam DX: 0
<Total Pages Printed>
 A4/Letter: 37         Envelope: 0       <COM Error>
 Legal/Folio: 0        A5: 0             1: 00000000  01/01/04 00:00
 B5/Executive: 0       Others: 0         2: 00000000  01/01/04 00:00
                                         3: 00000000  01/01/04 00:00
<Total Pages Printed>
 Plain/Thin/Recycled: 29                 <Developing Bias: C:0V M:0V Y:0V K:0V>
 Thick/Thicker/Bond: 0
 Envelope/Env.Thick/Env.Thin: 0          <Engine Sensor Log>
 Label: 0                                 KO: 000190/001805      MN: 000335/001815
 Hagaki: 0                                RS: 000555/001755      EJ: 002850/001820
 Glossy: 0

<Total Paper Jams: 0>                    <Status Log>
 Jam MP Tray: 0        Jam Rear: 0        85 14 01  85 14 01  83 10 00  83 10 00
 Jam Tray 1: 0         Jam Duplex: 0      83 10 00  83 10 00  83 10 00  83 10 00
 Jam Inside: 0                            86 40 00  83 1C 01

<Power On Time: 2 hours>                 <Temperature/Humidity>
<Power On Count: 11>                      Temperature: 27 degrees(C)    Humidity: 41%
                                         *  Remaining life will vary depending on the types of documents printed.
                                         **  Based on A4/Letter printing.    *** Calculated coverage.
```

Fig. 5-29

1.4.28 Operational check of fans (Function code 78)

<Function>

This function is to check whether each of fans is operating correctly or not. The operation of the following fan is checked respectively, and their operating states (rotation speed 100 %, rotation speed 50 %, or OFF) are displayed.

LCD	Parts name	Description
F	Fuser fan	Evacuate hot air of the fuser unit.
P	Power fan	Evacuate hot air of the low-voltage power supply PCB ASSY.
B	Blower	Intake air to prevent a dirt on the corona wire.

<Operating procedure>

(1) Press the **7** and **8** buttons in this order in the initial state of the maintenance mode. The indication will appear on the LCD as shown in the figure below.

(2) Press the **Start/Black** button to check the next item. For operation check, spin or stop fans actually on each item.

(3) Press the **Stop/Exit** button so that the machine stops checking the fans, beeps for one second and returns to the initial state of the maintenance mode.

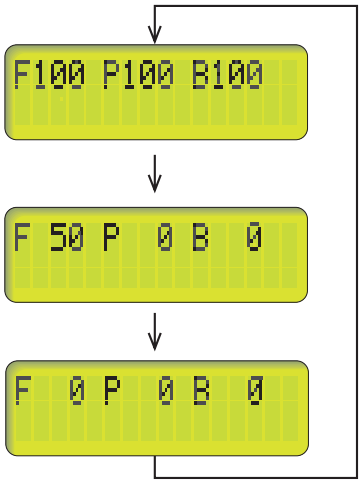

Fig. 5-30

■ Location of fans

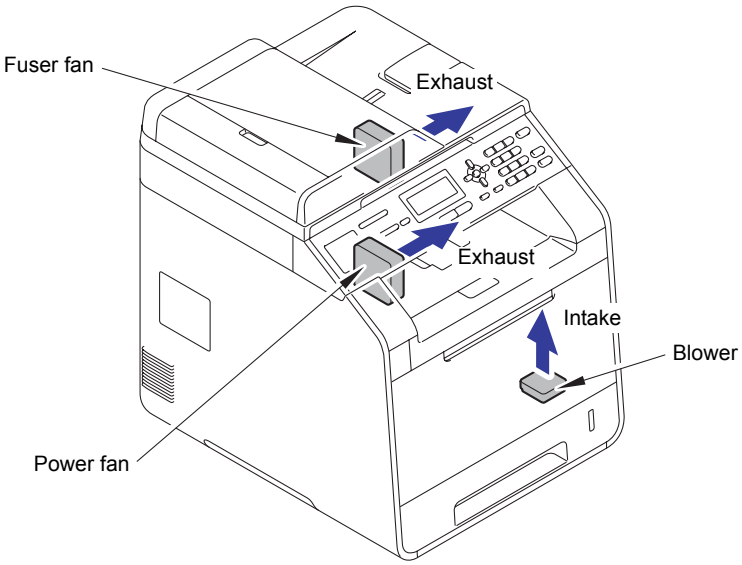

Fig. 5-31

1.4.29 Display of the machine history (log) (Function code 80)

<Function>

This function allows you to view the machine's history (log). The display items are shown in the table below.

	LCD	Description
Serial *1	USB:	Serial number
MAC Address	MAC:	MAC Address (Ethernet Address)
PCB Serial	PCB:	Main PCB serial number
Drum related items	DRUM:	Number of drum rotations
	DRUM_PG:	Number of printed pages by drum
	DRUM_CH: *2	Number of times the drum unit has been replaced/ Date of last replacement
Toner related items	CTN_PG1:	Number of printed pages by cyan toner
	CTN_PG2:	Number of printed pages before previous reset of cyan toner
	CTN_ERM:	Remaining toner amount of cyan toner (the calculated value in dots)
	CTN_RRM:	Remaining toner amount of cyan toner (the remaining amount based on the number of rotations of the developer roller)
	CTN_CH: *2	Number of times the cyan toner has been replaced/ Date of last replacement
	CTN_RND:	Cyan toner developer roller count
	MTN_PG1:	Number of printed pages by magenta toner
	MTN_PG2:	Number of printed pages before previous reset of magenta toner
	MTN_ERM:	Remaining toner amount of magenta toner (the calculated value in dots)
	MTN_RRM:	Remaining toner amount of magenta toner (the remaining amount based on the number of rotations of the developer roller)
	MTN_CH: *2	Number of times the magenta toner has been replaced/Date of last replacement
	MTN_RND:	Magenta toner developer roller count

	LCD	Description
Toner related items	YTN_PG1:	Number of printed pages by yellow toner
	YTN_PG2:	Number of printed pages before previous reset of yellow toner
	YTN_ERM:	Remaining toner amount of yellow toner (the calculated value in dots)
	YTN_RRM:	Remaining toner amount of yellow toner (the remaining amount based on the number of rotations of the developer roller)
	YTN_CH: *2	Number of times the yellow toner has been replaced/ Date of last replacement
	YTN_RND:	Yellow toner developer roller count
	KTN_PG1:	Number of printed pages by black toner
	KTN_PG2:	Number of printed pages before previous reset of black toner
	KTN_ERM:	Remaining toner amount of black toner (the calculated value in dots)
	KTN_RRM:	Remaining toner amount of black toner (the remaining amount based on the number of rotations of the developer roller)
	KTNR_CH: *2	Number of times the black toner has been replaced/ Date of last replacement
	KTN_RND:	Black toner developer roller count
Other replacing part related items	WTNR_PG:	Printed pages by waste toner box
	WTNR_CH: *2	Number of times the waste toner box has been replaced/Date of last replacement
	BCLN:	Number of rotations of the belt cleaner roller
	BELT_PG:	Printed pages by belt unit
	BELT_CH:	Number of times the belt unit has been replaced
	PFMP_PG:	Printed pages by MP paper feeding kit
	PFMP_CH:	Number of times the MP paper feeding kit has been replaced
	PFK1_PG:	Printed pages by paper feeding kit1
	PFK1_CH:	Number of times the paper feeding kit1 has been replaced
	PFK2_PG:	Printed pages by paper feeding kit2
	PFK2_CH:	Number of times the paper feeding kit2 has been replaced

	LCD	Description
Other replacing part related items	FUSR_PG:	Printed pages by fuser unit
	FUSR_CH:	Number of times the fuser unit has been replaced
	LASR_PG:	Printed pages by laser unit
	LASR_CH:	Number of times the laser unit has been replaced
Average print rate related items *3	CCVRGUSI:	Average cyan coverage % (Toner in use)
	CCVRGACC:	Average cyan coverage % (Accumulated)
	MCVRGUSI:	Average magenta coverage % (Toner in use)
	MCVRGACC:	Average magenta coverage % (Accumulated)
	YCVRGUSI:	Average yellow coverage % (Toner in use)
	YCVRGACC:	Average yellow coverage % (Accumulated)
	KCVRGUSI:	Average black coverage % (Toner in use)
	KCVRGACC:	Average black coverage % (Accumulated)
Print pages related items	TTL_PG:	Total number of printed pages
	TTL_CO:	Total number of color printed pages
	TTL_MO:	Total number of monochrome printed pages
	TTL_CI:	Cyan printed pages
	TTL_MI:	Magenta printed pages
	TTL_YI:	Yellow printed pages
	TTL_KI:	Black printed pages
	TTLCOPY:	Number of copy pages
	CL_COPY:	Number of color copy pages
	MN_COPY:	Number of B/W copy pages
	TTLPCPT	Number of PC prints made
	CL_PCPT:	Total number of PC color printed pages
	MN_PCPT:	Total number of PC monochrome printed pages
	TTLFAX	Number of List/FAX outputs made
	CL_FAX:	Total number of color List/FAX printed pages
	MN_FAX:	Total number of monochrome List/FAX printed pages
Picked-up pages by tray	TR1_PG:	Number of pages picked up from the paper tray 1
	TR2_PG:	Number of pages picked up from the paper tray 2
	MP_PG:	Number of pages picked up from the MP tray
	DX_PG:	Number of sheets picked up from the DX
Picked-up pages by paper size	A4+LTR:	Number of A4/Letter size sheets picked up
	LG+F0L:	Number of Legal/Folio size sheets picked up
	B5+EXE:	Number of B5/Executive size sheets picked up
	ENVLOP:	Number of envelopes picked up
	A5:	Number of A5 size (including A5R) sheets picked up
	OTHER:	Number of other-size (including JIS B6) sheets picked up

	LCD	Description
Print pages by paper type*4	PLTNRE:	Printed pages of plain, thin, and recycled paper
	TKTRBD:	Printed pages of thick, thicker, and bond paper
	ENVTYP:	Printed pages of envelope, envelope thick, and envelope thin
	HAGAKI:	Printed pages of Hagaki
	LABEL:	Printed pages of label
	GLOSSY:	Number of prints of glossy paper
Number of scanned pages	ADSX_PG:	Number of pages scanned in singled sided scanning with the ADF
	ADDX_PG:	Number of pages scanned in double sided scanning with the ADF
	FB_PG:	Number of pages scanned with the document table
Developing bias related time	CDEV_BIAS:	Cyan developing bias voltage (unit: V)
	MDEV_BIAS:	Magenta developing bias voltage (unit: V)
	YDEV_BIAS:	Yellow developing bias voltage (unit: V)
	KDEV_BIAS:	Black developing bias voltage (unit: V)
Power distribution time	POWER:	Power distribution time (unit: H)
	PWRCNT:	Number of times that the power is turned ON
Jam related items	TTL_JAM:	Total number of times when a jam occurs
	TR1_JAM:	Number of times when a jam occurs at the paper tray 1
	TR2_JAM:	Number of times when a jam occurs at the paper tray 2
	MP_JAM:	Number of times when a jam occurs at the MP tray
	DX_JAM	Number of sheets jammed in the DX
	IN_JAM:	Number of sheets jammed in the product
	RE_JAM:	Number of sheets jammed around the back cover
	ADSX_JAM:	Number of jams that occurred at singled sided scanning with the ADF
	ADDX_JAM:	Number of jams that occurred at double sided scanning with the ADF
Number of error occurrences	HODN_ER:	Number of times that the error caused by the dirt on the corona wire occurs
	FUSR_ER:	Number of times that fuser unit error occurs
	MTLK_ER:	Number of times that the motor lock error in the laser scanner occurs

	LCD	Description
Error log related items	MACHINEERR_##: *5	Error history ## to be displayed to the user: Error code/Occurrence page counter
	COMERR##: *6	Last communication error code
	ENGERR##:****** *7	Engine error history ##: Error level (2 bytes), large classification code (2 bytes), detailed classification code (2 bytes)
	DEVSTATUS__##: *8	Log for design analysis/Occurrence page counter

*1 You can change the serial number with the procedure given below.

(1) Press the **9**, **4**, **7**, and **5** buttons in this order while the serial number is displayed. The first digit of the serial number displayed on the LCD is blinking.

(2) Enter the first digit of the serial number of the machine using the ten-key pad, and press the ▶ button to move the blinking digit. Enter all 12 digits of the serial number after the first digit in the same way.
<How to enter alphabets>
Keep pressing a corresponding key in the ten-key pad based on the table given below until the alphabet you want to enter is displayed.

Ten-key pad	Corresponding alphabet
2	2 → A → B → C
3	3 → D → E → F
4	4 → G → H → I
5	5 → J → K → L
6	6 → M → N → O
7	7 → P → Q → R → S
8	8 → T → U → V
9	9 → W → X → Y → Z

(3) When you finish entering the serial number, press the **OK** button. The new setting is saved, and the machine returns to the initial state of the maintenance mode.

To cancel the input of the serial number, press the **Stop/Exit** button. When this button is pressed, the setting is canceled, and the machine returns to the initial state of the maintenance mode.

*2 Press the **OK** button while the number of times that the consumable part has been replaced is displayed, the date last time the consumable part was replaced is displayed. Press the **OK** button again, and the number of times the consumable part has been replaced is displayed again.

*3 Average print rate: Print area/printable area

*4 Paper type according to the printer driver settings. It is not necessarily matched with the type of the actually fed paper.

*5 01 to 10 are entered in ## in chronological order. When you press the **OK** button as the machine error history is displayed, the page counter values when the errors occurred are displayed.

*6 01 to 03 are entered in ## in chronological order.

*7 01 to 10 are entered in ## in chronological order. When you press the **OK** button as the engine error history is displayed, TM: elapsed time (minute) from the previous error and BT: the number of times when the power is ON are displayed. When you press the **OK** button again, the engine error history is displayed again.

*8 01 to 10 are entered in ## in chronological order. In the log for design analysis, even if a same error occurs continuously, it is recorded in the history every time it occurs.

<Operating procedure>

(1) Press the **8** and **0** buttons in this order in the initial state of the maintenance mode.

(2) Each time the **Start/Black** button is pressed, next log information item appears on the LCD in the order. Press the ▼ button to go to the next item. Press the ▲ button to go back to the previous item.

(3) Press the **Stop/Exit** button to return to the machine to the initial state of the maintenance mode.

Note:
Regarding "MACHINEERR", "COMERR", and "ENGERR", when the **OK** button is pressed while the error history is displayed, the page counter value at which the error occurred is displayed. Press the **OK** button again to return the machine to the error history display.

1.4.30 Error code indication (Function code 82)

<Function>

This function displays an error code of the machine on the LCD.

<Operating procedure>

(1) Press the **8** and **2** buttons in this order in the initial state of the maintenance mode.
The machine displays "MACHINE ERROR X X" on the LCD.

(2) Press the **Stop/Exit** button to return to the machine to the initial state of the maintenance mode.

1.4.31 Developing bias voltage correction (Function code 83)

<Function>

This function performs developing bias voltage correction to fix the density of each color toner when printed color is not correct.

Note:
Before this function is performed, there is a need that the "Sensitivity adjustment of density sensor (Function mode 72)" has been done more than once. When performing this maintenance mode 83 after replacing the main PCB ASSY, make sure to perform the "Sensitivity adjustment of density sensor (Function mode 72)" first.

<Operating procedure>

(1) Press the **8** and **3** buttons in this order in the initial state of the maintenance mode. The machine displays "PLEASE WAIT" on the LCD and starts the developing bias voltage correction.

(2) Upon completion of the developing bias voltage correction, the machine returns to the initial state of the maintenance mode. When an error message is displayed on the LCD, take the measures described in the table below.

Error message	Measure
FAILED	Remove the error factors with the following operations and press the **Start/Black** button to clear the error. - Re-insert the toner cartridge in the correct position. - Replace the toner cartridge. - Replace the drum unit. - Replece the waste toner box. - Replace the belt unit. - Replace the registration mark sensor holder ASSY.
TONER EMPTY # *	Replace the empty toner cartridge and press the **Start/Black** button to clear the error. Perform the developing bias voltage correction again after performing the sensitivity adjustment of density sensor (Function code72).
Cover is Open	Close the front cover.
Replace Toner	Replace the black toner cartridge and press the **Start/Black** button to clear the error. Perform the developing bias voltage correction again after performing the sensitivity adjustment of density sensor (Function code72).

* # indicates the toner color (Y, M, or C) of which cartridge became empty.

Note:
Any panel operation is invalid during the developing bias voltage correction.

1.4.32 Sending communication error list (Function code 87)

<Function>

This function is to send the error list to a service man at a remote location when a FAX communication error occurs on a user's machine. Reception of the error list enables a service man to analyze the problem occurring on a user's machine.

<Operating procedure>

- Service side

(1) The service side connects the phone line to the user in question.

- User side

(1) Press the **Menu** button and **Start/Black** button as the machine is in the ready state.

(2) Press the **0** button to display "0" on the LCD.

(3) Press the **8** button and **7** button in this order, and "SENDING P.01" is displayed on the LCD, and the error list is sent.

(4) When the error list is sent, the machine beeps for approximately 1 second and returns to the initial state of the maintenance mode.

Note:
If this operation is not performed while the phone line is connected, the error list sending operation is not started. Be sure to perform the operation explained above while the phone line is connected (i.e., while making a call using the built-in H/S, using the additional telephone set, or using the line monitor).

1.4.33 Counter reset after replacing the fuser unit and paper feeding kit (Function code 88)

<Function>

The number of replacement is increased by one, and the warning indication "Replace ***" is cleared, with implementing this operation after replacing the fuser unit and paper feeding kit.

<Operating procedure>

(1) Press the **8** button twice in the initial state of the maintenance mode.

(2) The "Reset-Fuser Unit" will appear on the LCD.

(3) Press the ▲ or ▼ button to select the item you want to reset. The LCD shows.

"Reset-Fuser Unit"

"Reset-PF KIT T1"

(4) Press the **OK** or **Start/Black** button, then "OK?" will appear on the LCD.

(5) Press the **OK** or **Start/Black** button to reset the counter of the selected part and returns the operating procedure (2) mode.

(6) When the **Stop/Exit** button is pressed, the machine beeps for one second and returns to the initial state of the maintenance mode.

1.4.34 Exit from the maintenance mode (Function code 99)

<Function>

This function allows you to exit from the maintenance mode. If the error related to the fuser unit occurs, the error is cleared. (Refer to "2.4 How to Recover from Errors of the Fuser Unit" in this chapter.)

<Operating procedure>

(1) Press the **9** button twice in the initial state of the maintenance mode. The maintenance mode exits from the maintenance mode and return to the ready state.

Note:

When a fuser error occurs, be sure to turn ON the power after cooling the halogen heater sufficiently.

2. OTHER SERVICE FUNCTIONS

2.1 Developer Roller Counter Reset Function

This function is to manually perform the operation same as the one when a toner cartridge is replaced with a new one. The purpose of this function is to provide a means to resolve an error when a new toner cannot be recognized by the machine, and the toner life display fails to be cleared.

Non Touch panel model

(1) Press the **Clear** button while the front cover is being opened.

Touch panel model

(1) Press the **1** button while the front cover is being opened.

(2) "Reset Menu" appears on the LCD. Press the ▲ or ▼ button to select the appropriate toner cartridge, and then press the **OK** button.

LCD	Description
K. TNR-STD	Starter/Standard black toner developer roller counter reset
K. TNR-HC	High capacity black toner developer roller counter reset
K. TNR-S.HC	Super high capacity black toner developer roller counter reset
C. TNR-STD	Starter/Standard cyan toner developer roller counter reset
C. TNR-HC	High capacity cyan toner developer roller counter reset
C. TNR-S.HC	Super high capacity cyan toner developer roller counter reset
M. TNR-STD	Starter/Standard magenta toner developer roller counter reset
M. TNR-HC	High capacity magenta toner developer roller counter reset
M. TNR-S.HC	Super high capacity magenta toner developer roller counter reset
Y. TNR-STD	Starter/Standard yellow toner developer roller counter reset
Y. TNR-HC	High capacity yellow toner developer roller counter reset
Y. TNR-S.HC	Super high capacity yellow toner developer roller counter reset

(3) Once " ▲ Reset ▼ Exit" appears on the LCD; press ▲ button.

(4) The developer roller counter is reset.

(5) The machine returns to the state in which the front cover is open.

Note:
If there is no operation for 30 seconds or more, the machine automatically returns to step (1).

2.2 Parts Life Reset Function

This function is used to reset the relevant part counter when the user replaced a periodical replacement part with the correct procedure, and also used to forcibly reset the relevant part counter when an error cannot be resolved because the user did not replace a consumable part with the correct procedure.

(1) Press the **3** and **9** buttons at the same time in the ready state.

Non Touch panel model

(2) The "Reset Menu" will appear on the LCD. Select the applicable periodical replacement part or consumable part by pressing the ▲ or ▼ button and press the **OK** button.

<Periodical replacement parts or consumable part are indicated on the LCD>

- Drum unit
- Belt unit
- PF kit MP
- PF kit 1
- PF kit 2
- Fuser
- Laser

(3) Once " ▲ Reset ▼ Exit" appears on the LCD; press ▲ button.

(4) The machine implements clearing the counter.

Touch panel model

(2) "Reset Menu" and periodical replacement parts or consumable parts will appear on the LCD. Press the relevant part.

(3) "Reset? Yes/No" will appear on the LCD. Press "Yes".

(4) "Accepted" appears on the LCD, and the counter is cleared.

Note:

- All replacement parts are always indicated on the LCD even though their lives do not reach the end of life.
- The machine returns to the ready state automatically if no panel operation is implemented for 30 seconds.

2.3 Deletion of User Setting Information, etc.

In this machine, the user setting information is stored in the EEPROM and flash memory of the main PCB ASSY. You can delete all the data listed below at a time with the procedure given below.

- Information related to Net
- User setting information

<Operating procedure>

(1) Press the **Menu** button while the machine is in the ready state.

Non Touch panel model

(2) Press the ▲ or ▼ button, then the "Initial Setup" or "General Setup" will appears on the LCD and press the **OK** button.
(Which will appear, "Initial Setup" or "General Setup", depends on the model.)

(3) Press the ▲ or ▼ button, then the "Reset Menu" will appear on the LCD and press the **OK** button.

(4) Press the ▲ or ▼ button, then the "All Settings" will appear on the LCD and press the **OK** button.

(5) The "1.Reset 2.Exit" appear on the LCD.

(6) Press the **1** button, and the user setting information is deleted, and the machine goes back to the ready state.

Touch panel model

(2) Press "Initial Setup" or "General Setup" on the LCD.

(3) Press "Reset" on the LCD.

(4) Press "All Settings" on the LCD.

(5) "Reset? All Settings? Yes/No" will appear on the LCD. Press "Yes".

(6) "Reboot OK? Press for 2 second to confirm. Yes/No" will appear on the LCD. Press "Yes" for 2 seconds or longer, the user settings are cleared, and the machine returns to the ready state.

Note:

The machine returns to the ready state automatically if no panel operation is implemented for 30 seconds.

2.4 How to Recover from Errors of the Fuser Unit

How to recover from errors of the fuser unit is to use Function code 99 in the maintenance mode.

<Operating procedure>

Non Touch panel model

(1) Press the **Menu** button and then the **Start/Black** button while the machine is in the ready state. Next, press the ▲ button four times to enter the maintenance mode.

Memo: Memo:

FAX models equipped with numerical keypads can enter the maintenance mode in the same way as conventional models; that is, by pressing the **Menu**, *****, **2**, **8**, **6** and **4** buttons in this sequence.

Touch panel model

(1) While the machine is in the ready state, press the **COPY** and **SCAN** buttons at the same time, and then press the *****, **2**, **8**, **6** and **4** buttons in this order.

(2) The machine beeps for one second and displays "▮▮ MAINTENANCE ▮▮▮" on the LCD, indicating that it is placed in the initial state of the maintenance mode, a mode in which the machine is ready to accept entry from the buttons.

(3) To exit from the maintenance mode and switch to ready state, press the **9** button twice in the initial state of the maintenance mode.

WARNING

When clearing an error, be sure that the fuser unit is cooled down sufficiently. If an error is cleared while the fuser unit is not cooled down, there is a possibility that the unit might be unable to be repaired.

2.5 Drum Cleaning

■ Drum cleaning function overview

This function is to attach a special cleaning sheet on the drum and perform the cleaning of the drum.

<Operating procedure>

Non Touch panel model

(1) Press the **Clear** button and ◀ button while the machine is in the ready state.
"Drum Cleaning/Attach the cleaning sheet. Please refer to the included instructions." is displayed on the LCD.

Touch panel model

(1) Press the **Job Cancel** and **Start/Black** buttons while the machine is in the ready state.
"Drum Cleaning/Attach the cleaning sheet. Please refer to the included instructions." is displayed on the LCD.

(2) Open the front cover, take out the drum unit, and attach the cleaning sheet on the drum unit. (For the method of attaching the cleaning sheet, refer to the insertion of the cleaning sheet.)

(3) Mount the drum unit to the machine and close the front cover.
"Drum Cleaning/Please wait" is displayed on the LCD, and then drum cleaning starts.

(4) After a while, "Drum Cleaning/Drum Cleaning completed. Remove the cleaning sheet." is displayed on the LCD, and drum cleaning is completed. Then, open the front cover, take out the drum unit, and remove the cleaning sheet from the drum unit.

(5) Mount the drum unit to the machine and close the front cover, and the machine goes back to the ready state.

Note:
If the machine is not operated for 1 minute while it is in the state of the procedure (1), it goes back to the ready state.

2.6 Deep Sleep Function

In addition to the sleep function with the normal specifications, the deep sleep function is prepared to reduce the power consumption.

The deep sleep function is used to stop the operation of the following functions whereas they are available in the normal sleep mode.

- Operation of the wireless LAN
- Power supply to the paper tray 2
- Operation of all the fans
- Detection of files in a USB flash memory

<Transition conditions>

The machine goes into the deep sleep function when the user does not operate the machine (from a PC) and no warning such as an error is issued after it goes into the normal sleep mode and all the fans are stopped. When secure print exists, the machine does not go into the deep sleep mode.

<How to Exit>

The machine exits from the deep sleep function when it receives an input from the outside, for instance when it receives print data from a PC, or when any button on the control panel is operated, or when the front cover is opened or closed.

■ Setting of ON/OFF of the deep sleep function

You can set ON/OFF of the deep sleep function so that the machine will not go into the deep sleep function even when the aforementioned conditions are satisfied.

<Operating procedure>

(1) Press the **Menu** button while the machine is in the ready state.

(2) Press the ▲ or ▼ button to display "General Setup" on the LCD, and then press the **OK** button.

(3) Press the ▲ or ▼ button to display "Ecology" on the LCD, and then press the **OK** button.

(4) Press the ▲ or ▼ button to display "Sleep Time" on the LCD, and then press the **OK** button.

(5) Press the **Job Cancel** button and **Start/Black** button at the same time while "Sleep Time/ *Min" is displayed on the LCD. "Deep Sleep/On*" is displayed on the LCD.

(6) Press the ▲ or ▼ button to switch Deep Sleep On and Off and display the state that you want to set, and then press the **OK** button.

(7) “Deep Sleep/Accepted” is displayed on the LCD, and the machine goes back to the ready state.

Note:

- When no operation is made for 30 seconds during the switching operation, the machine goes back to the ready state.
- The initial value of Deep Sleep is set to On.
- In the procedure (5), the present setting (On or Off) of Deep Sleep is displayed on the LCD.
- "*" is displayed on the right side of the present setting (On or Off) of Deep Sleep.

CHAPTER 6
CIRCUIT DIAGRAMS & WIRING DIAGRAM

CHAPTER 6
CIRCUIT DIAGRAMS & WIRING DIAGRAM

This chapter provides the circuit diagrams and wiring diagram for the connections of the PCBs.

CONTENTS

1. CIRCUIT DIAGRAMS

■ High-voltage Power Supply PCB Circuit Diagram (1/3)

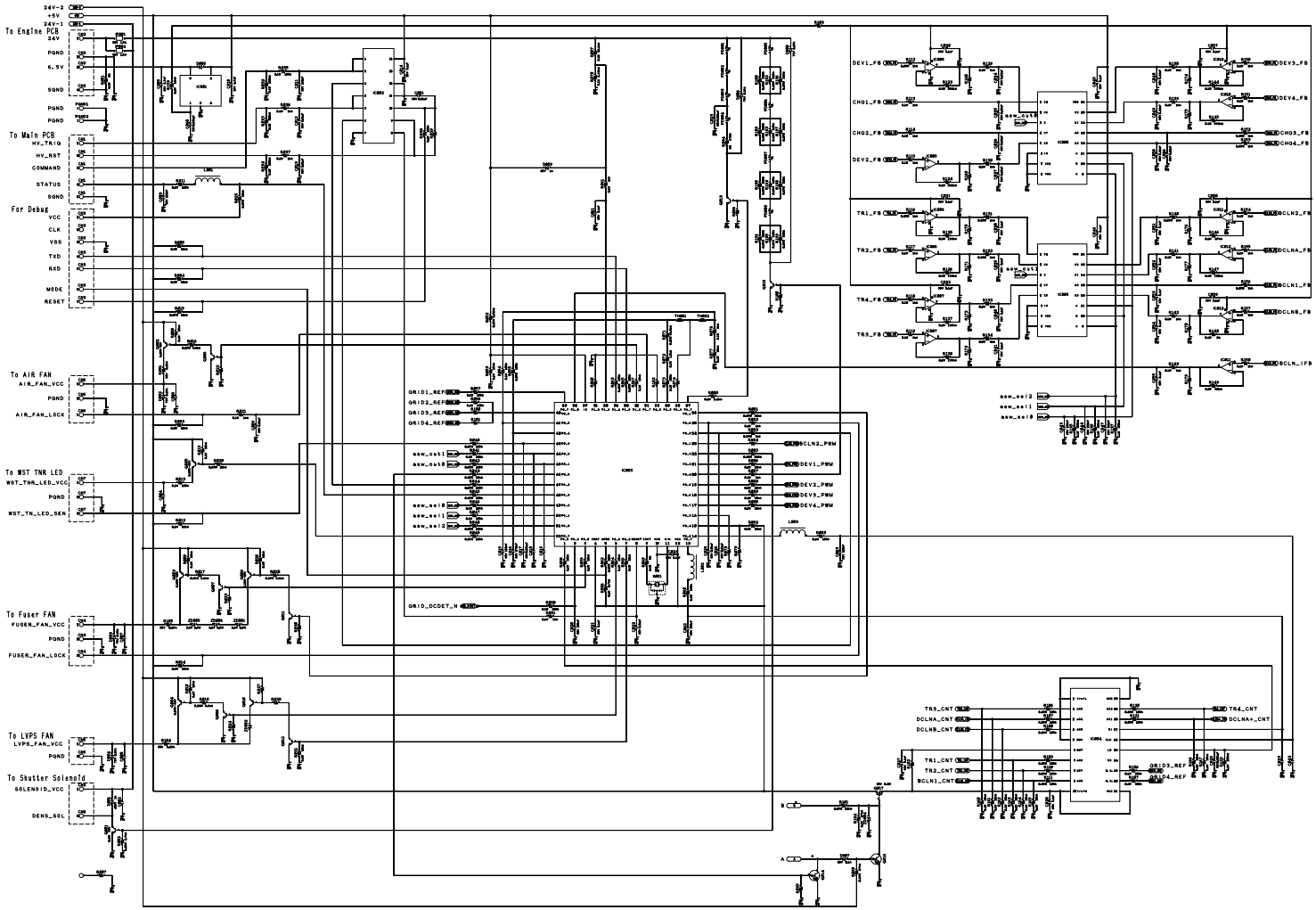

■ High-voltage Power Supply PCB Circuit Diagram (2/3)

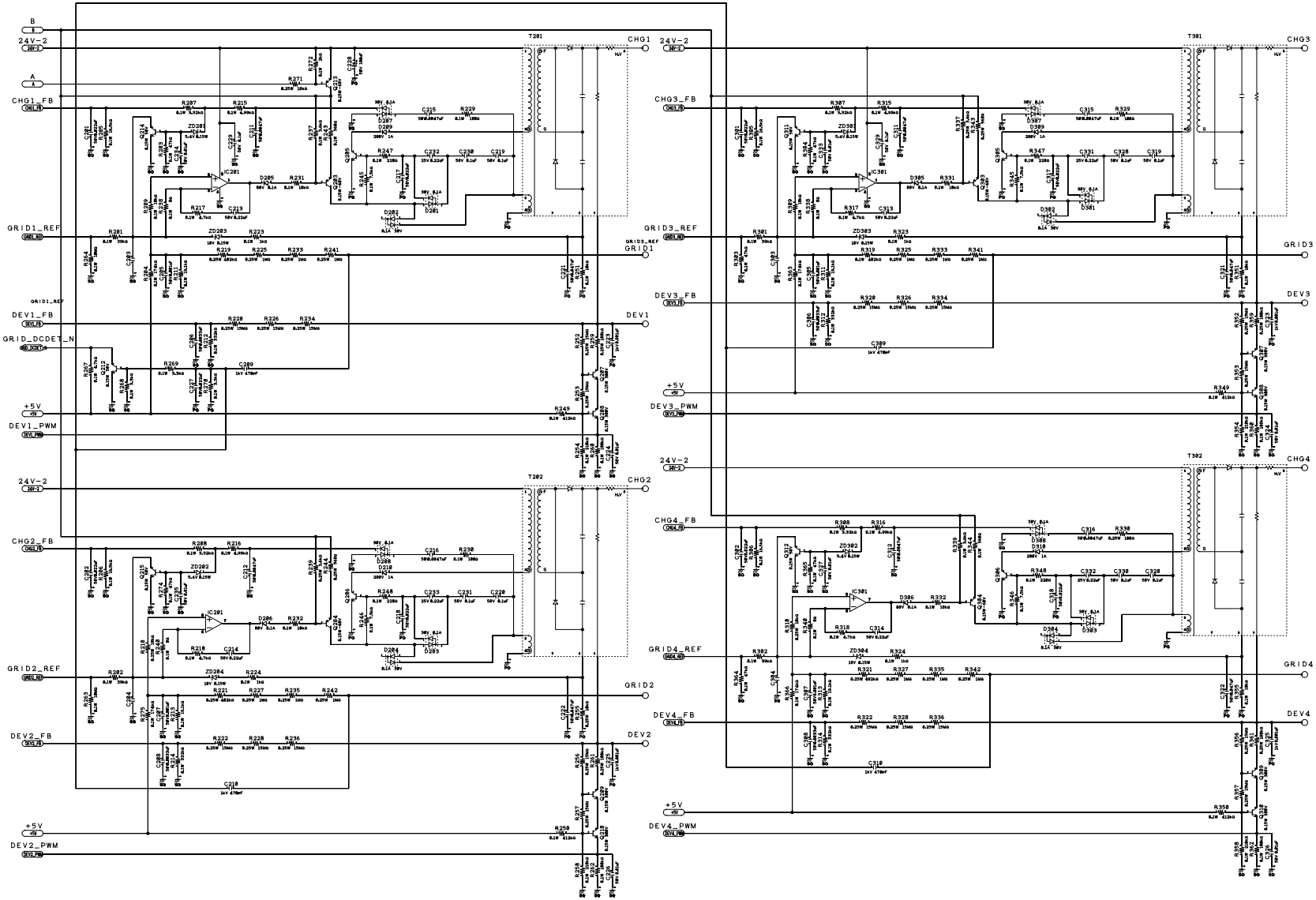

■ High-voltage Power Supply PCB Circuit Diagram (3/3)

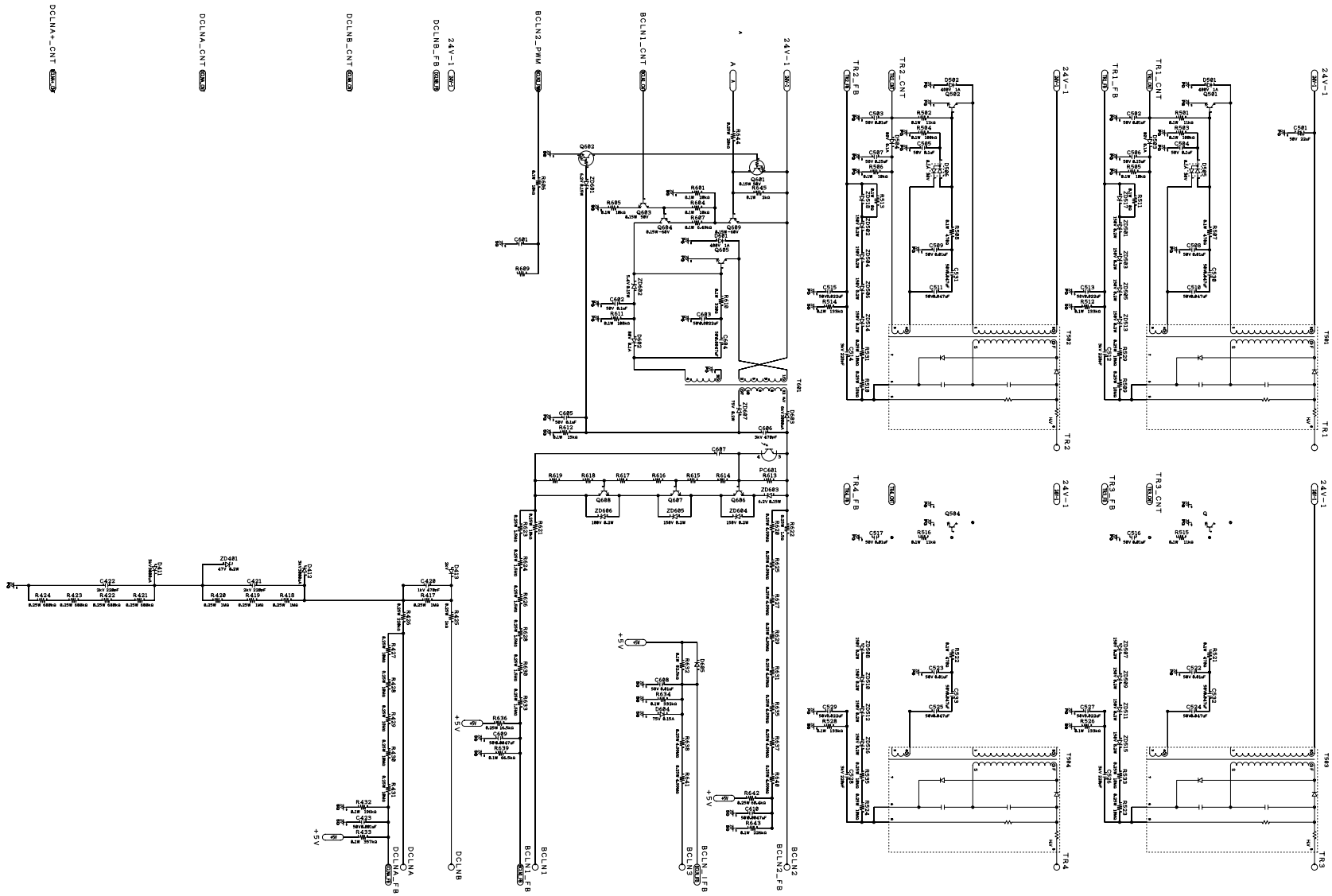

■ Low-voltage Power Supply PCB Circuit Diagram (100V)

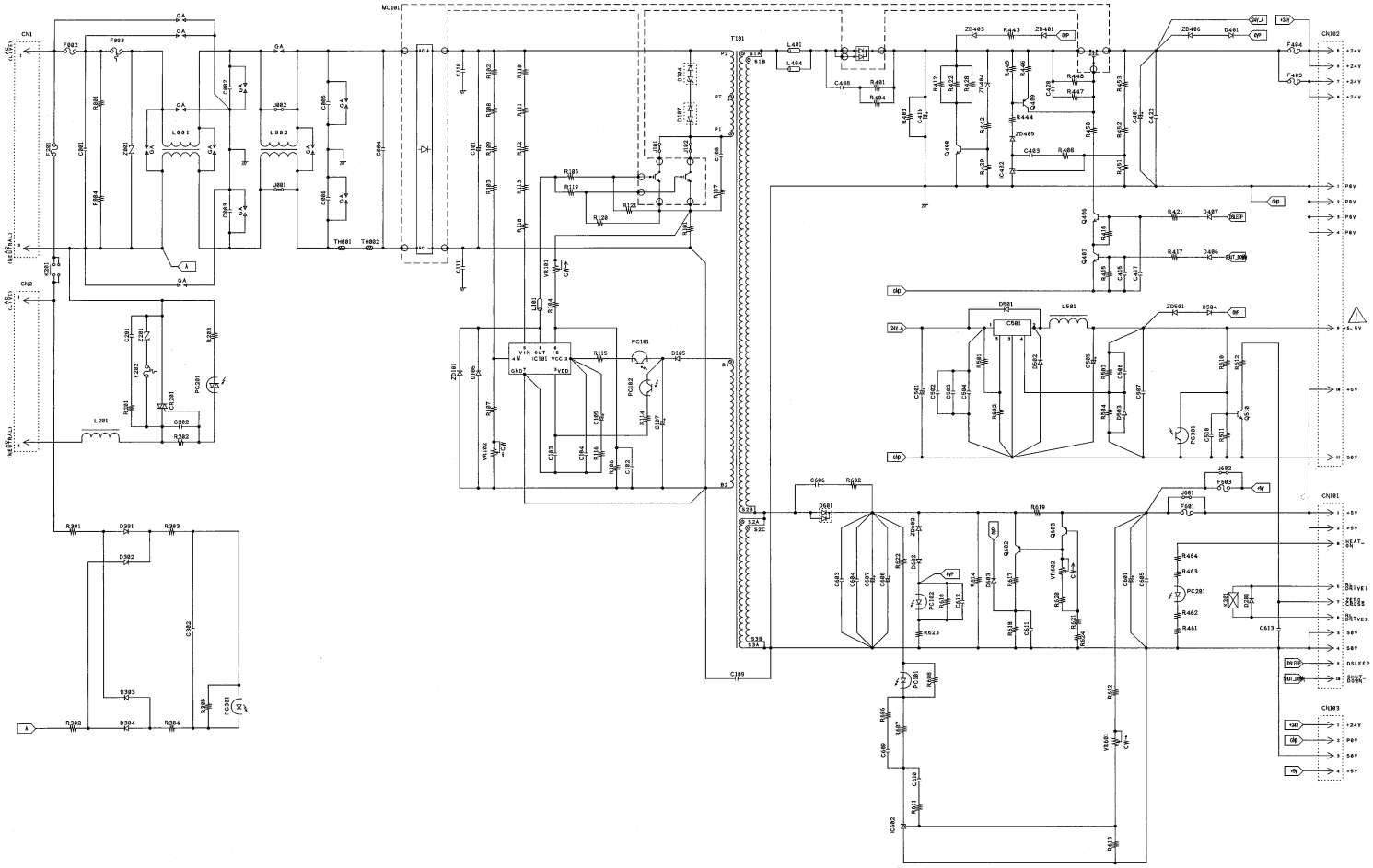

■ Low-voltage Power Supply PCB Circuit Diagram (200V)

■ NCU PCB Circuit Diagram: U.S.A/Canada

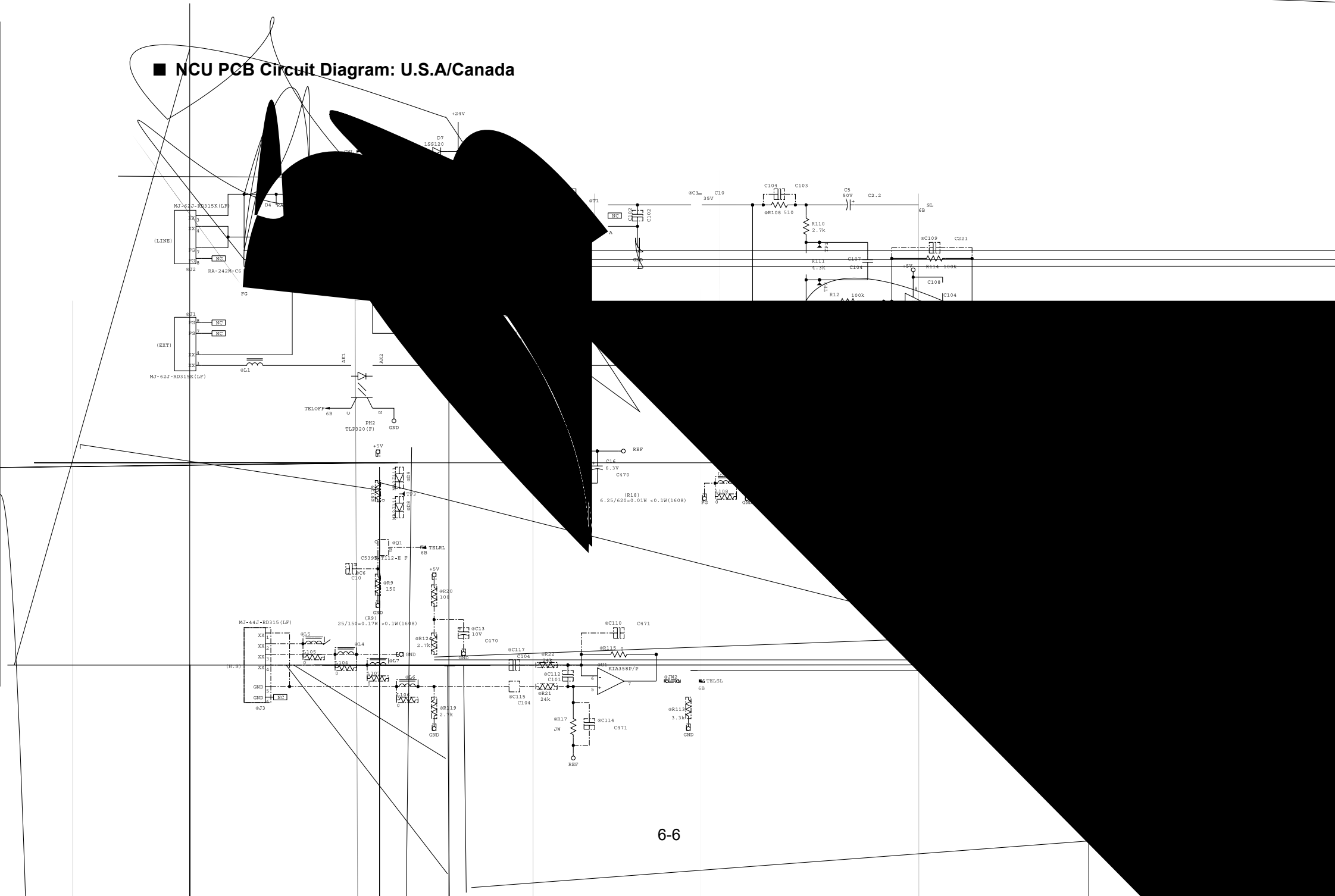

■ NCU PCB Circuit Diagram: Europe/Oceania

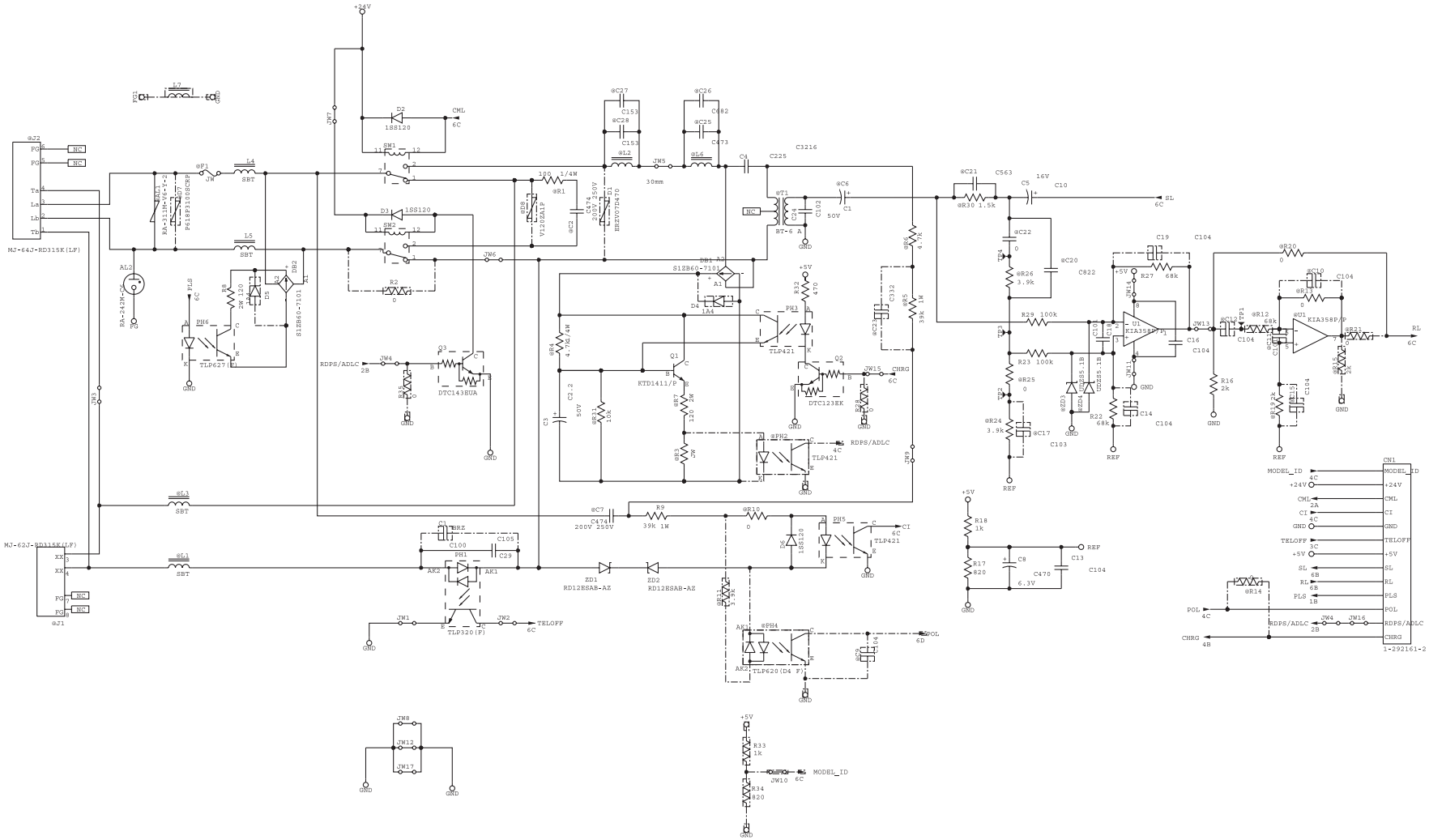

■ NCU PCB Circuit Diagram: China/Asia/South Africa/Gulf

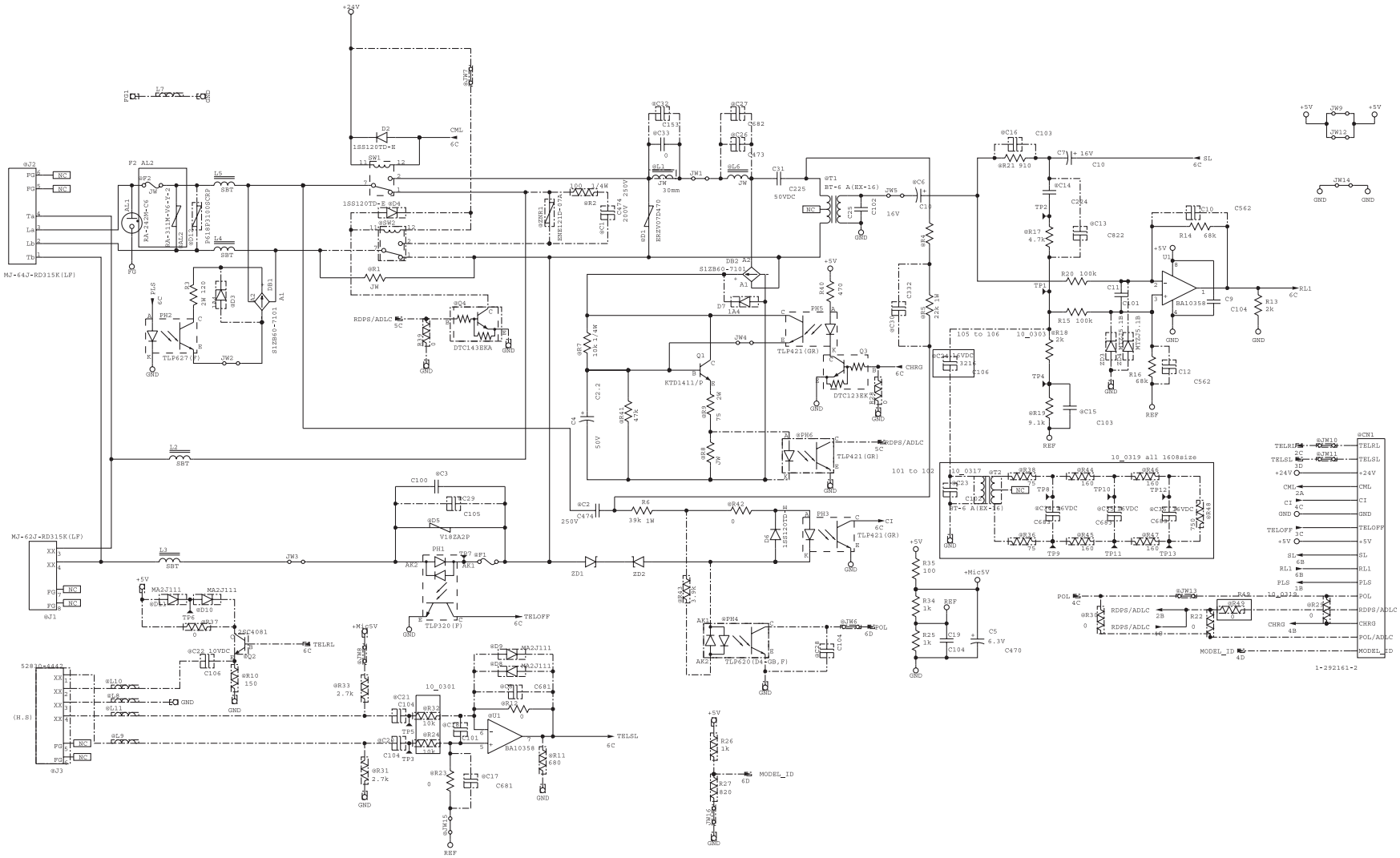

2. WIRING

■ **Wiring Diagram**

CHAPTER 7
PERIODICAL MAINTENANCE

CHAPTER 7
PERIODICAL MAINTENANCE

This chapter details periodical replacement parts. This chapter also covers procedures for disassembling and assembling periodical replacement parts.

CONTENTS

1. PRECAUTIONS

To avoid creating secondary problems by mishandling, follow the warnings below during maintenance work.

WARNING

- Always turn off the power switch and unplug the power cord from the power outlet before accessing any parts inside the machine.
- When opening the front cover or back cover to access any parts inside the machine, never touch the shaded parts shown in the following figures.

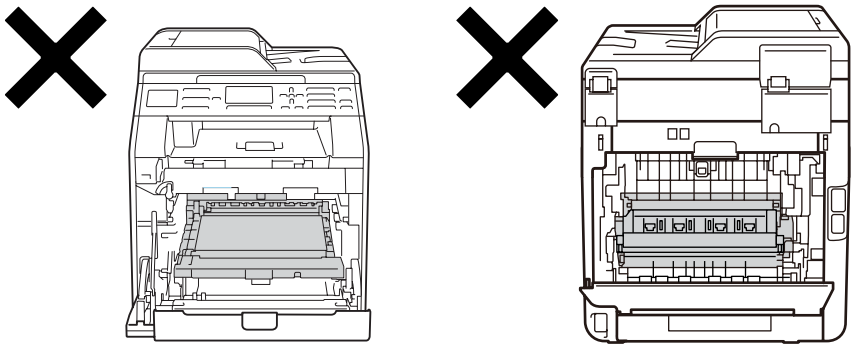

Periodical replacement parts are the parts to be replaced periodically to maintain product quality. These parts would affect the product quality if they loose their functionality even if they do not appear to be damaged or there is no change in their appearance.

When replacing the periodical replacement parts, each of the counters need to be reset in order to record the number of replacement times. Refer to "2.2 Parts Life Reset Function" in Chapter 5. Also make sure to wipe the dirt on the drum unit as shown in the figure below when replacing each of the periodical replacement parts.

The number of printed pages of the machine can be checked on Print Settings. (Refer to User's Guide how to printout of User Settings.) The actual number of printed page will vary depending on the type of print job or the paper to being used. The figures indicated as the approximate life in the table above are worked out when printing a general business document (in accordance with ISO/IEC 19798) on A4-size paper.

Note:

- If the fuser unit is replaced after errors related to the fuser unit occur, you need to wait until the machine sufficiently cools down before replacing the unit. After replacing the unit, turn ON the machine and leave if for approximately fifteen minutes. This will make the machine to be released from the error.
- After disconnecting flat cables, check that each cable is not damaged at its end or shortcircuited.
- When connecting flat cables, do not insert them at an angle. After insertion, check that the cables are not at an angle.

2. PERIODICAL REPLACEMENT PARTS

2.1 Procedures to Replace Periodical Replacement Parts

■ Preparation

Prior to proceeding with the disassembly procedure,

(1) Unplug

- the AC cord,
- the USB cable, if connected,
- the LAN cable, if connected, and
- USB flash memory drive, if connected.

(2) Remove

- the Paper tray,
- the Toner cartridge,
- the Drum unit,
- the Belt unit, and
- the Waste toner box.

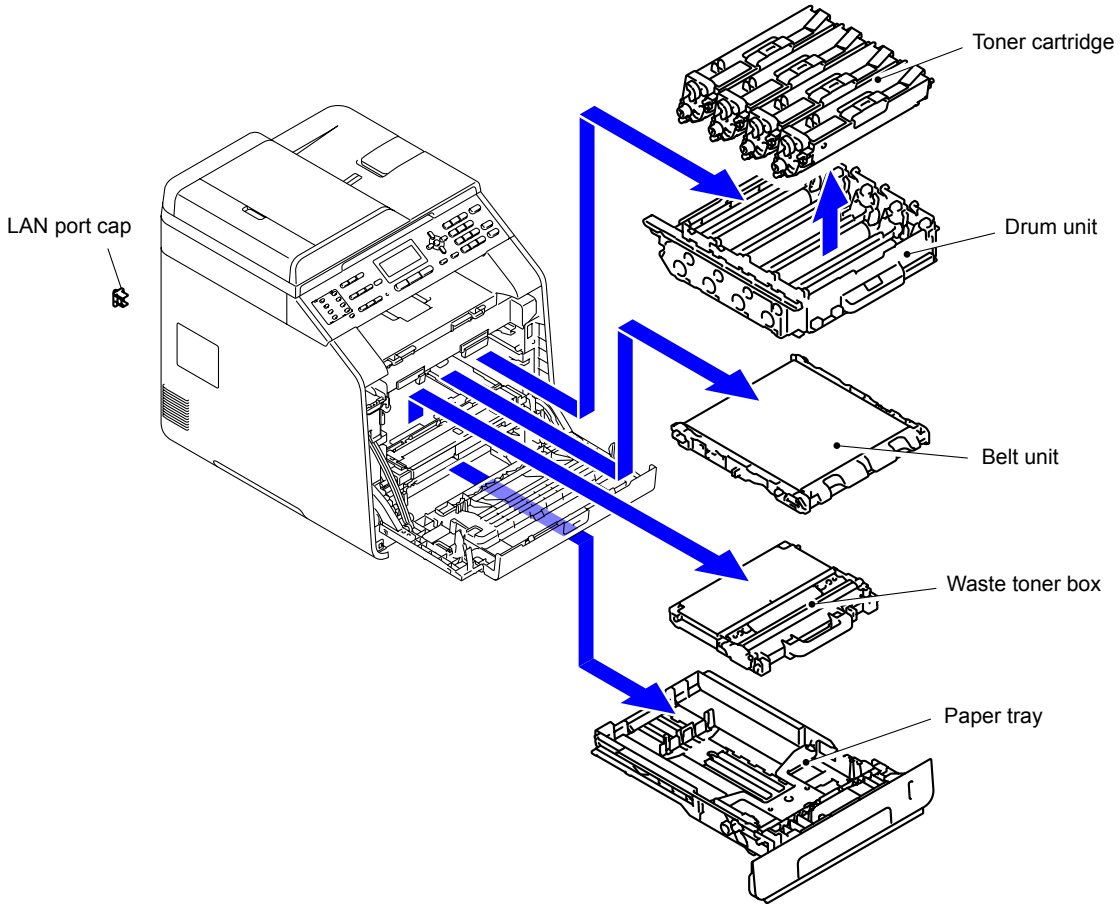

2.1.1 Fuser unit

(1) Open the Back cover.

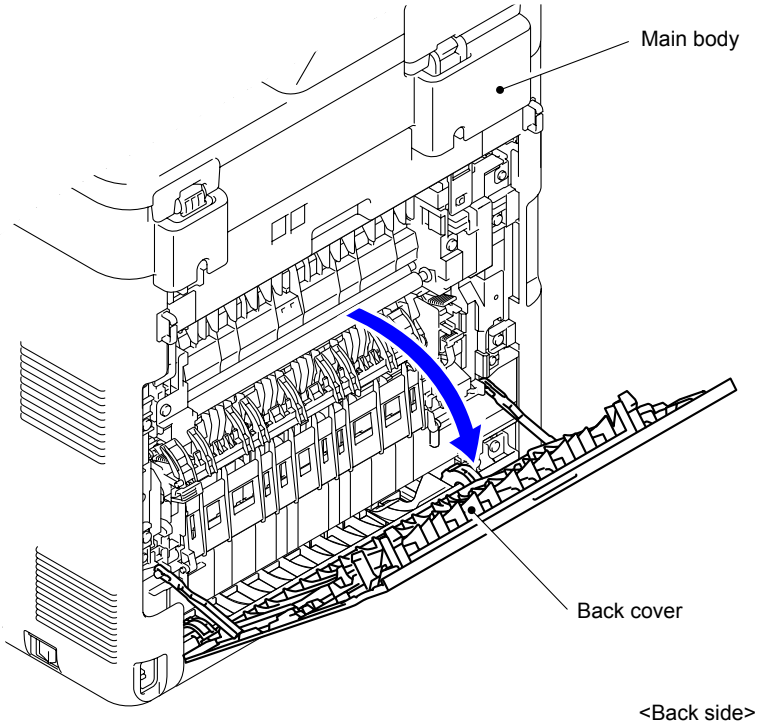

Fig. 7-1

(2) Remove the Back cover stopper arm L and R from the Main body.

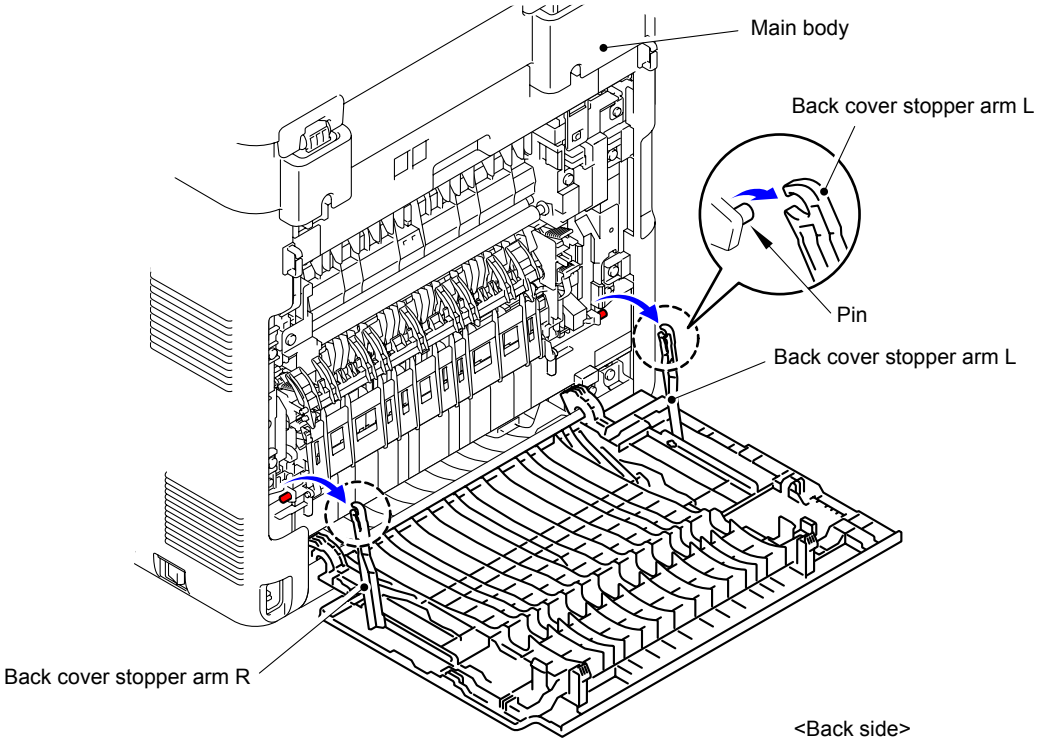

Fig. 7-2

(3) Remove the Shaft of the Back cover from the Bush on the right side of the Main body.

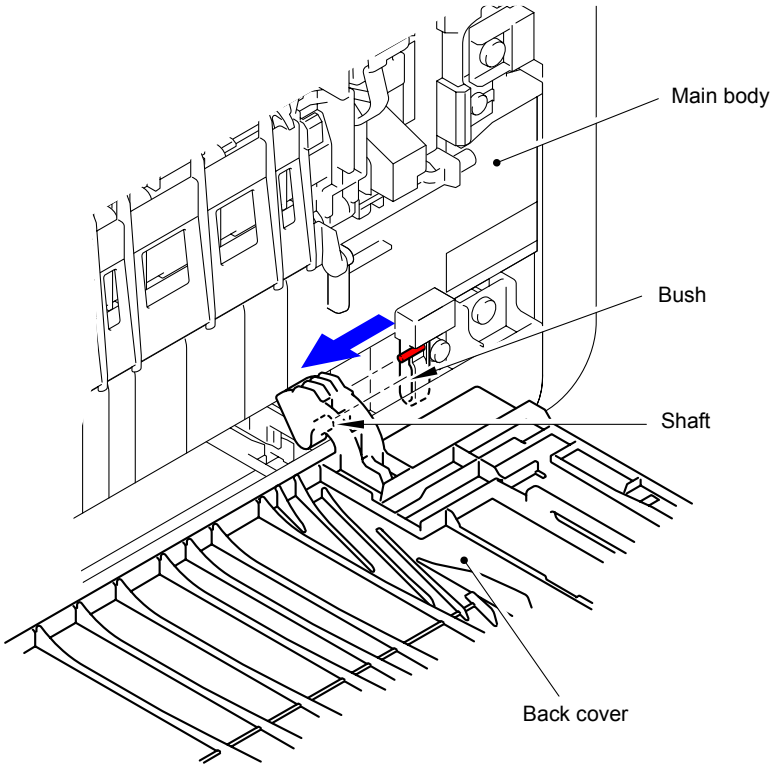

Fig. 7-3

(4) Remove the Back cover.

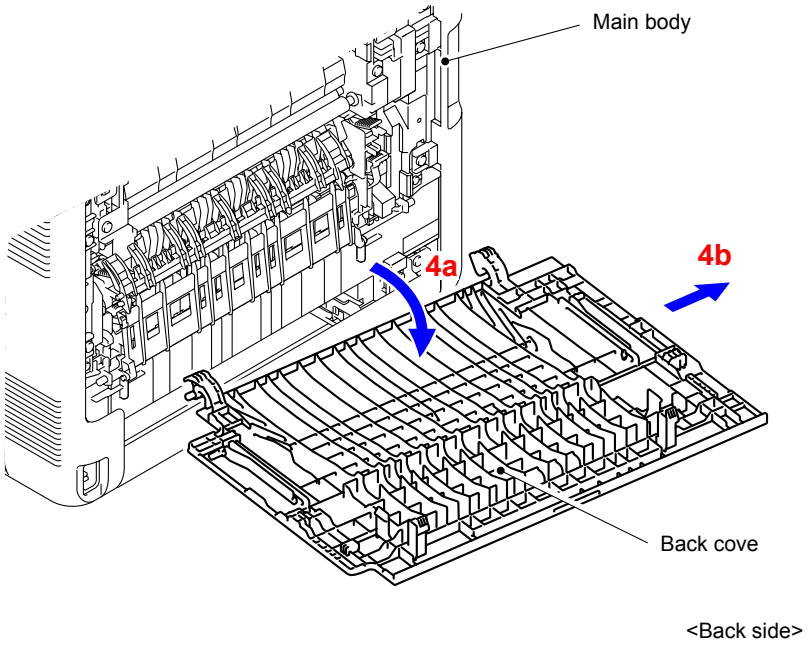

Fig. 7-4

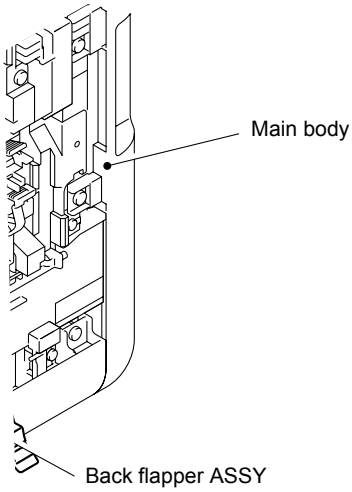

<Back side>

n the Fuser cover.

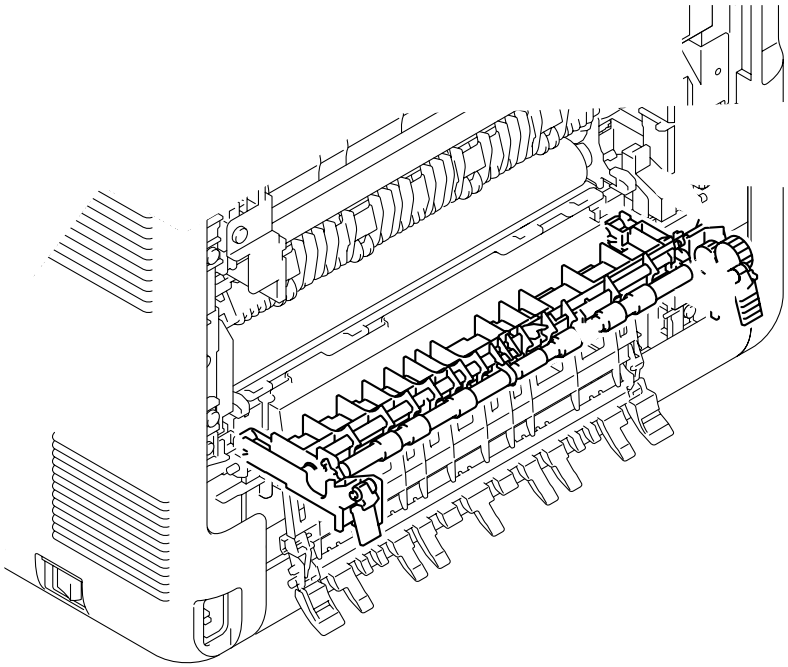

Fig. 7-6

(7) Remove the Taptite bind S M3x8 screw from the Fuser cover L.

(8) Release the Hook to remove the Fuser cover L from the Main body.

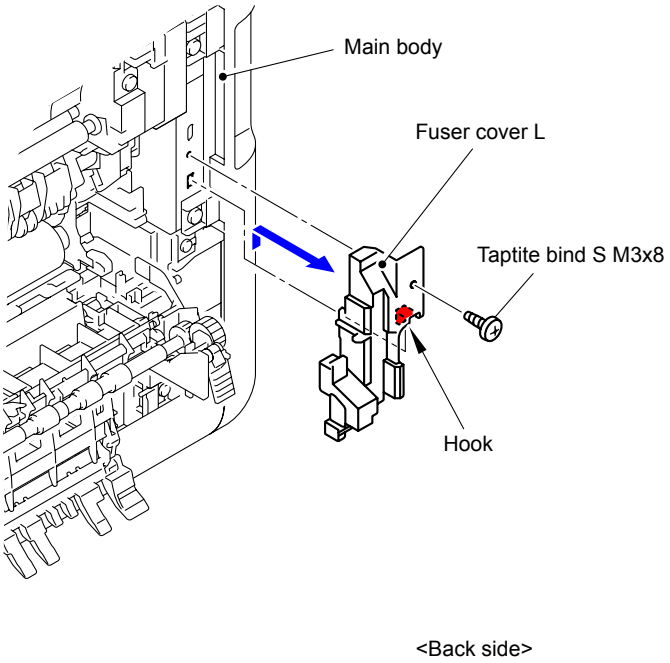

Fig. 7-7

(9) Slide the Fuser cover in the direction of the arrow 9a to remove it to the front.

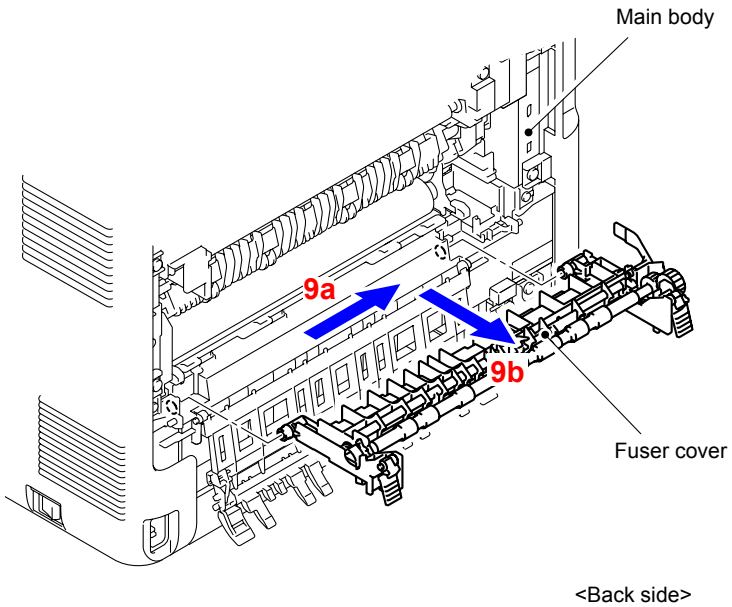

Fig. 7-8

(10) Remove the Taptite bind S M3x8 screw from the Fuser cover R.

(11) Release the Hook to remove the Fuser cover R from the Main body.

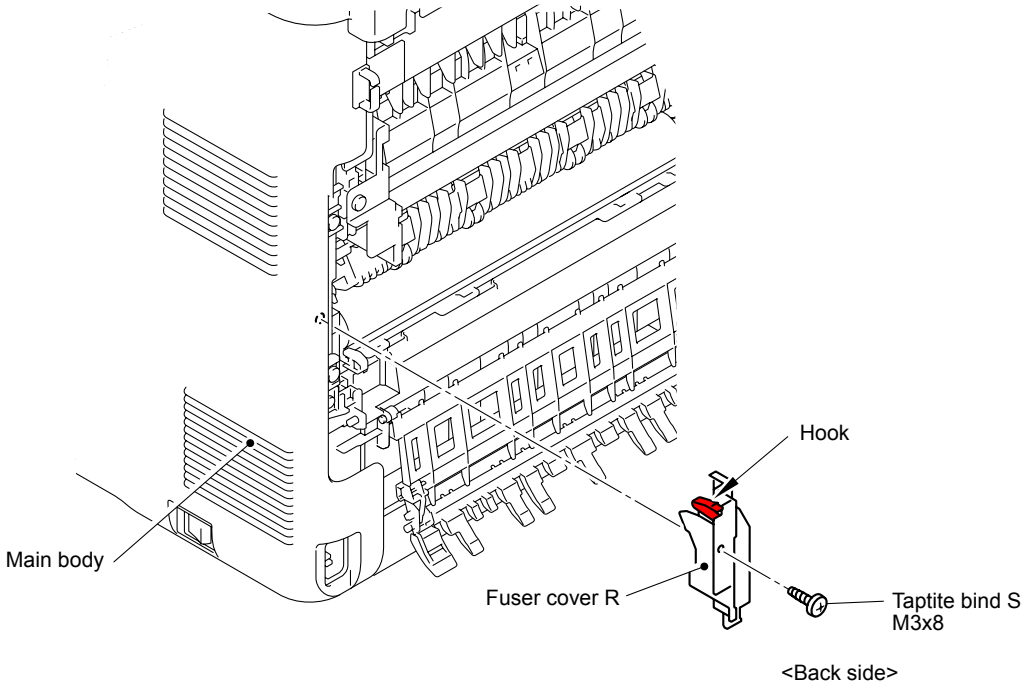

Fig. 7-9

(12) Disconnect the two Connectors (CN1, CN2) from the Paper eject sensor PCB ASSY.

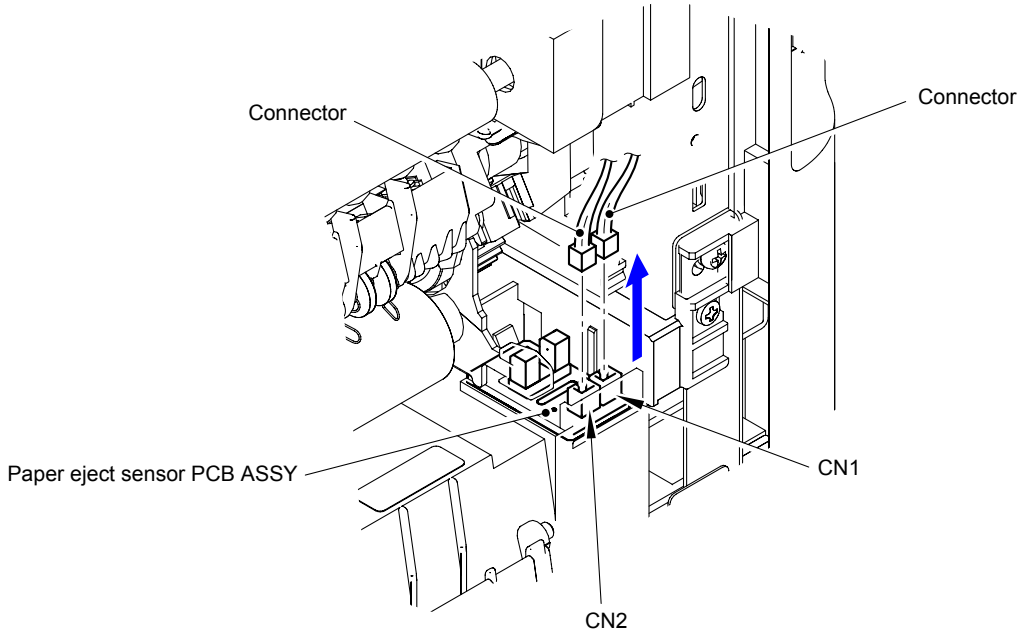

Fig. 7-10

(13) Disconnect the Electrode terminal from the Fuser unit.

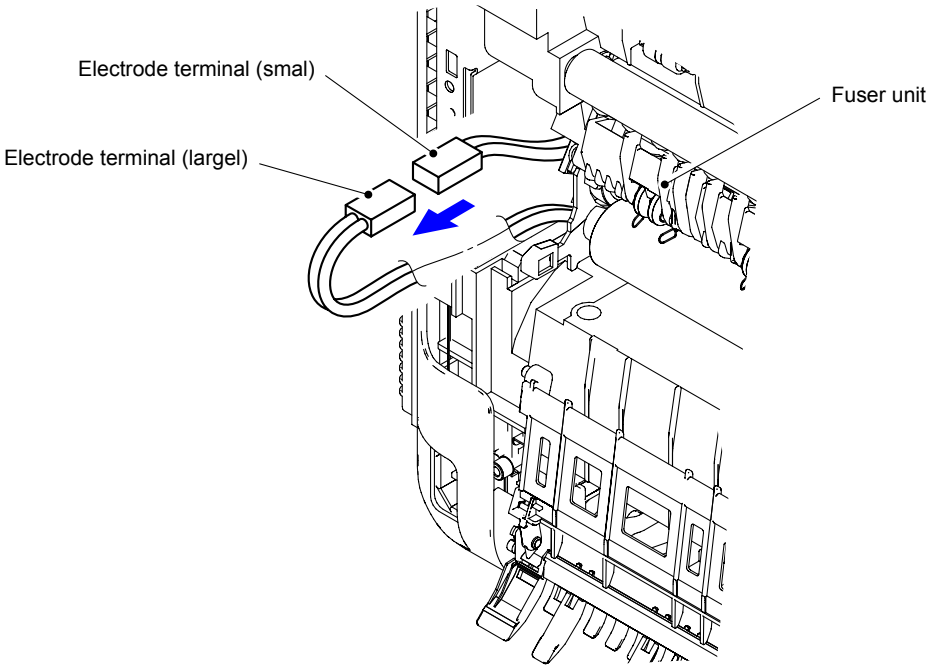

Fig. 7-11

(14) Remove the two Taptite pan B M4x14 screws to remove the Fuser unit from the Main body.

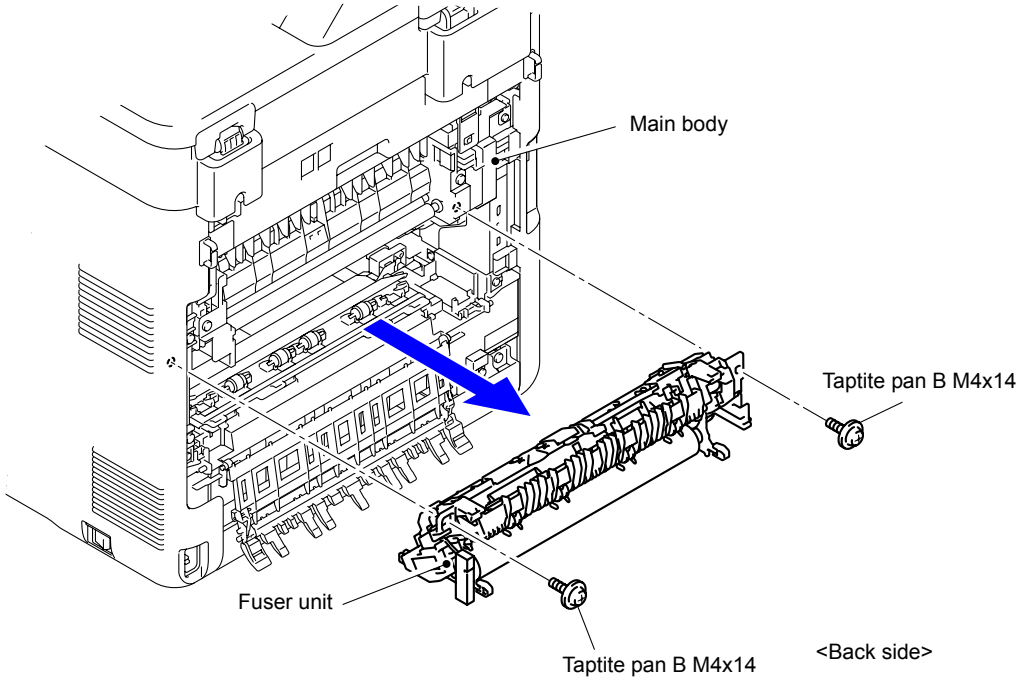

Fig. 7-12

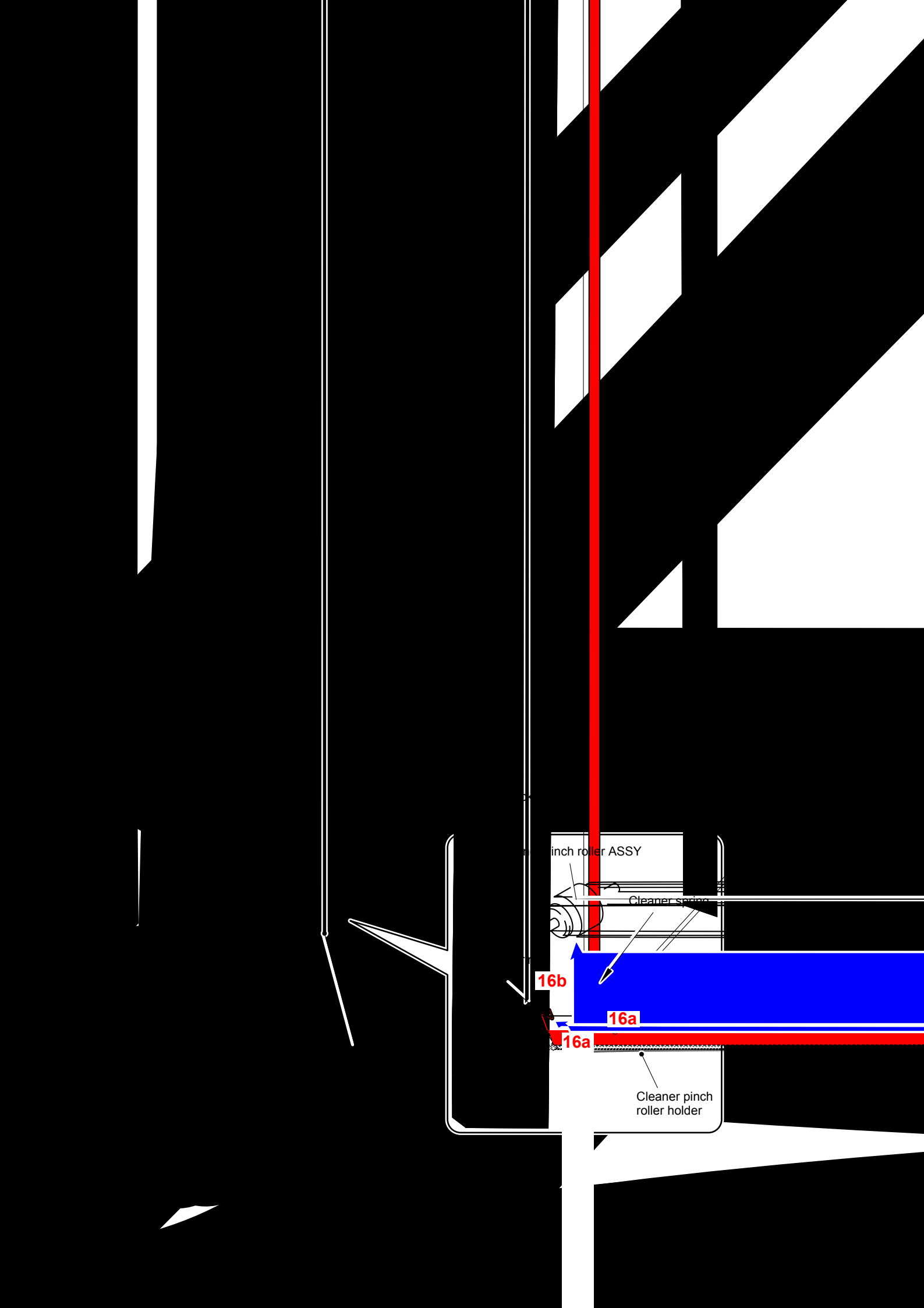
inch roller ASSY
Cleaner spring
16b
16a
16a
Cleaner pinch
roller holder

Note:

- Do not apply a physical impact or vibration to the Fuser unit.
- Do not touch the roller and electrodes as shown in the figure below to prevent breakage of the Fuser unit.

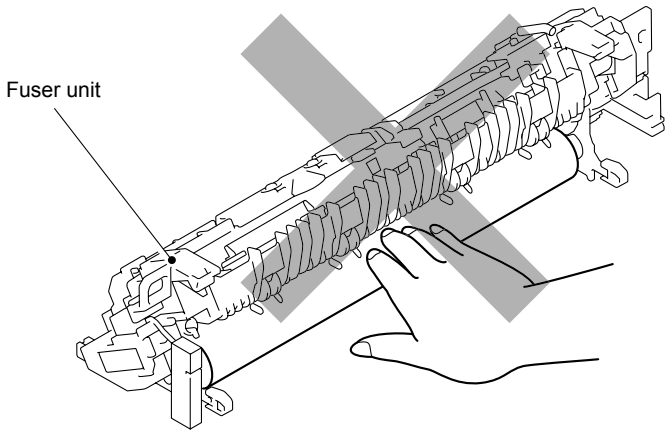

Fig. 7-15

(18) After replacing the Fuser unit, reset the counter. (Refer to "2.2 Parts Life Reset Function" in Chapter 5.)

2.1.2 Laser unit

(1) Open the Back cover.

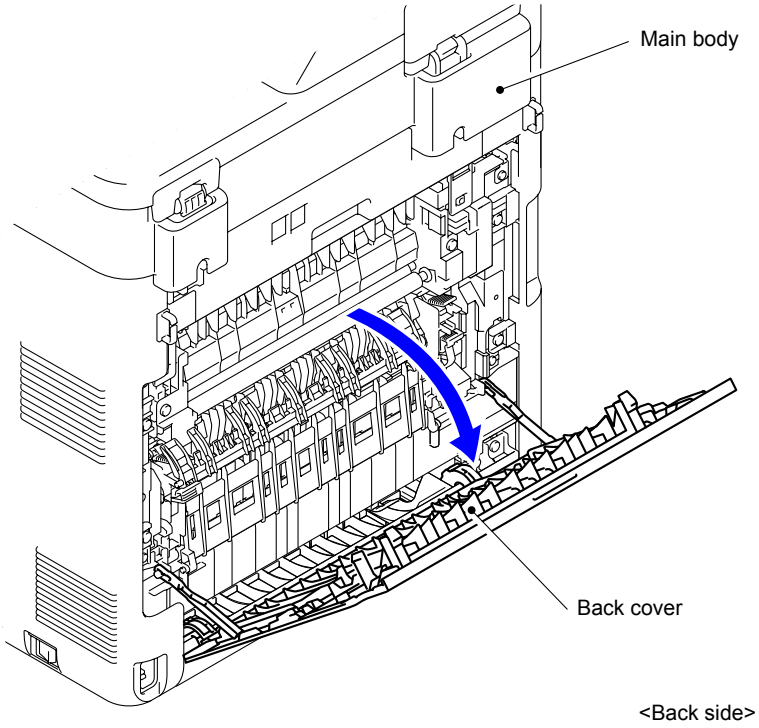

Fig. 7-16

(2) Remove the Back cover stopper arm L and R from the Main body.

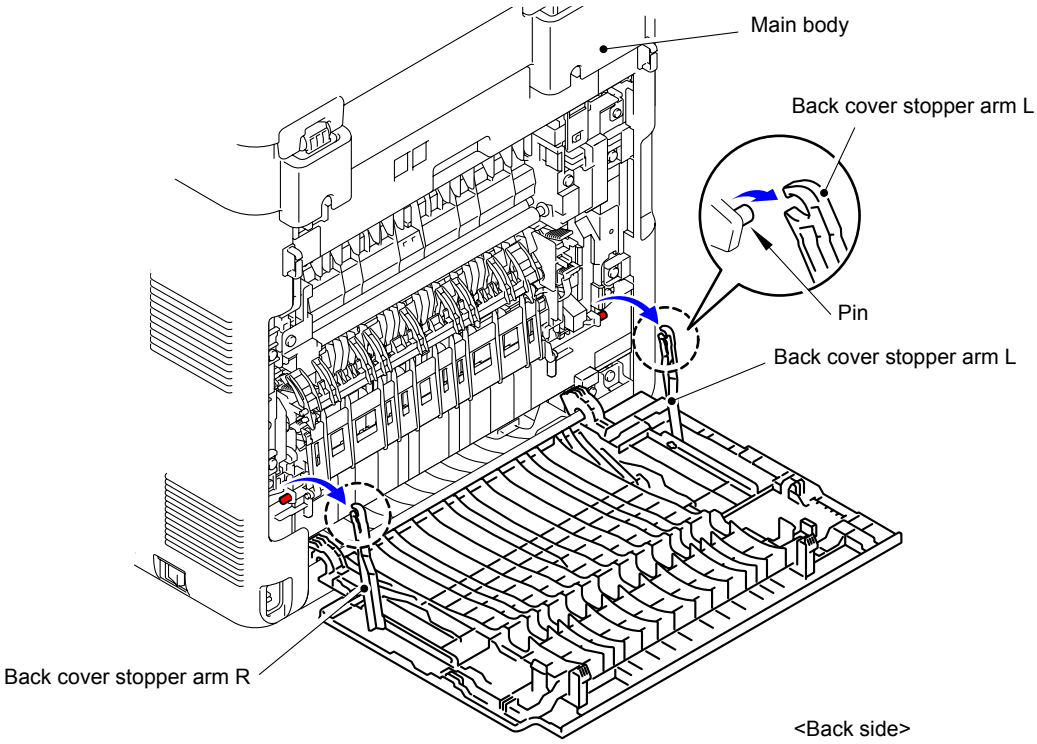

Fig. 7-17

(3) Remove the Shaft of the Back cover from the Bush on the right side of the Main body.

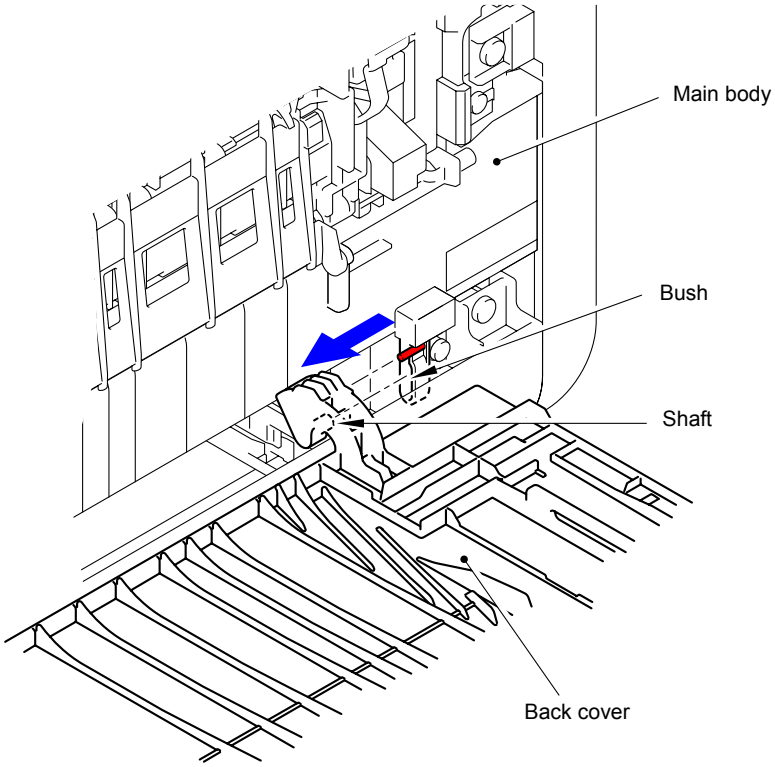

Fig. 7-18

(4) Remove the Back cover.

Fig. 7-19

(5) Open the Back flapper ASSY.

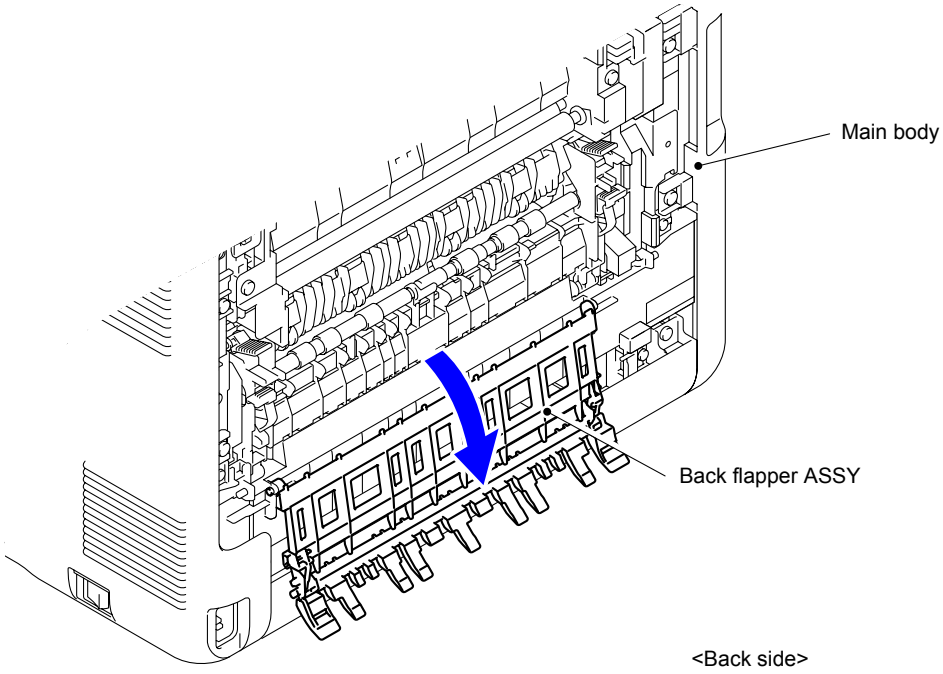

Fig. 7-20

(6) Open the Front cover.

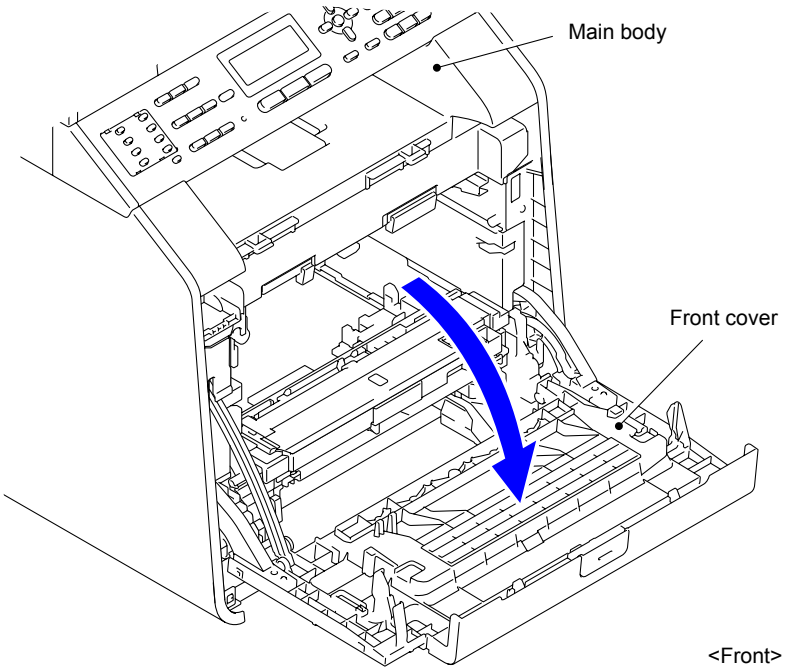

Fig. 7-21

(7) Remove the Taptite bind S M3x8 screw from the front of the Side cover L.

(8) Remove the Taptite bind B M4x12 screw from the side of the Side cover L.

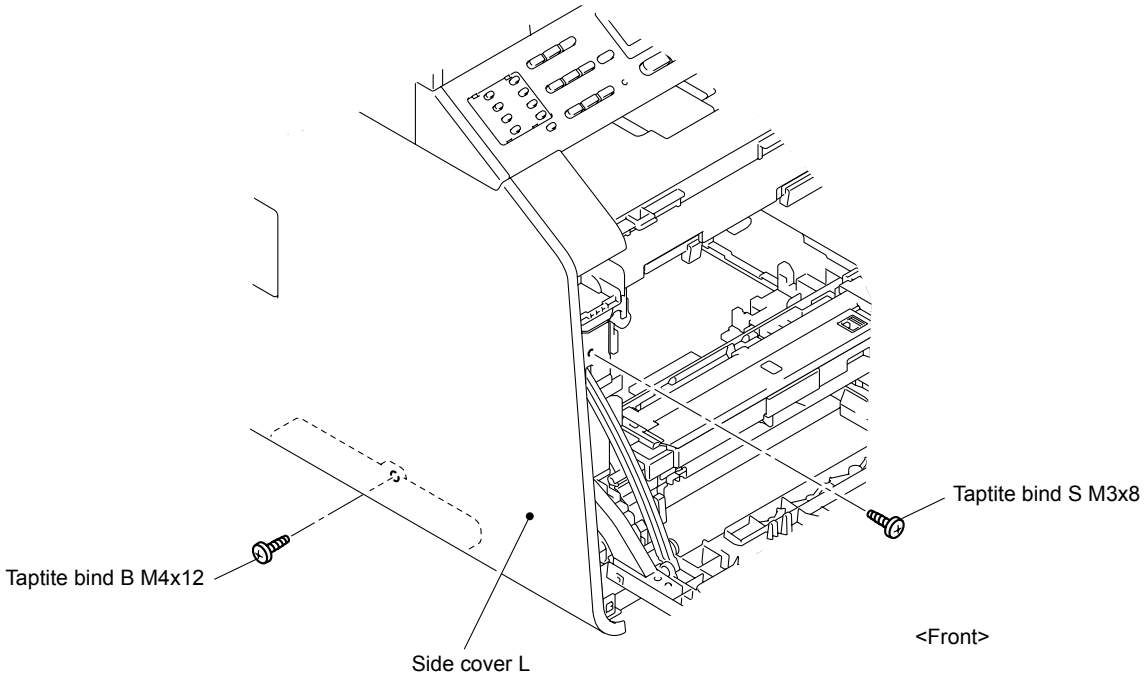

Fig. 7-22

(9) Remove the two Taptite bind S M3x8 screws from the back of the Side cover L.

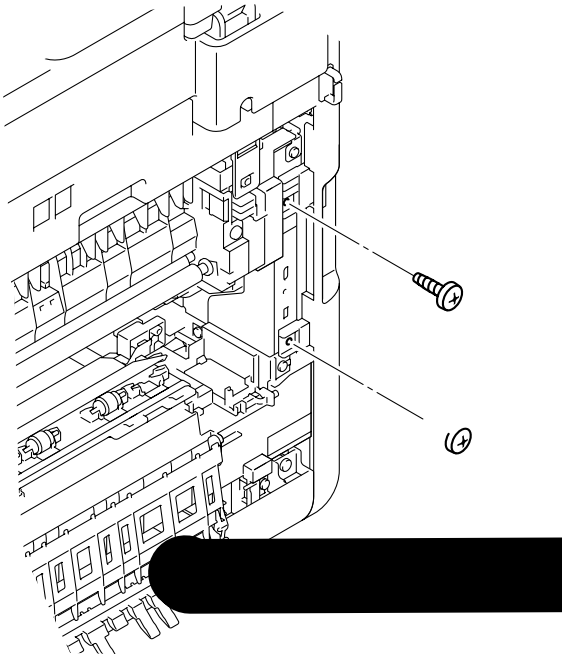

Fig. 7-23

■ A4 model

(10) Release the Hooks 1 and 2 at the same time, and then release the Hooks 3 to 6 in numerical order. Release the Hook 7. Release the Hooks 8 and 9 to remove the Side cover L from the Main body.

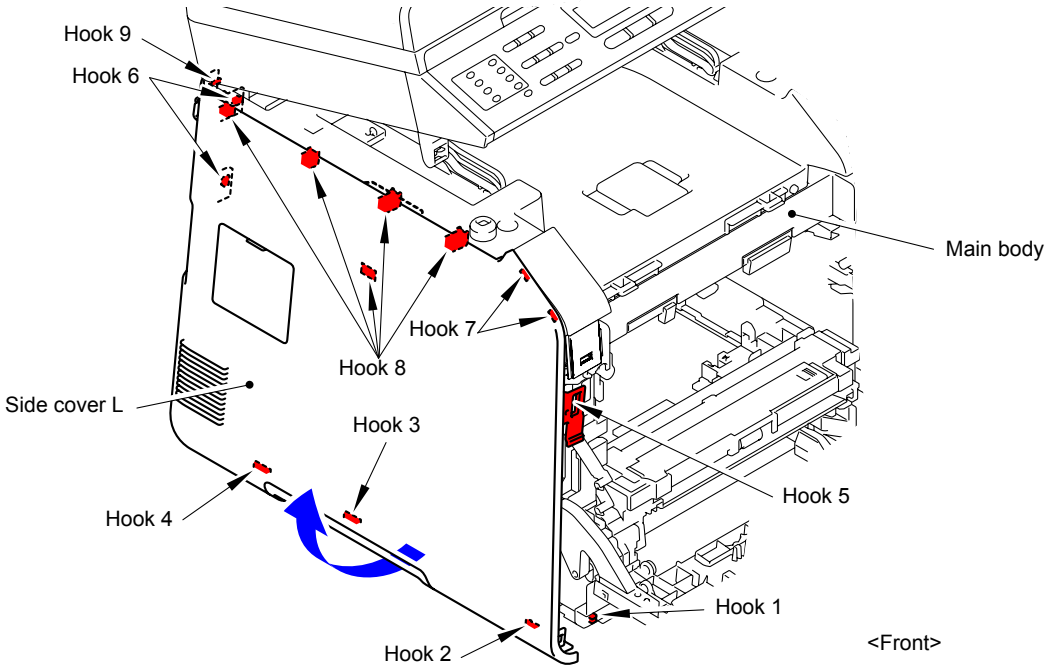

Fig. 7-24

* Inside of Side cover L

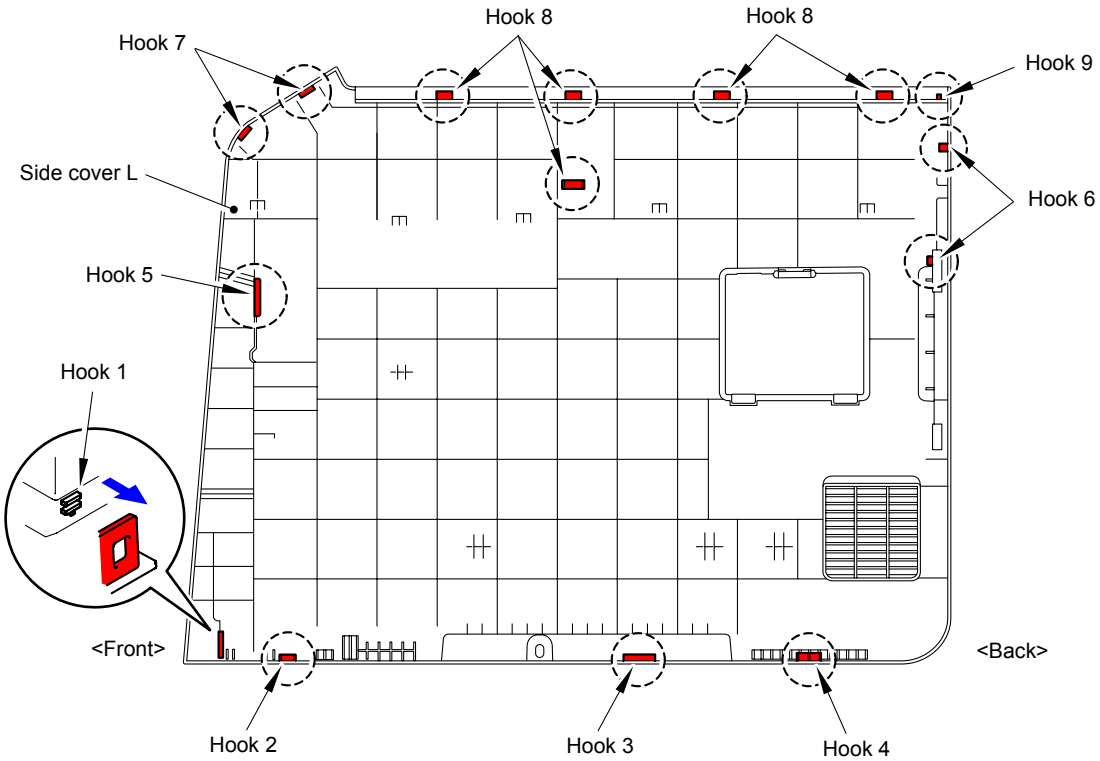

Fig. 7-25

■ Legal model

(10) Release the Hooks 1 and 2 at the same time, and then release the Hooks 3 to 6 in numerical order. Release the Hook 7. Release the Hook 8 to remove the Side cover L from the Main body.

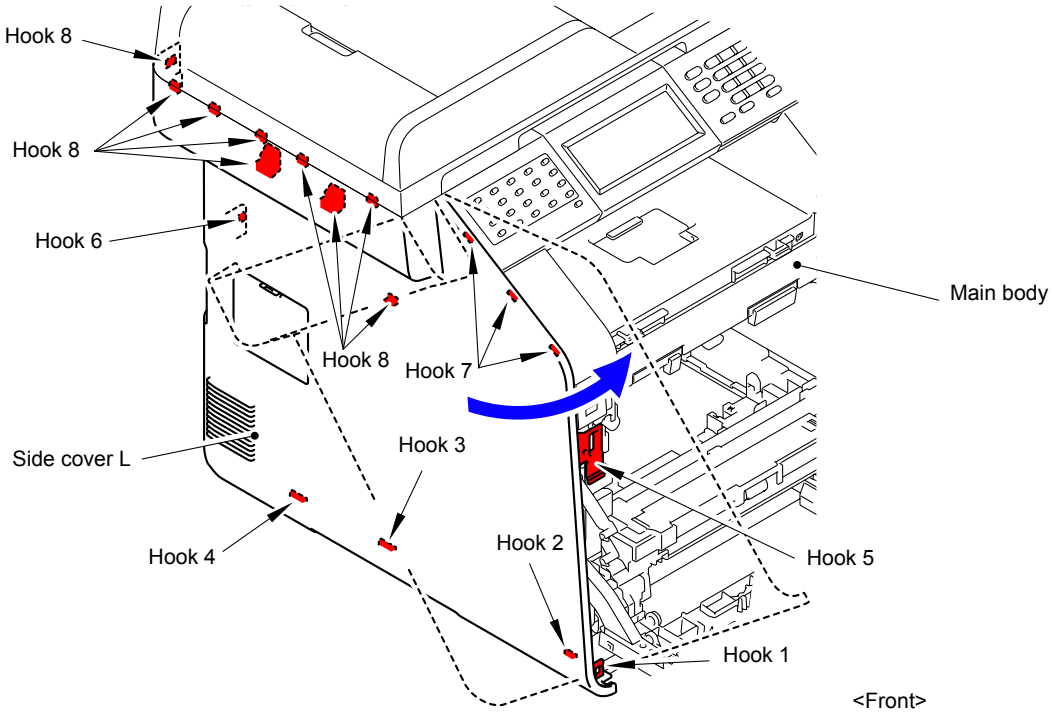

Fig. 7-26

* Inside of Side cover L

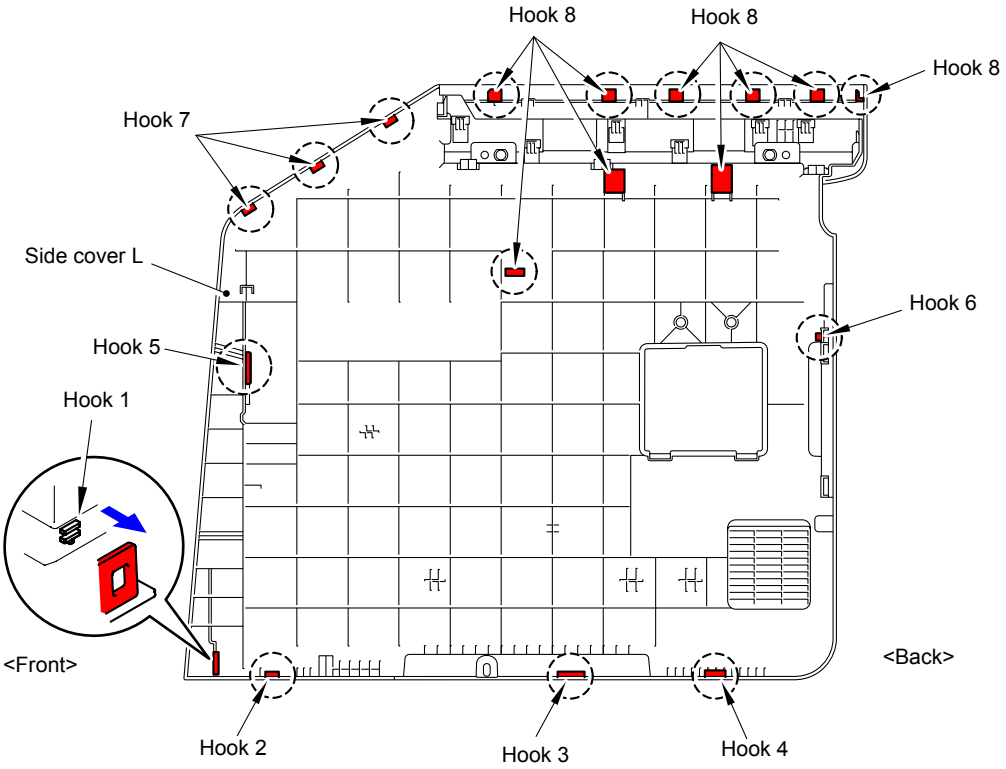

Fig. 7-27

(11) Remove the Taptite bind S M3x8 screw from the front of the Side cover R ASSY.

(12) Remove the Taptite bind B M4x12 screw from the side of the Side cover R ASSY.

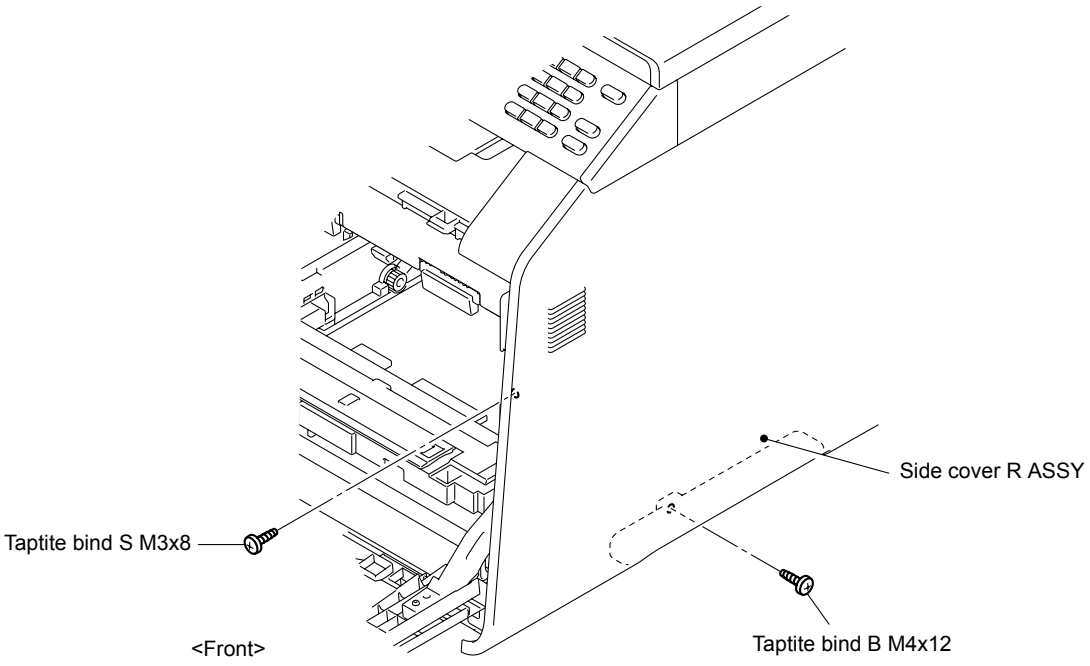

Fig. 7-28

(13) Remove the two Taptite bind S M3x8 screws from the back of the Side cover R ASSY.

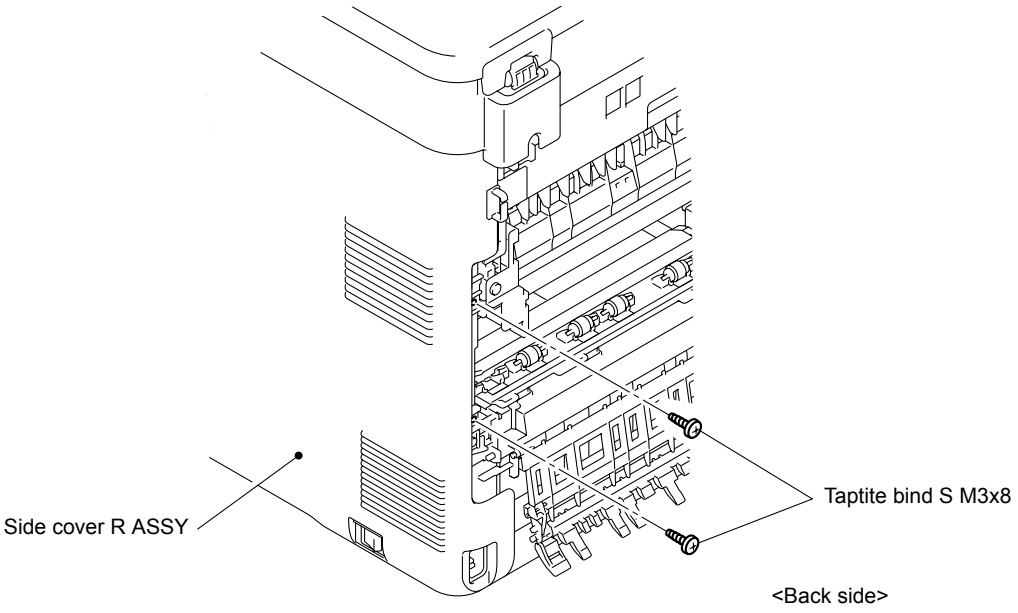

Fig. 7-29

■ A4 model

(14) Release the Hooks 1 and 2 at the same time, and then release the Hooks 3 to 6 in numerical order. Release the Hook 7. Release the Hooks 8 and 9 to remove the Side cover R ASSY from the Main body.

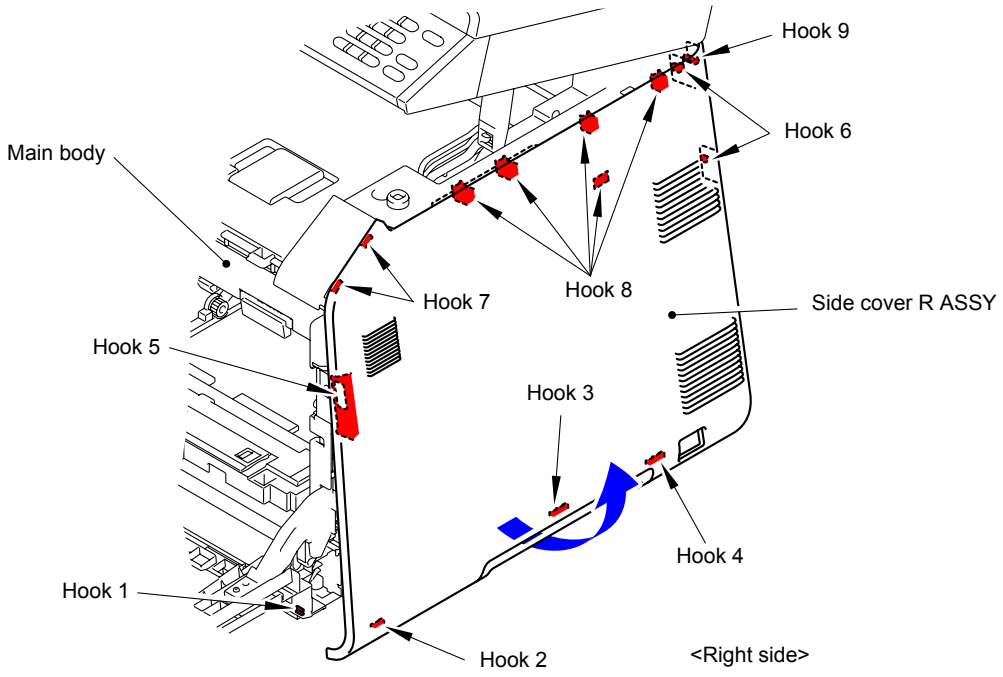

Fig. 7-30

* Inside of Side cover R ASSY

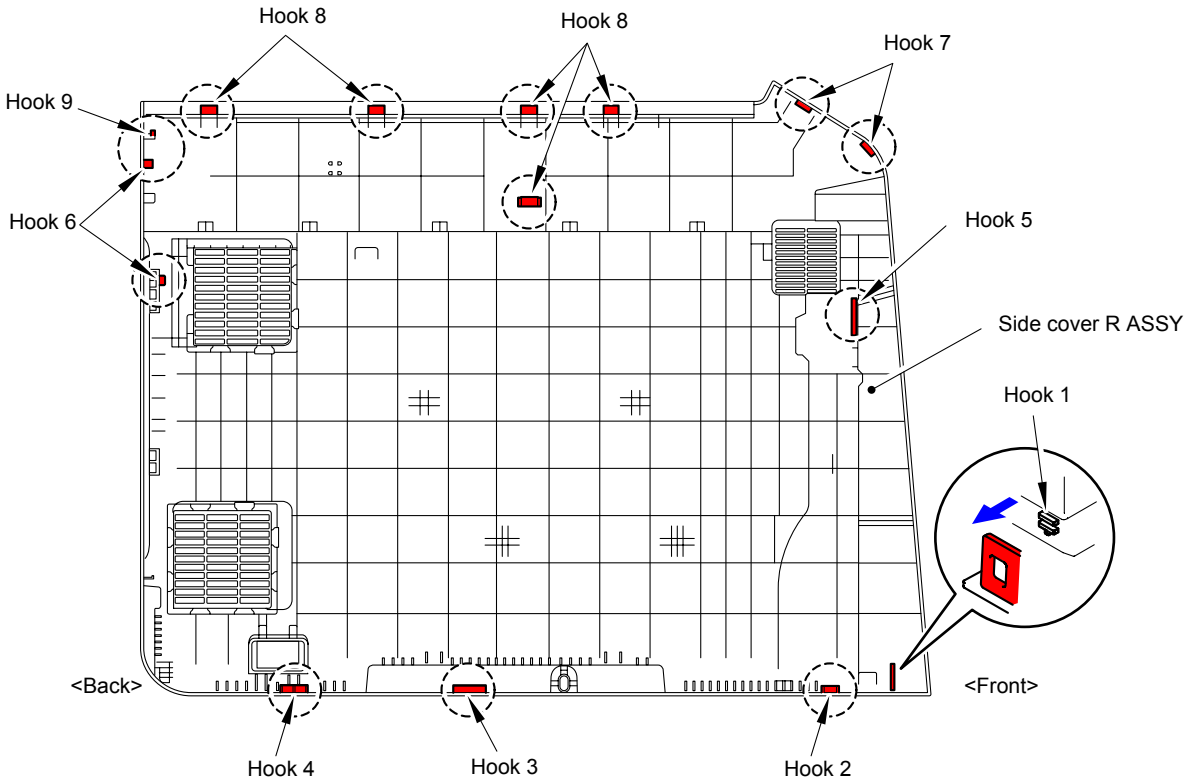

Fig. 7-31

(15) Remove the Ferrite core 1 from the FFC film. (A4 model only)

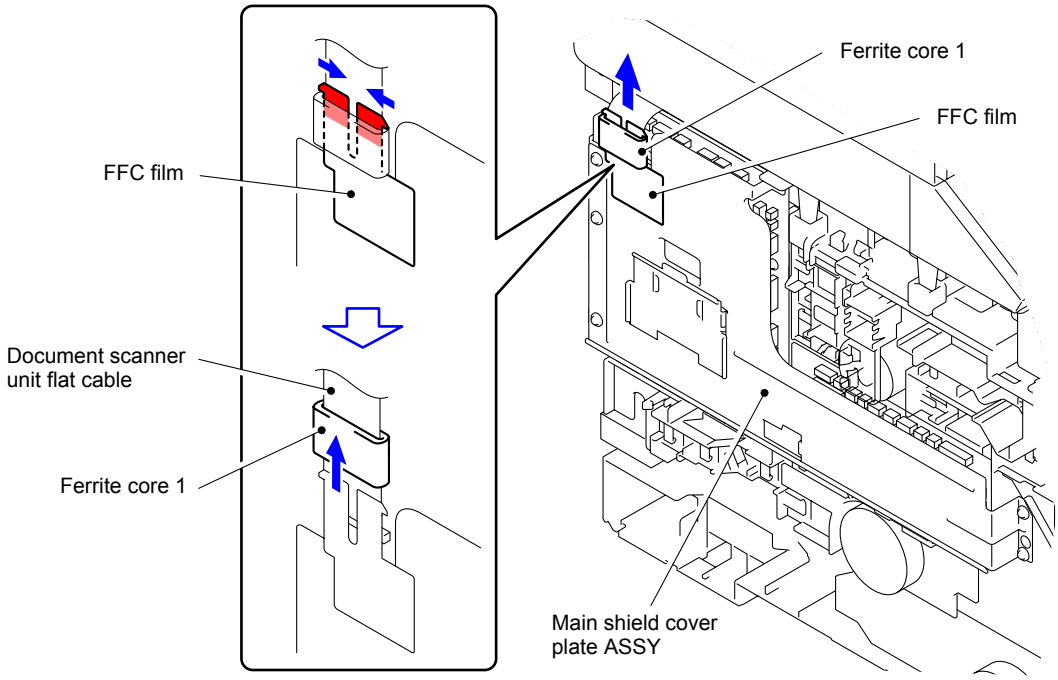

Fig. 7-32

(16) Remove the seven Taptite cup S M3x6 SR screws to remove the Main shield cover plate ASSY from the Main body.

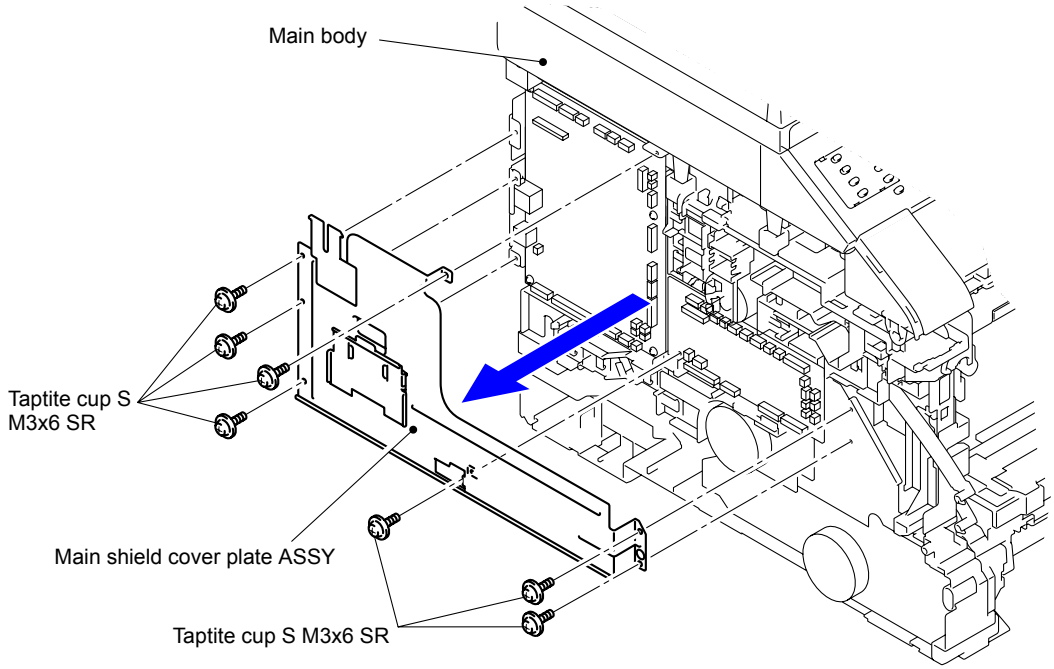

Fig. 7-33

(17) Remove one Taptite cup S M3x6 SR screw each for the FB FG harness ASSY and ADF FG harness ASSY to remove them from the Main body.

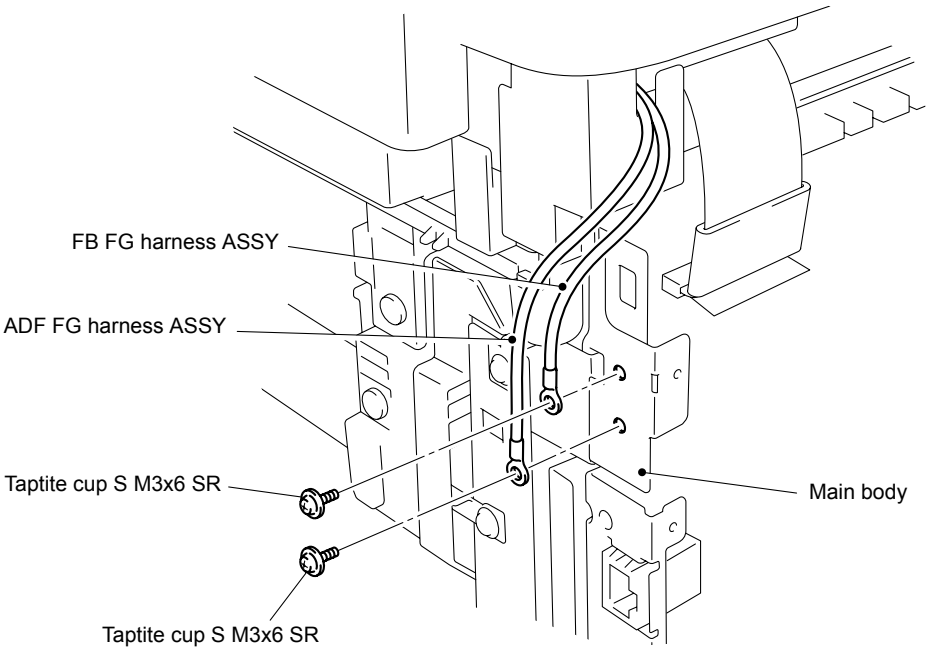

Fig. 7-34

(18) Disconnect the five Connectors (CN3, CN4, CN6, CN7, and CN8) and two Flat cables (CN1 and CN2) from the Main PCB ASSY.

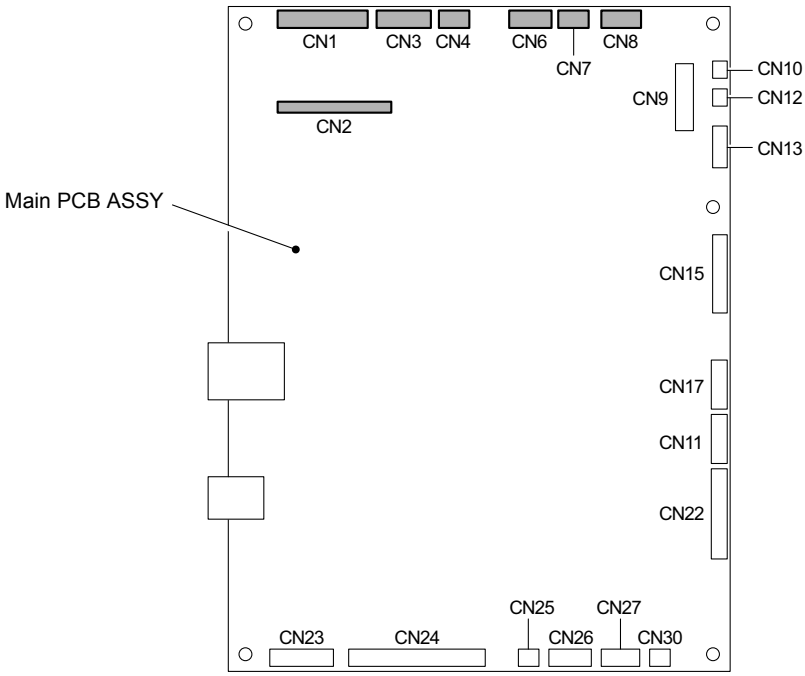

Fig. 7-35

(19) Release the Hooks of the Pull arm L and Pull arm R from the joint of the Document scanner unit.

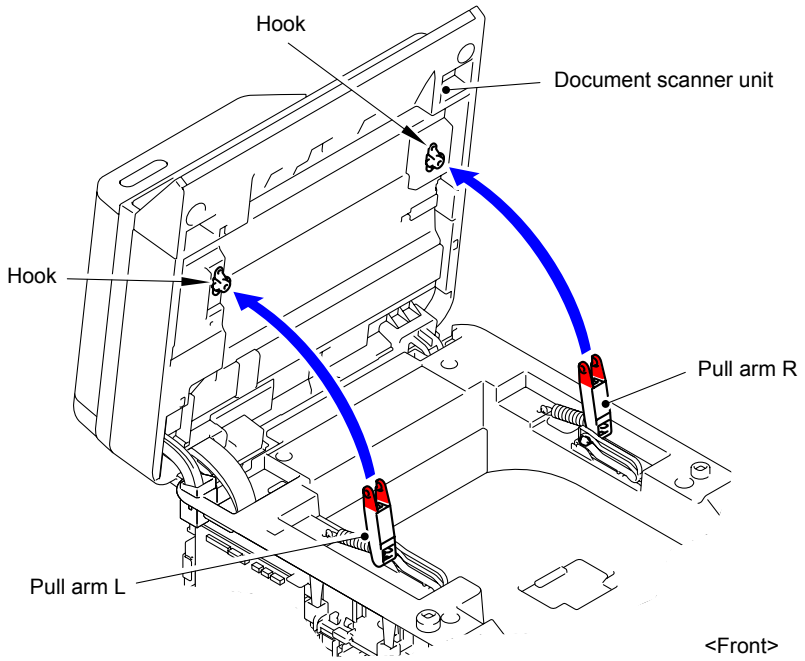

Fig. 7-36

(20) Remove the Pull arm L and Pull arm spring from the Pull arm guide L.

(21) Remove the Pull arm R and Pull arm spring from the Pull arm guide R.

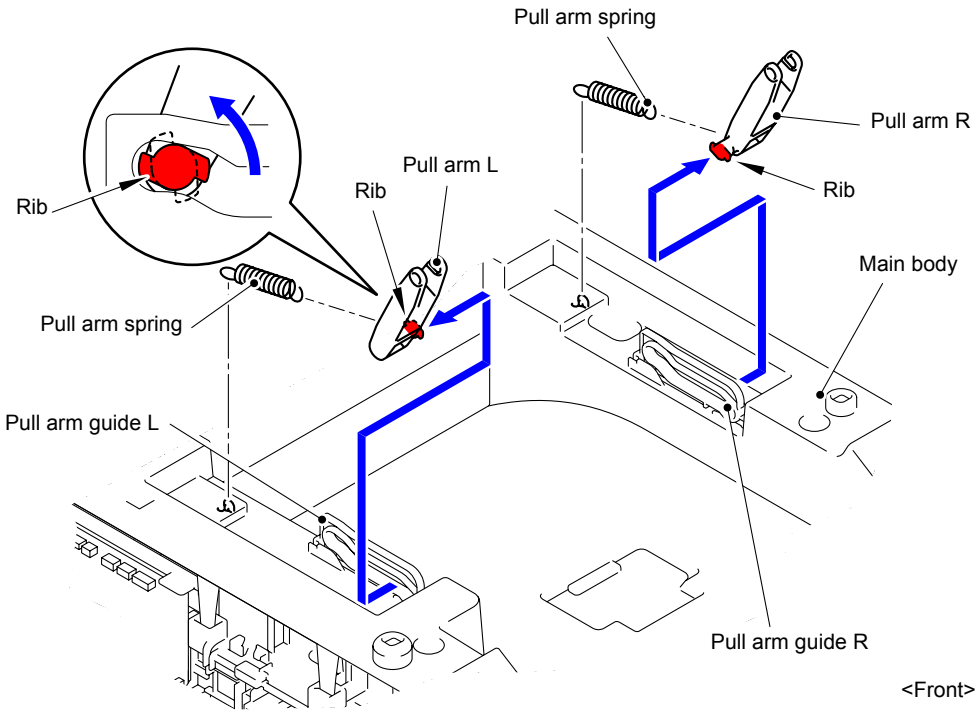

Fig. 7-37

(22) Open the Document scanner unit. Remove the Ferrite core 1 from the Document scanner unit flat cable.

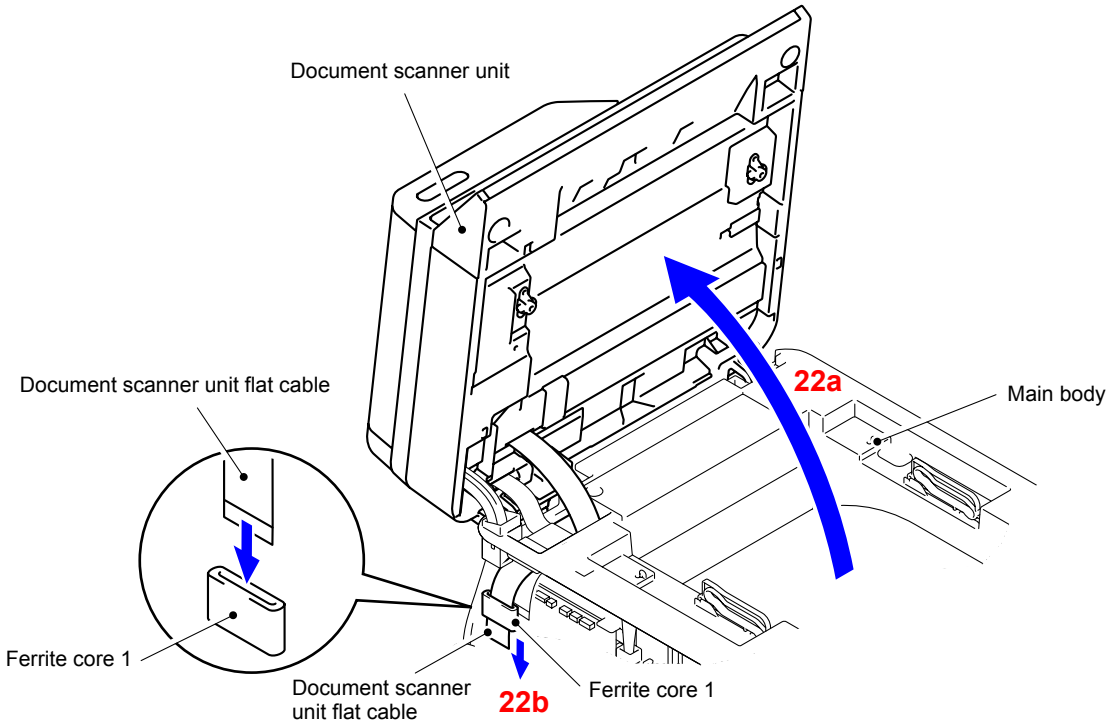

Fig. 7-38

(23) Remove the Document scanner unit flat cable and Second side scanning CIS flat cable from the Ferrite core 2 and 3 attached to the Film.

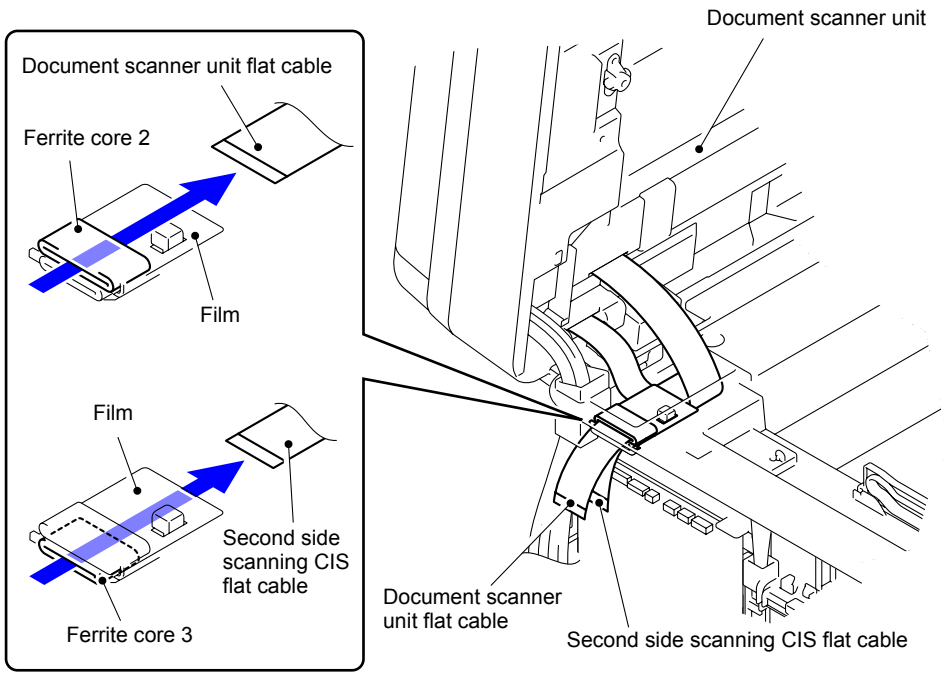

Fig. 7-39

(24) Remove the Harness from the Hook to take it out from the Hole in the Joint cover top.

(25) Take out the FB FG harness ASSY and ADF FG harness ASSY from the Hole in the Joint cover top.

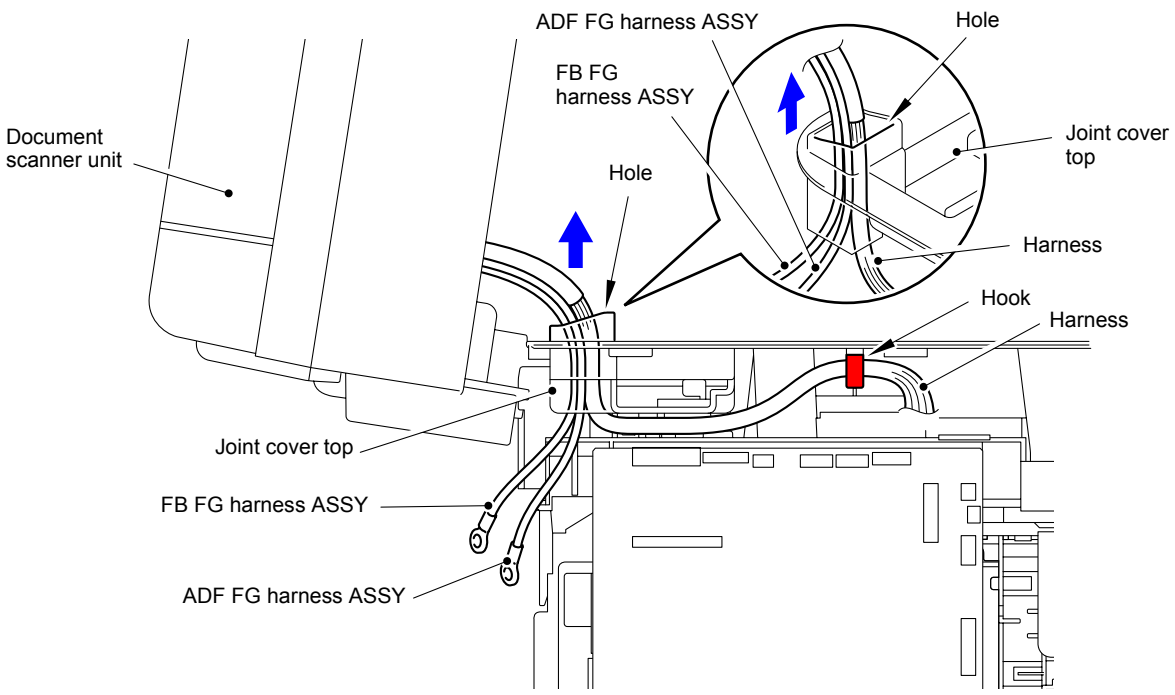

Fig. 7-40

(26) Change the angle of the Document scanner unit as shown in the figure to remove it from the Main body.

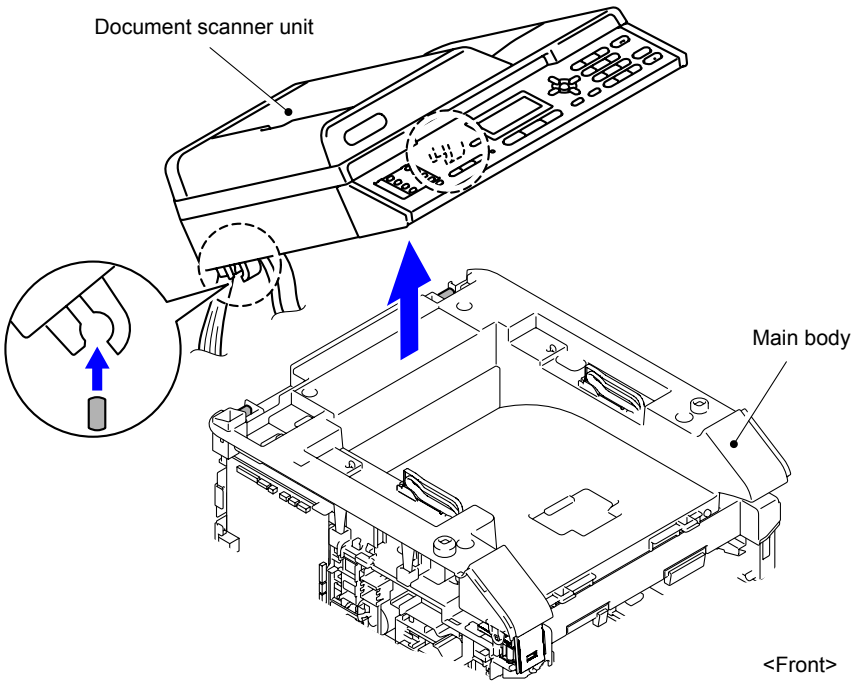

Fig. 7-41

(27) Remove the eight Taptite bind B M4x12 screws from the Joint cover top.

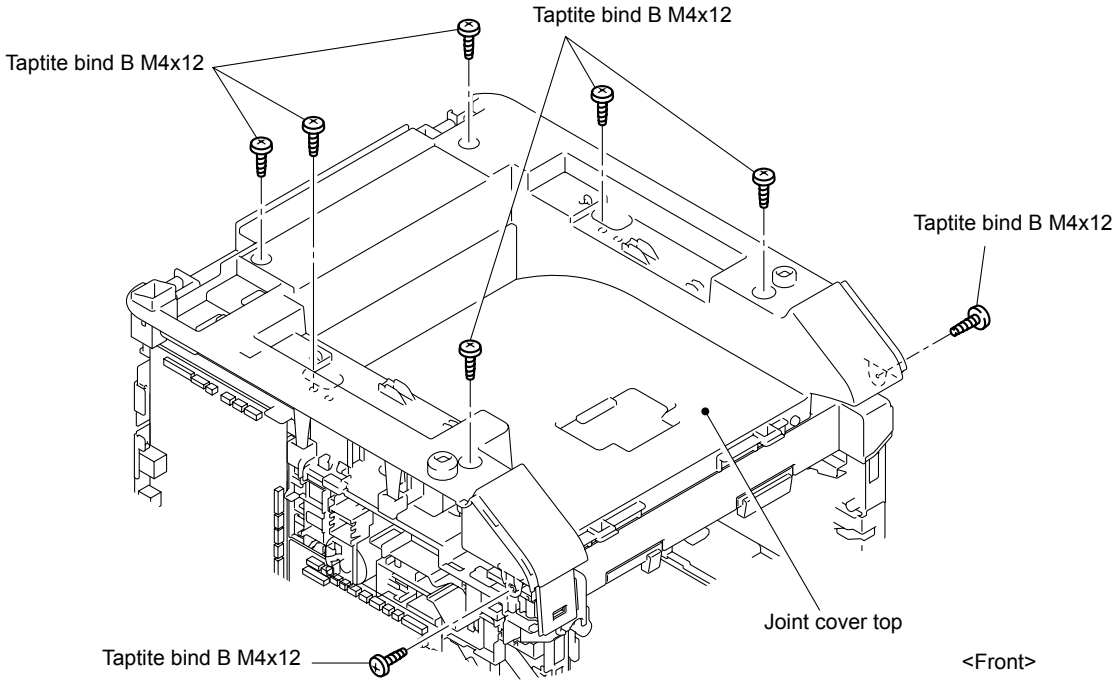

Fig. 7-42

(28) Release the eight Hooks to remove the Joint cover top from the Main body.

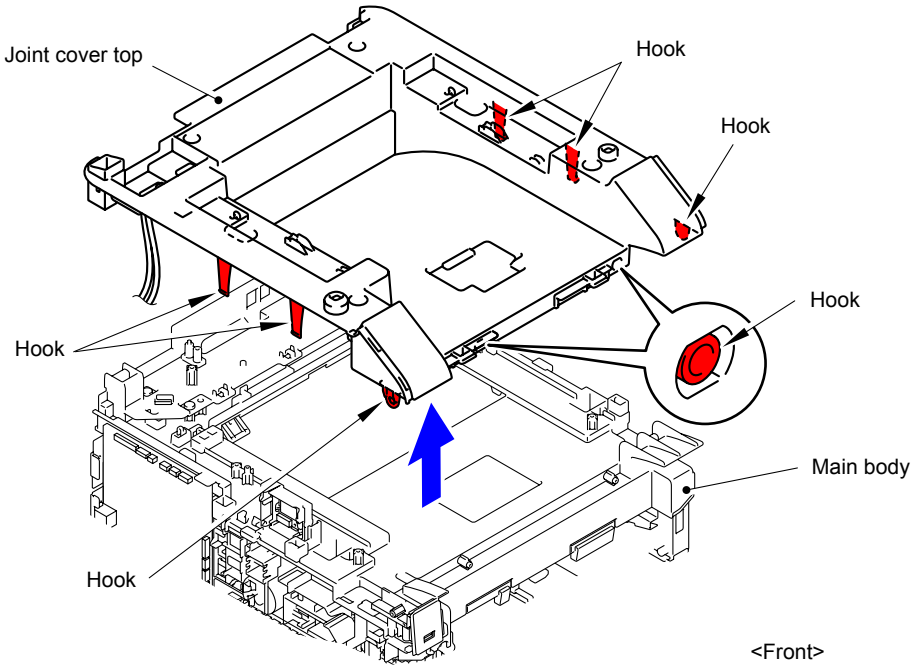

Fig. 7-43

(29) Remove the Screw pan (S/P washer) M3.5x6 screw to remove the NCU FG harness ASSY from the Main body.

(30) Disconnect the wiring from the Main PCB ASSY.

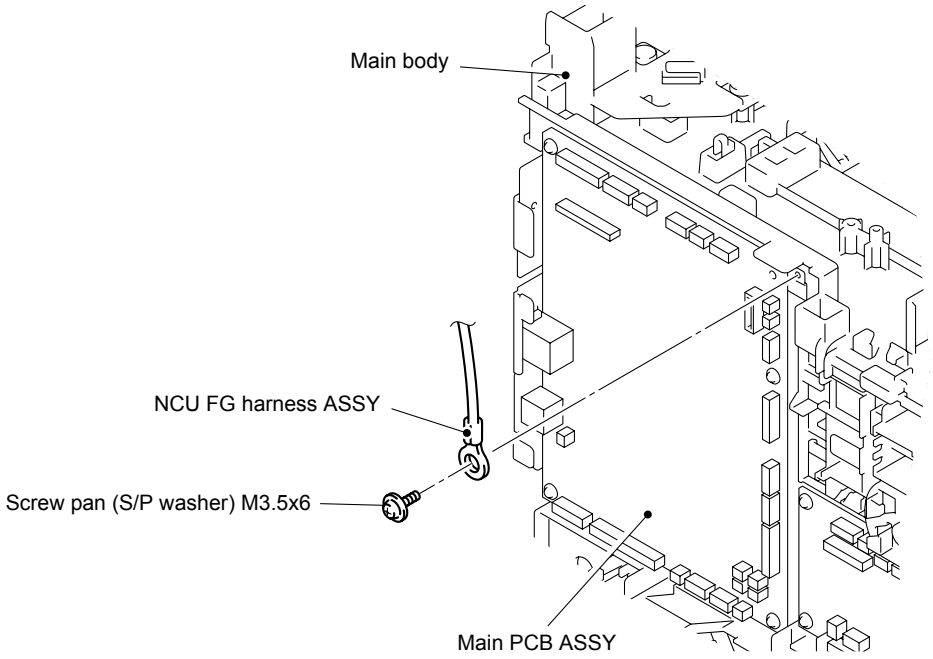

Fig. 7-44

(31) Disconnect the 14 Connectors (CN9, CN10, CN11, CN12, CN13, CN15, CN17, CN22, CN23, CN24, CN25, CN26, CN27, and CN30) from the Main PCB ASSY.

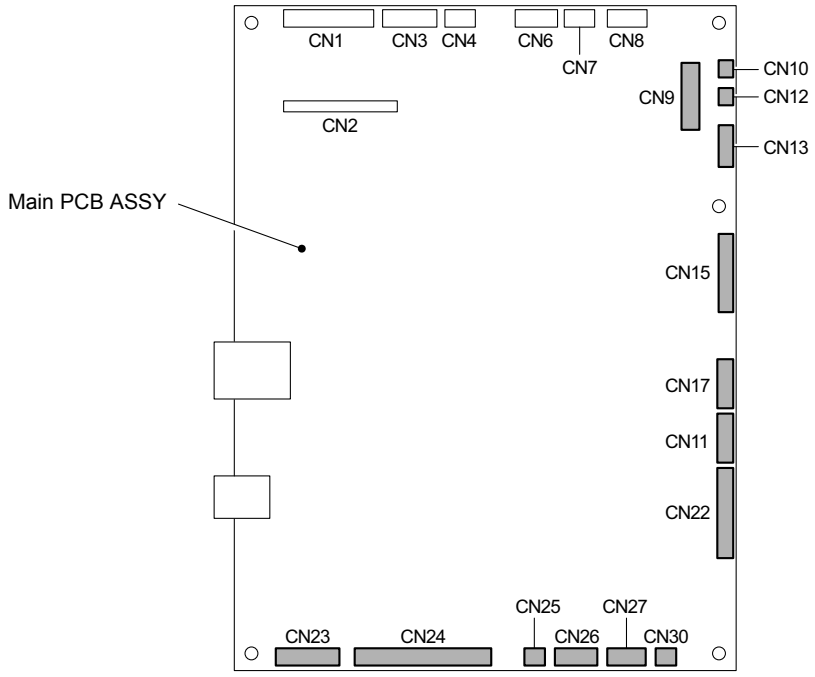

Fig. 7-45

(32) Remove the four Taptite cup S M3x6 SR screws to remove the Main PCB ASSY from the Top drive ASSY.

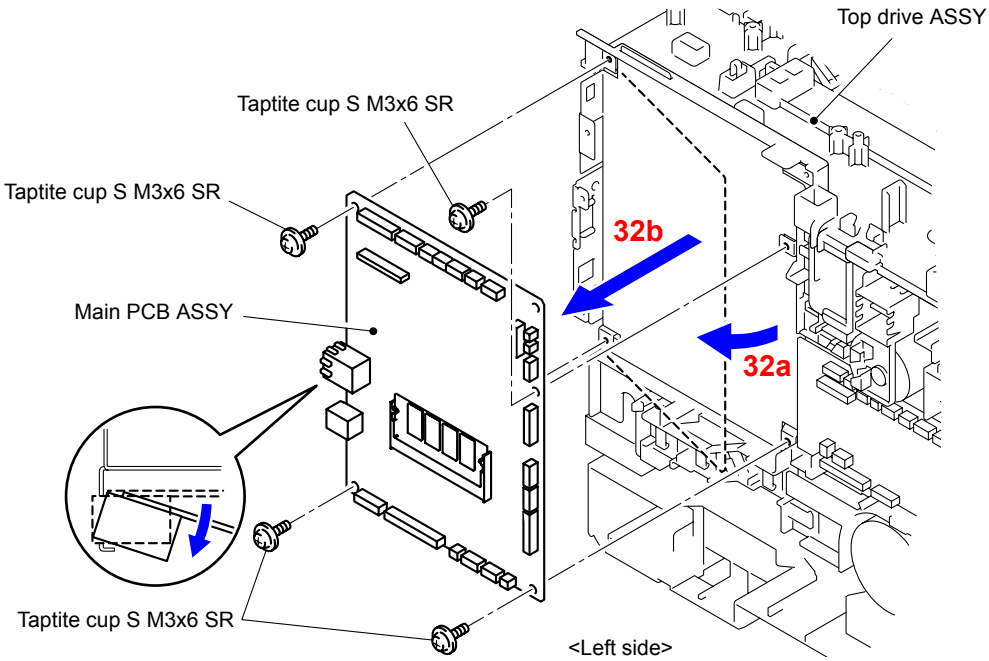

Fig. 7-46

(33) Remove the Main insulation sheet from the Top drive ASSY.

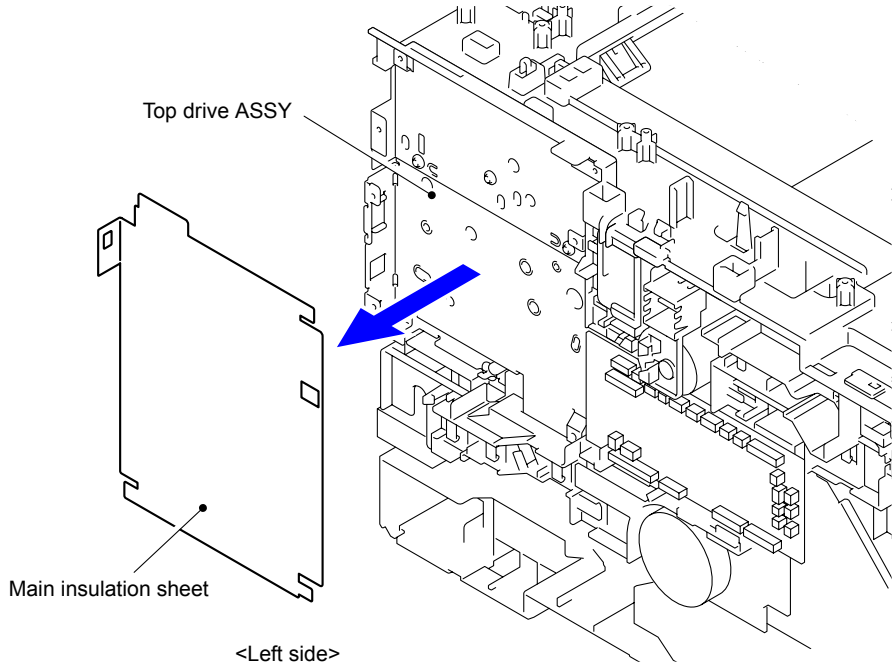

Fig. 7-47

(34) Remove the four Taptite bind B M4x12 screws from the Back cover upper.

(35) Release the two Hooks to remove the Back cover upper from the Main body.

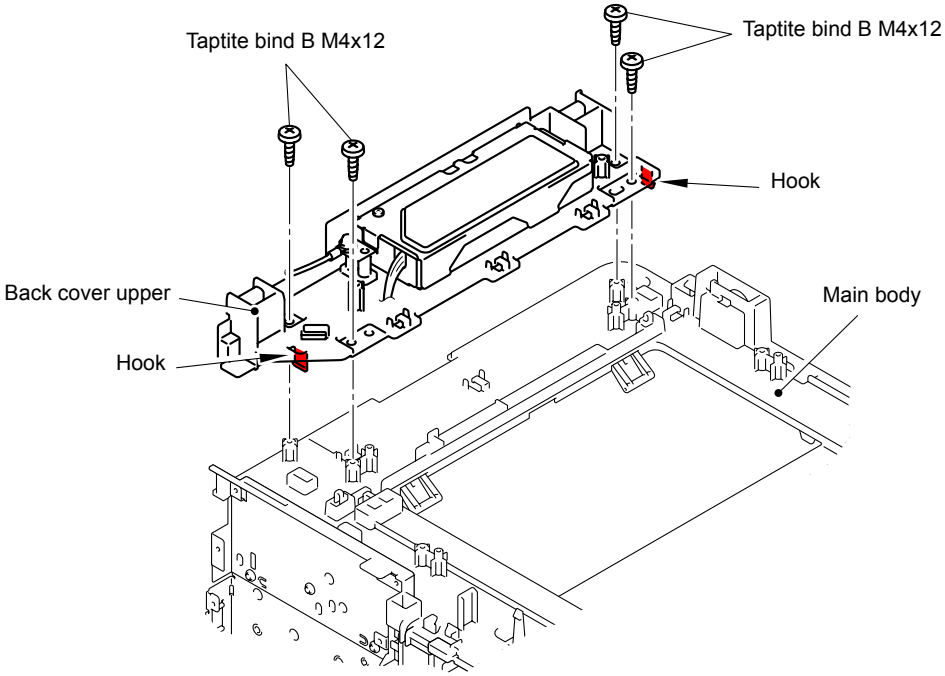

Fig. 7-48

(36) Remove the seven Taptite cup S M3x8 screws and Taptite cup S M3x6 SR screw from the Joint cover base ASSY.

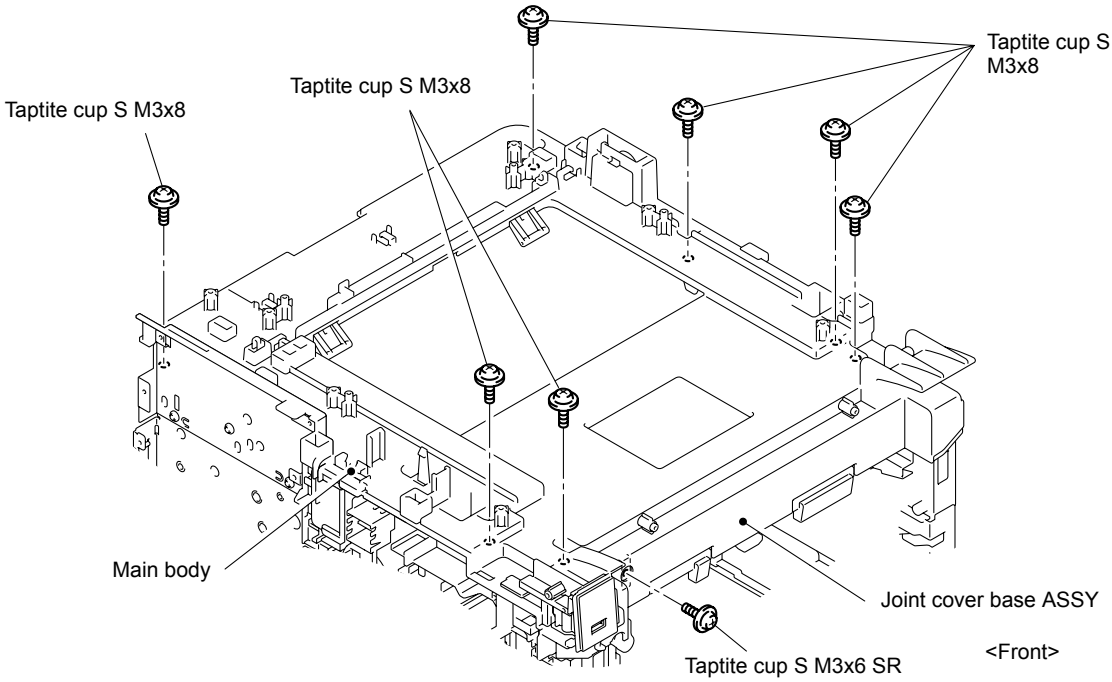

Fig. 7-49

(37) Remove the two Taptite bind B M4x12 screws from the Joint cover base ASSY.

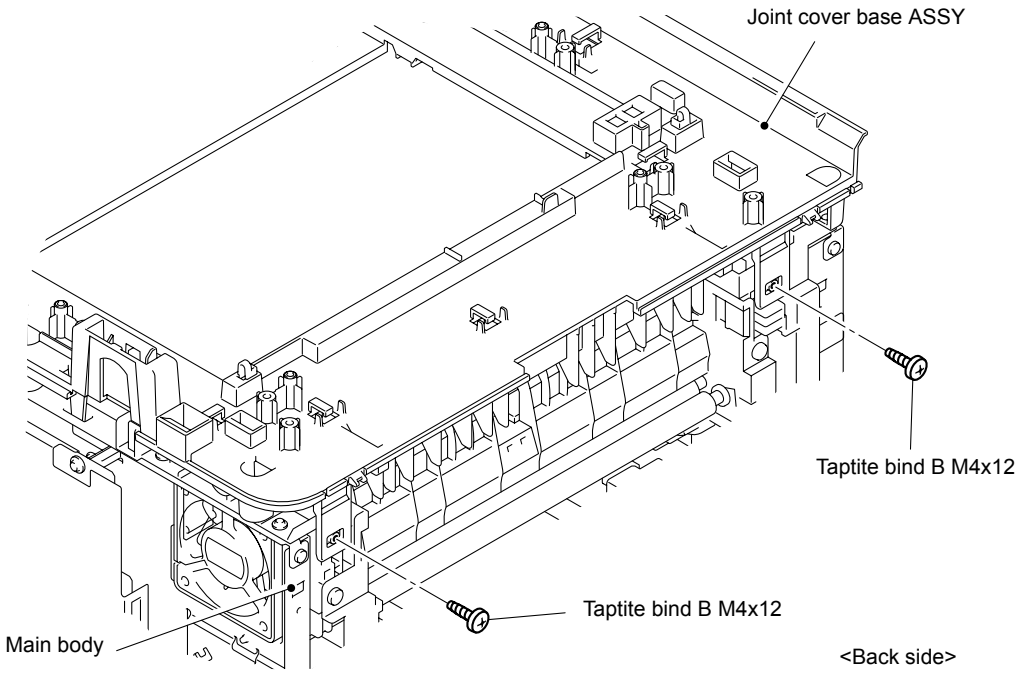

Fig. 7-50

(38) Release the ten Hooks to remove the Joint cover base ASSY from the Main body.

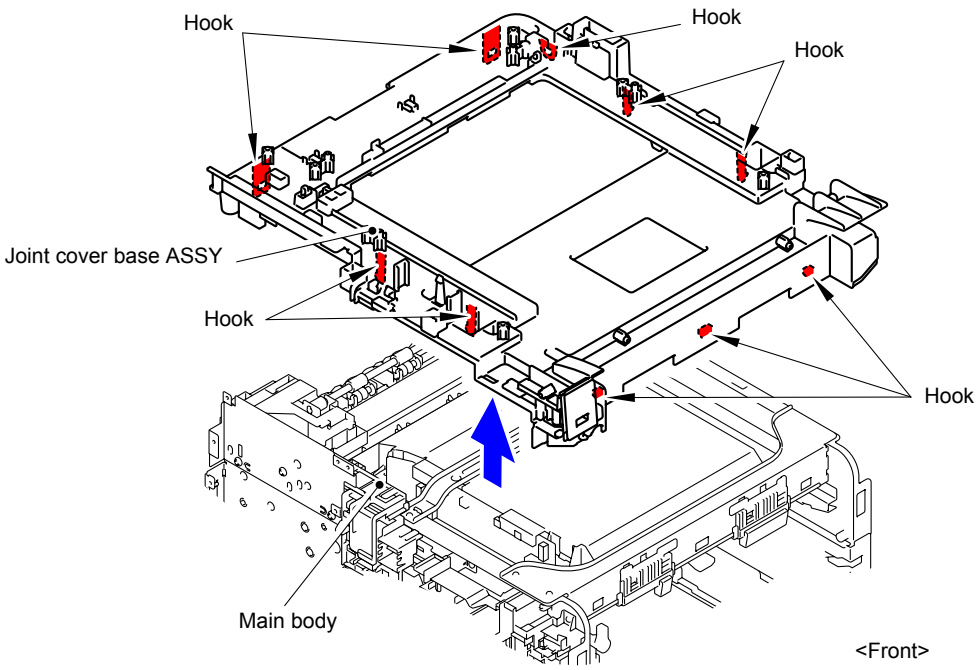

Fig. 7-51

(39) Remove the three Taptite cup S M3x6 SR screws to remove the Main shield plate from the Top drive ASSY.

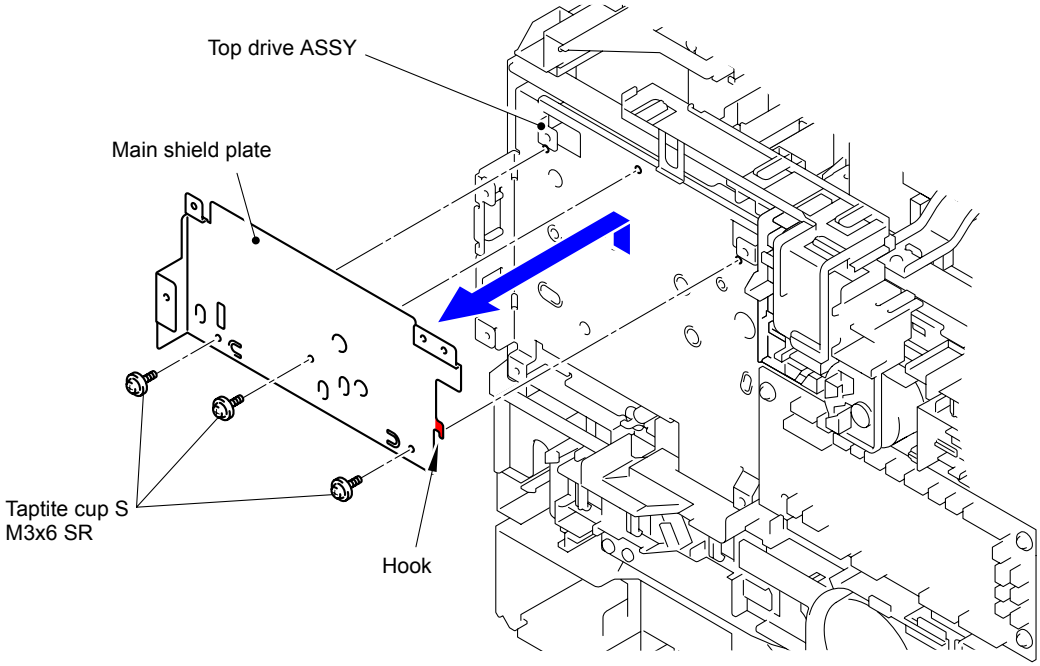

Fig. 7-52

(40) Disconnect the Flat cable from the Develop FFC holder.

(41) Release the two Hooks to remove the Develop FFC holder from the Upper cable rack.

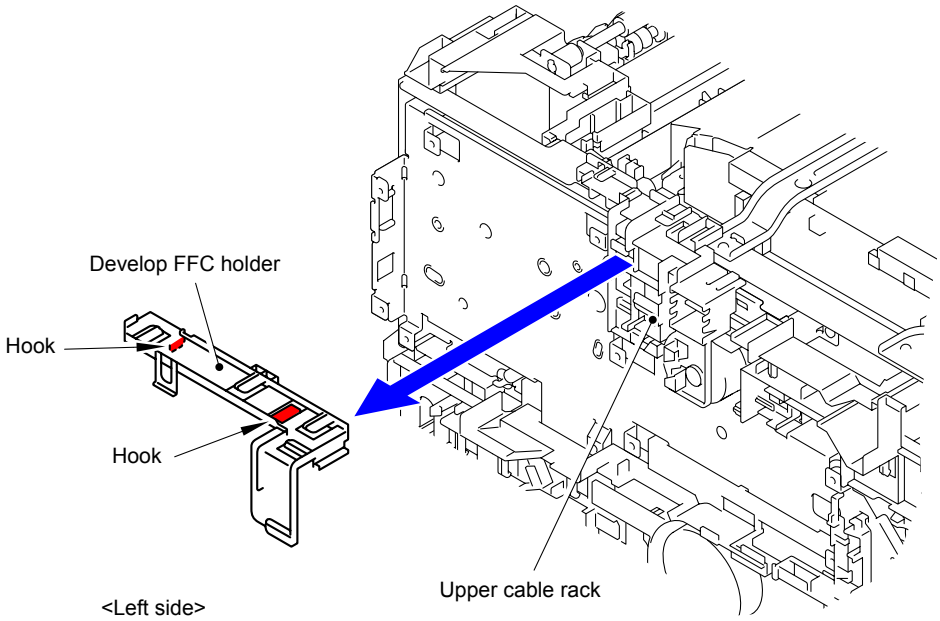

Fig. 7-53

(42) Disconnect cables from the Upper cable rack.

(43) Release the four Hooks to remove the Upper cable rack from the Base frame unit.

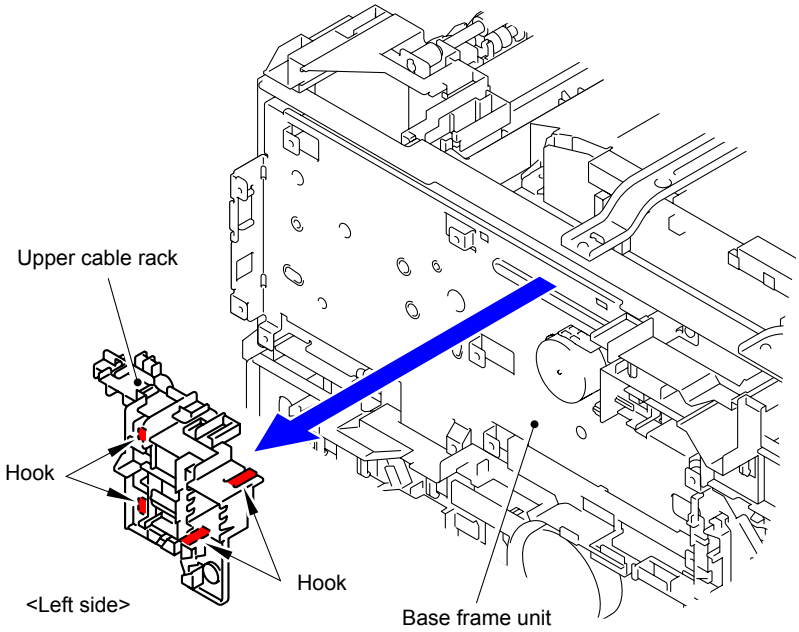

Fig. 7-54

(44) Remove the two Taptite cup S M3x6 SR screws to remove the Top beam from the Base frame unit.

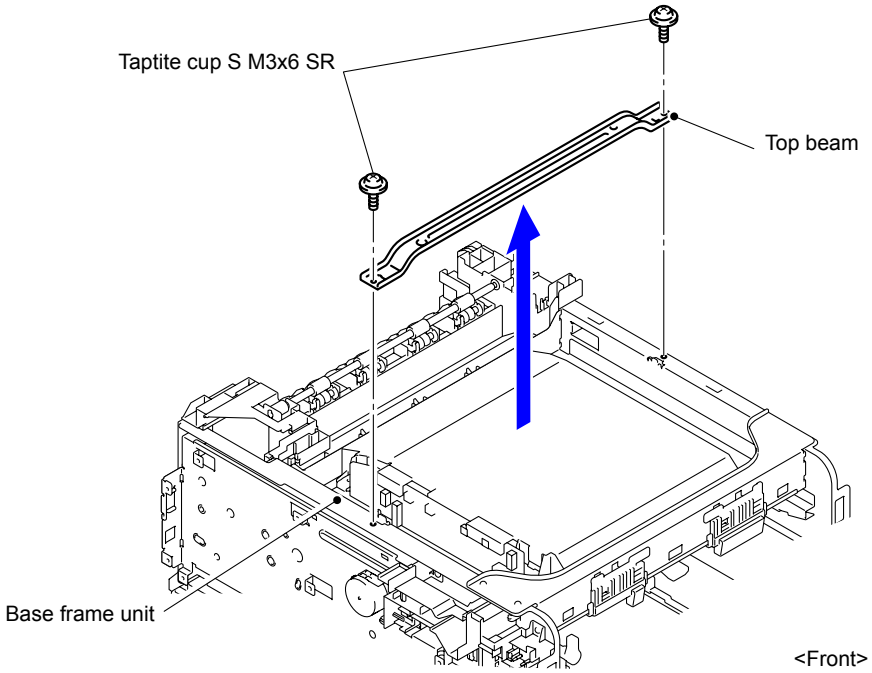

Fig. 7-55

(45) Remove the five Taptite cup S M3x6 SR screws to remove the four Scanner holders.

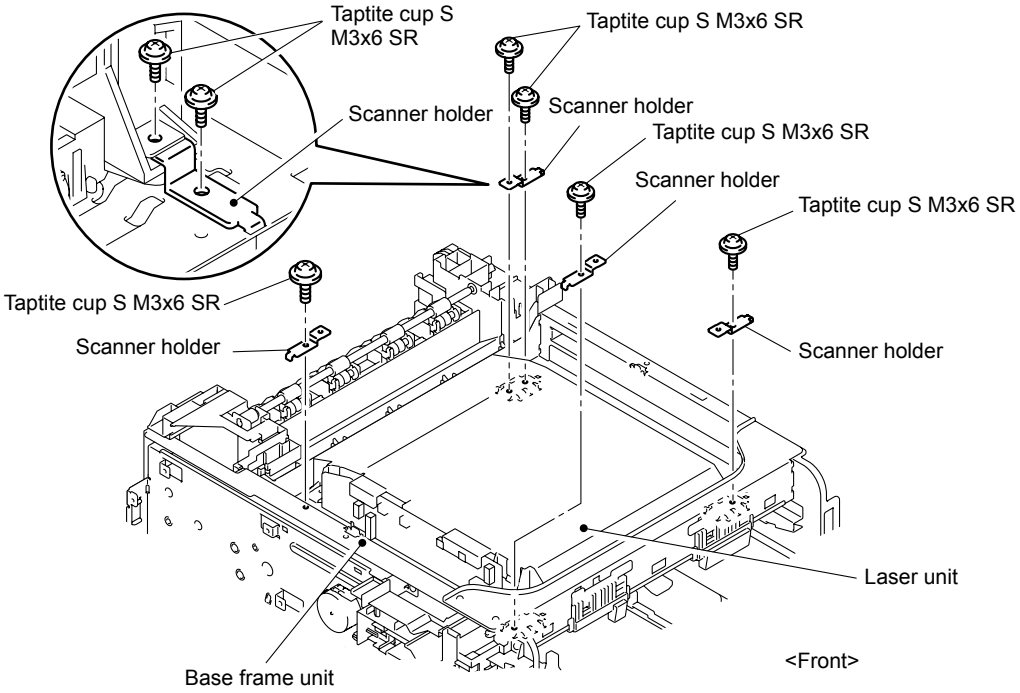

Fig. 7-56

(46) Remove the Connector (CN8) and two Flat cables from the Laser unit to remove the Laser unit from the Base frame unit.

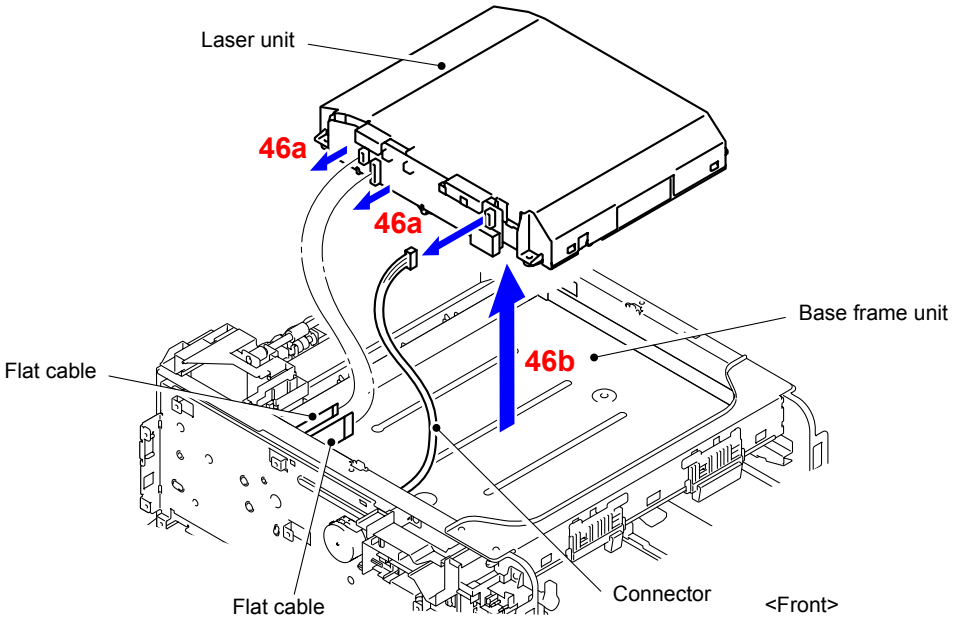

Fig. 7-57

Assembling Note:
When connecting flat cable(s), do not insert them at an angle. After insertion, check that the cable are not at an angle.

(47) After replacing the Laser unit, reset the counter. (Refer to "2.2 Parts Life Reset Function" in Chapter 5.)

■ Legal model

(14) Release the Hooks 1 and 2 at the same time, and then release the Hooks 3 to 6 in numerical order. Release the Hook 7. Release the Hook 8 to remove the Side cover R ASSY from the Main body.

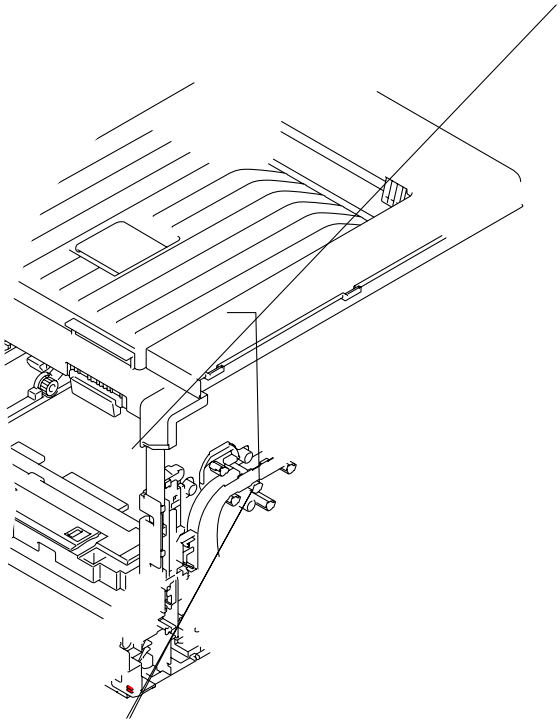

Fig. 7-58

* Inside of Side cover R ASSY

Fig. 7-59

(15) Remove the two Taptite bind B M4x12 screws from the Back cover upper.

(16) Release the four Hooks to remove the Back cover upper from the Main body.

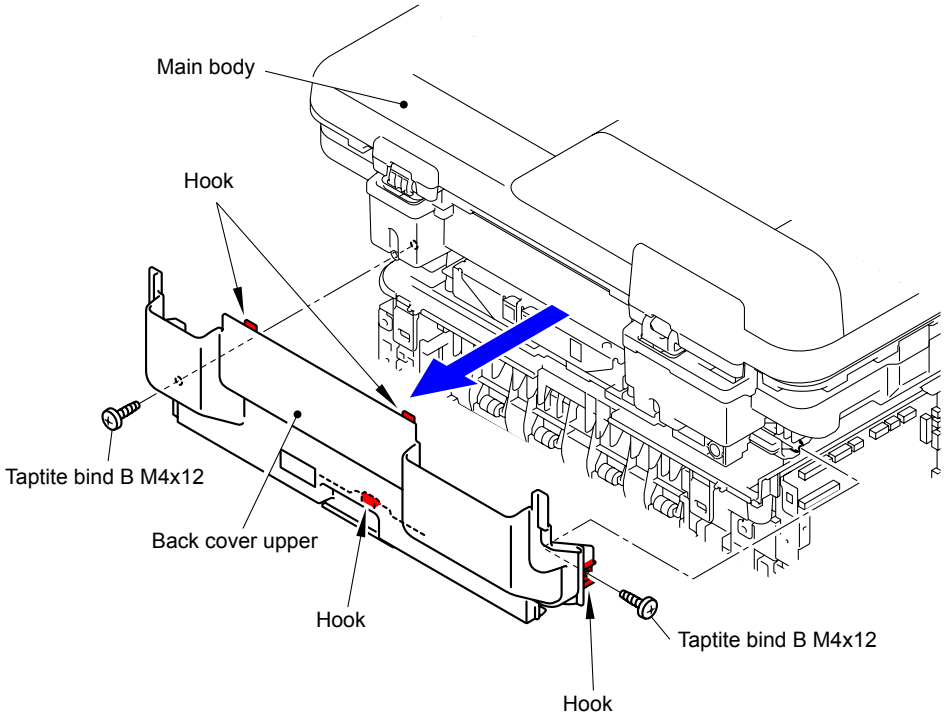

Fig. 7-60

(17) Remove the seven Taptite cup S M3x6 SR screws to remove the Main shield cover plate ASSY from the Main body.

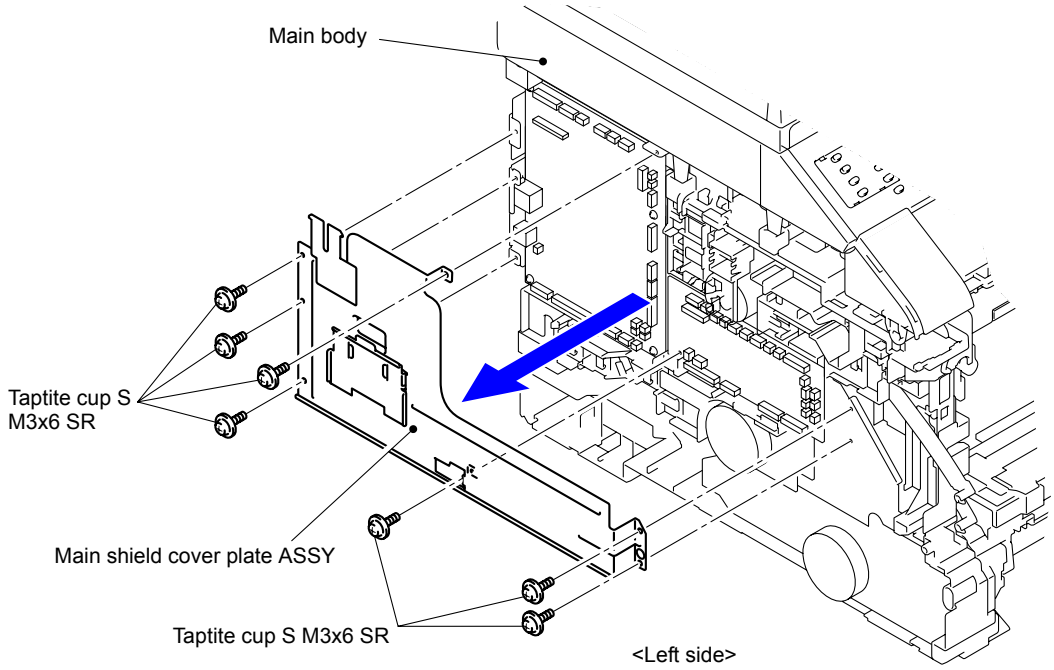

Fig. 7-61

(18) Remove one Taptite cup S M3x6 SR screw each for the FB FG harness ASSY and ADF FG harness ASSY to remove them from the Main body.

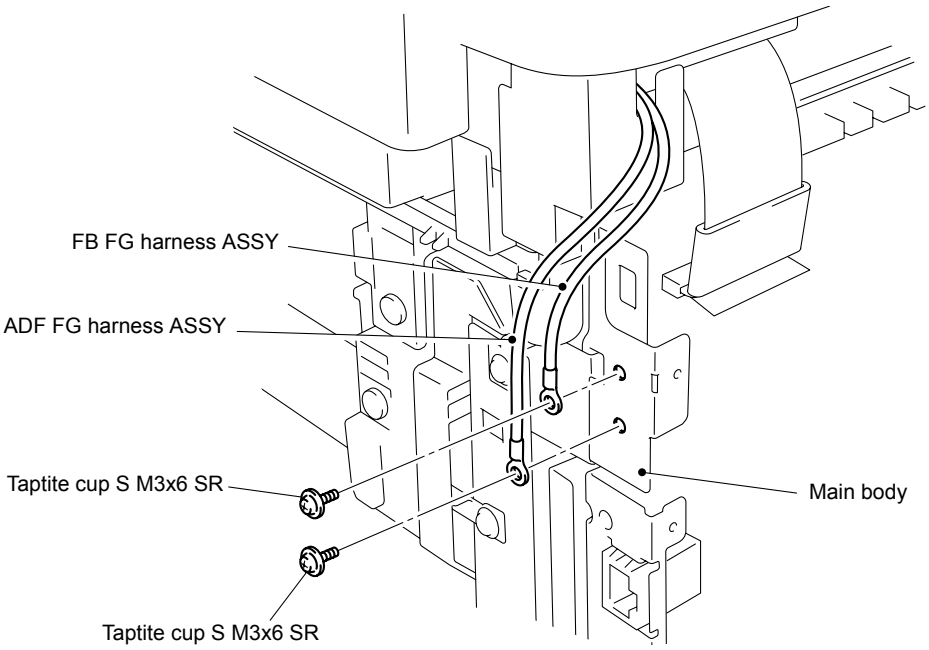

Fig. 7-62

(19) Disconnect the five Connectors (CN3, CN4, CN6, CN7, and CN8) and two Flat cables (CN1 and CN2) from the Main PCB ASSY.

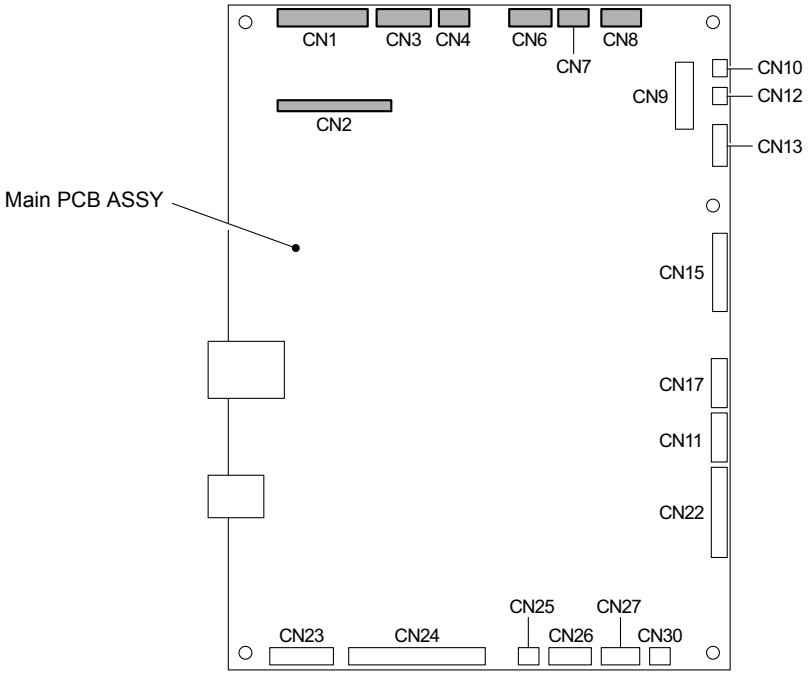

Fig. 7-63

(20) Remove the Second side scanning CIS flat cable from the Main body.

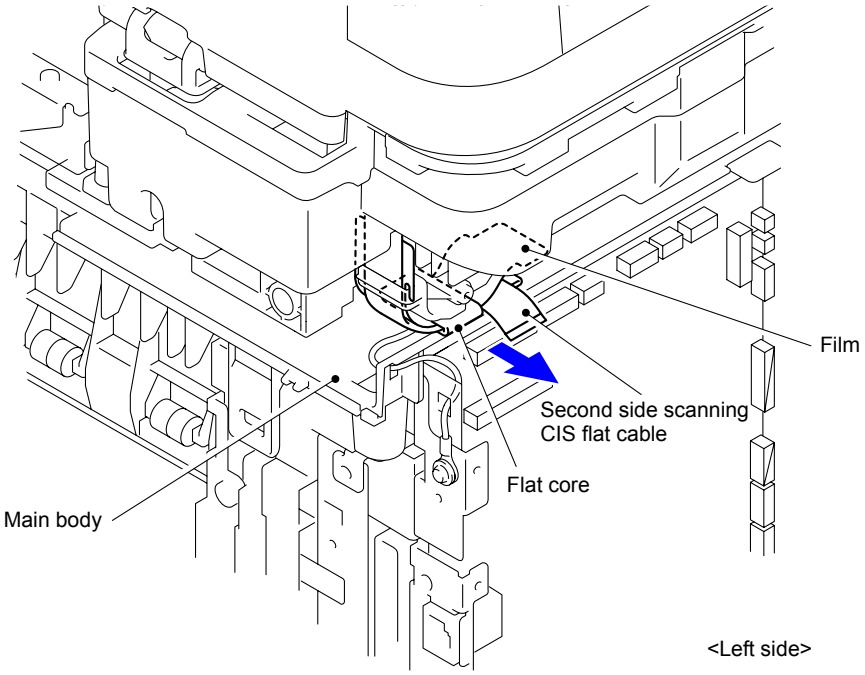

Fig. 7-64

Assembling Note:
When attaching the Second side scanning CIS flat cable, be sure to attach the Film as shown in the figure below.

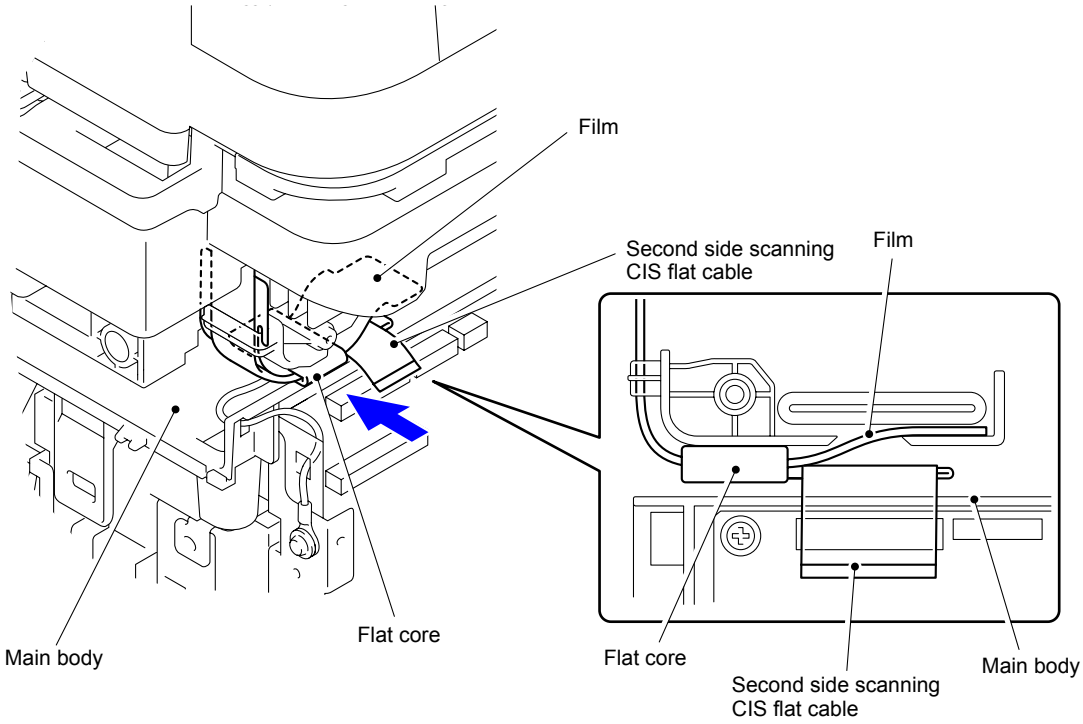

Fig. 7-65

(21) Remove the Flat core and Film.

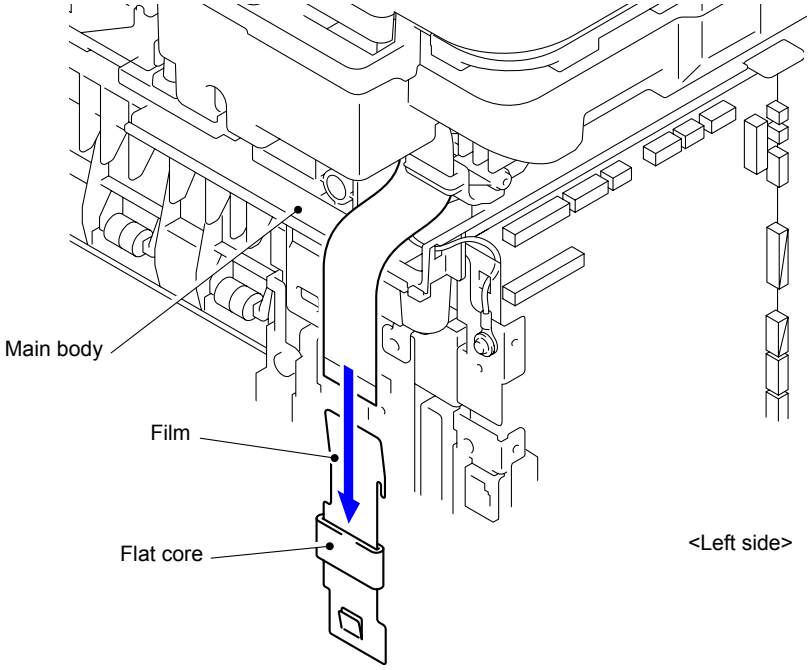

Fig. 7-66

(22) Remove the two Taptite bind B M4x12 screws and Taptite cup S M3x6 SR screw from the right side of the Main body.

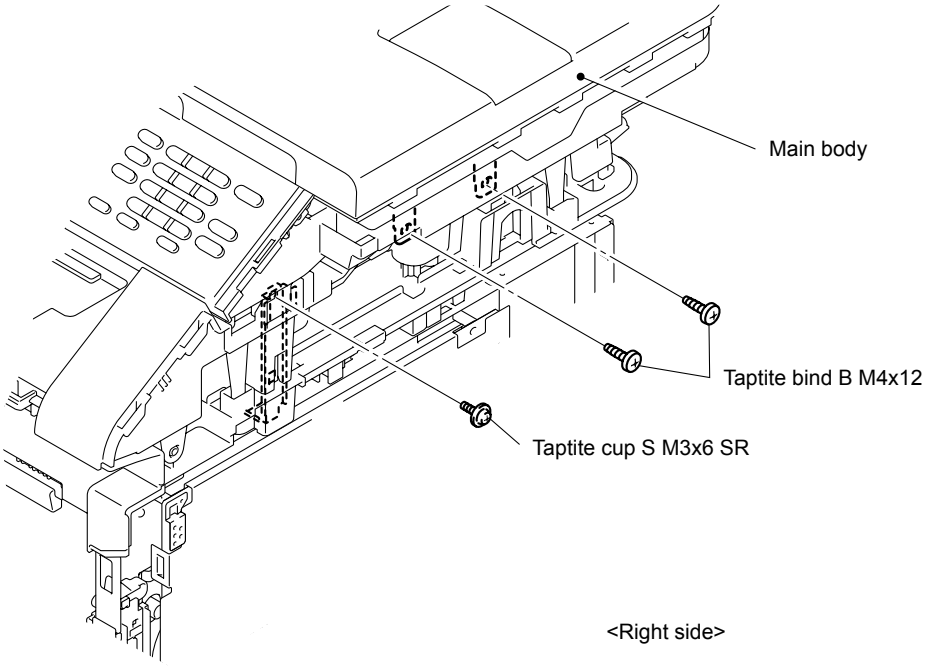

Fig. 7-67

(23) Remove [redacted] Taptite cup [redacted]
left side [redacted]

(24) Remov [redacted] body.

Fi [redacted]

(25) Release the eight Hooks to remove the Document scanner unit from the Main body.

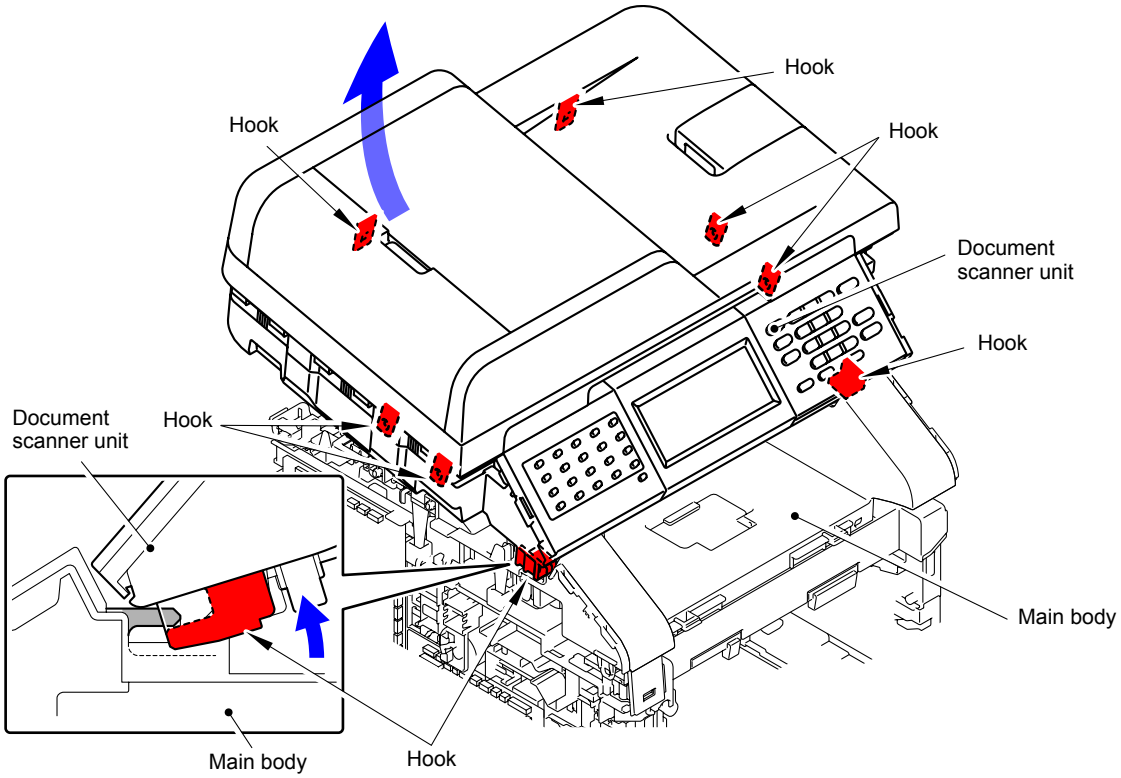

Fig. 7-70

(26) Take out the Document scanner unit flat cable from the Flat core of the Main body as lifting the Document scanner unit.

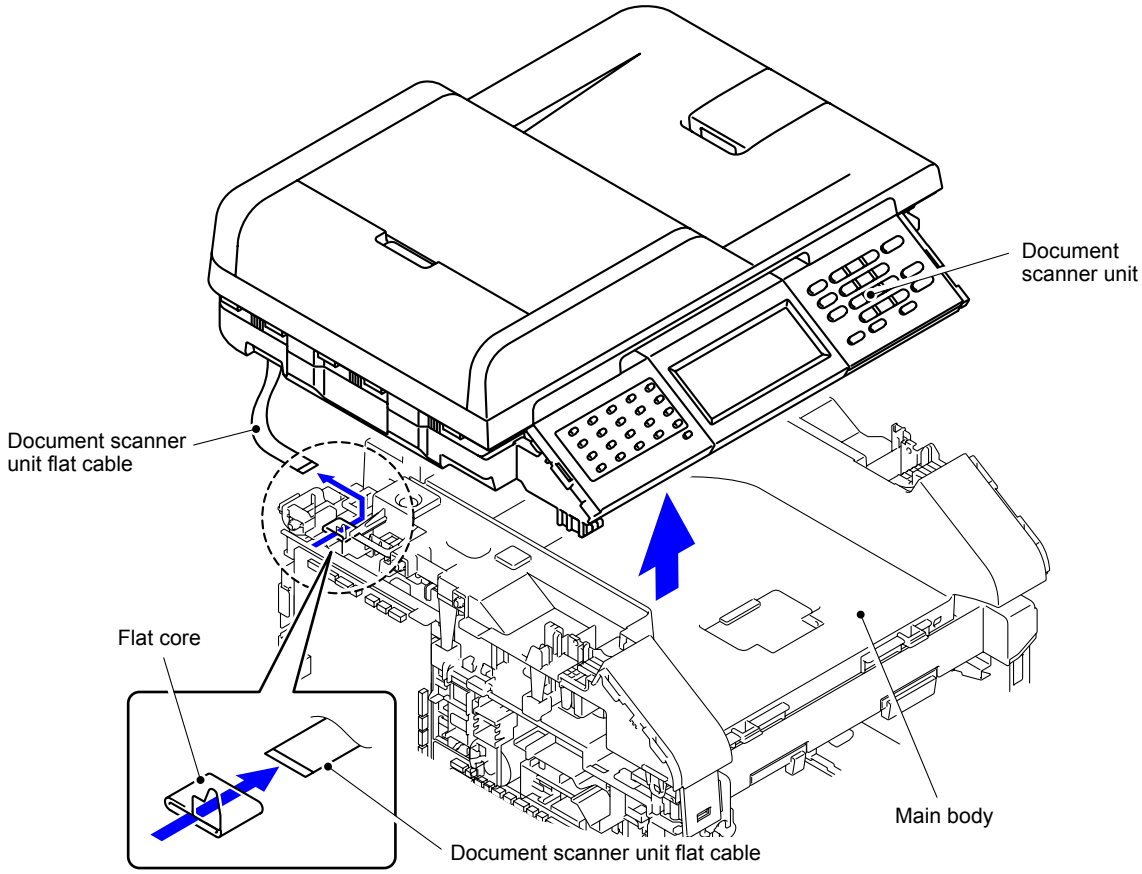

Fig. 7-71

(27) Remove the Screw pan (S/P washer) M3.5x6 screw to remove the NCU FG harness ASSY from the Main body.

(28) Disconnect the wiring from the Main PCB ASSY.

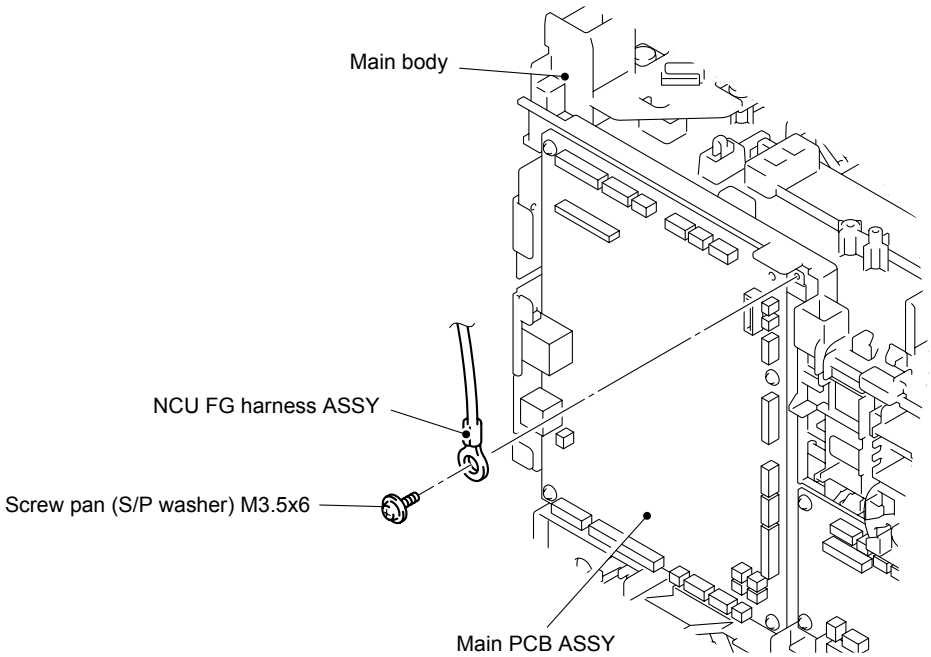

Fig. 7-72

(29) Disconnect the 14 Connectors (CN9, CN10, CN11, CN12, CN13, CN15, CN17, CN22, CN23, CN24, CN25, CN26, CN27, and CN30) from the Main PCB ASSY.

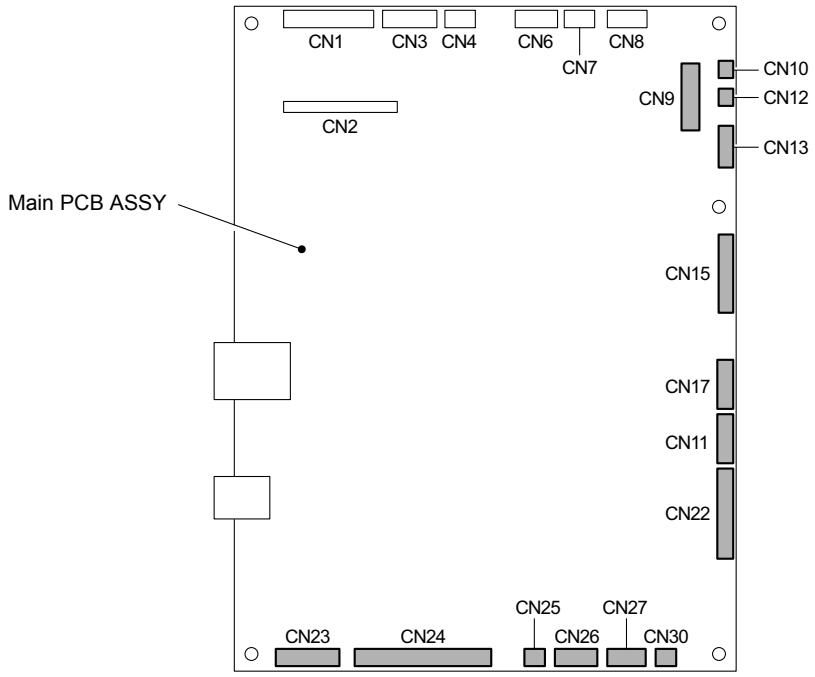

Fig. 7-73

(30) Remove the eight Taptite bind B M4x12 screws and twoTaptite cup S M3x6 SR screws from the Joint cover top.

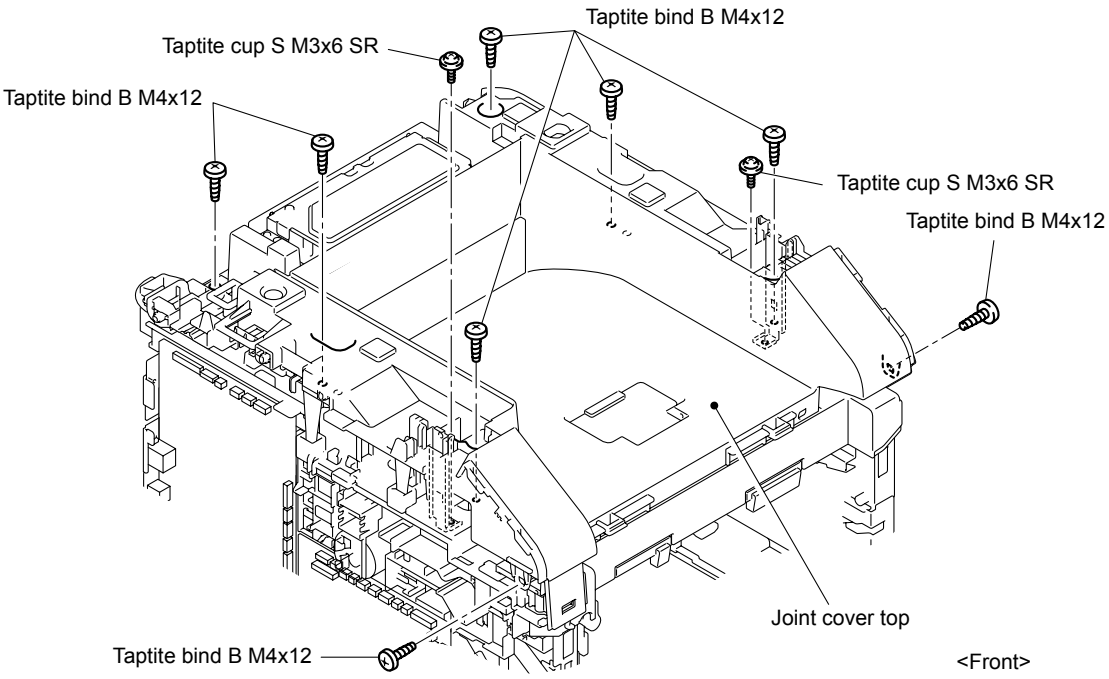

Fig. 7-74

(31) Release the four Hooks of the front.

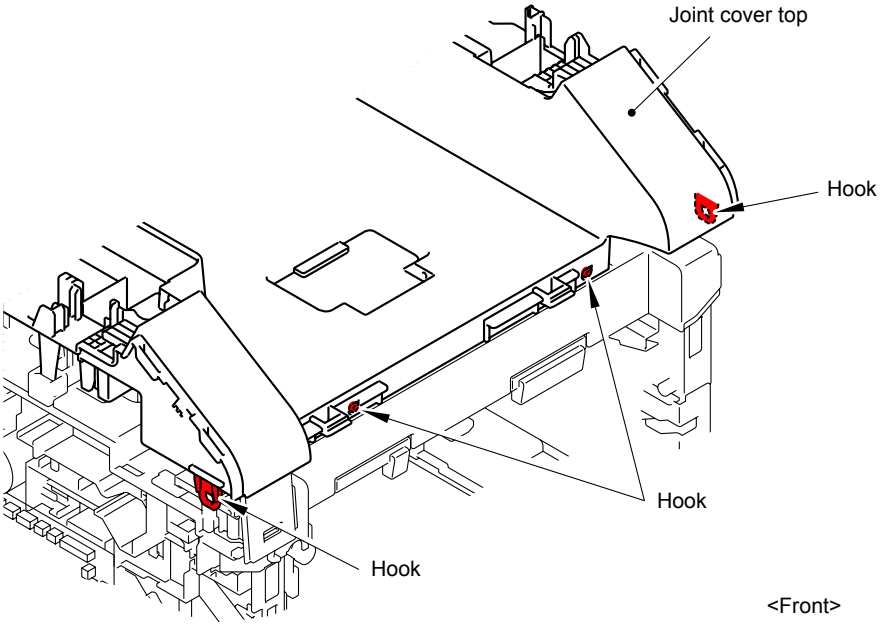

Fig. 7-75

(32) Release the eight Hooks to remove the Joint cover top from the Main body.

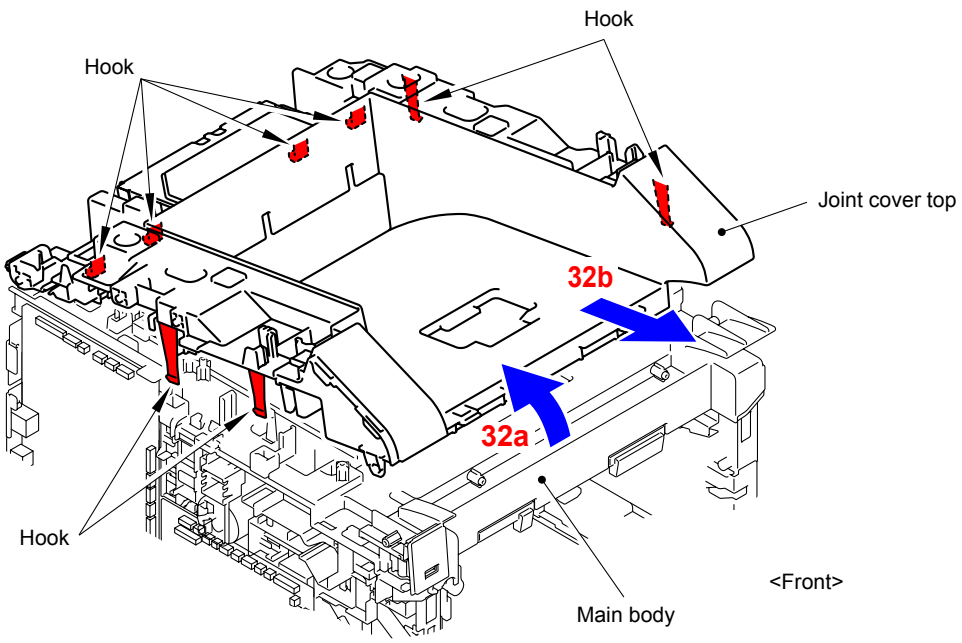

Fig. 7-76

(33) Remove the four Taptite cup S M3x6 SR screws to remove the Main PCB ASSY from the Top drive ASSY.

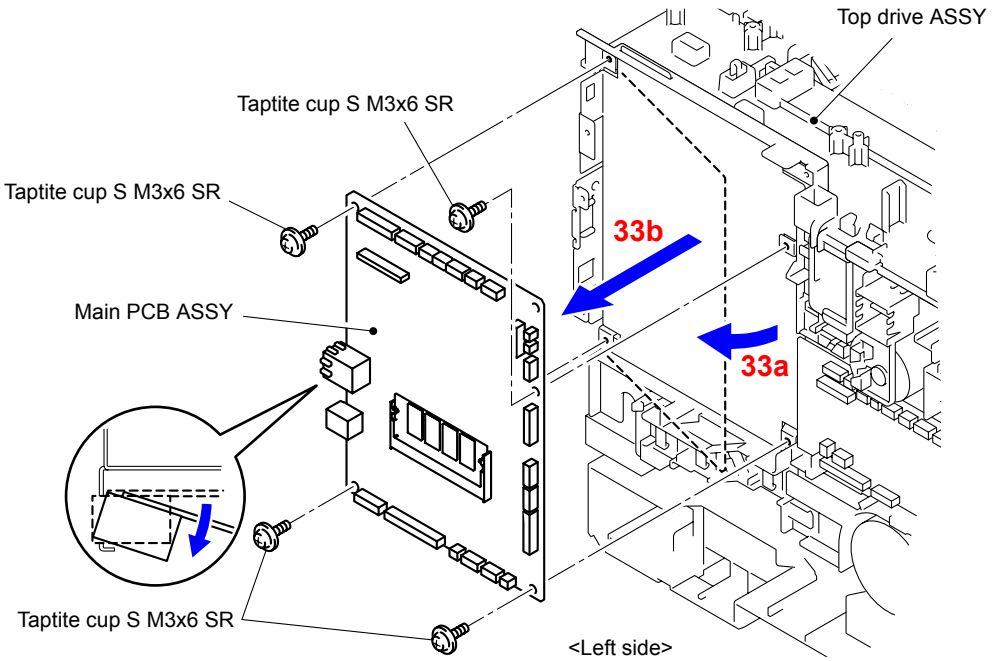

Fig. 7-77

(34) Remove the Main insulation sheet from the Top drive ASSY.

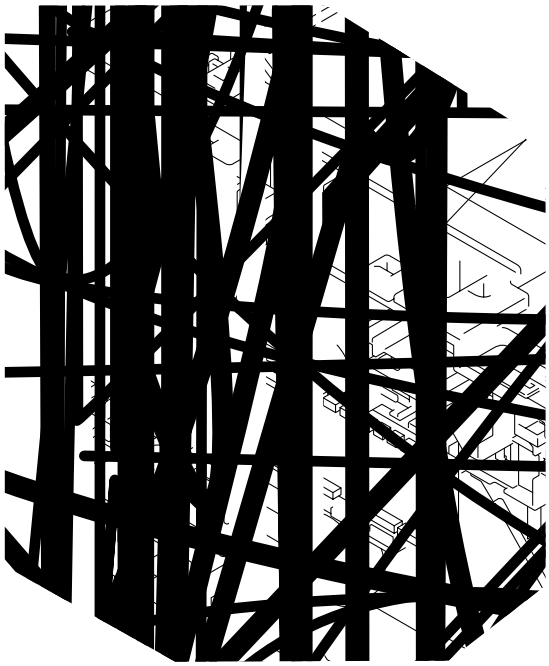

Fig. 7-78

(35) Remove the seven Taptite cup S M3x8 screws and Taptite cup S M3x6 SR screw from the Joint cover base ASSY.

Fig. 7-79

(36) Remove the two Taptite bind B M4x12 screws from the Joint cover base ASSY.

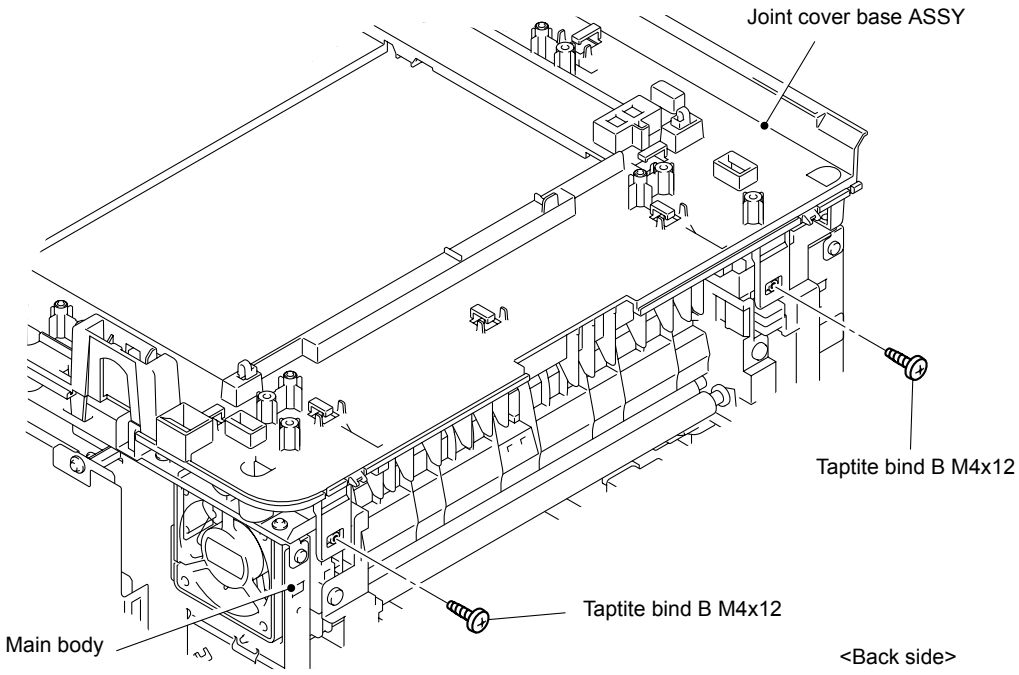

Fig. 7-80

(37) Release the ten Hooks to remove the Joint cover base ASSY from the Main body.

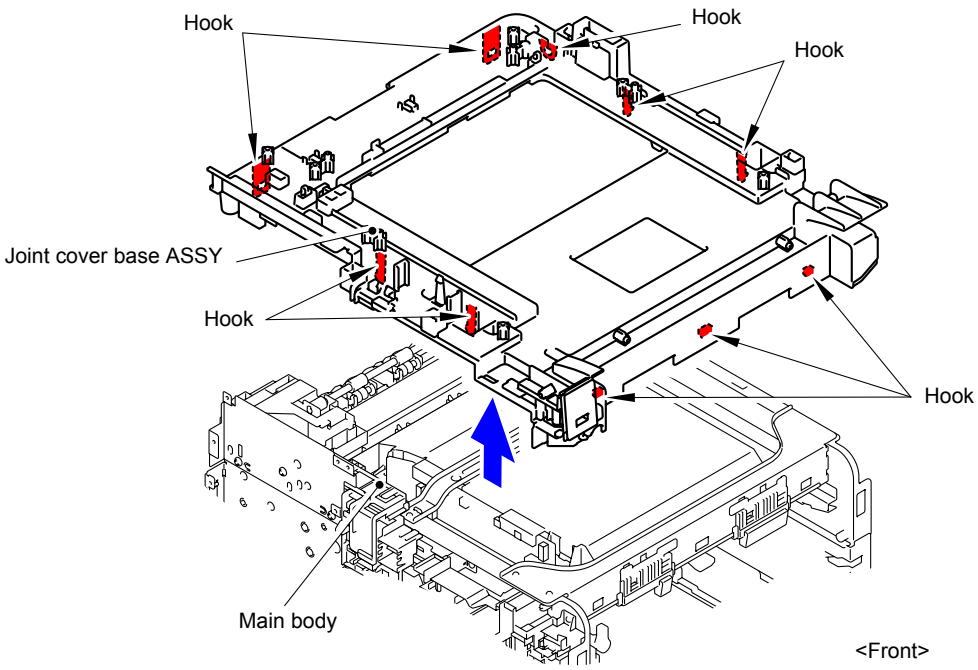

Fig. 7-81

(38) Remove the three Taptite cup S M3x6 SR screws to remove the Main shield plate from the Top drive ASSY.

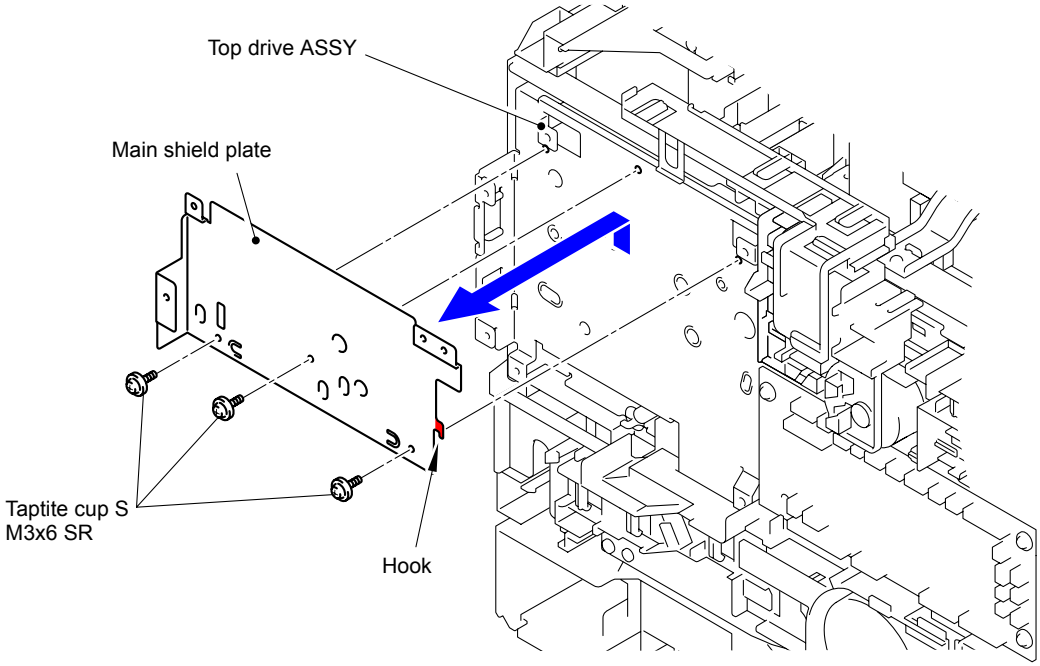

Fig. 7-82

(39) Disconnect the Flat cable from the Develop FFC holder.

(40) Release the two Hooks to remove the Develop FFC holder from the Upper cable rack.

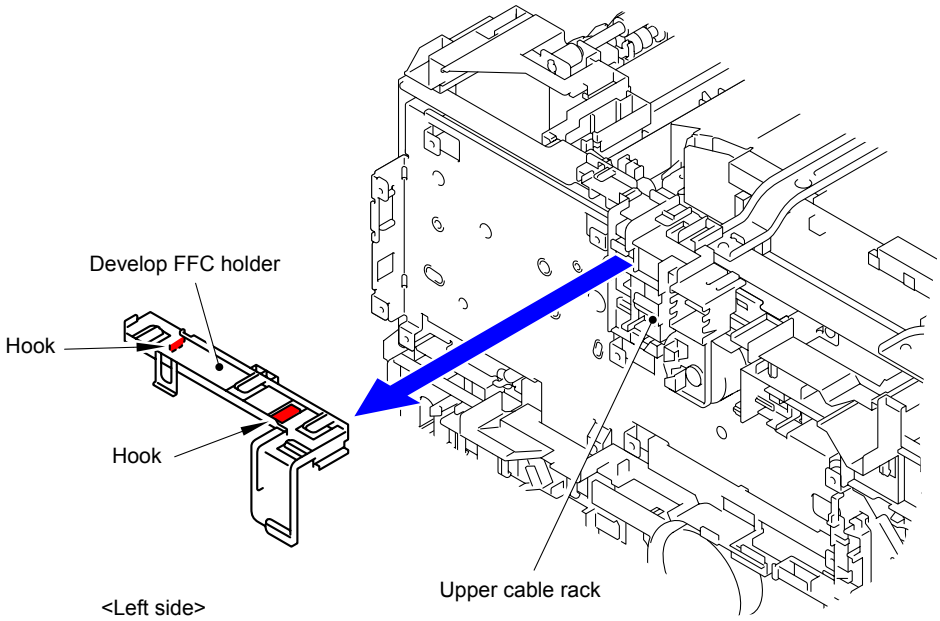

Fig. 7-83

(41) Disconnect cables from the Upper cable rack.

(42) Release the four Hooks to remove the Upper cable rack from the Base frame unit.

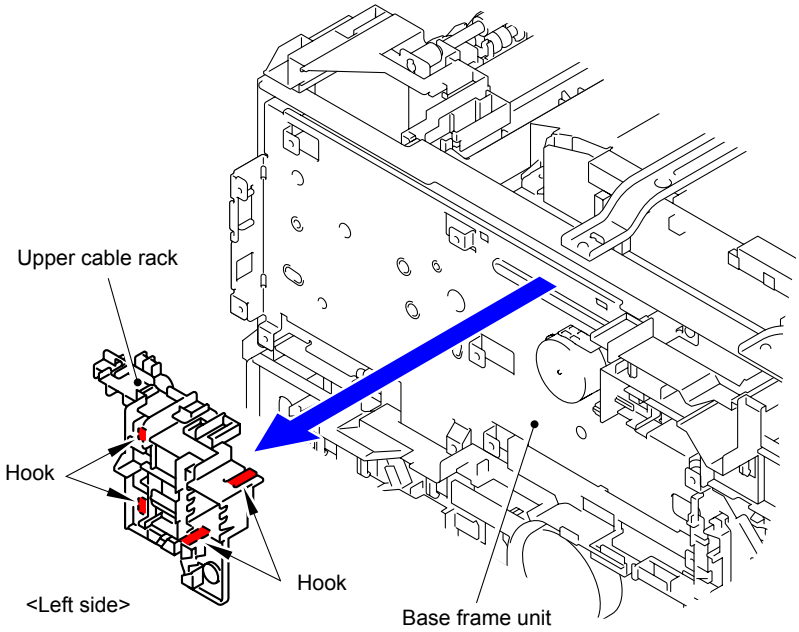

Fig. 7-84

(43) Remove the two Taptite cup S M3x6 SR screws to remove the Top beam from the Base frame unit.

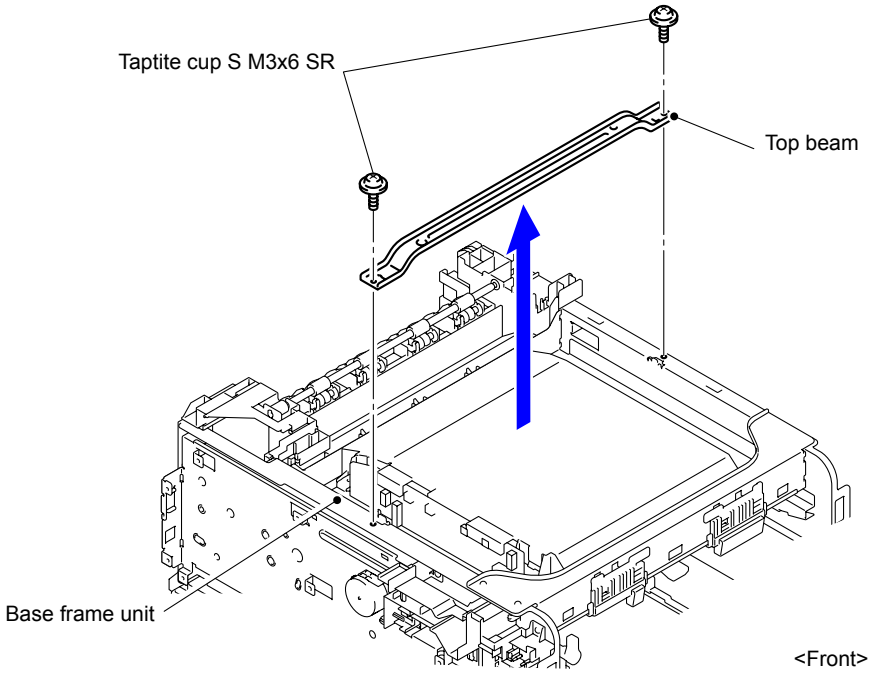

Fig. 7-85

(44) Remove the five Taptite cup S M3x6 SR screws to remove the four Scanner holders.

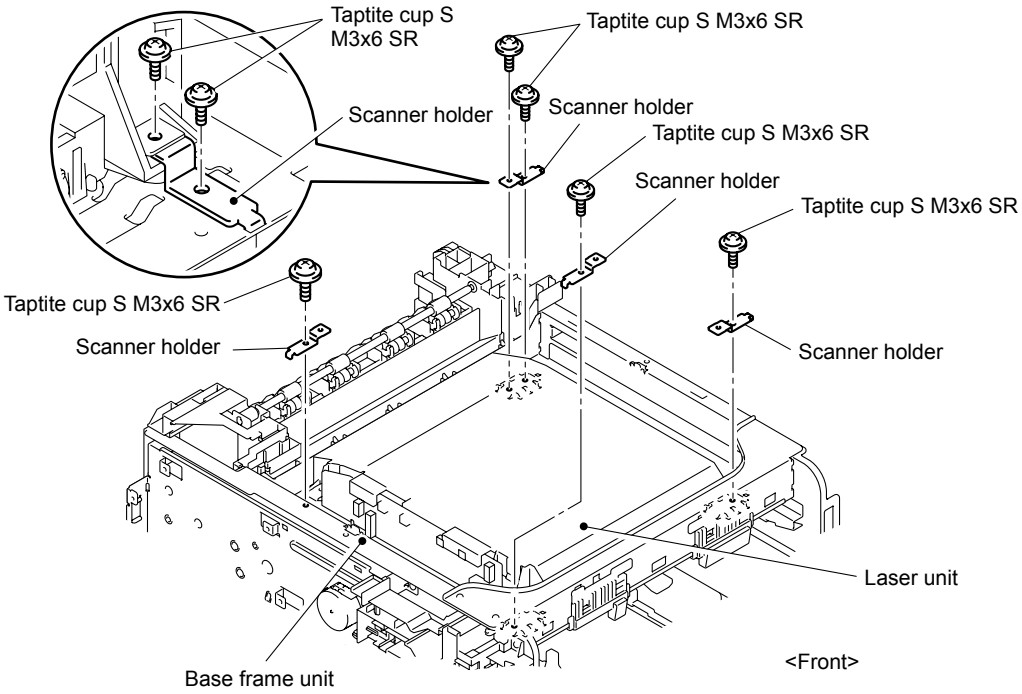

Fig. 7-86

(45) Remove the Connector (CN8) and two Flat cables from the Laser unit to remove the Laser unit from the Base frame unit.

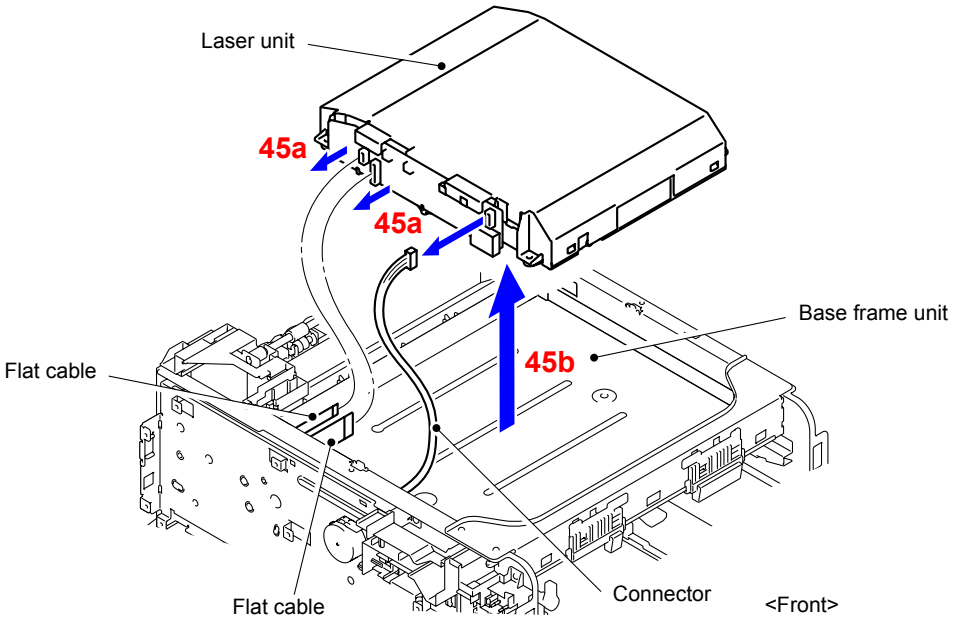

Fig. 7-87

Assembling Note:

When connecting flat cable(s), do not insert them at an angle. After insertion, check that the cable are not at an angle.

(46) After replacing the Laser unit, reset the counter. (Refer to "2.2 Parts Life Reset Function" in Chapter 5.)

2.1.3 Paper feeding kit1

(1) Release the Hook to remove the Separation pad holder ASSY from the Paper tray.

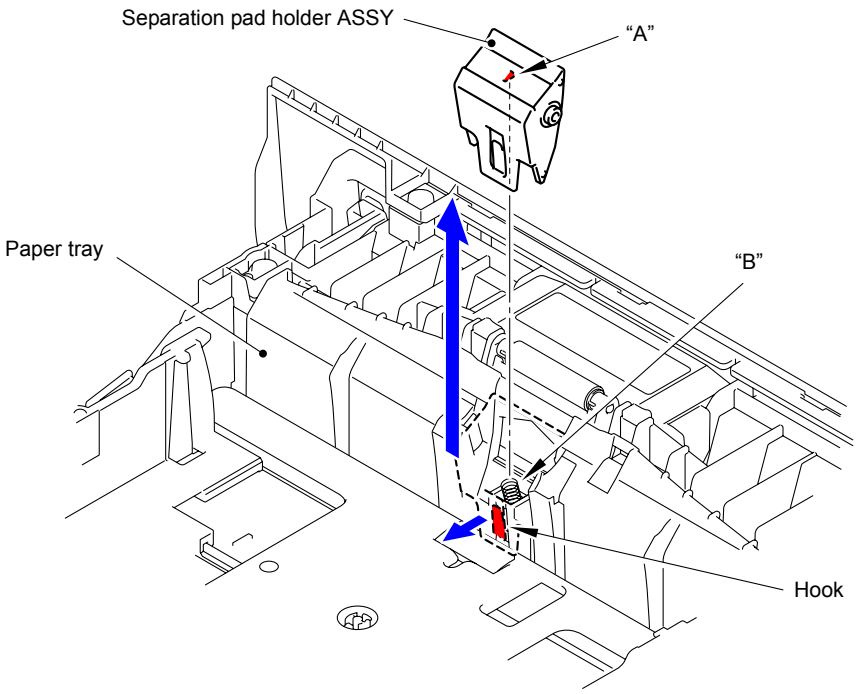

Fig. 7-88

Assembling Note:

Mount the Separation pad holder ASSY in a way that "A" of the Separation pad holder ASSY is inserted into "B" of the Separation pad spring.

(2) Remove the Separation pad spring from the Paper tray.

Note:
Be careful not to lose the Separation pad spring.

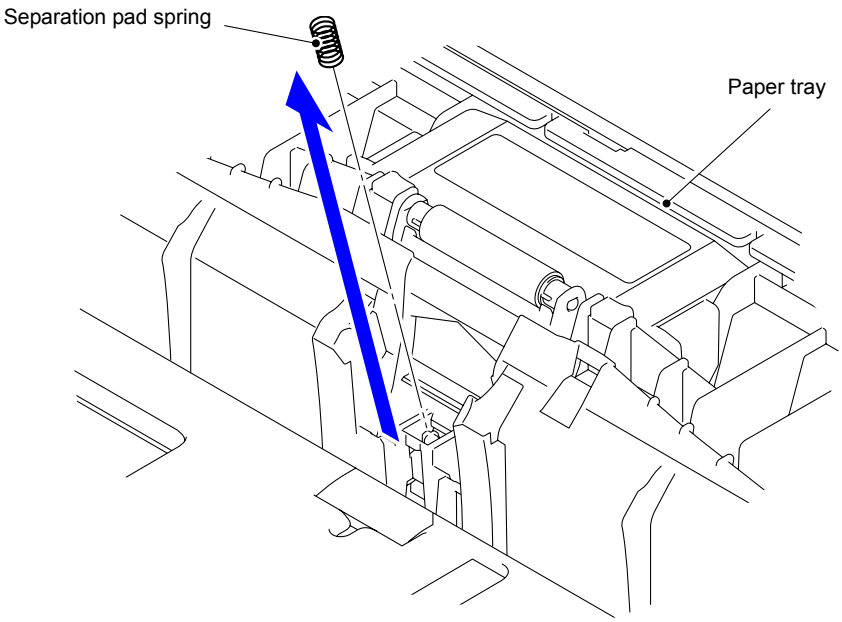

Fig. 7-89

(3) Push the T1 lift arm to the back to remove “B” of the Roller holder ASSY from “A” of the T1 lift arm.

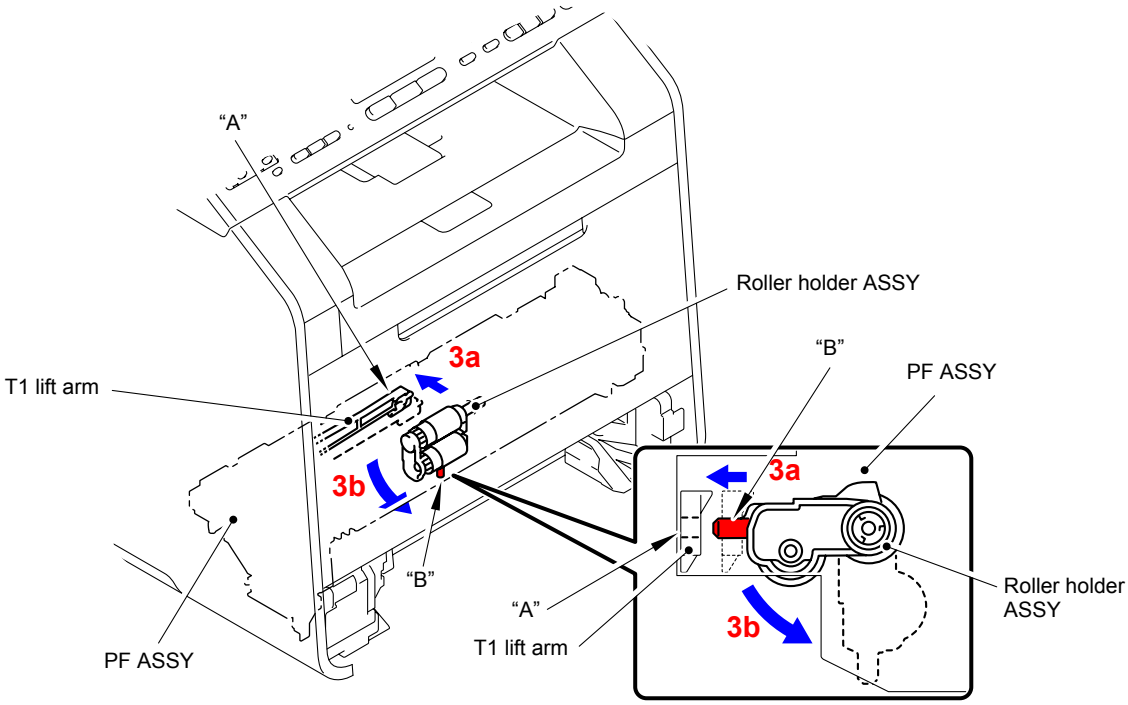

Fig. 7-90

(4) Slide the Roller holder ASSY in the direction of the arrow 4 to remove it from the “C” of the PF ASSY.

(5) Slide the Roller holder ASSY in the direction of the arrow 5a and 5b in this order to remove it.

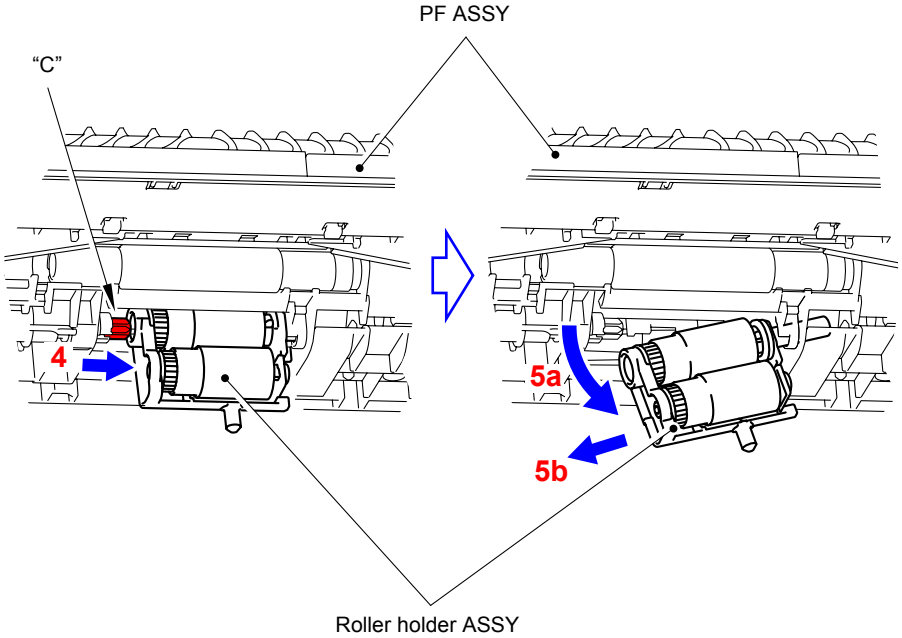

Fig. 7-91

Assembling Note:
Align the Shaft of the roller holder ASSY to the hole of the PF ASSY and insert it into the hole.

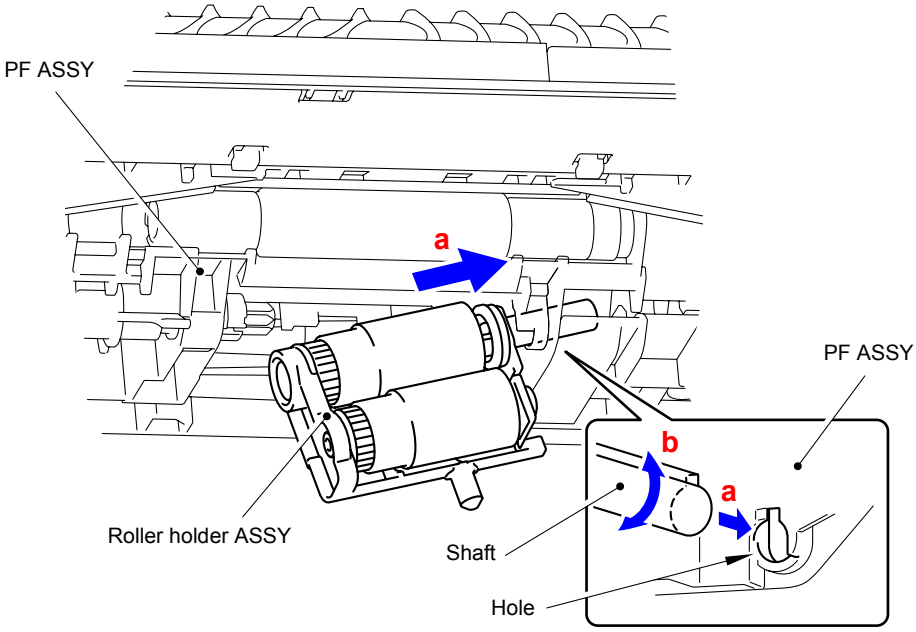

Fig. 7-92

(6) After replacing the Paper feeding kit, reset the counter. (Refer to “2.2 Parts Life Reset Function” in Chapter 5.)

2.1.4 Paper feeding kit2

(1) Release the two Hooks of the T2 separation pad ASSY to remove them in the upward direction.

> **Note:**
> Be careful not to lose the T2 separation pad spring.

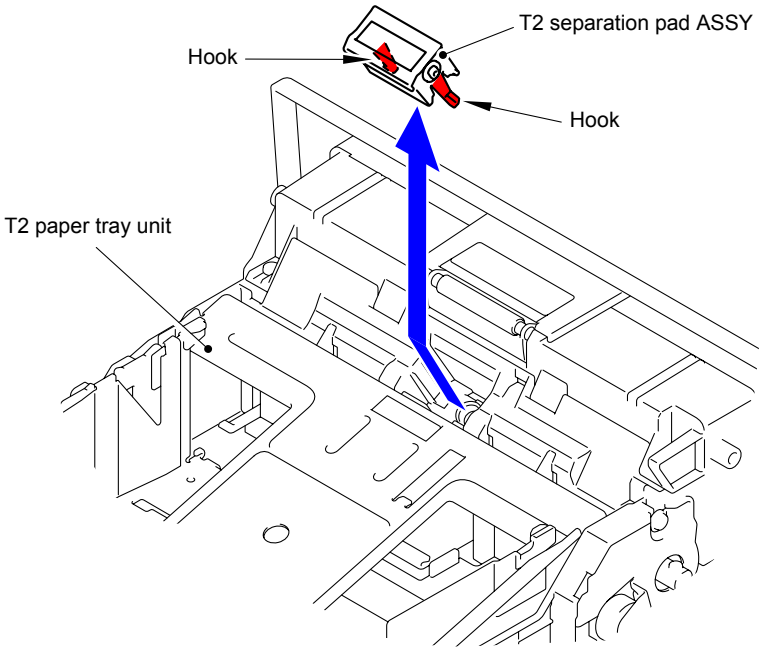

Fig. 7-93

(2) Remove the T2 separation pad spring from the T2 separation pad ASSY.

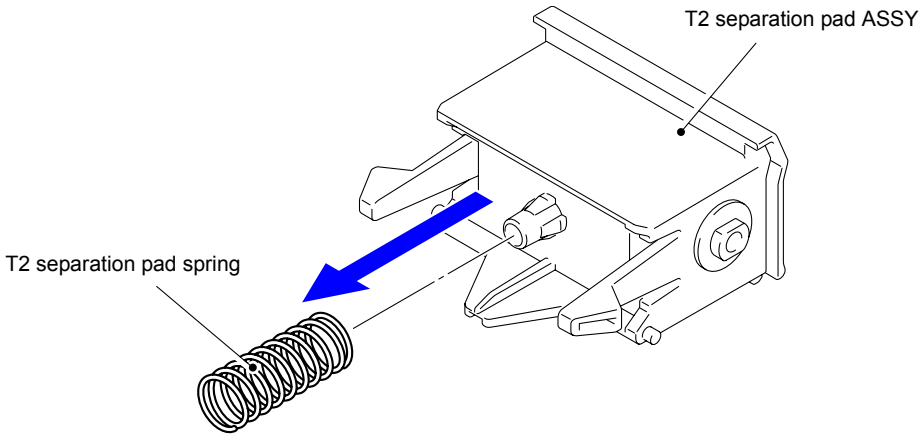

Fig. 7-94

(3) Release the Hook and slide the T2 separation roller ASSY in the direction of the arrow 3.

(4) Remove the T2 separation roller ASSY in the direction of the arrow 4b as rotating it in the direction of the arrow 4a.

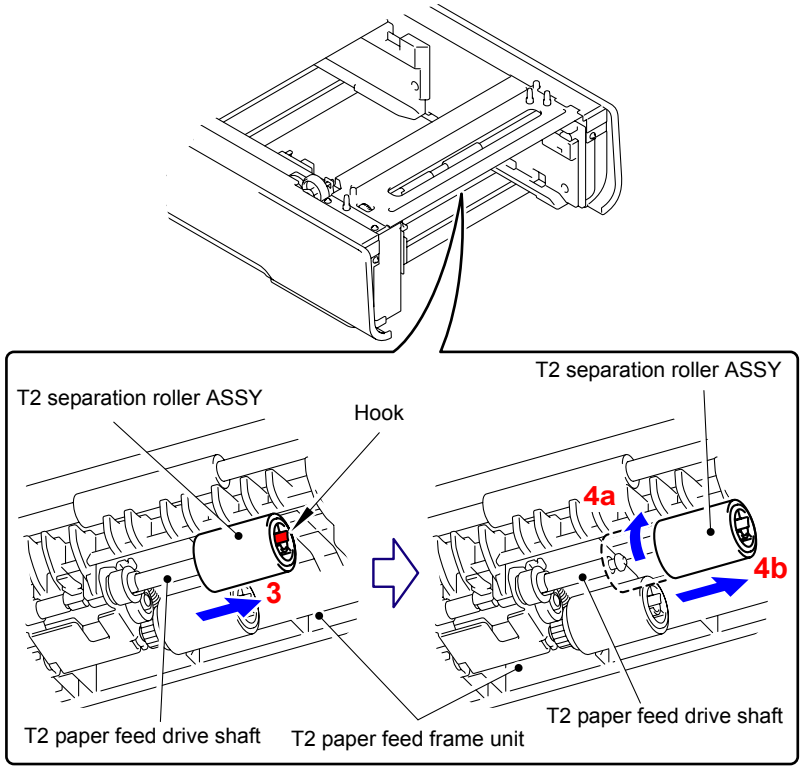

Fig. 7-95

Assembling Note:

When assembling the T2 separation roller ASSY, be sure to assemble it by sliding it in the direction of the arrow b as rotating the T2 separation roller ASSY in the direction of the arrow a.

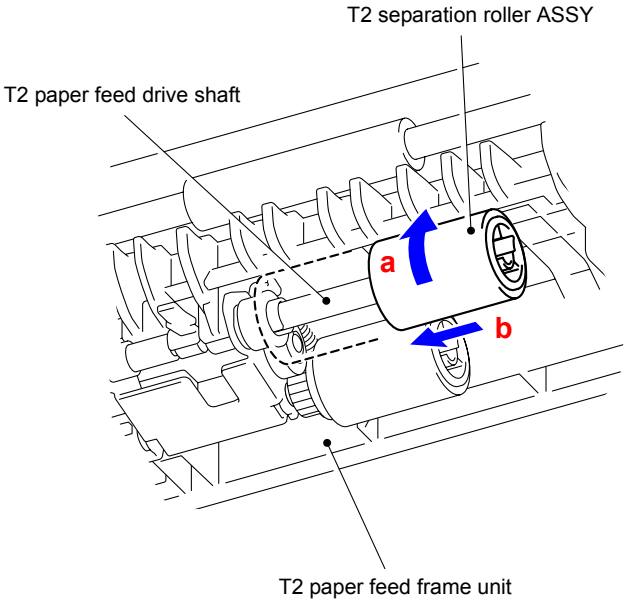

Fig. 7-96

(5) Release the Hooks to remove the Feed roller ASSY from the Paper feed shaft.

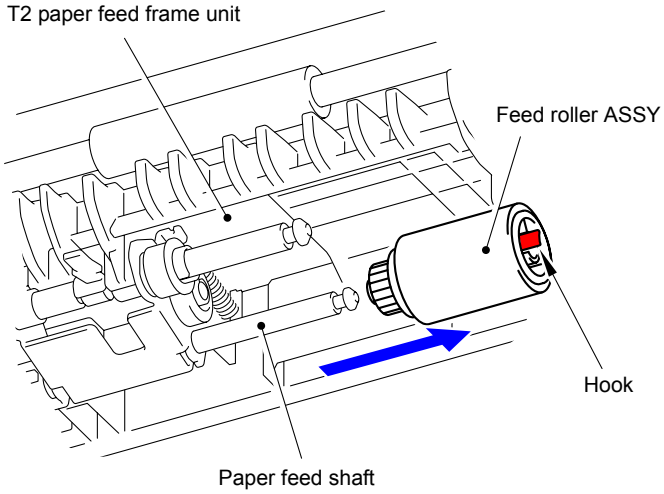

Fig. 7-97

(6) After replacing the Paper feeding kit, reset the counter. (Refer to "2.2 Parts Life Reset Function" in Chapter 5.)

2.1.5 MP paper feeding kit

(1) Press “A” to release the Hook and then remove the MP upper frame cover from the MP upper cover ASSY.

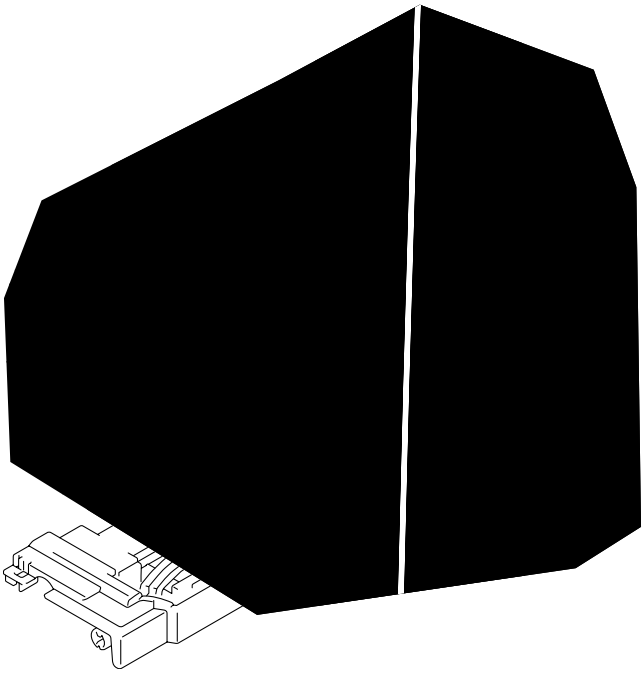

Fig. 7-98

(2) Remove the MP lift arm B from the MP upper cover ASSY.

Fig. 7-99

(3) Release the Hook to remove the MP holder bush from the MP upper cover.

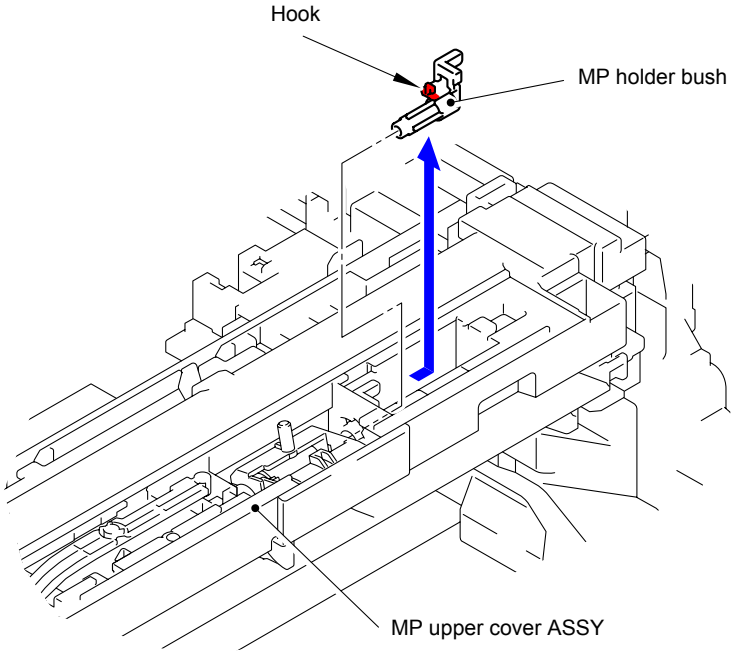

Fig. 7-100

(4) Remove the MP roller holder ASSY from the MP upper cover ASSY.

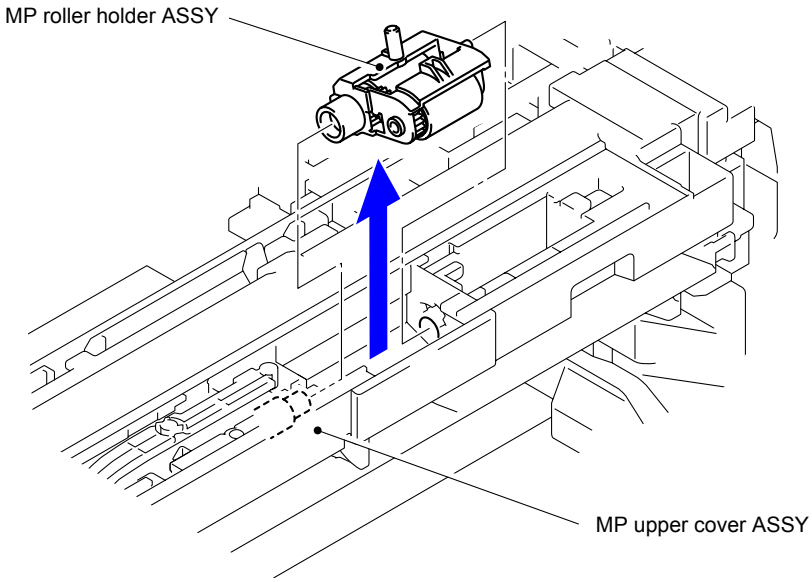

Fig. 7-101

(5) Turn the MP separation pad ASSY upright to remove it from the MP unit.

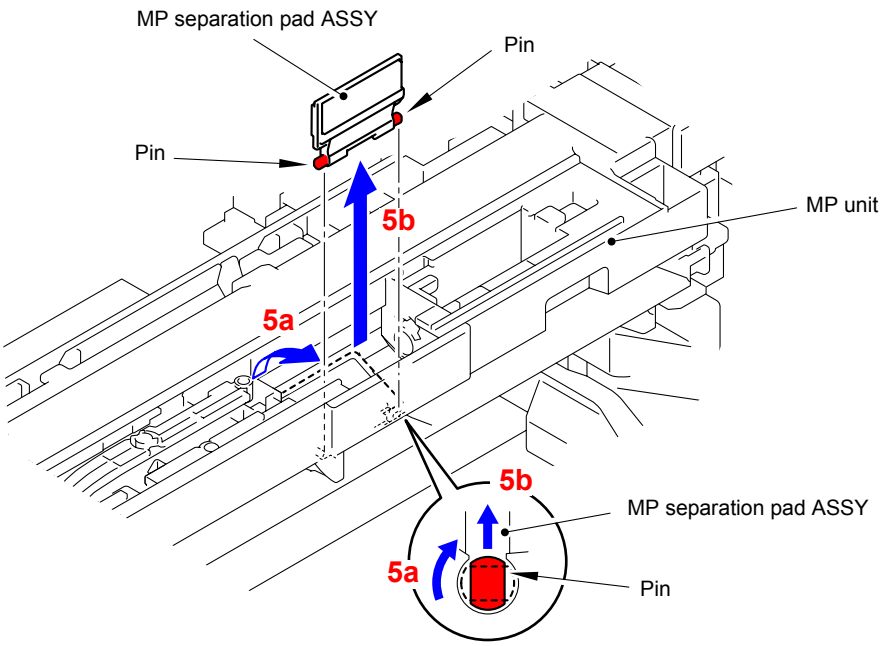

Fig. 7-102

(6) Remove the MP separation pad spring from the two Pins of MP unit.

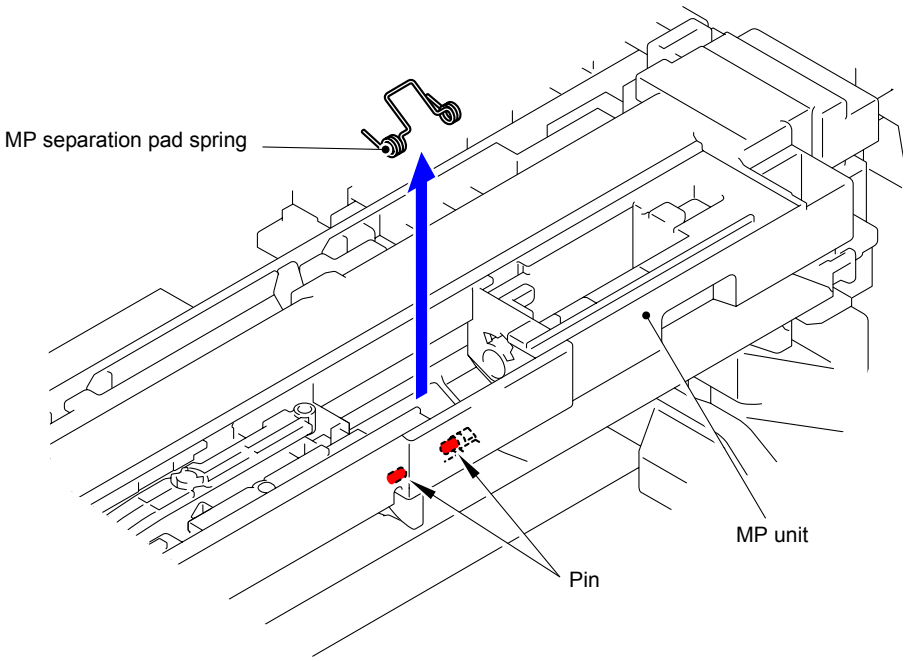

Fig. 7-103

(7) After replacing the MP paper feeding kit, reset the counter. (Refer to "2.2 Parts Life Reset Function" in Chapter 5.)

APPENDIX 1.
SERIAL NUMBERING SYSTEM

APPENDIX 1 SERIAL NUMBERING SYSTEM

■ Serial number labels for the machine itself

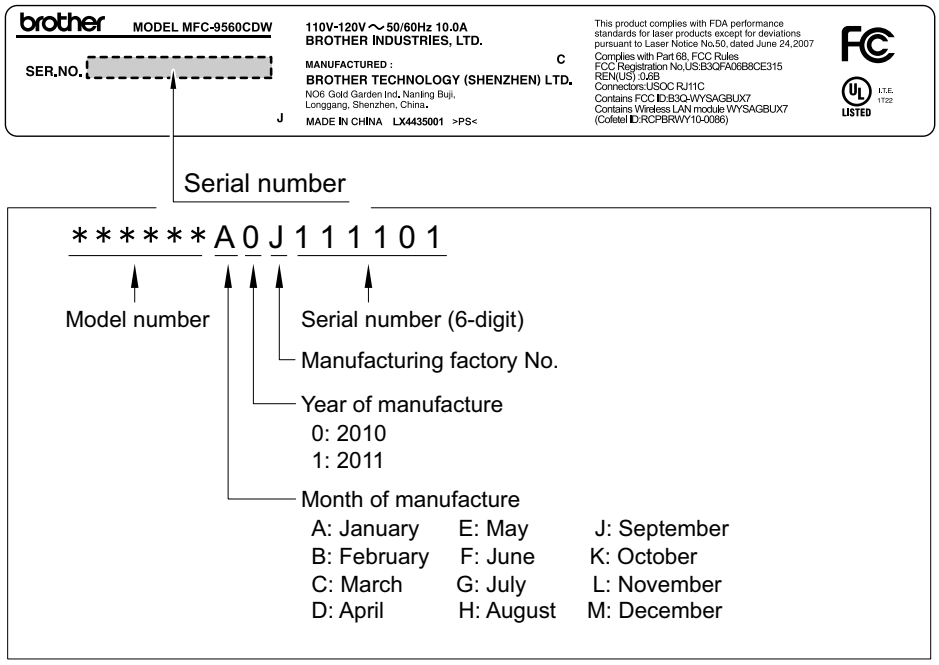

Fig. App 1-1

<Location>

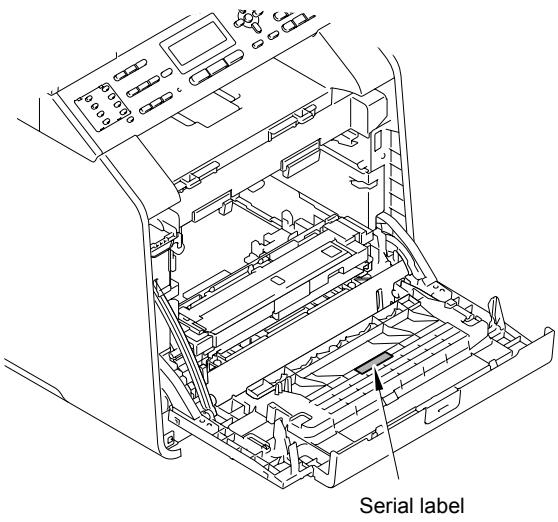

Fig. App 1-2

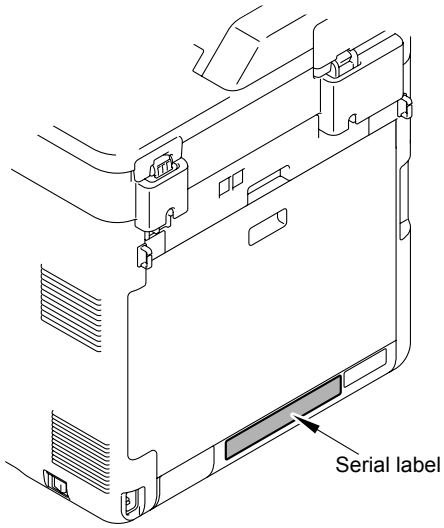

Fig. App 1-3

APPENDIX 2.

DELETION OF USER SETTING INFORMATION, ETC.

This appendix provides instructions on how to delete user setting information etc. recorded in the machine.

APPENDIX 2 DELETION OF USER SETTING INFORMATION, ETC.

In this machine, the user setting information is stored in the EEPROM and flash memory of the main PCB. You can delete all the data listed below at a time with the procedure given below.

- Information related to Net
- User setting information

<Operating procedure>

(1) Press the **Menu** button while the machine is in the ready state.

Non Touch panel model

(2) Press the ▲ or ▼ button, then the "Initial Setup" or "General Setup" will appears on the LCD and press the **OK** button.
(Which will appear, "Initial Setup" or "General Setup", depends on the model.)

(3) Press the ▲ or ▼ button, then the "Reset Menu" will appear on the LCD and press the **OK** button.

(4) Press the ▲ or ▼ button, then the "All Settings" will appear on the LCD and press the **OK** button.

(5) The "1.Reset 2.Exit" appear on the LCD.

(6) Press the **1** button, and the user setting information is deleted, and the machine goes back to the ready state.

Touch panel model

(2) Press "Initial Setup" or "General Setup" on the LCD.

(3) Press "Reset" on the LCD.

(4) Press "All Settings" on the LCD.

(5) "Reset? All Settings? Yes/No" will appear on the LCD. Press "Yes".

(6) "Reboot OK? Press for 2 second to confirm. Yes/No" will appear on the LCD. Press "Yes" for 2 seconds or longer, the user settings are cleared, and the machine returns to the ready state.

Note:
The machine returns to the ready state automatically if no panel operation is implemented for 30 seconds.

APPENDIX 3.
INSTALLING THE MAINTENANCE DRIVER

APPENDIX 3 INSTALLING THE MAINTENANCE DRIVER

To identify machines connected to the computer via USB, the computer needs to configure the corresponding number of virtual USB devices by a driver or software. If you connect a multiple number of machines to your computer, the same number of virtual USB devices will be automatically configured on your computer.

To prevent virtual USB devices from being configured without limitation, use the unique driver installation procedure described below that enables your computer to identify machines via one single virtual USB device.

<Procedures>

Non Touch panel model

(1) While the machine is in the ready state, press the **OK** button and then **Start/Black** button. Next, press the ▲ button 4 times, and the machine goes into the maintenance mode.

Touch panel model

(1) While the machine is in the ready state, press the **COPY** and **SCAN** buttons at the same time, and then press the *****, **2**, **8**, **6** and **4** buttons in this order.

(2) "▮▮ MAINTENANCE ▮▮▮" appears on the LCD, and the machine goes into the maintenance mode.

(3) Double-click "Setup.exe" of the maintenance printer driver which is saved in the temporary folder to execute.

(4) The following screen appears, indicating the detection of device driver installation wizard. Click **Next** to proceed. (Screen below is the example of Windows® XP.)

(5) Alert warning message appears three times, click **Continue Anyway** to proceed.

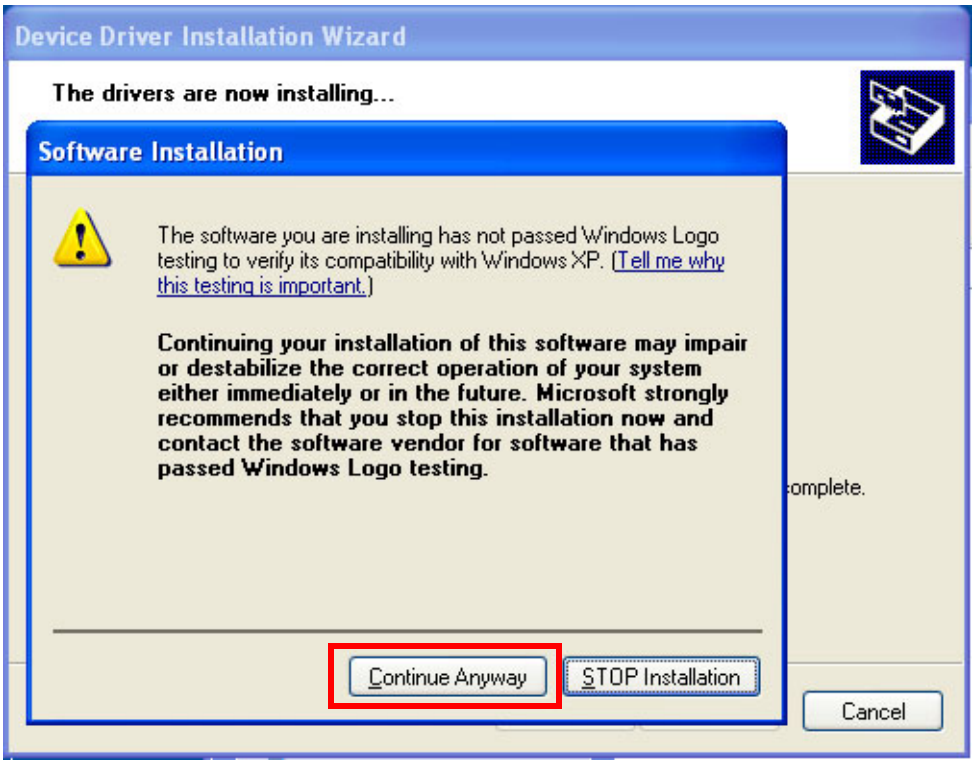

(6) If the device driver is successfully installed, the following message screen appears. Click **Finish** to return.

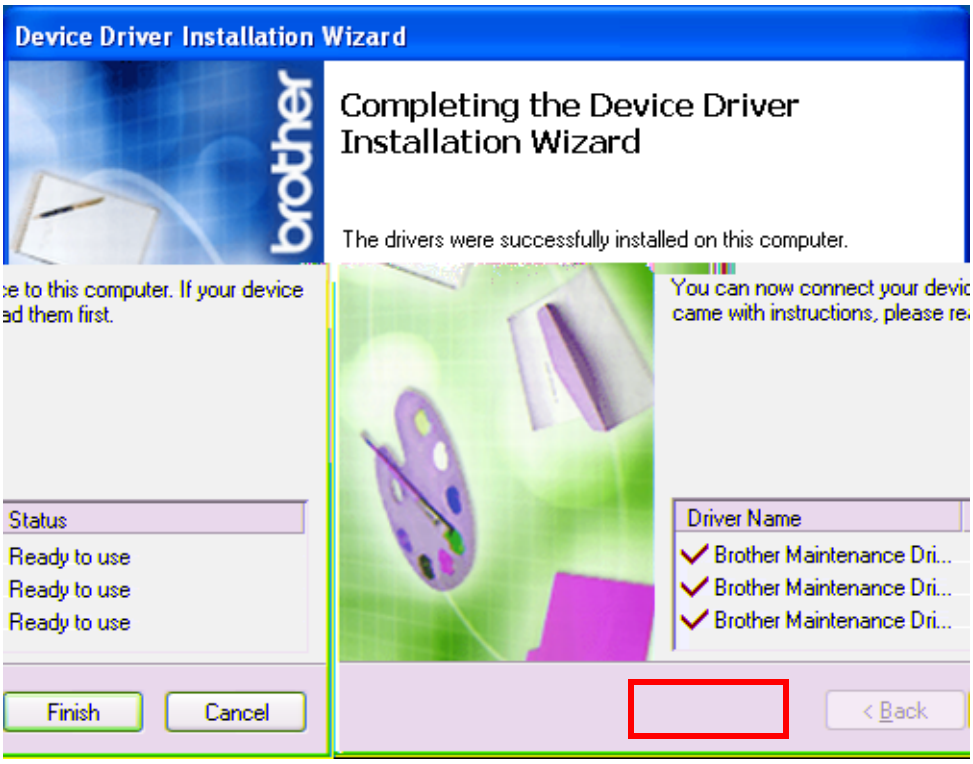

(7) Connect the machine to your computer using the USB cable.

(8) The following screen appears, indicating the detection of new hardware device by the system. Select “No, not this time” and click **Next**.

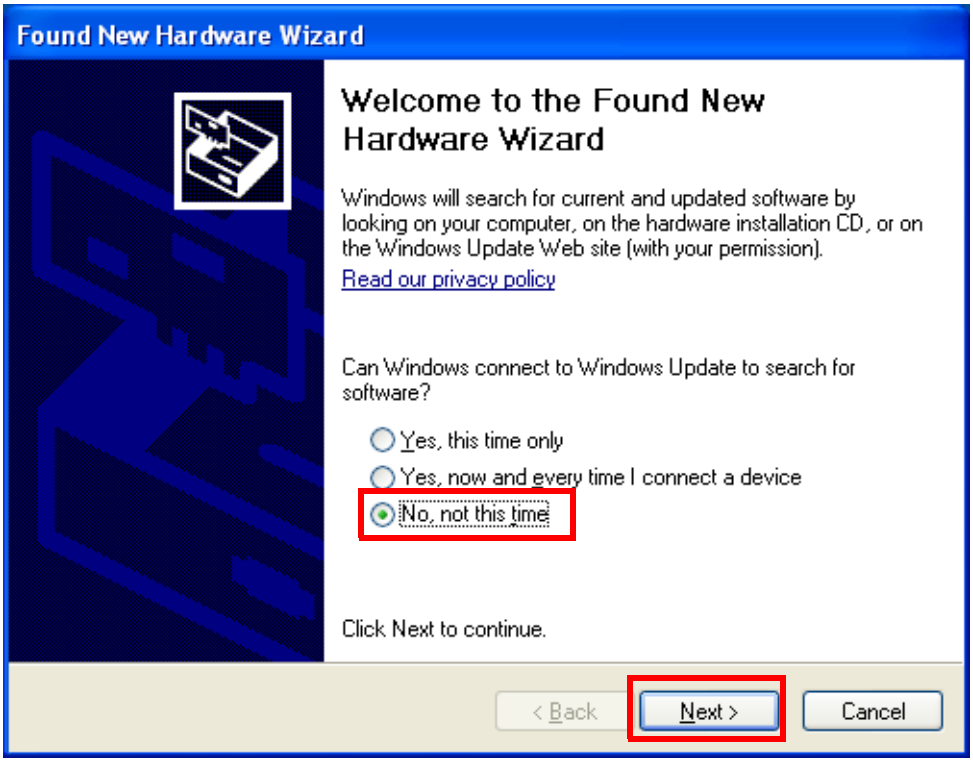

(9) Select “Install the software automatically (Recommended)” and click **Next**.

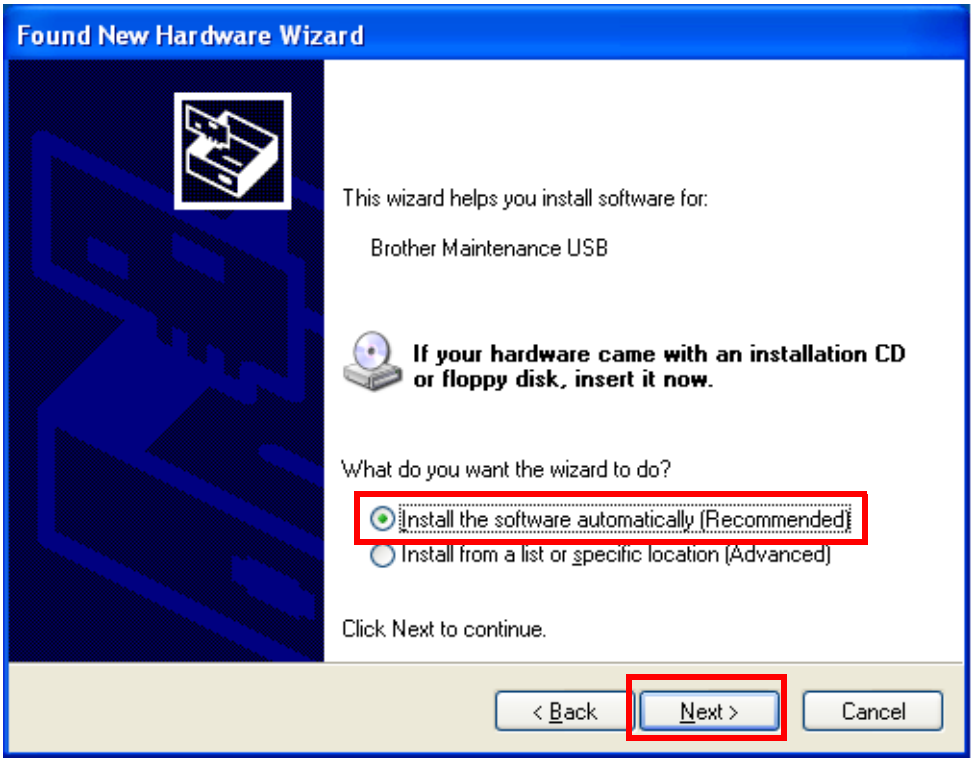

(10) Alert warning message appears, click **Continue Anyway** to proceed.

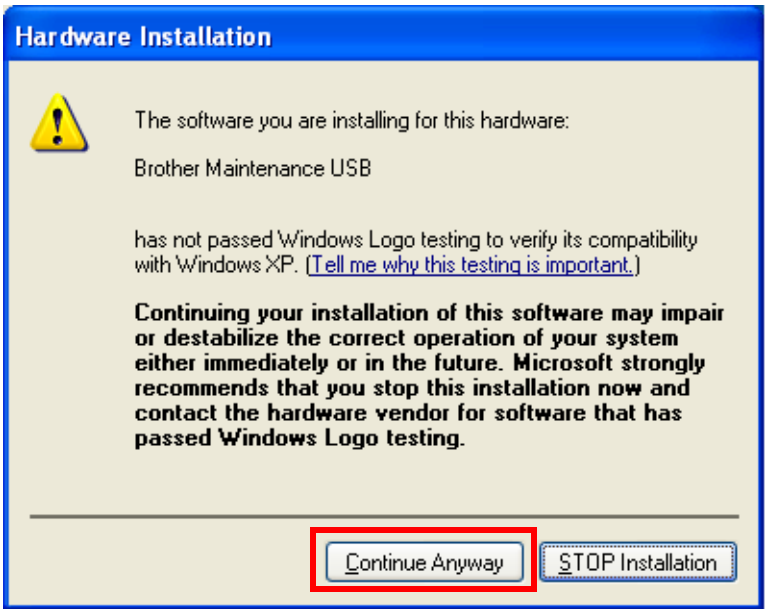

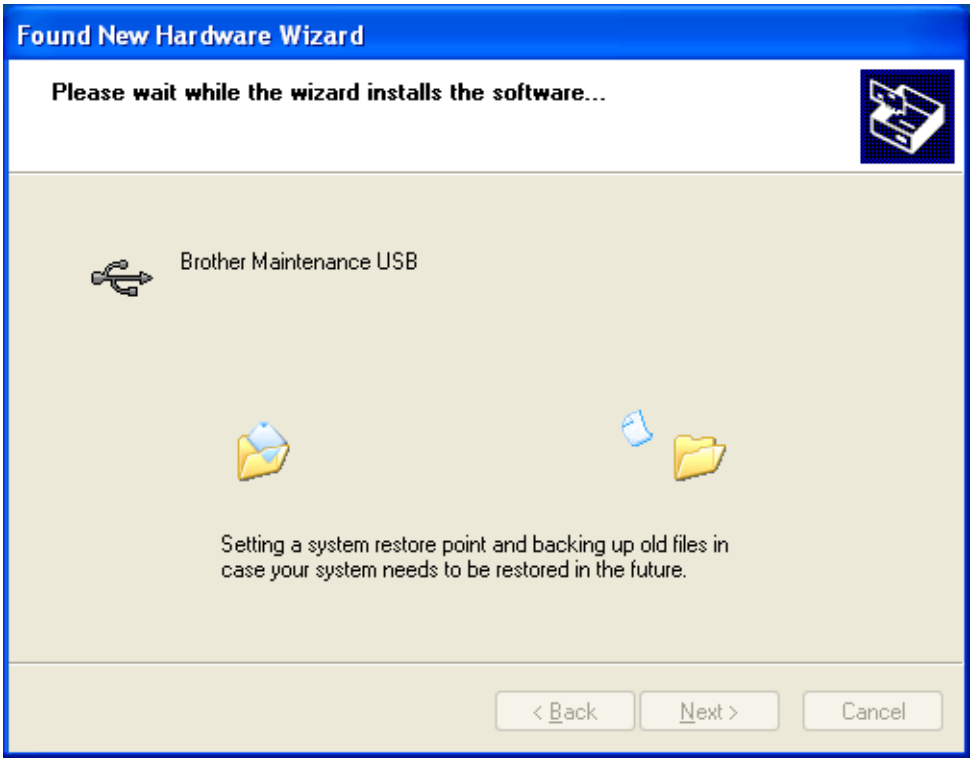

(11) If the Brother maintenance USB printer driver is successfully installed, the following message screen appears. Click **Finish** to return.

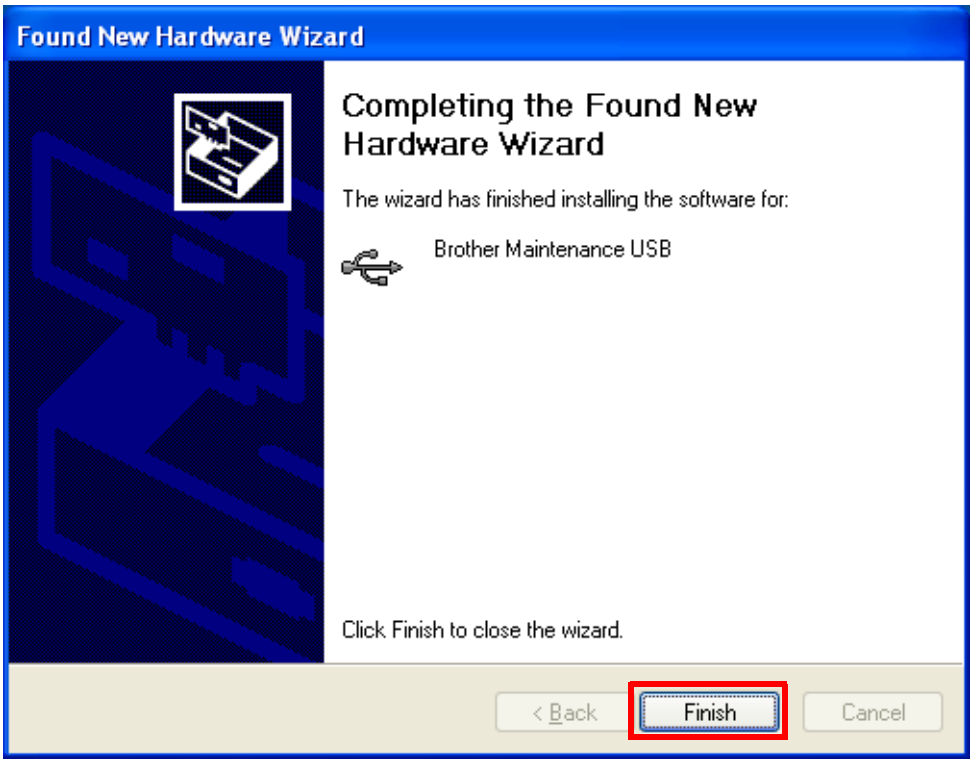

(12) Repeat the steps from (9) to (11) three times, and then complete its installation.

(13) Disconnect the USB cable.

(14) Press the ▲ or ▼ button to display “MAINTENANCE 99” on the LCD. Then, press the **OK** button. The maintenance mode exits from the maintenance mode and return to the ready state.