FAX-L2000IP
FAX-L2000
SERVICE MANUAL

REVISION 0

FAX-L2000IP	H12-2293	230V	EU
FAX-L2000IP	H12-2294	230V	UK
FAX-L2000IP	H12-2295	230V	GER
FAX-L2000IP	H12-2297	230V	FRN
FAX-L2000IP	H12-2298	230V	AUS
FAX-L2000	H12-2283	230V	EU
FAX-L2000	H12-2284	230V	UK
FAX-L2000	H12-2285	230V	GER
FAX-L2000	H12-2287	230V	FRN
FAX-L2000	H12-2288	230V	AUS
FAX-L2000	H12-2289	230V	AE
FAX-L2000 Printer Kit	H11-5583	230V	
FAX-L2000 Network Kit	H11-5593	230V	
Verification Stamp Unit 1	H12-3162		
Yellow Ink to refill for Verification Stamp	H12-3372		
FXL-CASSETTE FEEDER 6 (LTR/500)	H12-3872		
HANDSET REST FP	H12-3913	230V	
HANDSET APPATATUS			

Canon

DEC. 2002 HY8-10AW-000

COPYRIGHT © 2002 CANON INC.

Application

This manual has been issued by Canon Inc. for qualified persons to learn technical theory, installation, maintenance, and repair of products. This manual covers all localities where the products are sold. For this reason, there may be information in this manual that does not apply to your locality.

Corrections

This manual may contain technical inaccuracies or typographical errors due to improvements or changes in products. When changes occur in applicable products or in the content of this manual, Canon will release technical information as the need arises. In the event of major changes in the contents of this manual, Canon will issue a new editions of this manual.

The following paragraph does not apply to any countries where such provisions are inconsistent with local law.

Trademarks

The product names and company names described in this manual are the registered trademarks of the individual companies.

Copyright

This manual is copyrighted with all rights reserved. Under the copyright laws, this manual may not be copied, reproduced or translated into another language, in whole or in part, without the written consent of Canon Inc.

Copyright © 2002 by Canon Inc.

CANON INC.
Consumer Imaging Products Quality Assurance Dept. 1
5-1 Hakusan 7-Chome, Toride-city, Ibaraki 302-8501, Japan

DTP System

The data contained on this manual were created using Windows 2000® computers.
Document creation and page layout were performed using Adobe® PageMaker® 6.5.
Logos and illustrations were created using Adobe® Illustrator® 9.0.

I. MEANING OF MARKS

The marks used in this manual have the following meanings.

Mark	Meaning
	States a precaution to be taken to prevent danger to personnel, damage to the product, or damage to electronic components by discharge of static electricity. for example.
	States a precaution to be taken to prevent damage to electronic components by electrostatic discharge.
	If the following mark is used, following the directions given.
	Informs you of fire-related cautions.
	Informs you that the plug must be removed from the power outlet before starting an operation.
NOTE	Gives useful information to understand descriptions.
REFERENCE	Indicates sections to be read to obtain more detailed information.

II. ABOUT THIS MANUAL

This manual is divided into five parts, and contains information required for servicing the product.

Each of the above parts is further divided into the following four chapters:

Chapter 1: General Description

This part explains product specifications and the how to service the unit safely. It is very important, so please read it.

Chapter 2: Technical Reference

This part explains the technical theory the product.

Chapter 3: Assembly and Disassembly

This part explains the assembly and disassembly of the product.

Chapter 4: Maintenance and Service

This part explains how to maintain the products for adjustment and troubleshooting and service operations and service switches.

Chapter 5: Appendix

This part explains the informations of the optional products and user data flow.

REFERENCE

- For more details of user operations and user reports, see the separate volume of *USER'S GUIDE*.
- Detailed description of each SSSW/parameter is not given in this manual except the new SSSWs/parameters added to this model.
  See *G3 Facsimile Service Data Handbook (supplied separately)* for details them.
- See the *G3/G4 Facsimile Error Code List (Rev.2, supplied separately)* for details of the error codes not shown in this manual.

III. REVISION HISTORY

REVISION	CONTENT
0	Original

IV. TABLE OF CONTENTS

Page	
	Chapter 1: General Description
1 - 1	1. FEATURES
1 - 1	1.1 Overview
1 - 1	1.1.1 Facsimile overview
1 - 1	1.1.2 Option overview
1 - 3	2. SPECIFICATIONS
1 - 3	2.1 General Specifications
1 - 4	2.2 Communication Specifications
1 - 6	2.3 Scanner Section Specifications
1 - 8	2.4 Printer Section Specifications
1 -11	2.5 Copy Specifications
1 -12	2.6 Functions
1 -15	2.7 Printer Specifications
1 -16	3. OVERVIEW
1 -16	3.1 External View
1 -19	3.2 Operation Panel
1 -26	3.3 Consumables
1 -26	3.3.1 Toner cartridge
1 -27	3.3.2 Print media
	Chapter 2: Technical Reference
2 - 1	1. COMPONENT LAYOUT
2 - 1	1.1 Parts Layout
2 - 6	2. SCANNER MECHANISM
2 - 7	2.1 Names and Functions of Parts:
2 -10	3. PAPER SUPPLY SECTION
2 -11	3.1 Recording Paper Pickup Function
2 -11	3.1.1 Paper size error
2 -12	3.2 Recording Paper Pickup Jam Detection Configuration
2 -12	3.2.1 Pick-up delay jam
2 -12	3.2.2 Pick-up stationary jam
2 -12	3.2.3 Delivery delay jam
2 -13	3.2.4 Delivery stationary jam
2 -13	3.2.5 Reversing delay jam
2 -13	3.2.6 Reversing stationary jam
2 -13	3.2.7 Duplex pickup delay jam
2 -13	3.2.8 Duplex pickup stationary jam
2 -14	4. PRINTER SECTION
2 -15	4.1 Laser/Scanner Section
2 -16	4.2 Toner Cartridge
2 -16	4.2.1 Toner level detection/cartridge detection
2 -16	4.3 Toner Transfer Section
2 -16	4.4 Fixing Section
2 -17	4.4.1 Fixing heater malfunction

2-19 5. NEW FUNCTION
2-19 5.1 Twin Beam Method (Laser/Scanner System)

Chapter 3: Assembly and Disassembly
3- 1 1. ATTENTION TO BE PAID DURING ASSEMBLY/ DISASSEMBLY
3- 1 1.1 Safety Cautions
3- 2 1.2 General Cautions
3- 3 1.3 Product-Inherent Cautions
3- 4 1.4 All Clear (Action in the Event of Abnormality)
3- 5 2. DISASSEMBLY/ASSEMBLY
3- 5 2.1 Disassembly Procedure
3- 5 2.1.1 Document separation roller (Lower)
3- 6 2.1.2 Document separation roller (Upper)
3- 8 2.1.3 Paper pick-up roller and separation pad (Multi-purpose)
3-13 2.1.4 Paper pick-up roller (Main unit)
3-15 2.1.5 Paper pick-up roller (Feeder)
3-17 2.1.6 Separation pad (Cassette)
3-18 2.1.7 Fixing ass'y

Chapter 4: Maintenance and Service
4- 1 1. MAINTENANCE LIST
4- 1 1.1 Consumables
4- 1 1.2 Cleaning
4- 2 1.3 Periodic Inspection
4- 2 1.4 Periodic Replacement Parts
4- 2 1.5 Adjustment Items
4- 2 1.6 General Tools
4- 2 1.7 Special Tools
4- 3 2. HOW TO CLEAN PARTS
4- 3 2.1 Main Unit Outer Covers
4- 3 2.2 Document Pick-up Roller
4- 3 2.3 Document Separation Roller (Upper)
4- 3 2.4 Document Separation Roller (Lower)
4- 3 2.5 Document Feed Roller
4- 3 2.6 Document Eject Roller
4- 3 2.7 Scanning Glass (Contact Sensor)
4- 3 2.8 White Sheet
4- 5 2.9 Transfer Guide
4- 6 2.10 Multi-purpose Tray Pick-up Roller
4- 6 2.11 Cassette Pick-up Roller
4- 6 2.12 Separation Pad
4- 6 2.13 Registration Shutter
4- 6 2.14 Transfer Charging Roller
4- 7 2.15 Static Charge Eliminator
4- 7 2.16 Paper Feed Belt
4- 7 2.17 Paper Feed Guide

4 - 7 2.18 Duplex Feed Guide
4 - 7 2.19 Fixing Entrance Guide
4 - 7 2.20 Fixing Film
4 - 7 2.21 Fixing Pressure Roller
4 - 8 3. ADJUSTMENT
4 - 8 3.1 Checking the Nip Width of the Pressure Roller
4 - 9 4. TROUBLESHOOTING
4 - 9 4.1 Troubleshooting Index
4 -11 4.2 Errors Shown on the Display
4 -11 4.2.1 User error message
4 -16 4.2.2 Printer error message
4 -18 4.2.3 Error codes
4 -30 4.3 Errors not Shown on the Display
4 -30 4.3.1 General errors
4 -30 4.3.2 Printing problems
4 -37 4.3.3 Scanning problems
4 -39 4.3.4 Test mode function problems
4 -42 4.4 Processing Communication Problems
4 -42 4.4.1 Initial identification of problems
4 -43 4.4.2 Procedures for processing communication problems
4 -47 5. SERVICE SWITCHES
4 -47 5.1 Hardware Switches
4 -47 5.2 Service Data Setting
4 -49 5.3 Service Data Registration/Setting Method
4 -50 5.4 Service Data Flowchart
4 -58 5.5 Explanation of SSSW (Service Soft Switch Settings)
4 -59 5.6 New SSSWs/Parameters Added to this Model
4 -68 6. TEST FUNCTIONS
4 -68 6.1 Test Mode Overview
4 -69 6.2 Test Mode Flowchart
4 -70 6.3 D-RAM Tests
4 -71 6.4 Print Tests
4 -72 6.5 Modem and NCU Tests
4 -76 6.6 AGING Test
4 -76 6.7 Faculty Tests
4 -82 7. SERVICE REPORT
4 -82 7.1 Report Output Function
4 -82 7.1.1 User report output functions
4 -84 7.1.2 Service report output functions
4 -120 8. WIRING DIAGRAM
4 -120 8.1 Wiring Diagram

Chapter 5: Appendix

5 - 1 1. INSTALLATION
5 - 1 1.1 Setting up
5 - 2 1.2 Checking Operation

5 - 2 1.3 Moving the Fax Unit
5 - 3 2. USER DATA FLOW
5 - 3 2.1 User Data Flow (by Operation Panel)
5 -22 2.2 Printer Setting Menu
5 -22 2.2.1 Printer setting menu registration/setting method
5 -23 2.2.2 Printer setting menu flow
5 -26 3. OPTION
5 -26 3.1 Option Memory (32M-byte/64M-byte)
5 -26 3.1.1 Safety and precautions
5 -26 3.1.2 Service operations
5 -31 3.1.3 Maintenance and service
5 -32 3.2 Handset Rest Fp
5 -32 3.2.1 Service operations
5 -34 3.2.2 Maintenance and service
5 -35 3.3 Verification Stamp Unit
5 -35 3.3.1 Service operations
5 -39 3.4 FXL-CASSETTE FEEDER 6 (LTR/500)
5 -39 3.4.1 Safety and precautions
5 -40 3.4.2 Service operations
5 -44 3.4.3 Technical information
5 -45 3.4.4 Operations
5 -46 3.4.5 Maintenance and service
5 -47 3.5 FAX-L2000 Printer Kit
5 -47 3.5.1 Safety and precautions
5 -47 3.5.2 Service operations
5 -55 3.5.3 Technical information
5 -55 3.5.4 Maintenance and service
5 -56 3.6 FAX-L2000 Network Kit
5 -56 3.6.1 Safety and precautions
5 -56 3.6.2 Service operations
5 -65 3.6.3 Technical information
5 -65 3.6.4 Maintenance and service

This page intentionally left blank

Chapter 1

General Description

1. FEATURES

1.1 Overview

This G3 facsimile transceiver conforms to ITU-T international standards.

1.1.1 Facsimile overview

Improved speed

This fax unit is equipped with the ITU-T standard V.34 mode which enables transmission speeds up to 33,600bps, more than double the rate of older G3 fax models.

Full support of ITU-T subaddresses and passwords

You can employ ITU-T subaddresses and passwords to communicate not only with other Canon faxes, but fax machines of other manufacturers as well.

Economical and quiet

Canon's RAPID Fusing System™ realizes quiet operation while you save money. If the fax machine remains idle for a specified length of time, the fax machine automatically shuts itself down and enters the low energy sleep mode, and will remain in this low energy mode until the fax machine receives a document transmission or until you press the ENERGY SAVER button, You can also use recycled paper in this fax.

JBIG, Improved image data compression

JBIG is a ITU-T standard image data compression method. JBIG's compression method allows data to be compressed more efficiently than MMR, a conventional compression method. JBIG is especially effective when transmitting halftone image documents. Because the smaller data size requires less transmission time, JBIG saves you time and money.ctual compression ratio may vary with image.

1.1.2 Option overview

Fax memory

32MB memory module is available to expand the fax memory capacity.

Printer memory

32MB or 64MB memory module is available to expand the printer memory capacity.

Cassette feeder 6 (500 sheet capacity)

After installation of the optional Cassette feeder 6.

Verification stamp unit

The verification stamp unit stamps a check mark near the trailing edge of the scanning side of each document to verify that all documents are transmitted correctly without any errors, such as double feeding. This unit is installed near the contact sensor in the lower reader frame unit.

Handset rest

The handset rest includes a handset rest, a handset rest holder, and installation screws. Installing the handset rest enables the telephone functions to be used. (Prepare the handset CT-19 designed for each country, since it is not included in this kit.)

FAX-L2000 printer kit

This option enables your FAX-L2000 to operate as a printer. FAX-L2000 Printer Kit is a standard feature for FAX-L2000IP.

When built inside the host machine, it enables the host function as a printer.

FAX-L2000 network kit

This option enables your FAX-L2000 to operate as a network printer. FAX-L2000 Network Kit is a standard feature for FAX-L2000IP.

Built into the host machine together with a FAX-L2000 Printer kit, it will enables the host to function as a network printer.

2. SPECIFICATIONS

2.1 General Specifications

Type

Desktop facsimile transceiver

Body color

Cool White

Power source

Voltage	from AC 180 to 264 V
Frequency	from 48 to 62 Hz

Power consumption

Standby (Energy Saver On)	approx. 5W (FAX-L2000)
	approx. 15W (FAX-L2000IP)
Standby (Energy Saver Off)	approx. 15W (FAX-L2000)
	approx. 20W (FAX-L2000IP)
Operation	approx. 480W
Maximum	approx. 980W

Main unit usage environment

Temperature	10 °C to 32.5 °C (50 °F to 90.5 °F)
Humidity	20% to 80% RH
Horizontality	±3° or less

Operating noise

Measured in accordance with ISO standards

Standby	approx. 30 dB(A)
Operating	approx. 59 dB(A)

Dimensions

499mm (W) × 499mm (D) × 459mm (H) (19.65" (W) × 19.65" (D) × 18.07" (H))
Not including handset

Weight

FAX-L2000	Approx. 24 kg (Approx. 52 lbs)
FAX-L2000IP	Approx. 25 kg (Approx. 55 lbs)

Not including handset, paper, toner cartridge, document feeder tray, document output tray, upper output tray

2.2 Communication specifications

Applicable lines

Analog line (one line)
PSTN (Public Switched Telephone Network)

Handset (Option)

Handset with no numeric buttons

Transmission speed

33.6k, 31.2k, 28.8k, 26.4k, 24k, 21.6k, 19.2k, 16.8k, 14.4k, 12k, TC9.6k, TC7.2k, 9.6k, 7.2k, 4.8k, 2.4k bps
With automatic fallback function

Transmission method

Half-duplex

Transmission control protocol

ITU-T V.8 protocol V.34 protocol/ECM protocol
ITU-T T.30 binary protocol/ECM protocol

Modulation method

G3 image signals	ITU-T V.27ter (4.8k, 2.4k bps)
	ITU-T V.29 (9.6k, 7.2k bps)
	ITU-T V.17 (14.4k, 12k, TC9.6k, TC7.2k bps)
	ITU-T V.34 (33.6k, 31.2k, 28.8k, 26.4k, 24k, 21.6k, 19.2k, 16.8k, 14.4k, 12k, 9.6k, 7.2k, 4.8k, 2.4k bps)
G3 procedure signals	ITU-T V.21 (No.2) 300 bps
	ITU-T V.8, V.34 1200, 600, 300 bps

Coding

MH, MR, MMR, JBIG

Error correction

ITU-T ECM

Canon express protocol

None

Time required for transmission protocol

Mode	Pre-message Protocol *1	Post-message Protocol *2 (between pages)	Post-message Protocol *3 (after pages)
V.8 / V.34	Approx. 6 s	Approx. 1 s	Approx. 1 s
T.30 Standard	Approx. 18 s	Approx. 4 s	Approx. 4 s

*1 Time from when other facsimile is connected to the line until image transmission begins.
*2 Post-message (between pages): Time from after one document has been sent until transmission of the next document starts if several pages are transmitted.
*3 Post-message (after last pages): Time from after image transmission is completed until line is switched from facsimile to telephone.

Minimum transmission time

G3	10 ms
G3 (ECM)	0 ms

Transmission output level

-8 to -15 dBm

Minimum receive input level

-43 dBm

Modem IC

CONEXANT FM336 Plus

2.3 Scanner Section Specifications

Type

Sheets

Sheet dimensions

Maximum	Width 279.4mm × length 1m (Width 11.00" × length 39.4")
Minimum	Width 148mm × length 148mm (Width 5.83" × length 5.83")
Thickness	Multiple pages 0.06mm to 0.13mm (0.002" to 0.005") Single page 0.05mm to 0.23mm (0.002" to 0.009")

ADF capacity

A4/Letter	50 sheets or less
B4/Legal	20 sheets or less
11 inch × 17 inch	20 sheets or less

Effective scanning width

A4	208 mm (8.19")
LTR/LGL	214 mm (8.43")

Scanning method

Contact sensor scanning method

Scanning line density

Standard	8 dots/mm (203.2 dpi) × 3.85 lines/mm (97.79 dpi)
Fine	8 dots/mm (203.2 dpi) × 7.7 lines/mm (195.58 dpi)
Superfine	8 dots/mm (203.2 dpi) × 15.4 lines/mm (391.16 dpi)
Ultrafine	16 dots/mm (406.4 dpi) × 15.4 lines/mm (391.16 dpi)

Scanning density adjustment

Lighter, Standard, Darker:	The density level of each mode can be selected by the user data.

Half tone

256-gradation error diffusion system (UHQ)

Scanning range

Item	A4	Letter	Legal
Effective scanning width	208 ±0.1 mm (8.19"±0.004")	214 ±0.1 mm (8.43"±0.004")	214 ±0.1 mm (8.43"±0.004")
Effective scanning length (Fine, Superfine)	293 ±4.0 mm (11.54"±0.16")	275.4±4.0 mm (10.84"±0.16")	351.6±4.0 mm (13.84"±0.16")
Effective scanning length (Standard)	293 ±5.5 mm (11.54"±0.22")	275.4 ±5.5 mm (10.84"±0.22")	351.6 ±5.5 mm (13.84"±0.22")
Left margin	1.0 ±3.0 mm (0.04" ±0.12")	1.0 ±3.0 mm (0.04" ±0.12")	1.0 ±3.0 mm (0.04" ±0.12")
Right margin	1.0 ±3.5 mm (0.04" ±0.14")	1.0 ±3.5 mm (0.04" ±0.14")	1.0 ±3.5 mm (0.04" ±0.14")
Top margin	2.0 ±2.0 mm (0.08" ±0.08")	2.0 ±2.0 mm (0.08" ±0.08")	2.0 ±2.0 mm (0.08" ±0.08")
Bottom margin (Fine, Superfine)	2.0 ±2.0 mm (0.08" ±0.08")	2.0 ±2.0 mm (0.08" ±0.08")	2.0 ±2.0 mm (0.08" ±0.08")
Bottom margin (Standard)	2.0 ±3.5 mm (0.08" ±0.14")	2.0 ±3.5 mm (0.08" ±0.14")	2.0 ±3.5 mm (0.08" ±0.14")

Units are inches with mm shown in parentheses.

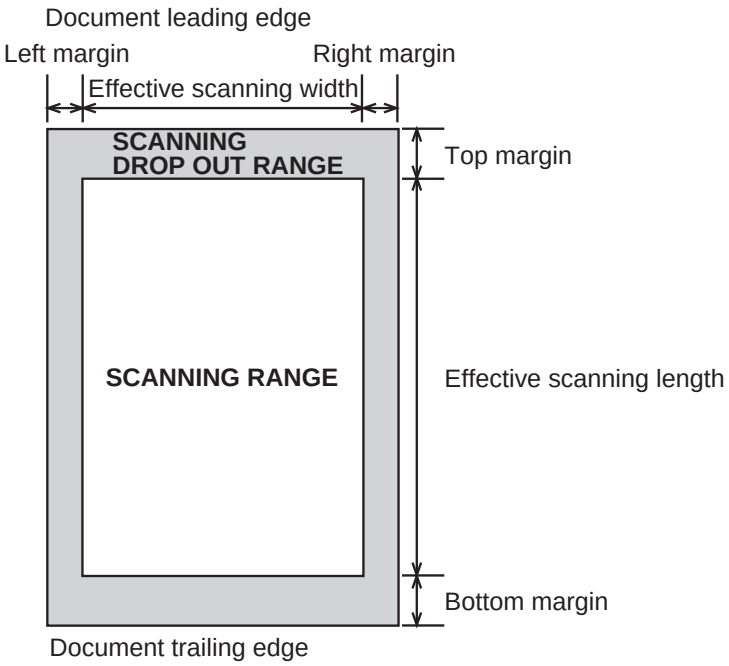

Figure 1-1 Scanning Range

NOTE

Document scanning width “A4/LTR” is set in service data #1SSSW SW 06, bit 4.

2.4 Printer Section Specifications

Paper dimensions

A4	210 mm × 297 mm (8.27" × 11.69")
Letter	216 mm × 279 mm (8.50" × 10.98")
Legal	216 mm × 356 mm (8.50" × 14.02")

Paper cassette capacity

Cassette
25 mm (0.98") or less in stacking height (Approx. 250 sheets)
50 mm (1.97") or less in stacking height (Approx. 500 sheets)

Multi-purpose (MP) tray
10mm (0.39") or less in stacking height (Approx. 100 sheets)

Tray stacking

Exit tray

Plain	250 sheets
Heavy/Bond	150 sheets
Recycled	100 sheets
OHP	1 sheet
Label paper	1 sheet

Face-up tray

Plain	50 sheets
Heavy/Bond/Recycled	30 sheets
Envelope	10 sheets
OHP	1 sheet
Label paper	1 sheet
Postcard	40 sheets
Index Card	35 sheets

Printing method

Laser beam printer

Printing cartridge

Product name	Canon FX7 Toner Cartridge	
Product code	H11-6471	
Strage conditions	Temperature	0 °C to 35 °C (32 °F to 95 °F)
	Humidity	35% to 85% RH
Valid period	2.5 years from date of manufacture displayed on carton.	

Toner detection

Antenna method

Printing speed

A4	Approx. 18 Sheets/min
Letter	Approx. 19 Sheets/min

Printing resolution

1200 dpi × 1200 dpi

Reduction for reception

Fixed reduction (75%, 90%, 95%, 97%)
Auto reduction (70~100%)

Recommended recording paper

KANGAS

Weight	80 g/m^2
Paper size	A4
Manufactured by	KANGAS

NEUSIEDLER Canon Paper

Weight	80 g/m^2
Paper size	A4
Manufactured by	NEUSIEDLER

Canon Copier LTR/LGL Premium Paper

Weight	75 g/m^2
Paper size	Letter, Legal
Manufactured by	BOISE CASCADE

Printing range

Item	A4	Letter	Legal
Effective printing width	204±2.1 mm (8.03" ±0.08)	210±2.1 mm (8.27" ±0.08)	210±2.1 mm (8.27" ±0.08)
Effective printing length	289.0 ±2.9 mm (11.38" ±0.11")	271.4 ±2.7 mm (10.69" ±0.11")	347.6 ±3.5 mm (13.69" ±0.14")
Left margin	3.0 ±2.5 mm (0.12" ±0.10")	3.0 ±2.5 mm (0.12" ±0.10")	3.0 ±2.5 mm (0.12" ±0.10")
Right margin	3.0 ±4.6 mm (0.12" ±0.18")	3.0 ±4.6 mm (0.12" ±0.18")	3.0 ±4.6 mm (0.12" ±0.18")
Top margin	3.0 ±2.0 mm (0.12" ±0.08")	3.0 ±2.0 mm3 (0.12" ±0.08")	3.0 ±2.0 mm (0.12" ±0.08")
Bottom margin	5.0 ±4.9 mm (0.20" ±0.19")	5.0 ±4.7 mm (0.20" ±0.19")	5.0 ±5.5 mm (0.20" ±0.22")

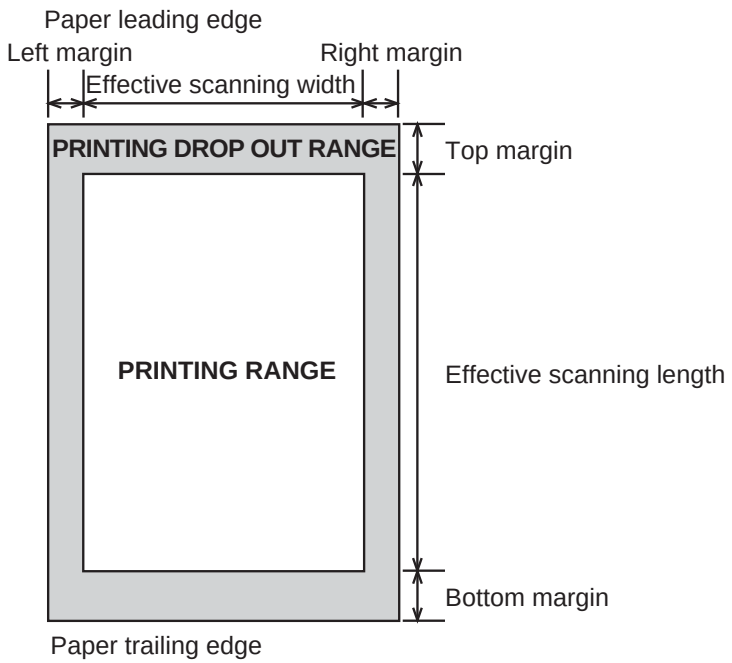

Figure 1-2 Printing Range

2.5 Copy Specifications

Copy resolution

Scanning	600 dpi × 600 dpi (Memory copy)
Printing	1200 dpi × 1200 dpi

Multiple copy

99 copies

Color copy

None

Copy magnification ratio

97%, 95%, 90%, 75%

Zoom

50 % to 200 %

2.6 Functions

FAX/TEL switching

None

Answering machine connection

None

Polling

Polling transmission

The document is accumulated into memory ahead of time, then transmitted when there is a polling request from the other party.

Polling reception

Receives from a fax in automatic transmission mode

One touch locations	Max. 72
Coded speed dial locations	Max. 128

Confidential reception

Memory reception of images from a transmitting fax that has the confidential transmission function for memory reception.

Box No.		00~99 (Up to 50 boxes can be created.)
Subaddress	(ITU-T standard)	Max. 20 digits
Transmission password	(ITU-T standard)	Max. 20 digits
Operation password		4 digits

Confidential transmission

Sends transmission images to receiving fax machines with the confidential reception function for memory reception.

Box No.		00~99
Subaddress	(ITU-T standard)	Max. 20 digits
Transmission password	(ITU-T standard)	Max. 20 digits
Destinations		Max. 200

Remote reception

Method	ID call# (ID input method)
Remote ID (with ID call#)	2 digits

Auto dialing

Telephone number digits	Max. 39 digits
One-touch dial	Max. 72
Coded speed dial	Max. 128
Group dial	Max. 199 (One-touch: 71, Coded speed dial: 128)
Redial	Numeric button redial function (max. 120 digits)

Delayed transmission

Locations	Max. 210 (One-touch :72, Coded speed dial :128, Numeric button:10)
Designated time	Max. 5 time

Broadcast transmission

Locations	Max. 210 (One-touch :72, Coded speed dial :128, Numeric button:10)
Group button addresses	Max. 199 (One-touch :71, Coded speed dial :128)

Relay broadcasting originating

Group No.	00~99 (Up to 50 boxes can be created.)
Subaddress (ITU-T standard)	Max. 20 digits
Transmission password (ITU-T standard)	Max. 20 digits
Destinations	Max. 200

Relay broadcasting

Group No.	00~99
Subaddress (ITU-T standard)	Max. 20 digits
Transmission password (ITU-T standard)	Max. 20 digits
Destinations	Max. 200

Closed network

The 8 bit ID is specified by SSSW.

Direct mail prevention

Telephone numbers compared	Telephone numbers registered under one-touch and coded speed dial, and a TSI signal
Number of digits	Lower 6 digits (number of digits can be changed with service data #3)

Activity management

a) User report

Activity management report
(Every 40 transactions : Can be separated into Tx and Rx)
Activity report (sending / receiving)
1-touch spd dial list
Coded speed dial list
Group dial list
Memory clear list
User's data list
Multi activity report
Transmission reserve list
Document memory list

b) Service report

System data list
System dump list

Transmitting terminal identification

Items	Time, telephone No. (max 20 digits), senders ID, address, number of transmitted pages (max 3 digits)
Address	Can be registered with one-touch/ coded speed dial keys (16 characters)
Senders ID	24 characters (1 name)

Display

Display size	2 rows × 20 digits

Program key

The document mode for scanning or a transmission result report can be registered with the program key.

Redial

Interval	2 min. (from 2 to 99 min. can be selected in user data)
Count	2 times (from 1 to 10 times can be selected in user data)

Memory backup

Backup contents	dial registration data, user data, service data, time
Backup IC	128 kbyte SRAM
Backup battery	Lithium battery 3.0 V DC / 1000 mAh
Battery life	Approx. 5 years

Image data backup

Backup contents	Memory reception, memory copy, delayed transmission and broadcast transmission image data, activity management report
Backup IC	16 Mbyte DRAM 32 Mbyte DRAM (optional memory)
Backup battery	Rechargeable vanadium lithium battery 3.0V DC/ 50 mAh
Battery life	40 cycles with 100% discharge (Temperature 25 °C (77 °F))
Backup time	12 hours

Time

Management data	year/month/day/hour/minute (24 hour display)
precision	±30 sec per month

2.7 Printer Specifications

FAX-L2000 Printer Kit

CPU	Power PC405 (200 MHz)
ROM	8 MB
RAM	Standard: 16 MB (80 MB max.)
Interface	Parallel (IEEE 1284), USB
Page description Language	PCL 5e, PCL 6
OS	Windows 95/98/NT4.0/2000/Me/XP
	45 scalable fonts as standard (Micro Type fonts); 32 TrueType fonts, 9 bitmap fonts
Duplex print	Printing from PC only.

FAX-L2000 Network Kit

Interface	10Base-T, 100Base-TX
CPU	RISC CPU (100 MHz)
Protocol	IPX/SPX, PServer, NDS PServer, NDPS, LPD, Port9100, NetBIOS, IPP, PAP (Apple Talk Printer Access Protocol)

3. OVERVIEW

3.1 External View

Front View

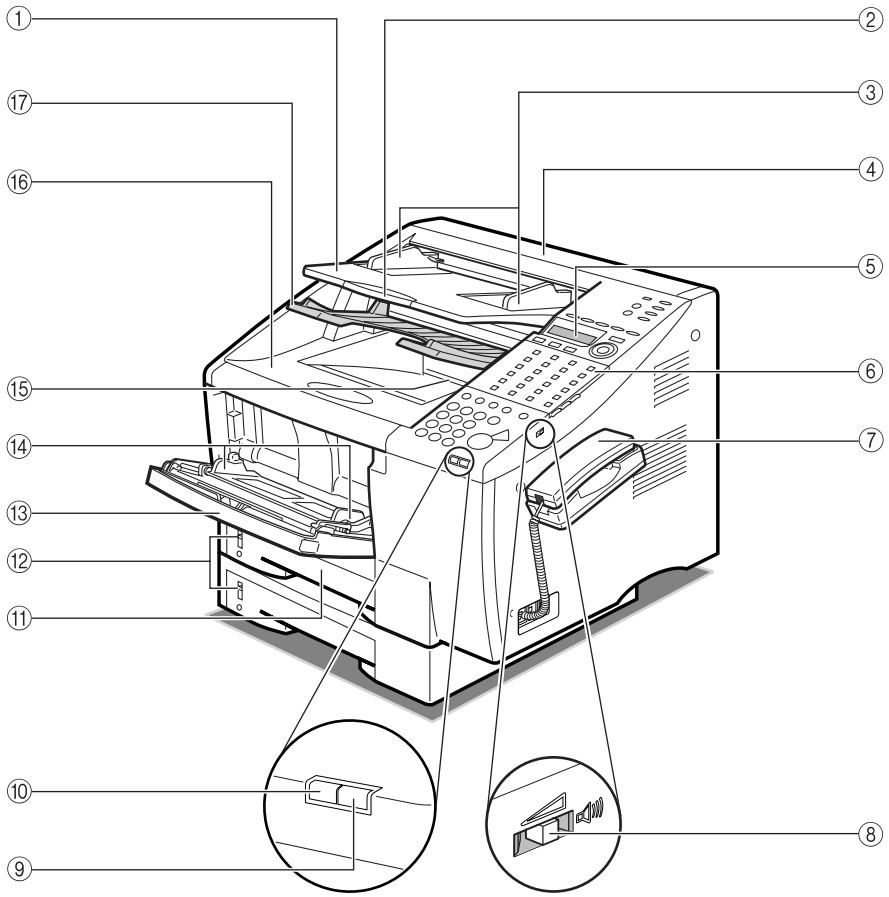

Figure 1-3 External View (1)

① **Document Feeder Tray**

Holds documents for scanning.

② **Document Extension Tray**

Open to support long documents during scanning.

③ **Document Guides**

Adjust to the width of the document.

④ **ADF (Automatic Document Feeder) Cover**

Provides access to help you clear paper jams, and clean the scanning area.

⑤ **LCD Display**

Displays menu items and messages.

⑥ **Operation Panel**

Use the operation panel keys to operate the machine.

⑦ **Handset (Optional)**

Detachable handset.

⑧ **Speaker Volume Switch**

Adjusts the speaker's volume.

⑨ **Error Lamp**

A light that blinks red when a problem occurs.

⑩ **In Use/Memory Lamp**

A light that blinks green when the machine is transmitting or receiving documents, or maintains a steady green when there are documents stored in memory.

⑪ **Paper Cassettes**

Adjustable to A4, A5, B5, executive, legal, and letter paper sizes. Each cassette holds approximately 250 sheets of paper.

⑫ **Paper Volume Status Bar**

Indicates the level of the current paper supply.

⑬ **MP (Multi-Purpose) Tray**

Adjustable to A4, A5, B5, executive, legal, and letter paper sizes. Holds approximately 100 sheets of paper.
Also holds envelopes and free-size paper.

⑭ **Paper Guides**

Adjust to the width of the paper.

⑮ **Output Tray**

Holds printed documents after they are ejected from the machine.

⑯ **Printer Cover**

Covers the toner cartridge.

⑰ **Document Output Tray**

Holds documents that have been sent or copied.

Figure 1-4 External View (2)

Rear View

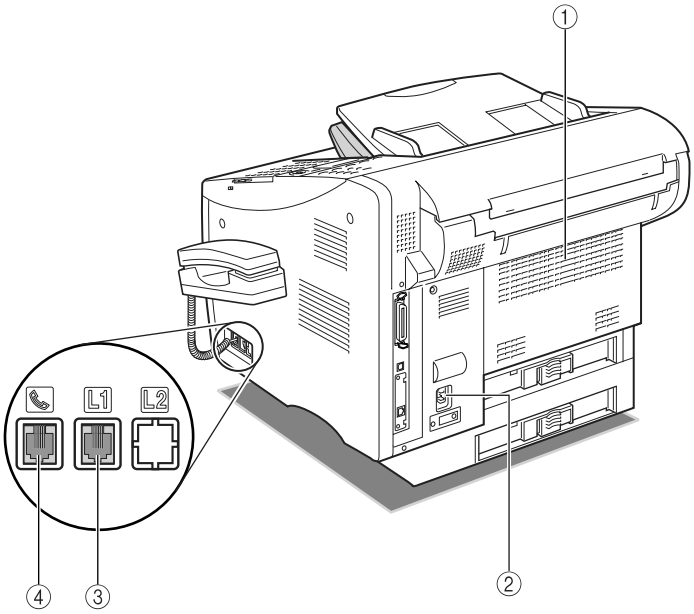

① **Face-Up Tray**

Holds printed documents after they are ejected from the machine.

② **Power Socket**

Connect the power cord here.

③ **Telephone Line Jack (L1)**

Connect the telephone line here.

④ **Handset Jack**

Connect the optional handset or an extension telephone.

Figure 1-5 External View (3)

3.2 Operation Panel

One-Touch Panels Closed

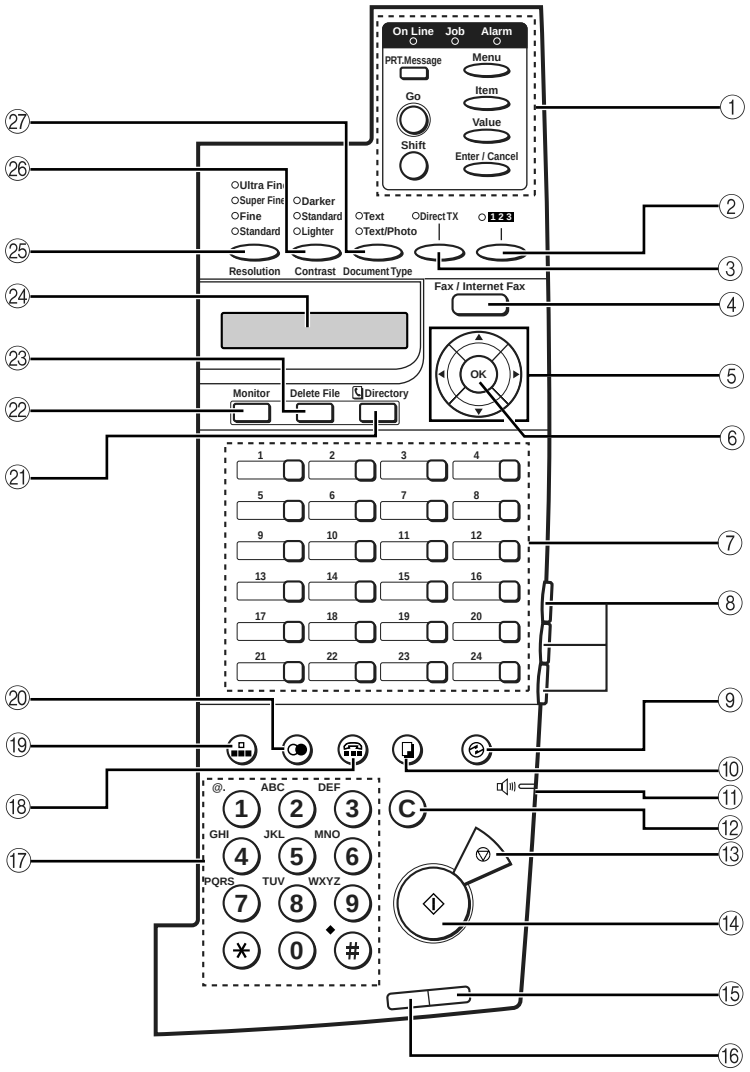

Figure 1-6 Operation Panel (1)

① **Printer Operation Panel**

These keys control the printing function of the machine. For details, see page 1-24.
For the FAX-L2000, the installation of the optional FAX-L2000 Printer Kit is necessary to use these keys.

② **(Counter Check)**

Press to check the counter information.

③ **Direct TX**

Sets the machine to the Direct Sending mode so you can send a document ahead of other documents stored in memory. Direct Sending scans a document and sends it immediately without storing the document in memory.

④ **Fax/Internet Fax**

Press to send an Internet Fax. For the FAX-L2000, the installation of the optional FAX-L2000 Network Printer/Fax Kit is necessary to use the Internet Fax function.

⑤ **◀ ▶Cursor Keys**

Move the cursor left or right during data registration.

▲▼ Search Keys

Enable you to scroll through the display so you can see other options and selections in the menus during data registration.

They also enable you to search through the registered fax numbers during directory dialing.

⑥ **OK**

Selects a menu item during data registration.

⑦ **One-Touch Speed Dialing Keys**

Dial numbers registered under one-touch speed dialing keys.

⑧ **One-Touch Speed Dialing Panels**

The first panel displays keys 1-24. Open the first panel to access keys 25-48. Open the second panel to access keys 49-72. Open the third panel to access the registration keys.

⑨ **(Energy Saver)**

Press to enter or cancel the Energy Saver mode. When the machine is in the Energy Saver mode, the Energy Saver indicator lights, and the other keys and indicators are turned OFF.

⑩ **(Copy)**

Enables the machine to act as a copier, so you can copy a document.

⑪ **Speaker Volume Switch**

Adjusts the speaker's volume.

⑫ **(Clear)**

Clears an entire entry during information registration.

⑬ **(Stop)**

Cancels sending, receiving, data registration, and other operations, and returns the machine to the Standby mode.

⑭ **(Start)**

Enables you to start sending, receiving, scanning, and copying documents.

⑮ **Error Lamp**

A light that blinks red when a paper jam occurs or the machine has run out of paper or toner. The error is described by a message that appears on the LCD display.

⑯ **In Use/Memory Lamp**

A light that blinks green when the machine is transmitting or receiving documents, or maintains a steady green light when there are documents stored in memory.

⑰ **Numeric Keypad**

Use the keys on the numeric keypad to enter telephone numbers when dialing. These keys are also used to enter text, numbers, and symbols when registering names and numbers.

⑱ **(Hook)**

Enables you to dial, even when the handset is still on the handset cradle.

⑲ **(Coded Dial)**

Press (Coded Dial), followed by a three digit code to dial the telephone number registered for coded speed dialing.

⑳ **(Redial)**

Redials the previous number dialed manually with the keys on the numeric keypad.

Figure 1-7 Operation Panel (2)

㉑ **Directory**

Enables you to search for fax/telephone numbers by the name under which they are registered for speed dialing, and then use the number for dialing.

㉒ **Monitor**

Press to check the fax transmission or copying status.

㉓ **Delete File**

Deletes documents waiting in memory for sending.

㉔ **LCD Display**

Displays messages and prompts during operation. It also displays selections, text, numbers, and names when registering information.

㉕ **Resolution**

Sets the resolution for the documents you send.

㉖ **Contrast**

Adjusts the lightness/darkness of the documents you send or copy.

㉗ **Document Type**

Adjusts the quality of documents containing only text, or both photos and text.

Figure 1-8 Operation Panel (3)

One-Touch Panels Opened

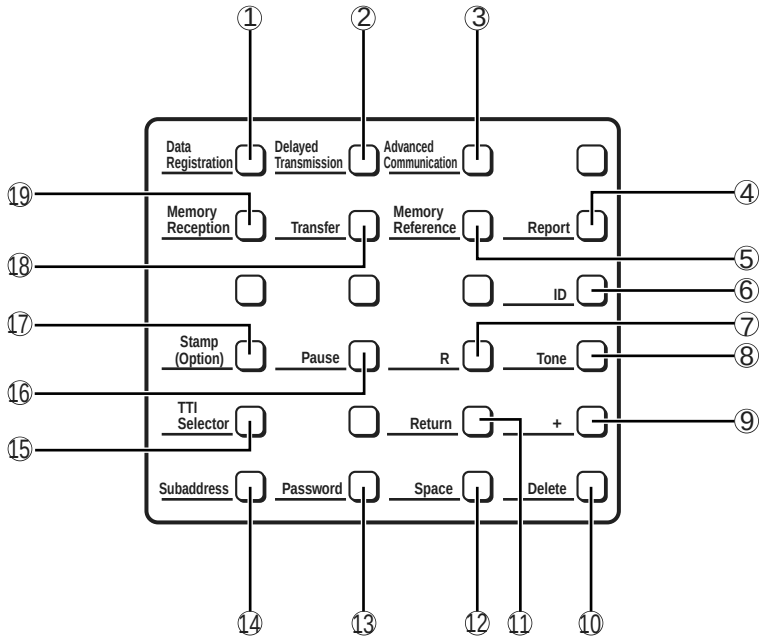

① **Data Registration**

Starts data registration for speed dialing, sender information, and other important settings for sending and receiving.

② **Delayed Transmission**

Sets a time for delayed sending.

③ **Advanced Communication**

Press to set a document for advanced communications, such as polling sending and receiving, confidential mailbox, relay broadcast, and subaddress/password transmissions.

④ **Report**

Prints reports about information registered in the machine. Also cancels printing of reports.

⑤ **Memory Reference**

Performs operations with documents currently stored in memory, including printing a list of documents, printing a document, sending a document to another destination, or deleting a document.

⑥ **ID**

Press to enter the Department ID.

⑦ **R**

Press to dial an outside line access number or an extension number then the unit is connected through a switchboard (PBX).

⑧ **Tone**

Connects to information services that accept tone dialing only, even if you are using a rotary pulse line.

⑨ **+**

Press [+] to enter a plus sign in a fax number.

Figure 1-9 Operation Panel (4)

⑩ **Delete**

Deletes a number or letter entry only when you are registering or entering a number, except for manual sending.

⑪ **Return**

Press to enter a paragraph break when entering e-mail text.

⑫ **Space**

Enters a space between letters and numbers on the LCD display when you are registering information and dialing.

⑬ **Password**

Enables you to enter an ITU-T password so you can send a document with a password.

⑭ **Subaddress**

Enables you to enter an ITU-T subaddress so you can send a document with a subaddress.

⑮ **TTI Selector**

Enters a registered sender's name to appear at the top of the document you are sending.

⑯ **Pause**

Enters pauses between digits or after the entire telephone number when dialing or registering facsimile numbers.

⑰ **Stamp (Option)**

Switches the machine in and out of the Stamp mode. If the machine is in the Stamp mode, the machine marks all documents scanned when sending in the Memory or Direct Sending mode. If you want to use the optional stamp feature, call your local authorized Canon dealer, and request the installation of the Stamp feature.

⑱ **Transfer**

Switches the machine in and out of the Transfer mode. In the Transfer mode, the machine sends all the documents it receives to another fax machine at your home or another office.

⑲ **Memory Reception**

Switches the machine in and out of the Memory Lock mode. In the Memory Lock mode, the machine stores all documents it receives in memory.

Figure 1-10 Operation Panel (5)

Parts and Functions

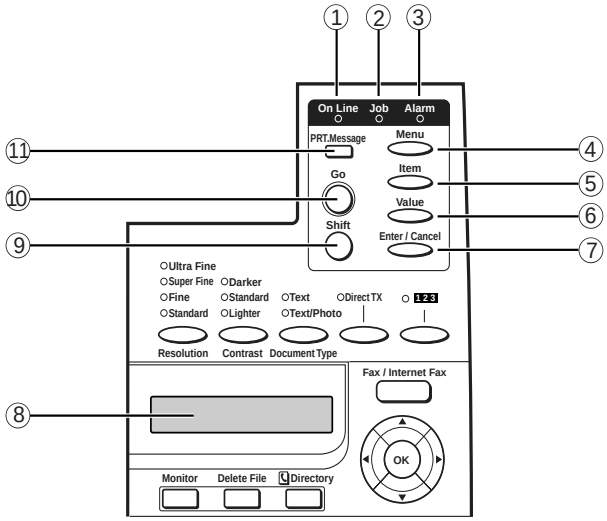

① **On Line Indicator**

On:
The printer is online (the power is ON, and the machine is warmed up and ready to receive data for printing). Before you send a print job, this indicator must be lit.

Blinking:
The printer is processing a print job. Do not disconnect the power cord, or you may lose print data. The document is printed when all of the data has been processed.

Off:
The printer is offline. You can now use the operation panel keys to view and change settings. When the printer is offline, the printer cannot accept data for printing.

② **Job Indicator**

On:
Part of a page has been processed and stored in the printer's memory.

Off:
There is no data stored in the printer's memory.

③ **Alarm Indicator**

On:
An error has occurred and printing has stopped. Check the display for a message indicating the problem.

Off:
Operation is normal and there is no error.

If the printer enters the Energy Saver mode while offline, only the Alarm indicator lights. The other indicators on the operation panel are turned off.

Figure 1-11 Operation Panel (6)

④ **Menu**

When the printer is offline, press [Menu] to scroll through the menu names. To scroll through the menu names in reverse order, hold down [Shift] while pressing [Menu].

⑤ **Item**

When a menu name is displayed, press [Item] to scroll through the items in that menu. To scroll through the items in reverse order, hold down [Shift] while pressing [Item].

Depending on what options are installed, some items may not appear.

⑥ **Value**

When an item from a menu is displayed, press [Value] to scroll through the item's values. To scroll through the values in reverse order, hold down [Shift] while pressing [Value].

Some items have a large range of values. For example, if you select <COPIES> as an item, you can set a value from 1 to 999. To quickly scroll through and select a value, hold down [Value].

⑦ **Enter/Cancel**

Saves a value you selected for an item in the menu. An asterisk (*) indicates the current default setting.

To cancel

Hold down [Shift] while pressing [Enter/Cancel] to cancel the current operation.

If a cancel operation is performed while the printer is receiving data, this causes the input data to be ushed from the printer's memory. The message <READY/FLUSHING...> appears on the LCD display while the data is being flushed. <READY> appears after the data has been flushed from the memory.

To cancel a print job, press [Go] to take the printer offline, then hold down [Shift] while pressing [Enter/Cancel].

⑧ **LCD Display**

Displays messages and prompts during operation. It also displays selections, text, numbers, and names when registering information.

⑨ **Shift**

Hold down [Shift] to scroll through menus, items, and values in reverse order.

⑩ **Go**

Takes the printer offline, and brings it back online. When the On Line indicator is on, the printer is ready to receive data and print. When the On Line indicator is off, the printer is offline, and you can use the other keys on the printer operation panel to view and change settings.

Press [Go] to resume a printing operation and display a message. For most situations, after you press [Go], the message clears and printing resumes.

To perform a form feed and print any data remaining in the printer's memory, press [Go] twice.

⑪ **PRT.Message**

Press [PRT. Message] to switch the machine to the Printer mode.

Figure 1-12 Operation Panel (7)

3.3 Consumables

3.3.1 Toner cartridge

Storing Toner Cartridges

Follow these simple guidelines when you handle and store toner cartridges.

Handling Cartridges

Always place toner cartridges down with the FX7 toner label on the cartridge facing up.

Handle the toner cartridge with care.

IMPORTANT

Do not subject the toner cartridge to shock or vibrations.

Do not remove the toner cartridge from its protective bag until you are ready to install it.

Save the protective bag. You may need it later to repack the cartridge temporarily, and protect it from exposure to light.

Never expose a toner cartridge to direct sunlight, and do not leave it exposed to normal room light (about 1,000 lux) for longer than five minutes.

There are strong magnets inside a toner cartridge. To avoid the possible destruction of valuable data stored on disks or other media, keep the toner cartridge away from computer screens, hard disks, floppy disks, or any other kind of material sensitive to magnetic fields.

Never touch or try to open the protective shutter that protects the light-sensitive drum inside the toner cartridge. If the drum is exposed to light, it may result in the deterioration of print quality.

Storing Cartridges

Store a toner cartridge in its original box and protective bag until you are ready to install it.

IMPORTANT

Store toner cartridges at a constant temperature within a range of 0˚C to 35˚C. Do not store cartridges in locations subject to extreme fluctuations in temperature and humidity.

To prevent caking of the toner, never stand the cartridge on its end, and do not store it upside down. If the toner becomes caked as a result of being stored in an odd position for too long, it may be impossible to dissolve it completely even by shaking the cartridge.

Do not store the cartridge in salty or corrosive air.

Never attempt to disassemble a toner cartridge or attempt to refill it.

Make sure that you use a stored toner cartridge before the expiration date printed on the toner cartridge box.

Figure 1-13 Toner Cartridge

3.3.2 Print media

Loading Paper into the Paper Cassettes

If your machine comes with more than one paper cassettes, you can use this procedure for each one.

The paper cassette can be adjusted to hold standard A or B series paper or inch-size paper, and can hold up to approximately 250 sheets of paper.

For high-quality printouts, we recommend using Canon standard 60 to 105 g/m^2 weight paper.

Whenever you change the paper size, you have to adjust the paper size setting for the paper cassette using the PAPER SETTINGS menu.

IMPORTANT

Use of print media not meeting the paper requirements, may cause severe paper jams or result in the excessive mechanical wear of the machine.

Do not load the following paper into the paper cassette:

- Moist paper
- Paper that is wavy, curled, or damaged
- Folded, clipped, or stapled paper
- Paper containing materials that melt, vaporize, offset, discolor, or emit dangerous fumes at a temperature of 190˚C or higher

To avoid paper curling, do not open the paper packages until you are ready to load the paper into the machine. Store unused paper from opened packages in a cool, dry location.

Let the paper run out before you refill the paper cassette. Avoid mixing new paper with paper remaining in the paper cassette.

Do not load different paper sizes into the paper cassette at the same time.

If a printed page comes out of the machine all curled up, you can correct the problem by turning over the paper stack in the paper cassette so that the bottom sheet in the stack is now at the top.

If the leading edge of the paper is curled, straighten it out as much as possible before loading it into the paper cassette.

Adjust the paper size guides so that there is no room between the guides and the paper stack.

Figure 1-14 Print media (1)

Using the MP Tray

The MP (Multi-Purpose) tray can hold standard A or B series paper or inch-size paper, non-standard size paper, envelopes, label sheets or transparencies, and can hold up to approximately 100 sheets of paper (80 g/m^2). For details on the types of paper you can set on the MP tray.
To use the MP tray as one of the input trays, you need to set MP TRAY to 'USE' in the PAPER SETTINGS menu.

NOTE

You can use the transparencies, envelopes, and label sheets only with the printer functions.

Loading Paper into the MP Tray

For high-quality printouts, we recommend using Canon standard 60 to 163 g/m^2 weight paper for the MP tray.

IMPORTANT

Using print media that does not meet the paper's requirements may cause severe paper jams, or result in the excessive mechanical wear of the machine.

Do not use the following paper in the MP tray:

- Moist paper
- Paper that is wavy, curled, or damaged
- Folded, clipped, or stapled paper
- Paper with cut-outs or perforations
- Paper containing materials that melt, vaporize, offset, discolor, or emit dangerous fumes at a temperature of 190˚C or higher

Avoid pressing or applying excessive force on the MP tray, as this may cause damage.

The paper stack must not exceed the paper limit guide.

Do not load different sizes of paper in the MP tray at the same time.

Do not add paper to the MP tray if paper is already loaded; incorrect paper feeding, or a paper jam may occur. Only add paper when the MP tray is empty.

You can set the paper of the widths from 76 mm to 216 mm.

Fan the transparencies before loading in the MP tray. Failure to do so may cause a paper jam.

When fanning or aligning the transparencies, take particular care to hold by its edges and not to touch the print side.

Keep the transparencies free of dust, oil, or fingerprints. They may cause the deterioration of outputs.

Remove the transparencies from the output tray as they are printed to avoid a paper jam.

Figure 1-15 Print media (2)

Chapter 2

Technical Reference

1. COMPONENT LAYOUT

1.1 Parts Layout

The parts layout of this machine consists of the scanning assembly, printing assembly and printer.

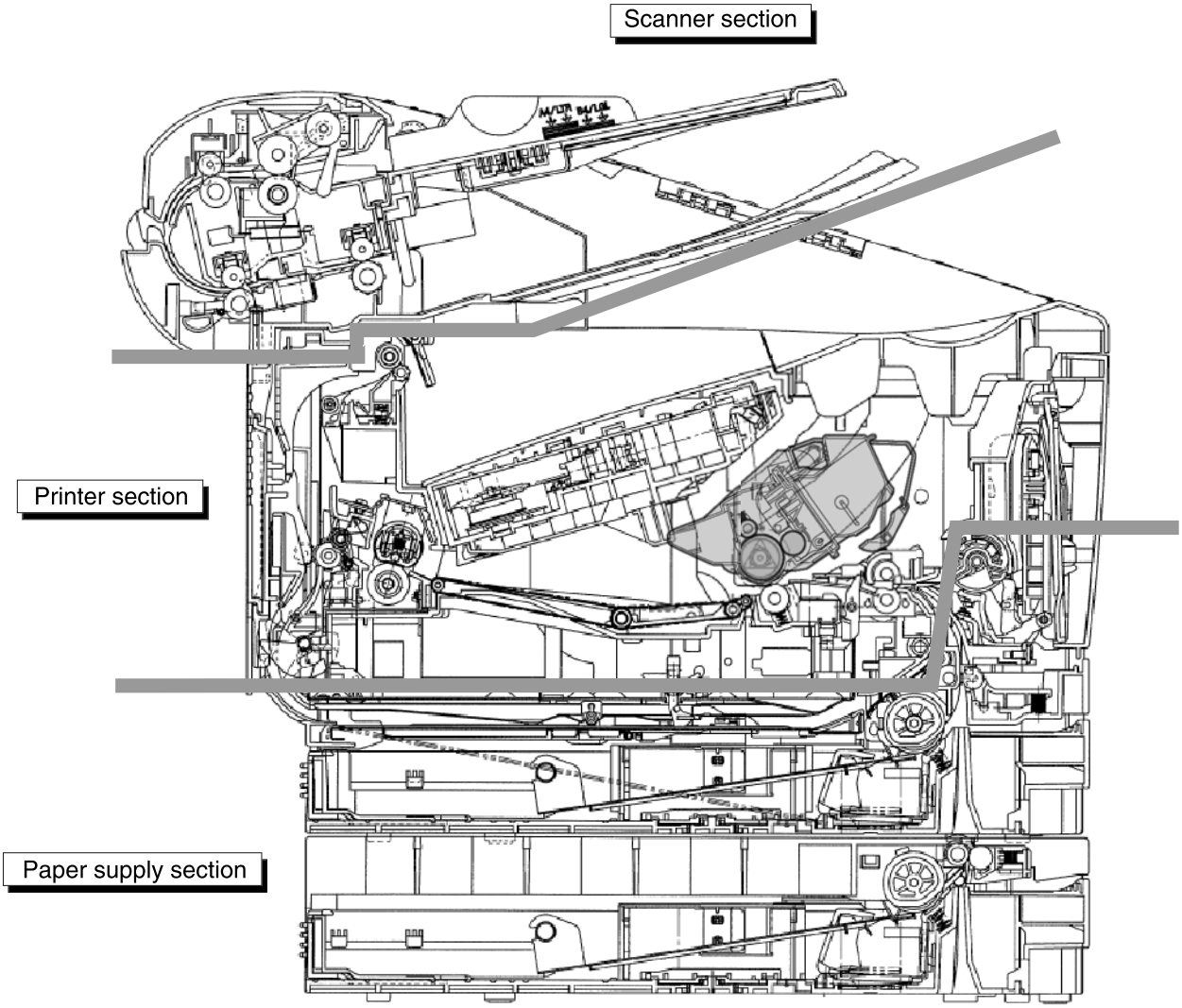

Figure 2-1 Mechanical Layout

The following six printed circuit boards are located in this machine:

1.SCNT board that controls the entire system
- Operation panel control
- Scanner control
- Printer interface control
- Communications unit control
- Speaker control
- Sensor detection
- Memory functions
- Energy Saver control

2.NCU board that interfaces with the telephone line
- Hybrid circuit
- Line voltage conversion circuit

3.MODULAR board that connects the telephone line and the NCU board
- Line interface

4.ECU board used to control the operation of the laser scanner, motor, and solenoid as well as pickup from the 2nd/3rd cassette.
- Fixing heater control
- High voltage control
- Drive control
- Sensors detection
- Laser control
- Scanner motor control

5.EPU board on which the fixing heater control circuit and the high-voltage power supply circuit are mounted.

6.OPCNT board that controls the operation panel's buttons and LCD
- Buttons detection and LED drive function
- Display
- Serial communication
- Sensors

7.A Power supply unit is also located in this machine
- Switching regulator

8.Sensor board used to monitor the sensors in the reader unit.
- Sensors

9.PCL board that interfaces with the local printer
(Standard feature for FAX-L2000IP, option for FAX-L2000)
• Develops print data written in PCL

10.NIC board (option) that interfaces with the network printer
(Standard feature for FAX-L2000IP, option for FAX-L2000)
• Connects the host machine with a network

11.USB board (option) that connects the the SCNT board
(Standard feature for FAX-L2000IP, option for FAX-L2000)
• NIC board communications control

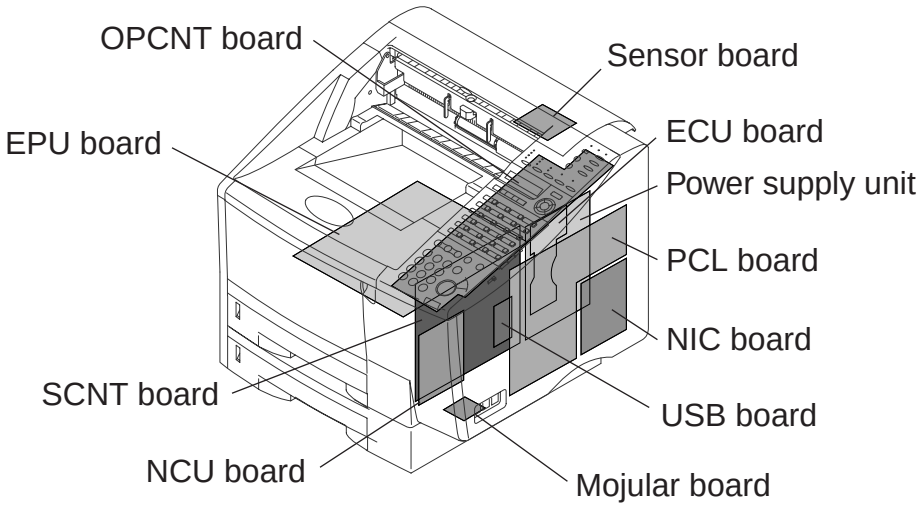

Figure 2-2 Electrical System Layout

As many as 13 sensors are used to monitor the movement of original and recording paper or to detect the presence/absence of toner.

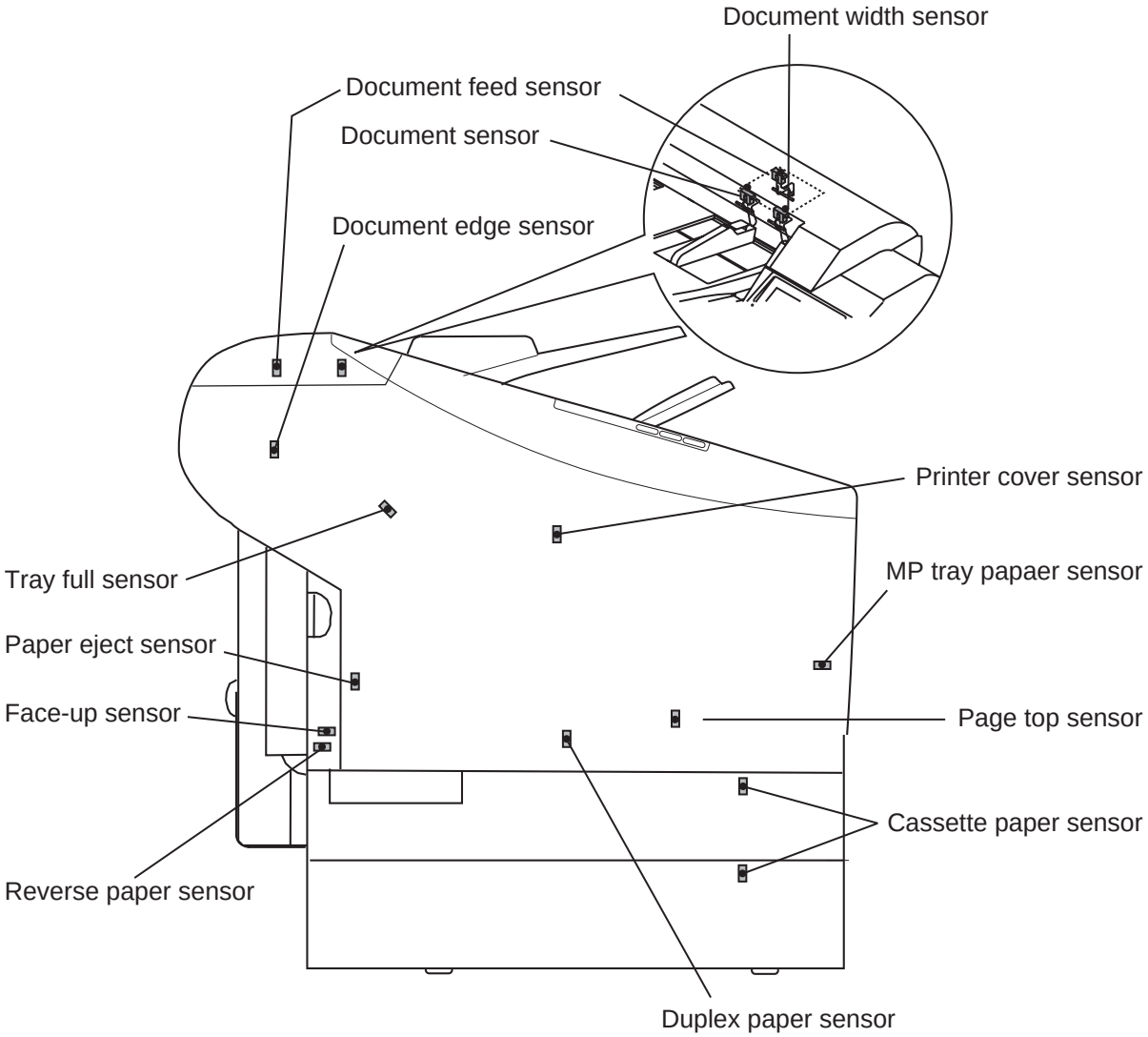

Figure 2-3 Sensor Layout1

a. Document sensor (DS):
It detects the presence/absence of a document.

b. Document width sensor (DWS):
It detects the width of the document.

c. Document feed sensor (DFS):
It detects the feed condition of the document.

d. Document edge sensor (DES):
It detects the lead and rear edges of a document.

e. MP tray paper sensor:
It detects the presence/absence of recording paper.

f. Cassette paper sensor:
It detects the presence/absence of recording paper.

g. Page top sensor:
It detects the lead and the rear edge of the recording paper.

h. Printer cover sensor:
It detects the opening/closing of the printer cover.

i. Reverse paper sensor:
It detects the presence/absence of recording paper.

j. Face-up sensor:
It detects the face-up tray conditions.

k. Paper eject sensor:
It detects the recording paper eject conditions.

l. Tray full sensor:
It checks the full loading of recording paper.

m. Duplex paper sensor:
It detects the presence/absence of recording paper.

2. SCANNER MECHANISM

The scanner section scans documents that are to be sent or copied.

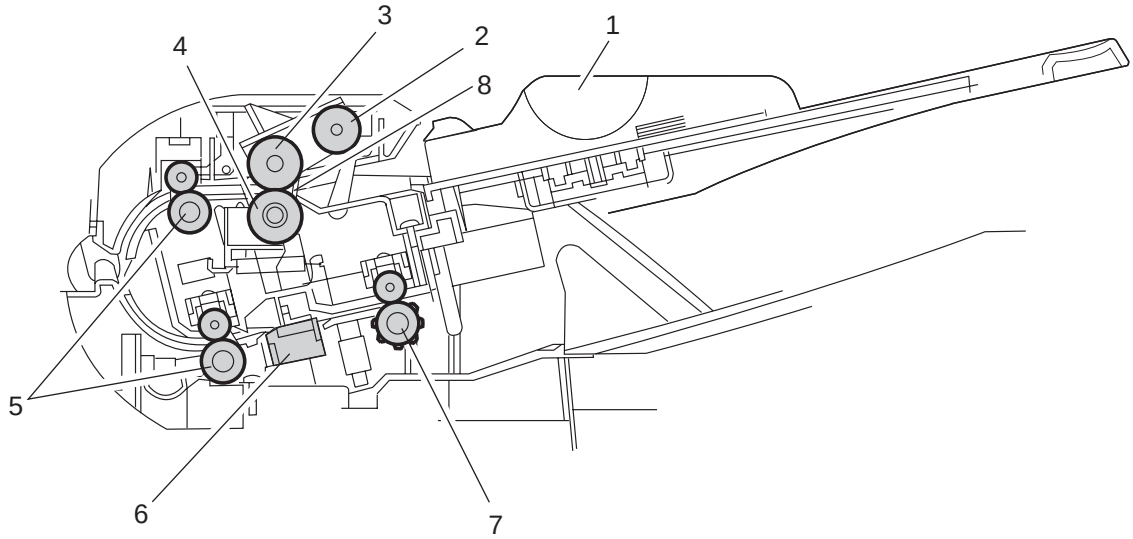

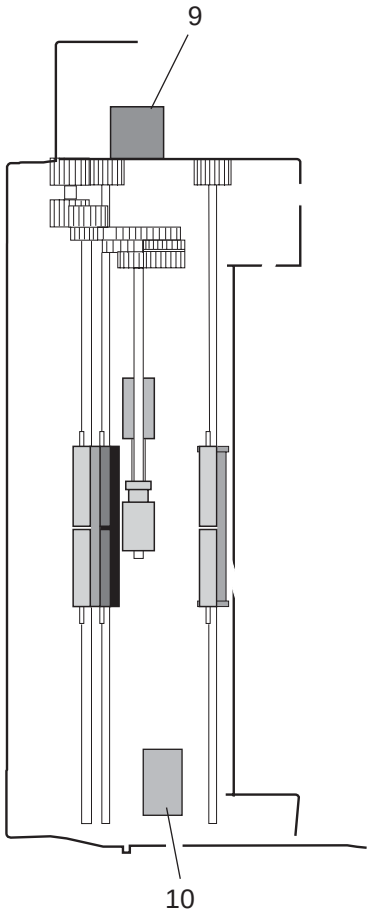

Figure 2-4 Electrical System Layout

2.1 Names and Functions of Parts:

1. Paper Guide

It is used to hold down the original in horizontal direction to prevent it from moving askew.

2. Pickup Roller

The cam is rotated by the DC motor, and the document stopper moves into a free condition. At this time, the pickup roller moves down and the document is fed.

3. Separation Roller (upper)

This roller uses differences in the coefficients of function of the document and separation roller to separate each of the sheets in a multiple-page document.

4. Separation Roller (lower)

This roller uses differences in the coefficients of function of the document and separation roller to separate each of the sheets in a multiple-page document.

5. Document Feed Roller

This roller feeds documents to the contact sensor after they are separated by the separation roller.

6. Contact Sensor

Scans the image information from the document, converts it to serial data, and transmits it to the SCNT board as an electrical signal. The contact sensor has a scanning resolution of 300 dpi.

7. Document Eject Roller

This roller ejects documents fed from the document feed roller.

8. Document Stopper

This stopper is located to the both sides of the separation rollers, and prevents document from entering too far inside the scanning section. This stopper is located here to improve document loading and prevent double feeding or non-feeding due to defective loading of documents.

9. Read Motor

This motor drives all the rollers in the scanner section.

10. DC Motor

This motor rotates cams to drive the separation roller arm, thereby moving the pickup roller up and down.

NOTE

Initializing the document stopper

The projection on the upper document feed roller needs to be set (initialized) to the optimum position to operate the document stopper properly.

The fax machine performs initialization when the power is turned on, and after a document is ejected.

Document jam detection

The document edge sensor detects such document jams as pickup jams and document too long errors.

A “pickup jam” means the document edge sensor cannot detect the leading edge of the document within 15 seconds after document feeding begins.

A “document too long error” means that the document edge sensor cannot detect the trailing edge of the document, even after the stepping pulses for feeding more than 1000 mm (39.4") of document have been transmitted.

Document jam processing

If a document jam occurs, the fax stops the document read motor and ADF operations, displays the error, and the Error lamp flashes in red.

For a pickup jam, “CHECK DOCUMENT” is displayed. For document too long error, “DOCUMENT TOO LONG” is displayed. If the document is being copied when a document jam occurs, the image data scanned in and stored in memory are erased for all pages, and print operations are stopped. Image data stored in memory when memory transmission, or delayed transmission, or sequential broadcasting, is erased from memory at the point when the jam is detected.

This page intentionally left blank

3. PAPER SUPPLY SECTION

The paper supply section is designed to separate the recording sheets stacked on the Cassette or MP tray one by one for forwarding to the printer unit.

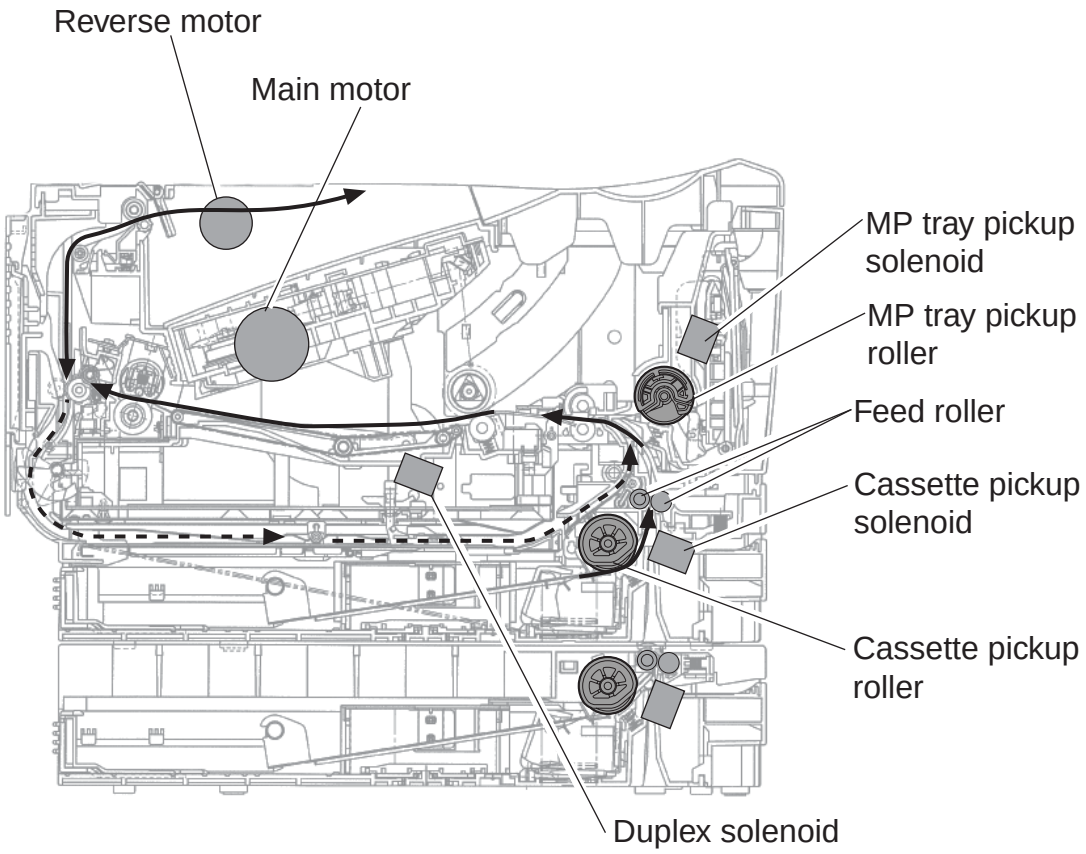

Figure 2-5 Paper supply section

3.1 Recording Paper Pickup Function

(from Multi-purpose (MP) tray)

In case of paper pickup from the MP tray, while the main motor rotates, the MP tray pickup solenoid is turned ON. Then, the MP tray pickup roller rotates, and a sheet of paper is fed into the printer section.

Up to 100 pages (80 g/m^2) can be loaded into the MP tray at one time and the position of the movable paper guides can be adjusted for recording paper.

(from cassette)

In case of paper pickup from the cassette, while the main motor rotates, the pickup solenoid is turned ON. Then, cassette pickup roller, feed roller rotate, and a sheet of paper is fed into the printer section.

(from duplex feed unit)

While the Face-up tray is closed, the paper eject sensor detects the trailing edge of the recording paper, and about in 0.1 second, the ECU board rotates the reverse motor in the counterclockwise, sending the paper to the duplex feed unit.

When the paper reaches the reverse paper sensor and about 0.68 second passes, the ECU board turns the duplex solenoid ON to rotate the oblique roller. The recording paper is transported by the oblique roller, with its right side touching the standard plate. This corrects the skew of the paper. The paper is then sent to the registration roller. During this operation, if next paper is picked up, the duplex-fed recording paper stops at the specified position (about 0.74 second passes after the duplex paper sensor detects the paper).

Then the following paper reaches the page top sensor, the specified period of time passes, and the duplex-fed paper is transported again.

The re-transported paper is printed with the other side and delivered to the output tray.

3.1.1 Paper size error

The machine does not have a paper size sensor. It recognizes the paper sizes (A4, Letter, and Legal etc.) according to the user data setting.

A paper size error occurs if the specified paper size is different from the size of the paper placed in the MP tray and cassette when one page is actually printed.

In this case, a message INCORRECT PAPER SIZE appears on the display, the Alarm lamp blinks.

3.2 Recording Paper Pickup Jam Detection Configuration

Recording paper pickup jams are detected by the photo-interrupter type recording paper pickup sensor equipped with an actuator arm.

3.2.1 Pick-up delay jam

This machine performs retry control to redress the pick-up delay jam caused by pick-up error.
If the top-of-page sensor cannot detect the leading edge of the paper within a specified period of time (T) after the start of pick-up operation, the machine performs pick-up operation once again. If the top-of-page sensor cannot detect the leading edge of the paper within the specified period of time (T) after the start of the second pick-up operation, the CPU judges it a pick-up delay jam.
The specified period of time (T) mentioned above is as follows.

- Paper pick-up from the multi-purpose tray: T= about 2.5 seconds
- Paper pick-up from the cassette: T= about 3.0 seconds

3.2.2 Pick-up stationary jam

a. When WAIT period starts

The CPU assesses a pick-up stationary jam if the top-of-page sensor detects paper when the WAIT period starts.

b. During paper feeding

The CPU assesses a pick-up stationary jam if the top-of-page sensor does not detect the trailing edge of the paper within 3.8 seconds (legal paper) after detecting the leading edge.

3.2.3 Delivery delay jam

The CPU assesses a delivery delay jam if the paper does not reach the delivery sensor within a specified period of time (T) after the top-of-page sensor detects the leading edge.

- Paper 270 mm or more: T= about 2.6 seconds
- Paper 200 mm to 270 mm: T= about 2.7 seconds
- Paper less than 200 mm: T= about 4.6 seconds

3.2.4 Delivery stationary jam

a. When WAIT period starts

The CPU assesses a delivery stationary jam if the delivery sensor detects paper when the WAIT period starts.

b. During paper feeding

The CPU assesses a delivery stationary jam if the delivery sensor does not detect the trailing edge of the paper within a specified period of time (T) after the top-of-page sensor detects the trailing edge.

- Paper 200 mm or more: T= about 2.7 seconds
- Paper less than 200 mm: T= about 5.2 seconds

c. When a pick-up delay jam occurred

When a pick-up delay jam occurred, the machine enters the LAST ROTATION period to deliver the jammed paper. During this period, the CPU assesses a delivery stationary jam if the delivery sensor does not detect the trailing edge of the paper within 8 seconds after the completion of the forced laser emission.

d. During pressure roller cleaning

During pressure roller cleaning, the CPU assesses a delivery stationary jam if the delivery sensor does not detect the trailing edge of the paper within 8 seconds after the 35th feed operation.

3.2.5 Reversing delay jam

The CPU assesses a reversing delay jam if the reverse paper sensor does not detect the leading edge of the paper within 3.4 seconds after the reverse motor starts rotating in the counterclockwise.

3.2.6 Reversing stationary jam

The CPU assesses a reversing stationary jam when the reverse paper sensor detects recording paper after duplex pickup operation has been performed for about 0.77 seconds.

3.2.7 Duplex pickup delay jam

The CPU assesses a duplex pickup delay jam if the duplex paper sensor does not detect the paper within 4.9 seconds after the reverse paper sensor detects the leading edge.

3.2.8 Duplex pickup stationary jam

After the start of the duplex pickup, if the duplex paper sensor detects recording paper after about 3.4 seconds has passed subsequently to the detection of the trailing edge by the reverse paper sensor, the CPU assesses a duplex pickup stationary jam.

4. PRINTER SECTION

The LASER beam printer engine comprises the following sections.

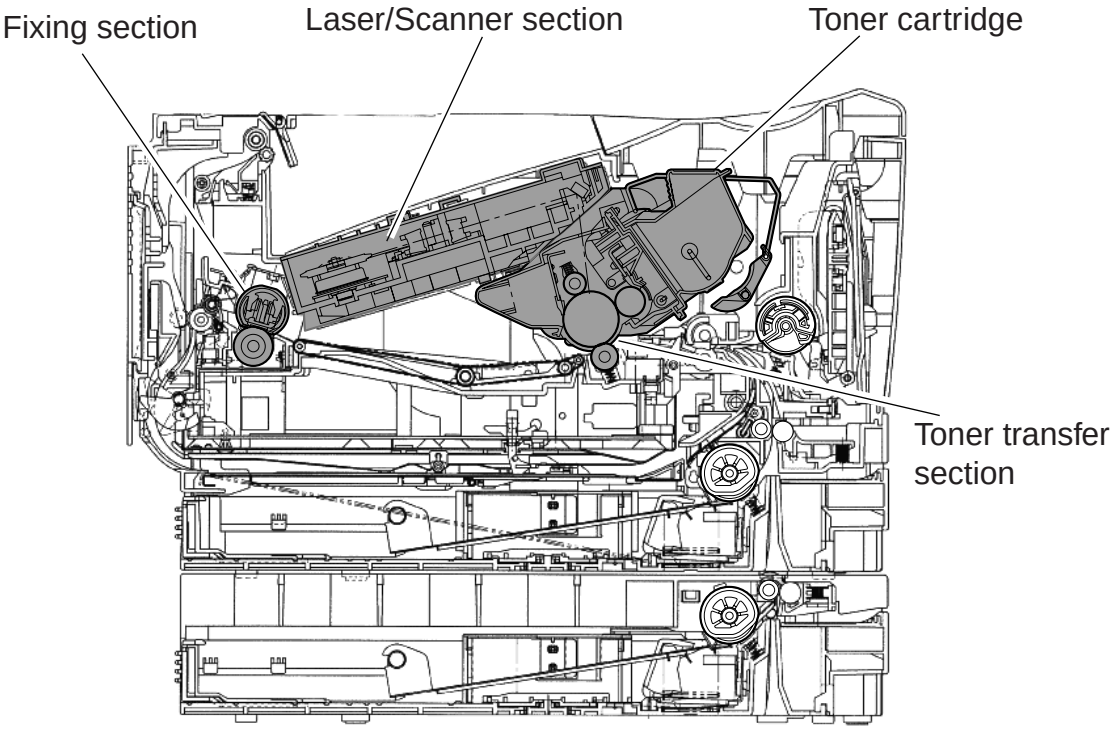

Figure 2-6 Printer section

4.1 Laser/Scanner Section

This section comprises a Laser unit, cylindrical lens, 6-faced polygon mirror, scanner motor, imaging lens, reflection mirror and BD unit. The Laser is driven in accordance with the Laser drive signals that are sent from the SCNT board. This Laser light passes through the cylindrical lens to fall on the 6-faced polygon mirror that is rotating at a fixed speed. The Laser light is reflected from the 6-faced polygon mirror and passes through the imaging lens, and reflects from the reflection mirror to scan the photosensitive drum in the toner cartridge.

The Laser/scanner unit offers newly developed functions. For details, see “5. NEW FUNCTION” in this chapter.

NOTE

BD Malfunction

When the input cycle of the /BDI signal falls out of the range of ± 1.7 % of the scanner motor’s specified rotation number after the scanner motor’s rotation has reached the specified number.

Scanner unit Malfunction

At the start of the scanner motor’s rotation, when the detected cycle of the /BDI signal does not reach the range of the specified number within 20 seconds, or when the /BDI signal is not detected for 0.5 second after the detected cycle reached the specified value.

The Laser/scanner unit contains parts that require adjustment that must be adjusted. Never disassemble the Laser/scanner unit.

4.2 Toner Cartridge

This cartridge comprises the primary charging roller, developing cylinder, photosensitive drum, cleaner blade, and toner.

The Laser beam from the Laser/scanner section forms a latent static image on the photosensitive drum that is charged by the primary charging roller.

The photosensitive drum rotates inside the toner cartridge, and rotation of the developing cylinder causes toner to adhere to the photosensitive drum to from a visible image which is then transferred to the recording paper at the toner transfer section. Residual toner is then removed from the surface of the photosensitive drum by the cleaning blade.

4.2.1 Toner level detection/cartridge detection

The FX 7 toner cartridge has a toner sensor.

The circuit compares the output value of the developing AC bias and the output value (ANT) from the antenna inside the cartridge, and outputs the toner detection signal.

The CPU detects the toner level and whether the cartridge is installed or not when the developing AC bias is applied to the developing cylinder. The toner level is always detected when the developing AC bias is applied, and the cartridge is detected only when the developing AC bias is applied during the initial rotation.

Drum cover shutter

If the photosensitive drum is subjected to strong light, optical memory can cause dropout areas or black bands to occur. To prevent the photosensitive drum from strong light, a drum cover shutter is attached. Do not open this cover unless absolutely necessary.

4.3 Toner Transfer Section

This section comprises the transfer charging roller and the static eliminator.

The recording paper passes between the photosensitive drum and the transfer charging roller, and the transfer charging roller is charged with a charge opposite to that of the toner to transfer the toner on the photosensitive drum to the recording paper. The charge on the rear side of the recording paper is then removed by the static eliminator.

4.4 Fixing Section

This section comprises the fixing ass’y and pressure roller. The fixing section on this machine is an on-demand method that uses fixing film with low thermal capacity.

The toner that was transferred to the recording paper at the toner transfer section is fused to the paper and fixed as a permanent image.

The fixing ass’y has a built-in fixing heater and thermistor.

4.4.1 Fixing heater malfunction

The printer controller on the ECU board detects a fixing heater malfunction in the following instances.

1. Abnormally high-temperature main thermistor (all modes)

The CPU assesses an abnormally high temperature when it detects a temperature of 245°C or more for 1 second continuously.

2. Abnormal warm-up 1 (initial temperature control mode)

The CPU assesses an abnormal warm-up 1 if the detected temperature is lower than 120°C for 1 second continuously after the heater has been energized for 20 second.

3. Abnormal warm-up 2 (initial / print temperature control mode)

It the reading of the main thermistor does not exceed a specific level of temperature within 75 sec after the fixing heater is supplid with power, the CPU will identify the condition as being abnormal warm-up2.

4. Low temperature during temperature control (print / between-page / postprint temperature control mode)

The CPU assesses a low temperature during temperature control when the detected temperature is lower than 120°C for 1 second continuously in the print / between-page / postprint temperature control mode.

5. Initial broken main thermistor wire (initial temperature control mode)

The CPU assesses an initial broken main thermistor wire when the output voltage from the main thermistor is about 3.3V (line voltage of 3.4V) or more for 1 second continuously.

6. Broken main thermistor wire (print / between-page / postprint temperature control mode)

The CPU assesses a broken main thermistor wire when the output voltage (FSRTH) from the main thermistor is about 3.3V (line voltage of 3.4V) or more for 0.5 second continuously.

7. Abnormally high-temperature sub thermistor (all modes)

The CPU assesses an abnormally high temperature sub thermistor when it detects the temperature of the sub thermistor is 315°C or more for 1 second continuously.

8. Abnormally low-temperature sub thermistor (initial / print control mode)

The CPU assesses an abnormally low temperature sub thermistor when it detects the temperature of the sub thermistor is less than 75°C for 2 seconds continuously after the heater has been energized for 20 seconds.

9. Abnormally low-temperature sub thermistor 2 (heater OFF mode)

The CPU assesses an abnormally low temperature sub thermistor 2 when all of the following conditions are met while the heater is OFF at the print completion:

- Ready.
- Print is not cancelled.
- After the completion of the initial control mode.
- Before the trailing edge of print paper passes through the delivery sensor, the temperature of the sub thermistor is less than 75°C.
- Immediately before the heater is OFF, the temperature of the sub thermistor is less than 75°C.

10. Abnormally high-temperature sub thermistor error detection

The CPU stores the temperature of the sub thermistor at the timing the leading edge of print paper reaches the fixing heater, and monitors the temperature rise of the thermistor during 270 mm of the print paper.

If the CPU detects that the sub thermistor rises to 80°C or more, it determines an abnormally high-temperature sub thermistor error and notifies it to the SCNT board.

5. NEW FUNCTION

5.1 Twin Beam Method (Laser/Scanner System)

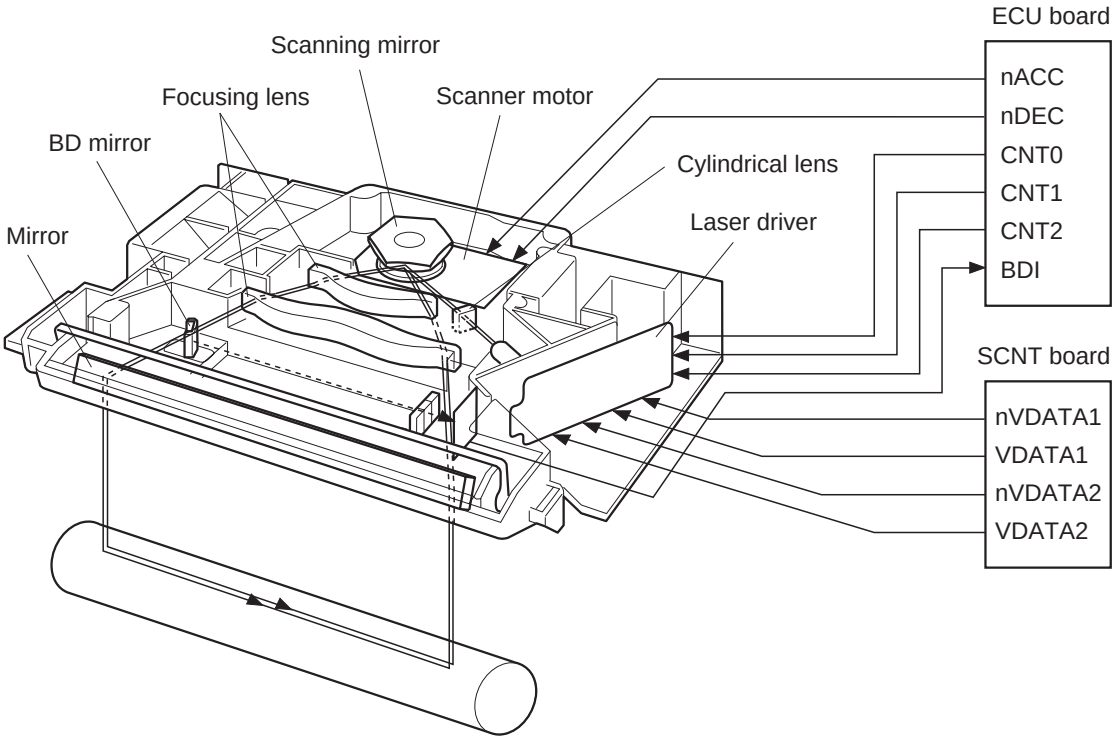

Figure 2-7 Laser/Scanner Unit

The Laser/Scanner unit is structured with the laser driver, the scanner motor and etc. It is controlled by the signals input from the ECU board and the SCNT board.
This machine employs the “Twin beam method” which scans two lines simultaneously with two laser diodes in the Laser/Scanner unit.
These two diodes (LD1, LD2) emit for a single scanning so that two lines are written simultaneously. Thus, this method enables high-resolution printing without decreasing the print speed.

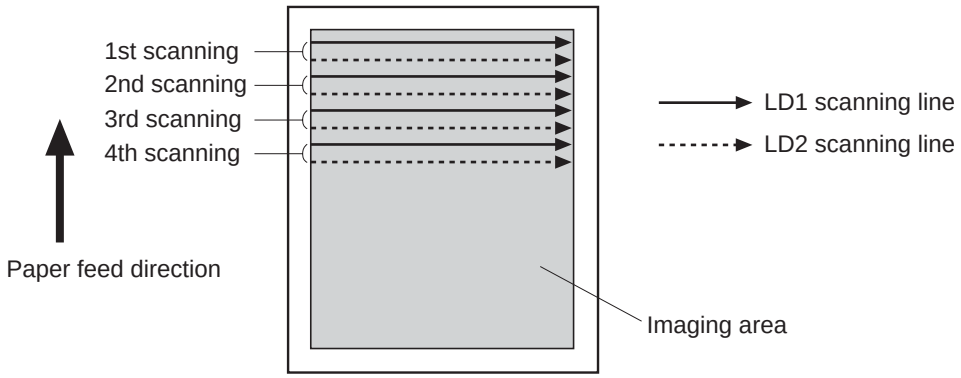

Figure 2-8 Twin beam method

The ECU board sends the laser control (CNT0, CNT1, CNT2) signals to the laser driver in the Laser/Scanner unit. Meanwhile, the SCNT board sends the VIDEO (nVDATA1, VDATA1, nVDATA2, VDATA2) signals to the laser driver via the ECU board.
According to these signals, the laser driver performs laser diode emission.
The two laser beams pass through the collimator and cylindrical lenses and strikes the scanning mirror, which is rotating at a constant speed. The laser beams reflected off the scanning mirror focus on the photosensitive drum after passing through the focusing lens and reflective mirror.
The scanning mirror rotates at a constant speed so that the laser beams scan across the photosensitive drum at a constant speed. This forms a latent image on the photosensitive drum surface.

Chapter 3

Assembly and Disassembly

1. ATTENTION TO BE PAID DURING ASSEMBLY/DISASSEMBLY

1.1 Safety Cautions

Electrical shock

In order to prevent any risk of electrical shock, always be sure to check that the power cord and modular jack have been removed. Also, remove all cables connecting to the computer.
When conducting service that requires the main unit to be powered on, be sure to wear some kind of earthing, such as a wrist strap, etc. Otherwise, there is a
danger of conduction and electrical shock.
Parts which are generally likely to cause electrical shock are as follows.

- Power supply unit primary (supplied with AC voltage)
- Telephone line primary
- LBP engine high voltage contacts (for high voltage during developing and transfer)

High temperature

In order to prevent burns during disassembly, allow at least ten minutes, after the power has been switched off, for the high temperature components to cool down.
General high temperature components are as follows.

- Motors
- Power supply unit
- Elements on driver ICs, etc., on PCBs (in particular, ICs with heatsinks)
- BJ cartridge aluminium plate (for BJ cartridge engine models)
- Fixing unit and peripheral covers (for LBP engines)

Battery Replacement

The batteries must be replaced correctly to avoid explosion.
Do not replace any battery with one not indicated for the machine, i.e.., use one of the same type or equivalent. Be sure to dispose of used batteries according to local laws and regulations.

Fire

It is dangerous to throw lithium batteries and parts and components containing flammable substances, such as cartridges, etc., into fire. Such parts and components must be disposed of in accordance with local laws and regulations.

Ignition

When using solvents such as alcohol, etc., while conducting service, there is a danger of fire igniting from heat from internal circuitry and from sparks. Before using any such solvents, be sure to switch off the power and allow time for high temperature parts to cool down. Make sure that there is sufficient ventilation when working with solvents.

Movable parts

In order to prevent accidents with movable parts, be sure to remove the power cable when conducting service that requires disassembly. Also, take care that personal accessories and hair, etc., are not caught in any moving parts.

1.2 General Cautions

Damage due to electrostatic discharge

This machine contains contact sensors and printed circuit boards that use ROMs, RAMs, custom chips and other electronic components that are vulnerable to damage by electrostatic discharge.
Be careful to avoid any damage from electrostatic discharge when conducting service that requires disassembly.

Static electricity warning

Electrostatic discharge can destroy electronic components and alter electrical characteristics. Plastic tools and even your hands, if they are not earthed, contain sufficient static electricity to damage electronic components.

The following materials may be used as countermeasures against electrostatic discharge:
• an earthed, conductive mat
• an earthed wrist-strap
• crocodile clips for the purpose of grounding metallic parts of the main unit

For service conducted on the user's premises, etc., where such countermeasure materials are not available, the following countermeasures may be employed.
• Use anti-static bags for the storage and carrying of PCBs and electrical elements.
• Avoid silk and polyester clothing and leather soled shoes, favouring instead cotton clothes and rubber soled shoes.
• Avoid working in a carpeted area.
• Before beginning the work, touch the grounded earth terminals of the main unit in order to discharge any static electricity.
• Use a wrist-strap and earth the metal parts of the main unit.
• PCBs and electrical elements must lifted around the edges and their terminals must not be touched.

Caution against electrical shock while working with power on

In cases where service must be carried out with power on, via a connected power cable, be sure to wear an anti-static wrist-strap or other earth, in order to prevent an electrical path being created through you body.

Application of grease

Grease must not be applied to any parts that are not so designated. Also, never use any other than the specified type of grease. Otherwise, plastic parts and rubber parts may melt or be otherwise deformed.

Attaching and removing cables

Attaching and removing cables with the power still on may cause breakdowns and should be avoided. In particular, flat cables are likely to cause short circuit.
When attaching or removing cables, always be sure to turn the power off.

1.3 Product-Inherent Cautions

Laser Light

Do not perform any tasks outside the scope of work indicated in the manual. (If exposed to laser light, the retina of the eye can permanently be damaged.)

Further, the laser scanner unit must not be disassembled or modified under any circumstances.

Handling of the Transfer Charging Roller

The presence of oils or the like on the sponge portion of the transfer charging roller leads to faults in the printer. Do not hold the transfer charging roller by its sponge portion during service work.

Handling the Fixing Unit

The presence of oils or the like on the surface of the pressure roller or the fixing film found inside the fixing unit can cause fixing faults or jams. Do not hold the pressure roller during service work.

1.4 All Clear (Action in the Event of Abnormality)

In the event of extreme noise or shock, etc., in very rate cases, the display may go out, and all the keys become inoperable. In that case, perform an All Clear.

This operation returns all values and settings to their default settings. However, as all settings, such as received images and user data, service data, etc., will be re-initialized, be sure to note down any settings that you will need to re-enter later.

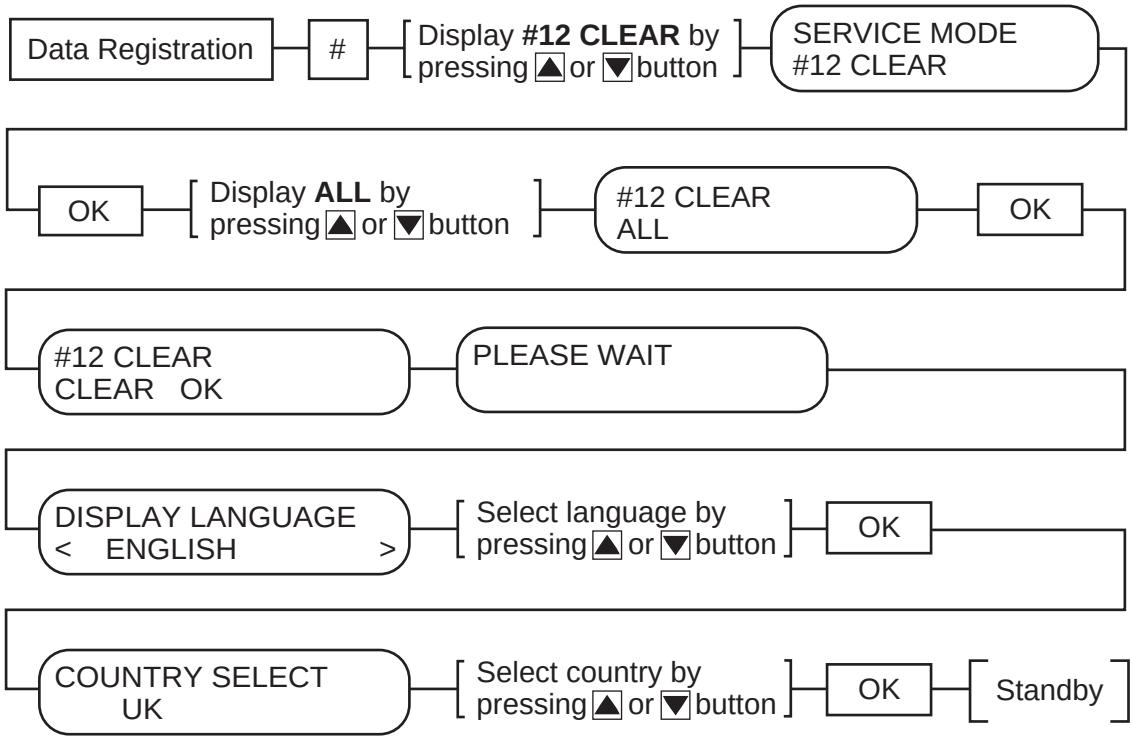

Figure 3-1 All Clear Operation

While waiting to return to the ready state after executing “All clear”, please do not press the stop button. Doing so may cause a malfunction afterwards.

2. DISASSEMBLY/ASSEMBLY

As a rule, refer to the Parts Catalog for instructions on how to disassemble and assemble the machine. The discussions that follow are limited to those components that are thought to require replacement relatively more often than others.

2.1 Disassembly Procedure

2.1.1 Document separation roller (Lower)

(1) Remove the document tray, and open the upper reader section. When doing so, try pushing the left claw toward the inside.

(2) Remove the 3 screws (a), and detach the middle reader cover.

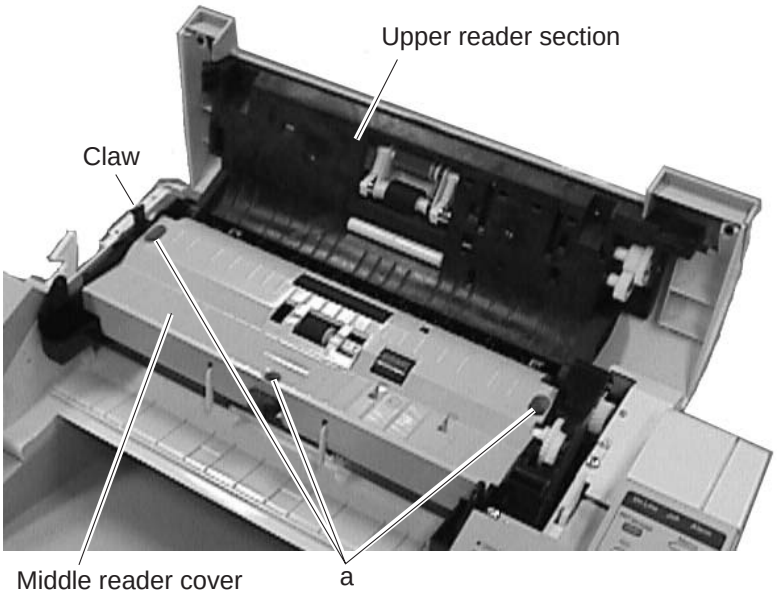

Figure 3-2 Document Separation Roller (Lower) 1

(3) Lift the separation roller, and detach it from the holder.

(4) Pull the separation roller to the left, out of the ADF connection shaft, to detach.

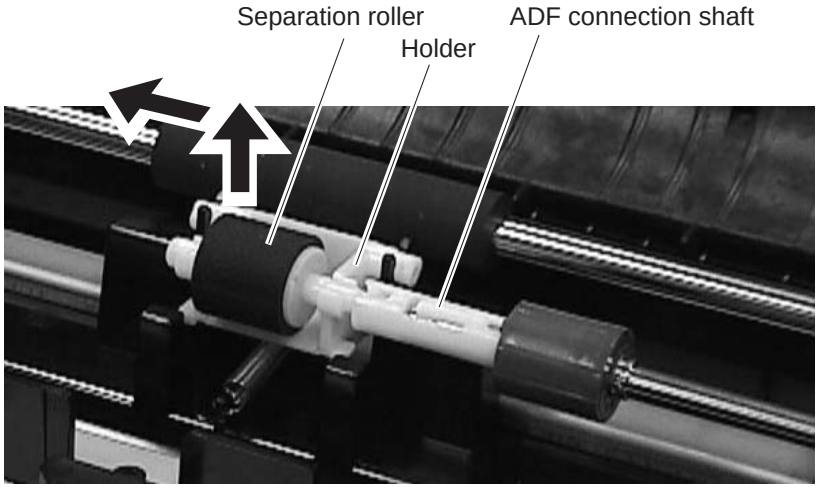

Figure 3-3 Document Separation Roller (Lower) 2

2.1.2 Document separation roller (Upper)

(1) Remove the document tray, and open the upper reader section. When doing so, try pushing the left claw toward the inside.

(2) Remove the 2 screws (a), and detach the upper reader cover; then, close the upper reader section.

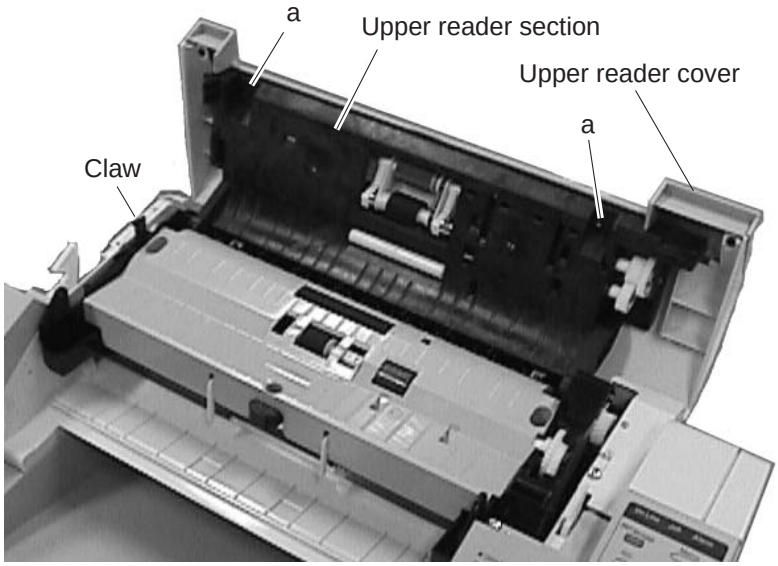

Figure 3-4 Document Separation Roller (Upper) 1

(3) Remove the screw (b), and detach the arm and spring.

(4) Detach the sensor board.

(5) Remove the 2 screws (c), and detach the grounding plate.

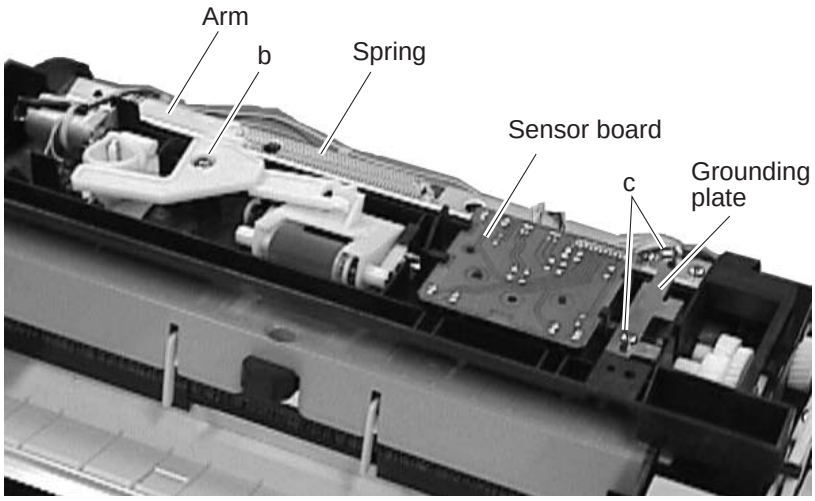

Figure 3-5 Document Separation Roller (Upper) 2

(6) Pull out the shaft, and pull the gear (found at the front) upward to detach.

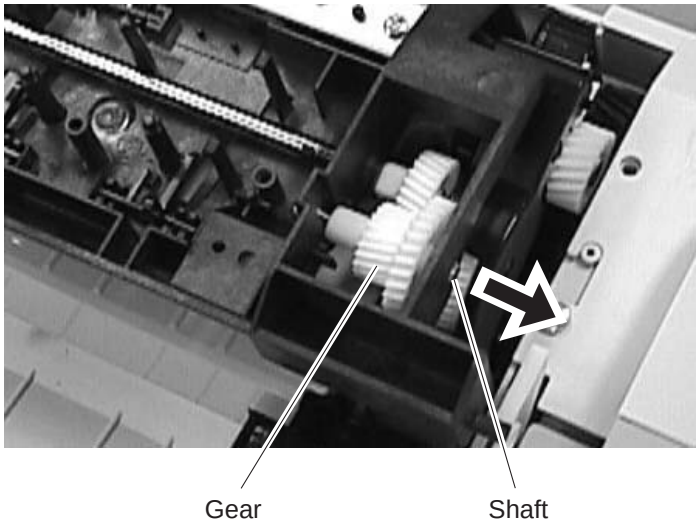

Figure 3-6 Document Separation Roller (Upper) 3

(7) Detach the left retaining ring.
(8) While detaching the claw, detach the right gear.
(9) Detach the bushings from both sides; then, detach the separation roller ass'y (upper).

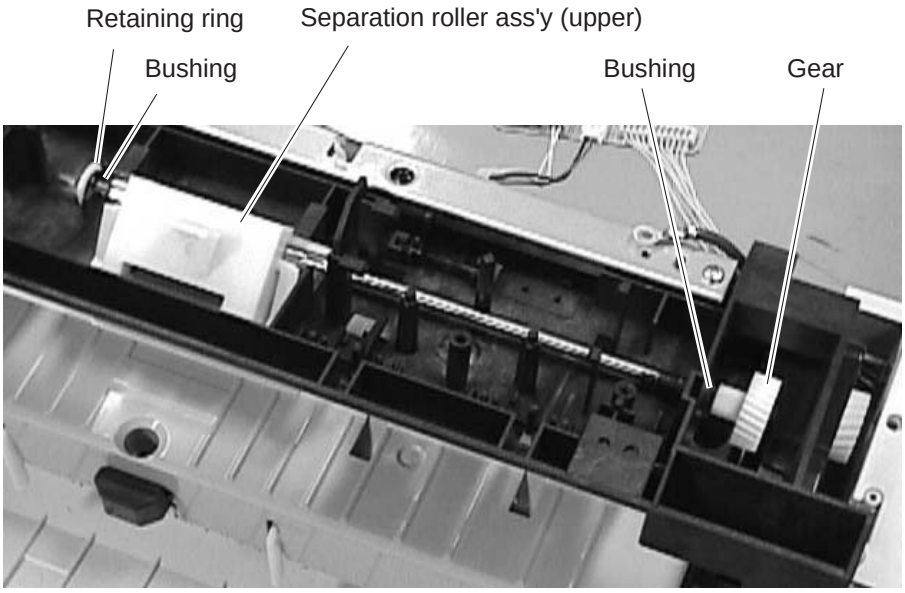

Figure 3-7 Document Separation Roller (Upper) 4

2.1.3 Paper pick-up roller and separation pad (Multi-purpose)

(1) Remove the 2 screws (a), and detach the right cover.

(2) Remove the 7 screws (b), and detach the shield plate. (FAX-L2000IP are the 8 screws (b))

(3) Remove the 2 screws (c), and detach the upper left cover.

(4) Remove the 2 screws (d); then while freeing the claw, detach the left cover.

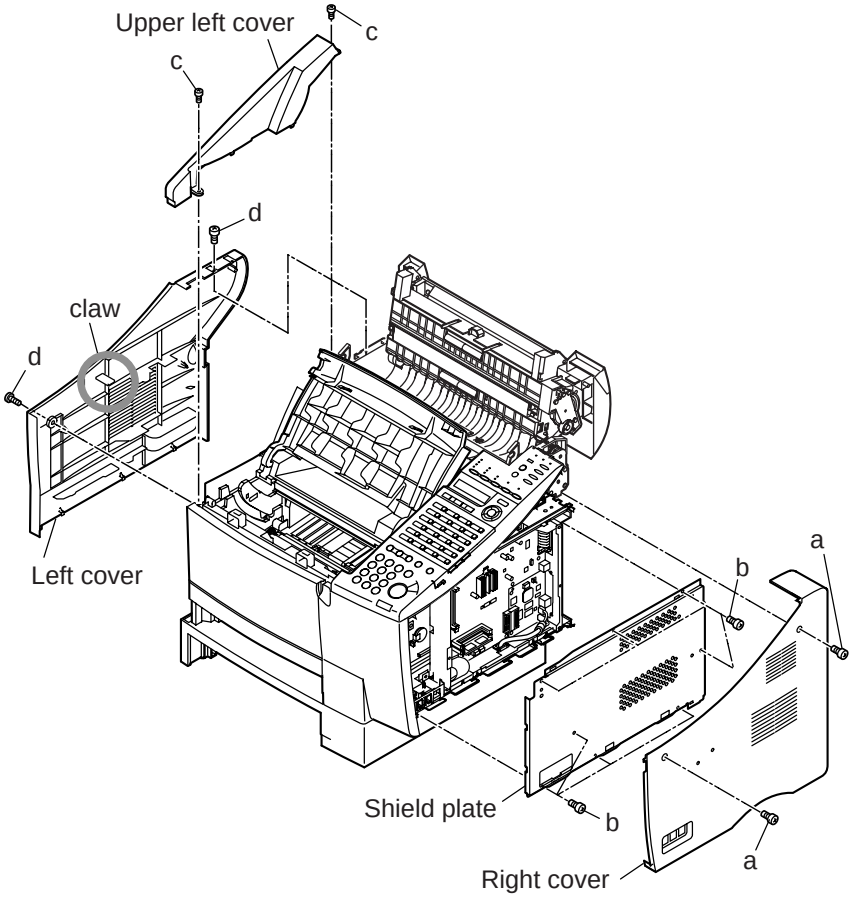

Figure 3-8 Paper Pick-up Roller (multi-purpose) 1

(5) Remove the 4 screws (e), and detach the rear right cover.

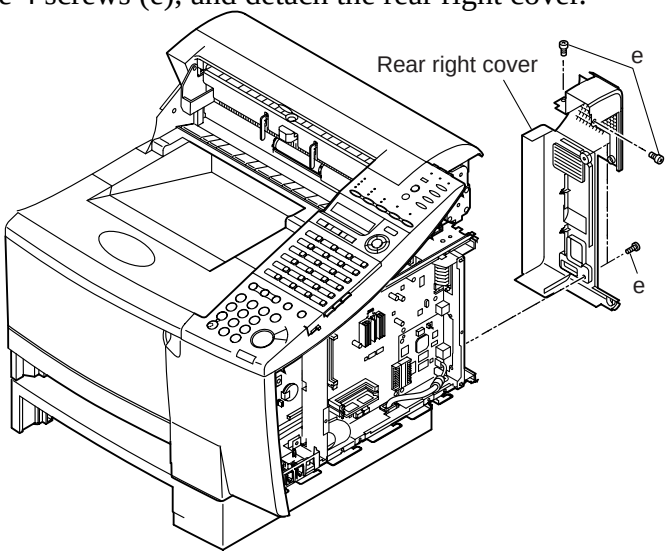

Figure 3-9 Paper Pick-up Roller (multi-purpose) 2

(6) Disconnect the connectors J5 and J6 of the PCL board. (FAX-L2000IP)
(7) Remove the screw (f), and detach the clamp.
(8) Disconnect the two connectors of the NIC board; then, remove the 6 screws (g), and detach the PCL/NIC unit. (FAX-L2000IP)
(9) Disconnect the connector J32 of the SCNT board; then, remove the 4 screws (h), and detach the operation panel ass'y.
(10) Disconnect the connectors J801, J803, J804, and J805 of the SCNT board; then, remove the 5 screws (i), and detach the reader ass'y.
(11) Remove the screw (j), and detach the front right cover.

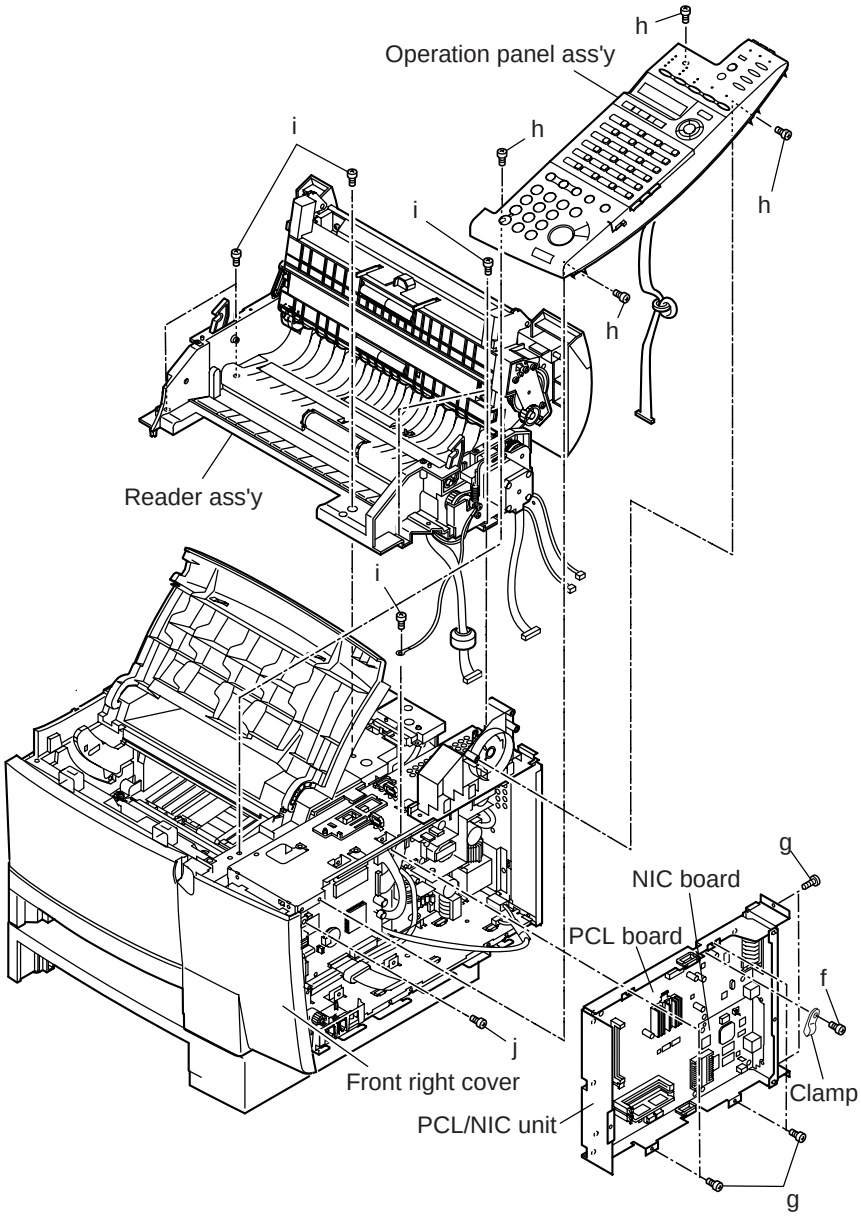

Figure 3-10 Paper Pick-up Roller (multi-purpose) 3

(12) Remove the screw (k), and detach the top cover unit.

(13) Remove the 2 screws (l), and detach the arm extending from the main unit and the joint of the cartridge cover; then, detach the top cover and cartridge cover.

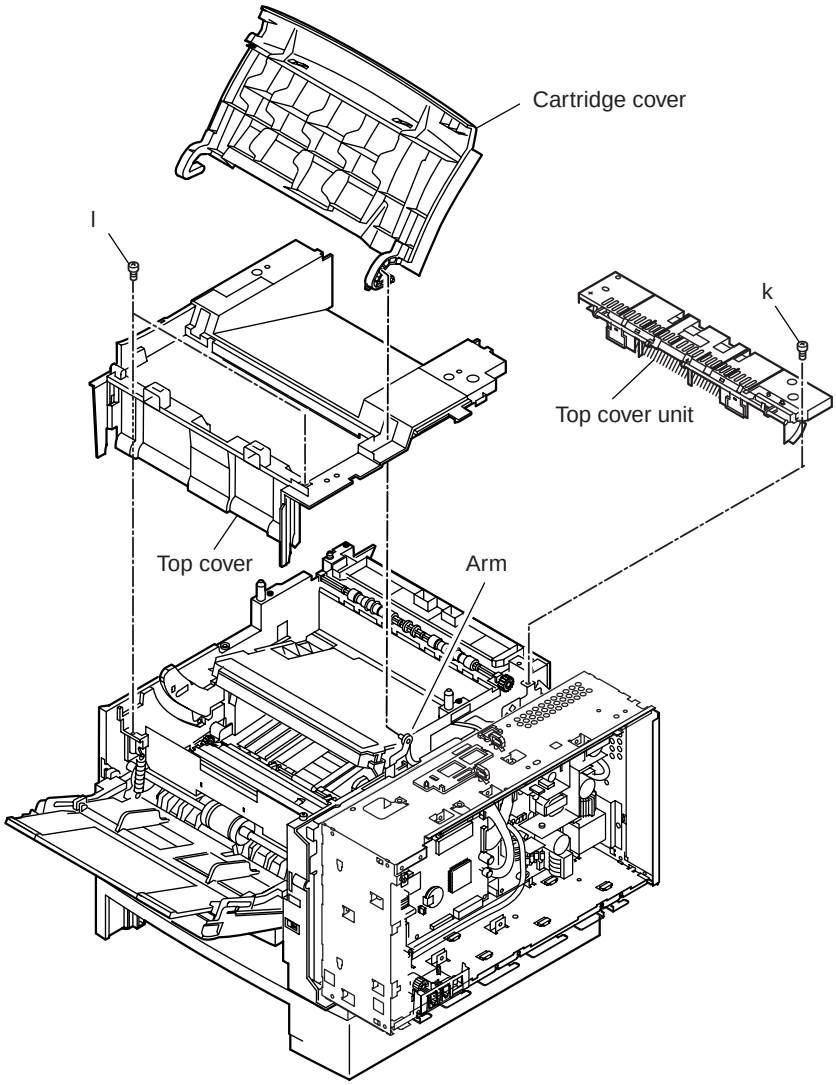

Figure 3-11 Paper Pick-up Roller (multi-purpose) 4

(14) Remove the 2 springs from the machine side; then, detach the multi-purpose tray ass'y from the front cover ass'y and the left and right hinges.

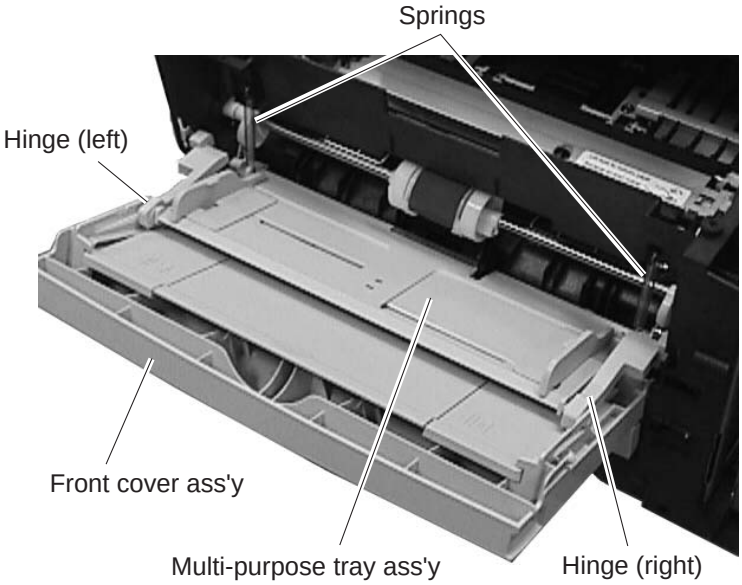

Figure 3-12 Paper Pick-up Roller (multi-purpose) 5

(15) Shift the front cover ass'y to the left to detach.

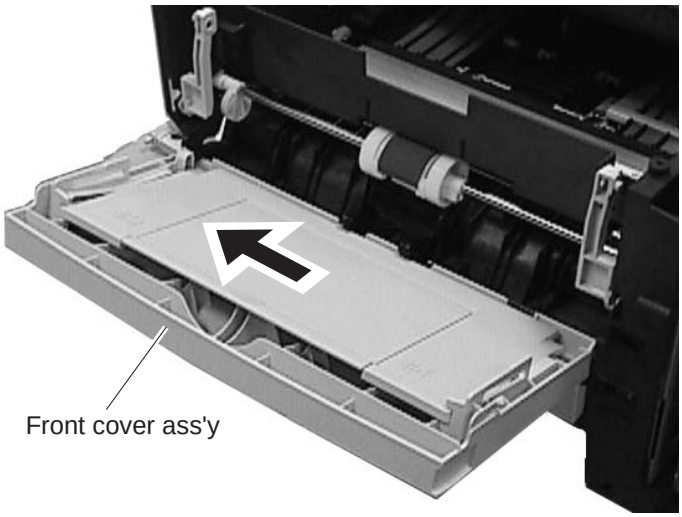

Figure 3-13 Paper Pick-up Roller (multi-purpose) 6

(16) While spreading open the roller claw found to the right of the pick-up roller, shift the roller to the right.

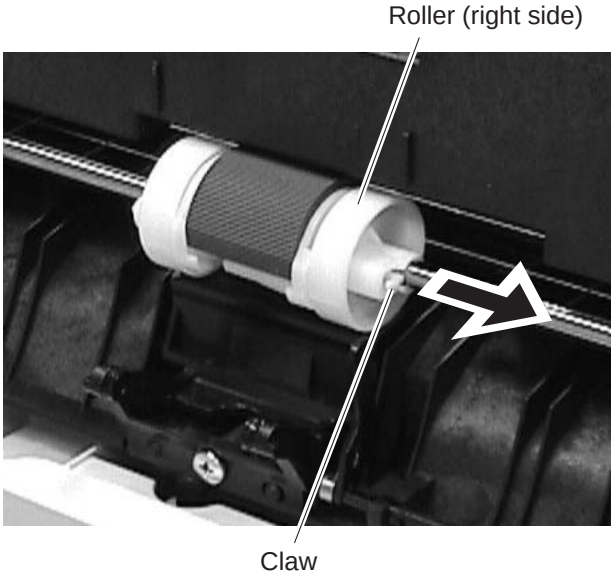

Figure 3-14 Paper Pick-up Roller (multi-purpose) 7

(17) While spreading open the claw of the pick-up roller, shift the roller to the right; then, as if to rotate it toward the front, detach the pick-up roller.

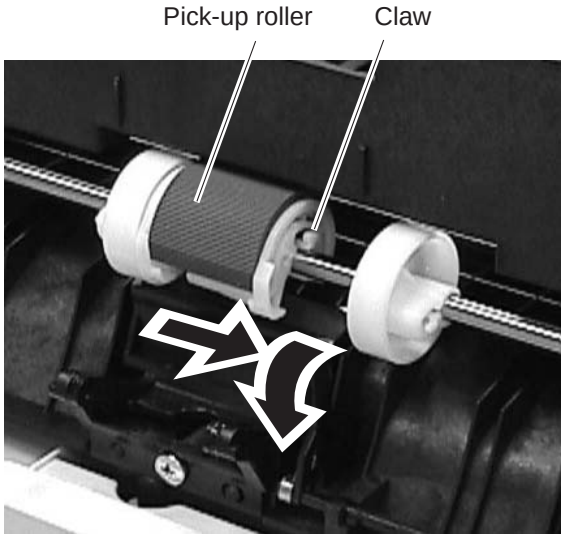

Figure 3-15 Paper Pick-up Roller (multi-purpose) 8

(18) Remove the screw (m), and slide out the separation pad to the front to detach.

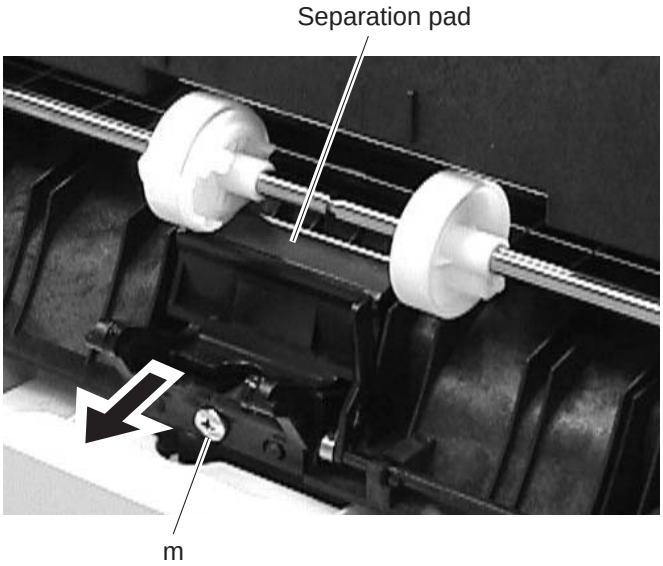

Figure 3-16 Paper Pick-up Roller (multi-purpose) 9

2.1.4 Paper pick-up roller (Main unit)

(1) Remove the 2 screws (a), and detach the right cover.
(2) Remove the 2 screws (b), and detach the upper left cover.
(3) Remove the 2 screws (c); then, while freeing the claw, detach the left cover.

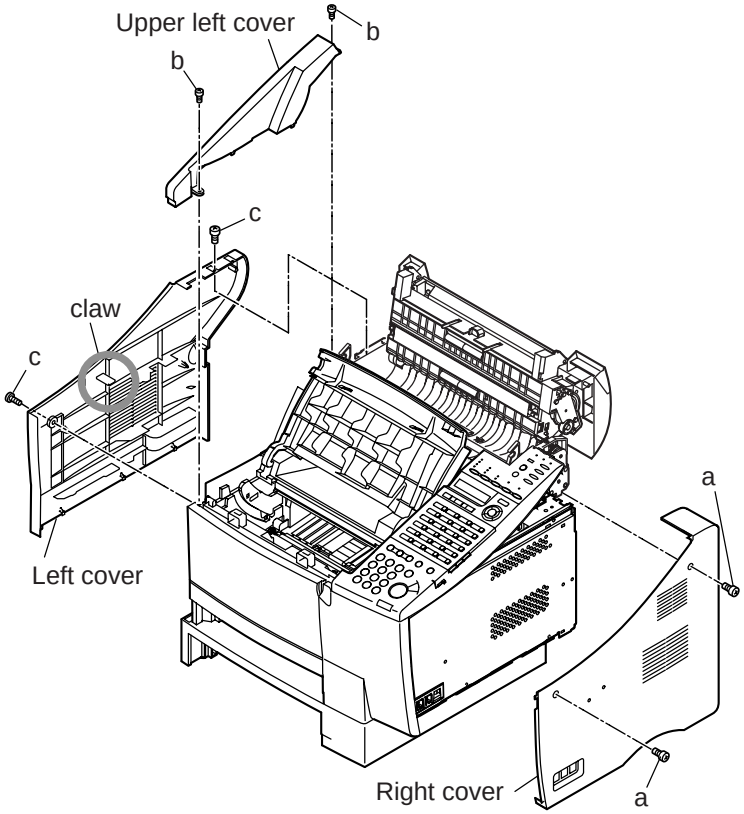

Figure 3-17 Paper Pick-up Roller (main unit) 1

(4) Remove the 4 screws (d), and detach the cassette feeder ass'y.

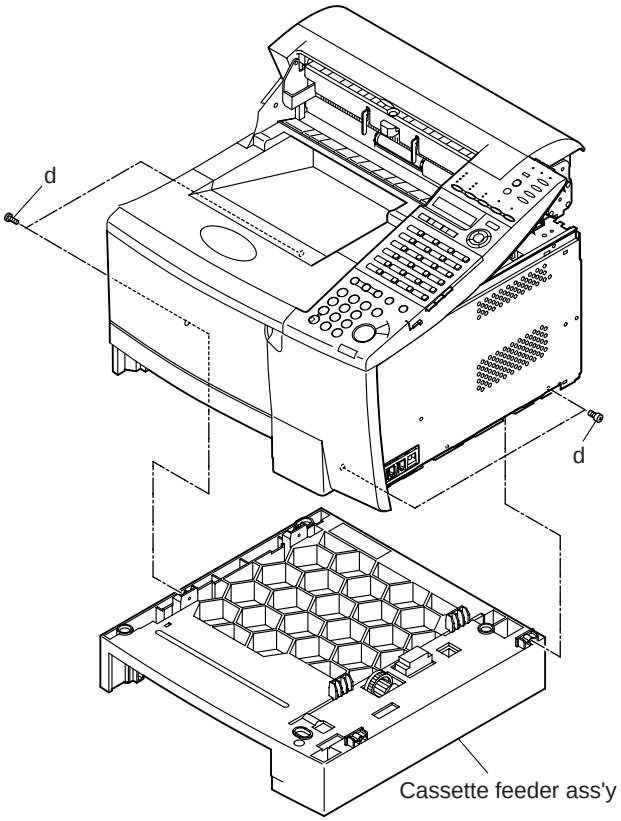

Figure 3-18 Paper Pick-up Roller (main unit) 2

(5) Take out the toner cartridge; then, turn over the main unit.
(6) Remove the 2 bushings; then, while shifting the pick-up roller to the left and right, detach it.

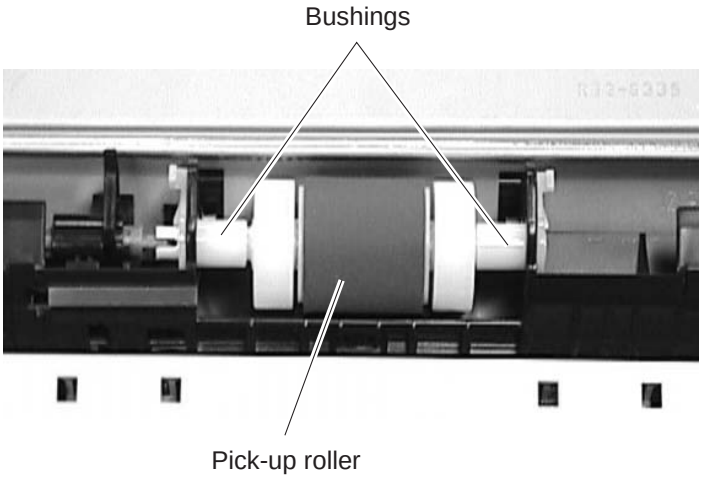

Figure 3-19 Paper Pick-up Roller (main unit) 3

2.1.5 Paper pick-up roller (Feeder)

(1) Remove the 2 screws (a), and detach the right cover.
(2) Remove the 2 screws (b), and detach the upper left cover.
(3) Remove the 2 screws (c); then, while freeing the claw, detach the left over.

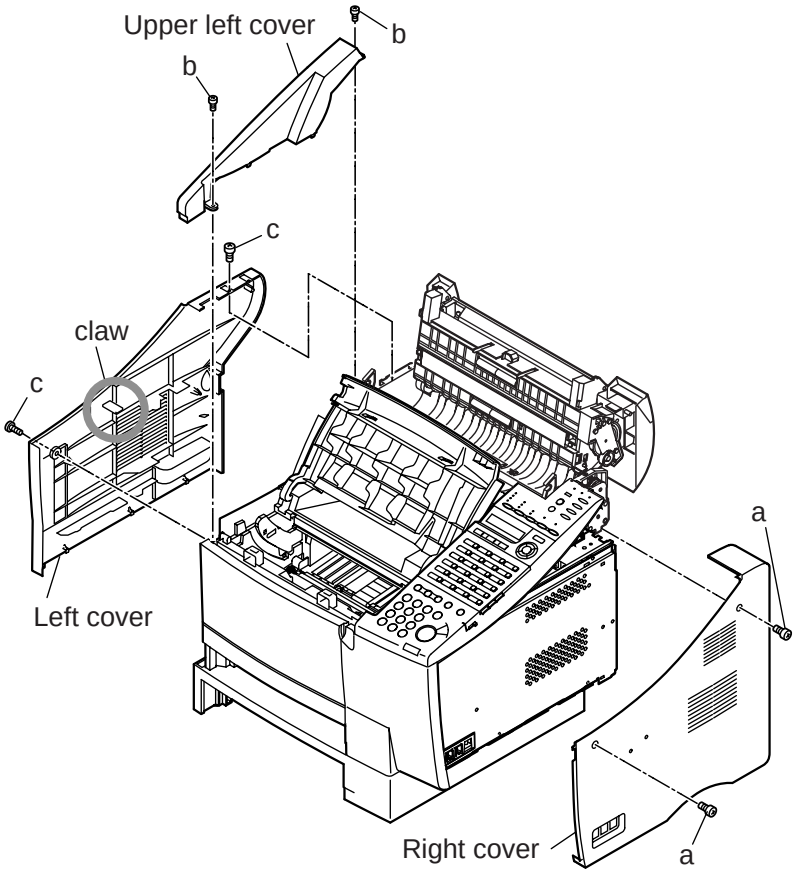

Figure 3-20 Paper Pick-up Roller (feeder) 1

(4) Remove the 4 screws (d), and detach the cassette feeder ass'y.

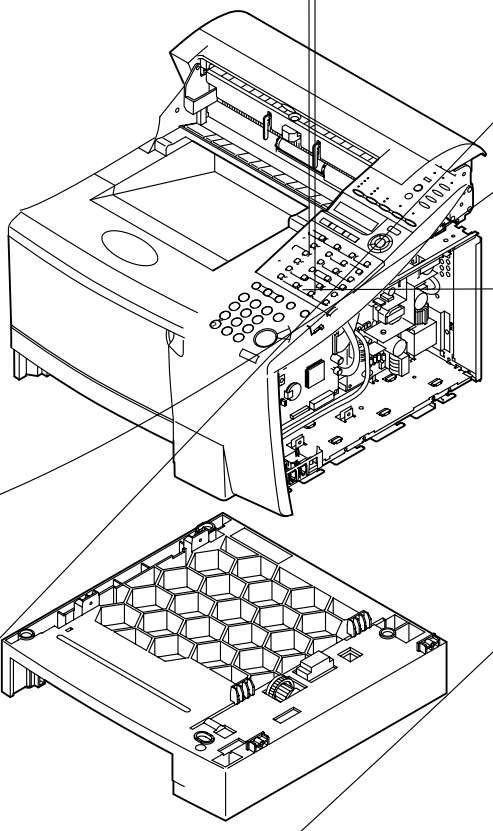

Figure 3-21 Paper Pick-up Roller (feeder) 2

(5) Turn over the cassette feeder ass'y, and remove the feeder bottom cover. (You will find a claw behind each cover.)

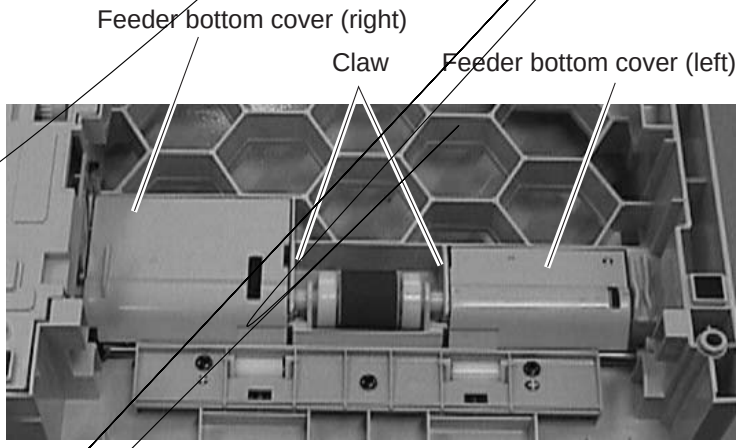

Figure 3-22 Paper Pick-up Roller (feeder) 3

(6) Remove the 2 bushings by moving them toward the outside, and detach the roller guide.
(7) While shifting the pick-up roller to the left and right, detach it.

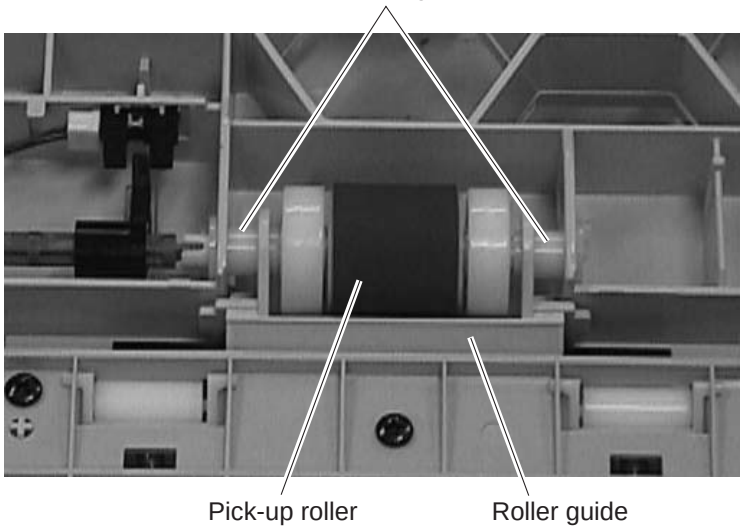

Figure 3-23 Paper Pick-up Roller (feeder) 4

2.1.6 Separation pad (Cassette)

(1) Take out the recording paper from the recording paper cassette.
(2) While pushing the left and right claws of the separation pad with a precision screwdriver, detach the pad by pulling it upward.

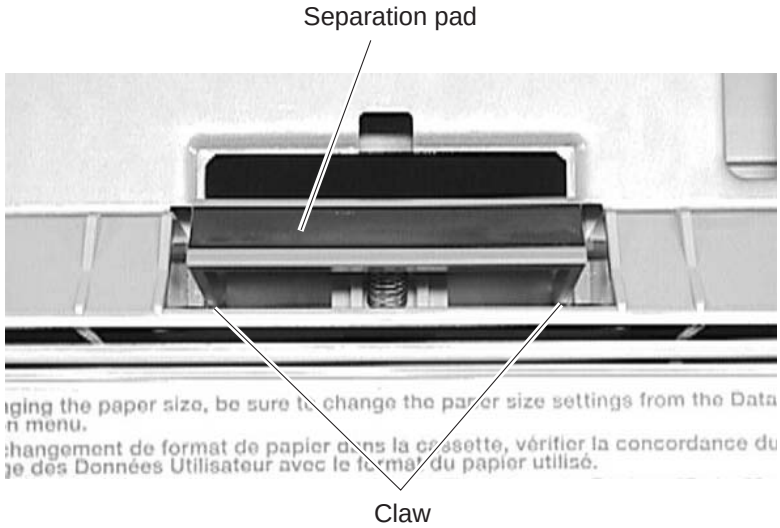

Figure 3-24 Separation pad (cassette)

2.1.7 Fixing ass'y

(1) Remove the 2 screws (a), and detach the right cover.
(2) Remove the 2 screws (b), and detach the upper left cover.
(3) Remove the 2 screws (c); then, while freeing the claw, detach the left cover.

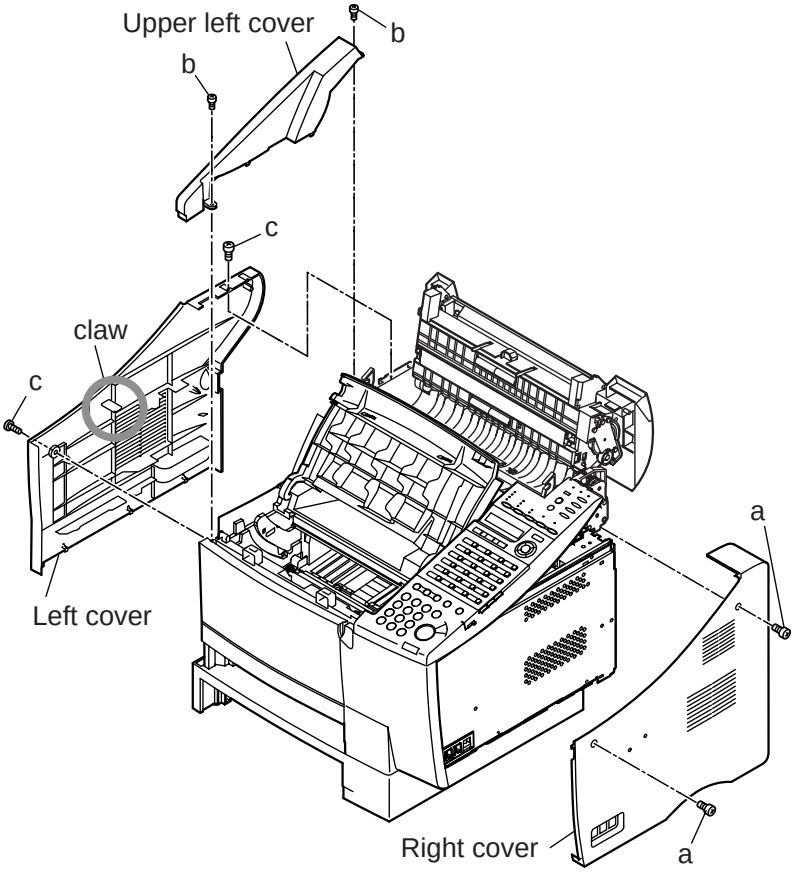

Figure 3-25 Fixing Ass'y 1

(4) Remove the 4 screws (d), and detach the rear right cover.

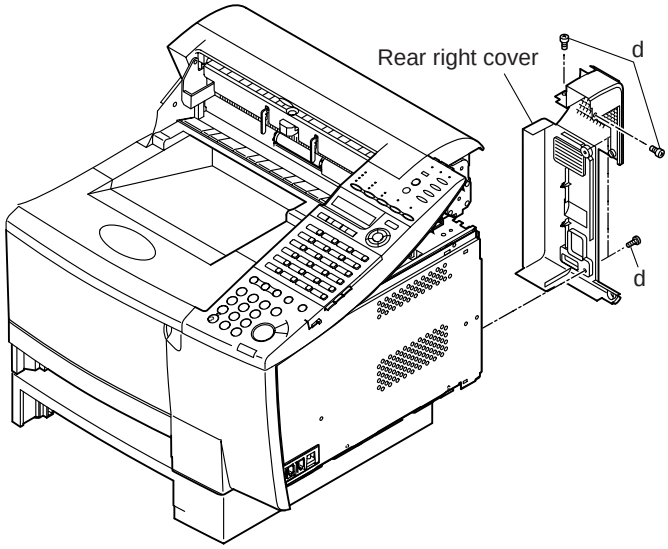

Figure 3-26 Fixing Ass'y 2

(5) Open the rear cover, and remove the 2 screws (e).

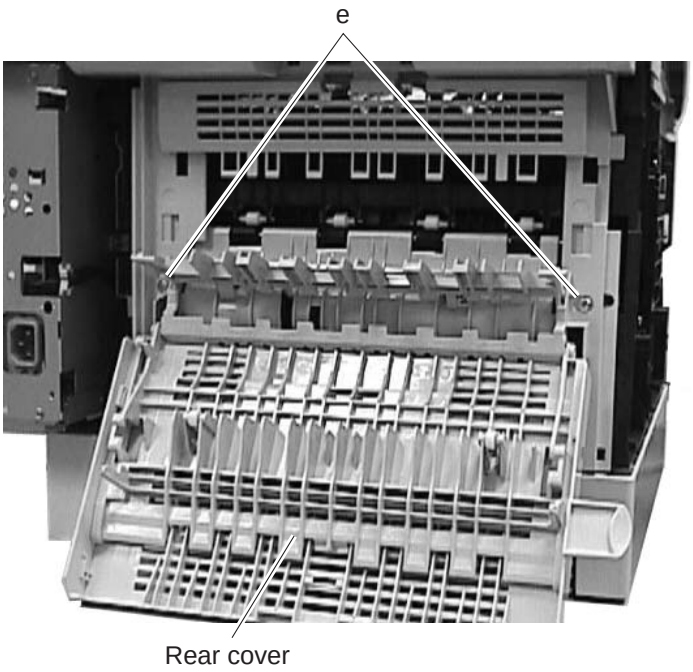

Figure 3-27 Fixing Ass'y 3

(6) Close the rear cover; then, while freeing the left and right claws at the bottom, detach the rear cover ass'y.

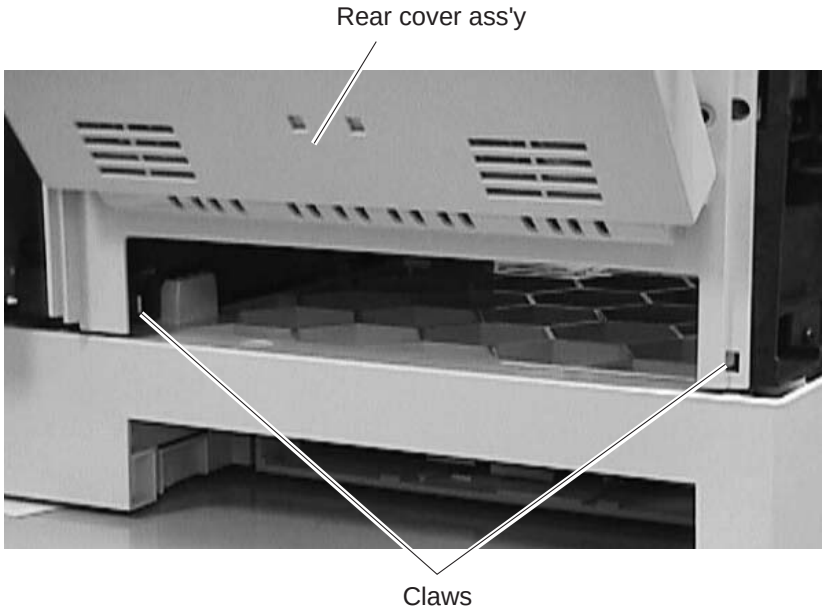

Figure 3-28 Fixing Ass'y 4

(7) Remove the 2 screws (f), and detach the reverse guide ass’y.

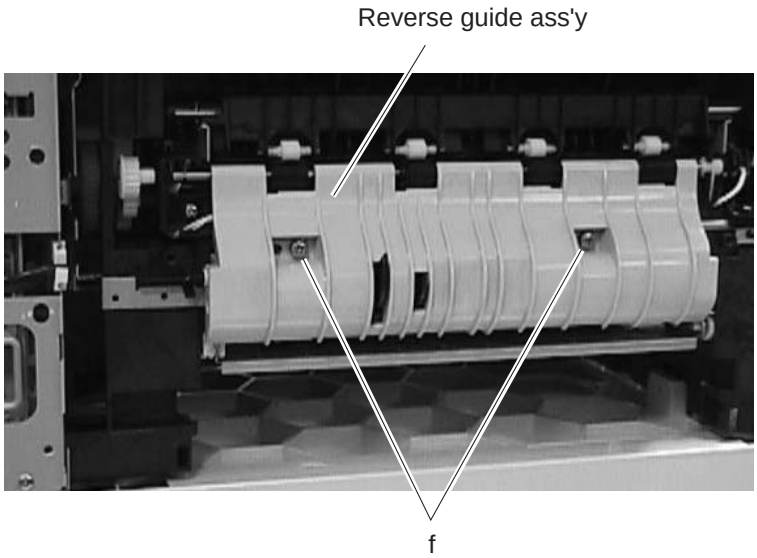

Figure 3-29 Fixing Ass’y 5

(8) Remove the 3 cables (g).
(9) Remove the 2 screws (h), and pull out the fixing ass’y to detach.

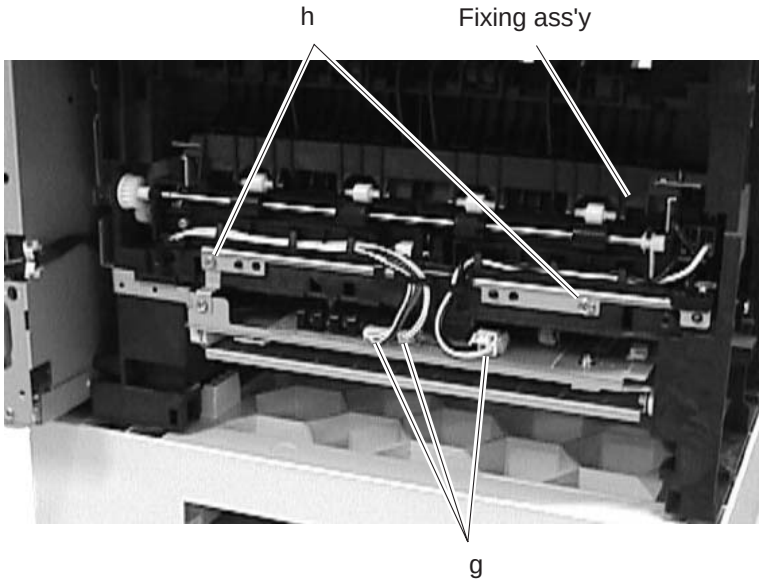

Figure 3-30 Fixing Ass’y 6

Chapter 4

Maintenance and Service

1. MAINTENANCE LIST

1.1 Consumables

Level	Consumable	When
User	Toner cartridge (FX7)	When“**REPLACE CARTRIDGE**” is displayed.
	Stamp ink (Shachihata X Stamper Inks CS-20 Yellow (H12-3372))	When the stamp becomes thin.

1.2 Cleaning

Level	Location	When
User	Main unit outer covers	When dirty.
	Document pick-up roller	When document pick-up performance fails.
	Document separation	When document separation or feed performance roller (upper/lower) fails.
	Document feed roller	When document feed performance fails.
	Document eject roller	When document feed performance fails.
	Scanning glass	When black vertical stripes appear in copied or transmitted.
	White sheet	When copied or transmitted images are light.
	Transfer guide	When dirty.
Service technician	Multi-purpose tray pick-up roller	When recording paper pick-up technician performance fails.
	Cassette pick-up roller	When recording paper pick-up performance fails.
	Separation pad	When recording paper separation performance fails.
	Registration shutter	When dirty.
	Transfer charging	When marks on back of recording paper or roller blank spots at intervals of 45 mm in copied or received images.
	Static charge eliminator	When polka appear dots in copied or received images.
	Paper feed belt	When marks on back of recording paper.
	Paper feed guide	When marks on back of recording paper.
	Duplex feed guide	When recording paper feed performance unit fails.

Level	Location	When
Service technician	Fixing entrance guide	When marks, marks on back of recording paper, irregular/smudged black vertical line, paper jam, or wrinkles in copied or received images.
	Fixing film	When marks at intervals of 75 mm or poor fixing in printed-out.
	Fixing pressure roller	When marks on back of recording paper at intervals of 66 mm , poor fixing, paper jam, or wrinkles in printed-out.

1.3 Periodic Inspection

None

1.4 Periodic Replacement Parts

Parts name	Parts No.	Life
Separation Roller (Upper)	HB1-5284	50,000 sheets
Separation Roller (Lower)	HB1-5298	50,000 sheets

1.5 Adjustment Items

Checking the Nip Width of the Pressure Roller

1.6 General Tools

Tool	Use
Phillips screwdriver	Removing/inserting screws
Flat bladed screwdriver	Removing/inserting screws
Precision Phillips screwdriver	Removing/inserting screws
Precision flat bladed screwdriver	Removing plastic tabs
Tweezers	Removing/inserting coil springs
Pliers, needle nose	Driving retaining ring
Lint-free paper	Clean transfer charging roller, fixing film
Isopropyl alcohol	Clean fixing film, fixing entrance guide, fixing pressure roller, fixing eject roller, fixing eject guide, static charge eliminator, etc.

1.7 Special Tools

Tool	Use	Part No.
Grease (MOLYKOTE EM-50L)	Apply to specified parts	HY9-0007
Grease (IF-20)	Apply to specified parts	CK-8006
IC-Removing Tool (24-64 pin)	Remove the main ROM on the SCNT board	HY9-0022

2. HOW TO CLEAN PARTS

2.1 Main Unit Outer Covers

Wipe any dirt off with a soft, dry cloth.

2.2 Document Pick-up Roller

Open the upper reader frame unit and wipe any dirt off with a soft, dry cloth.

2.3 Document Separation Roller (Upper)

Open the upper reader frame unit and wipe any dirt off with a soft, dry cloth.

2.4 Document Separation Roller (Lower)

Open the upper reader frame unit and wipe any dirt off with a soft, dry cloth.

2.5 Document Feed Roller

Open the upper reader frame unit and wipe any dirt off with a soft, dry cloth.

2.6 Document Eject Roller

Open the middle reader frame unit and wipe any dirt off with a soft, dry cloth.

2.7 Scanning Glass (Contact Sensor)

Open the middle reader frame unit and wipe any dirt off with a soft, dry cloth.

2.8 White Sheet

Open the middle reader frame unit and wipe any dirt off with a soft, dry cloth.

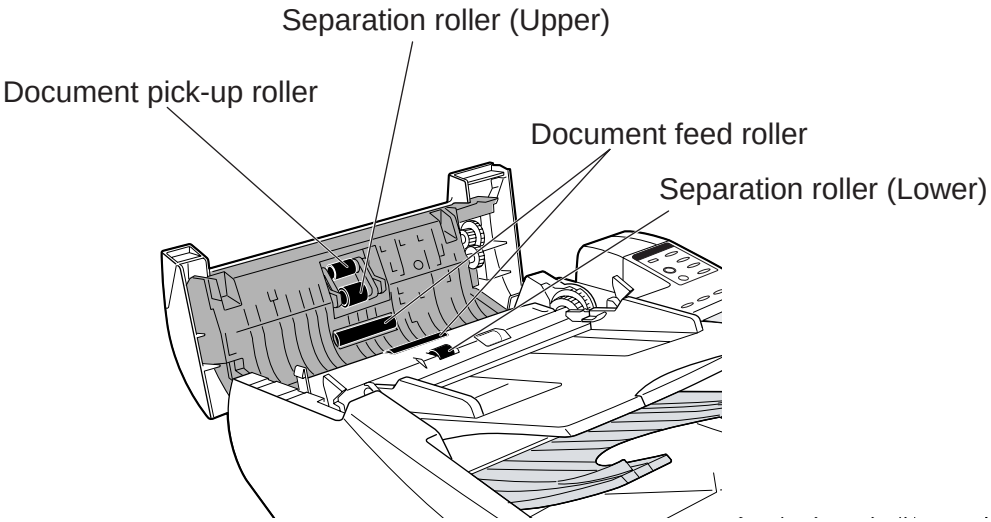

Figure 4-1 Cleaning Location 1

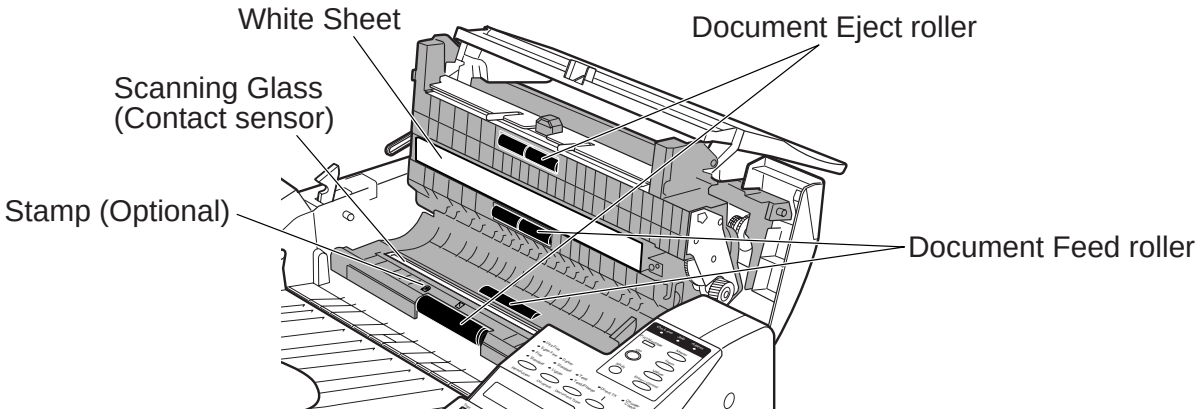

Figure 4-2 Cleaning Location 2

Do not use tissue. Otherwise, paper dust may stick to the parts or a static charge may be generated.

Precautions when using Isopropyl alcohol (IPA)

When cleaning with IPA, take care to prevent the IPA from splashing high-temperature parts. If IPA splashes high-temperature parts, leave for at least three minutes to allow the IPA to evaporate.

NOTE

If you have installed the optional stamp kit, be careful not to touch the stamp ink compartment when cleaning the scanning area.

2.9 Transfer Guide

a) Preparations for cleaning

(1) Disconnect the power cord of the main unit from the power source.
(2) Lift the document feeder tray and document output tray.
(3) Open the printer cover and remove the toner cartridge. Store the toner cartridge in its original protective bag to avoid exposure to light.

b) Cleaning

(1) Using a soft clean cloth, wipe any dust off the blank plate of the transfer guide.

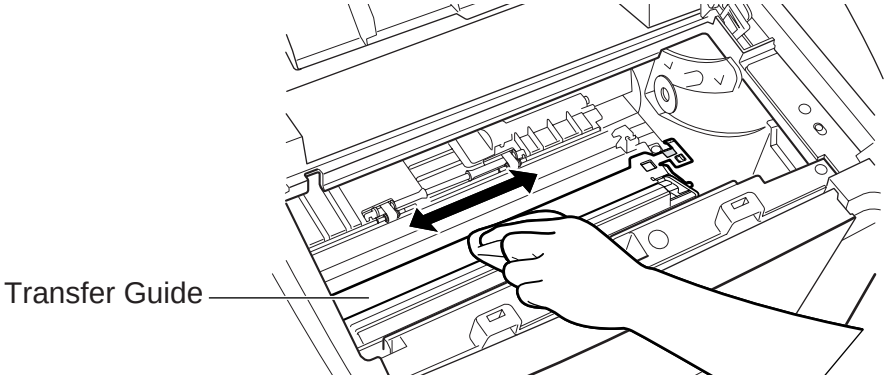

Figure 4-3 Cleaning Location 1

(2) While holding by the green label, flip the transfer guide up to its full extent.Wipe the edge of the transfer guide with a soft, clean cloth, to remove toner and paper dust from both sides of transfer guide.

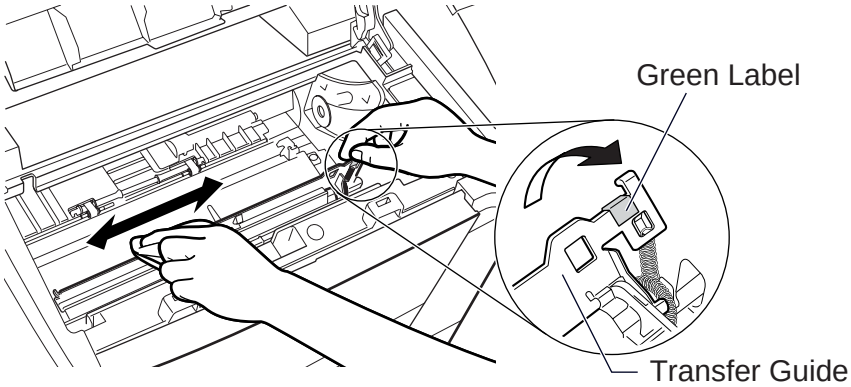

Figure 4-4 Cleaning Location 2

(3) Wipe the silver metal strip with a soft, clean cloth. Then, gently place the transfer guide back into its original position.

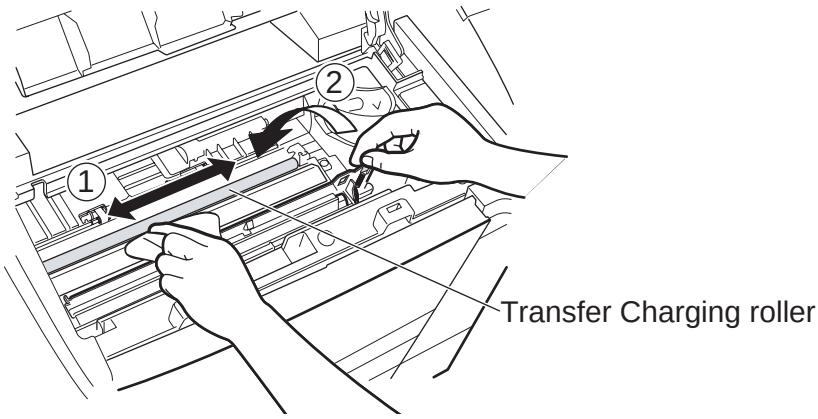

Figure 4-5 Cleaning Location 3

NOTE

To avoid the deterioration of print quality, never touch the transfer charging roller when you clean the metal strip.

2.10 Multi-purpose Tray Pick-up Roller

Using lint-free paper dipped in isopropyl alcohol, wipe and dirt off the multi-purpose tray pick-up roller.

2.11 Cassette Pick-up Roller

Using lint-free paper dipped in isopropyl alcohol, wipe and dirt off the cassette pick-up roller.

2.12 Separation Pad

Using cloth dipped in isopropyl alcohol, wipe and dirt off the separation pad.

2.13 Registration Shutter

Using lint-free paper dipped in isopropyl alcohol, wipe and dirt off the registration shutter.

2.14 Transfer Charging Roller

Wipe with lint-free paper and remove any toner or paper debris.

Do not touch or hold the sponge section of the transfer charging roller. Doing so can cause marks on back of paper or blank spots in copied or received images. Do not use solvent. Replace the charging roller it is deformed or cannot be thoroughly cleared using lint-free paper.

2.15 Static Charge Eliminator

Wipe with a lint-free paper and remove any foreign matter, such as paper fragments.

2.16 Paper Feed Belt

Using lint-free paper dipped in isopropyl alcohol, wipe of the paper feed belt.

2.17 Paper Feed Guide

Using lint-free paper dipped in isopropyl alcohol, wipe of the paper feed guide.

2.18 Duplex Feed Guide

Using lint-free paper dipped in isopropyl alcohol, wipe of the duplex feed guide.

2.19 Fixing Entrance Guide

Wipe with a lint-free paper and remove any toner or paper debris.

2.20 Fixing Film

Using lint-free paper dipped in isopropyl alcohol, wipe of the fixing film.

2.21 Fixing Pressure Roller

Using lint-free paper dipped in isopropyl alcohol, wipe of the fixing pressure roller.

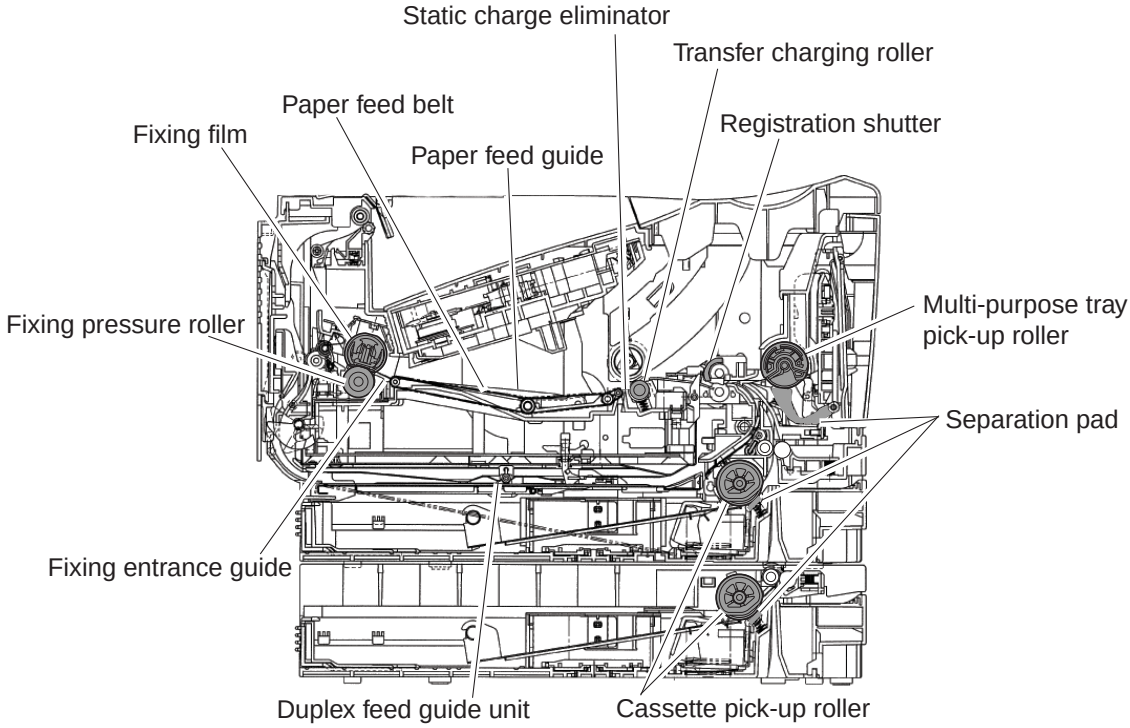

Figure 4-6 Cleaning Location 1

3. ADJUSTMENT

3.1 Checking the Nip Width of the Pressure Roller

The fixing unit is not designed to allow adjustment of the pressure (nip width); however, the incorrect nip width can cause fixing problems.

Follow the procedures below to check the nip width:

(1) Either take along one or two all-black copies of A4 or letter size made with a copier, or make it using a copier at the customer site.

(2) Place the all-back copy in the cassette of the printer, with the printed side facing down.

(3) Open the face-up tray.

(4) Press the test print switch (SW801) on the EPU board.

(5) When the leading edge of the print emerges at the face-up tray, turn OFF the printer. Take out the print from the printer about 10 seconds later.

(6) Measure the width of the glossy band across the paper and check that it meets the requirements as shown in below table.

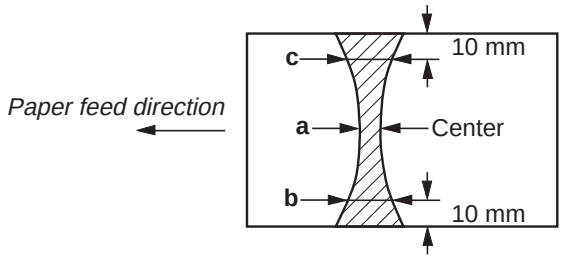

	Dimension
a	6.0 to 7.5 mm
|b - a|	0.6 mm or less
|c - a|	0.6 mm or less
|b - c|	0.5 mm or less

Figure 4-7 Fixing Nip Width

4. TROUBLESHOOTING

4.1 Troubleshooting Index

Using the troubleshooting index below to investigate the cause of a problem and refer to the specified page for countermeasures.

Problem

• Errors shown on the display (Evaluation criteria: Look at the unit in question.)

• The error message can be checked. **Page 4-11**
• The printer error message can be checked. **Page 4-16**
• The error code can be checked. **Page 4-18**

• General errors

• The unit does not pawer on. **Page 4-30**
• The display looks abnormal. **Page 4-30**
• The buttons do not work. **Page 4-30**
• No sound from the speaker. **Page 4-30**

• Printing problems (Evaluation criteria: Test printing is faulty.)

• The paper is not fed correctly. **Page 4-30**
The main motor does not run.
The Reverse motor does not run.
The paper is not picked up from the multi-purpose tray.
The paper is not picked up from the cassette.
The paper is not picked up from the duplex feed unit.
The paper skews.
• The printing operation is abnormal. **Page 4-32**
The recording paper is not fed between transfer and feed section.
The recording paper is not fed between fixing and delivery section.
Multiple feed.
Wrinkles/folded leading edge.
• Poor printing quality. **Page 4-33**
Light
Dark
Completely blank
All black
Dots
Marks on back of papers
Black vertical lines
Irregular and smudged black vertical lines
Irregular and smudged black horizontal lines
Marks
Blank spots
White vertical lines

White horizontal lines
Faulty registration
Distortion/BD signal failure
Partially compressed/stretched image
Poor fixing

- **Scanning problems (Evaluation criteria: Test printing is good, but the copied image is poor.)**
  - The document is not fed. **Page 4-37**
    The document feed motor does not run.
    The document skews.
    Two or more documents are fed at the same time
  - The scanning image is abnormal. **Page 4-38**
    Noting is printed.
    The image has vertical stripes.
    The image has thick vertical stripes.

- **Test mode function problems**
  - Faulty control panel test **Page 4-39**
    The LCD panel does not display correctly.
    The LED lamp fails to go ON.
    The keys on the operation panel fails to work properly.
  - Faulty contact sensor test **Page 4-39**
    The LED of the contact sensor fails to go ON properly.
  - Faulty DRAM test **Page 4-39**
    The indication “READ & COMPARE NG” appears.
  - Faulty sensor test **Page 4-39**
    DES sensor fails to operate properly.
    DS sensor fails to operate properly.
    DWS sensor fails to operate properly.
    DFS sensor fails to operate properly.
    Cassette 1 paper sensor fails to operate properly.
    Cassette 2 paper sensor fails to operate properly.
    Cassette 3 paper sensor fails to operate properly.
    MP tray paper sensor fails to operate properly.
    Tray full sensor fails to operate properly.
    Face-up sensor fails to operate properly.
    Printer cover sensor fails to operate properly.

4.2 Error Shown on the Display

4.2.1 User error message

Look for the applicable error message and implement the appropriate countermeasures.

"# ALREADY IN USE"

Cause: The box specified with confidential or polling communications is already in use.

Solution: Change the setting or select another box.

"AUTO REDIAL"

Cause: The other party's line was busy on the previous dialing attempt and the fax unit is dialing the number again.

Solution: To cancel redialing, press Stop button when direct dialing or press Delete File, select transaction number then press OK when memory sending.

"BUSY/NO SIGNAL" (#0005, #0018)

Cause: The receiving fax did not answer within 55 seconds. (T0 time over)

Solution: Contact the other party and have them check their fax.You can try to send the document manually. For an overseas call, add pauses to the registered number.

Cause: The touch tone/rotary pulse setting on your fax is incorrect.

Solution: Set your fax to the setting that matches your telephone line.

Cause: The other party is not using a G3 machine.

Solution: Contact the other party and have them send or receive the document using a G3 machine.

Cause: The other party's fax is not working.

Solution: Contact the other party and have them check their fax.

Cause: The telephone number you dialed is busy.

Solution: Try sending the document at a later time.

"CHECK DOCUMENT" (#0001, #0011)

Cause: Document jam. This is displayed when the document sensor detects paper, but the document edge sensor cannot detect the leading edge of the document with 15 seconds from the start of the feed operation.

Solution: (1) Remove the document and try again.
(2) If the document does not feed correctly, clean the rollers.

"CHECK POLLING ID" (#0008, #0021)

Cause: Pollimg was impossible because the polling ID or your subaddress/password did not match.

Solution: Check the polling ID or subaddress/passwaord with the other party and try polling again.

"SYSTEM ERROR"

See Printer error codes (E004, E100, E246, E805, E733)

"CHECK PRINTER COVER"

Cause: (1) Displayed when the printer cover sensor detects an open cover.
(2) Displayed when the toner cartridge is not installed.

Solution: (1) Close the Printer cover.
(2) Istall a toner cartridge.

"CHECK SUBADDR/PASSWD" (#0083, #0102)

Cause: Password/subaddress does not match.

Solution: Contact the other party and confilm that the subaddress/password that you are using are correct.

"COMMUNICATING PLEASE WAIT"

Cause: You tried to use direct sending while the fax was sending another document.

Solution: Wait until the transmission is finished, then try again.

"DOCUMENT TOO LONG" (#0003)

Cause: Displayed when one page of the document was longer than 1 meter (39.4 inches) or transmission/copying took longer than the regulated time (32 minutes).

Solution: (1) Use a copy machine to copy the document onto several shorter pages, then transmit again.
(2) Reduce them on a copy machine if necessary. Then paste them on standard A4 or letter-size sheets for scanning.

"HUNG UP PHONE"

Cause: The handset was left off the hook after the completion of transmission or reception.

Solution: Put the handset back on the handset rest.

"MEMORY FULL" (#0037)

Cause: The fax's memory is full because it has received too many documents.

Solution: (1) Print out any documents which are stored in memory. Then start the operation again.
(2) If the memory contains any facsimiles you don't need, delete them.

Cause: The fax's memory is full because you tired to send too many pages at once.

Solution: Divide the document and send each part separately.

"MEMORY FULL PLEASE WAIT"

Cause: The image data storage memory area is full.

Solution: Wait until the current document transmission has completed.

"NO ANSWER"

Cause: The other party did not answer.

Solution: (1) Start the procedure again from the beginning and try again.
(2) If the connection fails again, make sure the other party is using a G3-compatible fax machine.

"NO CONFID. TX" (#0033, #0034)

Cause: (1) The other fax machine may not have the confidential function.
(2) ITU-T subaddress/password does not match.
(3) It is possible that the other fax has no free memory.

Solution: Check the above items for the other fax.

"NO DOC. STORED"

Cause: Tried to check the contents of the memory but no documents are currently stored in the memory.

Solution: No need.

"NO ORIGINAL RELAY TX" (#0035, #0036)

Cause: (1) It is possible that the other fax has no relay function.
(2) ITU-T subaddress/password does not match.
(3) It is possible that the other fax has no free memory.

Solution: Check the above items for the other fax.

"NO RX PAPER" (#0012)

Cause: Declares that the other fax has no recording paper for DIS.

Solution: Contact the other party and have them load paper into their fax.

"NO TEL#" (#0022)

Cause: No one-touch speed dialing, coded speed dialing. or group dialing telephone number is registered.

Solution: Register the one-touch speed dialing, coded speed dialing, or group dialing telephone number.

"NOT AVAILABLE NOW"

Cause: You pressed an one-touch speed dialing, coded speed dialing, or group dialing, that is not registered for the feature you are trying to use.

Solution: Check the contents of the one-touch speed dialing, coded speed dialing, or group dialing registration, then try again.

"NOT FOUND, TRY AGAIN"

Cause: The box number you specified does not exist.

Solution: Try again with a different number.

"OUTPUT TRAY FULL"

Cause: The output tray is full of paper.
Solution: Pick up the printed pages on the tray.

"PASSWORD POLL REJECT"

Cause: You set up a polling box for polling sending with an ITU-T password, but the other party's fax unit does not support use of an ITU-T password for polling receiving.
Solution: Transmit without an ITU-T password.

"PASSWORD TX REJECT"

Cause: You attempted to send a document with an ITU-T password, but the other party's fax unit does not support use of an ITU-T password for receiving.
Solution: Transmit without an ITU-T password.

"PRT ALT. PAPER SIZE? YES=(*) NO=(#)"

Cause: The size of the available recording paper does not match the size of the document waiting to be printed.
Solution: If you do not mind printing on a different paper size, press ***** button.
If you want to print the correct paper size, press Stop button and install the correct size paper.

"REC. PAPER JAM" (#0009)

Cause: Recording paper jam.
This is displayed when the sensor detects a paper jam.
Solution: Recover paper jam.

"RECEIVED IN MAILBOX"

Cause: A confidential document has arrived in a mailbox of the fax unit, and the message will remain displayed until you print the document.
Solution: Output the document in the confidential mailbox.

"RECEIVED IN MEMORY"

Cause: (1) The fax unit has run out of recording paper.
(2) The toner supply of the toner cartridge is exhausted.
(3) The output tray is full of paper.
Solution: (1) Supply paper to the paper cassettes.
(2) Change the toner cartridge.
(3) Pick up the printed pages on the tray.

"RECEIVED IN MAM. BOX"

Cause: You have received a document in a memory box.
Solution: Print out the document in the memory box.

"REPLACE CARTRIDGE"

Cause: (1) The toner cartridge has run out of toner.
(2) Toner detection structure defects.
Solution: (1) Replace the toner cartridge.
(2) Clean the primary bias contact on the EPU board and cartridge contact.
(3) Clean the drum grounding contact pin of the drive unit and cartridge contact.
(4) Replace the EPU board.
(5) Replace the ECU board.

"SELECTIVE POLL REJECT"

Cause: You have setup a polling box for polling sending with an ITU-T subaddress, but the other party's fax unit does not support use of an ITU-T subaddress for polling receiving.
Solution: Transmit without a subaddress.

"START AGAIN"

Cause: An error due to system malfunction or line breakdown.
Solution: Carry out the same operation again.

"STOP KEY PRESSED"

Cause: You have pressed the Stop button to cancel the current transaction.
Solution: No need.

"SUBADDRESS TX REJECTED"

Cause: You attempted to send a document with an ITU-T subaddress, but the other party's fax unit does not support receiving a document with an ITU-T subaddress.
Solution: Transmit without a subaddress.

"SUPPLY REC. PAPER" (#0009)

Cause: Either recording paper run out or there is no recording paper cassette loaded. This is displayed when the cassette recording paper sensor detects no paper.
Solution: Refill the recording paper in the cassette.
Install the paper cassette correctly.

4.2.2 Printer error message

Look for the applicable error message and implement the appropriate countermeasures.

"AUTHENTICATION ERROR"

Cause: Invalid password.
Solution: Enter the correct password.

"ETHERNET OPTION ERROR"

Cause: A NIC board error occurred.
Solution: Restart the printer after checking the installation of the NIC board.
If the error persists, replace the NIC board.

"MEM ALLOC ERROR"

Cause: Not enough memory to process the data and print the page.
Solution: If AUTOCONT is ON (CONFIG MENU), the printer will be put back online after 10 sec.
If AUTOCONT is OFF, press the Go button to put the printer back online.
Check the printed page to ensure that the print job is complete.

"MEMORY OVERFLOW"

Cause: A memory overflow has occurred.
Solution: The printer has received more data than it can hold in the available memory on the PCL board.
If AUTOCONT is ON (CONFIG MENU), the print job will be put back online after 10 sec. If AUTOCONT is OFF, the printer will go offline.
Press the Go button and the print job will continue printing, although data may be lost.
Simplify the print job by deleting unnecessary fonts or macros from the printer memory, or add additional memory to the printer.

"MRT COMPRESSION"

Cause: The printer is processing complex data.
Solution: The printer is using MRT Compression because the page is too complex.
Wait a moment for the operation to complete.

"OPTION RAM ERROR"

Cause: An option RAM error occurred.
Solution: An option RAM has failed the startup checksum.
Replace the option RAM.

"PARALLEL INTERFACE ERROR"

Cause: A parallel port error occurred.

Solution: Correct the connection after checking the connector. Then, restart the printer. If the warning persists, replace the PCL board.

"USB INTERFACE ERROR"

Cause: A USB port error occurred.

Solution: Correct the connection after checking the connector. Then, restart the printer. If the error persists, replace the PCL board.

4.2.3 Error codes

a) Service error code output

When service data #1 SSSW SW01 bit 0 is set to “1” then service error codes are printed on the activity management reports, reception result reports and error transmission reports when communication is terminated due to an error. Also, the following is displayed when an error occurs.

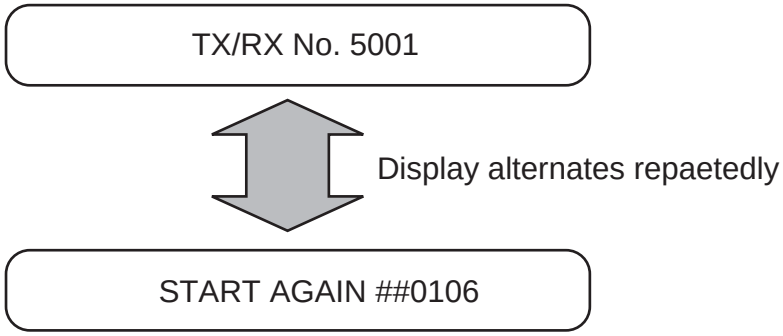

Figure 4-8 Service Error Code Display

b) Error code countermeasures

The following item c) lists all the error codes that the product can display. As for causes and countermeasures, only the error codes which are newly incorporated in the unit as well as which require remedies unique to the product are included in the item d). For the causes and countermeasures of other error codes, refer to the separate *G3/G4 Facsimile Error Code List (Rev. 2)*.

- **Increase the transmission level**

  Increase service data #2 MENU Parameter No.07 toward 8 (dBm).
- **Decrease the transmission level**

  Decrease service data #2 MENU Parameter No.07 toward -15 (dBm).
- **Echo measures**

  Change the following bit switches of service data #1 SSSW SW03.

Bit 4:	1	Ignore the first DIS signal sent by the other fax machine.
	0	Do not ignore the first DIS signal sent by the other fax machine.
Bit 5:	1	Transmit a tonal signal (1850 or 1650 Hz) when the other fax machine sends a DIS signal.
	0	Do not transmit a tonal signal when the other fax machine sends a DIS signal.
Bit 6:	1	Transmit a 1850-Hz tonal signal when bit 5 is 1.
	0	Transmit a 1650-Hz tonal signal when bit 5 is 1.
Bit 7:	1	Transmit a tonal signal before sending a CED signal.
	0	Do not transmit a tonal signal before sending a CED signal.

- **EPT (Echo Protect Tone)**

Change service data #1 SSSW SW03 bit 1.

Bit 1: 1 Transmit an echo protect tone.
0 Do not transmit an echo protect tone.

- **Adjust NL equalizer.**

Set service data #2 MENU Parameter No.05 to “ON”.

- **Reduce the transmission start speed.**

Reduce the transmission speed by changing “TX START SPEED” setting in user data “SYSTEM SETTINGS”.

- **Loosen the TCF judgment standard.**

Not available for this fax.

- **Loosen the RTN transmission conditions.**

Change service data #3 NUMERIC Param. Parameters No.02 to 04.

No.02 Percentage of errors in all lines : Set close to 99%.
No.03 Number of lines of burst condition : Set close to 99 lines.
No.04 Lines below the burst condition : Set close to 99 times.

- **Increase the no-sound time after CFR reception.**

Change service data #1 SSSW SW04 bit 4 to “1”.

Bit 4: 1 Time when the low-speed signal is ignored after sending a CFR signal: 1500 ms
0 Time when the low-speed signal is ignored after sending a CFR signal: 700 ms

c) ERROR CODE LIST

The error codes that have newly been added starting with the product are identified by the notation "New"; those error codes for which remedies unique to the product are offered are identified by the notation "UNQ (UNIQUE)".

• User error code

	No.	Tx or Rx	Definition
UNQ	#0001	[TX]	Document has jamed
UNQ	#0003	[TX/RX]	Document is too long, or page time-over
UNQ	#0005	[TX/RX]	Initial identification (T0/T1) time-over
	#0006	[TX]	Transmission cannot be made
		[RX]	Phase synchronization fails in OLD-FM
	#0008	[TX]	Password does not match for polling transmission
UNQ	#0009	[RX]	Recording paper has jamed or the recording paper has run out
	#0011	[RX]	Polling reception error
	#0012	[TX]	The other party has run out of recording paper
	#0018	[TX/RX]	Auto dialing transmission error
	#0021	[RX]	The other party has rejected the machine during polling reception
	#0022	[TX]	Call fails
	#0025	[TX/RX]	Auto-dial setting is wrong
	#0033	[TX]	Confidential transmission cannot be used
	#0034	[TX]	Transmission to the confidentical mailbox of the other party cannot be made in confidential transmission
	#0035	[TX]	Relay control transmission cannot be used
	#0036	[TX]	Relay control transmission cannot be made
	#0037	[RX]	Memory has overflowed when receiving images
	#0039	[TX]	Closed network transmission fails
	#0054	[TX/RX]	Call cannot be made
	#0056	[RX]	Recording paper feed fault
	#0057	[RX]	Recording paper feed fault
	#0058	[RX]	Recording paper feed fault
	#0059	[TX]	Dialed number and the connected number (CSI) do not match
	#0080	[TX]	The other party is not equipped with an ITU-T-compliant subaddress reception function
	#0081	[TX]	The other party is not equipped with an ITU-T-compliant password reception function
	#0082	[RX]	The other party is not equipped with an ITU-T-compliant selective polling transmission function
	#0083	[RX]	Selective polling address or the password does not match during ITU-T-compliant selective polling reception
	#0084	[RX]	The other party is not equipped with a password function for ITU-T-compliant selective polling reception
	#0099	[TX/RX]	Stop button was pressed during a communication
	#0995	[TX/RX]	Memory transmission reservation clear/memory reception image clear

• **Service error code**

No.	Tx or Rx	Definition
##0100	[TX]	The number allowed for retransmission of the procedure signal was exceeded during transmission
##0101	[TX/RX]	The modem speed of the machine does not match that of the other party
##0102	[TX]	Fallback is not possible
##0103	[RX]	EOL cannot be detected for 5 sec (15 sec if CBT)
##0104	[TX]	RTN or PIN has been received
##0106	[RX]	The procedure singal cannot be received for 6 sec while in wait
##0107	[RX]	The transmitting machine cannot be use fallback
##0109	[TX]	After transmitting DCS, a signal other than DIS, DTC, FTT, CFR, and CRP was received, exceeding the permitted number of transmissions of the procedure signal
##0111	[TX/RX]	Memory error
##0114	[RX]	RTN was transmitted
##0116	[TX/RX]	During a communication, suspension of loop current was detected
##0200	[RX]	During image reception, a carrier is not detected for 5 sec
##0201	[TX/RX]	DCN was received through a non-normal procedure
##0220	[TX/RX]	System error (e.g., main program may have gone away)
##0223	[TX]	The line was disconnected during communication
##0224	[TX/RX]	Fault occurred in the communication procedure signal
##0229	[RX]	The recording system became locked for 1 min
##0237	[RX]	The IC used to control the decoder malfunctioned
##0238	[RX]	The unit used to control recording malfunctioned
##0261	[TX/RX]	System error occurred between the modem and system control board
##0280	[TX]	The number of re-transmissions of the procedure signal has been exceeded
##0281	[TX]	The number of re-transmissions of the procedure signal has been exceeded
##0282	[TX]	The number of re-transmissions of the procedure signal has been exceeded
##0283	[TX]	The number of re-transmissions of the procedure signal has been exceeded
##0284	[TX]	DCN has been received after transmission of TCF
##0285	[TX]	DCN has been received after transmitting EOP
##0286	[TX]	DCN has been received after transmitting EOM
##0287	[TX]	DCN has been received after transmitting MPS
##0288	[TX]	After transmitting EOP, a signal other than PIN, PIP, MCF, RTP, or RTN was received
##0289	[TX]	After transmitting EOM, a signal other than PIN, PIP,MCF, RTP, or RTN was received

No.	Tx or Rx	Definition
##0290	[TX]	After transmitting MPS, a signal other than PIN, PIP,MCF, RTP, or RTN was received
##0295	[TX]	For the auto alarm notification function, the other party does not have an NTT remote maintenance function
##0670	[TX]	In V.8 late start, the V.8 ability was detected in DIS from the other party and, in response, CI was transmitted; however, the procedure failed to advance, causing a T1 time-over condition
##0671	[RX]	In V.8 call arrives, the procedure fails to advance to phase 2 after CM detection, causing a T1 time-over condition
##0672	[TX]	In V.34 transmission, the procedure fails to move from phase 2 to phase 3 and later, causing a T1 time-over condition
##0673	[RX]	In V.34 reception, the procedure fails to move from phase 2 to phase 3 and later, causing a T1 time-over condition
##0674	[TX]	In V.34 transmission, the procedure fails to move from phase 3 or phase 4 to a control channel or later, causing a T1 time-over condition
##0675	[RX]	In V.34 reception, the procedure fails to move from phase 3 or phase 4 to a control channel or later, causing a T1 time-over condition
##0705	[TX]	In CHT transmission, DCN was received after detecting NACK
##0711	[TX]	In CHT transmission, REJ was received after transmission of an image signal
##0750	[TX]	In ECM transmission, no significant signal can be received after transmission of PPS-NULL, and the allowed number of procedure signal re-transmissions was exceeded
##0751	[TX]	In ECM transmission, a signal other than MCF, PPR, or RNR was received after transmission of PPS-NULL
##0752	[TX]	In ECM transmission, DCN was received after transmission of PPS-NULL
##0753	[TX]	In ECM transmission, the allowed number of procedure signal re-transmissions was exceeded or a T5 time-over (60 sec) condition occurred after transmission of PPS-NULL
##0754	[TX]	In ECM transmission, the allowed number of procedure signal re-transmissions was exceeded after transmission of PPS-NULL
##0755	[TX]	In ECM transmission, no significant signal can be received after transmission of PPS-MPS, and the allowed number of procedure signal re-transmissions was exceeded
##0757	[TX]	In ECM transmission, DCN was received after transmission of PPS-MPS
##0758	[TX]	In ECM transmission, the allowed number of procedure signal re-transmissions was exceeded or a T5 time-over (60 sec) condition occurred after transmission of PPS-MPS

No.	Tx or Rx	Definition
##0759	[TX]	In ECM transmission, the allowed number of procedure signal re-transmissions was exceeded after transmission of PPS-MPS
##0760	[TX]	In ECM transmission, no significant signal can be received after transmission of PPS-EOM, and the allowed number of procedure signal re-transmissions was exceeded
##0762	[TX]	In ECM transmission, DCN was received after transmission of PPS-EOM
##0763	[TX]	In ECM transmission, the allowed number of procedure signal re-transmissions was exceeded or a T5 time-over (60 sec) condition occurred after transmission of PPS-EOM
##0764	[TX]	In ECM transmission, the allowed number of procedure signal re-transmissions was exceeded after transmission of PPS-EOM
##0765	[TX]	In ECM transmission, no significant signal can be received after transmission of PPS-EOP, and the allowed number of procedure signal re-transmissions was exceeded
##0767	[TX]	In ECM transmission, DCN was received after transmission of PPS-EOP
##0768	[TX]	In ECM transmission, the allowed number of procedure signal re-transmissions was exceeded or a T5 time-over (60 sec) condition occurred after transmission of PPS-EOP
##0769	[TX]	In ECM transmission, the allowed number of procedure signal re-transmissions was exceeded after transmission of PPS-EOP
##0770	[TX]	In ECM transmission, no significant signal can be received after transmission of EOR-NULL, and the allowed number of procedure signal re-transmissions was exceeded
##0772	[TX]	In ECM transmission, DCN was received after transmission of EOR-NULL
##0773	[TX]	In ECM transmission, the allowed number of procedure signal re-transmissions was exceeded or a T5 time-over (60 sec) condition occurred after transmission of EOR-NULL
##0774	[TX]	In ECM transmission, ERR was received after transmission of EOR-NULL
##0775	[TX]	In ECM transmission, no significant signal can be received after transmission of EOR-MPS, and the allowed number of procedure signal re-transmissions was exceeded
##0777	[TX]	In ECM transmission, DCN was received after transmission of EOR-MPS
##0778	[TX]	In ECM transmission, the allowed number of procedure signal re-transmissions was exceeded or a T5 time-over (60 sec) condition occurred after transmission of EOR-MPS
##0779	[TX]	In ECM transmission, ERR was received after transmission of EOR-MPS

	No.	Tx or Rx	Definition
	##0780	[TX]	In ECM transmission, no significant signal can be received after transmission of EOR-EOM, and the allowed number of procedure signal re-transmissions was exceeded
	##0782	[TX]	In ECM transmission, DCN was received after transmission of EOR-EOM
	##0783	[TX]	In ECM transmission, the allowed number of procedure signal re-transmissions was exceeded or a T5 time-over (60 sec) condition occurred after transmission of EOR-EOM
	##0784	[TX]	In ECM transmission, ERR was received after transmission of EOR-EOM
	##0785	[TX]	In ECM transmission, no significant signal can be received after transmission of EOR-EOP, and the allowed number of procedure signal re-transmissions was exceeded
	##0787	[TX]	In ECM transmission, DCN was received after transmission of EOR-EOP
	##0788	[TX]	In ECM transmission, the allowed number of procedure signl re-transmissions was exceeded or a T5 time-over (60 sec) condition occurred after transmission of EOR-EOP
	##0789	[TX]	In ECM transmission, ERR was received after transmission of EOR-EOP
	##0790	[RX]	In ECM receprion, ERR was transmitted after reception of EOR-Q
	##0791	[TX/RX]	During an ECM mode procedure, a signal other than a significant signal was received
	##0792	[RX]	In ECM reception, PPS-NULL between partial pages cannot be detected
	##0793	[RX]	In ECM reception, no effective frame was detected while signals were received at high speed, and a time-over condition occurred
	##0795	[TX/RX]	A fault occurred in decoding process during a communication
	##0799	[TX]	System error
New	E004		Fixing unit failure
New	E100		Scanner unit failure
New	E246		The Counter board is left out
New	E676		Communication error
New	E677/6F-61		ROM check error
New	E677/6F-63		RAM error
New	E733		A fault occurred in the communication between the SCNT board and ECU board/TOP signal cannot be detected
New	E805		Fan failure

d) New error codes and recovery methods

Those error codes that have been added starting with the product and those error codes for which remedies unique to the product are offered are shown together with causes and remedies, where applicable.

#001 [TX] Document has jammed

Cause: The document jammed in the fax machine.

Solutions: Remove the document and transmit/copy again.

Cause: The document width size or thickness does not meet the standards.

Solutions: Use a copy machine to copy the document to LTR or other standard size paper, then transmit that copy.

Cause: Internal structure defect.

Solutions:
(1) Check if the document sensor (DS) and document edge sensor (DES) are operating correctly using the methods given in this chapter, 6.7 Faculty Tests, Test mode [6] Faculty test, [3] Sensor tests.
(2) Check the Sensor board (J1) and SCNT board (J805) connections.
(3) Check the document edge sensor (DES) and SCNT board (J801) connections.
(4) Make a copy,and make sure that the document read motor is operating corrctly.
(5) Check the document read motor and SCNT board (J803) connections.
(6) Replace the Sensor board.
(7) Replace the document edge sensor (DES).
(8) Replace the document read motor.
(9) Replace the SCNT board.

#003 [TX/RX] Document is too long, or page time-over

Cause: One page of the document was longer than 1 meter (39.4 inches) or transmission/copying took longer than the regulated time (32 minutes).

Solutions:
(1) Use a copy machine to copy the document onto serveral shorter page, then tranmit/copy.
(2) Raise the page timer value with Service Data #1 SSSW SW12.

Cause: Reception took longer than the regulated time (32 minutes).

Solutions:
(1) Have the other party split the document over multiple pages and receive it that way.
(2) Contact the other party and check the cause.
(3) Raise the page timer value with Service Data #1 SSSW SW12.

Cause: Internal structure defect.

Solutions:
(1) Check if the document edge sensor (DES) are operating correctly using the methods given in this chapter, 6.7 Faculty Tests, Test mode [6] Faculty test, [3] Sensor tests.
(2) Check the document edge sensor (DES) and SCNT board (J801) connections.

(3) Make a copy,and make sure that the document read motor is operating corrctly.
(4) Check the document read motor and SCNT board (J803) connections.
(5) Replace the document edge sensor (DES).
(6) Replace the document read motor.
(7) Replace the SCNT board.

#005 [TX/RX] Initial identification (T0/T1) time-over

Cause: Tone/pulse parameter set incorrectly.
Solutions: Set the user data "TEL LINE TYPE" tone/pulse parameter correctly.
Cause: The time until connection with the other fax is too long.
Solutions:
(1) When registering for auto dialing, add a long pause to delay the start of the timer.
(2) Lengthen the T0 timer with Service Data #3 Numeric param.10 so that the timer does not time out.

Cause: The other fax does not answer.
Solutions: Contact the other party and have them check for the cause.
Cause: A significant signal has not been received after starting transmitting theDIS signal.
Solutions: Lengthen the T1 timer (Rx) with Service Data #3 Numeric param.11 so that the time-out error does not occurr.
Cause: The communications mode (G2,G3,etc) of the other fax does not match that of this fax.
Solutions: The communications mode is a part of specification for the fax, so there is no countermeasure.
Cause:
(1) The other fax malfunctioned during transmission due to echoes.
(2) Malfunction due to echoes during reception.

Solutions: Provide measures against echoing using SW03 of service data #1 SSSW.

#009 [RX] Recording paper has jammed or the recording paper has run out

Cause: The recording paper jammed.
Solutions: Clear the recording paper jam.
Cause: There is no recording paper.
Solutions: Load recording paper.
Cause: Internal structure defect.
Solutions:
(1) Check if the cassette recording paper sensor, multi-purpose tray paper sensor are operating correctly using the methodes given in this chapter, 6.7 Faculty Tests, Test mode [6] Faculty test, [3] Sensor tests.
(2) Check the multi-purpose tray paper sensor, the sensor cable and the ECU board connections.
(3) Check the cassette recording paper sensor, the sensor cable and the EPU board (J305) connections.

(4) Check the top of page sensor, the sensor cable and the EPU board (J305) connections.
(5) Check the paper eject sensor, the sensor cable and the EPU board (J301) connections.
(6) Check the main motor, main motor connector and the ECU board (J903).
(7) Replace the multi-purpose tray paper sensor.
(8) Replace the cassette recording paper sensor.
(9) Replace the top of page sensor.
(10) Replace the paper eject sensor.
(11) Replace the main motor.
(12) Replace the EPU board.
(13) Replace the ECU board.
(14) Replace the SCNT board.

E004 Fixing unit failure

Cause:
(1) Shorted/broken wired main thermistor
(2) Shorted/broken wired sub thermistor
(3) Broken wired heater/blown thermal fuse

Solutions:
(1) Turn the power off and remove the fixing unit from the machine. Measure the resistance between the fixing unit connector J301-1 (FSRTH) and J301-2 (GND).
If the resistance is not within the range between 350 W and 520 W (room temperature of 20°C), replace the fixing film unit.
(2) Turn the power off and remove the fixing unit from the machine. Measure the resistance between the fixing unit connector J302-1 (FSRTH2) and J302-2 (GND).
If the resistance is not within the range between 360 W and 530 W (room temperature of 20°C), replace the fixing film unit.
(3) With the fixing film unit removed, if there is no continuity between the fixing unit connectors J303-1 (ACN) and J303-3 (ACH), replace the fixing film unit.
(4) Replace the EPU board.
(5) Replace the ECU board.

If E004 is indicated, the RAM on the image processor will retain the error memory of the fixing assembly after the power has been turned OFF an then on. Execute the following in service mode, and turn OFF and then on the power to clear the memory: #7 PRINTER>#4 PRINTER RESET>YES=(*).

E100 Scanner unit failure

Cause:
(1) Poor contact in the laser/scanner unit connectors
(2) Defective laser/scanner unit
(3) Poor contact in the ECU board connectors
(4) Defective ECU board

Solutions:
(1) Reconnect the BD board connerctor (J871), laser driver board (J801), and scanner motor connector (J851).
(2) Replace the laser/scanner unit
(3) Reconnect the ECU board connectors J913 and J914 correctly.
(4) Replace the ECU board.

E246 The Counter board is left out

Cause: The Counter board was left out when the SCNT board was replaced.

Solutions: Fit the Counter board from the existing SCNT board to the new SCNT board.

E676 Communication error

Cause: A communication error occurred between the host machine and the printer board.

Solutions:
(1) Restart the printer.
(2) If the error persists, replace the printer board.
(3) If the error persists, replace the SCNT board.

E677/6F-61 ROM check error

Cause: An internal ROM check error occurred.

Solutions:
(1) Restart the printer.
(2) If the error persists, replace the printer board.

E677/6F-63 RAM error

Cause: An internal RAM check error occurred.

Solutions:
(1) Restart the printer.
(2) If the error persists, replace the printer board.

E733 A fault occurred in the communication between the SCNT board/the ECU board /TOP signal cannot be detected

Cause: No recording paper reaches the page top sensor within a specific period of time after the pickup command has been issued.

Solutions:

(1) Check the Top of page sensor, the sensor cable and the EPU board (J305) connections.
(2) Check the EPU board (J401) and the ECU board (J901) connections.
(3) Check the ECU board (J912) and the SCNT board (J35) connections.
(4) Replace the Top of page sensor.
(5) Replace the EPU board.
(6) Replace the ECU board.
(7) Replace the SCNT board.

E805 Fan failure

Cause:

(1) Poor contact in the fan drive signal line connector
(2) Defective fan motor
(3) Defective ECU board

Solutions:

(1) Reconnect the ECU board connector J905 correctly.
(2) Disconnect the ECU board connector J905. Measure the voltage between the ECU board connector J905-1 (/FANON) and J905-3 (GND) immediately after power-ON.
If the voltage changes from 0V to about 24V, replace the fan.
(3) Replace the ECU board.

4.3 Errors not Shown on the Display

4.3.1 General errors

• The unit does not turn on. (Evaluation criteria: Look at the actual unit.)

(1) Check the power cord connection.
(2) Check the connection between the EPU board (J101) and power supply unit (J201).
(3) Check the connection between the SCNT board (J1) and power supply unit (J202).
(4) Replace the power supply unit.

• Abnormal display. (Applicable test mode: Operation panel test)
Nothing is displayed.

(1) Check the connection between the OPCNT board (J1) and SCNT board (J32).
(2) Check the connection between the LCD unit and OPCNT board (J4).
(3) Replace the LCD unit.
(4) Replace the OPCNT board.
(5) Replace the SCNT board.

Part of the LCD panel does not display anything.

(1) Check for LCD problems with the test mode.
(2) Check the connection between the OPCNT board (J1) and SCNT board (J32).
(3) Check the connection between the LCD unit and OPCNT board (J4).
(4) Replace the LCD unit.
(5) Replace the OPCNT board.
(6) Replace the SCNT board.

• The buttons do not work. (Applicable test mode: Operation panel test)

(1) If the test mode can be used, check for faulty buttons.
(2) Check the connection between the OPCNT board (J1) and SCNT board (J32).
(3) Replace the OPCNT board.
(4) Replace the SCNT board.

• No sound from the speaker

(1) Check the connection of the speaker and SCNT board (J44).
(2) Replace the speaker.
(3) Replace the SCNT board.

4.3.2 Printing problems

• Faulty printing (Evaluation criteria: Test print is faulty.)

• The paper is not fed correctly. (Evaluation criteria: Look at the actual unit.)
The main motor does not run.

(1) Check the connection between the main motor and the ECU board (J903).
(2) Replace the main motor.
(3) Replace the ECU board.
(4) Replace the SCNT board.

The Reverse motor does not run.

(1) Check the connection between the reverse motor and the ECU board (J904).
(2) Replace the Reverse motor.
(3) Replace the ECU board.
(4) Replace the SCNT board.

The paper is not picked up from the multi-purpose tray.

(1) Check whether the recommended paper is used.
(2) Check whether more than 100 sheets of paper have been loaded in the multi-purpose tray.
(3) Check whether the paper has been loaded into the multi-purpose tray correctly.
(4) Check the connection between the paper pickup solenoid and the ECU board.
(5) Replace the paper pickup solenoid.
(6) Clean the separation pad.
(7) Replace the separation pad.
(8) Replace the SCNT board.

The paper is not picked up from the cassette.

(1) Check whether the recommended paper is used.
(2) Check whether more than 250 sheets of paper have been loaded in the cassette.
(3) Check whether the paper has been loaded into the cassette correctly.
(4) Check the connection between the paper pickup solenoid and the ECU board.
(5) Replace the paper pickup solenoid.
(6) Clean the separation pad.
(7) Replace the separation pad.
(8) Replace the SCNT board.

The paper is not picked up from the Duplex feed unit.

(1) Check whether the curled paper.
(2) Check whether dust or paper debris have built up inside the duplex feed unit.
(3) Clean the duplex feed unit.
(4) Check whether the rollers, are damaged or scratched.
(5) Check whether the actuator of Duplex pickup paper sensor is in correct position.
(6) Check the connection between the Duplex solenoid and the ECU board (J909).
(7) Check the connection between the ECU board (J901) and the EPU board (J401).
(8) Check the connection between the ECU board (J912) and the SCNT board (J35).
(9) Disconnect the duplex solenoid connector J909. Measure the resistance between the cable side connectors J909-1 and J909-2. If the resistance is 150Ω, replace the duplex solenoid.
(10) Replace the ECU board.
(11) Replace the EPU board.
(12) Replace the SCNT board.

The paper skews.

(1) Check to make sure that the cassette has been fully fitted all the way into the machine.
(2) Check whether the recommended paper is used.
(3) Check whether more than 100 sheets of paper have been loaded in the multi-purpose tray.
(4) Check whether more than 250 sheets of paper have been loaded in the cassette.
(5) Check whether the paper has been loaded into the multi-purpose tray correctly.
(6) Check whether the paper has been loaded into the cassette correctly.
(7) Check whether dust or paper debris have built up inside the cassette and multi-purpose tray.
(8) Check whether the paper pickup roller, or any other rollers, are damaged or scratched.

- **The printing operation is abnormal.**

The unit indicates there is a paper jam when there is no paper jam.

(1) Check if the cassette recording paper sensor, multi-purpose tray paper sensor are operating correctly using the methodes given in this chapter, 6.7 Faculty Tests, Test mode [6] Faculty test, [3] Sensor tests.
(2) Check the multi-purpose tray paper sensor, the sensor cable and the ECU board connections.
(3) Check the cassette recording paper sensor, the sensor cable and the EPU board (J305) connections.
(4) Check the top of page sensor, the sensor cable and the EPU board (J305) connections.
(5) Check the paper eject sensor, the sensor cable and the EPU board (J301) connections.
(6) Check the main motor, main motor connector and the ECU board (J903).
(7) Replace the multi-purpose tray paper sensor.
(8) Replace the cassette recording paper sensor.
(9) Replace the top of page sensor.
(10) Replace the paper eject sensor.
(11) Replace the main motor.
(12) Replace the EPU board.
(13) Replace the ECU board.
(14) Replace the SCNT board.

- **Poor printing quality (Evaluation criteria: Check the test print image's faults.)**

  Before checking for the cause of print defects, check whether the user uses Canon-recommended paper and stores it correctly. If the problem is solved by using the recommended paper, the customer should be advised to use the recommended paper and store it correctly.

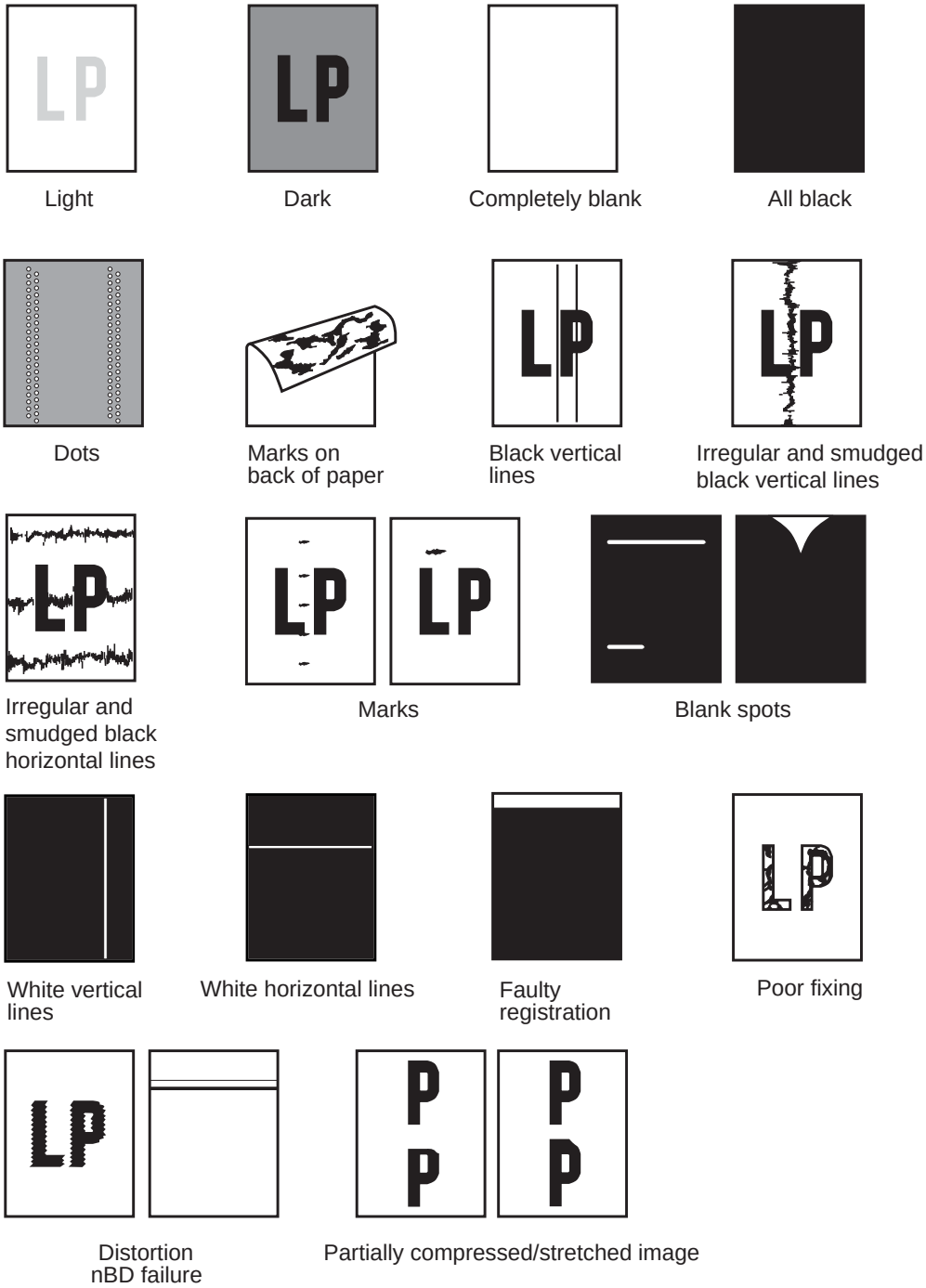

Figure 4-9 Faulty Print Samples

• Light

Solutions:

(1) Remove the toner cartridge and shake it lightly five or six times.
(2) Verify that user data “COMMON SETTING” “DENSITY CONTROL” is settings.
(3) Replace the toner cartridge.
(4) Open the printer cover during printing, and remove the toner cartridge. Open the cartridge drum cover shutter manually, and check whether the toner image on the photosensitive drum is transferred onto the paper. If it is transferred, go to item (7). If not, go the following step.
(5) Clean the transfer bias contact and the transfer charging roller shaft contact.
(6) Replace the transfer charging roller.
(7) Clean the developing bias contact and the toner cartridge contact.
(8) Replace the EPU board.
(9) Replace the ECU board.
(10) Replace the LASER/scanner section.
(11) Replace the SCNT board.
(12) Replace the power supply unit.

• Dark

Solutions:

(1) Verify that user data “COMMON SETTING” “DENSITY CONTROL” is settings.
(2) Clean the drum ground contact and the toner cartridge contact
(3) Clean the primary charging contact and the toner cartridge contact.
(4) Replace the LASER/scanner section.
(5) Replace the SCNT board.

• Completely blank

Solutions:

(1) Clean the developing bias contact and the toner cartridge contact.
(2) Check whether the projection for opening and closing the LASER shutter on the toner cartridge is damaged.
(3) Replace the LASER shutter lever or the LASER shutter.
(4) Replace the ECU board.
(5) Replace the LASER/scanner section.
(6) Replace the SCNT board.
(7) Replace the power supply unit.

• All black

Solutions:

(1) Replace the toner cartridge.
(2) Clean the primary charging contact and the toner cartridge contact.
(3) Replace the ECU board.
(4) Replace the LASER/scanner section.
(5) Replace the SCNT board.
(6) Replace the power supply unit

• Dots

Solutions:
(1) Clean the static charge eliminator in the toner transfer section.
(2) Check the static charge eliminator contact.
(3) Clean the transfer charging roller.
(4) Replace the transfer charging roller.

• Marks on back of papers

Solutions:
(1) Copy a few white paper documents.
(2) If the marks are at intervals of approx. 46mm (1.81"), clean the transfer charging roller, but if they are at intervals of approx. 66mm (2.60"), clean the pressure roller.
(3) Clean the paper feed guide and fixing entrance guide.
(4) Replace the transfer charging roller.
(5) Replace the pressure roller.

• Black vertical lines

Solutions:
(1) Open the printer cover during printing, and remove the toner cartridge. Open the cartridge drum cover shutter manually, and check whether there are black vertical lines on the photosensitive drum. If there are black lines, replace the toner cartridge. If not, go the following step.
(2) Clean the fixing entrance guide.
(3) Replace the fixing ass’y.

• Irregular and smudged black vertical lines

Solutions:
(1) Clean the fixing entrance guide.
(2) Replace the toner cartridge.

• Irregular and smudged black horizontal lines

Solutions: If the irregular smudged black lines occur cyclically, replace the toner cartridge. If they are non-cyclical, replace the fixing ass’y.

• Marks

Solutions:
(1) If the marks are at intervals of approx. 46mm (1.81"), clean the transfer charging roller; if they are at intervals of approx. 75mm (2.95"), clean the fixing ass’y; and if they are at intervals of approx. 94mm (3.7"),or 38mm (1.5"), replace the toner cartridge.
(2) Clean the paper feed guide.
(3) Clean the fixing entrance guide.

• Blank spots

Solutions:
(1) Clean the transfer charging roller.
(2) Replace the transfer charging roller.
(3) Replace the toner cartridge.
(4) Check for foreign matter button the transfer charging roller gear and the drive gear.
(5) Clean the developing bias contact and the toner cartridge contact.
(6) Replace the EPU board.
(7) Replace the ECU board.
(8) Replace the power supply unit.
(9) Replace the SCNT board.

• White vertical lines

Solutions:
(1) Remove the toner cartridge and shake it lightly five or six times.
(2) While printing is taking place, open the printer cover, and take out the toner cartridge.
(3) Open the toner cartridge drum shutter and if there are vertical white lines on the photosensitive drum, replace the toner cartridge.
(4) Check for foreign matter stuck in the LASER output hole on the LASER/scanner section or the LASER input hole on the toner cartridge.
(5) Clean the fixing entrance guide.
(6) Replace the fixing ass’y.
(7) Replace the LASER/scanner section.

• White horizontal lines

Solutions:
(1) Replace the toner cartridge.
(2) Replace the fixing ass’y.

• Faulty registration

Solutions:
(1) Check if more than the regulation amount of paper is loaded in the multi-purpose tray and cassette.
(2) Clean the paper pickup roller.
(3) Replace the paper pickup roller.
(4) Check whether the paper edge sensor actuator is damaged or deformed.
(5) Replace the pickup solenoid.
(6) Replace the paper edge sensor.
(7) Replace the ECU board.

• Distortion/BD signal failure

Solutions:
(1) Check the connection between the LASER/scanner section and ECU board (J913/J914) connector connections.
(2) Replace the LASER/scanner section.
(3) Replace the ECU board.

• Partially compressed/stretched image

Solutions:
(1) Check for foreign matter between the toner cartridge gear and the drive gear.
(2) Check if the toner cartridge gear is broken.
(3) Replace the toner cartridge.

• Poor fixing

Solutions:
(1) If the marks are at intervals of approx. 75mm (2.95"), clean the fixing ass'y; if they are at intervals of approx. 66mm (2.60"), clean the pressure roller.
(2) Replace the fixing ass'y.
(3) Replace the pressure roller.
(4) See "3.1 Checking the Nip width of the Pressure Roller" in this chapter, and check the nip width of the fixing section.
If it is not as specified, replace the fixing pressure plate.

4.3.3 Scanning problems

• Faulty scanning (Evaluation criteria: Test print is good, but the copied image is poor.)

• The document is not fed.

The document feed motor does not run. (Evaluation criteria: Check it visually.)

(1) Check the connection between the document read motor and the SCNT board (J803).
(2) Replace the document read motor.
(3) Replace the SCNT board.

The document slips against the rollers. (Evaluation criteria: Check it visually. Stretched copy image.)

(1) See page 4-3 and clean the document reading section.
(2) Replace the reading section's rollers.

The document does not separate. (Evaluation criteria: Check it visually.)

(1) Check whether the document feed motor is driving all the rollers.
(Check for any damaged gears or foreign matter stuck inside.)
(2) See page 4-3 and clean the separation roller and separation rollers.
(3) Replace the separation roller and separation rollers.

The scanner unit's sensors are defective (Evaluation criteria: The placed document or transported document is not detected.);

(1) Check for any faulty sensors while executing the copying operation and test mode.
(2) Check the connection between the ADF sensor board (J1) and the SCNT board (J805).
(3) Replace the ADF sensor board.
(4) Replace the SCNT board.

- **The scanning image is abnormal. (Evaluation criteria: Check the cpy image's faults.)**

Nothing is printed.

(1) Check the connection between the contact sensor and CS relay board (J4).
(2) Check the connection between the CS relay board (J1) and SCNT board (J4).
(3) Replace the contact sensor unit.
(4) Replace the CS relay board.
(5) Replace the SCNT board.

The image has vertical stripes.

(1) Clean the contact sensor's scanning glass and white sheet.
(2) Check the connection between the CS relay board (J1) and SCNT board (J4).
(3) Replace the contact sensor unit.
(4) Replace the CS relay board.
(5) Replace the SCNT board.

The image has thick vertical stripes.

(1) Clean the contact sensor's scanning glass and white sheet.
(2) Check the connection between the CS relay board (J1) and SCNT board (J4).
(3) Replace the contact sensor unit.
(4) Replace the CS relay board.
(5) Replace the SCNT board.

4.3.4 Test mode function problems

• Faulty control panel test

The LCD panel does not display correctly.

(1) Check the connection between the OPCNT board (J1) and the SCNT board (J32).
(2) Check the connection between the LCD unit and the OPCNT board (J2).
(3) Replace the LCD unit.
(4) Replace the OPCNT board.
(5) Replace the SCNT board.

The LED lamp fails to go ON.

(1) Check the connection between the OPCNT board (J1) and the SCNT board (J32).
(2) Replace the OPCNT board.
(3) Replace the SCNT board.

The keys on the operation panel fails to work properly.

(1) Check the connection between the OPCNT board (J1) and the SCNT board (J32).
(2) Replace the OPCNT board.
(3) Replace the SCNT board.

• Faulty contact sensor test.

The LED of the contact sensor fails to go ON properly.

(1) Check the connection between the Contact sensor and the SCNT board (J506).
(2) Replace the Contact sensor.
(3) Replace the SCNT board.

• Faulty DRAM test.

The indication “READ & COMPARE NG” appears.

(1) Perform the DRAM test again. In case “READ & COMPARE NG” still appears, replace the SCNT board.

• Faulty sensor test.

DES sensor fails to operate properly.

(1) Check whether the actuator of DES sensor is in correct position.
(2) Check the connection between the DES sensor and the SCNT board (J801).
(3) Replace the DES sensor.
(4) Replace the SCNT board.

DS sensor fails to operate properly.

(1) Check whether the actuator of DS sensor is in correct position.
(2) Check the connection between the ADF sensor board (J1) and the SCNT board (J805).
(3) Replace the ADF sensor board.
(4) Replace the SCNT board.

DWS sensor fails to operate properly.

(1) Check whether the actuator of DWS sensor is in correct position.
(2) Check the connection between the ADF sensor board (J1) and the SCNT board (J805).
(3) Replace the ADF sensor board.
(4) Replace the SCNT board.

DFS sensor fails to operate properly.

(1) Check whether the actuator of DFS sensor is in correct position.
(2) Check the connection between the ADF sensor board (J1) and the SCNT board (J805).
(3) Replace the ADF sensor board.
(4) Replace the SCNT board.

Cassette 1 paper sensor fails to operate properly.

(1) Check whether the actuator of recording paper sensor is in correct position.
(2) Check the connection between the recording paper sensor and the EPU board (J305).
(3) Check the connection between the ECU board (J901) and the EPU board (J401).
(4) Check the connection between the ECU board (J912) and the SCNT board (J35).
(5) Replace the Cassette 1 paper sensor.
(6) Replace the EPU board.
(7) Replace the ECU board.
(8) Replace the SCNT board.

Cassette 2 paper sensor fails to operate properly.

(1) Check whether the actuator of recording paper sensor is in correct position.
(2) Check the connection between the recording paper sensor and the 250 feeder board (J2003).
(3) Check the connection between the ECU board (J902) and the 250 feeder board (J2001).
(4) Check the connection between the ECU board (J912) and the SCNT board (J35).
(5) Replace the Cassette 2 paper sensor.
(6) Replace the 250 feeder board.
(7) Replace the ECU board.
(8) Replace the SCNT board.

Cassette 3 paper sensor fails to operate properly.

(1) Check whether the actuator of recording paper sensor is in correct position.
(2) Check the connection between the recording paper sensor and the 500 feeder board (J2003).
(3) Check the connection between the ECU board (J902) and the 500 feeder board (J2001).
(4) Check the connection between the ECU board (J912) and the SCNT board (J35).
(5) Replace the Cassette 3 paper sensor.
(6) Replace the 500 feeder board.

(7) Replace the ECU board.
(8) Replace the SCNT board.

MP tray paper sensor fails to operate properly.

(1) Check whether the actuator of MP tray paper sensor is in correct position.
(2) Check the connection between the MP tray paper sensor and the ECU board (J908).
(3) Check the connection between the ECU board (J912) and the SCNT board (J35).
(4) Replace the MP tray paper sensor.
(5) Replace the ECU board.
(6) Replace the SCNT board.

Tray full sensor fails to operate properly.

(1) Check whether the actuator of Tray full sensor is in correct position.
(2) Check the connection between the Tray full sensor and the ECU board (J915).
(3) Check the connection between the ECU board (J915) and the SCNT board (J6).
(4) Replace the Tray full sensor.
(5) Replace the ECU board.
(6) Replace the SCNT board.

Face-up sensor fails to operate properly.

(1) Check whether the actuator of Face-up sensor is in correct position.
(2) Check the connection between the ECU board (J901) and the EPU board (J401).
(3) Check the connection between the ECU board (J912) and the SCNT board (J35).
(4) Replace the EPU board.
(5) Replace the ECU board.
(6) Replace the SCNT board.

Printer cover sensor fails to operate properly.

(1) Check whether the switch of Printer cover sensor is in correct position.
(2) Check the connection between the Printer cover sensor and the ECU board (J906).
(3) Check the connection between the ECU board (J912) and the SCNT board (J35).
(4) Replace the Printer cover sensor.
(5) Replace the ECU board.
(6) Replace the SCNT board.

4.4 Processing Communication Problems

4.4.1 Initial identification of problems

Since the facsimile must transmit picture information, a transmitter, a receiver and telephone lines are required for this purpose. Transmissions may cause problems if one or more of the there is poor.

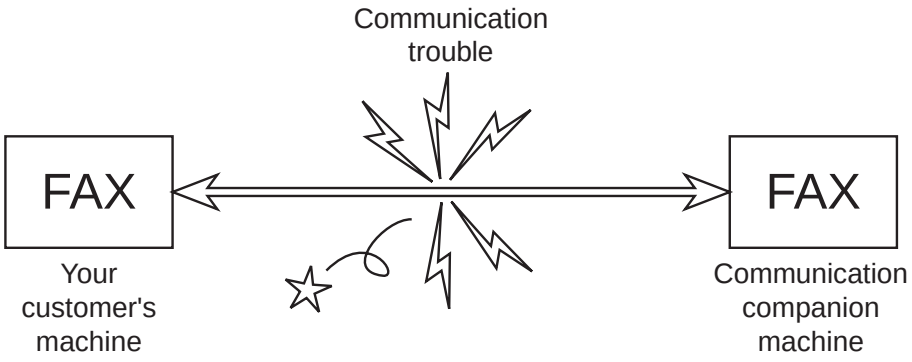

Figure 4-10 Communication Trouble

To process communication ploblrems, first of all, it is necessary to narrow down the cause of the problem. Thus, the procedures appearing below must be checked accordingly.

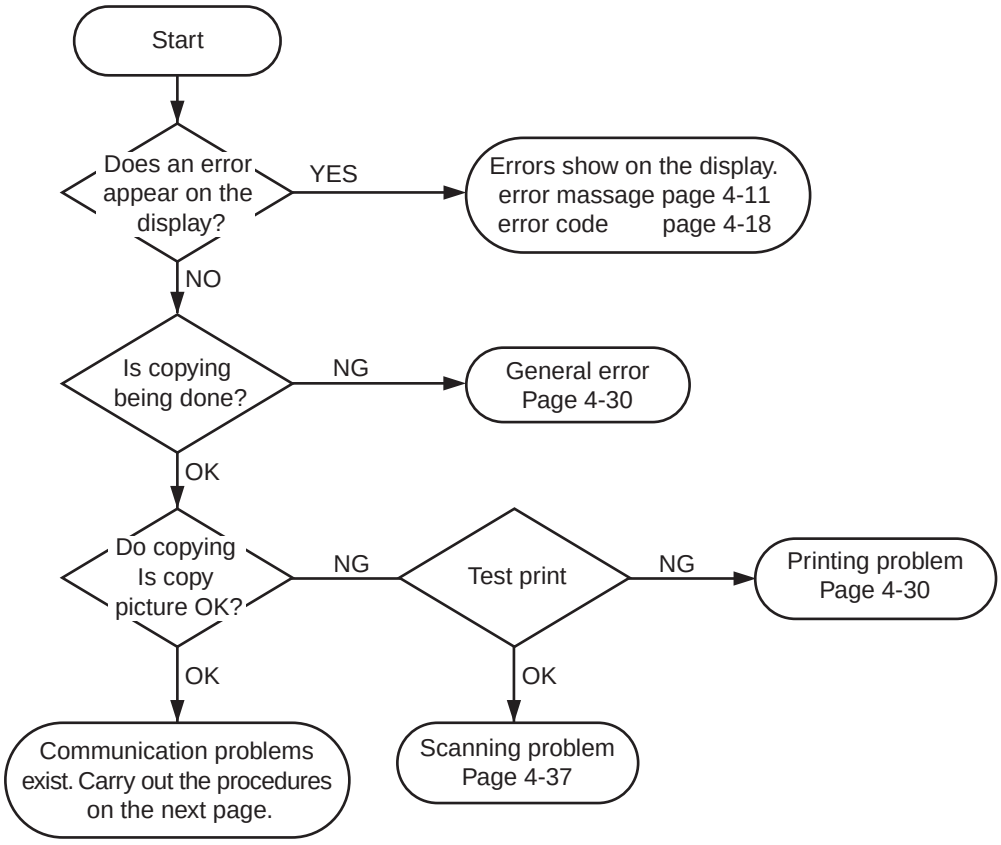

Figure 4-11 Procedures for Initial Identification of Trouble

4.4.2 Procedures for processing communication problems

If the problem proves to be communication trouble, deal with it according to the following procedures.

(1) Study the conditions at the time of trouble as closely as possible. Record or keep the items listed below.

a) Operations at the time of trouble.
Document number, transmission mode, error occurrence timing call set-up method (auto dialing etc.)

b) Sample of defective picture (When receiving)

c) LCD display at the time of trouble.

d) Communication management report at the time of trouble.

e) User's name, telephone number (to contact), Fax number, model name.

f) User's name, of the other party, telephone number (to contact), Fax number, model name, name of servicemen in charge.

g) Frequency of trouble and error code (##0100 etc.).

h) Condition of the other party's facsimile:
Transmitted/received page number? Automatic or manual?
Error occourred? The receive condition? etc.

NOTE

When visiting a user with a trouble report, a) can be known by outputting the error protcol data (or error dump), and g) can be known by outputting the total transacation report (or the system error data list).

(2) Test communication according to flowchart procedures appearing on the next page.

- Carry out the tests with the actual lines on each item, verify the symptoms and record it.
- In the case of trouble with another manufacturer's facsimile, refer to the flowchart for troubles with other manufacture's.

(3) Finally, process over by judging systematically all the data.

NOTE

If the other party's facsimile is that of another manufacturer and there is nothing wrong with your customer's machine, it is recommended that you ask your customer to contact the facsimile user of the other party, so that the other party's facsimile is checked by the dealer. "Call the service station" in the flowchart (Fig.4-13) means that problems may occur with regard to the communication compatibility of facsimile, consult the matter with the staff in charge at the service station. To quicken the resolving of the problem, report the information listed in (1) above.

• Procedures for processing communication problems with Canon facsimile.
The process for carrying out communications at three points as shown in the figure.

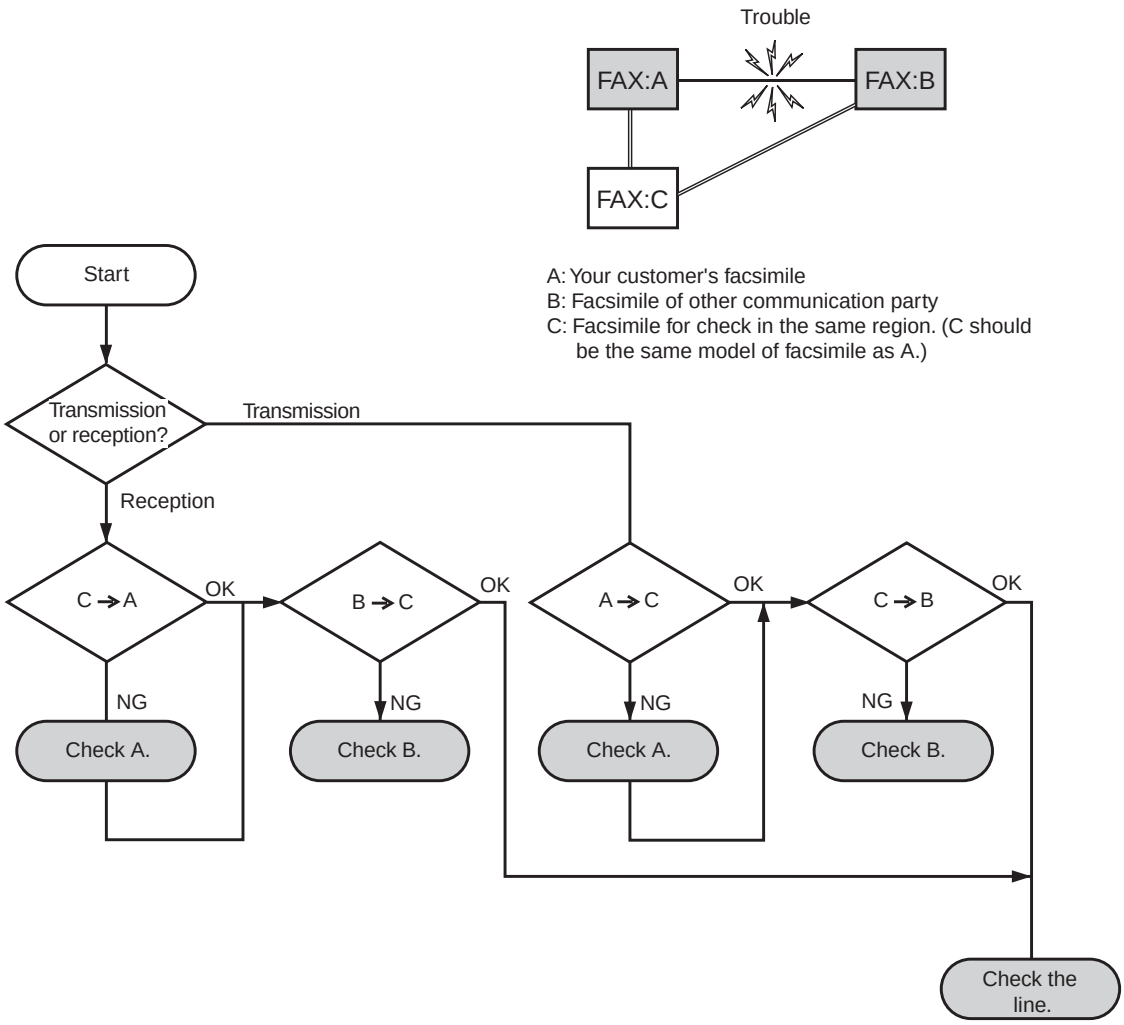

Figure 4-12 Flowchart for Processing Communication Troubles with Canon Facsimile

- Procedures for processing communication problems with other manufacturer's facsimiles.
  When problems occur with other manufacturer's facsimiles, make the user of the other party's facsimile call the serviceman in charge. Perform communication at the four points listed in the figure.

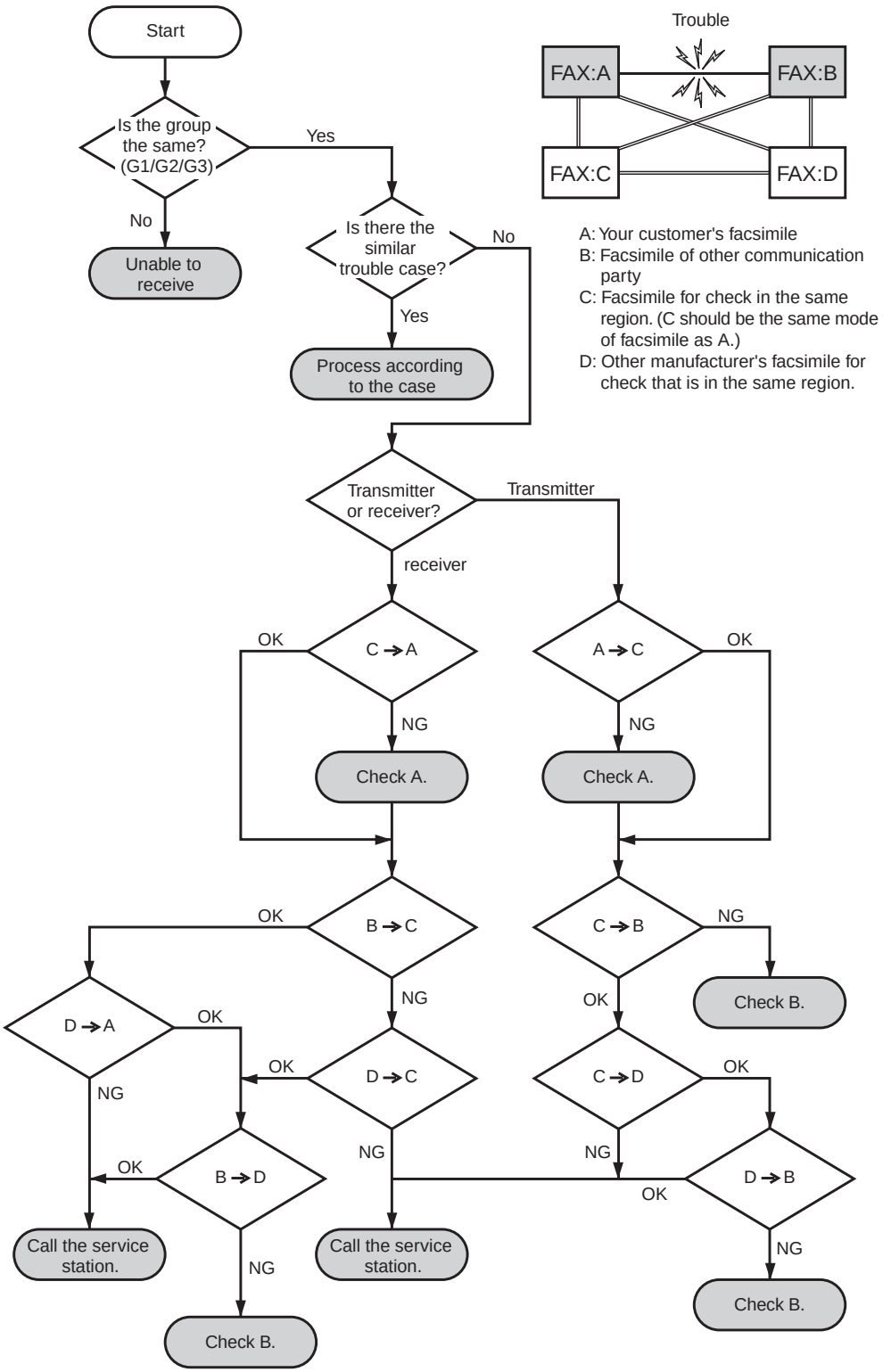

Figure 4-13 Flowchart for Processing Communication Troubles with other manufacturer's facsimile

This page intentionally left blank

5. SERVICE SWITCHES

5.1 Hardware Switches

This fax has the following hardware switches. Be sure not to use those switches not discussed herein; they are for use at the factory.

a) SCNT board

Jumper switch (JP1)

The lithium battery backs up control memory by causing a short with the jumper plug.

Jumper switch (JP17)

The secondary vanadium-lithium battery backs up image memory by causing a short with the jumper plug.

b) EPU board

Push switch (SW901)

This is a test print switch.

5.2 Service Data Setting

Service data can be checked and changed with items on display menus. The effective SSSWs/parameters and their default values in this fax machine are shown in *5.4 Service Data Flowchart* in this chapter. Detailed description of each SSSW/parameter is not given in this manual except the new SSSWs/parameters added to this model. See *G3 Facsimile SERVICE DATA HANDBOOK (Rev. 0) (supplied separately)* for details of them. The new switches for this model are described in *5.6 New SSSWs/Parameters Added to this Model*.

#1 SSSW (Service Soft Switch Settings)

These setting items are for basic fax service functions such as error management, echo countermeasures, and communication trouble countermeasures.

#2 MENU (MENU switch settings)

These setting items are for functions required during installation, such as NL equalizer and transmission levels.

#3 NUMERIC Param. (NUMERIC parameter settings)

These setting items are for inputting numeric parameters such as the various conditions for the RTN signal transmission.

#4A SPECIAL

These setting items are for telephone network control functions.

#4B NCU (NCU settings)

These setting items are for telephone network control functions such as the selection signal transmission conditions and the detection conditions, for the control signals sent from the exchange.

#5 TYPE (TYPE setting)

The type setting makes the service data conform to a specific country communications standards.

#6 SCANNER (SCANNER function setting)

These setting items are for scanned image processing such as edge enhancement and error diffusion processing.

#7 PRINTER (PRINTER function settings)

These setting items are for basic printer service functions such as the reception picture reduction conditions. Also there is an item for resetting the printer section without switching the power off-on.

#8 PDL (PDL settings)

A service menu is offerd for printer function settings and PCL board.

#9 COUNTER (Counter indication)

Use it to check estimates for maintenance/parts replacement.

#10 REPORT (Report output)

Use it to output reports on various service data.

#11 DOWNLOAD (Download)

Do not use.

#12 CLEAR (data initialization mode)

Various data are initialized by selecting one of these setting items. There is a setting item for checking/inputting the total number of pages printed and total number of pages scanned by this fax.

#13 ROM (ROM management)

ROM data such as the version number and checksum are displayed.

5.3 Service Data Registration/Setting Method

Service data can be registered/set by the following operations:

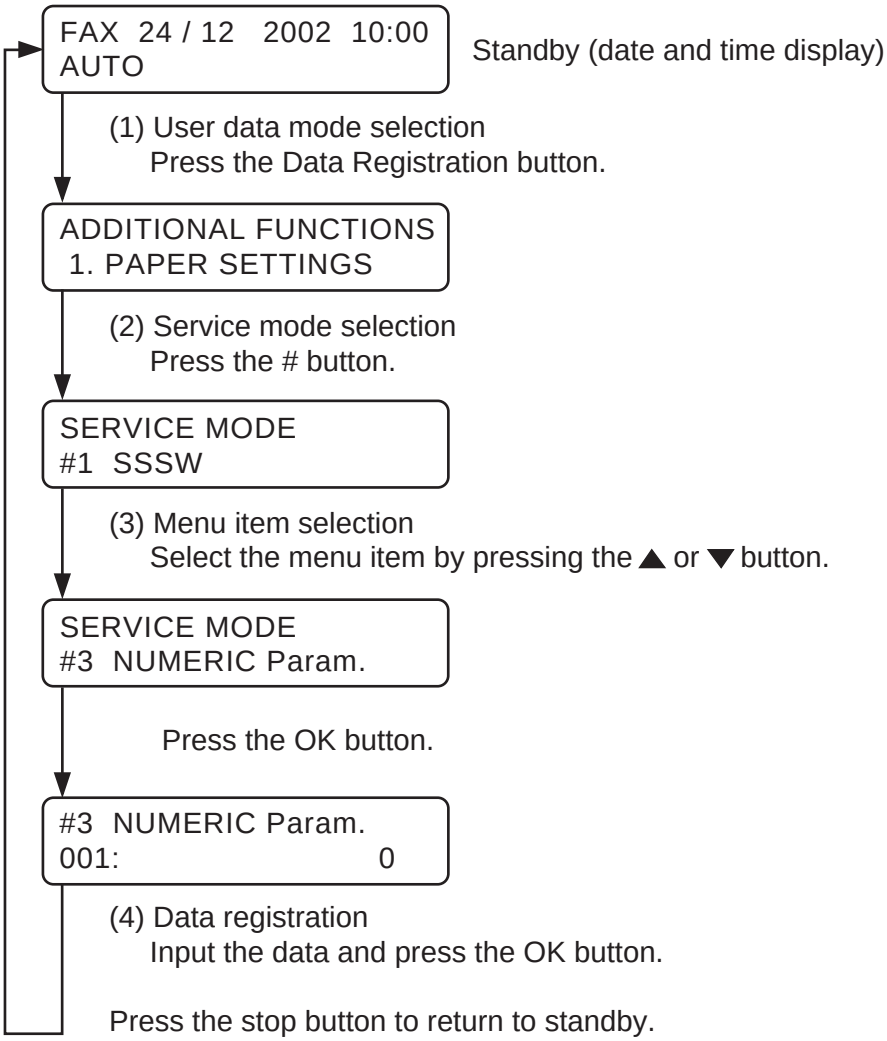

Figure 4-14 Service Data Setting Method

5.4 Service Data Flowchart

Service menu

#1 SSSW
(Service soft switch setting)

	Bit 7 6 5 4 3 2 1 0	
SW01	0 – – – – 0 0 0	Error management
SW02	– – – – – – – 0	Memory clear list out put settings
SW03	0 0 0 0 – – 0 –	Echo solution settings
SW04	0 0 0 0 0 0 0 0	Communication troublesolution settings
SW05	– – – 0 0 0 0 –	Standard function (DIS signal)settings
SW06	– – – 0 0 – – –	Scan condition settings
SW07	– – – – – – – –	Not used
SW08	– – – – – – – –	Not used
SW09	– – 0 – – – – –	Communications result display function settings
SW10	– – – – – – – –	Not used
SW11	– – – – – – – –	Not used
SW12	0 – 0 0 0 0 1 0	Page timer settings
SW13	– – – – – – – –	Not used
SW14	– – – 0 – 0 1 0	Inch/mm resolution settings
SW15	– – – – – – 0 –	Dail inn FAX/TEL switching function setteing
SW16	– – – – – – 1 1	Setting for a No Paper display
SW17	– – – – – – – –	Not used
SW18	– – – – – – 0 0	Communication trouble solutions settings (2)
SW19	– – – – – – – –	Not used
SW20	– – – – – – – –	Not used
SW21	– – – – – – – –	Not used
SW22	– – – – 0 – – –	Field Requests / Troubleshooting settings
SW23	– – – – – – – –	Not used
SW24	– – – – – – – –	Not used
SW25	– – – – – – – 0	Report diaplay function settings
SW26	0 0 – – 0 0 – –	Transmission function settings
SW27	– – – – – – – –	Not used
SW28	– – 0 0 0 0 0 0	V.8/V.34 protocol settings
SW29	– – – – – – – –	Not used
SW30	– – – – – – – –	Not used
SW31	– – – – – – – –	Not used
SW32	– – – – – – – –	Not used
SW33	– – – – – – 0 0	Counter related
SW34 to SW50:		Not used

Figure 4-15 Service Data 1

The switches marked “-” are not used. Do not change their settings.

#2 MENU (Menu switch settings)	001:		Not used
	002:		Not used
	003:		Not used
	004:		Not used
	005:	ON **OFF**	NL equalizer setting
	006:	**DIAL** SERVICEMAN [1] SERVICEMAN [2] OFF	Line monitor settings
	007:	**10** (-10dBm) (8~15)	Transmission level setting
	008:	**3429** (baud) 3200 3000 2800 2743 2400	V.34 Baud rate
	009:	**33.6** (2.4 kbps~33.6 kbps)	V.34 Transmission speed
	010:	50Hz **25Hz** 17Hz	Frequency of psudo CI
	011: ≈ 020:	Items 011 to 020:	Not used

Figures in boldface indicate the default setting.

Figure 4-16 Service Data 2

No.001 to 004, 011 to 020 are not used. Do not change their settings. SERVICEMAN[2] of No.006 is not used.

#3 NUMERIC Param.
(Numeric parameter settings)

	Default	Range	
001:	0		Not used
002:	10 (10%)	(1~99)	RTN signal transmission condition (1)
003:	15 (15 times)	(2~99)	RTN signal transmission condition (2)
004:	12 (12 lines)	(1~99)	RTN signal transmission condition (3)
005:	4 (sec)	(1~60)	Pause time for NCC (before the ID code)
006:	1 (sec)	(1~60)	Pause time for NCC (after the ID code)
007:	0		Not used
008:	0		Not used
009:	6 (6 digits)	(1~20)	The number of digits in telephone compared against TSI signal to be matched for restricted receiving function
010:	5500 (55 sec)	(0~9999)	T0 timer
011:	3500 (35 sec)	(0~9999)	T1 timer (Rx)
012:	0 (0 line)	(0~65535)	Not used
013:	1300 (13 sec)	(500~9999)	Maximum time allowed to receive one line of image data
014:	0		Not used
015:	120 (100 ms)	(0~999)	Hooking detection time
016:	2		Not used
017:	100		Not used
018:	0		Not used
019:	400		Not used
020:	100		Not used
021:	0		Not used
022:	400		Not used
023:	0		Not used
024:	10		Not used
025:	60		Not used
026:	0		Not used
027:	0		Not used
028:	3 (3 sec)	(1~60)	Menu pop-up time
	Item 029 to 055:		Not used
055:			

Figure 4-17 Service Data 3

No. 001, 007, 008, 012, 014, 029 to 055 and 071 to 080 are not used. Do not change their settings

	Default	Range	
056:	101	(101)	Total 1 indication
057:	201	(0~999)	Copy (total 1) indication
058:	0	(0~999)	No indication
059:	0	(0~999)	No indication
060:	0	(0~999)	No indication
061:	0	(0~999)	No indication
	Item 062 to 069:		Not used
070:	300 (300 lines)	(0~9999)	Number of text lines possible for mail reception
	Item 071 to 080:		Not used
080:			

#4A SPECIAL
- SW01
- ≈
- SW30

SW01 to SW30: Not used

#4B NCU
(NCU settings)
- 1.TONE/PULSE
- 2.DIAL TONE
- 3.2nd DIAL TONE
- 4.BUSY TONE 0
- 5.BUSY TONE 1
- 6.REORDER TONE
- 7.MULTI
- 8.AUTO RX
- 9.CNG DETECT
- 10.RKEY
- 11.PBX DIAL TONE
- 12.PBX BUSY TONE

#4C ISDN
- ISDN BASIC
- ISDN G4
- ISDN G3

Figure 4-18 Service Data 4

#4A SPECIAL, #4B NCU, #4C ISDN

The values of these items are all set to match a specific nation's communications standards by the #5 TYPE setting. Do not change these settings.

- **#5 TYPE** (Type setting)
  - U.K.
  - SWEDEN
  - SWISS
  - AUSTRIA
  - DENMARK
  - NORWAY
  - HOLLAND
  - BELGIUM
  - AUSTRALIA
  - FINLAND
  - N.Z.
  - ITALY
  - SPAIN
  - PORTUGAL
  - IRELAND
  - HONG KONG
  - MALAYSIA
  - HUNGARY
  - SAF
  - KOREA
  - CHINA
  - GERMAN
  - FRANCE
  - SINGAPORE
  - CZECH
  - SLOVENIA
  - ASIA
  - POLAND
  - EUROPE2
  - STANDARD
  - U.S.A.
  - EUROPE
- **#6 SCANNER** (Scanner function settings)
  - 1.Bit SW
  - 2.SLICE
  - 3.GAMMA
  - 4.Numeric
  - 5.LUT1 fno
  - 6.LUT2 adj
  - 7.CCD

Figure 4-19 Service Data 5

#6 SCANNER

Tampering with this setting may cause the scanned image quality to deteriorate. Do not change these settings.

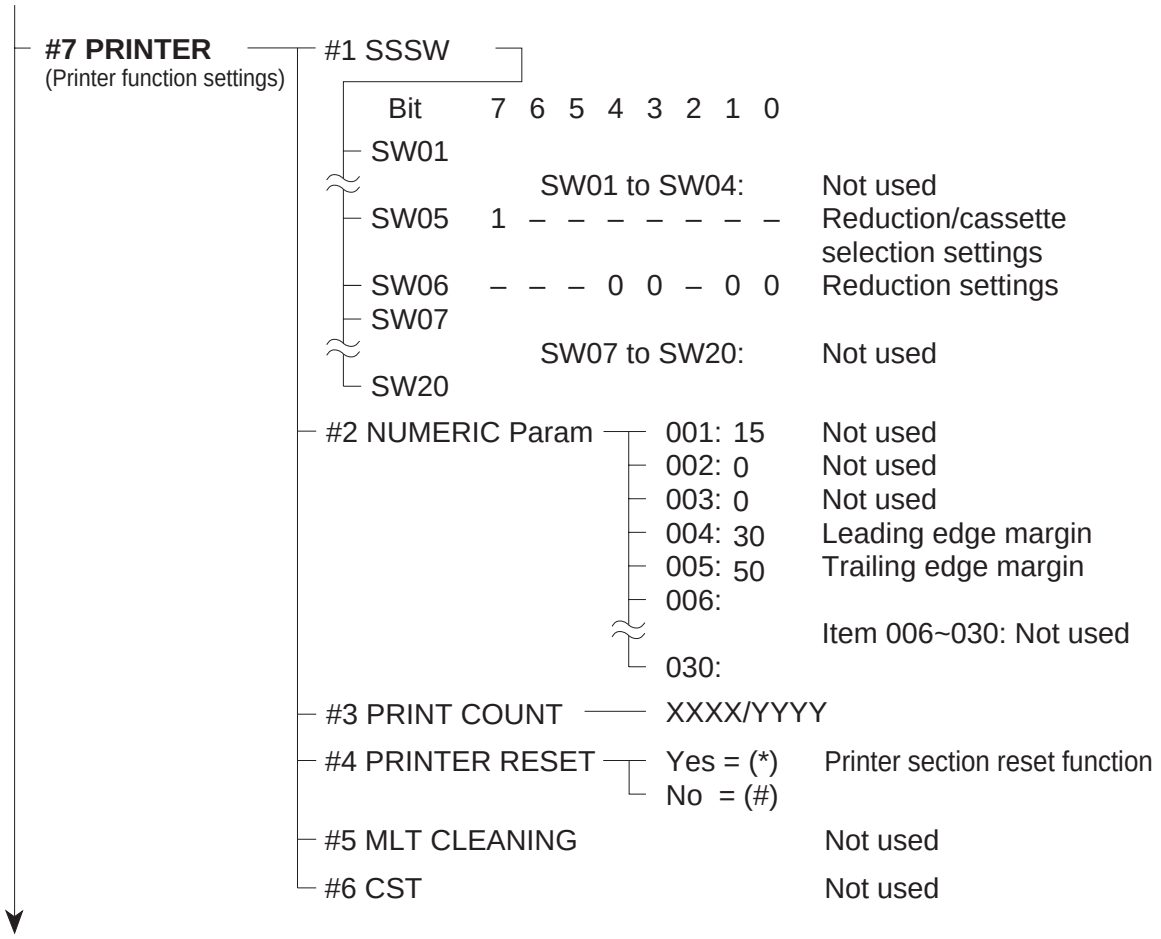

Figure 4-20 Service Data 6

- **#8 PDL** (PDL setting)
  - PDL-LIPS MENU — Not used
  - PDL-PCL MENU
    - PANEL CHACK — Not used
    - FLASH MENU — For R & D
    - PPG CHECK SUM — Checksum for PCL firmware
    - PS CHECK SUM — Not used
    - COLD RESET A4 — Select A4 as default paper size
    - COLD RESET A4+ — Not used
    - COLD RESET LETTER — Select LTR as default paper size
    - COLD RESET LETTER+ — Not used
    - SERVICE MENU
      - FEEDER MENU
        - MPT SIZE= — Select paper size for MP tray
          - **A4**
          - LETTER
          - LEGAL
          - A5
          - B5-JIS
          - EXEC
          - COM10
          - MONARCH
          - C5
          - DL
          - CUSTOM
          - B5-ISO
      - ERR/JAM LOG MENU
        - PRINT=
          - ERROR LOG — Generates error history
          - JAM LOG — Generates jam history
      - NVRAM MENU
        - NVRAM=
          - CHECK — Checks EEPROM
          - DUPLICATE — Copies contents of EEPROM
- **#9 COUNTER** (Counter indication)
  - TOTAL — Total counter
  - PICK-UP — Pick-up related counter
  - FEEDER — Feeder counter
  - JAM — Jam related counter
  - MISC — Other counter

Figure 4-21 Service Data 7

- **#10 REPORT** (Service report output)
  - 1.SERVICE & SYSTEM
  - 2.SERVICE DATA
  - 3.SYSTEM DUMP
  - 4.KEY HISTORY REPOR
  - 5.COUNTER REPORT
  - 6.JAM/ERR LOG REPOR
  - 7.PRINT SPEC REPORT
- **#11 DOWNLOAD** (Download)
  - Not used
- **#12 CLEAR** (Data initialization mode settings)
  - TEL & USER DATA — Dialing data and user data initialization
  - USER DATA — User data initialization
  - SERVICE SW — Service soft switch #1 to #7 initialization
  - SERVICE DATA — Data on system dump list initialization
  - REPORT
    - ACTIVITY — Data on activity report initialization
    - JAM — Jam history initialization
    - ERR — Error (E CODE) history initialization
    - ALARM — Alarm history initialization
  - COUNTER — Total number of pages printed/scanned
  - CARD — Not used
  - ERR — ---
  - ALL — All user data, service data, activity management data, and image data initialization (except COUNTER)
- **#13 ROM** (ROM management)
  - MAIN: EC-17-02 021203 DB00 FFFF — Version No. and Checksum display
  - MAIN2:WLD-02-01 020405 9D95 FFFF
  - ECONT:0007 FFFF
  - PDL :V1.04 FFFF
  - NIC :3.00 FFFF
- **TEST MODE**

Figure 4-22 Service Data 8

#11 DOWNLOAD

Not used.

REFERENCE

For details on test mode, see *this Chapter, 6.TEST FUNCTIONS*.

5.5 Explanation of SSSW (Service Soft Switch Settings)

The items registered and set by each of these switches comprise 8-bit switches. The figure below shows which numbers are assigned to which bits. Each bit has a value of either 0 or 1.

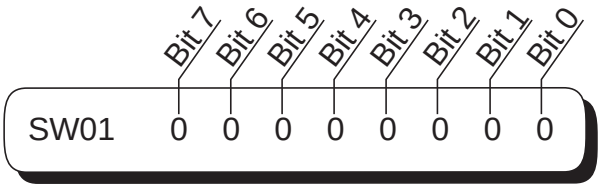

Figure 4-23 Bit Switch Display

See the chart in the service menu shown in Section 5.4 Service data flowchart to see effective bits and their default values. The meanings (functions) of the bits are not described in this manual except the new switches added to this model. See *G3 Facsimile SERVICE DATA HANDBOOK (Rev. 0) (supplied separately)* for details of the switches.
Below are examples showing how to read bit switch tables.

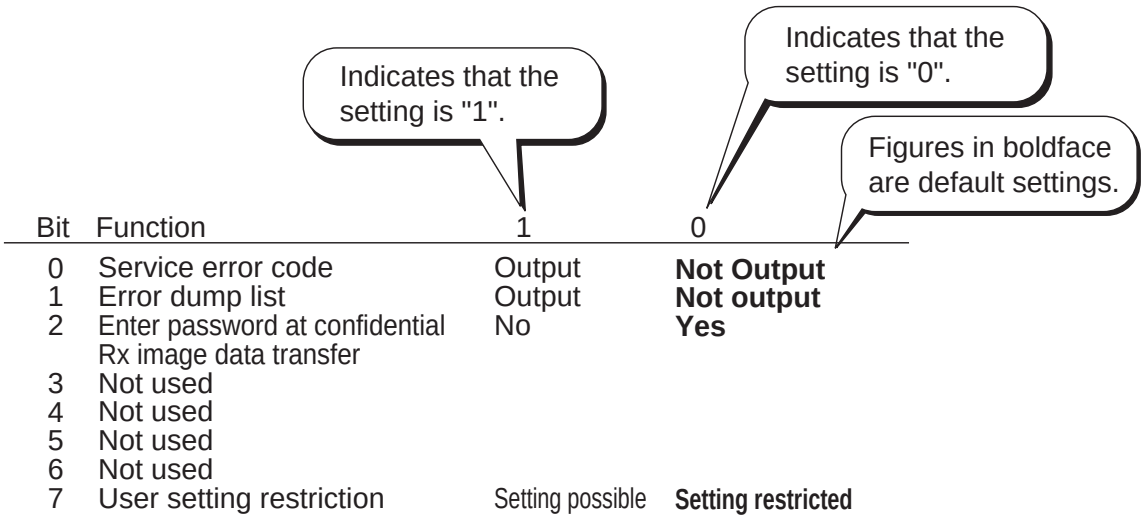

Bit	Function	1	0
0	Service error code	Output	**Not Output**
1	Error dump list	Output	**Not output**
2	Enter password at confidential Rx image data transfer	No	**Yes**
3	Not used		
4	Not used		
5	Not used		
6	Not used		
7	User setting restriction	Setting possible	**Setting restricted**

Figure 4-24 How to Read Bit Switch Tables

Do not change the settings of switches listed as “Not used”.

5.6 New SSSWs/Parameters Added to this Model

#1 SSSW

SW06 (service soft switch 06: scan condition settings)

Bit	Function	1	0
0	Not used		
1	Not used		
2	Not used		
3 (New)	Stamp option	Yes	**No**
4	Document scan width	LETTER	**A4**
5	Not used		
6	Not used		
7	Not used		

[Bit 3]

If a stamp unit option is installed, set this switch to 1. If it is set to 1, the Stamp button on the operational panel and the "STAMP ACTION" menu in Users Data becomes effective.

SW28 (service soft switch 28: V.8/V.34 protocol settings)

Bit	Function	1	0
0 (New)	Caller V.8 protocol	No	**Yes**
1 (New)	Called party V.8 protocol	No	**Yes**
2 (New)	Caller V.8 protocol late start	No	**Yes**
3 (New)	Called party V.8 protocol late start	No	**Yes**
4 (New)	V.34 reception fallback	Prohibited	**Not prohibited**
5 (New)	V.34 transmission fallback	Prohibited	**Not prohibited**
6	Not used		
7	Not used		

[Bit 0]

Select whether to use the V.8 protocol when calling. If "NO" is selected, the V.8 protocol is inhibited at calling and the V.21 protocol is used.

[Bit 1]

Select whether to use the V.8 protocol when called. If "NO" is selected, the V.8 protocol is inhibited when called and the V.21 protocol is used.

[Bit 2]

If ANSam signal is not received during transmission, select whether to use the V.8 protocol when the other fax machine declares the V.8 protocol in DIS signal. If “NO” is selected, the CI signal is not transmitted and the V.8 protocol is not used even if the DIS that specifies the V.8 protocol is received.

[Bit 3]

Select whether to declare the V.8 protocol in DIS signal for reception. If “NO” is selected, the V.8 protocol cannot be used because it is not declared in DIS signal.

[Bit 4]

Select whether the reception side falls back during V.34 reception. If Prohibited is selected, the reception side does not fall back.

[Bit 5]

Select whether the transmission side falls back during V.34 transmission. If Prohibited is selected, the transmission side does not fall back.

SW33 (service soft switch 33: counter related)

Bit	Function	1	0
0 (New)	Count B4 as large size	Yes	**No**
1 (New)	Indicate serial No. on counter check screen	Yes	**No**
2	Not used		
3	Not used		
4	Not used		
5	Not used		
6	Not used		
7	Not used		

[Bit 0]

Use it to specify whether B4 paper should be count as large-size paper. If “Yes” is selected, B4 paper will be counted as large-size paper. If “No” is selected, on the other hand, B4 paper will be counted as small-size paper.

[Bit 1]

Use it to specific whether to indicate the machine serial No. on the Counter Check screen, appearing when the Counter button is pressed. If “Yes” is selected, the serial No. will be indicated. If “No” is selected, on the other hand, the serial No. will not be indicated.

#2 MENU

No.	Function	Selection range	Default setting
008	V.34 max. baud rate	2400~3429	3429 (3429 baud)
009	V.34 max. transmission speed	2.4~33.6	33.6 (33.6 kbps)

[No. 008]

Select the maximum baud rate for V.34 transmission: 3429, 3200, 3000, 2800, 2743, and 2400.

NOTE

This model cannot use 2743 baud due to its modem specification. If it is set to 2743 baud, the maximum baud rate is 2400 baud.

[No.009]

Select the maximum transmission speed for V.34 transmission: 2.4 to 33.6 kbps.

#3 NUMERIC PARAM. (numeric parameter settings)

No.	Function	Selection range	Default setting
010	T0 Timer	0~9999	5500 (55 sec)
011	T1 Timer (Rx)	0~9999	3500 (35 sec)
013	Maximum time to receive one line of image data	500~3000	1300 (13 sec)
028	Menu selection screen display time length	1~60	3 (3 sec)
056	Count type select 1	101	101
057	Count type select 2	0~999	201
058	Count type select 3	0~999	0
059	Count type select 4	0~999	0
060	Count type select 5	0~999	0
061	Count type select 6	0~999	0
070	Number of text lines possible for mail reception	0~9999	300 (300 lines)

[No.010]

The “wait time after transmission of a dialing signal ends until a significant signal is detected in transmission” was set as T1 timer with parameter 10. However, ITU-T recommends that it should be set as T0 timer, so parameter 10 has been renamed to T0 timer and the default time-out time has been changed from 35 to 55 seconds.

NOTE

The T1 timer for the transmitter (wait time after a CED, V.21 flag, or ANSam significant signal is detected until the next significant signal is detected) is fixed at 35 seconds.

[No.011]

Set the T1 timer for the receiver (wait time after DIS transmission starts until a significant signal is received).

If frequent errors occur during reception because of line connection conditions, raise the value of this parameter.

[No.013]

Set the maximum time to receive one line of image data when image data is received.

If the other party is a computer fax and the time to receive one line of image data is long, raise the value of this parameter to increase the maximum reception time.

[No.028]

Use it to set the length of time during which the Menu Select screen is indicated on the LCD.

[No.056 to 061]

Use it to confirm the count type indicated on the Counter Check screen, which appears in response to a press on the Counter button.
When “0” is selected, count type will not be indicated.
No.056 : fix to total 1 (101) for the counter 1 reading.
No.057 : use it to select a count type for the counter 2 reading.
No.058 : use it to select a count type for the counter 3 reading.
No.059 : use it to select a count type for the counter 4 reading.
No.060 : use it to select a count type for the counter 5 reading.
No.061 : use it to select a count type for the counter 6 reading.
If above selections have been made, the counters will be displayed in order of counter numbers.

<Soft counter specifications>
The soft counters are classified as follows according to input numbers:
100s : total
200s : copy
300s : print
500s : scan
700s : received print
800s : report print

Guide to the table
Yes : available for the machine
large size (B4 or larger)
small size (smaller than B4)
total 1 (all sizes as 1)
total 2 (large sizes as 1)
1 or 2 under “Counter” : count increments for large-size paper
To make a change so that B4 and larger papers will be counted as large-size, use service mode: make the following selections, and change bit 0 to “1”: #1 SSSW>SW33.

Setting			Basic counter									
			Copy		PDL print		Received print		Report print		Scan	
			Large	Small	Large	Small	Large	Small	Large	Small	Large	Small
total	total 1	101	Yes	Yes	Yes	Yes	Yes	Yes	Yes	Yes		
	total 2	102	Yes	Yes	Yes	Yes	Yes	Yes	Yes	Yes		
	large	103	Yes		Yes		Yes		Yes			
	small	104		Yes		Yes		Yes		Yes		
copy	total 1	201	Yes	Yes								
	total 2	202	Yes	Yes								
	large	203	Yes									
	small	204		Yes								
print	total 1	301			Yes	Yes			Yes	Yes		
	total 2	302			Yes	Yes			Yes	Yes		
	large	303			Yes				Yes			
	small	304				Yes				Yes		
PDL	total 1	331			Yes	Yes						
	total 2	332			Yes	Yes						
	large	333			Yes							
	small	334				Yes						
received print												
	total 1	701					Yes	Yes				
	total 2	702					Yes	Yes				
	large	703					Yes					
	small	704						Yes				
report print												
	total 1	801							Yes	Yes		
	total 2	802							Yes	Yes		
	large	803							Yes			
	small	804								Yes		
scan	total 1	505									Yes	Yes
	total 2	506									Yes	Yes
	large	507									Yes	
	small	508										Yes

[No.070]

You can change the number of text lines that may be receiver for mail reception. If a mail containing excess lines arrives, the machine will stop communication on account of error #835.

#7 PRINTER

Service soft switch settings

SW06 (switch 06: reduction settings)

Bit	Function	1	0
0	Reduction during divided printing	No reduction	**Reduction**
1	Drop outs for printed image when long image received	Drop out	**Do not drop out**
2	Not used		
3 (New)	Priority selection of B5	Enable	**Not enable**
4 (New)	Priority selection of B5 for image reduction	Enable	**Not enable**
5	Not used		
6	Not used		
7	Not used		

[Bit 3]

You can decide whether B5 sheets (of A4R, B5, B4) should be given priority for printing when A5 images are received.

[Bit 4]

You can decide whether B5 sheets (of B5 and A5) should be given priority for printing by division when an extra-length original (of A configuration) is received.

#8 PDL

PPG CHECK SUM

The main unit performs a check sum operation on the requested ROM bank. Tne calculated Check Sum is displayed on the LCD.

COLD RESET A4 / COLD RESET LETTER

The main unit sets the default to the selected paper size (A4/LTR), and resets it to zero, if the page count is less than 50.

SERVICE MENU

FEEDER MENU

You mey select any of the following paper size for MP tray:
A4, LETTER, LEGAL, A5, B5-JIS, EXEC, COM10, MONARCH, C5, DL, CUSTOM, B5-ISO.

ERR / JAM LOG MENU

PRINT=ERROR LOG:
Indicates the times, codes, and locations of the most recent 20 errors.
PRINT=JAM LOG:
Indicates the times, codes, and locations of the most recent 30 jams.

NVRAM MENU

NVRAM=CHECK:
Indicates the counter readings of the 3 NVRAMs on the PCL board.
NVRAM=DUPLICATE:
Copies the contents of the existing NVRAM (EEPROM) at time of PCL board replacement.
The NVRAM contains the following data: page counter readings of the printer, panel settings of the printer, error/jam history, serial number.

#9 COUNTER

The following are items under COUNTER.
Small-size paper is counted for “1”, while large-size paper is counted for “2”.

Level 1	Level 2	Level 3	Description
COUNTER			
	TOTAL (total counter)		
		SERVICE1	total counter 1 for service
		SERVICE2	total counter 2 for service
		TTL	total counter
		COPY	total copy counter
		PDL-PRT	PDL print counter
		FAX-PRT	fax reception print counter
		RPT-PRT	report print counter
		SCAN	scanner counter
	PICK-UP (pickup-related counter)		
		C1	cassette 1 pickup counter
		C2	cassette 2 pickup counter
		C3	cassette 3 pickup counter
		C4	cassette 4 pickup counter
		MF	multifeeder tray pickup counter
	FEEDER (feeder-related counter)		
		FEED	feed pickup total counter
	JAM (jam counter)		
		TTL	total jam counter for machine
		FEEDER	jam counter for feeder
		SORTER	jam counter for sorter
		MF	multifeeder tray jam counter
		C1	cassette 1 jam counter
		C2	cassette 2 jam counter
		C3	cassette 3 jam counter
		C4	cassette 4 jam counter
	MISC (waste toner counter)		
		WST-TNR	waste toner counter

6. TEST FUNCTIONS

This fax functions for testing individual operations, such as below.

6.1 Test Mode Overview

Test mode can be executed by following the menu items from the display.

a) D-RAM tests

Writes data to DRAM image storage areas and reads that data to check operations.

b) Print test

Print patterns within the print area.

c) Modem, NCU tests

The frequency test, G3 signal transmission test, and Tonal and DTMF signals reception tests, and V.34 G3 signal transmission test.

d) Faculty tests

Test the operation of operation panel, sensor functions, and stamp function.

6.2 Test Mode Flowchart

To operate the test mode, after pressing the Data registration button, press the # button and select “SERVICE MODE”. After this, select “TEST MODE” with the search buttons, and press the OK button.

To end test mode, press the Stop button followed by the Clear button.

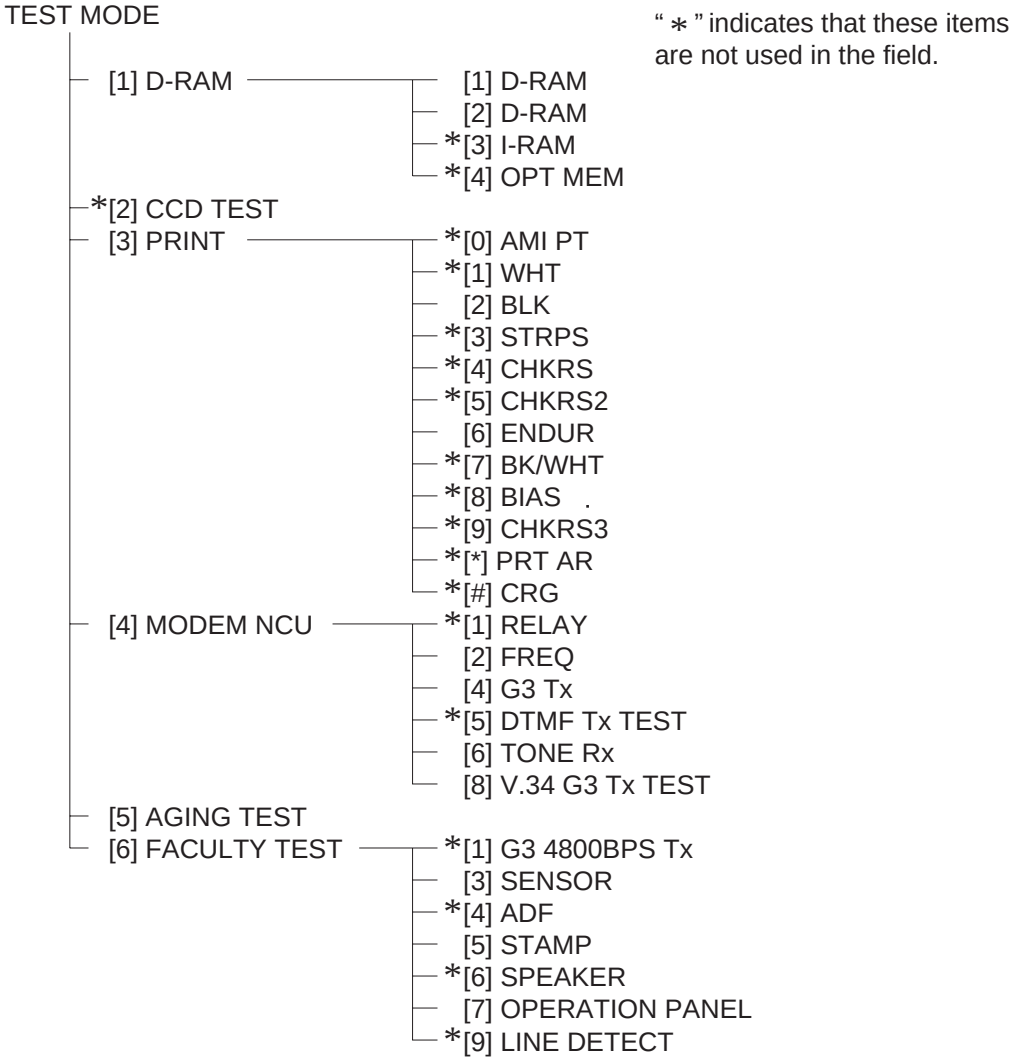

Figure 4-25 Test Mode Menu

6.3 D-RAM Tests

D-RAM test menu is selected by pressing the numeric button 1 from the test mode menu. D-RAM Test 1 writes data to the entire D-RAM region and reads it out to check that operations are correct. D-RAM Test 2 just reads data at high speed. This test can be used to check operations when optional memory has been added.

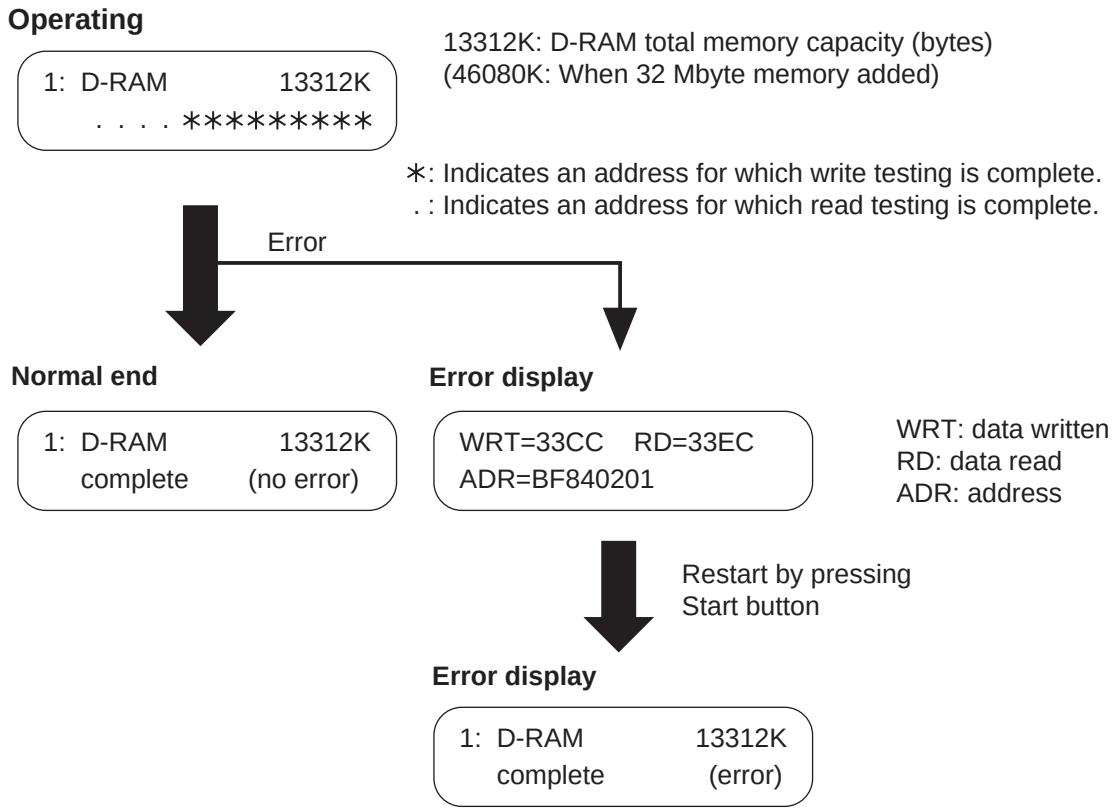

Figure 4-26 D-RAM Test

Before D-RAM test, output all image data in image memory. When D-RAM test is performed, all image data are cleared.

6.4 Print Tests

a) Test mode print test

The Print Test menu is selected by pressing the numeric button 3 from the test mode menu. In this test, various print patterns are output from the printer. As service print patterns, press the numeric button 2 from the Print Test menu to select “2: BLK” or press the numeric button 6 to select “6: ENDUR”. Do not use the other patterns. They are for development and factory use.

Check the following for the print pattern.

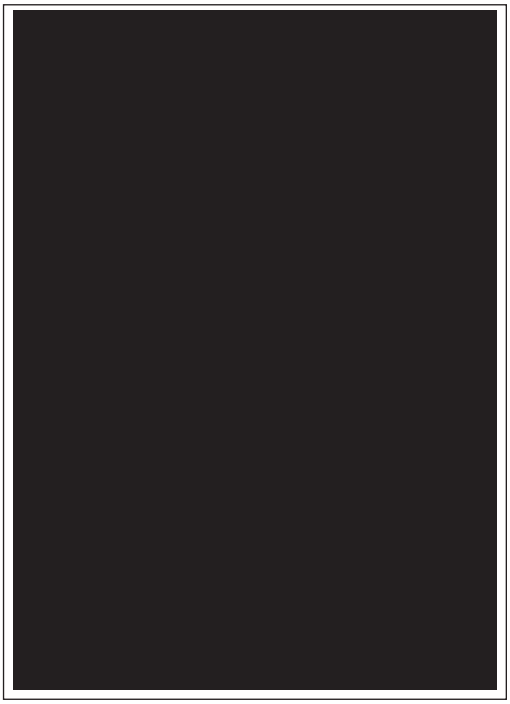

"2: BLK"
Check for white stripes and unevenness.

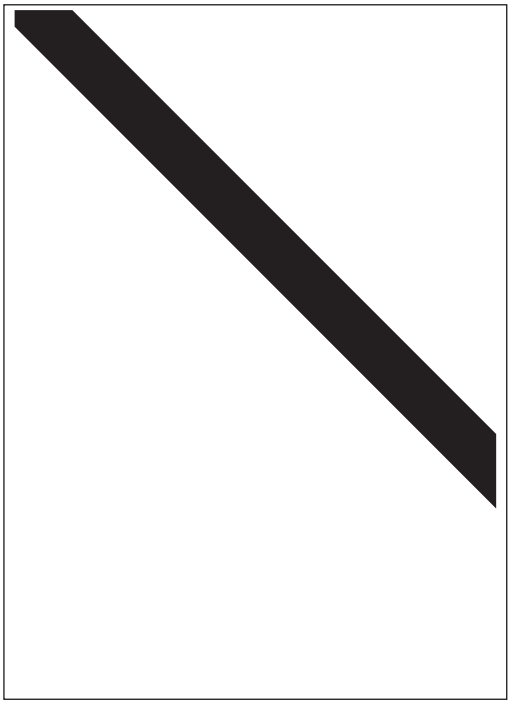

"6: ENDUR"
Check for image shrinkig, stretching, soiling, aand black strips.

Figure 4-27 Print Pattern Check

NOTE

After completion of the print test, if the printing was normal, copy a document. If there is any defect in the copied image, there is a defect in the scan section.

6.5 Modem and NCU Tests

The Modem and NCU Test menu is selected by pressing the numeric button 4 from the test mode menu. These tests test modem and NCU transmission and reception. The modem tests check whether signals are sent correctly from the modem by comparing the sound of the signals from the speaker with the sounds from a normal modem. Also, you check on the display whether or not the modem correctly detected received tone signals and DTMF signals.
End this test by pressing the Stop button.

Modem test type	Overview
Frequency test	The modem sends tonal signals from the modular jack and the speaker.
G3 signal transmission test	The modem sends G3 signals from the modular jack and the speaker.
Tonal signal/DTMF signal reception tests	The modem detects specific frequencies and DTMF signals received from the modular jack.
V.34 G3 signal transmission test	The modem sends V.34 G3 signals from the modular jack and the speaker.

a) Frequency test

The frequency test menu is selected by pressing the numeric button 2 from the MODEM NCU test menu. Signals of the frequencies below are sent from the modem using the modular jack and the speaker. The frequency can be changed with the numeric buttons.

Numeric button	Frequency
1	462 Hz
2	1100 Hz
3	1300 Hz
4	1500 Hz
5	1650 Hz
6	1850 Hz
7	2100 Hz

b) G3 signal transmission test

The G3 signal transmission test menu is selected by pressing the numeric button 4 from the MODEM NCU test menu. The G3 signals below are sent from the modem using the modular jack and the speaker. The Speed can be changed with the numeric buttons.

Numeric button	Speed
0	300 bps
1	2400 bps
2	4800 bps
3	7200 bps
4	9600 bps
5	TC7200 bps
6	TC9600 bps
7	12000 bps
8	14400 bps

NOTE

The transmission level for each frequency follows the service data.

c) Tonal and DTMF signal reception tests

The tonal and DTMF signal reception test is selected by pressing the numeric button 6 from the MODEM NCU test menu. In these tests, you can check whether the tonal signals and DTMF signals received from the modular jack are detected by the modem.
The 462Hz test is included because the modem has a 462Hz detection function.

Tone signal reception test

```
4-6:  TONE Rx        000
```

```
0 0 0
```

- When 1300 Hz signal detected, 0 to 1
- When 440 Hz signal detected, 0 to 1
- When 1100 Hz signal detected, 0 to 1

DTMF signal reception test

```
4-6:  TONE Rx        000
           1234567890
```

The received DTMF signals are displayed in order from the right on the second line of the display.

Figure 4-28 Tonal and DTMF Signal Reception Tests

d) V.34 G3 signal transmission test

The V.34 G3 signal transmission test menu is selected by pressing the numeric button 8 from the MODEM NCU test menu. The V.34 G3 signals below are sent from the modem using the modular jack and the speaker by pressing the Start button. The Baud rate can be changed with the numeric buttons, and the Speed can be changed with the search buttons.

Numeric button	Baud rate
0	3429 baud
1	3200 baud
2	3000 baud
3	2800 baud
4	2743 baud
5	2400 baud

Search button	Speed
	33.6 kbps
	31.2 kbps
	28.8 kbps
	26.4 kbps
▲	24.0 kbps
	21.6 kbps
	19.2 kbps
	16.8 kbps
	14.4 kbps
▼	12.0 kbps
	9.6 kbps
	7.2 kbps
	4.8 kbps
	2.4 kbps

NOTE

The transmission level for each baud rate and speed follows the service data.

6.6 AGING Test

The AGING test is selected by pressing the numeric button 5 from the test mode menu. In this test, the contact sensor LED is lit, and the document read motor driven in fine mode. Also, the printer will fine print a endurance pattern. The AGING test will end after the output of the printer is halted by pressing the Stop button.

6.7 Faculty Tests

The faculty tests are selected by pressing the numeric button 6 from the test mode menu. These tests test the following faculties of this fax.

Test type	Overview
Sensor tests	Test whether the sensors are operating correctly.
Operation panel test	Tests whether the button switches on the control panel are operating correctly.
Stamp test	Tests whether the stamp function is operating correctly.

a) Sensor tests

The sensor test is selected by pressing the numeric button 3 from the faculty test menu. In this test, you can check the status of each sensor of this fax in items 1 to 4 on the display. You can also check if sensors that use actuators and microswitches are operating correctly by moving the actuator or microswitch.

```
6-3:  SENSOR
[ 1] --- [ 4]
```

Pressing the 1 button

```
DS  of   DES  of   DOC  A4
DFS  of
```

DS : Document sensor on/of
on/of: document/nop document
DES : Document edge sensor on/of
DOC : Document width sensor A4/B4
DFS : Document feed sensor on/of

Pressing the 2 button

```
CT1on A4     CT2on A4
CT3of  A4    MPTof
```

CT1 : Cassette 1 recording paper sensor sensor on/of Registered paper size
CT2 : Cassette 2 recording paper sensor sensor on/of Registered paper size
CT3 : Cassette 3 recording paper sensor sensor on/of Registered paper size
MPT : MP tray recording paper sensor sensor on/of Registered paper size

Pressing the 3 button

```
CRG  on  TN   on  CVR  on
OVR  of   FU   on  JAM  of
```

CRG : Cartridge sensor on/of
TN : Toner sensor on/of
CVR : Cover sensor on/of
OVR : Recording paper eject over sensor on/of
FU : Face-up tray sensor on/of
JAM : Recording paper eject jam detection on/of

Pressing the 4 button

```
PANEL 1
```

PANEL : One-touch cover sensor 1-4

Figure 4-29 Sensor Tests

a-1) Toner sensor test check method

Use the following methods to test “TN on”, and “TN of”.

"TN on" check

(1) Open the printer cover.
(2) Insert a cartridge containing toner into the fax.
(3) Close the printer cover.

"TN of" check

(1) Open the printer cover.
(2) Insert the empty cartridge into the fax.
(3) Close the printer cover.

If the printer cover is closed without a cartridge being inserted, there will be “TN on” display.

b) Stamp test

The stamp test is selected by pressing the numeric button 5 from the faculty test menu. In this test, check if the stamp function operates correctly. The stamp test can test the following 2 operations.

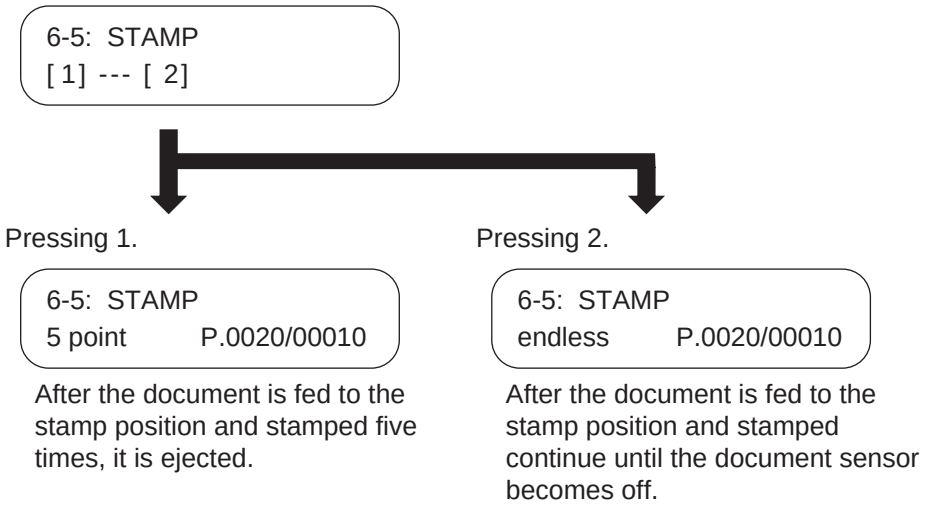

Figure 4-30 Stamp Test

NOTE

The above tests are carried out until the document sensor (DS) goes off.

c) Operation panel tests

The operation panel test is selected by pressing the numeric button 7 from the faculty test menu. In this test, check that the display, LED lamps, buttons and the sensors of one-touch speed dialing panel on the operation panel are operating correctly.

c-1) Display test

Pressing the Start button from the operation panel menu, “H” is displayed 20 characters by 2 lines. The next time the Start button is pressed, all the LCD dots are displayed. Check for any LCD dots in the display that are not displayed.

c-2) LED lamp test

The LED lamp test is selected by pressing the Start button after the display test.
When the Start button is pressed, all the lamps on the operation panel light. Check for any LED that does not blink during the test.

c-3) Operation button test

The Operation button test is selected by pressing the Start button after the LED lamp test.
In this test, you press the button corresponding to the displayed character to put it out. The table giving the correspondence between the characters and the buttons is below. When the LEDs for the character for the Resolution button, the Contrast button, or the Document Type button are all lit up, the display goes out.

Character	Operation button	Character	Operation button
0-#	Numeric buttons	L	Left cursor button
A	Coded dial button	M	Down cursor button
B	Redial button	N	Right cursor button
C	Hook button	O	Up cursor button
D	Copy button	P	OK button
E	Energy Saver button	Q	Fax/Internet Fax button
F	Clear button	R	Resolution button
G	Start button	S	Contrast button
H	Stop button	T	Document type button
I	Monitor button	U	Direct Tx button
J	Delete File button	V	Counter Check button
K	Directory button		

When all the characters displayed have gone out, the system next starts the one-touch speed dialing button and printer button test. In this test, you press the button corresponding to the displayed character to put it out. The table giving the correspondence between the characters and the buttons is below.

Character	Operation button
a-x	One-touch dial buttons
A	PRT. Message button
B	Go button
C	Shift button
D	Menu button
E	Item button
F	Value button
G	Enter/Cancel button

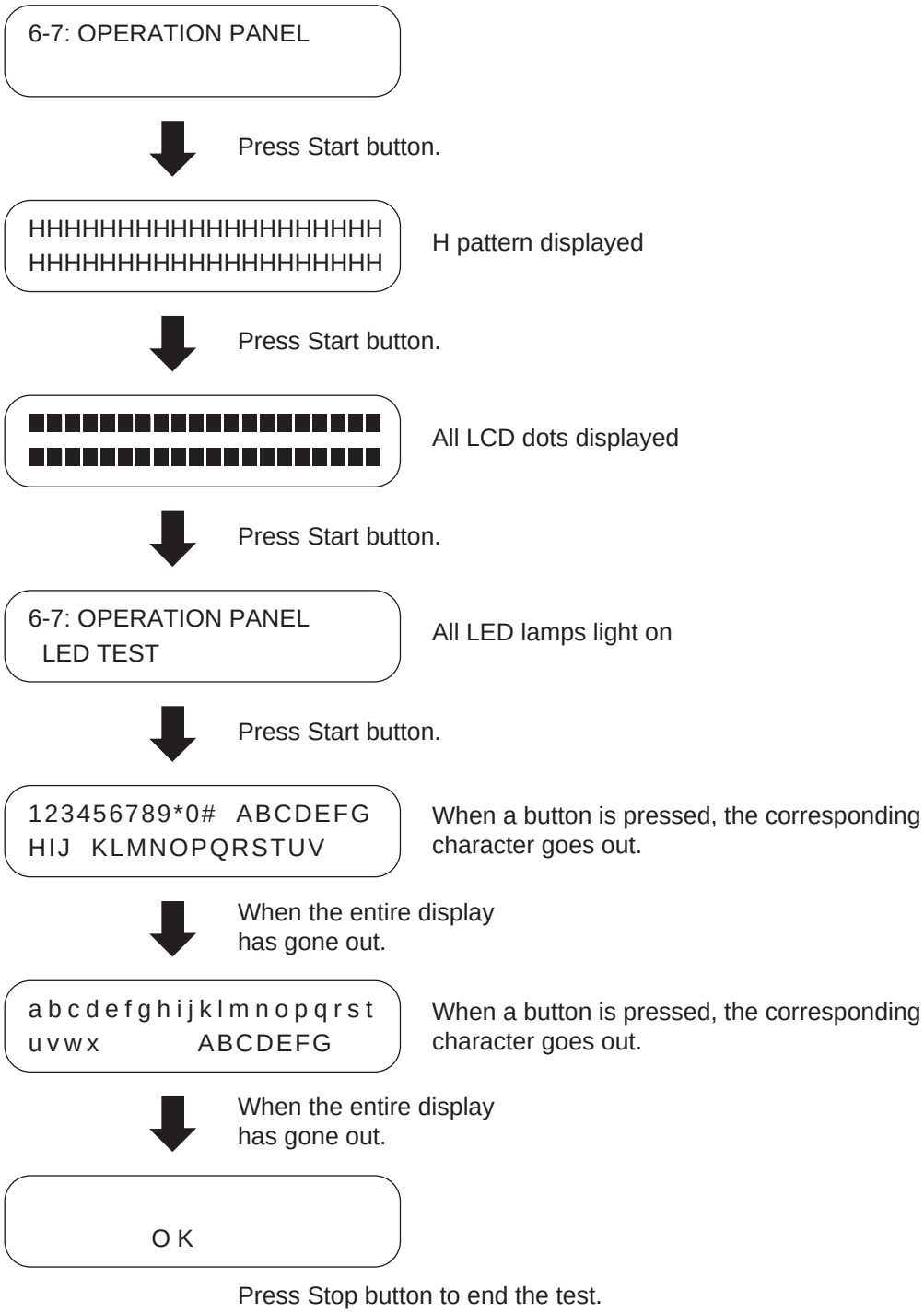

Figure 4-31 Operation Panel Test

7. SERVICE REPORT

7.1 Report Output Function

7.1.1 User report output functions

This fax can output user reports manually by user operation, or automatically, according to user data registration.

a) Manual output of reports by user operation

Report type	Operations
1-touch list	Press Report button, select the report type, and press OK button.
1-touch (detail)	
Coded dial list	
Coded (detail)	
Group dial list	
Access code list	
Dept. info list	
User's data list	
Sender name list	
Activity report	
Document memory list	
Confidential mail box report	
Cancel report	

b) Reports output automatically by user data registration

Each report written below can be automatically output by specifying "REPORT SETTINGS" in user data registration.

Transmission report
Reception report
Memory box report
Activity Report

REFERENCE

For samples of user reports, see the *Facsimile Guide*.

c) Reports output automatically (Memory clear report)

When this fax is turned on and the memory clear report is automatically printed out, the image data which appears on the report is the data which was deleted without being able to be backed up. After the memory clear report is printed, the image data management information is automatically deleted.

31/07 2002 10:12 FAX 001

```
*******************************
***   MEMORY CLEAR REPORT   ***
*******************************
```

MEMORY FILES DELETED

TX/RX NO	MODE	DESTINATION TEL/ID	PGS.	SET TIME	ST. TIME	SENDER NAME
0010	DELAYED TX	[01]Canon	2	31/07 10:09	23:00	
5003	MEMORY RX		1	31/07 10:10	-----	

Figure 4-32 Memory Clear Report

TX/RX NO : Indicates four digits of the transaction number
MODE : Displays the communication modes of TX, RX, delayed TX, memory RX, etc.
DESTINATION TEL/ID : Displays the number and each digit (24 digits) of one-touch speed dial and coded speed dial.
PGS. : Number of pages are stored in memory
SET TIME : Time when data is stored in memory (24-hour display)
ST. TIME : Displays a start time for delayed TX, etc. (24-hour display)
SENDER NAME : Sender name appended to transmission (up to 24 characters) Displays a 7-digits department ID (only used when department ID setup is “ON”).

7.1.2 Service report output functions

This fax outputs the service data setting status, past communications history reports, detailed error information reports, etc. in service mode.

a) List of service reports

This fax outputs the service reports shown below.

Report type	Operations
Service data list System dump list Key history report Counter report Jam/error log report Print spec report	In the service mode, press the Report button, select the report type, and press the OK button.
Transmission report (with service error code and dump list)	If you set bits 0 and 1 of #1 SSSW SW01 in the service mode, the service error code and dump list are indicated on the activity report.
Reception report (with service error code and dump list)	If you set bits 0 and 1 of #1 SSSW SW01 in the service mode, the service error code and dump list are indicated on the activity report.

a-1) System data list

This list shows service data setting statuses of service soft switches and service parameters.

24/12 2002 10:00 FAX 001

```
****************************
***   SYSTEM DATA LIST   ***
****************************
```

#1 SSSW

SW01	-----	00010000
SW02	-----	00000000
SW03	-----	00000000
SW04	-----	00000000
SW05	-----	00000000
SW06	-----	10000000
SW07	-----	00000000
SW08	-----	00000000
SW09	-----	00000000
SW10	-----	00000000
SW11	-----	00000000
SW12	-----	00000010
SW13	-----	00000000
SW14	-----	00000010
SW15	-----	00000000
SW16	-----	00000011
SW17	-----	00000000
SW18	-----	00000000
SW19	-----	00000000
SW20	-----	00000000
SW21	-----	00000000
SW22	-----	00000000
SW23	-----	00000000
SW24	-----	00000000
SW25	-----	00000000
SW26	-----	00000000
SW27	-----	00000000
SW28	-----	00000000
SW29	-----	00000000
SW30	-----	00000000
SW31	-----	00000000
SW32	-----	01100000
SW33	-----	00000000
SW34	-----	00000000
SW35	-----	00000000
SW36	-----	00000000
SW37	-----	00000000
SW38	-----	00000000
SW39	-----	00000000
SW40	-----	00000000
SW41	-----	00000000
SW42	-----	00000000
SW43	-----	00000000
SW44	-----	00000000
SW45	-----	00000000
SW46	-----	00000000
SW47	-----	00000000
SW48	-----	00000000
SW49	-----	00000000
SW50	-----	00000000

#2 MENU

05:	-----	OFF
06:	-----	DIAL
07:	-----	10
08:	-----	3429
09:	-----	33.6
10:	-----	25Hz

Figure 4-33 System Data List 1

24/12 2002 10:00 FAX ☑002

#3 NUMERIC Param.

01:	-----	0
02:	-----	10
03:	-----	15
04:	-----	12
05:	-----	4
06:	-----	1
07:	-----	0
08:	-----	0
09:	-----	6
10:	-----	5500
11:	-----	3500
12:	-----	0
13:	-----	1300
14:	-----	0
15:	-----	120
16:	-----	2
17:	-----	100
18:	-----	0
19:	-----	400
20:	-----	100
21:	-----	0
22:	-----	400
23:	-----	0
24:	-----	10
25:	-----	60
26:	-----	0
27:	-----	0
28:	-----	3
29:	-----	0
30:	-----	20
51:	-----	0
52:	-----	0
53:	-----	2
54:	-----	0
55:	-----	0
56:	-----	101
57:	-----	201
58:	-----	0
59:	-----	0
60:	-----	0
61:	-----	0
62:	-----	300
63:	-----	300
64:	-----	300
65:	-----	300
66:	-----	60
67:	-----	60
68:	-----	60
69:	-----	60
70:	-----	300

#4A SPECIAL

SW01	-----	00001000
SW02	-----	00000100
SW03	-----	00000000
SW04	-----	00000100
SW05	-----	00000000
SW06	-----	00000000
SW07	-----	00010010
SW08	-----	01000000
SW09	-----	00000000
SW10	-----	00000000

Figure 4-34 System Data List 2

24/12 2002 10:00 FAX 003

SW11	-----	00000000
SW12	-----	00000000
SW13	-----	00000000
SW14	-----	10000001
SW15	-----	00000000
SW16	-----	10100000
SW17	-----	00010011
SW18	-----	00000000
SW19	-----	00000000
SW20	-----	00000010
SW21	-----	00000010
SW22	-----	00000000
SW23	-----	00000000
SW24	-----	00000010
SW25	-----	00000101
SW26	-----	00000000
SW27	-----	00000000
SW28	-----	01001000
SW29	-----	00000000
SW30	-----	00011010
01 :	-----	5
02 :	-----	30
03 :	-----	30
04 :	-----	4
05 :	-----	150
06 :	-----	100
07 :	-----	26
08 :	-----	0
09 :	-----	0
10 :	-----	10
11 :	-----	2
12 :	-----	5
13 :	-----	8
14 :	-----	60
15 :	-----	6000
16 :	-----	8
17 :	-----	60
18 :	-----	99
19 :	-----	0
20 :	-----	58
21 :	-----	0
22 :	-----	0
23 :	-----	99
24 :	-----	10
25 :	-----	25
26 :	-----	2
27 :	-----	2
28 :	-----	0
29 :	-----	5
30 :	-----	6
31 :	-----	60
32 :	-----	94
33 :	-----	185
34 :	-----	102
35 :	-----	1420
36 :	-----	40
37 :	-----	74
38 :	-----	142
39 :	-----	1432
40 :	-----	0
41 :	-----	0
42 :	-----	0
43 :	-----	0
44 :	-----	0
45 :	-----	0

Figure 4-35 System Data List 3

```
24/12 2002 10:00 FAX                                                    004
                46 :                -----                0
                47 :                -----                0
                48 :                -----                0
                49 :                -----                0
                50 :                -----               30
                51 :                -----              120
                52 :                -----               60
                53 :                -----              400
                54 :                -----              180
                55 :                -----                0
                56 :                -----                0
                57 :                -----                0
                58 :                -----                0
                59 :                -----                0
                60 :                -----                0
                61 :                -----                0
                62 :                -----                0
                63 :                -----               10
                64 :                -----               30
                65 :                -----             1144
                66 :                -----             1400
                67 :                -----               11
                68 :                -----               14
                69 :                -----                0
                70 :                -----                0

            #4B NCU
              1.TONE / PULSE
               1.TONE
                01 :                -----              100
                02 :                -----              100
               2.PULSE              -----           DP(N)
                01 :                -----              100
                02 :                -----              200
                03 :                -----               34
                04 :                -----              820

              2.DIAL TONE                          01000000
                01 :                -----              350
                02 :                -----              130
                03 :                -----               10
                04 :                -----                0
                05 :                -----                0
                06 :                -----                5
                07 :                -----                1
                08 :                -----                0

              3.2nd DIAL TONE                      00000000
                01 :                -----              200
                02 :                -----                0
                03 :                -----                0
                04 :                -----                0
                05 :                -----                0
                06 :                -----                0
                07 :                -----                0
                08 :                -----                0

              4.BUSY TONE 0                        00000000
                01 :                -----             1000
                02 :                -----               40
                03 :                -----               60
                04 :                -----               40
                05 :                -----               60
                06 :                -----                1
                07 :                -----                0
                08 :                -----                3
```

Figure 4-36 System Data List 4

24/12 2002 10:00 FAX ☑005

5.BUSY TONE 1		00000000
01 :	-----	1000
02 :	-----	40
03 :	-----	60
04 :	-----	40
05 :	-----	60
06 :	-----	1
07 :	-----	0
08 :	-----	3
6.REORDER TONE		10000000
01 :	-----	1000
02 :	-----	11
03 :	-----	63
04 :	-----	11
05 :	-----	63
06 :	-----	20
07 :	-----	5
08 :	-----	3
7.MULTI		
01 :	-----	0
02 :	-----	10
03 :	-----	0
04 :	-----	0
8.AUTO RX		
01 :	-----	13
02 :	-----	50
03 :	-----	10
04 :	-----	50
05 :	-----	1100
06 :	-----	0
07 :	-----	2
08 :	-----	13
09 :	-----	65
9.CNG DETECT		
01 :	-----	40
02 :	-----	60
03 :	-----	0
04 :	-----	0
05 :	-----	0
06 :	-----	85
07 :	-----	40
08 :	-----	60
09 :	-----	8
10 :	-----	0
11 :	-----	2
12 :	-----	70
10.RKEY		
01 :	-----	8
02 :	-----	18
03 :	-----	0
11.PBX DIAL TONE		00000000
01 :	-----	350
02 :	-----	130
03 :	-----	10
04 :	-----	0
05 :	-----	0
06 :	-----	5
07 :	-----	0
08 :	-----	0

Figure 4-37 System Data List 5

```
24/12 2002 10:00 FAX                                                    006
                    12.PBX BUSY TONE                        00000000
                       01 :                  -----             1000
                       02 :                  -----               40
                       03 :                  -----               60
                       04 :                  -----               40
                       05 :                  -----               60
                       06 :                  -----                1
                       07 :                  -----                0
                       08 :                  -----                3

                  #4C ISDN
                    ISDN BASIC
                       SW01                  -----         00000000
                       SW02                  -----         00000000
                       SW03                  -----         00000000
                       SW04                  -----         00000000
                       SW05                  -----         00000000
                       SW06                  -----         00000000
                       SW07                  -----         00010000
                       SW08                  -----         00010000
                       SW09                  -----         00000000
                       SW10                  -----         00000000
                       SW11                  -----         00000000
                       SW12                  -----         00000000
                       SW13                  -----         00000000
                       SW14                  -----         00000000
                       SW15                  -----         00000000
                       SW16                  -----         00000000
                       SW17                  -----         00000000
                       SW18                  -----         00000000
                       SW19                  -----         00000000
                       SW20                  -----         00000000
                       SW21                  -----         00000000
                       SW22                  -----         00000000
                       SW23                  -----         00000000
                       SW24                  -----         00000000
                       SW25                  -----         00000000
                       SW26                  -----         00000000
                       SW27                  -----         00000000
                       SW28                  -----         00000000
                       SW29                  -----         00000000
                       SW30                  -----         00000000

                       01 :                  -----               60
                       02 :                  -----                3
                       03 :                  -----                0
                       04 :                  -----                0
                       05 :                  -----               20
                       06 :                  -----               20
                       07 :                  -----               35
                       08 :                  -----               30
                       09 :                  -----               30
                       10 :                  -----               30
                       11 :                  -----                0
                       12 :                  -----                0
                       13 :                  -----                4
                       14 :                  -----                4
                       15 :                  -----              120
                       16 :                  -----                0
                       17 :                  -----                0
                       18 :                  -----                0
                       19 :                  -----                0
                       20 :                  -----                0
```

Figure 4-38 System Data List 6

24/12 2002 10:01 FAX 007

21 :	-----	0
22 :	-----	0
23 :	-----	0
24 :	-----	0
25 :	-----	0
26 :	-----	0
27 :	-----	0
28 :	-----	0
29 :	-----	0
30 :	-----	0
31 :	-----	0
32 :	-----	0
33 :	-----	0
34 :	-----	0
35 :	-----	0
36 :	-----	0
37 :	-----	0
38 :	-----	0
39 :	-----	0
40 :	-----	0

Redial Code

001 :	-----	1017,	1018,	1019,	1027,	1031,
006 :	-----	1034,	1041,	1042,	1044,	1049,
011 :	-----	1127,	1131,	1144,	1145,	0,
016 :	-----	0,	0,	0,	0,	0,
021 :	-----	0,	0,	0,	0,	0,
026 :	-----	0,	0,	0,	0,	0,
031 :	-----	0,	0,	0,	0,	0,
036 :	-----	0,	0,	0,	0,	0,
041 :	-----	0,	0,	0,	0,	0,
046 :	-----	0,	0,	0,	0,	0,
051 :	-----	0,	0,	0,	0,	0,
056 :	-----	0,	0,	0,	0,	0,
061 :	-----	0,	0,	0,	0,	0,
066 :	-----	0,	0,	0,	0,	0,
071 :	-----	0,	0,	0,	0,	0,
076 :	-----	0,	0,	0,	0,	0,
081 :	-----	0,	0,	0,	0,	0,
086 :	-----	0,	0,	0,	0,	0,
091 :	-----	0,	0,	0,	0,	0,
096 :	-----	0,	0,	0,	0,	0,
101 :	-----	0,	0,	0,	0,	0,
106 :	-----	0,	0,	0,	0,	0,
111 :	-----	0,	0,	0,	0,	0,
116 :	-----	0,	0,	0,	0,	0,
121 :	-----	0,	0,	0,	0,	0,
126 :	-----	0,	0,	0		

Figure 4-39 System Data List 7

```
24/12 2002 10:01 FAX                                                    008

G4/G3 Fallback
   001 :                 -----          1003, 1018, 1057, 1058, 1063,
   006 :                 -----          1065, 1070, 1079, 1088, 1127,
   011 :                 -----             0,    0,    0,    0,    0,
   016 :                 -----             0,    0,    0,    0,    0,
   021 :                 -----             0,    0,    0,    0,    0,
   026 :                 -----             0,    0,    0,    0,    0,
   031 :                 -----             0,    0,    0,    0,    0,
   036 :                 -----             0,    0,    0,    0,    0,
   041 :                 -----             0,    0,    0,    0,    0,
   046 :                 -----             0,    0,    0,    0,    0,
   051 :                 -----             0,    0,    0,    0,    0,
   056 :                 -----             0,    0,    0,    0,    0,
   061 :                 -----             0,    0,    0,    0,    0,
   066 :                 -----             0,    0,    0,    0,    0,
   071 :                 -----             0,    0,    0,    0,    0,
   076 :                 -----             0,    0,    0,    0,    0,
   081 :                 -----             0,    0,    0,    0,    0,
   086 :                 -----             0,    0,    0,    0,    0,
   091 :                 -----             0,    0,    0,    0,    0,
   096 :                 -----             0,    0,    0,    0,    0,
   101 :                 -----             0,    0,    0,    0,    0,
   106 :                 -----             0,    0,    0,    0,    0,
   111 :                 -----             0,    0,    0,    0,    0,
   116 :                 -----             0,    0,    0,    0,    0,
   121 :                 -----             0,    0,    0,    0,    0,
   126 :                 -----             0,    0,    0

Speech Fallback
   001 :                 -----          1041, 1088,    0,    0,    0,
   006 :                 -----             0,    0,    0,    0,    0,
   011 :                 -----             0,    0,    0,    0,    0,
   016 :                 -----             0,    0,    0,    0,    0,
   021 :                 -----             0,    0,    0,    0,    0,
   026 :                 -----             0,    0,    0,    0,    0,
   031 :                 -----             0,    0,    0,    0,    0,
   036 :                 -----             0,    0,    0,    0,    0,
   041 :                 -----             0,    0,    0,    0,    0,
   046 :                 -----             0,    0,    0,    0,    0,
   051 :                 -----             0,    0,    0,    0,    0,
   056 :                 -----             0,    0,    0,    0,    0,
   061 :                 -----             0,    0,    0,    0,    0,
   066 :                 -----             0,    0,    0,    0,    0,
   071 :                 -----             0,    0,    0,    0,    0,
   076 :                 -----             0,    0,    0,    0,    0,
   081 :                 -----             0,    0,    0,    0,    0,
   086 :                 -----             0,    0,    0,    0,    0,
   091 :                 -----             0,    0,    0,    0,    0,
   096 :                 -----             0,    0,    0,    0,    0,
   101 :                 -----             0,    0,    0,    0,    0,
   106 :                 -----             0,    0,    0,    0,    0,
   111 :                 -----             0,    0,    0,    0,    0,
   116 :                 -----             0,    0,    0,    0,    0,
   121 :                 -----             0,    0,    0,    0,    0,
   126 :                 -----             0,    0,    0

 Othernetwork
   Network A
    SW01                 -----          00000000
    SW02                 -----          00000000
   Address

   Subaddress
```

Figure 4-40 System Data List 8

24/12 2002 10:01 FAX 009

Network B		
SW01	-----	00000000
SW02	-----	00000000
Address		
Subaddress		
Network C		
SW01	-----	00000000
SW02	-----	00000000
Address		
Subaddress		
ISDN G4		
SW01	-----	10000100
SW02	-----	00000000
SW03	-----	00000000
SW04	-----	00000000
01 :	-----	4
02 :	-----	0
03 :	-----	45
04 :	-----	6
05 :	-----	45
06 :	-----	4
07 :	-----	60
08 :	-----	60
09 :	-----	4
10 :	-----	55
11 :	-----	1
12 :	-----	30
13 :	-----	4
14 :	-----	4
15 :	-----	4
16 :	-----	4
17 :	-----	1
18 :	-----	1
19 :	-----	2
20 :	-----	10
21 :	-----	2
22 :	-----	10
23 :	-----	3
24 :	-----	230
25 :	-----	3
26 :	-----	100
27 :	-----	1
28 :	-----	3
29 :	-----	1800
30 :	-----	1800
31 :	-----	1800
32 :	-----	0
33 :	-----	0
34 :	-----	0
35 :	-----	0
36 :	-----	0
37 :	-----	0
38 :	-----	0
39 :	-----	0
40 :	-----	0

Figure 4-41 System Data List 9

```
24/12 2002 10:01 FAX                                                    010
                    41 :                -----                0
                    42 :                -----                0
                    43 :                -----                0
                    44 :                -----                0
                    45 :                -----                0
                    46 :                -----                0
                    47 :                -----                0
                    48 :                -----                0
                    49 :                -----                0
                    50 :                -----                0

                ISDN G4 Circuit
                    SW01                -----         00000000
                    SW02                -----         00000000

                    01 :                -----               15
                    02 :                -----                0
                    03 :                -----                0
                    04 :                -----                4
                    05 :                -----               20
                    06 :                -----                7
                    07 :                -----                0
                    08 :                -----                4
                    09 :                -----                2
                    10 :                -----                7
                    11 :                -----              180
                    12 :                -----              200
                    13 :                -----              180
                    14 :                -----              180
                    15 :                -----               60
                    16 :                -----                1
                    17 :                -----                1
                    18 :                -----                1
                    19 :                -----                0
                    20 :                -----                0
                    21 :                -----                0
                    22 :                -----                0
                    23 :                -----                0
                    24 :                -----                0
                    25 :                -----                0
                    26 :                -----                0
                    27 :                -----                0
                    28 :                -----                0
                    29 :                -----                0
                    30 :                -----                0

                ISDN G4 Packet
                    SW01                -----         00000000
                    SW02                -----         00000000

                    01 :                -----                3
                    02 :                -----                0
                    03 :                -----                0
                    04 :                -----                4
                    05 :                -----               25
                    06 :                -----                7
                    07 :                -----                0
                    08 :                -----                3
                    09 :                -----                2
                    10 :                -----                2
                    11 :                -----              180
                    12 :                -----              200
                    13 :                -----              180
                    14 :                -----              180
                    15 :                -----               60
```

Figure 4-42 System Data List 10

```
24/12 2002 10:01 FAX                                                    011
                    16 :              -----              1
                    17 :              -----              1
                    18 :              -----              1
                    19 :              -----              0
                    20 :              -----              0
                    21 :              -----              0
                    22 :              -----              0
                    23 :              -----              0
                    24 :              -----              0
                    25 :              -----              0
                    26 :              -----              0
                    27 :              -----              0
                    28 :              -----              0
                    29 :              -----              0
                    30 :              -----              0

                ISDN G3
                    SW01              -----          00000000
                    SW02              -----          00000000
                    SW03              -----          00000000
                    SW04              -----          00000000

                    01 :              -----              0
                    02 :              -----              0
                    03 :              -----              0
                    04 :              -----              0
                    05 :              -----              0
                    06 :              -----              0
                    07 :              -----              0
                    08 :              -----              0
                    09 :              -----              0
                    10 :              -----              0
                    11 :              -----              0
                    12 :              -----              0
                    13 :              -----              0
                    14 :              -----              0
                    15 :              -----              0
                    16 :              -----              0
                    17 :              -----              0
                    18 :              -----              0
                    19 :              -----              0
                    20 :              -----              0

                #5  TYPE
                    TYPE              -----          U.K.

                #6  SCANNER
                  SCANNER Bit SW
                    SW01              -----          00000000
                    SW02              -----          00000000

                  SCANNER SLICE
                    01 :              -----            224
                    02 :              -----            193
                    03 :              -----            176
                    04 :              -----            150
                    05 :              -----            126
```

Figure 4-43 System Data List 11

24/12 2002 10:01 FAX 012

06 :	-----	105
07 :	-----	86
08 :	-----	72
09 :	-----	58

SCANNER GAMMA

001 :	-----	0
002 :	-----	0
003 :	-----	0
004 :	-----	0
005 :	-----	0
006 :	-----	0
007 :	-----	0
008 :	-----	0
009 :	-----	0
010 :	-----	0
011 :	-----	0
012 :	-----	0
013 :	-----	0
014 :	-----	0
015 :	-----	0
016 :	-----	0
017 :	-----	0
018 :	-----	0
019 :	-----	0
020 :	-----	0
021 :	-----	0
022 :	-----	0
023 :	-----	0
024 :	-----	0
025 :	-----	0
026 :	-----	0
027 :	-----	0
028 :	-----	0
029 :	-----	0
030 :	-----	0
031 :	-----	0
032 :	-----	0
033 :	-----	0
034 :	-----	2
035 :	-----	2
036 :	-----	2
037 :	-----	3
038 :	-----	3
039 :	-----	3
040 :	-----	4
041 :	-----	4
042 :	-----	4
043 :	-----	5
044 :	-----	5
045 :	-----	5
046 :	-----	6
047 :	-----	6
048 :	-----	6
049 :	-----	7
050 :	-----	7
051 :	-----	8
052 :	-----	8
053 :	-----	8
054 :	-----	9
055 :	-----	9
056 :	-----	9
057 :	-----	10
058 :	-----	10
059 :	-----	10
060 :	-----	11

Figure 4-44 System Data List 12

24/12 2002 10:01 FAX ☑013

061 :	-----	11
062 :	-----	12
063 :	-----	12
064 :	-----	12
065 :	-----	12
066 :	-----	13
067 :	-----	13
068 :	-----	13
069 :	-----	14
070 :	-----	14
071 :	-----	14
072 :	-----	15
073 :	-----	15
074 :	-----	15
075 :	-----	16
076 :	-----	16
077 :	-----	16
078 :	-----	17
079 :	-----	17
080 :	-----	17
081 :	-----	18
082 :	-----	18
083 :	-----	18
084 :	-----	19
085 :	-----	19
086 :	-----	19
087 :	-----	19
088 :	-----	20
089 :	-----	20
090 :	-----	20
091 :	-----	20
092 :	-----	20
093 :	-----	22
094 :	-----	22
095 :	-----	22
096 :	-----	22
097 :	-----	22
098 :	-----	23
099 :	-----	23
100 :	-----	23
101 :	-----	23
102 :	-----	24
103 :	-----	24
104 :	-----	24
105 :	-----	25
106 :	-----	25
107 :	-----	25
108 :	-----	25
109 :	-----	26
110 :	-----	26
111 :	-----	26
112 :	-----	27
113 :	-----	27
114 :	-----	27
115 :	-----	27
116 :	-----	28
117 :	-----	28
118 :	-----	28
119 :	-----	28
120 :	-----	29
121 :	-----	29
122 :	-----	29
123 :	-----	29
124 :	-----	30
125 :	-----	30

Figure 4-45 System Data List 13

24/12 2002 10:01 FAX 014

126 :	-----	30
127 :	-----	30
128 :	-----	30
129 :	-----	31
130 :	-----	31
131 :	-----	31
132 :	-----	31
133 :	-----	31
134 :	-----	32
135 :	-----	32
136 :	-----	32
137 :	-----	33
138 :	-----	33
139 :	-----	34
140 :	-----	34
141 :	-----	35
142 :	-----	35
143 :	-----	36
144 :	-----	36
145 :	-----	37
146 :	-----	37
147 :	-----	37
148 :	-----	37
149 :	-----	38
150 :	-----	38
151 :	-----	38
152 :	-----	38
153 :	-----	39
154 :	-----	39
155 :	-----	39
156 :	-----	39
157 :	-----	40
158 :	-----	40
159 :	-----	40
160 :	-----	40
161 :	-----	41
162 :	-----	41
163 :	-----	41
164 :	-----	41
165 :	-----	43
166 :	-----	43
167 :	-----	43
168 :	-----	43
169 :	-----	44
170 :	-----	44
171 :	-----	44
172 :	-----	45
173 :	-----	45
174 :	-----	45
175 :	-----	46
176 :	-----	46
177 :	-----	46
178 :	-----	47
179 :	-----	47
180 :	-----	47
181 :	-----	48
182 :	-----	48
183 :	-----	49
184 :	-----	50
185 :	-----	50
186 :	-----	51
187 :	-----	51
188 :	-----	52
189 :	-----	52
190 :	-----	53

Figure 4-46 System Data List 14

24/12 2002 10:01 FAX 015

191 :	-----	53
192 :	-----	53
193 :	-----	54
194 :	-----	54
195 :	-----	54
196 :	-----	55
197 :	-----	55
198 :	-----	55
199 :	-----	56
200 :	-----	56
201 :	-----	56
202 :	-----	57
203 :	-----	57
204 :	-----	57
205 :	-----	57
206 :	-----	58
207 :	-----	58
208 :	-----	58
209 :	-----	59
210 :	-----	59
211 :	-----	59
212 :	-----	59
213 :	-----	59
214 :	-----	60
215 :	-----	60
216 :	-----	60
217 :	-----	60
218 :	-----	61
219 :	-----	61
220 :	-----	61
221 :	-----	61
222 :	-----	61
223 :	-----	61
224 :	-----	62
225 :	-----	62
226 :	-----	62
227 :	-----	62
228 :	-----	62
229 :	-----	62
230 :	-----	62
231 :	-----	62
232 :	-----	62
233 :	-----	63
234 :	-----	63
235 :	-----	63
236 :	-----	63
237 :	-----	63
238 :	-----	63
239 :	-----	63
240 :	-----	63
241 :	-----	63
242 :	-----	63
243 :	-----	63
244 :	-----	63
245 :	-----	63
246 :	-----	63
247 :	-----	63
248 :	-----	63
249 :	-----	63
250 :	-----	63
251 :	-----	63
252 :	-----	63
253 :	-----	63
254 :	-----	63
255 :	-----	63

Figure 4-47 System Data List 15

24/12 2002 10:02 FAX 016

256 :	-----	63

SCANNER Numeric

001 :	-----	0
002 :	-----	0
003 :	-----	1000
004 :	-----	5
005 :	-----	0
006 :	-----	0
007 :	-----	25
008 :	-----	0
009 :	-----	0
010 :	-----	0
011 :	-----	2
012 :	-----	127
013 :	-----	191
014 :	-----	150
015 :	-----	8
016 :	-----	204
017 :	-----	409
018 :	-----	409
019 :	-----	5
020 :	-----	255
021 :	-----	195
022 :	-----	255
023 :	-----	195
024 :	-----	0
025 :	-----	0
026 :	-----	0
027 :	-----	0
028 :	-----	0
029 :	-----	0
030 :	-----	4050
031 :	-----	4800
032 :	-----	5000
033 :	-----	11000
034 :	-----	2000
035 :	-----	2100
036 :	-----	1100
037 :	-----	1
038 :	-----	0
039 :	-----	0
040 :	-----	0
041 :	-----	1000
042 :	-----	100
043 :	-----	1500
044 :	-----	230
045 :	-----	308
046 :	-----	351
047 :	-----	647
048 :	-----	10
049 :	-----	0
050 :	-----	50
051 :	-----	100
052 :	-----	100
053 :	-----	100
054 :	-----	30
055 :	-----	0
056 :	-----	20
057 :	-----	20
058 :	-----	0
059 :	-----	0
060 :	-----	0

Figure 4-48 System Data List 16

24/12 2002 10:02 FAX 017

061 :	-----	32767
062 :	-----	0
063 :	-----	2
064 :	-----	522
065 :	-----	992
066 :	-----	12
067 :	-----	890
068 :	-----	12
069 :	-----	827
070 :	-----	12
071 :	-----	773
072 :	-----	12
073 :	-----	728
074 :	-----	12
075 :	-----	689
076 :	-----	12
077 :	-----	655
078 :	-----	12
079 :	-----	625
080 :	-----	12
081 :	-----	599
082 :	-----	12
083 :	-----	575
084 :	-----	12
085 :	-----	555
086 :	-----	12
087 :	-----	536
088 :	-----	12
089 :	-----	522
090 :	-----	12
091 :	-----	506
092 :	-----	12
093 :	-----	491
094 :	-----	12
095 :	-----	479
096 :	-----	12
097 :	-----	467
098 :	-----	12
099 :	-----	457
100 :	-----	12
101 :	-----	448
102 :	-----	12
103 :	-----	440
104 :	-----	12
105 :	-----	433
106 :	-----	12
107 :	-----	426
108 :	-----	12
109 :	-----	420
110 :	-----	12
111 :	-----	414
112 :	-----	12
113 :	-----	410
114 :	-----	12
115 :	-----	405
116 :	-----	12
117 :	-----	401
118 :	-----	12
119 :	-----	398
120 :	-----	12
121 :	-----	395
122 :	-----	12
123 :	-----	392
124 :	-----	12
125 :	-----	32767

Figure 4-49 System Data List 17

24/12 2002 10:02 FAX 018

126 :	-----	32767
127 :	-----	392
128 :	-----	12
129 :	-----	392
130 :	-----	12
131 :	-----	392
132 :	-----	12
133 :	-----	392
134 :	-----	12
135 :	-----	392
136 :	-----	12
137 :	-----	392
138 :	-----	12
139 :	-----	392
140 :	-----	12
141 :	-----	392
142 :	-----	12
143 :	-----	392
144 :	-----	12
145 :	-----	32767
146 :	-----	32767
147 :	-----	992
148 :	-----	12
149 :	-----	890
150 :	-----	12
151 :	-----	827
152 :	-----	12
153 :	-----	773
154 :	-----	12
155 :	-----	728
156 :	-----	12
157 :	-----	689
158 :	-----	12
159 :	-----	655
160 :	-----	12
161 :	-----	625
162 :	-----	12
163 :	-----	599
164 :	-----	12
165 :	-----	575
166 :	-----	12
167 :	-----	555
168 :	-----	12
169 :	-----	536
170 :	-----	12
171 :	-----	522
172 :	-----	12
173 :	-----	506
174 :	-----	12
175 :	-----	491
176 :	-----	12
177 :	-----	479
178 :	-----	12
179 :	-----	467
180 :	-----	12
181 :	-----	457
182 :	-----	12
183 :	-----	448
184 :	-----	12
185 :	-----	440
186 :	-----	12
187 :	-----	433
188 :	-----	12
189 :	-----	426
190 :	-----	12

Figure 4-50 System Data List 18

24/12 2002 10:02 FAX 019

191 :	-----	420
192 :	-----	12
193 :	-----	414
194 :	-----	12
195 :	-----	410
196 :	-----	12
197 :	-----	405
198 :	-----	12
199 :	-----	401
200 :	-----	12
201 :	-----	398
202 :	-----	12
203 :	-----	395
204 :	-----	12
205 :	-----	392
206 :	-----	12
207 :	-----	32767
208 :	-----	32767
209 :	-----	392
210 :	-----	12
211 :	-----	392
212 :	-----	12
213 :	-----	392
214 :	-----	12
215 :	-----	392
216 :	-----	12
217 :	-----	392
218 :	-----	12
219 :	-----	392
220 :	-----	12
221 :	-----	392
222 :	-----	12
223 :	-----	392
224 :	-----	12
225 :	-----	392
226 :	-----	12
227 :	-----	32767
228 :	-----	32767
229 :	-----	1
230 :	-----	11625
231 :	-----	11625
232 :	-----	497
233 :	-----	497
234 :	-----	11621
235 :	-----	11621
236 :	-----	15876
237 :	-----	15876
238 :	-----	11622
239 :	-----	11622
240 :	-----	498
241 :	-----	498
242 :	-----	11626
243 :	-----	11626
244 :	-----	15880
245 :	-----	15880
246 :	-----	0
247 :	-----	670
248 :	-----	0
249 :	-----	0
250 :	-----	1
251 :	-----	1
252 :	-----	0
253 :	-----	0
254 :	-----	0
255 :	-----	0

Figure 4-51 System Data List 19

24/12 2002 10:02 FAX 020

256 :	-----	0
257 :	-----	0
258 :	-----	0
259 :	-----	0
260 :	-----	0
261 :	-----	0
262 :	-----	0
263 :	-----	0
264 :	-----	0
265 :	-----	0
266 :	-----	0
267 :	-----	0
268 :	-----	0
269 :	-----	0
270 :	-----	0
271 :	-----	0
272 :	-----	0
273 :	-----	0
274 :	-----	3
275 :	-----	70
276 :	-----	3
277 :	-----	176
278 :	-----	0
279 :	-----	0
280 :	-----	0
281 :	-----	0
282 :	-----	0
283 :	-----	0
284 :	-----	0
285 :	-----	1
286 :	-----	0
287 :	-----	0
288 :	-----	0
289 :	-----	0
290 :	-----	0
291 :	-----	1
292 :	-----	1
293 :	-----	242
294 :	-----	0
295 :	-----	100
296 :	-----	0
297 :	-----	0
298 :	-----	0
299 :	-----	0
300 :	-----	0
SCANNER LUT1 fno		
01 :	-----	0
02 :	-----	0
03 :	-----	0
04 :	-----	0
05 :	-----	0
SCANNER LUT2 adj		
01 :	-----	0
02 :	-----	0
03 :	-----	0
04 :	-----	0
05 :	-----	0
SCANNER CCD		
01 :	-----	26
02 :	-----	26
03 :	-----	26
04 :	-----	26
05 :	-----	1024

Figure 4-52 System Data List 20

24/12 2002 10:02 FAX ☑021

06 :	-----	1024
07 :	-----	0
08 :	-----	0
09 :	-----	0
10 :	-----	0
11 :	-----	0
12 :	-----	255
13 :	-----	0
14 :	-----	0
15 :	-----	0
16 :	-----	10
17 :	-----	240
18 :	-----	470
19 :	-----	60
20 :	-----	40
21 :	-----	24
22 :	-----	30
23 :	-----	20
24 :	-----	257
25 :	-----	28
26 :	-----	28
27 :	-----	36
28 :	-----	43
29 :	-----	16
30 :	-----	16
31 :	-----	16
32 :	-----	16
33 :	-----	50
34 :	-----	50
35 :	-----	130
36 :	-----	0
37 :	-----	0
38 :	-----	0
39 :	-----	0
40 :	-----	0
41 :	-----	0
42 :	-----	0
43 :	-----	0
44 :	-----	0
45 :	-----	0
46 :	-----	0
47 :	-----	0
48 :	-----	0
49 :	-----	2001
50 :	-----	2001

#7 PRINTER

SW01	-----	00000000
SW02	-----	00000000
SW03	-----	00000001
SW04	-----	00000000
SW05	-----	10000000
SW06	-----	00000100
SW07	-----	00000000
SW08	-----	00000000
SW09	-----	00000000
SW10	-----	00000000
SW11	-----	00000000
SW12	-----	00000000
SW13	-----	00000000
SW14	-----	00000000
SW15	-----	00000000

Figure 4-53 System Data List 21

```
24/12 2002 10:02 FAX                                                    022
                    SW16              -----        00000000
                    SW17              -----        00000000
                    SW18              -----        00000000
                    SW19              -----        00000000
                    SW20              -----        00000000

                    01 :              -----           15
                    02 :              -----            0
                    03 :              -----            0
                    04 :              -----           30
                    05 :              -----           50
                    06 :              -----            0
                    07 :              -----            0
                    08 :              -----            0
                    09 :              -----            0
                    10 :              -----            0
                    11 :              -----            0
                    12 :              -----            0
                    13 :              -----           10
                    14 :              -----            0
                    15 :              -----            2
                    16 :              -----            0
                    17 :              -----            0
                    18 :              -----            0
                    19 :              -----           30
                    20 :              -----           30
                    21 :              -----           40
                    22 :              -----         3100
                    23 :              -----          100
                    24 :              -----          100
                    25 :              -----          100
                    26 :              -----          100
                    27 :              -----          100
                    28 :              -----            0
                    29 :              -----            0
                    30 :              -----            0

                #13 ROM
                MAIN                  -----        EC-17-02
                MAIN2                 -----        WLD-02-01
                ECNT                  -----        0007
                PDL                   -----        V1.04
                NIC                   -----        3.00

                START DATE
                     DATE             -----         17/12 2012
```

Figure 4-54 System Data List 22

NOTE

"START DATE" records the date when this fax performs its first transmission or reception, after shipment from the factory.

This page intentionally left blank

a-2) System dump list

This list shows the past communications statuses and error communications history.

```
31/07 2002 10:00 FAX                                                        001

  *1  CLEAR DATE                 19/07 2002

  *2  TX     =     11
  *3  A4     =     13    B4     =      1    A3     =      0
  *4  RX     =      3
  *5  A4     =      3    B4     =      0    A3     =      0    LTR    =      0    LGL    =      0
  *6  33600  =      0    31200  =      0    28800  =      5    26400  =      0    24000  =      3
      21600  =      0    19200  =      0    16800  =      0    14400  =      0    12000  =      0
      9600   =      0    7200   =      0    4800   =      0    2400   =      0
      14400  =      6    12000  =      0    TC9600=       0    TC7200=       0
      14400  =      0    12000  =      0
      9600   =      3    7200   =      0    4800   =      0    2400   =      0
  *7  STD    =      4    FINE   =      3    SUPER  =      2    ULTRA  =      8
  *8  MH     =      0    MR     =      3    MMR    =      0    JBIG   =     14
  *9  G3     =      3    ECM    =     14
  *10 PRINT  =     45 /    13               READ   =     15 /    15


  *11
   #000               0       0       0       0       0       0       0       0
                      0       0       0       0       0       0       0       0
                      0       0       1       0       0       0       0       0
                      0       0       0       0       0       0       0       0
                      0       0       0       0       0       0       0       0
                      0       0       0       0       0       0       0       0
                      0       0       0       0       0       0       0       0
                      0       0       0       0       0       0       0       0
                      0       0       0       0       0       0       0       0
                      0       0       0       0       0       0       0       0
                      0       0       0       0       0       0       0       0
                      0       0       0       0       0       0       0       0
                      0       0       0       0       0       0       0       0
                      0       0       0       0       0       0

   #700               0       0       0       0       0       0       0       0
                      0       0       0       0       0       0       0       0
                      0       0       0       0       0       0       0       0
                      0       0       0       0       0       0       0       0
                      0       0       0       0       0       0       0       0
                      0       0       0       0       0       0       0       0
                      0       0       0       0       0       0       0       0
                      0       0       0       0       0       0       0       0
                      0       0       0       0       0       0       0       0
                      0       0       0       0       0       0       0       0
                      0       0       0       0       0       0       0       0
                      0       0       0       0       0       0       0       0
                      0       0       0       0       0       0       0       0
                      0       0       0       0       0       0       0       0
                      0       0       0       0       0       0       0       0
                      0       0       0       0       0       0       0       0
                      0       0       0       0       0       0       0       0
                      0       0       0       0       0       0       0       0
                      0       0       0       0       0       0       0       0
                      0       0       0       0       0       0       0       0
                      0       0       0       0       0       0       0       0
                      0       0       0       0       0       0       0       0
                      0       0       0       0       0       0       0       0
                      0       0       0       0       0       0       0       0
                      0       0       0       0       0       0       0       0

  ##100               1       7       3       0       0       0       0       0
                      0       0       0       0       0       0       0       0
                      0
```

Figure 4-55 System Dump List 1

*1 : Date on which data was initialized with service data #8 CLEAR, ALL
*2 : Total number of transmission
*3 : Total number of pages transmitted for each document size
*4 : Total number of reception
*5 : Total number of pages received for each document size
*6 : Total number of pages transmitted and received for each modem speed
*7 : Total number of pages transmitted and received for each mode
*8 : Total number of pages transmitted and received for each coding method
*9 : Total number of pages transmitted and received in each mode
*10 : Total number of pages printed/scanned
[Display example]
PRINT = 30*/100** READ = 30*/100**
* Indicates the value input with Service Data #8 CLEAR, COUNTER.
** Indicates the value counted since shipment from the factory.
*11 : Total number of occurrences for each error code
[Display example]

##100	1	7	3	0	0
	##0100 errors	##0101 errors	##0102 errors		

Displays error information for the 3 most recent communications.

```
#1 LATEST                        *1 ##0755

       *2  START TIME                31/07 10:36
       *3  OTHER PARTY                             74899
       *4  MAKER CODE                10001000
       *5  MACHINE CODE              11000110 00000000
       *6  RCV V.8 FRAME             E0 81 85 D4 90 7E 00 00
       *7  SYMBOL RATE               3429
       *8  DATA RATE                 24.0
       *9  TX LVL REDUCTION           0
       *10 ERR ABCODE                92
       *11 ERR SECTXB                8A
       *12 ERR SECRXB                80

       *13 Rx : (bit 1) 00000100 01110011 01010101 00100011 00000001 10101011 11000001 (bit56)
                (bit57) 00000001 00000001 00000100 00000000 00000000                   (bit96)
       *14 Tx : (bit 1) 00000000 01000000 00011111 00100001 00000001 00100001 00000001 (bit56)
                (bit57) 00000001 00000001 00000100 00000000 00000000                   (bit96)
   *15
     Rx : NSF CSI DIS         CFR                 PPR                 MCF
     Tx :             NSS DCS     PIX-240 PPS-MPS     PIX-240 PPS-MPS     PIX-240 PPS-MPS
     Rx : MCF
     Tx :     PIX-240 PPS-MPS PPS-MPS PPS-MPS DCN
```

Figure 4-56 System Dump List 2

*1 : Service error code
*2 : Communication start date and time (on 24-hour display)
*3 : Telephone number sent from other party
*4 : Maker code
*5 : Machine code
*6 : Received V.8 protocol signal
*7 : Symbol rate used for the primary channel
*8 : Transmission speed used for the primary channel
*9 : 0 (Fixed)
*10 : Code output by the modem when an error occurred
(Not used in the field)
*11 : Transmit status of the modem when an error occurred
(Not used in the field)
*12 : Receive status of the modem when an error occurred
(Not used in the field)
*13 : Bit 1 to bit 96 of received DIS, DCS, or DTC
*14 : Bit 1 to bit 96 of transmitted DIS, DCS, or DTC
*15 : RX=Received protocol signal
TX=Transmitted protocol signal

NOTE

When an error occurs in direct transmission, *6 to *12 will not be listed even if the other party's machine has a V.34 modem.

a-3) Key history report

This report shows history of key press.

24/12 2002 10:46 FAX ☑001

```
*****************************
***   KEY HISTORY REPORT   ***
*****************************
```

24/12 10:46:54	SET_KEY	24/12 10:46:54	DOWN_KEY	24/12 10:46:54	DOWN_KEY
24/12 10:46:53	DOWN_KEY	24/12 10:46:53	REPORT_KEY	24/12 10:46:49	SHARP_KEY
24/12 10:46:49	USER_KEY	24/12 10:46:47	STOP_KEY	24/12 10:46:46	SET_KEY
24/12 10:46:45	UP_KEY	24/12 10:46:45	DOWN_KEY	24/12 10:46:45	DOWN_KEY
24/12 10:46:45	DOWN_KEY	24/12 10:46:44	DOWN_KEY	24/12 10:46:44	SET_KEY
24/12 10:46:43	SET_KEY	24/12 10:46:43	DOWN_KEY	24/12 10:46:43	DOWN_KEY
24/12 10:46:43	DOWN_KEY	24/12 10:46:42	DOWN_KEY	24/12 10:46:42	DOWN_KEY
24/12 10:46:42	DOWN_KEY	24/12 10:46:42	DOWN_KEY	24/12 10:46:41	SET_KEY
24/12 10:46:39	USER_KEY	24/12 10:46:39	STOP_KEY	24/12 10:46:38	TIMTRN_KEY
24/12 10:46:37	USER_KEY	24/12 10:46:37	STAMP_KEY	24/12 10:46:36	STAMP_KEY
24/12 10:46:36	STAMP_KEY	24/12 10:46:36	STAMP_KEY	24/12 10:46:36	STAMP_KEY
24/12 10:46:35	STAMP_KEY	24/12 10:46:34	STAMP_KEY	24/12 10:46:32	DELETE_KEY
24/12 10:46:32	SPACE_KEY	24/12 10:46:31	PWD_KEY	24/12 10:46:31	SUB_KEY
24/12 10:46:29	STOP_KEY	24/12 10:46:29	R_KEY	24/12 10:46:28	R_KEY
24/12 10:46:26	STOP_KEY	24/12 10:46:20	ONE_KEY_64	24/12 10:46:19	ONE_KEY_64
24/12 10:46:19	ONE_KEY_64	24/12 10:46:19	ONE_KEY_64	24/12 10:46:19	ONE_KEY_64
24/12 10:46:19	ONE_KEY_64	24/12 10:46:19	ONE_KEY_64	24/12 10:46:19	ONE_KEY_64
24/12 10:46:18	ONE_KEY_64	24/12 10:46:18	ONE_KEY_64	24/12 10:46:18	ONE_KEY_64
24/12 10:46:18	ONE_KEY_64	24/12 10:46:18	ONE_KEY_64	24/12 10:46:18	ONE_KEY_64
24/12 10:46:17	ONE_KEY_64	24/12 10:46:17	ONE_KEY_64	24/12 10:46:17	ONE_KEY_64
24/12 10:46:17	ONE_KEY_64	24/12 10:46:17	ONE_KEY_64	24/12 10:46:17	ONE_KEY_64
24/12 10:46:16	ONE_KEY_64	24/12 10:46:16	ONE_KEY_64	24/12 10:46:16	ONE_KEY_64
24/12 10:46:16	ONE_KEY_64	24/12 10:46:16	ONE_KEY_64	24/12 10:46:16	ONE_KEY_64
24/12 10:46:16	ONE_KEY_64	24/12 10:46:15	ONE_KEY_64	24/12 10:46:13	ONE_KEY_44
24/12 10:46:13	ONE_KEY_44	24/12 10:46:13	ONE_KEY_44	24/12 10:46:13	ONE_KEY_44
24/12 10:46:13	ONE_KEY_44	24/12 10:46:13	ONE_KEY_44	24/12 10:46:12	ONE_KEY_44
24/12 10:46:12	ONE_KEY_44	24/12 10:46:12	ONE_KEY_44	24/12 10:46:12	ONE_KEY_44
24/12 10:46:12	ONE_KEY_44	24/12 10:46:12	ONE_KEY_44	24/12 10:46:12	ONE_KEY_44
24/12 10:46:11	ONE_KEY_44	24/12 10:46:11	ONE_KEY_44	24/12 10:46:11	ONE_KEY_44
24/12 10:46:11	ONE_KEY_44	24/12 10:46:10	ONE_KEY_44	24/12 10:46:10	ONE_KEY_44
24/12 10:46:10	ONE_KEY_44	24/12 10:46:10	ONE_KEY_44	24/12 10:46:10	ONE_KEY_44
24/12 10:46:10	ONE_KEY_44	24/12 10:46:10	ONE_KEY_44	24/12 10:46:09	ONE_KEY_44
24/12 10:46:09	ONE_KEY_44	24/12 10:46:09	ONE_KEY_44	24/12 10:46:09	ONE_KEY_44
24/12 10:46:05	LINE_SEL_KEY	24/12 10:46:05	LINE_SEL_KEY	24/12 10:46:04	SET_KEY
24/12 10:46:03	STOP_KEY	24/12 10:46:02	SHARP_KEY	24/12 10:46:02	SHARP_KEY
24/12 10:46:02	SHARP_KEY	24/12 10:46:02	SHARP_KEY	24/12 10:46:00	STOP_KEY
24/12 10:45:59	CODE_KEY	24/12 10:45:58	REDIAL_KEY	24/12 10:45:58	ON_HOOK_KEY
24/12 10:45:57	COPY_KEY	24/12 10:45:57	STOP_KEY	24/12 10:45:56	CODE_KEY
24/12 10:45:55	REDIAL_KEY	24/12 10:45:55	ON_HOOK_KEY	24/12 10:45:54	COPY_KEY
24/12 10:45:53	ONE_KEY_24	24/12 10:45:53	ONE_KEY_23	24/12 10:45:52	ONE_KEY_22
24/12 10:45:52	ONE_KEY_21	24/12 10:45:52	ONE_KEY_20	24/12 10:45:52	ONE_KEY_19
24/12 10:45:51	ONE_KEY_18	24/12 10:45:51	ONE_KEY_17	24/12 10:45:51	ONE_KEY_16
24/12 10:45:51	ONE_KEY_15	24/12 10:45:50	ONE_KEY_14	24/12 10:45:50	ONE_KEY_13
24/12 10:45:50	ONE_KEY_12	24/12 10:45:49	ONE_KEY_11	24/12 10:45:49	ONE_KEY_10
24/12 10:45:49	ONE_KEY_09	24/12 10:45:48	ONE_KEY_08	24/12 10:45:47	ONE_KEY_07
24/12 10:45:47	ONE_KEY_06	24/12 10:45:47	ONE_KEY_05	24/12 10:45:46	ONE_KEY_01
24/12 10:45:46	ONE_KEY_02	24/12 10:45:46	ONE_KEY_03	24/12 10:45:46	ONE_KEY_04
24/12 10:45:45	STOP_KEY	24/12 10:45:44	ONE_KEY_04	24/12 10:45:44	ONE_KEY_03
24/12 10:45:43	ONE_KEY_02	24/12 10:45:43	ONE_KEY_01	24/12 10:45:40	EXTEND_MODE_KEY
24/12 10:45:39	EXTEND_MODE_KEY	24/12 10:45:38	EXTEND_MODE_KEY	24/12 10:45:37	EXTEND_MODE_KEY
24/12 10:45:36	DARK_KEY	24/12 10:45:36	FINE_KEY	24/12 10:45:36	HALF_KEY
24/12 10:45:35	DIRECT_KEY	24/12 10:45:35	COUNTER_KEY	24/12 10:45:34	DIRECT_KEY
24/12 10:45:34	HALF_KEY	24/12 10:45:34	DARK_KEY	24/12 10:45:34	FINE_KEY
24/12 10:45:33	HALF_KEY	24/12 10:45:33	DARK_KEY	24/12 10:45:33	FINE_KEY
24/12 10:45:33	DARK_KEY	24/12 10:45:33	HALF_KEY	24/12 10:45:32	DARK_KEY
24/12 10:45:32	FINE_KEY	24/12 10:45:32	FINE_KEY	24/12 10:45:27	STOP_KEY
24/12 10:45:24	TEN_KEY_0	24/12 10:45:17	TEN_KEY_9	24/12 10:45:17	TEN_KEY_8
24/12 10:45:17	TEN_KEY_7	24/12 10:45:17	TEN_KEY_6	24/12 10:45:17	TEN_KEY_5
24/12 10:45:16	TEN_KEY_4	24/12 10:45:16	TEN_KEY_3	24/12 10:45:16	TEN_KEY_2
24/12 10:45:16	TEN_KEY_1	24/12 10:45:03	STOP_KEY	24/12 10:44:48	SET_KEY
24/12 10:44:46	DOWN_KEY	24/12 10:44:46	DOWN_KEY	24/12 10:44:46	DOWN_KEY
24/12 10:44:45	REPORT_KEY	24/12 10:44:43	SHARP_KEY	24/12 10:44:43	USER_KEY

Figure 4-57 Key History Report

a-4) Counter report

This report shows counter of read, print, communication and copy. Then output the list of changes made to the defaults of user data list and system data list, and output the system data list.

```
31/07 2002 10:59 FAX                    Canon                                  001

                          **************************
                          ***   COUNTER REPORT   ***
                          **************************

            TOTAL
                    TTL1         =        16
                    TTL2         =        16
                    LARGE        =         0
                    SMALL        =        16
                    A3           =         0
                    A4H          =         9
                    A5           =         0
                    B4           =         0
                    B5           =         0
                    LDR          =         0
                    LTRH         =         7
                    LGL          =         0
                    EXE          =         0
                    ENV          =         0
                    OTHERS       =         0
                    C1           =        10
                    C2           =         6
                    MF           =         0
                    C3           =         0
                    C4           =         0
                    L-PRANE      =         0
                    S-PRANE      =        16
                    L-OHP        =         0
                    S-OHP        =         0
                    L-THICK      =         0
                    S-THICK      =         0
                    L-OTHERTYPE  =         0
                    S-OTHERTYPE  =         0
                    SCAN         =        29
                    L-BW-SCAN    =         0
                    S-BW-SCAN    =        29
                    L-FEED       =         0
                    S-FEED       =        29
            COPY
                    TTL1         =         5
                    TTL2         =         5
                    LARGE        =         0
                    SMALL        =         5
                    A3           =         0
                    A4H          =         2
                    A5           =         0
                    B4           =         0
                    B5           =         0
                    LDR          =         0
                    LTRH         =         3
                    LGL          =         0
                    EXE          =         0
                    ENV          =         0
                    OTHERS       =         0
                    C1           =         2
                    C2           =         3
                    MF           =         0
                    C3           =         0
                    C4           =         0
                    L-PRANE      =         0
                    S-PRANE      =         5
                    L-OHP        =         0
                    S-OHP        =         0
                    L-THICK      =         0
                    S-THICK      =         0
                    L-OTHERTYPE  =         0
                    S-OTHERTYPE  =         0
```

Figure 4-58 Counter Report

NOTE

For particulars of counters, see #9 COUNTER on page 4-67.

```
31/07 2002 10:57 FAX                    Canon                          001

                          ****************************
                          ***   USER'S DATA LIST   ***
                          ****************************


    1.PAPER SETTINGS
        MP TRAY                              USE
            MP PAPER SIZE
        CASSETTE 1                           LTR
        CASSETTE 2                           LGL
        PAPER TYPE

    2.COMMON SETTINGS
        DENSITY CONTROL
            LIGHT                                8
            STANDARD
            DARK
```

Figure 4-59 Changed Data List (User's Data List)

```
31/07 2002 10:57 FAX                    Canon                          001

                          ****************************
                          ***   SYSTEM DATA LIST   ***
                          ****************************

                #1  SSSW

                     SW01              -----          00000011
                     SW18              -----          00000001

                #2  MENU

                     06:               -----               SERVICEMAN [1]
                     07:               -----               8

                #3  NUMERIC Param.

                     02:               -----                 12
                     03:               -----                 17
                     04:               -----                 14
```

Figure 4-60 Changed Data List (System Data List)

a-5) Jam/err log report

This report shows history of jam, error and alarm.

Guide to a jam history

```
31/07 2002 11:21 FAX                    Canon                                  001

                          ******************************
                          ***   JAM/ERR LOG REPORT   ***
                          ******************************
                *1
                 JAM      *2  *3    *4     *5   *6     *7    *8         *9   *10 *11
                          01 30/07 07:53 07:54 3      0    0210      000016 2 LGL
                          02 30/07 07:54 07:54 4      1    0001      000016   LTR
                          03 30/07 07:55 07:56 4      1    0004      000016   LTR
                          04 31/07 11:09 11:17 3      0    0104      000018 1 A4
                          05 31/07 11:18 11:18 3      0    0210      000018 1 A4
                          06
                          07
```

Figure 4-61 Jam/Err Log Report (Jam)

*1 : Jam history
*2 : Sequence of jams (higher, more recent)
*3 : Date of occurrence
*4 : Time of occurrence
*5 : Recovery time
*6 : Approximate location (3: machine; 4: ADF)
*7 : Location block (0: machine; 1: ADF)
*8 : Jam code
*9 : Total counter reading (6 digits)
*10 : Paper source 0: MP tray
1: Cassette 1
2: Cassette 2
3: Cassette 3
*11 : Paper size

The following is a list of main unit codes and the types of jams corresponding to them:

Code	Jam type
0104	Pickup section delay jam
010C	Eject section delay jam
0120	Reversed paper sensor delay jam
0124	Duplex pickup paper sensor delay jam
0208	Pickup section stationary jam
0210	Eject section stationary jam
0221	Reversed paper sensor eject stationary jam
0228	Duplex pickup paper sensor stationary jam
1014	Remain jam
1118	Cover open jam

The following is a list of ADF codes and the types of jams corresponding to them:

Code	Jam type
0001	Pickup jam
0003	Document edge sensor delay jam
0004	Document edge sensor stationary jam
000B	Residual document at start
0013	Jam at initialization
0016	Other

Guide to an error history

```
31/07 2002 11:21 FAX                    Canon                                    001

                    *1
                     ERR        *2   *3     *4          *5            *6       *7
                                01 31/07 11:03          3          00000246 000016
                                02
                                03
                                04
                                05
```

Figure 4-62 Jam/Err Log Report (Err)

*1 : Error history
*2 : Sequence of errors (higher, more recent)
*3 : Date of occurrence
*4 : Time of occurrence
*5 : Approximate location (3: machine; 5: finisher)
*6 : Error code (in 8 digits, with rightmost 3 indicating the code on the LCD)
*7 : Total counter (6 digits)

a-6) Print spec report

This report shows specification of the machine.

```
24/12 2002 10:52 FAX                                                    001

          *1  TYPE                  -----        U.K.
          *2  TOTAL MEMORY          -----        46080K
          *3  MAIN                  -----        EC-17-02
          *4  MAIN2                 -----        WLD-02-01
          *5  ECONT                 -----        0007
          *6  PDL                   -----        V1.04
          *7  NIC                   -----        3.00

          *8  BODY No.              -----        EZT00014

          *9  TOTAL
                TTL1                -----           135
          *10 COPY
                TTL1                -----            87
          *11 PDL
                TTL1                -----            43
          *12 FAX
                TTL1                -----             3
          *13 RPT
                TTL1                -----             2

          *14 READ ADJ PRM
                22 :                -----        0030
                24 :                -----        0257
                25 :                -----        0028
                26 :                -----        0028
                27 :                -----        0036
                28 :                -----        0043
                30 :                -----        0016
                32 :                -----        0016
                34 :                -----        0050
                34 :                -----        0050

          *15 CS TYPE               -----        LTR

          *16 USB                   -----        EXIST
```

Figure 4-63 Print Spec Report

*1 : Country setting under '#5 TYPE' in service mode
*2 : Total memory size
*3 : Version of the ROM on the SCNT board
*4 : Version of the CPU on the SCNT board
*5 : Version of the ROM on the ECU board
*6 : Version of the ROM on the PDL board
*7 : Version of the ROM on the NIC board
*8 : Serial number of the machine
*9 : Reading of total 1
*10 : Number of copies
*11 : Number of prints
*12 : Number of faxes
*13 : Number of reports
*14 : Adjustment items and settings for the service mode item #6 SCANNER>7.CCD
*15 : Contact sensor size
*16 : Attach of USB

a-7) Service activity report

The ERROR TX REPORT includes appended service error codes and an error dump list. In user data “REPORT SETTINGS”, when the “REPORT WITH TX IMAGE” is set to “ON” in the “TX REPORT”, a section of the first page of transmitted image data is appended when memory transmission is done

```
31/07 2002 10:20 FAX                    Canon                          001

                          ***************************
                          ***   ERROR TX REPORT   ***
                          ***************************

            *1  TX FUNCTION WAS NOT COMPLETED

            *2  TX/RX NO                  0011
            *3  RECIPIENT ADDRESS         748992
            *4  DESTINATION ID            Canon
            *5  ST. TIME                  31/07 10:20
            *6  TIME USE                  00'41
            *7  PAGES SENT                  3
            *8  RESULT                    NG          ##0755

     *9  START TIME              31/07 10:20
     *10 OTHER PARTY                           748992
     *11 MAKER CODE              10001000
     *12 MACHINE CODE            11000110 00000000
     *13 RCV V.8 FRAME           E0 81 85 D4 90 7E 00 00
     *14 SYMBOL RATE             3429
     *15 DATA RATE               33.6
     *16 TX LVL REDUCTION         0
     *17 ERR ABCODE              92
     *18 ERR SECTXB              8A
     *19 ERR SECRXB              80

     *20 Rx : (bit 1) 00000100 01110111 01010101 00100011 00000001 10101011 11000001 (bit56)
              (bit57) 00000001 00000001 00000100 00000000 00000000                   (bit96)
     *21 Tx : (bit 1) 00000000 01000010 00011111 00100001 00000001 00000001 00000001 (bit56)
              (bit57) 00000001 00000001 00000100 00000000 00000000                   (bit96)
*22
     Rx : NSF CSI DIS            CFR                 MCF                 MCF
     Tx :             NSS TSI DCS     PIX-336 PPS-MPS     PIX-336 PPS-MPS     PIX-336 PPS-
     Rx :     MCF
     Tx : MPS     PIX-336 PPS-MPS PPS-MPS PPS-MPS DCN
```

Figure 4-64 Service Error Activity Report

NOTE

When an error occurs with direct transmission, *6 to *12 will not be listed even if the other party's machine has a V.34 modem.

*1 : OK, NG messages
*2 : Indicates four digits of the transaction number
*3 : Number sent from the other party or number dialled (lower 20 digits)
*4 : ID sent from the other party, if the other party is a Canon fax
*5 : Communication start date and time (on 24-hour display)
*6 : Communication time (in minutes and seconds)
*7 : Number of pages for which transmission was complete
*8 : “NG” display with number of pages for which transmission was fault, and service error code
*9 : Communication start date and time (on 24-hour display)
*10 : Telephone number sent from other party
*11 : Maker code
*12 : Machine code
*13 : Received V.8 protocol signal
*14 : Symbol rate used for the primary channel
*15 : Transmission speed used for the primary channel
*16 : 0 (Fixed)
*17 : Code output by the modem when an error occurred (Not used in the field)
*18 : Transmit status of the modem when an error occurred (Not used in the field)
*19 : Receive status of the modem when an error occurred (Not used in the field)
*20 : Bit 1 to bit 96 of received DIS, DCS, or DTC
*21 : Bit 1 to bit 96 of transmitted DIS, DCS, or DTC
*22 : RX=Received protocol signal
TX=Transmitted protocol signal

8. WIRING DIAGRAM

8.1 Wiring Diagram

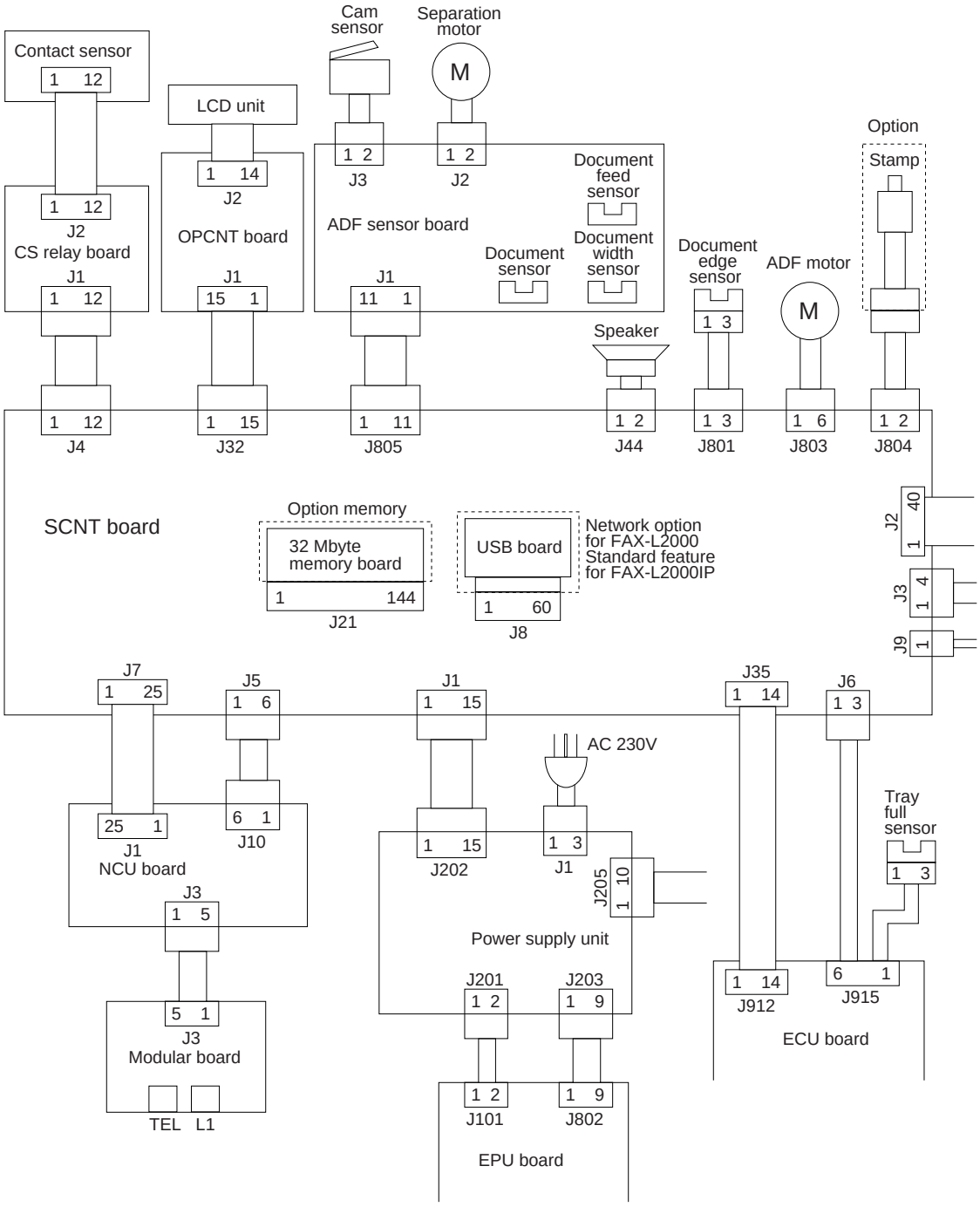

Figure 4-65 Wiring Diagram 1

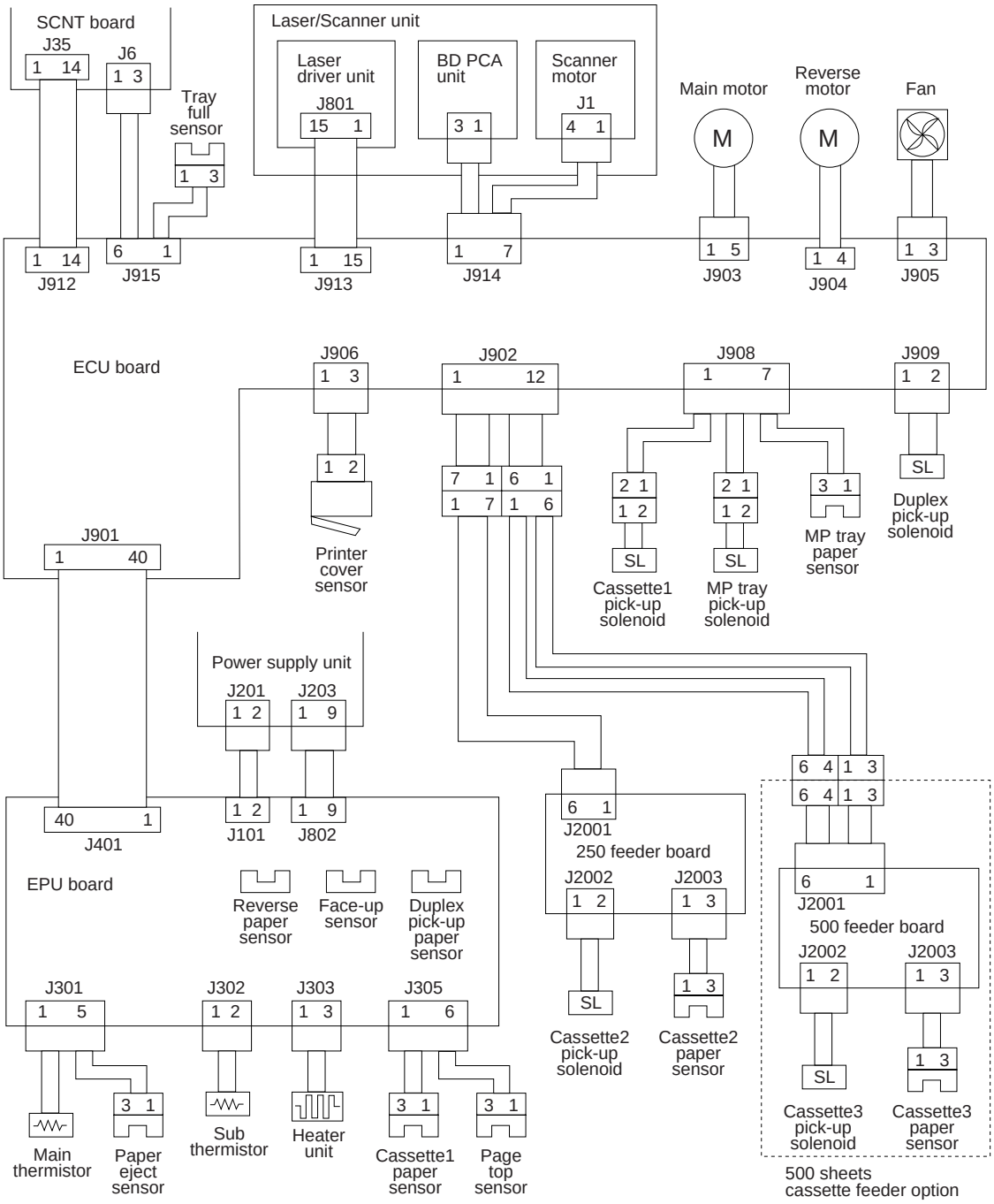

Figure 4-66 Wiring Diagram 2

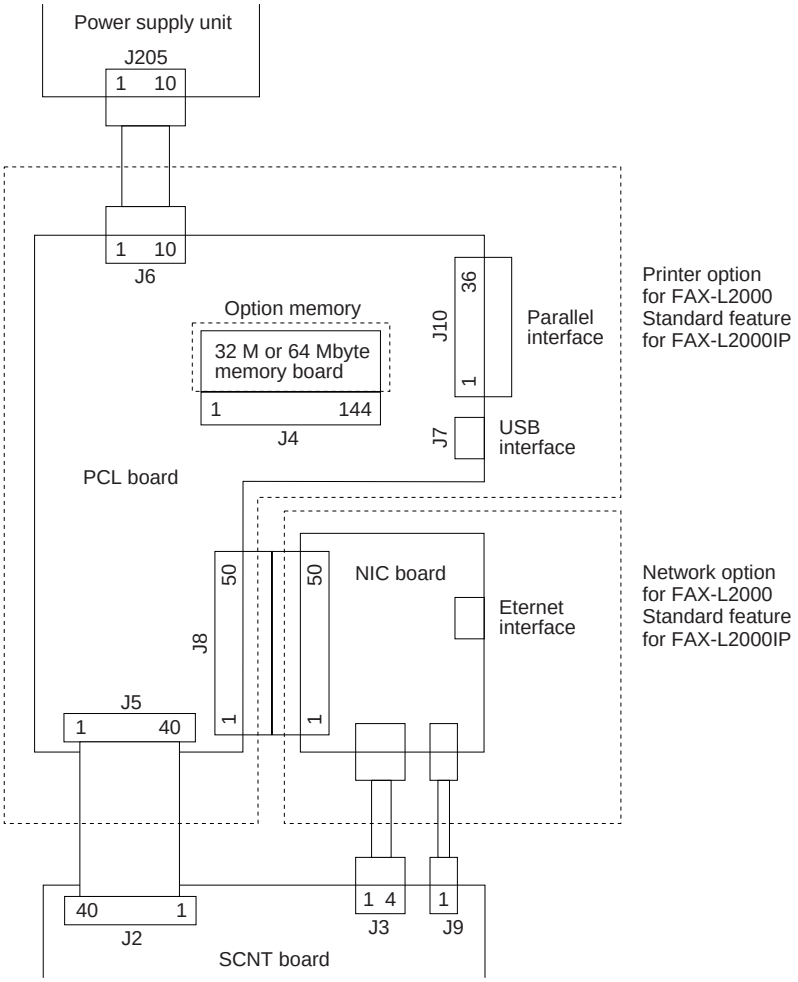

Figure 4-67 Wiring Diagram 3

Chapter 5

Appendix

1. INSTALLATION

1.1 Setting up

- Select a site of installation.
- Unpack the fax machine, and check the attachments.
  Make sure none is missing and there is no damage.
- Remove the packing material.
  Remove all tape and protective material used on the fax machine. Do not forget to remove the orange protective material used in the reader unit.
- Fit the attachments.
- Make connections.
  Connect the telephone line and the handset (option).
  Connect the interface cable (FAX-L2000IP).
- Turn on the power.
  Connect the power cord.
  When you connect the power cord to an AC outlet for the first time, you need to select the language for the LCD display. and also need to select the country.
  If the language and the country selection will not appear in the LCD display, set the display language and the country selection in user data.
- Set the display language.
  To do so, make the following selections: USER DATA>COMMON SETTINGS>DISPLAY LANGUAGE.
- Set the country selection.
  Set the country to suit the communication standard used in your country. To do so, make the following selections: USER DATA>FAX SETTINGS>SYSTEM SETTINGS>COUNTRY SELECT.
- Fit the toner cartridge.
  Shake the cartridge, and remove the protective material; then, pull the tab to remove the seal.
- Set the recording paper.
  Put recording paper in the cassette and the multi-purpose tray. When putting paper in the cassette, be sure to change the paper size to suit the size of the paper. Register the size of the recording paper by changing PAPER SETTINGS under USER DATA.
- Select the type of telephone line.
  To do so, make the following selections: USER DATA>FAX SETTINGS>USER SETTINGS>TEL LINE SETTINGS>TEL LINE TYPE.
- Register user data for date and time, by selecting USER DATA>TIMER SETTINGS>DATE/TIME SETTINGS; for telephone number, by selecting FAX SETTINGS>USER SETTINGS>TEL LINE SETTINGS>USER TEL NO.; for fax machine name, USER DATA>FAX SETTINGS>USER SETTINGS>UNIT NAME.

1.2 Checking Operation

- Check the level of quality for both reading and printing.
  Make a copy, and see that it is free of a fault for both reading and printing.
- Conduct a communications test.
  Send and receive a fax by connecting to another fax machine, making sure that the image is normally sent and the received image is normally printed.

What to do when trouble occurs

Very rarely, during use, the display may go out, all the buttons may stop working, or some other trouble may occur because of strong electrical noise or a large amount of static. If such trouble occurs, initialize the RAM (All clear operation). For how, please refer to *Chapter 3, 1.4 All Clear*.

1.3 Moving the Fax Unit

Before moving the fax machine, disconnect the power cord and the telephone line; then, take out the recording paper cassette. Be sure to work in a group of two; one with his/her hands in the cassette slots, and the other with his/her hands in the grips (recesses in the external cover) on both sides of the fax machine.

If the fax machine is fitted with a 500-sheet cassette feeder, be sure to relocate it separately form the fax machine.

The 500-sheet cassette feeder is not secured in place with screws. Do not try to lift it. Be sure to separate it from the fax machine before relocation.

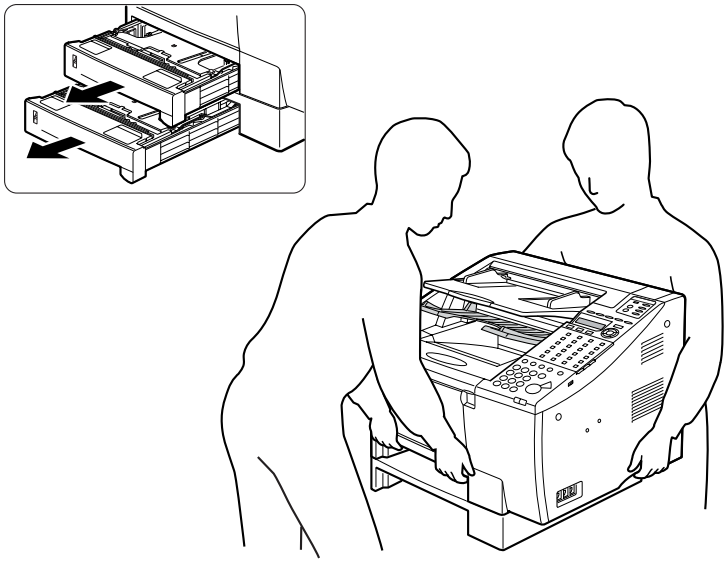

Figure 5-1 How to Lift the Fax Unit

2. USER DATA FLOW

2.1 User Data Flow (by Operation Panel)

Open the one-touch cover, and then press the Data Registration button.

Those items in the flow marked out by dotted lines are displayed or enabled when the appropriate option is installed or the service soft switch is appropriately set. Note that not all items are necessarily used by the fax machine.

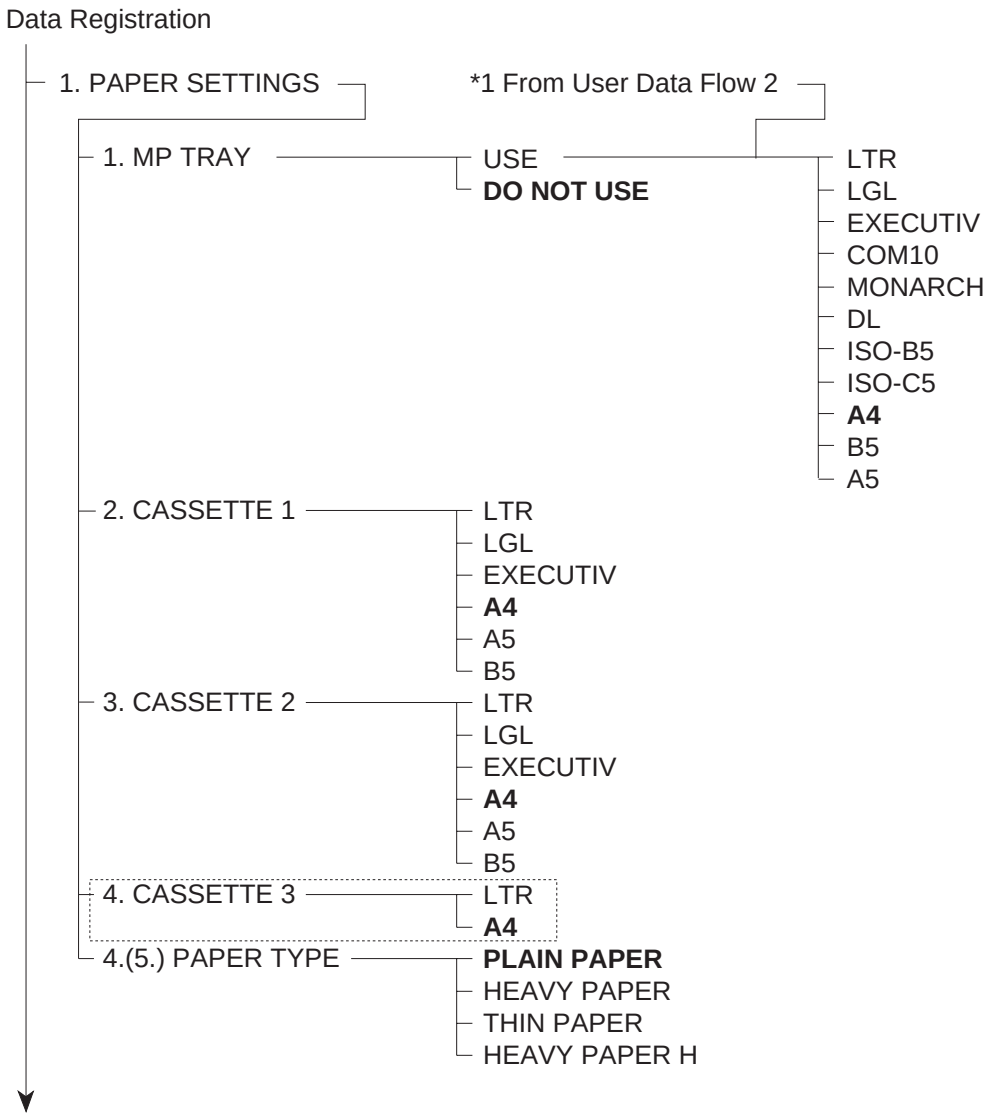

Figure 5-2 User Data Flow 1

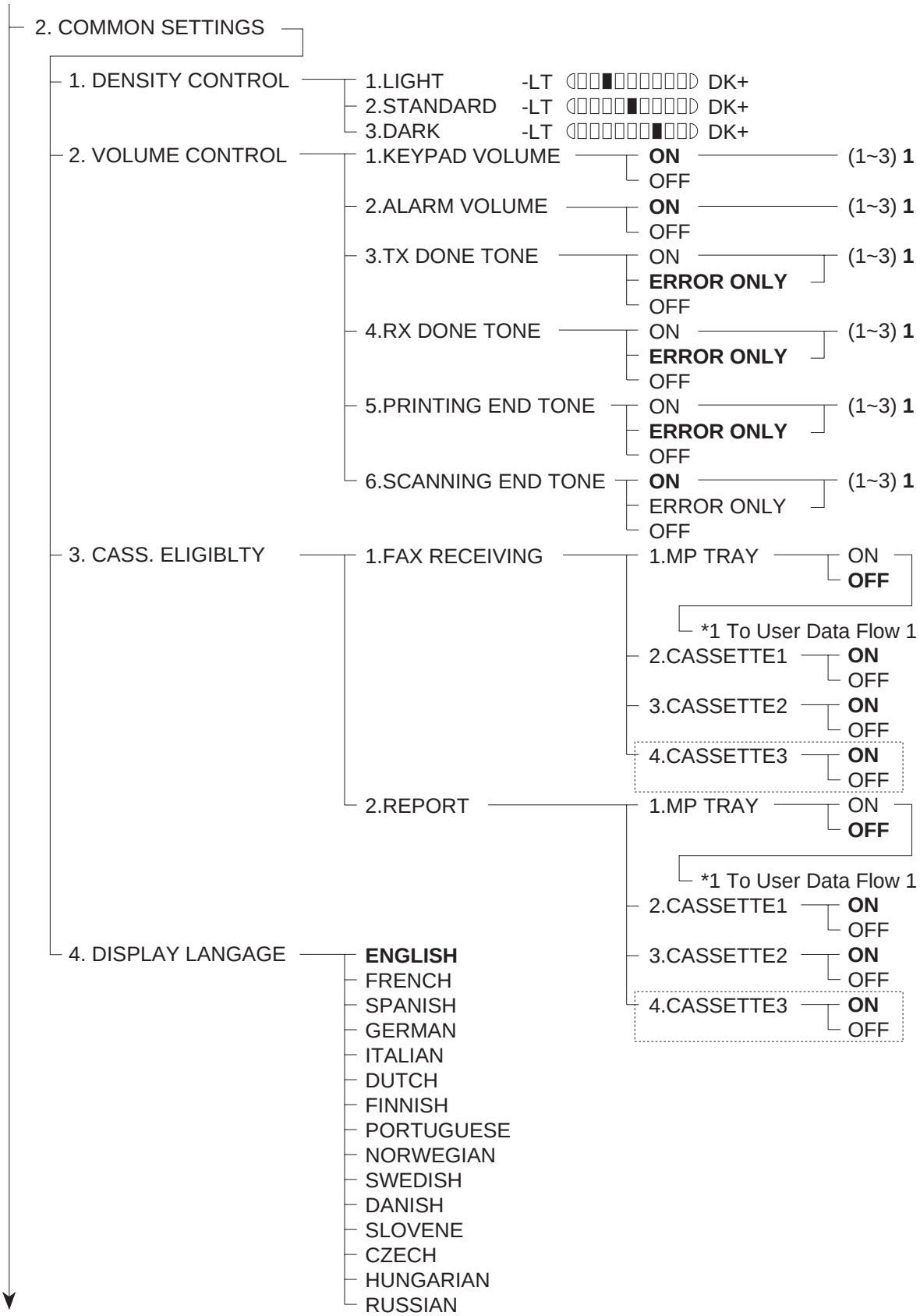

Figure 5-3 User Data Flow 2

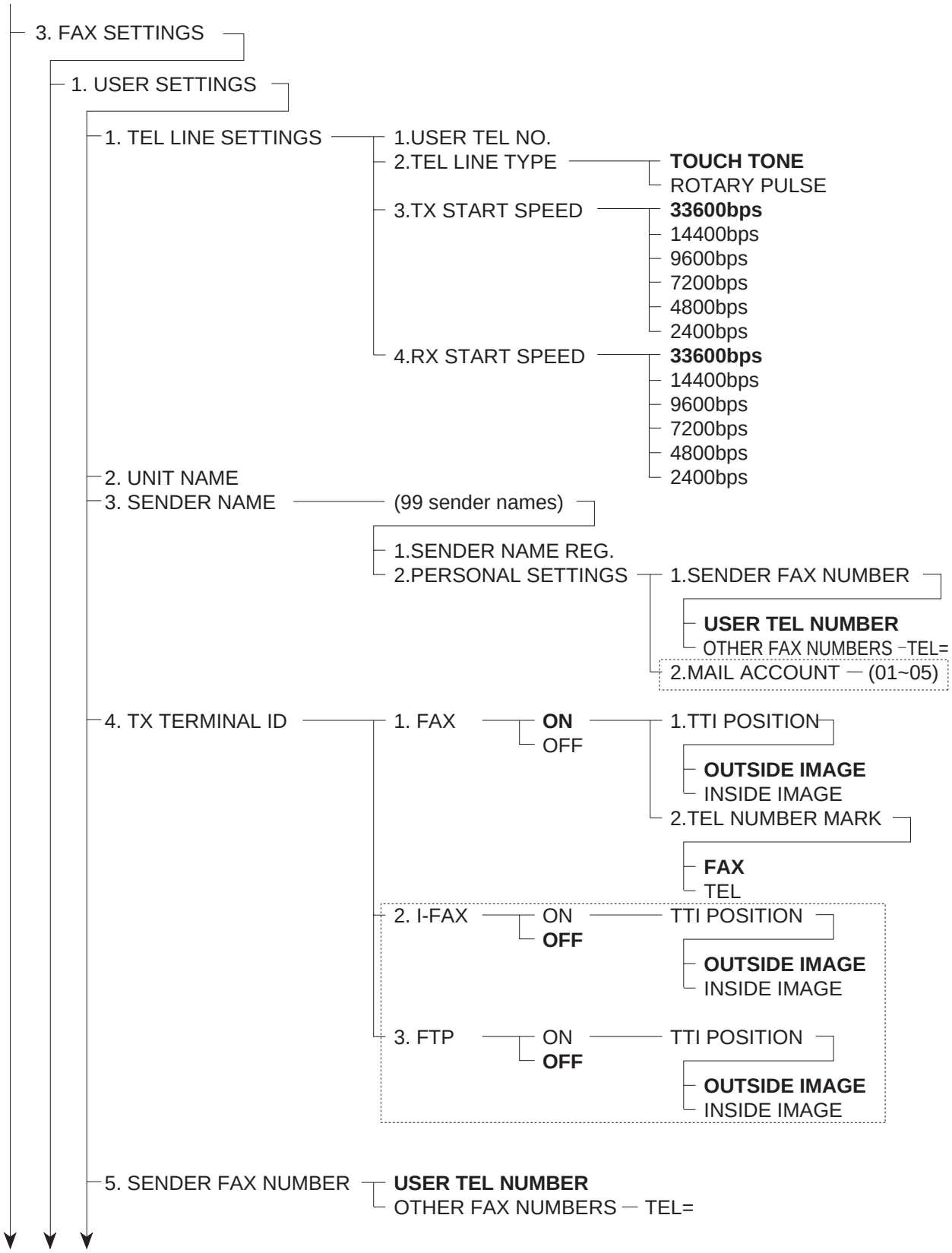

Figure 5-4 User Data Flow 3

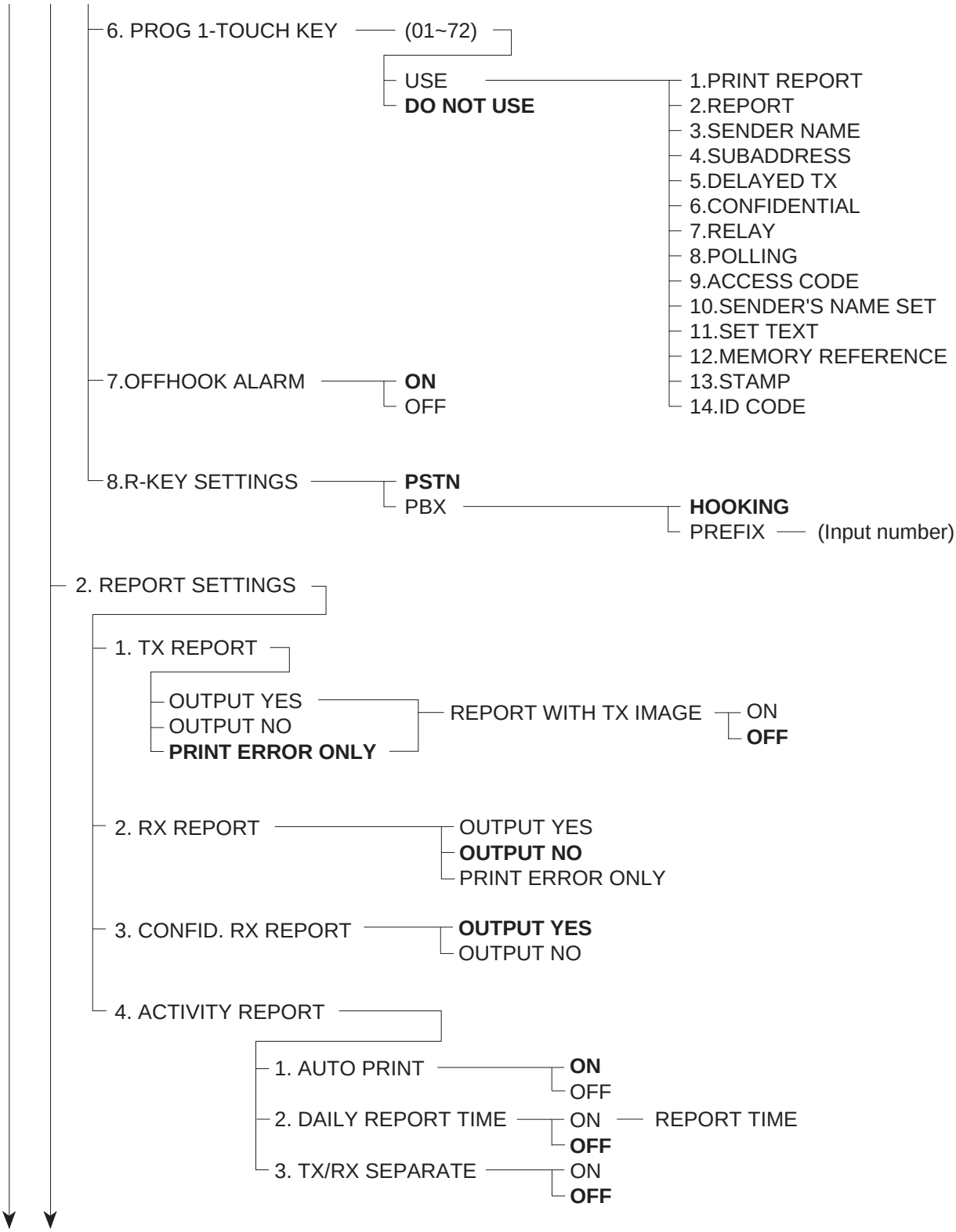

Figure 5-5 User Data Flow 4

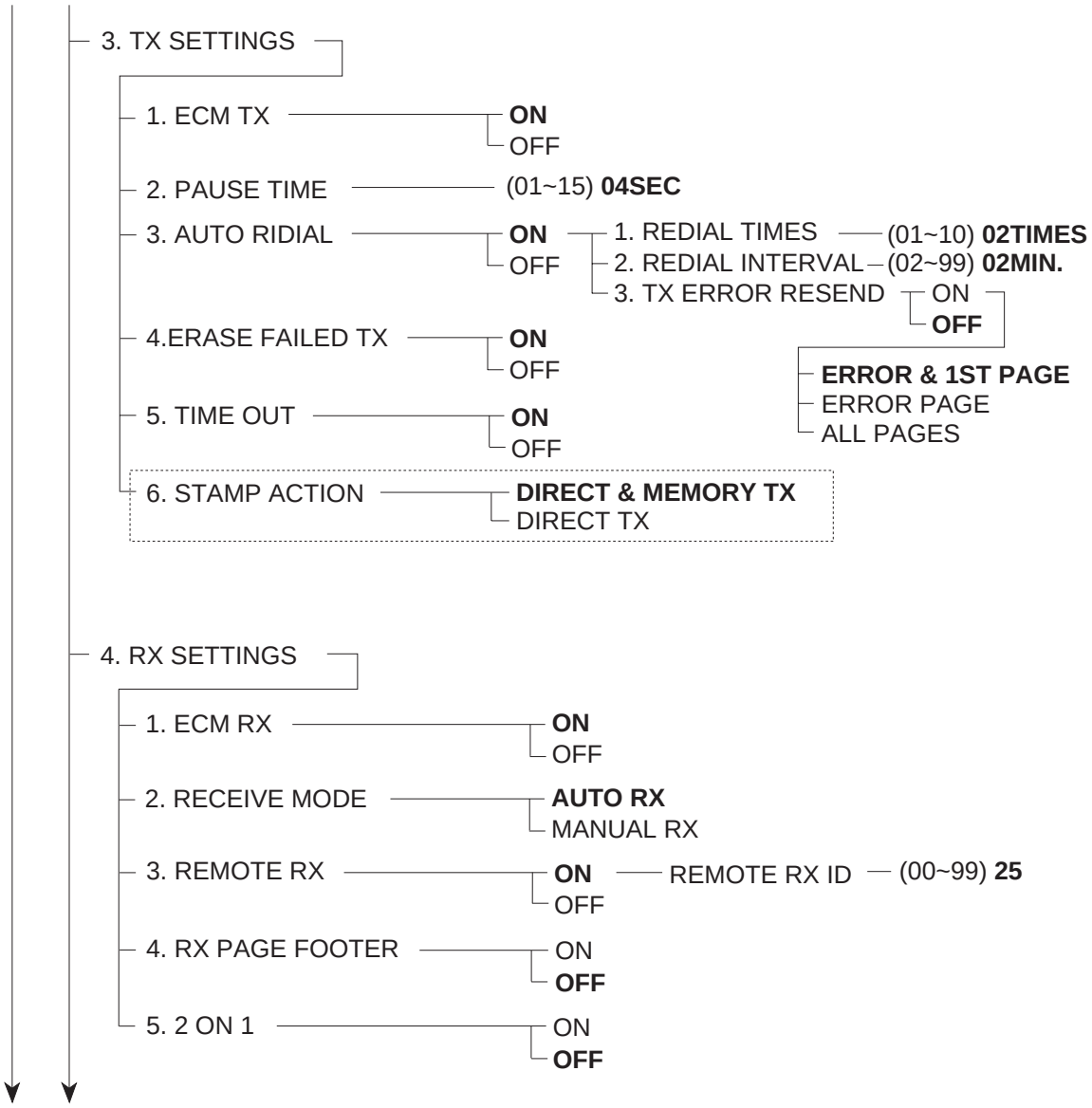

Figure 5-6 User Data Flow 5

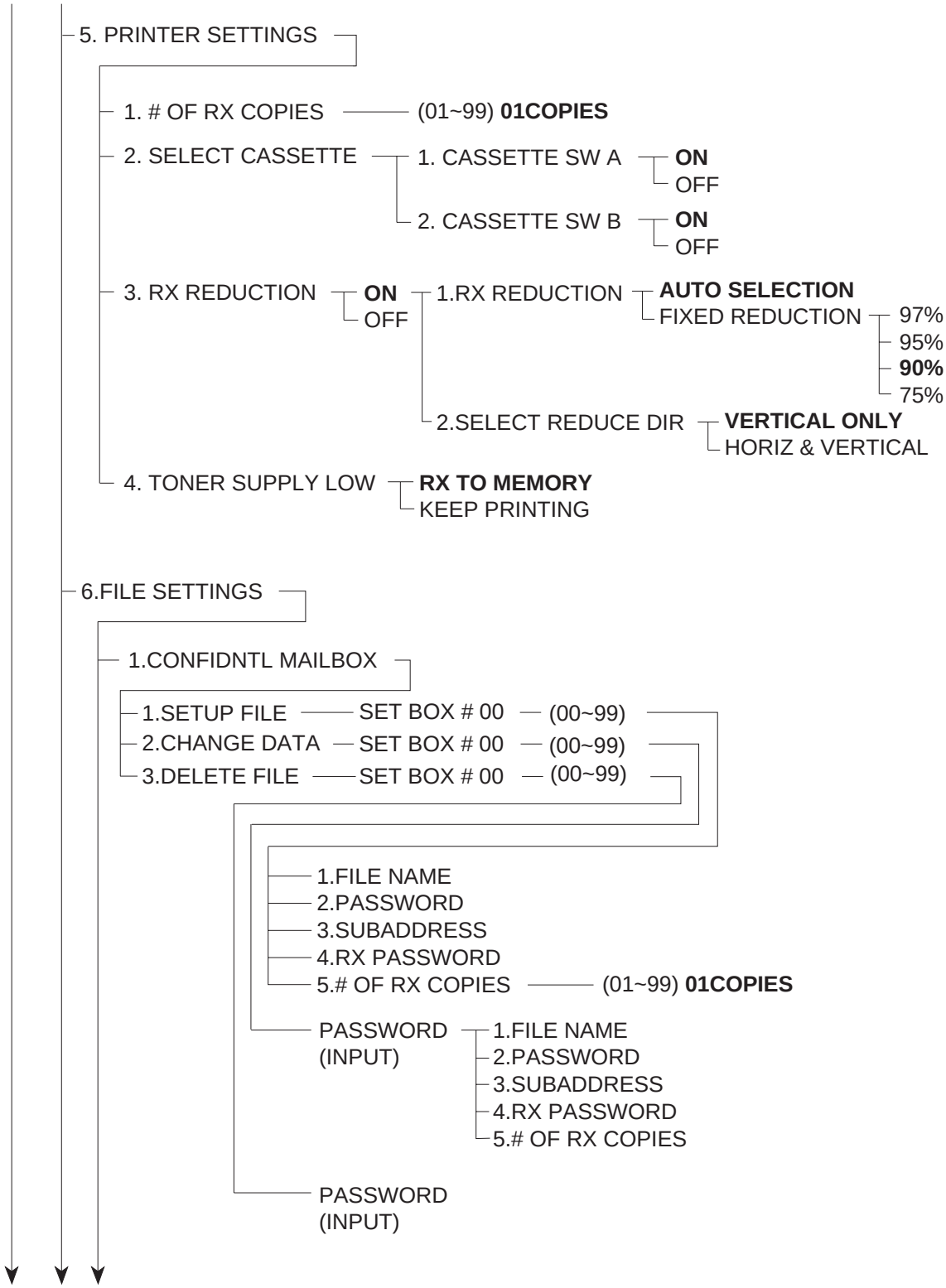

Figure 5-7 User Data Flow 6

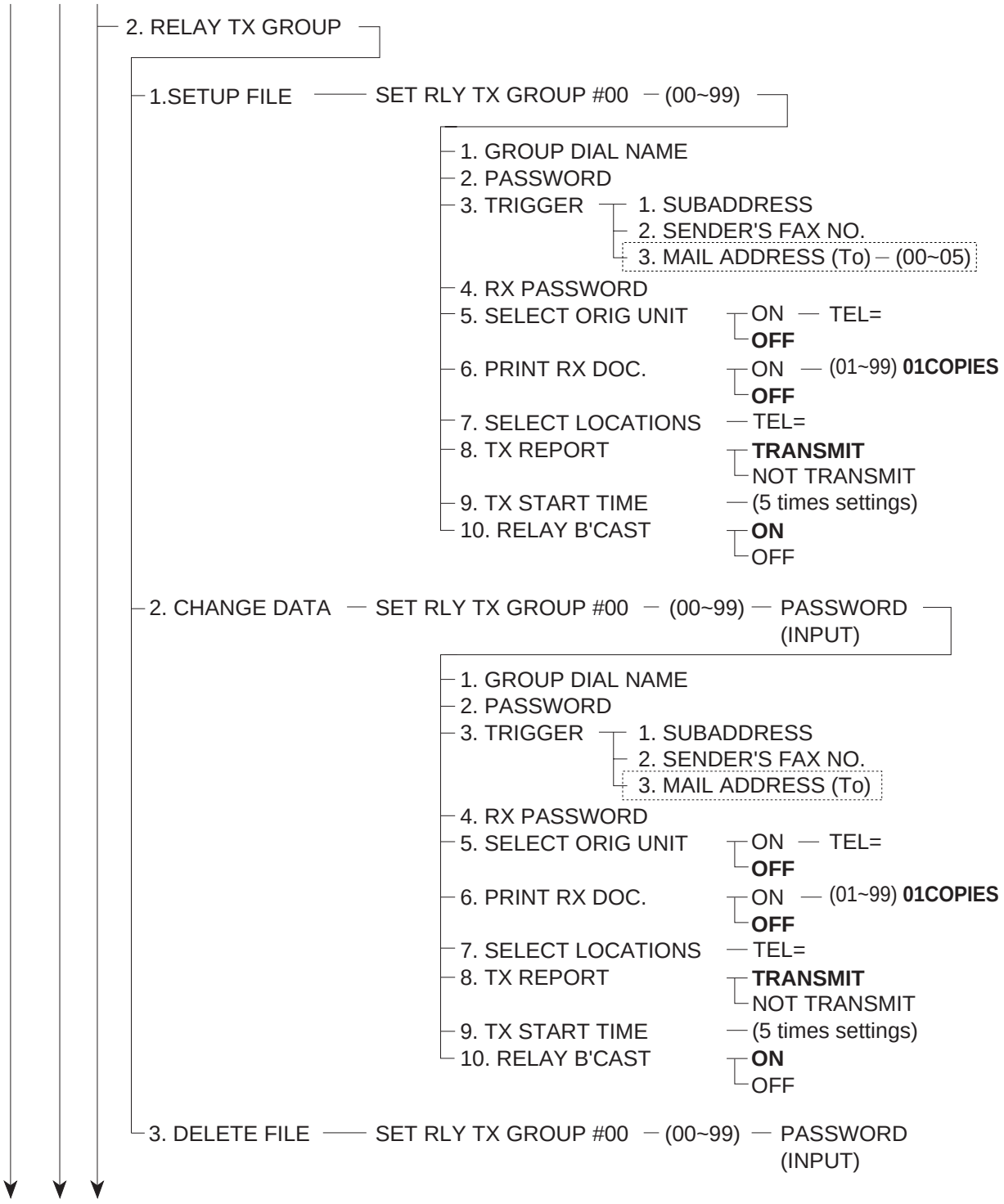

Figure 5-8 User Data Flow 7

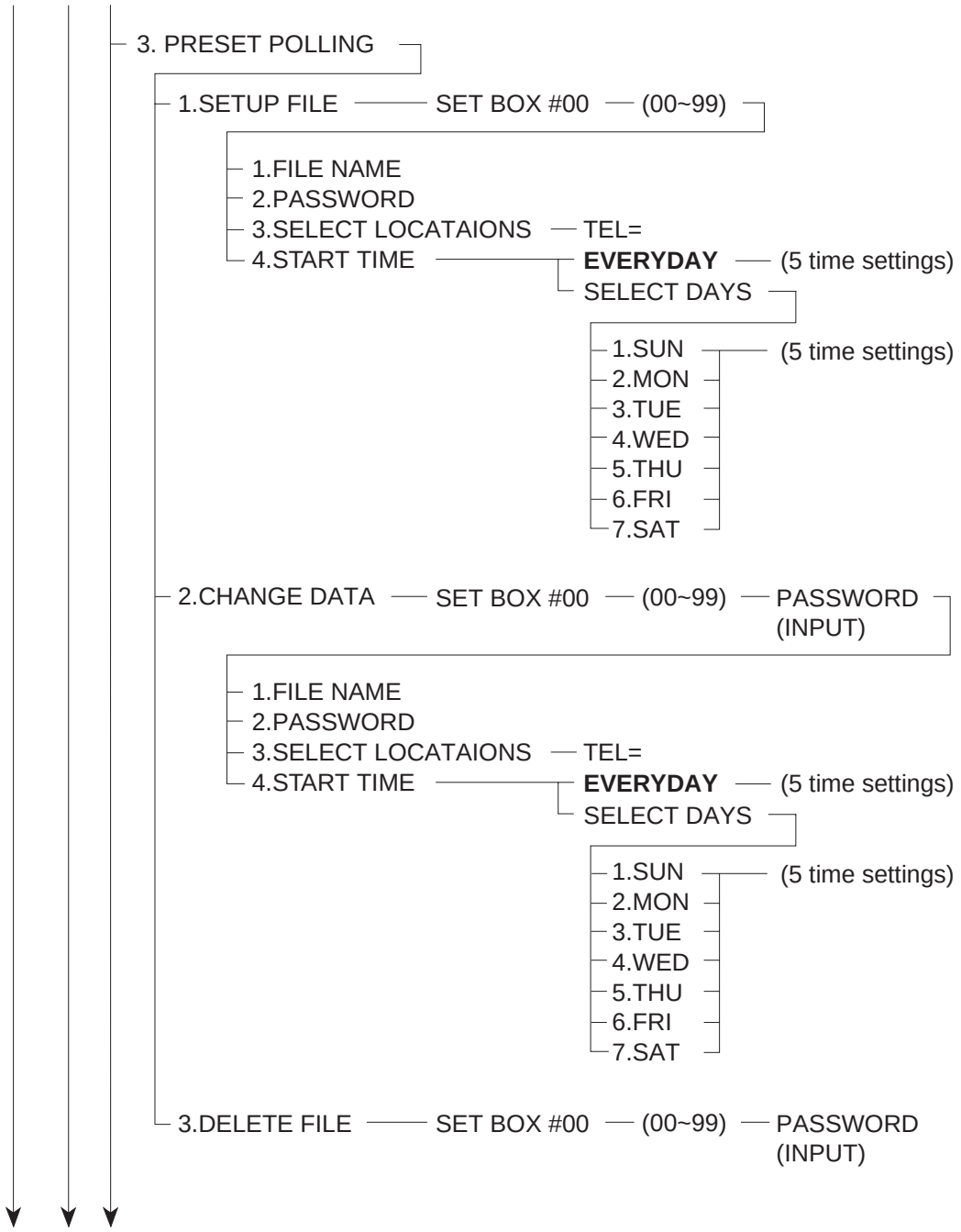

Figure 5-9 User Data Flow 8

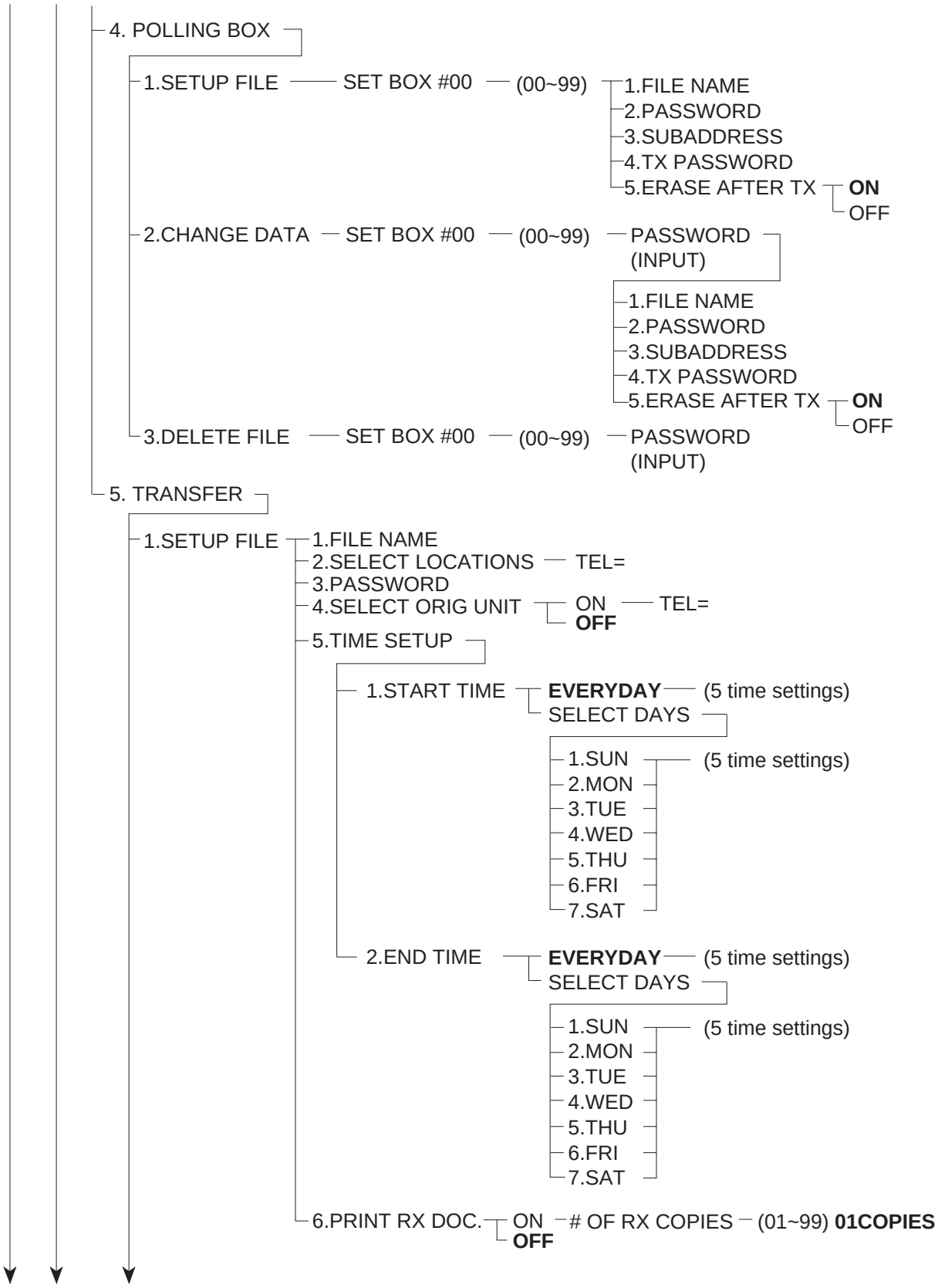

Figure 5-10 User Data Flow 9

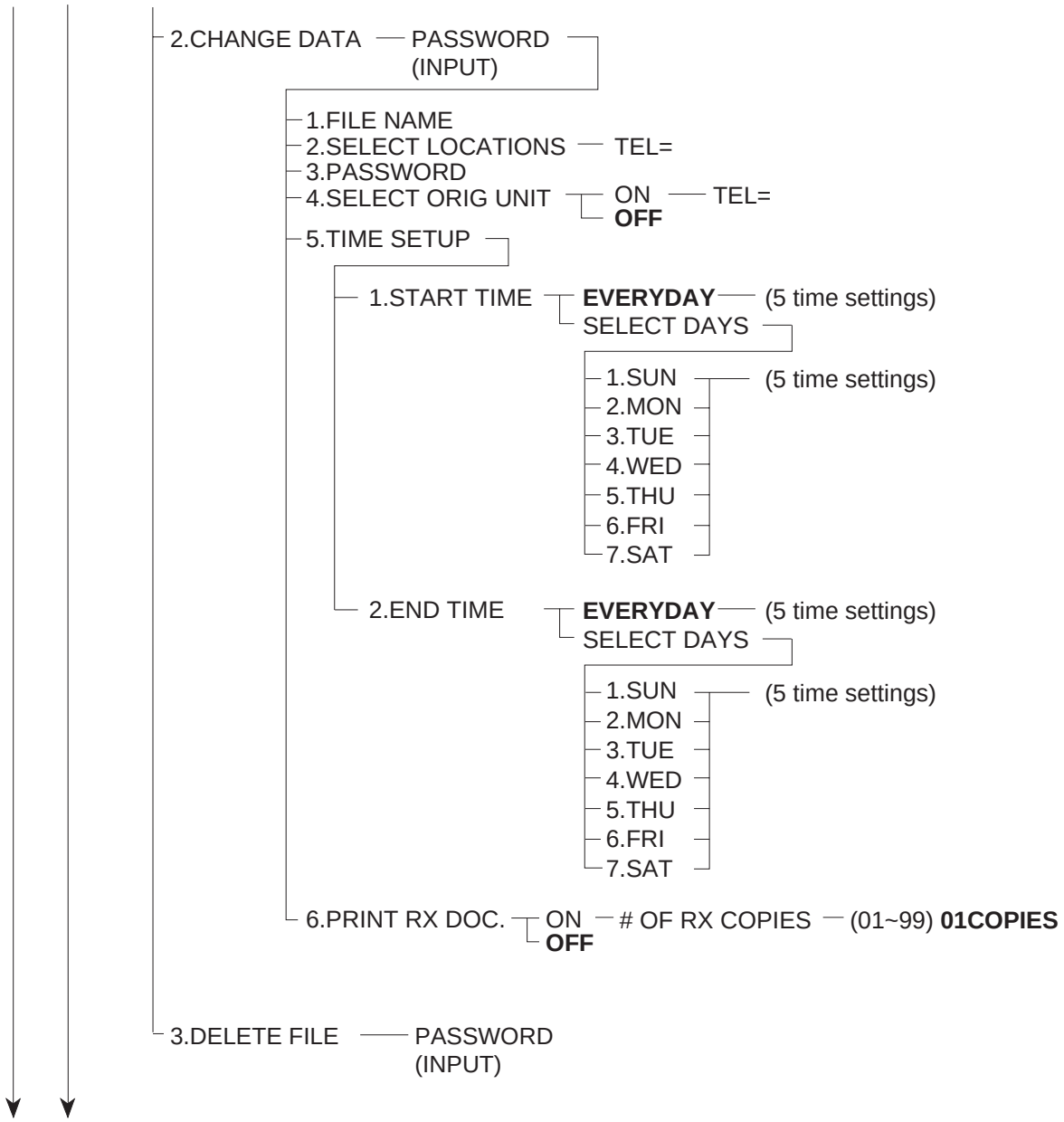

Figure 5-11 User Data Flow 10

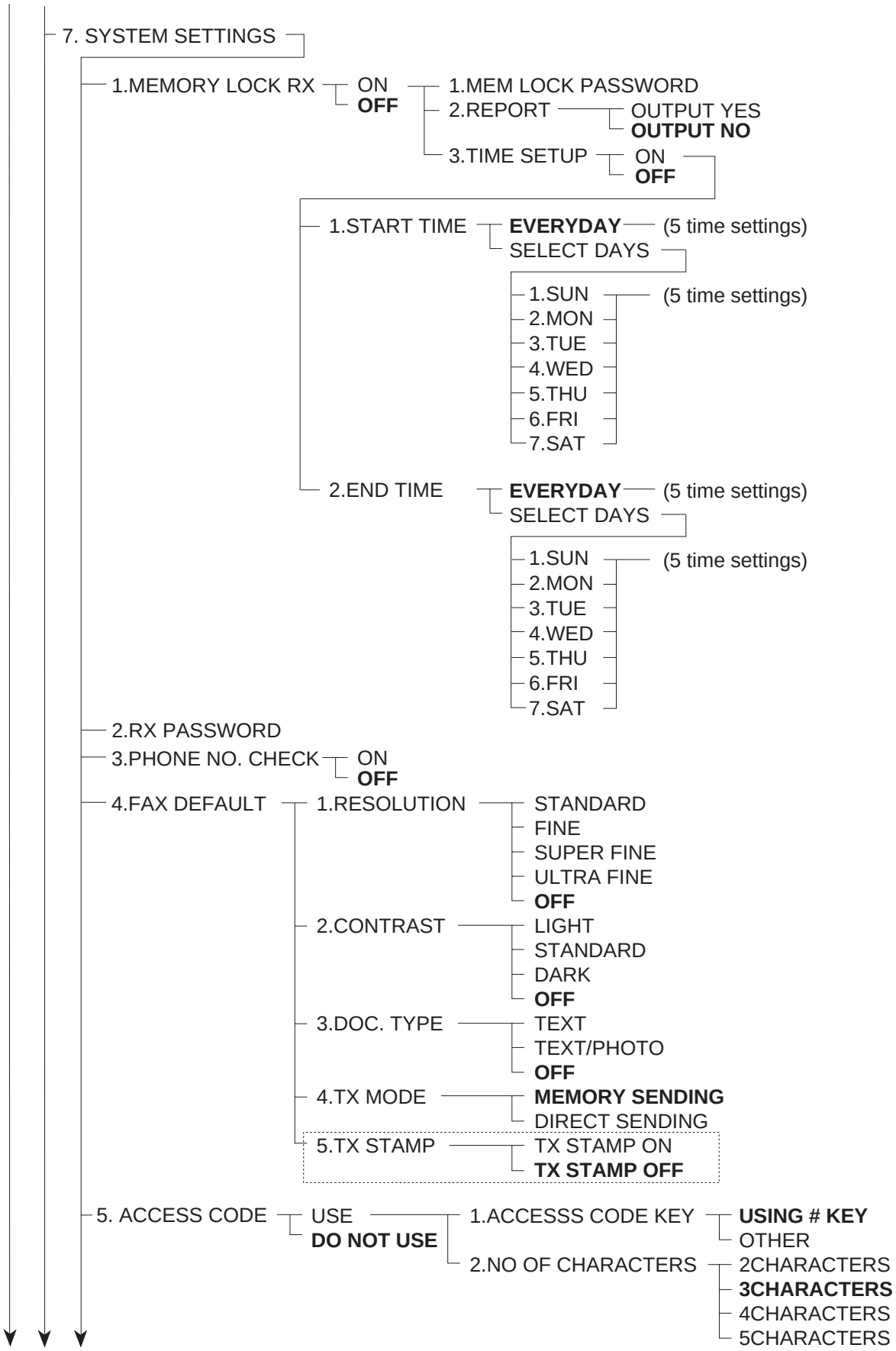

Figure 5-12 User Data Flow 11

Figure 5-13 User Data Flow 12

- 8. LAN SETTINGS
  - 1. MAIL USER SETTING
    - 1.SMTP SERVER
    - 2.POP3 SERVER
    - 3.EMAIL RX PROTOCOL
      - **POP3**
      - SMTP
    - 4.CHECK INTERVAL — (000~060) **000MIN.**
    - 5.RETRY — (00~05) **02TIMES**
    - 6.RETRY INTERVAL — (01~60) **02MIN.**
    - 7.TIME ZONE SETTING — (01~30) **14GMT**
    - 8.PORT NO.
      - 1.SMTP TX – (00001~65535) **00025**
      - 2.POP3 RX – (00001~65535) **00110**
      - 3.SMTP RX – (00001~65535) **00025**
    - 9.MAX. RX DATA SIZE — (0000~9999) **1000KB**
    - 10.TX MODE
      - **SIMPLE MODE**
      - E-MAIL MODE
    - 11.RX TEXT PRINT
      - **AUTO**
      - OFF
      - ON
    - 12.LARGE MAIL
      - **LEAVE ON SERVER**
      - ERASE FROM SERVER
    - 13.ERROR MAIL
      - **LEAVE ON SERVER**
      - ERASE FROM SERVER
    - 14.ADDRESS FORMAT
      - **NAME <ADDRESS>**
      - ADDRESS (NAME)
      - ADDRESS ONLY
    - 15.PRINT MAIL HEADER
      - ON
      - **OFF**
  - 2. E-MAIL ADD SETTNG — (01~05)
    - 1.SMTP SETTINGS
      - 1.MAIL ADD. (From)
      - 2.NAME
      - 3.OPTIONAL SETTING
        - 1.REPLAY ADDRESS
        - 2.SUBJECT
          - **AUTO**
          - FIXED
        - 3.MESSAGE TEXT
          - ON
          - **OFF**
        - 4.SIGNATURE
          - ON
          - **OFF**
        - 5.PRIORITY
          - **STANDARD**
          - LOW
          - HIGH
        - 6.RX CONFIRMATION
          - ON
          - **OFF**
        - 7.AUTO LINE WRAP
          - **ON** – (20~99) **76CHARACTERS**
          - OFF
    - 2.POP3 SETTINGS
      - 1.POP3 ACCOUNT
      - 2.POP3 PASSWORD

Figure 5-14 User Data Flow 13

- 4. ADD. REGISTRATION
  - 1. 1-TOUCH SPD DIAL
    - 1. TEL# REGISTRATION (01~72)
      - 1. TEL NUMBER ENTRY
      - 2. NAME
      - 3. OPTIONAL SETTING
        - ON
        - **OFF**
          - 1.ACCESS CODE
          - 2.TX TIME SETTNG — (5 time settings)
          - 3.TX TYPE
            - **REGULAR TX**
            - CONFIDENTIAL TX
              - 1.PASSWORD
              - 2.SUBADDRESS
            - ORIG RELAY TX
              - 1.PASSWORD
              - 2.SUBADDRESS
            - SUBADDRESS TX
              - 1.PASSWORD
              - 2.SUBADDRESS
            - POLLING RX
              - 1.PASSWORD
              - 2.SUBADDRESS
          - 4.INTERNATIONAL
            - **DOMESTIC**
            - INTERNATIONAL (1)
            - INTERNATIONAL (2)
            - INTERNATIONAL (3)
          - 5.TX SPEED
            - **33600bps**
            - 14400bps
            - 9600bps
            - 4800bps
          - 6.ECM
            - **ON**
            - OFF
          - 7.SENDER NAME — (00~99)
    - 2. E-MAIL ADDRESS (01~72)
      - 1. ENTER E-MAIL ADD.
      - 2. NAME
      - 3. OPTIONAL SETTING
        - **ON**
        - OFF
          - 1.ACCESS CODE
          - 2.TX MODE
            - **SIMPLE MODE**
            - E-MAIL MODE
          - 3.TX FILE NAME
            - **AUTO**
            - FIXED
            - FIXED+TX TIME
          - 4.TX TIME SETTNG — (5 time settings)
          - 5.SENDER NAME — (00~99)

Figure 5-15 User Data Flow 14

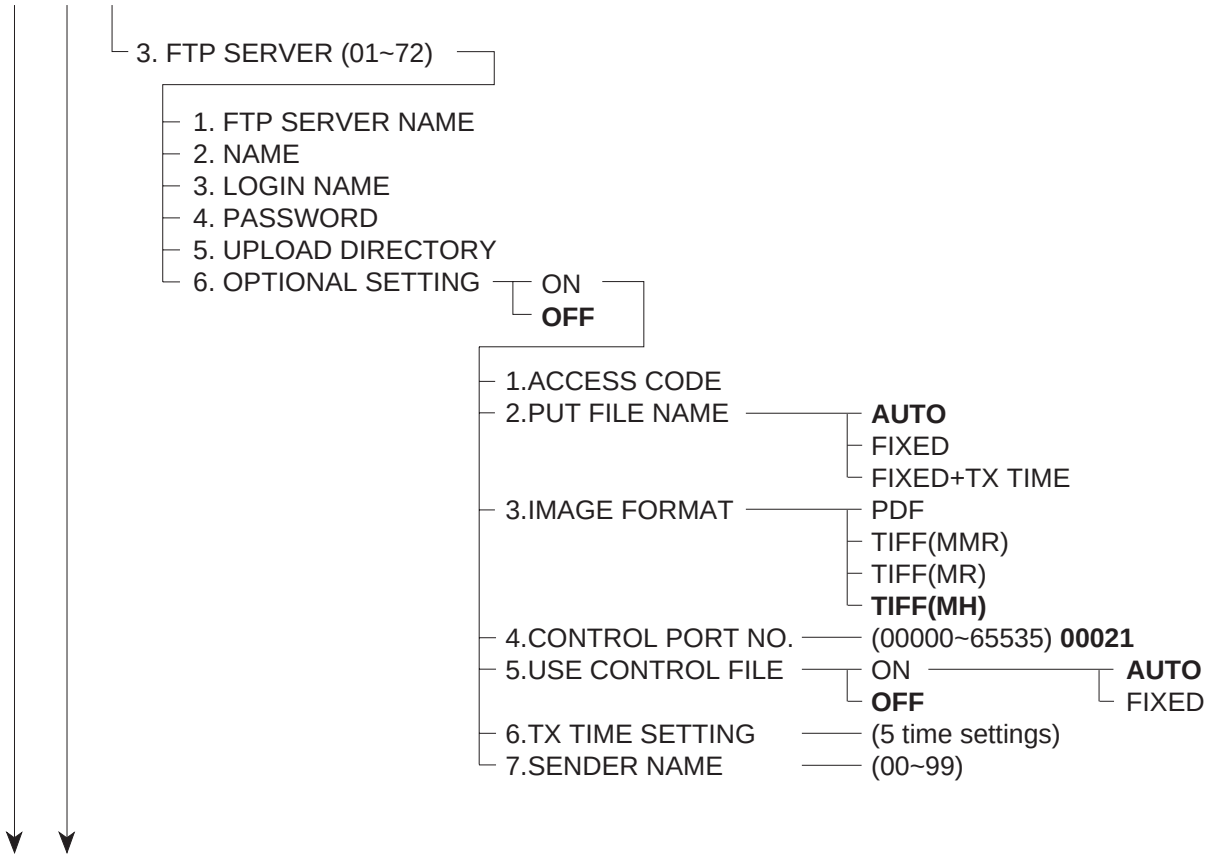

Figure 5-16 User Data Flow 15

- 2. CODED SPD DIAL
  - 1. TEL# REGISTRATION (*000~*127)
    - 1. TEL NUMBER ENTRY
    - 2. NAME
    - 3. OPTIONAL SETTING
      - ON
      - **OFF**
        - 1.ACCESS CODE
        - 2.TX TIME SETTNG — (5 time settings)
        - 3.TX TYPE
          - **REGULAR TX**
          - CONFIDENTIAL TX
            - 1.PASSWORD
            - 2.SUBADDRESS
          - ORIG RELAY TX
            - 1.PASSWORD
            - 2.SUBADDRESS
          - SUBADDRESS TX
            - 1.PASSWORD
            - 2.SUBADDRESS
          - POLLING RX
            - 1.PASSWORD
            - 2.SUBADDRESS
        - 4.INTERNATIONAL
          - **DOMESTIC**
          - INTERNATIONAL (1)
          - INTERNATIONAL (2)
          - INTERNATIONAL (3)
        - 5.TX SPEED
          - **33600bps**
          - 14400bps
          - 9600bps
          - 4800bps
        - 6.ECM
          - **ON**
          - OFF
        - 7.SENDER NAME — (00~99)
  - 2. E-MAIL ADDRESS (*000~*127)
    - 1. ENTER E-MAIL ADD.
    - 2. NAME
    - 3. OPTIONAL SETTING
      - **ON**
      - OFF
        - 1.ACCESS CODE
        - 2.TX MODE
          - **SIMPLE MODE**
          - E-MAIL MODE
        - 3.TX FILE NAME
          - **AUTO**
          - FIXED
          - FIXED+TX TIME
        - 4.TX TIME SETTNG — (5 time settings)
        - 5.SENDER NAME — (00~99)

Figure 5-17 User Data Flow 16

- 3. FTP SERVER (*000~*127)
  - 1. FTP SERVER NAME
  - 2. NAME
  - 3. LOGIN NAME
  - 4. PASSWORD
  - 5. UPLOAD DIRECTORY
  - 6. OPTIONAL SETTING
    - ON
    - **OFF**
      - 1.ACCESS CODE
      - 2.PUT FILE NAME
        - **AUTO**
        - FIXED
        - FIXED+TX TIME
      - 3.IMAGE FORMAT
        - PDF
        - TIFF(MMR)
        - TIFF(MR)
        - **TIFF(MH)**
      - 4.CONTROL PORT NO. — (00000~65535) **00021**
      - 5.USE CONTROL FILE
        - ON
          - **AUTO**
          - FIXED
        - **OFF**
      - 6.TX TIME SETTING — (5 time settings)
      - 7.SENDER NAME — (00~99)
- 3. GROUP DIAL (01~72)
  - 1. DEST. TEL/ID
  - 2. NAME
  - 3. OPTIONAL SETTING
    - **ON**
      - 1. ACCESS CODE
      - 2. TX TIME SETTING — (5time settings)
    - OFF

Figure 5-18 User Data Flow 17

- 5. TIMER SETTINGS
  - 1. DATE / TIME SETTINGS
  - 2. AUTO CLEAR
    - **ON** — (1~9) **2MIN.**
    - OFF
  - 3. ENERGY SAVER
    - ON — (03~30) **03MIN.**
    - **OFF**
  - 4.DAILY TIMER SET
    - 1.SUN
    - 2.MON
    - 3.TUE
    - 4.WED
    - 5.THU
    - 6.FRI
    - 7.SAT
  - 5. DATE SETUP
    - MM/DD/YYYY
    - **DD/MM YYYY**
    - YYYY MM/DD
- 6. SYSTEM SETTINGS
  - 1. SYS. ADMIN. INFO
    - 1.SYS. ADMIN. ID
    - 2.SYSTEM PASSWORD
    - 3.E-MAIL ADDRESS
  - 2. DEPT. ID MANAGEMENT
    - ON
    - **OFF**
    - 1. DEPT. ID ENTRY (00~99)
      - 1.PASSWORD
      - 2.COPY LIMITS
      - 3.TX LIMITS
      - 4.SELECT SENDER
    - 2. COUNT MANAGEMENT
      - 1.COUNT INFORMATION
        - 1.PRINT COUNT
        - 2.SEND COUNT
      - 2.COUNT RESET
        - 1.ON
        - 2.OFF
    - 3. RESTRICTIONS
      - 1.RESTRICT PRINTING
        - ON
        - **OFF**
      - 2.RESTRICT TX
        - ON
        - **OFF**
    - 4. PRINT WITH NO ID
      - **ON**
      - OFF
  - 3. LOCK PHONE
    - ON
    - **OFF**

Figure 5-19 User Data Flow 18

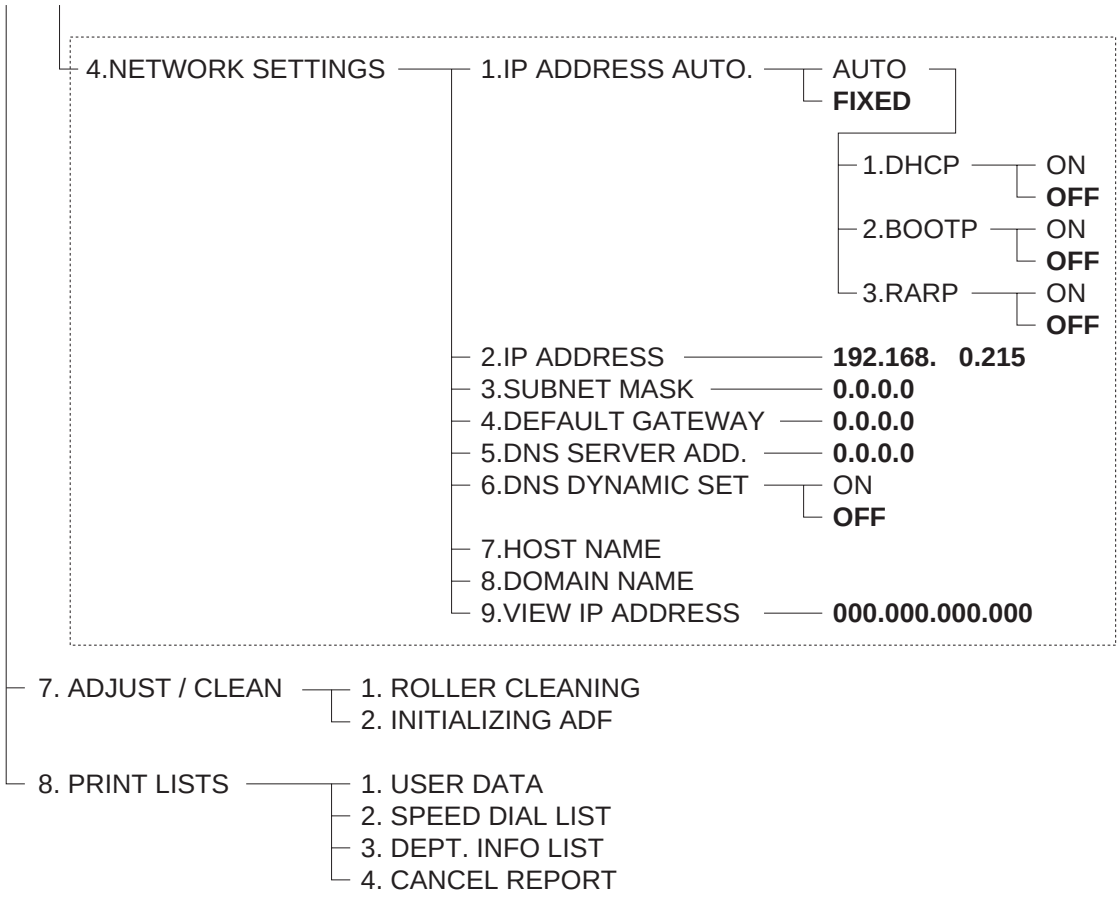

Figure 5-20 User Data Flow 19

2.2 Printer Setting Menu

2.2.1 Printer setting menu registration/setting method

Printer settings can be registered/set by the following operations:

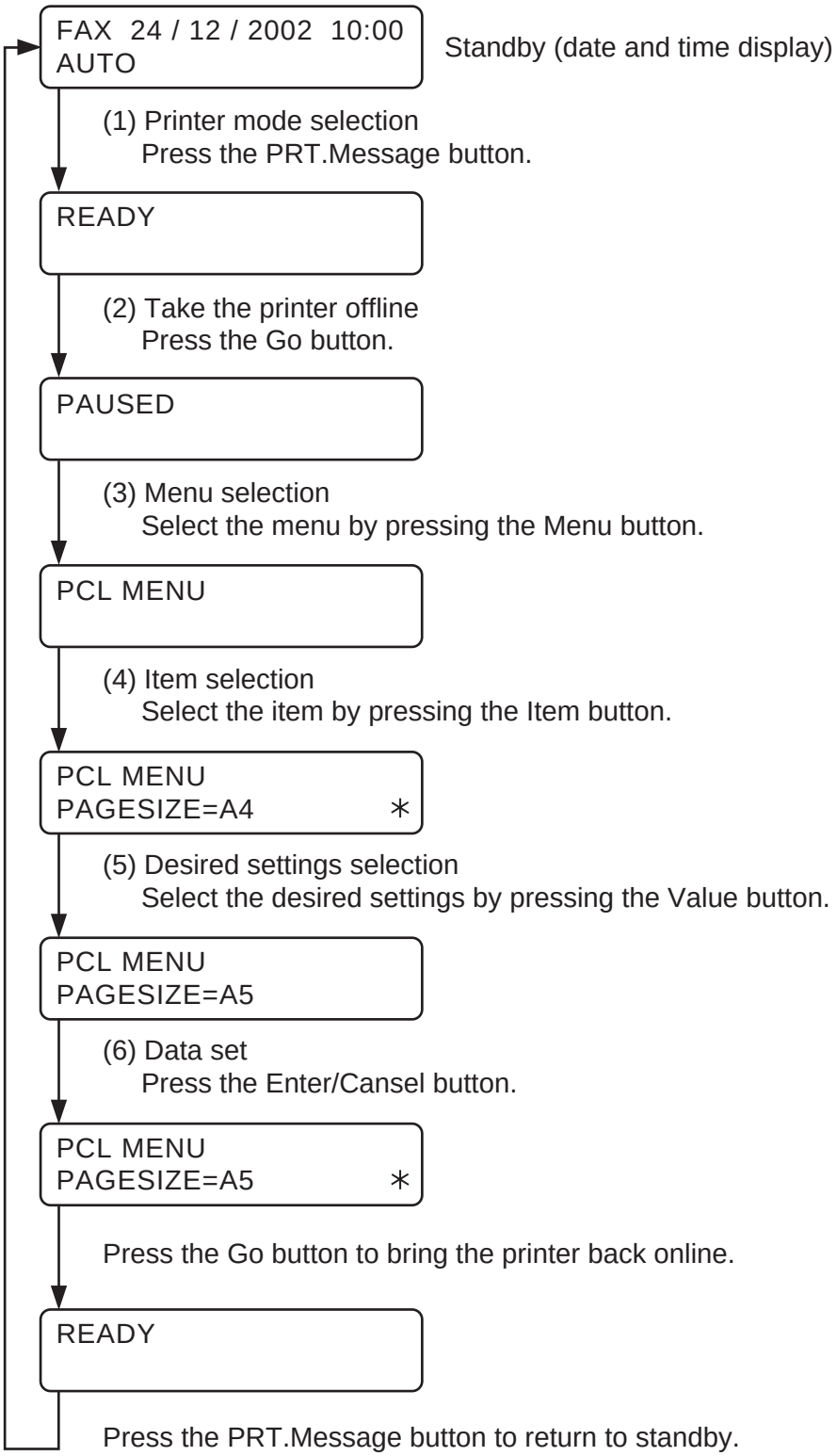

Figure 5-21 Printer Setting Menu Setting Method

2.2.2 Printer setting menu flow

- Printer Setting Menu
  - TEST MENU
    - SHOW PAGE COUNT
      - TOTAL
      - SIMPLEX
      - DUPLEX
    - TEST PRINT
    - PRINT PCL FONTS
    - PRINT JOB LOG
    - PRINT EN CONFIG
    - CONTINUOUS TEST
  - PCL MENU
    - RESOLUTION — **600**
    - COPIES — (1~999) **1**
    - PAGESIZE
      - **A4**
      - A5
      - EXEC
      - COM10
      - MONARCH
      - C5
      - DL
      - B5-JIS
      - B5-ISO
      - LETTER
      - LEGAL
    - ORIENTATION
      - **PORTRAIT**
      - LANDSCAPE
    - FORM — (5~128) **64LINES**
    - FNTSRC — **INTERNAL**
    - FONTNUM — (0~84) **0**
    - PITCH — (0.44~99.99) **10.00**

Figure 5-22 Printer Setting Menu Flow 1

- SYMSET
  - **ROMAN-8**
  - ISO L1
  - ISO L2
  - ISO L5
  - PC-8
  - PC-8 D/N
  - PC-850
  - PC-852
  - PC8-TK
  - WIN L1
  - WIN L2
  - WIN L5
  - DESKTOP
  - PS TEXT
  - VN INTL
  - VN US
  - MS PUBL
  - MATH-8
  - PS MATH
  - VN MATH
  - PI FONT
  - LEGAL
  - ISO 4
  - ISO 6
  - ISO 11
  - ISO 15
  - ISO 17
  - ISO 21
  - ISO 60
  - ISO 69
  - WIN 3.0
  - MC TEXT
  - PC-775
  - PC-860
  - PC-865
  - PC-8 GR
  - PC-1004
  - ISO L6
  - WIN BALT
- AUTO CR
  - ON
  - **OFF**
- WIDE A4
  - ON
  - **OFF**
- OVERRIDE
  - ON
  - **OFF**

- FEEDER MENU
  - FEED
    - **CASSETTE1**
    - CASSETTE2
    - CASSETTE3
    - MPT
  - TRAY SWITCH
    - **ON**
    - OFF
  - DUPLEX
    - ON
    - **OFF**

Figure 5-23 Printer Setting Menu Flow 2

- CONFIG MENU
  - JAM RECOVERY
    - ON
    - **OFF**
  - AUTOCONT
    - **ON**
    - OFF
  - DENSITY
    - (0~15) **7**
  - ECONOMY MODE
    - ON
    - **OFF**
- PARALLEL MENU
  - BIDIRECTION
    - **ON**
    - OFF
  - I/O TIMEOUT
    - (5~3000) **15**
- USB MENU
  - I/O TIMEOUT
    - (5~3000) **15**
- ETHERNET MENU
  - I/O TIMEOUT
    - (5~3000) **15**
- LANGUAGE MENU
  - LANG
    - **ENGLISH**
    - DANISH
    - DUTCH
    - FINNISH
    - FRENCH
    - GERMAN
    - ITALIAN
    - NORWEGIAN
    - PORTUGUESE
    - SPANISH
    - SWEDISH
- RESET MENU
  - RESET
    - MENU
    - JOBLOG
    - ERRORLOG
    - JAMLOG
- JOB LOG MENU
  - AUTO PRINT LOG PER 30 JOBS
    - YES
    - **NO**
  - JOB LOG FULL
    - **WARNING**
    - STOP
  - GMT DIFFERENTIAL TIME
    - **0.0**
  - DAYLIGHT SAVING
    - **OFF**

Figure 5-24 Printer Setting Menu Flow 3

3. OPTION

3.1 Option Memory (32M-byte/64M-byte)

A 32MB memory board can be added to the SCNT board as image memory for receiving facsimile. See *3.1.2 Service operations* for the installation procedure.
Either a 32MB memory board or 64MB memory board can be added to the PCL board for FAX-L2000IP or FAX-L2000 Printer Kit, as image memory for print images. See *3.7 FAX-L2000 Printer Kit* installation procedure.

3.1.1 Safety and precautions

Damage due to electrostatic discharge

Electrostatic charge in the human body is a common cause of damage to electronic parts as well as changes in their characteristics. When attaching / removing memory boards, be sure to take measures against electrostatic discharge by using a wrist strap, etc. If memory boards are handled when an electrostatic charge is present, the electronic parts will suffer damage.

REFERENCE

Countermeasures for Electrostatic Discharge

For details regarding countermeasures for electrostatic discharge, please refer to *Chapter 3, 1.2 General Cautions, Damage due to electrostatic discharge*.

3.1.2 Service operations

a) External view

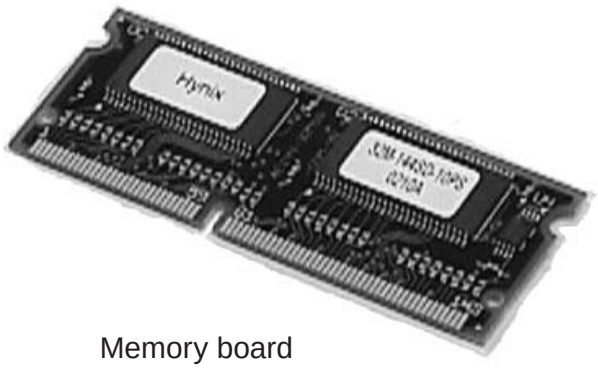

Memory board

Figure 5-25 External View

b) Installation

b-1) Precautions

The memory board cannot be installed if the PCL unit (FAX-L2000IP or FAX-L2000 Printer Kit) has been already attached to the main unit. In this case, remove the PCL unit once, and attach again with the kit.

b-2) Unpacking

Check that the box contains the memory board.

b-3) Preparation

Perform the steps below before attaching the memory boards.

(1) Output all image data if there is any remaining in image memory.

When attaching memory boards, it is necessary to disable memory backup, so the complete contents of image memory will be cleared. Output all image data if there is any remaining in image memory.

(2) Disconnect the power cord of the fax unit at the power source.

(3) Disconnect the modular jack cord (telephone line) from the fax.

(4) Remove the two screws and remove the right cover.

Figure 5-26 Preparation for Installation 1

(5) Remove the seven screws and remove the shield plate. (eight screws for FAX-L2000IP)

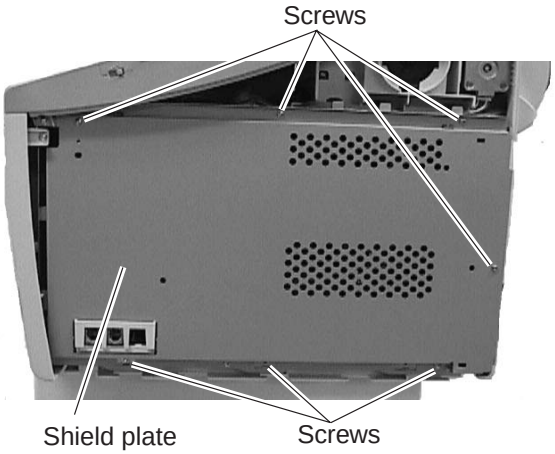

Figure 5-27 Preparation for Installation 2

b-4) Attaching memory boards

(1) To disable memory backup, remove the jumper plug on the SCNT board jumper switch (JP17).

When the jumper plug is attached to the SCNT board jumper switch (JP17) even when the power is turned off, the voltage of the vanadium-lithium secondary battery is still being output to the memory extension connector (JP17). If a memory board is loaded in this condition, the memory IC will suffer damage, so be sure to remove the jumper plug.

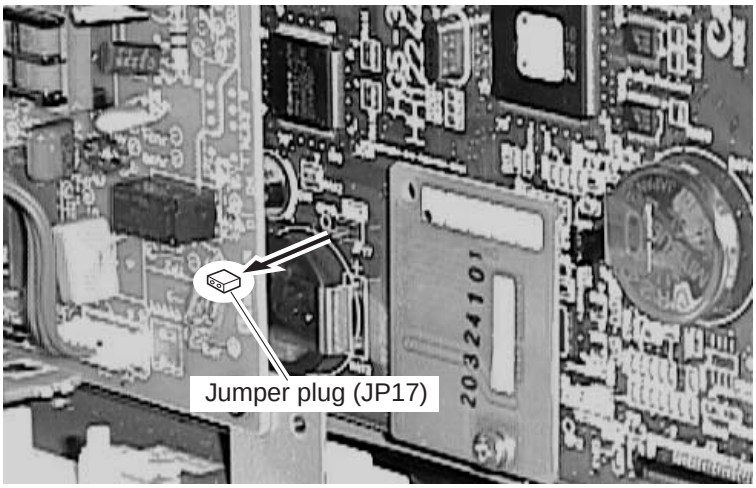

Figure 5-28 Memory Board Installation 1

(2) If the socket of the memory board is of a push-button type, push the memory board all the way in. If it is of a lever type, spread the right and left levers, and fit the memory board. (The right and left levers will close on its own to secure the board in memory.)

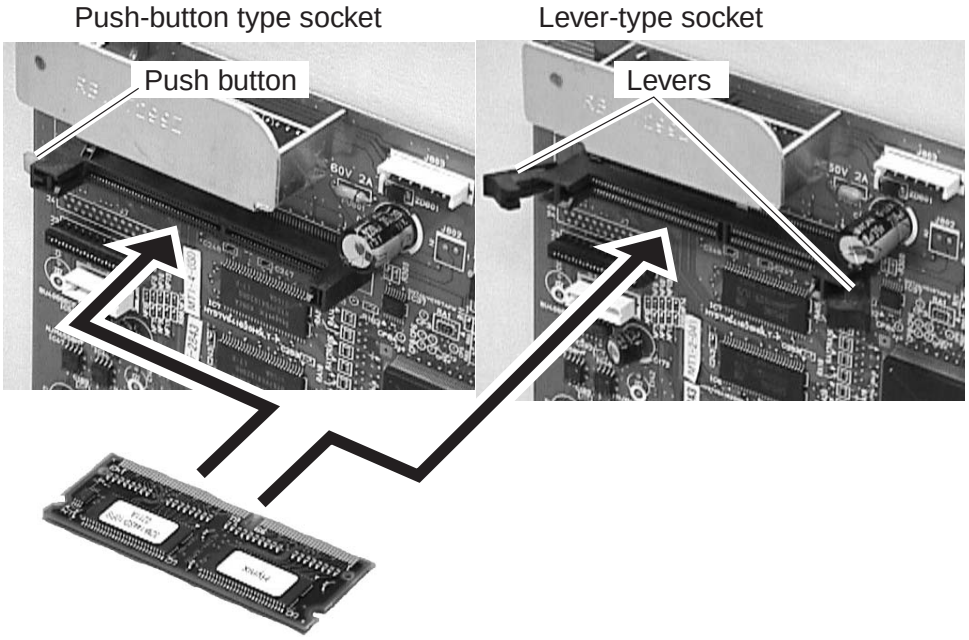

Figure 5-29 Memory Board Installation 2

(3) Install jumper plug JP17 on the SCNT board.
(4) Fasten the shield plate in place with the seven screws. (eight screws for FAX-L2000IP)
(5) Fasten the right cover in place with the two screws.
(6) Connect the modular jack cord (telephone line) to the fax.
(7) Connect the power supply cord to the fax.

b-5) Check after memory board installation

After installing the memory board, carry out the following procedure to ensure that the memory board are properly identified by the fax.

(1) Referring to the flow chart, enter test mode D-RAM test [1].

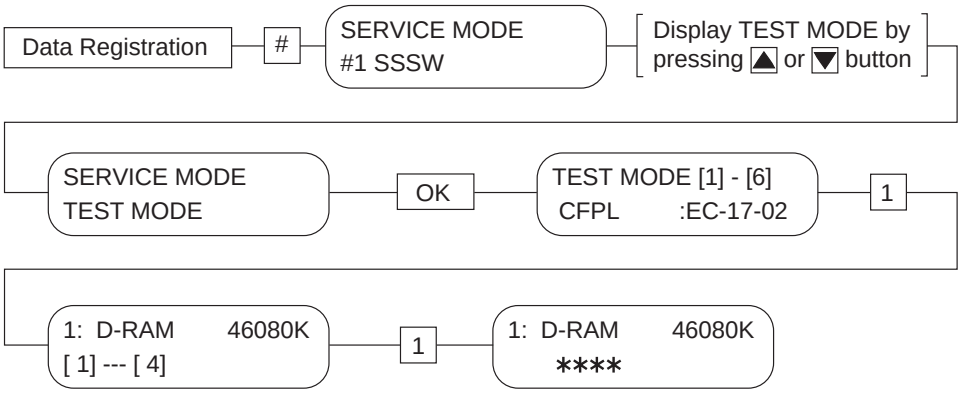

Figure 5-30 Flowchart of D-RAM Test 1

(2) When D-RAM test [1] is entered, check the D-RAM write-in and read-out. Confirm that the display shows the extended memory capacity value (46080K), and that the check completes with “no error”.

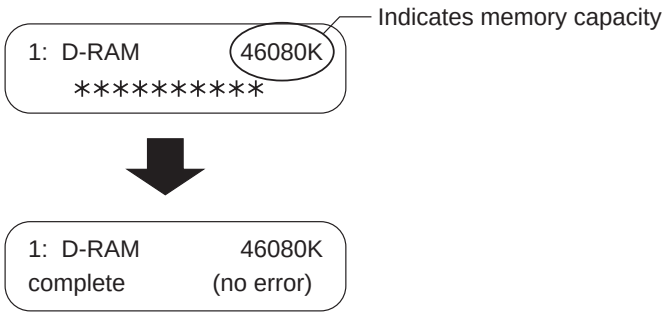

Figure 5-31 Memory Board Installation Check

(3) After confirming this, push the Stop button, then push the Clear button, which will put the machine into a standby condition.

(4) If the process does not complete normally, return to *b-3) Attaching memory boards*, re-attach the memory board, and then re-check with the D-RAM test.

b-6) Removing the memory board

When removing the memory board, perform the steps in *b-3) Attaching memory boards* in reverse order. If the socket of the memory board is of a push-button type, press the push button so that the board will slide out. If it is of a lever type, spread the right and left levers. Be sure to remove the memory board only after turning the power off and removing the jumper plug on SCNT board jumper switch (JP17).

If the memory board is removed with the jumper plug attached to the SCNT board jumper switch, the memory board will suffer damage.

3.1.3 Maintenance and service

a) Troubleshooting

The fax does not recognize the memory board even when the test mode D-RAM test is executed.

Solutions:
(1) Check that the memory board is securely connected.
(2) Replace the memory board.
(3) Replace the SCNT board.

3.2 Handset Rest Fp

3.2.1 Service operations

a) External view

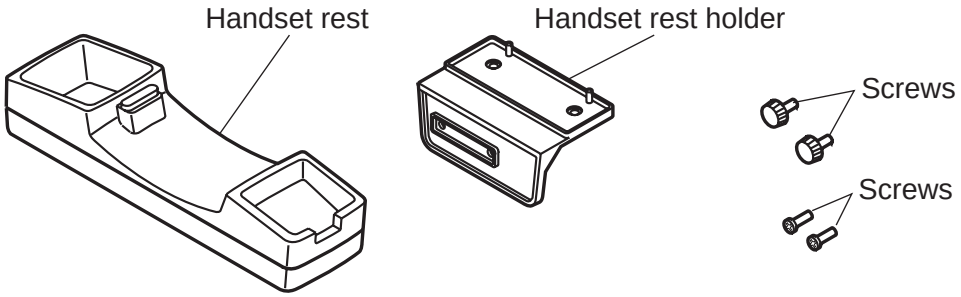

Figure 5-32 External View

b) Installation

b-1) Precautions

Prepare the handset CT-19 designed for each country, since it is not included in this kit.

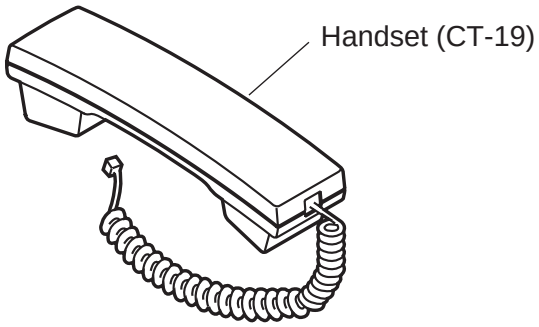

Figure 5-33 Handset

b-2) Unpacking

Check that the box contains the handset rest, handset rest holder and four screws.

b-3) Attachment to the main unit

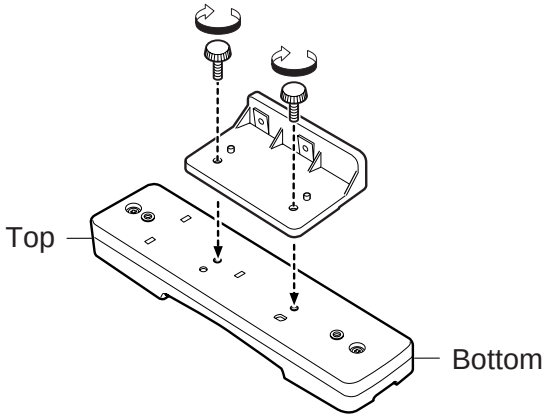

Figure 5-34 Handset Installation 1

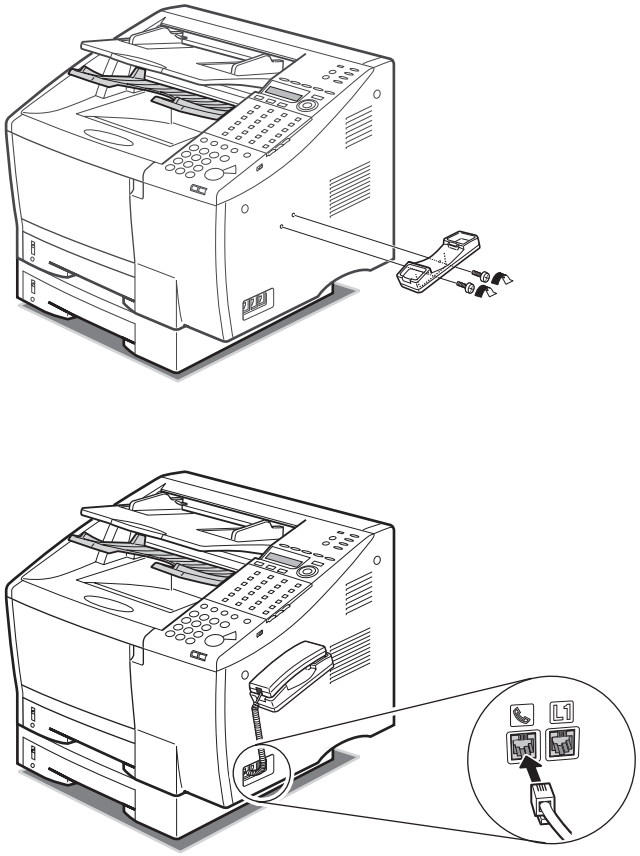

Figure 5-35 Handset Installation 2

3.2.2 Maintenance and service

a) Troubleshooting

Even when a call is received, the bell does not ring.

Solutions:
(1) Check that the handset modular jack connector is properly connected to the handset jack of the fax.
(2) Check that the ring-back tone volume adjustment switch is set to Off.
(3) Replace the handset.
(4) Replace the modular jack board.
(5) Replace the NCU board.

You cannot hear the dialing sounds from the handset.

Solutions:
(1) Check that the handset modular jack connector is properly connected to the handset jack of the fax.
(2) Check that the modular cord from the telephone line is properly connected to the telephone line jack of the fax.
(3) Check that documents can be transmitted and received normally.
(4) Replace the handset.
(5) Replace the modular jack board.
(6) Replace the NCU board.

There is no response when you dial.

Solutions:
(1) Check that user data “TEL LINE TYPE” (TONE/PULSE) is set to the same type as the telephone line you are using.
(2) Check that the modular cord from the telephone line is properly connected to the telephone line jack of the fax.
(3) Replace the modular jack board.
(4) Replace the NCU board.

3.3 Verification Stamp Unit

3.3.1 Service operations

a) External View

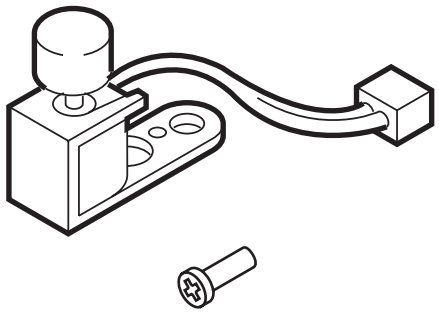

Figure 5-36 External View

b) Installation

b-1) Unpacking

Check that the box contains the stamp unit and one screw.

b-2) Attachment to the main unit

(1) Disconnect the power cord of the fax unit at the power source.

(2) While holding the upper reader frame and the middle reader frame open with one hand, use one finger of your other hand to gently push in the stopper to separate it from the stub on the fax machine, and open the upper reader frame and the middle reader frame.

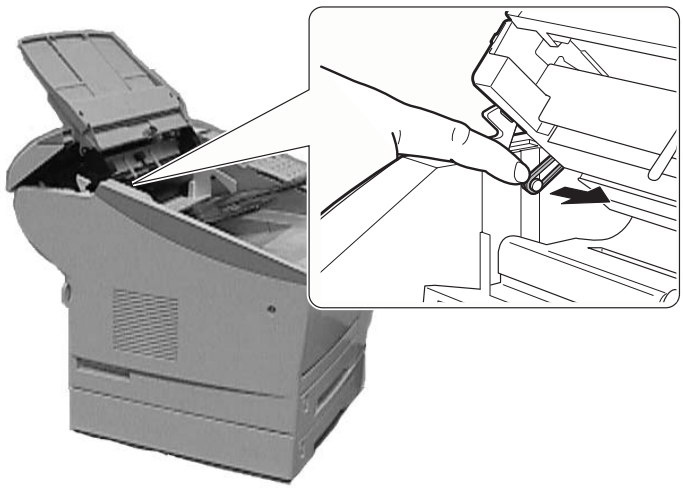

Figure 5-37 Stamp Unit Installation 1

(3) Remove the three screws, and remove the lower reader cover.

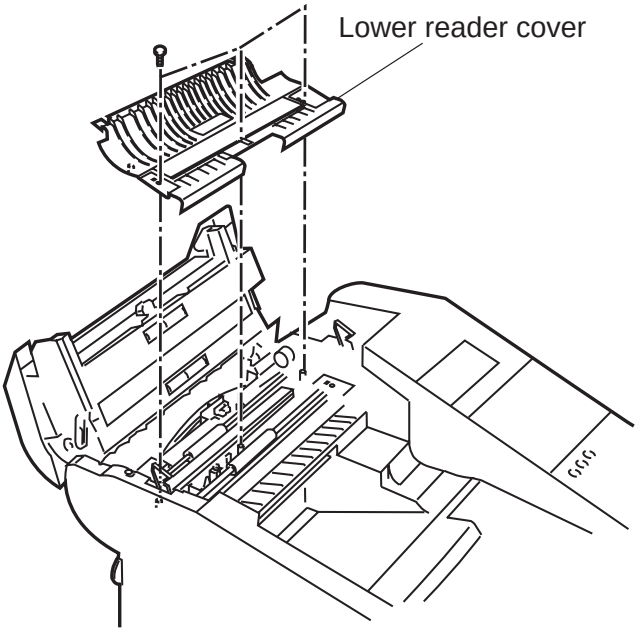

Figure 5-38 Stamp Unit Installation 2

(4) Connect the stamp unit connector cable to the main unit, and fasten the stamp unit with the one screw as shown below.

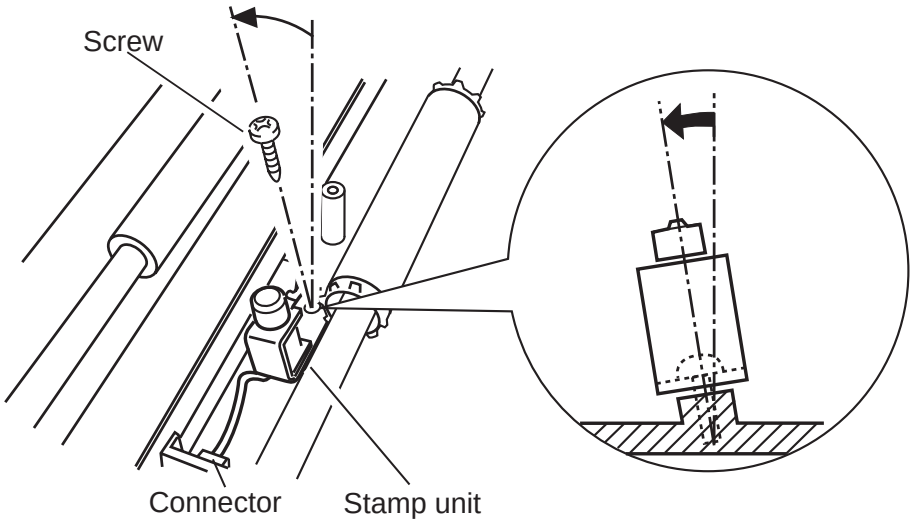

Figure 5-39 Stamp Unit Installation 3

NOTE

As shown in the figure, angle the boss slightly, insert the screw, and fix the stamp unit into place.

(5) Remove the cap from the stamp unit.

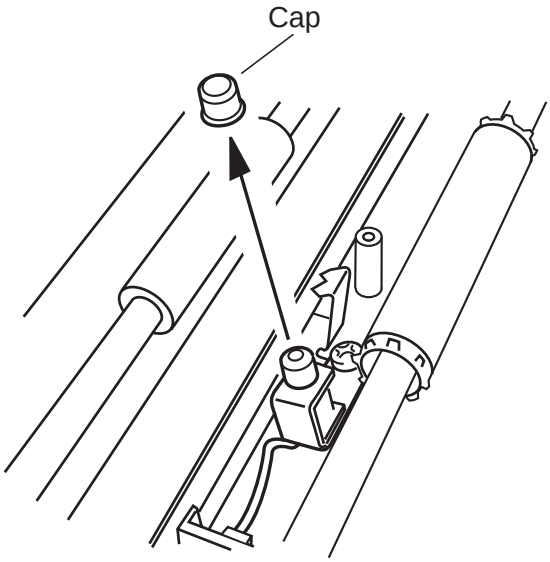

Figure 5-40 Stamp Unit Installation 4

(6) Fasten the lower reader cover in place with the three screws.
(7) Place the end of the stopper over the end of the stub so it locks in place, and close the upper reader frame.

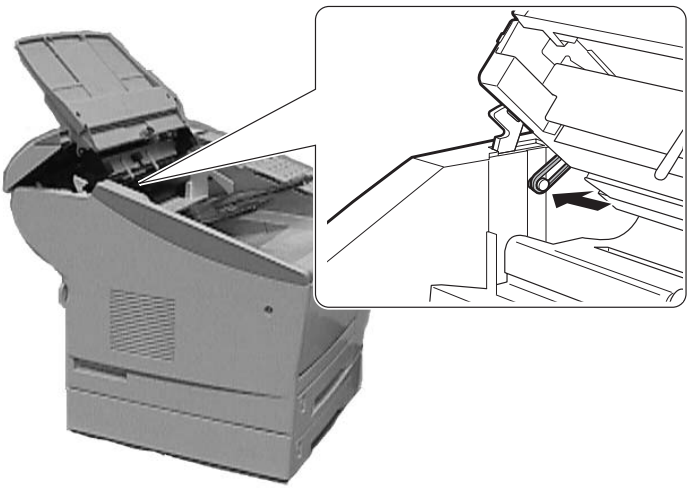

Figure 5-41 Stamp Unit Installation 5

(8) Connect the power cord to the fax.

(9) In the service mode, set #1SSSW SW06 Bit3 to 1.

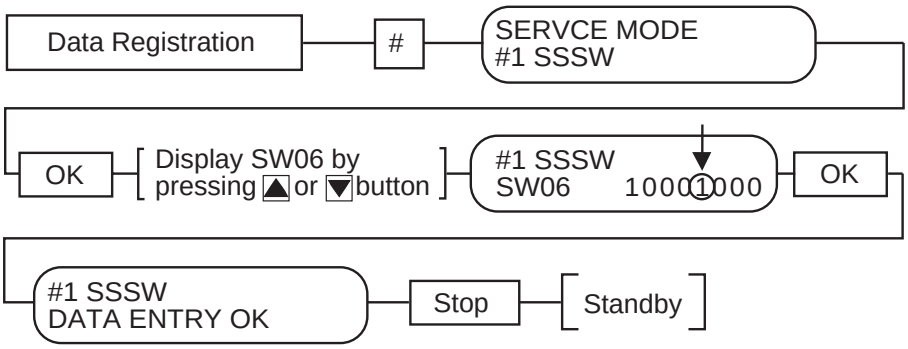

Figure 5-42 Flow Chart of Changing SSSW

b-3) Operation check

After setting 6. STAMP ACTION of USER DATA to “ON”, or after pressing the Stamp button on the operation panel and turning the stamp function “ON” using the search button, fax a document to verify that a stamp is put at the bottom of the document scanning surface during scanning.

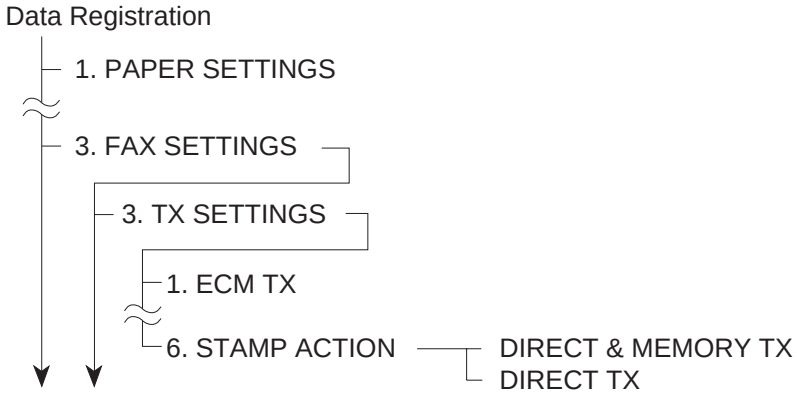

Figure 5-43 User Data Menu

3.4 FXL-CASSETTE FEEDER 6 (LTR/500)

3.4.1 Safety and precautions

a) Personal precautions

During servicing, if you have to operate the sensor arm, be careful to keep hair, clothes, accessories, etc. from becoming wrapped up in moving and rotating parts.

- The cassette pickup roller, and cassette feed roller are rotated by the main motor.
- The cassette pickup solenoid controls the cassette pickup roller.

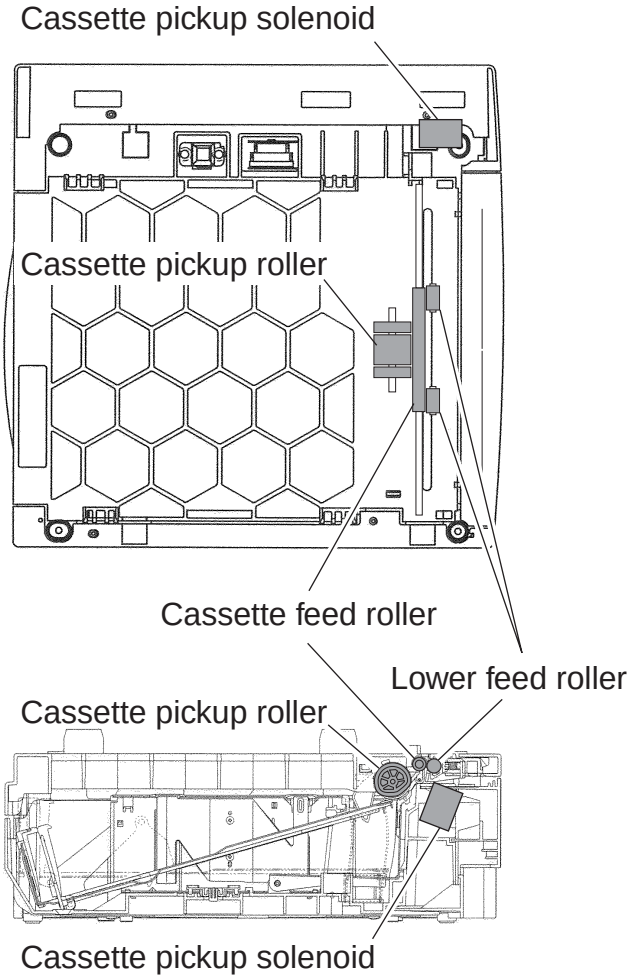

Figure 5-44 Moving and Rotating Parts

3.4.2 Service operations

a) External View

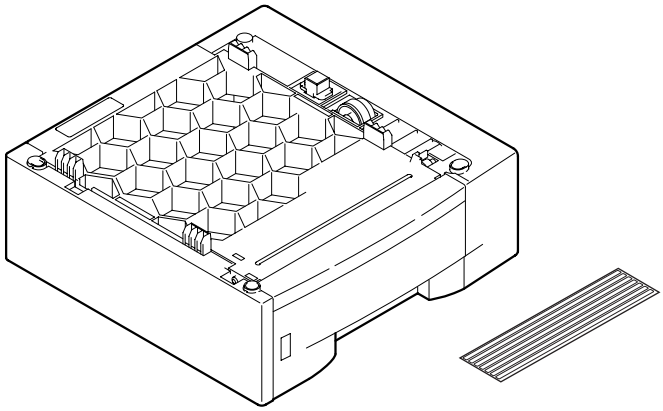

Figure 5-45 External View

b) Installation

b-1) Unpacking

Check that the box contains the cassette feeder including the paper cassette and label.

b-2) Preparation

Perform the steps below before attaching the cassette feeder.

(1) Disconnect the modular jack cord (telephone line) from the fax.
(2) Disconnect the power cord of the fax unit at the power source.
(3) Check to make sure that the main fax machine is equipped with a 250-sheet cassette feeder.
(4) Remove the 250-sheet cassettes (i.e., both of them).

Figure 5-46 Preparation for Installation 1

b-3) Attachment to the main unit

(1) While working in a group of two, lift the main fax machine, with one standing at the front and the other, at the rear. While making sure that the front/rear and left sides are flush, place the main fax machine.

The FXL-Cassette Feeder 6 is not secured in place with screws. Be sure to separate it from the main fax machine before relocating it.

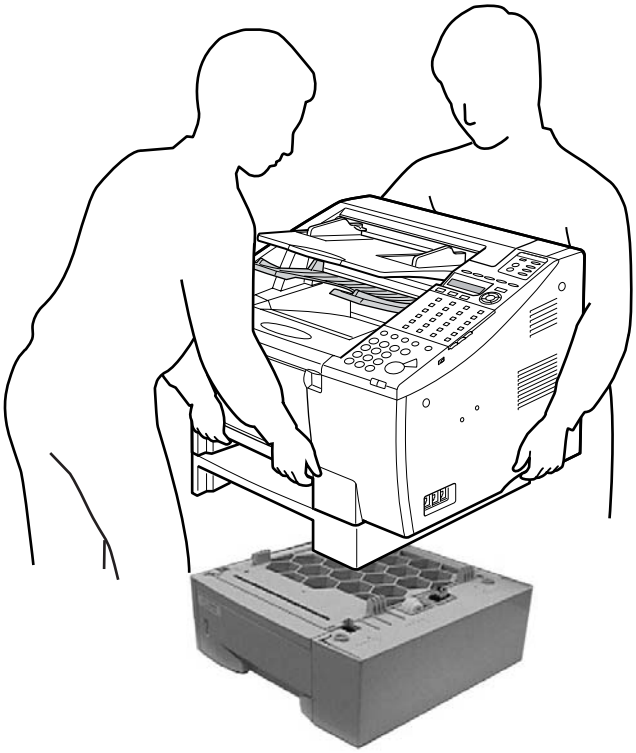

Figure 5-47 Cassette Feeder Installation 1

(2) When you plug the power cord into a socket, “SUPPLY REC. PAPER” is displayed and the Alarm lamp blinks. Check that the cassette pickup roller is at its initial position.

NOTE

After connecting the FXL-Cassette Feeder 6 and install the toner cartridge, when you plug the power cord, the main unit automatically detects that the feed unit is connected and the cassette pickup roller is set to its initial position. This initial position is as shown in below.

After connecting the FXL-Cassette Feeder 6, if you load the cassette when the cassette pickup roller is not in its initial position, then the cassette will strike the roller and may break it. Always check that the roller is in its initial position before loading the cassette.

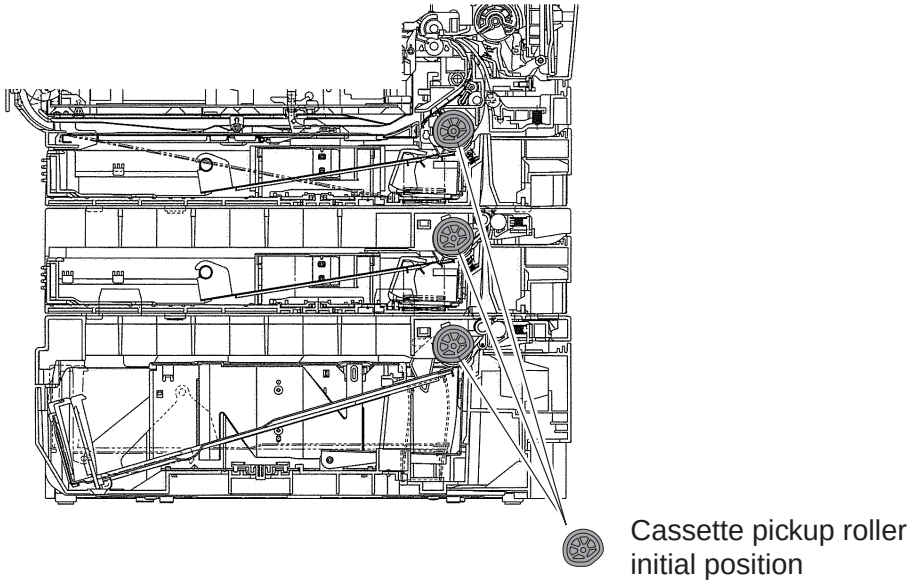

Figure 5-48 Cassette Feeder Installation 2

(3) Attach the label (to suit your local language).

(4) Only if you are using A4 paper,
The paper cassette of the FXL-Cassette Feeder 6 is set to accommodate LTR paper. If you are using A4 recording paper, slide the right and left side plates of the cassette toward the center, and shift down the rear edge plate so that the cassette is set for LTR paper.

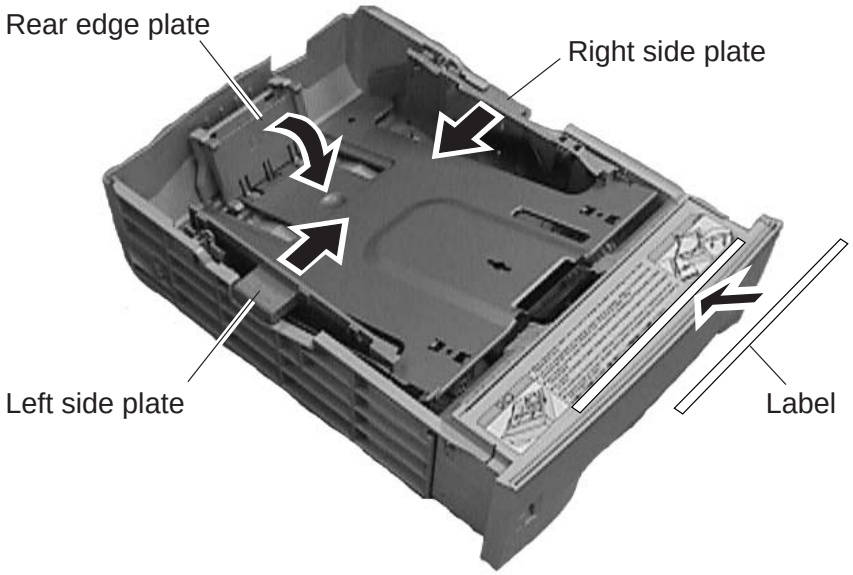

Figure 5-49 Cassette Feeder Installation 3

(5) Start [user data registration], and register the size of recording paper you will be using.

NOTE

The fax machine is not equipped with a recording paper size sensor, requiring you to register the size of recording paper you will be using.

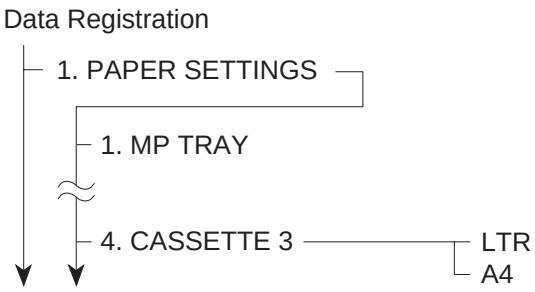

Figure 5-50 Cassette Feeder Installation 4

b-4) Operation Check

Empty all the recording paper other than that in the cassette, make a copy, and check that the recording paper is picked up correctly.

3.4.3 Technical information

a) Specifications

Recording paper dimensions

Letter	8.50"(W) x 10.98"(L) (216 mm x 279 mm)
A4	8.27"(W) x 11.69"(L) (210 mm x 297 mm)
Weight	64~90 g/m^2

Recording paper cassette capacity

500 sheets (max.), or 2.24" (57mm) in height; of weight 80g/m^2 paper.

Recommended recording paper

KANGAS Canon Paper

Weight	80 g/m^2
Paper size	A4
Manufactured by	KANGAS

NEUSIEDLER Canon Paper

Weight	80 g/m^2
Paper size	A4
Manufactured by	NEUSIEDLER

Canon Copier LTR Premium Paper

Weight	75 g/m^2
Paper size	Letter
Manufactured by	BOISE CASCADE

3.4.4 Operations

a) Functions

a-1) Recording paper pickup function

The cassette feeder is driven by the main motor of the fax via a gear.

The paper feeder driver PCB receives the pick-up command from the ECU board, and the cassette feeder pick-up solenoid is turned ON. As a result, the pick-up roller is driven by the main motor rotation.

a-2) No recording paper detection function

The cassette recording paper sensor in the option feeder detects whether or not there is recording paper in the cassette.

b) Structures

The cassette feeder has the following construction:

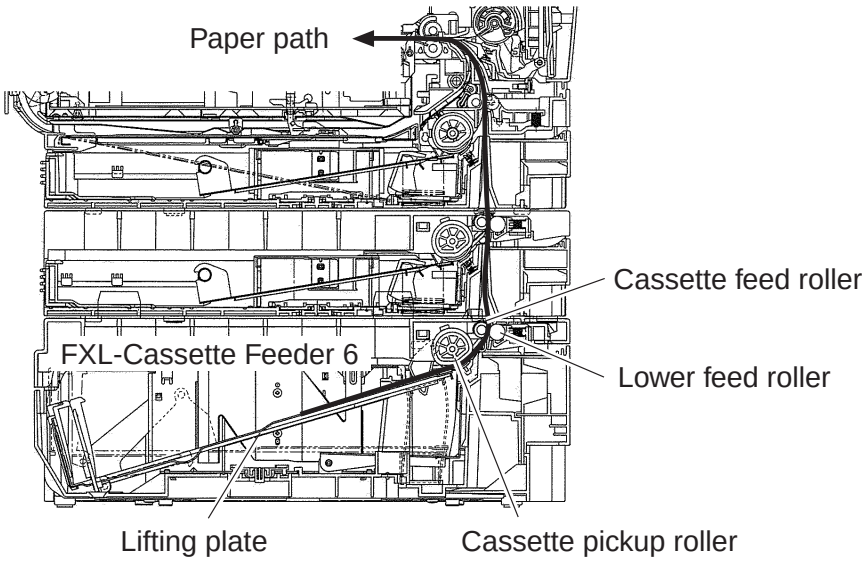

Figure 5-51 Cross-Sectional Diagram

3.4.5 Maintenance and service

a) Troubleshooting

The fax main unit does not detect that the FXL-Cassette Feeder 6 is mounted.

Solutions:
(1) Disconnect and connect the power cord; then, turn on the power once again.
(2) Check to see that the fax machine and the cassette feeder are correctly connected.
(3) Check to see that the connector of the feeder board found inside the cassette feeder is correctly connected.
(4) Replace the feeder board.
(5) Replace the ECU board.

Recording paper is not picked up.

Solutions:
(1) Check the connection between the main unit and the paper feeder unit.
(2) Check the gears of the main unit and the cassette feeder unit, and replace any damaged gears.
(3) Check to see that the connector of the feeder board found inside the cassette feeder is correctly connected.
(4) Clean the rollers etc. (cassette pick-up roller, feed roller and separation pad) if soiled.
(5) Replace it if worn or deformed. The cassette separation roller, the feed roller and the separation pad are to be replaced together.
(6) Check to see that the recording paper sensor is operating normally.
(7) Replace the pick-up solenoid.
(8) Replace the feeder board.
(9) Replace the ECU board.

INCORRECT PAPER SIZE is indicated.

Solutions:
(1) Make sure that the size of the recording paper deposited and the size of recording paper registered are identical.

3.5 FAX-L2000 Printer Kit

3.5.1 Safety and precautions

Damage due to electrostatic discharge

Electrostatic charge in the human body can will be the cause of damage to electronic parts as well as changes in their characteristics. When attaching / removing the kit, be sure to take measures against electrostatic discharge by using a wrist strap, etc. If the kit is handled when an electrostatic charge is present, the electronic parts will suffer damage.

REFERENCE

Countermeasures for Electrostatic Discharge

For details regarding countermeasures for electrostatic discharge, please refer to *Chapter 3, 1.2 General Cautions, Damage due to electrostatic discharge*.

3.5.2 Service operations

a) External view

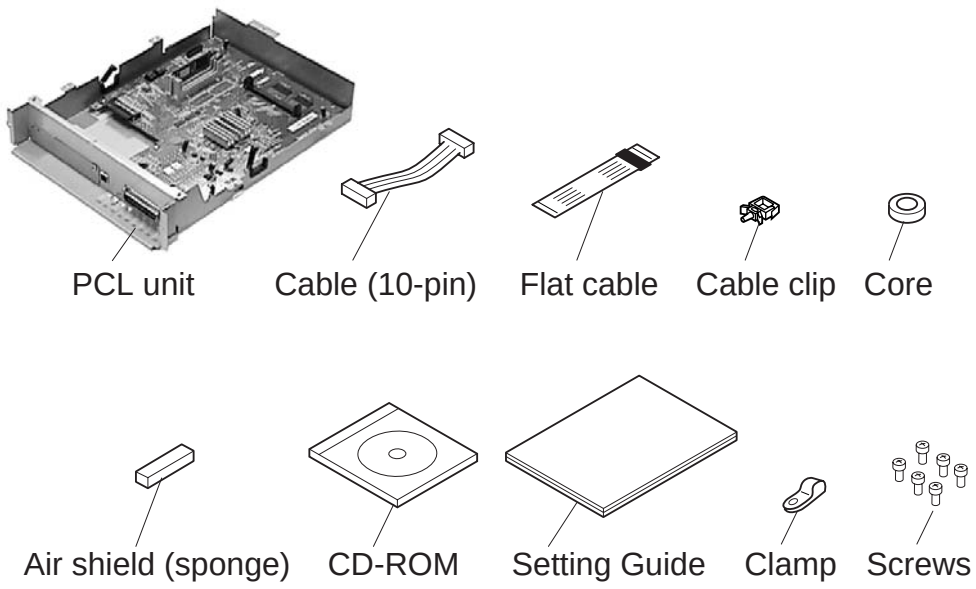

Figure 5-52 External View

b) Installation

b-1) Precautions

See 3.6 FAX-L2000 Network Kit before attaching the FAX-L2000 Network Kit together with the kit.

The Option Memory can be attached to the kit. See b-7) Installing the Option Memory if attaching.

b-2) Unpacking

Check that the box contains the PCL unit, cable (40-pin), flat cable, cable clip, core, air shield, CD-ROM, setting guide, clamp and six screws.

b-3) Preparation

Perform the steps below before attaching the kit.

(1) Disconnect the modular cord (telephone line) from the fax.

(2) Disconnect the power cord of the fax unit at the power source.

Wait at least 10 minutes for the power supply unit to cool before continuing the work.

(3) Remove the two screws and remove the right cover.

Figure 5-53 Preparation for Installation 1

(5) Remove the seven screws and remove the shield plate.

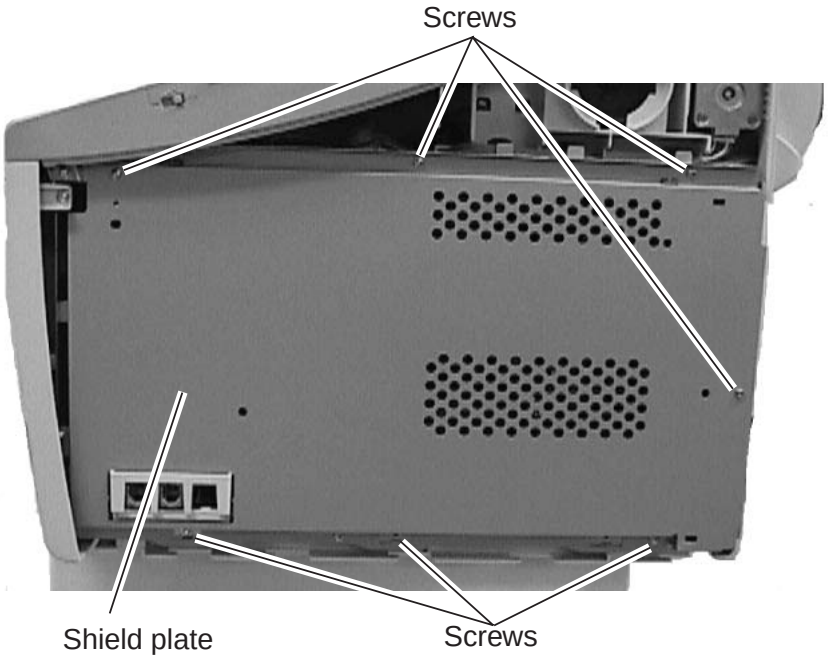

Figure 5-54 Preparation for Installation 2

(6) Remove the two screws and remove the rear plate.

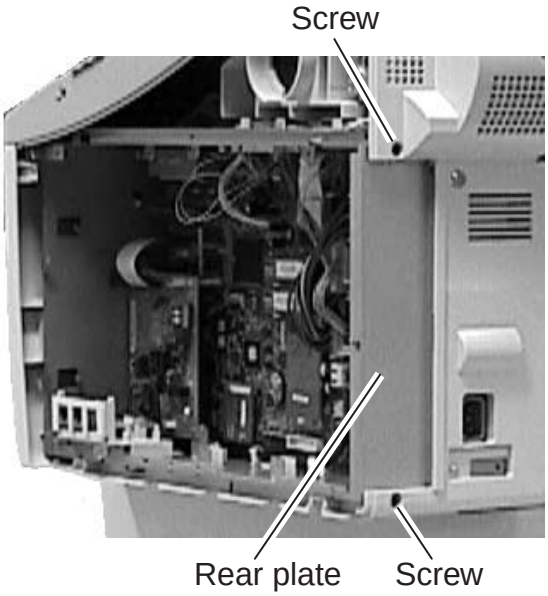

Figure 5-55 Preparation for Installation 3

(7) Connect the 10-pin cable to the connector J205 of the power supply unit.
(8) Attach the cable clip to upper inside the shield case to fix the 10-pin cable.
(9) Put the core through the cable.

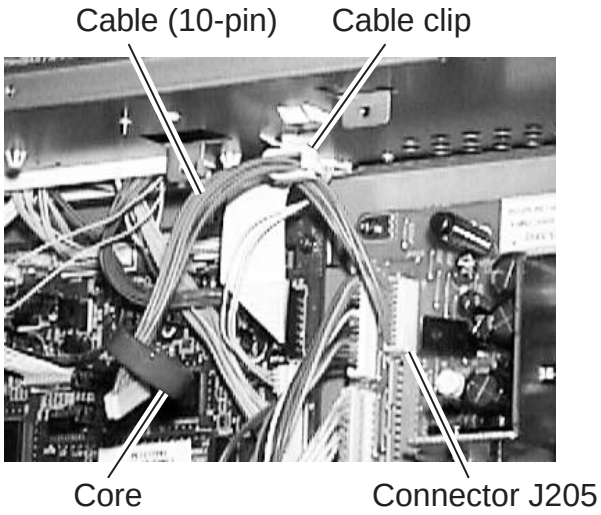

Figure 5-56 Preparation for Installation 4

(10) Connect the flat cable to the connector J2 of the SCNT board. At this time, face up the white flat cable surface, and connect the core side of the flat cable to the SCNT board
(11) Attach the air shield (sponge) to lower inside the shield case, which is under the flat cable.

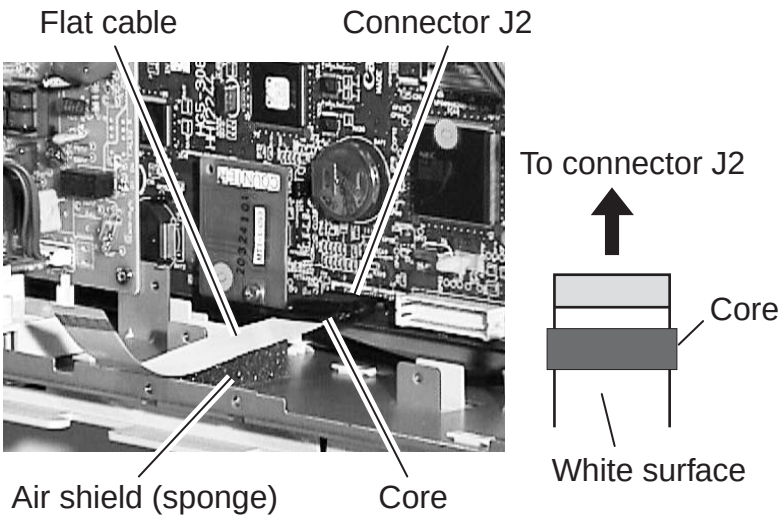

Figure 5-57 Preparation for Installation 5

b-4) Attaching to the main unit

(1) When attaching the PCL unit, check to make sure that the core of the 10-pin cable must be placed between the backside of the PCL unit and the cable clip. (Do not place the core on the PCL unit board surface) After that, secure the PCL unit with six screws.

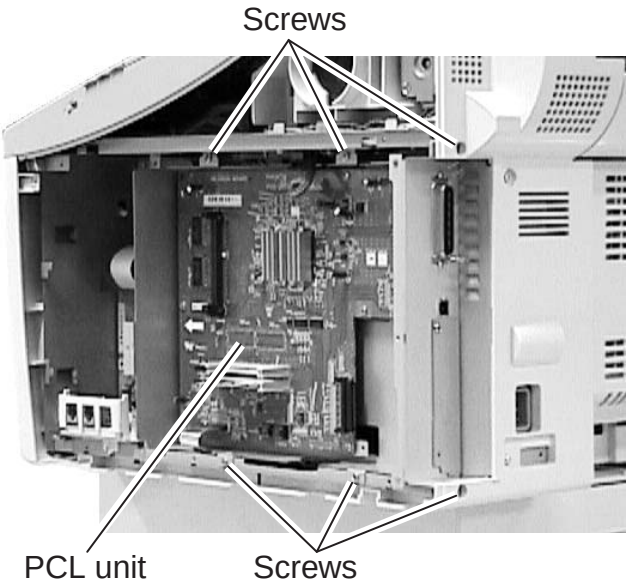

Figure 5-58 Printer Kit Installation 1

(2) Remove the screw, and fix the 10-pin cable with the clamp included with the Kit. After that, connect the 10-pin cable to the connector J6 of the PCL board, and then secure it in place using black clamp. Press the cable toward the PCL board as much as possible.

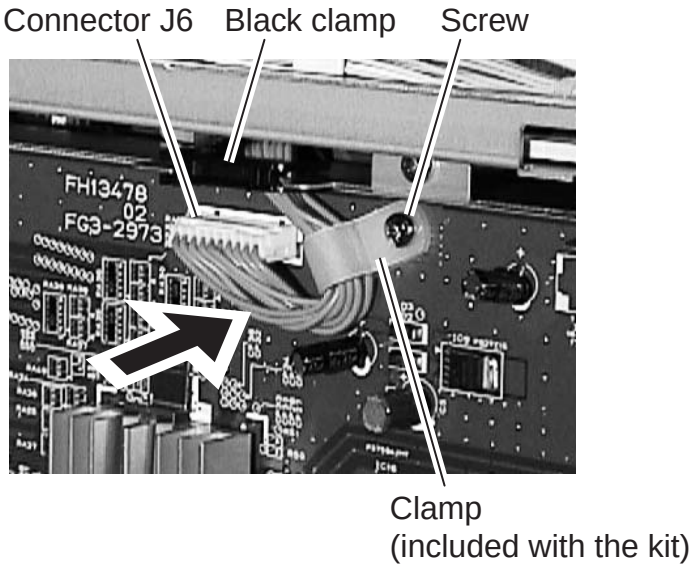

Figure 5-59 Printer Kit Installation 2

(3) Connect the flat cable to the connector J5 of the PCL board.

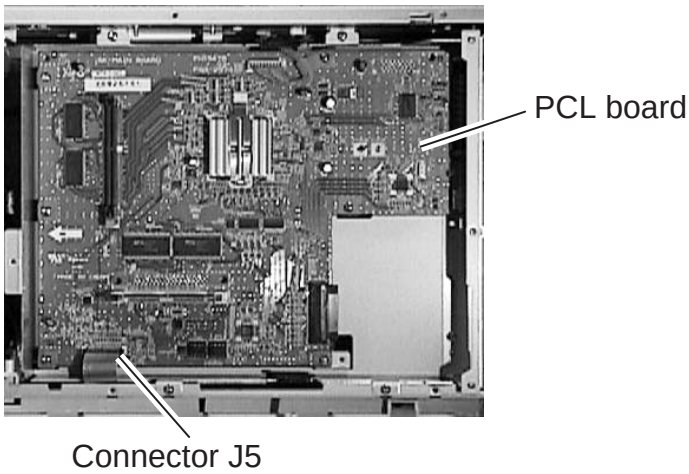

Figure 5-60 Printer Kit Installation 3

(4) Fasten the shield plate in place with the eight screws.

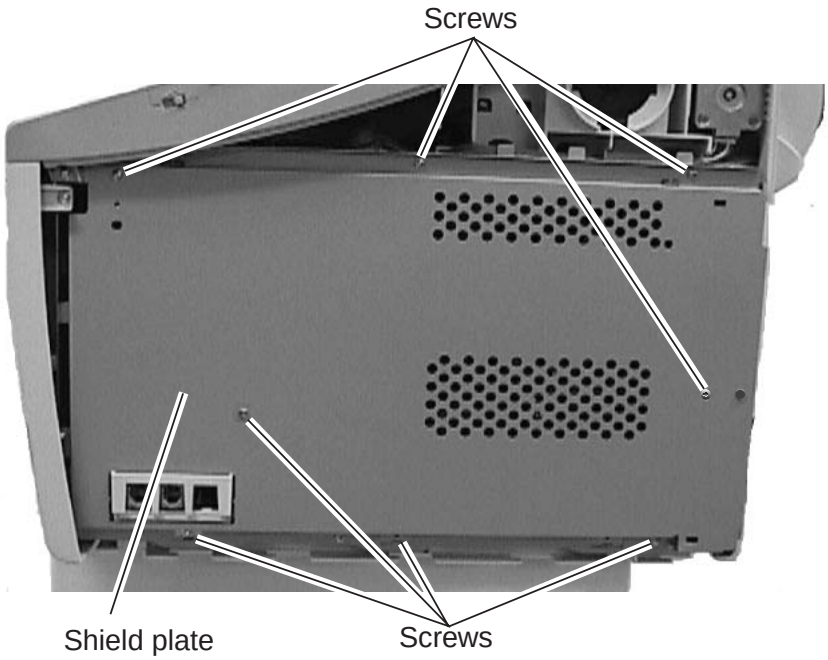

Figure 5-61 Printer Kit Installation 4

(5) Fasten the right cover in place with the two screws.
(6) Connect the modular cord (telephone line) to the fax (L1 jack).

b-5) Check after the Kit Installation

After installing the kit, carry out the following procedure to ensure that the kit is properly identified by the main unit.

(1) Connect the power supply cord to the main unit.
(2) Carry out COLD RESET by the following procedure in service mode.
Press the Data Registration button and the # button to go into service mode.
Press the Search button to display “#8 PDL” and press the OK button.
Press the Search button to display “PDL-PCL MENU” and press the OK button.
Press the Search button to display “COLD RESET A4” reset is carried out by pressing the OK button. “READY” is displayed later on.
(3) Carry out COLD RESET again after ensuring the display “READY”.
(4) Output the TEST PRINT about the PCL board by the following procedure, and ensure that the operation is done properly.
Press the PRT. Message button on the operation panel to light a lamp.
Press the Go button and the Menu button to display “TEST MENU”.
Select “TEST PRINT” by pressing the Item button, and press the Enter/Cancel button.
The TEST PRINT on which the state of the PCL board is printed is outputted if the kit has been installed properly.

b-6) Removing the kit

When removing the kit, perform the steps in *b-4) Attaching to the main unit* in reverse order. Be sure to remove the kit only after turning the power off.

b-7) Installing the Option Memory

Either one piece of 32M-bite memory or 64M-bite memory can be installed to the kit.
When adding a memory after installing the FAX-L2000 Printer Kit, be sure to unplug the power code of the main unit.

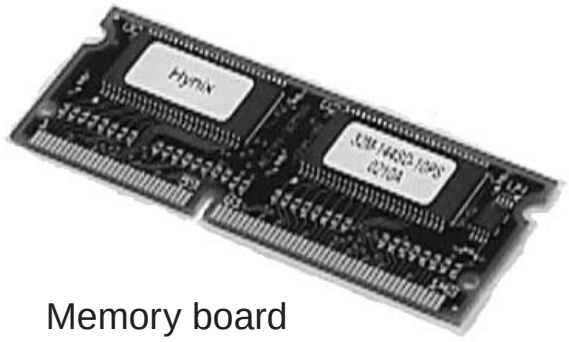

Figure 5-62 Option Memory 1

(1) Inset the memory board in the connector J4 of the PCL board as far as it will go.

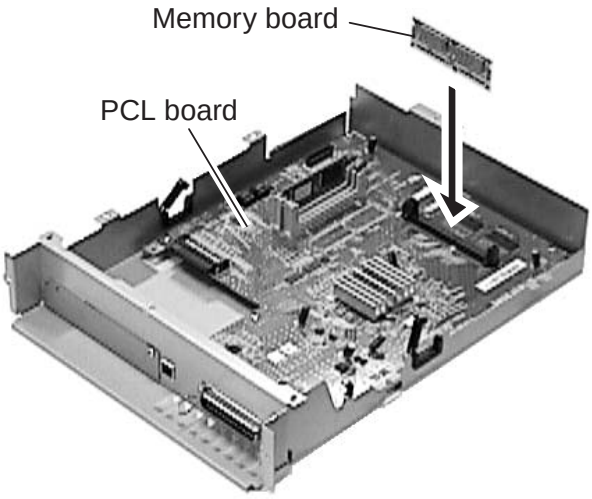

Figure 5-63 Option Memory 2

(2) Check to make sure that the values of TOTAL MEMORY of the TEST PRINT, which was outputted at the step b-5) Check after the Kit Installation, are as follows.
The value should be 48MB in case that the 32M-byte memory is added.
The value should be 80MB in case that the 64M-byte memory is added.

3.5.3 Technical information

a) Specifications

CPU	Power PC405 (200 MHz)
ROM	8 MB
RAM	Standard: 16 MB (80 MB max.)
Interface	Parallel (IEEE 1284), USB
Page description Language	PCL 5e, PCL 6
OS	Windows 95/98/NT4.0/2000/Me/XP
	45 scalable fonts as standard (Micro Type fonts); 32 TrueType fonts, 9 bitmap fonts
Duplex print	Printing from PC only.

3.5.4 Maintenance and service

a) Troubleshooting

The fax does not recognize the FAX-L2000 Printer Kit even when it is attached properly.

Solutions:
(1) Check that the kit is securely connected.
(2) Replace the kit.
(3) Replace the SCNT board.

3.6 FAX-L2000 Network Kit

3.6.1 Safety and precautions

Damage due to electrostatic discharge

Electrostatic charge in the human body can will be the cause of damage to electronic parts as well as changes in their characteristics. When attaching / removing the kit, be sure to take measures against electrostatic discharge by using a wrist strap, etc. If the kit is handled when an electrostatic charge is present, the electronic parts will suffer damage.

REFERENCE

Countermeasures for Electrostatic Discharge

For details regarding countermeasures for electrostatic discharge, please refer to *Chapter 3, 1.2 General Cautions, Damage due to electrostatic discharge*.

3.6.2 Service operations

a) External view

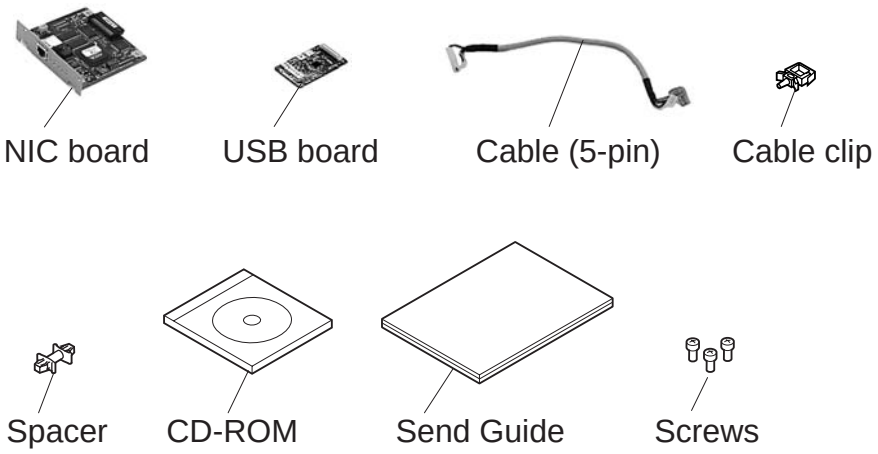

Figure 5-64 External View

b) Installation

b-1) Precautions

Be sure to prepare the FAX-L2000 Printer Kit, as the kit by itself cannot be installed to the main unit.

The kit cannot be installed if the FAX-L2000 Printer Kit has been already attached to the main unit. In this case, remove the FAX-L2000 Printer Kit once, and attach again with the kit.

b-2) Unpacking

Check that the box contains the NIC board, USB board, cable (5-pin), cable clip, spacer, CD-ROM, send guide and three screws.

b-3) Preparation

Perform the steps below before attaching the kit.

(1) Disconnect the modular cord (telephone line) from the fax.

(2) Disconnect the power cord of the fax unit at the power source.

Wait at least 10 minutes for the power supply unit to cool before continuing the work.

(3) Remove the two screws and remove the right cover.

Figure 5-65 Preparation for Installation 1

(5) Remove the seven screws and remove the shield plate.

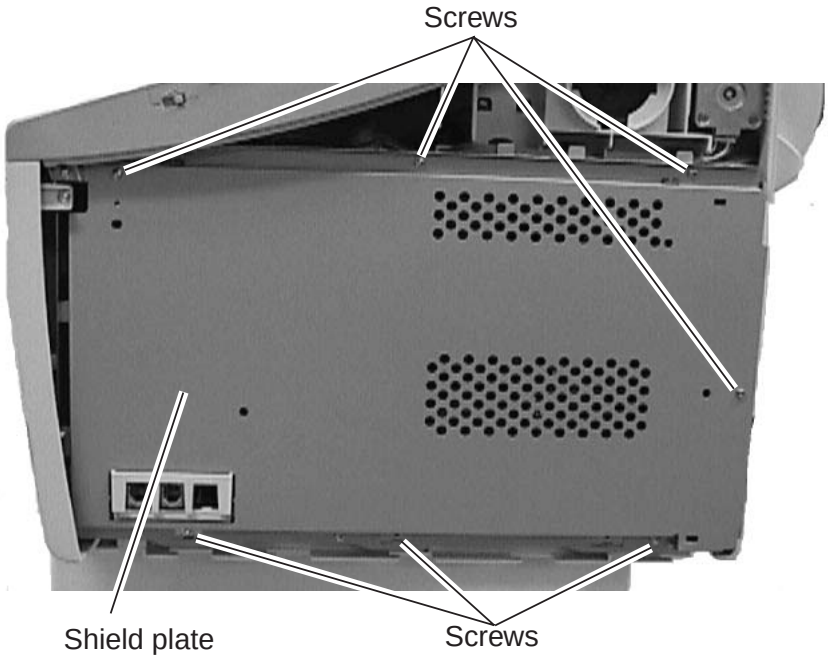

Figure 5-66 Preparation for Installation 2

(6) Remove the two screws and remove the rear plate.

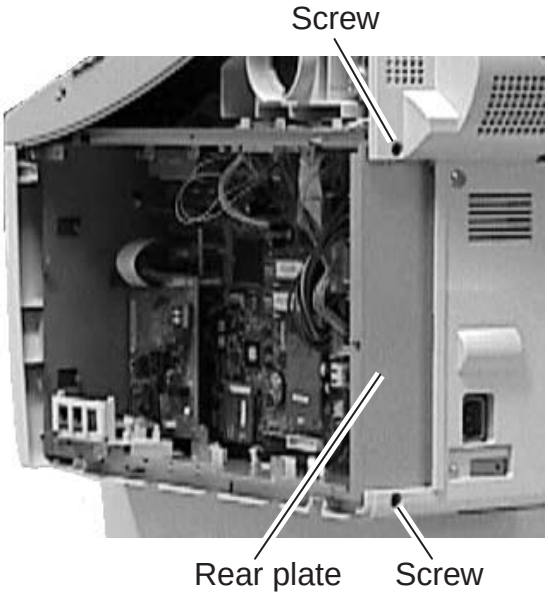

Figure 5-67 Preparation for Installation 3

(7) Connect the 10-pin cable included with the FAX-L2000 Printer Kit to the connector J205 of the power supply unit.
(8) Attach the cable clip included with the FAX-L2000 Printer Kit to upper inside the shield case to fix the 10-pin cable.
(9) Put the core included with the FAX-L2000 Printer Kit through the cable.

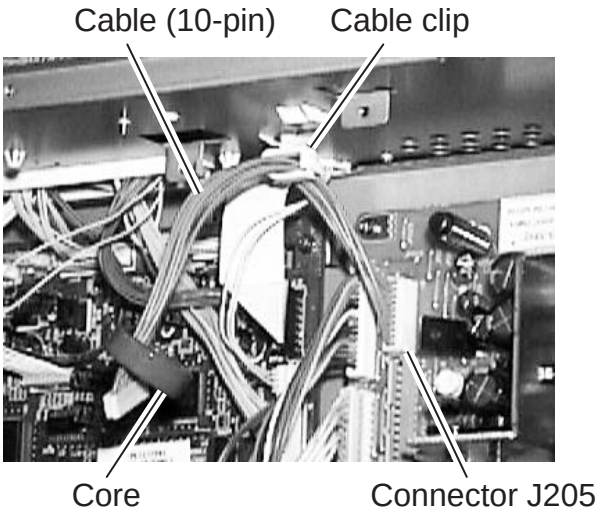

Figure 5-68 Preparation for Installation 4

(10) Connect the flat cable included with the FAX-L2000 Printer Kit to the connector J2 of the SCNT board. At this time, face up the white flat cable surface, and connect the core side of the flat cable to the SCNT board.
(11) Attach the air shield (sponge) included with the FAX-L2000 Printer Kit to lower inside the shield case, which is under the flat cable.

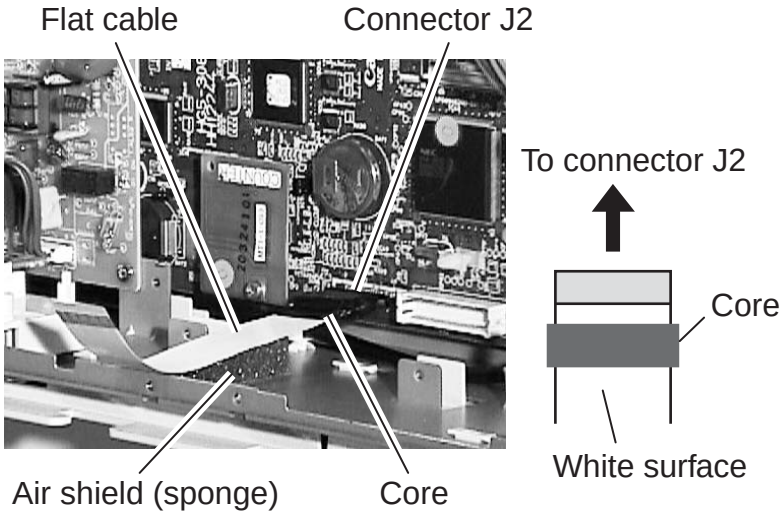

Figure 5-69 Preparation for Installation 5

(12) Connect the 5-pin cable to the connector J3 and J9 of the SCNT board
(13) Attach the cable clip to lower inside the shield case to fix the 5-pin cable.
(14) Inset the spacer in the hole of the SCNT board.

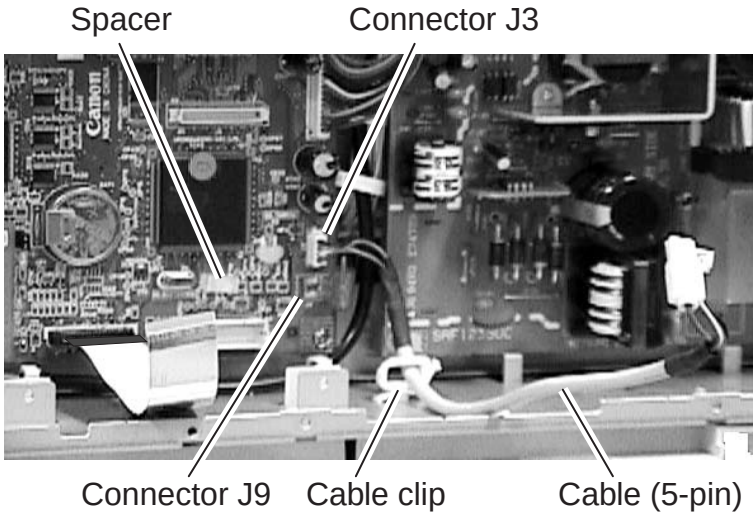

Figure 5-70 Preparation for Installation 6

(15) Inset the USB board in the connector J8 of the SCNT board, and fix it with the spacer.

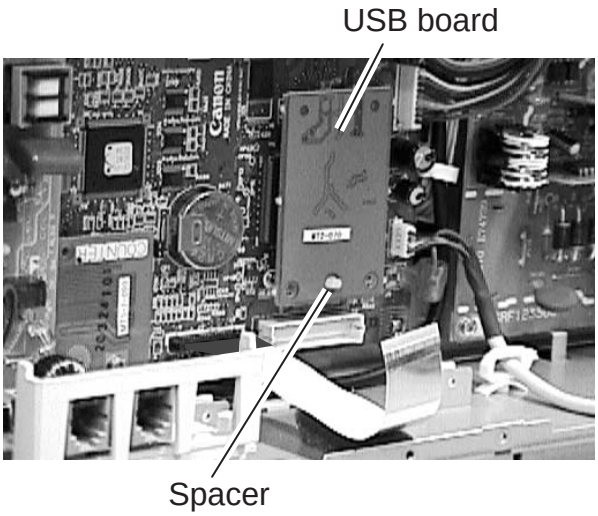

Figure 5-71 Preparation for Installation 7

(16) Remove the screw of the PCL unit included with the FAX-L2000 Printer Kit, and detach the plate.

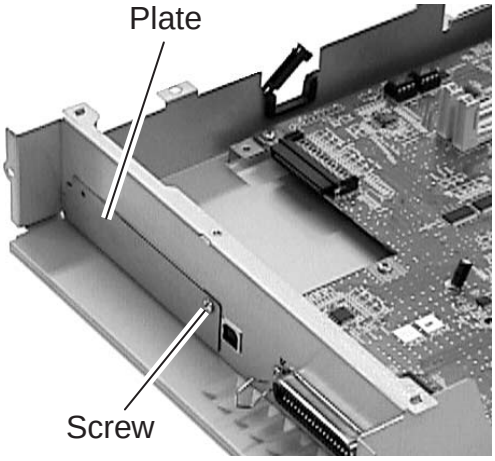

Figure 5-72 Preparation for Installation 8

(17) Inset the NIC board in the PCL unit, and fix it with the three screws.

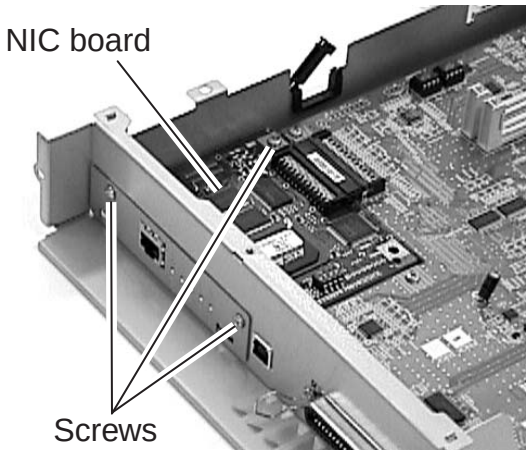

Figure 5-73 Preparation for Installation 9

b-4) Attaching to the main unit

(1) When attaching the PCL unit, check to make sure that the core of the 10-pin cable must be placed between the backside of the PCL unit and the cable clip. (Do not place the core on the PCL unit board surface) After that, secure the PCL unit with six screws.

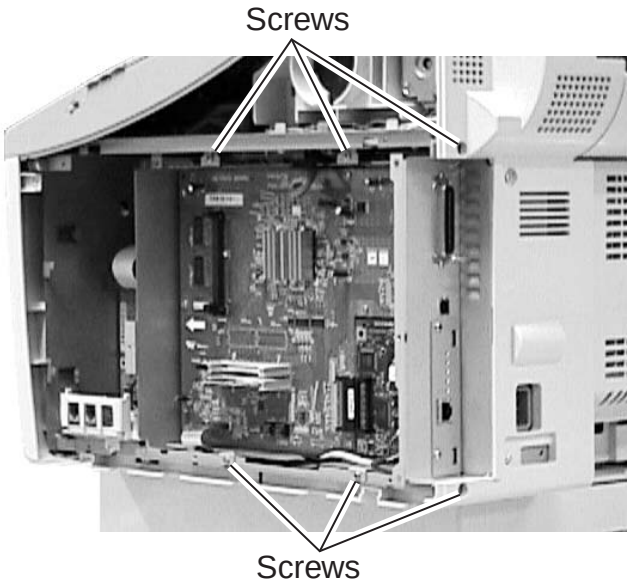

Figure 5-74 Network Kit Installation 1

(2) Remove the screw, and fix the 10-pin cable with the clamp included with the FAX-L2000 Printer Kit. After that, connect the 10-pin cable to the connector J6 of the PCL board, and then secure it in place using black clamp. Press the cable toward the PCL board as much as possible.

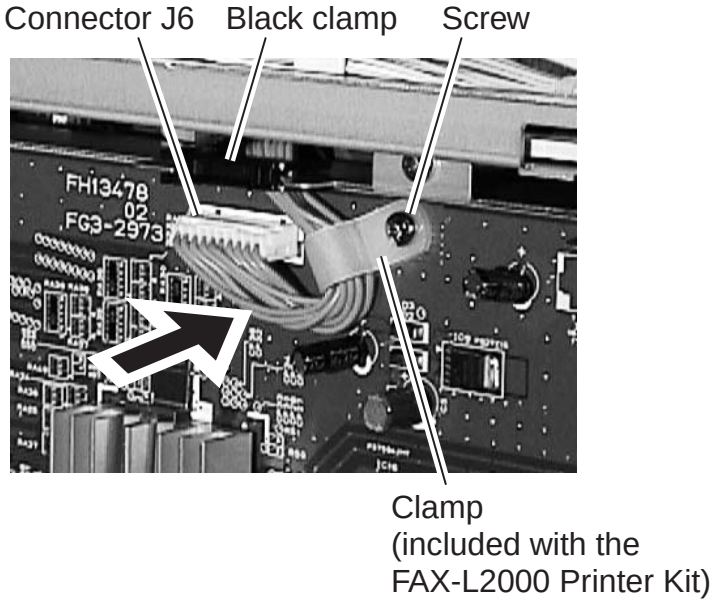

Figure 5-75 Network Kit Installation 2

(3) Connect the flat cable to the connector J5 of the PCL board.
(4) Connect the 5-pin cable to the two connectors of the NIC board, and then secure it in place using clamp.

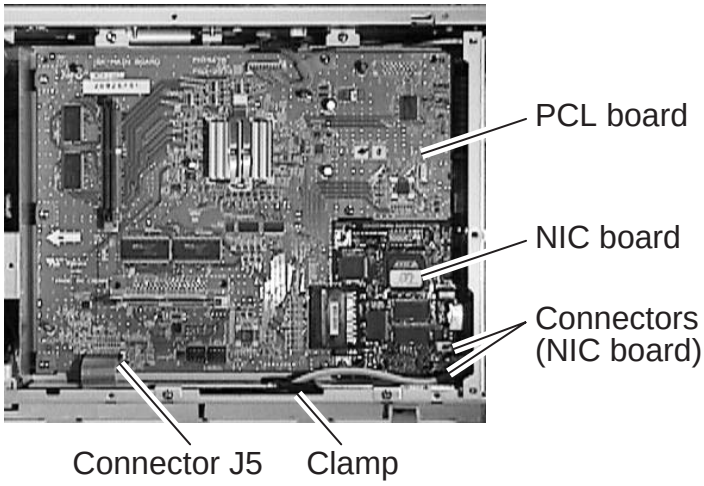

Figure 5-76 Network Kit Installation 3

(5) Fasten the shield plate in place with the eight screws.

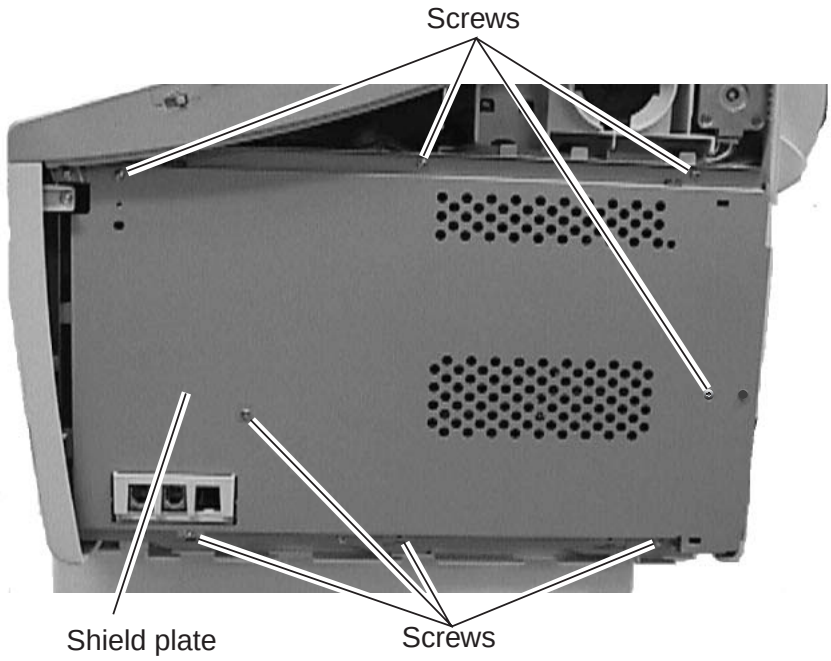

Figure 5-77 Network Kit Installation 4

(6) Fasten the right cover in place with the two screws.
(7) Connect the modular cord (telephone line) to the fax (L1 jack).

b-5) Check after the Kit Installation

After installing the kit, carry out the following procedure to ensure that the kit is properly identified by the main unit.

(1) Connect the power supply cord to the main unit.
(2) Carry out COLD RESET by the following procedure in service mode.
Press the Data Registration button and the # button to go into service mode.
Press the Search button to display “#8 PDL” and press the OK button.
Press the Search button to display “PDL-PCL MENU” and press the OK button.
Press the Search button to display “COLD RESET A4” reset is carried out by pressing the OK button. “READY” is displayed later on.
(3) Carry out COLD RESET again after ensuring the display “READY”.
(4) After ensuring the display “READY” carry out the following procedure to ensure that “NIC Version” is displayed.
Press the Data Registration button and the # button to go into service mode.
Press the Search button to display “#13 ROM” and press the OK button.
Press the Search button to display “NIC” and ensure the display “ROM Version”.
(5) Output the TEST PRINT about the PCL board by the following procedure, and ensure that the operation is done properly.
Press the PRT. Message button on the operation panel to light a lamp.
Press the Go button and the Menu button to display “TEST MENU”.
Select “TEST PRINT” by pressing the Item button, and press the Enter/cancel button.
The TEST PRINT on which the state of the PCL board is printed is outputted if the kit has been installed properly.
(6) Ensure that the items of ETHERNET MENU are printed on the TEST PRINT outputted at step (5).
(7) Ensure that the ERR LED indicator on the NIC board is off.

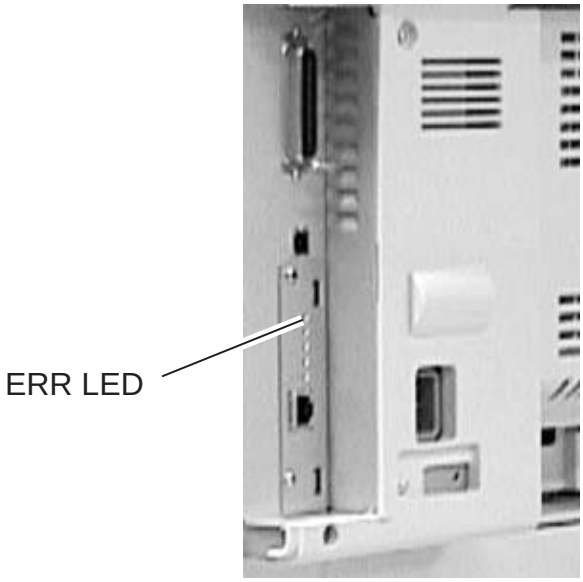

Figure 5-78 Check of the Nic board LED

b-6) Removing the kit

When removing the kit, perform the steps in *b-4) Attaching to the main unit* in reverse order. Be sure to remove the kit only after turning the power off.

3.6.3 Technical information

a) Specifications

Interface	10Base-T, 100Base-TX
CPU	RISC CPU (100 MHz)
Protocol	IPX/SPX, PServer, NDS PServer, NDPS, LPD, Port9100, NetBIOS IPP, PAP (Apple Talk Printer Access Protocol)

3.6.4 Maintenance and service

a) Troubleshooting

The fax does not recognize the FAX-L2000 Network Kit even when it is attached properly.

Solutions:
(1) Check that the kit is securely connected.
(2) Replace the kit.
(3) Replace the SCNT board.

This page intentionally left blank

Canon

SERVICE MANUAL FAX-L2000IP FAX-L2000

SERVICE MANUAL FAX-L2000IP FAX-L2000
SERVICE MANUAL FAX-L2000IP FAX-L2000
SERVICE MANUAL FAX-L2000IP FAX-L2000
SERVICE MANUAL FAX-L2000IP FAX-L2000
SERVICE MANUAL FAX-L2000IP FAX-L2000
SERVICE MANUAL FAX-L2000IP FAX-L2000
SERVICE MANUAL FAX-L2000IP FAX-L2000
SERVICE MANUAL FAX-L2000IP FAX-L2000
SERVICE MANUAL FAX-L2000IP FAX-L2000
SERVICE MANUAL FAX-L2000IP FAX-L2000
SERVICE MANUAL FAX-L2000IP FAX-L2000
SERVICE MANUAL FAX-L2000IP FAX-L2000
SERVICE MANUAL FAX-L2000IP FAX-L2000
SERVICE MANUAL FAX-L2000IP FAX-L2000
SERVICE MANUAL FAX-L2000IP FAX-L2000
SERVICE MANUAL FAX-L2000IP FAX-L2000
SERVICE MANUAL FAX-L2000IP FAX-L2000
SERVICE MANUAL FAX-L2000IP FAX-L2000