KYOCERA

FS-1920
FS-3820N
FS-3830N

TONER+
www.tonerplus.com.ua

SERVICE MANUAL

Published in June 2006
842FR116
2FRSM066
Rev.6

Revision history

Revision	Date	Replaced pages	Remarks
1.0	8-Jan-2004	-	-
1.1	15-Jan-2004	1-4-9, 1-5-1, 1-5-5, 2-3-2, 2-3-3	Corrected: Product code 2FP/2FR
1.2	28-Jan-2004	Revised all	Combined: FS-3820N model (2FY)
1.3	14-Feb-2004	2-4-1 to 2-4-14	
1.4	19-Mar-2004	1-1-5	
2	28-May-2004	1-1-1, 1-1-3, 1-1-5, 1-4-1, 1-5-2, 1-5-3, 1-5-11, 1-5-13, 1-5-20, 1-5-21, 1-6-24, 1-6-25, 2-1-11, 2-3-5, 2-3-6	
3	7 January 2005	1-1-2, 1-1-4, 1-1-5, 1-1-6	
4	15 December 2005	1-4-1, 1-4-9, 1-6-13, 1-6-14, 1-6-36	
5	9 May 2006	1-4-6, 1-4-7, 1-4-8, 1-4-9, Address	
6	23 June 2006	1-4-2, 1-4-3, 1-4-4, 1-4-5, 1-4-7, 1-4-8, Address	

TONER
www.tonerplus.com.ua

Safety precautions

This booklet provides safety warnings and precautions for our service personnel to ensure the safety of their customers, their machines as well as themselves during maintenance activities. Service personnel are advised to read this booklet carefully to familiarize themselves with the warnings and precautions described here before engaging in maintenance activities.

www.tonerplus.com.ua

Safety warnings and precautions

Various symbols are used to protect our service personnel and customers from physical danger and to prevent damage to their property. These symbols are described below:

⚠**DANGER**: High risk of serious bodily injury or death may result from insufficient attention to or incorrect compliance with warning messages using this symbol.

⚠**WARNING**:Serious bodily injury or death may result from insufficient attention to or incorrect compliance with warning messages using this symbol.

⚠**CAUTION**: Bodily injury or damage to property may result from insufficient attention to or incorrect compliance with warning messages using this symbol.

Symbols

The triangle (△) symbol indicates a warning including danger and caution. The specific point of attention is shown inside the symbol.

General warning.

Warning of risk of electric shock.

Warning of high temperature.

⃠ indicates a prohibited action. The specific prohibition is shown inside the symbol.

General prohibited action.

Disassembly prohibited.

● indicates that action is required. The specific action required is shown inside the symbol.

General action required.

Remove the power plug from the wall outlet.

Always ground the copier.

TONER+
www.tonerplus.com.ua

1. Installation Precautions

⚠ WARNING

- Do not use a power supply with a voltage other than that specified. Avoid multiple connections to one outlet: they may cause fire or electric shock. When using an extension cable, always check that it is adequate for the rated current. .....

- Connect the ground wire to a suitable grounding point. Not grounding the copier may cause fire or electric shock. Connecting the earth wire to an object not approved for the purpose may cause explosion or electric shock. Never connect the ground cable to any of the following: gas pipes, lightning rods, ground cables for telephone lines and water pipes or faucets not approved by the proper authorities. .....

⚠ CAUTION:

- Do not place the copier on an infirm or angled surface: the copier may tip over, causing injury. .....

- Do not install the copier in a humid or dusty place. This may cause fire or electric shock. .....

- Do not install the copier near a radiator, heater, other heat source or near flammable material. This may cause fire. .....

- Allow sufficient space around the copier to allow the ventilation grills to keep the machine as cool as possible. Insufficient ventilation may cause heat buildup and poor copying performance. .....

- Always handle the machine by the correct locations when moving it. .....

- Always use anti-toppling and locking devices on copiers so equipped. Failure to do this may cause the copier to move unexpectedly or topple, leading to injury. .....

- Avoid inhaling toner or developer excessively. Protect the eyes. If toner or developer is accidentally ingested, drink a lot of water to dilute it in the stomach and obtain medical attention immediately. If it gets into the eyes, rinse immediately with copious amounts of water and obtain medical attention. .....

- Advice customers that they must always follow the safety warnings and precautions in the copier's instruction handbook. .....

TONER+
www.tonerplus.com.ua

2. Precautions for Maintenance

⚠ WARNING

- Always remove the power plug from the wall outlet before starting machine disassembly. .....
- Always follow the procedures for maintenance described in the service manual and other related brochures. .....
- Under no circumstances attempt to bypass or disable safety features including safety mechanisms and protective circuits. .....
- Always use parts having the correct specifications. .....
- Always use the thermostat or thermal fuse specified in the service manual or other related brochure when replacing them. Using a piece of wire, for example, could lead to fire or other serious accident. .....
- When the service manual or other serious brochure specifies a distance or gap for installation of a part, always use the correct scale and measure carefully. .....
- Always check that the copier is correctly connected to an outlet with a ground connection. .....
- Check that the power cable covering is free of damage. Check that the power plug is dust-free. If it is dirty, clean it to remove the risk of fire or electric shock. .....
- Never attempt to disassemble the optical unit in machines using lasers. Leaking laser light may damage eyesight. .....
- Handle the charger sections with care. They are charged to high potentials and may cause electric shock if handled improperly. .....

⚠ CAUTION

- Wear safe clothing. If wearing loose clothing or accessories such as ties, make sure they are safely secured so they will not be caught in rotating sections. .....
- Use utmost caution when working on a powered machine. Keep away from chains and belts. .....
- Handle the fixing section with care to avoid burns as it can be extremely hot. .....
- Check that the fixing unit thermistor, heat and press rollers are clean. Dirt on them can cause abnormally high temperatures. .....
- Do not remove the ozone filter, if any, from the copier except for routine replacement. .....

TONER+
www.tonerplus.com.ua

- Do not pull on the AC power cord or connector wires on high-voltage components when removing them; always hold the plug itself. .....

- Do not route the power cable where it may be stood on or trapped. If necessary, protect it with a cable cover or other appropriate item. .....

- Treat the ends of the wire carefully when installing a new charger wire to avoid electric leaks. .....

- Remove toner completely from electronic components. .....

- Run wire harnesses carefully so that wires will not be trapped or damaged. .....

- After maintenance, always check that all the parts, screws, connectors and wires that were removed, have been refitted correctly. Special attention should be paid to any forgotten connector, trapped wire and missing screws. .....

- Check that all the caution labels that should be present on the machine according to the instruction handbook are clean and not peeling. Replace with new ones if necessary. .....

- Handle greases and solvents with care by following the instructions below: .....
  - · Use only a small amount of solvent at a time, being careful not to spill. Wipe spills off completely.
  - · Ventilate the room well while using grease or solvents.
  - · Allow applied solvents to evaporate completely before refitting the covers or turning the main switch on.
  - · Always wash hands afterwards.

- Never dispose of toner or toner bottles in fire. Toner may cause sparks when exposed directly to fire in a furnace, etc. .....

- Should smoke be seen coming from the copier, remove the power plug from the wall outlet immediately. .....

3. Miscellaneous

⚠WARNING

- Never attempt to heat the drum or expose it to any organic solvents such as alcohol, other than the specified refiner; it may generate toxic gas. .....

TONER+
www.tonerplus.com.ua

This page is intentionally left blank.

TONER+
www.tonerplus.com.ua

CONTENTS

1-1 Specifications

1-1-1 Specifications 1-1-1
1-1-2 Name of parts 1-1-7
(1) Overall 1-1-7
(2) Operator panel 1-1-8
1-1-3 Machine cross section 1-1-9

1-2 Handling Precautions

1-2-1 Drum 1-2-1
1-2-2 Installation environment 1-2-1

1-3 Installation

1-3-1 Unpacking and installation 1-3-1
(1) Installation procedure 1-3-1
1-3-2 Installing the optional expanding memory 1-3-8
1-3-3 Installing the optional memory card (CompactFlash) 1-3-10
1-3-4 Installing the optional harddisk (Microdrive) 1-3-11
1-3-5 Installing the optional network interface card 1-3-12

1-4 Maintenance

1-4-1 Service mode 1-4-1
(1) Executing service mode 1-4-1
1-4-2 Maintenance 1-4-12
(1) Cleaning the paper transfer unit 1-4-12
(2) Replacing the developer 1-4-13

1-5 Troubleshooting

1-5-1 Paper misfeed detection 1-5-1
(1) Paper misfeed indication 1-5-1
(2) Paper misfeed detection 1-5-1
1-5-2 Self-diagnosis 1-5-2
(1) Self-diagnostic function 1-5-2
(2) Self-diagnostic indication 1-5-2
1-5-3 Image formation problems 1-5-15
(1) Completely blank printout 1-5-16
(2) No image appears (entirely black). 1-5-16
(3) Dropouts. 1-5-17
(4) Black dots. 1-5-17
(5) Black horizontal streaks. 1-5-18
(6) Black vertical streaks. 1-5-18
(7) Unsharpness. 1-5-19
(8) Gray background. 1-5-19
(9) Dirt on the top edge or back of the paper. 1-5-20
(10) Undulated printing at the left edge (scanning start position). 1-5-20
1-5-4 Electrical problems 1-5-21
(1) Defective waste toner box detecting. 1-5-21
(2) Defective paper jam detecting. 1-5-21
(3) Defective paper gauge sensing. 1-5-21
(4) Defective paper size detecting. 1-5-22
(5) Defective message displaying (LCD) [1] 1-5-22
(6) Defective message displaying (LCD) [2] 1-5-22
(7) Defective face up/down solenoid operating. 1-5-23
(8) False "Close paper transfer unit". 1-5-23
(9) False "Close top cover". 1-5-23

TONER
www.tonerprinter.com.ua

1-5-5 Mechanical problems 1-5-24
(1) No primary paper feed. 1-5-24
(2) No secondary paper feed. 1-5-24
(3) Skewed paper feed. 1-5-24
(4) Multiple sheets of paper are fed at one time. 1-5-24
(5) Paper jams. 1-5-24
(6) Abnormal noise is heard. 1-5-24

1-6 Assembly and Disassembly

1-6-1 Precautions for assembly and disassembly 1-6-1
(1) Precautions 1-6-1
1-6-2 Removing the developer 1-6-2
(1) Removing the developer 1-6-2
1-6-3 Removing the paper transfer unit 1-6-4
1-6-4 Removing the main charger unit 1-6-5
1-6-5 Removing the operator panel and outer covers 1-6-6
(1) Removing the operator panel 1-6-6
(2) Removing the top cover/face-down output tray 1-6-7
(3) Removing the right cover 1-6-8
(4) Removing the left cover 1-6-9
1-6-6 Removing the drum unit 1-6-10
1-6-7 Removing the pickup roller and feed roller 1-6-11
1-6-8 Removing the MP tray paper feed unit, MP tray feed roller and retard holder (roller) 1-6-13
(1) Removing the MP tray paper feed unit 1-6-13
(2) Removing the MP tray feed roller 1-6-14
(3) Removing the retard holder (roller) 1-6-14
1-6-9 Removing the transfer roller 1-6-15
1-6-10 Removing the controller unit and the principal circuit board 1-6-16
(1) Removing and opening the controller unit 1-6-16
(2) Removing the engine board and power supply unit 1-6-20
(3) Removing the main board 1-6-22
(4) Removing the high voltage unit 1-6-23
(5) Removing the sensor board 1-6-24
1-6-11 Removing the drive unit and main motor 1-6-25
1-6-12 Removing and splitting the fuser unit 1-6-27
(1) Removing the separators 1-6-30
(2) Removing the heater lamp 1-6-31
(3) Removing the heat roller 1-6-32
(4) Removing the thermistor and thermal cutout 1-6-33
(5) Removing the press roller 1-6-34
1-6-13 Removing the laser scanner unit 1-6-35
1-6-14 Replacing the ozone filter B and ozone filter 1-6-36
(1) Replacing the ozone filter B and ozone filter 1-6-36

1-7 Upgrading the Firmware

1-7-1 Upgrading the firmware on the main board 1-7-1
(1) Firmware program data format 1-7-2
(2) Downloading the firmware from the parallel interface 1-7-3
(3) Downloading the firmware from the memory card 1-7-5
(4) Downloading errors 1-7-7

TONER
www.tonerplus.com.au

2-1 Mechanical Construction

2-1-1 Paper feeding system 2-1-1
(1) Paper feeding system 2-1-1
(2) Paper feed control 2-1-2
(3) Paper feeding mechanism 2-1-3

2-1-2 Electrophotographic cycle 2-1-6
(1) Main charging 2-1-7
(2) Exposure 2-1-10
(3) Development 2-1-13
(4) Transfer 2-1-16
(5) Fusing 2-1-17
(6) Cleaning 2-1-19

2-2 Electrical Parts Layout

2-2-1 Electrical parts layout 2-2-1
(1) Main frame (fuser, laser scanner unit, and controller unit) 2-2-1
(2) Drum and developer 2-2-3

2-3 Operation of the PWBs

2-3-1 Main board 2-3-1
2-3-2 Engine board 2-3-3
2-3-3 Power supply unit 2-3-8

2-4 Appendixes

Timing chart No. 1 Paper cassette feeding, A4 size paper [For FS-1920/3820N models] 2-4-1
Timing chart No. 2 Paper cassette feeding, Letter size paper [For FS-1920/3820N models] 2-4-2
Timing chart No. 3 Paper cassette feeding, Legal size paper [For FS-1920/3820N models] 2-4-3
Timing chart No. 4 MP tray feeding, A4 size paper [For FS-1920/3820N models] 2-4-4
Timing chart No. 5 MP tray feeding, A4 size paper [For FS-1920/3820N models] 2-4-5
Timing chart No. 6 MP tray feeding, A4 size paper [For FS-1920/3820N models] 2-4-6
Timing chart No. 7 Optional paper feeder feeding, A4 size paper [For FS-1920/3820N models] 2-4-7
Timing chart No. 8 Paper cassette feeding, A4 size paper [For FS-3830N model] 2-4-8
Timing chart No. 9 Paper cassette feeding, Letter size paper [For FS-3830N model] 2-4-9
Timing chart No. 10 Paper cassette feeding, Legal size paper [For FS-3830N model] 2-4-10
Timing chart No. 11 MP tray feeding, A4 size paper [For FS-3830N model] 2-4-11
Timing chart No. 12 MP tray feeding, A4 size paper [For FS-3830N model] 2-4-12
Timing chart No. 13 MP tray feeding, A4 size paper [For FS-3830N model] 2-4-13
Timing chart No. 14 Optional paper feeder feeding, A4 size paper [For FS-3830N model] 2-4-14
Wiring diagram [For FS-1920 model] 2-4-15
Wiring diagram [For FS-3820N model] 2-4-16
Wiring diagram [For FS-3830N model] 2-4-17
Repetitive defects gauge 2-4-18

TONER+
www.tonerplus.com.ua

This page is intentionally left blank.

TONER+
www.tonerplus.com.ua

1-1-1 Specifications

FS-1920 model

Type	Desktop
Printing system	Indirect electrostatic system
Paper type	Cassette: Plain paper (60 - 90 g/m^2 [thick paper mode: 90 - 105 g/m^2]) MP tray: Plain paper (60 - 90 g/m^2 [thick paper mode: 90 - 200 g/m^2]) Special paper: Transparencies, letterhead, colored paper, recycled paper Note: Use the MP tray for special paper
Paper size	A4 (210 × 297 mm) B5 (182 × 257 mm) A5 (148 × 210 mm) Letter (8$^1/_2$" × 11") Legal (8$^1/_2$" × 14") Folio (210 × 330 mm) Non-standard size (148 to 215.9 mm × 210 to 355.6 mm: cassette), (148 to 215.9 mm × 210 to 355.6 mm: MP tray)
Printing speed	[Cassette/MP tray]: 28 pages//min. (A4, plain, 29 pages//min. (Letter, plain) [Duplexer DU-61]: 27 pages//min. (A4/Letter, plain) [Paper feeder PF-60]: 28 pages//min. (A4/Letter, plain) [Sorter SO-60]: 28 pages//min. (A4/Letter, plain) [Small size paper]: 18 pages/min. (A5, plain), 13 pages/min. (Post card)
First print	Approx. 9.5 s or less (A4/Letter), EcoFuser [OFF] and Ready, (room temperature 23°C/73.4°F, humidity 60% RH) , depends on input data Approx. 19.5 s or less (A4/Letter), EcoFuser [ON] or Sleep mode, (room temperature 23°C/73.4°F, humidity 60% RH) , depends on input data
Warm-up time	Approx. 10 s or less [from sleep mode] Approx. 18 s or less [from power on]
Paper feed system	One universal cassette and one MP tray
Paper loading capacity	Cassette: 500 sheets (80 g/m^2, 0.11 µm) MP tray: 100 sheets (80 g/m^2, 0.11 µm)
Paper eject system	Face down: 250 sheets (80 g/m^2, 0.11 µm) Face up: 250 sheets (80 g/m^2, 0.11 µm) Face up: 100 sheets (80 g/m^2, 0.11 µm), Optional paper tray PT-60
Standard memory	32 MB, expandable up to 288 MB
Additional memory	1 slot (16/32/64/128/256 MB DIMM)
Resolution	Fast 1200 mode 600 × 600 dpi, with KIR (Kyocera Image Refinement) 300 × 300 dpi, with KIR (Kyocera Image Refinement)
Photoconductor	a-Si (drum diameter 30 mm)
Charging system	Single positive corona charging
Developing system	Single element reversing process
Transfer system	Transfer roller
Fixing system	Heat roller Heat source: Halogen heaters (750 W) Control temperature: 180°C/356°F (at normal ambient temperature) Abnormally high temperature protection device: thermal cutout
Charge erasing system	Exposure by eraser lamp (LED array)
Cleaning system	Cleaning blade
Controller hardware	CPU: Power PC405 (266 MHz) System ROM: 4 MB (32 Mbit × 1) Font ROM: 2 MB (16 Mbit × 1) Main RAM: 32 MB standard (on-board); expanding up to 288 MB (standard 32 MB + 256 MB) at the maximum by adding optional expansion memory Optional expansion RAM (DIMM): 1 slot

TONER
www.tonerplus.com.ua

Controller software	a) Emulation PCL6 (PCL5e+PCLXL) KPDL3 (PostScript 3 compatible) b) Fonts: Bitmap font: 1 Line Printer bitmap font Outline fonts: 35 PCL6 (PCL5e/PCL-XL) fonts 45 KPDL2 fonts: c) Graphic: (1) Raster graphic: 75, 100, 150, 200*, 300, 600* dpi (*200 dpi is supported when the resolution is 600 dpi.) (2) Vector graphic: Line, Box, Circle, Arc, Fill pattern etc. (3) Bar code: One-dimensional bar code: 45 types Two-dimensional bar code: 1 type (PDF-417) d) Connectivity Plug & play, Windows 95/98/Me/NT4.0/2000/XP
Interface	Parallel: High-speed (bi-directional), IEEE 1284 Nibble/ECP mode USB: Full-Speed USB2.0 Optional interface (KUIO-LV) × 1: Network interface card IB-20 (10 Base-TX/100 Base-TX/10 Base-2), IB-21E (10 Base-TX/100 Base-TX), wireless LAN card IB-22 must be installed. Optional serial interface: RS-232C (Max. 115.2 Kbps), Serial interface board IB-11 must be installed.
Dimensions	345 (W)× 300 (H) × 390 (D) mm $13^{9}/_{16}$" (W) × $11^{13}/_{16}$" (H) × $18^{1}/_{4}$" (D)
Weight	Approx. 13.2 kg/$29^{9}/_{16}$ lbs
Floor requirements	496 (W) × 740 (D) mm $19^{9}/_{16}$" (W) × $29^{3}/_{16}$" (D)
Power source	120 V AC, 60 Hz, 8.0 A 220 - 240 V AC, 50/60 Hz, 3.9 A
Power consumption	Max.: 979 W (120 V AC), 987 W (220 - 240 V AC), During printing: 422 W (120 V AC), 425 W (220 - 240 V AC) During sleep mode: 5.6 W (120 V AC), 5.3 W (220 - 240 V AC)
Noise	Printing: 55 dB(A) Ready: 33 dB(A)
Options	Paper feeder PF-60, Envelope feeder EF-60, Duplexer DU-61, Face-up tray PT-4 (for printer), Face-up tray PT-60 (for duplexer), Sorter SO-60, Printer base unit PB-60, Additional memory (DIMM 16/32/64/128/256 MB), Memory card, Hard disk (IBM Microdrive 340/512 MB/1 GB), Network interface card IB20/IB21E/IB-22, Serial interface board IB-11

TONER+
www.tonerplus.com.ua

FS-3820N model

Type	Desktop
Printing system	Indirect electrostatic system
Paper type	Cassette: Plain paper (60 - 90 g/m^2 [thick paper mode: 90 - 105 g/m^2]) MP tray: Plain paper (60 - 90 g/m^2 [thick paper mode: 90 - 200 g/m^2]) Special paper: Transparencies, letterhead, colored paper, recycled paper Note: Use the MP tray for special paper
Paper size	A4 (210 × 297 mm) B5 (182 × 257 mm) A5 (148 × 210 mm) Letter (8$^1/_2$" × 11") Legal (8$^1/_2$" × 14") Folio (210 × 330 mm) Non-standard size (148 to 215.9 mm × 210 to 355.6 mm: cassette), (148 to 215.9 mm × 210 to 355.6 mm: MP tray)
Printing speed	[Cassette/MP tray]: 28 pages/min. (A4, plain), 29 pages/min. (Letter, plain) [Duplexer DU-61]: 27 pages/min. (A4/Letter, plain) [Paper feeder PF-8E]: 28 pages/min. (A4/Letter, plain) [Sorter SO-60]: 28 pages/min. (A4/Letter, plain) [Small size paper]: 20 pages/min. (A5, plain), 15 pages/min. (Post card)
First print	Approx. 9.5 s or less (A4/Letter), EcoFuser [OFF] and Ready, (room temperature 23°C/73.4°F, humidity 60% RH) , depends on input data Approx. 19.5 s or less (A4/Letter), EcoFuser [ON] or Sleep mode, (room temperature 23°C/73.4°F, humidity 60% RH) , depends on input data
Warm-up time	Approx. 10 s or less [from sleep mode] Approx. 18 s or less [from power on]
Paper feed system	One universal cassette and one MP tray
Paper loading capacity	Cassette: 500 sheets (80 g/m^2, 0.11 µm) MP tray: 100 sheets (80 g/m^2, 0.11 µm)
Paper eject system	Face down: 250 sheets (80 g/m^2, 0.11 µm) Face up: 250 sheets (80 g/m^2, 0.11 µm) Face up: 100 sheets (80 g/m^2, 0.11 µm), Optional paper tray PT-60
Standard memory	64 MB, expandable up to 320 MB
Additional memory	1 slot (16/32/64/128/256 MB DIMM)
Resolution	Fast 1200 mode 600 × 600 dpi, with KIR (Kyocera Image Refinement) 300 × 300 dpi, with KIR (Kyocera Image Refinement)
Photoconductor	a-Si (drum diameter 30 mm)
Charging system	Single positive corona charging
Developing system	Single element reversing process
Transfer system	Transfer roller
Fixing system	Heat roller Heat source: Halogen heaters (750 W) Control temperature: 180°C/356°F (at normal ambient temperature) Abnormally high temperature protection device: thermal cutout
Charge erasing system	Exposure by eraser lamp (LED array)
Cleaning system	Cleaning blade
Controller hardware	CPU: Power PC750CXe (300 MHz) System ROM: 4 MB (16 Mbit × 2) Font ROM: 2 MB (16 Mbit × 1) Main RAM: [Standard] 64 MB (on-board); [Expanding] up to 320 MB (64 MB + 256 MB × 1) at the maximum by adding optional expansion memory Optional expansion RAM (DIMM): 1 slot

TONER
www.tonerplus.com.ua

Controller software	a) Emulation PCL6 (PCL5e+PCLXL) KPDL3 (PostScript 3 compatible) b) Fonts: Bitmap font: 1 Line Printer bitmap font Outline fonts: 35 PCL6 (PCL5e/PCL-XL) fonts 45 KPDL2 fonts: c) Graphic: (1) Raster graphic: 75, 100, 150, 200*, 300, 600* dpi (*200 dpi is supported when the resolution is 600 dpi.) (2) Vector graphic: Line, Box, Circle, Arc, Fill pattern etc. (3) Bar code: One-dimensional bar code: 45 types Two-dimensional bar code: 1 type (PDF-417) d) Connectivity Plug & play, Windows 95/98/Me/NT4.0/2000/XP
Interface	Parallel: High-speed (bi-directional), IEEE 1284 Nibble/ECP mode USB: Hi-Speed USB 2.0 (480 Mbps)/Full-Speed USB 2.0 (12 Mbps) Network: Protocol support TCP/IP, IPX/SPX, NetBEUI, EtherTalk Optional interface (KUIO-LV) × 1: Network interface card IB-20 (10 Base-TX/100 Base-TX/10 Base-2), IB-21E (10 Base-TX/100 Base-TX), wireless LAN card IB-22 must be installed. Optional serial interface: RS-232C (Max. 115.2 Kbps), Serial interface board IB-11 must be installed.
Dimensions	345 (W)× 300 (H) × 390 (D) mm $13^{9}/_{16}$" (W) × $11^{13}/_{16}$" (H) × $18^{1}/_{4}$" (D)
Weight	Approx. 13.2 kg/$29^{9}/_{16}$ lbs
Floor requirements	496 (W) × 740 (D) mm $19^{9}/_{16}$" (W) × $29^{3}/_{16}$" (D)
Power source	120 V AC, 60 Hz, 8.0 A 220 - 240 V AC, 50/60 Hz, 4.0 A
Power consumption	Max.: 1008 W During printing: 425 W During sleep mode: 13 W
Noise	Printing: 55 dB(A) Ready: 33 dB(A)
Options	Paper feeder PF-60, Envelope feeder EF-60, Duplexer DU-61, Face-up tray PT-4 (for printer), Face-up tray PT-60 (for duplexer), Sorter SO-60, Printer base unit PB-60, Additional memory (DIMM 16/32/64/128/256 MB), Memory card, Hard disk (IBM Microdrive 340/512 MB/1 GB), Network interface card IB20/IB21E/IB-22, Serial interface board IB-11

TONER+
www.tonerplus.com.ua

FS-3830N model

Type	Desktop
Printing system	Indirect electrostatic system
Paper type	Cassette: Plain paper (60 - 90 g/m^2 [thick paper mode: 90 - 105 g/m^2]) MP tray: Plain paper (60 - 90 g/m^2 [thick paper mode: 90 - 200 g/m^2]) Special paper: Transparencies, letterhead, colored paper, recycled paper Note: Use the MP tray for special paper
Paper size	A4 (210 × 297 mm) B5 (182 × 257 mm) A5 (148 × 210 mm) Letter (8$^1/_2$" × 11") Legal (8$^1/_2$" × 14") Folio (210 × 330 mm) Non-standard size (148 to 215.9 mm × 210 to 355.6 mm: cassette), (148 to 215.9 mm × 210 to 355.6 mm: MP tray)
Printing speed	[Cassette/MP tray]: 33 pages/min. (A4, plain), 35 pages/min. (Letter, plain) [Duplexer DU-61]: 30 pages/min. (A4/Letter, plain) [Paper feeder PF-8E]: 31 pages/min. (A4/Letter, plain) [Sorter SO-60]: 28 pages/min. (A4/Letter, plain) [Small size paper]: 20 pages/min. (A5, plain), 15 pages/min. (Post card)
First print	Approx. 11.5 s or less (A4/Letter), EcoFuser [OFF] and Ready, (room temperature 23°C/73.4°F, humidity 60% RH) , depends on input data Approx. 26.5 s or less (A4/Letter), EcoFuser [ON] or Sleep mode, (room temperature 23°C/73.4°F, humidity 60% RH) , depends on input data
Warm-up time	Approx. 15 s or less [from sleep mode] Approx. 20 s or less [from power on]
Paper feed system	One universal cassette and one MP tray
Paper loading capacity	Cassette: 500 sheets (80 g/m^2, 0.11 µm) MP tray: 100 sheets (80 g/m^2, 0.11 µm)
Paper eject system	Face down: 250 sheets (80 g/m^2, 0.11 µm) Face up: 250 sheets (80 g/m^2, 0.11 µm) Face up: 100 sheets (80 g/m^2, 0.11 µm), Optional paper tray PT-60
Standard memory	96 MB, expandable up to 576 MB
Additional memory	2 slots (16/32/64/128/256 MB DIMM)
Resolution	Fast 1200 mode 600 × 600 dpi, with KIR (Kyocera Image Refinement) 300 × 300 dpi, with KIR (Kyocera Image Refinement)
Photoconductor	a-Si (drum diameter 30 mm)
Charging system	Single positive corona charging
Developing system	Single element reversing process
Transfer system	Transfer roller
Fixing system	Heat roller Heat source: Halogen heaters (750 W) Control temperature: 180°C/356°F (at normal ambient temperature) Abnormally high temperature protection device: thermal cutout
Charge erasing system	Exposure by eraser lamp (LED array)
Cleaning system	Cleaning blade
Controller hardware	CPU: Power PC750CXe (300 MHz) System ROM: 4 MB (16 Mbit × 2) Font ROM: 2 MB (16 Mbit × 1) Main RAM: [Standard] 64 MB (on-board) + 32 MB DIMM; [Expanding] up to 576 MB (64 MB + 256 MB × 2) at the maximum by adding optional expansion memory Optional expansion RAM (DIMM): 2 slots

TONER+
www.tonerplus.com.ua

Controller software	a) Emulation PCL6 (PCL5e+PCLXL) KPDL3 (PostScript 3 compatible) b) Fonts: Bitmap font: 1 Line Printer bitmap font Outline fonts: 35 PCL6 (PCL5e/PCL-XL) fonts 45 KPDL2 fonts: c) Graphic: (1) Raster graphic: 75, 100, 150, 200*, 300, 600* dpi (*200 dpi is supported when the resolution is 600 dpi.) (2) Vector graphic: Line, Box, Circle, Arc, Fill pattern etc. (3) Bar code: One-dimensional bar code: 45 types Two-dimensional bar code: 1 type (PDF-417) d) Connectivity Plug & play, Windows 95/98/Me/NT4.0/2000/XP
Interface	Parallel: High-speed (bi-directional), IEEE 1284 Nibble/ECP mode USB: Hi-Speed USB 2.0 (480 Mbps)/Full-Speed USB 2.0 (12 Mbps) Network: Protocol support TCP/IP, IPX/SPX, NetBEUI, EtherTalk Optional interface (KUIO-LV) × 1: Network interface card IB-20 (10 Base-TX/100 Base-TX/10 Base-2), IB-21E (10 Base-TX/100 Base-TX), wireless LAN card IB-22 must be installed. Optional serial interface: RS-232C (Max. 115.2 Kbps), Serial interface board IB-11 must be installed.
Dimensions	345 (W)× 300 (H) × 390 (D) mm $13^{9}/_{16}$" (W) × $11^{13}/_{16}$" (H) × $18^{1}/_{4}$" (D)
Weight	Approx. 13.2 kg/$29^{9}/_{16}$ lbs
Floor requirements	496 (W) × 740 (D) mm $19^{9}/_{16}$" (W) × $29^{3}/_{16}$" (D)
Power source	120 V AC, 60 Hz, 8.0 A 220 - 240 V AC, 50/60 Hz, 4.0 A
Power consumption	Max.: 1008 W During sleep mode: 512 W During sleep mode: 13 W
Noise	Printing: 57 dB(A) Ready: 36 dB(A)
Options	Paper feeder PF-60, Envelope feeder EF-60, Duplexer DU-61, Face-up tray PT-4 (for printer), Face-up tray PT-60 (for duplexer), Sorter SO-60, Printer base unit PB-60, Additional memory (DIMM 16/32/64/128/256 MB), Memory card, Hard disk (IBM Microdrive 340/512 MB/1 GB), Network interface card IB20/IB21E/IB-22, Serial interface board IB-11

TONER+
www.tonerplus.com.ua

1-1-2 Name of parts

(1) Overall

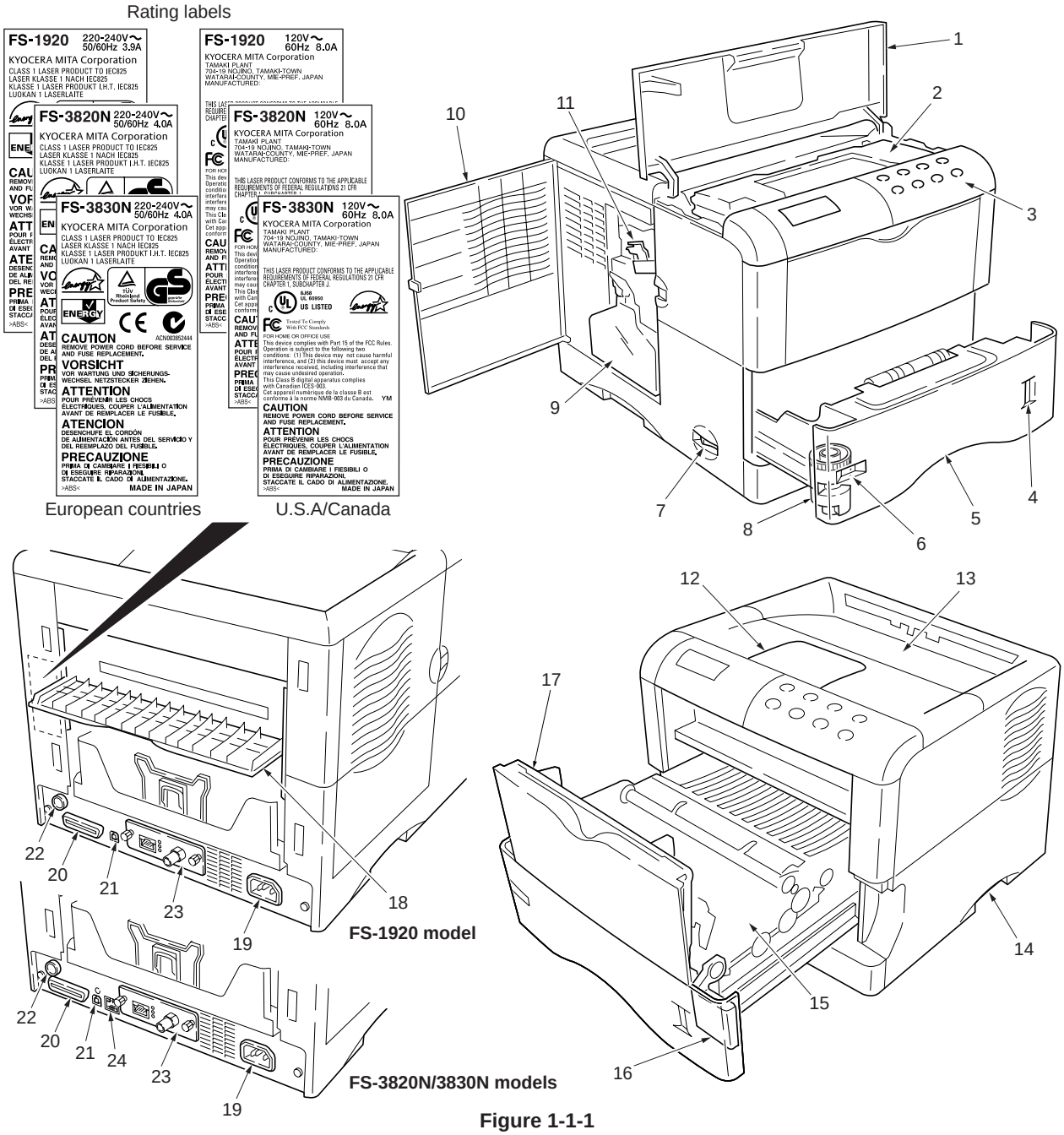

Figure 1-1-1

1. Top cover
2. Toner container
3. Operator panel
4. Paper gauge
5. Paper cassette
6. Paper size window
7. Power switch
8. Paper size dial
9. Waste toner box
10. Left cover
11. Charger Cleaning knob
12. Paper stopper
13. Face-down output tray
14. Memory card slot
15. Paper transfer unit
16. Paper transfer unit release lever
17. MP tray
18. Rear cover
19. AC inlet
20. Parallel interface connector
21. USB interface connector
22. Option unit connector
23. Network interface card (option) or serial interface board (option)
24. Network interface connector (for FS-3820N/3830N models only)

TONER
www.tonerplus.com.ua

(2) Operator panel

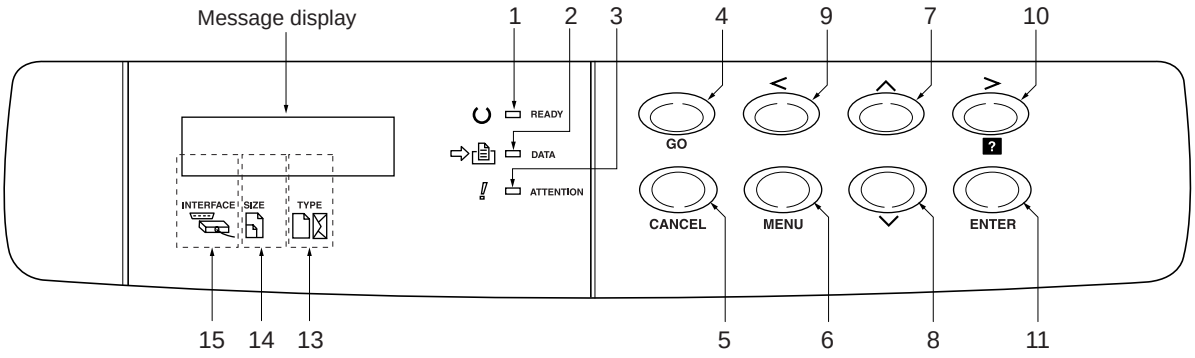

Figure 1-1-2

1. Ready indicator
2. Data indicator
3. Attention indicator
4. GO key
5. CANCEL key
6. MENU key
7. △ key
8. ▽ key
9. ◁ key
10. ▷? key
11. ENTER key
12. TYPE indicator
13. SIZE indicator
14. INTERFACE indicator
15. Message display

TONER
www.tonerplus.com.ua

1-1-3 Machine cross section

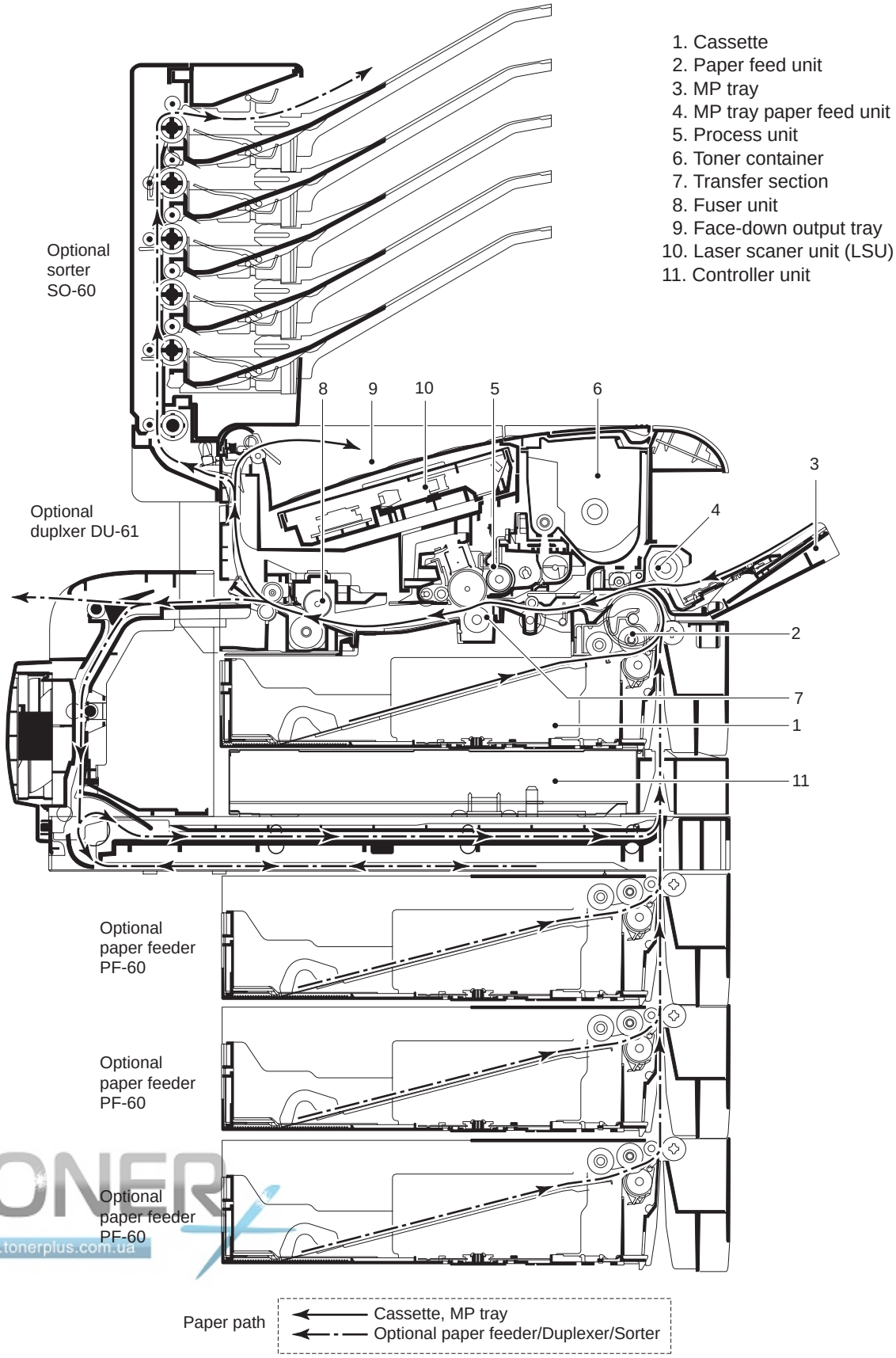

TONER
www.tonerplus.com.ua

Figure 1-1-3

This page is intentionally left blank.

TONER+
www.tonerplus.com.ua

1-2-1 Drum

Note the following when handling or storing the drum.

- When removing the process unit, never expose the drum surface to strong direct light.
- Keep the drum at an ambient temperature between 10°C/50°F and 32.5°C/90.5°F and at a relative humidity not higher than 80% RH. Avoid abrupt changes in temperature and humidity.
- Avoid exposure to any substance which is harmful to or may affect the quality of the drum.
- Do not touch the drum surface with any object. Should it be touched by hands or stained with oil, clean it.

1-2-2 Installation environment

1. Temperature: 10 - 32.5°C/50 - 90.5°F
2. Humidity: 20 - 80%RH
3. Power supply: 120 V AC, 7.1 A
   220 - 240 V AC, 3.8 A
4. Power source frequency: 50 Hz ±0.3%/60 Hz ±0.3%
5. Installation location

- Avoid direct sunlight or bright lighting. Ensure that the photoconductor will not be exposed to direct sunlight or other strong light when removing paper jams.
  Avoid extremes of temperature and humidity, abrupt ambient temperature changes, and hot or cold air directed onto the machine.
- Avoid dust and vibration.
- Choose a surface capable of supporting the weight of the machine.
- Place the machine on a level surface (maximum allowance inclination: 1°).
- Avoid air-borne substances that may adversely affect the machine or degrade the photoconductor, such as mercury, acidic of alkaline vapors, inorganic gasses, NOx, SOx gases and chlorine-based organic solvents. Select a room with good ventilation.

6. Allow sufficient access for proper operation and maintenance of the machine.
   Machine front: 50 mm/19 11/16" Machine rear: 40 mm/15 3/4"
   Machine right: 25 mm/9 7/8" Machine left: 25 mm/9 7/8"
   Machine above: 30 mm/11 13/16"

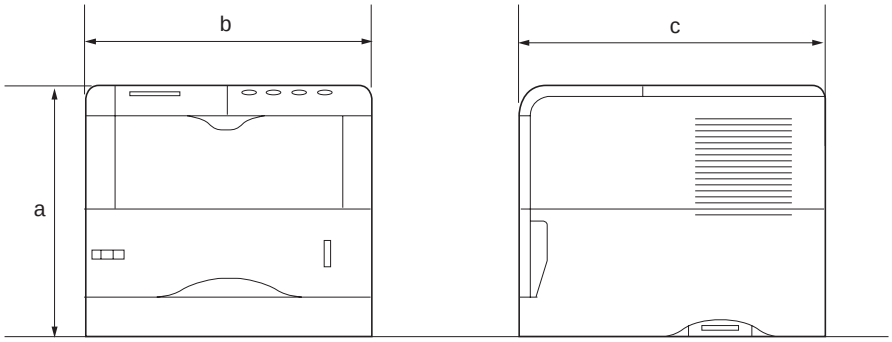

a: 300 mm/14 3/4"
b: 345 mm/14 7/8"
c: 390 mm/9 1/4"

Figure 1-2-1 Installation dimensions

TONER+
www.tonerplus.com.ua

This page is intentionally left blank.

TONER+
www.tonerplus.com.ua

1-3-1 Unpacking and installation

(1) Installation procedure

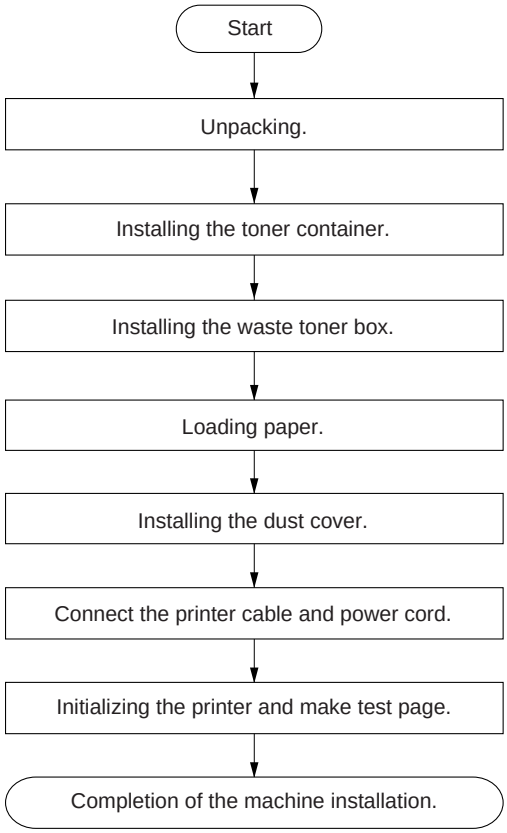

TONER
www.tonerplus.com.ua

Unpack.

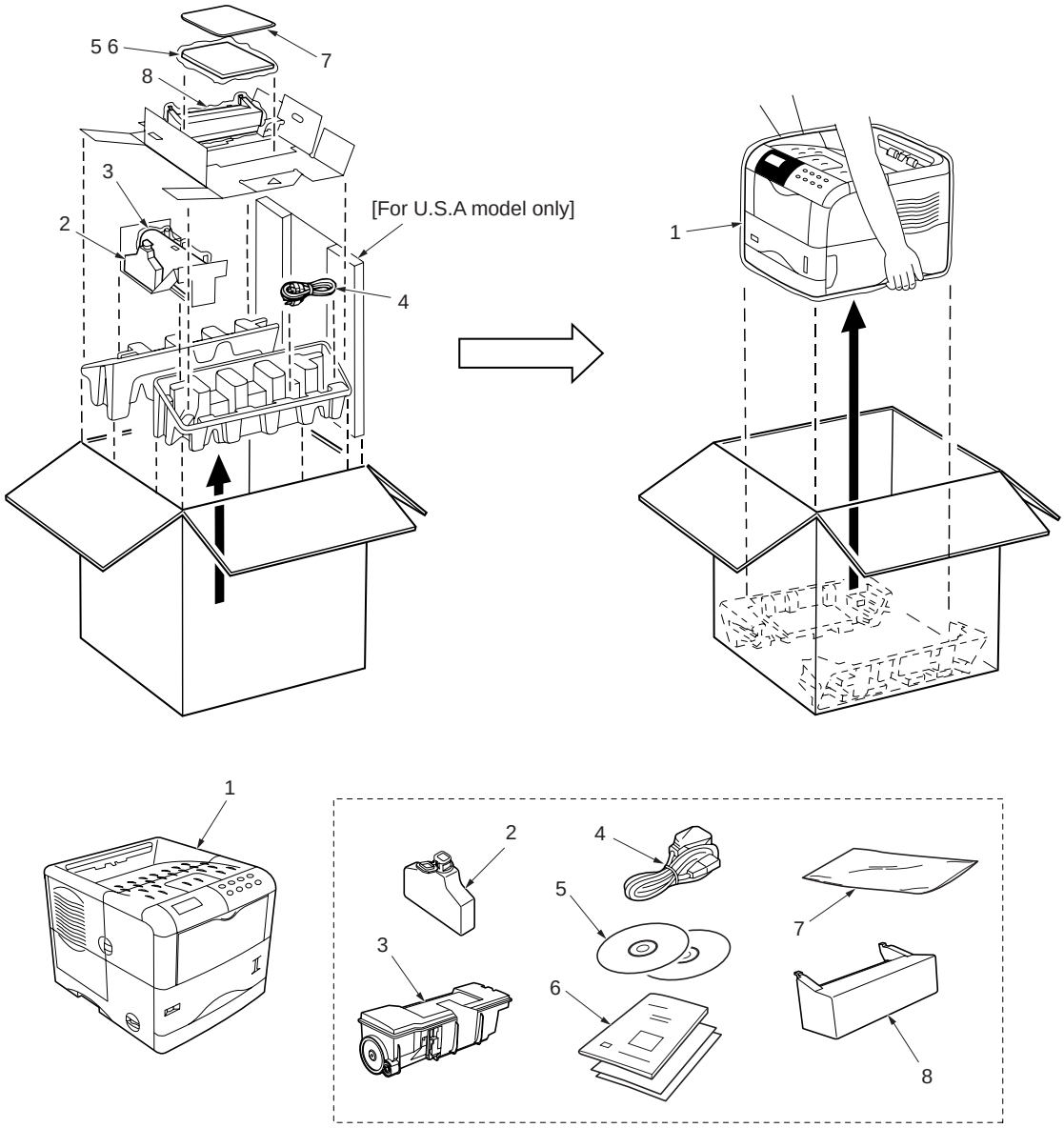

Figure 1-3-1 Unpacking

1. Printer
2. Waste toner box
3. Toner container
4. Power cord
5. CD-ROMs
6. Installation guide and other printed matter
7. Plastic bag for developer
8. Dust cover [For U.S.A model only]

TONER
www.tonerplus.com.ua

Installing the toner container.

1. With the label side down, thoroughly shake the toner container (in the direction of the arrow) ten times or more to loosen and mix the toner inside.

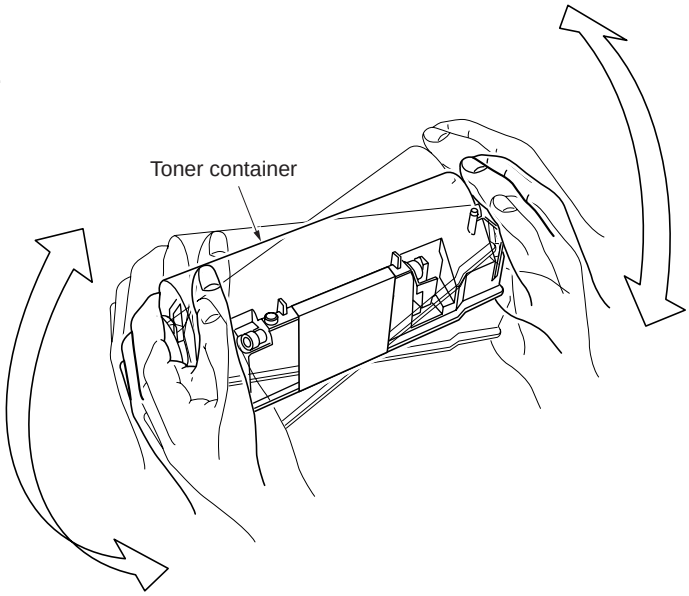

Figure 1-3-2

2. Carefully remove the protective seal.

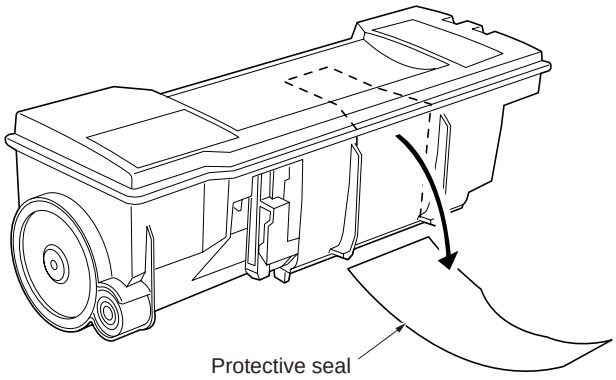

Figure 1-3-3

3. Open the printer top cover all the way.
4. Install the toner container into the printer.

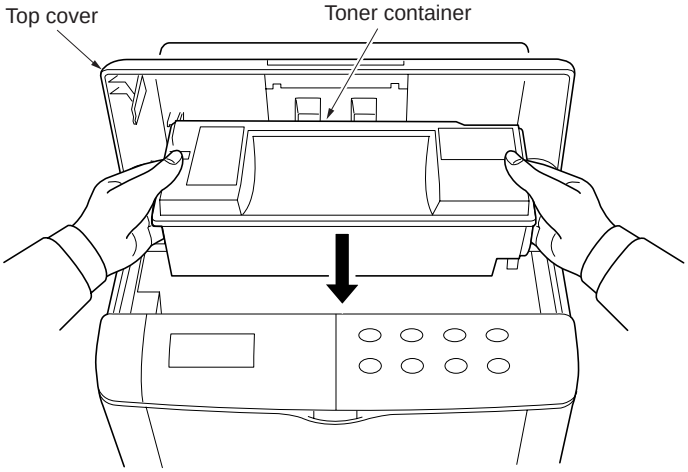

Figure 1-3-4

TONER
www.tonerplus.com.ua

5. Push firmly on the top of the toner container at the positions marked PUSH HERE.
6. Close the top cover.

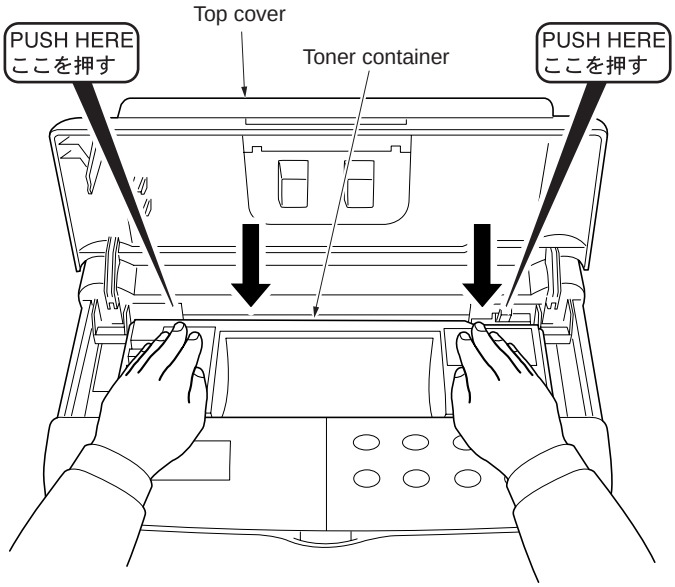

Figure 1-3-5

Install the waste toner box.

1. Open the cap of the waste toner box.

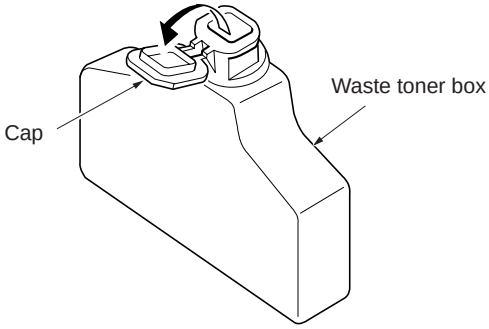

Figure 1-3-6

2. Open the left cover on the left side of the printer.
3. Insert the waste toner box as shown in the figure. The box will be locked when it fits into place.

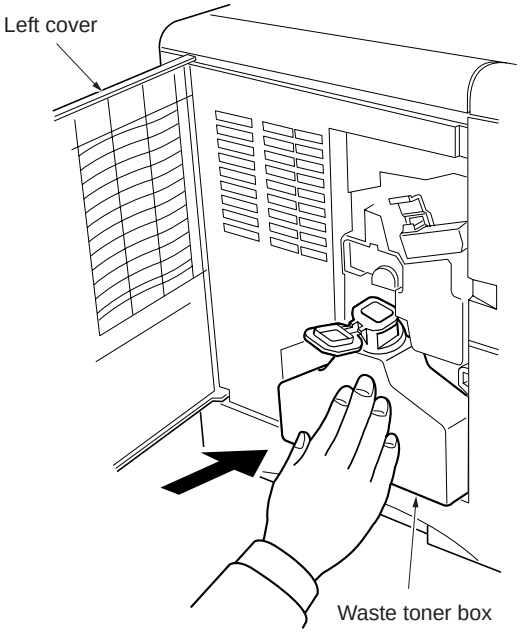

Figure 1-3-7

TONER+
www.tonerplus.com.ua

Load paper.

1. Pull the cassette out of the printer.
2. Set the paper in the cassette.

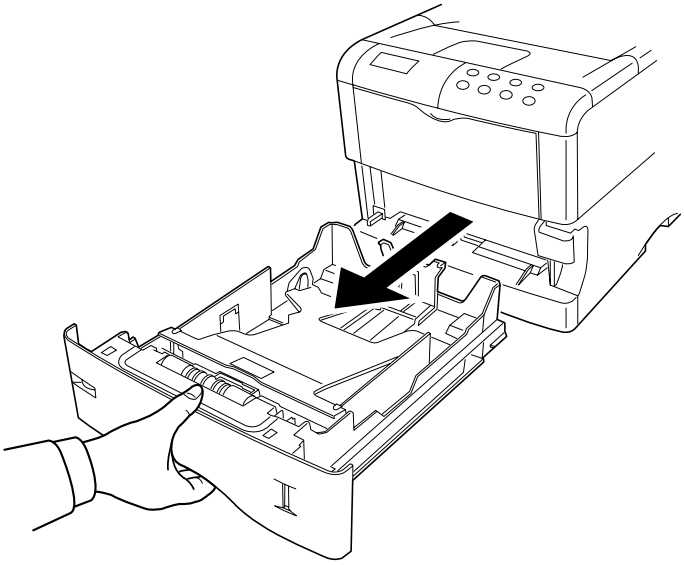

Figure 1-3-8

Installing the dust cover.

1. If you have installed a paper cassette that can hold the legal size paper, install the dust cover at the back of the printer (The legal size cassette and the dust cover are supplied for U.S.A. model only)

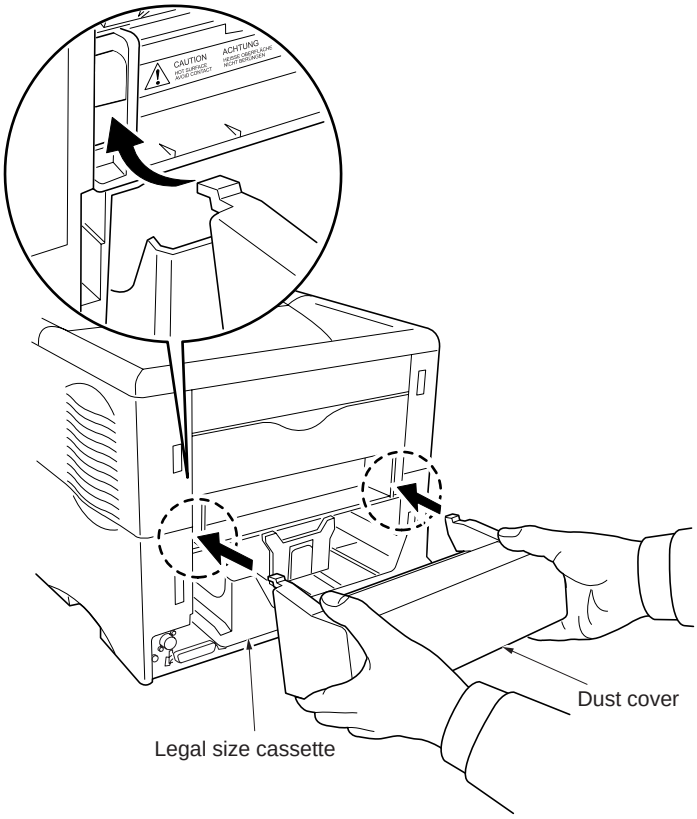

Figure 1-3-9

TONER
www.tonerplus.com.ua

Connect the printer cable and power cord.

1. Connect the printer cable (parallel, USB or network* interface).
   *: For FS-3820N/3830N models only.

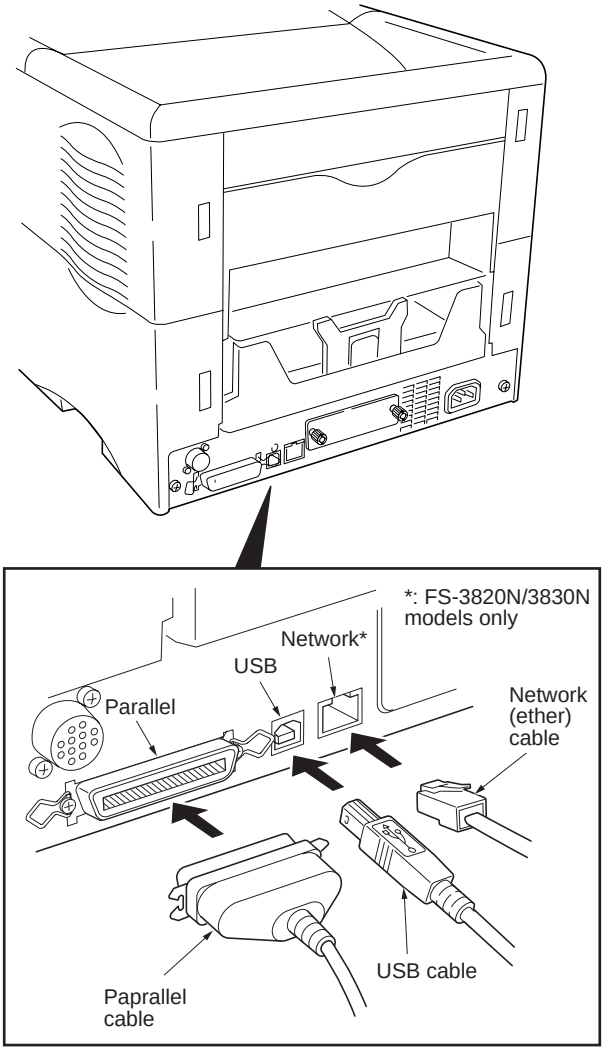

Figure 1-3-10

2. Connect the power cord to AC inlet.

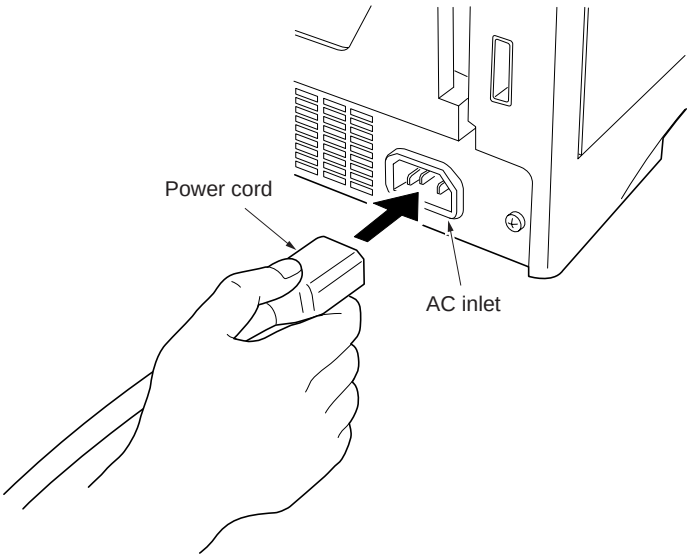

Figure 1-3-11

TONER+
www.tonerplus.com.ua

Initializing the printer and make test print.

1. Turn on the printer's power switch. The message display should indicate [Self test].
   When the printer is first switched on after installation, there will be a delay of approximately 8 minutes before the printer gets ready to print as the developer needs to be filled with toner. During this period, the message display shows [Please wait (Adding toner)].
2. Wait until the READY indicator is also lit and the message display indicates [Ready]. The printer is ready to print.
3. The printer can print two different types of status page standard and service-purpose. A service-purpose status page contains more detailed information about printer settings than a standard status page.

   To print standard status page
   (1) Press the MENU key on the operator panel.
   (2) Press the △ or ▽ key repeatedly until the message display shows [>>Print Status Page].
   (3) Press the ENTER key twice. The message display indicates [Processing] during printing of the standard status page, then returns to [Ready].

   To print service status page
   (1) Press the MENU key on the operator panel.
   (2) Press the △ or ▽ key repeatedly until the message display shows [Others >].
   (3) Press the ▷ key.
   (4) Press the △ or ▽ key repeatedly until the message display shows [>Service >].
   (5) Press the ▷ key.
   (6) Press the △ or ▽ key repeatedly until the message display shows [>>Print Status Page].
   (7) Press the ENTER key twice. The message display indicates [Processing] during printing of the service status page, then returns to [Ready].

Completion of machine installation.

TONER+
www.tonerplus.com.ua

1-3-2 Installing the optional expanding memory

The main board of the printer is equipped with one socket for memory expansion. Expansion memory is available in the form of DIMM (Dual In-line Memory Module).

CAUTION
Take precautions that no foreign substances such as metal chips or liquid get inside the printer during the installation process. Operation of the printer during the presence of a foreign substance may lead to fire or electric shock.

WARNING
Turn the printer's power switch off. Unplug the printer's power cable.

Procedure

1. Remove the two screws and then pull the main board all the way out of the printer.
   There are two DIMM sockets are provided on the FS-3830N model, and one DIMM socket on the FS-1920/3820N models for expanding the printer's memory.
   (The extra 32 MB of DIMM memory that come standard with the FS-3830N model is installed in one of the expanding DIMM sockets.)

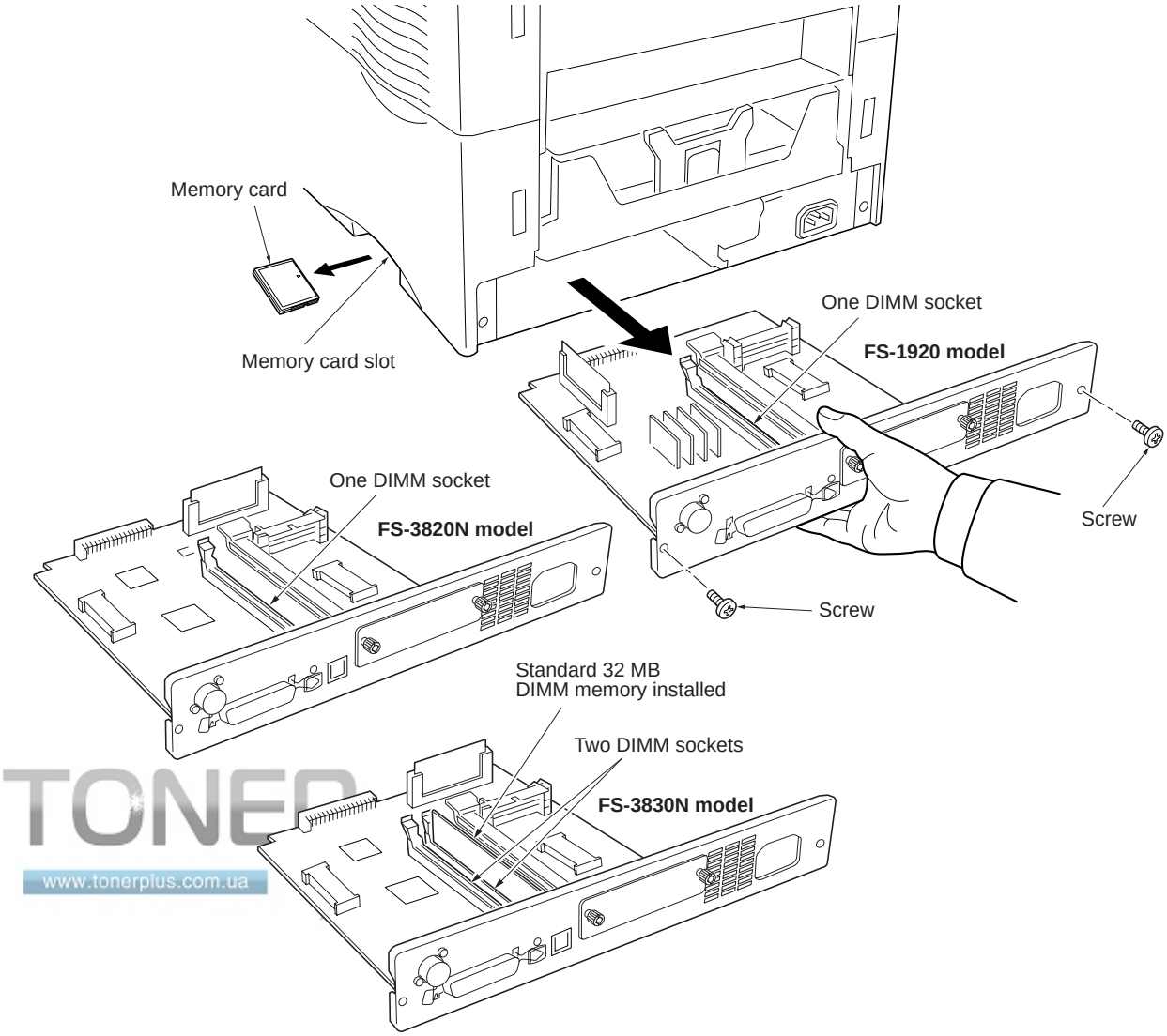

TONER
www.tonerplus.com.ua

Figure 1-3-12 Removing the main board

2. Open the clips on both ends of the DIMM socket.
3. Insert the DIMM into the DIMM socket so that the notches on the DIMM align with the corresponding protrusions in the slot.
4. Close the clips on the DIMM slot to secure the DIMM.

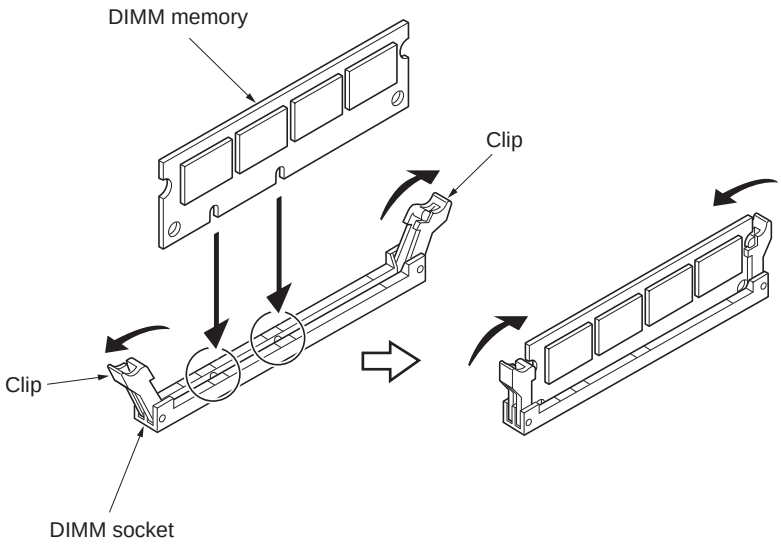

Figure 1-3-13 Inserting the DIMM

TONER
www.tonerplus.com.ua

1-3-3 Installing the optional memory card (CompactFlash)

The main board of the printer is equipped with one slot for memory card.

CAUTION
Take precautions that no foreign substances such as metal chips or liquid get inside the printer during the installation process. Operation of the printer during the presence of a foreign substance may lead to fire or electric shock.

WARNING
Turn the printer's power switch off. Unplug the printer's power cable and disconnect the printer from the computer or the network. Never insert or remove a memory card while the printer power is ON.

Failure to turn the power switch OFF will immediately halt the printer with a [Memory card err20] message (this message may not always appear). It also could result in any damage to the printer's electronic parts or the memory card. Turn the power switch ON again to restart the printer.

Procedure
1. Turn the power switch off.
2. Insert the memory card in the memory card slot at the right bottom of the printer. Insert it face up, connector end first. Push it in all the way.

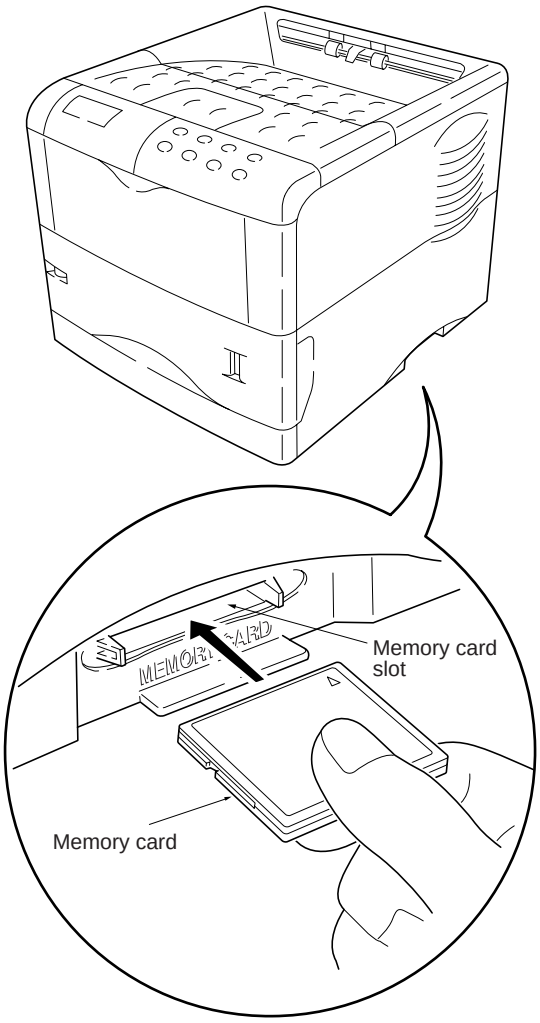

Figure 1-3-14 Inserting the memory card

TONER+
www.tonerplus.com.ua

1-3-4 Installing the optional harddisk (Microdrive)

The main board of the printer is equipped with one socket for harddisk.

CAUTION
Take precautions that no foreign substances such as metal chips or liquid get inside the printer during the installation process. Operation of the printer during the presence of a foreign substance may lead to fire or electric shock.

WARNING
Turn the printer's power switch off. Unplug the printer's power cable.

Procedure
1. Remove the two screws and then pull the main board all the way out of the printer. (See page 1-3-8)
2. Install the harddisk (Microdrive) into its socket on the main board.

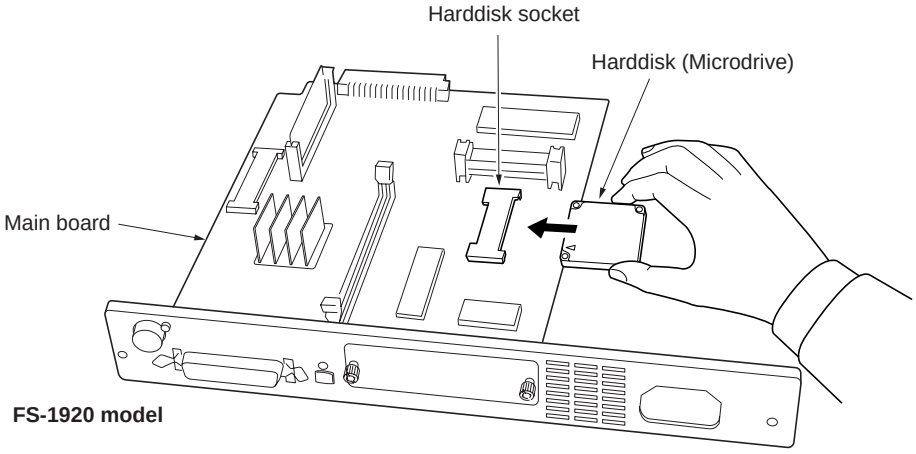

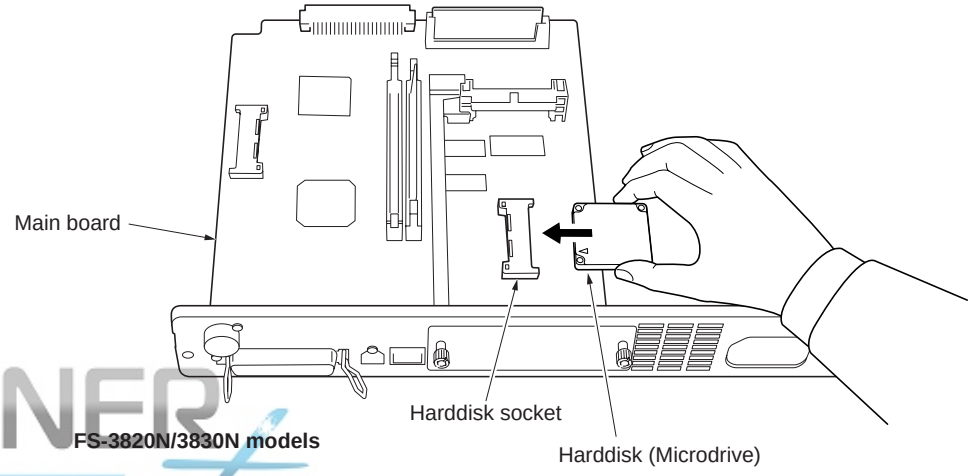

TONER
www.tonerplus.com.ua

Figure 1-3-15 Installing the harddisk (Microdrive)

1-3-5 Installing the optional network interface card

The main board of the printer is equipped with a network interface card slot (KUIO-LV type, 3.3 V).
If the serial interface board kit is installed, remove it to use the network interface card.

CAUTION
Take precautions that no foreign substances such as metal chips or liquid get inside the printer during the installation process. Operation of the printer during the presence of a foreign substance may lead to fire or electric shock.

WARNING
Turn the printer's power switch off. Unplug the printer's power cable.

Procedure
1. Turn the power switch off.
2. Remove the two screws then remove the option interface card slot cover.
3. Insert the network interface card to the option interface card slot.
4. Fix the network interface card by two screws.
5. Connect the network cable to the network interface card.
6. Set the network address from the printer operator panel. (Refer to the printer's user's manual)

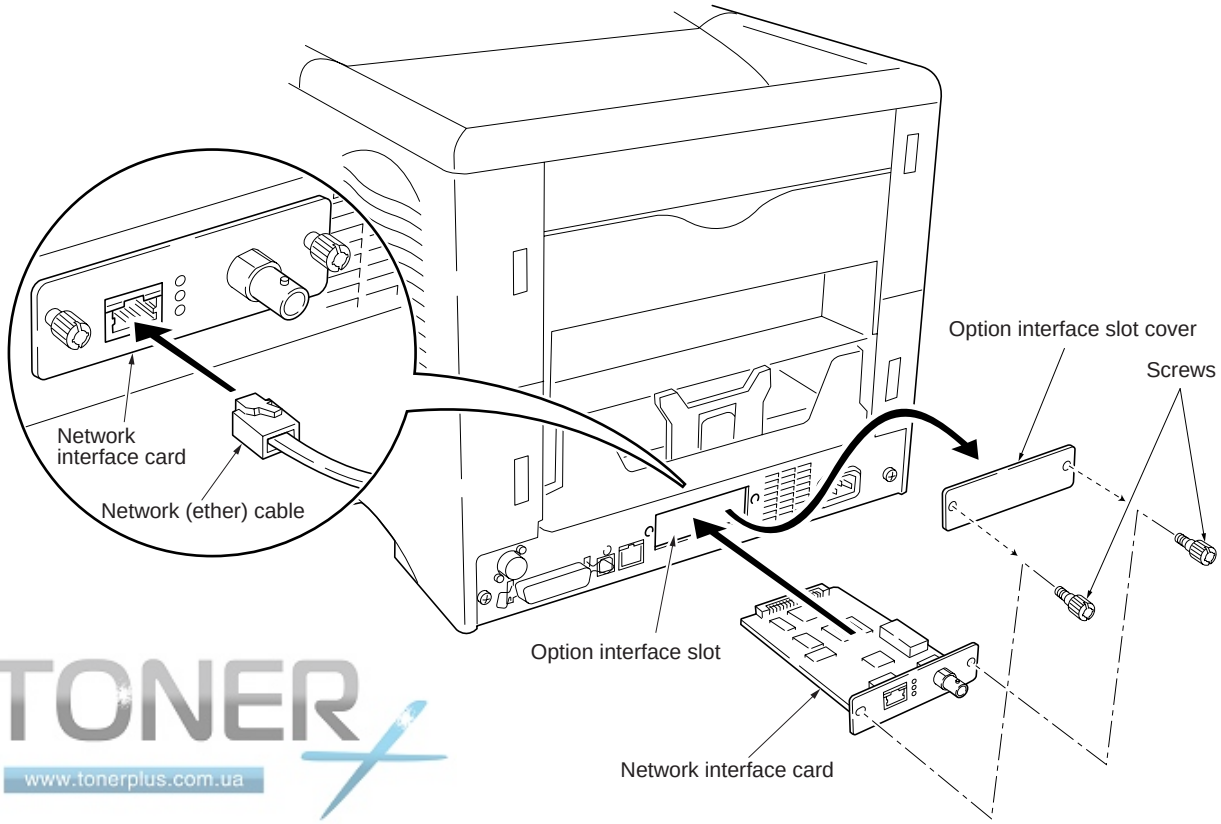

TONER
www.tonerplus.com.ua

Figure 1-3-16 Installing the optional network interface card

1-4-1 Service mode

The printer is equipped with the service mode that can be accessed in the menu system. The service mode is intended for use by the service person for maintenance and service for the items explained in the following sections.

(1) Executing service mode

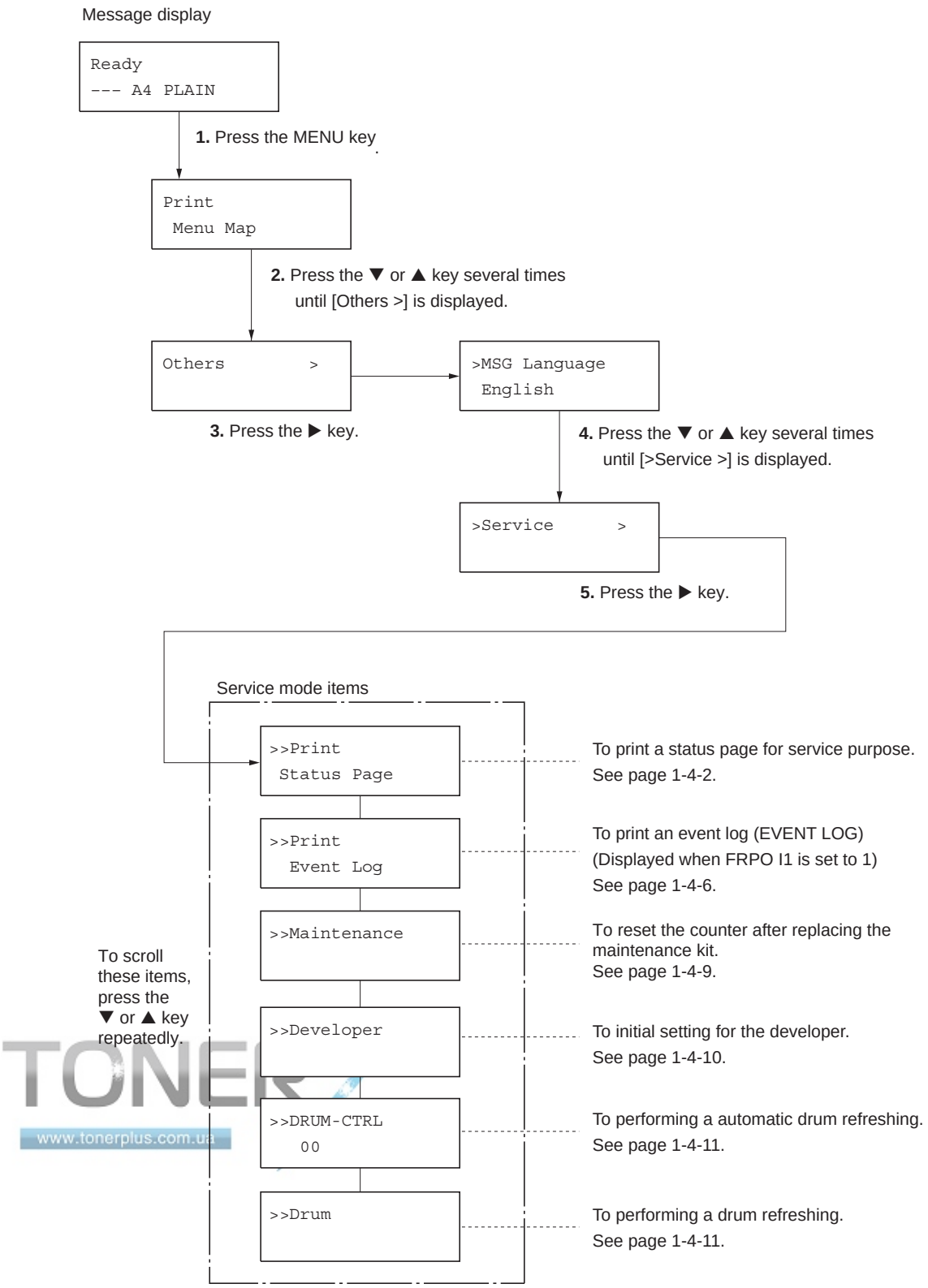

TONER
www.tonerplus.com.ua

Service items	Description
`>>Print Status Page`	**Printing a status page for service purpose** **Description** Service information on the status page include various settings for the printer, service statistics, etc. **Purpose** To understand the machine environments and general settings. **Method** 1. Enter the service mode [>>Printing Status Page]. 2. Press the Enter key. [?] will be displayed. 3. Press the Enter key. The status page is printed. (See the figure below)

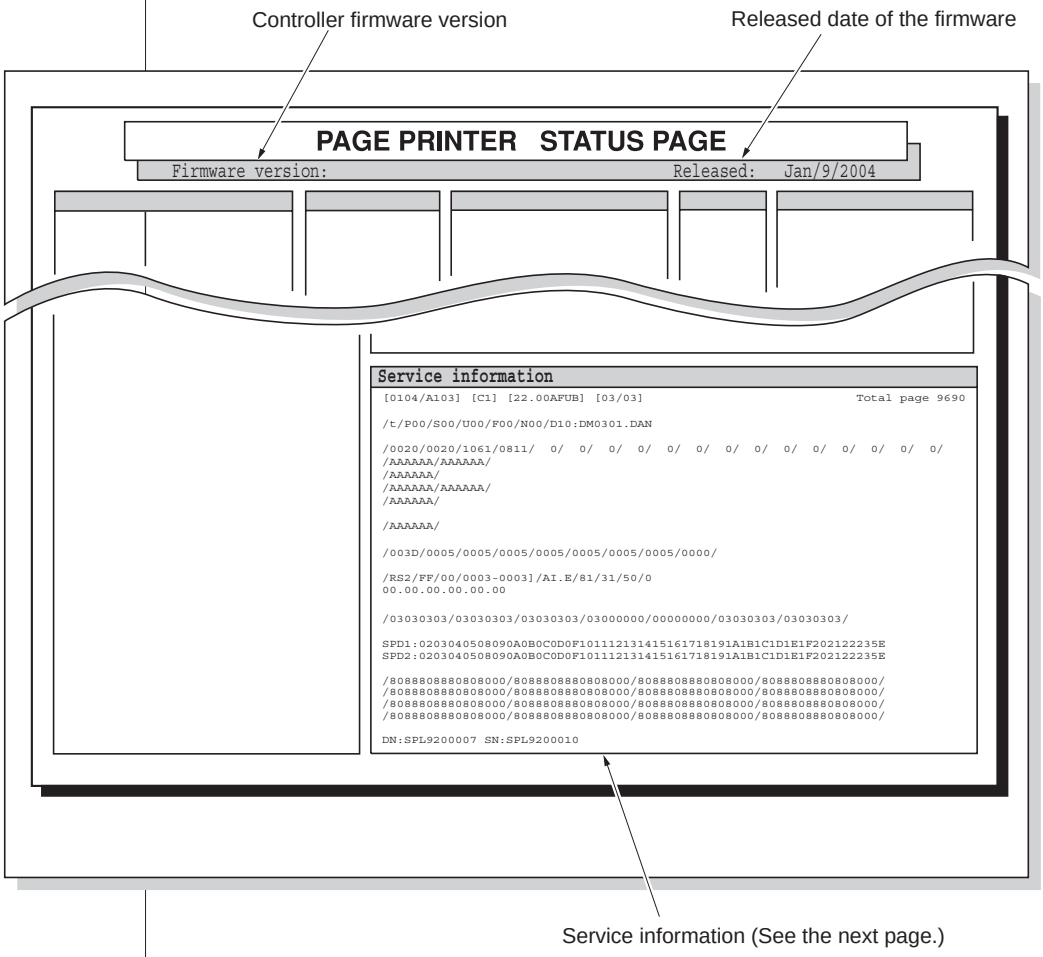

Figure 1-4-1

TONER
www.tonerplus.com.ua

Service items	Description

Detail of service information

Service information

```
[0104/A103] [C1] [22.00AFUB] [03/03]                                Total page 9690
     1        2        3        4                                        5
/t/P00/S00/U00/F00/N00/D10:DM0301.DAN
6  7   8   9   10  11        12
/0020/0020/1061/0811/  0/  0/  0/  0/  0/  0/  0/  0/  0/  0/  0/  0/  0/  0/
        13                     14                          15          16
/AAAAAA/AAAAAA/
      17
/AAAAAA/
  18
/AAAAAA/AAAAAA/
      19
/AAAAAA/
  20


/AAAAAA/
  21


/003D/0005/0005/0005/0005/0005/0005/0005/0000/
                    22                      23
/AAAAAA/
  24


/RS2/FF/00/[0003-0003]/AI.E/81/31/50/0
 25  26 27*     28       29  30  31 32 33*
00.00.00.00.00.00
        34*


/03030303/03030303/03030303/03000000/00000000/03030303/03030303/
                          35

SPD1:0203040508090A0B0C0D0F101112131415161718191A1B1C1D1E1F202122235E 36
SPD2:0203040508090A0B0C0D0F101112131415161718191A1B1C1D1E1F202122235E 37*

/8088808880808000/8088808880808000/8088808880808000/8088808880808000/
/8088808880808000/8088808880808000/8088808880808000/8088808880808000/
/8088808880808000/8088808880808000/8088808880808000/8088808880808000/
/8088808880808000/8088808880808000/8088808880808000/8088808880808000/
                                                                      38


DN:SPL9200007 SN:SPL9200010
      39            40
```

*: FS-3820N/3830N models only.

Table 1-4-1 Detail of service information

	Item	Description
1	Engine board flash ROM information	[ROM version]
2	LCD controller board mask ROM information	[ROM version]
3	Boot ROM and flash DIMM type information	First 6 digits: boot ROM version Last 3 digits: flash DIMM type MXI: Macronix / SHB: SHARP (LH28F160B) FUB: Fujitsu (bottom type) / FUT: Fujitsu (top type) HUB: HYUNDAI (bottom type) / HUT: (top type)

Service items	Description

	Item	Description
4	Software jumper switch information (Hexadecimal)	First byte Bit 7: always 0 (MSB) Bit 6: 0 Non MICR mode Bit 5: 0: For Europe 1: For U.S. Bit 4: 0: Kyocera 1: OEM Bit 3: always 0 Bit 2: always 0 Bit 1: 0: Overseas 1: Domestic (Japan) Bit 0: always 0 (LSB) Second byte OEM information: Displayed in OEM mode only.
5	Total page counter	-
6	Toner install information	-
7	Parallel I/O information	-
8	Serial I/O error code	00: Normal Bit 2: 1: Parity error Bit 1: 1: Overrun error Bit 0: 1: Framing error
9	USB information	00: Not connected 01: Full-Speed 02: Hi-Speed
10	Operation panel key lock status (Displayed only when locked)	01: Partial lock 02: Full lock
11	NVRAM error code (Displays only when error occurred)	01: ID error 02: Version error 03: Checksum error 04: NVRAM crush error
12	NVRAM downloading status	00: Normal downloaded Bit 7: Error occurred (MSB) Bit 6: (Reserved) Bit 5: OEM data Bit 4: Operator panel message data (File name displayed) Bit 3: Program data Bit 2: Macro data Bit 1: Host data Bit 0: Font data (LSB)
13	Printable area information	Top offset / Left offset / Page length / Page width
14	Left offset	MP tray / Cassette 1 / Cassette 2 / Cassette 3 / Cassette 4 / Envelope feeder / Duplexer
15	Top offset	MP tray / Cassette 2 / Cassette 3 / Cassette 4 / Duplexer
16	Offset for page rotation	Top offset / Left offset /
17	Life counter of paper feeder	Paper feeder 1 (total) / Paper feeder 2 (total) /
18	Life counter of paper feeder	Paper feeder 3 (total)
19	Life counter of paper feed position	Duplexer / Bulk paper feeder
20	Life counter of unit	/Drum
21	MK counter	-
22	Version of each unit (hexadecimal)	Paper feeder 1 / Paper feeder 2 / Paper feeder 3 / Envelope feeder / Duplexer / Bulk paper feeder / (Reserved) / Sorter

Service items	Description

	Item	Description
23	EEPROM error of each unit (Hexadecimal)	Bit 0: Ppaer feeder 1 Bit 1: Paper feeder 2 Bit 2: Paper feeder 3 Bit 3: Duplexer Bit 4: Sorter Bit 5: Bulk paper feeder Bit 6: (Reserved) Bit 7: Drum
24	Drum ID	-
25	Serial interface information	RS2: RS-232C
26	Drum sensitivity information	-
27*	Calibration table settings	Setting value (FRPO I4), Hexadecimal
28	Optional paper feeder information	First 2 bytes Bit 0: MP tray Bit 1: Cassette 1 Bit 2 to 6: Paper feeder 1 to 5 (4 and 5 Reserved) Bit 7: Duplexer Bit 8: Bulk paper feeder Bit 9: Envelope feeder Bit 10 to 15: (Reserved) Second 2 bytes Bit 0: Face-up Bit 1: Face-down Bit 2: (Reserved) Bit 3: Sorter Bit 4 to 15: (Reserved)
29	Average print density (%)	2 digits of integer part and 1 digit of fraction part (total print density from shipping from factory)
30	Operation panel message language	PMSG command setting value (decimal)
31	Current temperature	0 to 80 °C ("-" = Humidity/temperature sensor is abnormal.)
32	Current humidity	5 to 100 %RH (in 1% increment)
33*	Number of rebooting for vertical distortion check	-
34*	MAC address	-
35	Media type attributes	Media type 1 to 28 (14 to 20: Reserved)
36	SPD information (slot 1)	2 to 6 bytes, 8 to 36 bytes, 94 to 95 bytes (total 32 bytes)
37*	SPD information (slot 2)	2 to 6 bytes, 8 to 36 bytes, 94 to 95 bytes (total 32 bytes)
38	Engine parameter setting	-
39	Drum serial number	-
40	Machine serial number	-

*[1]: FS-3820N/3830N models only.

TONER
www.tonerplus.com.ua

Service items	Description
`>>Print Event Log`	

Printing an event log (EVENT LOG)

Description

Prints the history of paper misfeeds and self-diagnostic errors including up to 16 items from the latest occurrence of such an error. (If the number of errors exceeds 16, errors will be deleted sequentially from the oldest one.)

Purpose

To allow machine malfunction analysis based on the frequency of paper misfeeds and self diagnostic errors.

Method

1. Enter the service mode [>>Print Event log].
2. Press the Enter key. [?] will be displayed.
3. Press the Enter key. A sheet of event log will be printed.

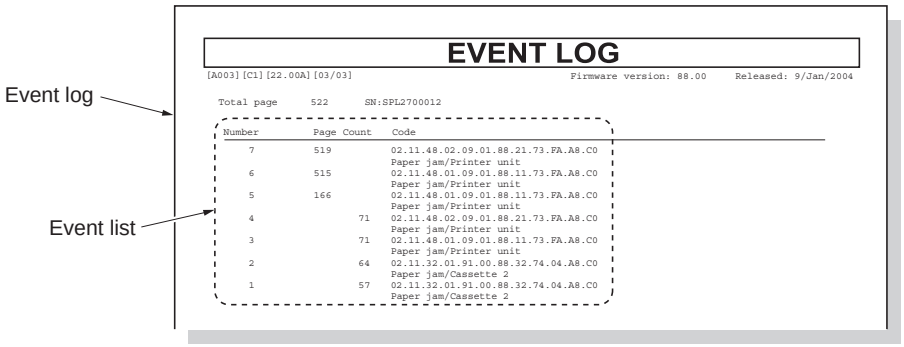

Figure 1-4-2 Event log

Details of event list

The event list includes the following information.

(A) Number..... Prints a list of error history (1 to 16). A smaller number means an older event.

(B) Page Count ... Number of pages printed when an error occurred.

(C) Code .....

(1)	Identification code	02: (fixed)	
(2)	Error type	01: Self-diagnostic error	See page 1-4-9 (Code table 2)
		11: Paper misfeed	See page 1-4-7 (Code table 1)
		1C: Toner container replacement	See page 1-4-9 (Code table 3)
(3) to (9)	Detail of code (2)	-	

(D) Description .... Indicates the description of error.

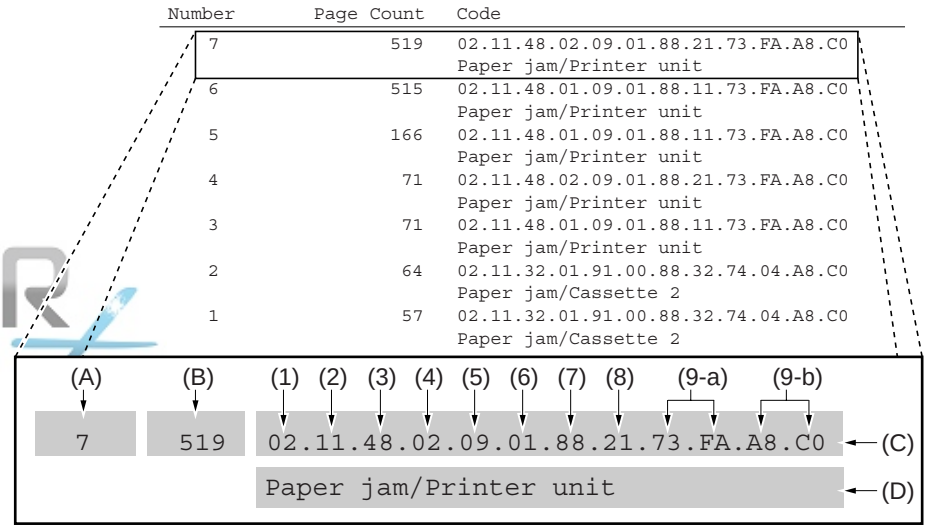

Figure 1-4-3 Details of event list

TONER
www.tonerplus.com.ua

Service items	Description

Table 1-4-2 Code table 1

Code digit and description		Details of code		
(1)	Identification code	02: (fixed)		
(2)	Error type (hexadecimal)	11: Paper misfeed		
(3)	Paper misfeed locations (hexadecimal)	31: Cassette 1 (in the printer) 32: Cassette 2 33: Cassette 3 34: Cassette 4 41: Envelope feeder 42: MP tray 46: Sorter 48: Inside the printer 49: Duplexer 4A: Bulk paper feeder 4B: (Reserved)	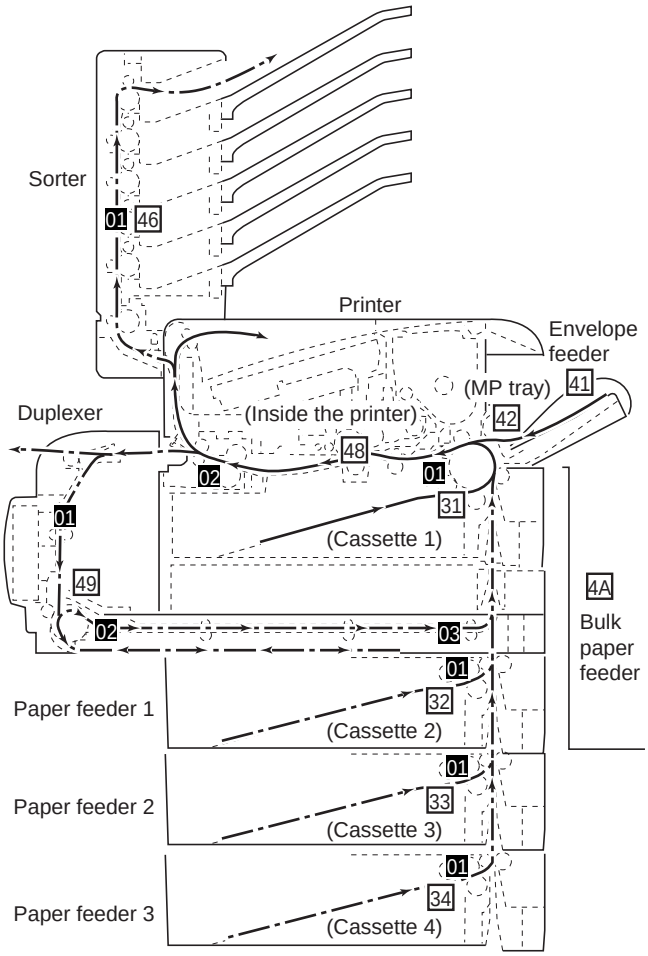	
(4)	Paper misfeed sensor location (hexadecimal)	01: Registration sensor [48] Paper feed sensor [32] Paper feed sensor [33] Paper feed sensor [34] Vertical path sensor [49] Sorter [46] 02: Eject sensor [48] Switchback sensor [49] 03: Duplex refeed sensor [49] 99: Not determined Values within [ ] indicate paper misfeed locations. (hexadecimal)		
(5)	Cause of paper misfeed (hexadecimal)	01: Paper did not pass within a specified time. 02: Paper did not arrive within a specified time. 09: Paper remains longer than a specified time. (other than 01 and 02) 11: Paper misfeed occurred when paper is being transported. 91: Paper remains when power is turned on. 99: Others (Paper stopped due to external cause such as opening of a cover during printing.)		
(6)	Paper source (hexadecimal)	00: MP tray 01: Cassette 1 (in the printer) 02: Cassette 2 03: Cassette 3	04: Cassette 4 05: (Reserved) 06: (Reserved) 08: Bulk paper feeder	09: Duplexer 99: Envelope feeder

Service items	Description

Table 1-4-2 Code table 1

Code digit and description		Details of code			
(7)	Paper size (hexadecimal)	01: Monarch 02: Business 03: International DL 04: International C5 05: Executive 06: Letter 07: Legal 08: A4 09: B5	0A: A3 0B: B4 0C: Ledger 0D: A5 0E: A6 0F: B6 10: Commercial #9 11: Commercial #6 12: ISO B5	13: Custom size 1E: C4 1F: Postcard 20: Reply-paid postcard 21: Oficio II 22: 216 x 310 (mm) 23: 216 x 316 (mm) 24: A3 wide 25: Ledger wide	27: 8K 28: 16K 32: Statement 33: Folio 34: Western type 2 35: Western type 4 86: Letter-R 88: A4R 89: B5R
(8)	Main cause of paper misfeed (hexadecimal)	10: Paper does not arrive at the registration sensor. 11: Paper does not pass the registration sensor. 12: Paper remains at the registration sensor when power is turned on. 20: Paper does not arrive at the eject sensor. 21: Paper does not pass the eject sensor. 22: Paper remains at the eject sensor when power is turned on. 30: Paper does not arrive at the paper feeder 1 feed sensor. 31: Paper does not pass the paper feeder 1 feed sensor. 32: Paper remains at the paper feeder 1 feed sensor when power is turned on. 40: Paper does not arrive at the paper feeder 2 feed sensor. 41: Paper does not pass the paper feeder 2 feed sensor. 42: Paper remains at the paper feeder 2 feed sensor when power is turned on. 50: Paper does not arrive at the paper feeder 3 feed sensor. 51: Paper does not pass the paper feeder 3 feed sensor. 52: Paper remains at the paper feeder 3 feed sensor when power is turned on. 60: (Reserved) 61: (Reserved) 62: (Reserved) A1: Paper does not arrive at the vertical path sensor. (duplexer) A2: Paper does not arrive at the switchback sensor. (duplexer) A3: Paper does not pass the duplex refeed sensor. (duplexer) A4: Paper does not arrive at the duplexer refeed eject sensor. A5: Paper does not pass the duplexer refeed rear edge sensor. A6: Paper does not pass the duplexer refeed eject sensor. A7: Duplexer overflow (Third sheet is commanded when second sheet remains.) A8: Duplexer drive signal output from the printer while paper is transported turns off. A9: Paper remains in the duplexer when power is turned on. AA: The rear cover of the duplexer is opened while paper is transported. B1: Paper does not arrive at the tray paper sensor. (sorter) B2: Paper does not pass the tray paper sensor. (sorter) B3: Paper remains at the tray paper when power is turned on. (sorter) C1: (Reserved) E0: Paper misfeed occurs due to forced stop when an error occurs during printing. (such as opening of a cover) F0 to FF: Paper misfeed by another cause.			
(9-a)	Misfed paper width (hexadecimal)	0000 to FFFF [in 0.1 mm] Example: 73FA (hexadecimal) = 29690 (decimal) = 296.9 mm			
(9-b)	Misfed paper length (hexadecimal)	0000 to FFFF [in 0.1 mm] Example: A8C0 (hexadecimal) = 43200 (decimal) = 432.0 mm			

Service items	Description

Table 1-4-3 Code table 2

Code digit and description		Details of code	
(1)	Identification code (hexadecimal)	02: (fixed)	
(2)	Error type (hexadecimal)	01: Self-diagnostic error	
(3)	-	00: (not used)	
(4)	Self-diagnostic error code (hexadecimal)	Upper 2-digit of self-diagnostic error code (4-digit).	See page 1-5-2. Remarks: Self-diagnostic error codes F0, F010, F020, F030, F040 and F070 are not recorded.
(5)		Lower 2-digit of self-diagnostic error code (4-digit).	
(6) to (9)	-	00: (not used)	

Table 1-4-4 Code table 3

Code digit and description		Details of code
(1)	Identification code (hexadecimal)	02: (fixed)
(2)	Error type (hexadecimal)	1C: Toner container replacement
(3) to (9)	-	00: (not used)

`>>Maintenance`

Counter reset for the maintenance kit

Description

The "Install MK" message means that maintenance kit (MK-67/MK-68) should be replaced at 300,000 pages of printing. The interval counter must be manually reset using this service item. Maintenance kit includes the following units:

Items	Quantity	MK-67 (For FS-1920/3820N)	MK-68 (For FS-3830N)
Developer unit	1	DV-67	DV-67
Drum unit	1	DK-67	DK-68
Fuser unit	1	FK-67(E)	FK-68(E)
Paper transfer unit	1	FE-67	FE-67
Ozone filter	1	OZONE FILTER	OZONE FILTER
Ozone filter B	1	OZONE FILTER B	OZONE FILTER B
MP tray feed roller	1	ROLLER MP ASSY	ROLLER MP ASSY
Retard roller holder (roller)	1	RETARD ASSY MK	RETARD ASSY MK

Purpose

To reset the life counter for the developer units and drum units included in maintenance kit.

Procedure for replacing the maintenance kit

1. Remove the developer unit and drum unit (See page 1-6-2 and 1-6-10).
2. Replace the paper transfer unit (See page 1-6-4).
3. Replace the fuser unit (See page 1-6-27).
4. Replace the ozone filter B and ozone filter (See page 1-6-36).
5. Replace the MP tray feed roller and retard holder (roller) (See page 1-6-14).

Method

1. Enter the service mode [>>Maintenance].
2. Press the Enter key. [?] will be displayed.
3. Press the ENTER key twice. The counter for each component is reset immediately.

Completion

TONER PLUS
www.tonerplus.com.ua

Service items	Description
>>Developer	**Initializing the developer unit (toner install mode)** **Description** The new developer unit is shipped from the factory with no toner contained. The developer can be automatically replete with toner when a toner container is installed onto it and the printer is turned on. However, because the toner reservoir in the developer has a large capacity, it requires a lengthy period of time until a substantial amount of toner has been fed to get the printer ready. (A new developer needs approximately 100 g for triggering the sensor inside.) **Purpose** To execute when the developer unit has been replaced. **Method** 1. Enter the service mode [>>Developer]. 2. Press the Enter key. [?] will be displayed. 3. Press the Enter key. 4. Turn off and on the printer. [Self test] [Please wait (Adding toner)] will displayed. The printer continually engages in this mode for a period of approximately 8 minute, after which the printer reverts to the [Ready] state. [Ready] will displayed. Developer initialization is finished. 5. Make a test print by printing a status page. **Note** If the printer is switched off in the middle of developer initialization, even after the printer is switch on again, the printer will automatically resumes developer initialization. To cancel the toner install mode in this case, first turn power off, press and hold all three paper size switches , and turn power on. Let go off of the switches when the unit message changes to [Ready]. 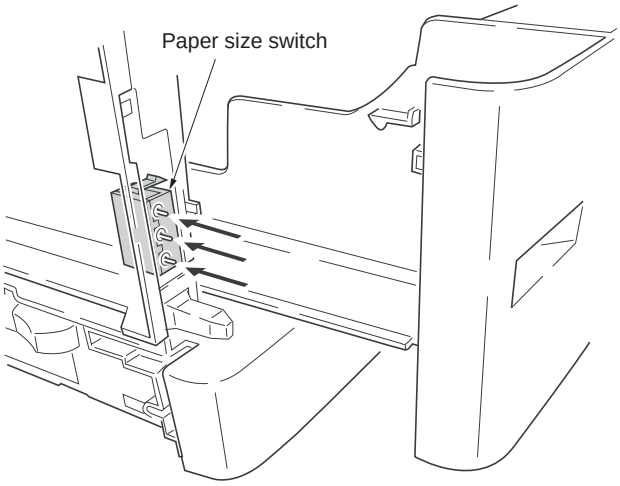 **Figure 1-4-4**

TONER+
www.tonerplus.com.ua

Service items	Description
`>>DRUM-CTRL` `00`	**Automatic drum surface refreshing** **Description** The drum surface refreshing operation is normally performed when the power is turned on to the printer or during warm-up when the printer is recovering from the Sleep mode, but even then only at those times that the temperature/humidity sensor detects the drum surface to be in a state of dew condensation. By using this mode, it is possible to force the drum surface refreshing operation to be performed automatically at a predetermined period of time, regardless of the status detected by the temperature/humidity sensor. **Purpose** To prevent bleeding of the output image when the printer's operating environment is one of high humidity. **Method** 1. Enter the service mode [>>DRUM-CTRL]. 2. Press the Enter key. [?] will be displayed. 3. Press the Enter key. 4. Press the △ or ▽ key and select the desire mode (from 00 to 02) 00 — Mode turned OFF (default setting) 01 — Refreshing operation time (short) 02 — Refreshing operation time (long) 5. Press the Enter key. The new value is set.
`>>Drum`	**Drum surface refreshing (drum cleaning mode)** **Description** This mode forces the printer to rotate the drum against the cleaning roller inside the drum unit for a predetermined period of time. The printer automatically activates the drum cleaning mode based on the environmental conditions that the temperature/humidity sensor detects. The time required to complete the drum cleaning mode varies depending on the current setting for the sleep timer and will be deactivated during developer initialization. **Purpose** To clean the drum surface when an image problem occurs. **Method** 1. Enter the service mode [>>Drum]. 2. Press the Enter key. [?] will be displayed. 3. Press the Enter key. Drum surface refreshing will start. The drum is cleaned by the cleaning blade in the drum unit. If paper is present on the MP tray, the drum is also cleaned by the paper that is fed automatically and stops at the transfer roller.

TONER+
www.tonerplus.com.ua

1-4-2 Maintenance

(1) Cleaning the paper transfer unit

To avoid print quality problems due to paper dust and debris, clean the paper transfer unit in the following manner.

Pull the paper transfer unit release lever up and draw the paper transfer unit all the way out until it stops.
Wipe the paper dust on the upper registration roller and the paper ramp using the wiper cloth included in the toner kit.

CAUTIONS Do not touch the transfer roller (black sponge roller) when wiping the paper ramp.

Area (A) below is factory-applied with lubricating oil. When cleaning the paper transfer unit, do not use alcohol to clean this area. If the oil is completely removed, an incorrect action of the MP tray paper sensor (actuator) will result.

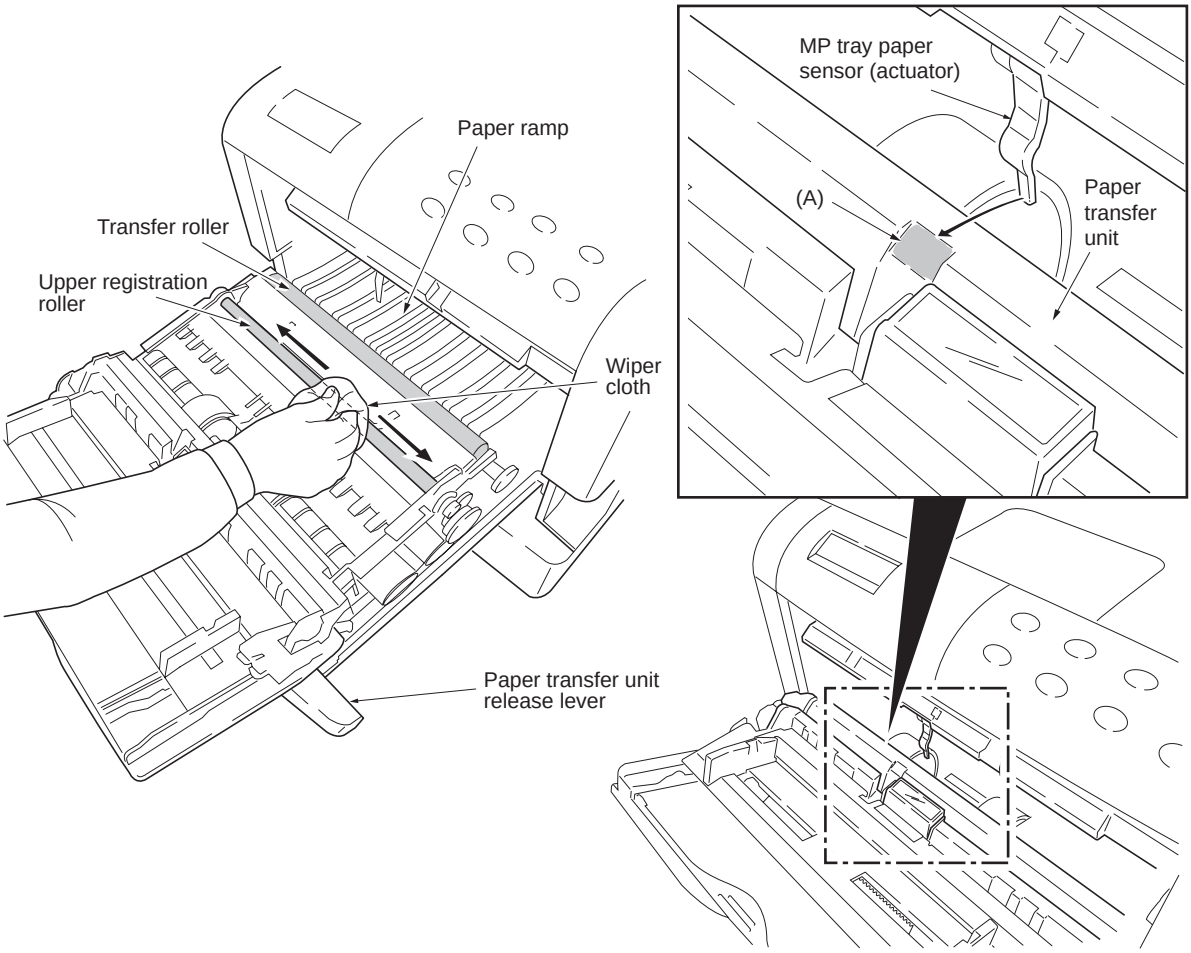

Figure 1-4-5

TONER
www.tonerplus.com.ua

(2) Replacing the developer

To remove the developer unit from the printer for shipment or replacing to a new one, it should be handled following the instructions below.
After the replacement, new developer needs to be initialized. See page 1-4-10.

Shipping the developer
The printer is supplied with a plastic bag that should be retained for future shipment of the developer.

1. To pack the developer in the packing carton, first flap down the magnet roller protective cover.
2. Put the developer into the supplied plastic bag.
3. Put the developer on the developer install position of packing carton.

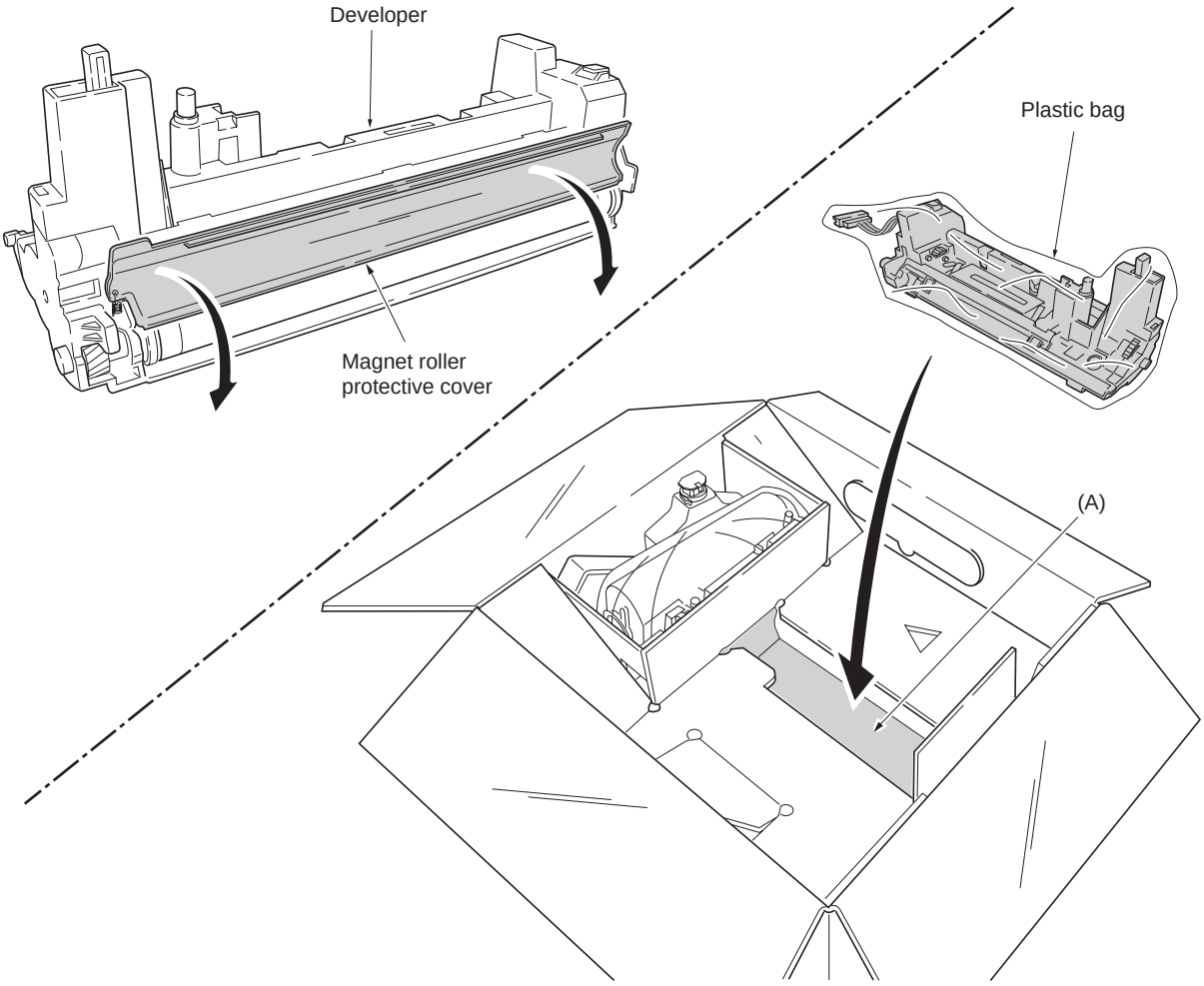

TONER
www.tonerplus.com.ua

Figure 1-4-6

This page is intentionally left blank.

TONER+
www.tonerplus.com.ua

1-5-1 Paper misfeed detection

(1) Paper misfeed indication

When a paper misfeed occurs, the printer immediately stops printing and displays the paper misfeed message on the operator panel. To remove paper misfeed in the printer, pull out the paper cassette or rear cover, paper transfer unit.

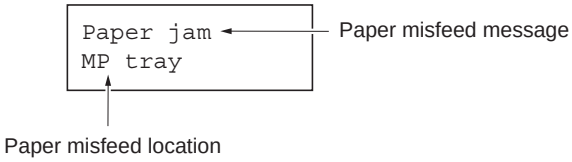

Figure 1-5-1

(2) Paper misfeed detection

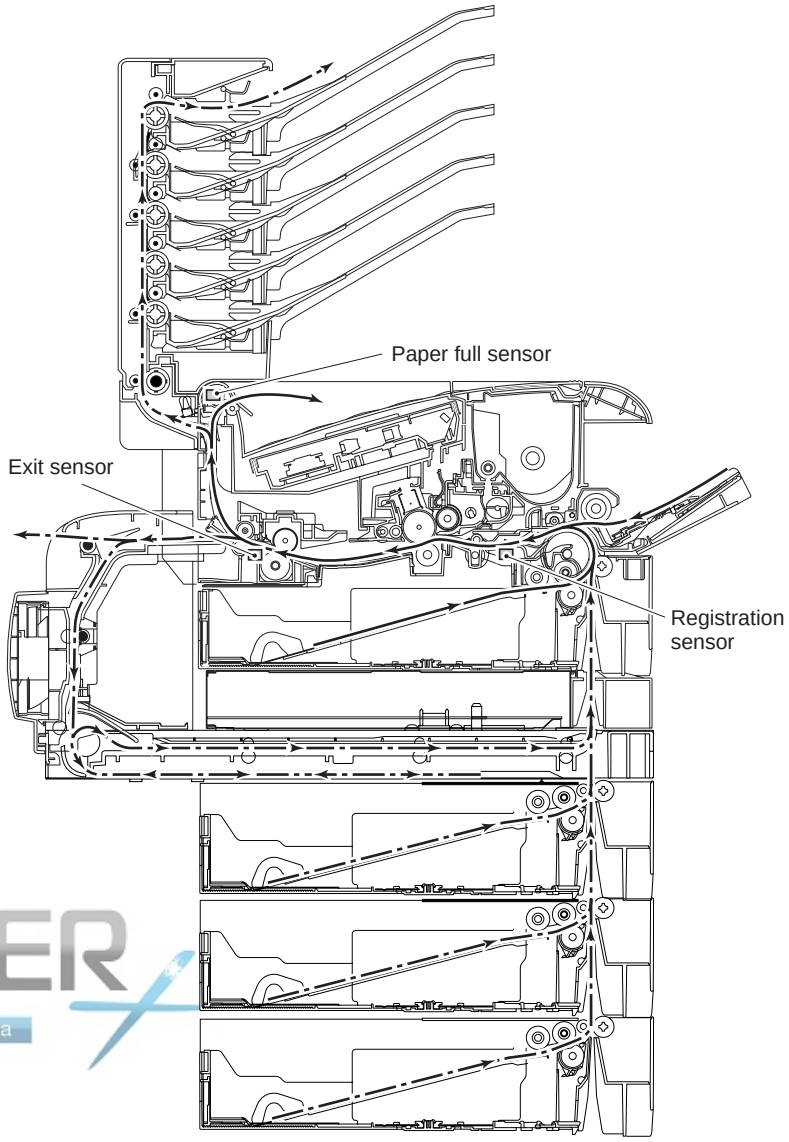

TONER
www.tonerplus.com.ua

Figure 1-5-2

1-5-2 Self-diagnosis

(1) Self-diagnostic function

The printer does not operate when a message beginning with “Call service ####” or “Call service person F0##” is displayed. The messages are categorized as follows:

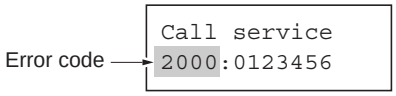

Figure 1-5-3

(2) Self diagnostic codes

*1: For FS-1920, *2: For FS-3820N, *3: For FS-3830N models

Code	Contents	Remarks	
		Causes	Check procedures/corrective measures
0100	**Engine board EEPROM (socket mount)** · Detecting EEPROM communication error.	Improper installation EEPROM.	Check EEPROM installation, Remedy.
		Defective engine board (KP-1081).	Replace engine board (KP-1081). See page 1-6-20.
0150	**Engine board EEPROM (surface mount) error** · Detecting EEPROM communication error.	Defective EEPROM or engine board (KP-1081).	Replace engine board (KP-1081). See page 1-6-20.
0420	**Optional paper feeder PF-60 communication error** · Communication error between engine board and optional paper feeder PF-60.	Improper installation between printer and optional paper feeder.	Follow installation instruction carefully again.
		Defective optional paper feeder PF-60.	Replace optional paper feeder PF-60.
		Defective engine board (KP-1081).	Replace engine board (KP-1081). See page 1-6-20.
0440	**Optional sorter SO-60 communication error** · Communication error between engine board and optional sorter SO-60.	Improper installation between printer and optional sorter SO-60.	Follow installation instruction carefully again.
		Defective optional sorter SO-60.	Replace optional sorter SO-60.
		Defective engine board (KP-1081).	Replace engine board (KP-1081). See page 1-6-20.
0460	**Optional duplexer DU-61 communication error** · Communication error between engine board and optional duplexer DU-61.	Improper installation between printer and optional duplexer DU-61.	Follow installation instruction carefully again.
		Defective optional duplexer DU-61.	Replace optional duplexer DU-61.
		Defective engine board (KP-1081).	Replace engine board (KP-1081). See page 1-6-20.

TONER
www.tonerplus.

Code	Contents	Remarks	
		Causes	Check procedures/corrective measures
0550	**Non-supported duplexer is installed** ·Non-supported duplexer DU-60 is installed	DU-60 is installed.	Replace duplexer DU-60 for DU-61.
0560	**Paper feeder PF-60 [top] with wrong firmware version is installed** ·The code that identifies the firmware version was out of range.	Wrong firmware version is used on the main board in paper feeder PF-60.	Change the main board with the one having the correct firmware in paper feeder PF-60.
0570	**Paper feeder PF-60 [middle] with wrong firmware version is installed** ·The code that identifies the firmware version was out of range. **Bulk paper feeder PF-8E with wrong firmware version is installed** ·The code that identifies the firmware version was out of range.	Wrong firmware version is used on the main board in paper feeder PF-60 or bulk paper feeder PF-8E.	Change the main board with the one having the correct firmware in paper feeder PF-60 or bulk paper feeder PF-8E.
0580	**Paper feeder PF-60 [bottom] with wrong firmware version is installed** ·The code that identifies the firmware version was out of range.	Wrong firmware version is used on the main board in paper feeder PF-60.	Change the main board with the one having the correct firmware in paper feeder PF-60.
1200	**Optional duplexer DU-61 side registration error** · Side registration home position error of optional duplexer DU-61.	Defective gate array U7 on the engine board (KP-1081).	Replace engine board (KP-1081). See page 1-6-20.
		Improper installation between printer and optional duplexer, or each optional unit.	Follow installation instruction carefully again.
		Defective harness (S03022) between engine board and optional unit interface connector.	Replace harness (S03022).
		Improper connector insertion.	Remedy.
		Defective optional duplexer DU-61.	Refer to the optional duplexer DU-61's service manual.

TONER
www.tonerplus.com.ua

Code	Contents	Remarks	
		Causes	Check procedures/corrective measures
2000	**Main motor error** • The main motor is overloaded.	Overcurrent in the main motor circuitry due to an excessive torque.	Follow the flow chart below.
		Connector insertion error.	
		Defective gate array U7 on the engine board (KP-1081).	
		Defective harness between engine board and engine relay board (KP-1071).	
		Defective harness between engine relay board (KP-1071) and main motor.	

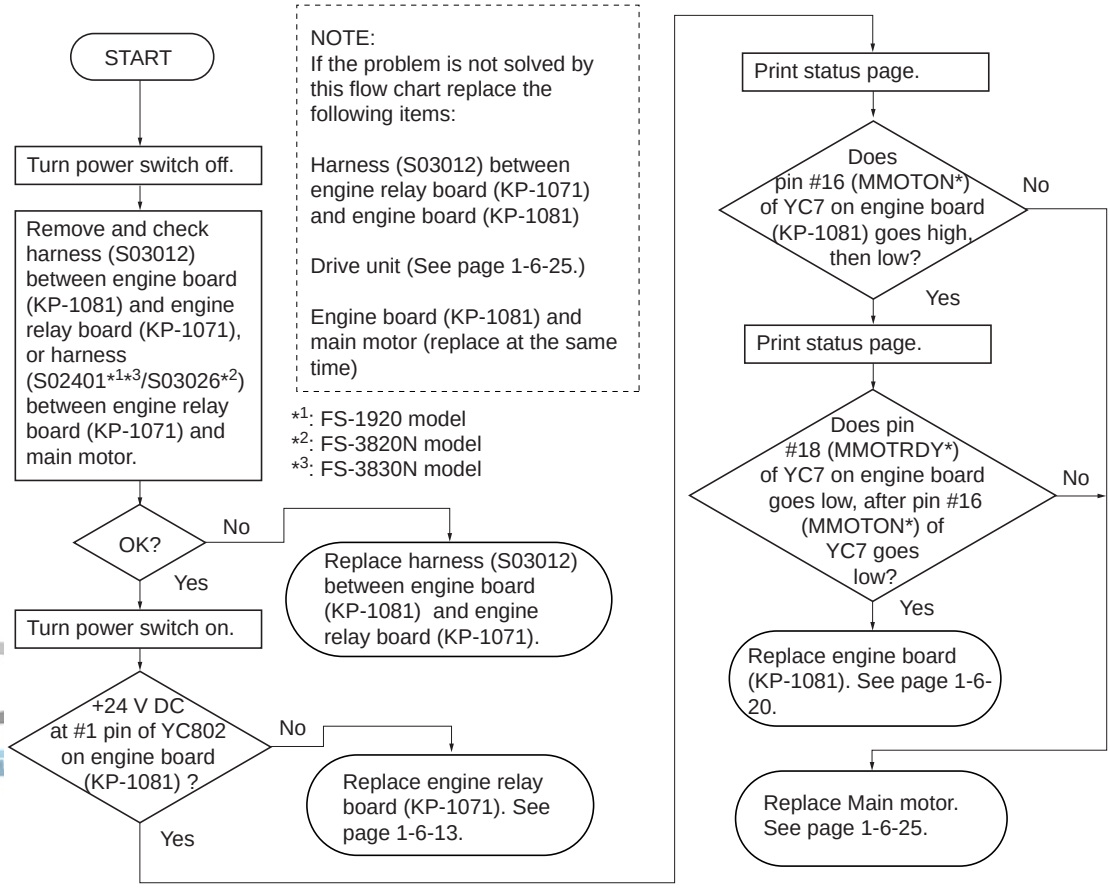

Code	Contents	Remarks	
		Causes	Check procedures/corrective measures
2600	**Optional bulk paper feeder PF-8E motor error** • Motor error in the optional bulk paper feeder PF-8E.	Defective harness (S03022) between engine board and optional unit interface connector.	Replace engine board (KP-1081). See page 1-6-20.
		Defective optional bulk paper feeder.	Replace harness (S03022).
2610	**Optional paper feeder PF-60 (Top) paper feed motor error** • Paper feed motor error in the top optional paper feeder.	Defective gate array U7 on the engine board (KP-1081).	Replace engine board (KP-1081). See page 1-6-20.
		Defective harness (S03022) between engine board and optional unit interface connector.	Replace harness (S03022).
		Defective paper feeder PF-60.	Refer to optional paper feeder PF-60's service manual.
2620	**Optional paper feeder PF-60 (Middle) paper feed motor error** • Paper feed motor error in the middle optional paper feeder.	Defective gate array U7 on the engine board (KP-1081).	Replace engine board (KP-1081). See page 1-6-20.
		Defective harness (S03022) between engine board and optional unit interface connector.	Replace harness (S03022).
		Defective optional paper feeder PF-60.	Refer to optional paper feeder PF-60's service manual.
2630	**Optional paper feeder PF-60 (bottom) paper feed motor error** • Paper feed motor error in the bottom optional paper feeder.	Defective gate array U7 on the engine board (KP-1081).	Replace engine board (KP-1081). See page 1-6-20.
		Defective harness (S03022) between engine board and optional unit interface connector.	Replace harness (S03022).
		Defective paper feeder PF-60.	Refer to optional paper feeder PF-60's service manual.

TONER
www.tonerplus.com.ua

Code	Contents	Remarks	
		Causes	Check procedures/corrective measures
4000	**Laser scanner unit (Polygon motor) error** • POLRDY* does not go low within 20 seconds after POLON* goes low (When starting) or within 16 seconds after REGPAP signal goes high (during printing).	Defective gate array U7 on the engine board. Defective polygon motor.	Follow the flow chart below.
		Improper connector insertion.	
		Defective harness between laser scanner unit and engine board.	

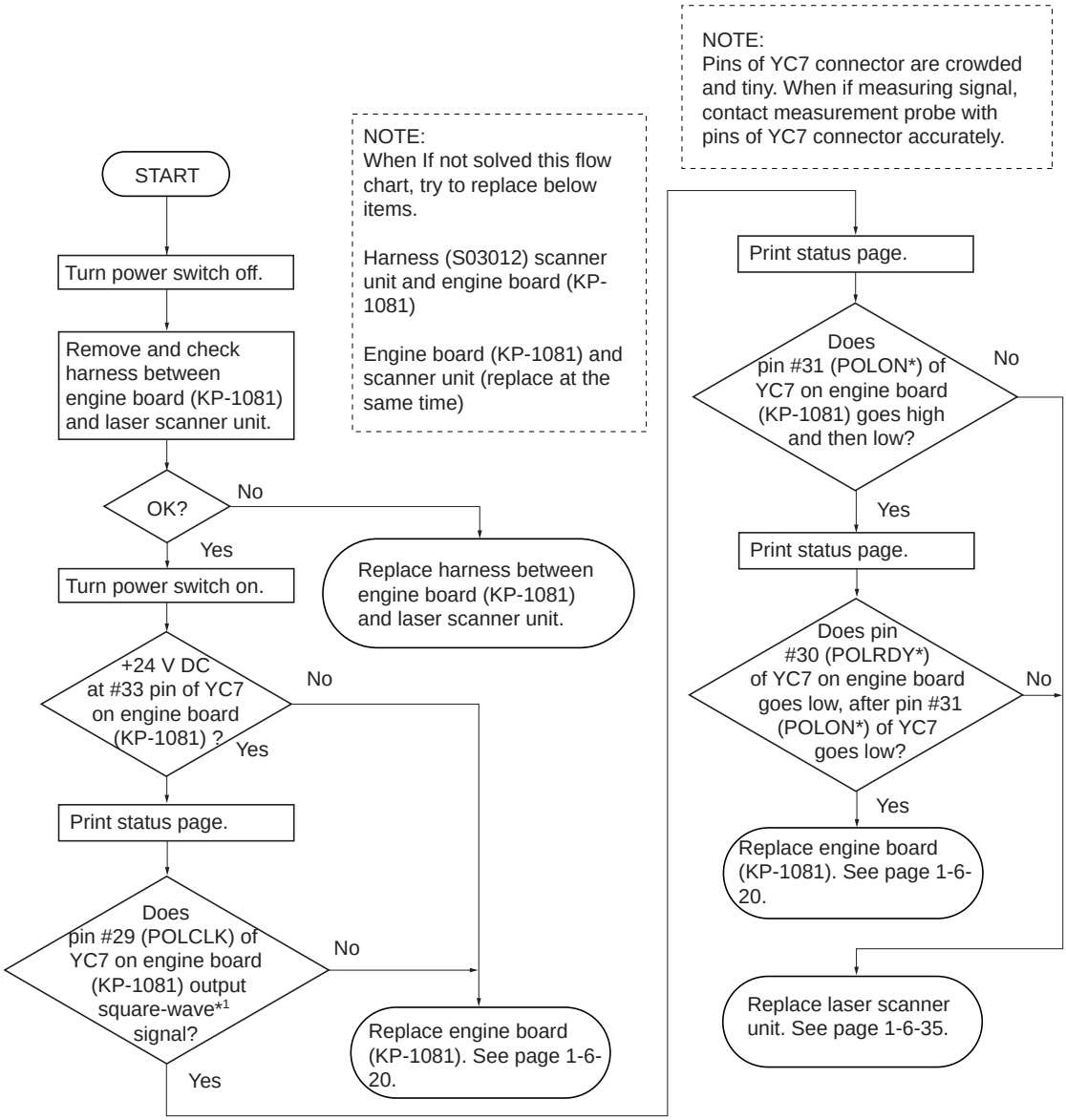

*1: 2.7165 KHz

Code	Contents	Remarks	
		Causes	Check procedures/corrective measures
4200	**Laser scanner unit (Pin photo diode sensor) error** • Laser beam detection failed. The pin photo diode sensor [board] (KP-1075) does not deliver a horizontal synchronous signal (PD*).	No laser beam due to the laser diode defect (PD*).	Follow the flow chart below.
		Soiled or defective pin photo diode sensor.	
		Defective gate array U7 of engine board.	
		Improper connector insertion.	
		Defective harness between engine board and laser scanner unit.	

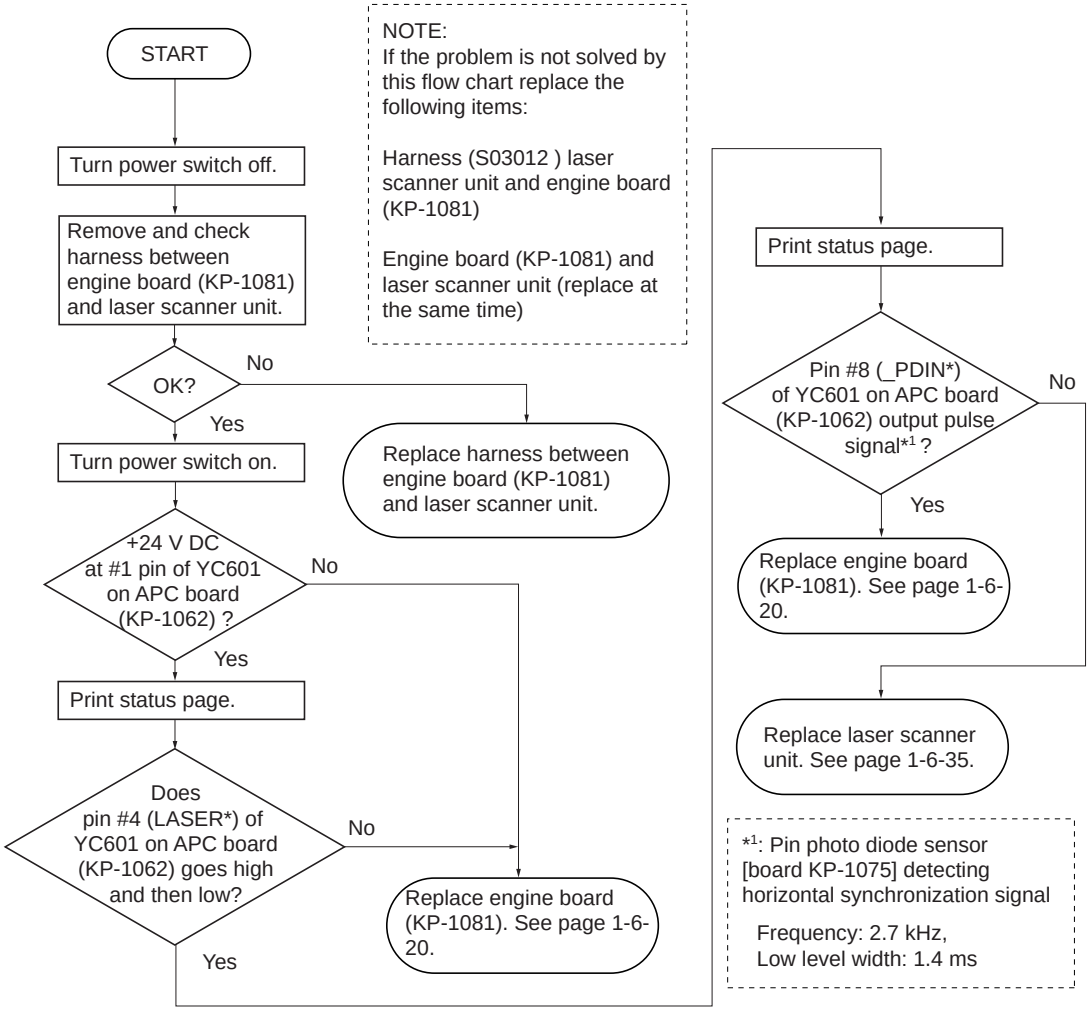

Code	Contents	Remarks	
		Causes	Check procedures/corrective measures
5300	**Eraser lamp error** • The ERADEAD* signal (delivered from the eraser lamp blown-out detection circuit on the engine board) goes low continuously more than 1 second, while eraser lamp is on.	Blown-out eraser lamp [board KP-1067].	Follow the flow chart below.
		Defective CPU U1 on the engine board.	
		Improper connector insertion to the eraser lamp [board KP-1067].	

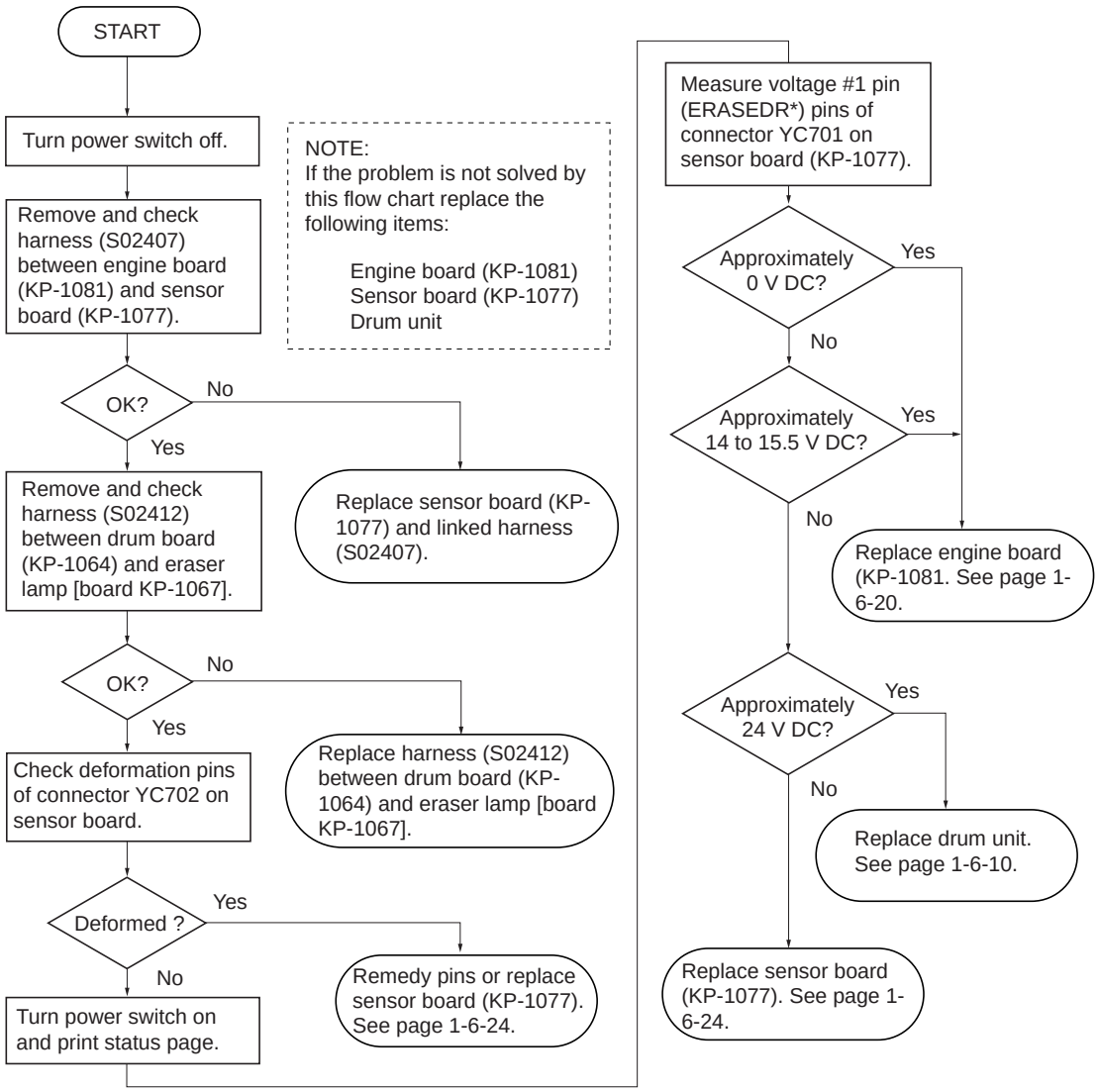

Code	Contents	Remarks	
		Causes	Check procedures/corrective measures
6000	**Fuser unit error** • HTEMP* remains high for longer than 4 seconds since the heater lamp is on. The heater lamp continues to be turn on for longer than 60 seconds.	Blown-out thermistor.	Follow the flow chart below.
		Blown-out heater lamp.	
		Defective CPU U1 or comparator U9 on the engine board.	
		Improper connector insertion.	
		Defective power supply unit.	
		Defective harness between fuser unit and power supply unit.	

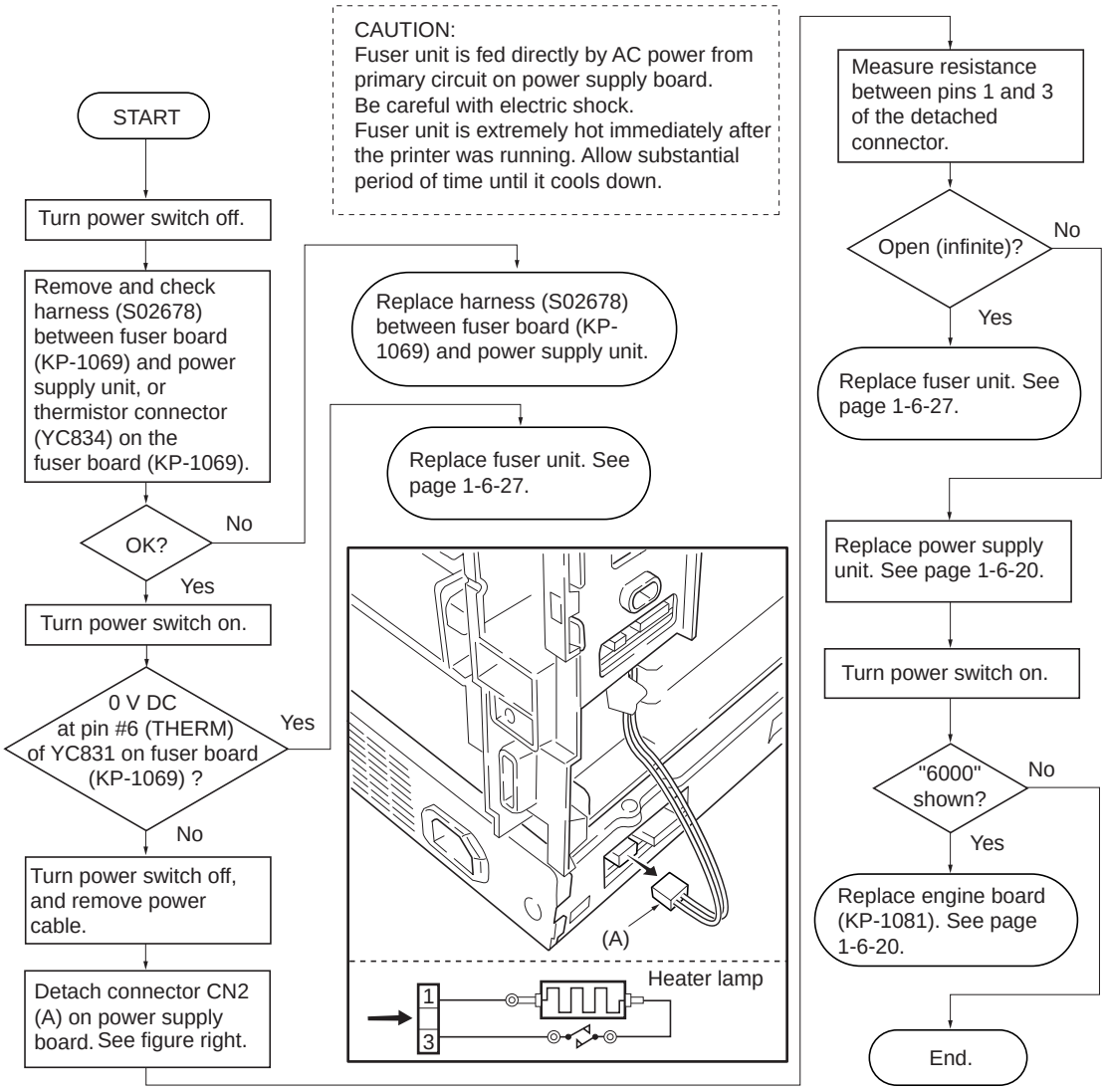

Code	Contents	Remarks	
		Causes	Check procedures/corrective measures
6020	**Abnormal high temperature error** • HTEMP* remains high for longer than 4 seconds since the heater lamp is on. The heater lamp continues to be turn on for longer than 60 seconds.	Defective CPU U1 or comparator U9 on the engine board.	Follow the flow chart below.
		Defective engine board (KP-1081).	
		Defective ther-mistor.	
		Defective photo coupler on the power supply unit for the heater lamp.	

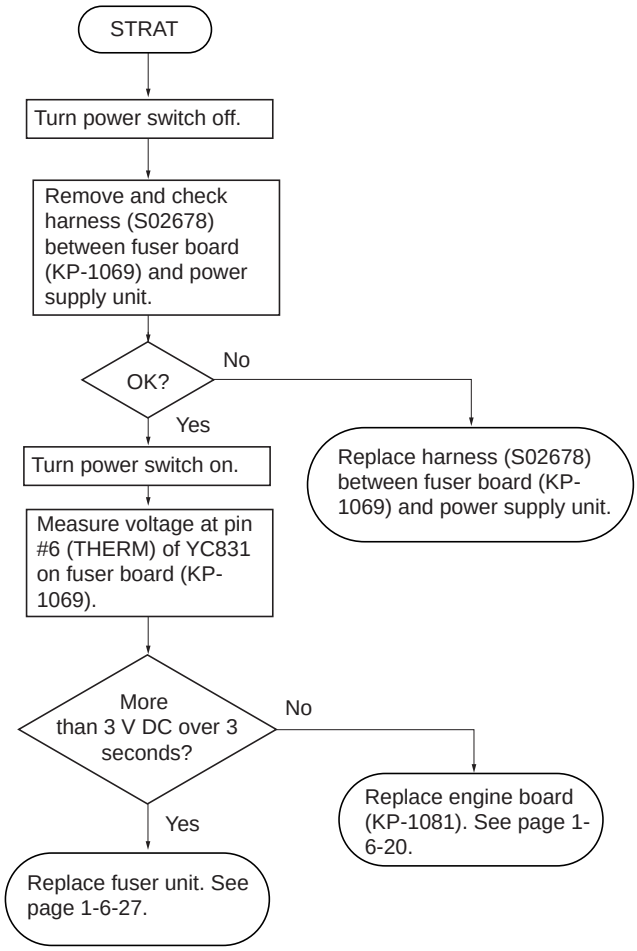

CAUTION:
Fuser unit is fed directly by AC power from primary circuit on power supply board.
Be careful with electric shock.

NOTE:
If the problem is not solved by this flow chart replace, the following items:

Engine board (KP-1081)
Power supply unit
Fuser unit

TC
www.ton

Code	Contents	Remarks	
		Causes	Check procedures/corrective measures
6030	**Thermistor error** · The thermistor error signal was detected when the heater lamp was turned on.	Defective thermistor.	Follow the flow chart below.
		Defective harness (S02678).	
		Defective power supply unit.	
		Defective engine board (KP-1081).	
		Defective fuser board (KP-1069).	

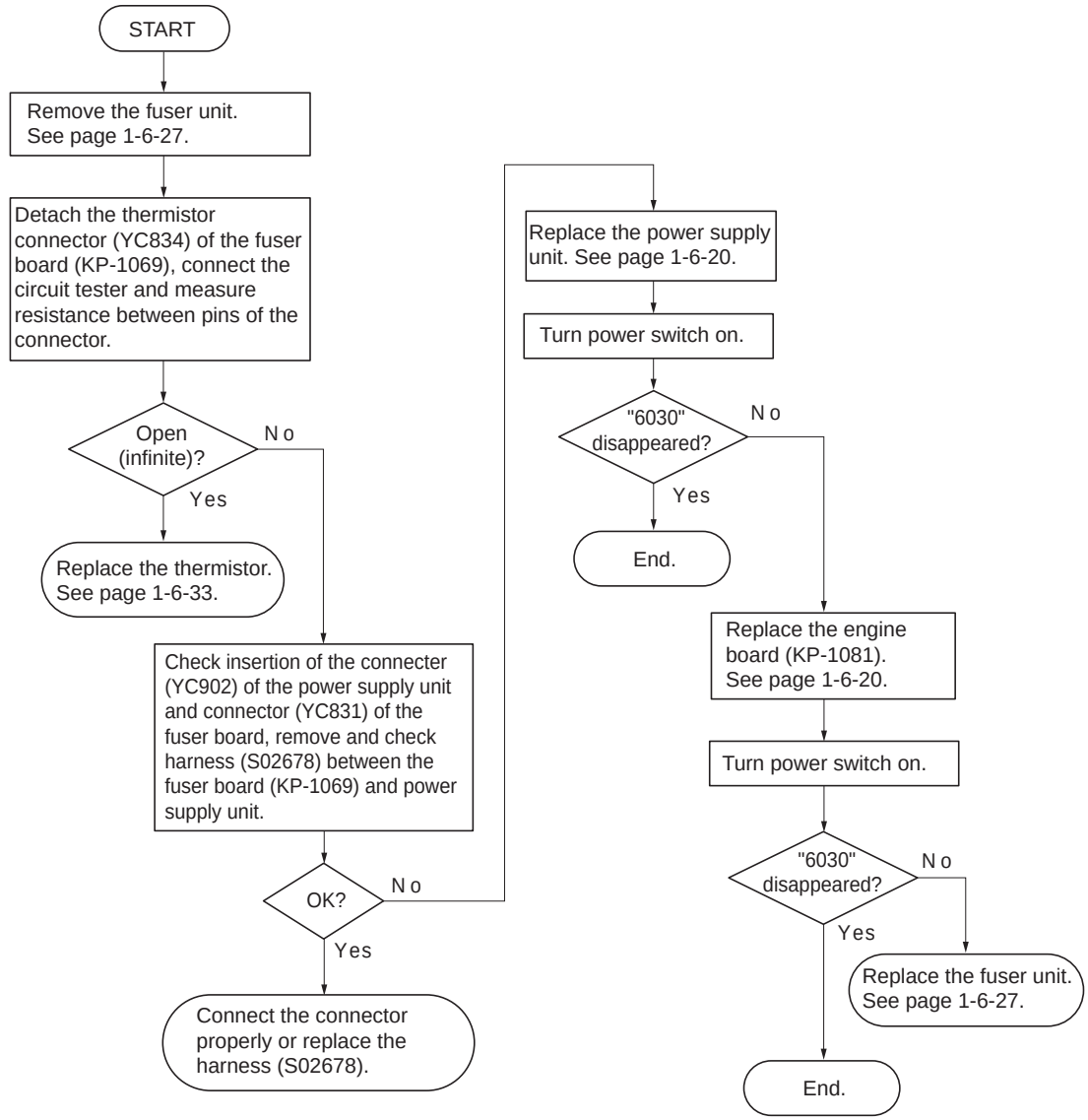

Code	Contents	Remarks	
		Causes	Check procedures/corrective measures
6400	**Zero cross signal error** • The ZCROSS signal does not reach the engine board within 3 seconds after power on.	Defective power supply unit.	Replace power supply unit. See page 1-6-20.
		Defective CPU U1 on the engine board.	Replace engine board. See page 1-6-20.
7001	**Toner motor error** • Toner motor is overloaded. TNMOC is detected by sampling every other 100 ms in 2 seconds since the main and toner motors are activated following the Replace toner Clean printer message after the “Toner low” is detected.	Overcurrent in the toner motor circuitry due to an excessive torque, caused by hardened toner.	Follow the flow chart below.
		Defective gate array U7 on the engine board.	
		Improper connector insertion.	
		Defective harness between developer and high voltage unit.	
		Defective harness between high voltage unit and engine board.	

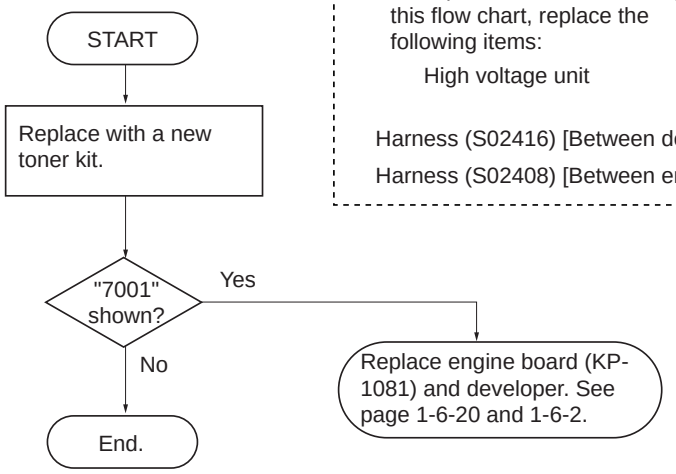

NOTE:
If the problem is not solved by this flow chart, replace the following items:

High voltage unit

Harness (S02416) [Between developer and high voltage unit]

Harness (S02408) [Between engine board and high voltage unit]

Code	Contents	Remarks	
		Causes	Check procedures/corrective measures
7350	**Toner refreshing mode error** • Toner refreshing mode error.	Defective high voltage unit.	Replace high voltage unit. See page 1-6-23.
		Defective toner refreshing.	See page 1-4-10.
7400	**The developer unit is not installed or not installed properly** • Failed to detect the voltage to identify the developer.	The developer unit is not installed.	Install the developer unit. See page 1-6-2.
		The developer connector is not properly inserted in the printer.	Follow installation instructions for developer carefully again.
		Defective developer unit.	Replace the developer unit. See page 1-6-2.
		Defective engine board (KP-1081).	Replace the engine board (KP-1081). See page 1-6-20.
7410	**The drum unit is not installed or not installed properly** • EEPROM communication error or the drum ID was not identified.	The drum unit is not installed.	Install the drum unit. See page 1-6-10.
		The drum unit connector is not properly inserted in the printer.	Follow the installation instructions for the drum unit carefully again.
		Defective drum unit.	Replace the drum unit. See page 1-6-10.
		Defective engine board (KP-1081).	Replace the engine board (KP-1081). See page 1-6-20.
8000	**Non-supported device is installed as an optional exit** • Serial communication detected that a non-supported bulk paper stacker HS-8E has been installed.	A non-supported bulk paper stacker HS-8E is installed.	Remove the bulk paper stacker HS-8E.
F0	**Main board or LCD controller board error** • Communication is failed between the LCD controller board (KP-1079) and the main board.	Defective system DIMM [board KP-1059*1/893*2*3].	Replace system DIMM [board KP-1059*1/893*2*3] or main board (KP-1053*1/1033*2*3).
		Defective main board (KP-1053*1/1033*2*3).	Replace system DIMM [board KP-1059*1/893*2] or main board (KP-1053*1/1033*2*3).
F010	**System DIMM [board] error** • Checksum failed with system DIMM [board KP-1059*1/893*2*3] on the main board.	LCD controller board (KP-1079).	Replace LCD controller board (KP-1079).
		Defective system DIMM [board KP-1059*1/893*2*3].	Replace system DIMM [board KP-1059*1/893*2*3] or main board (KP-1053*1/1033*2*3).
		Improper system DIMM [board KP-1059*1/893*2*3] insertion to system DIMM slot on the main board (KP-1053*1/1033*2*3).	Reinsert the system DIMM [board KP-1059*1/893*2*3].

TONER
www.tonerplus.com.ua

Code	Contents	Remarks	
		Causes	Check procedures/corrective measures
F020	**Main or expanded memory error** • Checksum failed with main memory (RAM) on the main board or expanded memory (DIMM).	Defective system main memory (RAM) on the main board (KP-1059*1/893*2*3).	Defective system main memory (RAM) on the main board (KP-1053*1/1033*2*3).
		Defective main board (KP-1053*1/1033*2*3).	Defective main board (KP-1053*1/1033*2*3).
		Defective expanding memory (DIMM) on the main board (KP-1053*1/1033*2*3).	Defective expanding memory (DIMM) on the main board (KP-1053*1/1033*2*3).
F030	**General failure** • Miscellaneous failure with the main board, other than F0, F010 and F020, above.	Defective main board (KP-1053*1/1033*2*3).	Replace main board (KP-1053*1/1033*2*3).
F040	**Communication error** • Communication between the engine board and the main board is failed.	Defective gate array (U02) on the main board.	Replace the main board (KP-1053*1/1033*2*3). See page 1-6-24.
		Connector failure between the engine board (KP-1081) and main board (KP-1053*1/1033*2*3).	Verify connector connections.
F070	**Flash ROM error** • CPU U1 of engine board could not write data failed to flash ROM U2. Write sequence to flash ROM is not successful. Verify error. (Written data does not match the original data.)	Overrun in the engine system, deactivating the program flash ROM (U2) on the engine board (KP-1081).	Replace the engine board (KP-1081). See page 1-6-20.
		Defective CPU U1 or gate array U7 or flash ROM U2 on the engine board (KP-1081).	Replace engine board (KP-1081).

TONER
www.tonerplus.com.ua

1-5-3 Image formation problems

(1) Completely blank print-out.

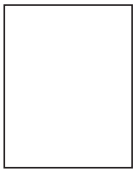

See page 1-5-16

(2) All-black printout.

See page 1-5-16

(3) Dropouts.

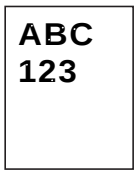

See page 1-1-6-17

(4) Black dots.

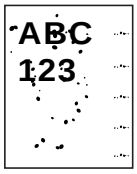

See page 1-1-6-17

(5) Black horizontal streaks.

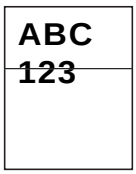

See page 1-1-6-18

(6) Black vertical streaks.

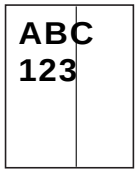

See page 1-5-18

(7) Unsharpness.

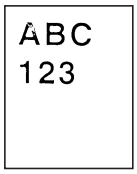

See page 1-5-19

(8) Gray background.

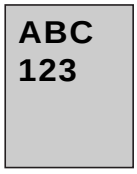

See page 1-5-19

(9) Dirt on the top edge or back of the paper.

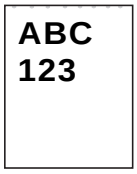

See page 1-5-20

(10) Undulated printing at the left edge (scanning start position).

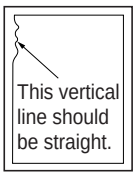

See page 1-5-20

TONER
www.tonerplus.com.ua

(1) Completely blank printout.

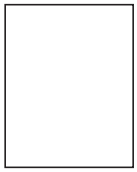

Causes
1. Defective developer
2. Defective transfer bias potential
3. Defective laser scanner unit
4. Defective main board

Causes	Check procedures/corrective measures
1. Defective developer	Check that the developer is inserted correctly. See page 1-6-2. Check that the toner on the magnet roller surface. See page 1-6-2.
2. Defective transfer bias potential	Check the transfer bias output on the high voltage unit. This requires removal of the left cover and the test equipment. Replace the high voltage unit if high voltage potential is not available on the board. See page 1-6-23.
3. Defective laser scanner unit	The scanner components within the scanner may be disordered. Replace the laser scanner unit. See page 1-6-35. Defective laser scanner unit control circuit in the main board (KP-1053*1/1033*2*3). See page 1-6-22.
4. Defective main board	Defective laser scanner unit control circuit in the main board (KP-1053*1/1033*2*3). See page 1-6-22.

*1: For FS-1920, *2: For FS-3820N, *3: For FS-3830N models

(2) No image appears (entirely black).

Causes
1. Defective main charger unit
2. Defective drum bias
3. Defective high voltage unit
4. Defective main board

Causes	Check procedures/corrective measures
1. Defective main charger unit	Open the printer side cover and check that the drum unit is correctly seated. Check for poor contact of the main charger terminal between the main charger unit and the drum unit.
2. Defective drum bias	Make sure the bias from the high voltage unit correctly arrives at the drum unit.
3. Defective high voltage unit	Check the high voltage output on the high voltage unit. Replace the high voltage unit if high voltage potential is not available on the board.
4. Defective main board	Defective laser scanner unit control circuit in the main board (KP-1053*1/1033*2*3). See page 1-6-22.

*1: For FS-1920, *2: For FS-3820N, *3: For FS-3830N models

TONER+
www.tonerplus.com.ua

(3) Dropouts.

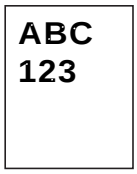

Causes
1. Defective developing roller (in the developer)
2. Defective drum unit
3. Defective fuser unit
4. Defective paper specifications
5. Defective transfer roller installation
6. Defective high voltage unit (transfer bias potential)

Causes	Check procedures/corrective measures
1. Defective developing roller (in the developer)	If the defects occur at regular intervals of 39 mm, the problem may be the damaged developing roller (in the developer). Replace the developer. See page 1-6-2.
2. Defective drum unit	If the defects occur at regular intervals of 94 mm, the problem may be the damaged drum (in the drum unit). Replace the drum unit. See page 1-6-10.
3. Defective fuser unit	If the defects occur at regular intervals of 72 mm (heat roller) or 79 mm (press roller), the problem may be the damaged fuser unit. Replace the press roller or heat roller. See page 1-6-32 or 1-6-34.
4. Defective paper specifications	Paper with rugged surface or dump tends to cause dropouts. Replace paper with the one that satisfies the paper specifications.
5. Defective transfer roller installation	The transfer roller must be supported by the bushes at the both ends. Clean the bush to remove oil and debris. Replace the transfer roller if necessary. See page 1-6-15.
6. Defective high voltage unit (transfer bias potential)	Check the transfer bias output on the high voltage unit. This requires removal of the left cover and the test equipment. Replace the high voltage unit if high voltage potential is not available on the board. See page 1-6-23.

(4) Black dots.

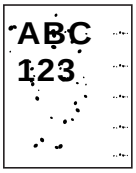

Causes
1. Defective drum unit

Causes	Check procedures/corrective measures
1. Defective drum unit	If the defects occur at regular intervals of 94 mm, the problem may be the damaged drum (in the drum unit). Replace drum unit. See page 1-6-10. If the defects occur at random intervals, the toner may be leaking from the developer and drum unit. Replace developer and drum unit. See page 1-6-2 and 1-6-10.

TONER+
www.tonerplus.com.ua

(5) Black horizontal streaks.

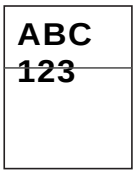

Causes
1. Defective drum unit's ground
2. Defective drum unit

Causes	Check procedures/corrective measures
1. Defective drum unit's ground	The drum axle in the drum unit and its counter part, the grounding tab in the printer, must be in a good contact. If necessary, apply a small amount of electro-conductive grease onto the tab.
2. Defective drum unit	Replace the drum unit. See page 1-6-10.

(6) Black vertical streaks.

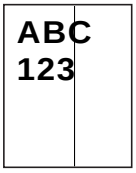

Causes
1. Contaminated main charger wire
2. Defective drum surface
3. Defective magnet roller (in the developer)

Causes	Check procedures/corrective measures
1. Contaminated main charger wire	Clean the main charger wire by pulling the green colored cleaning knob in and out several times.
2. Defective drum surface	A streak of toner remaining on drum after printing means that the cleaning blade (in the drum unit) is not working properly. Replace the drum unit. See page 1-6-10.
3. Defective magnet roller (in the developer)	Replace the developer. See page 1-6-2.

TONER+
www.tonerplus.com.ua

(7) Unsharpness.

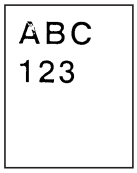

Causes
1. Defective paper specifications
2. Defective transfer roller installation
3. Defective transfer bias potential
4. EcoPrint setting

Causes	Check procedures/corrective measures
1. Defective paper specifications	Paper with rugged surface or dump tends to cause unsharp printing. Replace paper with the one that satisfies the paper specifications.
2. Defective transfer roller installation	The transfer roller must be supported by the bushes at the both ends. Clean the bush to remove oil and debris. Replace the transfer roller if necessary. See page 1-6-15.
3. Defective transfer bias potential	Check the transfer bias output on the high voltage unit. This requires removal of the left cover and the test equipment. Replace the high voltage unit if high voltage potential is not available on the board. See page 1-6-23.
4. EcoPrint setting	The EcoPrint mode can provides faint, unsharp printing because it acts to conserve toner for draft printing purpose. For normal printing, turn the EcoPrint mode off by using the operator panel. For details refer to the printer's user's manual.

(8) Gray background.

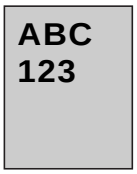

Causes
1. Print density setting
2. Defective drum surface potential
3. Grid
4. Developing roller (in the developer)

Causes	Check procedures/corrective measures
1. Print density setting	The print density may be set too high. Try adjusting the print density using the Remote operation panel utility. For details refer to the printer's user's manual.
2. Defective drum surface potential	The drum surface potential should be approximately 230±15 V. This may vary depending on production lots. Measurement is possible only by using the jig and tool specifically designed for this purpose. The drum unit will have to be replaced if it bears values far out of the allowable range.
3. Grid	Clean the grid by grid cleaner. For details refer to the printer's user's manual.
4. Developing roller (in the developer)	If a developer which is known to work normally is available for check, replace the current developer in the printer with the normal one. If the symptom disappears, replace the developer with a new one. See page 1-6-2.

TONER
www.tonerplus.com.ua

(9) Dirt on the top edge or back of the paper.

Causes
1. Toner contamination in various parts
2. Defective transfer roller

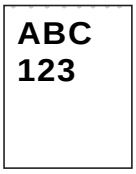

Causes	Check procedures/corrective measures
1. Toner contamination in various parts	Dirty edges and back of the paper can be caused by toner accumulated on such parts as the paper chute, paper transportation paths, the bottom of the drum and developer, and the fuser unit inlet. Clean these areas and parts to remove toner.
2. Defective transfer roller	If the transfer roller is contaminated with toner, clean the transfer roller using a vacuum cleaner or by continuously printing a low-density page until the symptom has faded away.

(10) Undulated printing at the left edge (scanning start position).

Causes
1. Defective laser scanner unit
2. Defective engine controller circuit in the engine board

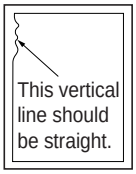

Causes	Check procedures/corrective measures
1. Defective laser scanner unit	Defective polygon motor in the laser scanner unit. Replace the laser scanner unit. See page 1-6-35.
2. Defective engine controller circuit in the engine board	Replace the engine board (KP-1081). See page 1-6-20.

TONER
www.tonerplus.com.ua

1-5-4 Electrical problems

Problem	Causes	Check procedures/corrective measures
(1) Defective waste toner box detecting. • Although new waste toner box is installed, Check waste toner box is displayed. Although waste toner bottle is not installed, Ready is displayed.	Defective waste toner full sensor [board] (KP-1065) or waste toner sensor (receiver).	Replace drum unit. See page 1-6-10.
	Deformed pins of connector (YC702) on the sensor board (KP-1077).	Check and straighten pins of connector (YC702) on the sensor board (KP-1077).
	Defective engine board (KP-1081).	Replace engine board (KP-1081).
(2) Defective paper jam detecting. • Paper jam frequently occurs. • False paper jam message display.	Surface of the registration sensor (PH701) is dirty with paper particles.	Clean with cloth.
	Actuators of registration sensor (PH701) or exit sensor does not operate smoothly.	Repair or replace.
	Defective sensor board (KP-1077), fuser board (KP-1069) or engine board (KP-1081).	Replace sensor board (KP-754), fuser board (KP-1069), or engine board (KP-1081). See page 5-26 and 1-6-20.
	A piece of paper torn from a sheet is caught around actuator of registration sensor or exit sensor.	Check visually and remove it, if any.
(3) Defective paper gauge sensing. • False paper gauge indication.	Surface of the paper gauge sensor 1 (PH702) and 2 (PH703) on the sensor board (KP-754) are dirty with paper particles.	Clean with cloth.
	A piece of paper torn from a sheet is caught around paper gauge sensor 1 (PH702) and 2 (PH703) on the paper sensor board (KP-754).	Check visually and remove it, if any.
	Reflecting mirror has come off the actuator of paper gauge sensor 1 (PH702) and 2 (PH703).	Check visually and remove it, if any.
	Defective paper gauge sensor 1 (PH702) and 2 (PH703) on the sensor board (KP-754).	Replace sensor board (KP-1077). See page 1-6-24.
	Defective engine board (KP-1081).	Replace engine board (KP-1081). See page 1-6-20.

TONER
www.tonerplus.com.ua

Problem	Causes	Check procedures/corrective measures
(4) Defective paper size detecting. • False paper size message display.	Defective paper size switch.	Replace paper size switch.
	Defective sensor board (KP-754).	Replace sensor board (KP-1077). See page 1-6-24.
	Defective engine board (KP-1081).	Replace engine board (KP-1081). See page 1-6-20.
(5) Defective message displaying (LCD) [1]. • No message appears on the message display (LCD), though the message background is faintly illuminated. (Power is supplied to the LCD controller board [KP-1079].)	Defective main board (system DIMM board [KP-1059*1/893*2*3]).	Replace main board (system DIMM [board]).
	Defective LCD controller board (KP-1079).	Replace LCD controller board (KP-1079).
	Defective engine board (KP-1081).	Replace engine board (KP-1081).
	Improper connection of harness (S02402) between LCD controller board (KP-1079) and engine relay board (KP-1071).	Reinsert the connector.
	Improper connection of harness (S03012) between engine board (KP-1081) and engine relay board (KP-1071).	Reinsert the connector.
(6) Defective message displaying (LCD) [2]. • No message appears on the message display (LCD), even thought the message background does not illuminate faintly. (The power is not supplied to the LCD controller board [KP-1079].)	Defective main board (system DIMM [board KP-1059*1/893*2*3]).	Replace main board (system DIMM [board]).
	Defective LCD controller board (KP-1079).	Replace LCD controller board (KP-1079).
	Defective engine board (KP-1081).	Replace engine board (KP-1081).
	Improper connection of harness (S02402) between LCD controller board (KP-1079) and engine relay board (KP-1071).	Reinsert the connector.
	Improper connection of harness (S03012) between engine board (KP-1081) and engine relay board (KP-1071).	Reinsert the connector.
	Broken power cord.	Replace the power cord.
	The power cord is not plugged in properly.	Check the contact between the printer's AC inlet and the outlet.
	No electricity at the power outlet.	Measure the AC power voltage at the outlet.
	Defective power supply unit.	Replace the power supply unit. See page 1-6-20.

*1: For FS-1920, *2: For FS-3820N, *3: For FS-3830N models

TONER
www.tonerplus.com.ua

Problem	Causes	Check procedures/corrective measures
(7) Defective face up/down solenoid operating. • Change guide does not operate in the fuser unit.	Improper insertion of the face up/down solenoid connector into fuser board (KP-1069).	Reinsert the connector.
	Broken face up/down solenoid coil or blown-out fuse (ICP831) on the fuser board (KP-1069).	Remove and then check for continuity across the face up/down solenoid connector terminals; pin #1 and pin #2, pin #3 and pin #2. Remove and check for continuity of fuser board (KP-1069) connectors terminals; across the pin #2 of connector (YC832) and pin #2 of connector (YC831). If none, replace the face up/down solenoid and fuser board (KP-1069) at the same time. Or replace fuser unit. See page 1-6-27.
	Defective engine board (KP-1081) or power supply unit.	Replace engine board (KP-1081) or power supply unit. See page 1-6-20.
(8) False “Close paper transfer unit”.	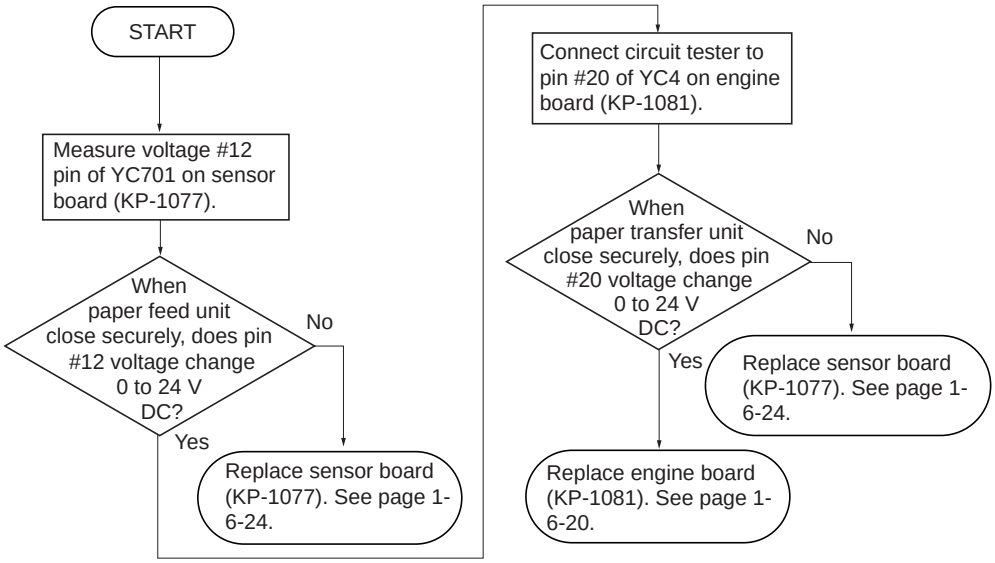	
(9) False “Close top cover”.	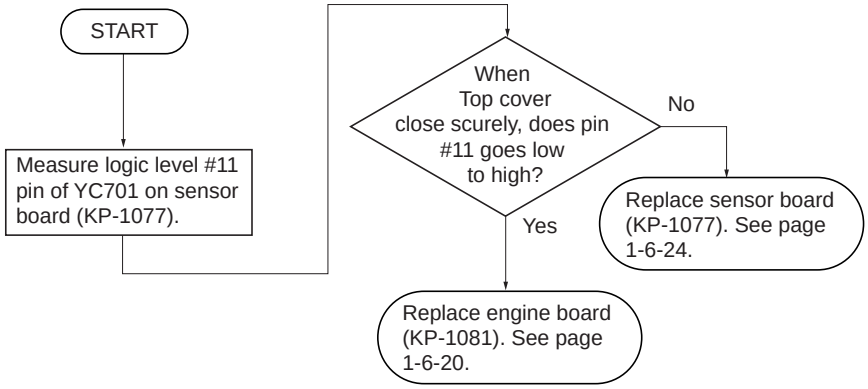	

TONE
www.tonerplus.com.ua

1-5-5 Mechanical problems

Problem	Causes/check procedures	Corrective measures
(1) No primary paper feed.	Check if the surfaces of the following rollers are dirty with paper powder: pickup roller, feed roller, and MP tray feed roller.	Clean with isopropyl alcohol.
	Check if the pickup roller, feed roller, and MP tray feed roller are deformed.	Check visually and replace any deformed rollers (see page 1-6-11 and 1-6-14).
	Electrical problem with the following electromagnetic clutch (solenoid): feed clutch, and MP feed solenoid.	Check visually and replace any deformed electromagnetic clutch.
(2) No secondary paper feed.	Check if the surfaces of the upper and lower registration rollers are dirty with paper powder.	Clean with isopropyl alcohol.
	Electrical problem with the registration clutch.	Check visually and replace any deformed registration clutch.
(3) Skewed paper feed.	Check if the paper is curled.	Change the paper.
(4) Multiple sheets of paper are fed at one time.	Check if the paper is excessively curled.	Change the paper.
	Deformed guides along the paper conveying path.	Check visually and replace any deformed guides.
(5) Paper jams.	Check if the contact between the upper and lower registration rollers is correct.	Check visually and remedy if necessary. Replace the pressure spring if it is deformed.
	Check if the press roller is extremely dirty or deformed.	Clean or replace the press roller.
	Check if the contact between the heat roller and its separation claws is correct.	Repair if any springs are off the separation claws.
(6) Toner drops on the paper conveying path.	Check if the developing section of the image formation unit is extremely dirty.	Clean the developing section of the image formation unit.
(7) Abnormal noise is heard.	Check if the pulleys, rollers and gears operate smoothly.	Grease the bearings and gears.
	Check if the following electromagnetic clutches (solenoid) are installed correctly: feed clutch, registration clutch, middle clutch, and MP feed solenoid.	Correct.

TONER+
www.tonerplus.com.ua

1-6-1 Precautions for assembly and disassembly

(1) Precautions

- Be sure to turn the power switch off and disconnect the power plug before starting disassembly.
- When handling PWBs (printed wiring boards), do not touch parts with bare hands. The PWBs are susceptible to static charge.
- Do not touch any PWB containing ICs with bare hands or any object prone to static charge.
- Use only the specified parts to replace the fixing unit thermal cutout. Never substitute electric wires, as the printer may be seriously damaged.
- Use the following circuit testers when measuring voltages:
  Hioki 3200
  Sanwa MD-180C
  Sanwa YX-360TR
  Beckman TECH300
  Beckman DM45
  Beckman 330*
  Beckman 3030*
  Beckman DM850*
  Fluke 8060A*
  Arlec DMM1050
  Arlec YF1030C
  * Capable of measuring RMS values.

TONER+
www.tonerplus.com.ua

1-6-2 Removing the developer

(1) Removing the developer

CAUTIONS When if installing or removing the developer, do not let the magnet roller touch any part in the printer.

1. Open the top cover.
2. Remove the toner container.
3. Disconnect the developer connector.
4. Remove the developer from the printer while sliding the developer lock lever frontwards.

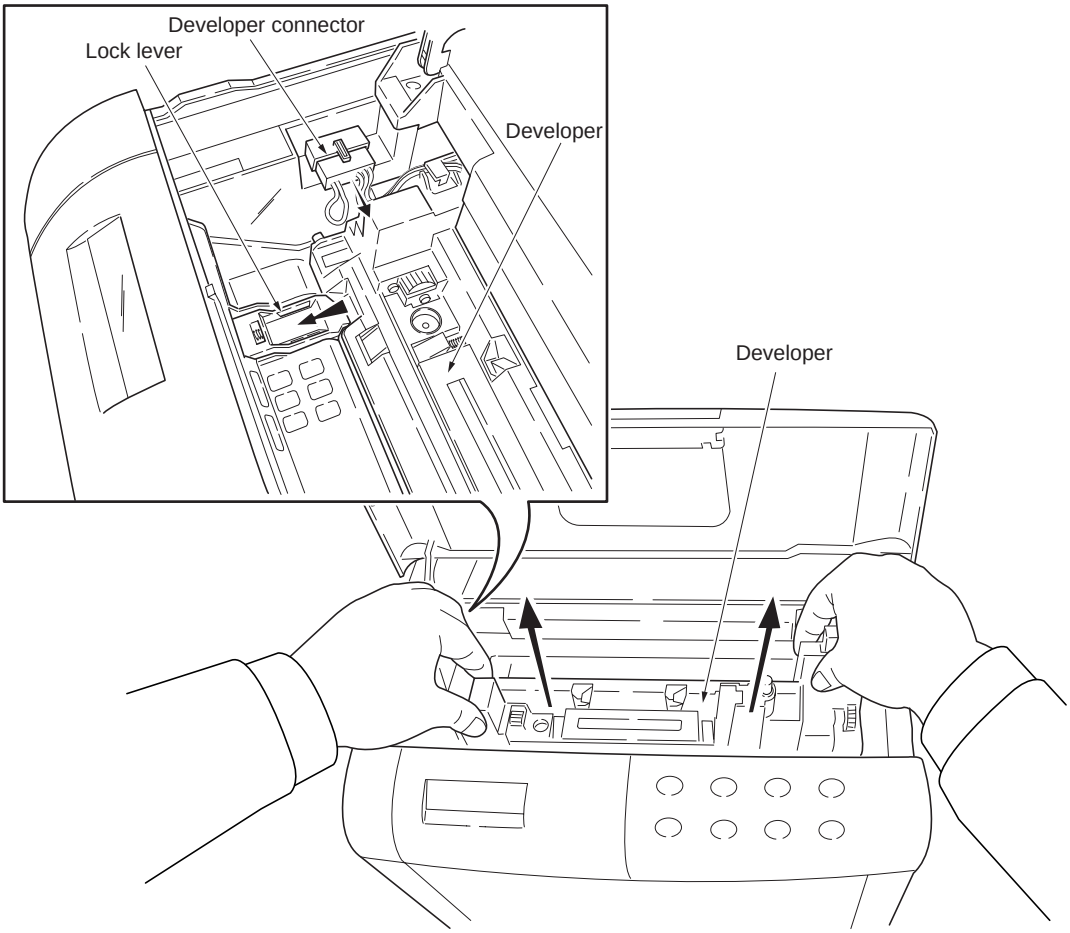

Figure 1-6-1 Removing the developer

TONER
www.tonerplus.com.ua

5. Gently flip down the magnet roller protective cover.

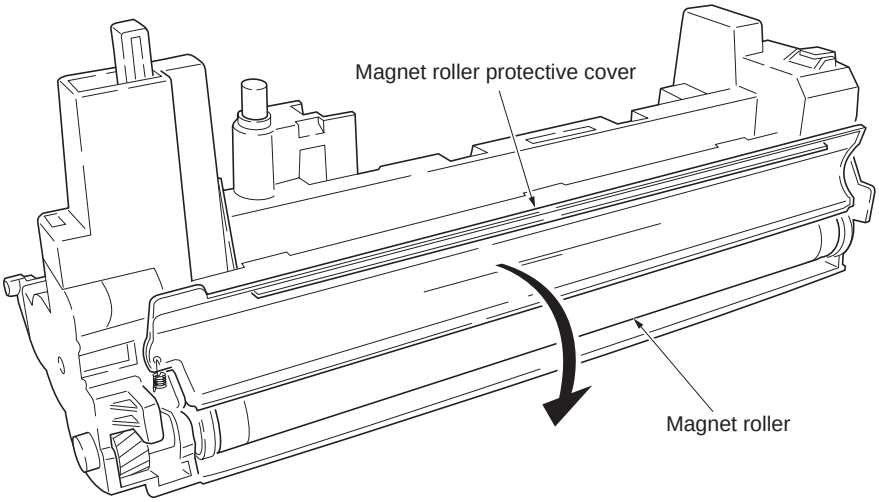

Figure 1-6-2 Closing the magnet roller protective cover

NOTE After removing the developer, seal it in the protective bag and place it on a flat surface. Do not place the developer in a dusty area. If you ship the developer, pack it in the shipping container specifically supplied with the printer. See page 1-4-13.

TONER+
www.tonerplus.com.ua

1-6-3 Removing the paper transfer unit

1. Draw the paper transfer unit while pressing the buttons in the direction of arrow (A).

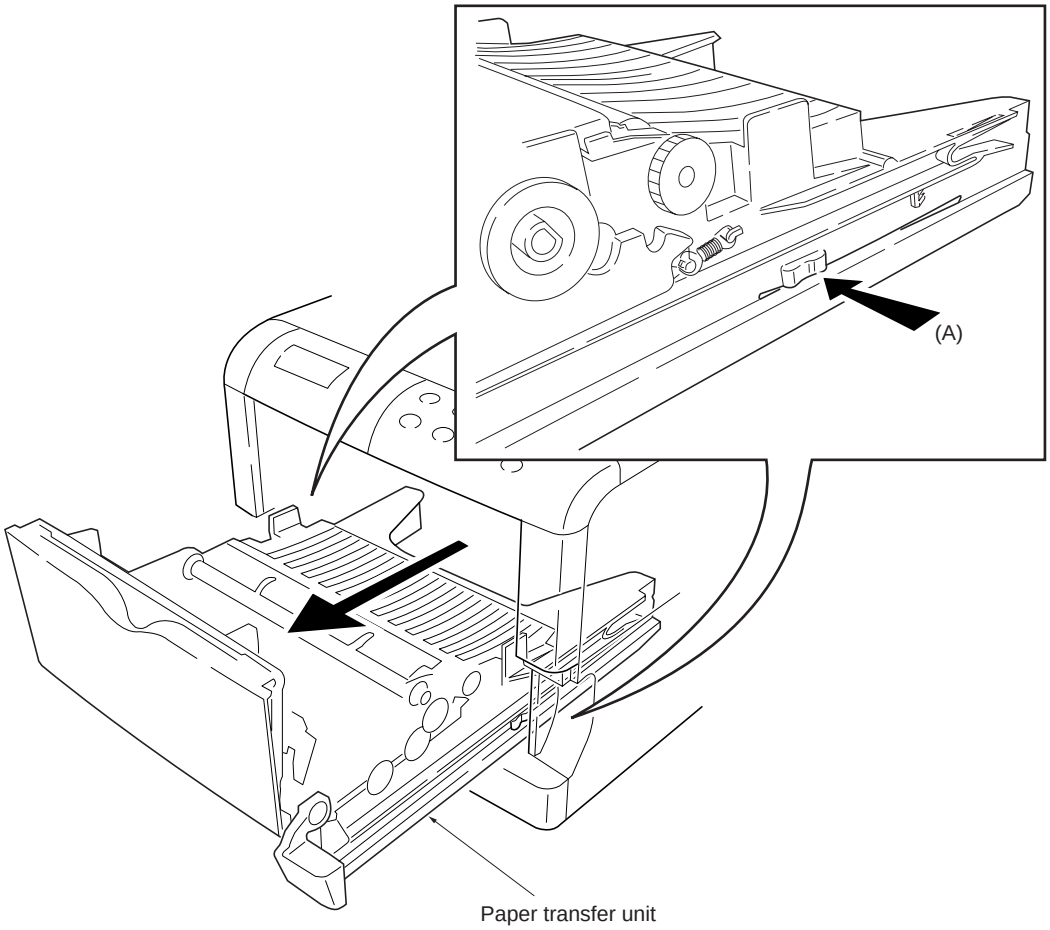

Figure 1-6-3 Removing the paper transfer unit

TONER
www.tonerplus.com.ua

1-6-4 Removing the main charger unit

1. Pull the main charger unit upwards while pushing main charger release lever. Then, pull the main charger unit frontwards.

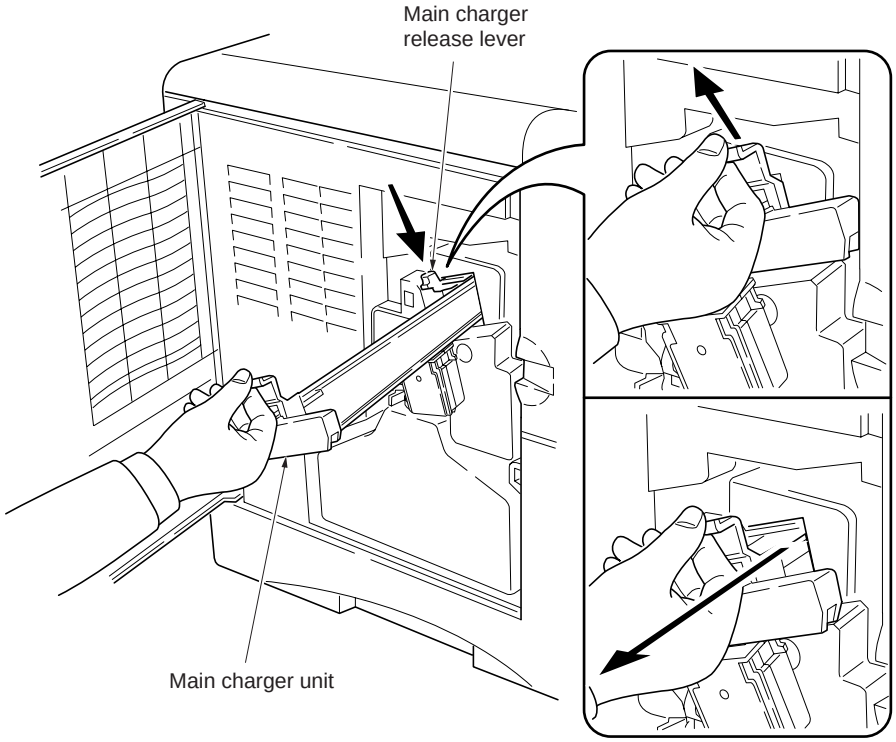

Figure 1-6-4 Removing the main charger unit

TONER
www.tonerplus.com.ua

1-6-5 Removing the operator panel and outer covers

(1) Removing the operator panel

1. Open the top cover and MP tray.
2. Unlatch two hooks.
3. Pull the operator panel towards the front.

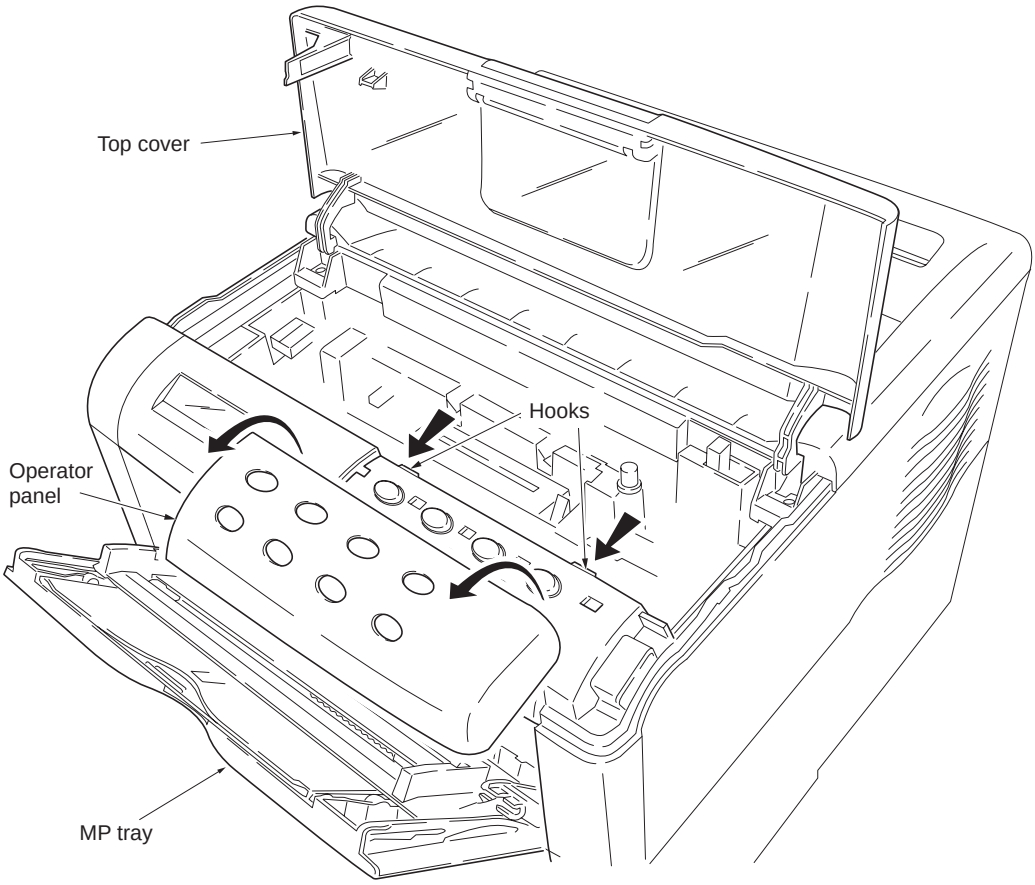

Figure 1-6-5 Removing the operator panel

TONER+
www.tonerplus.com.ua

(2) Removing the top cover/face-down output tray

1. Open the top cover.
2. Remove two screws.
3. Remove the top cover/face-down output tray while pressing it the direction arrows (A) [backwards].

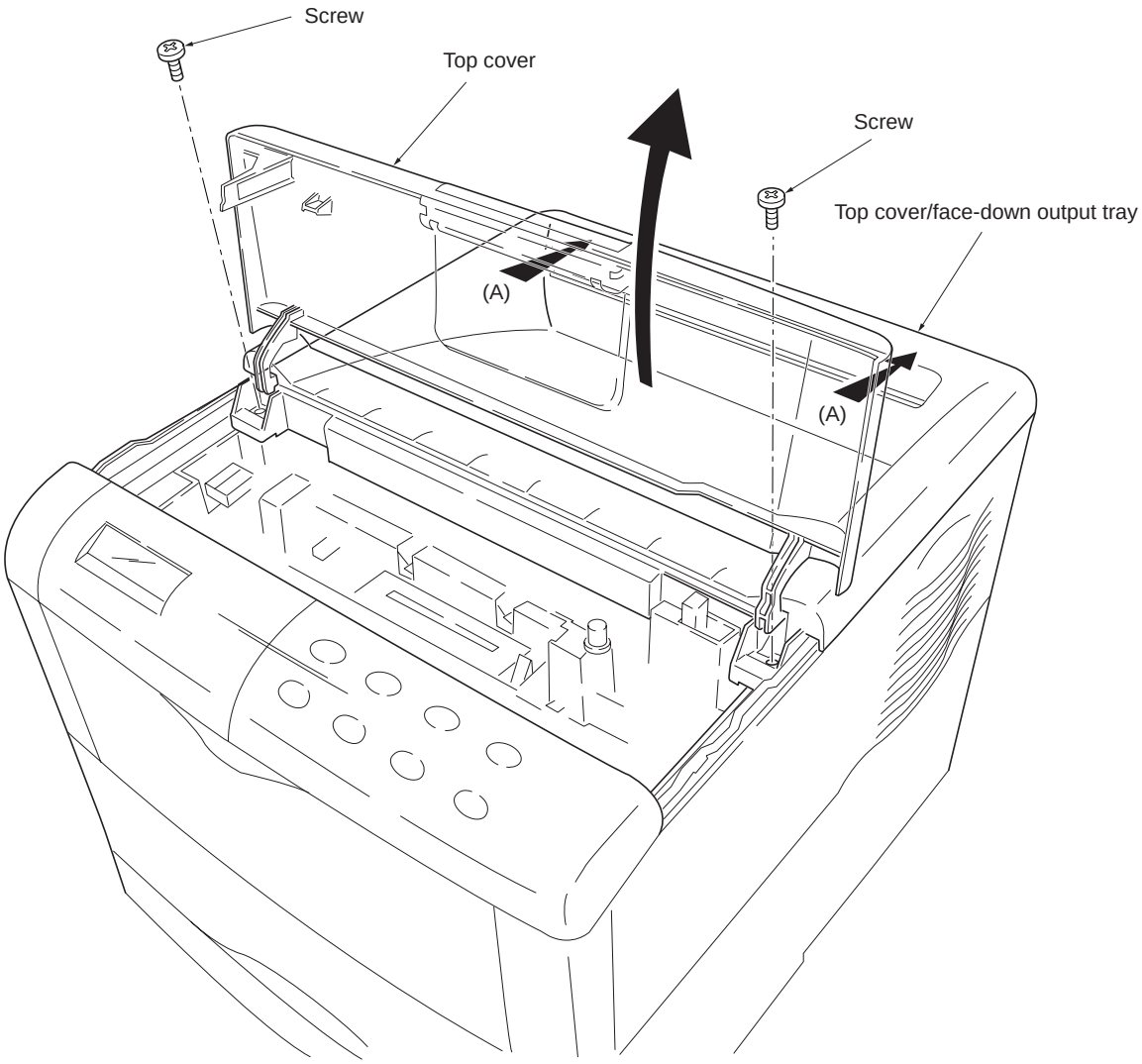

Figure 1-6-6 Removing the top cover/face-down output tray

TONER+
www.tonerplus.com.ua

(3) Removing the right cover

1. Remove the operator panel. See page 1-6-6.
2. Unlatch the four snaps (A) and three hooks (B) on the chassis. Remove the right cover.

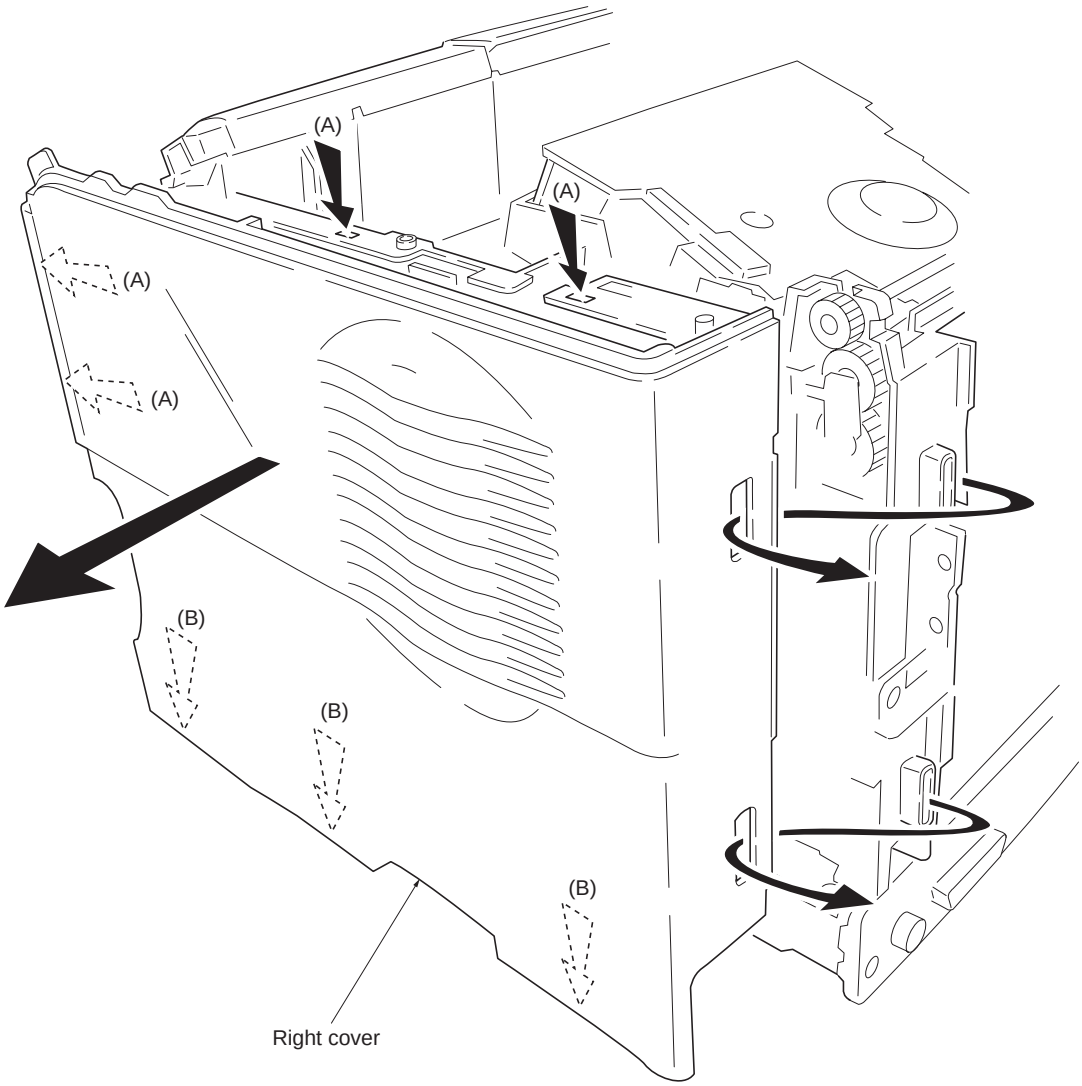

Figure 1-6-7 Removing the right cover

TONER
www.tonerplus.com.ua

(4) Removing the left cover

1. Unlatch the four snaps (A) and three hooks (B) on the chassis. Remove the left cover.

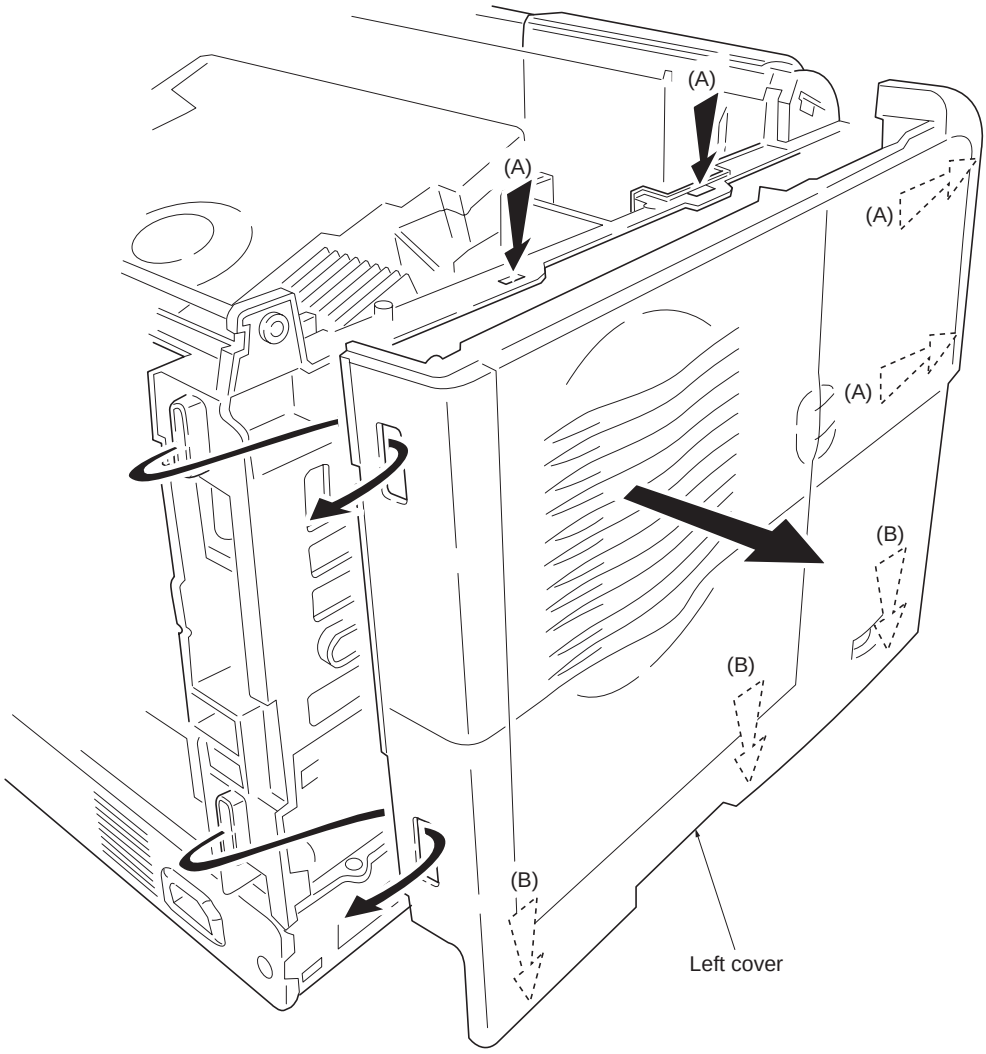

Figure 1-6-8 Removing the left cover

TONER+
www.tonerplus.com.ua

1-6-6 Removing the drum unit

1. Remove the paper cassette and the paper transfer unit. See page 1-6-4.
2. Remove the developer unit. See page 1-6-2.
3. Remove the waste toner bottle.
4. Remove the drum unit while pressing the drum lock.

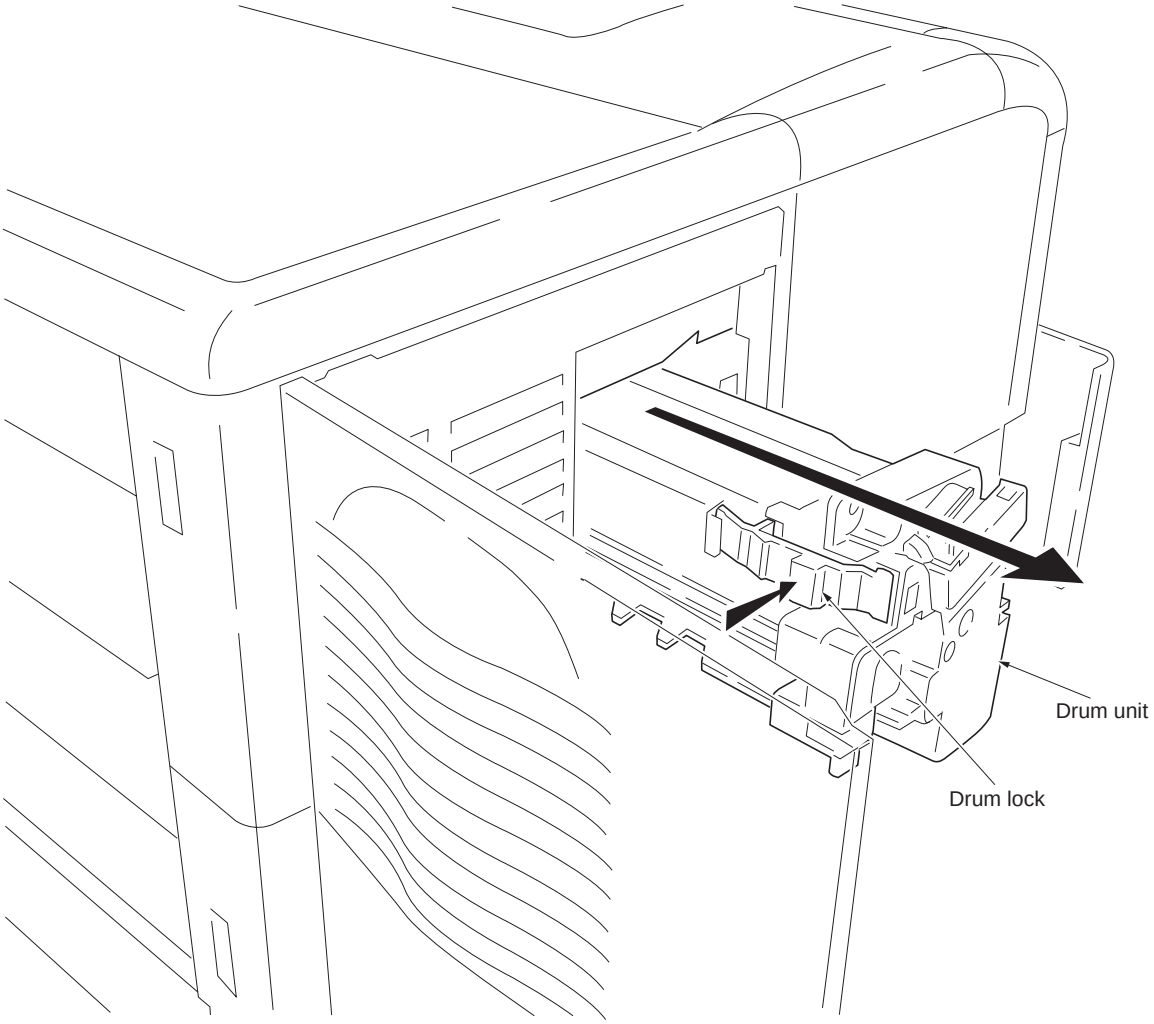

Figure 1-6-9 Removing the drum unit

TONER+
www.tonerplus.com.ua

1-6-7 Removing the pickup roller and feed roller

1. Remove the paper transfer unit. See page 1-6-4.
2. Turn the paper transfer unit over.
3. Detach the release holder by sliding it while pressing the projections.
4. Remove the feed roller assembly while pressing it in the direction of arrow (A).

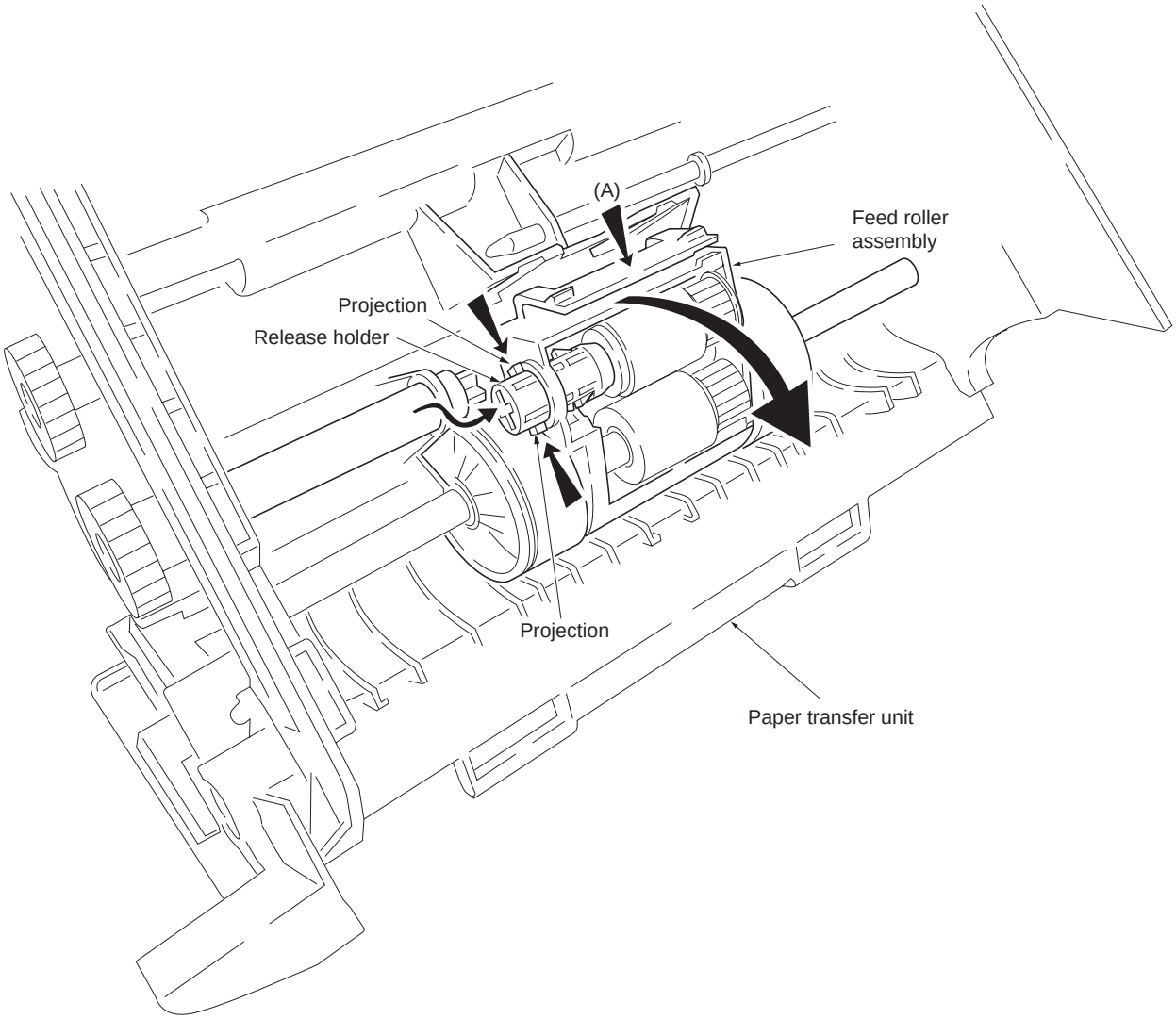

Figure 1-6-10 Removing the feed roller assembly

TONER+
www.tonerplus.com.ua

5. Remove the feed bracket cover while unlatching three snaps.
6. Remove the pickup roller and the feed roller.

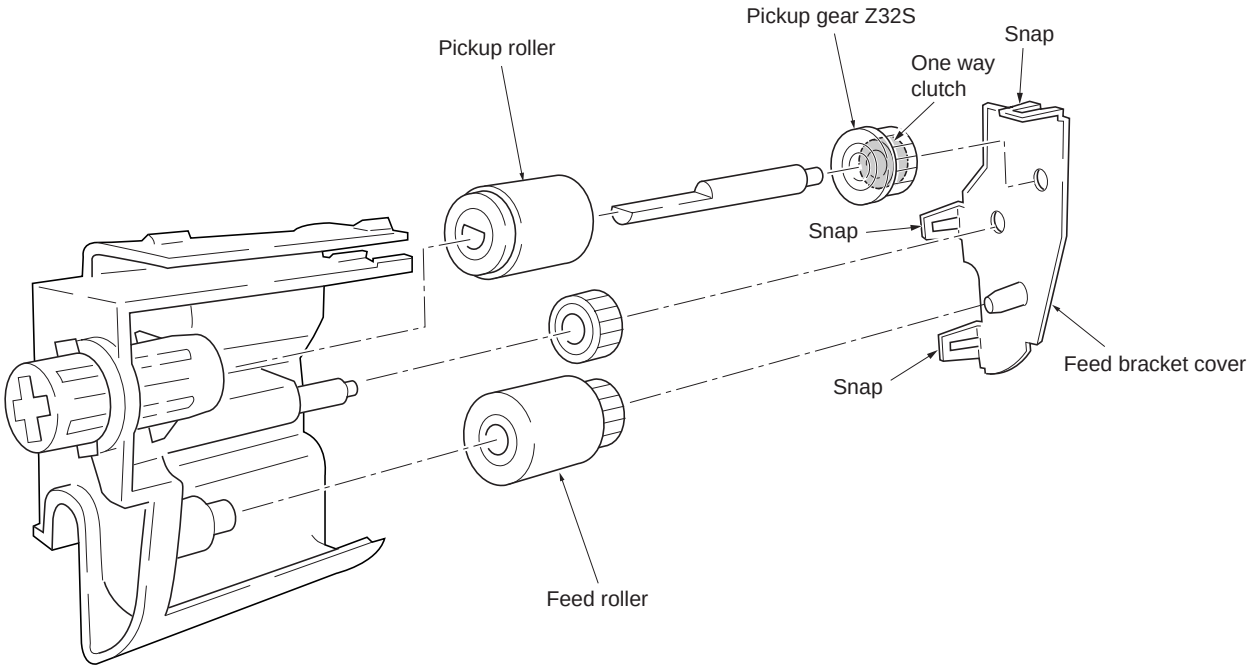

Figure 1-6-11 Remove the pickup roller and feed roller

CAUTIONS Pickup gear Z32S is installed of the inside the one way clutch. When refitting pickup gear Z32S, face the one way clutch face to the feed bracket cover.

TONER
www.tonerplus.com.ua

1-6-8 Removing the MP tray paper feed unit, MP tray feed roller and retard holder (roller)

(1) Removing the MP tray paper feed unit

1. Remove the paper transfer unit. See page 1-6-4.
2. Remove the developer. See page 1-6-2.
3. Remove the three connectors.
4. Remove the engine relay board while unlatching the latches.

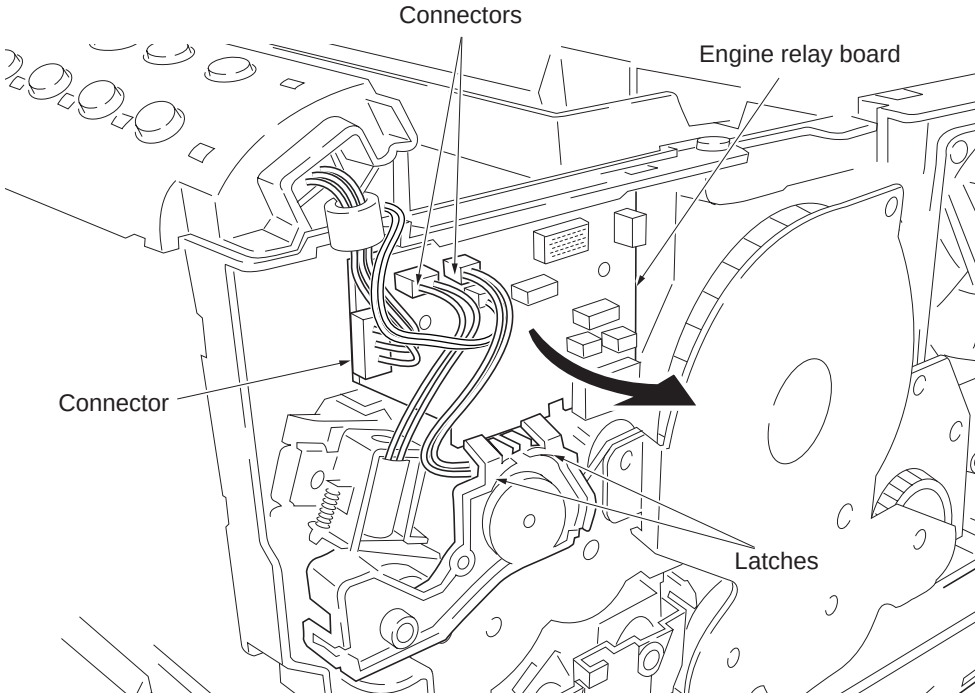

Figure 1-6-12 Removing the engine relay board

5. Pull the MP tray paper feed unit out while unlatching two latches off of points (A).

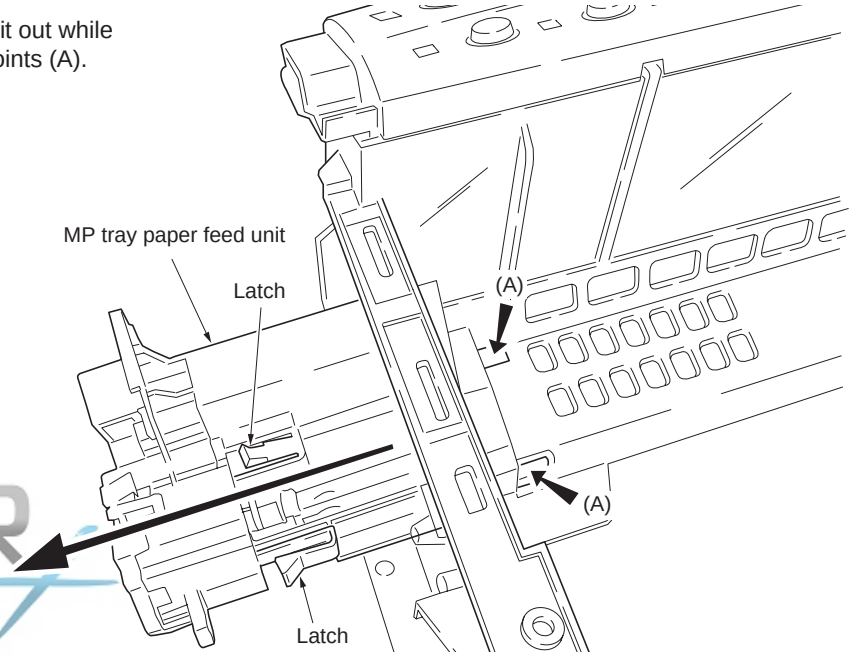

TONER
www.tonerplus.com.ua

Figure 1-6-13 Removing the MP tray paper feed unit

(2) Removing the MP tray feed roller

1. Remove the paper transfer unit. See page 1-6-4.
2. Pull the lever and slide the paper MP feed roller holder.
3. Remove the MP tray feed roller.

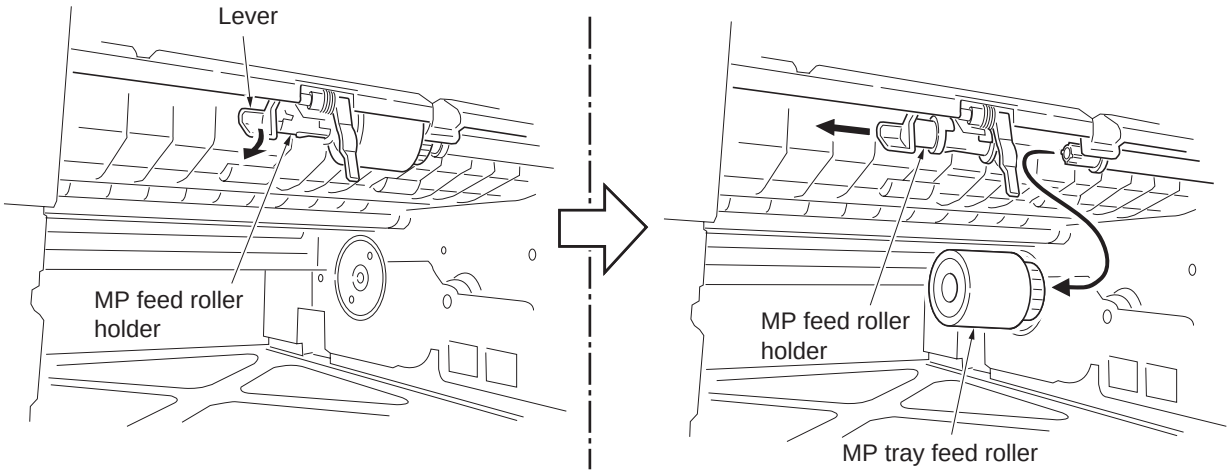

Figure 1-6-13 (a) Removing the MP tray feed roller

(3) Removing the retard holder (roller)

1. Remove the cassette from the printer.
2. Unlatch the two latches and then remove the retard guide.
3. Remove the retard holder (roller).

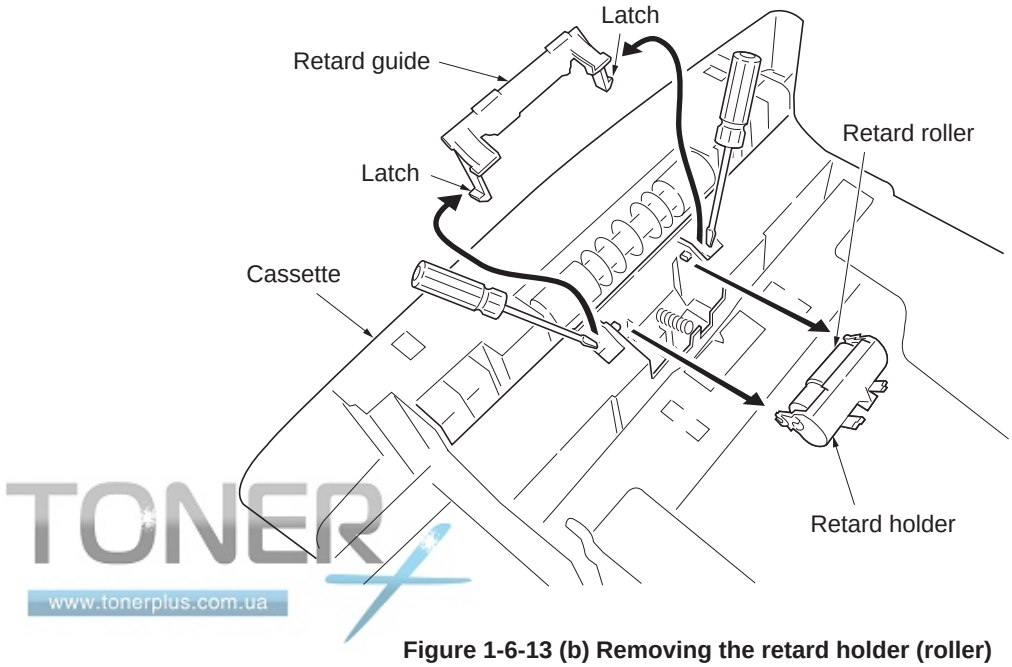

TONER
www.tonerplus.com.ua

Figure 1-6-13 (b) Removing the retard holder (roller)

1-6-9 Removing the transfer roller

CAUTIONS Do not touch the transfer roller (sponge) surface. Oil and dust (particles of paper, etc.) on the transfer roller can significantly deteriorate the print quality (white spots, etc.).

1. Draw the paper transfer unit from the printer.
2. Remove the paper chute.
3. Remove the transfer roller.

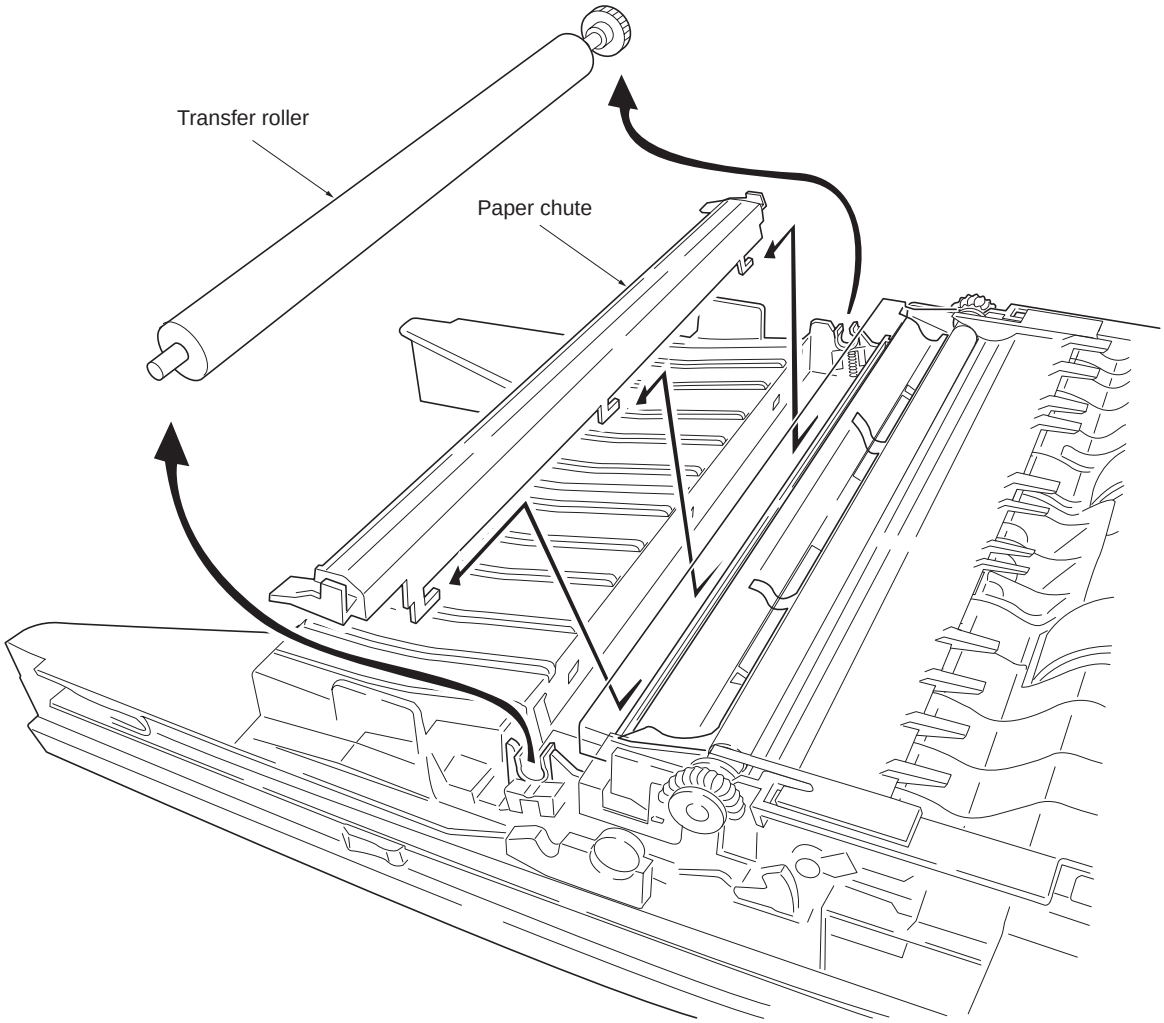

Figure 1-6-14 Removing the transfer roller

TONER
www.tonerplus.com.ua

1-6-10 Removing the controller unit and the principal circuit boards

(1) Removing and opening the controller unit

1. Remove the top cover/face-down output tray. See page 1-6-7.
2. Remove the right and left covers. See page 1-6-8 and 1-6-9.
3. Remove the four connectors and one tab from the controller unit left side.

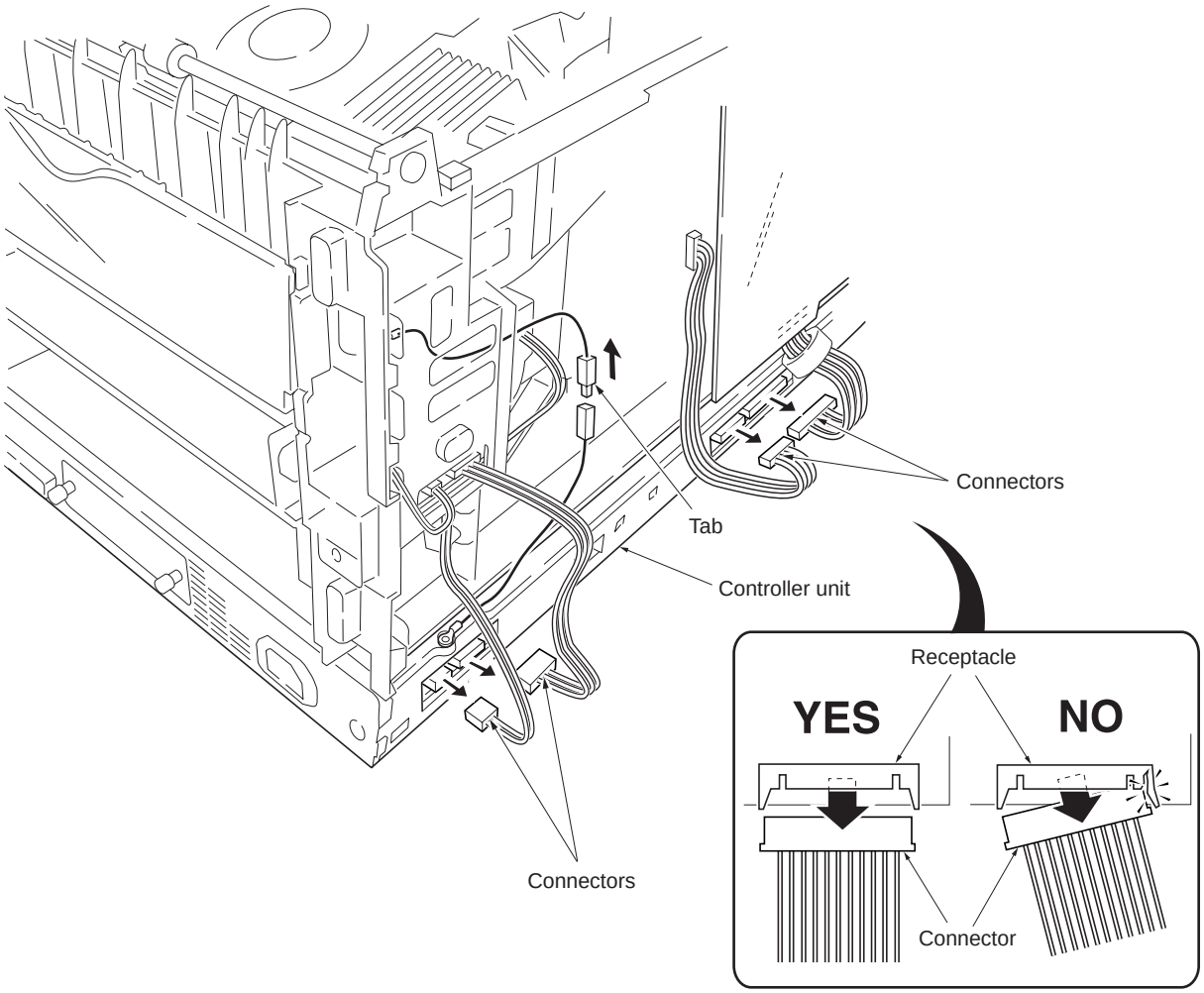

Figure 1-6-15 Removing the connectors and tab from controller unit left side

CAUTIONS Draw the connector straight to remove. If you draw the connector while it is slanted, the receptacle may be damaged.

TONER+
www.tonerplus.com.ua

4. Remove the two connectors from the controller unit right side.

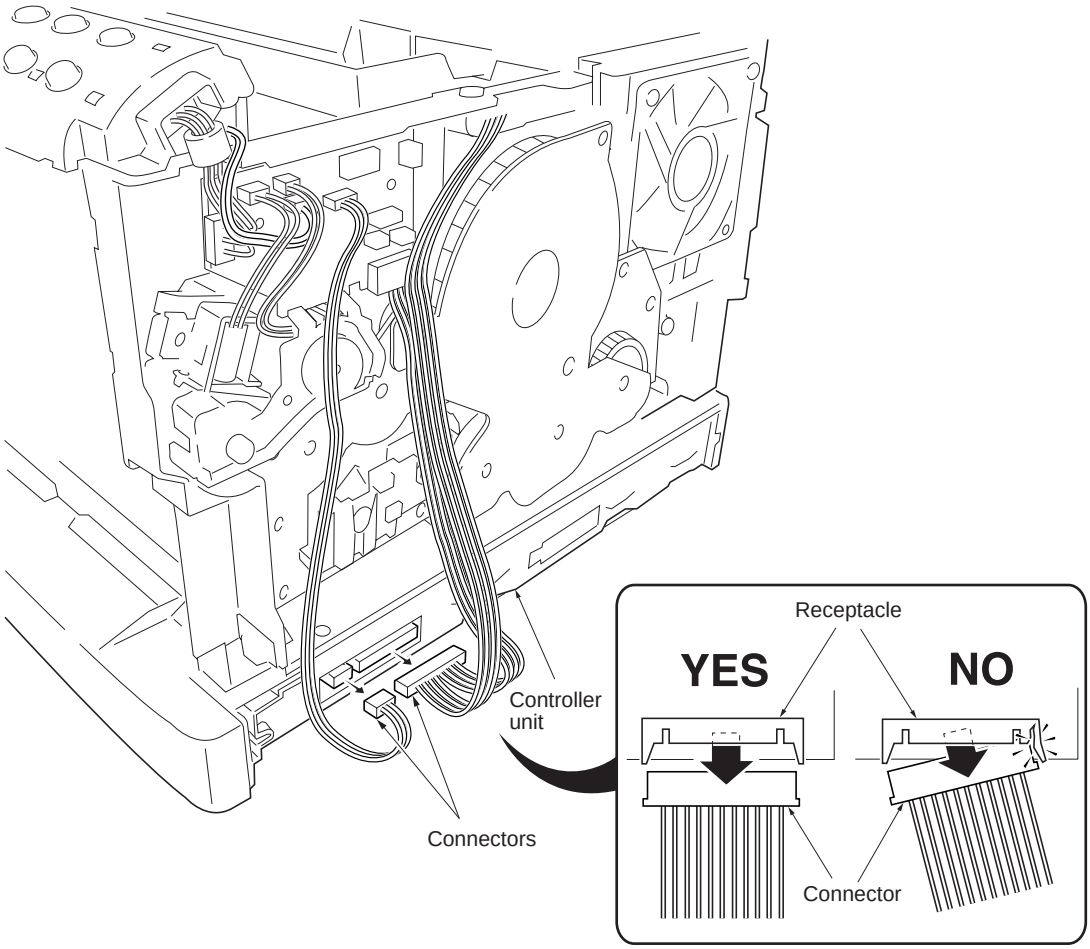

Figure 1-6-16 Removing the connectors from controller unit right side

TONER+
www.tonerplus.com.ua

5. Remove three screws.
6. Remove frame unit while releasing the projections from the catches on the frame unit.

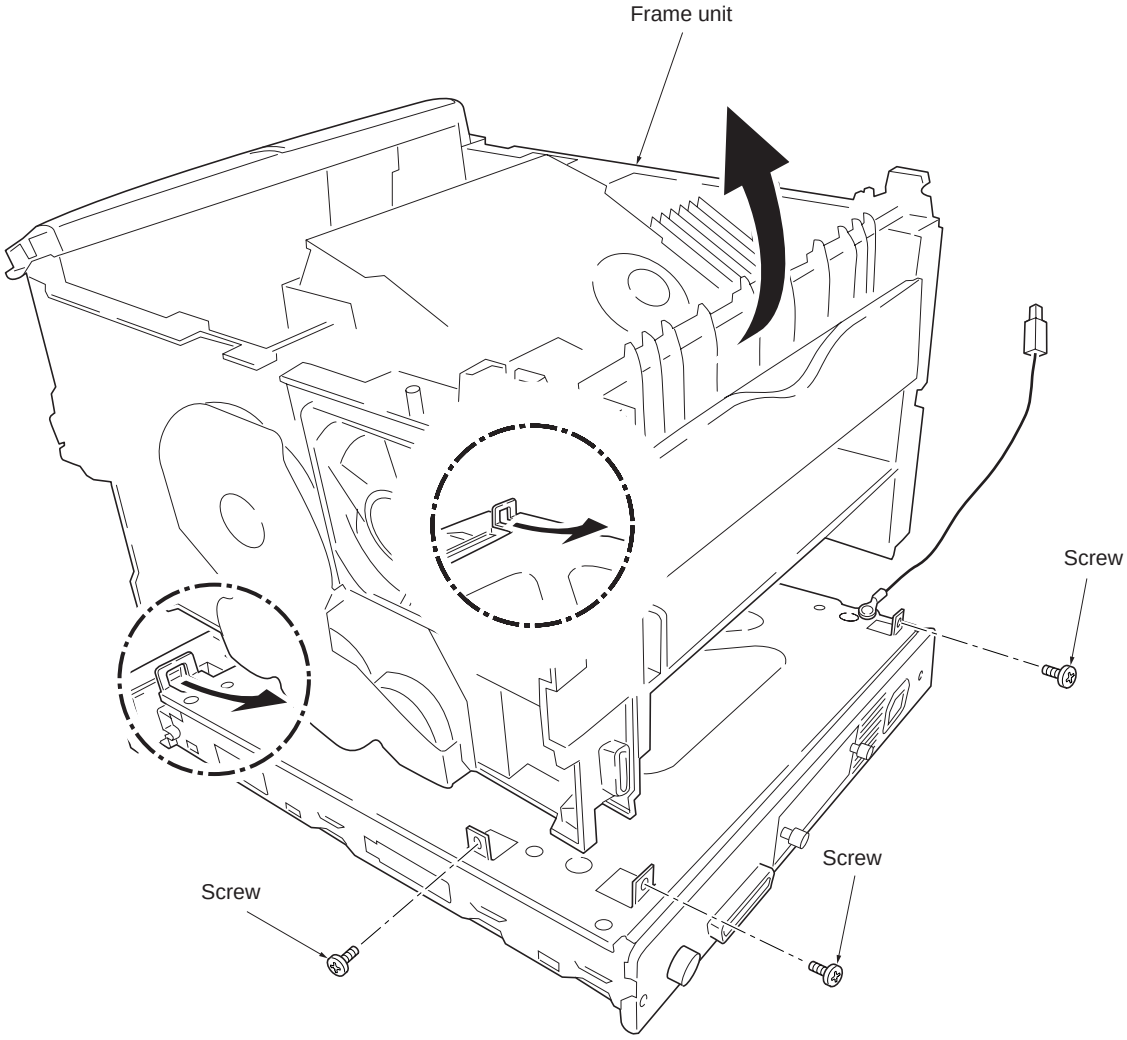

Figure 1-6-17 Removing the controller unit form the frame unit

TONER+
www.tonerplus.com.ua

7. Remove two screws.
8. Remove the main board.
9. Remove four screws.
10. Remove the grounding terminal and controller unit lid from the controller unit.

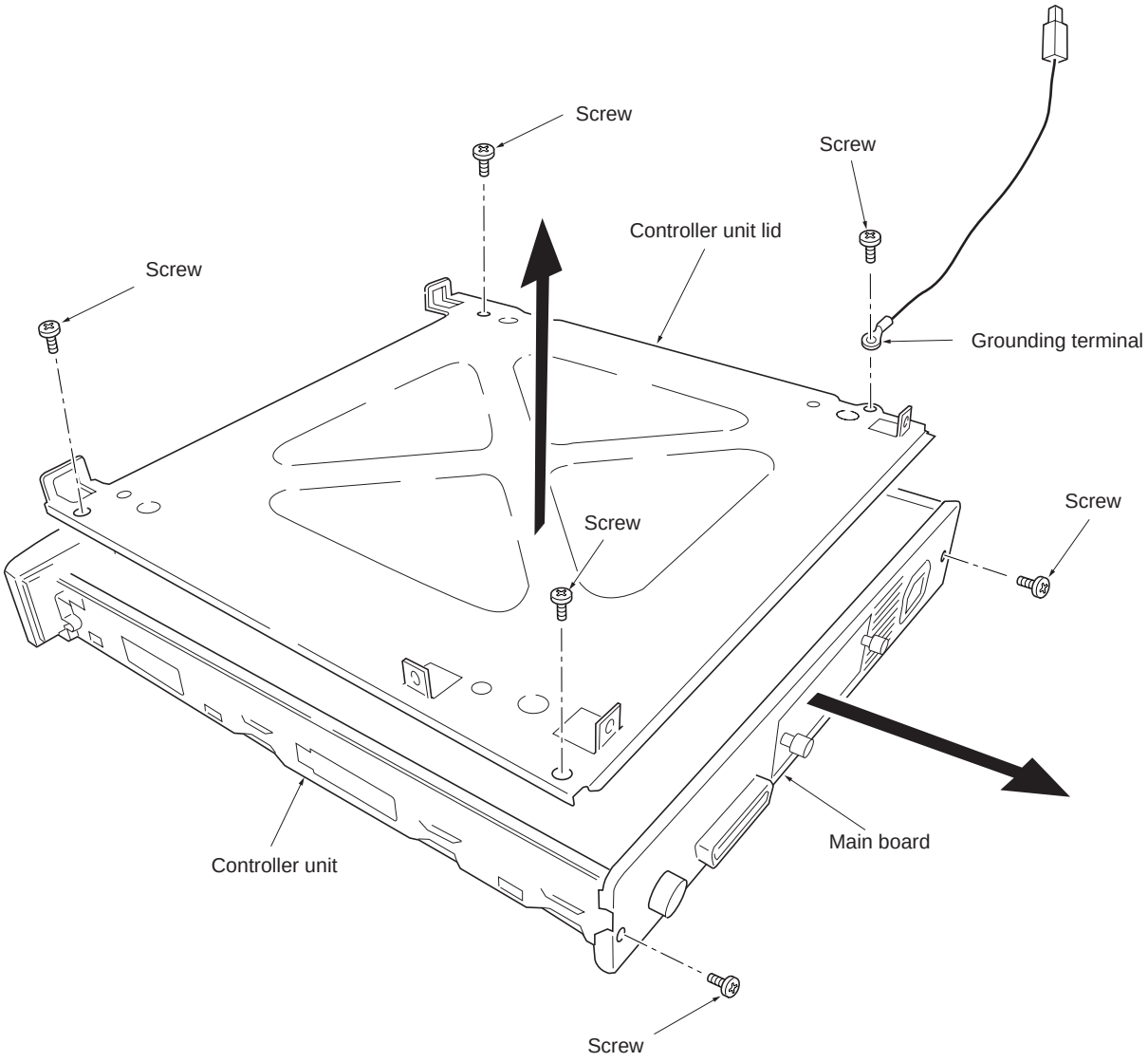

Figure 1-6-18 Opening the controller unit

TONER+
www.tonerplus.com.ua

(2) Removing the engine board and power supply unit

1. Remove and open the controller unit. See pages 1-6-19.
2. Remove the connectors YC3 and YC6 from the engine board.
3. Remove the connector YC10 from the engine board. (For FS-3820N/3830N models only)
4. Remove five screws.
5. Remove the engine board.

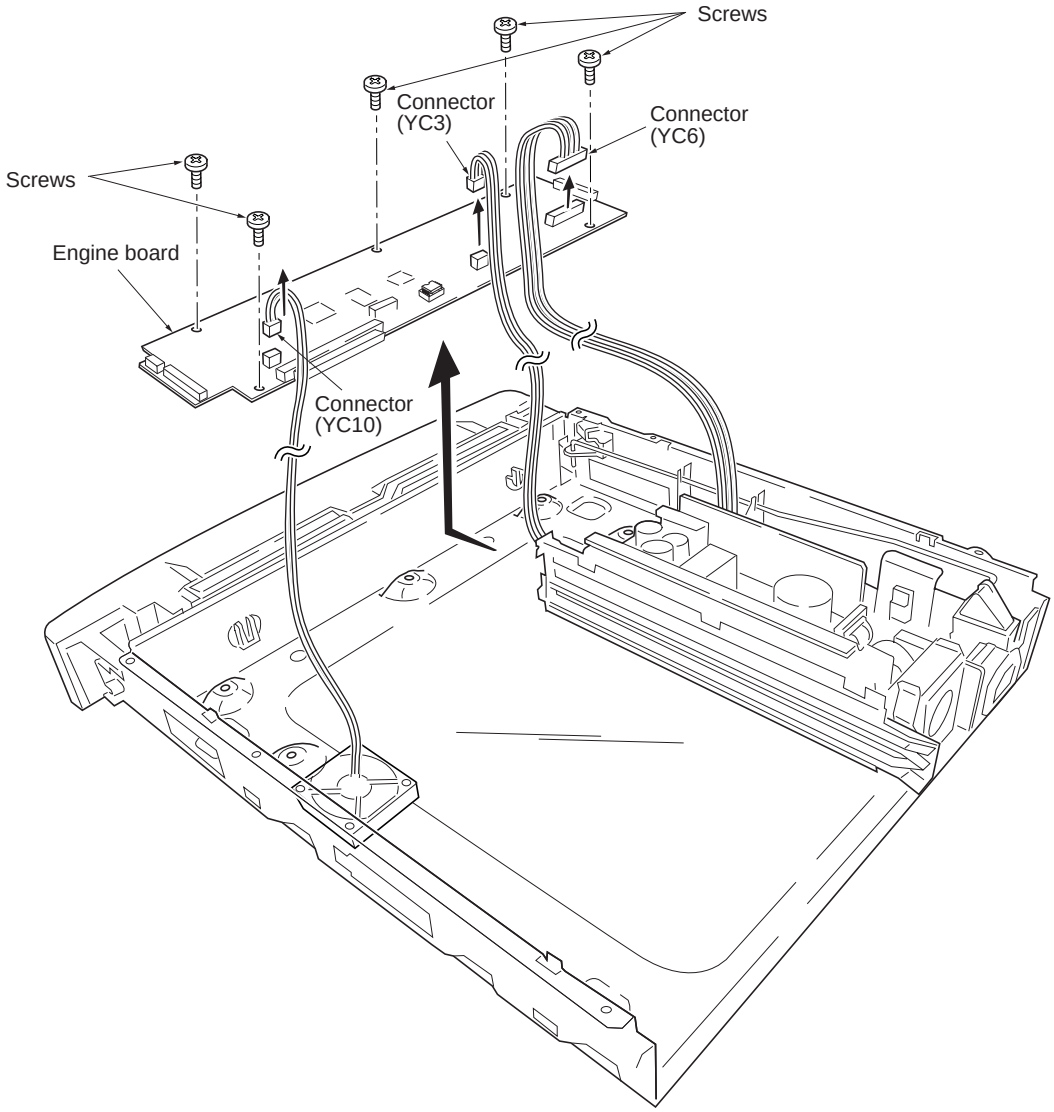

Figure 1-6-19 Removing the engine board

TONER
www.tonerplus.com.ua

6. Remove the power switch rod.
7. Remove one screw, grounding wire terminal, and lock washer.
8. Remove three screws.
9. Remove the power supply unit from the power supply unit cover.

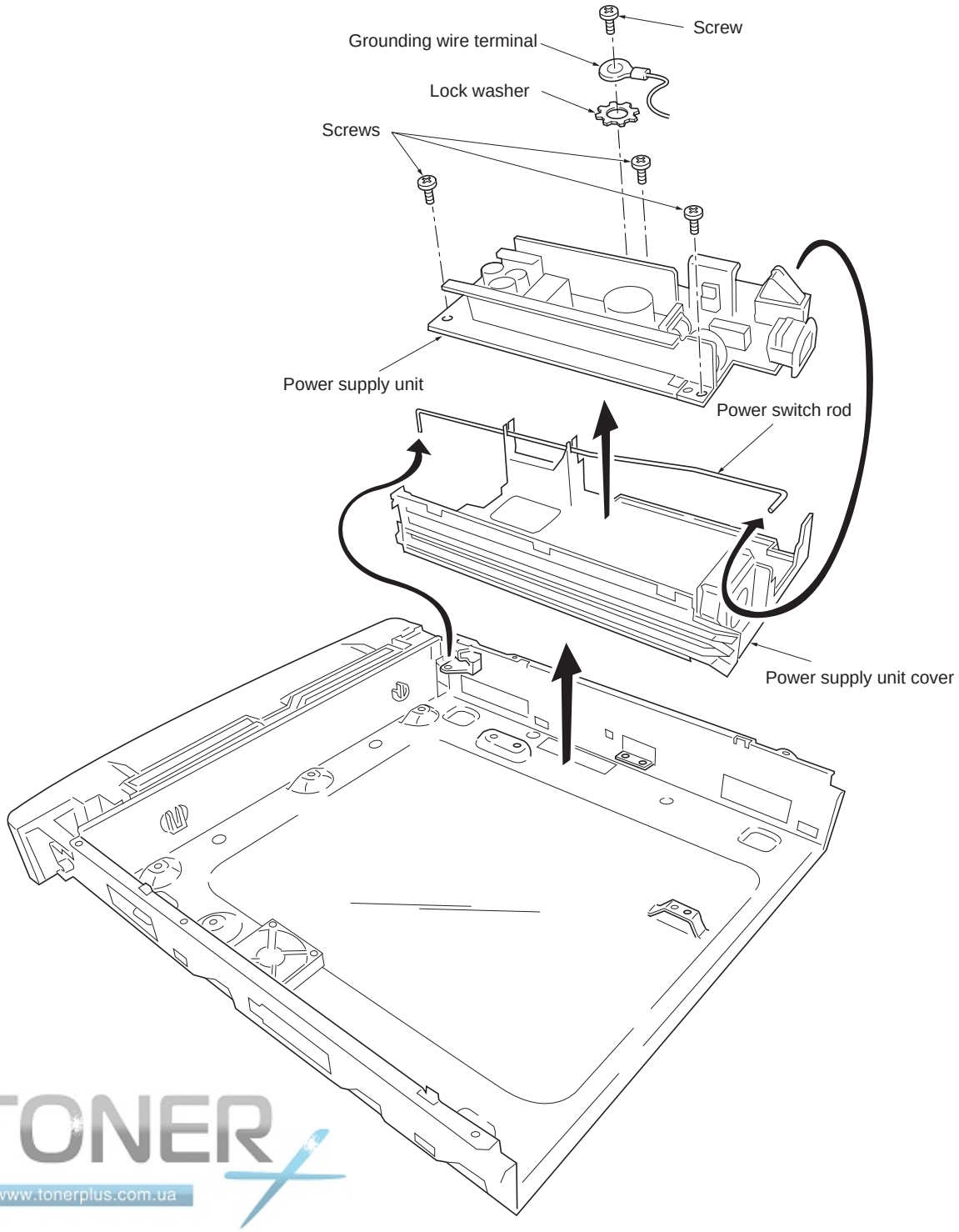

TONER+
www.tonerplus.com.ua

Figure 5-2-20 Removing the power supply unit

(3) Removing the main board

CAUTIONS Before removing the main board, the memory card must be removed first. However, do not remove the memory card while power is on. If the memory card is removed (or inserted) while the printer is on, damage could result in the printer's electronics as well as the memory card.

1. Turn the power switch off.
2. Remove the memory card that may be inserted in the memory card slot at the left side of the printer.
3. Remove two screws.
4. Pull the main board all the way out of the printer.

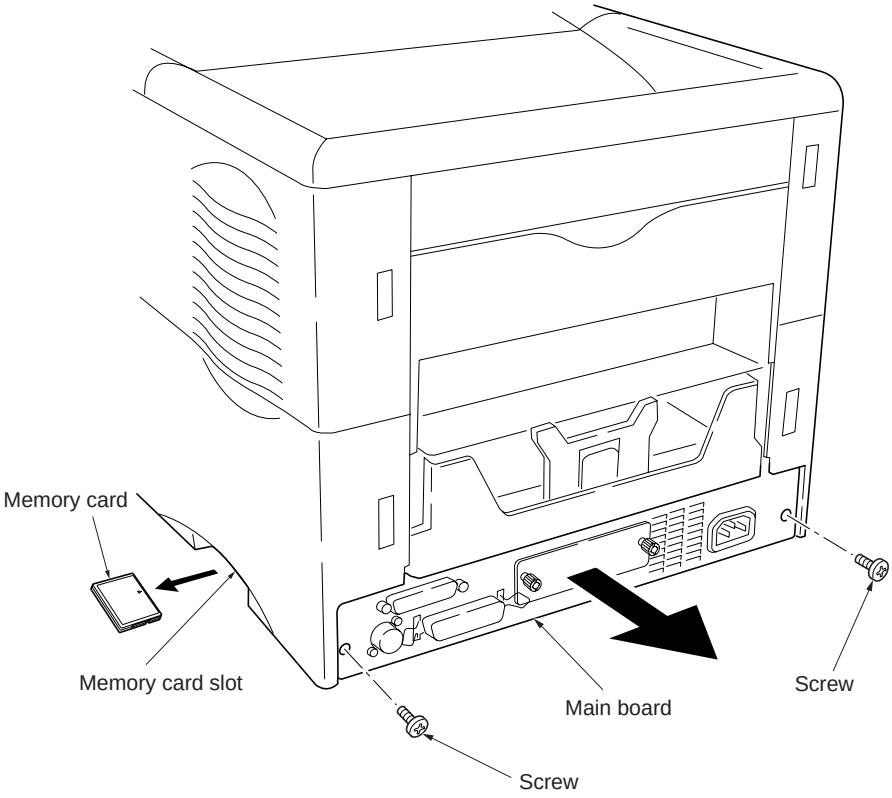

Figure 1-6-21 Removing the main board

TONER+
www.tonerplus.com.ua

(4) Removing the high voltage unit

1. Remove the top cover and left covers. See pages 1-6-7 and 1-6-9.
2. Remove the high voltage unit while unlatching two latches.
3. Remove two connectors from the high voltage unit.

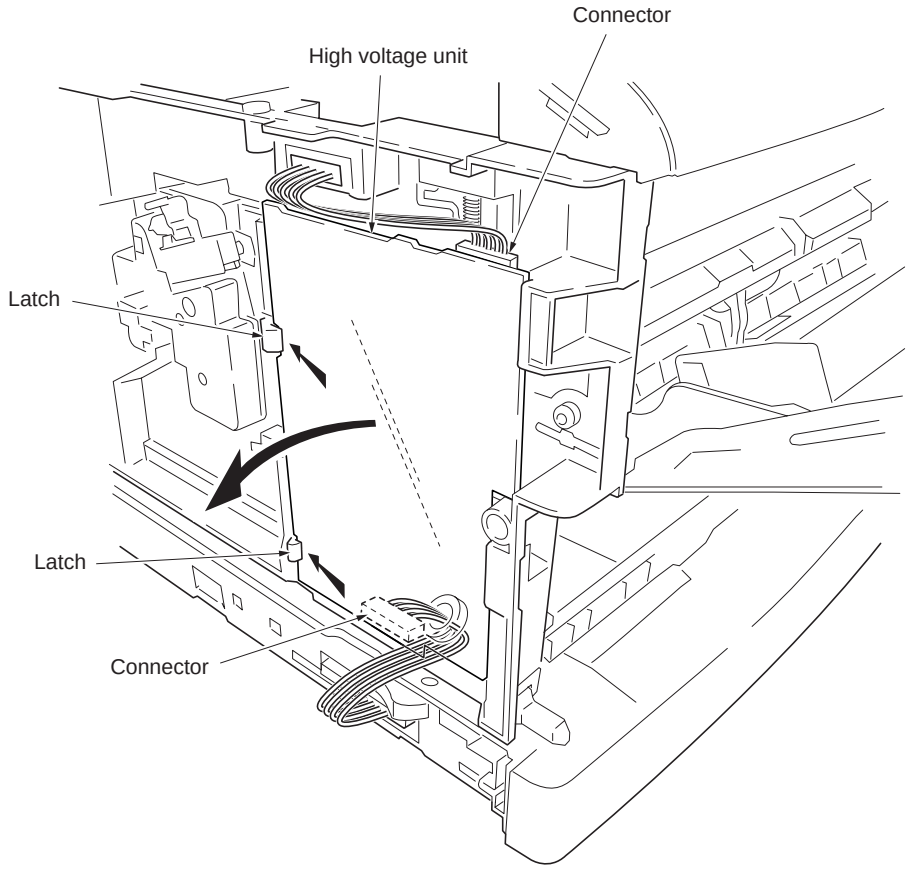

Figure 1-6-22 Removing the high voltage unit

TONER+
www.tonerplus.com.ua

(5) Removing the sensor board

CAUTIONS Draw the connector straight to remove. If you draw the connector while it is slanted, the receptacle may be damaged.

1. Remove the drum unit. See page 1-6-10.
2. Remove the high voltage unit. See previous page.
3. Remove two connectors.
4. Remove the high voltage unit cover.
5. Remove the sensor board while unlatching two latches.

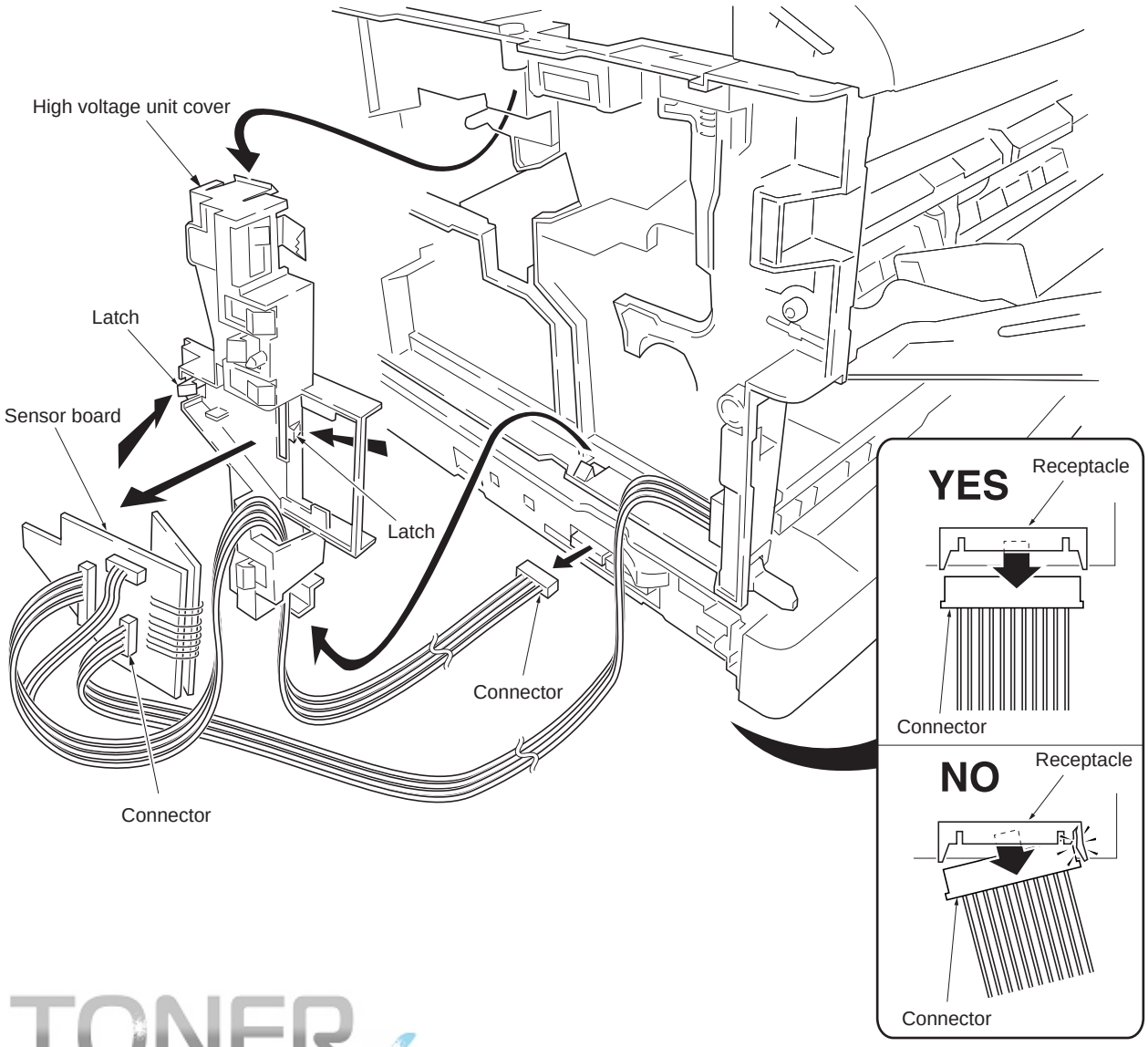

TONER
www.tonerplus.com.ua

Figure 1-6-23 Removing the sensor board

1-6-11 Removing the drive unit and main motor

CAUTIONS Draw the connector straight to remove. If you draw the connector while it is slanted, the receptacle may be damaged.

1. Remove the paper cassette and the paper transfer unit. See page 1-6-4.
2. Remove the top cover/face-down output tray. See page 1-6-7.
3. Remove the left and right covers. See pages 1-6-8 and 1-6-9.
4. Remove two connectors.
5. Remove three connectors of the drive unit.
6. Remove five screws and the ground wire terminal.
7. Remove the drive unit from the frame unit.

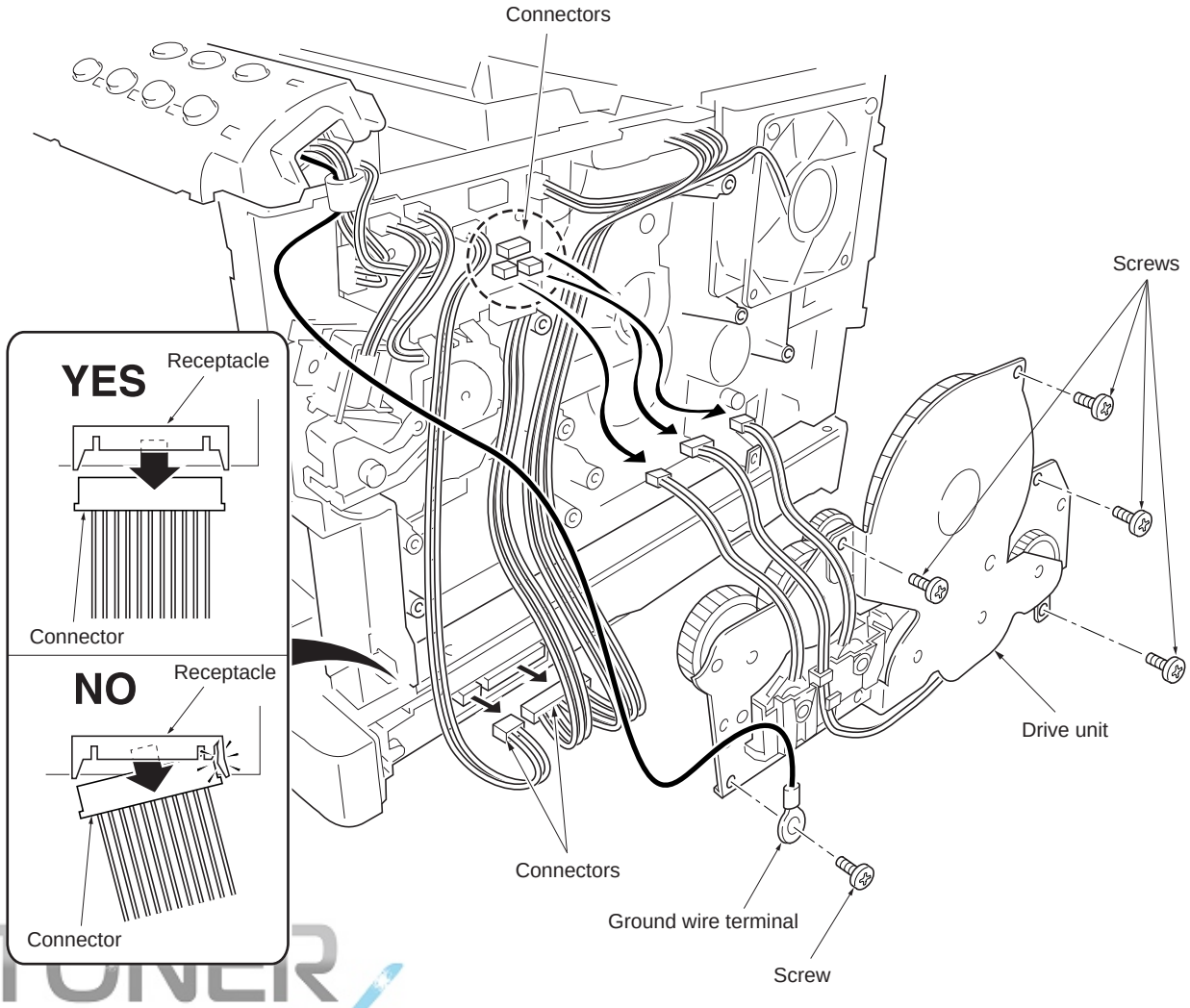

TONER+
www.tonerplus.com.ua

Figure 1-6-24 Removing drive unit

8. Remove four screws.
9. Remove the main motor from the drive unit.

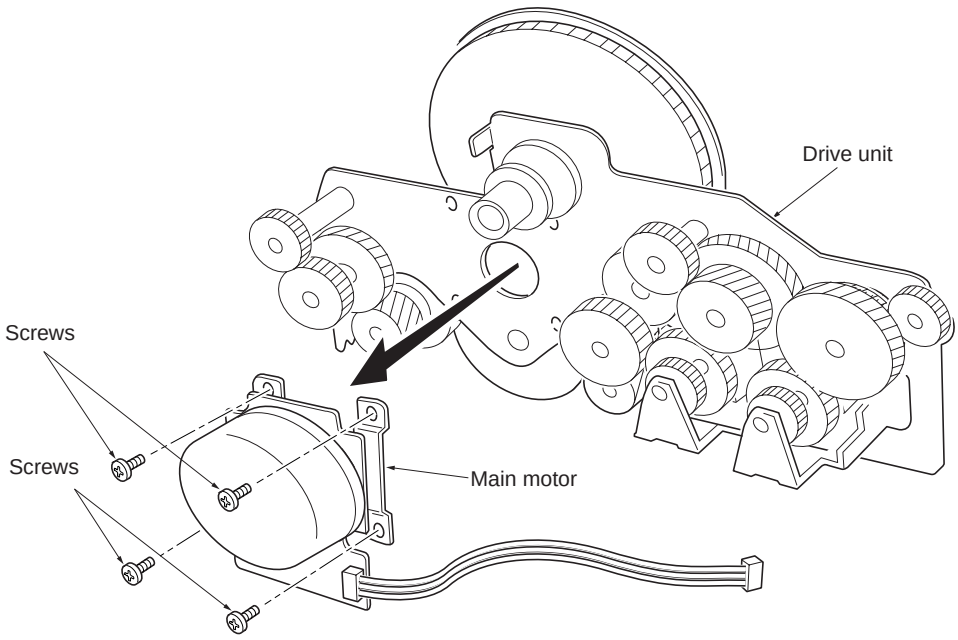

Figure 1-6-25 Removing the main motor

TONER+
www.tonerplus.com.ua

1-6-12 Removing and splitting the fuser unit

WARNING The fuser unit is hot after the printer was running. Wait until it cools down.

1. Remove three connectors and one tab.
2. Remove two screws.
3. Remove the fuser unit from the frame unit.

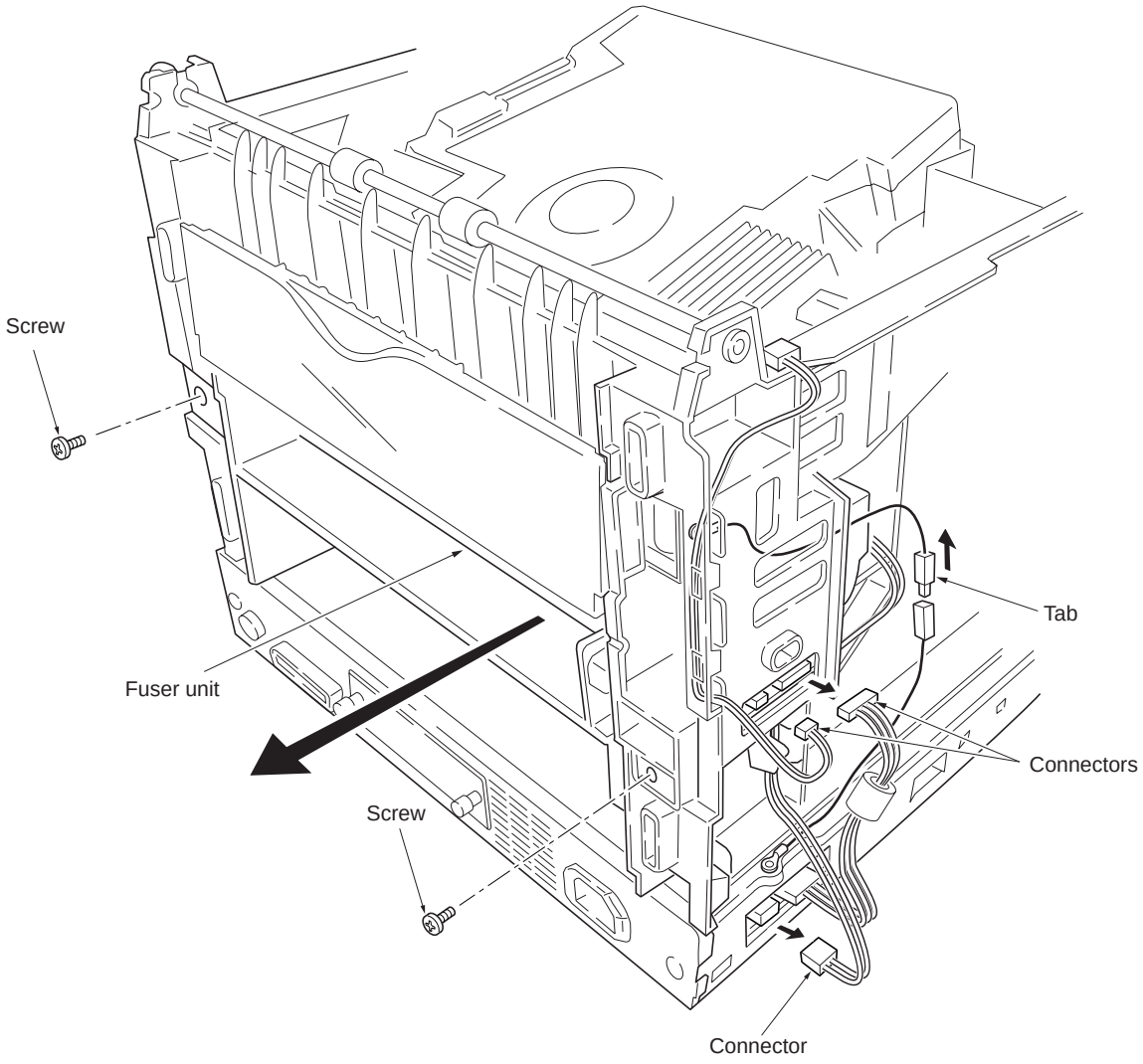

Figure 1-6-26 Removing the fuser unit

TONER
www.tonerplus.com.ua

4. Remove the rear cover and the spring.
5. Remove the solenoid actuator.
6. Remove the change guide.
7. Remove one connector.

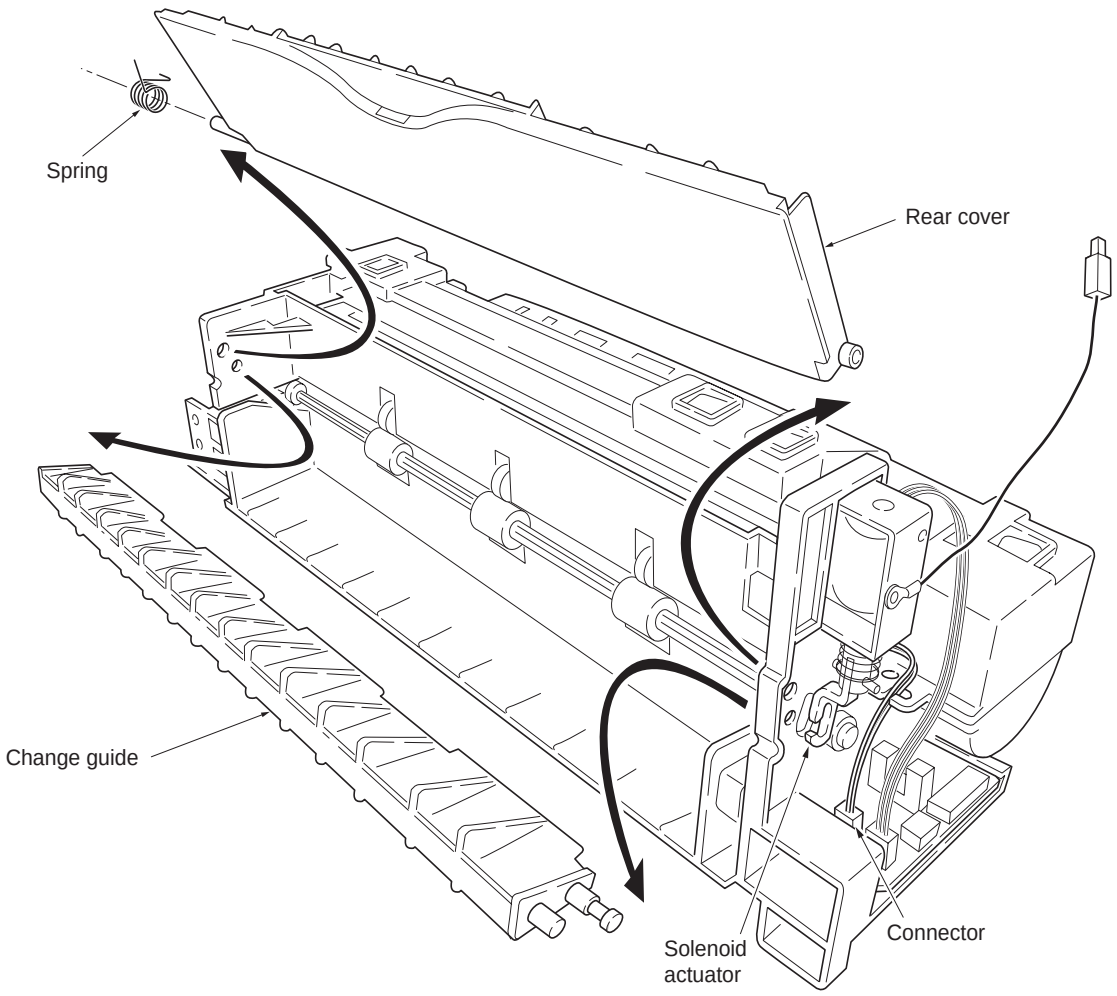

Figure 1-6-27 Removing the rear cover and change guide

TONER+
www.tonerplus.com.ua

8. Remove two screws.
9. Split the fuser unit.

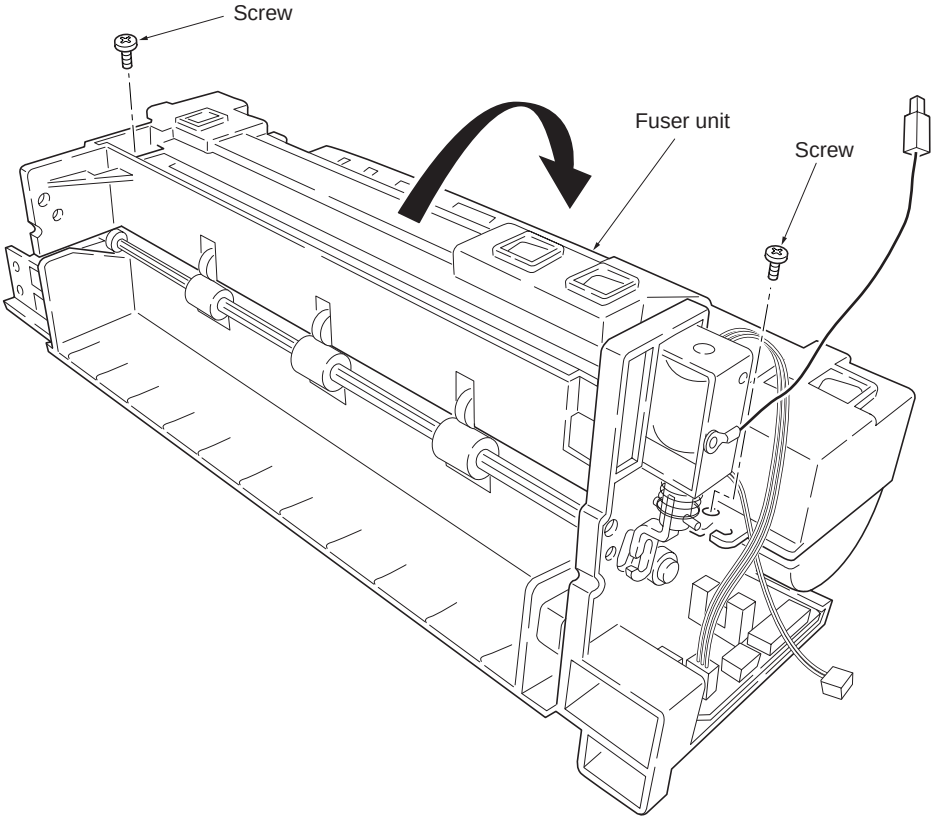

Figure 1-6-28 Splitting the fuser unit

TONER+
www.tonerplus.com.ua

(1) Removing the separators

WARNING The separators are extremely hot immediately after the printer was running. Allow substantial period of time until it cools down.

1. Remove and split the fuser unit. See page 1-6-27.
2. Remove the upper exit guide while unlatching three latches.
3. Remove the exit pulley.
4. Hold the separator upright and remove the separator and the separator spring.

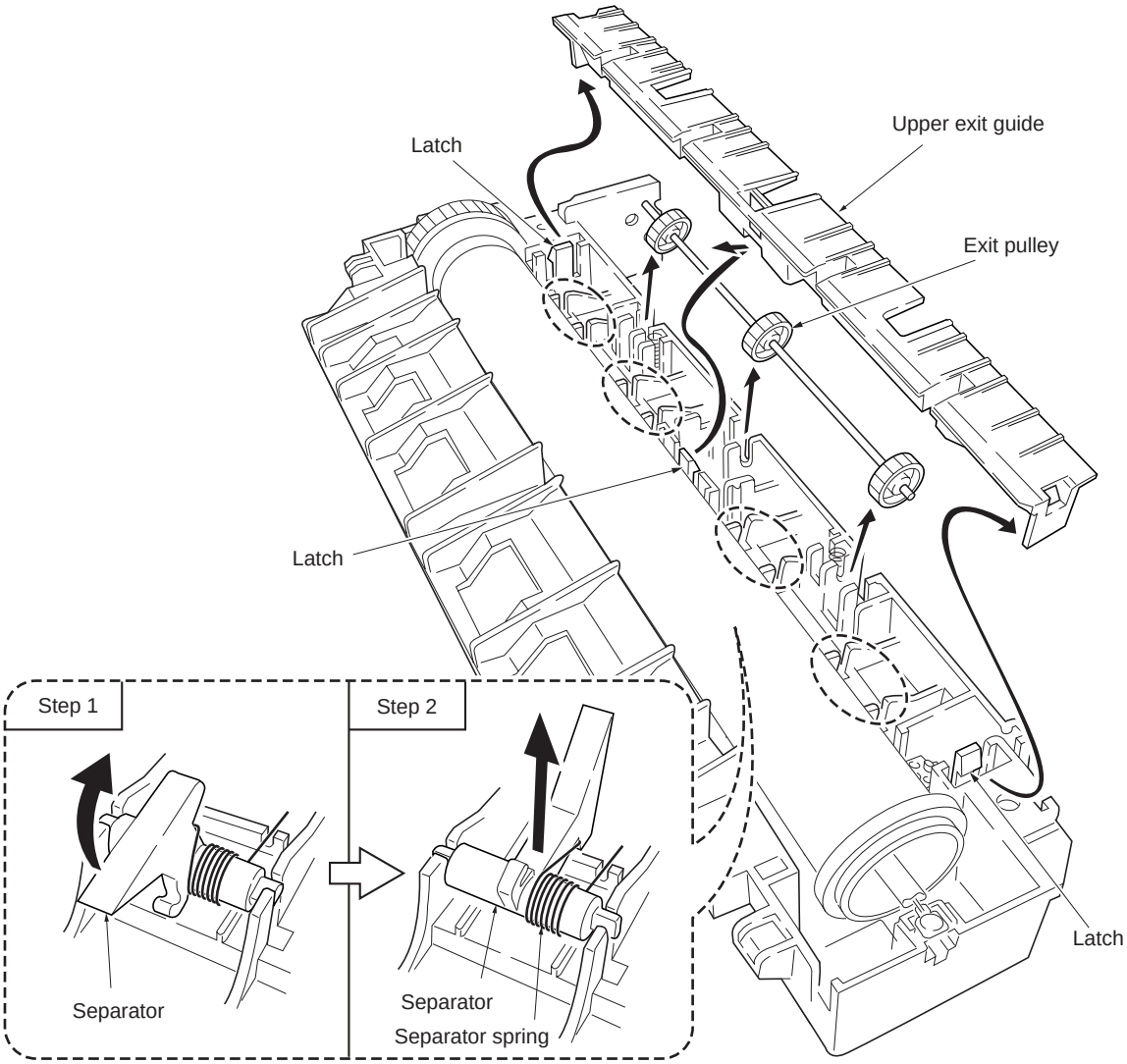

TONER
www.tonerplus.com.ua

Figure 1-6-29 Removing the separators

(2) Removing the heater lamp

WARNING The heater lamp is extremely hot immediately after the printer was running. Allow substantial period of time until it cools down.

CAUTIONS The heater lamps are fragile. Use extreme care when handling not to drop or break.
Do not directly touch on the heater lamp. Finger prints on the heater lamp's outer surface can prevent proper fusing of toner on paper. When holding the heater lamp, hold the ceramic parts of heater lamp at both ends.
When refitting the heater lamp, direct the wattage making side facing the heat gear Z36 side.

1. Remove and split the fuser unit. See page 1-6-27.
2. Remove the lamp support.
3. Remove two screws and heater wire terminal.
4. Remove the heater lamp from the heat roller.

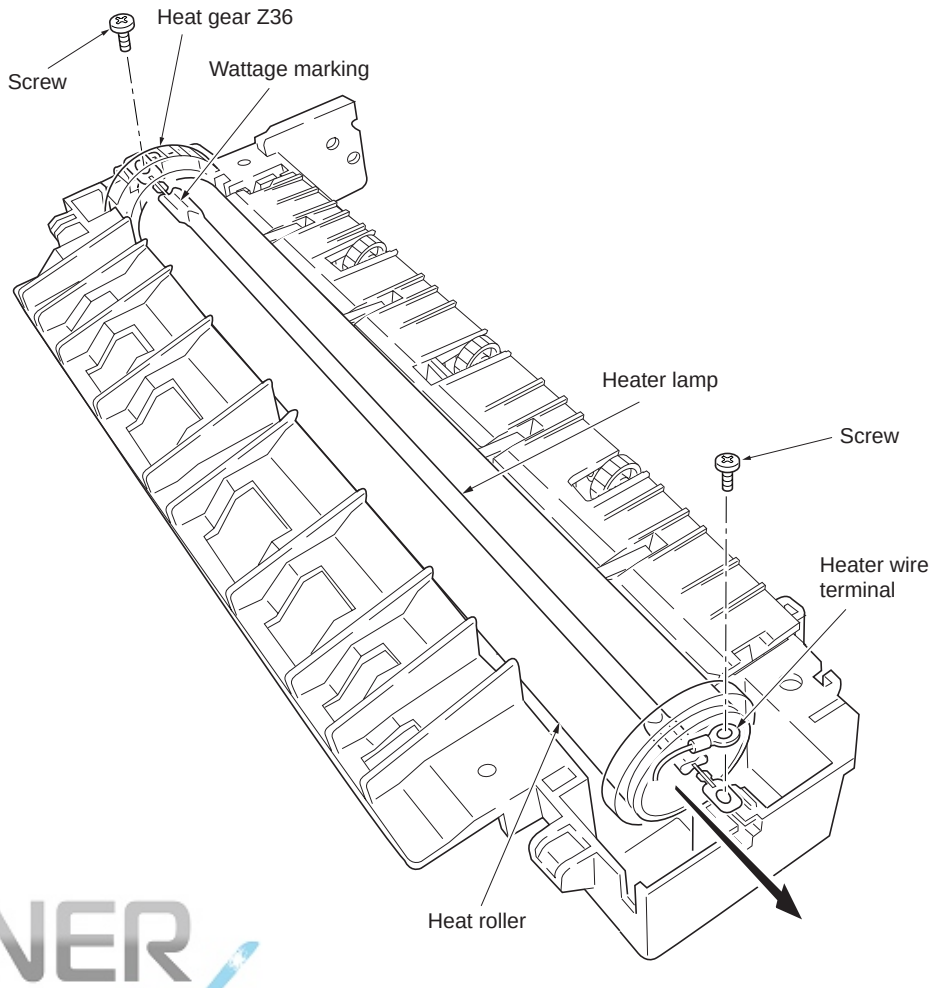

TONER
www.tonerplus.com.ua

Figure 1-6-30 Removing the heater lamp

(3) Removing the heat roller

WARNING The heat roller is extremely hot immediately after the printer was running. Allow a substantial period of time until it cools down.

1. Remove and split the fuser unit. See page 1-6-27.
2. Remove the heater lamp. See the previous page.
3. Remove the separators. See page 1-6-30.
4. Remove the two C rings.
5. Pull up both bearings at the same time.
6. Remove heat gear Z36, bearings, heat R bush, and heat L bush from the heat roller.

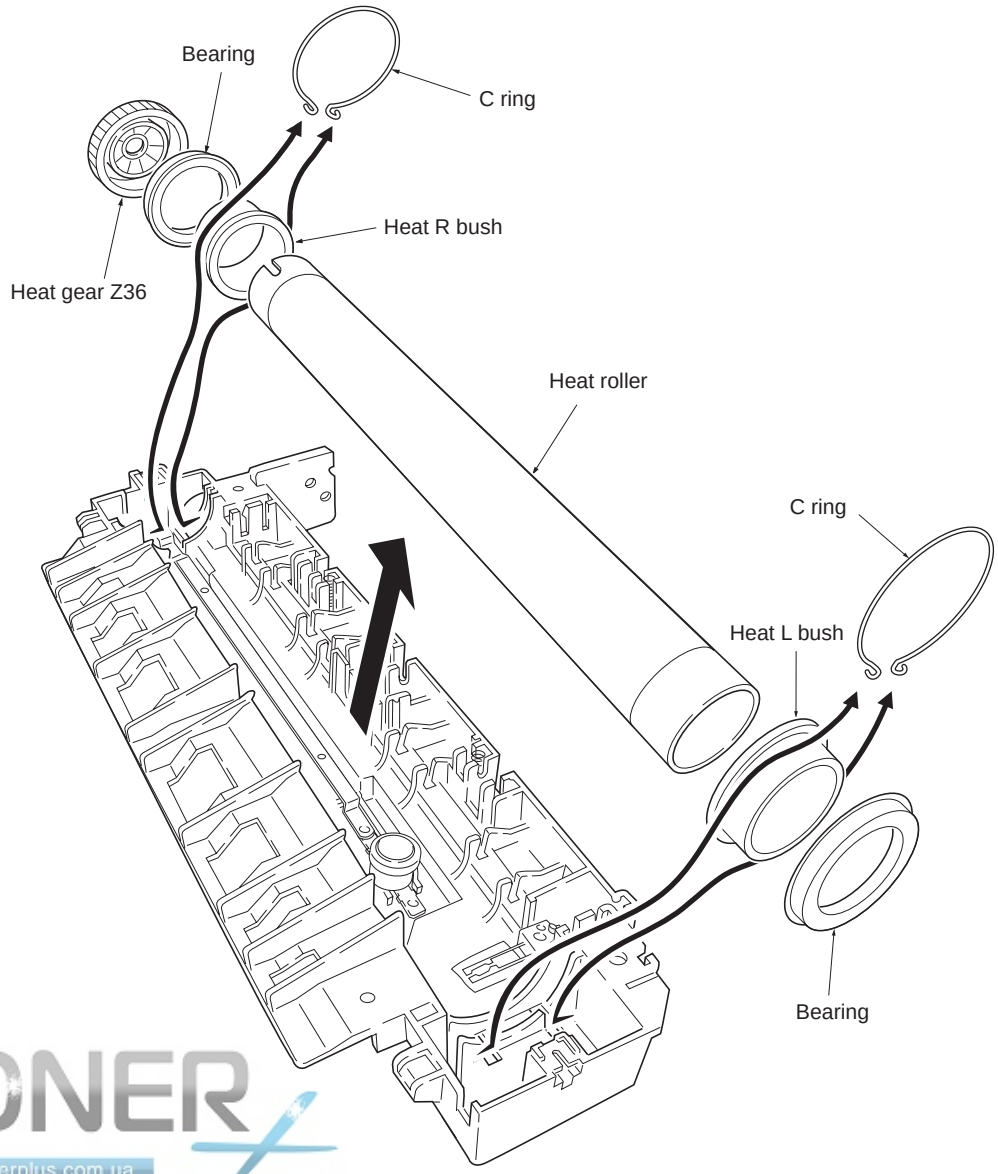

TONER
www.tonerplus.com.ua

Figure 1-6-31 Removing the heat roller

(4) Removing the thermistor and the thermal cutout

1. Remove and split the fuser unit. See page 1-6-27.
2. Remove the heater lamp. See page 1-6-31.
3. Remove the heat roller. See previous page.
4. Remove one screw.
5. Remove the thermistor.
6. Remove two screws and then remove cord plate.
7. Remove one screw and the heater wire terminal.
8. Remove the thermal cutout.

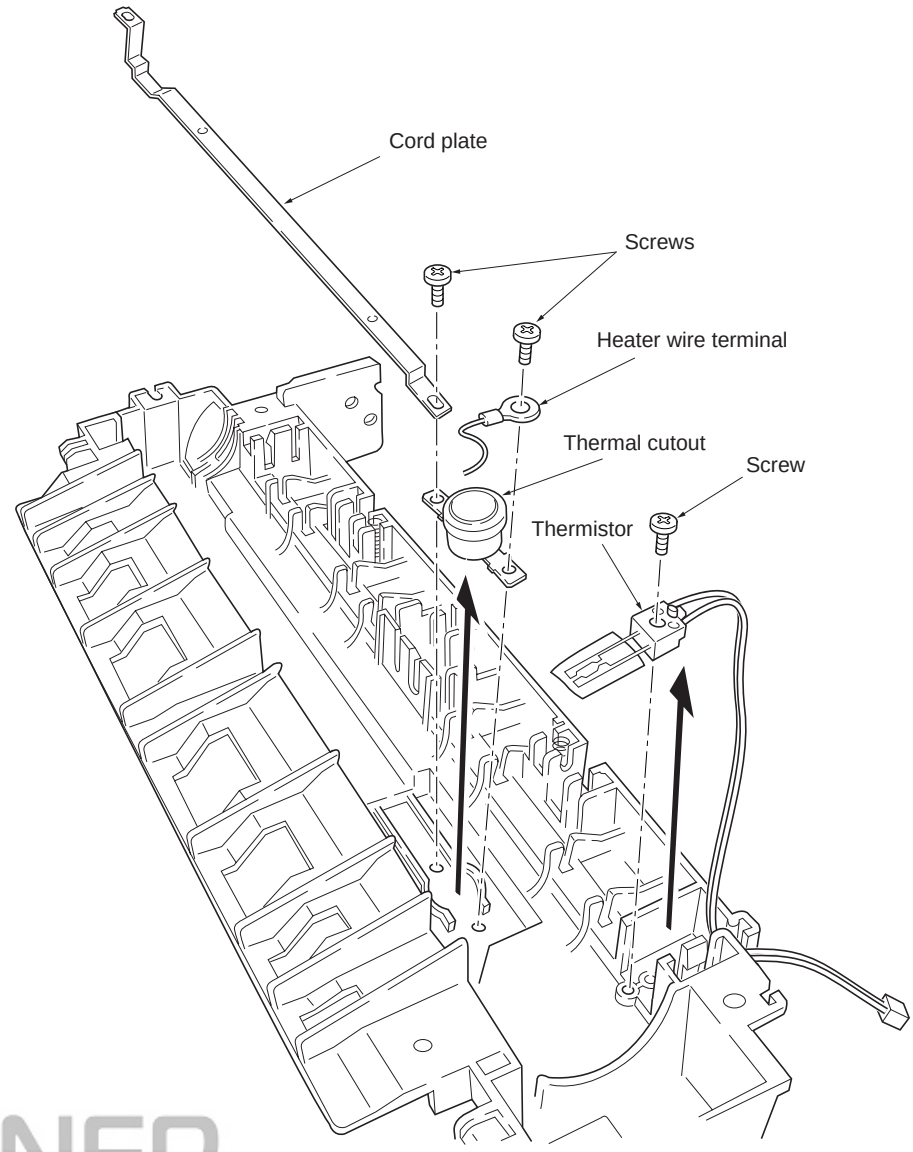

TONER
www.tonerplus.com.ua

Figure 1-6-32 Removing the thermistor and thermal cutout

(5) Removing the press roller

WARNING The press roller is extremely hot immediately after the printer was running. Allow substantial period of time until it cools down.

1. Remove and split the fuser unit. See page 1-6-27.
2. Remove the press roller from the fuser unit.

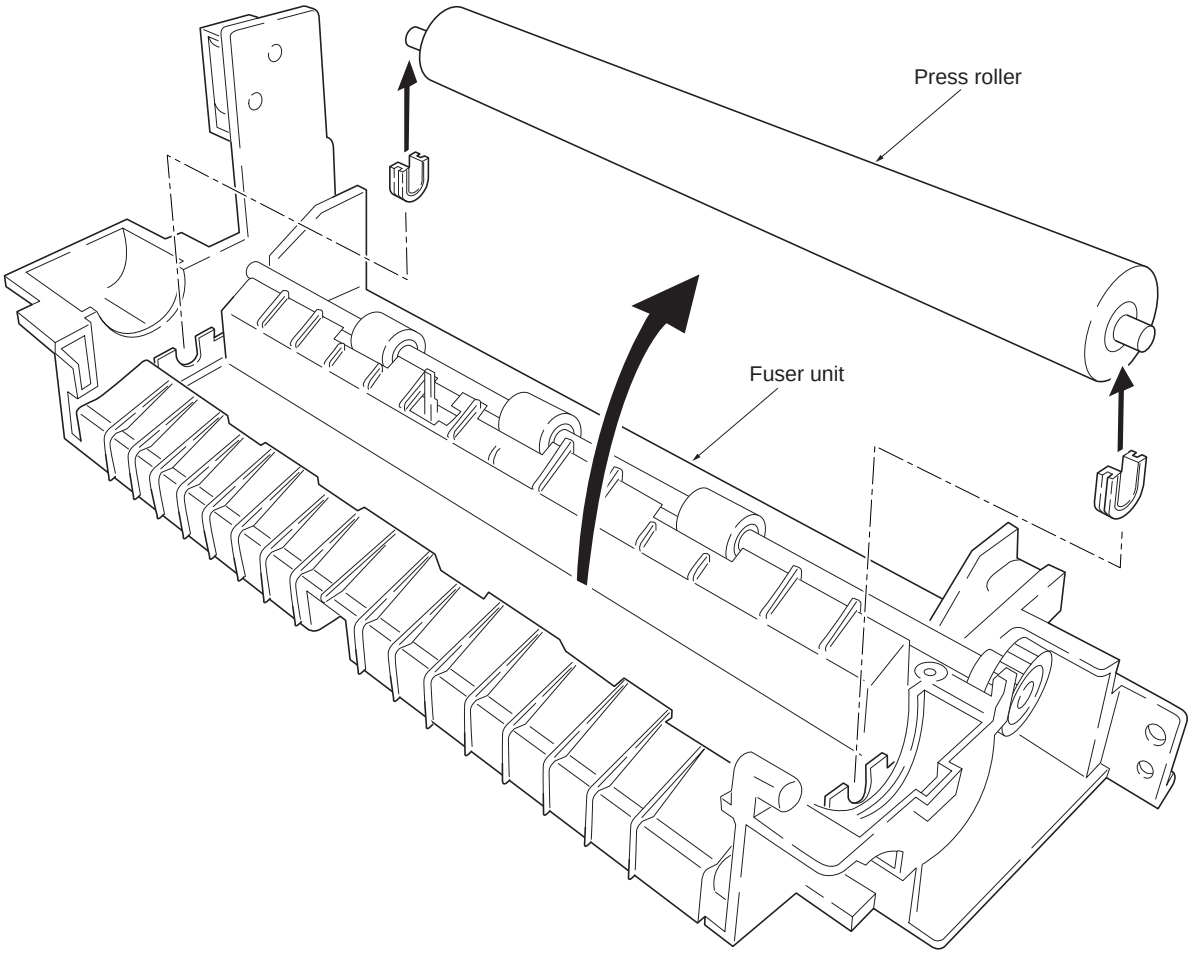

Figure 1-6-33 Removing the press roller

TONER
www.tonerplus.com.ua

1-6-13 Removing the laser scanner unit

1. Remove the top cover/face-down output tray.
   See pages 1-6-7.
2. Remove two connectors.
3. Remove four screws.
4. Remove the laser scanner unit from the frame unit.

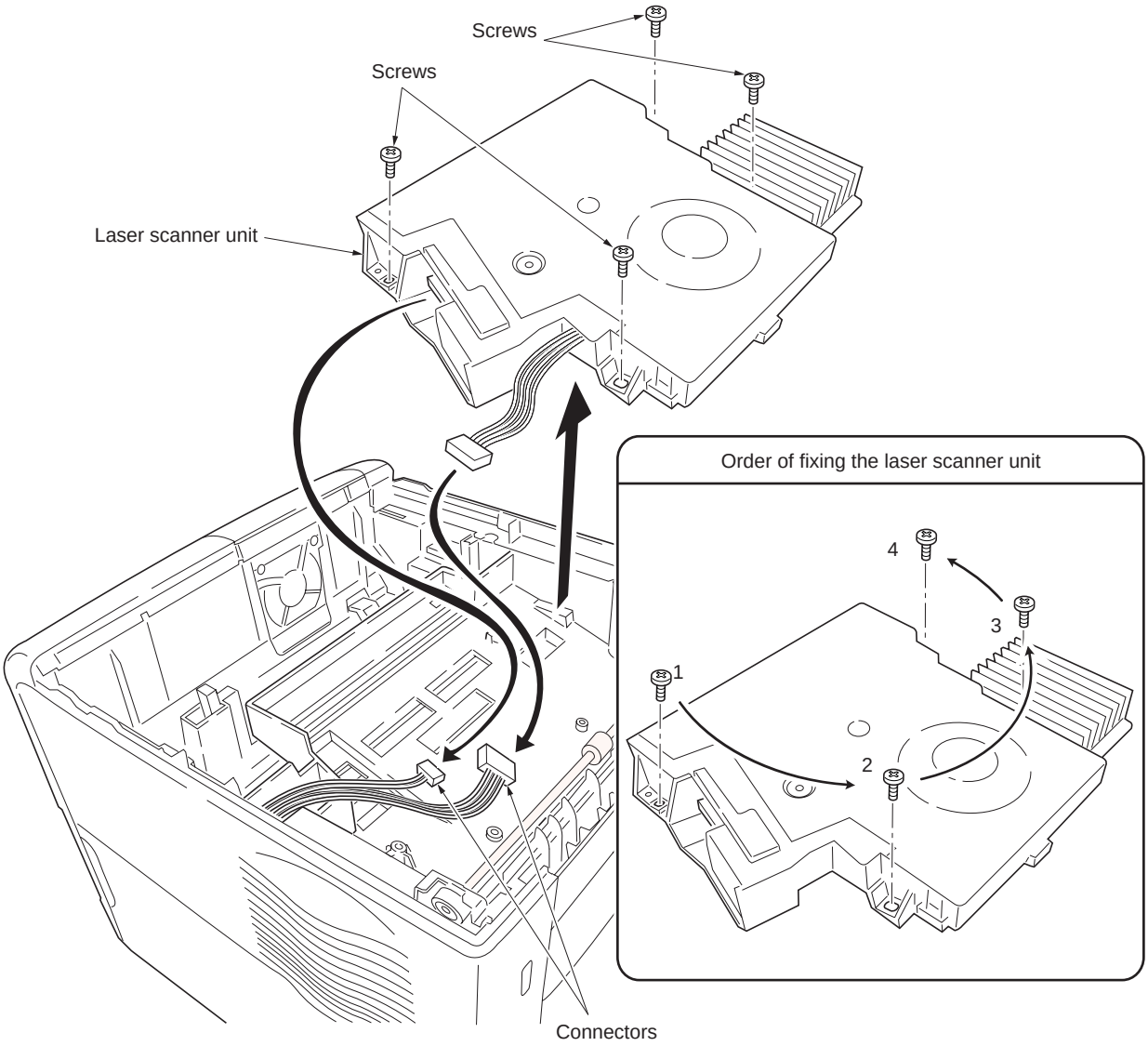

CAUTIONS When refitting the laser scanner unit, fix the four screws in the order indicated above.

TONER
www.tonerplus.com.ua

Figure 1-6-34 Removing the laser scanner unit

1-6-14 Replacing the ozone filter B and ozone filter

(1) Replacing the ozone filter B and ozone filter

1. Remove the top cover/face-down output tray. See page 1-6-7.
2. Remove the right cover. See page 1-6-8.
3. Replace the ozone filter B.

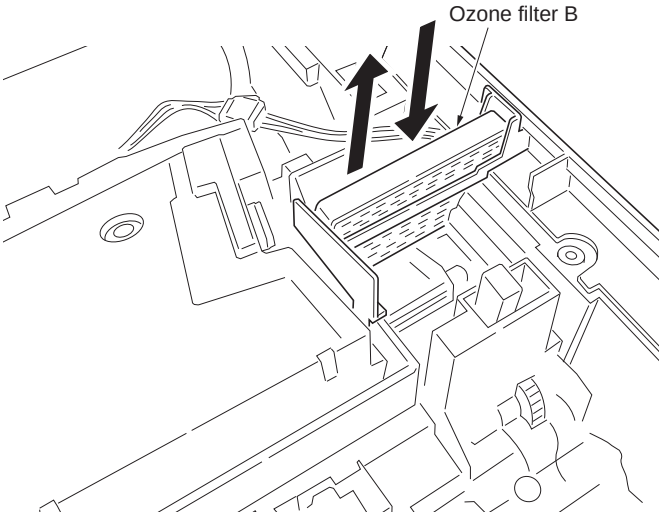

Figure 1-6-35 Replacing the ozone filter B

4. Remove the two screws and then remove the cooling fan motor.

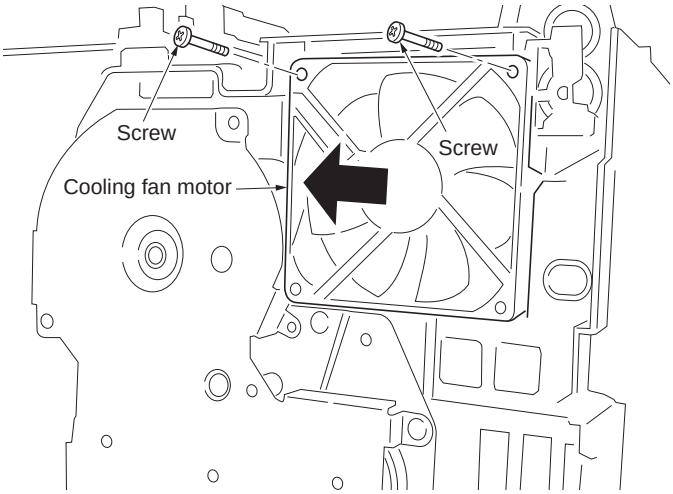

Figure 1-6-36

5. Replace the ozone filter.

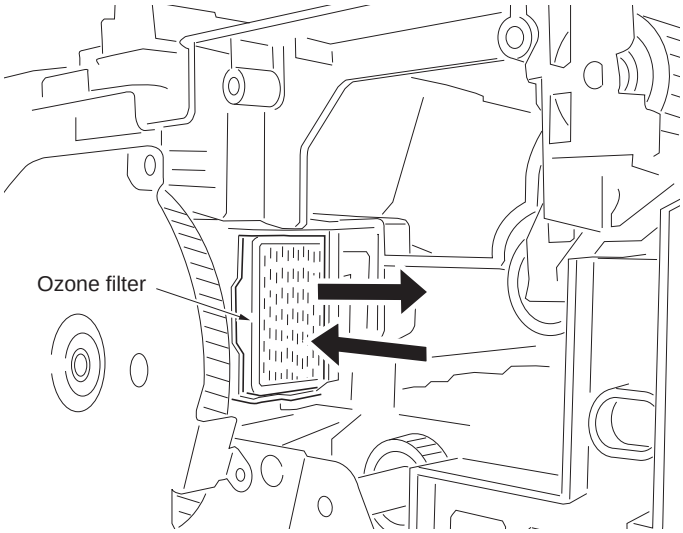

Figure 1-6-37 Replacing the ozone filter

TONER+
www.tonerplus.com.ua

1-7-1 Upgrading the firmware on the main board

Updating the engine and system (controller) firmware is possible by downloading the firmware through the parallel interface or through the memory card (CompactFlash). These firmware programs are directly overwritten in the flash ROM on the printer's engine board or system DIMM [board KP-893/1059] (Flash ROM type only) on the main board. The operator panel message in different languages can also be downloaded through the parallel interface or through the memory card (CompactFlash).

NOTE System DIMM: Firmware update is possible only with a flash ROM type system DIMM [board]. Masked type system DIMM [board] can not be overwritten. Check the type of the system DIMM [board] currently used on the main board by service status page (See page1-4-2).

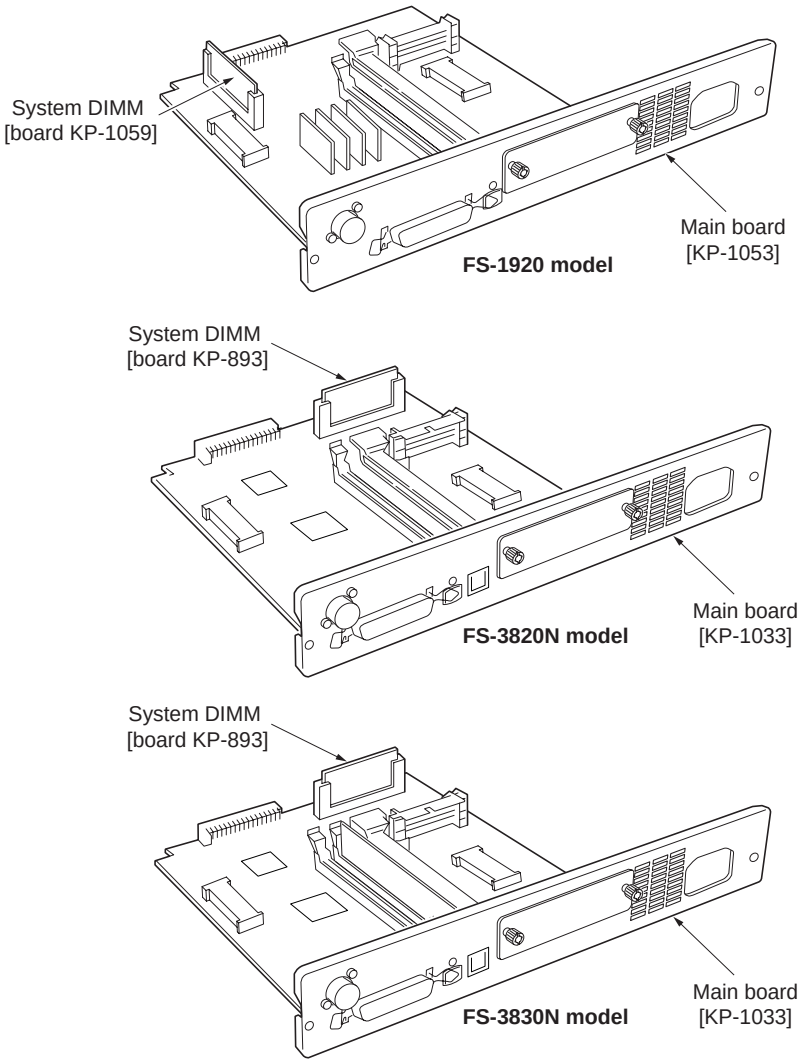

Figure 1-7-1 System DIMM [board]

TONER
www.tonerplus.com.ua

(1) Firmware program data format
Kyocera mita supplies the following types of data for updating firmware of the different purposes:

System firmware
Engine firmware
Operator panel message data

The data to be downloaded are supplied in the following format:

System firmware file name example

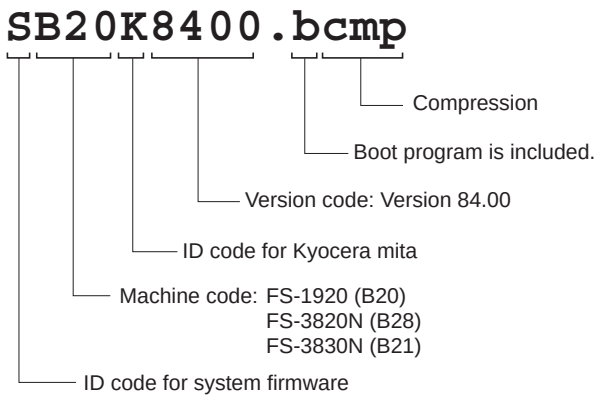

Engine firmware file name example

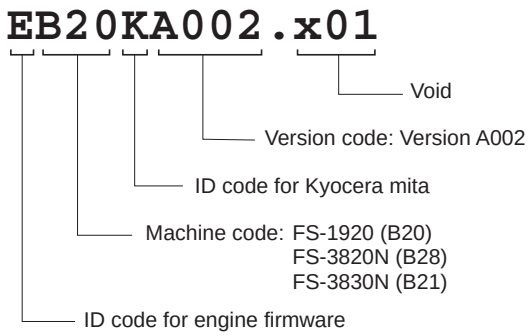

Operator panel message data file name example

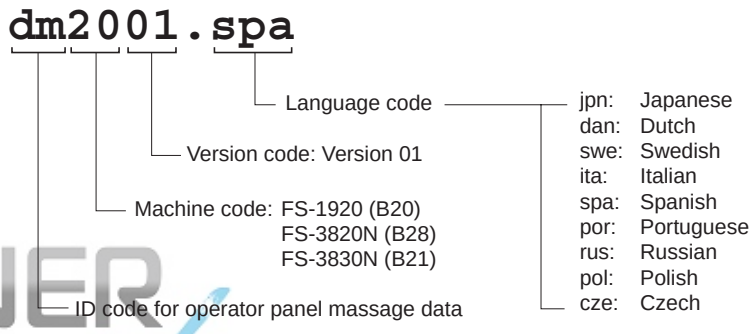

TONER
www.tonerplus.com.ua

(2) Downloading the firmware from the parallel interface

This section explains how to download firmware data from the parallel interface. The printer system can automatically recognize whether the data to be overwritten is for the engine firmware, the controller firmware or operator panel message data.

CAUTION Downloading the controller firmware takes several minutes. Do not turn power off during downloading.

NOTE MS-DOS is required for a downloading from the parallel interface. The computer must be connected to the printer with a parallel cable.

1. Turn power switch on.
2. At the DOS prompt, send the command to the printer that engages the printer in the supervisor mode.
3. Copy the firmware data to the printer. (See the flow chart below)
   [System firmware ex. `SB20KA8400.bcmp`, Engine firmware ex. `EB20KA002.x01`, Operator panel message data ex. `dm2001.spa`]

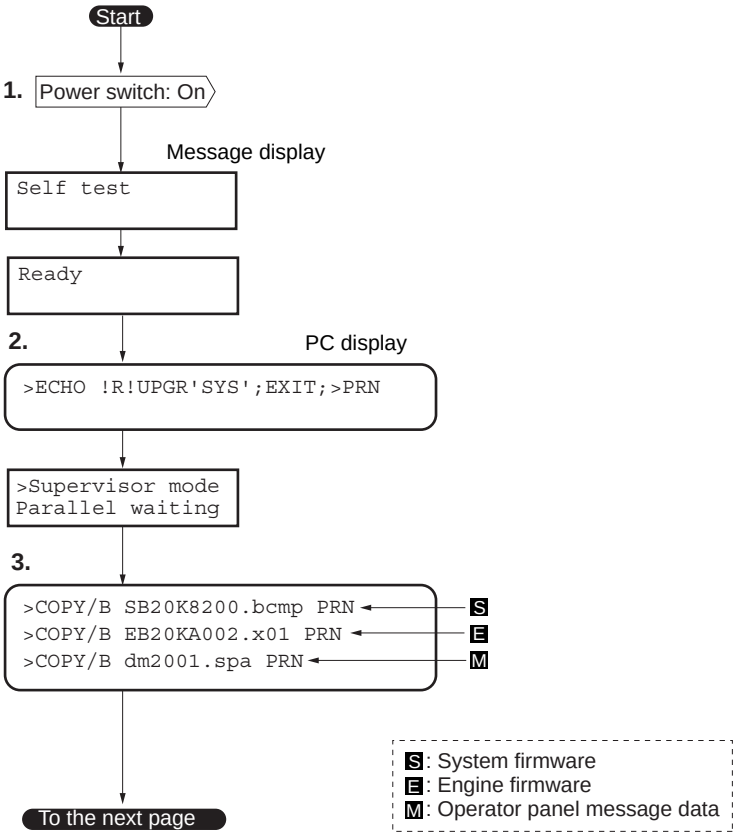

TONER
www.tonerplus.com.ua

4. Supervisor mode. The parallel interface is waiting for the firmware data.
5. Receiving the firmware data.
6. The system DIMM or flash ROM is overwritten with the new firmware data.
7. Firmware downloading is finished. (When more than one data are down loaded, the data display can be changed by pressing any key.)
8. Turn power switch off and on.
9. Check the that printer gets Ready.

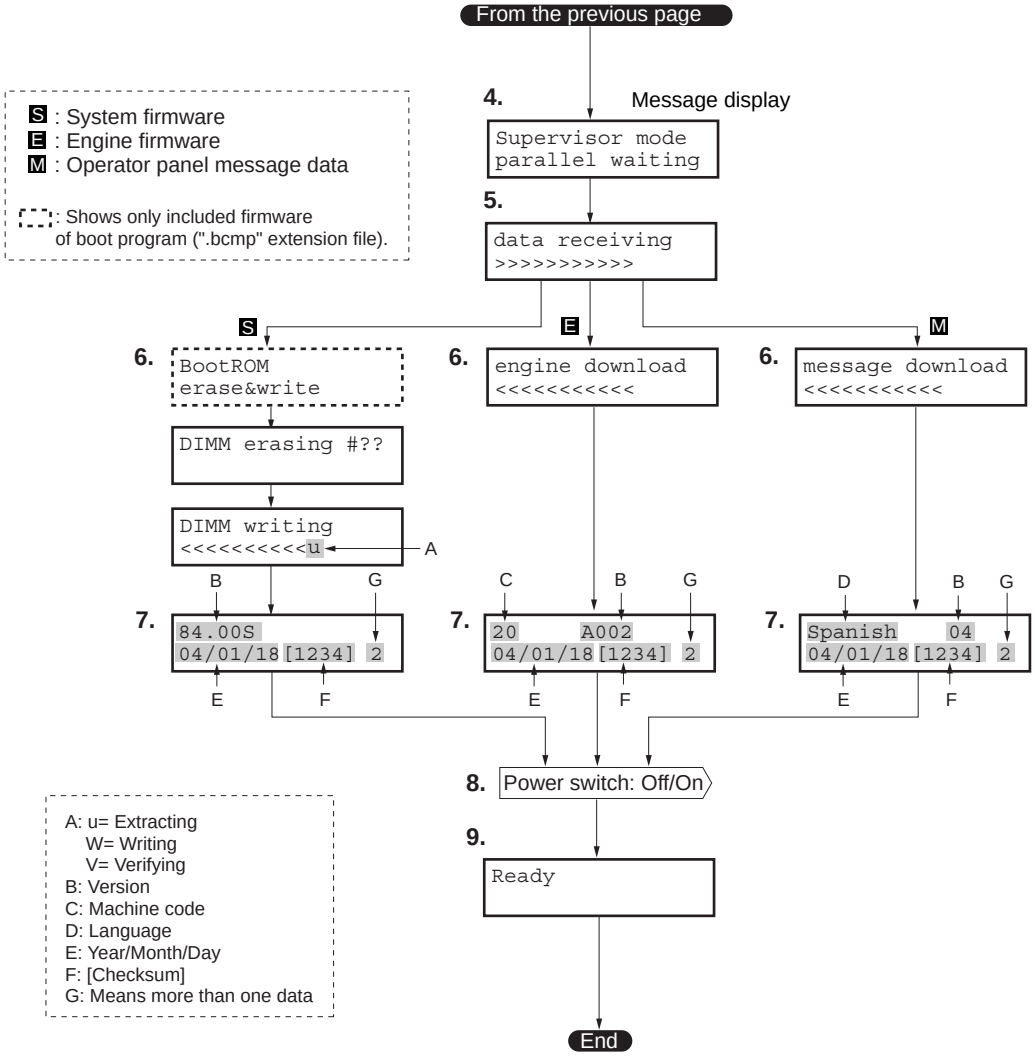

Confirm that the status page shows the new engine firmware, system firmware or operator panel message data version (See page 1-4-2). If the message display indicates download error, refer to section "Downloading errors" on page 1-7-7.

TONER
www.tonerplus.com.ua

(3) Downloading the firmware from the memory card

To download data written in a memory card (CompactFlash) to the printer, proceed as explained in this section.

CAUTION Downloading firmware takes several minutes. Do not turn power off during downloading. If downloading is interrupted by an accidental power failure, etc., the system DIMM may have to be replaced.

NOTE The firmware program data must be stored to the root directory of the memory card (CompactFlash).

1. Turn power switch off.
2. Insert the memory card in the printer's memory card slot.
3. Turn power switch on.
4. The printer is automatically engaged in the supervisor mode. The parallel interface receives for the firmware data.

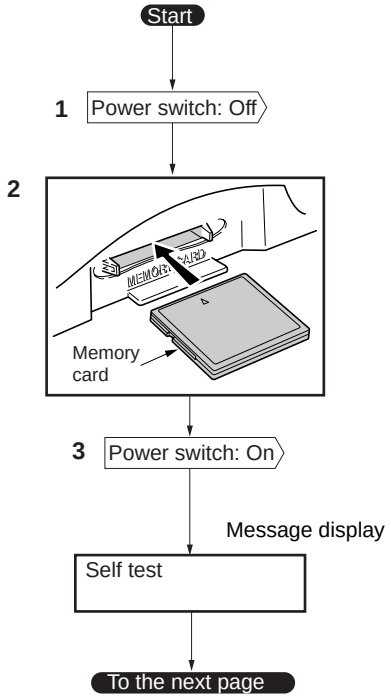

TONER
www.tonerplus.com.ua

5. Data are transferred to the RAM on the main board.
6. The system DIMM or Flash ROM is overwritten with the new firmware data.
7. Firmware download is finished. (When more than one data are down loaded, the data display can be changed by pressing any key.
8. Turn power switch off.
9. Remove the memory card.
10. Turn power switch on.
11. Check the printer gets Ready.

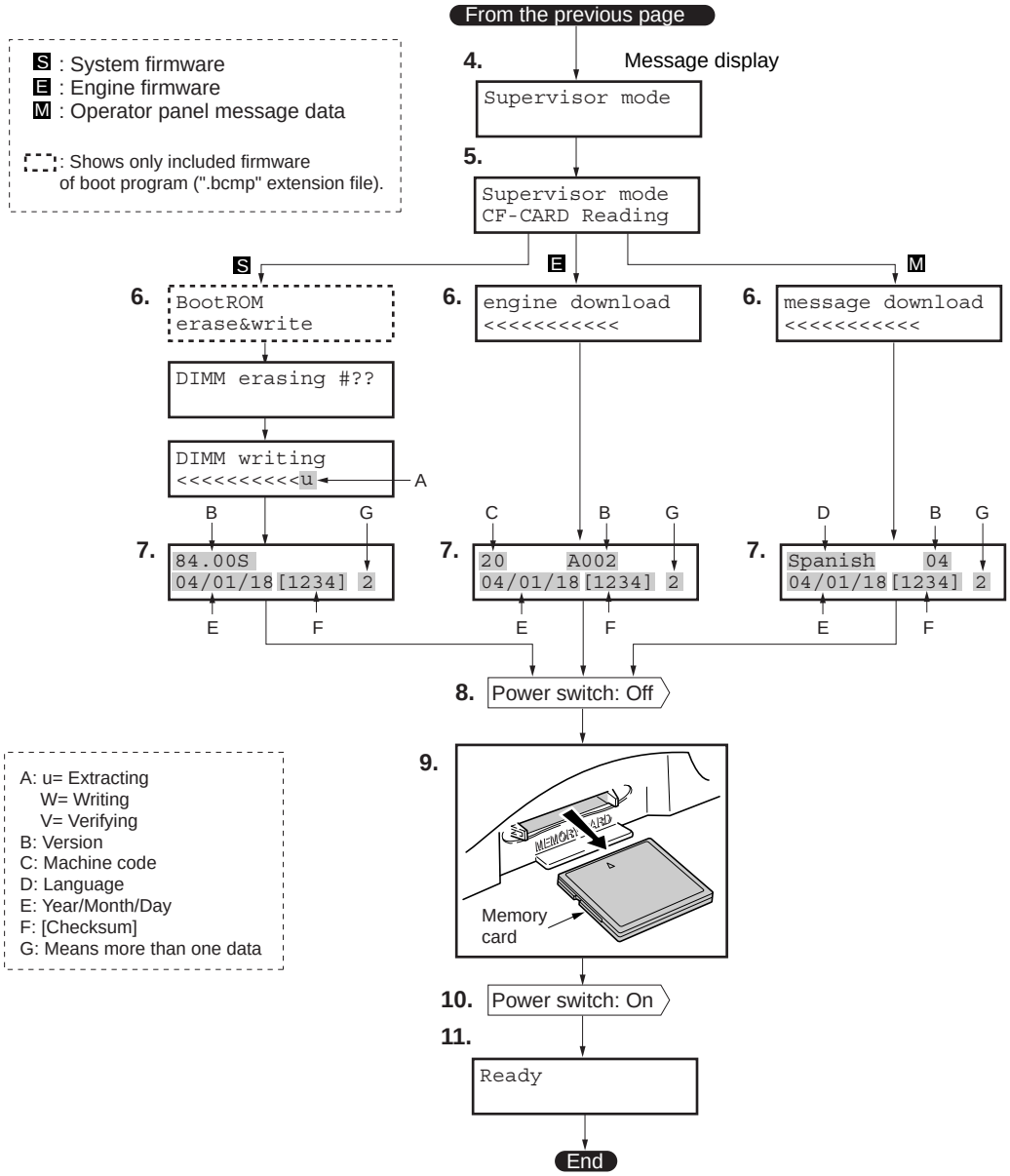

Confirm that the status page shows the new engine firmware, system firmware or operator panel message data version (See page 1-4-2). If the message display indicates download error, refer to section "Downloading errors" on page 1-7-7.

TONER
www.tonerplus.com.ua

(4) Downloading errors

The following messages are indicated on the message display when an error occurred during downloading the firmware data.

Error message	Description	Corrective action
`download header error [##]` ##: Error code 20 to 26.	Deficit of the file header Deficit of the data header File checksum error Data checksum error File header version error Data header version error	Obtain the correct firmware.
`system download error [##]` ##: Error code 40 to 59.	Incompatibility of firmware and system DIMM board	Confirm whether the firmware is applicable to this printer.
	Defective system DIMM board	Replace the system DIMM board.
`receive error [##]` ##: Error code 80 or 81.	Improper connection of parallel cable between PC and printer	Check the contact between PC and the printer's interface connector.
	Defective parallel cable	Replace the parallel cable.
`Engine download error [##]` ##: Error code 60 or 69.	Improper connection of parallel cable between PC and printer	Check the contact between PC and the printer's interface connector.
	Incompatibility of firmware and engine board	Confirm whether the firmware conforms to this printer.
`Message download error [##]` ##: Error code 70 or 77.	Improper connection of parallel cable between PC and printer	Check the contact between PC and the printer's interface connector.
	Defective LCD controller board	Replace the LCD controller board

If the corrective action above does not solve the problem, replace engine board (KP-1081). See page 1-6-20.

TONER
www.tonerplus.com.ua

This page is intentionally left blank.

TONER+
www.tonerplus.com.ua

2-1-1 Paper feeding system

The paper feeding system picks up paper from the paper cassette, MP tray, or if installed, the paper feeder PF-60, feeds it in the printer and delivers in the output tray. Paper is feed at the precise timing in synchronization with data processing. The paper feeding system finally delivers the printed page to either the face-down or face-up output tray as manipulated by the user.

(1) Paper feeding system

The figure below shows the components in the paper feeding system and the paths through which the paper travels. The sensors, clutches, solenoids, motor etc., are described in the following pages.

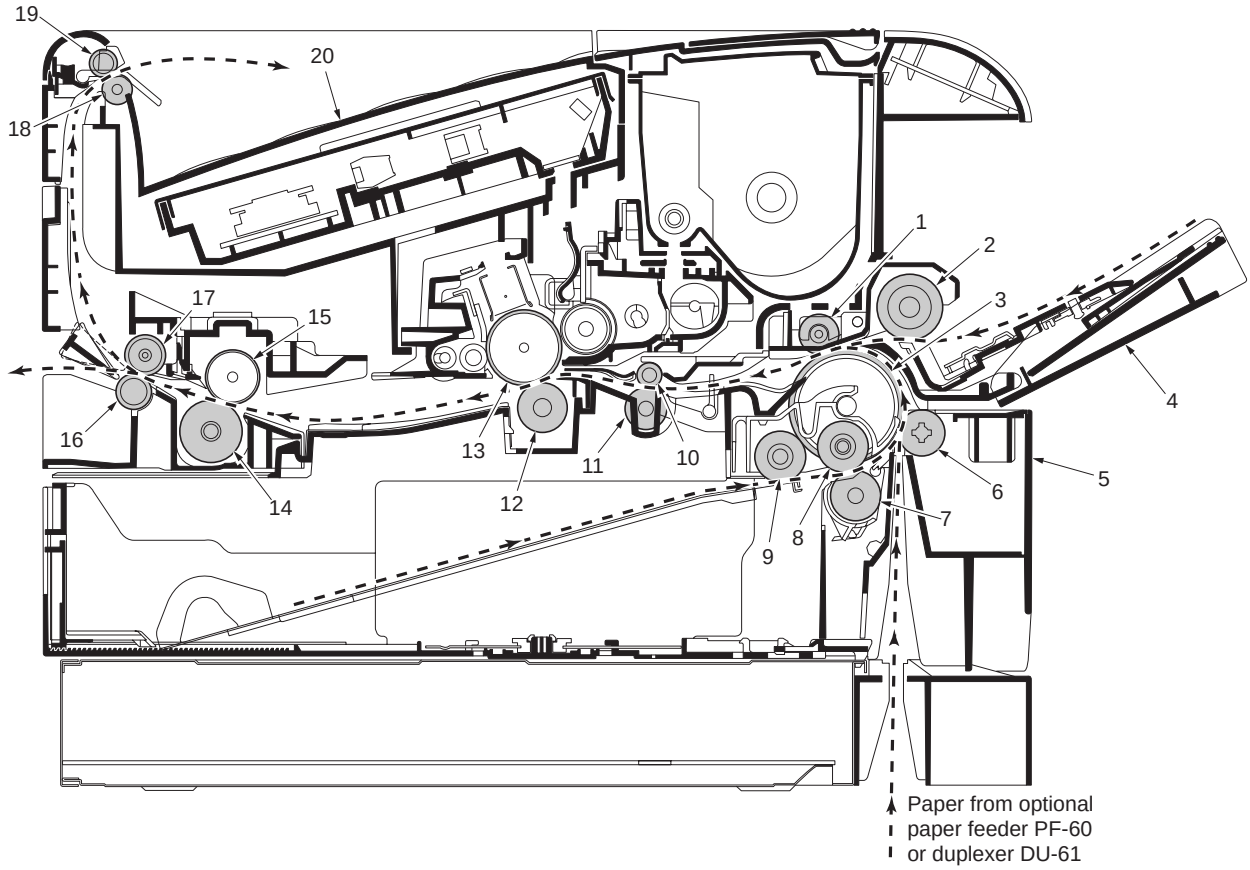

Figure 2-1-1 Paper feeding components

1. Middle feed roller
2. MP tray feed roller
3. Guide pulley(s)
4. MP tray
5. Paper cassette
6. Feed pulley
7. Retard roller
8. Feed roller
9. Pickup roller
10. Upper registration roller
11. Lower registration roller
12. Transfer roller
13. Drum
14. Press roller
15. Heat roller
16. Exit roller
17. Exit pulley(s)
18. FD roller
19. Pinch roller(s)
20. Face-down output tray

TONER
www.tonerplus.com.tw

(2) Paper feed control

The following diagram shows interconnectivity of the feeding system components including the sensors and rollers. The engine board issues various signals in synchronization with the electrophotographic process that is executed by the main board.

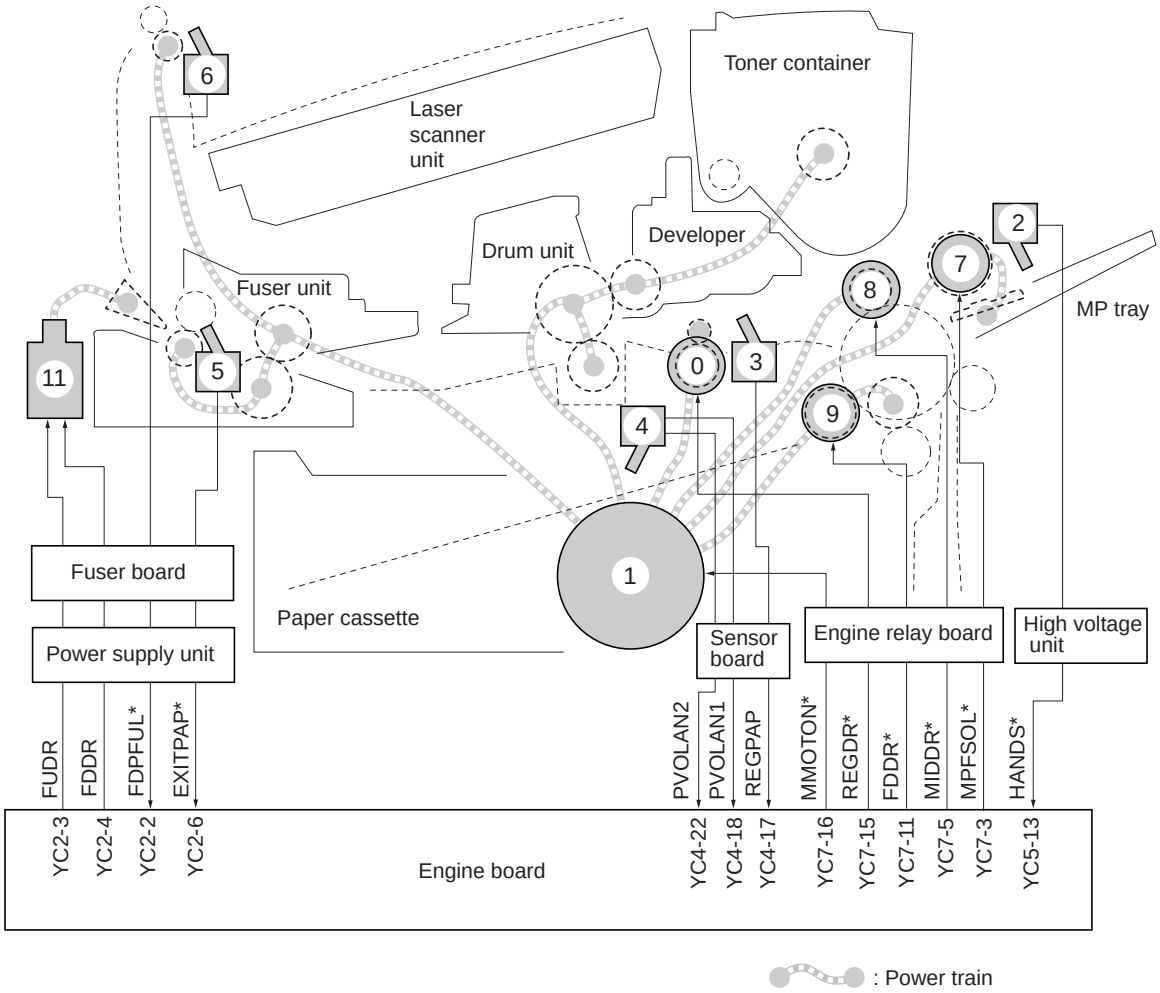

Figure 2-1-2 Paper feed control

1. Main motor
2. MP tray paper sensor
3. Registration sensor
4. Paper gauge sensor 1, 2
5. Exit sensor
6. Paper full sensor
7. MP tray feed solenoid
8. Middle feed clutch
9. Feed clutch
10. Registration clutch
11. Face up/down solenoid

TONER
www.tonerplus.com.ua

(3) Paper feeding mechanism

Drive and paper transfer unit

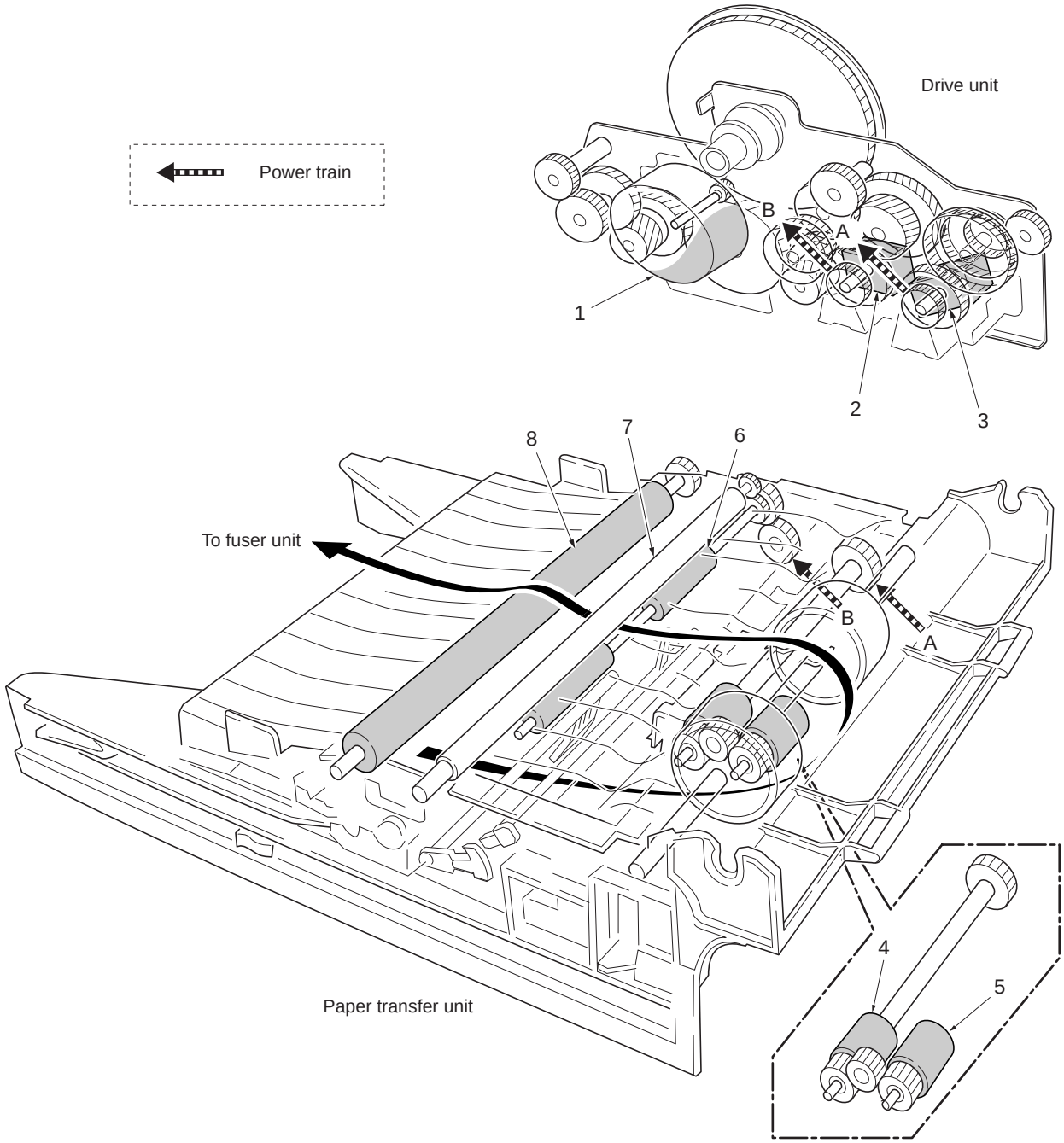

Figure 2-1-3 Drive and paper transfer unit

TONER
www.tonerplus.com.ua

1. Main motor
2. Registration clutch
3. Feed clutch
4. Pickup roller
5. Feed roller
6. Lower registration roller
7. Upper registration roller
8. Transfer roller

MP tray paper feed unit

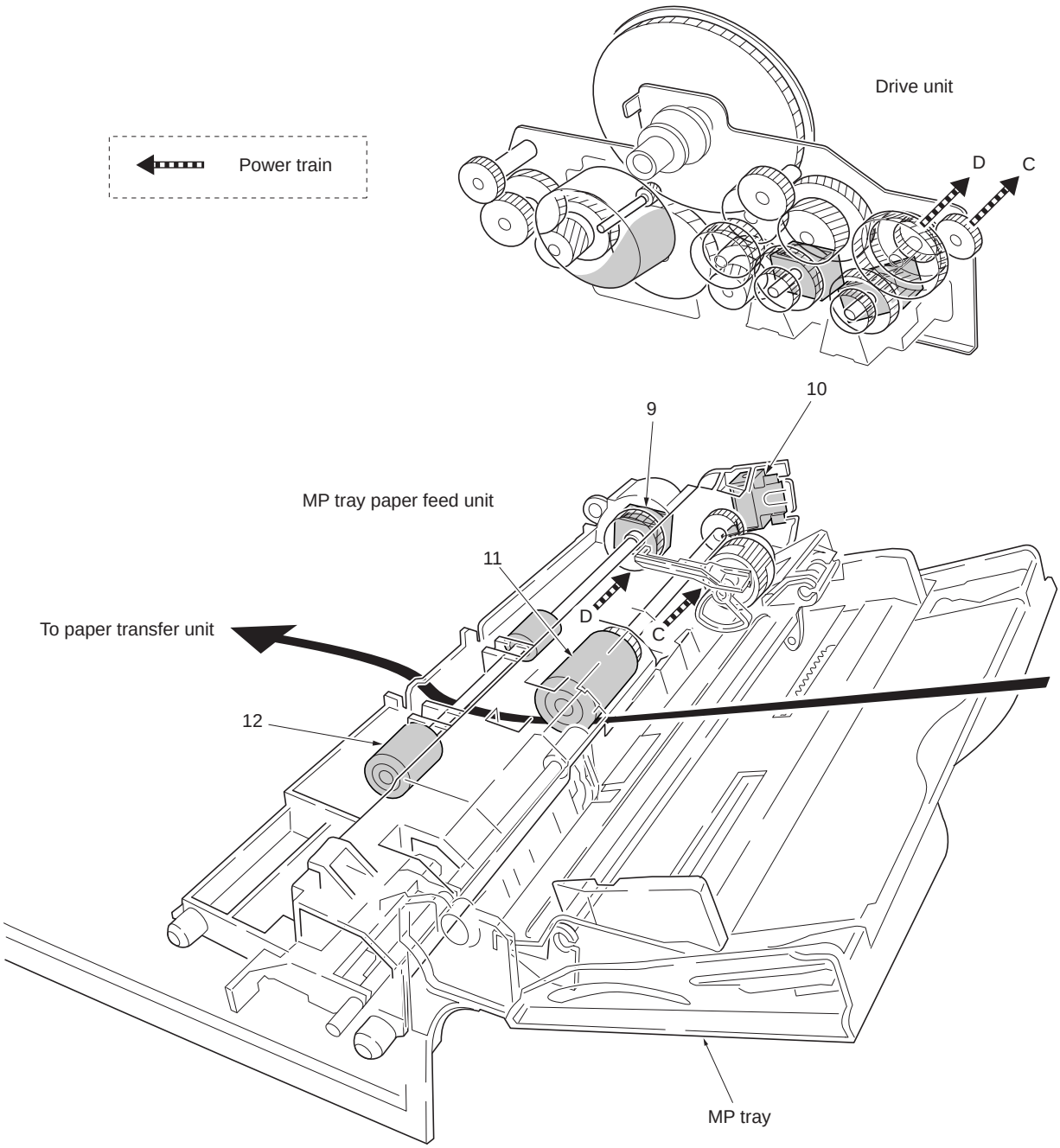

Figure 2-1-4 MP tray paper feed unit

TONER
www.tonerplus.com.ua

9. Middle feed clutch
10. MP tray feed solenoid
11. MP tray feed roller
12. Middle feed roller

Fuser unit and face up/down output

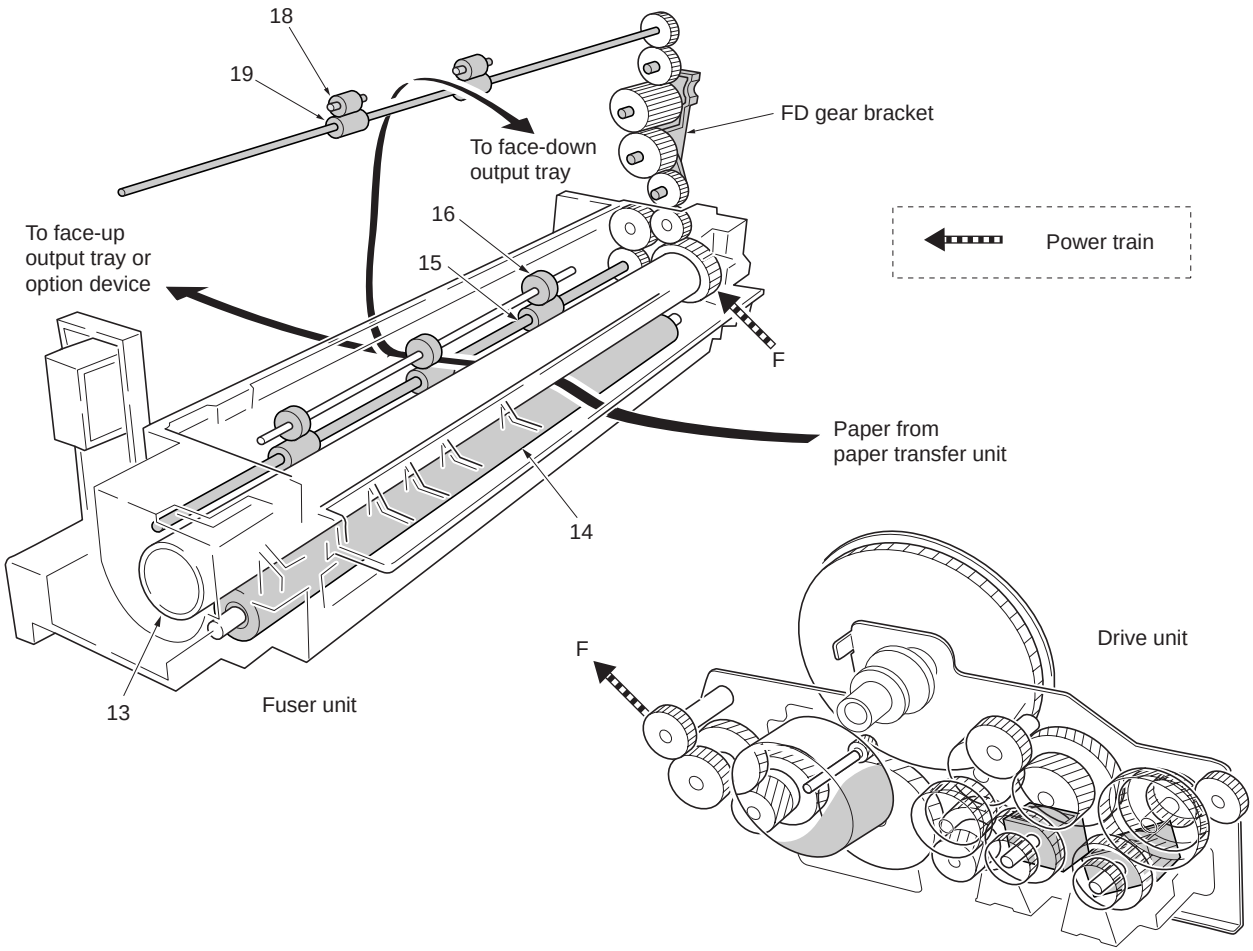

Figure 2-1-5 Fuser unit and face up/down output

TONER
www.tonerplus.com.ua

13. Heat roller
14. Press roller
15. Exit roller
16. Exit pulley(s)
17. FD roller
18. Pinch roller(s)

2-1-2 Electrophotographic cycle

The electrophotographic system of the printer performs a cyclic action made of six steps as follows. Each step is technically explained in the following sections.

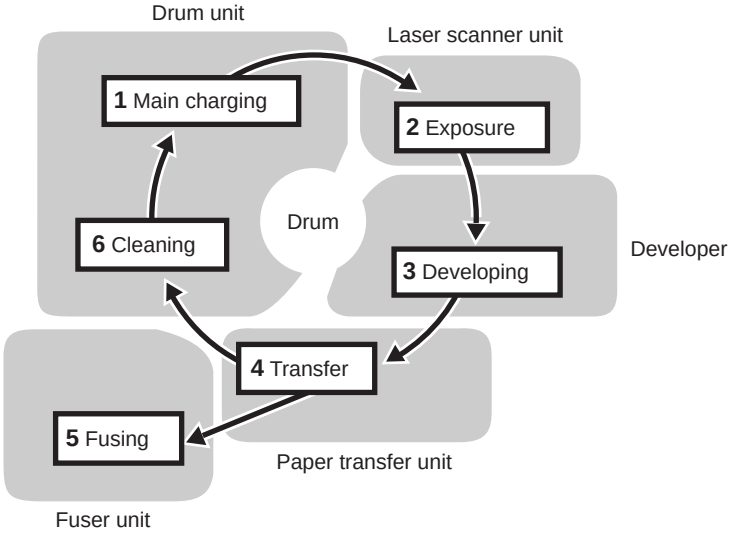

Figure 2-1-6 Electrophotographic cycle

TONER
www.tonerplus.com.ua

(1) Main charging
Components of drum and main charger unit

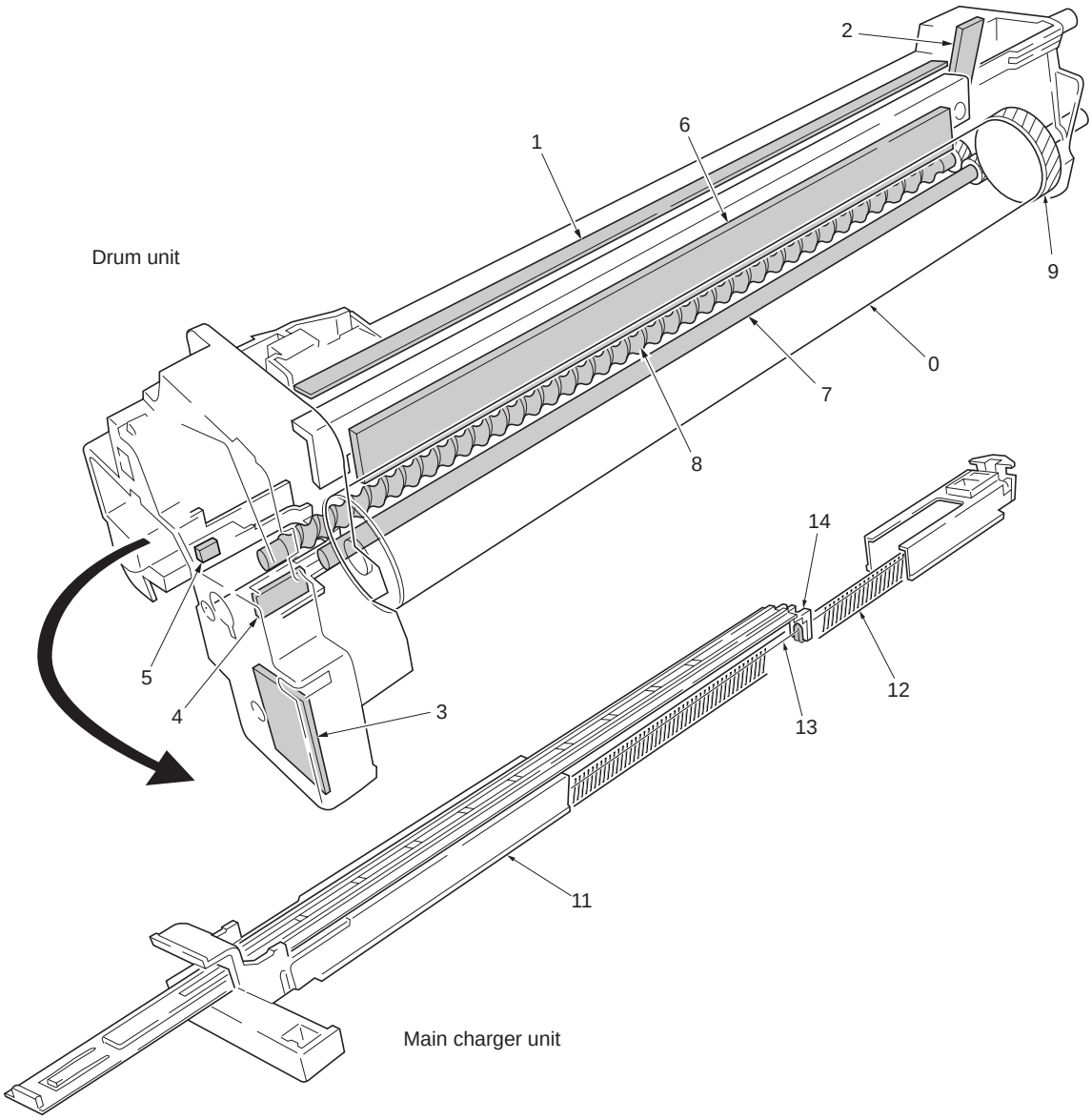

Figure 2-1-7 Components of drum and main charger unit

1. Eraser lamp [board] (KP-1067)
2. Zener board (KP-1073)
3. Drum board (KP-1064)
4. Waste toner full sensor [board] (KP-1065)
5. Waste toner full sensor (receiver)
6. Cleaning blade
7. Cleaning roller
8. Cleaner screw
9. Drum gear Z36H
10. Drum
11. Main charger shield
12. Grid
13. Main charger wire
14. Charger wire cleaner

TONER
www.tonerplus.com.ua

Amorphus-silicon drum
The printer use the long lasting amorphous silicon drum. The drum surface is a composite of five substances coated in five layers as shown below.

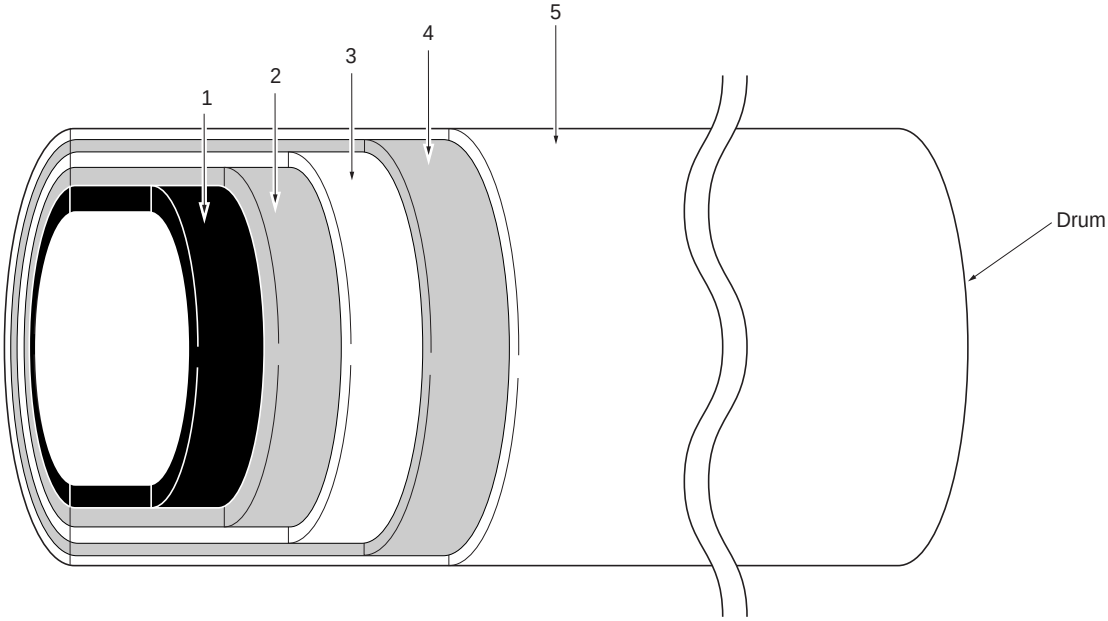

1. Aluminum base
2. Carrier block (1 to 3 mm thick)
3. Photoconductor a-Si
4. Primary protection layer (1 mm thick)
5. Secondary protection layer

Figure 2-1-8 Amorphus silicon drum

The primary and secondary layers are for protecting the amorphous silicon layer underneath. The amorphus silicon layer is of photoconductive, meaning it can be electronically conductive when exposed to a (laser) light source to effectively ground electrons charged on its outer surface to the ground. This layer is approximately 9 mm thick.

The carrier block layer lies between the amorphous silicon layer and the aluminum base cylinder and prevents the backward electron flow, from the base cylinder to the drum's outer surface, which might give adverse effect (possibly "ghost") on the print quality.

TONER+
www.tonerplus.com.ua

Charging the drum
The following shows a simplified diagram of the electrophotographic components in relation to the engine system. Charging the drum is done by the main charger wire.

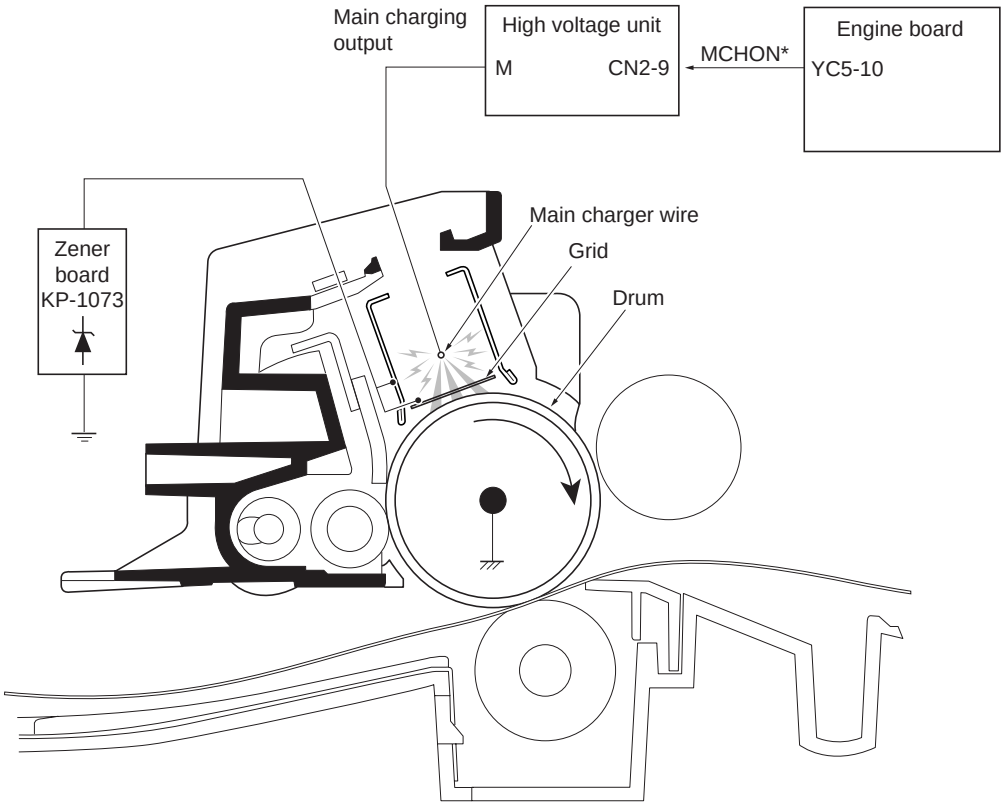

Figure 2-1-9 Charging the drum

As the drum rotates in a “clean (neutral)” state, its photoconductive layer is given a uniform, positive (+) corona charge dispersed by the main charger wire. The grid regulates the main charging potential so that it is evenly and stably dispersed over the drum at a constant voltage level.

Due to being high-voltage scorotron charging, the main charger wire can get contaminated by oxidization after a long run. Therefore, it must be cleaned periodically from time to time using the charger wire cleaner (charger cleaning knob). Cleaning the main charger wire prevents print quality problems such as black streaks.

TONER+
www.tonerplus.com.ua

(2) Exposure

The charged surface of the drum is exposed to the laser beam scanning from the laser scanner unit.

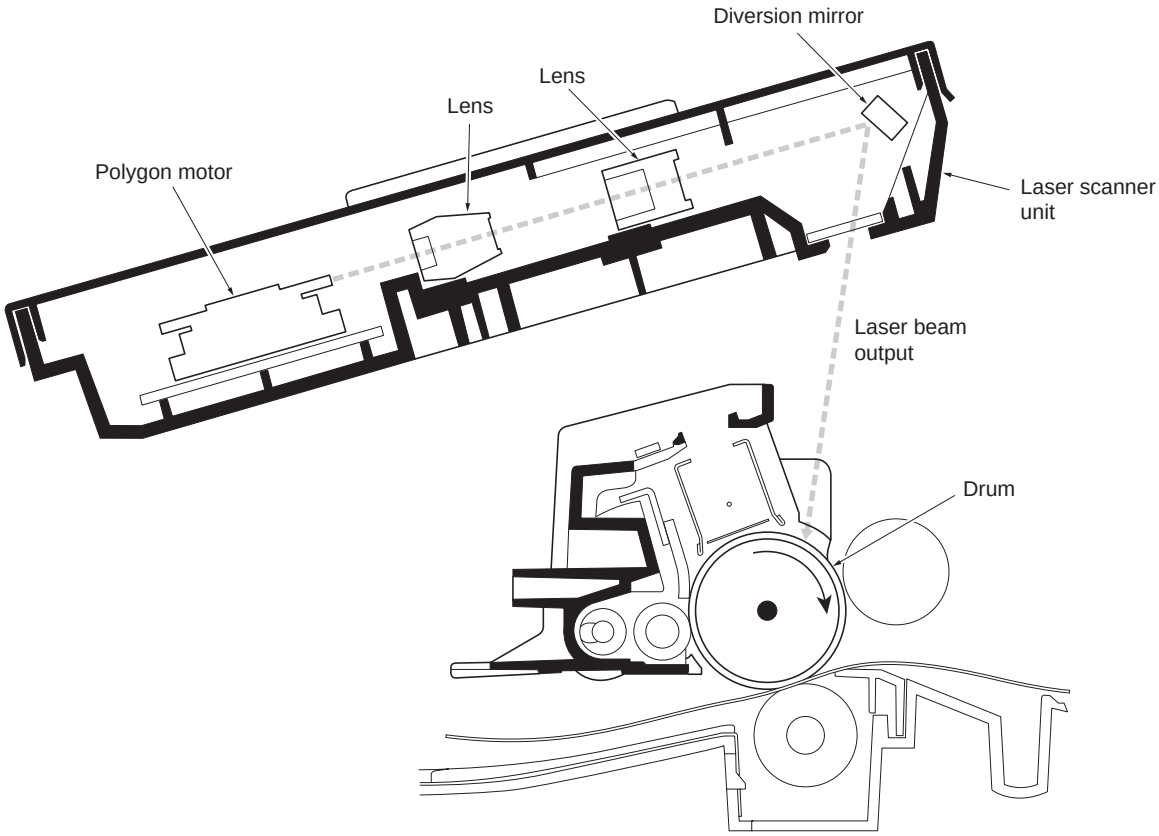

Figure 2-1-10 Exposure

The polygon motor (with polygon mirrors) revolves (27,165 rpm) to reflect the laser beam over the drum. Lenses and diversion mirror are housed in the laser scanner unit. These lenses adjust the diameter of the laser beam (670 nm wavelength) so that the laser beam effectively focalizes on the drum surface.

TONER+
www.tonerplus.com.ua

Laser scanner unit

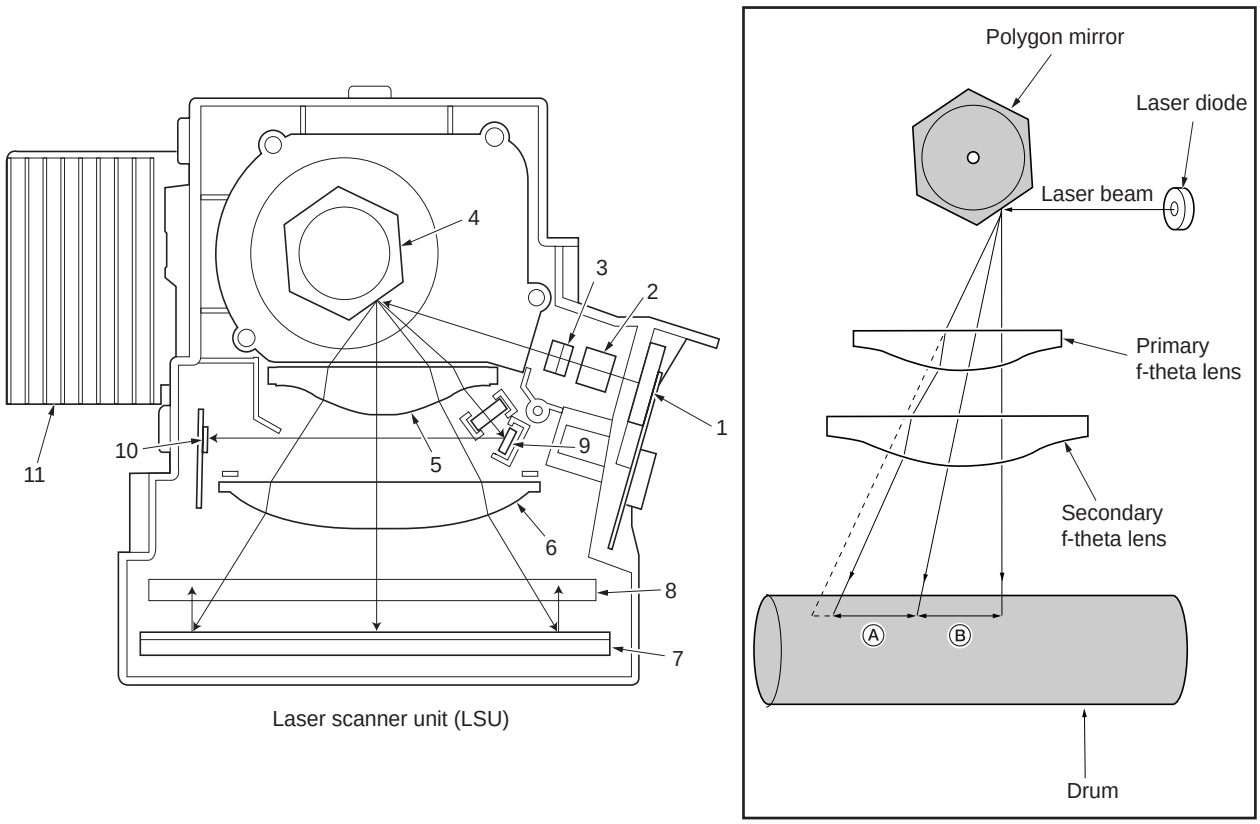

Figure 2-1-11 Laser scanner unit

1. Laser diode ..... Emits diffused, visible laser.
2. Collimator lens ..... Aligns the laser beam to the cylindrical lens.
3. Cylindrical lens ..... Compensates the vertical angle at which the laser beam hits on of the polygon mirror segments.
4. Polygon mirror (motor) ..... Has six mirror segments around its hexagonal circumference. Each mirror corresponds to one scanned line width on the drum when the laser beam scans on it.
5. Primary f-theta lens ..... See figure 2-1-11 above.
6. Secondary f-theta lens ..... The primary (above) and secondary f-theta lenses equalize focusing distortion on the area on the drum closer to the edge. The effective length of line (A, B in the figure below) the laser beam draws on the drum becomes longer as the laser beam hits closer to the drum edge. In the figure 2-1-11 above, distances represented by A and B are not the same (A > B) until the f-theta lenses are provided between the polygon mirror and the drum (A = B).
7. Diversion mirror ..... Diverts the laser beam vertically onto the drum. Note the diffused laser beam finally pinpoints on the drum.
8. Protective glass ..... Prevent dust, debris, etc., from entering the scanner assembly.
9. Sensor mirror ..... Bends the very first shot of a laser scan towards the pin photo sensor (See figure 2-1-11).
10. Pin photo sensor ..... When shone by the sensor mirror above, this pin photo sensor generates a trigger signal.
11. Heat sink ..... Cooling polygon motor.

TONER
www.tonerplus.com.ua

Drum surface potential

The laser beam is continually switched on and off depending on the print data. It is on for a black (exposed) dot and off for a white (blank) dot. Since the drum surface is evenly charged, whenever it is illuminated by the laser beam, the electrical resistance of the photoconductor is reduced and the potential on the photoconductor is also lowered. Resulted on the drum surface is an electrostatic image which represents the data to print. Note that the area to be printed black has the low potential, constituting a “positively exposed” image.

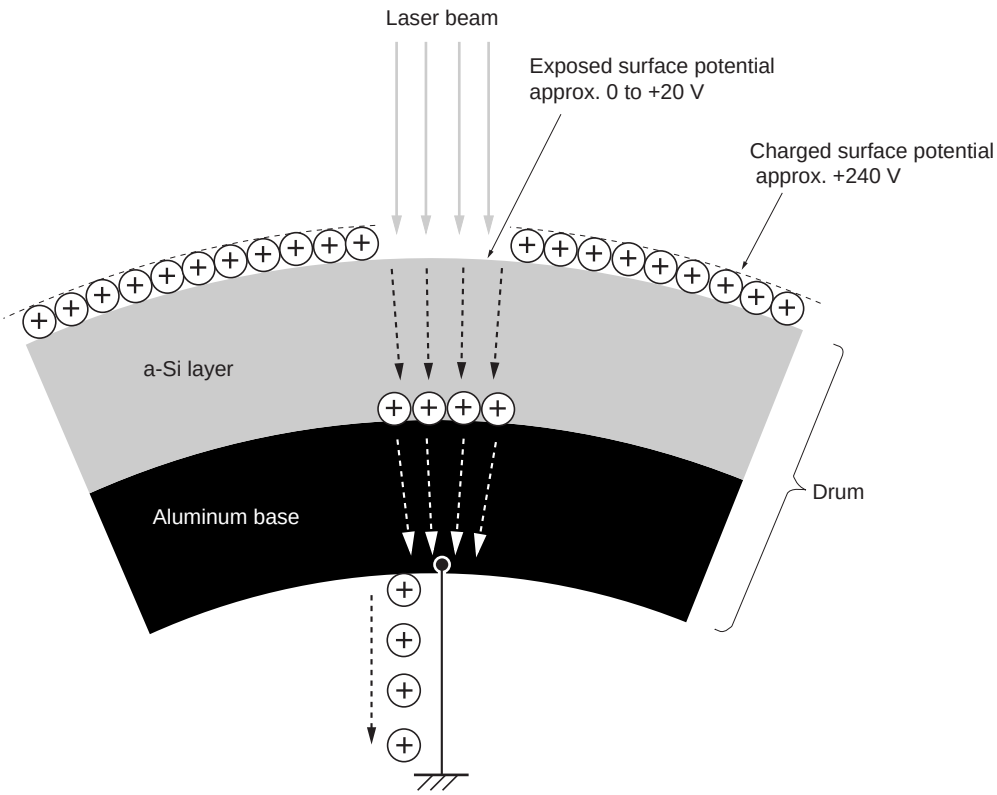

Figure 2-1-12 Drum surface potential

TONER
www.tonerplus.com.ua

(3) Development

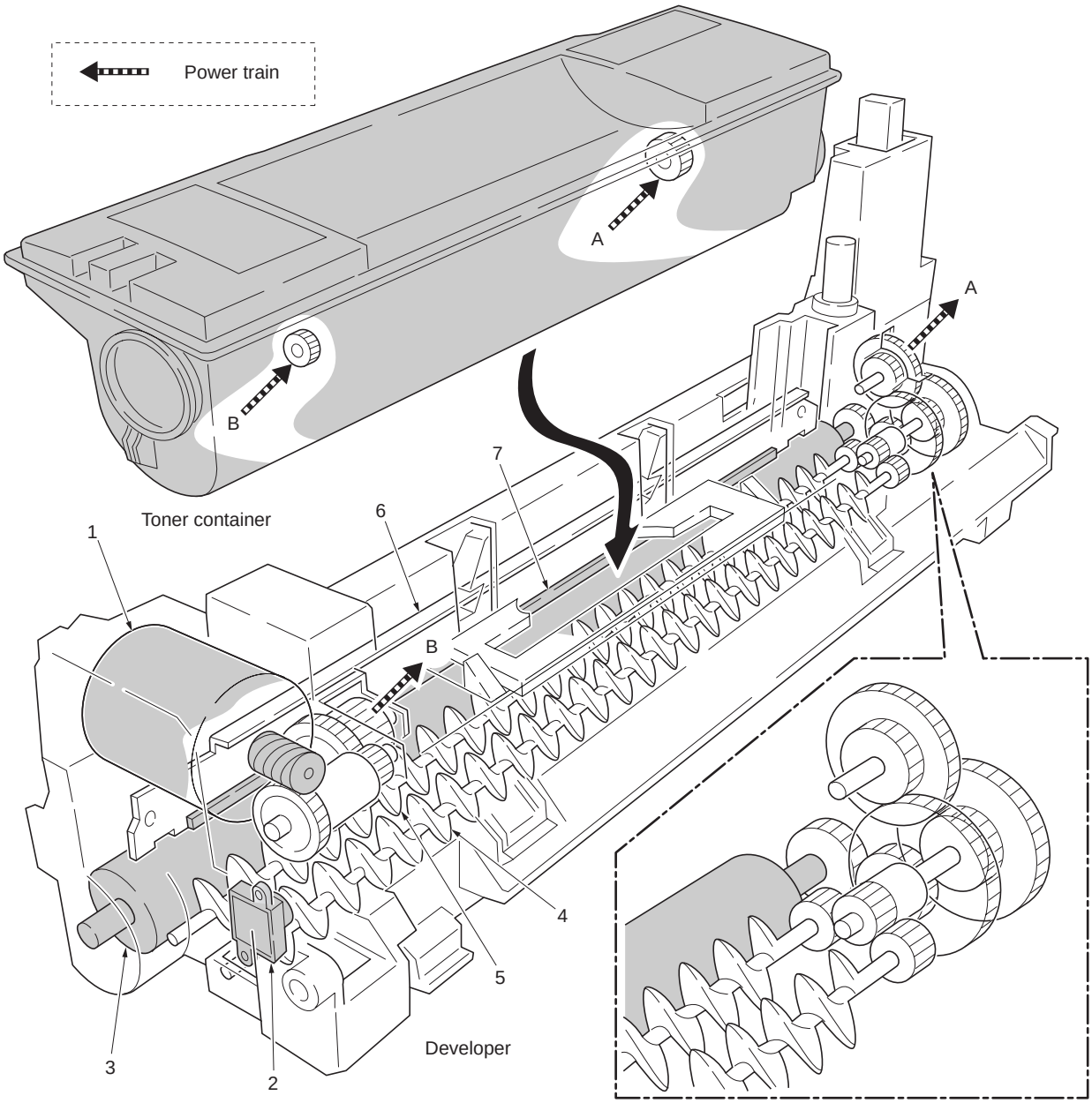

Figure 2-1-13 Developer mechanism

TONER
www.tonerplus.com.ua

1. Toner motor
2. Toner sensor
3. Developing roller
4. DLP A screw
5. DLP B screw
6. Blade
7. Magnet

The latent image constituted on the drum is developed into a visible image. The developing roller contains a 4-pole (S-N-S-N) magnet core and an aluminum cylinder rotating around the magnet core. Toner attracts to the developing roller since it is powdery ink made of black resin bound to iron particles. The magnetic blade to which an auxiliary magnet piece is attached is positioned approximately 0.3 to 0.4 mm above the developing roller. It constitutes a smooth layer of toner in accordance with the revolution of the roller.

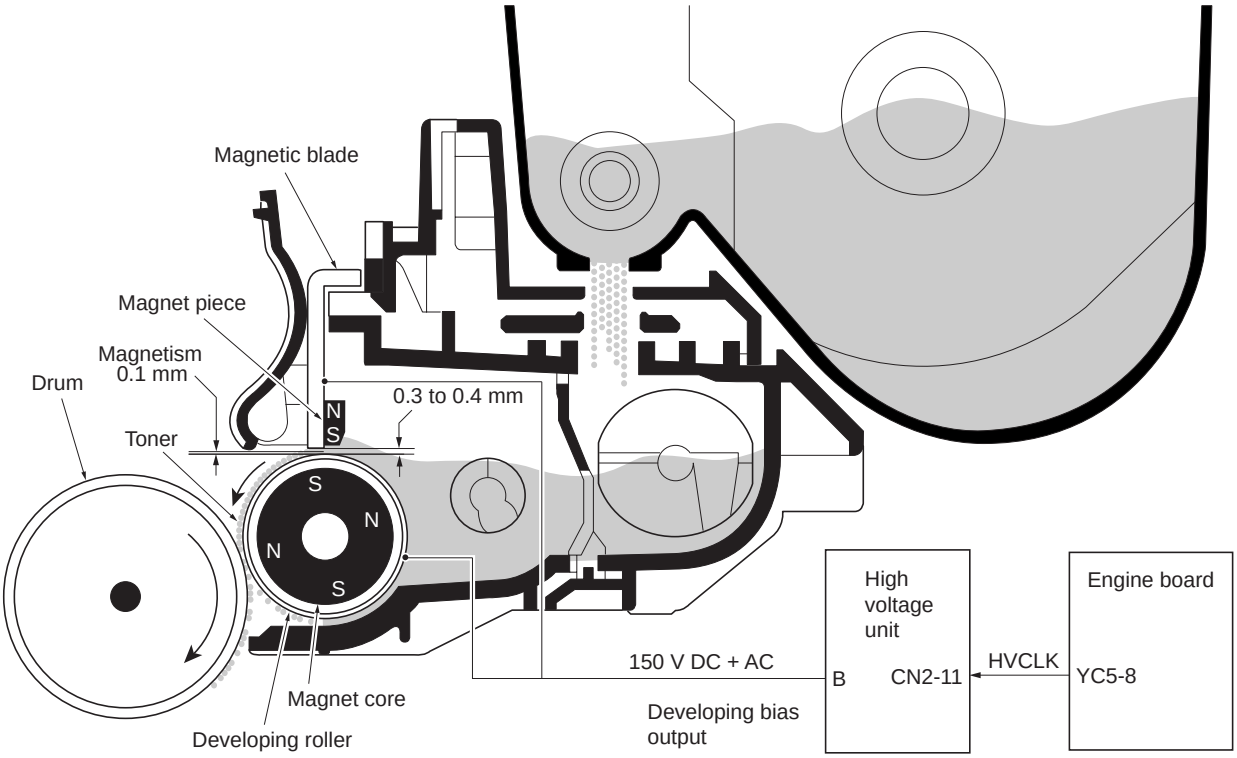

Figure 2-1-14 Development

The developing roller is applied with the AC-weighted, positive DC power source. Toner on the developing roller is given a positive charge. The positively charged toner is then attracted to the areas of the drum which was exposed to the laser light. (The gap between the drum and the developing roller is approximately 0.3 mm.) The non-exposed areas of the drum repel the positively charged toner as these areas maintain the positive charge. The developing roller is also AC-biased to ensure contrast in yielding by compensating the toner's attraction and repelling action during development.

TONER+
www.tonerplus.com.ua

A toner sensor is provided within the developer. As the toner supply from the toner container dwindles and the toner level lowers in the reservoir, the sensor translates it into an electrical signal through its diaphragm, urging the toner motor to feed more toner.

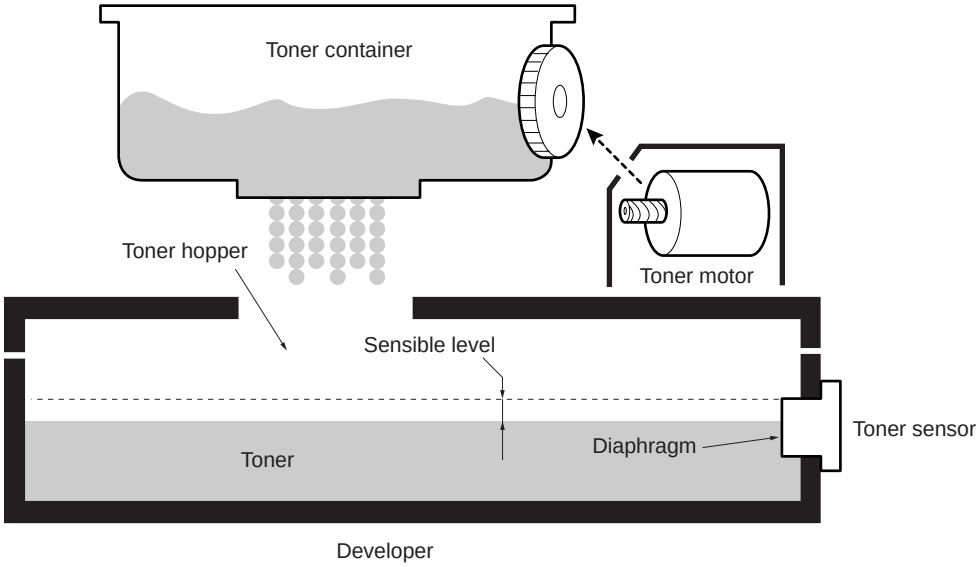

Figure 2-1-15 Toner sensor

TONER
www.tonerplus.com.ua

(4) Transfer

The image developed by toner on the drum is transferred onto the paper because of the electrical attraction between the toner itself and the transfer roller. The transfer roller is negatively-biased so that the positively-charged toner is attracted onto the paper while it is pinched by the drum and the transfer roller.

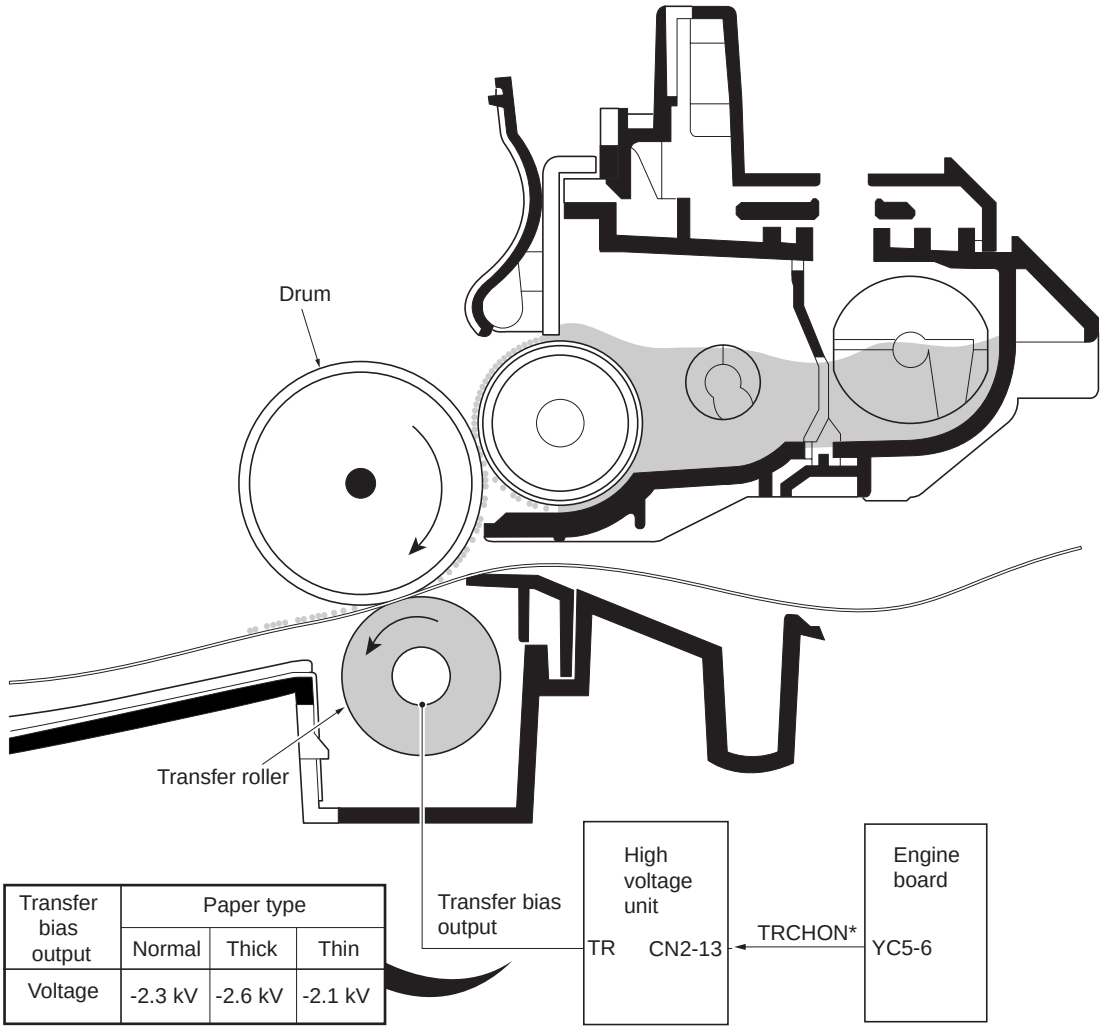

Transfer bias output	Paper type		
	Normal	Thick	Thin
Voltage	-2.3 kV	-2.6 kV	-2.1 kV

Figure 2-1-16 Transfer

The nominal transfer bias is set to approximately -2.3 kV (limit). Since the ideal potential of the transfer bias depends on the thickness of paper, the bias is raised to approximately -2.6 kV for thicker paper. On the other hand, the bias current is reduced to -2.1 kV for thin paper.

TONER+
www.tonerplus.com.ua

(5) Fusing

The toner on the paper is molten by heat and pressed into the paper as it passes between the heat roller and the press roller in the fuser unit.

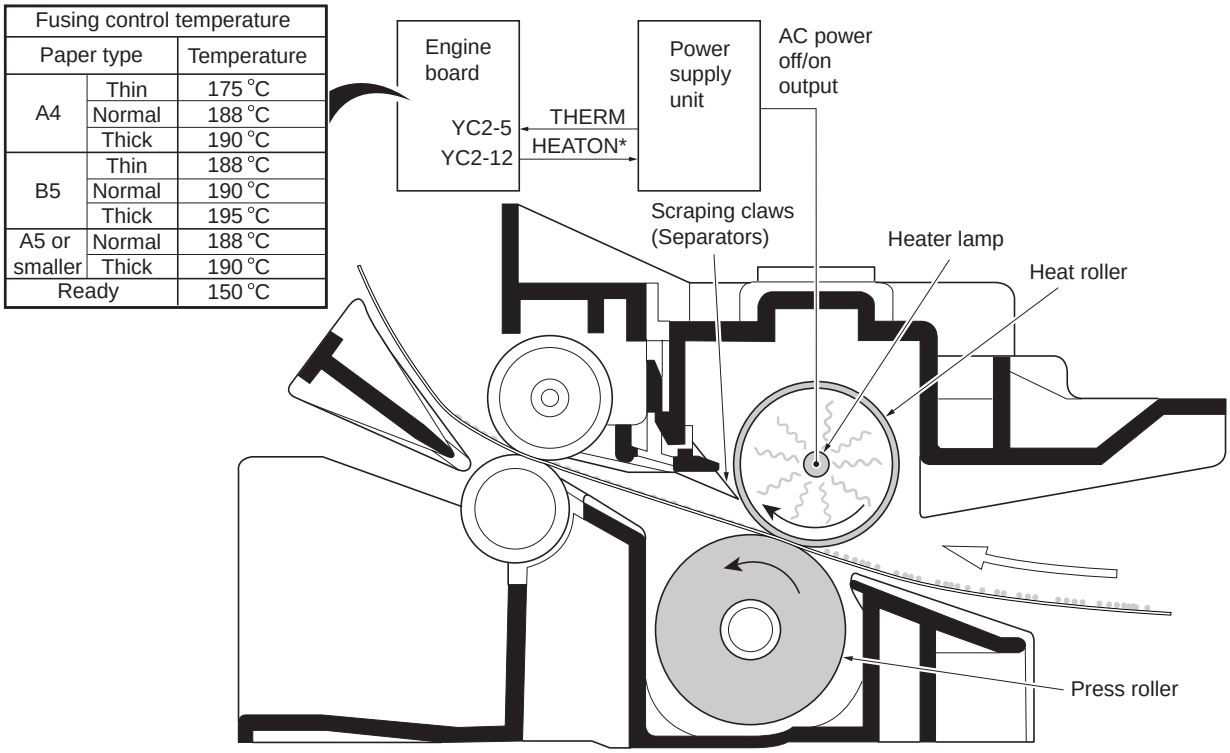

Fusing control temperature		
Paper type		Temperature
A4	Thin	175 °C
	Normal	188 °C
	Thick	190 °C
B5	Thin	188 °C
	Normal	190 °C
	Thick	195 °C
A5 or smaller	Normal	188 °C
	Thick	190 °C
Ready		150 °C

Figure 2-1-17 Fusing

The heat roller has a heater (infrared) lamp inside which continuously turns on and off by the thermistor to maintain the constant temperature on the heat roller surface. The fusing temperature is also controlled based on paper types. See the table in the figure above.

The heat roller is florin coated by to prevent toner from accumulating on the roller after a long usage. Care must be taken while handling the heat roller not to scratch the roller surface as doing so may result in quality problems.

The heat roller has four scraping claws [Separators] which are continuously in contact with its surface. These claws prevent the paper on which toner has been fused from being wound around the heat roller causing paper jam.

The press roller is made of the heat resistant silicon rubber. This roller is used to strongly press the paper towards the heat roller by means of coil springs.

The temperature of the heat roller is constantly monitored by the engine board using the thermistor and triac. Should the temperature of the heat roller exceed the predetermined value, the thermal cutout is activated to effectively disconnect the heater lamp from power.

TONER+
www.tonerplus.com.ua

Fuser unit mechanism

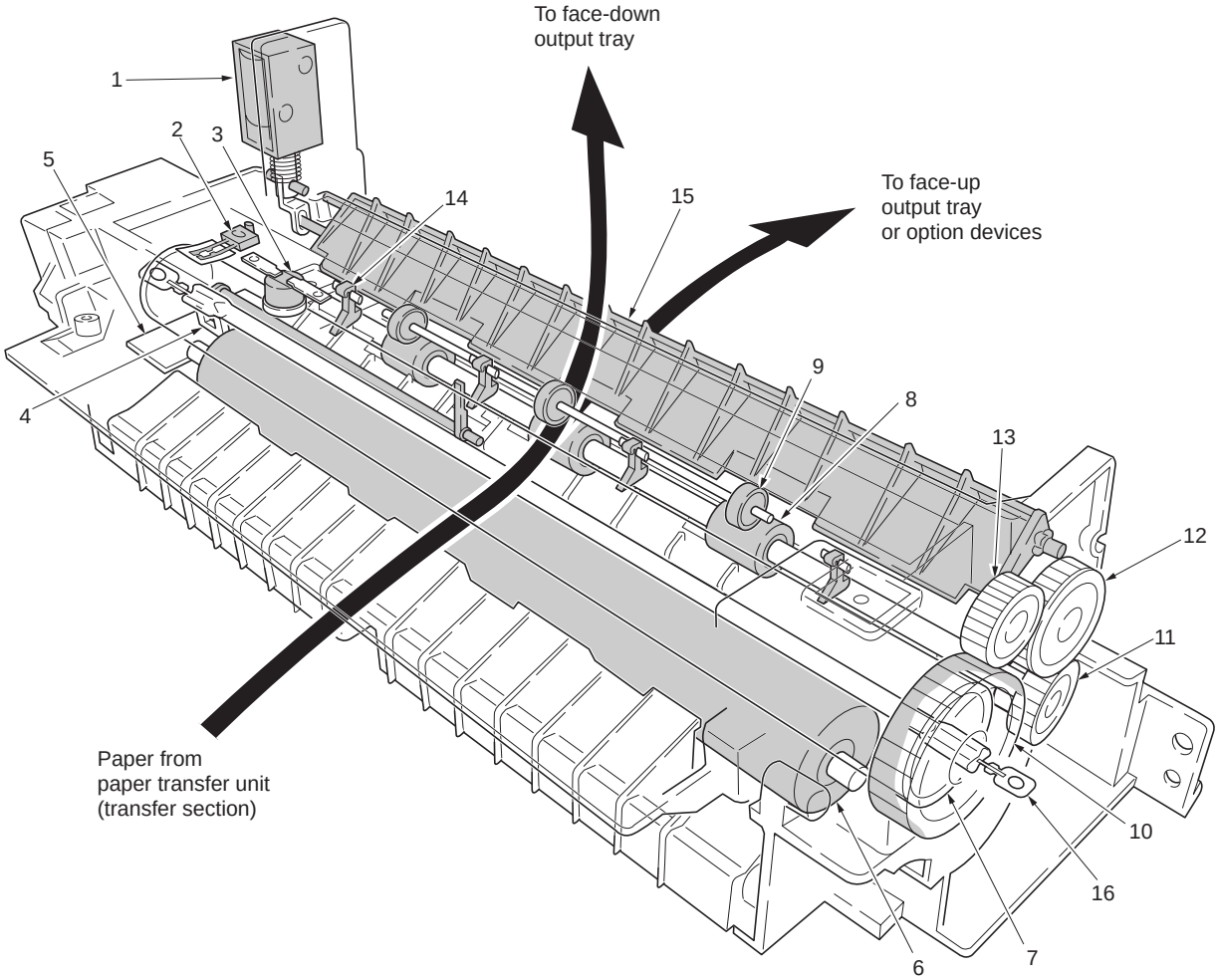

Figure 2-1-18 Fuser unit mechanism

1. Face up/down solenoid
2. Thermistor
3. Thermal cutout
4. Exit sensor
5. Fuser board (KP-1069)
6. Press roller
7. Heat roller
8. Exit roller
9. Exit pulley(s)
10. Heat gear Z36
11. Exit gear Z21
12. Idle gear Z18
13. Idle gear Z28
14. Separator(s)
15. Change guide
16. Heater lamp

TONER
www.tonerplus.com.ua

(6) Cleaning

After the transferring process, the drum needs to be physically cleaned of toner which is residual after the development process. The cleaning blade is constantly pressed against the drum and scrapes the residual toner on the drum off to the cleaning roller. The cleaning roller drives the toner to the cleaner screw at one end of which the waste toner bottle is connected to collect the waste toner.

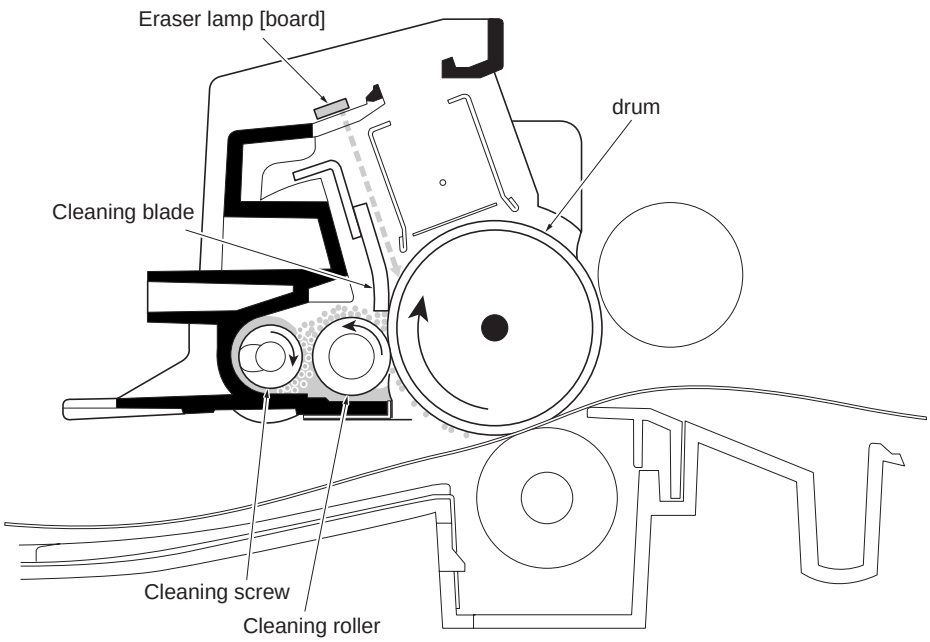

Figure 2-1-19 Drum cleaning and erasing static charge

After the drum is physically cleaned, it then must be electrically cleaned to neutral state. This is necessary to erase any residual positive charges, ready to accept the next uniform charge. The residual charge is canceled by exposing the drum to the light emitted from the eraser lamp [board] (See figure 2-1-19 above.) in the similar manner as described on page 2-1-9. This lowers the electrical conductivity of the drum surface making the residual charge on the drum surface escape to the ground.

After the drum is physically cleaned, it then must be cleaned to the electrically neutral state. This is necessary to erase any residual positive charge, ready to accept the uniform charge for the next print process. The residual charge is canceled by exposing the drum to the light emitted from the eraser lamp. This lowers the electrical conductivity of the drum surface making the residual charge on the drum surface escape to the ground.

TONER+
www.tonerplus.com.ua

This page is intentionally left blank.

TONER+
www.tonerplus.com.ua

2-2-1 Electrical parts layout

(1) Main frame (fuser, laser scanner unit, and controller unit)

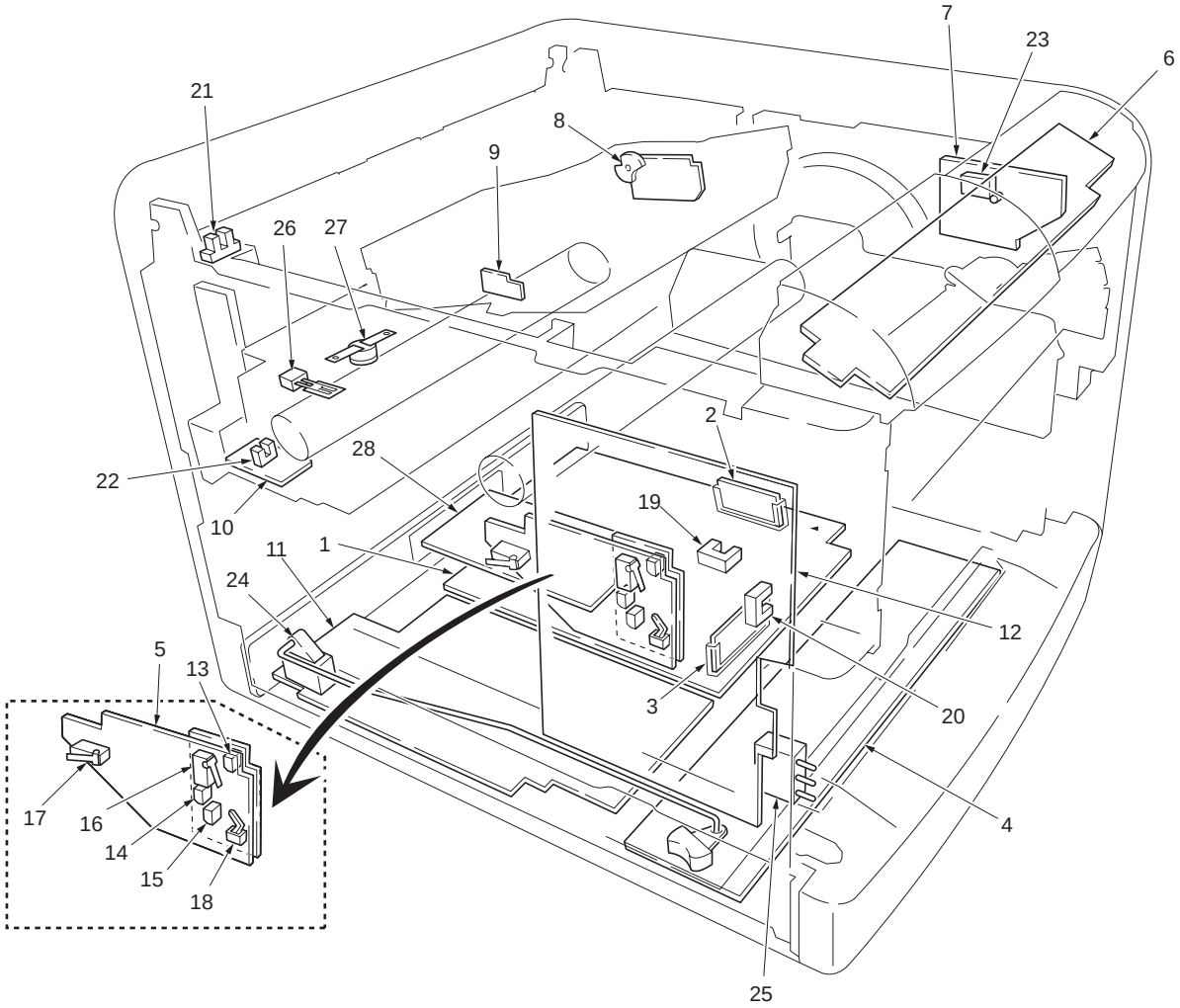

Figure 2-2-1 Main frame (1)

1. Main board (KP-1053*1/1033*2)
2. System DIMM [board] (KP-1059)*1
3. System DIMM [board] (KP-893)*2
4. Engine board (KP-1081)
5. Sensor board (KP-1077)
6. LCD controller board (KP-1079)
7. Engine relay board (KP-1071)
8. APC board (KP-1062)
9. Pin photo diode sensor [board] (KP-1075)
10. Fuser board (KP-1069)
11. Power supply unit
12. High voltage unit
13. Registration sensor (PH701)
14. Paper gauge sensor 1 (PH702)
15. Paper gauge sensor 2 (PH703)
16. Top cover/paper transfer unit interlock switch (SW702)
17. Left cover interlock switch (SW703)
18. Top cover switch (SW701)
19. MP tray paper sensor (PC502)
20. Option feeder sensor (PC501)
21. Paper full sensor
22. Exit sensor
23. Temperature/humidity sensors
24. Power switch
25. Paper size switch
26. Thermistor
27. Thermal cutout
28. Network interface card or serial interface card (Optional)

*1: For FS-1920 model
*2: For FS-3820N/3830N models

TONER www.tonerplus.com.ua

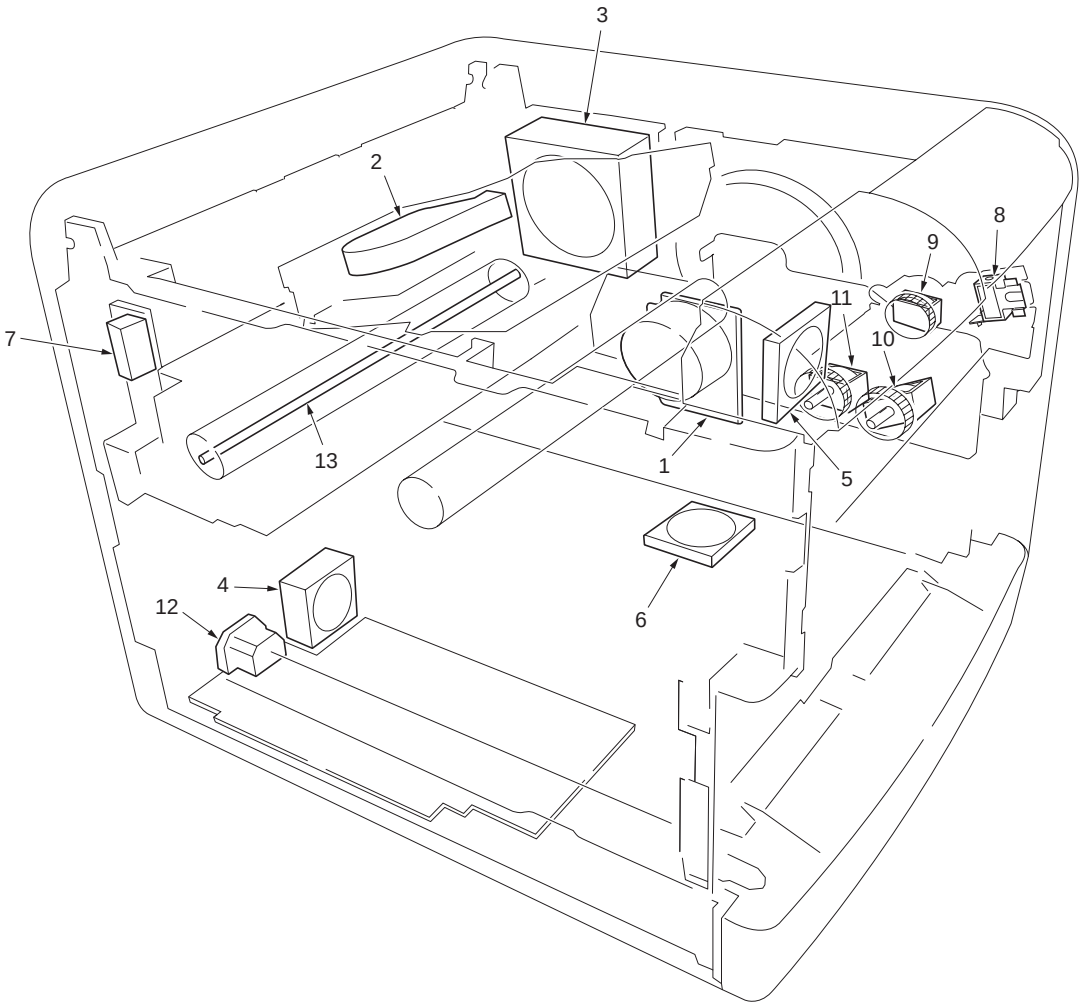

Figure 2-2-2 Main frame (2)

1. Main motor
2. Polygon motor
3. Cooling fan motor
4. Controller unit fan motor
5. Developer fan motor
6. CPU cooling fan motor*[1]
7. Face up/down solenoid
8. MP feed solenoid
9. Middle feed clutch
10. Feed clutch
11. Registration clutch
12. Heater lamp
13. AC inlet

*[1]: For FS-3820N/3830N models only

TONER
www.tonerplus.com.ua

(2) Drum and developer

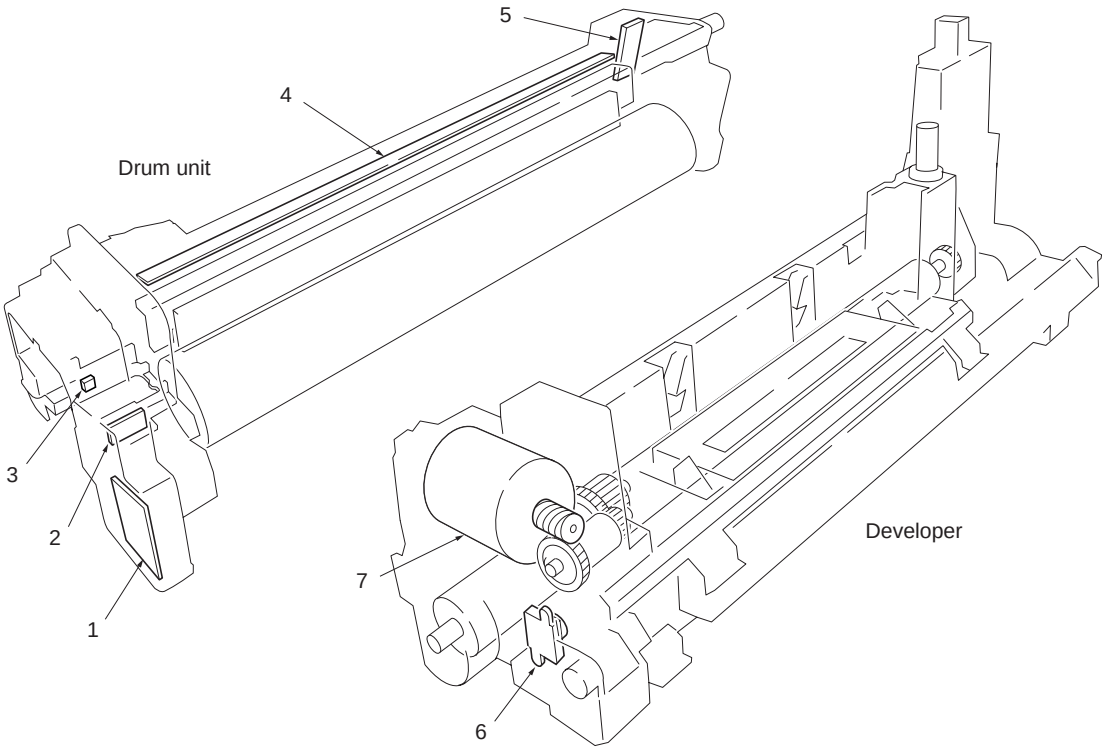

Figure 2-2-3 Drum and developer

1. Drum board (KP-1064)
2. Waste toner full sensor [board] (KP-1065)
3. Waste toner full sensor (receiver)
4. Eraser lamp [board] (KP-1067)
5. Zener board (KP-1073)
6. Toner sensor
7. Toner motor

TONER
www.tonerplus.com.ua

This page is intentionally left blank.

TONER+
www.tonerplus.com.ua

2-3-1 Main board

For FS-1920 model (KP-1053)

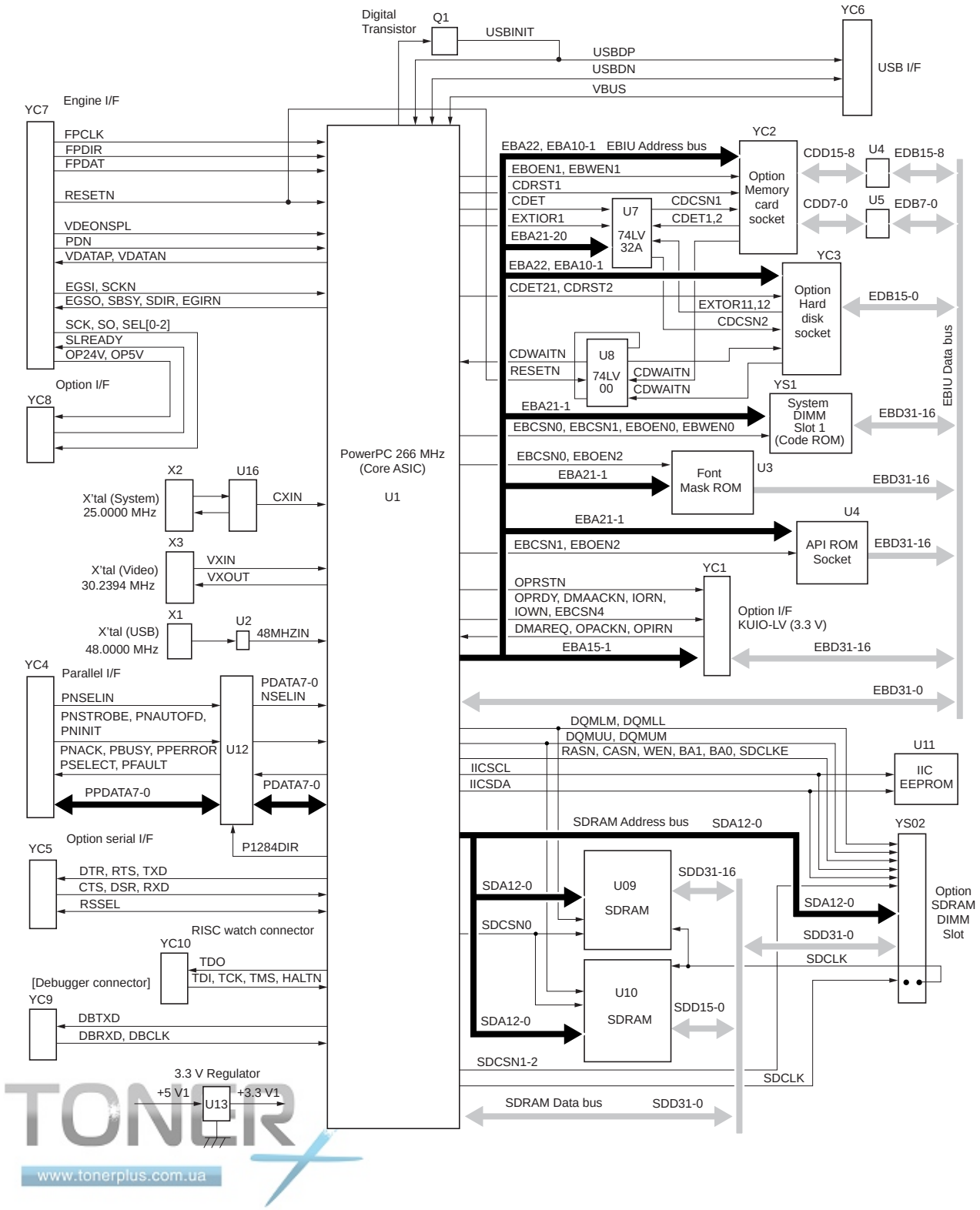

TONER
www.tonerplus.com.ua

Figure 2-3-1 Main board (KP-1053) circuit block diagram

For FS-3820N/3830N models (KP-1033)

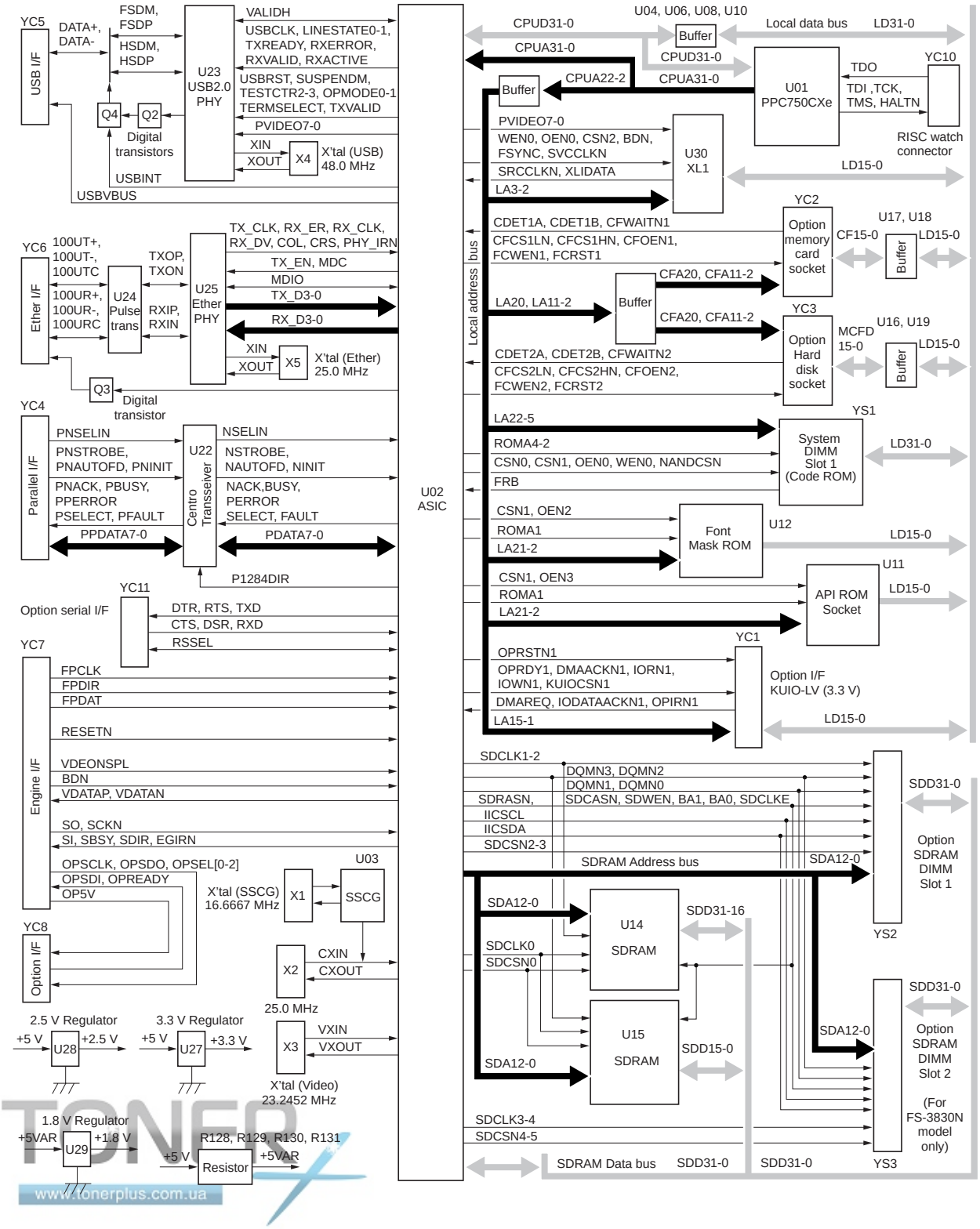

Figure 2-3-2 Main board (KP-1033) circuit block diagram

2-3-2 Engine board

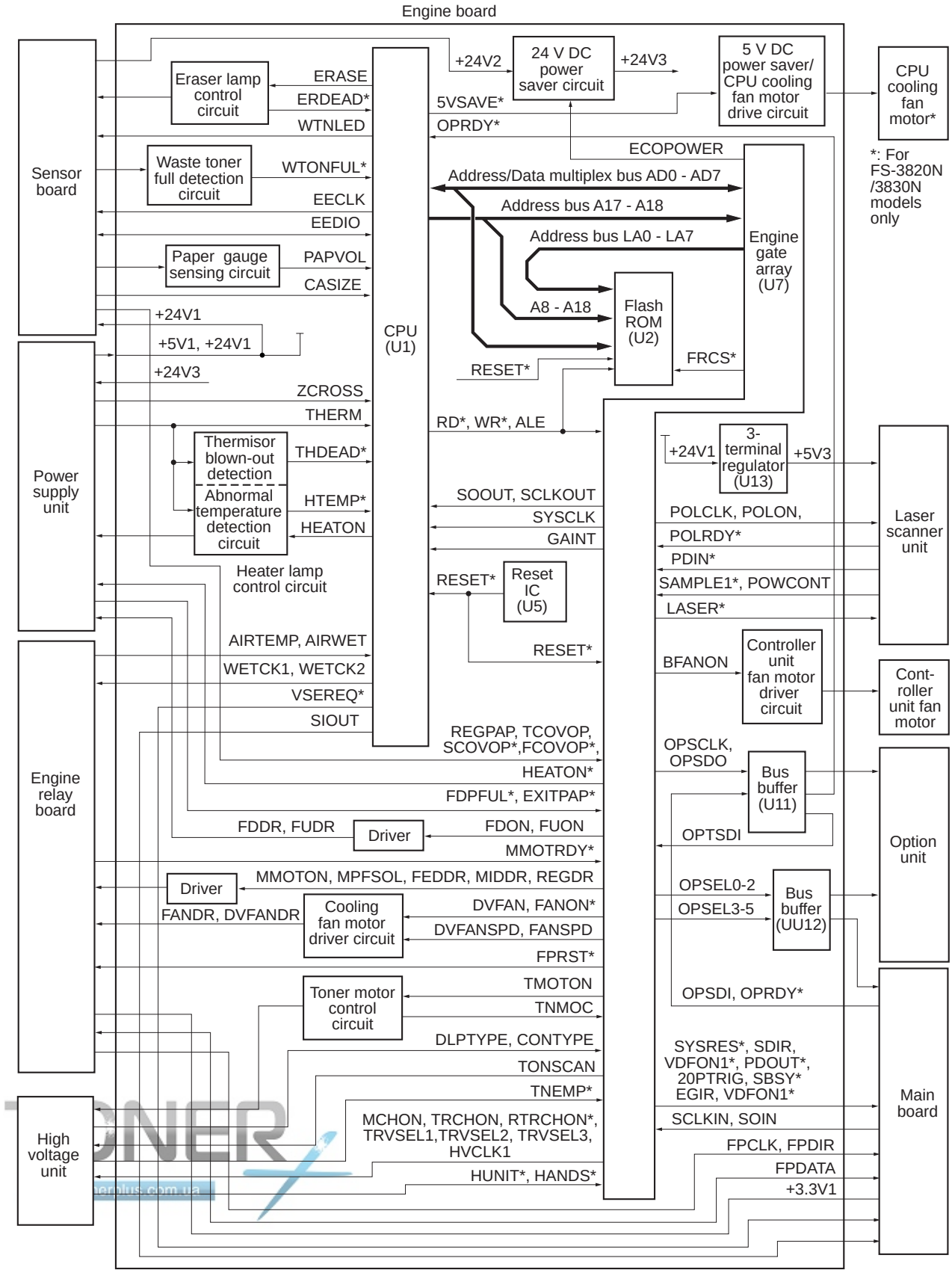

Figure 2-3-3 Engine board circuit block diagram

Connector	Pin No.	Signal	I/O	Voltage	Description
YC2	1	+24V3	O	24 V DC	24 V DC power supply
Connected to the power supply board	2	FDPFUL*	I	0/5 V DC	Paper full sensor: On/Off
	3	FUDR	O	0/24 V DC	Face- up/down solenoid (UP): On/Off
	4	FDDR	O	0/24 V DC	Face- up/down solenoid (DOWN): On/Off
	5	THERM	I	Analog	Thermistor detection voltage
	6	EXITPAP*	I	0/5 V DC	Exit sensor: On/Off
	7	+5V1	I	5 V DC	5 V DC power supply
	8	GND	-	Ground	Ground
	9	+24V3	O	24 V DC	24 V DC power supply
	10	SLEEP	-	-	Not used
	11	ZCROSS	I	0/5 V DC (pulse)	Zero cross signal
	12	HEATON*	O	0/24 V DC	Heater lamp: On/Off
	13	+5V1	I	5 V DC	5 V DC power supply
	14	+5V1	I	5 V DC	5 V DC power supply
	15	+5V1	I	5 V DC	5 V DC power supply
	16	+5V1	I	5 V DC	5 V DC power supply
	17	GND	-	Ground	Ground
	18	GND	-	Ground	Ground
	19	GND	-	Ground	Ground
	20	GND	-	Ground	Ground
	21	+24V1	I	24 V DC	24 V DC power supply
	22	+24V1	I	24 V DC	24 V DC power supply
	23	+24V1	I	24 V DC	24 V DC power supply
	24	+24V1	I	24 V DC	24 V DC power supply
YC3	1	BFANDR(+5V)	O	0/2.5/5 V DC	Controller unit fan motor: Stop/Low speed/High speed
Connected to the controller unit fan motor	2	GND	-	Ground	Ground
YC4	1	+24V1	O	24 V DC	24 V DC power supply
Connected to the sensor board	2	+24V1	O	24 V DC	24 V DC power supply
	3	+24V1	O	24 V DC	24 V DC power supply
	4	GND	-	Ground	Ground
	5	GND	-	Ground	Ground
	6	+24V2	I	24 V DC	24 V DC power supply (via interlock switches)
	7	+24V2	I	24 V DC	24 V DC power supply (via interlock switches)
	8	+24V2	I	24 V DC	24 V DC power supply (via interlock switches)
	9	ERASEDR	O	0/24 V DC	Eraser lamp: On/Off
	10	WTNLED*	O	0/5 V DC (pulse)	Waste toner full sensor (LED): On/Off
	11	TNRFUL*	I	0/5 V DC (pulse)	Waste toner full sensor: On/Off
	12	+5V1	O	5 V DC	5 V DC power supply
	13	+5V2	O	5 V DC	5 V DC power supply
	14	GND	-	Ground	Ground
	15	EEDIO	I/O	0/5 V DC (pulse)	Serial data signal for EEPROM (drum board)
	16	EECLK	O	0/5 V DC (pulse)	Clock signal for EEPROM (drum board)
	17	REGPAP	I	0/5 V DC	Registration sensor: On/Off
	18	PVOLAN1	I	0/5 V DC	Paper gauge sensor 1: On/Off
	19	TCOVOP	I	0/5 V DC	Top cover switch: On/Off
	20	FCOVOP*	I	0/24 V DC	Top cover/paper transfer unit interlock switch: On/Off
	21	CASIZE	I	0/	Paper size switch: Cassette not installed/
				1.05 V/	[OTHER]/
				1.64 V/	[LG]/
				2.15 V/	[LTR]/
				2.38 V/	[A4]/
				2.70 V/	[A5]/
				2.91 V/	[B5]/
				3.12 V	Cassette size error (Toner install mode reset)
	22	PVOLAN2	I	0/5 V DC	Paper gauge sensor 2: On/Off

TONER
www.tonerplus.com.ua

Connector	Pin No.	Signal	I/O	Voltage	Description
YC5 Connected to the high voltage unit	1	TRVSEL1*	O	0/24 V DC	Transfer charger output voltage setting 1
	2	TRVSEL2*	O	0/24 V DC	Transfer charger output voltage setting 2
	3	+5V1	O	5 V DC	5 V DC power supply
	4	TRVSEL3*	O	0/24 V DC	Transfer charger output voltage setting 3
	5	TNEMP*	I	0/5 V DC	Toner sensor: On (toner empty)/Off
	6	TRCHON*	O	0/24 V DC	Transfer charger: On/Off
	7	TONSCAN	O	0/5 V DC (pulse)	Scan signal for toner sensor
	8	HVCLK	O	0/5 V DC (pulse)	Clock signal for developing bias output
	9	GND	-	Ground	Ground
	10	MCHON*	O	0/24 V DC	Main charger: On/Off
	11	HUNIT*	I	0/5 V DC	Optional envelop feeder installation signal: Installed/Not installed
	12	RTRCHON*	O	0/24 V DC	Transfer charger output reverse voltage: On/Off
	13	HANDS*	I	0/5 V DC	MP tray paper sensor: On/Off
	14	DLPTYPE	I	0/5 V DC	Developer identification signal: Not installed/Developer DV-63
	15	+5V2	O	5 V DC	5 V DC power supply
	16	TMOTDR	O	0/24 V DC	Toner motor: On/Off
	17	CONTYPE	I	0/5 V DC	Toner container identification signal (for MICR): Normal/Not installed (abnormal)
	18	+24V3	O	24 V DC	24 V DC power supply
YC6 Connected to the optional unit	1	OP24V	O	24 V DC	24 V DC power supply
	2	GND	-	Ground	Ground
	3	OP5V	O	5 V DC	5 V DC power supply
	4	(PFSEL)	-	-	Not used
	5	OPSCLK	O	0/5 V DC (pulse)	Clock signal for serial communication
	6	OPSEL0	O	0/5 V DC	Optional unit identification code 0
	7	OPSDI	I	0/5 V DC (pulse)	Serial communication data input signal
	8	OPSEL1	O	0/5 V DC	Optional unit identification code 1
	9	OPSDO	O	0/5 V DC (pulse)	Serial communication data output signal
	10	OPSEL2	O	0/5 V DC	Optional unit identification code 2
	11	OPRDY*	I	0/5 V DC	Optional unit READY signal: Ready/Not ready
	12	GND	-	Ground	Ground

TONER
www.tonerplus.com.ua

Connector	Pin No.	Signal	I/O	Voltage	Description
YC7	1	+24V3	O	24 V DC	24 V DC power supply
Connected to the engine relay board, APC board, and polygon motor	2	+3.3V1	O	3.3 V DC	3.3 V DC power supply
	3	MPFSOL*	O	0/24 V DC	MP feed solenoid: On/Off
	4	FPDATA	I/O	0/3.3V DC(pulse)	LCD controller board data signal
	5	MIDDR*	O	0/24 V DC	Middle feed clutch: On/Off
	6	FPDIR	I	0/3.3V DC	LCD controller board control signal
	7	+24V3	O	24 V DC	24 V DC power supply
	8	FPCLK	I	0/3.3V DC	LCD controller board control signal
	9	GND	-	Ground	Ground
	10	GND	-	Ground	Ground
	11	FEDDR*	O	0/24 V DC	Feed clutch: On/Off
	12	FPRST*	O	0/3.3V DC	LCD controller board RESET signal
	13	+24V3	O	24 V DC	24 V DC power supply
	14	FANDR	O	0/12/24 V DC	Cooling fan motor: High speed/Low speed/Stop
	15	REGDR*	O	0/24 V DC	Registration clutch: On/Off
	16	MMOTON*	O	0/5 V DC	Main motor: On/Off
	17	GND	-	Ground	Ground
	18	MMOTRDY*	I	0/5 V DC	Main motor READY signal: Ready/Not ready
	19	+5V3	O	5 V DC	5 V DC power supply
	20	SAMPLE*	O	0/5 V DC	Sample & Hold signal (laser power output)
	21	DVFANDR	O	12/24 V DC	Developer fan motor: Low/High speed
	22	LASER*	O	0/5 V DC	Laser output: On/Off
	23	VD0+	O	0/3.3V DC(pulse)	Laser output data signal (+)
	24	VD0-	O	0/3.3V DC(pulse)	Laser output data signal (-)
	25	GND	-	Ground	Ground
	26	+5V3	O	5 V DC	5 V DC power supply
	27	PDIN*	I	0/5V DC (pulse)	Pin photo diode sensor detection signal
	28	GND	-	Ground	Ground
	29	POLCLK*	O	0/5V DC (pulse)	Clock signal for polygon motor rotation speed
	30	POLRDY*	I	0/5V DC	Polygon motor READY signal: Ready/Not ready
	31	POLON*	O	0/5V DC	Polygon motor: On/Off
	32	GND	-	Ground	Ground
	33	+24V3	O	24 V DC	24 V DC power supply
	34	GND	-	Ground	Ground

TONER
www.tonerplus.com.ua

Connector	Pin No.	Signal	I/O	Voltage	Description
YC8	A1	GND	-	Ground	Ground
Connected to the main board	B1	GND	-	Ground	Ground
	A2	+5V1	O	5 V DC	5 V DC power supply
	B2	+5V1	O	5 V DC	5 V DC power supply
	A3	+5V1	O	5 V DC	5 V DC power supply
	B3	SIOUT	O	0/3.3 V DC (pulse)	Serial communication signal
	A4	SDIR	O	0/3.3 V DC (pulse)	Control signal
	B4	SCLKN	O	0/3.3 V DC (pulse)	Clock signal
	A5	EGIR	O	0/3.3 V DC (pulse)	Control signal
	B5	SBSY*	O	0/3.3 V DC (pulse)	Control signal
	A6	VDFON1	O	0/3.3 V DC (pulse)	Control signal
	B6	SOIN	I	0/3.3 V DC (pulse)	Serial communication signal
	A7	VSREQ*	O	0/3.3 V DC (pulse)	Control signal
	B7	SYSRES*	O	0/3.3 V DC (pulse)	Control signal
	A8	GND	-	Ground	Ground
	B8	PDOUT*	O	0/3.3 V DC (pulse)	Control signal
	A9	GND	-	Ground	Ground
	B9	GND	-	Ground	Ground
	A10	GND	-	Ground	Ground
	B10	VD0+	O	1.02 - 1.38 V DC	LVDS video data signal (positive)
	A11	GND	-	Ground	Ground
	B11	VD0-	O	1.02 - 1.38 V DC	LVDS video data signal (negative)
	A12	FPDIR	O	0/3.3 V DC (pulse)	Control signal (LCD control board)
	B12	GND	-	Ground	Ground
	A13	+3.3V1	O	3.3 V DC	3.3 V DC power supply
	B13	FPCLK	O	0/3.3 V DC (pulse)	Clock signal (LCD control board)
	A14	GND	-	Ground	Ground
	B14	FPDATA	I/O	0/3.3 V DC (pulse)	Data signal (LCD control board)
	A15	20PSEL5	O	0/5 V DC	Optional unit identification code 5
	B15	GND	-	Ground	Ground
	A16	20PSEL3	O	0/5 V DC	Optional unit identification code 3
	B16	20PSEL4	O	0/5 V DC	Optional unit identification code 4
	A17	GND	-	Ground	Ground
	B17	20PTRIG*	O	0/5 V DC	Optional sorter SO-60 control signal
	A18	20PSDO	O	0/5 V DC(pulse)	Serial communication data output signal (Sorter)
	B18	20PRDY*	I	0/5 V DC	Sorter READY singal: Ready/Not ready
	A19	20PSCLK	O	0/5 V DC(pulse)	Clock signal for serical communication (Sorter)
	B19	20PSDI	I	0/5 V DC(pulse)	Serial communication data input signal (Sorter)
	A20	OP24V	O	24 V DC	24 V DC power supply
	B20	OP5V	O	5 V DC	5 V DC power supply
YC9	1	AIRTEMP	I	Analog	Temperature sensor detection voltage
Connected to the engine relay board	2	+5V1	O	5 V DC	5 V DC power supply
	3	WETCK1	O	0/5 V DC (pulse)	Clock signal 1 for humidity sensor
	4	WETCK2	O	0/5 V DC (pulse)	Clock signal 2 for humidity sensor
YC10	1	CPUFANDR	O	0/5 V DC	CPU cooling fan motor: On/Off
Connected to the CPU cooling fan motor (for FS-3820N/3830N models only)	2	GND	-	Ground	Ground

TONER
www.tonerplus.com.ua

2-3-3 Power supply unit

The power supply unit provides the AC power input and DC power and outputs. The high voltage bias generator circuit is mounted on a separate board. A simplified schematic diagram is shown below.

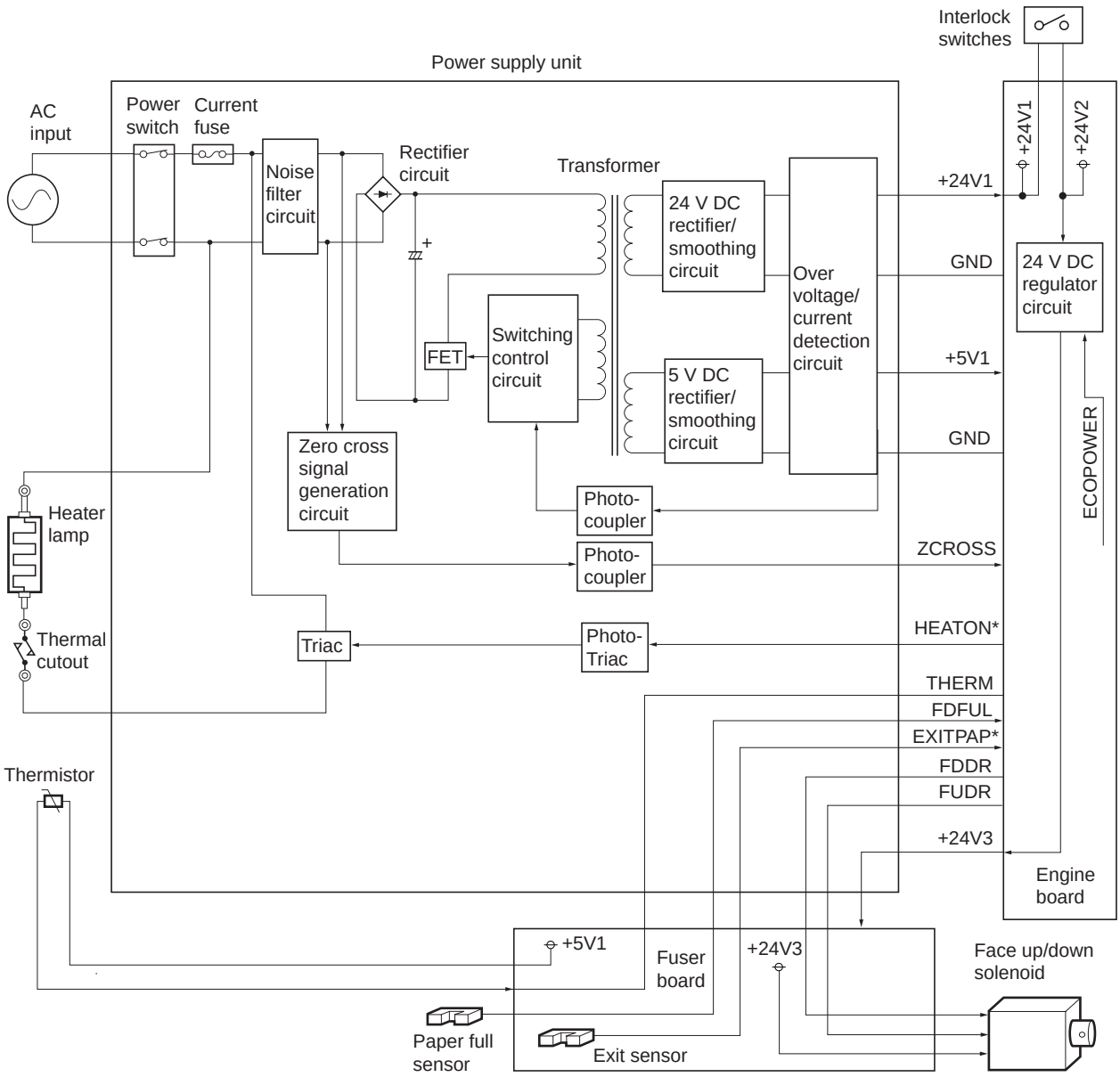

Figure 2-3-4 Power supply unit circuit block diagram

TONER
www.tonerplus.com.ua

Connector	Pin No.	Signal	I/O	Voltage	Description
CN1	1	LIVE	I	120 V AC 220 - 240 V AC	AC power supply
Connected to the AC inlet	2	GND	-	-	Ground
	3	NEUTRAL	I	120 V AC 220 - 240 V AC	AC power supply
CN2	1	LIVE	O	120 V AC 220 - 240 V AC	Power supply for heater lamp
Connected to the heater lamp	2	NEUTRAL	O	120 V AC 220 - 240 V AC	Power supply for heater lamp
YC901	1	+24V3	I	24 V DC	24 V DC power supply
Connected to the engine board	2	FDPFUL*	O	0/5 V DC	Paper full sensor: On/Off
	3	FUDR	I	0/24 V DC	Face up/down solenoid (UP): On/Off
	4	FDDR	I	0/24 V DC	Face up/down solenoid (DOWN): On/Off
	5	THERM	O	Analog	Thermistor detection voltage
	6	EXITPAP*	O	0/5 V DC	Exit sensor: On/Off
	7	+5V1	O	5 V DC	5 V DC power supply
	8	GND	-	Ground	Ground
	9	+24V3	I	24 V DC	24 V DC power supply
	10	SLEEP	-	-	Not used
	11	ZCROSS	O	0/5 V DC (pulse)	Zero cross signal
	12	HEATON*	I	0/24 V DC	Heater lamp: On/Off
	13	+5V1	O	5 V DC	5 V DC power supply
	14	+5V1	O	5 V DC	5 V DC power supply
	15	+5V1	O	5 V DC	5 V DC power supply
	16	+5V1	O	5 V DC	5 V DC power supply
	17	GND	-	Ground	Ground
	18	GND	-	Ground	Ground
	19	GND	-	Ground	Ground
	20	GND	-	Ground	Ground
	21	+24V1	O	24 V DC	24 V DC power supply
	22	+24V1	O	24 V DC	24 V DC power supply
	23	+24V1	O	24 V DC	24 V DC power supply
	24	+24V1	O	24 V DC	24 V DC power supply
YC902	1	+5V1	O	5 V DC	5 V DC power supply
Connected to the fuser board	2	GND	-	Ground	Ground
	3	THERM	I	Analog	Thermistor detection voltage
	4	EXITPAP*	I	0/5 V DC	Exit sensor: On/Off
	5	FDDR	O	0/24 V DC	Face up/down solenoid (DOWN): On/Off
	6	FUDR	O	0/24 V DC	Face up/down solenoid (UP): On/Off
	7	+24V3	O	24 V DC	24 V DC power supply
	8	FDPFUL*	I	0/5 V DC	Paper full sensor: On/Off

TONER
www.tonerplus.com.ua

This page is intentionally left blank.

TONER+
www.tonerplus.com.ua

Timing chart No. 1 Paper cassette feeding, A4 size paper [For FS-1920/3820N models]

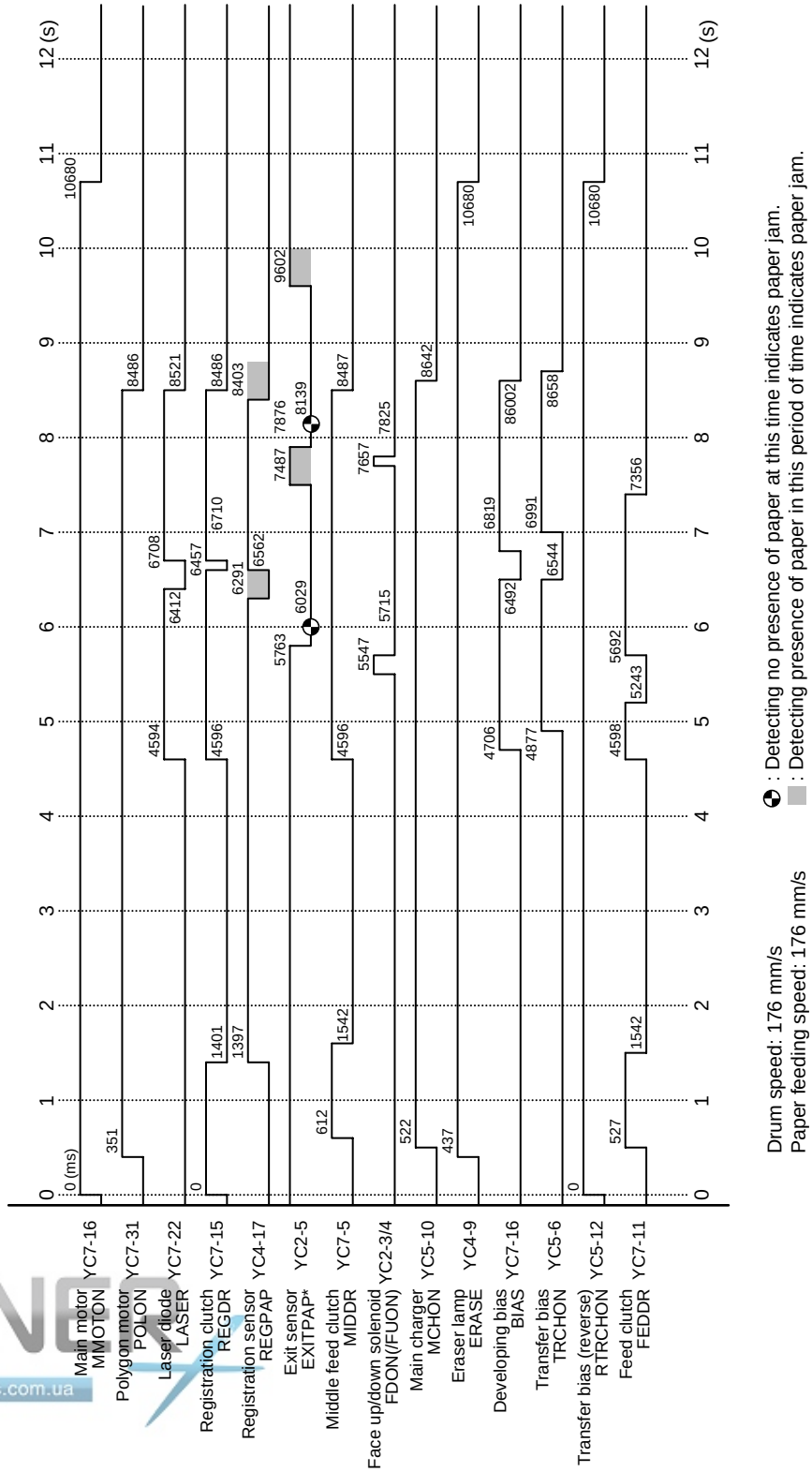

TONER PLUS
www.tonerplus.com.ua

Timing chart No. 2 Paper cassette feeding, Letter size paper [For FS-1920/3820N models]

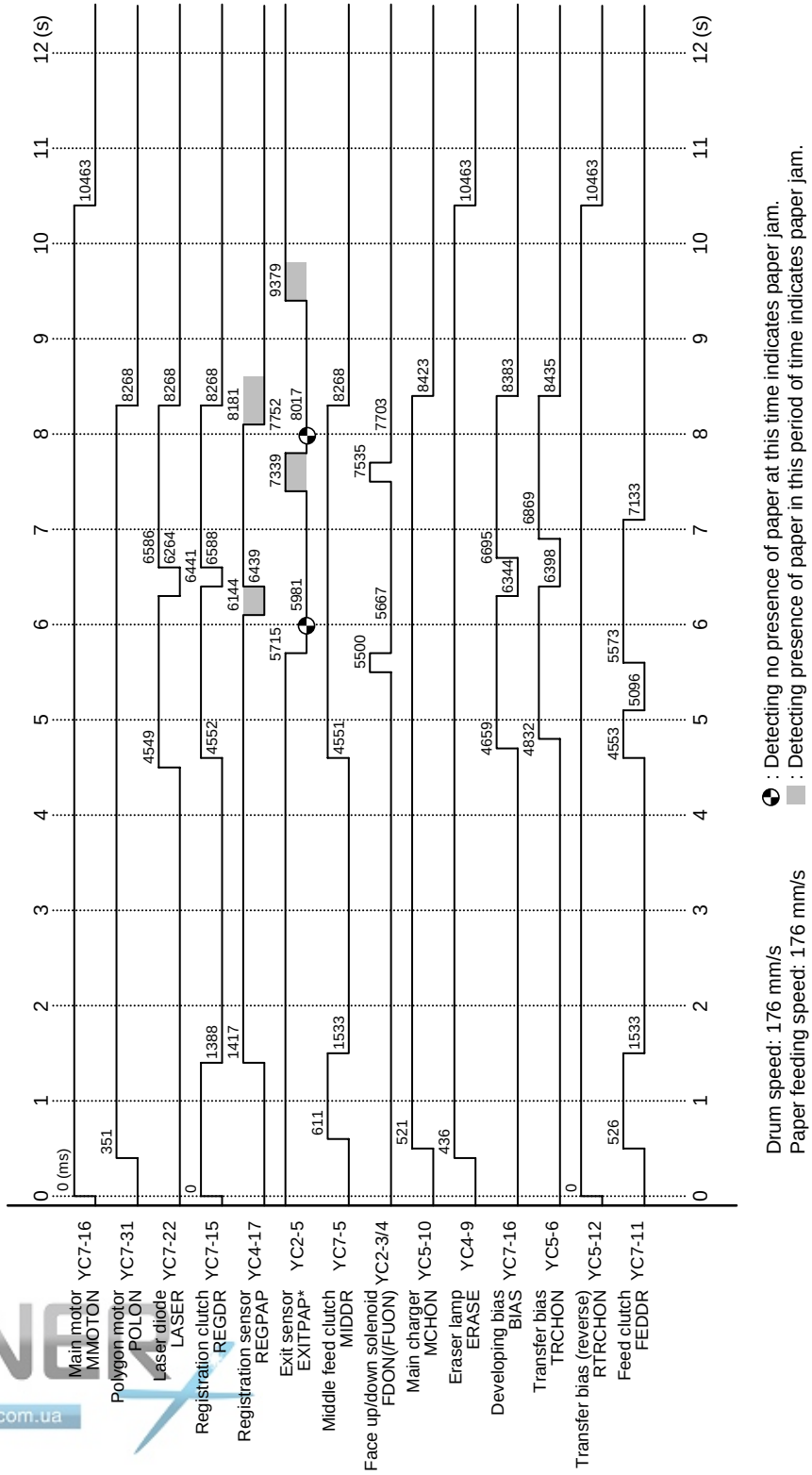

TONER
www.tonerplus.com.ua

Timing chart No. 3 Paper cassette feeding, Legal size paper [For FS-1920/3820N models]

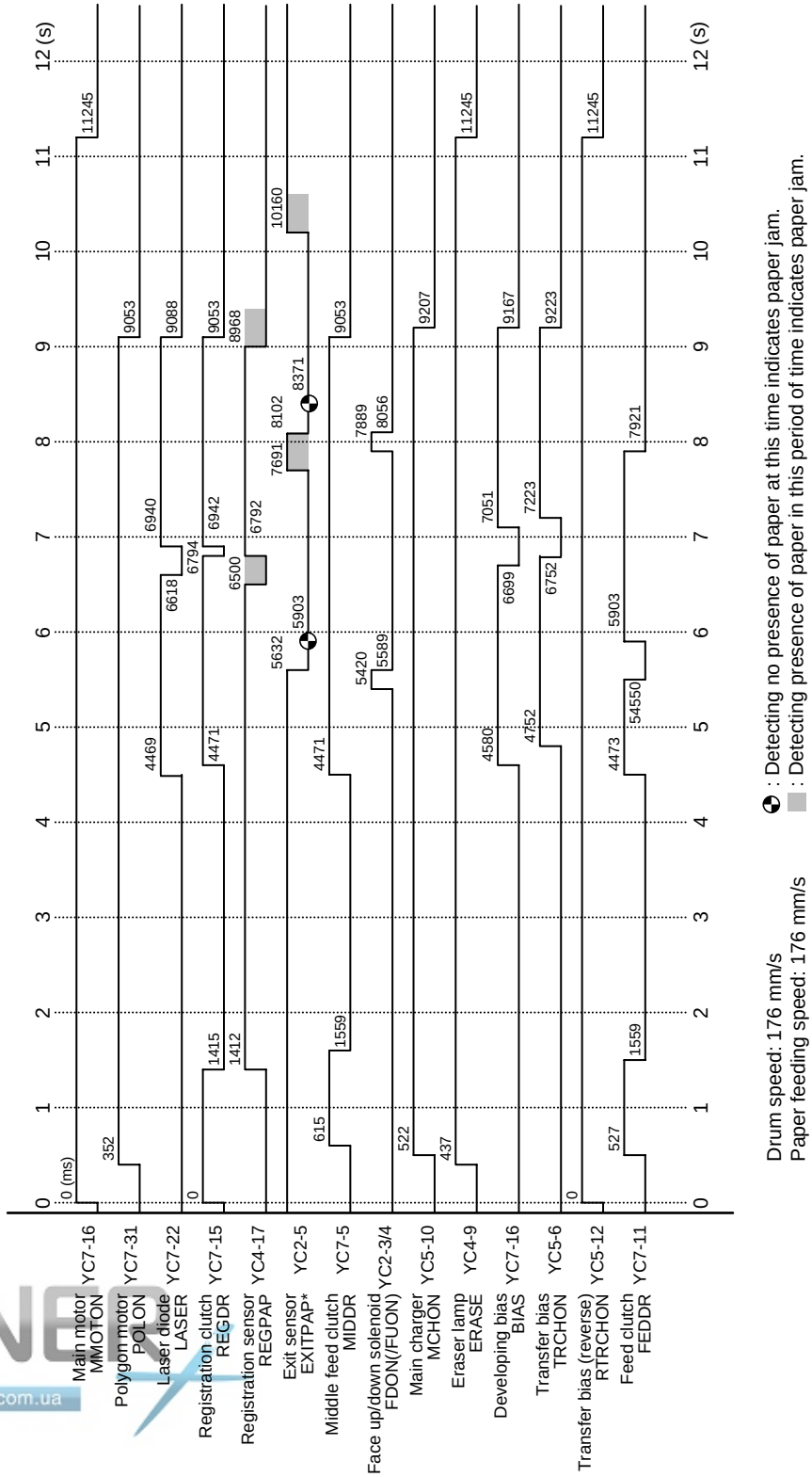

TONER
www.tonerplus.com.ua

Timing chart No. 4 MP tray feeding, A4 size paper [For FS-1920/3820N models]

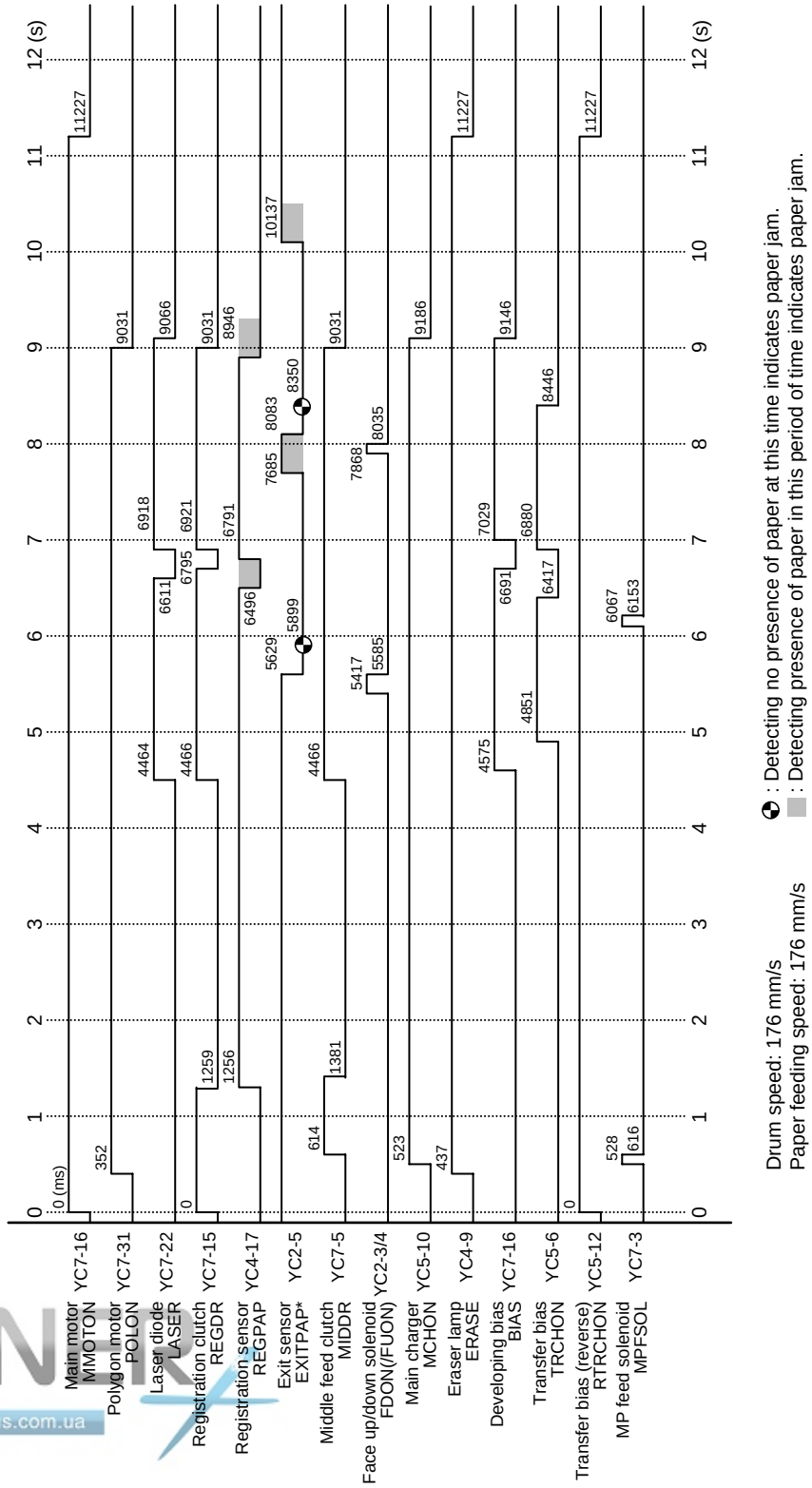

TONER PLUS
www.tonerplus.com.ua

Timing chart No. 5 MP tray feeding, Letter size paper [For FS-1920/3820N models]

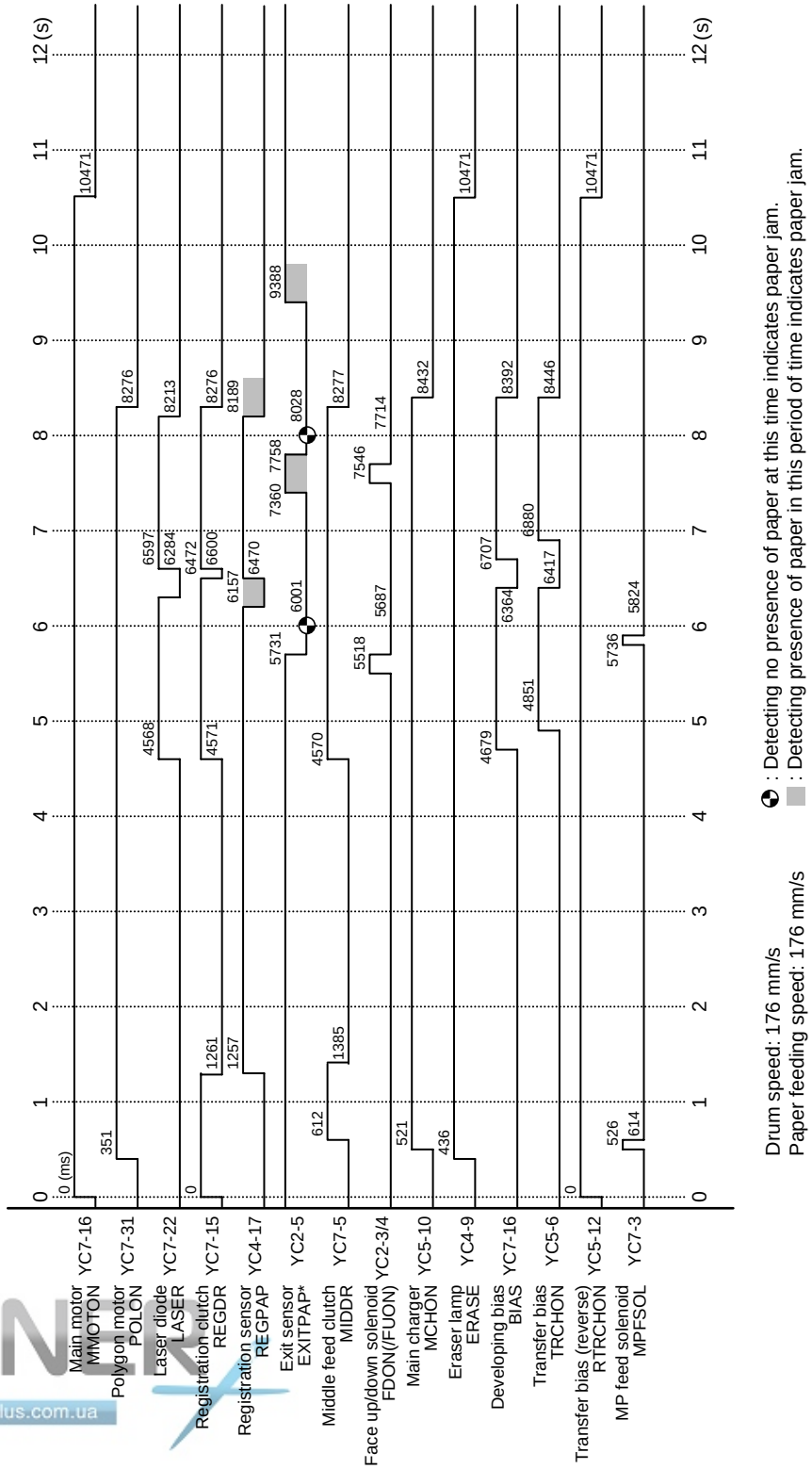

TONER
www.tonerplus.com.ua

Timing chart No. 6 MP tray feeding, Legal size paper [For FS-1920/3820N models]

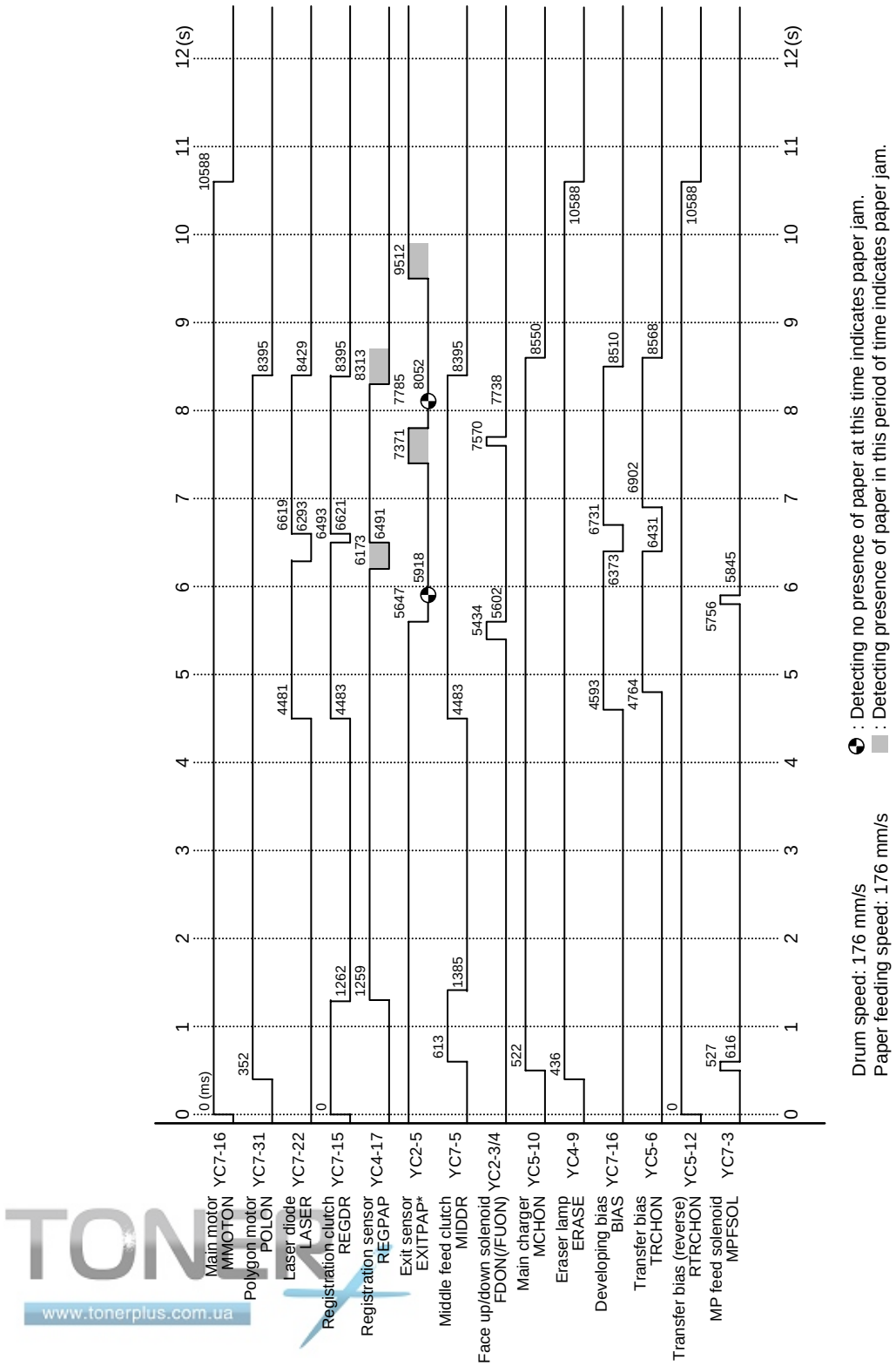

TONER
www.tonerplus.com.ua

Timing chart No. 7 Optional paper feeder feeding, A4 size paper [For FS-1920/3820N models]

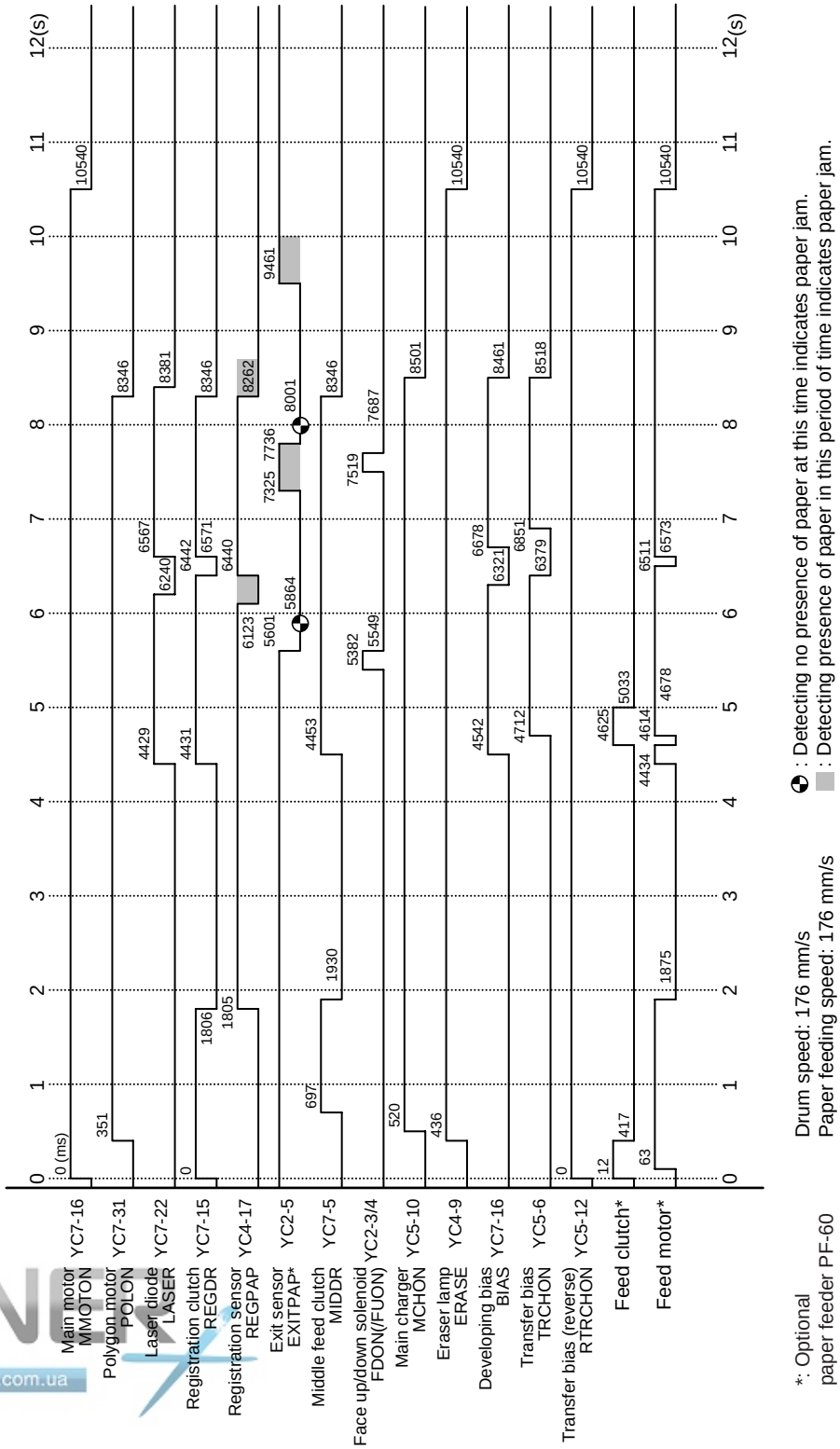

TONER PLUS
www.tonerplus.com.ua

Timing chart No. 8 Paper cassette feeding, A4 size paper [For FS-3830N model]

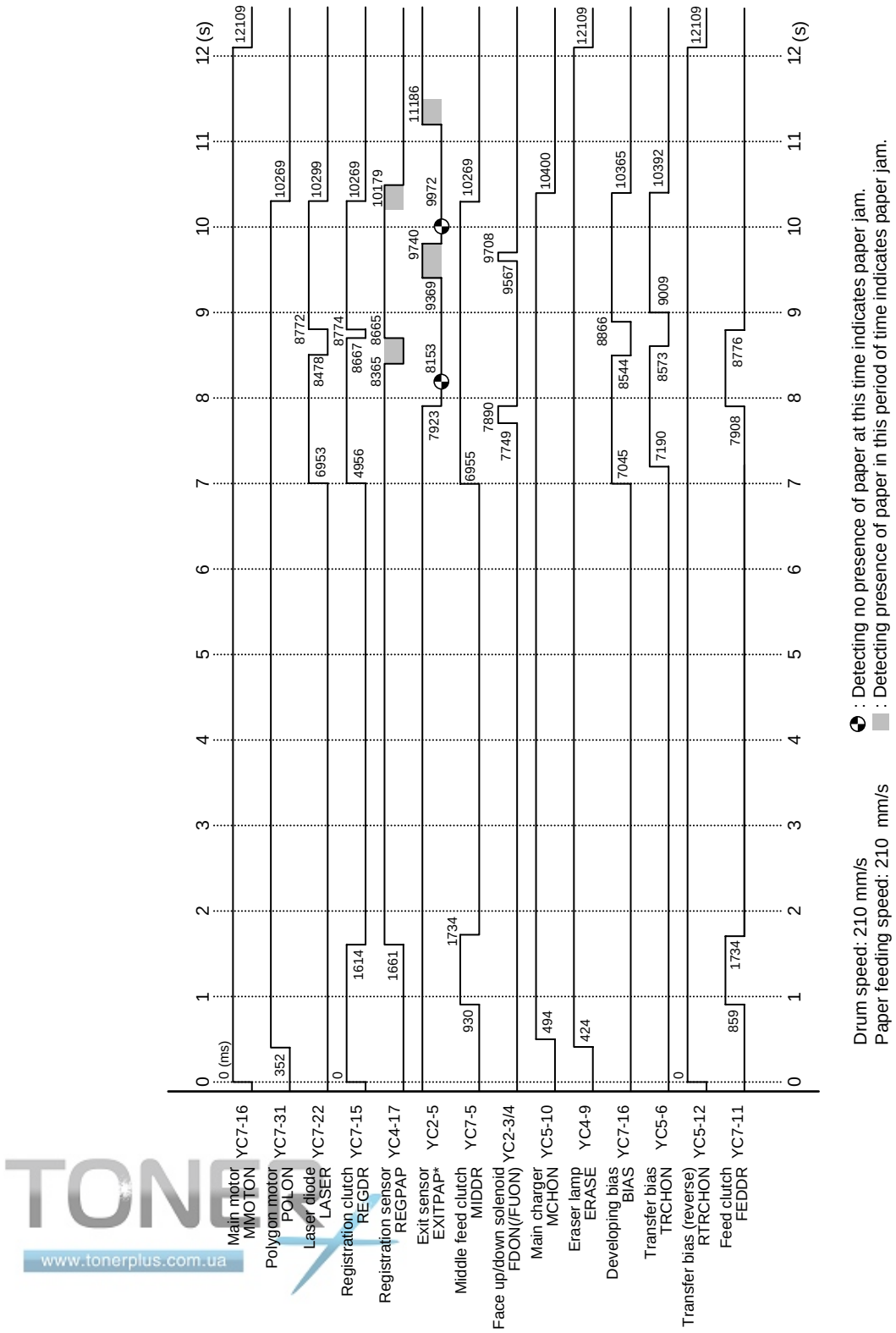

TONER PLUS
www.tonerplus.com.ua

Timing chart No. 9 Paper cassette feeding, Letter size paper [For FS-3830N model]

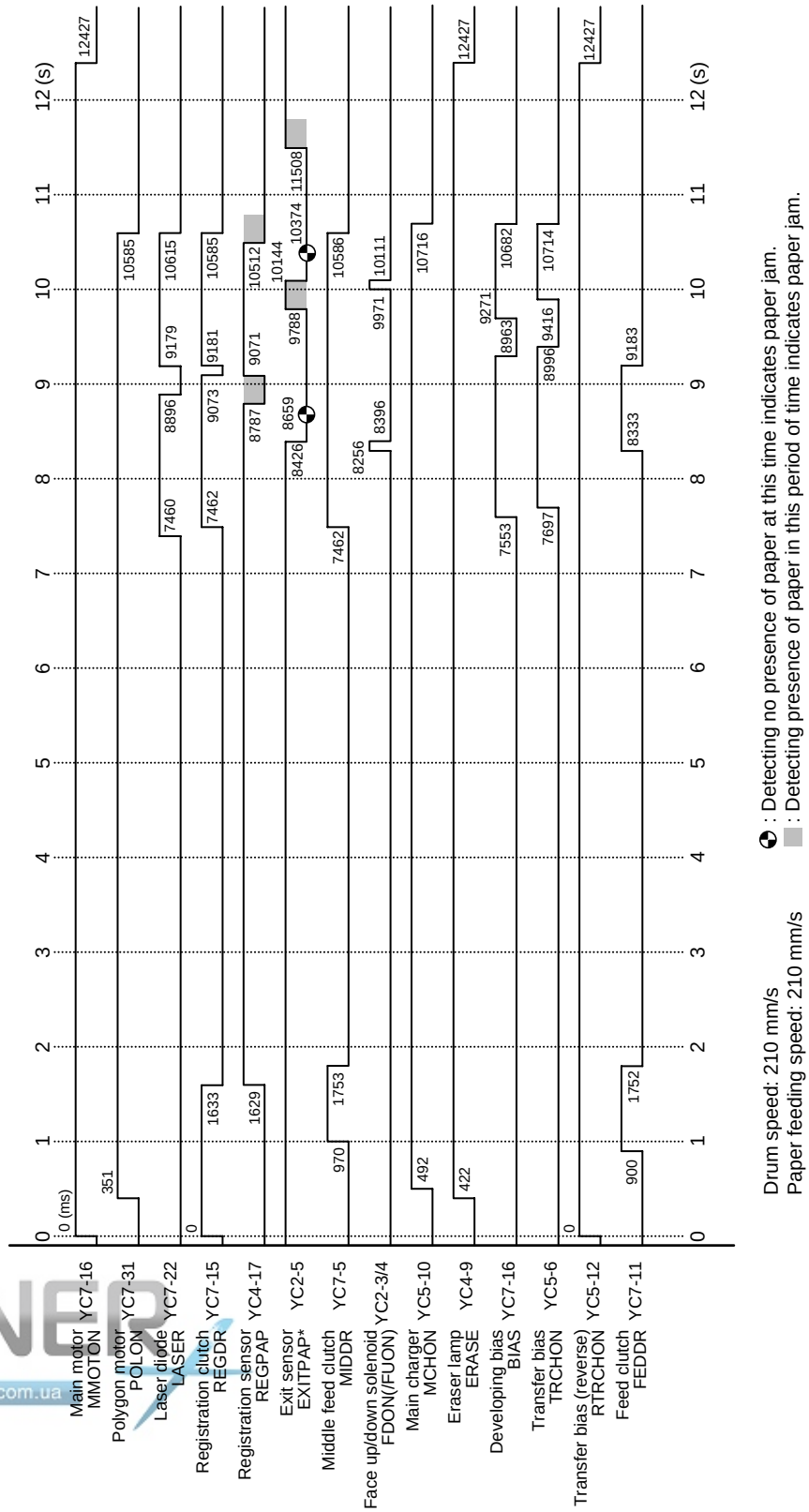

TONER
www.tonerplus.com.ua

Timing chart No. 10 Paper cassette feeding, Legal size paper [For FS-3830N model]

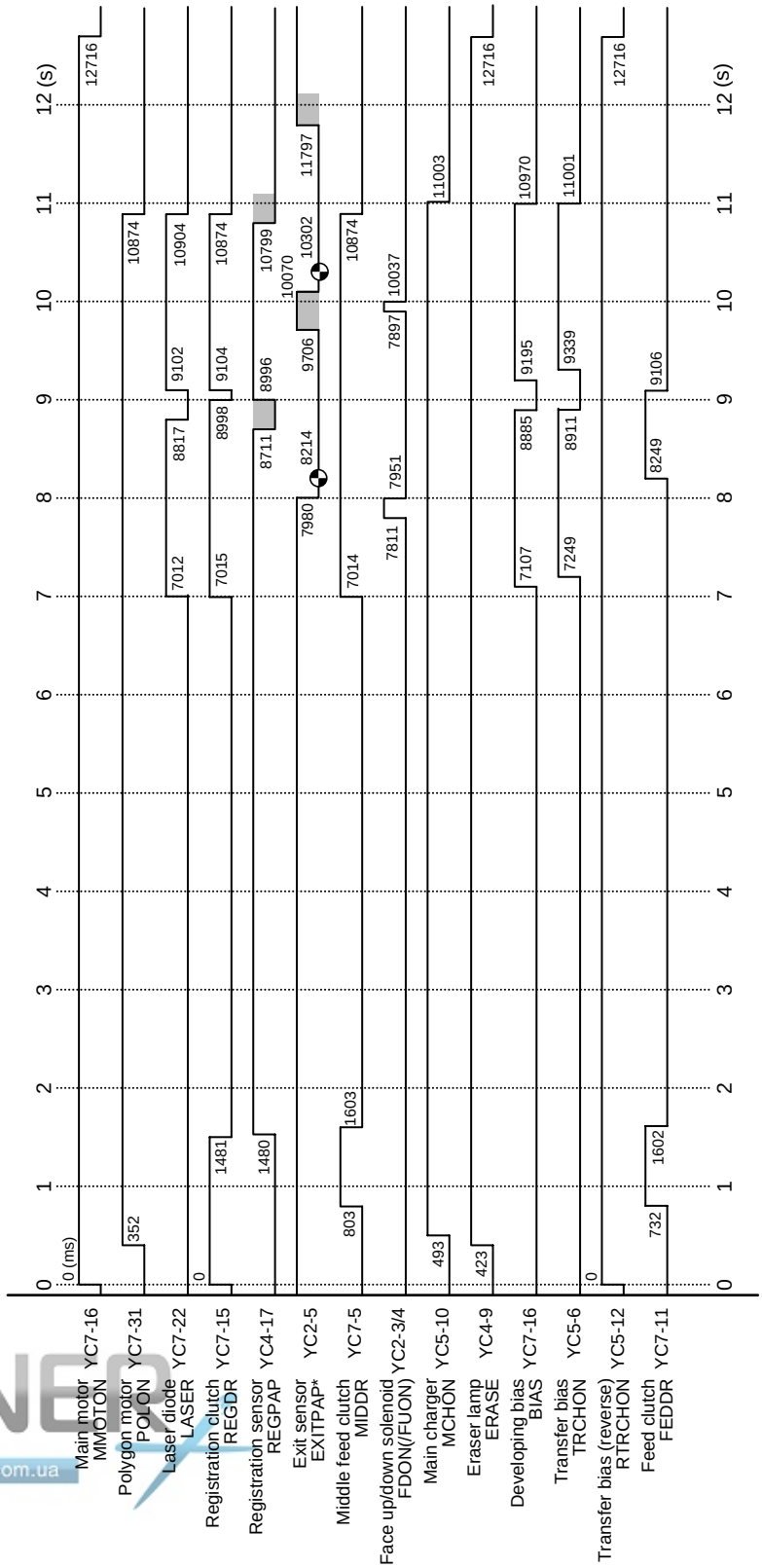

TONER
www.tonerplus.com.ua

Timing chart No. 11 MP tray feeding, A4 size paper [For FS-3830N model]

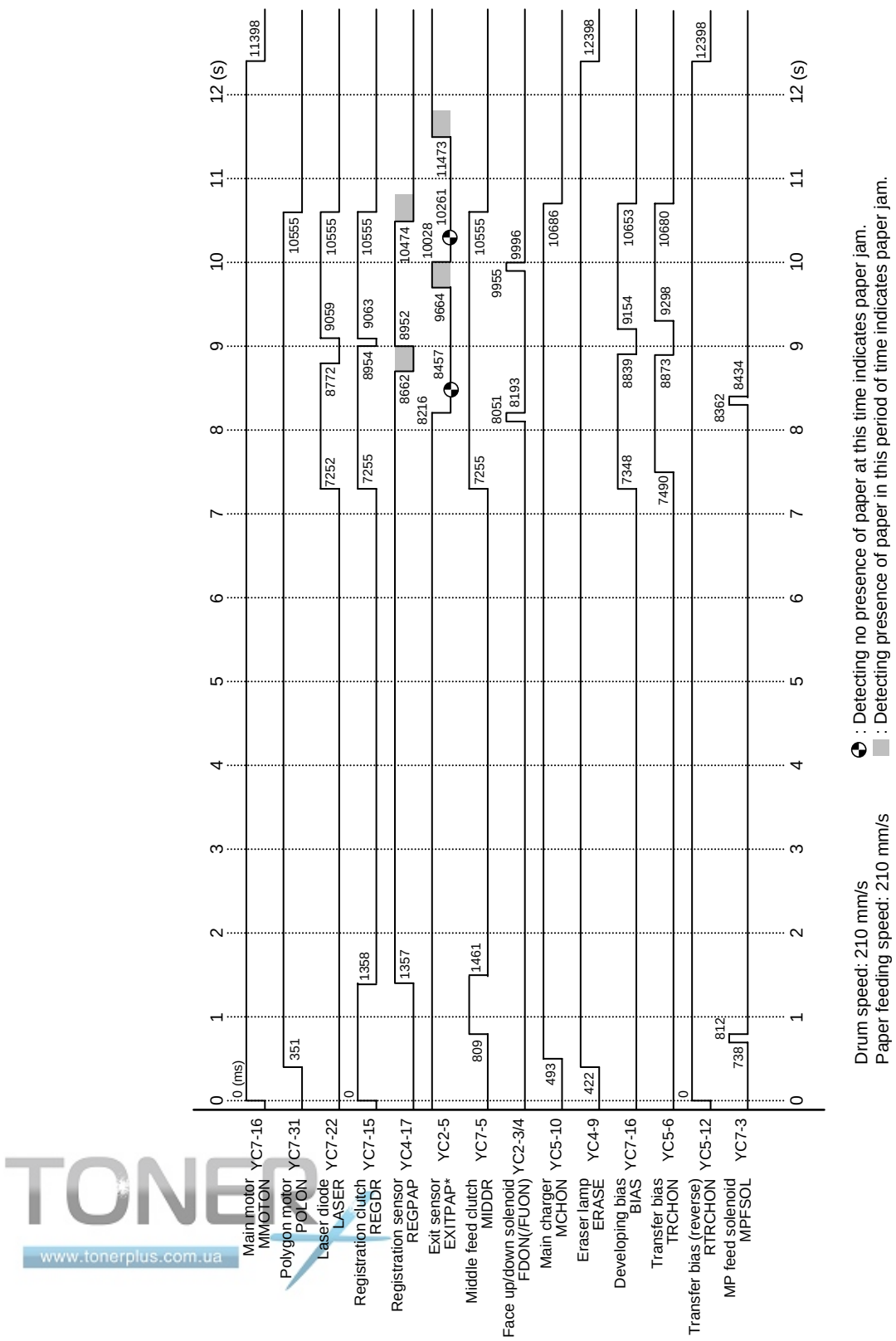

TONER
www.tonerplus.com.ua

Timing chart No. 12 MP tray feeding, Letter size paper [For FS-3830N model]

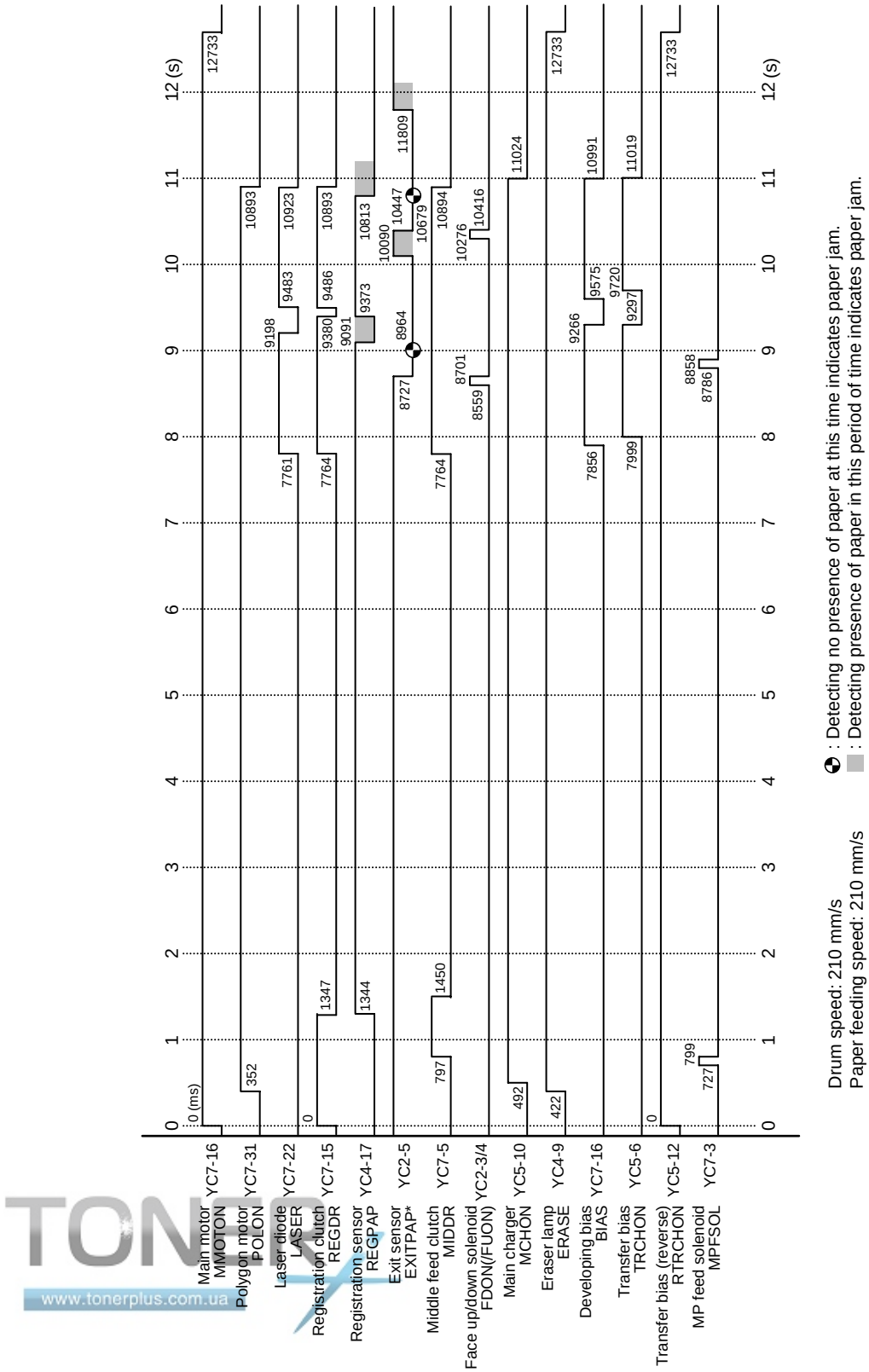

TONER
www.tonerplus.com.ua

Timing chart No. 13 MP tray feeding, Legal size paper [For FS-3830N model]

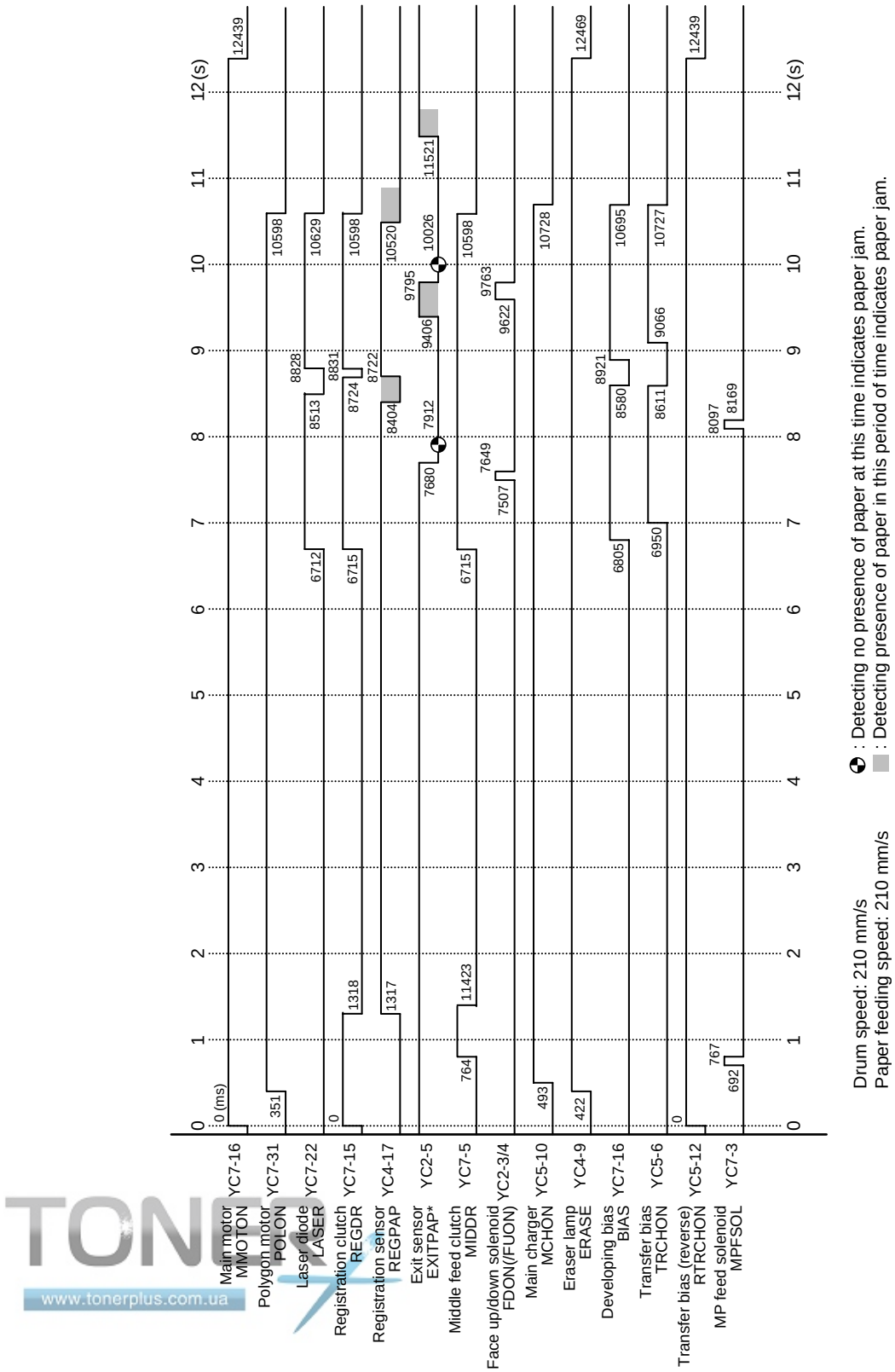

TONER
www.tonerplus.com.ua

Timing chart No. 14 Optional paper feeder feeding, A4 size paper [For FS-3830N model]

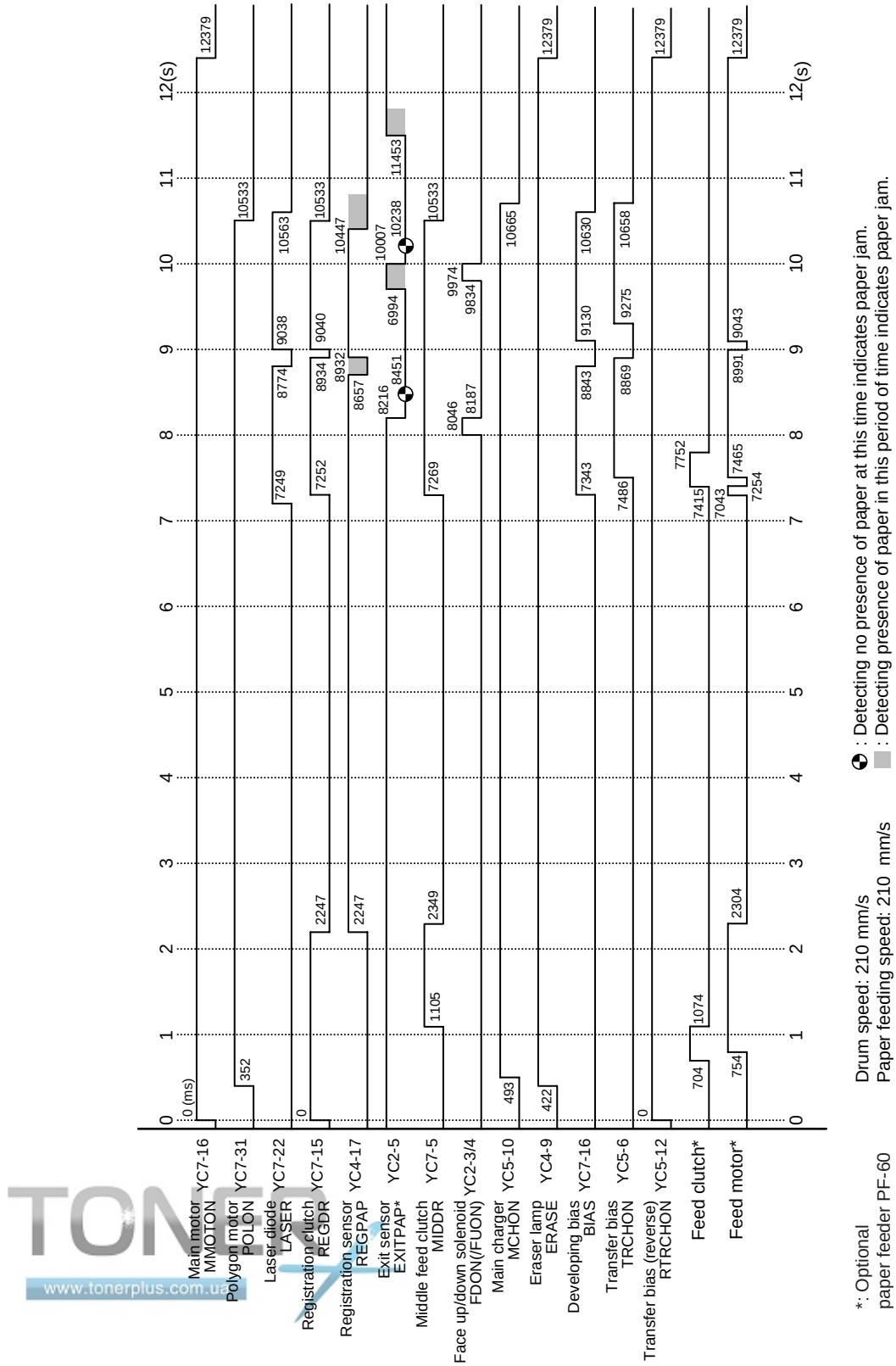

TONER
www.tonerplus.com.ua

Wiring diagram [For FS-1920 model]

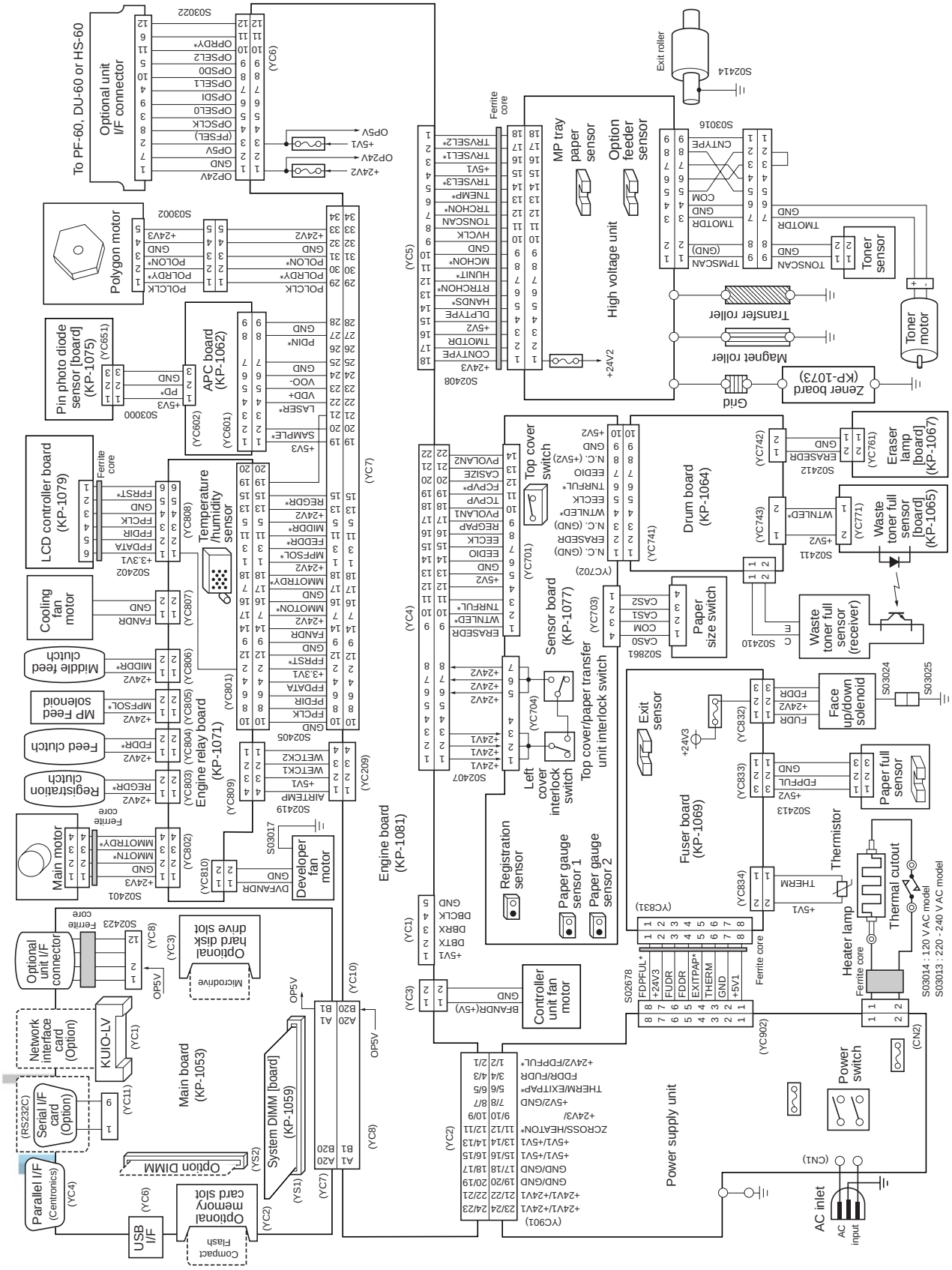

Wiring diagram [For FS-3820N model]

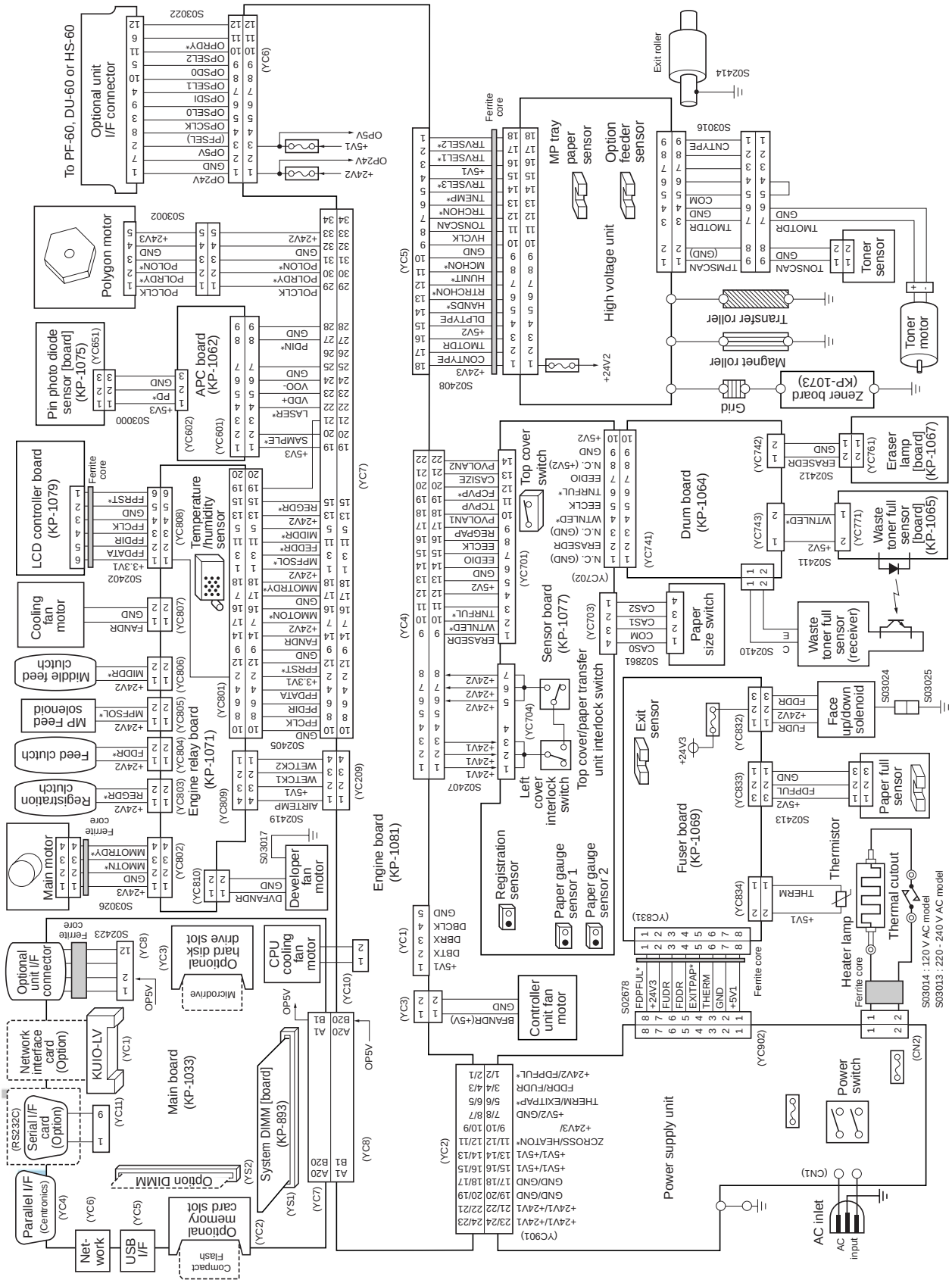

Wiring diagram [For FS-3830N model]

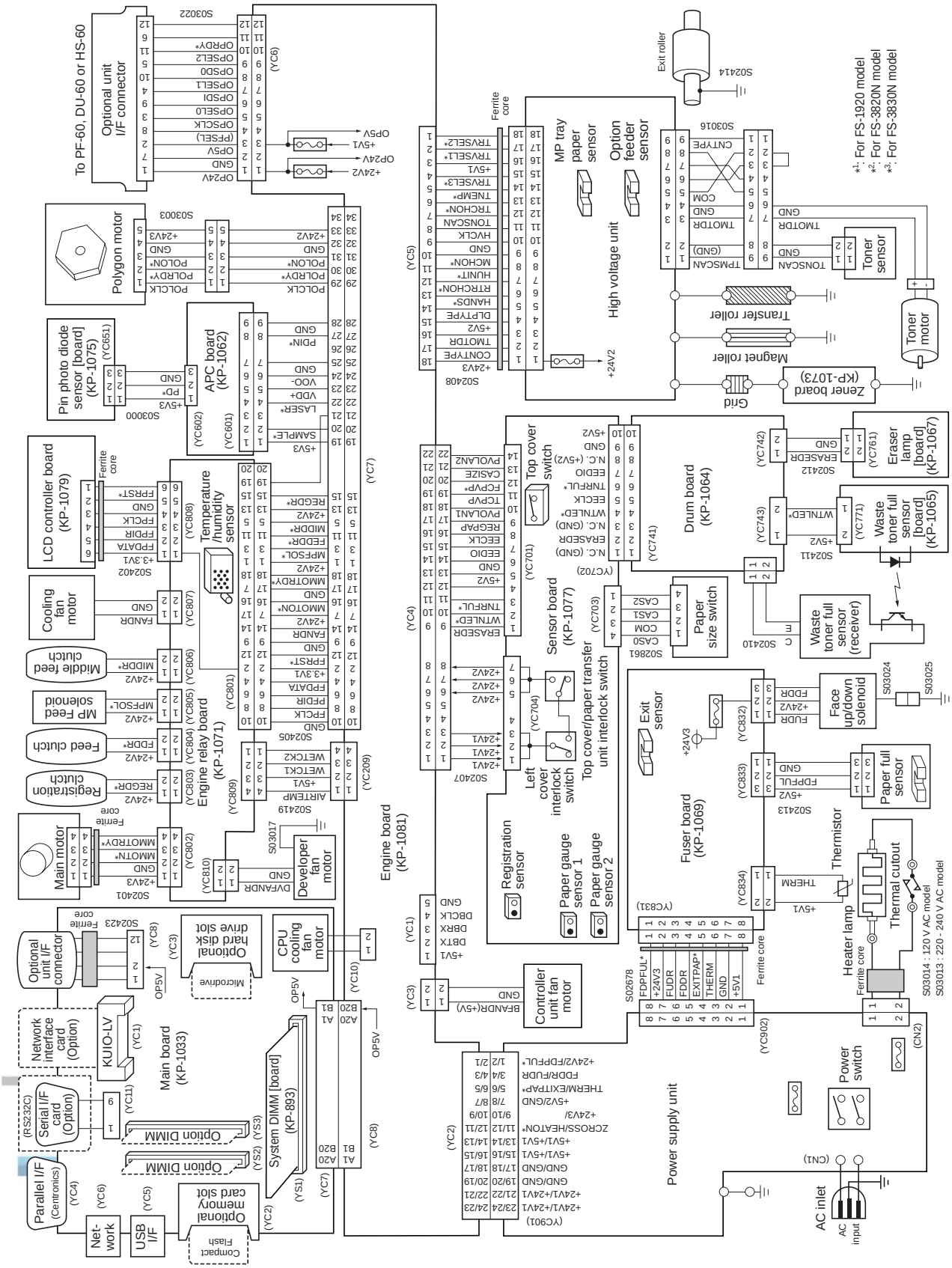

Repetitive defects gauge

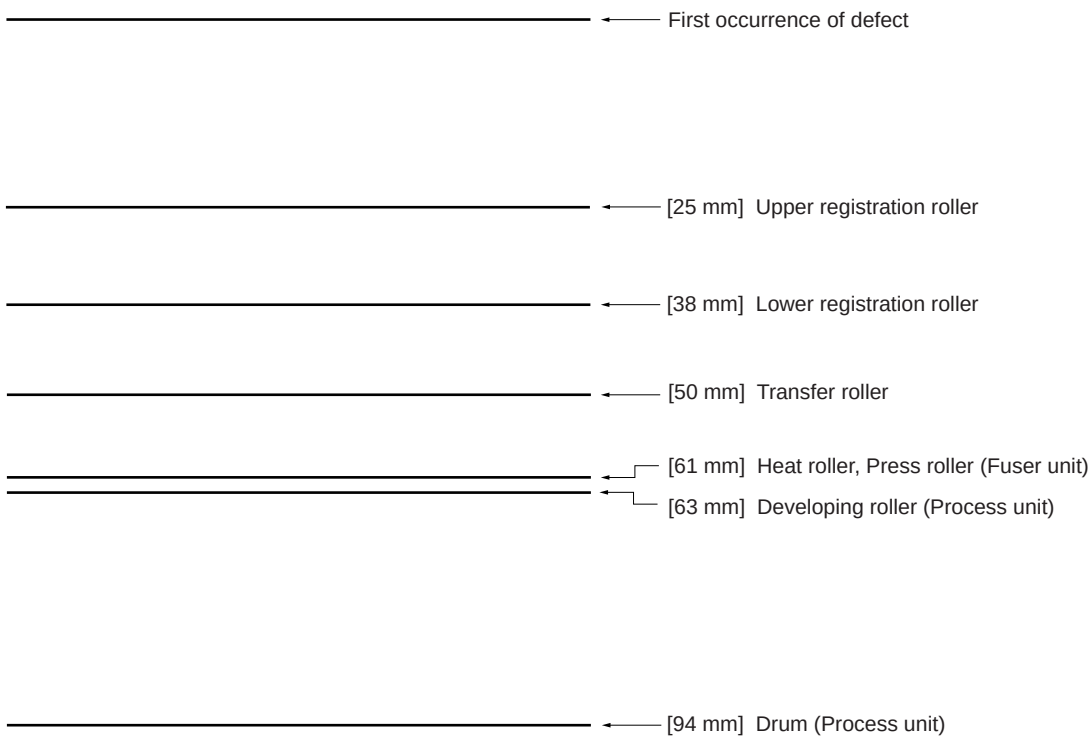

TONER+
www.tonerplus.com.ua

This page is intentionally left blank.

TONER+
www.tonerplus.com.ua

MEMO:

TONER+
www.tonerplus.com.ua

MEMO:

TONER+
www.tonerplus.com.ua

MEMO:

TONER+
www.tonerplus.com.ua

KYOCERA MITA EUROPE B.V.

Hoeksteen 40, 2132 MS Hoofddorp,
The Netherlands
Phone: +31.20.654.0000
Home page: http://www.kyoceramita-europe.com
Email: info@kyoceramita-europe.com

KYOCERA MITA NEDERLAND B.V.

Beechavenue 25,1119RA Schiphol-Rijk
The Netherlands
Phone: +31.20.58.77.200

KYOCERA MITA (UK) LTD

8 Beacontree Plaza
Gillette Way Reading Berks RG2 0BS,
U.K.
Phone: +44.1189.311.500

KYOCERA MITA ITALIA S.p.A.

Via G. Verdi, 89 / 91, 20063 Cernusco s/N
Milano, Italy
Phone: +39.02.92179.1

S.A. KYOCERA MITA BELGIUM N.V.

Hermesstraat 8A,1930 Zaventem,
Belgium
Phone: +32.2.720.9270

KYOCERA MITA FRANCE S.A.

Parc Les Algorithmes Saint Aubin
91194 GIF-SUR-YVETTE,
France
Phone: +33.1.6985.2600

KYOCERA MITA ESPAÑA S.A.

Edificio Kyocera, Avda de Manacor No. 2,
28290 Las Matas (Madrid),
Spain
Phone: +34.91.631.8392

KYOCERA MITA FINLAND OY

Kirvesmiehenkatu 4, 00880 Helsinki,
Finland
Phone: +358.9.4780.5200

KYOCERA MITA (SCHWEIZ)

Hohlstrasse 614, 8048 Zürich
Switzerland
Phone: +41.1.908.4949

KYOCERA MITA DEUTSCHLAND GMBH

Mollsfeld 12,40670 Meerbusch,
Germany
Phone: +49.2159.918.0

KYOCERA MITA GMBH AUSTRIA

Eduard-Kittenberger-Gasse 95,
1230 Wien,
Austria
Phone: +43.1.86338.210

KYOCERA MITA SVENSKA AB

Vretenvägen 2, 6tr, 17 154 Solna,
Sweden
Phone: +46.8.546.55000

KYOCERA MITA NORGE

Postboks 150 Oppsal, NO 0619 Oslo
Olaf Helsetsvei 6, NO 0694 Oslo,
Norway
Phone: +47.22.62.73.00

KYOCERA MITA DANMARK A/S

Ejby Industrivej 1, DK-2600 Glostrup,
Denmark
Phone: +45.5687.1100

KYOCERA MITA PORTUGAL LDA.

Rua do Centro Cultural, 41 (Alvalade) 1700-106 Lisbon,
Portugal
Phone: +351.21.842.9100

KYOCERA MITA SOUTH AFRICA (PTY) LTD.

527 Kyalami Boulevard,
Kyalami Business Park Midrand,
South Africa
Phone: +27.(0)11.540.2600

KYOCERA MITA AMERICA, INC.

Headquarters:
225 Sand Road,
Fairfield, New Jersey 07004-0008,
U.S.A.
Phone: (973) 808-8444

KYOCERA MITA AUSTRALIA PTY. LTD.

Level 3, 6-10 Talavera Road, North Ryde,
N.S.W. 2113 Australia
Phone: (02) 9888-9999

KYOCERA MITA NEW ZEALAND LTD.

1-3 Parkhead Place, Albany
P.O. Box 302 125 NHPC, Auckland,
New Zealand
Phone: (09) 415-4517

KYOCERA MITA (THAILAND) CORP., LTD.

9/209 Ratchada-Prachachem Road,
Bang Sue, Bangkok 10800, Thailand
Phone: (02) 586-0320

KYOCERA MITA SINGAPORE PTE LTD.

121 Genting Lane, 3rd Level,
Singapore 349572
Phone: 67418733

KYOCERA MITA HONG KONG LIMITED

11/F., Mita Centre,
552-566, Castle Peak Road,
Tsuen Wan, New Territories,
Hong Kong
Phone: 24297422

KYOCERA MITA TAIWAN Corporation.

7F-1~2, No.41, Lane 221, Gangchi Rd.
Neihu District, Taipei, Taiwan, 114. R.O.C.
Phone: (02) 87511560

KYOCERA MITA Corporation

2-28, 1-chome, Tamatsukuri, Chuo-ku
Osaka 540-8585, Japan
Phone: (06) 6764-3555
http://www.kyoceramita.com

TONER+
www.tonerplus.com.ua

©2006 KYOCERA MITA Corporation
KYOCERA is a trademark of Kyocera Corporation

Printed in Holland

KYOCERA MITA AMERICA, INC.

Headquarters:
225 Sand Road,
Fairfield, New Jersey 07004-0008
TEL : (973) 808-8444
FAX : (973) 882-6000

New York Branch:
1410 Broadway 23rd floor
New York, NY 10018
TEL : (917) 286-5400
FAX : (917) 286-5402

Northeastern Region:
225 Sand Road,
Fairfield, New Jersey 07004-0008
TEL : (973) 808-8444
FAX : (973) 882-4401

Midwestern Region:
201 Hansen Court Suite 119
Wood Dale, Illinois 60191
TEL : (630) 238-9982
FAX : (630) 238-9487

Western Region:
14101 Alton Parkway,
Irvine, California 92618-7006
TEL : (949) 457-9000
FAX : (949) 457-9119

Southeastern Region:
1500 Oakbrook Drive,
Norcross, Georgia 30093
TEL : (770) 729-9786
FAX : (770) 729-9873

Southwestern Region:
2825 West Story Road,
Irving, Texas 75038-5299
TEL : (972) 550-8987
FAX : (972) 252-9786

National Operation Center
& National Training Center:
2825 West Story Road,
Irving, Texas 75038-5299
TEL : (972) 659-0055
FAX : (972) 570-5816

Latin America Division:
8240 N.W. 52nd. Terrace Dawson Building,
Suite 108 Miami, Florida 33166
TEL : (305) 421-6640
FAX : (305) 421-6666

KYOCERA MITA CANADA, LTD.

6120 Kestrel Road, Mississauga,
Ontario L5T 1S8, Canada
TEL : (905) 670-4425
FAX : (905) 670-8116

KYOCERA MITA MEXICO, S.A. DE C.V.

Av. 16 de Septiembre #407
Col. Santa Inés,
Azcapotzalco México,
D.F. 02130, México
TEL : (55) 5383-2741
FAX : (55) 5383-7804

©2006 KYOCERA MITA Corporation

http://www.kyoceramita.com

KYOCERA is a trademark of Kyocera Corporation

Printed in U.S.A.