KYOCERA

ECOSYS FS-4300DN
ECOSYS FS-4200DN
ECOSYS FS-4100DN
ECOSYS FS-2100DN
ECOSYS FS-2100D

TONER+
www.tonerplus.com.ua

SERVICE MANUAL

Published in August 2012
842LV110
2LVSM060
First Edition

CAUTION

RISK OF EXPLOSION IF BATTERY IS REPLACED BY AN INCORRECT TYPE. DISPOSE OF USED BATTERIES ACCORDING TO THE INSTRUCTIONS.

It may be illegal to dispose of this battery into the municipal waste stream. Check with your local solid waste officials for details in your area for proper disposal.

ATTENTION

IL Y A UN RISQUE D'EXPLOSION SI LA BATTERIE EST REMPLACEE PAR UN MODELE DE TYPE INCORRECT. METTRE AU REBUT LES BATTERIES UTILISEES SELON LES INSTRUCTIONS DONNEES.

Il peut être illégal de jeter les batteries dans des eaux d'égout municipales. Vérifiez avec les fonctionnaires municipaux de votre région pour les détails concernant des déchets solides et une mise au rebut appropriée.

Notation of products in the manual

For the purpose of this service manual, products are identified by print speed at A4.

ECOSYS FS-4300DN : 60 ppm model
ECOSYS FS-4200DN : 50 ppm model
ECOSYS FS-4100DN : 45 ppm model
ECOSYS FS-2100DN : 40 ppm model (with Network)
ECOSYS FS-2100D : 40 ppm model (without Network)

TONER+
www.tonerplus.com.ua

Revision history

Revision	Date	pages	Revised contents

TONER
www.tonerplus.com.ua

This page is intentionally left blank.

TONER
www.tonerplus.com.ua

Safety precautions

This booklet provides safety warnings and precautions for our service personnel to ensure the safety of their customers, their machines as well as themselves during maintenance activities. Service personnel are advised to read this booklet carefully to familiarize themselves with the warnings and precautions described here before engaging in maintenance activities.

www.tonerplus.com.ua

Safety warnings and precautions

Various symbols are used to protect our service personnel and customers from physical danger and to prevent damage to their property. These symbols are described below:

⚠**DANGER:** High risk of serious bodily injury or death may result from insufficient attention to or incorrect compliance with warning messages using this symbol.

⚠**WARNING:** Serious bodily injury or death may result from insufficient attention to or incorrect compliance with warning messages using this symbol.

⚠**CAUTION:** Bodily injury or damage to property may result from insufficient attention to or incorrect compliance with warning messages using this symbol.

Symbols

The triangle (△) symbol indicates a warning including danger and caution. The specific point of attention is shown inside the symbol.

General warning. Warning of risk of electric shock.

Warning of high temperature.

⃠ indicates a prohibited action. The specific prohibition is shown inside the symbol.

General prohibited action. Disassembly prohibited.

● indicates that action is required. The specific action required is shown inside the symbol.

General action required. Remove the power plug from the wall outlet.

Always ground the copier.

TONER
www.tonerplus.com.ua

1. Installation Precautions

⚠WARNING

- Do not use a power supply with a voltage other than that specified. Avoid multiple connections to one outlet: they may cause fire or electric shock. When using an extension cable, always check that it is adequate for the rated current. .....
- Connect the ground wire to a suitable grounding point. Not grounding the copier may cause fire or electric shock. Connecting the earth wire to an object not approved for the purpose may cause explosion or electric shock. Never connect the ground cable to any of the following: gas pipes, lightning rods, ground cables for telephone lines and water pipes or faucets not approved by the proper authorities. .....

⚠CAUTION:

- Do not place the copier on an infirm or angled surface: the copier may tip over, causing injury. .....
- Do not install the copier in a humid or dusty place. This may cause fire or electric shock. .....
- Do not install the copier near a radiator, heater, other heat source or near flammable material. This may cause fire. .....
- Allow sufficient space around the copier to allow the ventilation grills to keep the machine as cool as possible. Insufficient ventilation may cause heat buildup and poor copying performance. .....
- Always handle the machine by the correct locations when moving it. .....
- Always use anti-toppling and locking devices on copiers so equipped. Failure to do this may cause the copier to move unexpectedly or topple, leading to injury. .....
- Avoid inhaling toner or developer excessively. Protect the eyes. If toner or developer is accidentally ingested, drink a lot of water to dilute it in the stomach and obtain medical attention immediately. If it gets into the eyes, rinse immediately with copious amounts of water and obtain medical attention. .....
- Advice customers that they must always follow the safety warnings and precautions in the copier's instruction handbook. .....

TONER+
www.tonerplus.com.ua

2. Precautions for Maintenance

WARNING

- Always remove the power plug from the wall outlet before starting machine disassembly. .....
- Always follow the procedures for maintenance described in the service manual and other related brochures. .....
- Under no circumstances attempt to bypass or disable safety features including safety mechanisms and protective circuits. .....
- Always use parts having the correct specifications. .....
- Always use the thermostat or thermal fuse specified in the service manual or other related brochure when replacing them. Using a piece of wire, for example, could lead to fire or other serious accident. .....
- When the service manual or other serious brochure specifies a distance or gap for installation of a part, always use the correct scale and measure carefully. .....
- Always check that the copier is correctly connected to an outlet with a ground connection. .....
- Check that the power cable covering is free of damage. Check that the power plug is dust-free. If it is dirty, clean it to remove the risk of fire or electric shock. .....
- Never attempt to disassemble the optical unit in machines using lasers. Leaking laser light may damage eyesight. .....
- Handle the charger sections with care. They are charged to high potentials and may cause electric shock if handled improperly. .....

CAUTION

- Wear safe clothing. If wearing loose clothing or accessories such as ties, make sure they are safely secured so they will not be caught in rotating sections. .....
- Use utmost caution when working on a powered machine. Keep away from chains and belts. .....
- Handle the fixing section with care to avoid burns as it can be extremely hot. .....
- Check that the fixing unit thermistor, heat and press rollers are clean. Dirt on them can cause abnormally high temperatures. .....

TONER

- Do not remove the ozone filter, if any, from the copier except for routine replacement. .....
- Do not pull on the AC power cord or connector wires on high-voltage components when removing them; always hold the plug itself. .....
- Do not route the power cable where it may be stood on or trapped. If necessary, protect it with a cable cover or other appropriate item. .....
- Treat the ends of the wire carefully when installing a new charger wire to avoid electric leaks. .....
- Remove toner completely from electronic components. .....
- Run wire harnesses carefully so that wires will not be trapped or damaged. .....
- After maintenance, always check that all the parts, screws, connectors and wires that were removed, have been refitted correctly. Special attention should be paid to any forgotten connector, trapped wire and missing screws. .....
- Check that all the caution labels that should be present on the machine according to the instruction handbook are clean and not peeling. Replace with new ones if necessary. .....
- Handle greases and solvents with care by following the instructions below: .....
  · Use only a small amount of solvent at a time, being careful not to spill. Wipe spills off completely.
  · Ventilate the room well while using grease or solvents.
  · Allow applied solvents to evaporate completely before refitting the covers or turning the power switch on.
  · Always wash hands afterwards.
- Never dispose of toner or toner bottles in fire. Toner may cause sparks when exposed directly to fire in a furnace, etc. .....
- Should smoke be seen coming from the copier, remove the power plug from the wall outlet immediately. .....

3. Miscellaneous

WARNING

- Never attempt to heat the drum or expose it to any organic solvents such as alcohol, other than the specified refiner; it may generate toxic gas. .....
- Keep the machine away from flammable liquids, gases, and aerosols. A fire or an electric shock might occur. .....

TONER

This page is intentionally left blank.

TONER
www.tonerplus.com.ua

CONTENTS

1-1 Specifications

1-1-1 Specifications 1-1-1
1-1-2 Parts names 1-1-4
(1) Machine (front side) 1-1-4
(2) Machine (rear side) 1-1-6
(3) Operation section 1-1-7
1-1-3 Machine cross section 1-1-8
(1) 60/50/45 ppm model 1-1-8
(2) 40 ppm model 1-1-9

1-2 Installation

1-2-1 Installation environment 1-2-1
1-2-2 Unpacking and installation 1-2-2
1-2-3 Install the expansion memory (option) 1-2-12
1-2-4 Install the memory card (SD card) (option) 1-2-13
1-2-5 Option composition 1-2-14

1-3 Maintenance Mode

1-3-1 Service mode 1-3-1
(1) Executing a service mode 1-3-1
(2) Description of service mode 1-3-2
(3) Printing an event log 1-3-15

1-4 Troubleshooting

1-4-1 Paper misfeed detection 1-4-1
(1) Paper misfeed indication 1-4-1
(2) Paper misfeed detection condition 1-4-1
(2-1) PF-320 (500 sheets Paper feeder) 1-4-1
(2-2) PF-315+ (Bulk Paper Feeder) 1-4-2
1-4-2 Self-diagnostic function 1-4-8
(1) Self-diagnostic function 1-4-8
(2) Self diagnostic codes 1-4-8
1-4-3 Image formation problems 1-4-24
(1) No image appears (entirely white). 1-4-25
(2) No image appears (entirely black). 1-4-25
(3) Image is too light. 1-4-26
(4) The background is colored. 1-4-27
(5) White streaks are printed vertically. 1-4-27
(6) Black streaks are printed vertically. 1-4-28
(7) Streaks are printed horizontally. 1-4-28
(8) Spots are printed. 1-4-28
(9) Image is blurred. 1-4-29
(10) Paper is wrinkled. 1-4-29
(11) Offset occurs. 1-4-29
(12) Part of image is missing. 1-4-29
(13) Fusing is loose. 1-4-30
(14) Image is out of focus. 1-4-30
1-4-4 Electric problems 1-4-31
1-4-5 Mechanical problems 1-4-35

TONER
www.tonerplus.co.uk

1-5 Assembly and disassembly

1-5-1 Precautions for assembly and disassembly 1-5-1
(1) Precautions 1-5-1
(2) Drum unit 1-5-1
(3) Toner 1-5-1
(4) How to tell a genuine Kyocera toner container 1-5-2
1-5-2 Outer covers 1-5-3
(1) Detaching and refitting the top cover 1-5-3
(2) Detaching and refitting the inlet cover and slot cover 1-5-3
(3) Detaching and refitting the right upper cover 1-5-4
(4) Detaching and refitting the right lower cover 1-5-4
(5) Detaching and refitting the rear left cover 1-5-5
(6) Detaching and refitting the left upper cover 1-5-5
(7) Detaching and refitting the left lower cover 1-5-6
(8) Detaching and refitting the rear cover 1-5-6
1-5-3 Paper feed section 1-5-8
(1) Detaching and refitting the paper feed roller 1-5-8
(2) Detaching and refitting the retard roller 1-5-8
(3) Detaching and refitting the MP paper feed pulley 1-5-9
1-5-4 Developer section 1-5-13
(1) Detaching and refitting the developer unit 1-5-13
1-5-5 Drum section 1-5-15
(1) Detaching and refitting the drum unit 1-5-15
(2) Detaching and refitting the chager roller unit 1-5-15
1-5-6 Transfer/separation section 1-5-16
(1) Detaching and refitting the transfer roller assembly 1-5-16
(2) Detaching and refitting the separation needle unit 1-5-17
1-5-7 Optical section 1-5-18
(1) Detaching and refitting the laser scanner unit 1-5-18
1-5-8 Fuser section 1-5-19
(1) Detaching and refitting the fuser unit 1-5-19
1-5-9 ejection section 1-5-21
(1) Detaching and refitting the ejection unit 1-5-21
1-5-10 PWBs 1-5-22
(1) Detaching and refitting the main PWB 1-5-22
(2) Detaching and refitting the engine PWB 1-5-22
(3) Detaching and refitting the relay-L PWB 1-5-24
(4) Detaching and refitting the power source PWB 1-5-25
(5) Detaching and refitting the high voltage PWB 1-5-26
(6) Detaching and refitting the operation PWB 1-5-28
1-5-11 Others 1-5-29
(1) Detaching and refitting the main driving motor unit 1-5-29
(2) Detaching and refitting the paper feed driving motor unit 1-5-30
(3) Detaching and refitting the power source fan motor 1-5-30
(4) Direction of installing the principal fan motors 1-5-31

1-6 Requirements on PWB Replacement

1-6-1 Upgrading the firmware 1-6-1
1-6-2 Remarks on PWB replacement 1-6-2
(1) Engine PWB 1-6-2

TONER
www.tonerplus.com.ua

2-1 Mechanical Construction

2-1-1 Paper feed/conveying section 2-1-1
(1) Cassette paper feed section 2-1-1
(2) MP tray paper feed section 2-1-2
(3) Conveying section 2-1-3
2-1-2 Drum section 2-1-4
(1) Charger roller unit 2-1-4
(2) Cleaning unit 2-1-5
2-1-3 Developer section 2-1-6
2-1-4 Optical section 2-1-7
(1) Laser scanner section 2-1-7
2-1-5 Transfer/Separation section 2-1-8
2-1-6 Fuser section 2-1-9
2-1-7 Eject/Feedshift section 2-1-11
2-1-8 Duplex conveying section 2-1-13

2-2 Electrical Parts Layout

2-2-1 Electrical parts layout 2-2-1
(1) PWBs 2-2-1
(2) Switches and sensors 2-2-3
(3) Motors 2-2-5
(4) Clutches and others 2-2-7

2-3 Operation of the PWBs

2-3-1 Main PWB (MPWB) 2-3-1
2-3-2 Engine PWB (EPWB) 2-3-6
2-3-3 Power source PWB (PSPWB) 2-3-13
2-3-4 Relay-L PWB (R-LPWB) 2-3-15
2-3-5 High voltage PWB (HVPWB) 2-3-18

2-4 Appendixes

2-4-1 Appendixes 2-4-1
(1) Maintenance kits 2-4-1
(2) Repetitive defects gauge 2-4-2
(3) Firmware environment commands 2-4-3
(4) Wiring diagram (60/50/45 ppm model) 2-4-11
(5) Wiring diagram (40ppm model) 2-4-13

Installation Guide

500 sheets paper feeder
2000 sheets bulk paper feeder
Expanded HDD (SSD)
IEEE1284 Interface
Network interface
Wireless LAN interface

TONER
www.tonerplus.com.ua

This page is intentionally left blank.

TONER
www.tonerplus.com.ua

1-1-1 Specifications

Item		Specifications			
		60 ppm	**50 ppm**	**45 ppm**	**40 ppm**
Type		Desktop			
Printing method		Electrophotography by semiconductor laser			
Paper weight	**Cassette**	60 to 120 g/m²			
	MP tray	60 to 220 g/m², 230 g/m² (Postcard)			
Paper type	**Cassette**	Plain, Recycled, Bond, Color (Colour), Preprinted, Letterhead, Prepunched, Rough, High quality, Custom 1 to 8			
	MP tray	Plain, Recycled, Bond, Color (Colour), Preprinted, Letterhead, Prepunched, Rough, High quality, Label, Transparency, Postcard, Vellum, Thick, Envelope, Custom 1 to 8			
Paper size	**Cassette**	Legal, Oficio II, Mexican Oficio, Letter, Executive, Statement, Folio, A4, B5(JIS), A5, B6 *1, A6 *1, Return postcard *1, B5(ISO), C5, DL *1, 16K, Custom			
	MP tray	Legal, Oficio II, Mexican Oficio, Letter, Executive, Statement, Folio, A4, B5(JIS), A5, B6, A6, Return postcard, Postcard, B5(ISO), C5, Commercial #10, DL, Commercial #9, Monarch, Commercial #6-3/4, Youkei4, Youkei2, 16K, Custom			
	*1: 60/50/45 ppm model only				
Printing speed (ppm) Full speed	**[Simplex] A4/Letter -/Legal B5R A5R A6R**	60/62 - /50 48 32 32	50/52 - /42 40 27 27	45/47 - /38 36 23 23	40/42 - /33 33 22 22
	[Duplex] A4/Letter -/Legal B5R A5R	43/44 - /25 34 23	36/37 - /21 28 19	32/33 - /16 25 16	20/21 - /16.5 16.5 11
Printing speed (ppm) Half speed	**[Simplex] A4/Letter -/Legal B5R A5R A6R**	30/31 - /25 24 16 16	25/26 - /21 20 13.5 13.5	22.5/23.5 - /19 18 11.5 11.5	20/21 - /17 16.5 11 11
	[Duplex] A4/Letter -/Legal B5R A5R	21.5/22 - /12.5 17 11.5	18/18.5 - /10.5 14 9.5	16/16.5 - /8 12.5 8	10/10.5 - /8 8 5.5

TONER
www.tonerplus.com.ua

Item		Specifications			
		60 ppm	50 ppm	45 ppm	40 ppm
Resolution		Fine1200, Fast1200(KIR), 600dpi(KIR) , 300dpi			
First print time (A4, feed from cassette)		9.0 s or less			
Warm-up time (22 °C/ 71.6 °F, 60% RH)	Power on/ Off mode/ Sleep mode	25 s or less	20 s or less	15 s or less	15 s or less
	Low power mode	-			
Paper capacity	Cassette	500 sheets (80g/m²)			
	MP tray	100 sheets (80 g/m²)			
Output tray capacity	Facedown	500 sheets (67g/m²)			250 sheets (67g/m²)
	Faceup	100 sheets (67g/m²)			-
Photoconductor		a-Si drum (diameter 30 mm)			
Image write system		Semiconductor laser			
Charging system		Contact charger roller method			
Developer system		Mono component dry developing method Toner replenishing: Automatic from the toner container			
Transfer system		Transfer roller method			
Separation system		Small diameter separation, dischager needle (DC bias)			
Cleaning system		Counter blade cleaning + cleaning roller			
Charge erasing system		Exposure by cleaning lamp (LED)			
Fusing system		Heat and pressure fusing with the heat roller and the press roller Heat source: halogen heater Abnormally high temperature protection devices: thermostat			
CPU		PowerPC465, ARM7/ARM9			PowerPC465 *1
Main memory		256 MB / 1280 MB (Standard / Max) *2			
Operating system		Windows XP, Windows XP Professional, Windows Server 2003, Windows Server 2003 x64 Edition, Windows Vista x86 Edition, Windows Vista x64 Edition, Windows 7 x86 Edition, Windows 7 x64 Edition, Windows Server 2008, Windows Server 2008 x64 Edition, Apple Macintosh OS X			
Interface	Standard	USB device interface connector: 1 (USB 2.0) USB host interface connector: 2 (USB 2.0) Network interface connector: 1 (10BASE-T/100BASE-TX/1000BASE-T) *3			
	Option	eKUIO slot: 1			
Page description language		PRESCRIBE			
Emulation		PCL6, KPDL3, XPS, Line printer, IBM Proprinter X24E, EPSON LQ-850			

TONER
www.tonerpl

Item		Specifications			
		60 ppm	**50 ppm**	**45 ppm**	**40 ppm**
Operating environment	**Temperature**	10 to 32.5 °C/50 to 90.5 °F			
	Humidity	15 to 80% RH			
	Altitude	2,500 m/8,202 ft or less			
	Brightness	1,500 lux or less			
Dimensions (W × D × H)		380 × 416 × 320 mm / 14 15/16” × 16 3/8 “× 12 1/4”			380 × 416 × 285 14 15/16” × 16 3/8 “× 11 1/4”
Weight (with toner container)		14.6 kg / 32.2 lb			13.5kg/29.8lb
Space required (W × D)		380 × 593 mm / 14 15/16” × 23 3/8” (using MP tray)			
		380 × 1138 mm / 14 15/16” × 44 13/16” (using 2000 sheets paper feeder + Faceup tray)			380 × 799 mm / 14 15/16” × 31 7/16” (using 2000 sheets paper feeder)
Power source					
120 V AC, 60 Hz		more than 10.0 A			
220 - 240 V AC, 50/60 Hz		more than 6.0 A			
Options		500 sheets paper feeder, 2000 sheets bulk paper feeder, Faceup tray *4, Expanded HDD (SSD), IEEE1284 Interface, Network interface, Wireless LAN interface, Expanded memory, SD card, Card Authentication Kit, IC card reader, Data Security Kit(E), USB keyboard, UG-33(Thin print)			

*1: 40 ppm (without Network) model ;
*2: 40 ppm (without Network) model ; 128 MB / 1152 MB (Standard / Max)
*3: 40 ppm (without Network) model ; Network interface connector : 0
*4: 60/50/45 ppm model only

TONER www.toner-plus.com.ua

NOTE: These specifications are subject to change without notice.

1-1-2 Parts names

(1) Machine (front side)

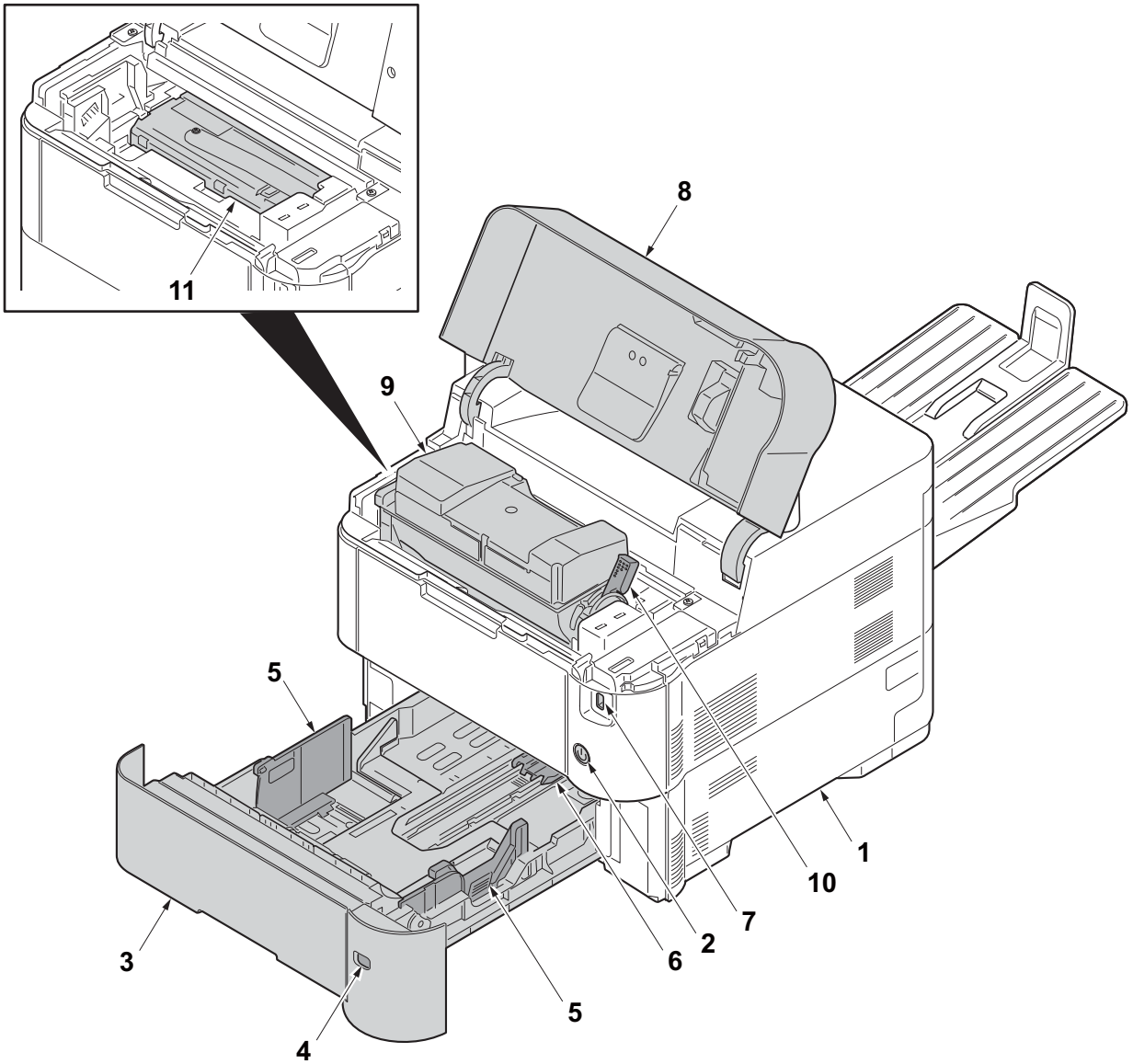

Figure 1-1-1

1. Machine
2. Power switch
3. Cassette
4. Paper size label
5. Paper width guides
6. Paper length guide
7. USB memory slot
8. Top cover
9. Toner container
10. Lock lever (Toner container)
11. Developer unit

TONER
www.tonerplus.com.ua

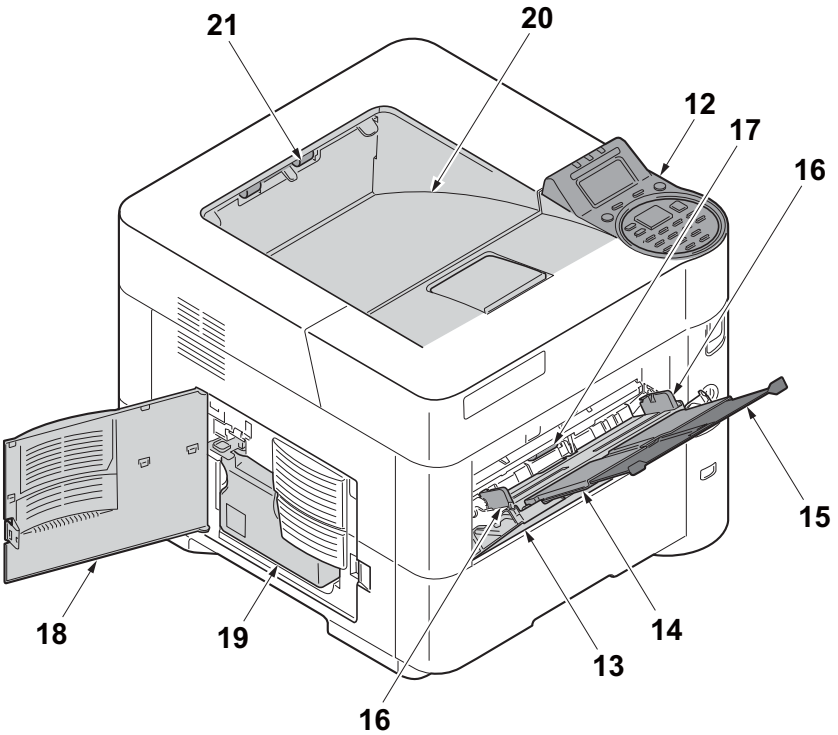

Figure 1-1-2

12. Operation panel
13. MP (multi purpose) tray
14. MP middle tray
15. MP top tray
16. MP Paper width guides
17. MP paper feed roller
18. Left cover
19. Waste toner box
20. Top tray (facedown)
21. Eject roller

TONER
www.tonerplus.com.ua

(2) Machine (rear side)

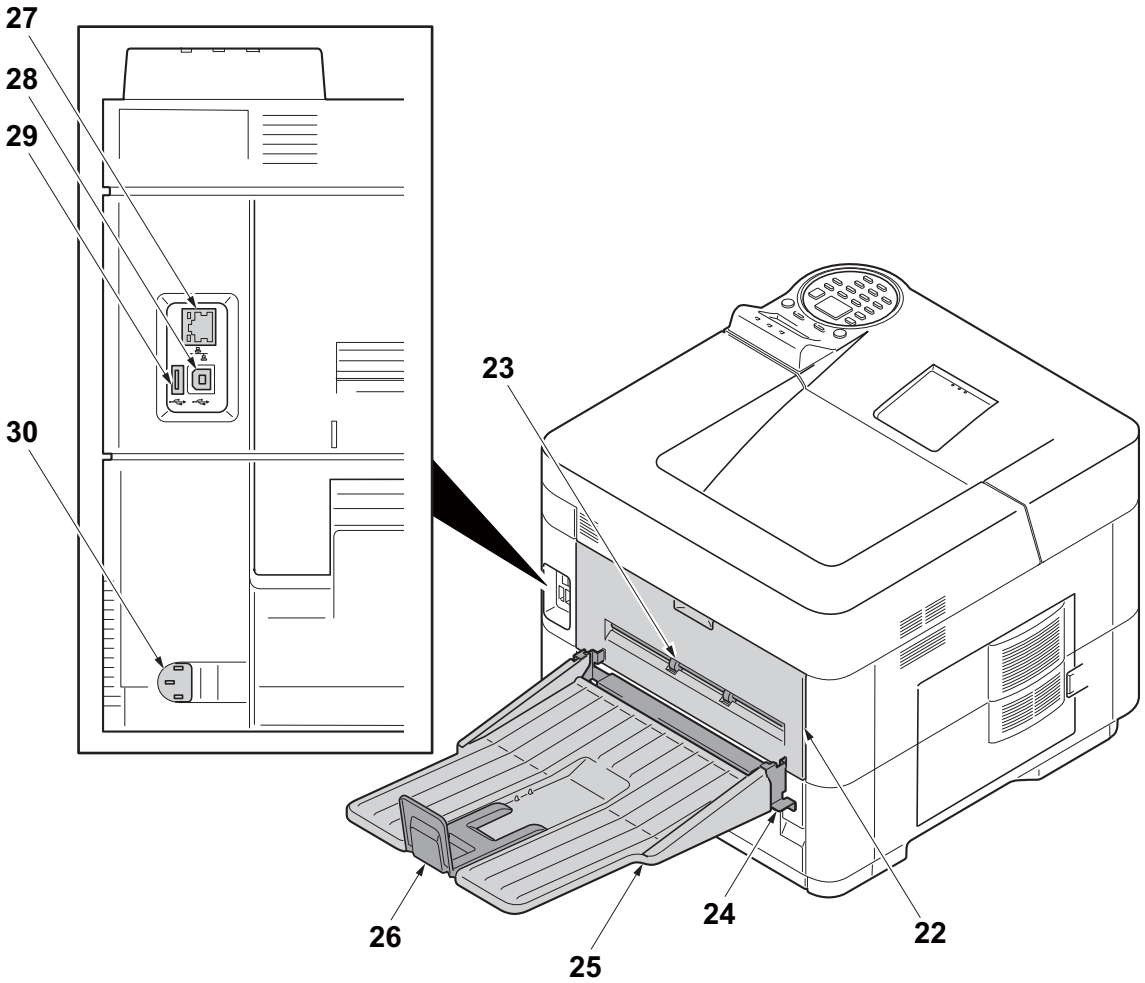

Figure 1-1-3

22. Rear cover
23. Faceup roller *1
24. Tray attachment plate *2
25. Faceup tray *2
26. Paper stopper *2
27. Network interface connector *3
28. USB interface connector
29. USB port
30. Power cord connector

*1: 60/50/45 ppm model only
*2: 60/50/45 ppm model only (Option)
*3: Except 40 ppm model (without Network)

TONER
www.tonerplus.com.ua

(3) Operation section

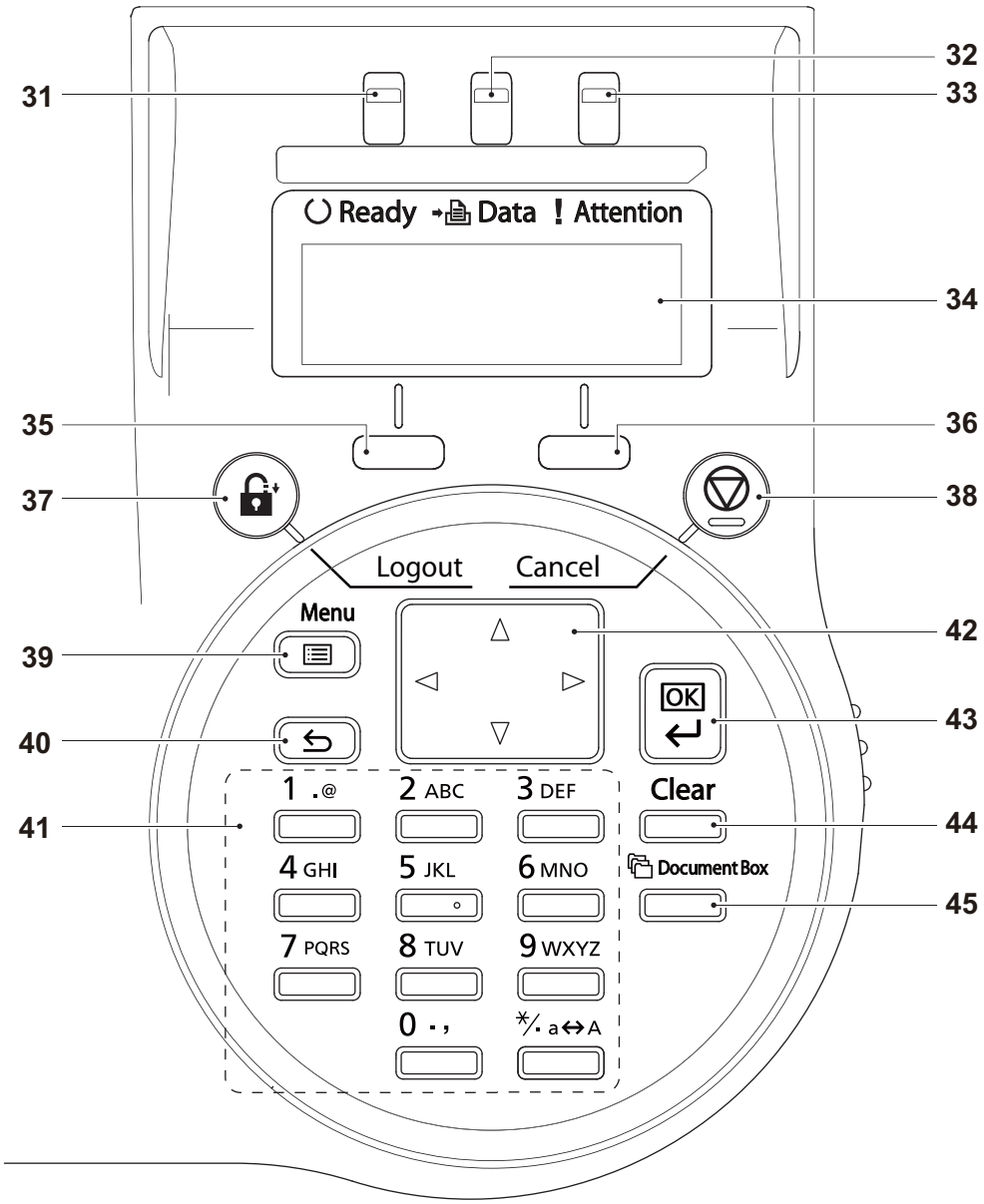

Figure 1-1-4

31. Ready indicator
32. Data indicator
33. Attention indicator
34. Message display
35. Left select key
36. Right select key
37. Logout key
38. Cancel key
39. Menu key
40. Back key
41. Numeric keys
42. Cursor keys
43. OK key
44. Clear key
45. Document box key

TONER
www.tonerplus.com.ua

1-1-3 Machine cross section

(1) 60/50/45 ppm model

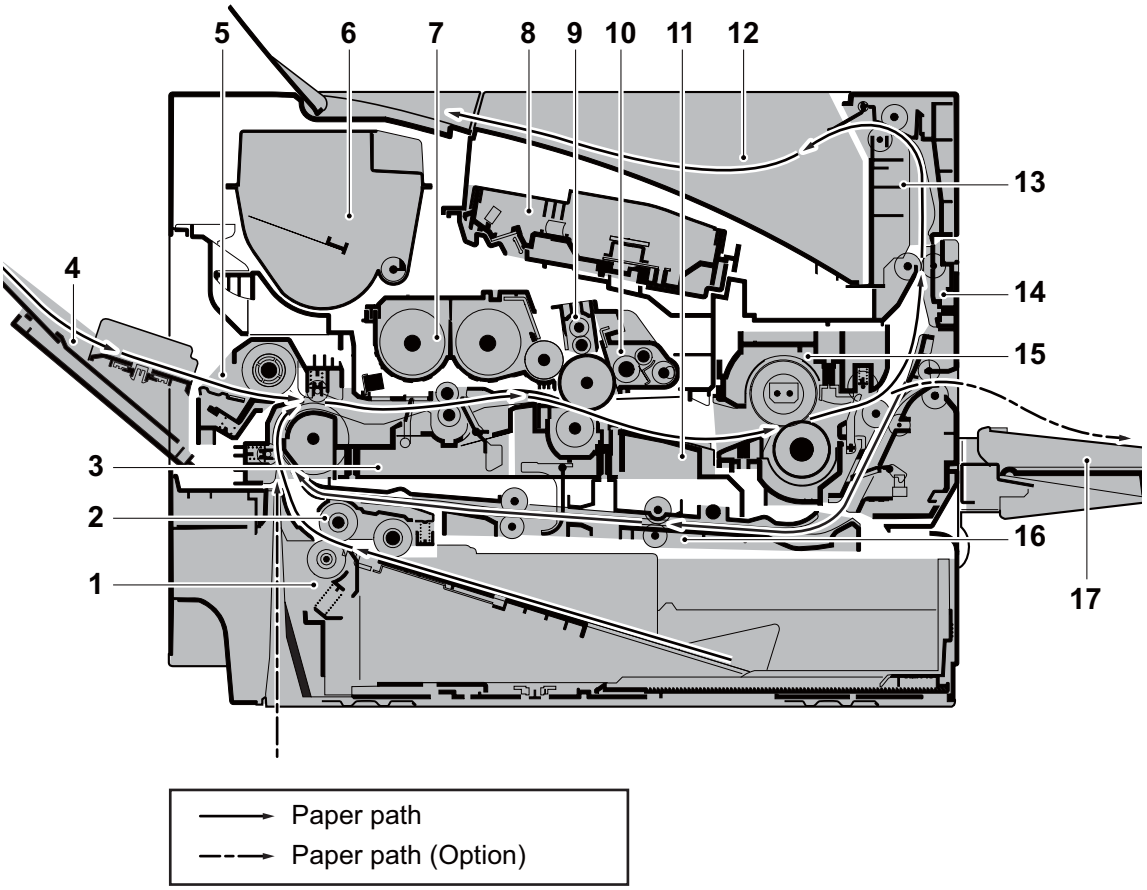

Figure 1-1-5

1. Cassette
2. Cassette paper feed section
3. Paper feed conveying section
4. MP tray
5. MP tray paper feed section
6. Toner container
7. Developer unit
8. Laser scanner unit (LSU)
9. Charger roller unit
10. Drum unit
11. Transfer/Separation section
12. Eject tray (facedown)
13. Eject section
14. Eject conveying section
15. Fuser unit
16. Duplex conveyning section
17. Faceup tray (option)

TONER
www.tonerplus.com.ua

(2) 40 ppm model

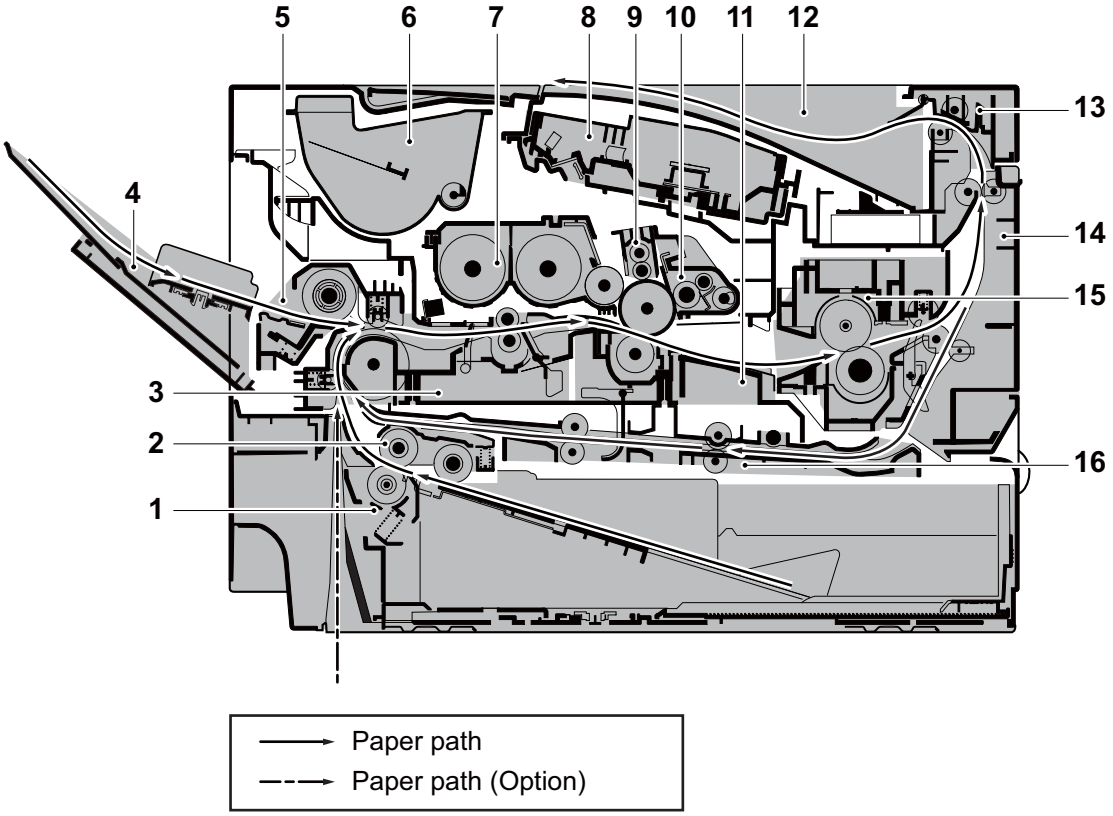

Figure 1-1-6

1. Cassette
2. Cassette paper feed section
3. Paper feed conveying section
4. MP tray
5. MP tray paper feed section
6. Toner container
7. Developer unit
8. Laser scanner unit (LSU)
9. Charger roller unit
10. Drum unit
11. Transfer/Separation section
12. Eject tray (facedown)
13. Eject section
14. Eject conveying section
15. Fuser unit
16. Duplex conveyning section

TONER PLUS
www.tonerplus.com.ua

This page is intentionally left blank.

TONER
www.tonerplus.com.ua

1-2-1 Installation environment

1. Temperature: 10 to 32.5°C/50 to 90.5°F
2. Humidity: 15 to 80% RH
3. Power supply: 120 V AC, 12.0 A
   220 - 240 V AC, 6.5 A
4. Power supply frequency: 50 Hz ±2%/60 Hz ±2%
5. Installation location
   Avoid direct sunlight or bright lighting. Ensure that the photoconductor will not be exposed to direct sunlight or other strong light when removing paper jams.
   Avoid locations subject to high temperature and high humidity or low temperature and low humidity; an abrupt change in the environmental temperature; and cool or hot, direct air.
   Avoid places subject to dust and vibrations.
   Choose a surface capable of supporting the weight of the machine.
   Place the machine on a level surface (maximum allowance inclination: 1°).
   Avoid air-borne substances that may adversely affect the machine or degrade the photoconductor, such as mercury, acidic of alkaline vapors, inorganic gasses, NOx, SOx gases and chlorine-based organic solvents.
   Select a well-ventilated location.
6. Allow sufficient access for proper operation and maintenance of the machine.

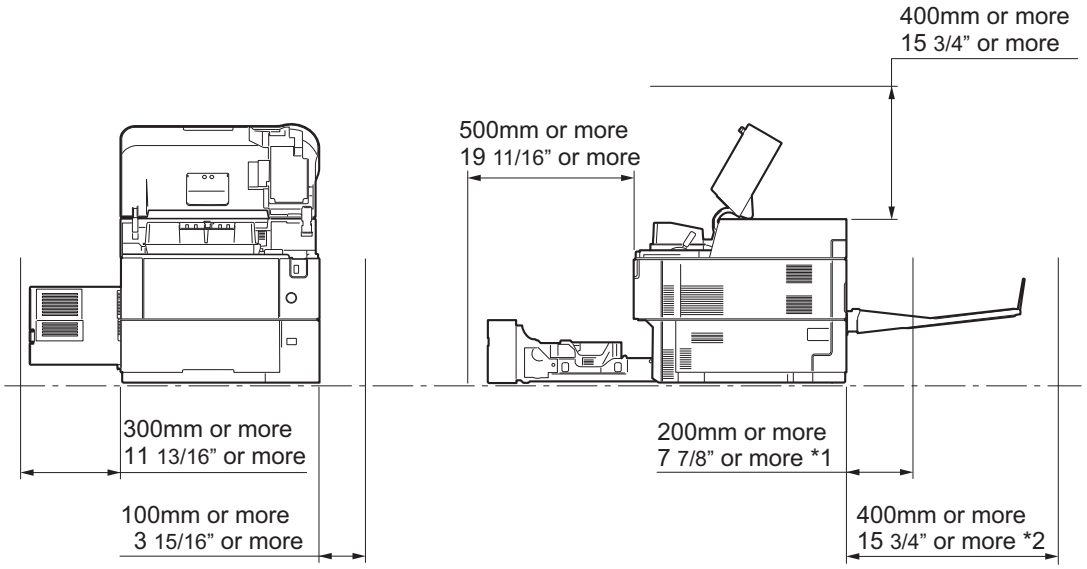

*1: Without the faceup tray
*2: With the faceup tray (60/50/45 ppm model)

Figure 1-2-1

TONER
www.tonerplus.com.ua

1-2-2 Unpacking and installation

Unpacking

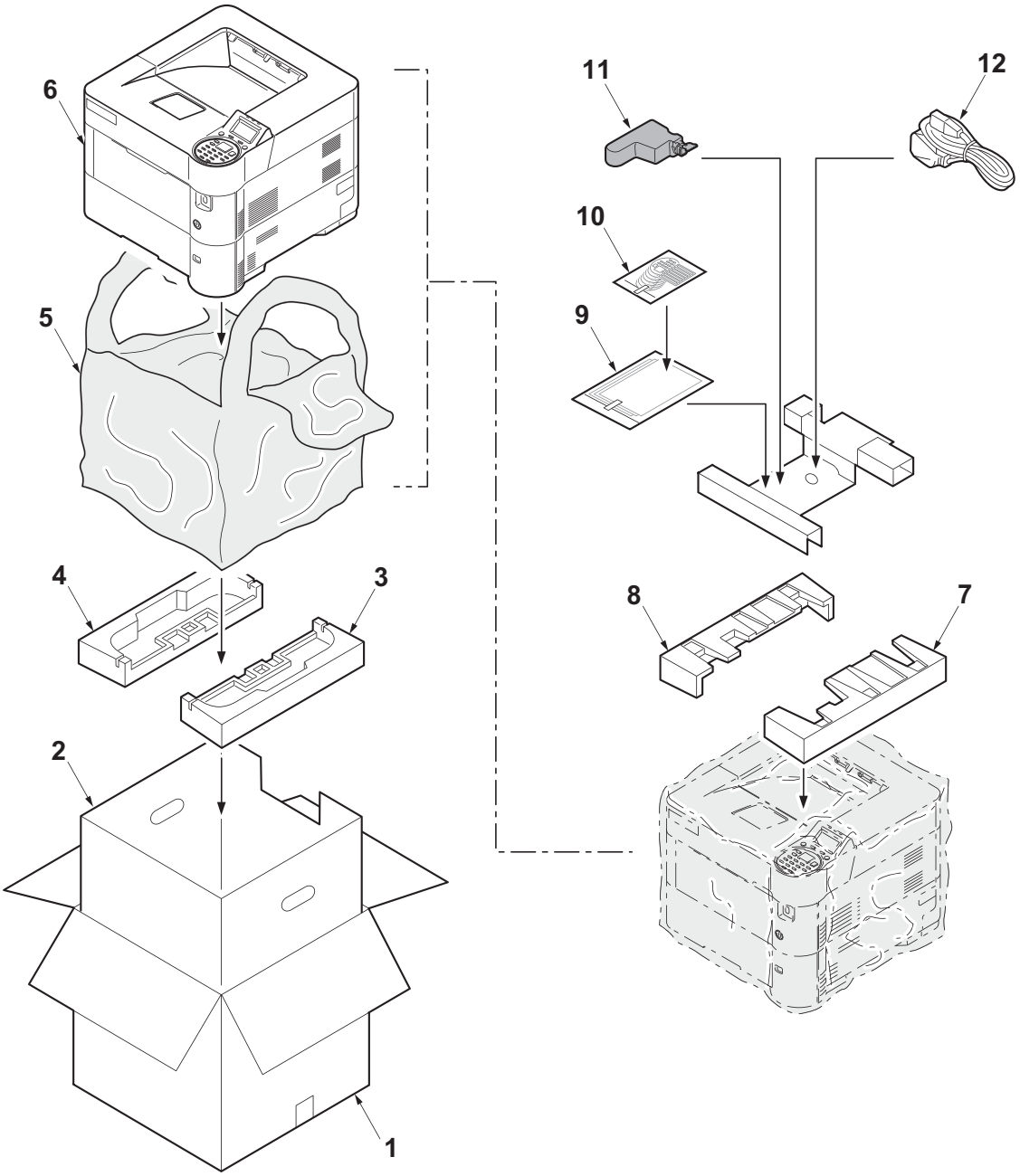

Figure 1-2-2

1. Outer case
2. Inner case
3. Bottom pad R
4. Bottom pad L
5. Machine cover (740 × 700)
6. Machine
7. Upper pad R
8. Upper pad L
9. Operation guide
10. Operation sheets Assy *1
11. Waste toner bottle
12. Power cord

*1: Except 240V model

Caution: Place the machine on a level surface.

TONER
www.tonerplus.co.uk

Removing the tapes and pads

1. Remove two tapes.
2. Remove the protection sheet.

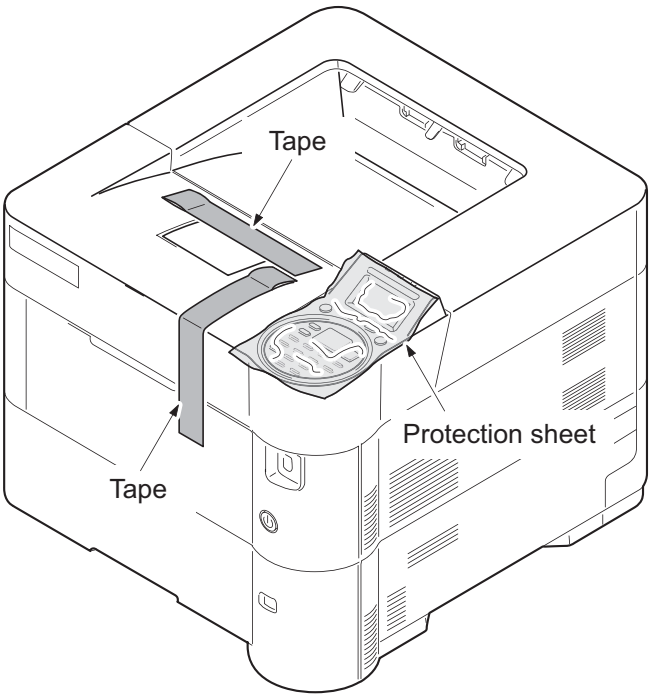

Figure 1-2-3

3. Remove four tapes.

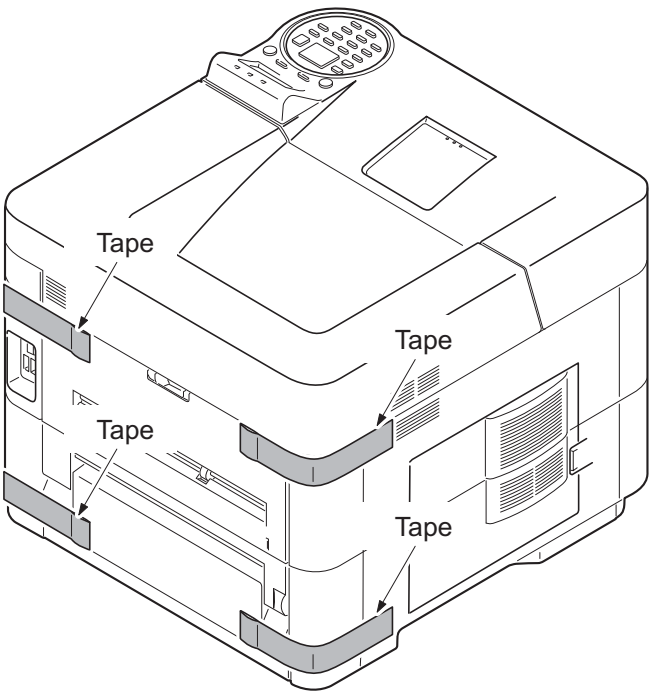

Figure 1-2-4

TONER
www.tonerplus.com.ua

(60/50/45 ppm model only)

4. Open the top cover.
5. Remove the tape and the spacer.

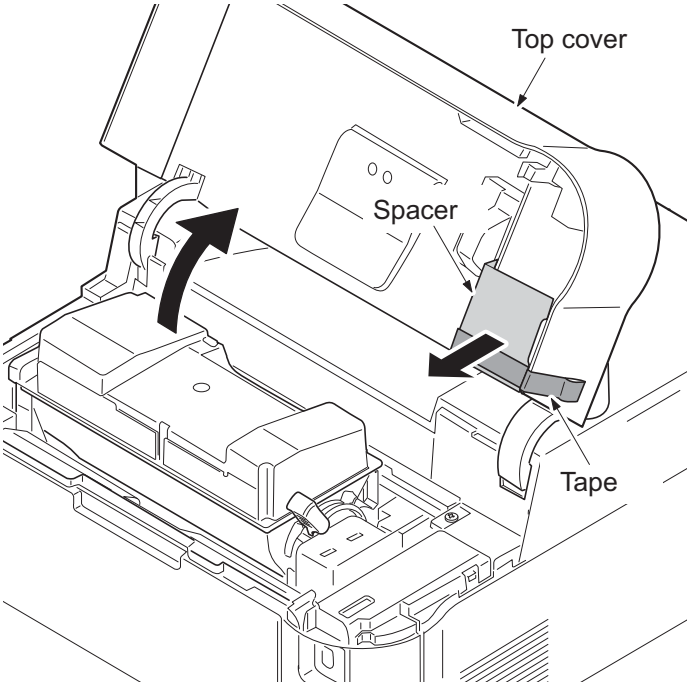

Figure 1-2-5

Installing the toner container

1. Remove the container label by removing the tape.

   Caution: Check the contents of the container label and remove a container.

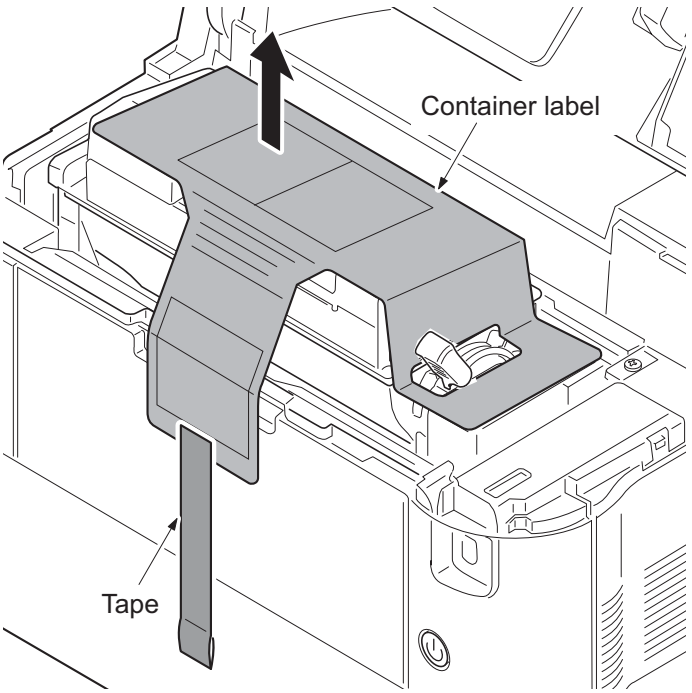

Figure 1-2-6

TONER
www.tonerplus.com.ua

2. Rotate the toner container lock lever to the lock position and then remove the toner container from the printer by returning it to the unlock position.

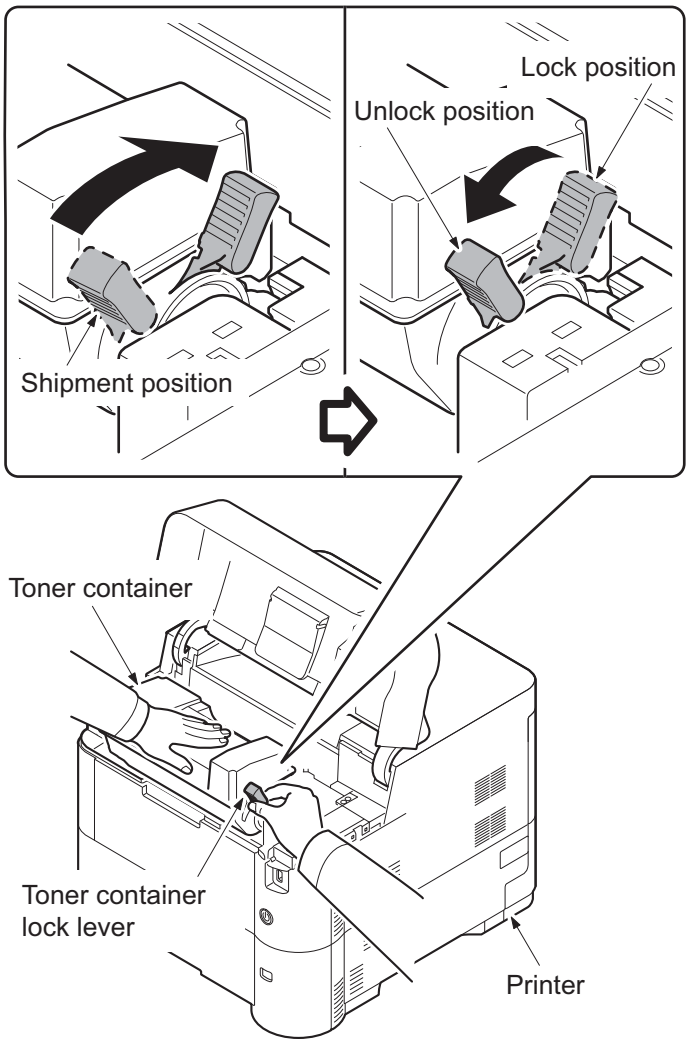

Figure 1-2-7

3. Shake the turned toner container 10 times or more as shown in the figure in order to distribute the toner evenly inside the container.
   Caution:Do not press too firmly on the center of the toner container or touch the toner feed slot or the terminal parts.
4. Set the toner container to the printer and then turn the toner container lock lever to the lock position.
5. Close the top cover.

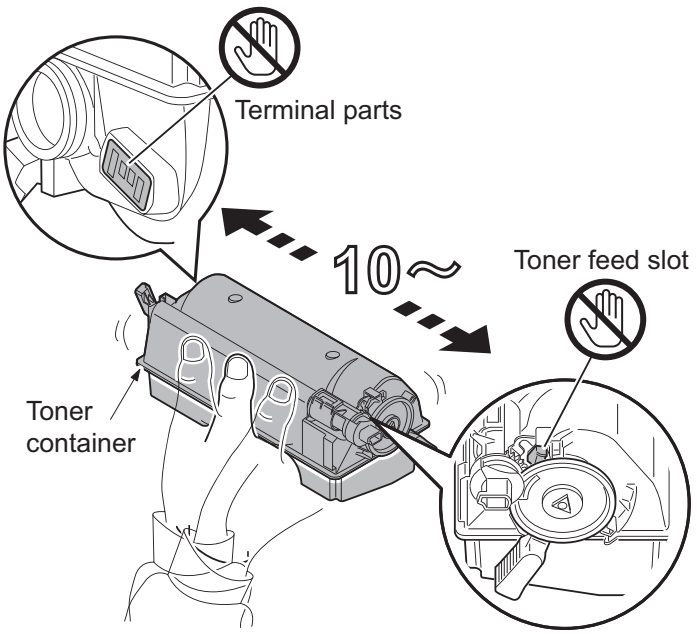

Figure 1-2-8

TONER
www.tonerplus.com.ua

Installing the waste toner box

1. Openthe left cover.
2. Open the cap of the waste toner box.
3. Install the waste toner box.
4. Close the left cover.

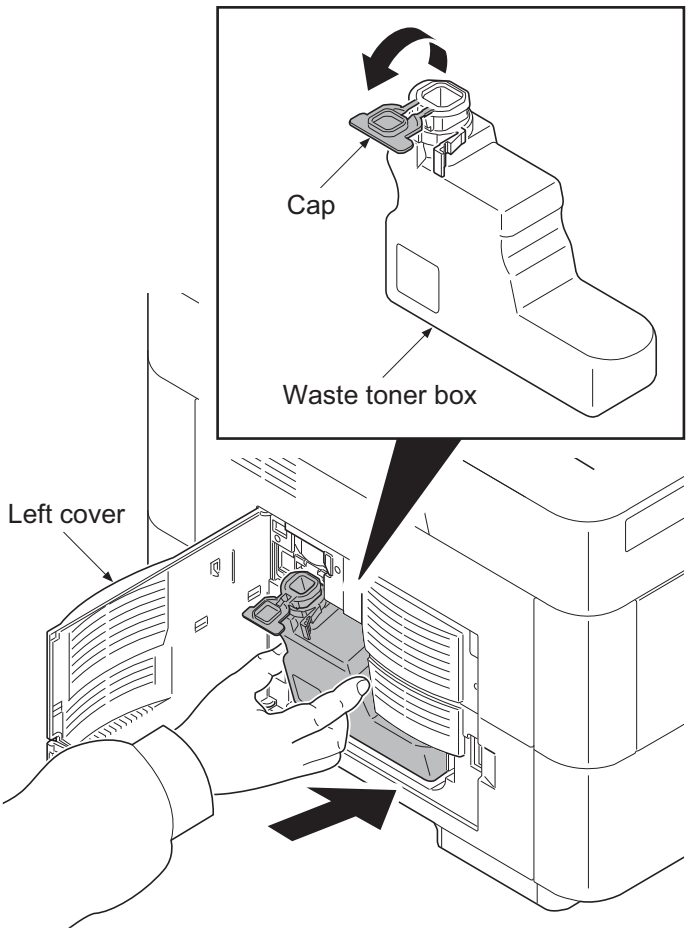

Figure 1-2-9

Setting of the fuser pressure release lever (40 ppm model only)

1. Open the rear cover.
2. Push the release lever down for changing the lever position to a normal position from a shipment position.
3. Close the rear cover.

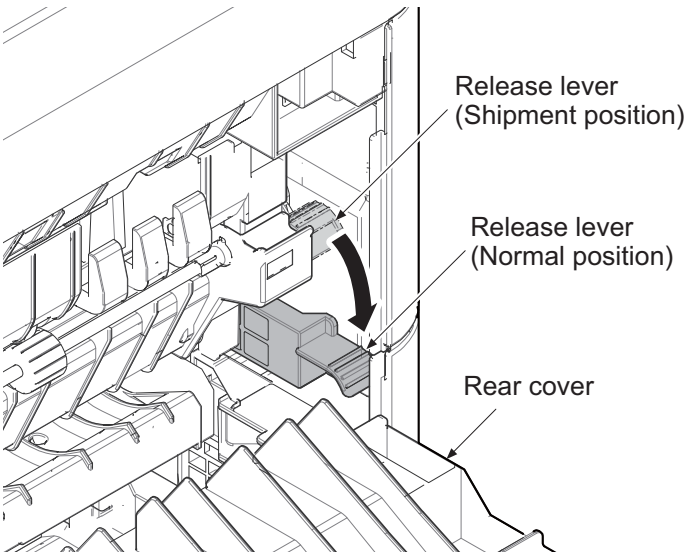

Figure 1-2-10

TONER
www.tonerplus.com.ua

Loading paper

1. Pull the cassette from the printer out.

(40 ppm model only)
2. Push the bottom plate down.

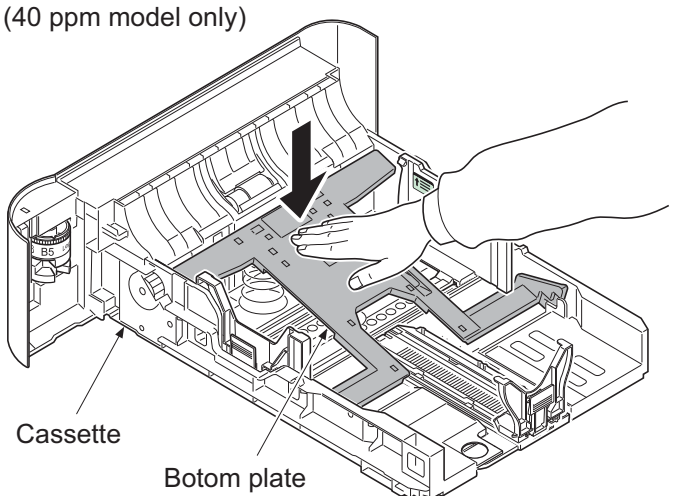

Figure 1-2-11

(Common)
3. Turn the cassette size dial so that the size of the paper you are going to use appears in the cassette size window.

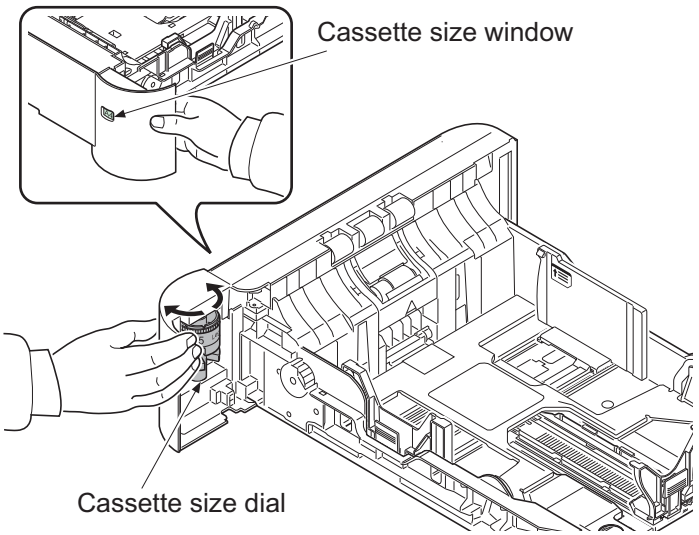

Figure 1-2-12

4. Push the lock lever on the left side guide and slide to the desired paper size.

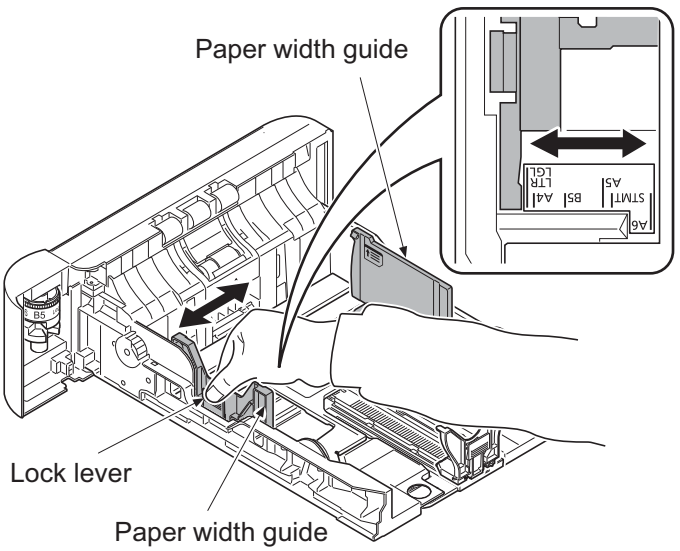

Figure 1-2-13

TONER
www.tonerplus.com.ua

5. Push the lock lever and slide the paper length guide to the desired paper size.

   If you are going to set paper that is longer than A4, pull out the extension cassettes pushing the lock lbutton one by one and adjust them to the desired paper size.

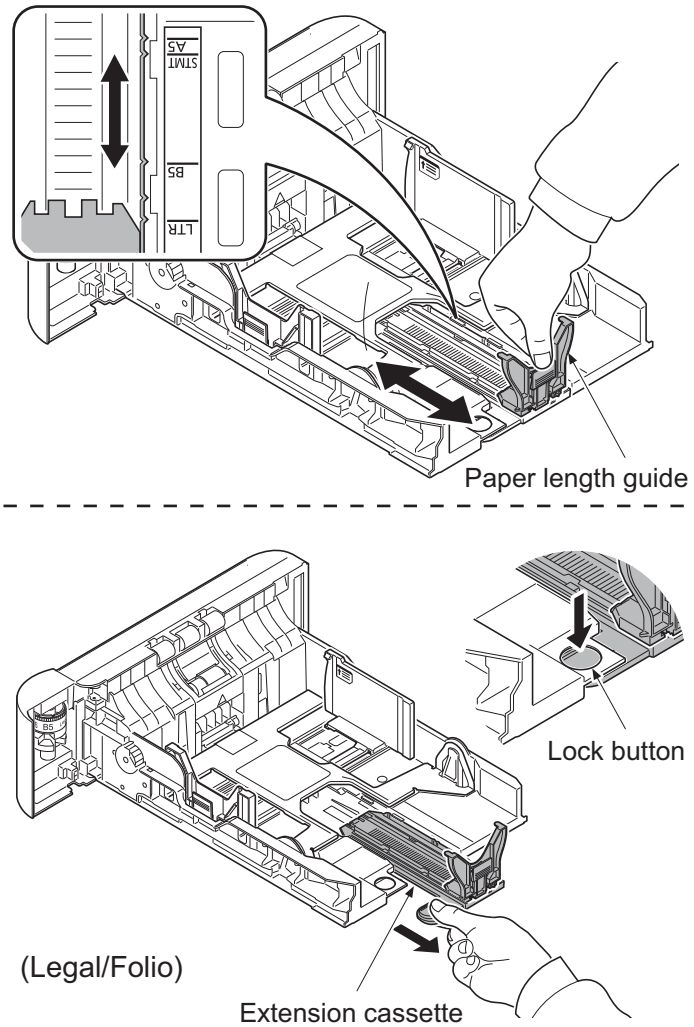

Figure 1-2-14

6. Fan the media (paper/transparencies), then tap it on a level surface to avoid media jams or skewed printing.
7. Slide the paper into the paper cassette.
8. Insert the cassette into the slot in the printer. Push it straight in as far as it will go.

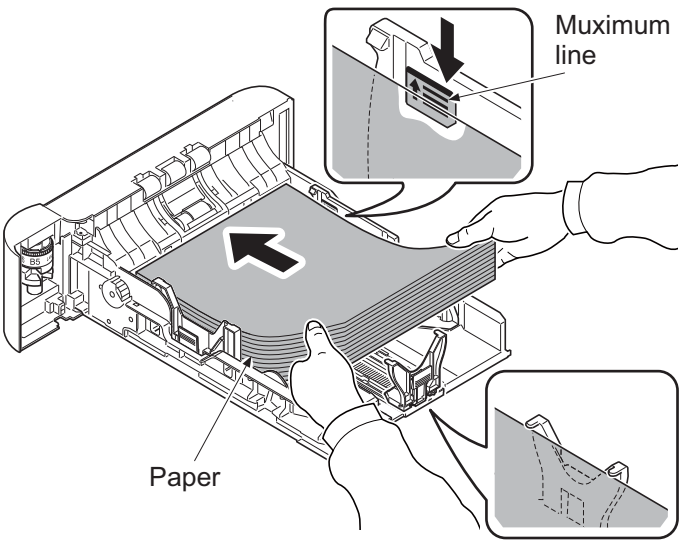

Figure 1-2-15

TONER
www.tonerplus.com.ua

Replace the operation panel sheet (except 240V AC model)

1. Rotate the operation panel ring in the counterclockwise direction.
2. Remove the operation panel cover.
3. Replace it to the operation panel sheet of the corresponding language.
4. Refit all the removed parts.

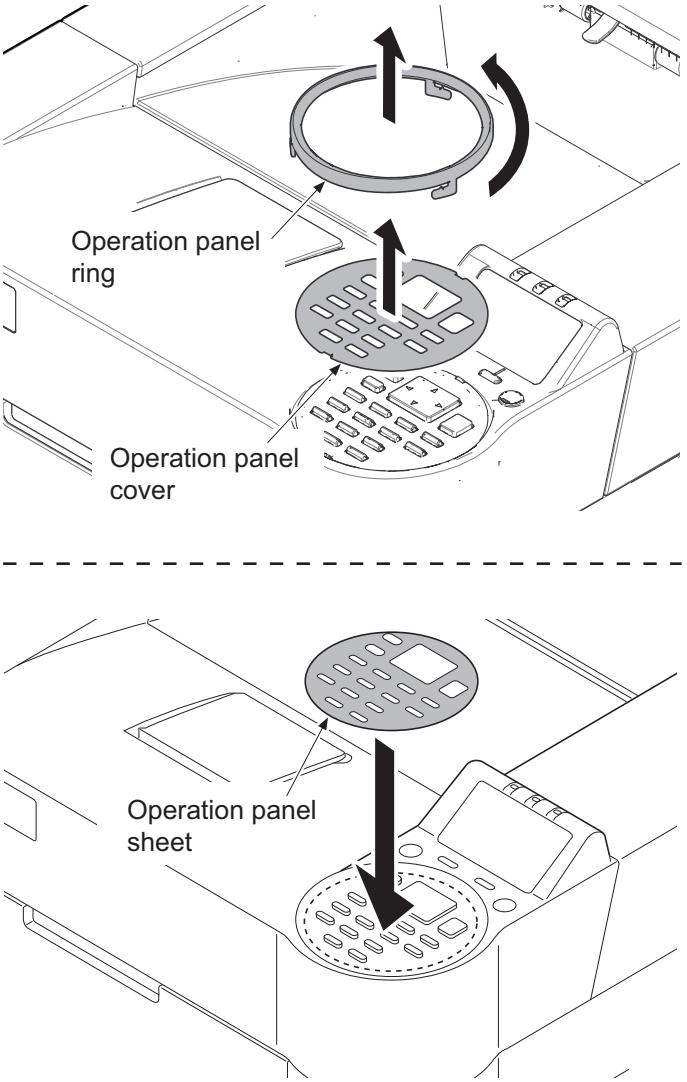

Figure 1-2-16

5. Stick the language sheet of the corresponding language.

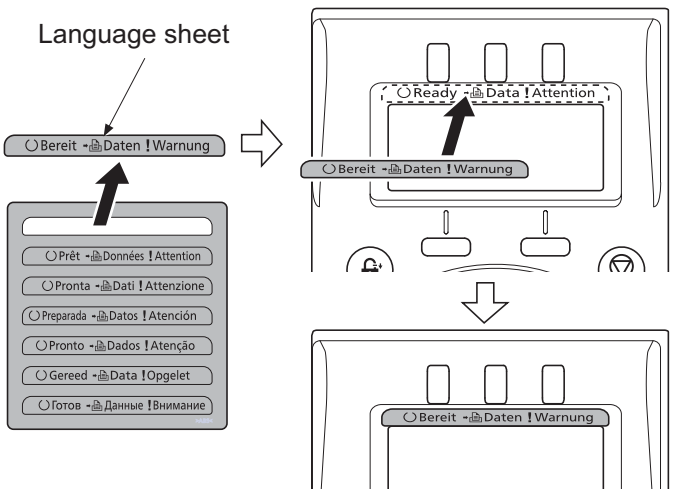

Figure 1-2-17

TONER
www.tonerplus.com.ua

Connecting the cable

1. Remove the inlet cover.
2. Open the rear cover.
3. Connect the USB interface cable to the printer and PC.

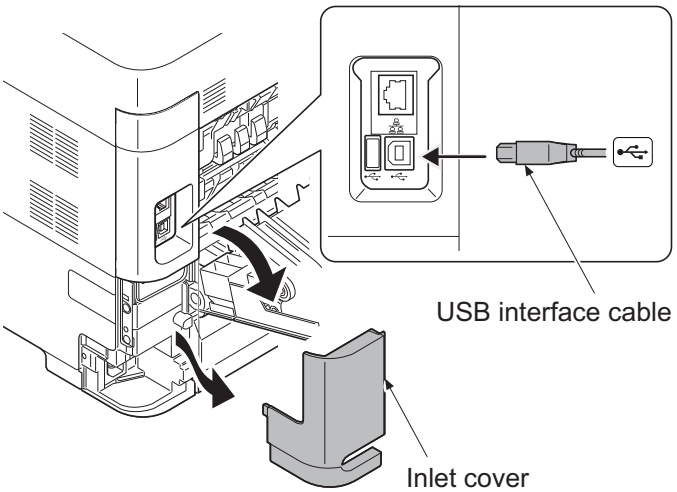

Figure 1-2-18

4. Connect the network interface cable to the printerand network.

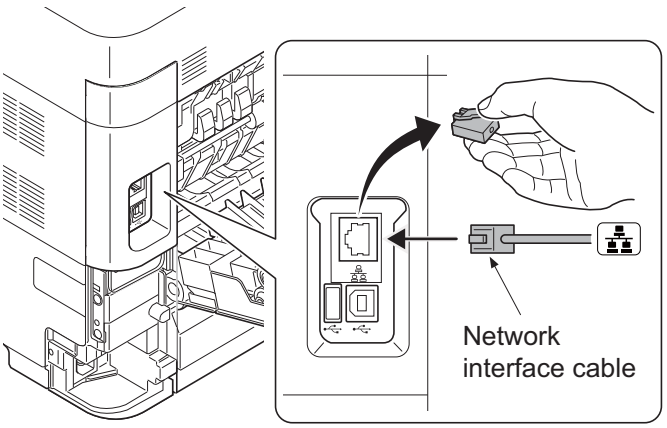

Figure 1-2-19

5. Connect the power cord to the printer and the wall outlet.
6. Refit the inlet cover.
7. Close the rear cover.

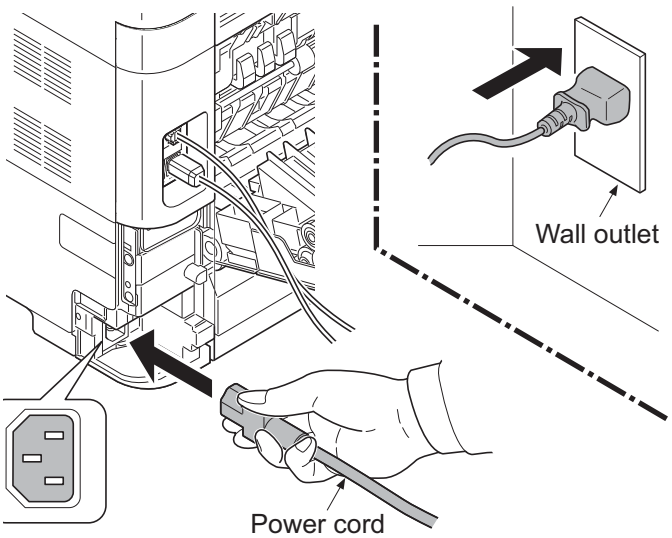

Figure 1-2-20

TONER
www.tonerplus.com.ua

Power on

8. Press the power switch and then check the lighting up of ready indicator.
9. Installing the printer driver (refer to operation guide).

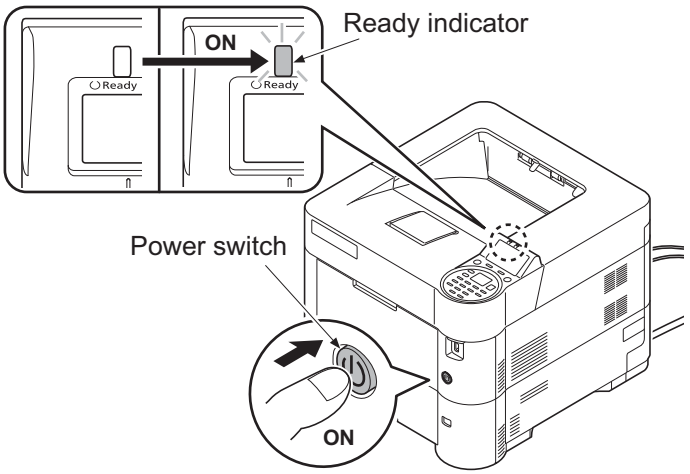

Figure 1-2-21

Setting the language

1. Press the menu key.
2. Select [Device Common] using the cursor up/down keys.
3. Press the OK key.
4. Select [Language] using the cursor up/down keys.
5. Press the OK key.
6. Select the language to set using the cursor up/down keys.
7. Press the OK key.

Printout the status page

1. Press the menu key.
2. Select [Report Print] using the cursor up/down keys.
3. Press the OK key.
4. Select [Status Page] using the cursor up/down keys.
5. Press the OK key.
6. Select the [YES] using the left select key.
7. [Accepted] is displayed and the page will be printed.
8. Press the menu key.

Completion of the machine installation

TONER
www.tonerplus.com.ua

1-2-3 Install the expansion memory (option)

Procedure

1. Remove the inlet cover.
2. Remove the slot cover.
3. Unplug the power cable.

   Caution: Do not insert or remove main PWB assembly while machine power is on.
   Doing so may cause damage to the machine and the main PWB.

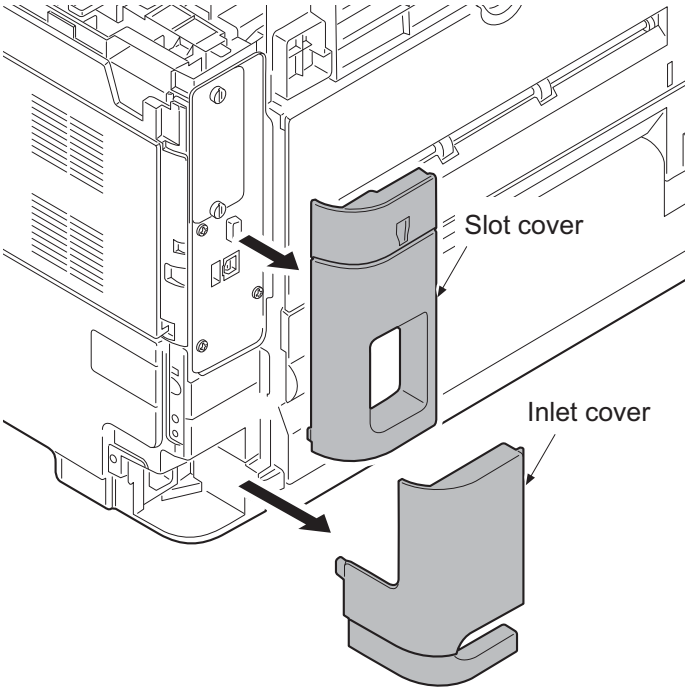

Figure 1-2-22

4. Remove five screws and then remove the main PWB assembly.
5. Aligning the cutouts of the memory module with the matching keys of the socket, carefully plug the memory module into the memory socket until it clicks in place.
6. Then, push down the memory module to secure.
7. Refit the main PWB assembly and the screws.
8. Refit the covers.
9. Plug the printer into a power outlet.
10. Print a status page to check the memory expansion. (See page 1-3-2)
    If memory expansion has been properly performed, information on the installed memory is printed with the total memory capacity has been increased.
    Standard memory capacity 256 MB. *1

    *1: 40 ppm (without Metwork); 128MB

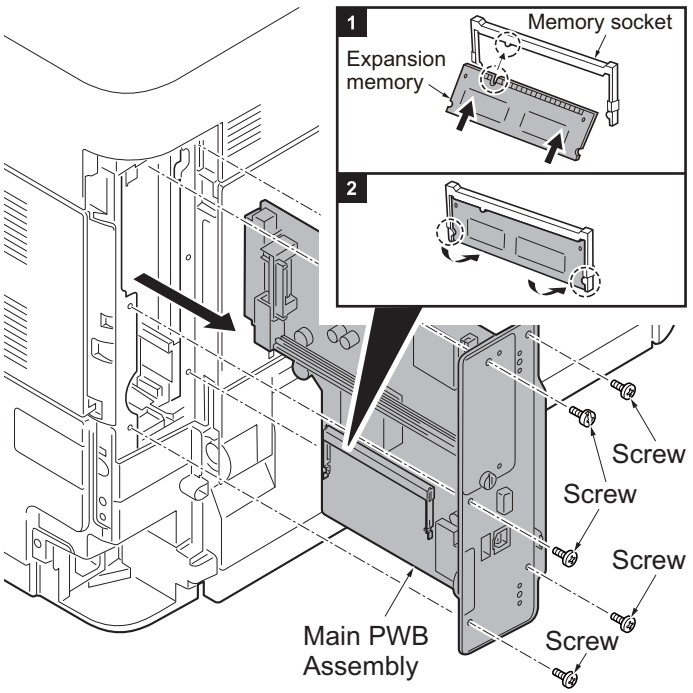

Figure 1-2-23

TONER
www.tonerplus.com.ua

1-2-4 Install the memory card (SD card) (option)

Procedure

1. Remove the main PWB assembly from the machine. (SeePage 1-2-12)
2. SD card is inserted in a SD card slot. Maximum memory capacity 32 GB.
3. Remove the main PWB assmbly and the covers.

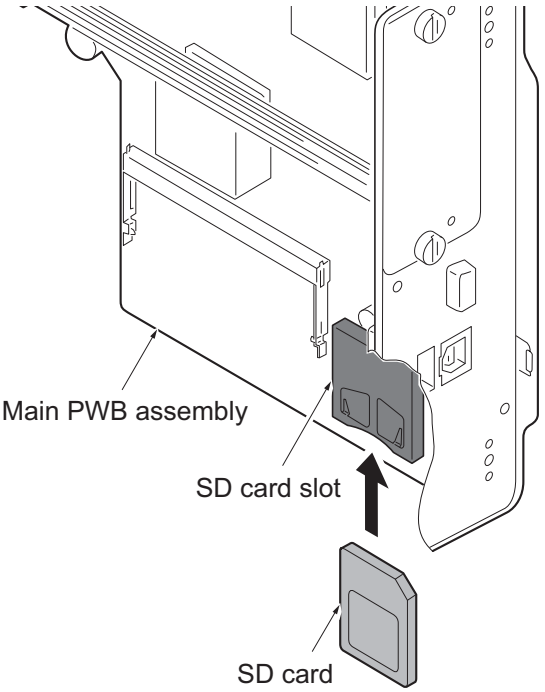

TONER
www.tonerplus.com.ua

1-2-5 Option composition

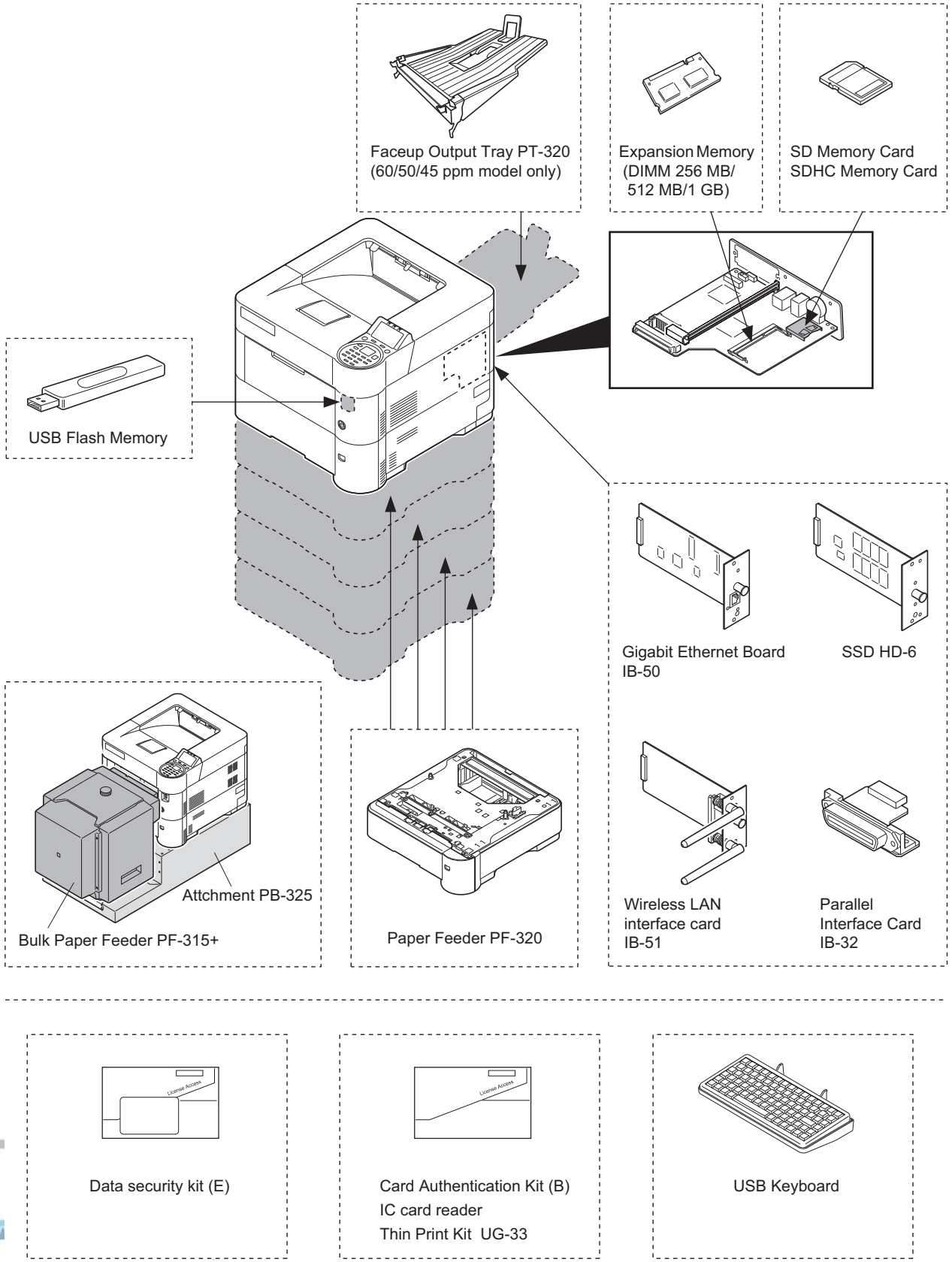

1-3-1 Service mode

The machine is equipped with a maintenance function which can be used to maintain and service the machine.

(1) Executing a service mode

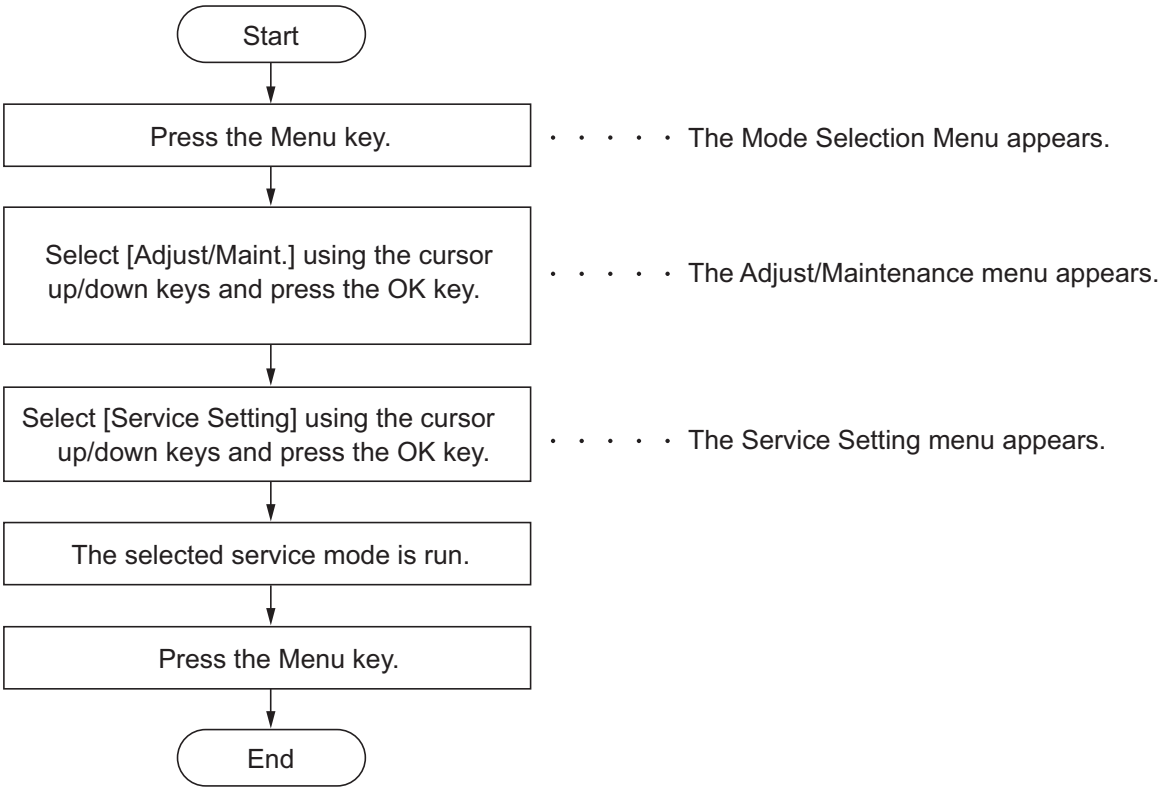

TONER
www.tonerplus.com.ua

(2) Description of service mode

Service items	Description
Service Status	**Printing a status page for service purpose** **Description** Prints a status page for service purpose. The status page includes various settings and service cumulative. **Purpose** To acquire the current printing environmental parameters and cumulative information. **Method** 1. Enter the Service Setting menu. 2. Select [Status Page] using the cursor up/down keys. 3. Press the OK key. 4. Select the [YES] using the left select key. [Accepted] is displayed and two pages will be printed.

TONER
www.tonerplus.com.ua

Service items	Description

Service status page (1)

Service Status Page

Printer

(2) 2012/04/19 16:39

(1) Firmware version 2LV_2000.000.000 2012.04.19 (3) [XXXXXXXX] (4) [XXXXXXXX] (5) [XXXXXXXX]

Controller Information

Memory status

(7)	Standard Size	128.0 KB
(8)	Option Slot	128.0 KB
(9)	Total Size	256.0 KB

Time

(10)	Local Time Zone	+01:00 Tokio
(11)	Date and Time	19/06/2010 16:39
(12)	Time Server	10.183.53.13

Installed Options

(13)	Paper feeder2	Installed
(14)	Paper feeder3	Installed
(15)	Paper feeder4	Not Installed
(16)	Paper feeder5	Not Installed
(17)	Bulk Feeder	Not Installed
(18)	Memory card	Installed
(19)	SSD	Installed
(20)	Card Authentication Kit (B)	Installed
(21)	Security Kit(E)	Installed
	Data Security Kit (E)	
(22)	UG-33	Installed
(23)	USB Keyboard	Connected
(24)	USB Keyboard Type	US-English

(25) **Print Coverage**

(26) Average(%) / Usage Page(A4/Letter Conversion)

K: 1.10 / 1111111.11 PDF mode Y5 00

(27) Last Page (%) 1.00

(28) **FRPO Status**

User Top Margin	A1+A2/100	0.00
User Left Margin	A3+A4/100	0.00

(29) **RP Code**

1234 5678 9012
5678 9012 3456
9012 3456 7890
3456 7890 1234

1 (6) [XXXXXXXXXXXXXXXX]

Figure 1-3-1

TONER
www.tonerplus.com.ua

Service items	Description

Service status page (2)

Service Status Page

Printer 2012/04/19 16:39

Firmware version 2LV_2000.000.000 2012.04.19 [XXXXXXXX] [XXXXXXXX] [XXXXXXXX]

Engine Information

(30) NVRAM Version _1F31225_1F31225
(31) MAC Address 00:C0:EE:D0:01:0D

Send Information

(32) Date and Time 10/06/19 16:39
(33) Address

1/2 **(34) (35)**
(36) 100/100
(37) 0/0/0/0/0/0/0/
(38) 0/0/0/0/0/0/0/
(39) 0/0/0/0/
(40) 0000000/0000000/0000000/0000000/0000000/0000000/0000000/0000000/
0000000/0000000/0000000/0000000/
F00/U00/0/0/0/30/30/70/70/00/00/00/abcde/1/0/1/
(41)(42)(43)(44)(45)(46)(47)(48)(49)(50)(51)(52)(53)(54)(55)(56)
(57) 0000/0000/0000/0000/0000/0000/0000/0000/0000/0000/0000/0000/0000/0000/0000/
0000/0000/0000/0000/0000/0000/0000/0000/0000/0000/
(58) 12345678/11223344/00001234abcd567800001234abcd5678/0123456789012345678901234567890 1/0008/00/07
t/ **(59)**
(60) 00/
0000000000000000000000000000000/0000000000000000000000000000000/ **(61)(62)**
(63) 0000000000000000000000000000000000000000000000000000000000000/
(64) 00000000/00000000/00000000/00000000/00000000/00000000/00000000/00000000/00000000/00000000/00000000/
00000000/00000000/00000000/00000000/00000000/00000000/00000000/00000000/00000000/00000000/00000000/

↓

00000000/00000000/00000000/00000000/00000000/00000000/00000000/00000000/00000000/00000000/00000000/
00000000/00000000/00000000/00000000/00000000/00000000/00000000/00000000/00000000/00000000/00000000/
00000000/00000000/00000000/00000000/00000000/00000000/00000000/00000000/00000000/00000000/00000000/
00000000/00000000/00000000/00000000/00000000/00000000/00000000/00000000/00000000/00000000/00000000/
(65) [ ] [ ] [ ] [ ] [ ] [ ]
[2LV_81BR.001.010] **(66)**
0/3/ **(67)(68)**
(69) 1/1/0 2010 /12/15 12:34:56
1/5/ **(70)(71)**
20/100/1/1/5 **(72)(73)(74)(75)(76)**
(77) 1/2/3/4/5/6/7/8/9/10/11/12/13/14/15/16
(78) 0.00/0.00/0.00/0.00/0.00/0.00/0.00/0.00/0.00/0.00/0.00/0.00/0.00/0.00/0.00/0.00/0.00/0.00/0.00/0.00/
(79) 0.00/0.00/0.00/0.00/0.00/0.00/0.00/0.00/0.00/0.00/0.00/0.00/0.00/0.00/0.00/0.00/0.00/0.00/0.00/0.00/
(80) 0.00/
(81) 0.00/0.00/0.00/0.00/0.00/0.00/0.00/0.00/0.00/0.00/0.00/0.00/0.00/0.00/0.00/0.00/0.00/0.00/0.00/0.00/
0/ **(82)**
ABCD/ABCDEFGHIJ/ **(83)(84)**

2 [XXXXXXXXXXXXXXXX]

Figure 1-3-2

TONER
www.tonerplus.com.ua

Service items	Description
	Detail of service status page

No.	Description	Supplement
(1)	Firmware version	-
(2)	System date	-
(3)	Engine soft version	-
(4)	Engine boot version	-
(5)	Operation panel mask version	-
(6)	Machine serial number	-
(7)	Standard memory size	-
(8)	Optional memory size	-
(9)	Total memory size	-
(10)	Local time zone	-
(11)	Report output date	Day/Month/Year hour:minute
(12)	NTP server name	-
(13)	Presence or absence of the optional paper feeder 1	Installed/Not Installed
(14)	Presence or absence of the optional paper feeder 2	Installed/Not Installed
(15)	Presence or absence of the optional paper feeder 3	Installed/Not Installed
(16)	Presence or absence of the optional paper feeder 4	Installed/Not Installed
(17)	Presence or absence of the optional bulk feeder	Installed/Not Installed
(18)	Presence or absence of the optional memory card	Installed/Not Installed
(19)	Presence or absence of the optional SSD	Installed/Not Installed
(20)	Presence or absence of the optional Card Authentication Kit(B)	Installed/Not Installed/Trial
(21)	Presence or absence of the optional Security Kit(E)	Installed/Not Installed
(22)	Presence or absence of the optional UG-33	Installed/Not Installed
(23)	The connection state of an optional USB Keyboard	Connected/Not Connected
(24)	Displays setting of optional USB Keyboard	US English/US English with Euro/German/French

TO
www.tonerplu

Service items	Description
	Detail of service status page

No.	Description	Supplement
(25)	Page of relation to the A4/Letter	-
(26)	Average coverage for printer	Black
(27)	Coverage on the final output page	-
(28)	FRPO setting	-
(29)	RP Code	Code the engine software version and the date of update. Code the main software version and the date of update. Code the engine software version and the date of the previous update. Code the main software version and the date of the previous update.
(30)	NV RAM version	_ 1F3 1225 _ 1F3 1225 (a) (b) (c) (d) (e) (f) (a) Consistency of the present software version and the database _ (underscore): OK * (Asterisk): NG (b) Database version (c) The oldest time stamp of database version (d) Consistency of the present software version and the ME firmware version _ (underscore): OK * (Asterisk): NG (e) ME firmware version (f) The oldest time stamp of the ME database version Normal if (a) and (d) are underscored, and (b) and (e) are identical with (c) and (f).
(31)	Mac address	-
(32)	The last sent date and time	-
(33)	Transmission address	-
(34)	Destination information	-
(35)	Area information	-
(36)	Margin settings	Top margin/Left margin
(37)	Top offset for each paper source	MP tray/Paper feeder 1/Paper feeder 2/ Paper feeder 3/Paper feeder 4/Duplex/Page rotation
(38)	Left offset for each paper source	MP tray/Paper feeder 1/Paper feeder 2/ Paper feeder 3/Paper feeder 4/Duplex/Page rotation
(39)	Margin/Page length/Page width settings	Top margin integer part/Top margin decimal part/ Left margin integer part/Left margin decimal part/ Page length integer part/Page length decimal part/ Page width integer part/Page width decimal part

TON
www.tonerplu

Service items	Description

No.	Description	Supplement
(40)	Life counter (The first line)	Machine life/MP tray/Cassette/Paper feeder 1/ Paper feeder 2/Paper feeder 3/Paper feeder 4/Duplex
	Life counter (The second line)	Bulk Feeder counter/Drum counter K/ Developer counter K/Maintenance kit counter
(41)	Panel lock information	F00: OFF F01: Partial Lock 1 F02: Partial Lock 2 F03: Partial Lock 3 F04: Full Lock
(42)	USB information	U00: Not installed/U01: Full speed/U02: Hi speed
(43)	Paper handling information	0: Paper source unit select/1: Paper source unit
(44)	Black and white printing double count mode	0: All single counts 3: Folio, Single count, Less than 330 mm (length)
(45)	Billing counting timing	-
(46)	Temperature (machine inside)	-
(47)	Temperature (machine outside)	-
(48)	Relative temperature (machine outside)	-
(49)	Absolute temperature (machine outside)	-
(50)	XLI calibration information	-
(51)	Beam A/BD synchronous fine-tuning value	-
(52)	Beam B/BD synchronous fine-tuning value	-
(53)	Fixed assets number	-
(54)	Job end judgment time-out time	-
(55)	Job end detection mode	-
(56)	PRESCRIBE environmental reset	-
(57)	Media type attributes 1 to 28 (Not used: 18, 19, 20)	Weight settings 0: Light 1: Normal 1 2: Normal 2 3: Normal 3 4: Heavy 1 5: Heavy 2 6: Heavy 3 7: Extra Heavy Fuser settings 0: High 1: Middle 2: Low 3: Vellum Duplex settings 0: Disable 1: Enable

TO
www.tonerplu

Service items	Description

No.	Description	Supplement
(58)	RFID information	Product (OEM/maker) / destination code / a toner name / lot number / toner capacity / toner empty information / number of times of toner refilling
(59)	Toner install mode information	0:OFF t:ON
(60)	Drum status	-
(61)	Drum surface potential	-
(62)	Drum density	-
(63)	LSU light volume distribution	-
(64)	DRT parameter coefficient	-
(65)	Soft version of the optional paper feeder	Paper feeder 1/Paper feeder 2/Paper feeder 3 Paper feeder 4
(66)	Version of the optional message	-
(67)	Altitude	0: Standard 1: High altitude 1 2: High altitude 2
(68)	Charger roller correction	1 to 5
(69)	Data Sanitization details result	-
(70)	Toner Low setting	0:Invalid 1: Effective
(71)	Toner Low detection level	0 to 100(%)
(72)	Number of page that swept out at any time (SP1)	1 to 65535
(73)	Number of page that swept out at instancy (SP2)	1 to 65535
(74)	The practice standard printing rate of development TC (SGE)	0 to 15
(75)	The practice standard printing rate according to area TC (SDR)	0 to15
(76)	The number of times of enforcement of the development TC	-
(77)	The number of times of enforcement according to area	-

TONER
www.tonerplus.com.ua

Service items	Description

No.	Description	Supplement
(78)	The last page printing rate of each area	0.00 to 100.00(%)
(79)	The average printing rate of each area	0.00 to 100.00(%)
(80)	The average printing rate for the 1000 past	0.00 to 100.00(%)
(81)	The average printing rate for the 1000 past of each area	0.00 to 100.00(%)
(82)	ErP application	0: ErP Un-Applying mode 1: ErP Application mode
(83)	Drum ID	-
(84)	Drum serial number	-

Code conversion

A	B	C	D	E	F	G	H	I	J
0	1	2	3	4	5	6	7	8	9

TONER
www.tonerplus.com.ua

Service items	Description
Network Status	**Printing a status page for network** **Description** Prints a status page for network. Execution is possible only the model with network. **Purpose** To acquire the detailed network setting information. **Method** 1. Enter the Service Setting menu. 2. Select [Network Status Page] using the cursor up/down keys. 3. Press the OK key. 4. Select the [YES] using the left select key. [Accepted] is displayed and Network status page will be printed.
Test Page	**Printing a test page** **Description** The test page is printed with halftones. **Purpose** To check the activation of the developer and drum units. **Method** 1. Enter the Service Setting menu. 2. Select [Test Page] using the cursor up/down keys. 3. Press the OK key. 4. Select the [YES] using the left select key. [Accepted] is displayed and Test page will be printed. 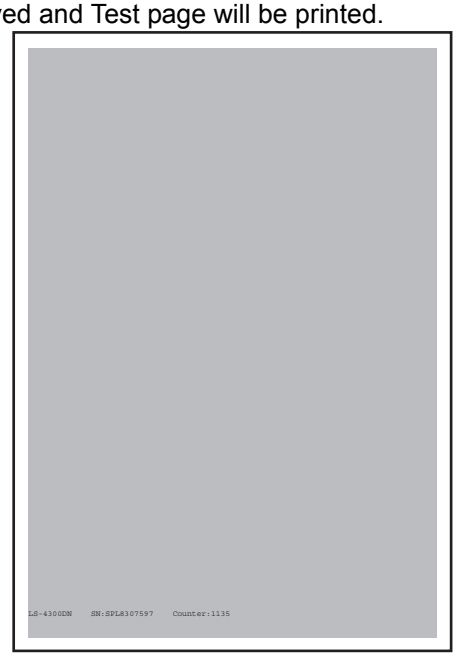 **Figure 1-3-3**

TONER
www.tonerplus.com.ua

Service items	Description
Maintenance	**Counter reset for the maintenance kit** **Description** The "Install MK" message means that maintenance kit should be replaced at fixed pages of printing. The interval counter must be manually reset using this service item. Maintenance kit MK-3102 (for 120 V) (40 ppm) :300,000 images Maintenance kit MK-3132 (for 120 V) (60/50/45 ppm) :500,000 images Maintenance kit MK-3100 (for 230 V) (40 ppm) :300,000 images Maintenance kit MK-3130 (for 230 V) (60/50/45 ppm) :500,000 images Maintenance kit includes the following units: Drum unit Developer unit Transfer roller assembly Fuser unit Paper feed roller assembly Retard roller assembly **Purpose** To reset the life counter for maintenance kit. **Method** Drum unit (see page 1-5-15) Developer unit (see page 1-5-13) Transfer roller assembly (see page 1-5-16) Fuser unit (see page 1-5-19) Paper feed roller assembly (see page 1-5-8) Retard roller assembly (see page 1-5-8) **Method** 1. Enter the Service Setting menu. 2. Select [Maintenance] using the cursor up/down keys. 3. Press the OK key. 4. Select the [YES] using the left select key. [Completed] is displayed. The counter for each component is reset immediately. **Note:** Occurrences of resetting the maintenance kits are recorded on the service status page or event log in number of pages at which the maintenance kit was replaced (see page 1-3-2, page 1-3-17). This may be used to determine the possibility that the counter was errorneously or unintentionally reset.

TONER
www.tonerplus.com.ua

Service items	Description
New Developer	**Initializing the developing unit (toner install mode)** **Description** The new developing unit is shipped from the factory with no toner contained. The developing unit can be automatically replete with toner when a toner container is installed onto it and the printer is turned on. However, because the toner reservoir in the developing unit has a large capacity, it requires a lengthy period of time until a substantial amount of toner has been fed to get the printer ready. (A new developing unit needs approximately 200 g for triggering the sensor inside.) **Purpose** To execute when the developing unit has been replaced. **Method** 1. Enter the Service Setting menu. 2. Select [New Developer] using the cursor up/down keys. 3. Press the OK key. 4. Select the [YES] using the left select key. [Accepted] is displayed. The toner installation is performed when power is turned on and off. NOTE: Toner supply is stopped when toner installation mode is performing.
Auto Drum Refresh	**Automatic drum surface refreshing** **Description** The drum surface refreshing operation is normally performed when the power is turned on to the printer or during warm-up when the printer is recovering from the Sleep mode, but even then only at those times that the temperature/humidity sensor detects the drum surface to be in a state of dew condensation. By using this mode, it is possible to force the drum surface refreshing operation to be performed automatically at a predetermined period of time, regardless of the status detected by the temperature/humidity sensor. **Purpose** To prevent bleeding of the output image when the printer's operating environment is one of high humidity. **Method** 1. Enter the Service Setting menu. 2. Select [Auto Drum Refresh] using the cursor up/down keys. 3. Press the OK key. 4. Select the desire mode (Off/Short/Standard/Long) using the cursor up/down keys. 5. Press the OK key. The new value is set.

TONER
www.tonerplus.com.ua

Service items	Description
Drum	**Drum surface refreshing** **Description** Rotates the drum approximately 3 minutes with toner lightly on the overall drum using the high-voltage output control. The cleaning blade in the drum unit scrapes toner off the drum surface to clean it. **Purpose** To clean the drum surface when image failure occurs due to the drum. This mode is effective when dew condensation on the drum occurs. **Method** 1. Enter the Service Setting menu. 2. Select [Drum] using the cursor up/down keys. 3. Press the OK key. 4. Select the [YES] using the left select key. Drum surface refreshing will start.
Write Data	**Write data (USB memory data write)** **Description** To write data into a USB memory. Execution is possible only when a USB memory is detected. **Method** Install the USB memory before attempting to write data. 1. Enter the Service Setting menu. 2. Select [Write Data] using the cursor up/down keys. 3. Press the OK key. 4. Select the [YES] using the left select key. 5. [Data waiting] is displayed and the printer waits for data to be written. 6. When the data is sent, [Processing] appears and the data is written to USB memory. When data writing ends, the display returns to [Ready].

TONER
www.tonerplus.com.ua

Service items	Description
Altitude adj.	**Setting altitude adjustment** **Description** Sets the altitude adjustment mode. **Purpose** Used when print quality deteriorates in an installation at the altitude of 1,500 meters or higher. **Method** 1. Enter the Service Setting menu. 2. Select [Altitude Adj.] using the cursor up/down keys. 3. Press the OK key. 4. Select [Normal], [High 1] or [High 2] using the cursor up/down keys. 5. Press the OK key. The setting is set.
MC	**Setting main charger output** **Description** Sets the main charger output. Execution is possible only when the altitude adjustment mode is set to [Normal]. **Purpose** Execute when the image density declines, dirt of a background or an offset has occurred. **Method** 1. Enter the Service Setting menu. 2. Select [MC] using the cursor up/down keys. 3. Press the OK key. 4. Select [1] to [5] using the cursor up/down keys. 5. Press the OK key. The setting is set.

TONER
www.tonerplus.com.ua

(3) Printing an event log

Service items	Description
Printing an event log	**Printing an event log (EVENT LOG)** **Description** Prints a history list of occurrences of paper jam, self-diagnostics, toner replacements, etc. **Purpose** To allow machine malfunction analysis based on the frequency of paper misfeeds, self diagnostic errors and replacements. **Method** 1. Connect the USB or network cable between machine and PC (network). 2. Remove the inlet cover and connect the power cord. 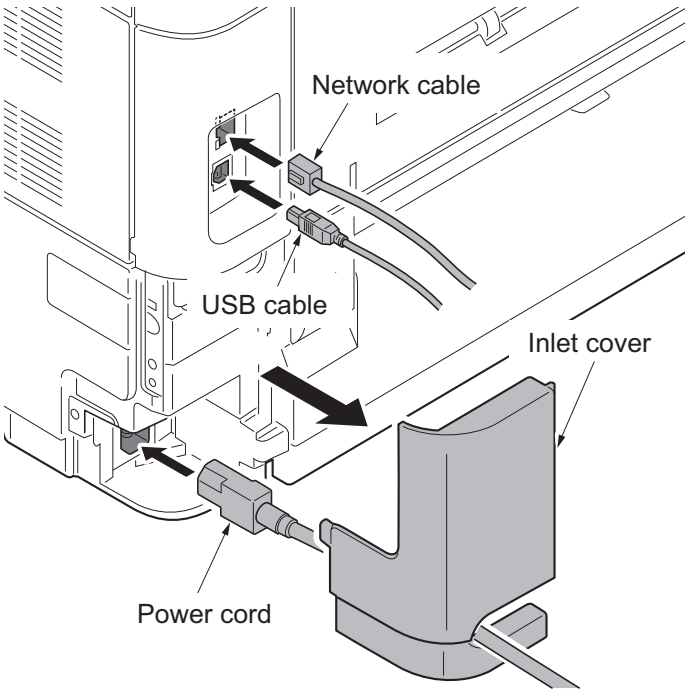 **Figure 1-3-4** 3. Refit the inlet cover. 4. Turn the main power switch on. Make sure the machine is ready. 5. Send the following PRESCRIBE command sequence from the PC to the machine. !R!KCFG"ELOG";EXIT; 6. A sheet of event log will be printed. **Completion**

TONER
www.tonerplus.com.ua

Service items	Description
Printing an event log	**Remarks: Details of configurations (See above 5.)** **Notes on Connecting to USB** (1)Save the PRESCRIBE commands above as a text file in the PC. (2)Select the Sharing tab of the printer properties and share the printer. (3)Select a USB port in the Port tab. (Specify the printer name for sharing.) (4)From the DOS Prompt, execute the following command line: copy file-name\\computer-name\shared-printe File-name should be the name of the file that was saved in step 1. **Notes on connecting via network (using FTP protocol)** (1)Save the PRESCRIBE commands above as a text file in the PC. (2)From the DOS Prompt, execute the following command line: ftp printer-IP-address Do not specify user name and password. (3)From the DOS Prompt, execute the following command: put file-name File-name should be the name of the file that was saved in step 1.

TONER
www.tonerplus.com.ua

Service items	Description

Event log

Event Log

Printer

(2) 19/June/2010 08:40

(1) Firmware version 2LV_2000.000.000 2010.06.19

(3) [XXXXXXXX] (4) [XXXXXXXX] (5) [XXXXXXXX]

(7) Paper Jam Log

#	Count.	Event Descriprions
16	1876543	0501.01.08.01.01
15	166554	4020.01.08.01.01
14	4988	0501.01.08.01.01
13	4988	4020.01.08.01.01
12	4988	0501.01.08.01.01
11	4988	4020.01.08.01.01
10	1103	0501.01.08.01.01
9	1103	4020.01.08.01.01
8	1103	0501.01.08.01.01
7	1103	4020.01.08.01.01
6	1027	0501.01.08.01.01
5	1027	4020.01.08.01.01
4	1027	0501.01.08.01.01
3	1027	4020.01.08.01.01
2	406	0501.01.08.01.01
1	36	4020.01.08.01.01

0501.01.08.01.01
(a) (b) (c) (d) (e)

(11) Counter Log

(f)

J0100: 0	J4201: 0
J0105: 0	J4202: 0
J0106: 0	J4203: 0
J0110: 0	J4208: 0
J0111: 0	J4209: 0
J0512: 0	.
J0513: 0	.
J0518: 0	.
J0519: 0	.
J1020: 0	.
.	.

(g)

C0030: 1
C0070: 1
C0100: 1
C0120: 1
C0130: 1
C2100: 1
C2200: 1
C2300: 1
C2330: 1
C2340: 1
.

(h)

T00: 1
T01: 1

(8) Service Call Log

#	Count.	Service Code
5	5295	01.6000
4	2099	01.2100
3	1054	01.4000
2	809	01.6000
1	30	01.2100

(9) Maintenance Log

#	Count.	Item
3	3454	01.01
2	417	01.01
1	34	01.01

(10) Unknown toner Log

#	Count.	Item
3	3454	01.00
2	406	01.00
1	32	01.00

(6) [XXXXXXXXXXXXXXXX]

Figure 1-3-5

Detail of event log

No.	Items	Description
(1)	System version	
(2)	System date	
(3)	Engine soft version	
(4)	Engine boot version	
(5)	Operation panel mask version	
(6)	Machine serial number	

www.tonerplu

Service items	Description

No.	Items	Description		
(7)	Paper Jam Log	#	Count.	Event
		Remembers 1 to 16 of occurrence. If the occurrence of the previous paper jam is less than 16, all of the paper jams are logged. When the occurrence excesseds 16, the oldest occurrence is removed.	The total page count at the time of the paper jam.	Log code (hexadecimal, 5 categories) (a) Cause of a paper jam (b) Paper source (c) Paper size (d) Paper type (e) Paper eject
		(a) Cause of paper jam (Hexadecimal)		
		Refer to page 1-4-1 for paper jam location 0000: Initial jam 0100: Secondary paper feed request time out 0101: Waiting for process package to be ready 0104: Waiting for conveying package to be ready 0106: Paper feeding request for duplex printing time out 0107: Waiting for fuser package to be ready 0120: Receiving a duplex paper feeding request while paper is empty 0121: Exceeding number of duplex pages circulated 0501: No paper feed of jam (cassette 1) 0502: No paper feed of jam (cassette 2) 0503: No paper feed of jam (cassette 3) 0504: No paper feed of jam (cassette 4) 0505: No paper feed of jam (cassette 5) 0508: No paper feed of jam (duplex section) 0509: No paper feed of jam (MP tray) 0511: Multiple sheets of jam (cassette 1) 0512: Multiple sheets of jam (cassette 2) 0513: Multiple sheets of jam (cassette 3) 0514: Multiple sheets of jam (cassette 4) 0515: Multiple sheets of jam (cassette 5) 0518: Multiple sheets of jam (duplex section) 0519: Multiple sheets of jam (MP tray) 0529: No paper feed of jam (bulk feeder) 0539: Multiple sheets of jam (bulk feeder) 1403: PF feed sensor 1 non arrival jam (cassette 3) 1404: PF feed sensor 1 non arrival jam (cassette 4) 1405: PF feed sensor 1 non arrival jam (cassette 5) 1413: PF feed sensor 1 stay jam (cassette 3) 1414: PF feed sensor 1 stay jam (cassette 4) 1415: PF feed sensor 1 stay jam (cassette 5)		

www.tonerplus.com.ua

Service items	Description

No.	Items	Description
(7) cont.	Paper Jam Log	1604: PF feed sensor 2 non arrival jam (cassette 4) 1605: PF feed sensor 2 non arrival jam (cassette 5) 1614: PF feed sensor 2 stay jam (cassette 4) 1615: PF feed sensor 2 stay jam (cassette 5) 1805: PF feed sensor 3 non arrival jam (cassette 5) 1815: PF feed sensor 3 stay jam (cassette 5) 4002: Registration sensor 2 non arrival jam (cassette 2) 4003: Registration sensor 2 non arrival jam (cassette 3) 4004: Registration sensor 2 non arrival jam (cassette 4) 4005: Registration sensor 2 non arrival jam (cassette 5) 4012: Registration sensor 2 stay jam (cassette 2) 4013: Registration sensor 2 stay jam (cassette 3) 4014: Registration sensor 2 stay jam (cassette 4) 4015: Registration sensor 2 stay jam (cassette 5) 4101: Registration sensor 3 non arrival jam (cassette 1) 4102: Registration sensor 3 non arrival jam (cassette 2) 4103: Registration sensor 3 non arrival jam (cassette 3) 4104: Registration sensor 3 non arrival jam (cassette 4) 4105: Registration sensor 3 non arrival jam (cassette 5) 4108: Registration sensor 3 non arrival jam (duplex section) 4109: Registration sensor 3 non arrival jam (MP tray) 4111: Registration sensor 3 stay jam (cassette 1) 4112: Registration sensor 3 stay jam (cassette 2) 4113: Registration sensor 3 stay jam (cassette 3) 4114: Registration sensor 3 stay jam (cassette 4) 4115: Registration sensor 3 stay jam (cassette 5) 4118: Registration sensor 3 stay jam (duplex section) 4119: Registration sensor 3 stay jam (MP tray) 4201: Eject full sensor non arrival jam (cassette 1) 4202: Eject full sensor non arrival jam (cassette 2) 4203: Eject full sensor non arrival jam (cassette 3) 4204: Eject full sensor non arrival jam (cassette 4) 4205: Eject full sensor non arrival jam (cassette 5) 4208: Eject full sensor non arrival jam (duplex section) 4209: Eject full sensor non arrival jam (MP tray) 4211: Eject full sensor stay jam (cassette 1) 4212: Eject full sensor stay jam (cassette 2) 4213: Eject full sensor stay jam (cassette 3) 4214: Eject full sensor stay jam (cassette 4) 4215: Eject full sensor stay jam (cassette 5) 4218: Eject full sensor stay jam (duplex section) 4219: Eject full sensor stay jam (MP tray) 4301: Duplex sensor 1 non arrival jam (cassette 1) 4302: Duplex sensor 1 non arrival jam (cassette 2) 4303: Duplex sensor 1 non arrival jam (cassette 3) 4304: Duplex sensor 1 non arrival jam (cassette 4) 4305: Duplex sensor 1 non arrival jam (cassette 5) 4309: Duplex sensor 1 non arrival jam (MP tray or bulk feeder)

TO
www.tonerplu

Service items	Description

No.	Items	Description
(7) cont.	Paper Jam Log	4401: Duplex sensor 2 non arrival jam (cassette 1) 4402: Duplex sensor 2 non arrival jam (cassette 2) 4403: Duplex sensor 2 non arrival jam (cassette 3) 4404: Duplex sensor 2 non arrival jam (cassette 4) 4405: Duplex sensor 2 non arrival jam (cassette 5) 4409: Duplex sensor 2 non arrival jam (MP tray or bulk feeder) 4418: Duplex sensor 2 stay jam (duplex section)
		(b) Detail of paper source (Hexadecimal)
		00: MP tray 01: Cassette 1 02: Cassette 2 (paper feeder 1) 03: Cassette 3 (paper feeder 2) 04: Cassette 4 (paper feeder 3) 05 to 09: Reserved
		(c) Detail of paper size (Hexadecimal)
		00: (Not specified) 01: Monarch 02: Business 03: International DL 04: International C5 05: Executive 06: Letter-R 86: Letter-E 07: Legal 08: A4R 88: A4E 09: B5R 89: B5E 0A: A3 0B: B4 0C: Ledger 0D: A5R 0E: A6 0F: B6 10: Commercial #9 11: Commercial #6 12: ISO B5 13: Custom size 1E: C4 1F: Postcard 20: Reply-paid postcard 21: Oficio II 22: Special 1 23: Special 2 24: A3 wide 25: Ledger wide 26: Full bleed paper (12 x 8) 27: 8K 28: 16K-R A8: 16K-E 32: Statement-R B2: Statement-E 33: Folio 34: Western type 2 35: Western type 4
		(d) Detail of paper type (Hexadecimal)
		01: Plain 02: Transparency 03: Preprinted 04: Labels 05: Bond 06: Recycled 07: Vellum 08: Rough 09: Letterhead 0A: Color 0B: Prepunched 0C: Envelope 0D: Cardstock 0E: Coated 0F: 2nd side 10: Thick 11: High quality 15: Custom 1 16: Custom 2 17: Custom 3 18: Custom 4 19: Custom 5 1A: Custom 6 1B: Custom 7 1C: Custom 8
		(e) Detail of paper eject location (Hexadecimal)
		01: Face down (FD)

www.tonerplus.com.ua

Service items	Description

No.	Items	Description		
(8)	Service Call Log	#	Count.	Service Code
		Remembers 1 to 8 of occurrence of self diagnostics error. If the occurrence of the previous diagnostics error is less than 8, all of the diagnostics errors are logged.	The total page count at the time of the self diagnostics error.	Self diagnostic error code (See page 1-4-8) Example: 01.6000 01: Self diagnostic error 6000: Self diagnostic error code number
(9)	Maintenance Log	#	Count.	item
		Remembers 1 to 8 of occurrence of replacement. If the occurrence of the previous replacement of toner container is less than 8, all of the occurrences of replacement are logged.	The total page count at the time of the replacement of the toner container.	Code of maintenance replacing item (1 byte, 2 categories) First byte (Replacing item) 01: Toner container Second byte (Type of replacing item) 00: Black First byte (Replacing item) 02: Maintenance kit Second byte (Type of replacing item) 01: MK-3100/3102 (40 ppm model only) MK-3130/3132 (60/50/45 ppm model only)
(10)	Unknown Toner Log	#	Count.	item
		Remembers 1 to 5 of occurrence of unknown toner detection. If the occurrence of the previous unknown toner detection is less than 5, all of the unknown toner detection are logged.	The total page count at the time of the toner empty error with using an unknown toner container.	Unknown toner log code (1 byte, 2 categories) First byte 01: Toner container (Fixed) Second byte 00: Black

TONER
www.tonerplus.com.ua

Service items	Description

No.	Items	Description		
(11)	Counter Log Comprised of three log counters including paper jams, self diagnostics errors, and replacement of the toner container.	(f) Paper jam	(g) Self diagnostic error	(h) Maintenance item replacing
		Indicates the log counter of paper jams depending on location. Refer to Paper Jam Log. All instances including those are not occurred are displayed.	Indicates the log counter of self diagnostics errors depending on cause. (See page 1-4-8) Example: C6000: 4 Self diagnostics error 6000 has happened four times.	Indicates the log counter depending on the maintenance item for maintenance. T: Toner container 00: Black M: Maintenance kit 01: MK-3100/3102 (40 ppm model only) MK-3130/3132 (60/50/45 ppm model only) Example: T00: 1 The toner container has been replaced once.

TONER
www.tonerplus.com.ua

1-4-1 Paper misfeed detection

(1) Paper misfeed indication

When a paper misfeed occurs, the machine immediately stops printing and displays the paper misfeed message on the operation panel. To remove paper misfeed in the machine, pull out the cassette, open the front cover or the rear cover.

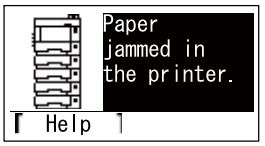

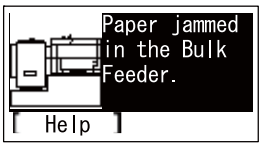

(2) Paper misfeed detection condition

(2-1) PF-320 (500 sheets Paper feeder)

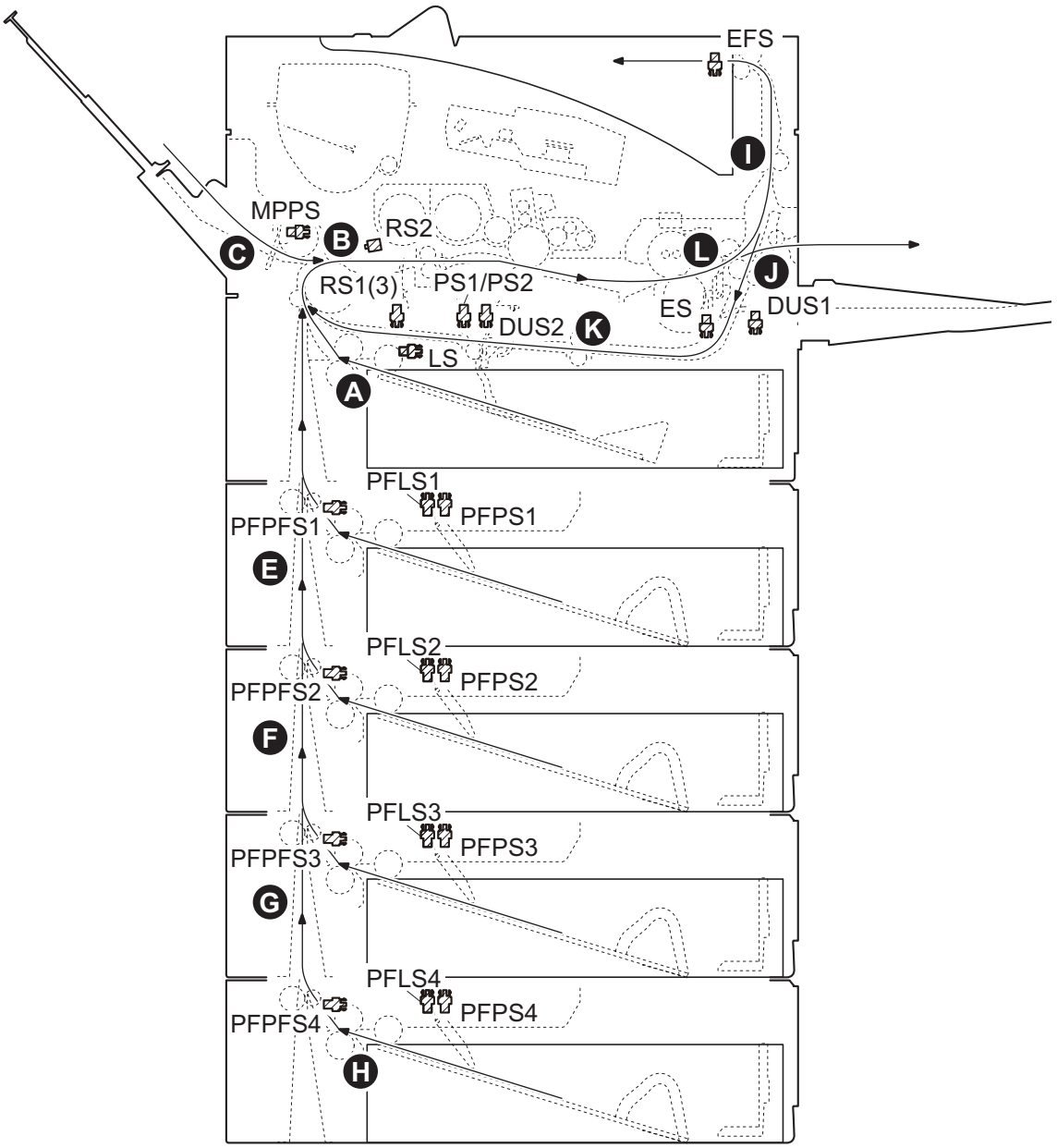

Figure 1-4-1 Paper jam location

(2-2) PF-315+ (Bulk Paper Feeder)

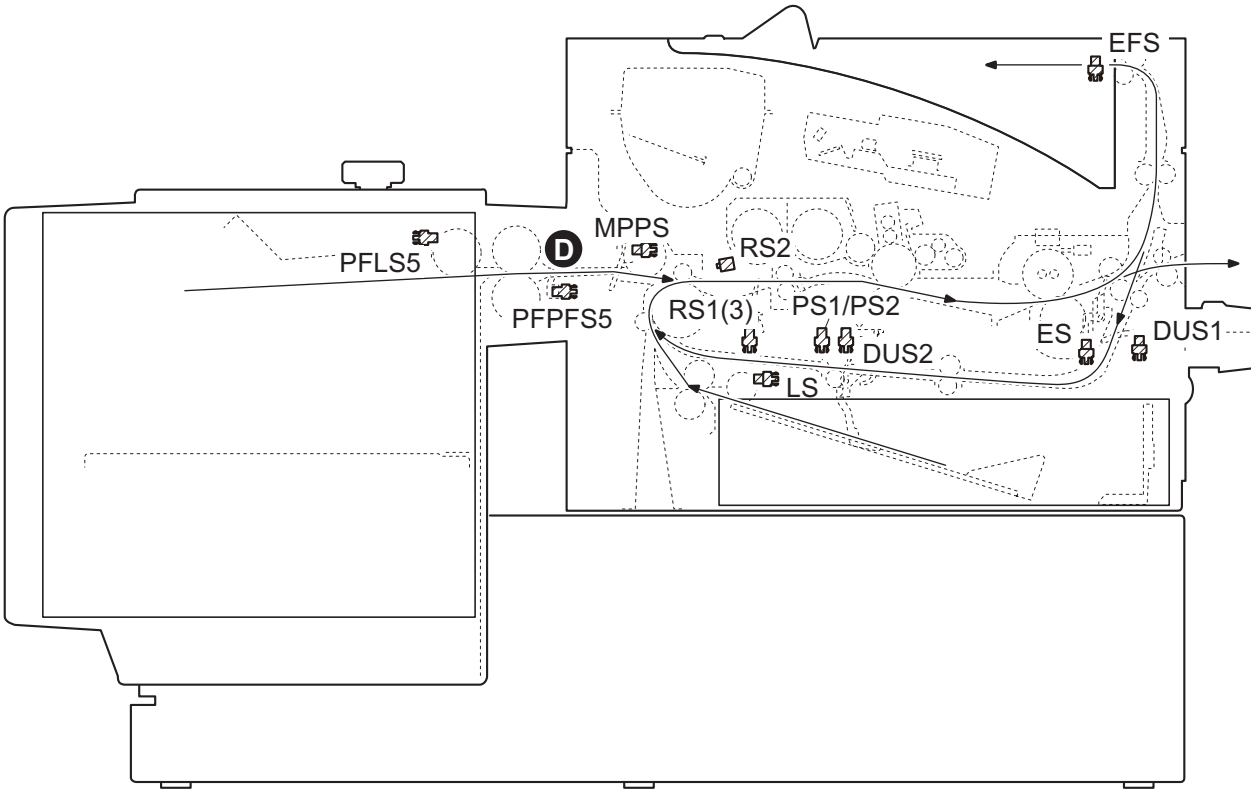

Figure 1-4-2 Paper jam location

(A)Misfeed in cassette1
(B)Misfeed in paper feed section
(C)Misfeed in MP tray
(D)Misfeed in bulk paper feeder (Option)
(E)Misfeed in cassette2 (Option)
(F)Misfeed in cassette3 (Option)
(G)Misfeed in cassette4 (Option)
(H)Misfeed in cassette5 (Option)
(I)Misfeed in exit conveying section
(J)Misfeed in rear cover section
(K)Misfeed in duplex conveying section
(L)Misfeed in fuser section

TONER
www.tonerplus.com.ua

Code	Contents	Conditions	Jam location*
0000	Initial jam	The power is turned on when a sensor in the conveying system is on.	-
0100	Secondary paper feed request time out	Secondary paper feed request given by the controller is unreachable.	-
0101	Waiting for process package to be ready	Process package won't be ready.	-
0104	Waiting for conveying package to be ready	Conveying package won't be ready.	-
0106	Paper feeding request for duplex printing time out	Paper feeding request for duplex printing given by the controller is unreachable.	-
0107	Waiting for fuser package to be ready	Fuser package won't be ready.	-
0120	Receiving a duplex paper feeding request while paper is empty	Paper feed request was received from the duplex section despite the absence of paper in the duplex section.	-
0121	Exceeding number of duplex pages circulated	The controller issued the duplex section a request for more pages than the duplex print cycle contains.	-
0501	No paper feed of jam	The registration sensor 2 (RS2) does not turn on during paper feed from cassette 1.	A
0502		PF feed sensor 1 (PFPFS1) does not turn on during paper feed from cassette 2.	E
0503		PF feed sensor 2 (PFPFS2) does not turn on during paper feed from cassette 3.	F
0504		PF feed sensor 3 (PFPFS3) does not turn on during paper feed from cassette 4.	G
0505		PF feed sensor 4 (PFPFS4) does not turn on during paper feed from cassette 5.	H
0508		The registration sensor 2 (RS2) does not turn on during paper feed from duplex section.	B
0509		The registration sensor 2 (RS2) does not turn on during paper feed from MP tray.	C

TONER
www.tonerplus.com.ua

*: Refer to figure 1-4-1 for paper jam location (see page 1-4-1).

Code	Contents	Conditions	Jam location*
0511	Multiple sheets of jam	The registration sensor 2 (RS2) does not turn off during paper feed from cassette 1.	B
0512		PF feed sensor 1 (PFPFS1) does not turn off during paper feed from cassette 2.	B
0513		PF feed sensor 2 (PFPFS2) does not turn off during paper feed from cassette 3.	B
0514		PF feed sensor 3 (PFPFS3) does not turn off during paper feed from cassette 4.	B
0515		PF feed sensor 4 (PFPFS4) does not turn off during paper feed from cassette 5.	B
0518		The registration sensor 2 (RS2) does not turn off during paper feed from duplex section.	B
0519		The registration sensor 2 (RS2) does not turn off during paper feed from MP tray.	B
0529	No paper feed of jam (Bulk feeder)	The registration sensor 2 (RS2) does not turn on during paper feed from bulk feeder.	D
0539	Multiple sheets of jam (Bulk feeder)	The registration sensor 2 (RS2) does not turn off during paper feed from bulk feeder.	B
1403	PF feed sensor 1 non arrival jam	PF feed sensor 1 (PFPFS1) does not turn on during paper feed from cassette 3.	E
1404		PF feed sensor 1 (PFPFS1) does not turn on during paper feed from cassette 4.	E
1405		PF feed sensor 1 (PFPFS1) does not turn on during paper feed from cassette 5.	E
1413	PF feed sensor 1 stay jam	PF feed sensor 1 (PFPFS1) does not turn off during paper feed from cassette 3.	E
1414		PF feed sensor 1 (PFPFS1) does not turn off during paper feed from cassette 4.	E
1415		PF feed sensor 1 (PFPFS1) does not turn off during paper feed from cassette 5.	E
1604	PF feed sensor 2 non arrival jam	PF feed sensor 2 (PFPFS2) does not turn on during paper feed from cassette 4.	F
1605		PF feed sensor 2 (PFPFS2) does not turn on during paper feed from cassette 5.	F
1614	PF feed sensor 2 stay jam	PF feed sensor 2 (PFPFS2) does not turn off during paper feed from cassette 4.	F
1615		PF feed sensor 2 (PFPFS2) does not turn off during paper feed from cassette 5.	F
1805	PF feed sensor 3 non arrival jam	PF feed sensor 3 (PFPFS3) does not turn on during paper feed from cassette 5.	G
1815	PF feed sensor 3 stay jam	PF feed sensor 3 (PFPFS3) does not turn off during paper feed from cassette 5.	G

*: Refer to figure 1-4-1 for paper jam location (see page 1-4-1).

TONER www.tonerplus.com.sg

Code	Contents	Conditions	Jam location*
4002	Registration sensor 2 non arrival jam	The registration sensor 2 (RS2) does not turn on during paper feed from cassette 2.	B
4003		The registration sensor 2 (RS2) does not turn on during paper feed from cassette 3.	B
4004		The registration sensor 2 (RS2) does not turn on during paper feed from cassette 4.	B
4005		The registration sensor 2 (RS2) does not turn on during paper feed from cassette 5.	B
4012	Registration sensor 2 stay jam	The registration sensor 2 (RS2) does not turn off during paper feed from cassette 2.	B
4013		The registration sensor 2 (RS2) does not turn off during paper feed from cassette 3.	B
4014		The registration sensor 2 (RS2) does not turn off during paper feed from cassette 4.	B
4015		The registration sensor 2 (RS2) does not turn off during paper feed from cassette 5.	B
4101	Registration sensor 3 non arrival jam	The registration sensor 3 (RS3) does not turn on during paper feed from cassette 1.	B
4102		The registration sensor 3 (RS3) does not turn on during paper feed from cassette 2.	B
4103		The registration sensor 3 (RS3) does not turn on during paper feed from cassette 3.	B
4104		The registration sensor 3 (RS3) does not turn on during paper feed from cassette 4.	B
4105		The registration sensor 3 (RS3) does not turn on during paper feed from cassette 5.	B
4108		The registration sensor 3 (RS3) does not turn on during paper feed from duplex section.	B
4109		The registration sensor 3 (RS3) does not turn on during paper feed from MP tray.	B

TONER
www.tonerplus.com.ua

*: Refer to figure 1-4-1 for paper jam location (see page 1-4-1).

Code	Contents	Conditions	Jam location*
4111	Registration sensor 3 stay jam	The registration sensor 3 (RS3) does not turn off during paper feed from cassette 1.	B
4112		The registration sensor 3 (RS3) does not turn off during paper feed from cassette 2.	B
4113		The registration sensor 3 (RS3) does not turn off during paper feed from cassette 3.	B
4114		The registration sensor 3 (RS3) does not turn off during paper feed from cassette 4.	B
4115		The registration sensor 3 (RS3) does not turn off during paper feed from cassette 5.	B
4118		The registration sensor 3 (RS3) does not turn off during paper feed from duplex section.	B
4119		The registration sensor 3 (RS3) does not turn off during paper feed from MP tray.	B
4201	Ejetct sensor non arrival jam	The eject sensor (ES) does not turn on during paper feed from cassette 1.	I
4202		The eject sensor (ES) does not turn on during paper feed from cassette 2.	I
4203		The eject sensor (ES) does not turn on during paper feed from cassette 3.	I
4204		The eject sensor (ES) does not turn on during paper feed from cassette 4.	I
4205		The eject sensor (ES) does not turn on during paper feed from cassette 5.	I
4208		The eject sensor (ES) does not turn on during paper feed from duplex section.	I
4209		The eject sensor (ES) does not turn on during paper feed from MP tray.	I

TONER
www.tonerplus.com.ua

*: Refer to figure 1-4-1 for paper jam location (see page 1-4-1).

Code	Contents	Conditions	Jam location*
4211	Ejetct sensor stay jam	The eject sensor (ES) does not turn off during paper feed from cassette 1.	I or L
4212		The eject sensor (ES) does not turn off during paper feed from cassette 2.	I or L
4213		The eject sensor (ES) does not turn off during paper feed from cassette 3.	I or L
4214		The eject sensor (ES) does not turn off during paper feed from cassette 4.	I or L
4215		The eject sensor (ES) does not turn off during paper feed from cassette 5.	I or L
4218		The eject sensor (ES) does not turn off during paper feed from duplex section.	I or L
4219		The eject sensor (ES) does not turn off during paper feed from MP tray.	I or L
4301	Duplex sensor 1 non arrival jam	The duplex sensor 1 (DUS1) does not turn on during paper feed from cassette 1.	J
4302		The duplex sensor 1 (DUS1) does not turn on during paper feed from cassette 2.	J
4303		The duplex sensor 1 (DUS1) does not turn on during paper feed from cassette 3.	J
4304		The duplex sensor 1 (DUS1) does not turn on during paper feed from cassette 4.	J
4305		The duplex sensor 1 (DUS1) does not turn on during paper feed from cassette 5.	J
4309		The duplex sensor 1 (DUS1) does not turn on during paper feed from MP tray or bulk feeder.	J
4401	Duplex sensor 2 non arrival jam	The duplex sensor 2 (DUS2) does not turn on during paper feed from cassette 1.	K
4402		The duplex sensor 2 (DUS2) does not turn on during paper feed from cassette 2.	K
4403		The duplex sensor 2 (DUS2) does not turn on during paper feed from cassette 3.	K
4404		The duplex sensor 2 (DUS2) does not turn on during paper feed from cassette 4.	K
4405		The duplex sensor 2 (DUS2) does not turn on during paper feed from cassette 5.	K
4409		The duplex sensor 2 (DUS2) does not turn on during paper feed from MP tray or bulk feeder.	K
4418	Duplex sensor 2 stay jam	The duplex sensor 2 (DUS2) does not turn off during paper feed from duplex section.	K

*: Refer to figure 1-4-1 for paper jam location (see page 1-4-1).

TONER
www.tonerplus.com.ua

1-4-2 Self-diagnostic function

(1) Self-diagnostic function

This machine is equipped with self-diagnostic function. When a problem is detected, the machine stops printing and display an error message on the operation panel. An error message consists of a message prompting a contact to service personnel and a four-digit error code indicating the type of the error.

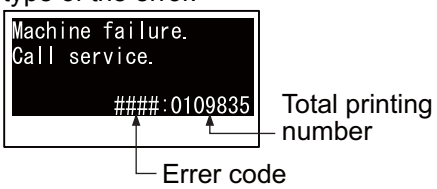

(2) Self diagnostic codes

If the part causing the problem was not supplied, use the unit including the part for replacement.

Code	Contents	Causes	Check procedures/ corrective measures
0100	**Backup memory device error**	Defective flash memory.	Replace the main PWB and check for correct operation (see page 1-5-22).
		Defective main PWB.	
0120	**MAC address data error** For data in which the MAC address is invalid.	Defective flash memory.	Replace the main PWB and check for correct operation (see page 1-5-22).
		Defective main PWB.	Replace the main PWB and check for correct operation (see page 1-5-22).
0130	**Backup memory read/write error (main PWB)**	Defective flash memory.	Replace the main PWB and check for correct operation (see page 1-5-22).
		Defective main PWB.	
0140	**Backup memory data error (main PWB)**	Defective flash memory.	Replace the main PWB and check for correct operation (see page 1-5-22).
		Defective main PWB.	
0150	**Backup memory read/write error (engine PWB)** Detecting engine PWB EEPROM communication error.	Improper installation engine PWB EEPROM.	Check the installation of the EEPROM and remedy if necessary.
		Defective engine PWB.	Replace the engine PWB and check for correct operation (see page 1-5-22).
		Device damage of EEPROM.	Contact the Service Administrative Division.
0160	**Backup memory data error (engine PWB)**	Defective EEPROM.	Replace the engine PWB and check for correct operation (see page 1-5-22).
		Defective engine PWB.	

TONER
www.tonerplus.com.ua

Code	Contents	Causes	Check procedures/ corrective measures
0170	**Billing counting error** A checksum error is detected in the main and engine backup memories for the billing counters.	Data damage of EEPROM.	Contact the Service Administrative Division.
		Defective PWB.	Replace the main PWB or the engine PWB and check for correct operation (see page 1-5-22, 1-5-22).
0190	**Backup memory device error (engine PWB)**	Defective engine PWB.	Replace the engine PWB and check for correct operation (see page 1-5-22).
0800	**Image processing error** JAM010x is detected twice.	Defective main PWB.	Replace the main PWB and check for correct operations page 1-5-22).
0840	**Faults of RTC** The time is judged to go back based on the comparison of the RTC time and the current time or five years or more have passed.	The battery is disconnected from the main PWB.	Check visually and remedy if necessary
		Defective main PWB.	Replace the main PWB and check for correct operation (see page 1-5-22).
1010	**Lift motor error (60/50/45 ppm model only)** After cassette 1 is inserted, lift sensor does not turn on within 10 s. This error is detected four times successively.	Defective bottom plate elevation mechanism in the cassette.	Check to see if the bottom plate can move smoothly and repair it if any problem is found.
		Defective connector cable or poor contact in the connector.	Reinsert the connector. Also check for continuity within the connector cable. If none, replace the cable. Lift motor and engine PWB (YC13)
		Defective drive transmission system of the lift motor.	Check if the gears rotate smoothly. If not, grease the bushes and gears. Check for broken gears and replace if any.
		Defective lift motor.	Replace the lift motor.
		Defective engine PWB.	Replace the engine PWB and check for correct operation (see page 1-5-22).

TONER
www.tonerplus.com.ua

Code	Contents	Causes	Check procedures/ corrective measures
1020	**PF lift motor 1 error (paper feeder)** After cassette 2 is inserted, PF lift sensor 1 does not turn on. This error is detected four times successively.	Defective bottom plate elevation mechanism in the cassette.	Check to see if the bottom plate can move smoothly and repair it if any problem is found.
		Defective connector cable or poor contact in the connector.	Reinsert the connector. Also check for continuity within the connector cable. If none, replace the cable. PF lift motor 1 and PF main PWB (YC7)
		Defective drive transmission system of the PF lift motor.	Check if the gears rotate smoothly. If not, grease the bushes and gears. Check for broken gears and replace if any.
		Defective PF lift motor.	Replace the PF lift motor 1.
		Defective PF main PWB.	Replace the PF main PWB (Refer to the service manual for the paper feeder).
1030	**PF lift motor 2 error (paper feeder)** After cassette 3 is inserted, PF lift sensor 2 does not turn on. This error is detected four times successively.	Defective bottom plate elevation mechanism in the cassette.	Check to see if the bottom plate can move smoothly and repair it if any problem is found.
		Defective connector cable or poor contact in the connector.	Reinsert the connector. Also check for continuity within the connector cable. If none, replace the cable. PF lift motor 2 and PF main PWB (YC7)
		Defective drive transmission system of the PF lift motor.	Check if the gears rotate smoothly. If not, grease the bushes and gears. Check for broken gears and replace if any.
		Defective PF lift motor.	Replace the PF lift motor 2.
		Defective PF main PWB.	Replace the PF main PWB (Refer to the service manual for the paper feeder).

TONER
www.tonerplus.com.ua

Code	Contents	Causes	Check procedures/ corrective measures
1040	**PF lift motor 3 error (paper feeder)** After cassette 4 is inserted, PF lift sensor 3 does not turn on. This error is detected four times successively.	Defective bottom plate elevation mechanism in the cassette.	Check to see if the bottom plate can move smoothly and repair it if any problem is found.
		Defective connector cable or poor contact in the connector.	Reinsert the connector. Also check for continuity within the connector cable. If none, replace the cable. PF lift motor 3 and PF main PWB (YC7)
		Defective drive transmission system of the PF lift motor.	Check if the gears rotate smoothly. If not, grease the bushes and gears. Check for broken gears and replace if any.
		Defective PF lift motor.	Replace the PF lift motor 3.
		Defective PF main PWB.	Replace the PF main PWB (Refer to the service manual for the paper feeder).
1050	**PF lift motor 4 error (paper feeder)** After cassette 5 is inserted, PF lift sensor 4 does not turn on. This error is detected four times successively.	Defective bottom plate elevation mechanism in the cassette.	Check to see if the bottom plate can move smoothly and repair it if any problem is found.
		Defective connector cable or poor contact in the connector.	Reinsert the connector. Also check for continuity within the connector cable. If none, replace the cable. PF lift motor 4 and PF main PWB (YC7)
		Defective drive transmission system of the PF lift motor.	Check if the gears rotate smoothly. If not, grease the bushes and gears. Check for broken gears and replace if any.
		Defective PF lift motor.	Replace the PF lift motor 4.
		Defective PF main PWB.	Replace the PF main PWB (Refer to the service manual for the paper feeder).
1140	**BPF lift motor upward error (Bulk paper feeder)** BPF lift maximum sensor does not turn on. The lock signal of the motor is detected continuously three times.	Defective connector cable or poor contact in the connector.	Reinsert the connector. Also check for continuity within the connector cable. If none, replace the cable. BPF lift motor and BPF main PWB
		Defective drive transmission system of the motor.	Check if the gears rotate smoothly. If not, grease the bushes and gears. Check for broken gears and replace if any.
		Defective BPF lift motor.	Replace the BPF lift motor.
		Defective BPF main PWB.	Replace the BPF main PWB (Refer to the service manual for the paper feeder).

TONER
www.tonerplus.com.ua

Code	Contents	Causes	Check procedures/ corrective measures
1150	**BPF lift motor downward error (Bulk paper feeder)** BPF lift minimum sensor does not turn on. The lock signal of the motor is detected continuously three times.	Defective connector cable or poor contact in the connector.	Reinsert the connector. Also check for continuity within the connector cable. If none, replace the cable. BPF lift motor and BPF main PWB
		Defective drive transmission system of the motor.	Check if the gears rotate smoothly. If not, grease the bushes and gears. Check for broken gears and replace if any.
		Defective BPF lift motor.	Replace the BPF lift motor.
		Defective BPF main PWB.	Replace the BPF main PWB (Refer to the service manual for the paper feeder).
1800	**Paper feeder 1 communication error** A communication error is detected 10 times in succession.	Improper installation paper feeder.	Follow installation instruction carefully again.
		Defective connector cable or poor contact in the connector.	Reinsert the connector. Also check for continuity within the connector cable. If none, replace the cable. PF main PWB (YC3) and engine PWB (YC22)
		Defective engine PWB.	Replace the engine PWB and check for correct operation (see page 1-5-22).
		Defective PF main PWB.	Replace the PF main PWB (Refer to the service manual for the paper feeder).
1810	**Paper feeder 2 communication error** A communication error is detected 10 times in succession.	Improper installation paper feeder.	Follow installation instruction carefully again.
		Defective connector cable or poor contact in the connector.	Reinsert the connector. Also check for continuity within the connector cable. If none, replace the cable. PF main PWB (YC3) and PF main PWB (YC4)
		Defective PF main PWB.	Replace the PF main PWB (Refer to the service manual for the paper feeder).
1820	**Paper feeder 3 communication error** A communication error is detected 10 times in succession.	Improper installation paper feeder.	Follow installation instruction carefully again.
		Defective connector cable or poor contact in the connector.	Reinsert the connector. Also check for continuity within the connector cable. If none, replace the cable. PF main PWB (YC3) and PF main PWB (YC4)
		Defective PF main PWB.	Replace the PF main PWB (Refer to the service manual for the paper feeder).

TONER
www.tonerplus.com.ua

Code	Contents	Causes	Check procedures/ corrective measures
1830	**Paper feeder 4 communication error** A communication error is detected 10 times in succession.	Improper installation paper feeder.	Follow installation instruction carefully again.
		Defective connector cable or poor contact in the connector.	Reinsert the connector. Also check for continuity within the connector cable. If none, replace the cable. PF main PWB (YC3) and PF main PWB (YC4)
		Defective PF main PWB.	Replace the PF main PWB (Refer to the service manual for the paper feeder).
1900	**Paper feeder 1/BPF paper feeder EEPROM error** When writing the data, the write data and the read data is not in agreement.	Defective PF main PWB.	Replace the PF main PWB or the BPF main PWB (Refer to the service manual for the paper feeder).
		Device damage of EEPROM.	
1910	**Paper feeder 2 EEPROM error** When writing the data, the write data and the read data is not in agreement.	Defective PF main PWB.	Replace the PF main PWB (Refer to the service manual for the paper feeder).
		Device damage of EEPROM.	
1920	**Paper feeder 3 EEPROM error** When writing the data, the write data and the read data is not in agreement.	Defective PF main PWB.	Replace the PF main PWB (Refer to the service manual for the paper feeder).
		Device damage of EEPROM.	
1930	**Paper feeder 4 EEPROM error** When writing the data, the write data and the read data is not in agreement.	Defective PF main PWB.	Replace the PF main PWB (Refer to the service manual for the paper feeder).
		Device damage of EEPROM.	
2000	**Main motor drive error** The main motor is not stabilized within 2 s after driving starts.	Defective connector cable or poor contact in the connector.	Reinsert the connector. Also check for continuity within the connector cable. If none, replace the cable. Main motor and engine PWB (YC4)
		Defective drive transmission system of the main motor.	Check if the rollers and gears rotate smoothly. If not, grease the bushes and gears. Check for broken gears and replace if any.
		Defective main motor.	Replace the main motor.
		Defective engine PWB.	Replace the engine PWB and check for correct operation (see page 1-5-22).

TONER
www.tonerplus.com.ua

Code	Contents	Causes	Check procedures/ corrective measures
2010	**Main motor steady-state error** Stable OFF is detected for 2 s continuously after main motor stabilized.	Defective connector cable or poor contact in the connector.	Reinsert the connector. Also check for continuity within the connector cable. If none, replace the cable. Main motor and engine PWB (YC4)
		Defective drive transmission system of the main motor.	Check if the rollers and gears rotate smoothly. If not, grease the bushes and gears. Check for broken gears and replace if any.
		Defective main motor.	Replace the main motor.
		Defective engine PWB.	Replace the engine PWB and check for correct operation (see page 1-5-22).
2200	**Drum motor drive error (60/50/45 ppm model only)** The drum motor is not stabilized within 2 s after driving starts.	Defective connector cable or poor contact in the connector.	Reinsert the connector. Also check for continuity within the connector cable. If none, replace the cable. Drum motor and engine PWB (YC4)
		Defective drive transmission system of the drum motor.	Check if the rollers and gears rotate smoothly. If not, grease the bushes and gears. Check for broken gears and replace if any.
		Defective drum motor.	Replace the drum motor.
		Defective engine PWB.	Replace the engine PWB and check for correct operation (see page 1-5-22).
2210	**Drum motor steady-state error (60/50/45 ppm model only)** Stable OFF is detected for 2 s continuously after drum motor stabilized.	Defective connector cable or poor contact in the connector.	Reinsert the connector. Also check for continuity within the connector cable. If none, replace the cable. Drum motor and engine PWB (YC4)
		Defective drive transmission system of the drum motor.	Check if the rollers and gears rotate smoothly. If not, grease the bushes and gears. Check for broken gears and replace if any.
		Defective drum motor.	Replace the drum motor.
		Defective engine PWB.	Replace the engine PWB and check for correct operation (see page 1-5-22).

TONER
www.tonerplus.com.ua

Code	Contents	Causes	Check procedures/ corrective measures
2330	**Fuser pressure release motor error (Over-current) (60/50/45 ppm model only)** The over-current detection signal of the motor is detected continuously twenty times.	Defective connector cable or poor contact in the connector.	Reinsert the connector. Also check for continuity within the connector cable. If none, replace the cable. Fuser pressure release motor and relay-L PWB(YC11) Relay-L PWB and engine PWB(YC2)
		Defective drive transmission system of the fuser pressure release motor.	Check if the gears rotate smoothly. If not, grease the bushes and gears. Check for broken gears and replace if any.
		Defective fuser pressure release motor.	Replace the fuser pressure release motor.
		Defective PWB.	Replace the relay-L PWB or engine PWB. (See Page 1-5-24,1-5-22)
2340	**Fuser pressure release motor error (Timeout) (60/50/45 ppm model only)** The position detection sensor is not detected continuously for 30 s.	Defective connector cable or poor contact in the connector.	Reinsert the connector. Also check for continuity within the connector cable. If none, replace the cable. Fuser pressure release motor and relay-L PWB(YC11) Relay-L PWB and engine PWB(YC2)
		Defective drive transmission system of the fuser pressure release motor.	Check if the gears rotate smoothly. If not, grease the bushes and gears. Check for broken gears and replace if any.
		Defective fuser pressure release motor.	Replace the fuser pressure release motor.
		Defective PWB.	Replace the relay-L PWB or engine PWB. (See Page 1-5-24,1-5-22)
2600	**PF drive motor 1 error (paper feeder 1)** When the PF drive motor is driven, error signal is detected continuously for 2 s.	Defective connector cable or poor contact in the connector.	Reinsert the connector. Also check for continuity within the connector cable. If none, replace the cable. PF drive motor 1 and PF main PWB (YC6)
		Defective drive transmission system of the PF drive motor.	Check if the rollers and gears rotate smoothly. If not, grease the bushes and gears. Check for broken gears and replace if any.
		Defective PF drive motor.	Replace the PF drive motor 1.
		Defective PF main PWB.	Replace the PF main PWB (Refer to the service manual for the paper feeder).

TONER
www.tonerplus.com.ua

Code	Contents	Causes	Check procedures/ corrective measures
2610	**PF drive motor 2 error (paper feeder 2)** When the PF drive motor is driven, error signal is detected continuously for 2 s.	Defective connector cable or poor contact in the connector.	Reinsert the connector. Also check for continuity within the connector cable. If none, replace the cable. PF drive motor 2 and PF main PWB (YC6)
		Defective drive transmission system of the PF drive motor.	Check if the rollers and gears rotate smoothly. If not, grease the bushes and gears. Check for broken gears and replace if any.
		Defective PF drive motor.	Replace the PF drive motor 2.
		Defective PF main PWB.	Replace the PF main PWB (Refer to the service manual for the paper feeder).
2620	**PF drive motor 3 error (paper feeder 3)** When the PF drive motor is driven, error signal is detected continuously for 2 s.	Defective connector cable or poor contact in the connector.	Reinsert the connector. Also check for continuity within the connector cable. If none, replace the cable. PF drive motor 3 and PF main PWB (YC6)
		Defective drive transmission system of the PF drive motor.	Check if the rollers and gears rotate smoothly. If not, grease the bushes and gears. Check for broken gears and replace if any.
		Defective PF drive motor.	Replace the PF drive motor 3.
		Defective PF main PWB.	Replace the PF main PWB (Refer to the service manual for the paper feeder).
2630	**PF drive motor 4 error (paper feeder 4)** When the PF drive motor is driven, error signal is detected continuously for 2 s.	Defective connector cable or poor contact in the connector.	Reinsert the connector. Also check for continuity within the connector cable. If none, replace the cable. PF drive motor 4 and PF main PWB (YC6)
		Defective drive transmission system of the PF drive motor.	Check if the rollers and gears rotate smoothly. If not, grease the bushes and gears. Check for broken gears and replace if any.
		Defective PF drive motor.	Replace the PF drive motor 4.
		Defective PF main PWB.	Replace the PF main PWB (Refer to the service manual for the paper feeder).
4000	**Polygon motor synchronization error** The polygon motor is not stabilized within 20 s after driving starts.	Defective connector cable or poor contact in the connector.	Reinsert the connector. Also check for continuity within the connector cable. If none, replace the cable. Polygon motor and engine PWB (YC15)
		Defective polygon motor.	Replace the laser scanner unit (see page 1-5-18).
		Defective engine PWB.	Replace the engine PWB and check for correct operation (see page 1-5-22).

TONER
www.tonerplus.com.ua

Code	Contents	Causes	Check procedures/ corrective measures
4200	**BD steady-state error** When the value of Register BDSET is 1 after setting Register BDSET as one and passing by BD1 cycle.	Defective connector cable or poor contact in the connector.	Reinsert the connector. Also check for continuity within the connector cable. If none, replace the cable. PD PWB and engine PWB (YC16)
		Defective PD PWB.	Replace the laser scanner unit (see page 1-5-18).
		Defective engine PWB.	Replace the engine PWB and check for correct operation (see page 1-5-22).
5100	**Chager current error** When the current value measured at the time of potential adjustment is less than 20 μA. When the current values in the chager voltage 500V constitute not less than 85% of target current values.	Defective connector cable or poor contact in the connector.	Reinsert the connector. Also check for continuity within the connector cable. If none, replace the cable. Chager unit and high voltage PWB High voltage PWB and engine PWB (YC16)
		Defective high voltage PWB.	Replace the high voltage PWB and check for correct operation (see page 1-5-26).
		Defective engine PWB.	Replace the engine PWB and check for correct operation (see page 1-5-22).
6000	**Broken fuser heater wire** (60/50/45 ppm model) The detection temperature of fuser thermistor 2 is 100 °C/ 212°F or less after the fuser heater lamp has been turned on continuously for 30 s. (40 ppm model) The detection temperature of fuser thermistor 1 is 100 °C/ 212°F or less after the fuser heater lamp has been turned on continuously for 30 s.	Defective connector cable or poor contact in the connector.	Reinsert the connector. Also check for continuity within the connector cable. If none, replace the cable. Fuser heater and power source PWB (YC2) Fuser thermistor and Fuser thermistor connect PWB Fuser thermistor connect PWB and engine PWB (YC21)
		Deformed connector pin.	See page 1-4-19.
		Defective triac.	See page 1-4-19.
		Fuser thermostat triggered.	Reinsert the fuser unit (see page 1-5-19).
		Broken fuser heater wire.	
		Defective engine PWB.	Replace the engine PWB and check for correct operation (see page 1-5-22).

TONER
www.tonerplus.com.ua

Code	Contents	Causes	Check procedures/ corrective measures
6020	**Abnormally high fuser thermistor 2 temperature (60/50/45 ppm model only)** The detection temperature of fuser thermistor 2 is higher than 235°C/455°F. In a heater-off state, the detection temperature of fuser thermistor 2 is higher than 195°C/383°F after the detection temperature of fuser thermistor 2 was 155°C/311°F or less.	Deformed connector pin.	See page 1-4-19.
		Defective triac.	See page 1-4-19.
		Shorted fuser thermistor.	Replace the fuser unit (see page 1-5-19).
		Defective engine PWB.	Replace the engine PWB and check for correct operation (see page 1-5-22).
6030	**Broken fuser thermistor 2 wire (60/50/45 ppm model only)** A/D value of the fuser thermistor 2 exceeds 1019 bit continuously for 4 s during warming up.	Defective connector cable or poor contact in the connector.	Reinsert the connector. Also check for continuity within the connector cable. If none, replace the cable. Fuser thermistor and fuser thermistor connect PWB Fuser thermistor connect PWB and engine PWB (YC21)
		Deformed connector pin.	See page 1-4-19.
		Defective triac.	See page 1-4-19.
		Defective fuser thermistor.	Replace the fuser unit (see page 1-5-19).
		Defective engine PWB.	Replace the engine PWB and check for correct operation (see page 1-5-22).

TONER
www.tonerplus.com.ua

Code	Contents	Causes	Check procedures/ corrective measures
6000/ 6020/ 6030/ 6120/ 6130/ Com-bined	**Broken fuser heater wire Abnormally high fuser thermistor 2 temperature Broken fuser thermistor 2 wire Abnormally high fuser thermistor 1 temperature Broken fuser thermistor 1 wire**	Deformed connec-tor pin.	If the I/F connector pins of the fuser unit and the main unit are deformed owing to foreign matters, replace the connectors or the units including the connectors.
		Defective triac.	Remove the power cord and check that the resistance between terminals T1 and T2 of the triac TRA41 is of several Mega-Ohms and not shorted (see figure 1-4-3). If failed, replace the power source PWB (see page 1-5-25).

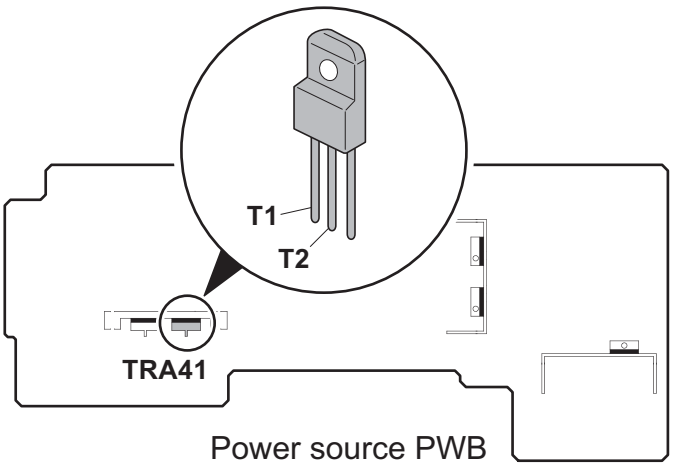

Figure 1-4-3

TONER
www.tonerplus.com.ua

Code	Contents	Causes	Check procedures/ corrective measures
6120	**Abnormally high fuser thermistor 1 temperature** (60/50/45 ppm model) The detection temperature of fuser thermistor 1 is higher than 245°C/473°F. In a heater-off state, the detection temperature of fuser thermistor 1 is higher than 195°C/383°F after the detection temperature of fuser thermistor 1 was 155°C/311°F or less. (40 ppm model) The detection temperature of fuser thermistor 1 is higher than 250°C/482°F. In a heater-off state, the detection temperature of fuser thermistor 1 is higher than 170°C/338°F after the detection temperature of fuser thermistor 1 was 155°C/311°F or less.	Deformed connector pin.	See page 1-4-19.
		Defective triac.	See page 1-4-19.
		Shorted fuser thermistor.	Replace the fuser unit (see page 1-5-19).
		Defective engine PWB.	Replace the engine PWB and check for correct operation (see page 1-5-22).
6130	**Broken fuser thermistor 1 wire** A/D value of the fuser thermistor 1 exceeds 1019 bit continuously for 4 s during warming up.	Defective connector cable or poor contact in the connector.	Reinsert the connector. Also check for continuity within the connector cable. If none, replace the cable. Fuser thermistor and fuser thermistor connect PWB Fuser thermistor connect PWB and engine PWB (YC21)
		Deformed connector pin.	See page 1-4-19.
		Defective triac.	See page 1-4-19.
		Defective fuser thermistor.	Replace the fuser unit (see page 1-5-19).
		Defective engine PWB.	Replace the engine PWB and check for correct operation (see page 1-5-22).

TONER
www.tonerplus.com.ua

Code	Contents	Causes	Check procedures/ corrective measures
6400	**Zero-cross signal error** While fuser heater control is performed, the zero-cross signal is not input within 2 s.	Defective connector cable or poor contact in the connector.	Reinsert the connector. Also check for continuity within the connector cable. If none, replace the cable. Power source PWB (YC3) and engine PWB (YC1)
		Defective power source PWB or engine PWB.	Replace the power source PWB or the engine PWB and check for correct operation (see page 1-5-22).
7000	**Toner motor error** During driving the toner motor, an over-current detection signal is detected at intervals of 10 ms as for 300 accumulation.	Defective connector cable or poor contact in the connector.	Reinsert the connector. Also check for continuity within the connector cable. If none, replace the cable. Toner motor and drum PWB (YC4) Drum PWB and relay-L PWB (YC3) Relay-L PWB and engine PWB (YC2)
		Defective toner motor.	Replace the toner motor.
		Defective engine PWB.	Replace the engine PWB and check for correct operation (see page 1-5-22).
7100	**Toner sensor error** Sensor output value of 930 or more continuously for 5 s.	Defective connector cable or poor contact in the connector.	Reinsert the connector. Also check for continuity within the connector cable. If none, replace the cable. Toner sensor and drum PWB (YC3) Drum PWB and relay-L PWB (YC3) Relay-L PWB and engine PWB (YC2)
		Defective toner sensor.	Replace the developer unit. (See Page 1-5-13)
		Defective engine PWB.	Replace the engine PWB and check for correct operation (see page 1-5-22).
7400	**Developer unit non-installing error** Sensor output value of 31 or less continuously for 5 s.	Defective connector cable or poor contact in the connector.	Reinsert the connector. Also check for continuity within the connector cable. If none, replace the cable. Developer unit and drum PWB (YC3) Drum PWB and relay-L PWB (YC3) Relay-L PWB and engine PWB (YC2)
		Defective toner sensor.	Replace the developer unit. (See Page 1-5-13)
		Defective engine PWB.	Replace the engine PWB and check for correct operation (see page 1-5-22).

TONER
www.tonerplus.com.ua

Code	Contents	Causes	Check procedures/ corrective measures
7410	**Drum unit type mismatch error** The drum PWB EEPROM does not communicate normally. Absence of the drum unit is detected.	Defective connector cable or poor contact in the connector.	Reinsert the connector. Also check for continuity within the connector cable. If none, replace the cable. Drum unit and drum connect PWB (YC1) Drum connect PWB and relay-L PWB (YC3) Relay-L PWB and engine PWB (YC2)
		Defective toner sensor.	Replace the drum unit. (See Page 1-5-13)
		Defective engine PWB.	Replace the engine PWB and check for correct operation (see page 1-5-22).
7800	**Broken external thermistor wire** The average of thermistor output value of 1016 or more continuously for 160 ms. The average of thermistor output value of 930 or more continuously for 5 s.	Defective connector cable or poor contact in the connector.	Reinsert the connector. Also check for continuity within the connector cable. If none, replace the cable. Operation PWB and engine PWB (YC17)
		Defective temperature sensor.	Replace the operation PWB.
7810	**Short-circuited external thermistor wire** The average of thermistor output value of 31 or less continuously for 5 s.	Defective connector cable or poor contact in the connector.	Reinsert the connector. Also check for continuity within the connector cable. If none, replace the cable. Operation PWB and engine PWB (YC17)
		Defective temperature sensor.	Replace the operation PWB.
7900	**Drum unit EEPROM error** No response is issued from the device in reading/writing for 5 ms or more and this problem is repeated five times successively. Mismatch of reading data from two locations occurs eight times successively. Mismatch between writing data and reading data occurs eight times successively.	Defective connector cable or poor contact in the connector.	Reinsert the connector. Also check for continuity within the connector cable. If none, replace the cable. Drum unit and drum connect PWB (YC1) Drum connect PWB and relay-L PWB (YC3) Relay-L PWB and engine PWB (YC15)
		Defective drum unit.	Replace the drum unit (see 1-5-15).

TONER
www.tonerp

Code	Contents	Causes	Check procedures/ corrective measures
F000	**Main PWB - operation PWB communication error**	Defective connector cable or poor contact in the connector.	Reinsert the connector. Also check for continuity within the connector cable. If none, replace the cable. Operation PWB and engine PWB (YC17)
		Defective main PWB.	Turn the main power switch off/on to restart the machine. If the error is not resolved, replace main PWB (see page 1-5-22).
		Defective operation PWB.	Replace the operation PWB and check for correct operation.
F010	**Main PWB checksum error**	Defective main PWB.	Turn the main power switch off/on to restart the machine. If the error is not resolved, replace main PWB (see page 1-5-22).
F020	**Main PWB RAM checksum error**	Defective main memory (RAM) in main PWB	Turn the main power switch off/on to restart the machine. If the error is not resolved, replace main PWB (see page 1-5-22).
		Defective expended memory (DIMM)	Replace the expansion memory (DIMM). (See Page 1-2-12) Also in the case of the capacity besides specification, it displays.
F040	**Main PWB - print engine communication error**	Defective main PWB.	Turn the main power switch off/on to restart the machine. If the error is not resolved, replace main PWB (see page 1-5-22).
		Defective engine PWB.	Replace the engine PWB and check for correct operation (see page 1-5-22).
F050	**Print engine ROM checksum error**	Defective engine PWB.	Turn the main power switch off/on to restart the machine. If the error is not resolved, replace engine PWB (see page 1-5-22).

TONER
www.tonerplus.com.ua

1-4-3 Image formation problems

If the part causing the problem was not supplied, use the unit including the part for replacement.

(1) No image appears (entirely white).

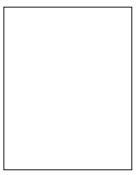

See page 1-4-25

(2) No image appears (entirely black).

See page 1-4-25

(3) Image is too light.

See page 1-4-26

(4) The background is colored.

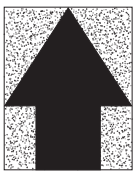

See page 1-4-27

(5) White streaks are printed vertically.

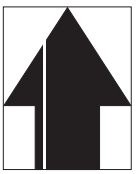

See page 1-4-27

(6) Black streaks are printed vertically.

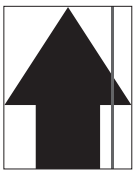

See page 1-4-28

(7) Streaks are printed horizontally.

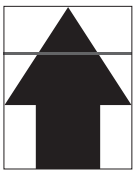

See page 1-4-28

(8) Spots are printed.

See page 1-4-28

(9) Image is blurred.

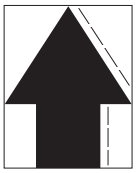

See page 1-4-29

(10) Paper is wrinkled.

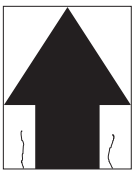

See page 1-4-29

(11) Offset occurs.

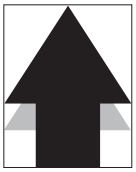

See page 1-4-29

(12) Part of image is missing.

See page 1-4-29

(13) Fusing is loose.

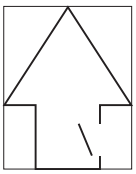

See page 1-4-30

(14) Image is out of focus.

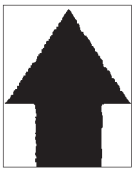

See page 1-4-30

TONER
www.tonerplus.com.ua

(1) No image appears (entirely white).

Print example	Causes		Check procedures/corrective measures
	Defective developer bias output.	Defective connector cable or poor contact in the connector.	Reinsert the connector. Also check for continuity within the connector cable. If none, replace the cable. Developer unit and high voltage PWB High voltage PWB and engine PWB (YC19)
		Defective high voltage PWB.	Replace the high voltage PWB (see page 1-5-26).
		Defective engine PWB.	Replace the engine PWB (see page 1-5-22).
	No LSU laser is output.	Defective connector cable or poor contact in the connector.	Reinsert the connector. Also check for continuity within the connector cable. If none, replace the cable. Laser scanner unit and engine PWB (YC16)
		The shutter of a laser scanner unit does not open.	The operating state of a link part with an top cover is checked.
		Defective laser scanner unit.	Replace the laser scanner unit (see page 1-5-18).
		Defective engine PWB.	Replace the engine PWB (see page 1-5-22).
		Defective main PWB.	Replace the main PWB (see page 1-5-22).

(2) No image appears (entirely black).

Print example	Causes		Check procedures/corrective measures
	No main charging.	Defective connector cable or poor contact in the connector.	Reinsert the connector. Also check for continuity within the connector cable. If none, replace the cable. Chager roller unit and high voltage PWB High voltage PWB and engine PWB (YC19)
		Defective poor connection of the charger roller	Connection is checked by the electrical connection inspection of the charger roller.
		Defective charger roller unit.	Replace the charger roller unit (see page 1-5-15).
		Defective high voltage PWB.	Replace the high voltage PWB (see page 1-5-26).
		Defective engine PWB.	Replace the engine PWB (see page 1-5-22).

TONER
www.tonerplus.com.ua

(3) Image is too light.

Print example	Causes		Check procedures/corrective measures
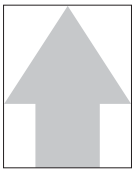	Dew condensation of the drum surface.		Perform the drum surface refreshing in a system menu.
	The paper is moist.		The storage state of a paper is checked.
	Defective transfer charger output.	Defective connector cable or poor contact in the connector.	Reinsert the connector. Also check for continuity within the connector cable. If none, replace the cable. Transfer roller unit and high voltage PWB High voltage PWB and engine PWB (YC19)
		Defective high voltage PWB.	Replace the high voltage PWB (see page 1-5-26).
		Defective engine PWB.	Replace the engine PWB (see page 1-5-22).
	Defective developer bias output.	Defective connector cable or poor contact in the connector.	Reinsert the connector. Also check for continuity within the connector cable. If none, replace the cable. Developer unit and high voltage PWB High voltage PWB and engine PWB (YC10)
		Defective high voltage PWB.	Replace the high voltage PWB (see page 1-5-26).
		Defective engine PWB.	Replace the engine PWB (see page 1-5-22).
	Insufficient toner.		If the display shows the message requesting toner replenishment, replace the container.

TONER
www.tonerplus.com.ua

(4) The background is colored.

Print example	Causes		Check procedures/corrective measures
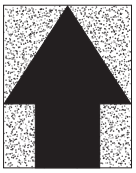	Defective main charger output.	Defective connector cable or poor contact in the connector.	Reinsert the connector. Also check for continuity within the connector cable. If none, replace the cable. Chager roller unit and high voltage PWB High voltage PWB and engine PWB (YC19)
		Defective high voltage PWB.	Replace the high voltage PWB (see page 1-5-26).
		Defective engine PWB.	Replace the engine PWB (see page 1-5-22).
	Defective developer bias output.	Defective connector cable or poor contact in the connector.	Reinsert the connector. Also check for continuity within the connector cable. If none, replace the cable. Developer unit and high voltage PWB High voltage PWB and engine PWB (YC10)
		Defective developer unit.	Replace the developer unit (see page 1-5-13).
		Defective high voltage PWB.	Replace the high voltage PWB (see page 1-5-26).
		Defective engine PWB.	Replace the engine PWB (see page 1-5-22).
	Deteriorated toner.		Perform the drum surface refreshing operation.

(5) White streaks are printed vertically.

Print example	Causes	Check procedures/corrective measures
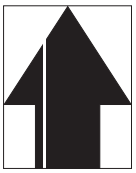	Foreign matter in the developer unit.	Check if the magnetic brush is formed uniformly. Replace the developer unit if any foreign matter (see page 1-5-13).
	Adhesion of soiling to transfer roller.	Clean the transfer roller. Replace the transfer roller if it is extremely dirty (see page 1-5-16).
	Dust adhesion to the charger roller unit.	Clean the chager roller unit.
	Dirty dust shield glass of laser scanner unit.	Clean the dust shield glass of laser scanner unit.

TONER
www.tonerplus.com.ua

(6) Black streaks are printed vertically.

Print example	Causes	Check procedures/corrective measures
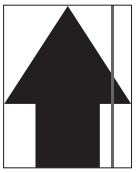	Dirty or flawed drum.	Perform the drum surface refreshing operation. Flawed drum. Replace the drum unit (see page 1-5-15).
	Deformed or worn cleaning blade in the drum unit.	Replace the drum unit (see page 1-5-15).
	Defective transfer roller.	Replace the transfer roller unit (see page 1-5-16).
	Defective chager roller.	Replace the chager roller unit (see page 1-5-15).
	Defective developer roller.	Replace the developer unit (see page 1-5-13).

(7) Streaks are printed horizontally.

Print example	Causes	Check procedures/corrective measures
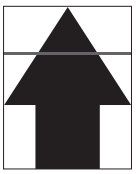	Dirty or flawed drum.	Perform the drum surface refreshing operation. Flawed drum. Replace the drum unit (see page 1-5-15).
	Dirty developer section.	Clean any part contaminated with toner in the developer section.
	Poor contact of grounding terminal of drum unit.	Check the installation of the drum unit. If it operates incorrectly, replace it (see page 1-5-15).
	The beam detection error of a laser scanner unit	Replace the laser scanner unit (see page 1-5-18).

(8) Spots are printed.

Print example	Causes	Check procedures/corrective measures
	Dirty or flawed drum.	Perform the drum surface refreshing operation. Flawed drum. Replace the drum unit (see page 1-5-15).
	Deformed or worn cleaning blade in the drum unit.	Replace the drum unit (see page 1-5-15).
	Flawed developer roller.	Replace the developer unit (see page 1-5-13).
	Dirty heat roller and press roller.	Clean the heat roller and press roller.

TONER
www.tonerplus.com.ua

(9) Image is blurred.

Print example	Causes	Check procedures/corrective measures
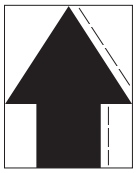	Deformed press roller.	Replace the fuser unit (see page 1-5-19).
	Paper conveying section drive problem.	Check the gears and belts and, if necessary, grease them.

(10) Paper is wrinkled.

Print example	Causes	Check procedures/corrective measures
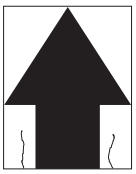	Paper curled.	Check the paper storage conditions.
	Paper damp.	
	Defective pressure springs.	Replace the fuser unit (see page 1-5-19).

(11) Offset occurs.

Print example	Causes	Check procedures/corrective measures
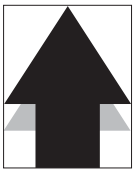	Deformed or worn cleaning blade in the drum unit.	Replace the drum unit (see page 1-5-15).
	Defective fuser unit.	Replace the fuser unit (see page 1-5-19).
	Wrong types of paper.	Check if the paper meets specifications. Replace paper.

(12) Part of image is missing.

Print example	Causes	Check procedures/corrective measures
	Paper damp.	Check the paper storage conditions.
	Paper creased.	Replace the paper.
	Drum condensation.	Perform the drum surface refreshing operation.
	Dirty or flawed drum.	Perform the drum surface refreshing operation. Flawed drum. Replace the drum unit (see page 1-5-15).
	Dirty transfer roller.	Clean the transfer roller. Replace the transfer roller if it is extremely dirty (see page 1-5-16).

TONER
www.tonerplus.com.ua

(13) Fusing is loose.

Print example	Causes	Check procedures/corrective measures
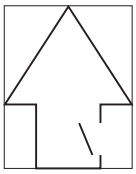	Wrong types of paper.	Check if the paper meets specifications, replace paper. Setup of media Practical use of half speed printing
	Paper creased.	Replace the paper.
	Flawed heat roller or press roller.	Replace the fuser unit (see page 1-5-19).
	Defective pressure springs.	
	Defective fuser heater.	

(14) Image is out of focus.

Print example	Causes	Check procedures/corrective measures
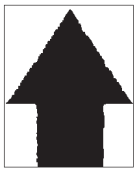	Drum condensation.	Perform the drum refresh operation.

TONER
www.tonerplus.com.ua

1-4-4 Electric problems

If the part causing the problem was not supplied, use the unit including the part for replacement.
Troubleshooting to each failure must be in the order of the numbered symptoms.

Problem	Causes	Check procedures/corrective measures
(1) The machine does not operate when the power switch is turned on.	1. No electricity at the power outlet.	Measure the input voltage.
	2. The power cord is not plugged in properly.	Check the contact between the power plug and the outlet.
	3. Broken power cord.	Check for continuity. If none, replace the cord.
	4. Defective power switch.	Check for continuity across the contacts. If none, replace the power switch.
	5. Defective interlock switch.	Check for continuity across the contacts of interlock switch. If none, replace the power source PWB (see page 1-5-25).
	6. Defective power source PWB.	Replace the power source PWB or engine PWB (see page 1-5-25,1-5-22).
(2) Eject motor does not operate.	1. Defective connector cable or poor contact in the connector.	Reinsert the connector. Also check for continuity within the connector cable. If none, replace the cable. Eject motor and relay-L PWB (YC12) Relay-L PWB and engine PWB (YC2/YC3)
	2. Defective drive transmission system.	Check if the rollers and gears rotate smoothly. If not, grease the bushes and gears. Check for broken gears and replace if any.
	3. Defective motor.	Replace the eject motor.
	4. Defective PWB.	Replace the engine PWB or the relay-L PWB and check for correct operation (see page 1-5-22, 1-5-24).
(3) Power source fan motor does not operate.	1. Defective connector cable or poor contact in the connector.	Reinsert the connector. Also check for continuity within the connector cable. If none, replace the cable. Power source fan motor and engine PWB (YC10)
	2. Defective motor.	Replace the power source fan motor.
	3. Defective PWB.	Replace the engine PWB and check for correct operation (see page 1-5-22).
(4) LSU fan motor does not operate.	1. Defective connector cable or poor contact in the connector.	Reinsert the connector. Also check for continuity within the connector cable. If none, replace the cable. LSU fan motor and relay-L PWB (YC4) Relay-L PWB and engine PWB (YC2/YC3)
	2. Defective motor.	Replace the LSU fan motor.
	3. Defective PWB.	Replace the engine PWB or the relay-L PWB and check for correct operation (see page 1-5-22, 1-5-24).

TONER
www.tonerplus.com.ua

Problem	Causes	Check procedures/corrective measures
(5) Developer fan motor does not operate.	1. Defective connector cable or poor contact in the connector.	Reinsert the connector. Also check for continuity within the connector cable. If none, replace the cable. Developer fan motor and fuser thermistor connect PWB (YC4) Fuser thermistor connect PWB and engine PWB (YC21)
	2. Defective motor.	Replace the developer fan motor.
	3. Defective PWB.	Replace the engine PWB or fuser thermistor connect PWB and check for correct operation (see page 1-5-22).
(6) Paper feed clutch does not operate.	1. Defective connector cable or poor contact in the connector.	Reinsert the connector. Also check for continuity within the connector cable. If none, replace the cable. Paper feed clutch and engine PWB (YC5)
	2. Defective clutch.	Replace the paper feed clutch.
	3. Defective PWB.	Replace the engine PWB and check for correct operation (see page 1-5-22).
(7) Registration clutch does not operate.	1. Defective connector cable or poor contact in the connector.	Reinsert the connector. Also check for continuity within the connector cable. If none, replace the cable. Registration clutch and engine PWB (YC5)
	2. Defective clutch.	Replace the registration clutch.
	3. Defective PWB.	Replace the engine PWB and check for correct operation (see page 1-5-22).
(8) Duplex clutch does not operate. (60/50/45 ppm model only)	1. Defective connector cable or poor contact in the connector.	Reinsert the connector. Also check for continuity within the connector cable. If none, replace the cable. Duplex clutch and engine PWB (YC5)
	2. Defective clutch.	Replace the duplex clutch.
	3. Defective PWB.	Replace the engine PWB and check for correct operation (see page 1-5-22).
(9) Developer clutch does not operate.	1. Defective connector cable or poor contact in the connector.	Reinsert the connector. Also check for continuity within the connector cable. If none, replace the cable. Developer clutch and engine PWB (YC5)
	2. Defective clutch.	Replace the developer clutch.
	3. Defective PWB.	Replace the engine PWB and check for correct operation (see page 1-5-22).
(10) Conveying clutch does not operate. (60/50/45 ppm model only)	1. Defective connector cable or poor contact in the connector.	Reinsert the connector. Also check for continuity within the connector cable. If none, replace the cable. Conveying clutch and engine PWB (YC5)
	2. Defective clutch.	Replace the Conveying clutch.
	3. Defective PWB.	Replace the engine PWB and check for correct operation (see page 1-5-22).
(11) MP solenoid does not operate.	1. Defective connector cable or poor contact in the connector.	Reinsert the connector. Also check for continuity within the connector cable. If none, replace the cable. MP solenoid and engine PWB (YC8)
	2. Defective solenoid.	Replace the MP solenoid.
	3. Defective PWB.	Replace the engine PWB and check for correct operation (see page 1-5-22).

TONER
www.tonerplus.com.ua

Problem	Causes	Check procedures/corrective measures
(12) Feedshift solenoid does not operate. (60/50/45 ppm model only)	1. Defective connector cable or poor contact in the connector.	Reinsert the connector. Also check for continuity within the connector cable. If none, replace the cable. Feedshift solenoid and relay-L PWB (YC13) Relay-L PWB and engine PWB (YC2/YC3)
	2. Defective solenoid.	Replace the Feedshift solenoid.
	3. Defective PWB.	Replace the engine PWB or the relay-L PWB and check for correct operation (see page 1-5-22, 1-5-24).
(13) The message requesting paper to be loaded is shown when paper is present on the cassette.	1. Defective connector cable or poor contact in the connector.	Reinsert the connector. Also check for continuity within the connector cable. If none, replace the cable. High voltage PWB and engine PWB (YC19)
	2. Deformed actuator of the paper sensor.	Check visually and replace if necessary.
	3. Defective paper sensor.	Replace the engine PWB or the high voltage PWB and check for correct operation (see page 1-5-22,1-5-26).
	4. Defective PWB.	
(14) The message requesting paper to be loaded is shown when paper is present on the MP tray.	1. Defective connector cable or poor contact in the connector.	Reinsert the connector. Also check for continuity within the connector cable. If none, replace the cable. MP paper sensor and relay-L PWB (YC8) Relay-L PWB and engine PWB (YC2)
	2. Deformed actuator of the MP paper sensor.	Check visually and replace if necessary.
	3. Defective MP paper sensor.	Replace the MP paper sensor.
	4. Defective PWB.	Replace the engine PWB or the relay-L PWB and check for correct operation (see page 1-5-22, 1-5-24).
(15) The size of paper on the cassette is not displayed correctly.	1. Defective connector cable or poor contact in the connector.	Reinsert the connector. Also check for continuity within the connector cable. If none, replace the cable. Cassette size switch and engine PWB (YC7)
	2. Defective cassette size switch.	Replace the cassette size switch.
	3. Defective PWB.	Replace the engine PWB and check for correct operation (see page 1-5-22).

TONER
www.tonerplus.com.ua

Problem	Causes	Check procedures/corrective measures
(16) A paper jam in the paper feed, paper conveying or eject section is indicated when the main power switch is turned on.	1. Defective connector cable or poor contact in the connector.	Reinsert the connector. Also check for continuity within the connector cable. If none, replace the cable. Regist sensor 2 and Drum PWB (YC6) DU sensor 1 and Relay-L PWB (YC9) PF feed sensor and PF main PWB Eject full sensor and engine PWB (YC12) Eject sensor and Engine PWB (YC26)
	2. A piece of paper torn from paper is caught around registration sensor, duplex sensor, PF feed sensor, eject full sensor or eject sensor.	Check visually and remove it, if any.
	3. Defective sensor.	Replace the registration sensor, duplex sensor, PF feed sensor, eject full sensor or eject sensor.
	4. Defective PWB.	Replace the engine PWB and check for correct operation (see page 1-5-22).
(17) A message indicating cover open is displayed when the top cover is closed.	1. Defective connector cable or poor contact in the connector.	Reinsert the connector. Also check for continuity within the connector cable. If none, replace the cable. Interlock switch and engine PWB (YC6)
	2. Defective interlock switch.	Check and replace if necessary.
	3. Defective PWB.	Replace the engine PWB and check for correct operation (see page 1-5-22).
(18) A message indicating cover open is displayed when the rear cover is closed. (60/50/45 ppm model only)	1. Defective connector cable or poor contact in the connector.	Reinsert the connector. Also check for continuity within the connector cable. If none, replace the cable. Rear cover switch and relay-L PWB (YC10) Relay-L PWB and engine PWB (YC2/3)
	2. Defective rear cover switch.	Check and replace if necessary.
	3. Defective PWB.	Replace the engine PWB or the relay-L PWB and check for correct operation (see page 1-5-22, 1-5-24).

TONER
www.tonerplus.com.ua

1-4-5 Mechanical problems

If the part causing the problem was not supplied, use the unit including the part for replacement.

Problem	Causes/check procedures	Corrective measures
(1) No primary paper feed.	Check if the surfaces of the following rollers are dirty with paper powder. Pickup roller Paper feed roller MP paper feed pulley	Clean with isopropyl alcohol.
	Check if the following rollers is deformed. Pickup roller Paper feed roller MP paper feed pulley	Check visually and replace any deformed (see page 1-5-8, 1-5-10).
	Defective paper feed clutch installation.	Check visually and remedy if necessary.
(2) No secondary paper feed.	Check if the surfaces of the following rollers are dirty with paper powder. Upper registration roller Lower registration roller	Clean with isopropyl alcohol.
	Defective registration clutch installation.	Check visually and remedy if necessary.
(3) Skewed paper feed.	Paper width guide in a cassette installed incorrectly.	Check the paper width guide visually and remedy or replace if necessary.
(4) Multiple sheets of paper are fed.	Check if the paper is excessively curled.	Change the paper.
	Paper is loaded incorrectly.	Load the paper correctly.
	Check if the retard roller is worn.	Replace the retard roller if it is worn (see page 1-5-8).
(5) Paper jams.	Check if the paper is excessively curled.	Change the paper.
	Check if the contact between the upper and lower registration rollers is correct.	Check visually and remedy if necessary.
	Check if the heat roller or press roller is extremely dirty or deformed.	Check visually and replace the fuser unit (see page 1-5-19).
(6) Toner drops on the paper conveying path.	Check if the drum unit or developer unit is extremely dirty.	Clean the drum unit or developer unit.
(7) Abnormal noise is heard.	Check if the rollers, pulleys and gears operate smoothly.	Grease the bushes and gears.
	Check if the following clutches are installed correctly. Paper feed clutch Registration clutch Duplex clutch	Check visually and remedy if necessary.

TONER
www.tonerplus.com.ua

This page is intentionally left blank.

TONER
www.tonerplus.com.ua

1-5-1 Precautions for assembly and disassembly

(1) Precautions

Before starting disassembly, push the power switch and check the disappeared display of an operation panel certainly. Unplug the power cable from the wall outlet.
When handling PWBs (printed wiring boards), do not touch parts with bare hands.
The PWBs are susceptible to static charge.
Do not touch any PWB containing ICs with bare hands or any object prone to static charge.
When removing the hook of the connector, be sure to release the hook.
Take care not to get the cables caught.
To reassemble the parts, use the original screws. If the types and the sizes of screws are not known, refer to the PARTS LIST.

(2) Drum unit

Note the following when handling or storing the drum unit.
When removing the drum unit, never expose the drum surface to strong direct light.
Keep the drum unit at an ambient temperature between -20°C/-4°F and 40°C/104°F and at a relative humidity not higher than 85% RH. Avoid abrupt changes in temperature and humidity.
Avoid exposure to any substance which is harmful to or may affect the quality of the drum unit.
Do not touch the drum surface with any object. Should it be touched by hands or stained with oil, clean it.

(3) Toner

Store the toner containers in a cool, dark place.
Avoid exposing the toner containers to direct light and high humidity.

TONER+
www.tonerplus.com.ua

(4) How to tell a genuine Kyocera toner container

As a means of brand protection, the Kyocera toner container utilizes an optical security technology to enable visual validation. A validation viewer is required to accomplish this.

Hold the validation viewer over the left side part of the brand protection seal on the toner container. Through each window of the validation viewer, the left side part of the seal should be seen as follows:

A black-colored band when seen through the left side window (●)

A shiny or gold-colored band when seen through the right side window (☼)

The above will reveal that the toner container is a genuine Kyocera branded toner container, otherwise, it is a counterfeit.

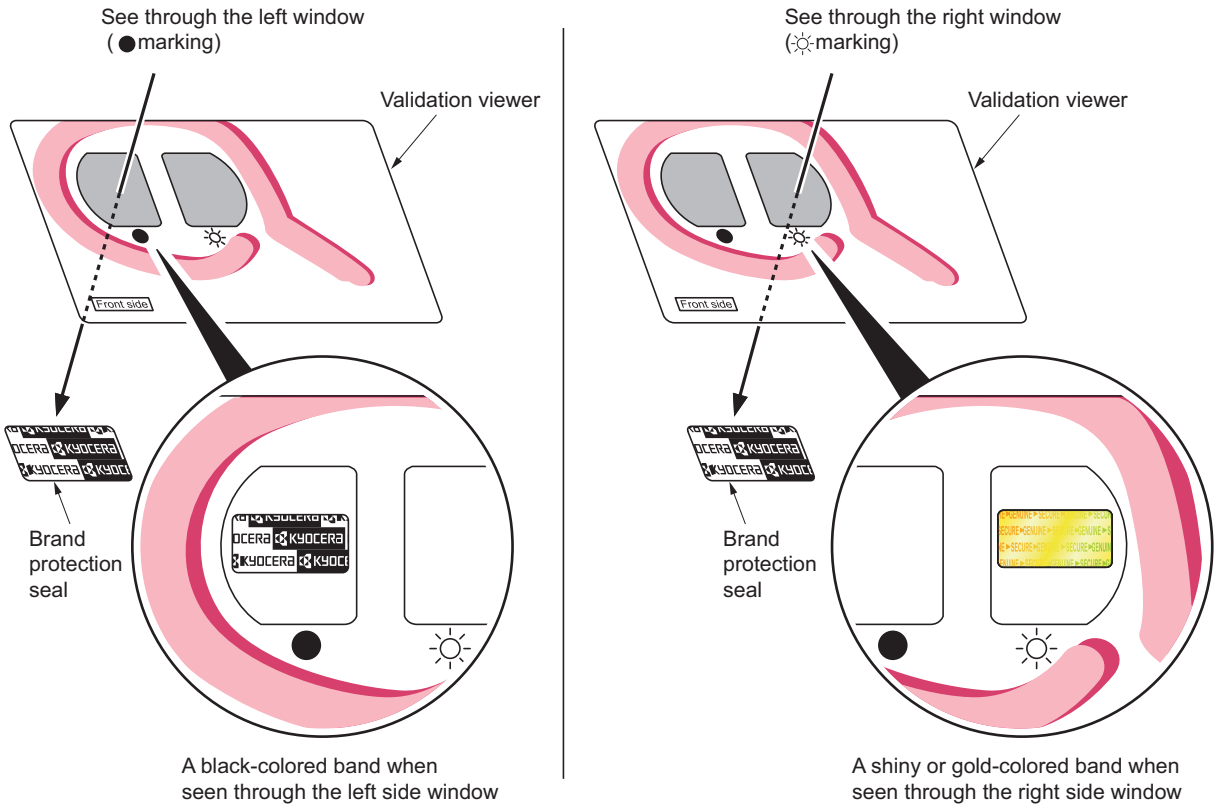

Figure 1-5-1

The brand protection seal has an incision as shown below to prohibit reuse.

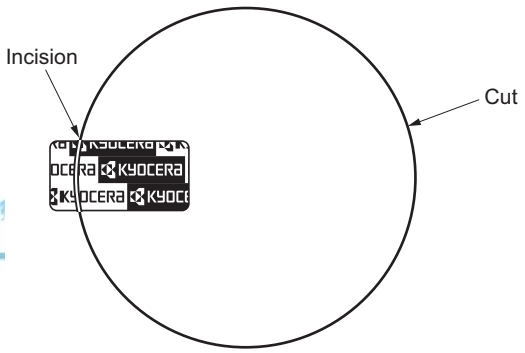

TONER
www.tonerplus.com.ua

Figure 1-5-2

1-5-2 Outer covers

(1) Detaching and refitting the top cover

Procedure

1. Open the rear cover.
2. Open the top cover.
3. Remove two screws.
4. Release two hooks and then lift the top cover upward.
5. Pull out FFC from the connector and then remove the top cover assembly.

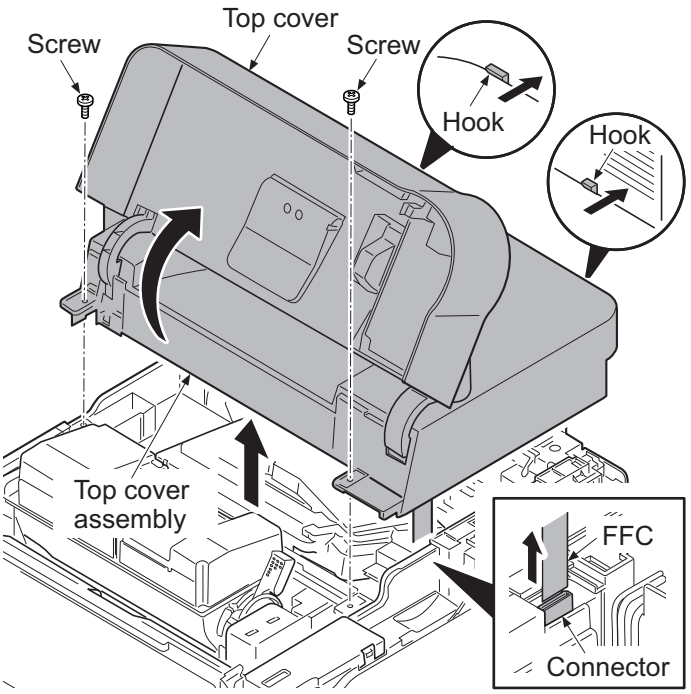

Figure 1-5-3

(2) Detaching and refitting the inlet cover and slot cover

Procedure

1. Open the rear cover.
2. Remove the inlet cover.
3. Release the hook of the slot cover and then remove the slot cover.

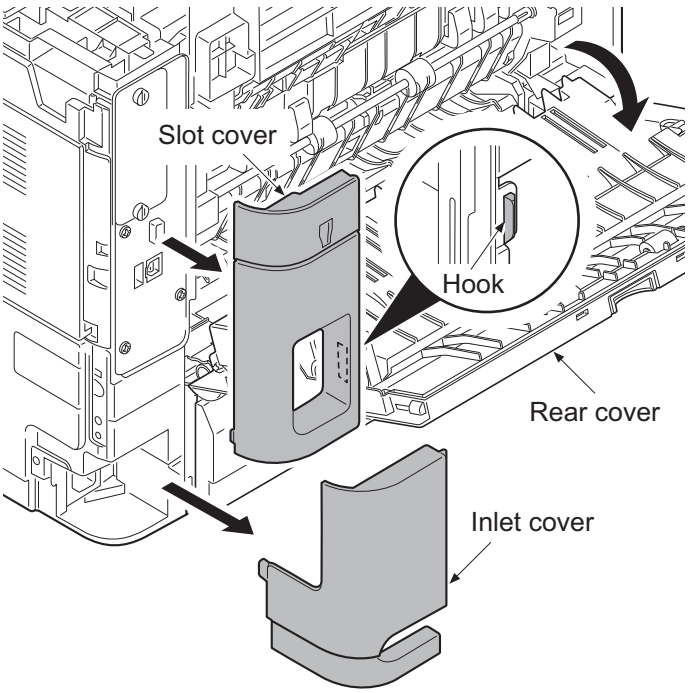

Figure 1-5-4

TONER
www.tonerplus.com.ua

(3) Detaching and refitting the right upper cover

Procedure

1. Open the front cover.
2. Remove the top cover assembly. (See page 1-5-3)
3. Remove the slot cover. (See page 1-5-3)
4. Remove two screws.
5. Release hook A.
6. Release two hooks B by sliding the right upper cover upward and then remove the right upper cover.

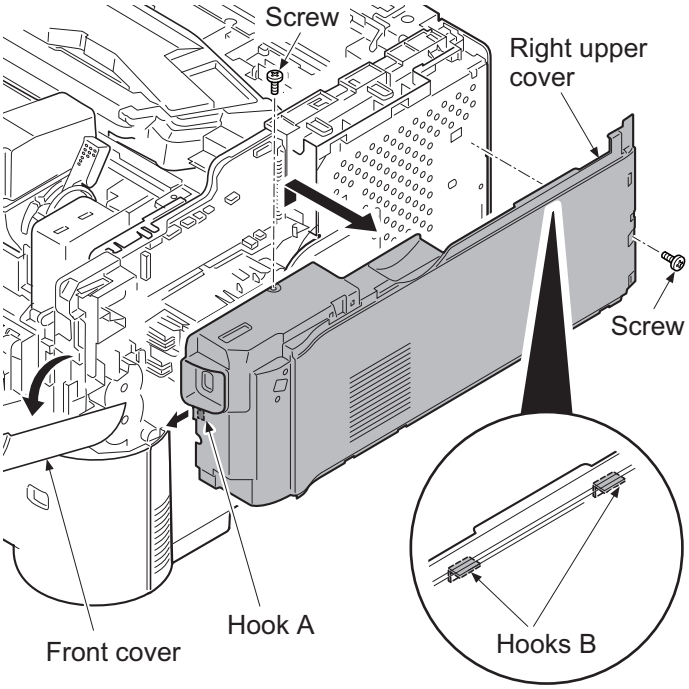

Figure 1-5-5

(4) Detaching and refitting the right lower cover

Procedure

1. Remove the right upper cover. (See page 1-5-4)
2. Remove the inlet cover. (See page 1-5-4)
3. Pull out the cassette.
4. Remove three screws.
5. Release two hooks by sliding the right lower cover upward and then remove the right lower cover.

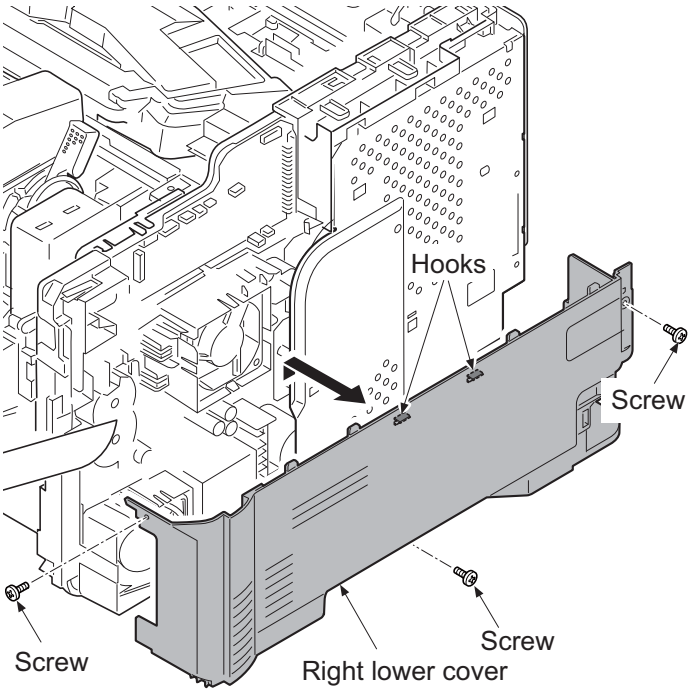

Figure 1-5-6

TONER
www.tonerplus.com.ua

(5) Detaching and refitting the rear left cover

Procedure

1. Open the rear cover.
2. Release two hooks of the rear left cover while pulling forward.
3. Remove the rear left cover by rotating.

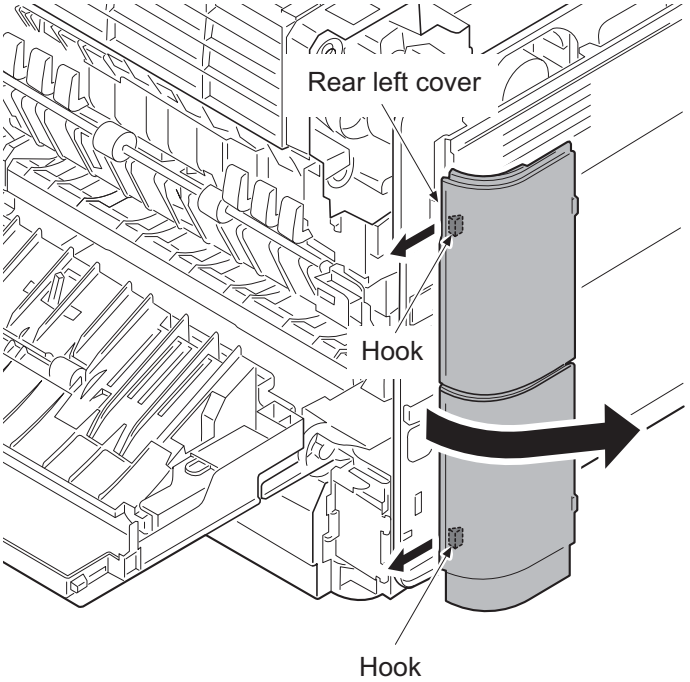

Figure 1-5-7

(6) Detaching and refitting the left upper cover

Procedure

1. Open the front cover.
2. Remove the top cover assembly. (See page 1-5-3)
3. Remove the rear left cover. (See page 1-5-5)
4. Release the hook A by sliding the left upper cover upward.
5. Release the hook B and hook C and then remove the left upper cover and the waste toner box cover. (See page 1-5-5)

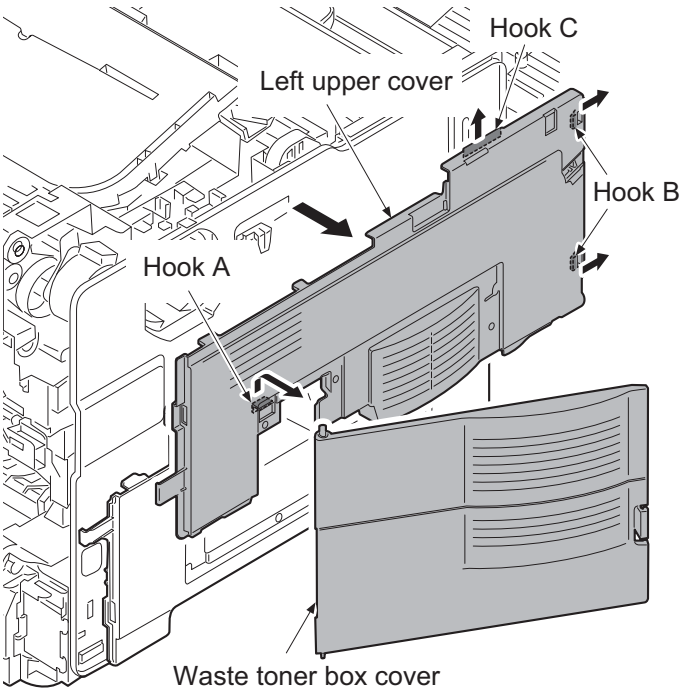

Figure 1-5-8

TONER
www.tonerplus.com.ua

(7) Detaching and refitting the left lower cover

Procedure

1. Remove the left upper cover.
   (See page 1-5-5)
2. Pull out the cassette.
3. Remove the rear left lower cover.
   (See page 1-5-5)
4. Remove the screw.
5. Release the hook A.
6. Release two hooks B by sliding the left lower cover upward and then remove the left lower cover.

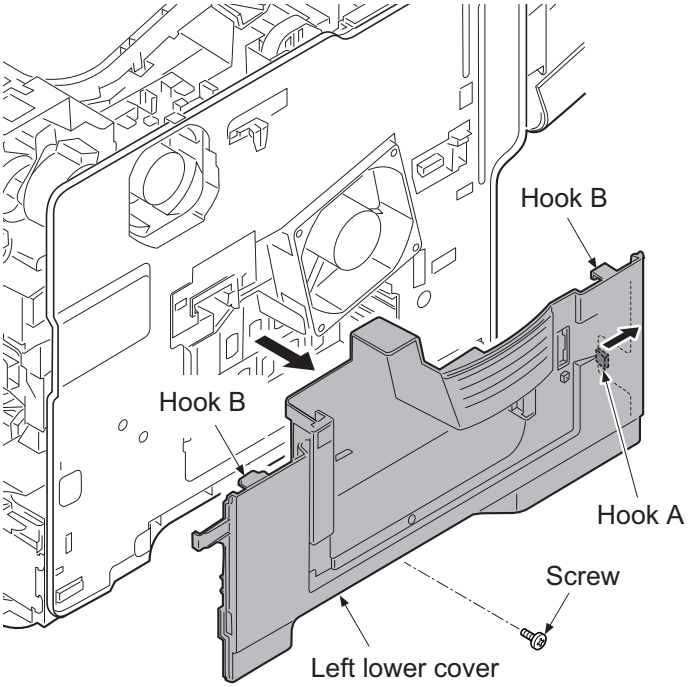

Figure 1-5-9

(8) Detaching and refitting the rear cover

Procedure

1. Remove the rear left lower cover.
   (See page 1-5-5)
2. Open the rear cover.

[60/50/45 ppm model only]

3. Remove the screw and then the grounding wire.
4. Open the connector cover and then remove three connectors.

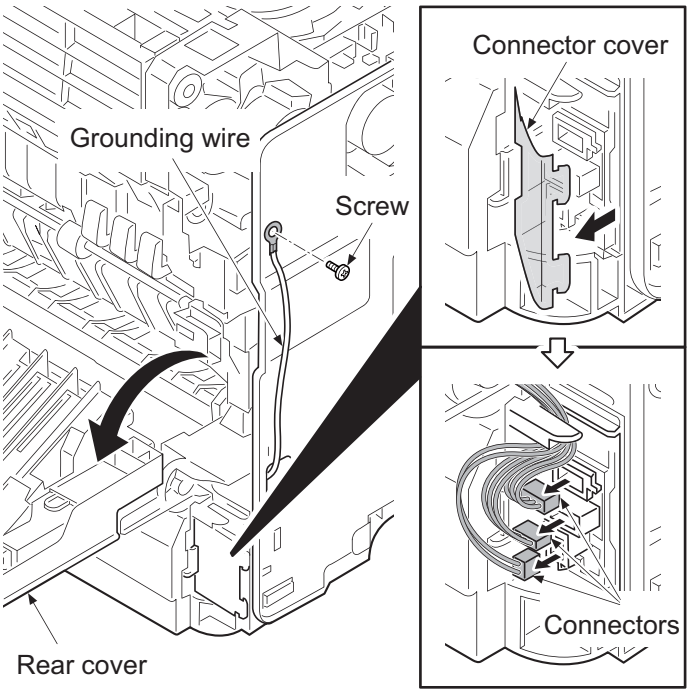

Figure 1-5-10

TONER
www.tonerplus.com.ua

5. Remove the fulcrum axis by sliding the rear cover assembly while avoiding rear cover and then remove the rear cover assembly.

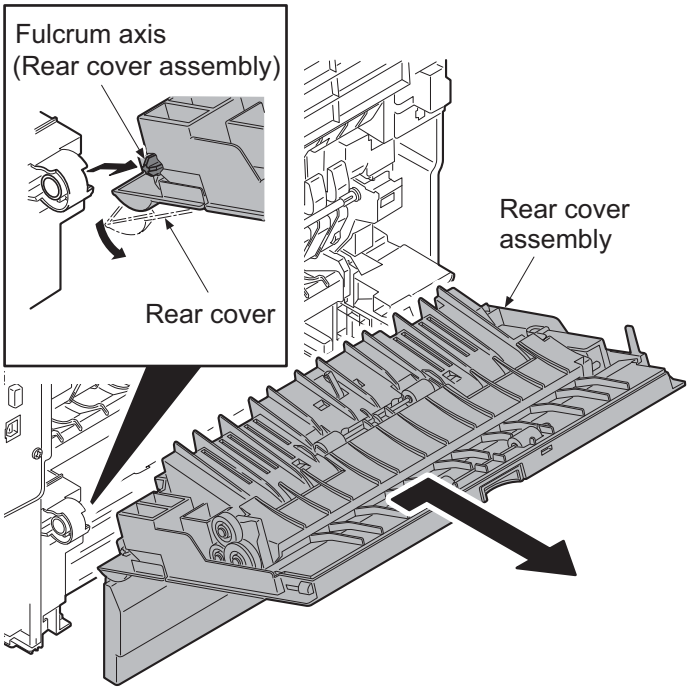

Figure 1-5-11

TONER
www.tonerplus.com.ua

1-5-3 Paper feed section

(1) Detaching and refitting the paper feed roller

Procedure

1. Pull out the cassette.
2. Release the lock by pulling the lever.
3. Remove the paper feed roller assembly by pulling and raising and then sliding forward.
4. Check or replace the paper feed roller and refit all the removed parts.

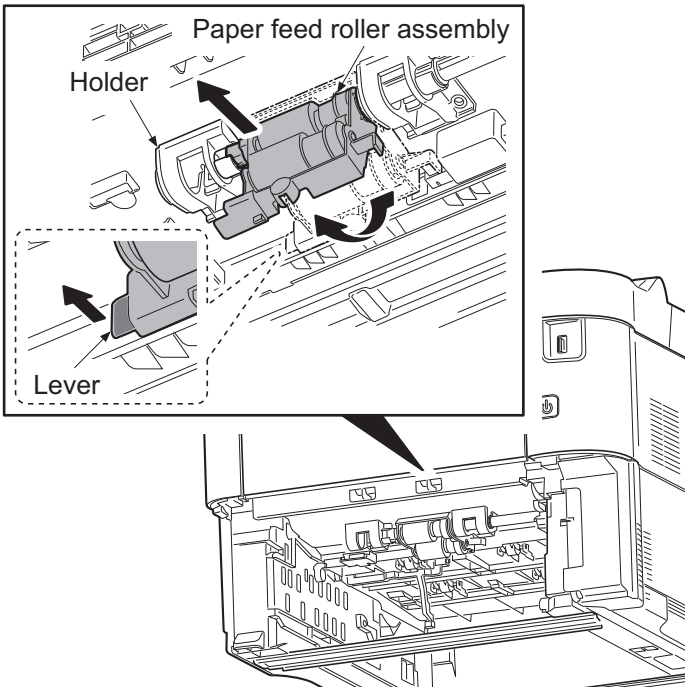

Figure 1-5-12

(2) Detaching and refitting the retard roller

Procedure

1. Release two hooks in backside of cassette and then remove the retard roller assembly.

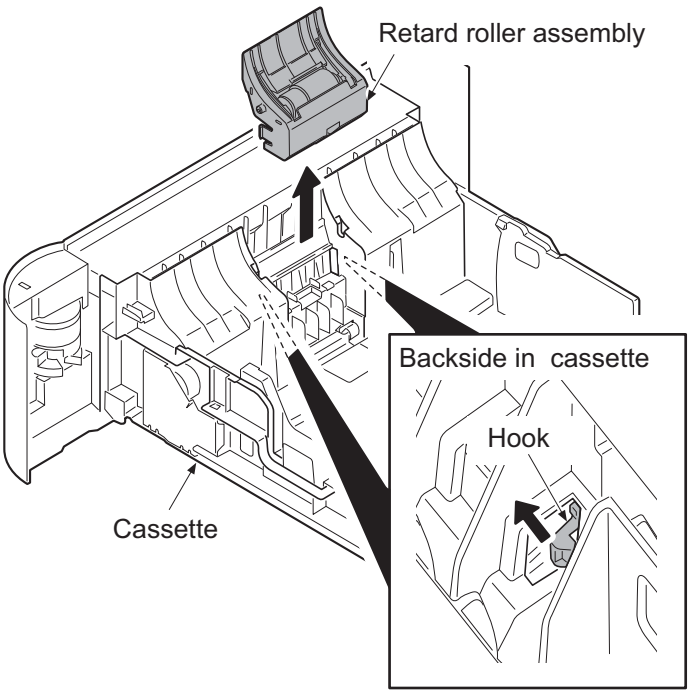

Figure 1-5-13

TONER
www.tonerplus.com.ua

2. Remove the spring.
3. Remove the retard roller holder by rotating.
4. Check or replace the retard roller and refit all the removed parts.

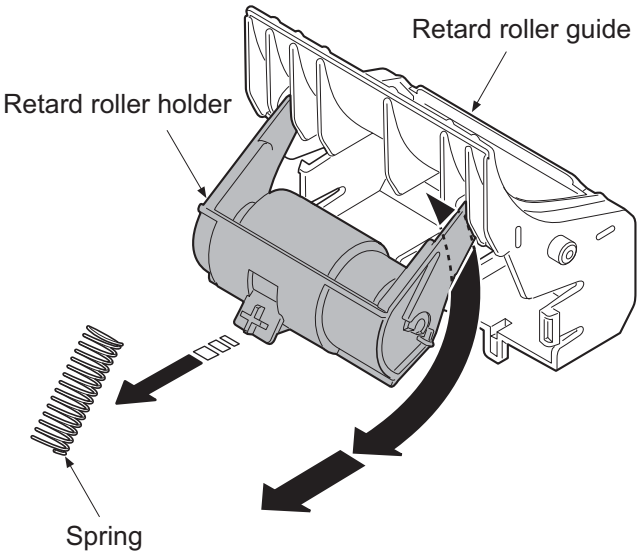

Figure 1-5-14

(3) Detaching and refitting the MP paper feed pulley

Procedure

1. Open the front cover.
2. Remove the MP tray from the printer while bending it. Retain the MP tray for future use.

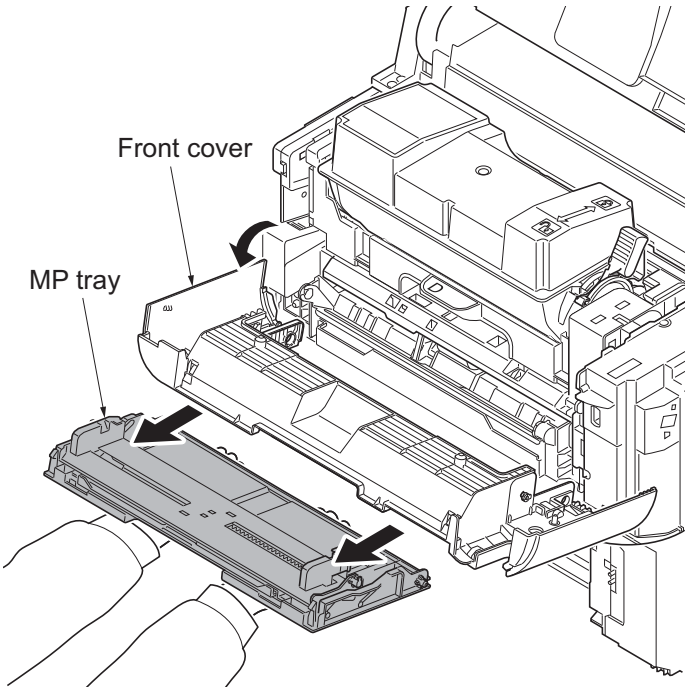

Figure 1-5-15

TONER
www.tonerplus.com.ua

3. Remove the screw.
4. Remove the fulcrum of leftside by extending a cover.
5. Remove the fulcrum of rightside during twisting a cover.
6. Remove the front cover forward.

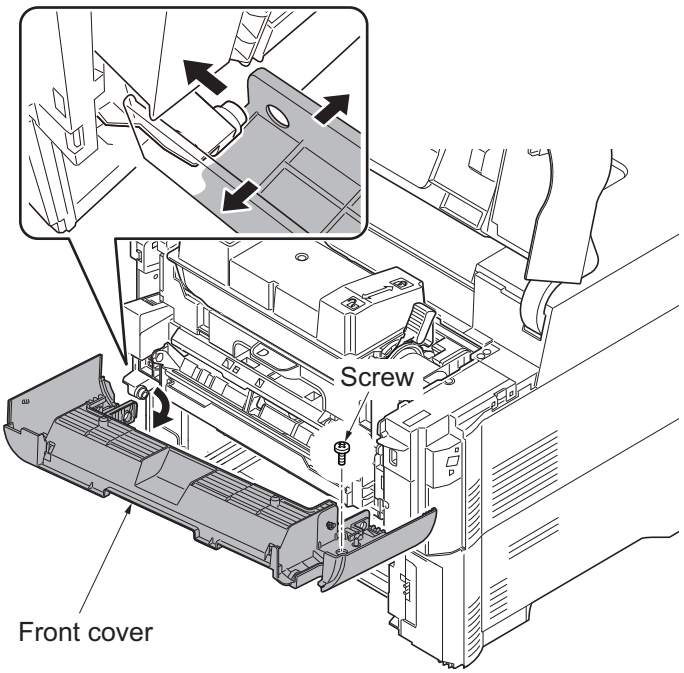

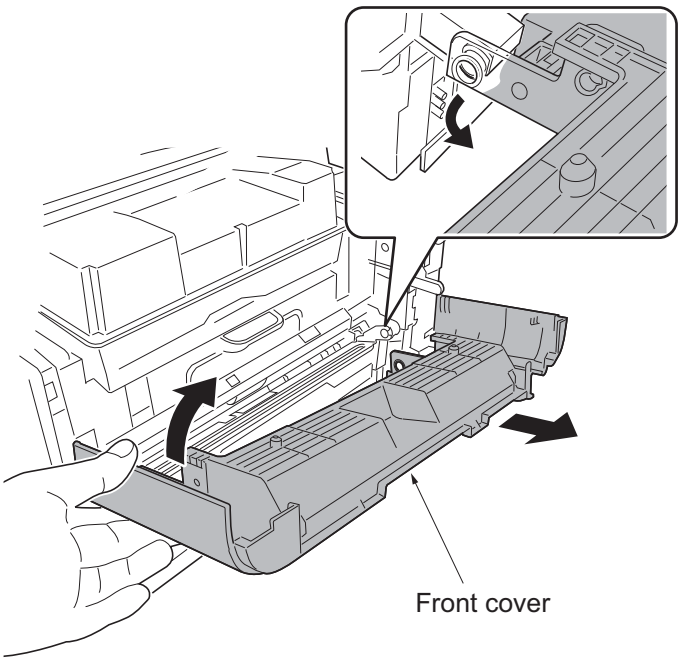

Figure 1-5-16

TONER
www.tonerplus.com.ua

7. Remove two screws on the MP paper feed unit.

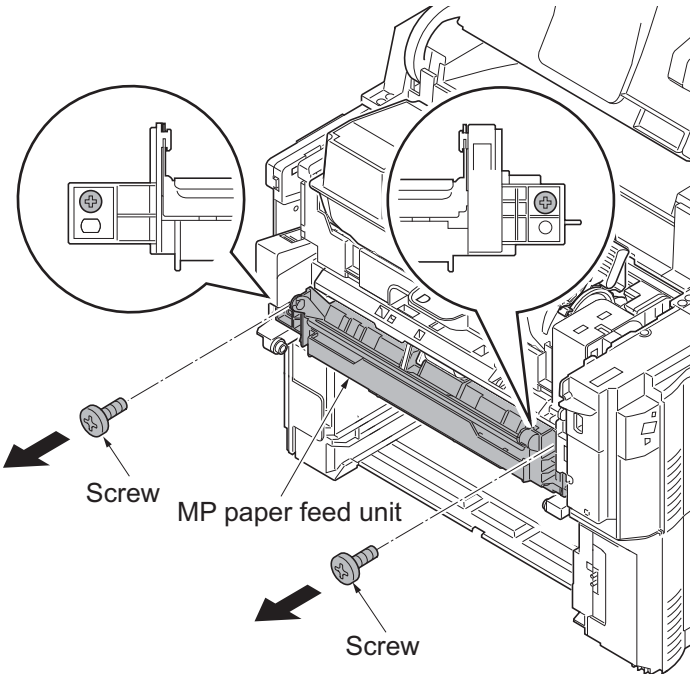

Figure 1-5-17

8. Remove the MP paper feed unit from the printer.

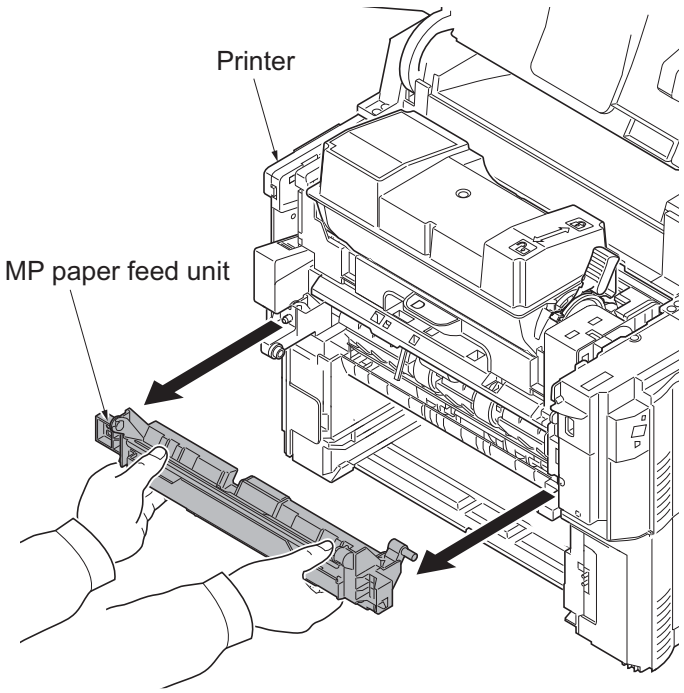

Figure 1-5-18

TONER
www.tonerplus.com.ua

9. Release the lock lever and then slide the MP paper feed pulley axis.
10. Remove MP paper feed pulley.
11. Check or replace the MP paper feed pulley and refit all the removed parts.

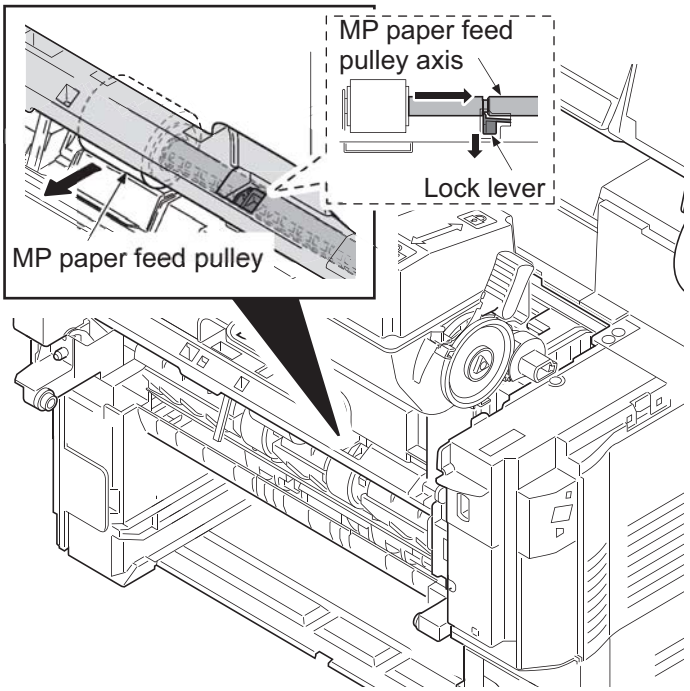

Figure 1-5-19

TONER
www.tonerplus.com.ua

1-5-4 Developer section

(1) Detaching and refitting the developer unit

Procedure

1. Open the top cover.
2. Release the lock lever by rotating and then remove the toner container.

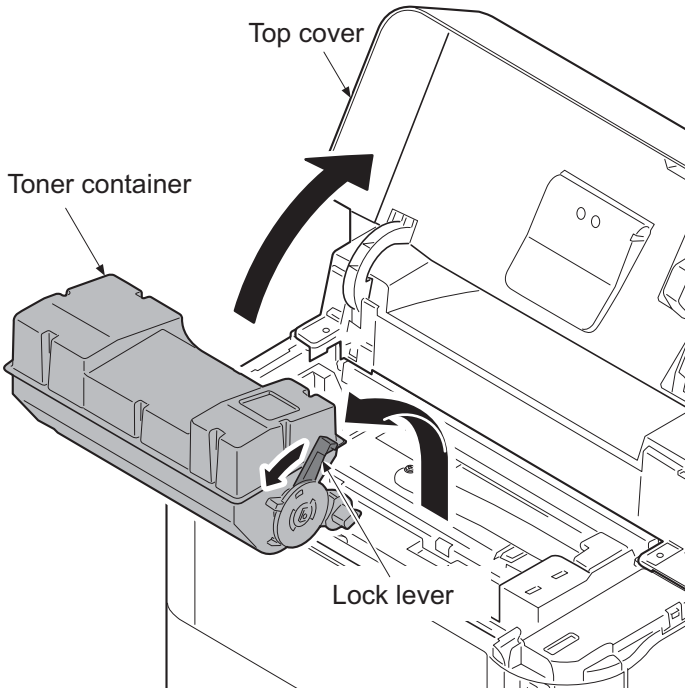

Figure 1-5-20

3. Open the front cover.
4. Pull the imaging unit forward.
5. Release the hook and then remove the container guide by sliding backwards.

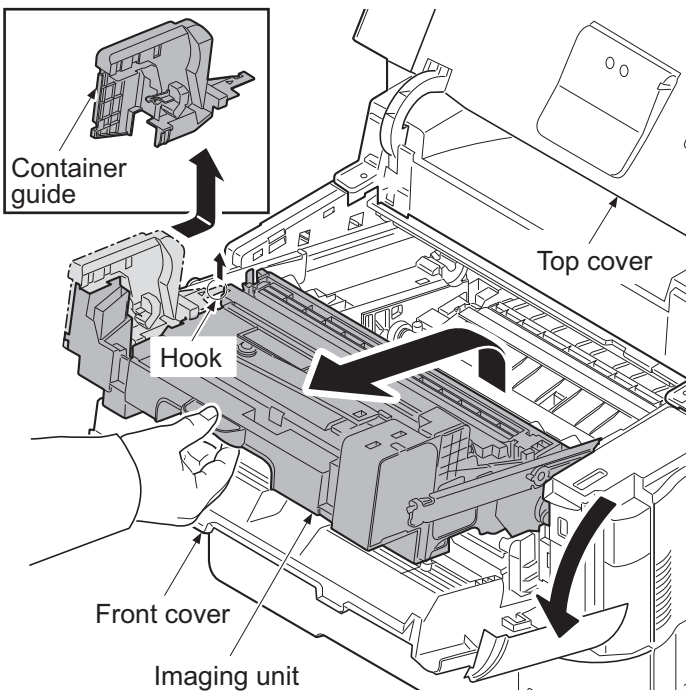

Figure 1-5-21

TONER
www.tonerplus.com.ua

6. Pull the connector out.
7. Release the lock lever and then remove the developer unit upward.
8. Check or replace the developer unit and refit all the removed parts.

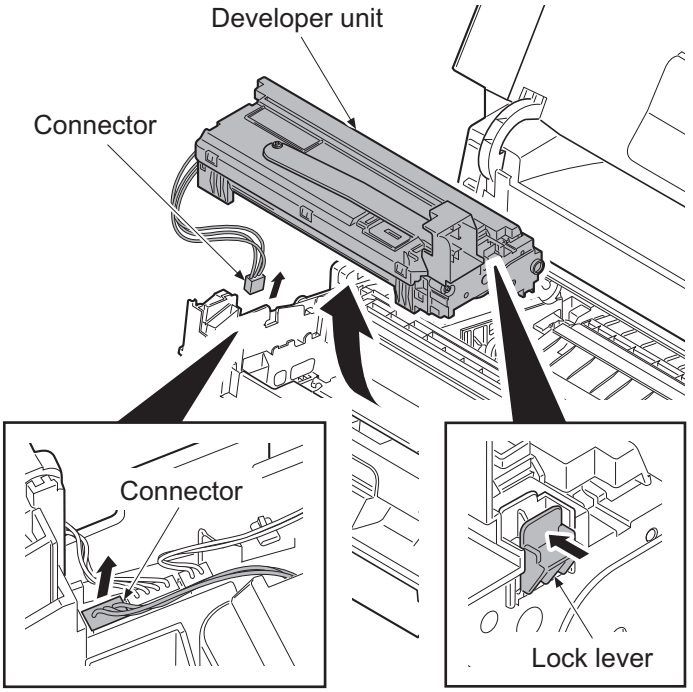

Figure 1-5-22

TONER
www.tonerplus.com.ua

1-5-5 Drum section

(1) Detaching and refitting the drum unit

Procedure

1. Remove the developer unit.
   (See page 1-5-13)
2. Remove the lock lever L.
3. Remove the lock lever R by sliding backward.
4. Remove the drum unit by sliding forward.
5. Check or replace the drum unit and refit all the removed parts.

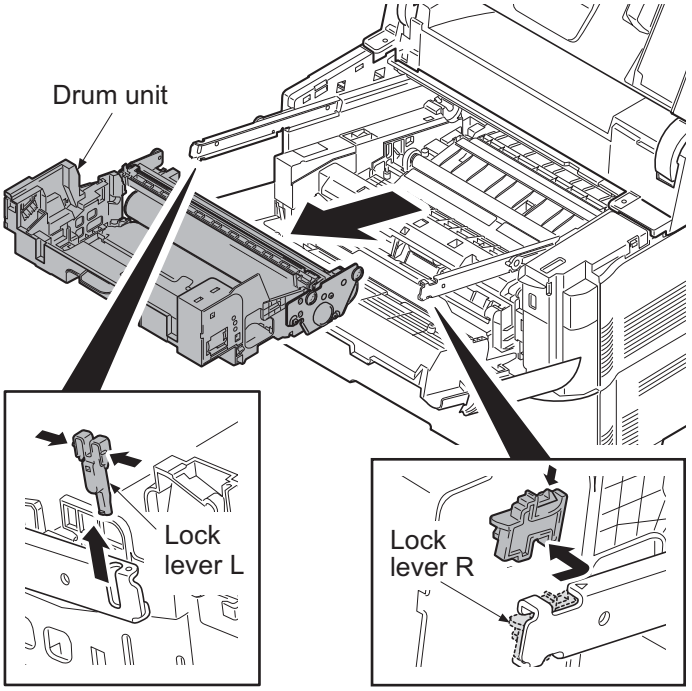

Figure 1-5-23

(2) Detaching and refitting the chager roller unit

Procedure

1. Release the lock lever and then remove the chager roller unit.
2. Check or replace the charger roller unit and refit all the removed parts.

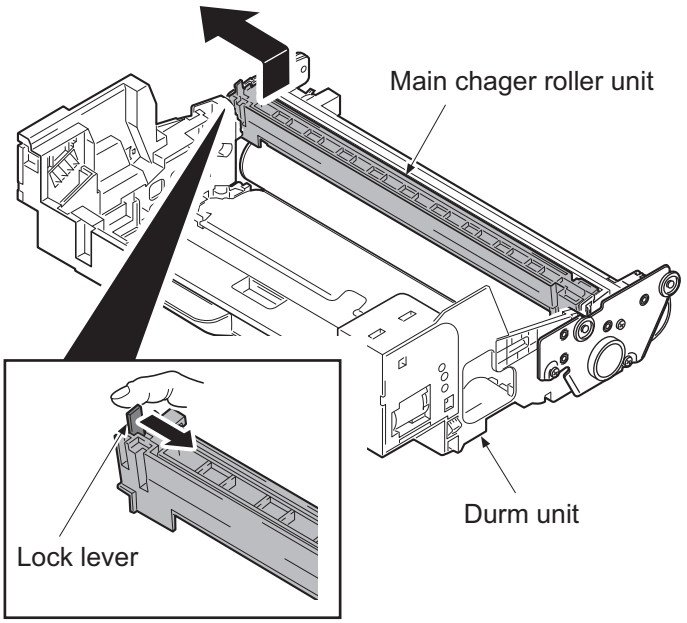

TONER
www.tonerplus.com.ua

Figure 1-5-24

1-5-6 Transfer/separation section

(1) Detaching and refitting the transfer roller assembly

Procedure

1. Release four hooks by sliding to left the paper chute guide.
2. Remove the paper chute guide upward.

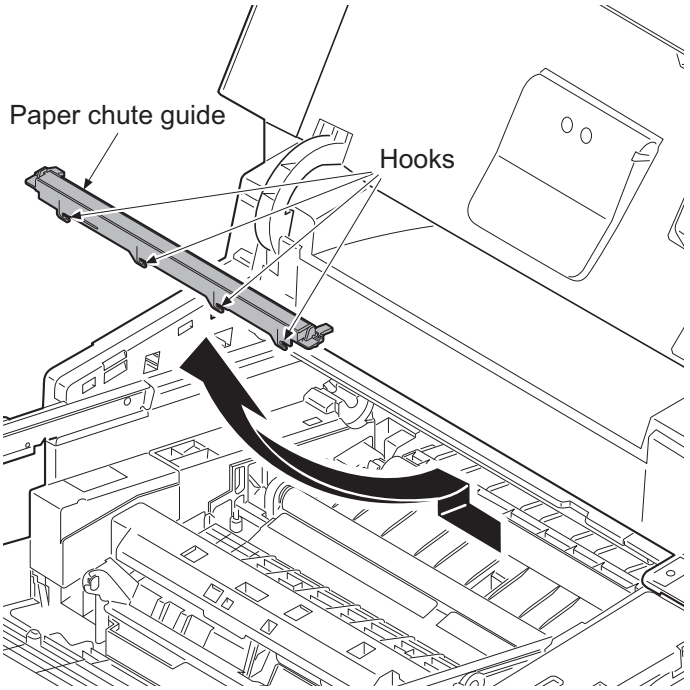

Figure 1-5-25

3. Remove the axes of transfer roller from each bush.
4. Remove the transfer roller assembly upward.
5. Check or replace the transfer roller assembly and refit all the removed parts.

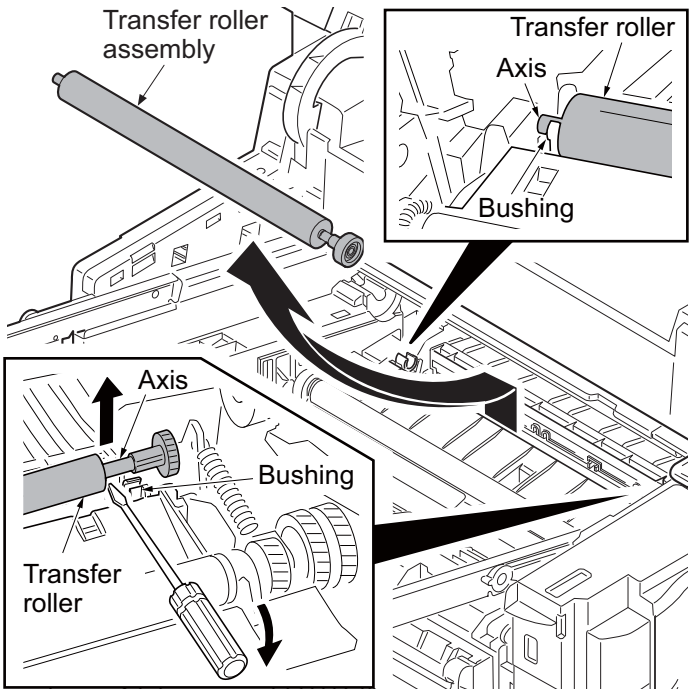

Figure 1-5-26

TONER
www.tonerplus.com.ua

(2) Detaching and refitting the separation needle unit

Procedure

1. Remove the transfer roller unit.
   (See page 1-5-16)
2. Release four hooks of separation needle unit by rotating and then remove the separation needle unit upward.
3. Check or replace the separation needle unit and refit all the removed parts.

Caution: Check certainly being fixed at the time of attachment.

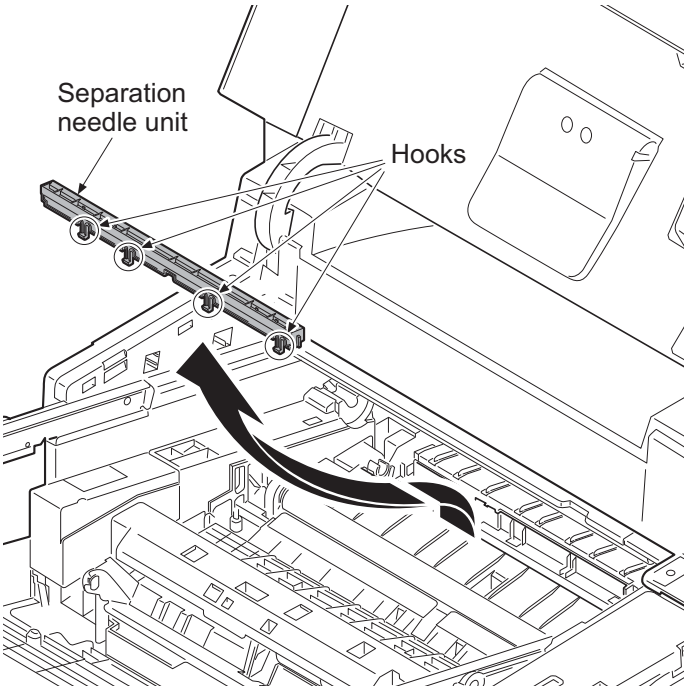

Figure 1-5-27

TONER
www.tonerplus.com.ua

1-5-7 Optical section

(1) Detaching and refitting the laser scanner unit

Procedure

1. Remove the top cover assembly.
   (See page 1-5-3)
2. Remove the right upper cover.
   (See page 1-5-4)
3. Pull the connector and FFC from engine PWB out.
4. Release the wires from the wire guide.
5. Remove four screws and then remove the laser scanner unit upward.
6. Check or replace the laser scanner unit and refit all the removed parts.

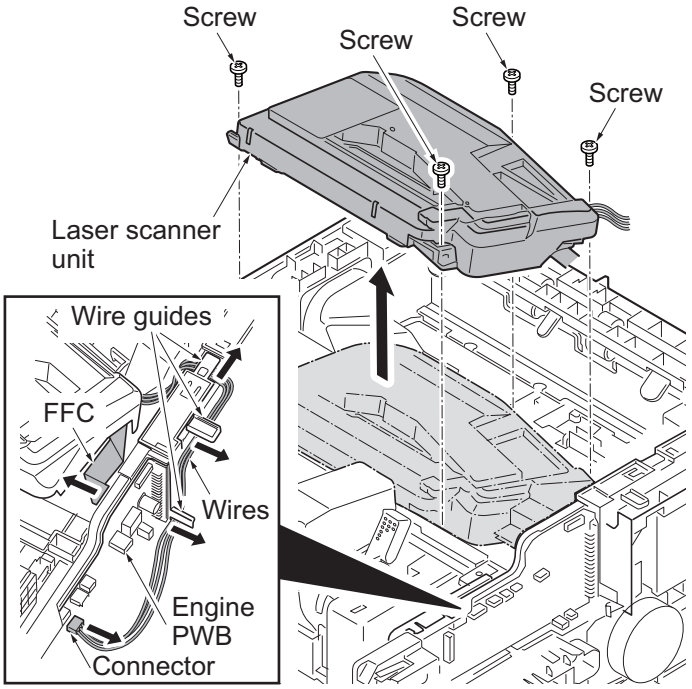

Figure 1-5-28

TONER
www.tonerplus.com.ua

1-5-8 Fuser section

(1) Detaching and refitting the fuser unit

Procedure

1. Remove the rear cover.
   (See page 1-5-6)
2. Remove the screw and then remove the connector cover A.
3. Pull two connectors out.

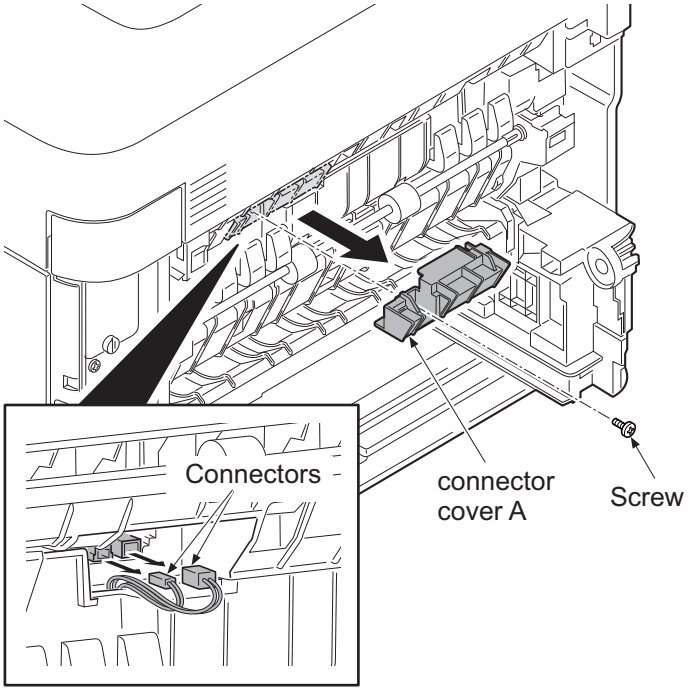

Figure 1-5-29

4. Remove the connector cover B by releasing the hook.
5. Remove the screw of connector cover C.
6. Remove the connector cover C by releasing the hook.
7. Pull two connectors out.

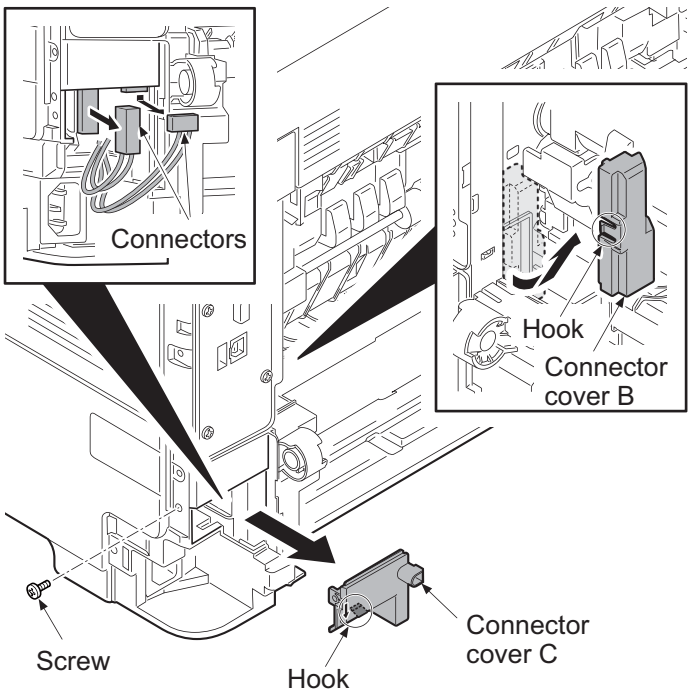

Figure 1-5-30

TONER
www.tonerplus.com.ua

[60/50/45 ppm model]

8. Remove the screw and then remove the fuser unit forward.
9. Check or replace the fuser unit and refit all the removed parts.

Caution: when refitting the fuser unit, perform the following procedures.

(1)Turn on the power switch while opening the rear cover after removing the fuser unit.
(2)Turn off the power switch after 5-second or more progress.
(release state of fixing pressure)
(3)Refit the fuser unit.

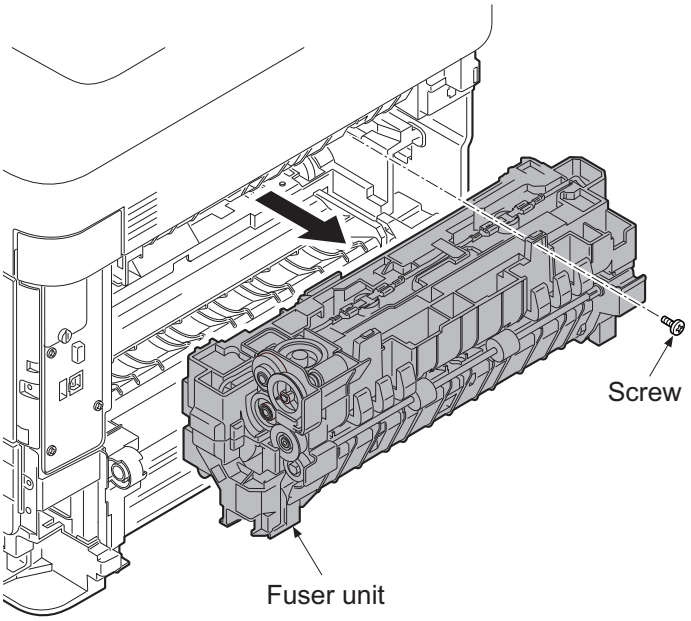

Figure 1-5-31

[40 ppm model]

8. Pull up the release lever of fixing pressure.
9. Remove the screw and then remove the fuser unit forward.
10. Check or replace the fuser unit and refit all the removed parts.

Caution: Pull down the release lever of fixing pressure after refitting the fuser unit.(pressurization state)

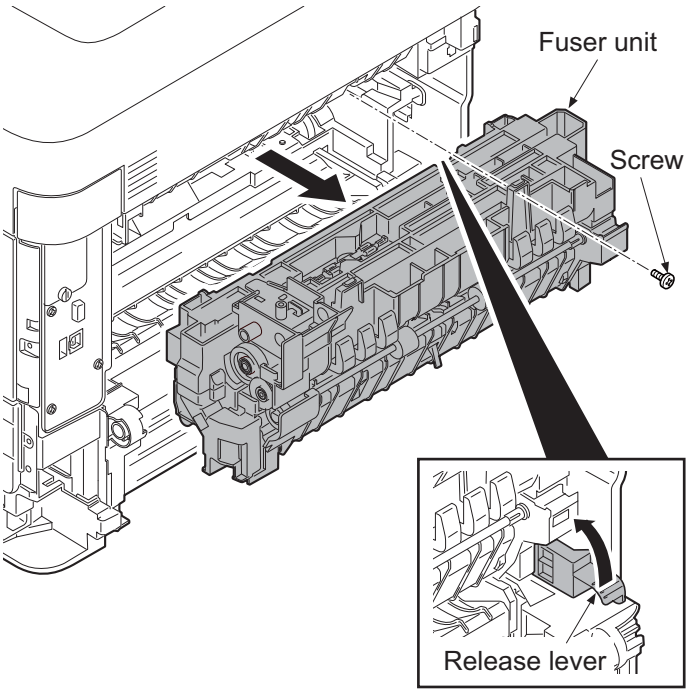

Figure 1-5-32

TONER
www.tonerplus.com.ua

1-5-9 ejection section

(1) Detaching and refitting the ejection unit

Procedure

1. Remove the top cover assembly. (See page 1-5-3)
2. Remove the right upper cover and the right lower cover. (See page 1-5-4)
3. Remove the left upper cover. (See page 1-5-5)
4. Remove the controller box cover. (See page 1-5-25)
5. Pull the connector out and then release the wires from Hooks.
6. Remove three screws and then remove the ejection unit.
7. Check or replace the ejection unit and refit all the removed parts.

*1: 60/50/45 ppm model only
*2: 40 ppm model only

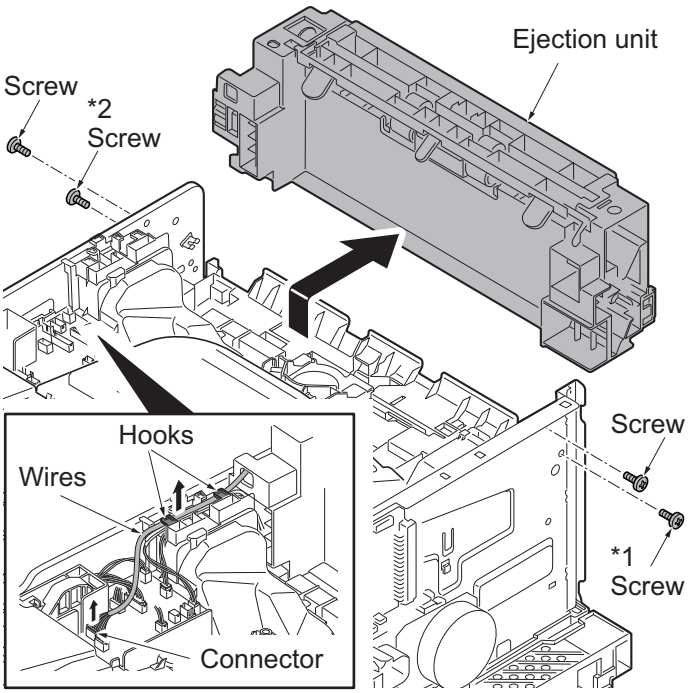

Figure 1-5-33

TONER
www.tonerplus.com.ua

1-5-10 PWBs

(1) Detaching and refitting the main PWB

Procedure

1. Remove the inlet cover and the slot cover.(See page 1-5-3)
2. Unplug the power cable.

   Caution: Do not insert or remove main PWB assembly while machine power is on.
   Doing so may cause damage to the machine and the main PWB.

3. Remove five screws and then pull the main PWB assembly out forward.
4. Check or replace the main PWB and refit all the removed parts.

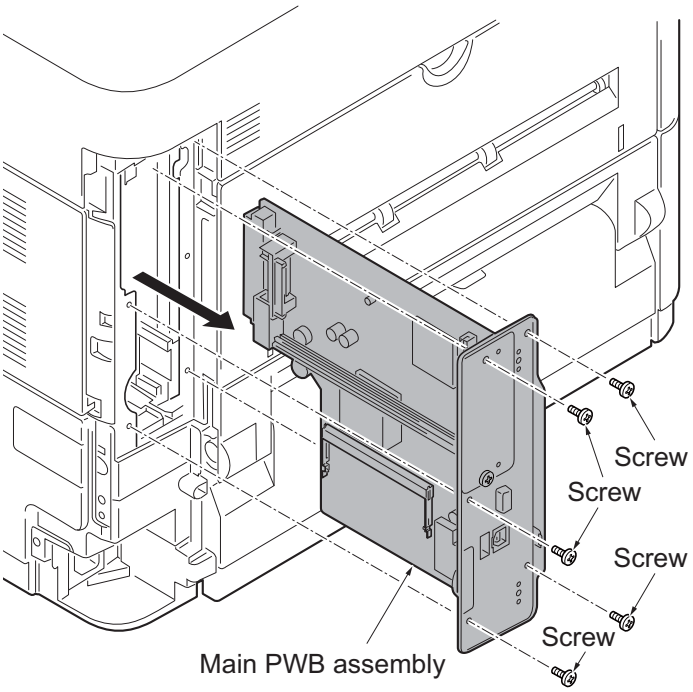

Figure 1-5-34

(2) Detaching and refitting the engine PWB

Procedure

1. Remove the top cover assembly. (See page 1-5-3)
2. Remove the right upper cover. (See page 1-5-4)
3. Remove the main PWB assembly. (See page 1-5-22)
4. Remove the screw and then the grounding terminal.
5. Release the wires and FFC from hooks.
6. Release the fixing hook and then remove the wire guide.

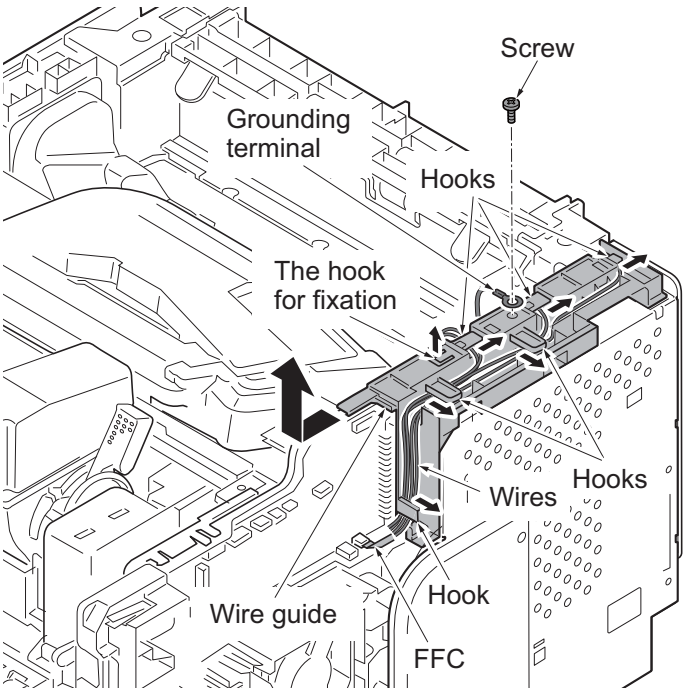

Figure 1-5-35

TONER
www.tonerplus.com.ua

7. Pull two connectors out.
8. Remove the screw and two hooks and then remove the wire guide.

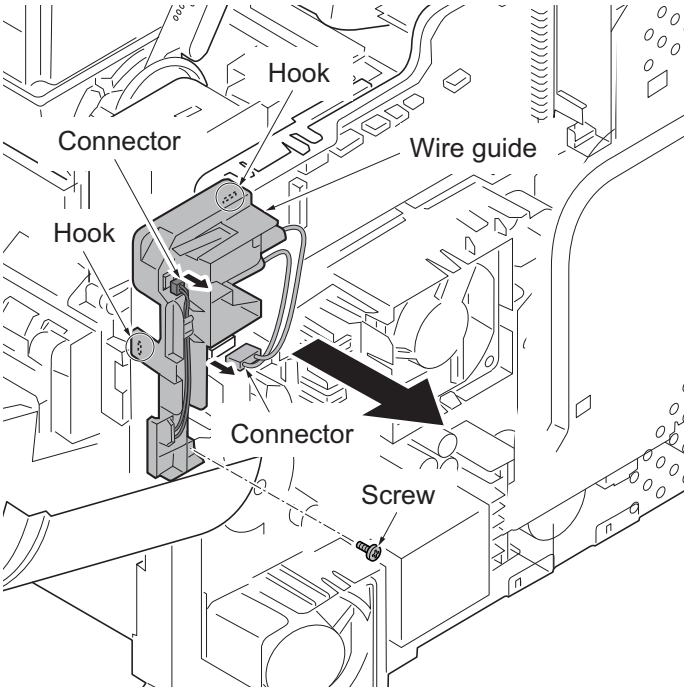

Figure 1-5-36

9. Pull all connectors out from main PWB.
10. Remove four screws and then remove the engine PWB.
11. Check or replace the engine PWB and refit all the removed parts.

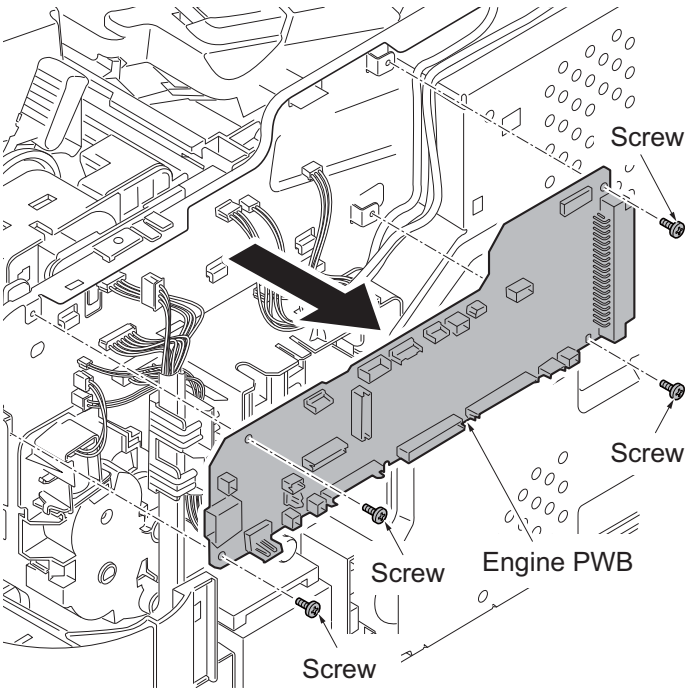

Figure 1-5-37

TONER
www.tonerplus.com.ua

(3) Detaching and refitting the relay-L PWB

Procedure

1. Remove the top cover assembly. (See page 1-5-3)
2. Pull the connectors out from relay-L PWB and then release the wires from hooks.
3. Remove the LSU fan motor assembly upward.

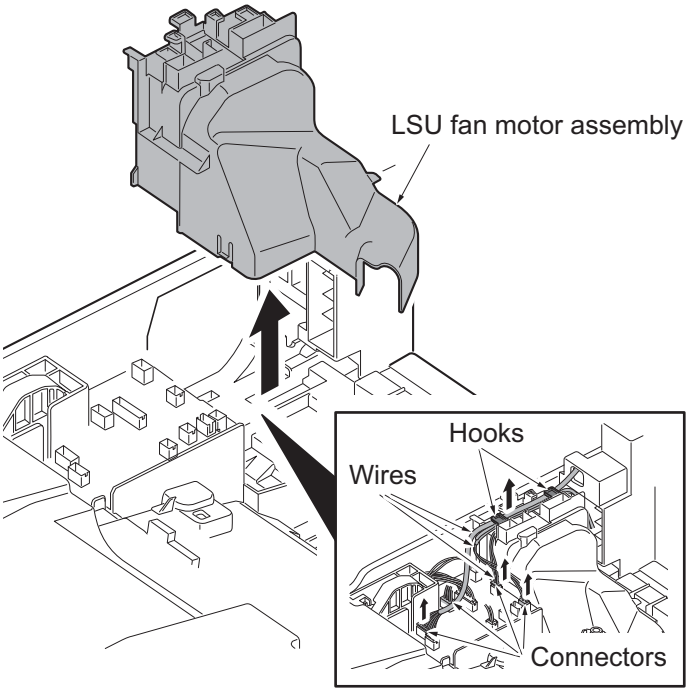

Figure 1-5-38

4. Pull the connectors and FFC out and then remove the relay-L PWB.
5. Check or replace the relay-L PWB and refit all the removed parts.

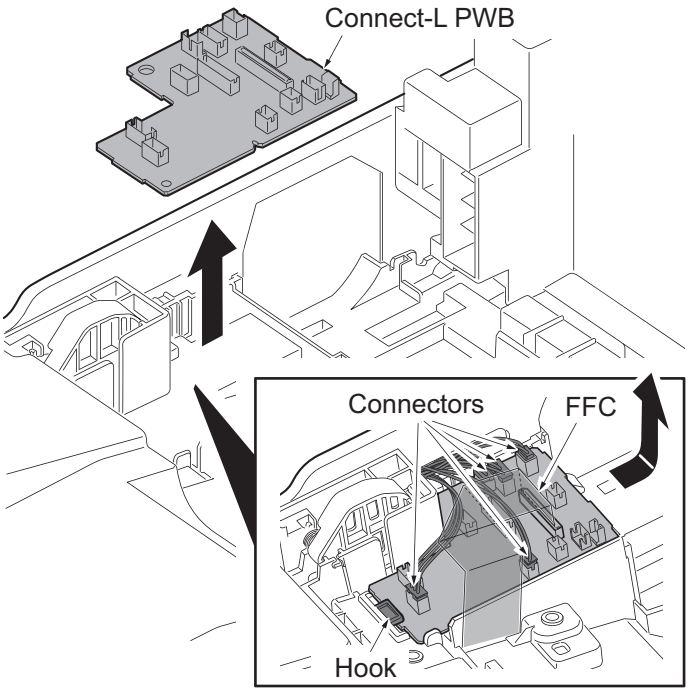

Figure 1-5-39

TONER
www.tonerplus.com.ua

(4) Detaching and refitting the power source PWB

Procedure

1. Remove the top cover assembly. (See page 1-5-3)
2. Remove the right upper cover. (See page 1-5-4)
3. Remove the right lower cover. (See page 1-5-4)
4. Remove the main PWB. (See page 1-5-22)
5. Remove the wire guide. (See page 1-5-22)
6. Remove three screws and then remove the controller box cover.

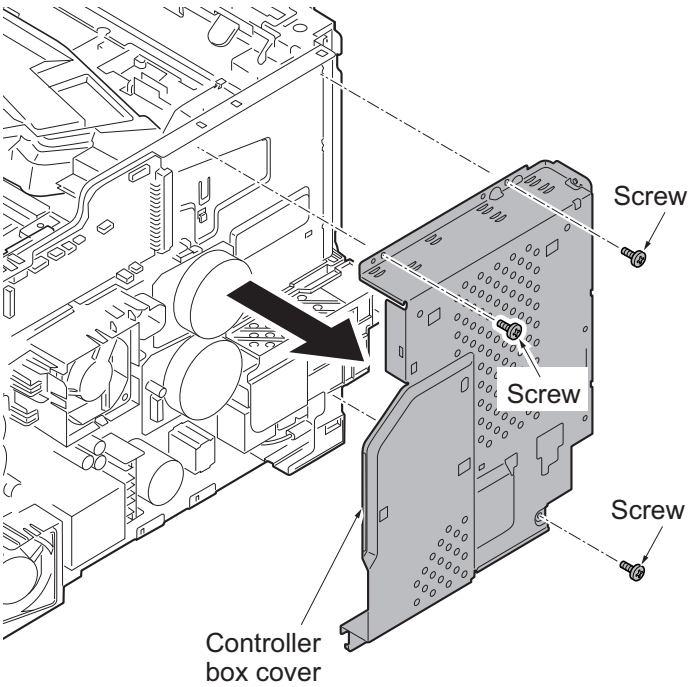

Figure 1-5-40

7. Remove the grounding wire by removing the screw.
8. Remove three screws and then remove the power source PWB assembly.
9. Check or replace the power source PWB and refit all the removed parts.

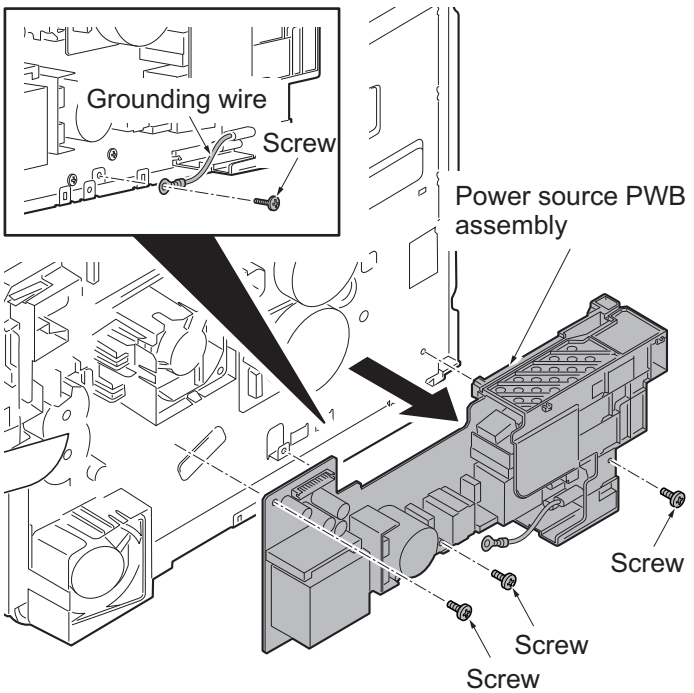

Figure 1-5-41

TONER
www.tonerplus.com.ua

(5) Detaching and refitting the high voltage PWB

Procedure

1. Remove the cassette.
2. Remove the right upper cover and the right lower cover. (See page 1-5-4)
3. Remove the left upper cover and the left lower cover. (See page 1-5-6)
4. Remove the power source fan motor. (See page1-5-30)
5. Remove the power source PWB. (See page1-5-25)
6. Stand the printer front side up.
7. Remove four screws each and then remove the bottom plate 1 and the bottom plate 2.

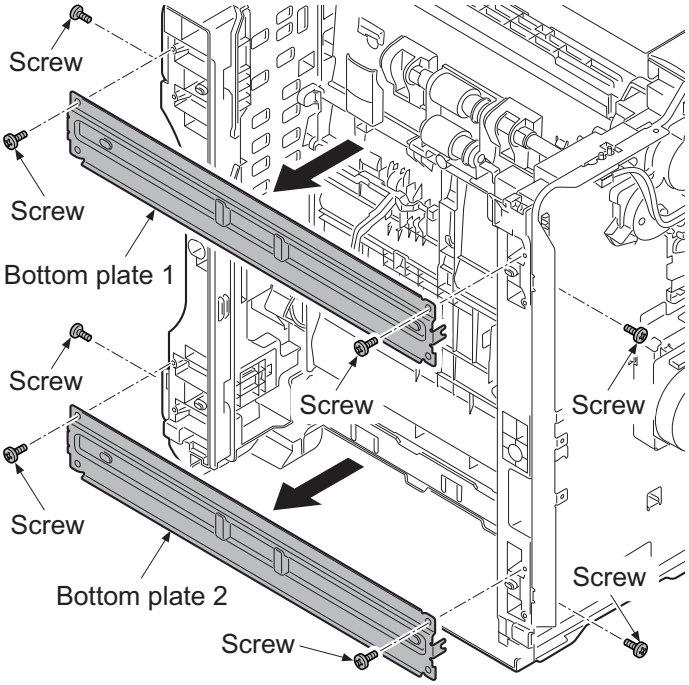

Figure 1-5-42

8. [60/50/45 ppm model only]
   Release two hooks and then remove the wire cover.
   Pull the connector of lift sensor out.

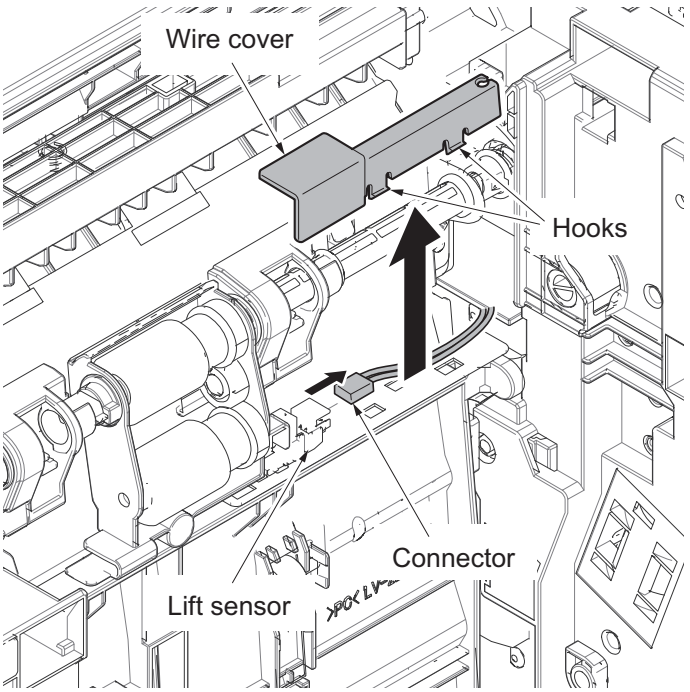

TONER
www.tonerplus.com.ua

Figure 1-5-43

9. Remove seven screws.
10. Extract the feed roller axis by pushing the joint part.
11. Remove the DU assy to the front.

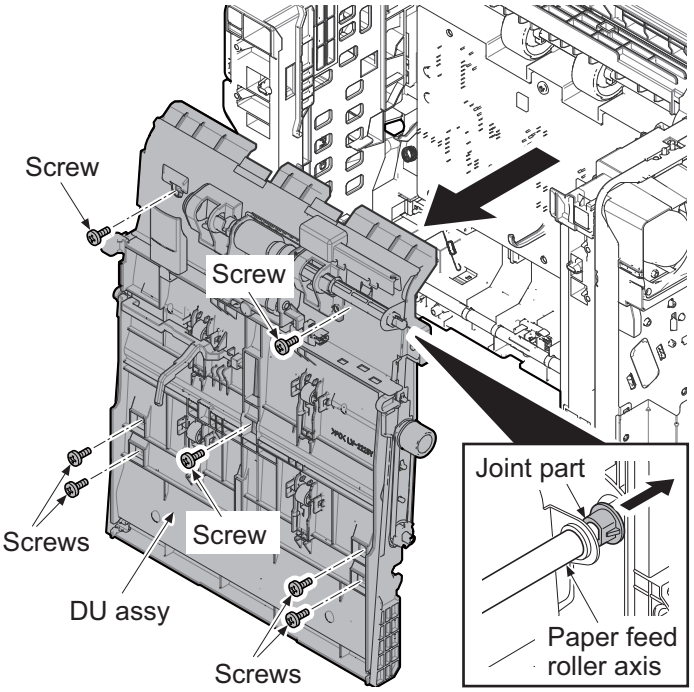

Figure 1-5-44

12. Remove the screw.
13. Pull two connectors out and then remove the high voltage PWB.
14. Check or replace the high voltage PWB and refit all the removed parts.

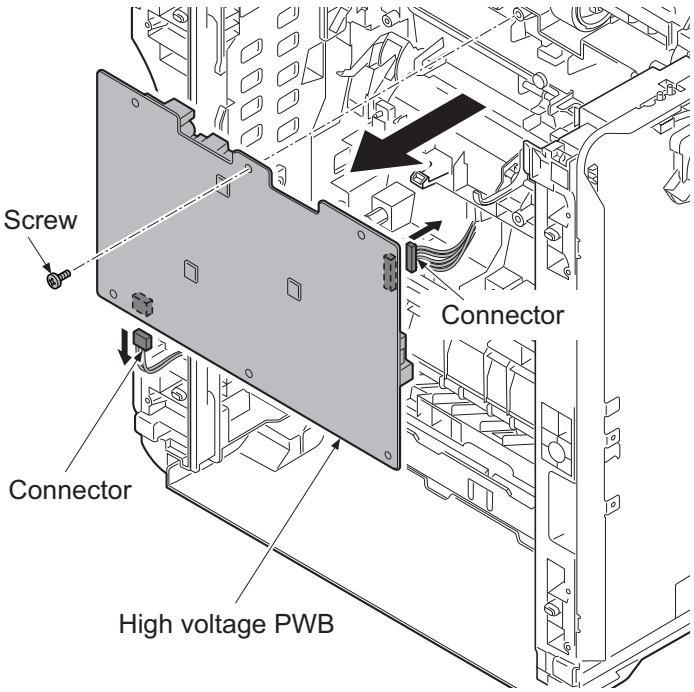

Figure 1-5-45

TONER
www.tonerplus.com.ua

(6) Detaching and refitting the operation PWB

Procedure

1. Open the top cover.
2. Remove the JAM processing procedure sheet.
3. Remove three screws.

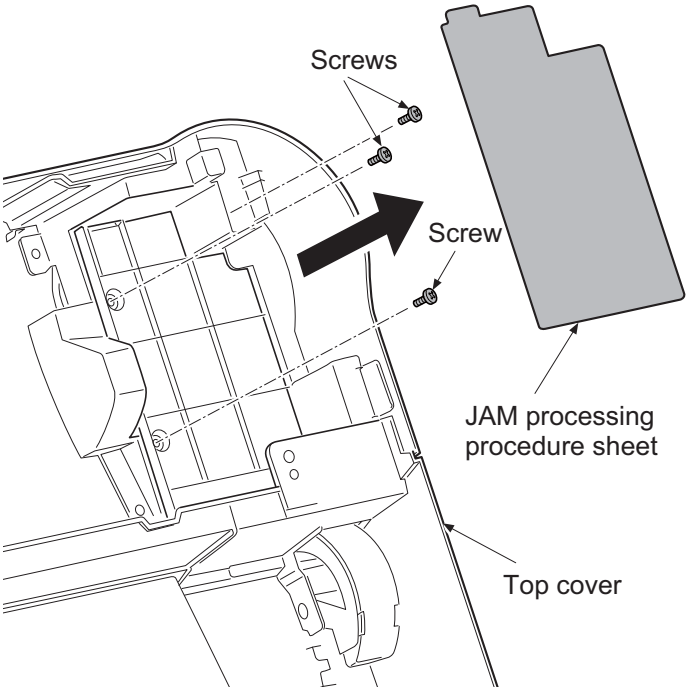

Figure 1-5-46

4. Rotate the operation PWB cover.
5. Remove the screw and then remove the operation PWB.
6. Check or replace the operation PWB and refit all the removed parts.

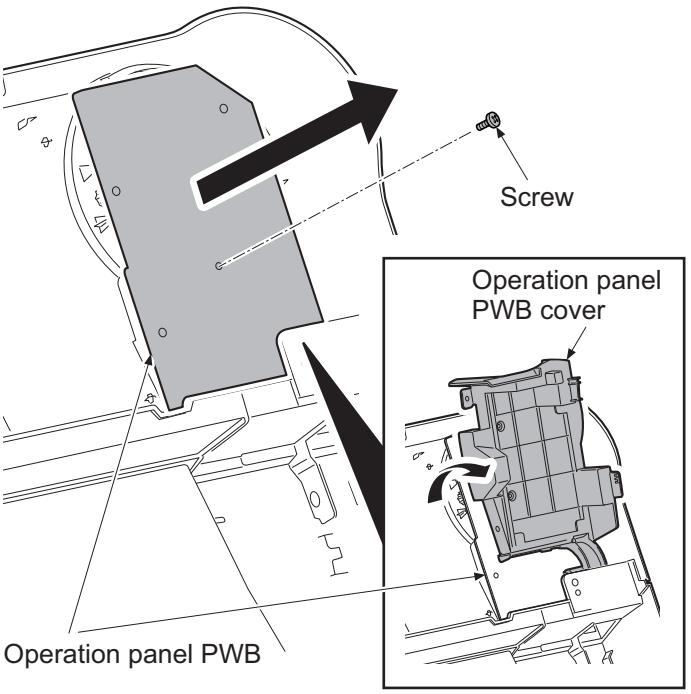

Figure 1-5-47

TONER
www.tonerplus.com.ua

1-5-11 Others

(1) Detaching and refitting the main driving motor unit

Procedure

1. Remove the right upper cover.
   (See page 1-5-4)
2. Remove the right lower cover.
   (See page 1-5-4)
3. Pull the connector out from the motor and then release the wires from wire holder.
4. Remove three screws and then remove the main driving motor unit.
5. Check or replace the main driving motor unit and refit all the removed parts.

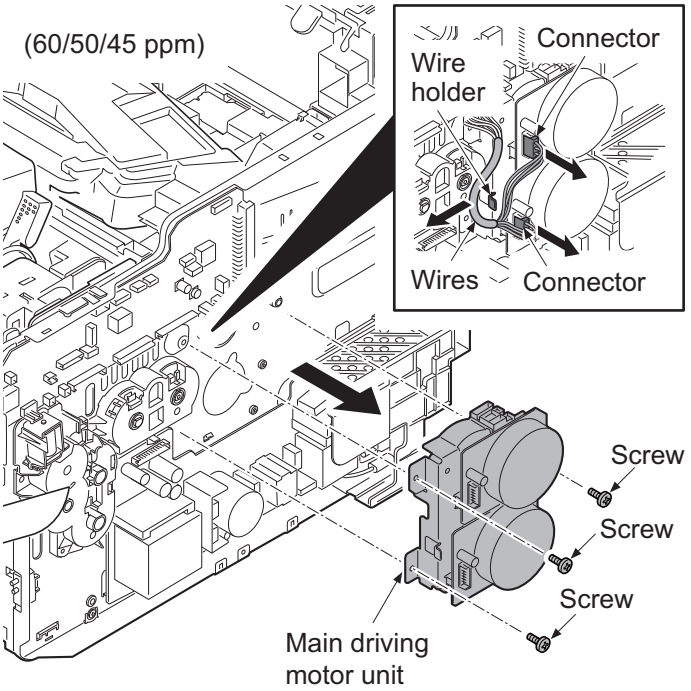

Figure 1-5-48

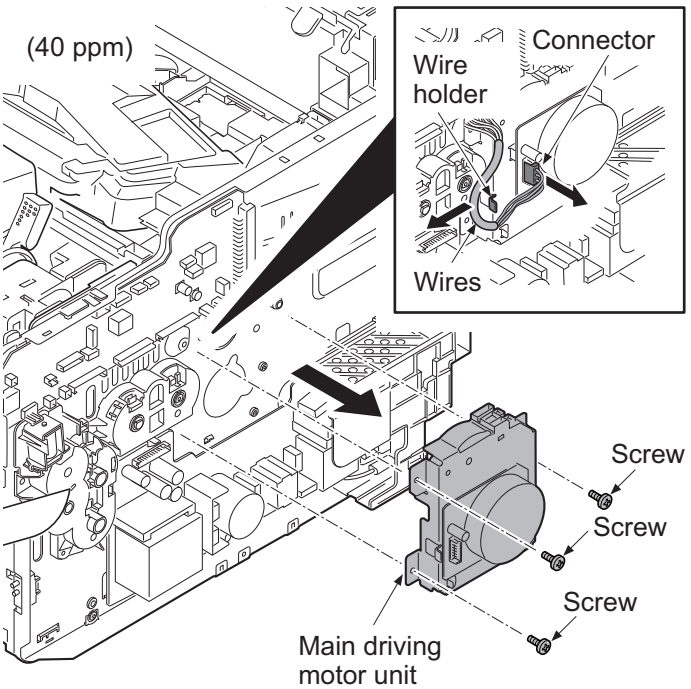

Figure 1-5-49

TONER
www.tonerplus.com.ua

(2) Detaching and refitting the paper feed driving motor unit

Procedure

1. Remove the right upper cover. (See page 1-5-4)
2. Remove the right lower cover. (See page 1-5-4)
3. Pull the connectors of clutches and solenoid out.
4. Remove three screws and then remove the paper feed driving motor unit.
5. Check or replace the paper feed driving motor unit and refit all the removed parts.

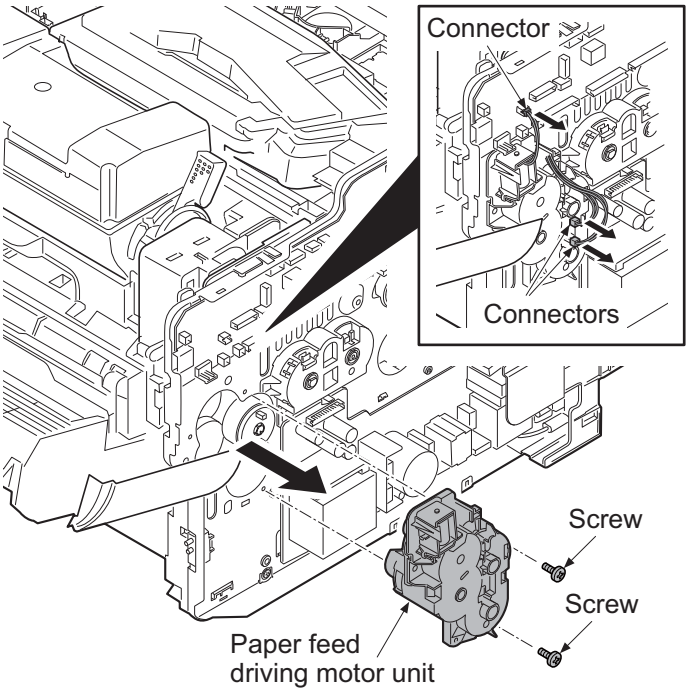

Figure 1-5-50

(3) Detaching and refitting the power source fan motor

Procedure

1. Remove the right upper cover. (See page 1-5-4)
2. Remove the right lower cover. (See page 1-5-4)
3. Pull the connector of the power source fan motor wire out.
4. Release three hooks using flat-blade screwdriver and then remove the power source fan motor assembly.
5. Check or replace the power source fan motor and refit all the removed parts.

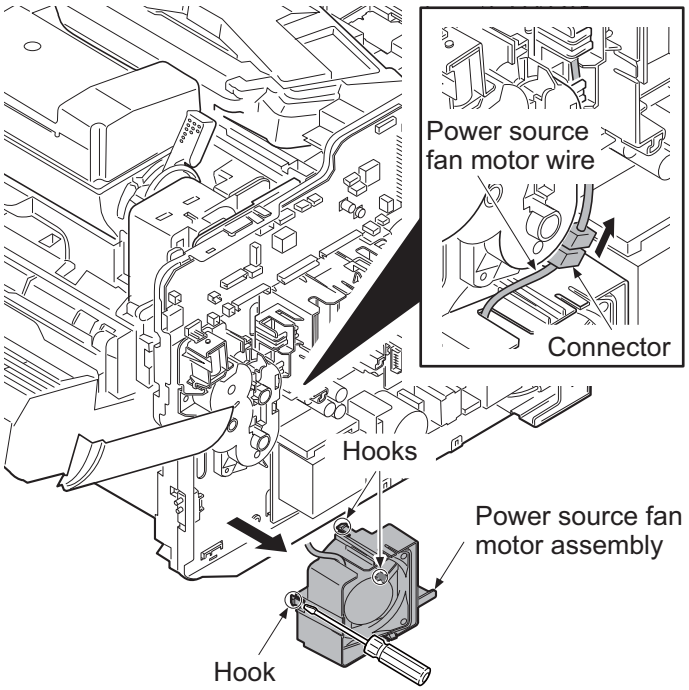

Figure 1-5-51

TONER
www.tonerplus.com.ua

(4) Direction of installing the principal fan motors

When detaching or refitting the fan motor, be careful of the airflow direction (intake or exhaust).

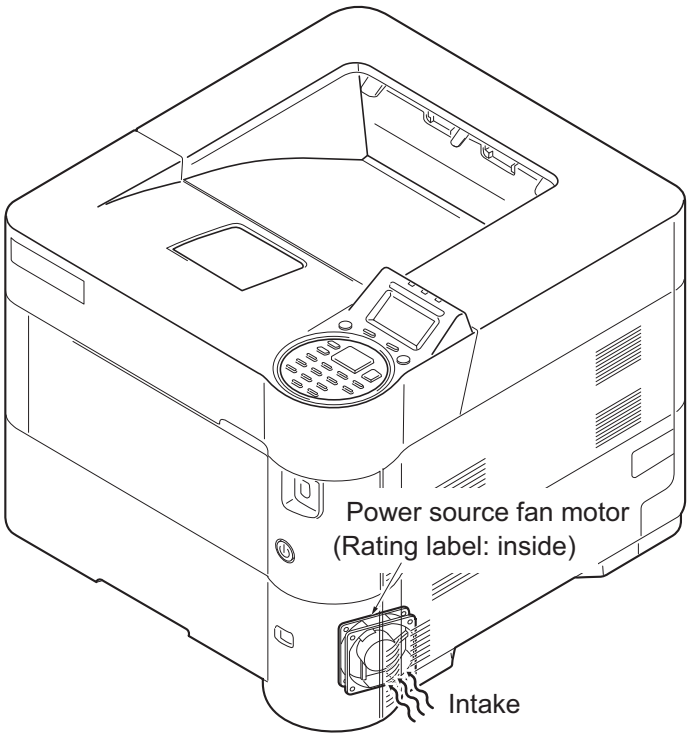

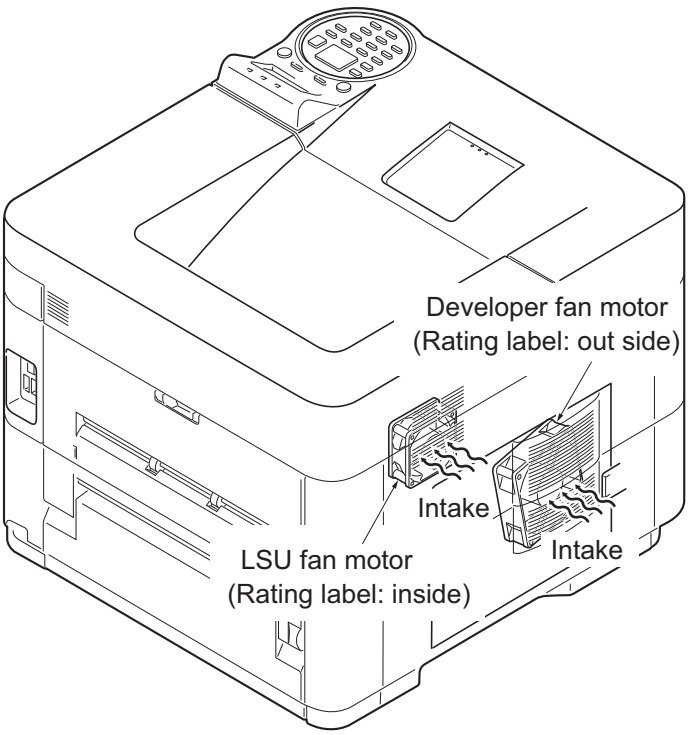

Figure 1-5-52

TONER
www.tonerplus.com.ua

This page is intentionally left blank.

TONER
www.tonerplus.com.ua

1-6-1 Upgrading the firmware

Follow the procedure to upgrade the firmware below.

* Main PWB (CTRL)
* Engine PWB (ENGN)
* PF main PWB (PF)
* Language data (OPT)

Preparation

Extract the file that has the download firmware and put them in the USB Memory.

NOTE: To improve Firmware Upgrade speed, a separate SKIP file can be added to the USB Memory Stick with the Firmware Upgrade package. The Skip file will allow ONLY the Firmware that has been Upgraded to a New Version to load, skipping duplicate Firmware Levels.

Procedure

1. Turn ON the power switch and confirm if the screen shows “Ready to print” then, turn OFF the power switch.

```
Ready to print.
 A4   A6
[ Status ] [ Toner ]
```

2. Insert USB memory that has the firmware in the USB host interface slot.
3. Turn ON the power switch.
4. About 50 seconds later, “FW-Update” will be displayed (this shows to start the download).
5. Display the software that now upgrading.

   CTRL → PF1 → PF2 →PF3 → PF4 → ENGN → OPT

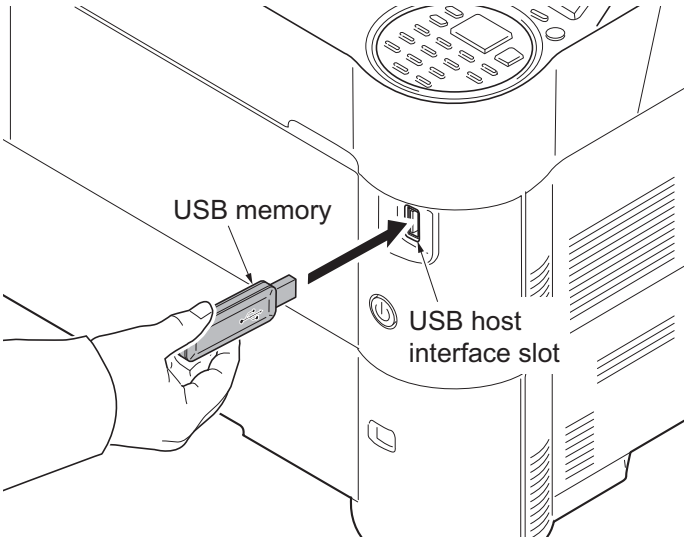

Figure 1-6-1

SAMPLE:
```
=================
 FW-Update [CTRL]
 ■■■■■□□□□
=================
```

The first line: Display that shows update object

The second line: The progress bar that shows update advance degree

Caution:

Never turn off the power switch or remove the USB flash device during upgrading.

6. Display the completion of the upgrade.

(The 1st page)
```
=================
 FW-Update
     Completed
=================
```

(2 page or subsequent ones)
```
=================
 [ENGN]      2/8
 2LV_3F00.001.014
=================
```

7. ROM version is confirmed by the content of the display.
8. Unplug the power cable and remove the USB memory.

TONER

1-6-2 Remarks on PWB replacement

(1) Engine PWB

NOTE: When replacing the PWB, remove the EEPROM from the PWB and then reattach it to the new PWB.

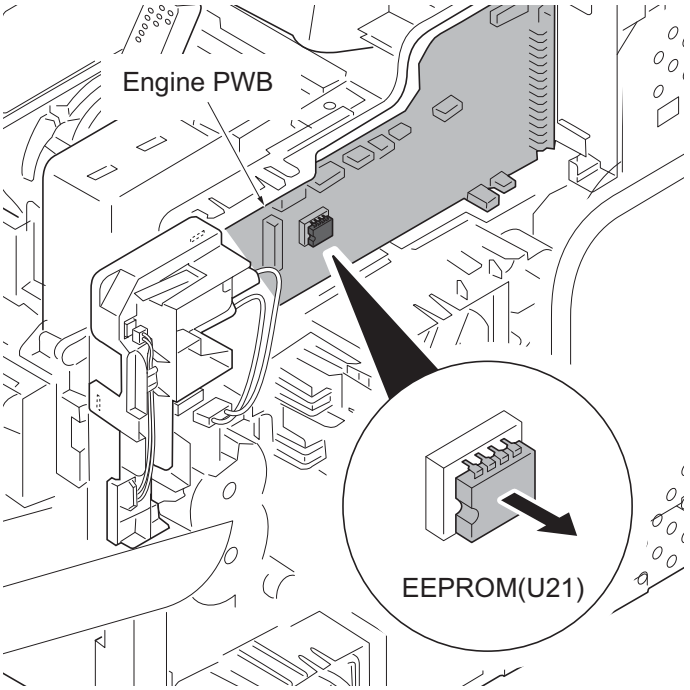

Figure 1-6-2

TONER
www.tonerplus.com.ua

2-1-1 Paper feed/conveying section

Paper feed/conveying section consists of the paper feed unit that feeds paper from the cassette and the MP tray paper feed unit that feeds paper from the MP tray, and the paper conveying section that conveys the fed paper to the transfer/separation section.

(1) Cassette paper feed section

The cassette can contain 500 sheets. The sheet from the cassette is pulled out by rotation of the pickup roller and sent to the paper conveying section by rotation of the paper feed roller. Also the retard roller prevents multiple feeding of paper.

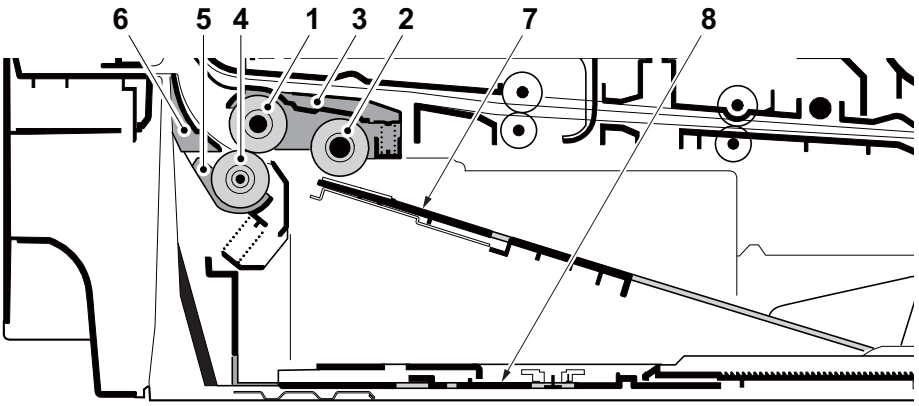

Figure 2-1-1 Cassette paper feed section

1. Paper feed roller
2. Pickup roller
3. Feed holder
4. Retard roller
5. Retard holder
6. Retard guide
7. Bottom plate
8. Cassette base

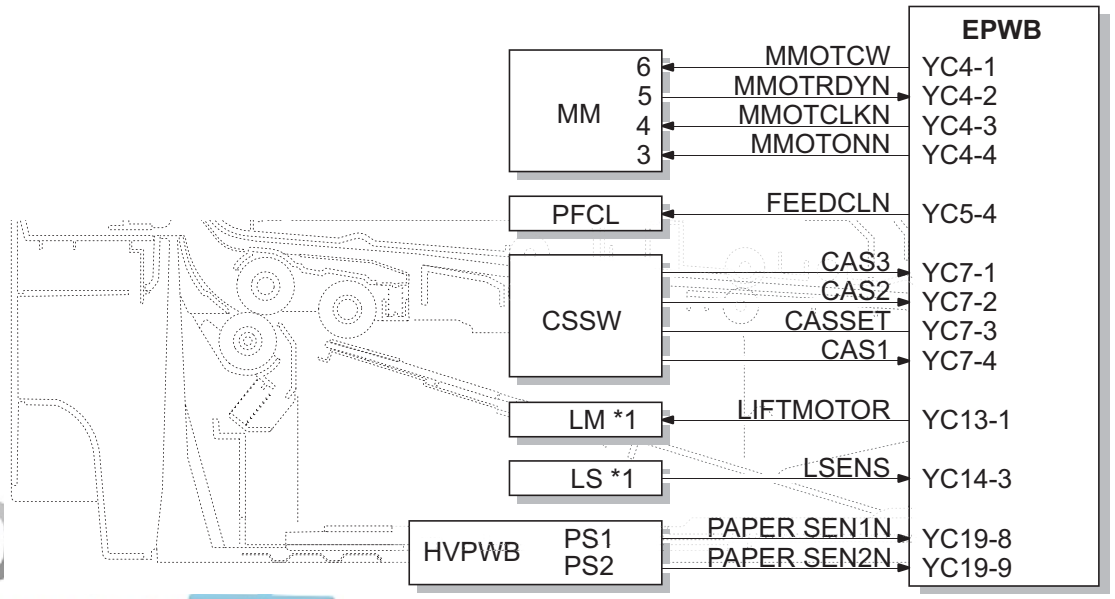

www.tonerplus.com.ua

Figure 2-1-2 Cassette paper feed section block diagram

*1: 60/50/45 ppm model only

(2) MP tray paper feed section

The MP tray can contain 100 sheets. Feeding from the MP tray is performed by the rotation of the MP paper feed roller. Also, function of the MP separation pad prevents paper from multiple feeding.

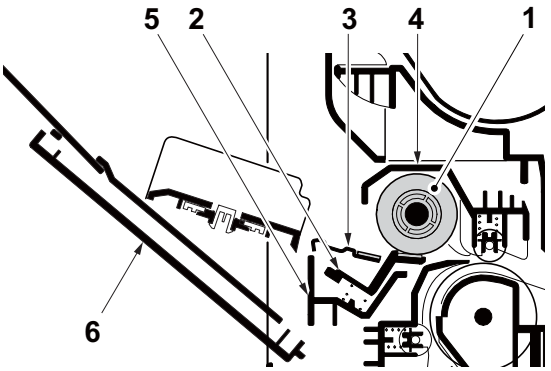

Figure 2-1-3 MP tray paper feed section

1. MP paper feed roller
2. MP separation pad
3. MP bottom plate
4. MP frame
5. MP base
6. MP (Multi purpose)tray

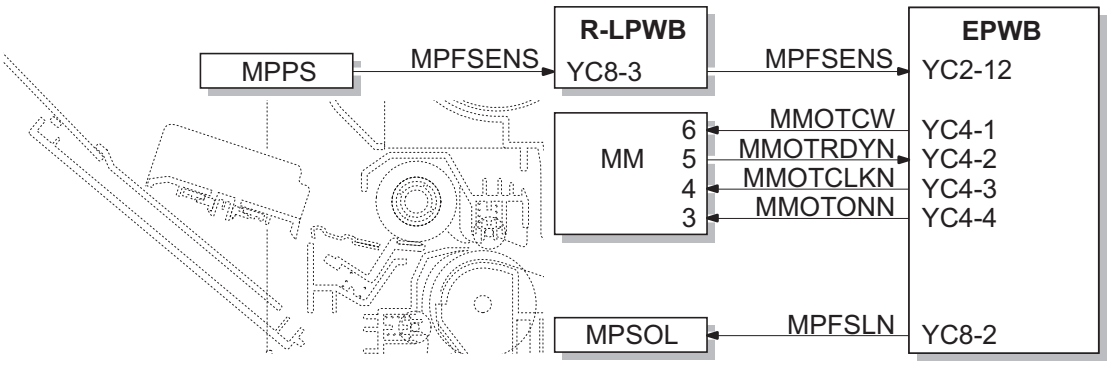

Figure 2-1-4 MP tray paper feed section block diagram

TONER
www.tonerplus.com.ua

(3) Conveying section

The conveying section conveys paper to the transfer/separation section as paper feeding from the cassette or MP tray, or as paper refeeding for duplex printing. Paper by feeding is conveyed by the paper feed roller to the position where the registration sensor (RS) is turned on, and then sent to the transfer/separation section by the upper registration roller and lower registration roller.

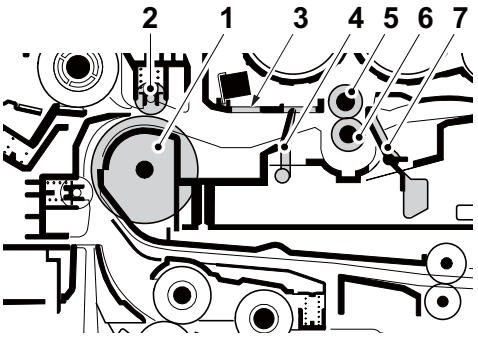

Figure 2-1-5 Conveying section

1. Middle feed roller
2. Feed DU pulley
3. Upper registration guide
4. Actuator
   (Registration sensor 1 (RS1)) *1
5. Upper registration roller
6. Lower registration roller
7. Actuator
   (Registration sensor 3 (RS3)) *2

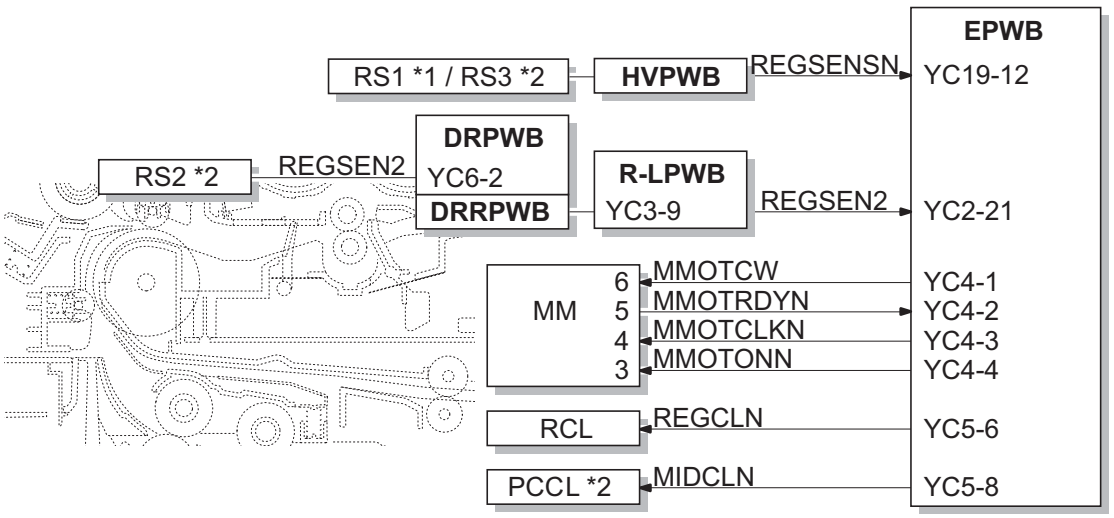

Figure 2-1-6 Paper conveying section block diagram

*1: 40ppm model only
*2: 60/50/45 ppm model only

TONER
www.tonerhead.com

2-1-2 Drum section

The drum section consists of the drum, the charger roller unit, and the cleaning unit, and the drum surface is uniformly charged in preparation for formation of residual image by laser beam.

(1) Charger roller unit

The drum surface is uniformly charged
by contacting the roller which gave the electric charge and was charged on the drum surface, and rotating it.

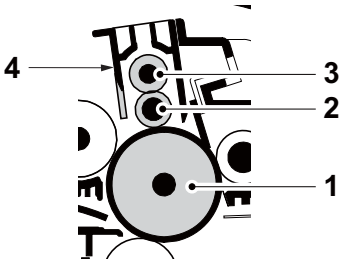

Figure 2-1-7 Charger roller unit

1. Drum
2. Charger roller
3. Charger cleaning roller
4. Charger case

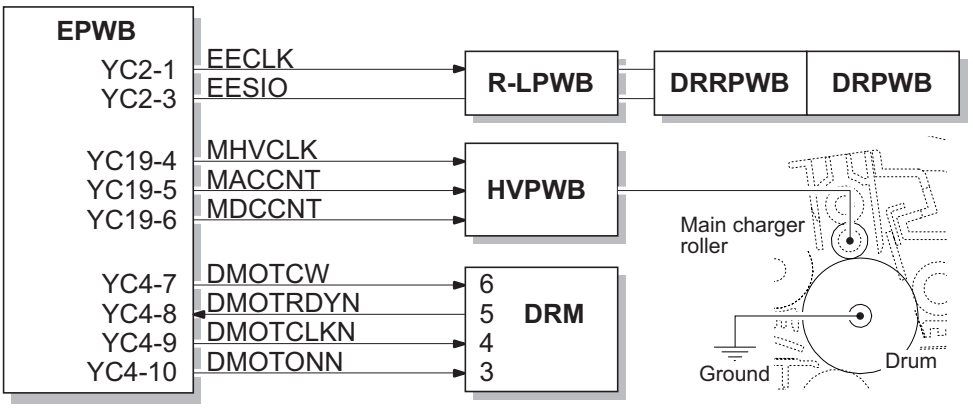

Figure 2-1-8 Charger roller unit

TONER
www.tonerplus.com.ua

(2) Cleaning unit

After transfer is complete, toner remaining on the drum surface is chipped off with the cleaning blade and is collected to the waste toner box with the drum screw. The cleaning lamp (CL) consists of LEDs and removes residual charge on the drum before main charging.

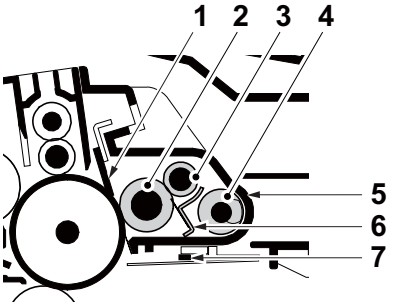

Figure 2-1-9 Cleaning unit

1. Cleaning blade
2. Cleaning roller
3. Control roller
4. Sweep roller
5. Drum frame
6. Scraper
7. Cleaning lamp (CL)

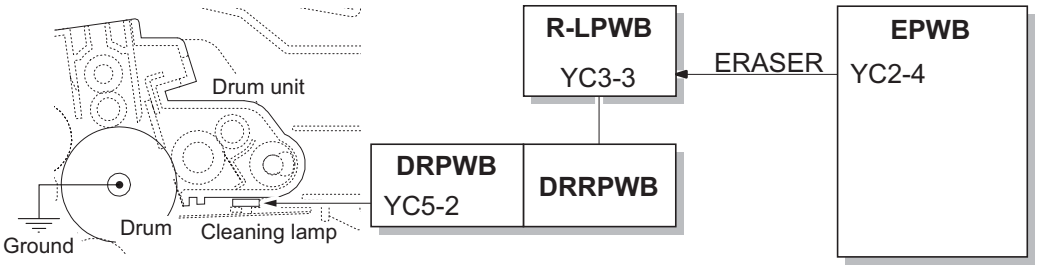

Figure 2-1-10 Cleaning unit block diagram

TONER
www.tonerplus.com.ua

2-1-3 Developer section

The developer unit consists of the developer roller that forms the magnetic brush, the developer blade and the developer screws that agitate the toner.Also, the toner sensor (TS) checks whether or not toner remains in the developer unit.

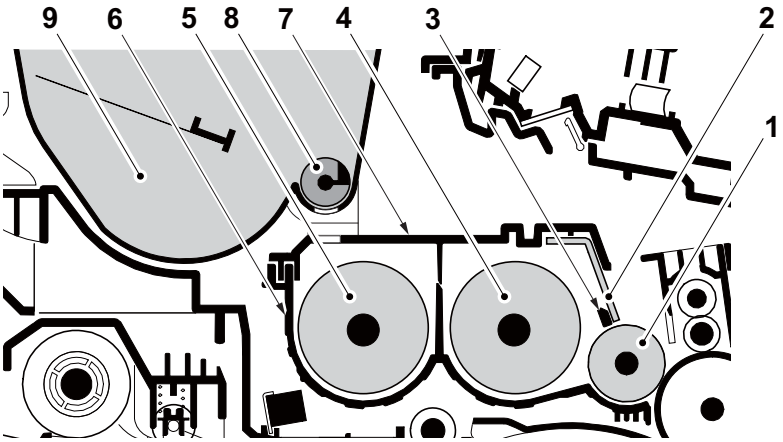

Figure 2-1-11 Developer section

1. Developer roller
2. Developer blade
3. Magnet blade
4. Developer screw A
5. Developer screw B
6. Developer case
7. Upper developer cover
8. Toner supply roller
9. Toner container

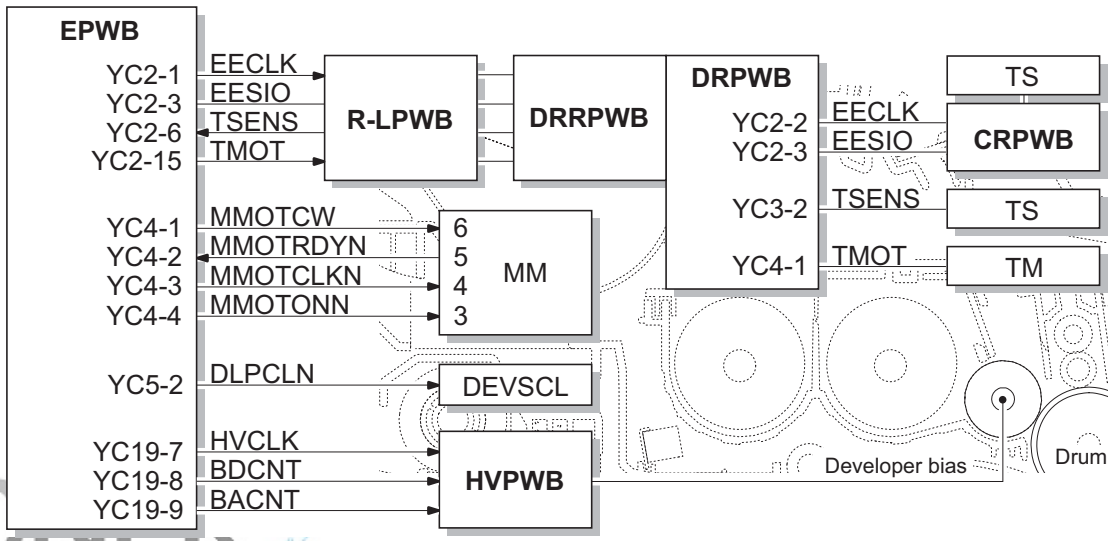

www.tonerplus.com.ua

Figure 2-1-12 Developer section block diagram

2-1-4 Optical section

(1) Laser scanner section

The charged surface of the drum is then scanned by the laser beam from the laser scanner unit. The laser beam is dispersed as the polygon motor (PM) revolves to reflect the laser beam over the drum. Various lenses and mirror are housed in the laser scanner unit, adjust the diameter of the laser beam, and focalize it at the drum surface.

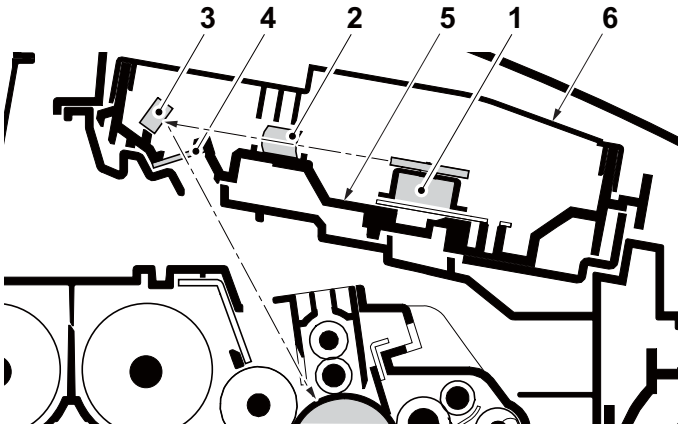

Figure 2-1-13 Laser scanner unit (LSU)

1. Polygon motor (PM)
2. fθ main lens
3. Direction change mirrer
4. LSU dust shield glass
5. LSU base
6. LSU cover

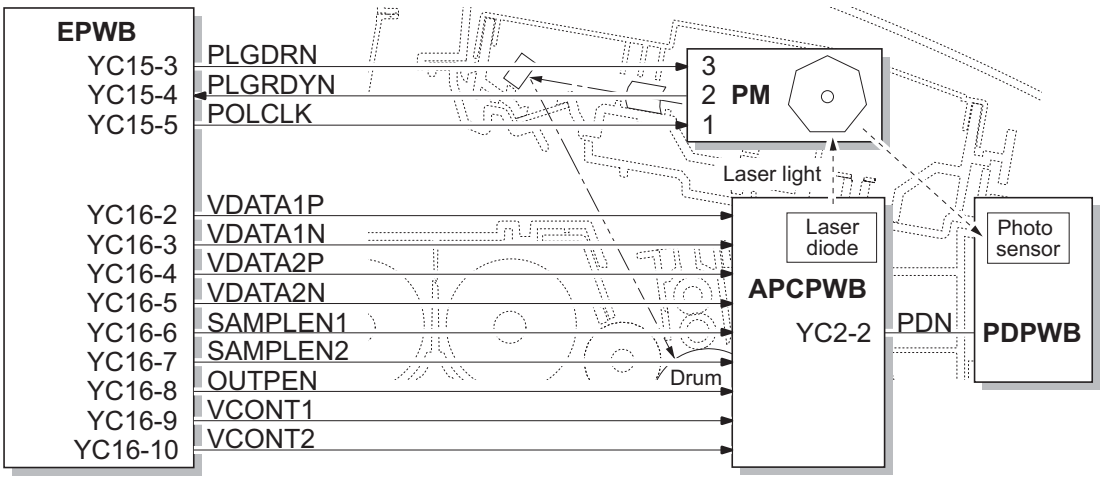

Figure 2-1-14 Laser scanner unit block diagram

TONER
www.tonerplus.com.ua

2-1-5 Transfer/Separation section

The transfer and separation section consists mainly of the transfer roller and separation electrode.
A high voltage generated by the high voltage PWB (HVPWB) is applied to the transfer roller for transfer charging.
Paper after transfer is separated from the drum by applying separation charging that is output from the high voltage PWB (HVPWB) to the separation electrode.

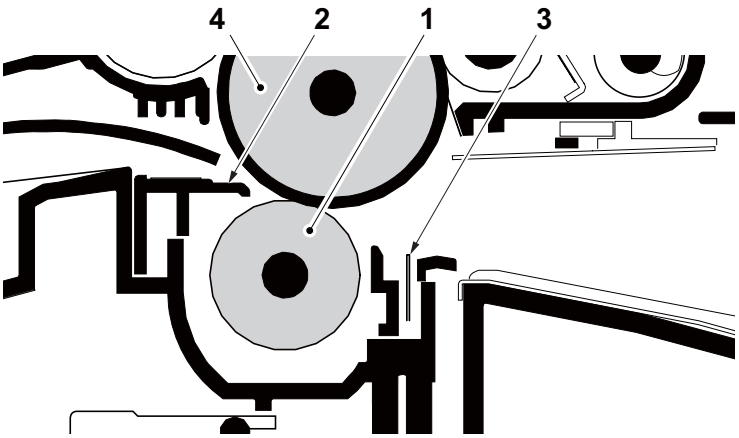

Figure 2-1-15 Transfer/Separation section

1. Transfer roller
2. Paper chute guide
3. Separation needle
4. Drum

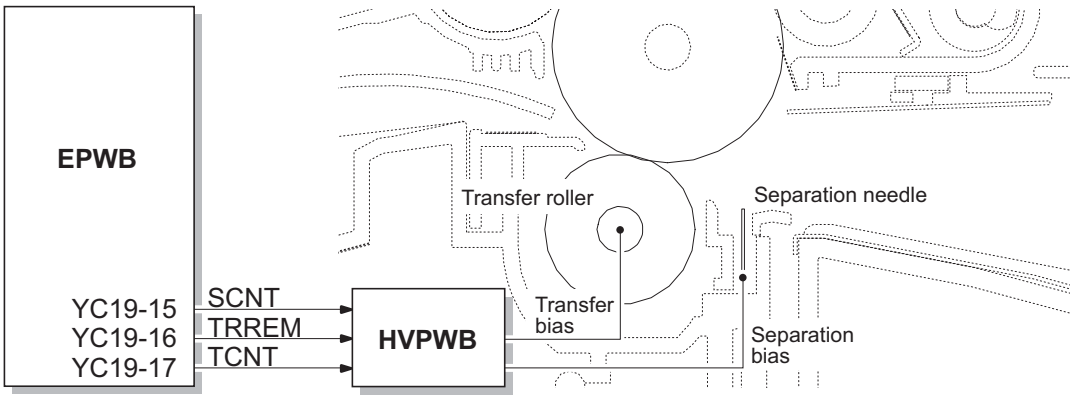

Figure 2-1-16 Transfer/Separation section block diagram

TONER
www.tonerplus.com.ua

2-1-6 Fuser section

The paper sent from the transfer/separation section is interleaved between the heat roller and the press roller. The heat roller is heated by the fuser heater (FUH), and the toner is fused by heat and pressure and fixed onto the paper because the press roller is pressed by the fuser press spring. The surface temperature of heat roller is detected by the fuser thermistor (FUTH1,2) and controlled by the engine PWB (EPWB). If the fuser section shows extremely high temperature, the power line will be shut off and the fuser heater (FUH) is forced to turn off.

(60/50/45 ppm model)

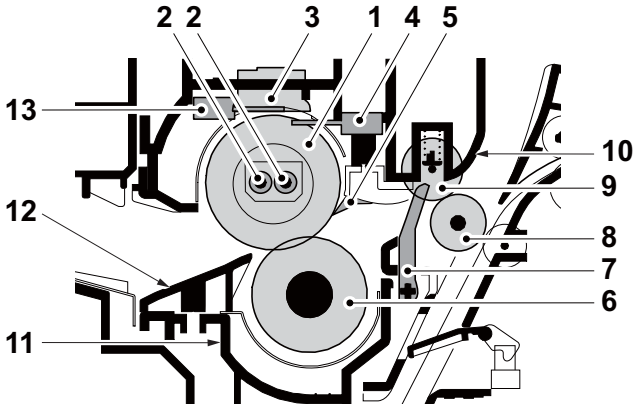

(40 ppm model)

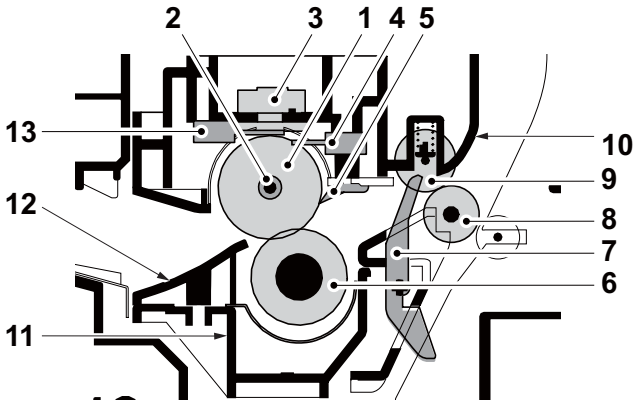

Figure 2-1-17 Fuser section

1. Heat roller
2. Fuser heater (FUH)
3. Fuser thermostat (FUTS)
4. Fuser thermistor (FUTH1)
5. Separators
6. Press roller
7. Actuater (Eject sensor (ES))
8. Fuser eject roller
9. Fuser eject pulley
10. Upper fuser frame
11. Lower Fuser frame
12. Pre fuser guide
13. Fuser thermistor (FUTH2)

TONER
www.tonerplus.com.ua

(60/50/45 ppm model)

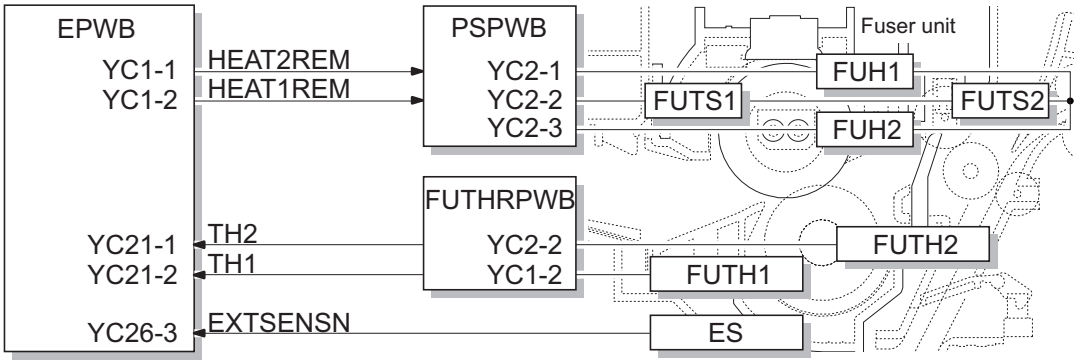

(40 ppm model)

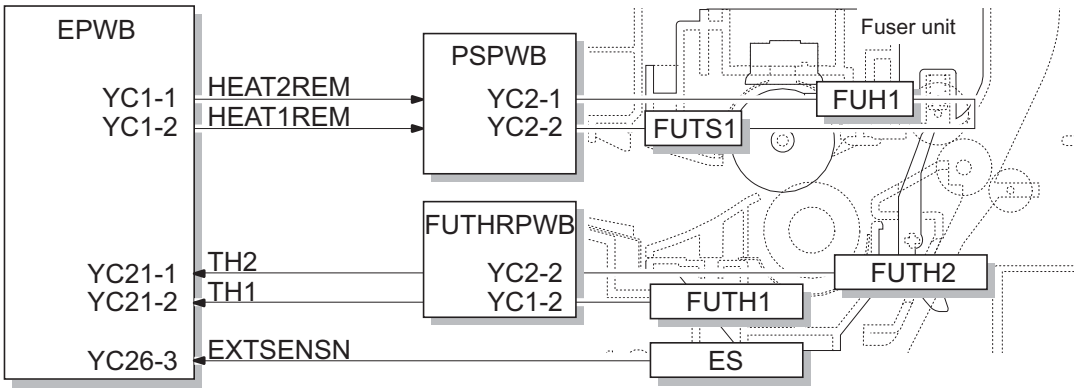

Figure 2-1-18 Fuser section block diagram

TONER
www.tonerplus.com.ua

2-1-7 Eject/Feedshift section

The paper eject/feedshift section consists of the conveying path which sends the paper that has passed the fuser section to the facedown tray, the faceup tray (60/50/45 ppm model only) or the duplex conveying section.

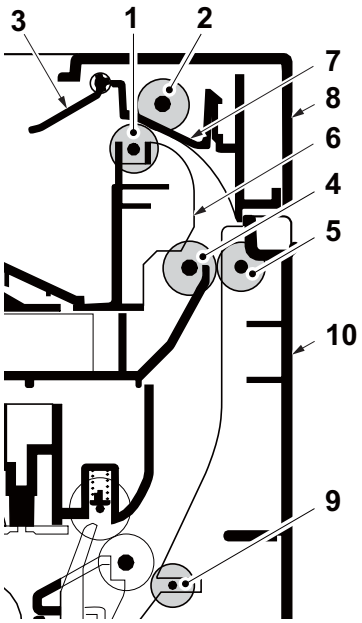

(40 ppm model)

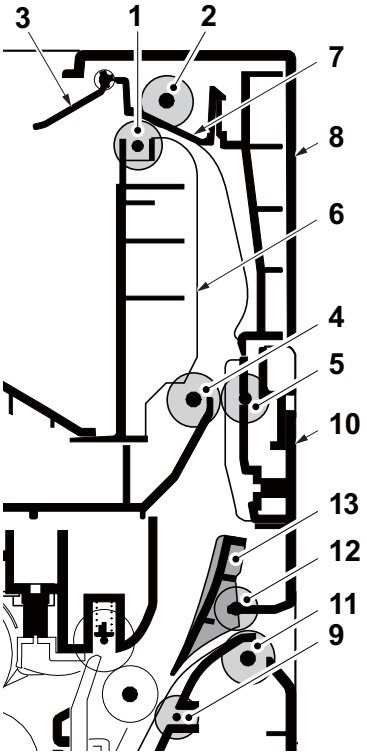

(60/50/45 ppm model)

Figure 2-1-19 Eject/Feedshift section

1. Upper eject roller
2. Upper eject pulley
3. Actuator
   (Eject full sensor (EFS)) *2
4. Lower eject roller
5. Lower eject pulley
6. Vertical guide
7. Paper exit guide
8. Top cover
9. DU feed pulley
10. Rear cover
11. Faceup roller *1
12. Faceup pulley *1
13. Feedshift guide *1

*1: 60/50/45 ppm model only
*2: Except 40 ppm (without Network) model

TONER+
www.tonerplus.com.ua

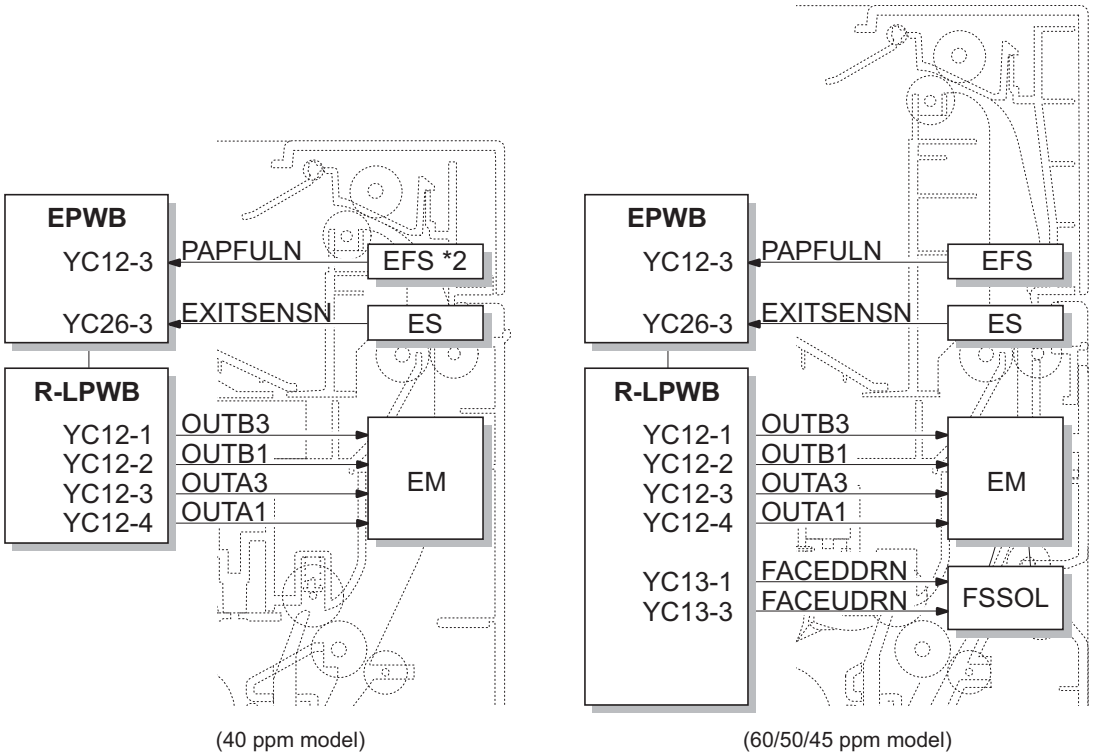

Figure 2-1-20 Eject/Feed shift section block diagram

*2: Except 40 ppm (without Network) model

TONER
www.tonerplus.com.ua

2-1-8 Duplex conveying section

The duplex conveying section consists of conveying path which sends the paper sent from the eject/feedshift section to the paper feed/conveying section when duplex printing.

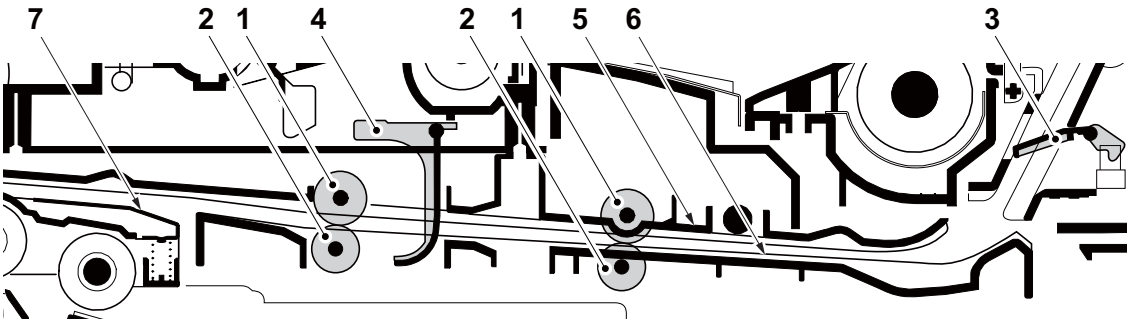

Figure 2-1-21 Duplex conveying section

1. DU conveying roller
2. DU conveying pulley
3. Actuater
   (Duplex sensor 1 (DUS1)) *1
4. Actuater
   (Duplex sensor 2 (DUS2))
5. DU base
6. DU lower guide
7. Upper feed guide

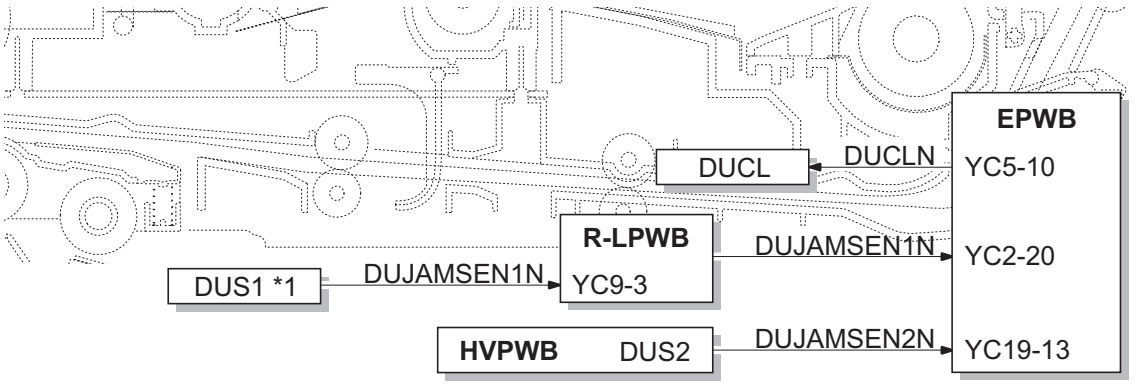

Figure 2-1-22 Duplex conveying section block diagram

*1: 60/50/45 ppm model only

TONER
www.tonerplus.com.ua

This page is intentionally left blank.

TONER
www.tonerplus.com.ua

2-2-1 Electrical parts layout

(1) PWBs

[60/50/45 ppm model]

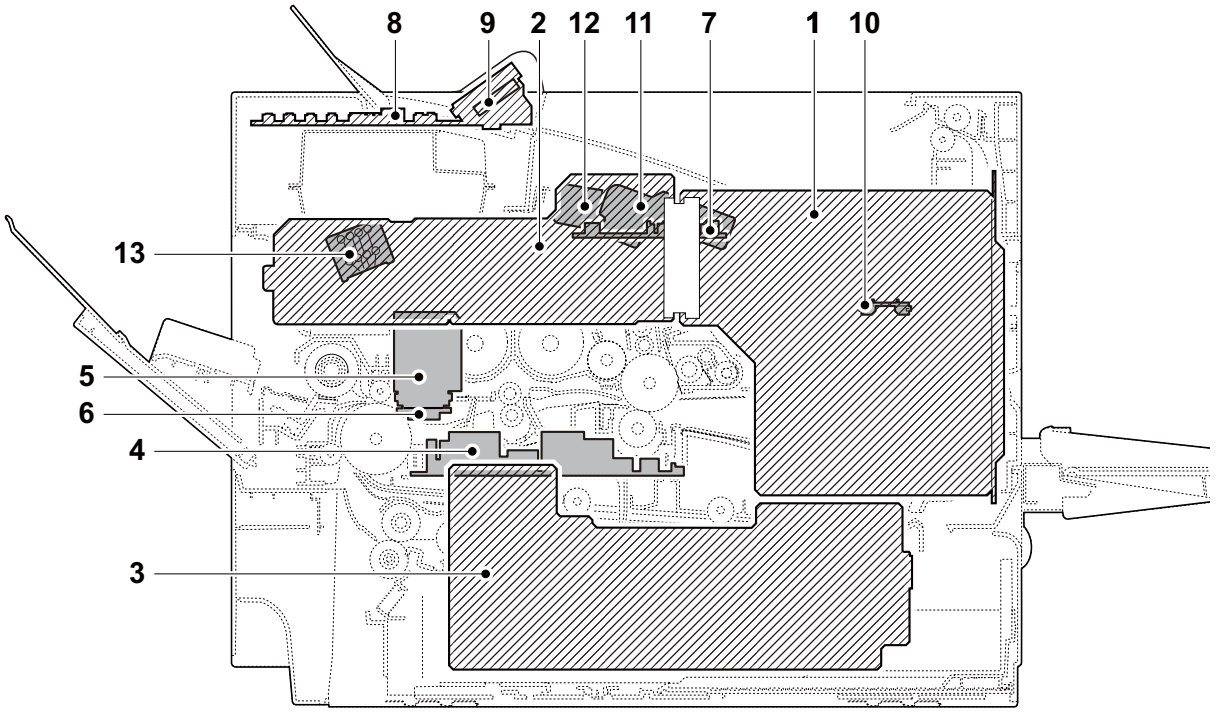

[40 ppm model]

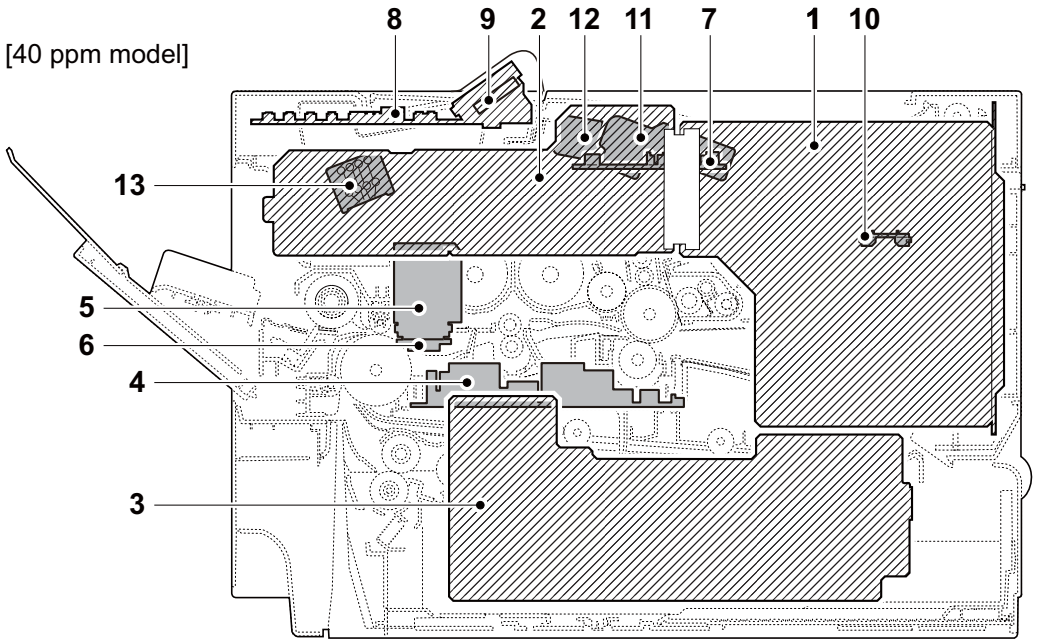

Machine front Machine inside

Figure 2-2-1 PWBs

1. Main PWB (MPWB) ..... Controls the software such as the print data processing and provides the interface with computers.
2. Engine PWB (EPWB)..... Controls printer hardware such as high voltage/bias output control, paper conveying system control, and fuser temperature control, etc.
3. Power source PWB (PSPWB) ..... After full-wave rectification of AC power source input, switching for converting to 24 V DC for output. Controls the fuser heater.
4. High voltage PWB (HVPWB) ..... Generates main charging, developing bias, transfer bias.
5. Drum PWB (DRPWB) ..... Relays wirings from electrical components on the drum unit. Drum individual information in EEPROM storage.
6. Drum relay PWB (DRRPWB)..... Consists of wiring relay circuit between engine PWB and the drum unit.
7. Relay-L PWB (R-LPWB)..... Consists of wiring relay circuit between engine PWB and drum connect PWB.
8. Operation PWB (OPPWB-M)..... Consists the LCD, LED indicators and key switches.
9. Backlight PWB (BLPWB) ..... LCD lighting.
10. Fuser thermistor relay PWB (FUTHRPWB) ..... Consists of wiring relay circuit between engine PWB ,fuser thermistors and cooling fans.
11. APC PWB (APCPWB) ..... Generates and controls the laser beam.
12. PD PWB (PDPWB) ..... Controls horizontal synchronizing timing of laser beam.
13. Container PWB (CPWB)..... Reads the container information.

List of correspondences of PWB names

No.	Name used in service manual	Name used in parts list
1	Main PWB (MPWB)	PARTS PWB ASSY MAIN SP
2	Engine PWB (EPWB)	PARTS PWB ASSY ENGINE SP
3	Power source PWB (PSPWB)	PARTS SWITCHING REGULATOR 120V SP PARTS SWITCHING REGULATOR 230V SP
4	High voltage PWB (HVPWB)	PARTS HIGH VOLTAGE UNIT SP
5	Drum PWB (DRPWB)	P.W. BOARD ASSY DRUM
6	Drum connect PWB (DRRPWB)	P.W. BOARD ASSY DRUM CONNECT
7	Relay-L PWB (R-LPWB)	P.W. BOARD ASSY CONNCT-L
8	Operation PWB (OPPWB)	PARTS PWB ASSY PANEL SP
9	Backlight PWB (BLPWB)	
10	Fuser thermistor relay PWB (FUTHRPWB)	P.W. BOARD ASSY TH CONNECT
11	APC PWB (APCPWB)	P.W. BOARD ASSY APC
12	PD PWB (PDPWB)	P.W. BOARD ASSY PD
13	Container PWB (CPWB)	P.W. BOARD ASSY CONTAINER

TONER
www.tonerplus.com.ua

(2) Switches and sensors

[60/50/45 ppm model]

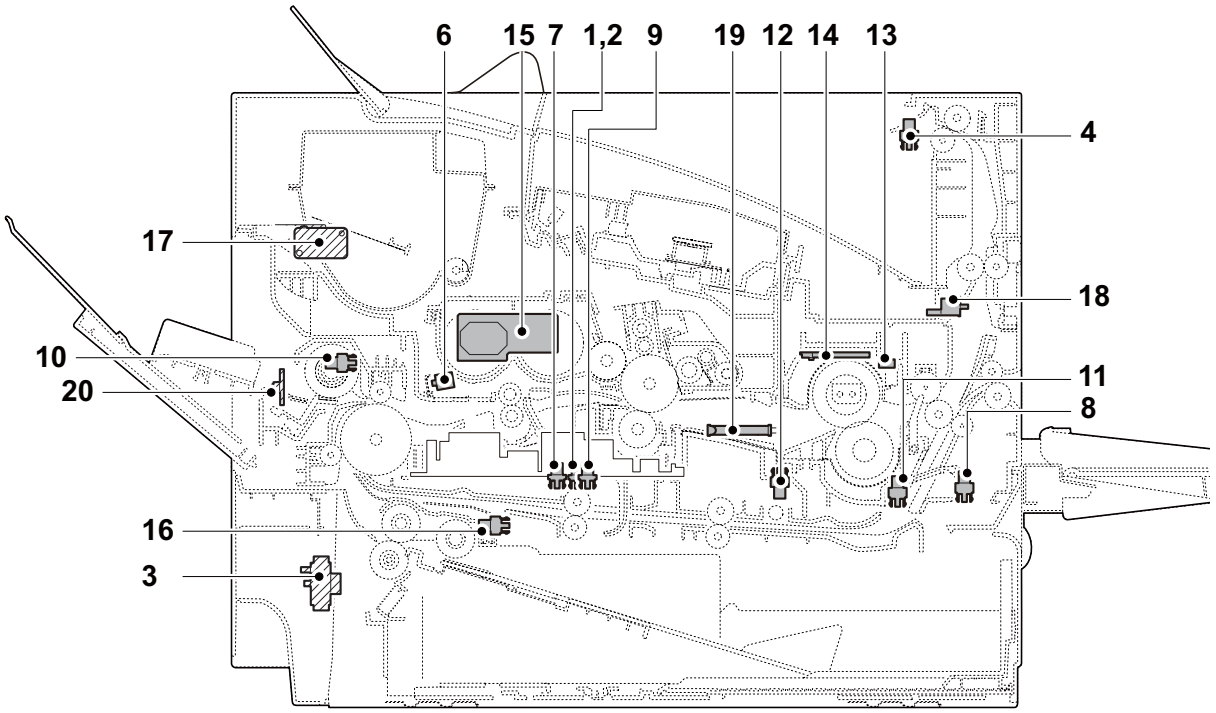

[40 ppm model]

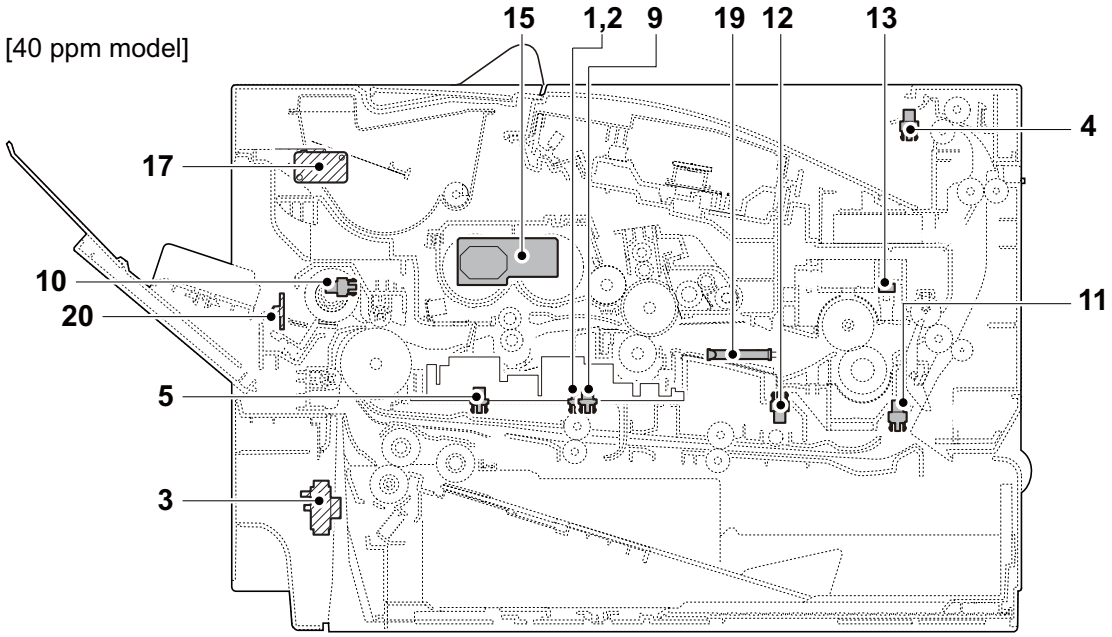

Machine front Machine inside

TONER
www.tonerplus.com.ua

Figure 2-2-2 Switches and sensors

1. Paper sensor 1 (PS1) ..... Detects the presence of paper in the cassette.
2. Paper sensor 2 (PS2) ..... Detects the presence of paper in the cassette.
3. Cassette size switch (CSSW) ..... Detects the paper size dial setting of the paper setting dial.
4. Eject full sensor (EFS) *3..... Detects the paper full in the upper tray (Facedown).
5. Registration sensor 1 (RS1) *2 ..... Controls the secondary paper feed start timing.
6. Registration sensor 2 (RS2) *1 ..... Controls the secondary paper feed start timing.
7. Registration sensor 3 (RS3) *1 ..... Controls the Image data beginning timing.
8. Duplex sensor 1 (DUS1) *1..... Detects a paper jam in the duplex section.
9. Duplex sensor 2 (DUS2)..... Detects a paper jam in the duplex section.
10. MP paper sensor (MPPS)..... Detects the presence of paper on the MP tray.
11. Eject sensor (ES)..... Detects a paper misfeed in the fuser or eject section.
12. Fuser pressure release sensor (FURS)..... Detects the change state of pressure in fuser unit.
13. Fuser thermistor 1 (FUTH1)..... Detects the heat roller temperature at the edge position.
14. Fuser thermistor 2 (FUTH2)..... Detects the heat roller temperature at the center position.
15. Toner sensor (TS) ..... Detects the amount of toner in the developer.
16. Lift sensor (LS) *1 ..... Detects the top limit of the bottom plate.
17. Interlock switch (ILSW) ..... Shuts off 24 V DC power line when the top cover is opened.
18. Rear cover switch (RECSW) *1 ..... Detects the opening and closing of the rear cover.
19. Waste toner sensor (WTS)..... Detects when the waste toner box is full.
20. Power source switch (PSSW)..... Change ON/OFF the power supply of a main PWB, an operation PWB, etc.

*1: 60/50/45 ppm model only
*2: 40 ppm model only
*3: Except 40 ppm model (without network)

TONER
www.tonerplus.com.ua

(3) Motors

[60/50/45 ppm model]

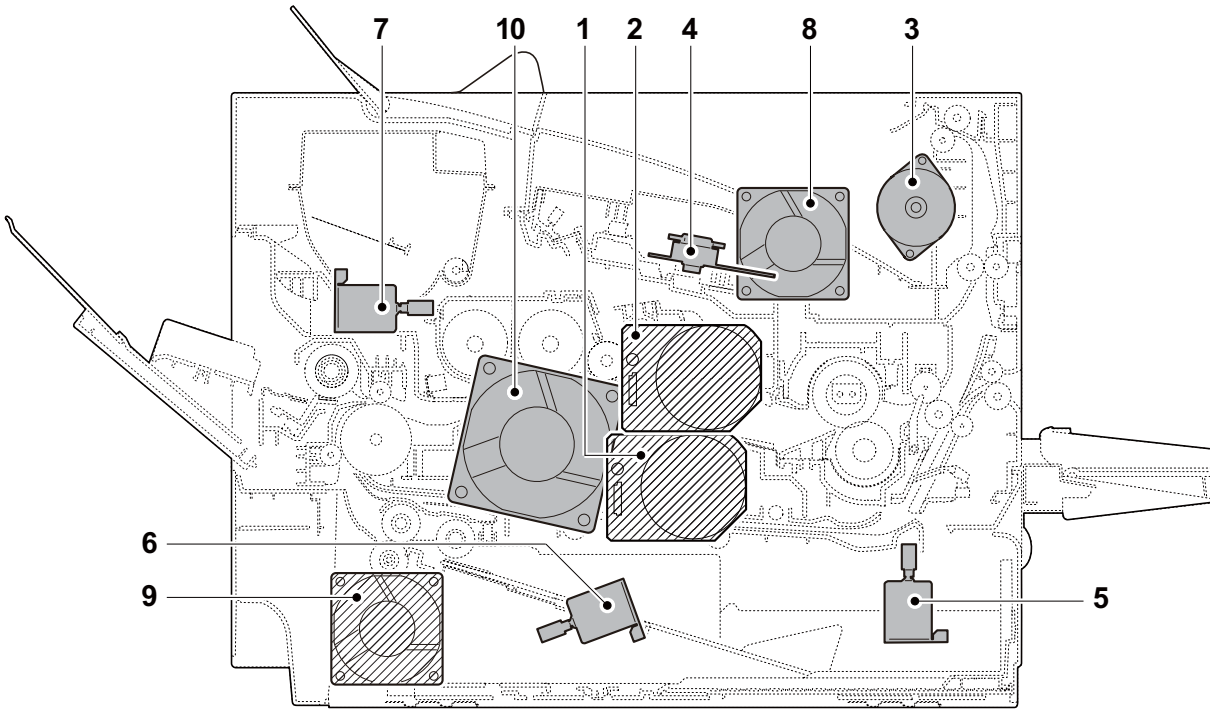

[40 ppm model]

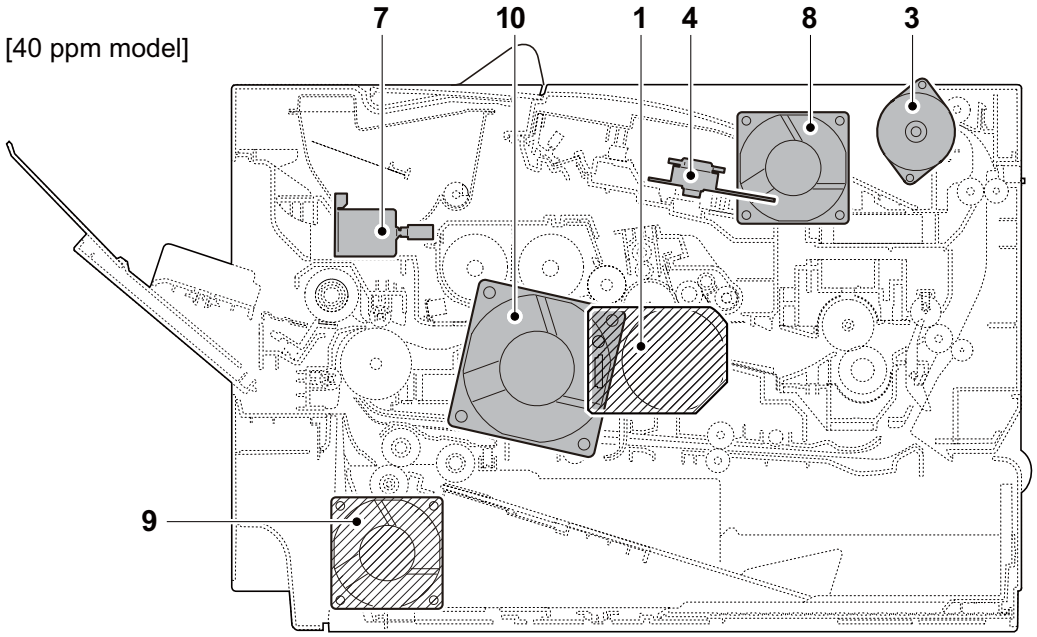

Machine front Machine inside

TONER+
www.tonerplus.com.ua

Figure 2-2-3 Motors

1. Main motor (MM)..... Drives the paper feed section and conveying section.
2. Drum motor (DRM) *1 ..... Drives the drum unit and transfer roller.
3. Eject motor (EM) ..... Drives the eject section.
4. Polygon motor (PM) ..... Drives the polygon mirror.
5. Fuser pressure release motor (FUPRM) *1Drives the change mechanism of fixing pressure in fuser unit.
6. Lift motor (LM) *1 ..... Operates the bottom plate in the cassette.
7. Toner motor (TM) ..... Replenishes toner to the developer unit.
8. LSU fan motor (LSUFM) ..... Cools the LSU unit.
9. Power source fan motor (PSFM) ..... Cools the power source PWB.
10. Developer fan motor (DEVFM) ..... Cools the developer unit.

*1: 60/50/45 ppm model only

TONER+
www.tonerplus.com.ua

(4) Clutches and others

[60/50/45 ppm model]

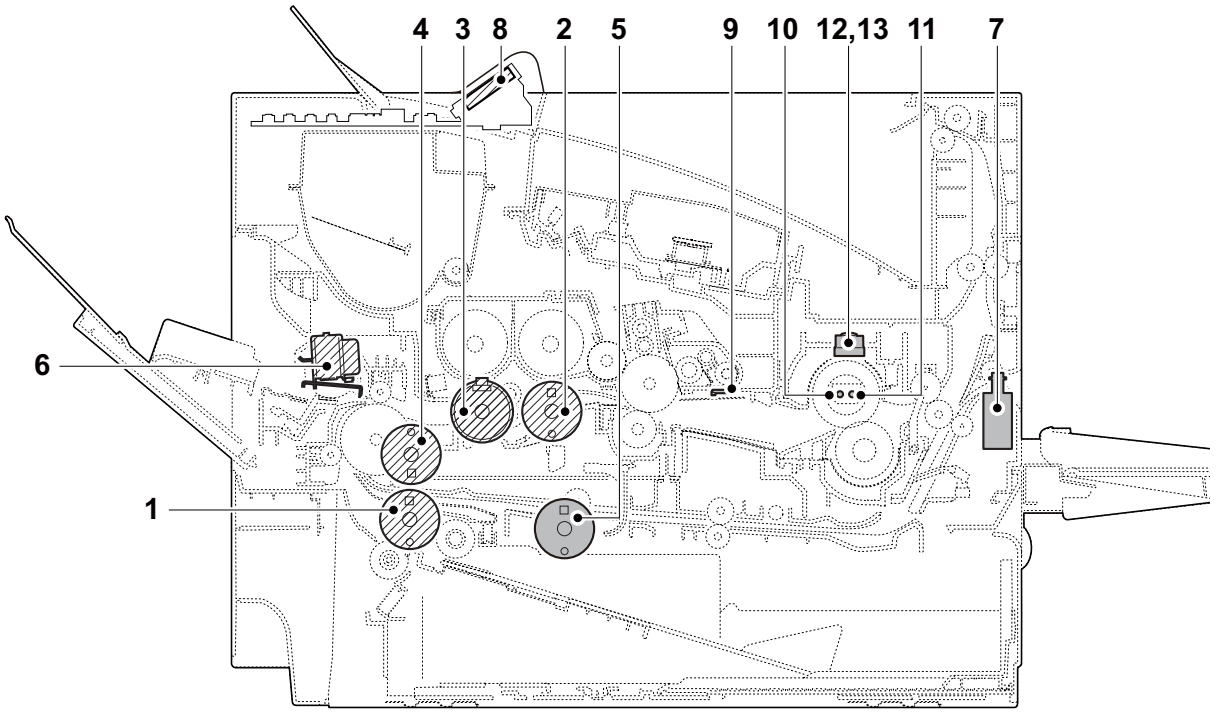

[40 ppm model]

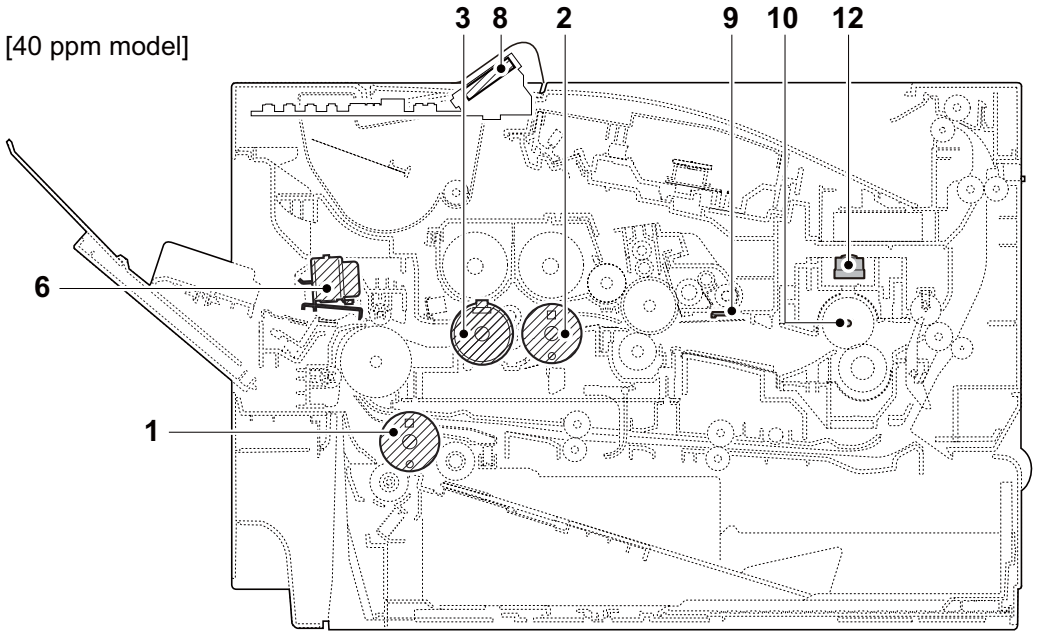

Machine front Machine inside

TONER+
www.tonerplus.com.ua

Figure 2-2-4 Clutches and others

1. Paper feed clutch (PFCL) ..... Primary paper feed from cassette.
2. Registration clutch (RCL)..... Controls the secondary paper feed.
3. Developer stop clutch (DEVSCL)..... Controls the drive of the developer.
4. Conveying clutch (PCCL) *1 ..... Controls the paper conveying.
5. Duplex clutch (DUCL) *1..... Controls the drive of the duplex feed roller.
6. MP solenoid (MPSOL) ..... Controls the MP bottom plate.
7. Feedshift solenoid (FSSOL) *1 ..... Operates the feedshift guide.
8. LCD (LCD) ..... LCD display. Displays an operating state.
9. Cleaning lamp (CL)..... Eliminates the residual electrostatic charge on the drum.
10. Fuser heater 1 (FUH1)..... Heats the heat roller.
11. Fuser heater 2 (FUH2) *1 ..... Heats the heat roller.
12. Fuser thermostat 1 (FUTS1)..... Prevents overheating of the heat roller.
13. Fuser thermostat 2 (FUTS2) *1..... Prevents overheating of the heat roller.

*1: 60/50/45 ppm model only

TONER
www.tonerplus.com.ua

2-3-1 Main PWB (MPWB)

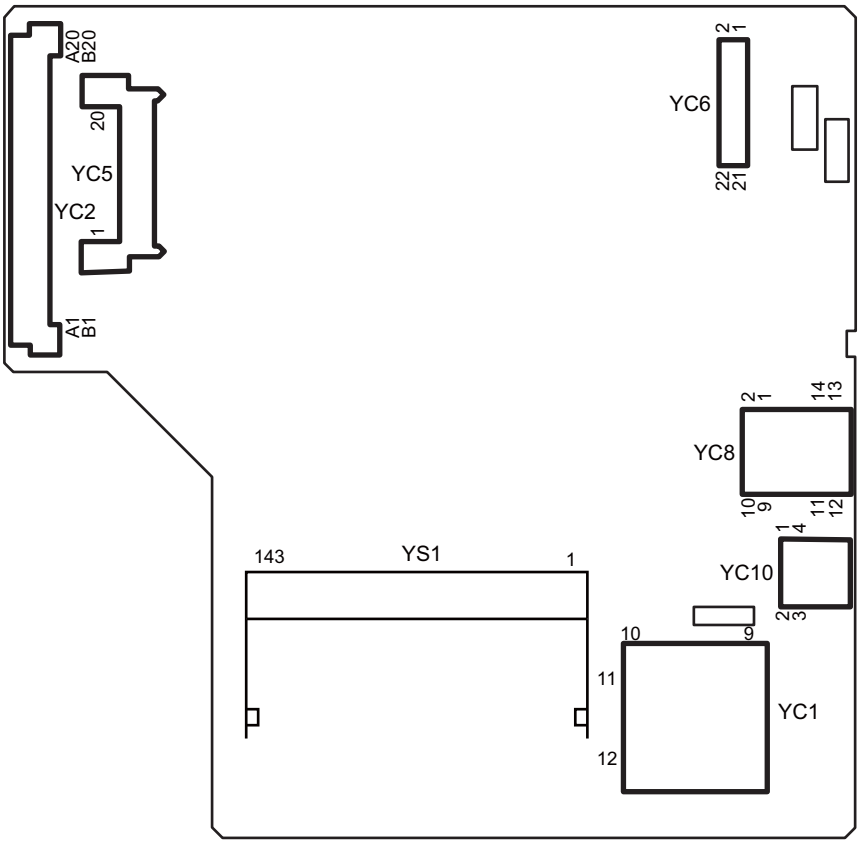

TON
www.tonerplus.co

Figure 2-3-1 Main PWB silk-screen diagram and Photograph

Connector	Pin	Signal	I/O	Voltage	Description
YC1	1	CD/DAT3	I/O	0/3.3 V DC	control signal
Connected to the SD card I/F	2	CMD	I/O	0/3.3 V DC	control signal
	3	Vss	-	-	Ground
	4	Vdd	-	0/3.3 V DC	control signal
	5	CLK	-	0/3.3 V DC	control signal
	6	Vss	-	-	Ground
	7	DAT0	I/O	0/3.3 V DC(pulse)	Data bus signal
	8	DAT1	I/O	0/3.3 V DC(pulse)	Data bus signal
	9	DAT2	I/O	0/3.3 V DC(pulse)	Data bus signal
	10	CD	I	0/3.3 V DC	control signal
	11	COMMON	-	0/3.3 V DC	control signal
	12	WP	I	0/3.3 V DC	control signal
YC2	A1	E2C_INT	I	0/3.3 V DC	Transmission clock signal
Connected to the engine PWB	B1	C2E_INT	O	0/3.3 V DC	controller interrupt signal
	A2	GND	-	-	Ground
	B2	C2E_OFFRDY	O	0/3.3 V DC	OFF mode sift signal
	A3	GND	-	-	Ground
	B3	VSYNC	I	0/3.3 V DC(pulse)	Sub scanning synchronizing signal
	A4	E2C_SBSY	I	0/3.3 V DC	System busy signal
	B4	E2C_SDIR	I	0/3.3 V DC	Serial communication direction signal
	A5	C2E_SDAT	O	0/3.3 V DC(pulse)	Serial communication data input
	B5	C2E_SCKN	O	0/3.3 V DC(pulse)	Serial communication clock signal
	A6	E2C_IRN	I	0/3.3 V DC	Engine interrupt signal
	B6	E2C_SDAT	I	0/3.3 V DC(pulse)	Serial communication data output
	A7	GND	-	-	Ground
	B7	PLGCLK	O	0/3.3 V DC	PM control signal
	A8	VDATA2N	O	0/3.3 V DC	Video data signal
	B8	VDATA1N	O	0/3.3 V DC	Video data signal
	A9	VDATA2P	O	0/3.3 V DC	Video data signal
	B9	VDATA1P	O	0/3.3 V DC	Video data signal
	A10	GND	-	-	Ground
	B10	PDN	I	0/3.3 V DC(pulse)	Main scanning synchronizing signal
	A11	SAMPLE1	O	0/3.3 V DC	Sample/Hold signal
	B11	SAMPLE2	O	0/3.3 V DC	Sample/Hold signal
	A12	C2P_SDAT	O	0/3.3 V DC	Panel transmitted data signal
	B12	P2C_SDAT	I	0/3.3 V DC	Panel received data sjgnal

TONER www.tonerplus.com.ua

Connector	Pin	Signal	I/O	Voltage	Description
YC2	A13	C2P_LCDCON	O	0/3.3 V DC	Panel LCD control signal
Connected to the engine PWB	B13	P2C_PKEY	I	0/3.3 V DC	Panel start signal
	A14	C2P_BUZCON	O	0/3.3 V DC	Panel buzzer control signal
	B14	FUPRST	O	0/3.3 V DC	Panel reset signal
	A15	GND	-	-	Ground
	B15	GND	-	-	Ground
	A16	VBUS	O	5V DC	5 V DC power output to USB
	B16	UDATAP	I/O	-	USB data signal
	A17	GND	-	-	Ground
	B17	UDATAN	I/O	-	USB data signal
	A18	GND	-	-	Ground
	B18	GND	-	-	Ground
	A19	+5V2	I	5 V DC	5 V DC power input from EPWB
	B19	+5V2	I	5 V DC	5 V DC power input from EPWB
	A20	+5V2	I	5 V DC	5 V DC power input from EPWB
	B20	+5V2	I	5 V DC	5 V DC power input from EPWB
YC5	1	VDD5	O	5 V DC	5 V DC power output to eKUIO
Connected to the eKUIO IF	2	GND	-	-	Ground
	3	RESETN	O	0/3.3 V DC	Reset signal
	4	VDD5_CUT	O	0/3.3 V DC	Sleep signal
	5	GND	-	-	Ground
	6	WAKEUP	I	0/3.3 V DC	Wake-up signal
	7	AUDIO	I	0/3.3 V DC	Audio signal
	8	NC	-	-	Not used
	9	NC	-	-	Not used
	10	NC	-	-	Not used
	11	GND	-	-	Ground
	12	NC	-	-	Not used
	13	NC	-	-	Not used
	14	GND	-	-	Ground
	15	NC	-	-	Not used
	16	NC	-	-	Not used
	17	GND	-	-	Ground
	18	USB_DP	I/O	-	USB data signal
	19	USB_DN	I/O	-	USB data signal
	20	VBUS	O	5 V DC	5 V DC power output to eKUIO

TONER
www.tonerplus.com.ua

Connector	Pin	Signal	I/O	Voltage	Description
YC6	1	+3.3V	O	3.3 V DC	5 V DC power output to OP
Connected to the centro option I/F	2	+5.0V	O	5 V DC	5 V DC power output to OP
	3	P1284DIR	O	0/3.3 V DC	Direction input signal
	4	NACK	O	0/3.3 V DC	Acknowledge input signal
	5	BUSY	O	0/3.3 V DC	Busy input
	6	PERROR	O	0/3.3 V DC	Errer signal
	7	SELECT	O	0/3.3 V DC	Select signal
	8	NFAULT	O	0/3.3 V DC	Errer signal
	9	PDATA1	I/O	-	Data signal
	10	PDATA2	I/O	-	Data signal
	11	PDATA3	I/O	-	Data signal
	12	PDATA4	I/O	-	Data signal
	13	PDATA5	I/O	-	Data signal
	14	PDATA6	I/O	-	Data signal
	15	PDATA7	I/O	-	Data signal
	16	PDATA8	I/O	-	Data signal
	17	NSELECTIN	I	0/3.3 V DC	Select signal
	18	NSTROBE	I	0/3.3 V DC	Output signal
	19	NAUTOFD	I	0/3.3 V DC	AUTO-FEED signal
	20	NINIT	I	0/3.3 V DC	Reset signal
	21	PDETECT	I	0/3.3 V DC	OP detection signal
	22	GND	-	-	Ground
YC8	1	TD1+	I/O	0/3.3 V DC(pulse)	Trancemitted data
Connected to the network I/F	2	TD1-	I/O	0/3.3 V DC(pulse)	Send data
	3	TD2+	I/O	0/3.3 V DC(pulse)	Send data
	4	TD2-	I/O	0/3.3 V DC(pulse)	Send data
	5	CT1	O	3.3 V DC	3.3 V DC power output
	6	CT2	O	3.3 V DC	3.3 V DC power output
	7	TD3+	I/O	0/3.3 V DC(pulse)	Send data
	8	TD3-	I/O	0/3.3 V DC(pulse)	Send data
	9	TD4+	I/O	0/3.3 V DC(pulse)	Send data
	10	TD4-	I/O	0/3.3 V DC(pulse)	Send data
	11	GRLED_A	I	0/3.3 V DC	LED flashing caution signal
	12	GRLED_K	I	0/3.3 V DC	LED flashing caution signal
	13	YWLED_A	I	0/3.3 V DC	LED flashing caution signal
	14	YWLED_K	I	0/3.3 V DC	LED flashing caution signal

TONER
www.tonerplus.com.ua

Connector	Pin	Signal	I/O	Voltage	Description
YC10	A1	VBUS_A	O	5 V DC	5 V DC power output to USB device
Connected to the USB host I/F USB device I/F	A2	D-_A	I/O	-	USB data signal
	A3	D+_A	I/O	-	USB data signal
	A4	GND_A	-	-	Ground
	B1	VBUS_B	O	5 V DC	5 V DC power output to USB host
	B2	D-_B	I/O	-	USB data signal
	B3	D+_B	I/O	-	USB data signal
	B4	GND_B	-	-	Ground

TONER
www.tonerplus.com.ua

2-3-2 Engine PWB (EPWB)

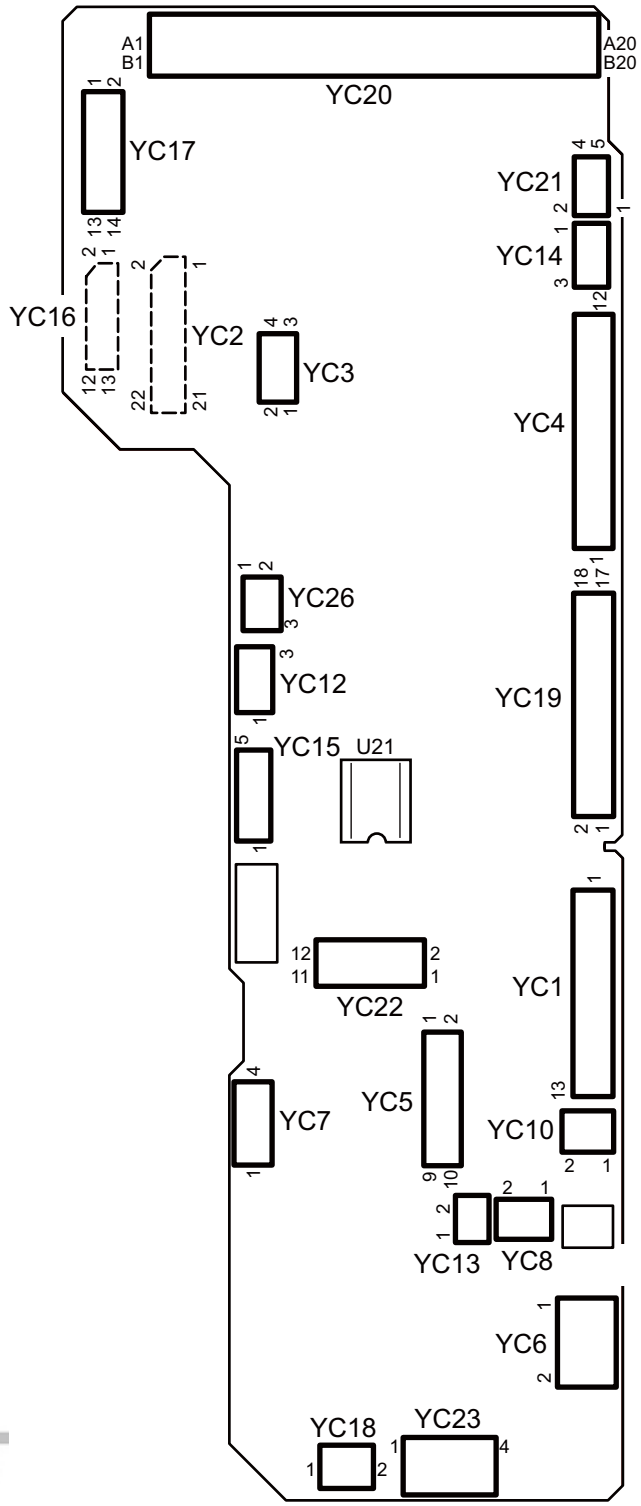

Figure 2-3-2 Engine PWB silk-screen diagram and Photograph

Connector	Pin	Signal	I/O	Voltage	Description
YC1	1	HEAT2REM	O	0/3.3 V DC	TH2 remote signal
Connected to the power source PWB	2	HEAT1REM	O	0/3.3 V DC	TH1 remote signal
	3	ZCROSSN	I	0/3.3 V DC	Zero crossing detection signal
	4	RELAY	O	0/3.3 V DC	Relay driving signal
*: 60/50/45 ppm model only	5	PSLEEPN	O	0/3.3 V DC	Sleep signal
	6	GND	-	-	Ground
	7	GND	-	-	Ground
	8	GND	-	-	Ground
	9	GND	-	-	Ground
	10	+24V1	I	24 V DC	24 V DC power input from PSPWB
	11	+24V1	I	24 V DC	24 V DC power input from PSPWB
	12	+24V1	I	24 V DC	24 V DC power input from PSPWB
	13	+24V1	I	24 V DC	24 V DC power input from PSPWB
YC2	1	EECLK	O	0/3.3 V DC	Clock signal
Connected to the relay-L PWB	2	GND	-	-	Ground
	3	EESIO	I/O	0/3.3 V DC(pulse)	Communication data
	4	ERASER	O	0/3.3 V DC	CL: On/Off
*: 60/50/45 ppm model only	5	+3.3V6	O	3.3 V DC	3.3 V DC power output to R-LPWB
	6	TSENS	I	Analog	TS output signal
	7	SBMDIR	O	0/3.3 V DC	SBM: On/Off
	8	WTSENS	I	Analog	WTS output signal
	9	SBMENBLN	O	0/3.3 V DC	SBM enable signal
	10	WTLED	O	0/3.3 V DC	LED: On/Off
	11	SBMSTEP	O	0/3.3 V DC(pulse)	SBM clock signal
	12	MEFSENS	I	0/3.3 V DC	MPS: On/Off
	13	SBMMODE	O	0/3.3 V DC	SBM mode signal
	14	+3.3V2	O	3.3 V DC	3.3 V DC power output
	15	TMOT	O	0/3.3 V DC	TM: On/Off
	16	LFANN	O	0/3.3 V DC	CENFM: On/Off
	17	FUDR	O	0/3.3 V DC	FSSOL: On/Off
	18	ENVMOT	O	0/3.3 V DC	FUPRM: On/Off
	19	FDDR	O	0/3.3 V DC	FSSOL: On/Off
	20	DUJAMSEN1N	I	0/3.3 V DC	DUS: On/Off
	21	REGSEN2	I	0/3.3 V DC	RS: On/Off
	22	REARSWN	I	0/3.3 V DC	RCS: On/Off

TONER www.tonerplus.com.ua

Connector	Pin	Signal	I/O	Voltage	Description
YC3	1	+24V4	O	24 V DC	24 V DC power output
Connected to the relay-L PWB	2	GND	-	-	Ground
	3	GND	-	-	Ground
	4	+24V6	O	24 V DC	24 V DC power output
YC4	1	MMOTCW	O	0/5 V DC	MM drive shift signal
Connected to the drum motor and main motor	2	MMOTRDYN	I	0/3.3 V DC	MM ready signal
	3	MMOTCLKN	O	0/5 V DC(pulse)	MM clock signal
	4	MMOTONN	O	0/5 V DC	MM: On/Off
	5	GND	-	-	Ground
*: 60/50/45 ppm model only	6	+24V3	O	24 V DC	24 V DC power output
	7	DMOTCW	O	0/5 V DC	DRM rotation direction
	8	DMOTRDYN	I	0/3.3 V DC	DRM ready signal
	9	DMOTCLKN	O	0/5 V DC(pulse)	DRM clock signal
	10	DMOTONN	O	0/5 V DC	DRM: On/Off
	11	GND	-	-	Ground
	12	+24V3	O	24 V DC	24 V DC power output
YC5	1	+24V3	O	24 V DC	24 V DC power output to DEVCL
Connected to the duplex cltch,mid cltch, registration clutch,paper feed cltch and developer clutch	2	DLPCLN	O	0/3.3 V DC	DEVCL: On/Off
	3	+24V3	O	24 V DC	24 V DC power output to PFCL
	4	FEEDCLN	O	0/24 V DC	PFCL: On/Off
	5	+24V3	O	24 V DC	24 V DC power output to RCL
	6	REGCLN	O	0/24 V DC	RCL: On/Off
	7	+24V3	O	24 V DC	24 V DC power output to PCCL
	8	MIDCLN	O	0/24 V DC	PCCL: On/Off
	9	+24V3	O	24 V DC	24 V DC power output to DUCL
*: 60/50/45 ppm model only	10	DUCLN	O	0/24 V DC	DUCL: On/Off
YC6	1	+24V1	O	24 V DC	24 V DC power output
Connected to the interlock switch	2	+24V2	O	24 V DC	24 V DC power output
YC7	1	CAS3	I	0/24 V DC	CSSW: On/Off
Connected to the cassette size switch	2	CAS2	I	0/3.3 V DC	CSSW: On/Off
	3	CASSET	-	-	CSSW common signal
	4	CAS1	I	0/3.3 V DC	CSSW: On/Off

TONER
www.tonerplus.com.ua

Connector	Pin	Signal	I/O	Voltage	Description
YC8	1	+24V3	O	24 V DC	24 V DC power output to MPSOL
Connected to the MP solenoid	2	MEFSOLN	O	0/24 V DC	MPSOL: On/Off
YC10	1	+24V1	O	24 V DC	24 V DC power output to PSFM
Connected to the power source fan motor	2	FANRN	O	0/24 V DC	PSFM: On/Off
YC12	1	+3.3V10	O	3.3 V DC	3.3 V DC power output to EFS
Connected to the eject full sensor	2	GND	-	-	Ground
	3	PAPFULN	I	0/3.3 V DC	EFS: On/Off
YC13	1	LIFTMOTOR	O	0/5 V DC	LM: On/Off
Connected to the lift motor	2	GND	-	-	Ground
YC14	1	+3.3V9	O	3.3 V DC	3.3 V DC power output to LS
Connected to the lift sensor	2	GND	-	-	Ground
	3	LSENS	I	0/3.3 V DC	LS: On/Off
YC15	1	+24V6	O	24 V DC	24 V DC power output to PM
Connected to the polygon motor	2	GND	-	-	Ground
	3	PLGDRN	O	0/5 V DC	PM: On/Off
	4	PLGRDYN	I	0/3.3 V DC	PM ready signal
	5	POLCLK	O	0/3.3 V DC(pulse)	PM clock signal
YC16	1	+5V5	O	5 V DC	5 V DC power output to APCPWB
Connected to the APC PWB	2	VDATA1P	O	LVDS	Video data 1 signal (+)
	3	VDATA1N	O	LVDS	Video data 1 signal (-)
	4	VDATA2P	O	LVDS	Video data 2 signal (+)
	5	VDATA2N	O	LVDS	Video data 2 signal (-)
	6	SAMPLEN1	O	0/3.3 V DC	Sample / hold signal 1
	7	SAMPLEN2	O	0/3.3 V DC	Sample / hold signal 2
	8	OUTPEN	O	0/3.3 V DC	Laser enable
	9	VCONT1	O	Analog	LD-1 Light volume adjustment
	10	VCONT2	O	Analog	LD-2 Light volume adjustment
	11	GND	-	-	Ground
	12	PDN	I	0/3.3 V DC (pulse)	Main scanning synchronizing signal
	13	+3.3V6	O	3.3 V DC	3.3 V DC power output to APCPWB

TONER
www.tonerplus.com.ua

Connector	Pin	Signal	I/O	Voltage	Description
YC17	1	+3.3V6	O	3.3 V DC	3.3 V DC power output to OPPWB
Connected to the operation PWB	2	FUPRSTN	O	0/3.3 V DC	OPPWB reset signal
	3	P2C_OK_KEY	I	0/3.3 V DC	OK KEY:On/Off
	4	C2P_BUZCON	O	0/3.3 V DC	Buzzer control signal
	5	AIRTEMP	I	Analog	Temperature sensor input signal
	6	C2P_LCDCON	O	0/5 V DC	LCD: On/Off
	7	+5V5	O	5 V DC	5 V DC power output to LCD
	8	P2C_SDAT	I	0/3.3 V DC	Data signal
	9	AIRWET	I	Analog	Humid sensor input signal
	10	C2P_SDAT	O	0/3.3 V DC	The data signal between panel main
	11	WETCLK	O	0/3.3 V DC (pulse)	Humid sensor clock signal
	12	LED	O	0/3.3 V DC	READY LED control signal
	13	FG	-	-	Ground
	14	GND	-	-	Ground
YC18	1	GND	-	-	Ground
Connected to the power switch	2	POWERSW	I	0/3.3 V DC	PSSW: On/Off
YC19	1	ENVSENSN	I	0/3.3 V DC	ENVS: On/Off
Connected to the high voltage PWB	2	GND	-	-	Ground
	3	MISENS	I	Analog	MC output signal
	4	MHVCLK	O	0/3.3 V DC (pulse)	MC clock signal
	5	MACCNT	O	Analog	MC AC control signal
	6	MDCCNT	O	Analog	MC DC control signal
	7	HVCLK	O	0/3.3 V DC (pulse)	DEV clock signal
	8	BDCNT	O	Analog	DEV DC control signal
	9	BACNT	O	Analog	DEV AC control signal
	10	PAPERSEN2N	I	0/3.3 V DC	EFS2: On/Off
	11	PAPERSEN1N	I	0/3.3 V DC	EFS1: On/Off
	12	REGSENSN	I	0/3.3 V DC	RS: On/Off
	13	DUJAMSEN2N	I	0/3.3 V DC	DUS: On/Off
	14	+3.3V6	O	3.3 V DC	3.3 V DC power output to HVPWB

TONER
www.tonerplus.com.ua

Connector	Pin	Signal	I/O	Voltage	Description
YC19	15	SCNT	O	0/3.3 V DC	Separation output control signal
Connected to the high voltage PWB	16	TRREM	O	0/3.3 V DC	TC remote signal
	17	TCNT	O	Analog	TC control signal
	18	+24V3	O	24 V DC	24 V DC power output to HVPWB
YC20	A1	+5V2	O	5 V DC	5 V DC power output to MPWB
Connected to the main PWB	A2	+5V2	O	5 V DC	5 V DC power output to MPWB
	A3	GND	-	-	Ground
	A4	GND	-	-	Ground
	A5	VBUS	I	3.3 V DC	3.3 V DC power output to USB host
	A6	GND	-	-	Ground
	A7	C2P_BUZCON	I	0/3.3 V DC	Buzzer control signal
	A8	C2P_LCDCON	I	0/3.3 V DC	LCD: On/Off
	A9	C2P_SDAT	I	0/3.3 V DC	The data signal between panel main
	A10	SAMPLE1	I	0/3.3 V DC	Sample / hold signal 1
	A11	GND	-	-	Ground
	A12	VDATA2P	I	LVDS	Video data 2 signal (+)
	A13	VDATA2N	I	LVDS	Video data 2 signal (-)
	A14	GND	-	-	Ground
	A15	E2C_IRN	O	0/3.3 V DC	Engine interrupt signal
	A16	C2E_SDAT	I	0/3.3 V DC	Serial communication data input
	A17	E2C_SBSY	O	0/3.3 V DC	System busy signal
	A18	GND	-	-	Ground
	A19	GND	-	-	Ground
	A20	E2C_INT	O	0/3.3 V DC	Interrupt signal
	B1	+5V2	O	5 V DC	5 V DC power output to MPWB
	B2	+5V2	O	5 V DC	5 V DC power output to MPWB
	B3	GND	-	-	Ground
	B4	UDATAN	I/O	LVDS	USB host data signal (-)
	B5	UDATAP	I/O	LVDS	USB host data signal (+)
	B6	GND	-	-	Ground
	B7	FUPRSTN	I	0/3.3 V DC	OPPWB reset signal
	B8	P2C_PKEY	O	0/3.3 V DC	OK KEY:On/Off
	B9	P2C_SDAT	O	0/3.3 V DC	The data signal between panel main
	B10	SAMPLE2	I	0/3.3 V DC	Sample / hold signal 2
	B11	PDN	O	0/3.3 V DC (pulse)	Main scanning synchronizing signal

TONER
www.tonerplus.com.ua

Connector	Pin	Signal	I/O	Voltage	Description
YC20	B12	VDATA1P	I	LVDS	Video data 1 signal (+)
Connected to the main PWB	B13	VDATA1N	I	LVDS	Video data 1 signal (-)
	B14	PLGCLK	I	0/3.3 V DC (pulse)	PM clock signal
	B15	E2C_SDAT	O	0/3.3 V DC (pulse)	Serial communication data output
	B16	C2E_SCKN	I	0/3.3 V DC (pulse)	Serial communication clock
	B17	E2C_SDIR	O	0/3.3 V DC	Communication direction change signal
	B18	VSYNC	O	0/3.3 V DC (pulse)	Sub scanning synchronizing signal
	B19	C2E_OFFRDY	I	0/3.3 V DC	Off-mode notice signal
	B20	C2E_INT	I	0/3.3 V DC	Interrupt signal
YC21	1	TH2	I	Analog	FUTH2 output signal
Connected to the fuser thermistor connect PWB	2	TH1	I	Analog	FUTH1output signal
	3	GND	-	-	Ground
	4	REARFANN	O	24 V DC	REFM: On/Off
	5	+24V4	O	24 V DC	24 V DC power output to FTHPWB
YC22	1	+24V5	O	24 V DC	24 V DC power output to PF
Connected to the paper feeder	2	OPSDO	O	0/3.3 V DC (pulse)	PF communication serial data signal
	3	OPSDI	I	0/3.3 V DC (pulse)	PF communication serial data signal
	4	OPCLK	O	0/3.3 V DC (pulse)	PF communication serial clock signal
	5	OPRDYN	I	0/3.3 V DC	Option communication ready signal
	6	+3.3V7	O	3.3 V DC	3.3 V DC power output to PF
	7	GND	-	-	Ground
	8	OPSEL2	O	0/3.3 V DC	PF select signal
	9	OPSEL1	O	0/3.3 V DC	PF select signal
	10	OPSEL0	O	0/3.3 V DC	PF select signal
	11	OPPAUSEN	O	0/3.3 V DC	Paper stop signal
	12	GND	-	-	Ground
YC23	1	VBUS	O	5 V DC	5 V DC power output to USB host
Connected to the USB host	2	UDATAN	I/O	LVDS	USB data signal (-)
	3	UDATAP	I/O	LVDS	USB data signal (+)
	4	GND	-	-	Ground
	5	GND	-	-	Ground
YC26	1	+3.3V13	O	3.3 V DC	3.3 V DC power output to ES
Connected to the eject sensor	2	GND	-	-	Ground
	3	EXITSENSN	I	0/3.3 V DC	ES: On/Off

TONER

2-3-3 Power source PWB (PSPWB)

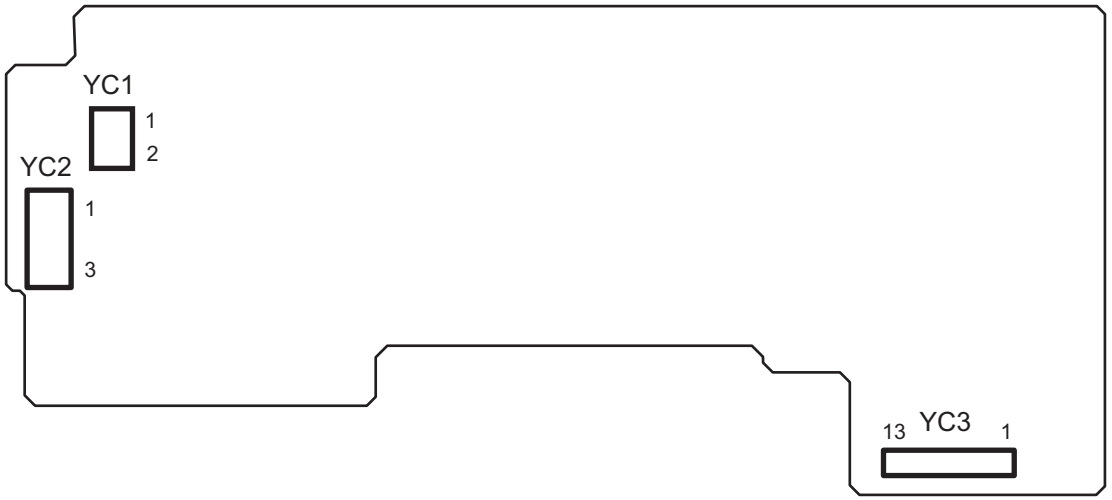

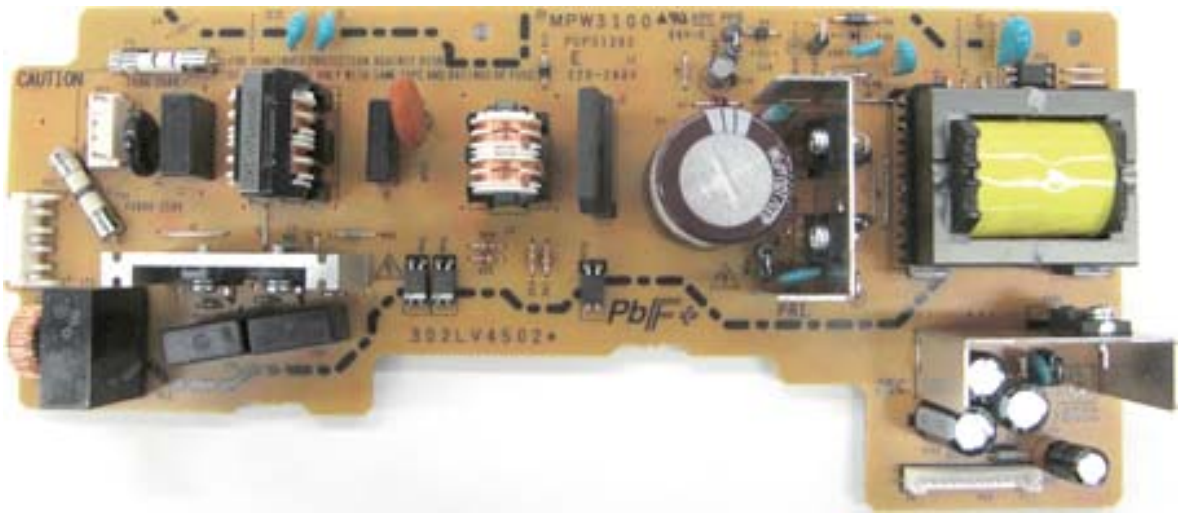

Figure 2-3-3 Power source PWB silk-screen diagram and Photograph

TONER
www.tonerplus.com.ua

Connector	Pin	Signal	I/O	Voltage	Description
YC1	1	LIVE	I	100 V AC	AC power input
Connected to the inlet	2	NEUTRAL	I	100 V AC	AC power input
YC2	1	NEUTRAL1	I	100 V AC	Fuser heater
Connected to the fuser unit	2	LIVE	O	100 V AC	AC power input
	3	NEUTRAL2	I	100 V AC	Fuser heater
YC3	1	+24V1	O	24 V DC	24 V DC power output to EPWB
Connected to the engine PWB	2	+24V1	O	24 V DC	24 V DC power output to EPWB
	3	+24V1	O	24 V DC	24 V DC power output to EPWB
	4	+24V1	O	24 V DC	24 V DC power output to EPWB
	5	GND	-	-	Ground
	6	GND	-	-	Ground
	7	GND	-	-	Ground
	8	GND	-	-	Ground
	9	PSLEEPN	I	0/5 V DC	Sleep mode signal
	10	RELAY	I	0/5 V DC	Relay control
	11	ZCROSSN	O	0/5 V DC(pulse)	Zero crossing signal
	12	HEAT1REM	I	0/24 V DC	Fuser heater control
	13	HEAT2REM	I	0/24 V DC	Fuser heater control

TONER
www.tonerplus.com.ua

2-3-4 Relay-L PWB (R-LPWB)

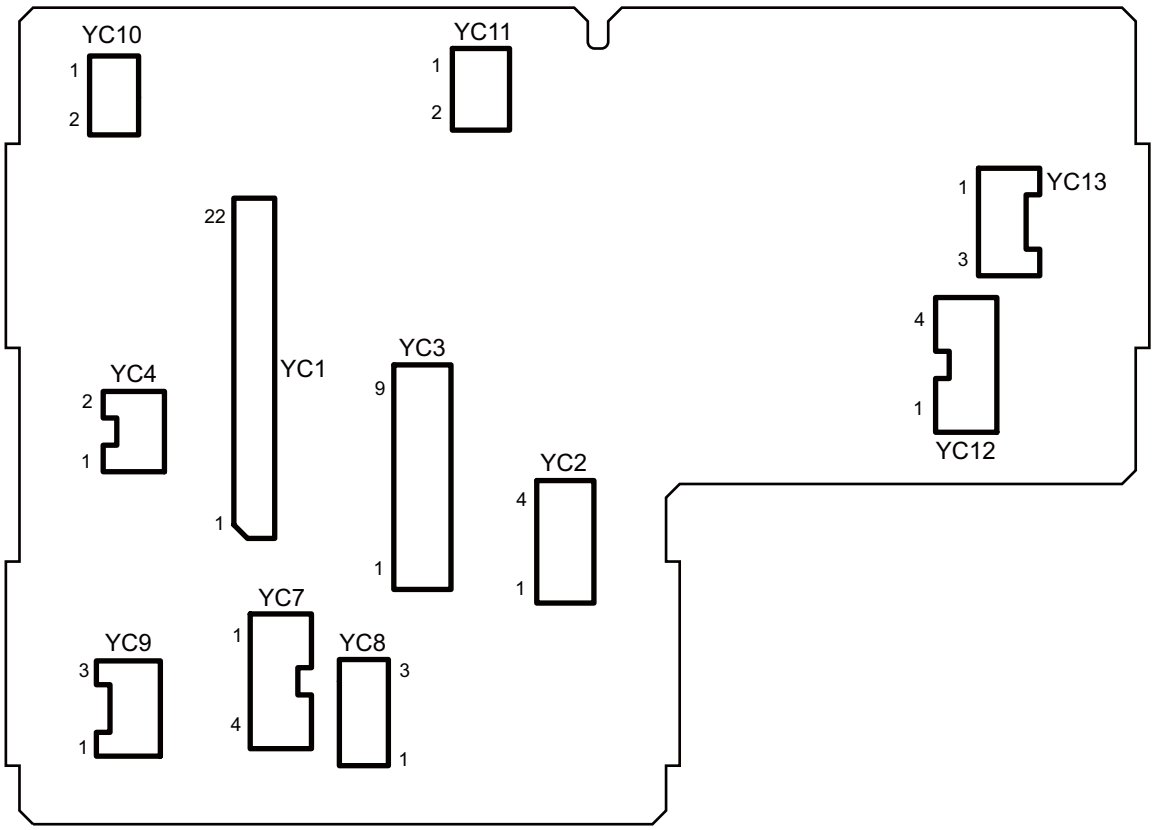

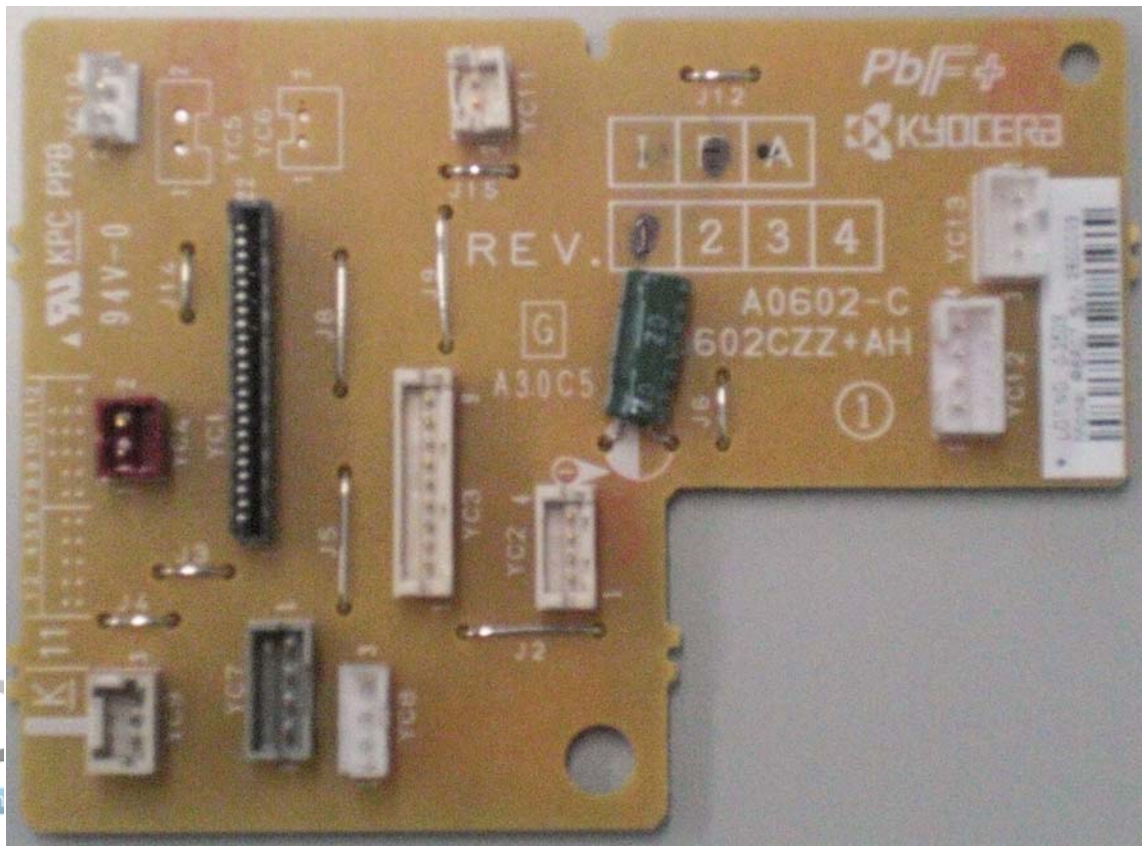

Figure 2-3-4 Relay-L PWB silk-screen diagram and Photograph

Connector	Pin	Signal	I/O	Voltage	Description
YC1	1	EECLK	I	0/3.3 V DC(pulse)	Clock signal
Connected to the engine PWB	2	GND	-	-	Ground
	3	EESIO	I/O	0/3.3 V DC	Data signal
	4	ERASER	I	0/3.3 V DC	CL control signal
	5	+3.3V6	I	3.3 V DC	3.3 V DC power input from EPWB
	6	TSENS	O	Analog	TS output signal
	7	SBMDIR	I	0/5 V DC	SBM: On/Off
	8	WTSENS	O	Analog	WTS output signal
	9	SBMENBLN	I	0/3.3 V DC	SBM output control signal
	10	WTLED	I	0/3.3 V DC	Waste toner LED control
	11	SBMSTEP	I	0/3.3 V DC	SBM step signal
	12	MEFSENS	O	0/3.3 V DC	MPS: On/Off
	13	SBMMODE	I	0/3.3 V DC	SBM mode control signal
	14	+3.3V2	I	3.3 V DC	3.3 V DC power input from EPWB
	15	TMOT	I	0/3.3 V DC	TM: On/Off
	16	LFANN	I	0/24 V DC	LFM: On/Off
	17	FUDR	I	0/24 V DC	FSSOL: On/Off
	18	ENVMOT	I	0/5 V DC	ENVM: On/Off
	19	FDDR	I	0/24 V DC	FSSOL: On/Off
	20	DUJAMSEN1N	O	0/3.3 V DC	DUS1: On/Off
	21	REGSEN2	O	0/3.3 V DC	RS2: On/ Off
	22	REARSWN	O	0/3.3 V DC	RECSW: On/Off
YC2	1	+24V6	I	24 V DC	24 V DC power input from EPWB
Connected to the engine PWB	2	GND		-	Ground
	3	GND		-	Ground
	4	+24V4	I	24 V DC	24 V DC power input from EPWB
YC3	1	TSENS	I	Analog	TS output signal
Connected to the drum connect PWB	2	+24V6	O	24 V DC	24 V DC power output to DRRPWB
	3	ERASERN	O	0/24 V DC	CL: On/Off
	4	EECLK	O	0/24 V DC(pulse)	Clock signal
	5	EESIO	I/O	0/3.3 V DC	Data signal
	6	TMOT	O	0/5 V DC	TM control signal
	7	+3.3V6	O	3.3 V DC	3.3 V DC power output to DRRPWB
	8	GND	-	-	Ground
	9	REGSEN2	I	0/3.3 V DC	RS2: On/Off

TONER www.tonerplus.com.ua

Connector	Pin	Signal	I/O	Voltage	Description
YC4	1	LFANN	-	0/24 V DC	LFM: On/Off
Connected to the LSU fan motor	2	+24V4	O	24 V DC	24 V DC power output to LSUFM
YC7	1	+3.3V12	O	3.3 V DC	3.3 V DC power output to WTS(LED)
Connected to the waste toner sensor	2	WTLEDN	I	0/3.3 V DC	WTS(LED): On/Off
	3	WTSENS	I	Analog	WTS output signal
	4	+3.3V6	O	3.3 V DC	3.3 V DC power output to WTS
YC8	1	+3.3V8	O	-	3.3 V DC power output to MPS
Connected to the MP paper sensor	2	GND	-	-	Ground
	3	MEFSENS	I	OC	MPS: On/Off
YC9	1	+3.3V11	O	3.3 V DC	3.3 V DC power output to DUS
Connected to the duplex sensor 1	2	GND	-	-	Ground
	3	DUJAMSEN1N	I	0/3.3 V DC	DUS: On/Off
YC10	1	REARSWN	I	0/3.3 V DC	RECSW: On/Off
Connected to the rear cover switch	2	GND	-	-	Ground
YC11	1	ENVMOT	O	0/5 V DC	FUPRM: On/Off
Connected to the fuser pressure release motor	2	GND	-	-	Ground
YC12	1	OUTB3	O	0/3.3 V DC	SBM B3 drive control signal
Connected to the shiftback motor	2	OUTB1	O	0/3.3 V DC	SBM B1 drive control signal
	3	OUTA3	O	0/3.3 V DC	SBM A3 drive control signal
	4	OUTA1	O	0/3.3 V DC	SBM A1 drive control signal
YC13	1	FACEDDRN	O	0/24 V DC	FSSOL: On/Off
Connected to the feed shift solenoid	2	+24V6	O	24 V DC	24 V DC power output to FSSOL
	3	FACEUDRN	O	0/24 V DC	FSSOL: On/Off

TONER
www.tonerplus.com.ua

2-3-5 High voltage PWB (HVPWB)

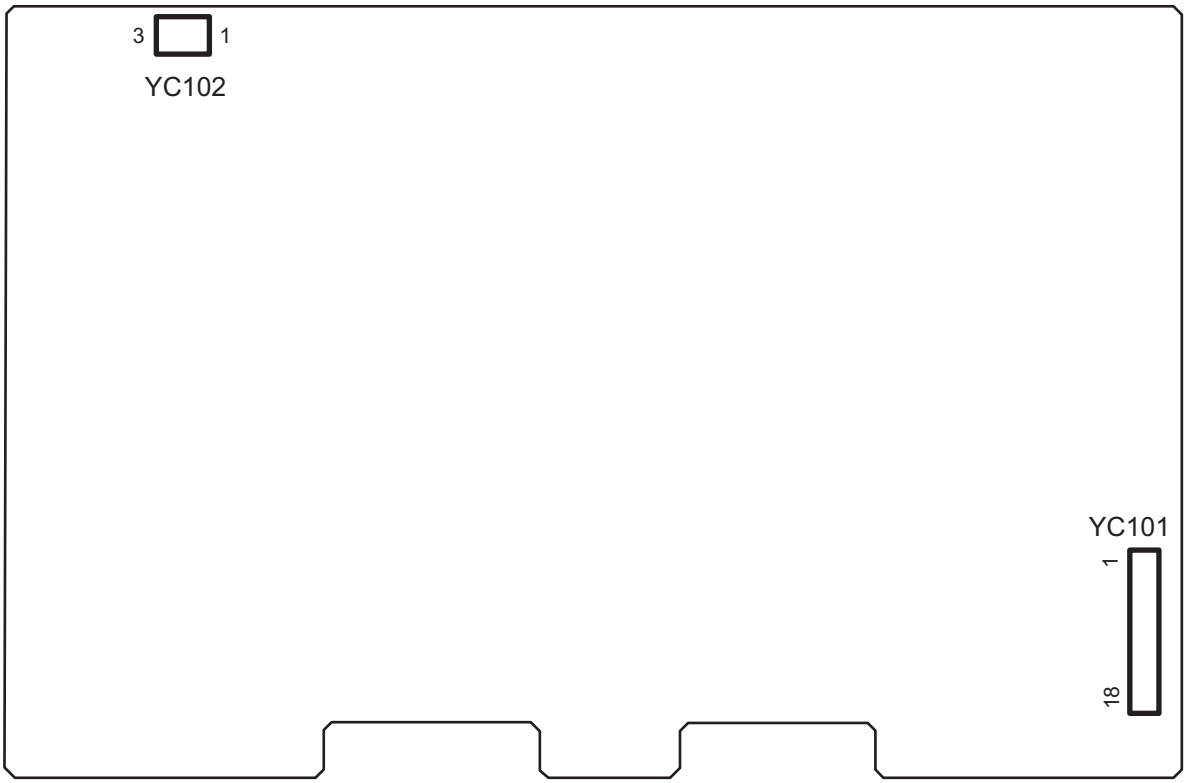

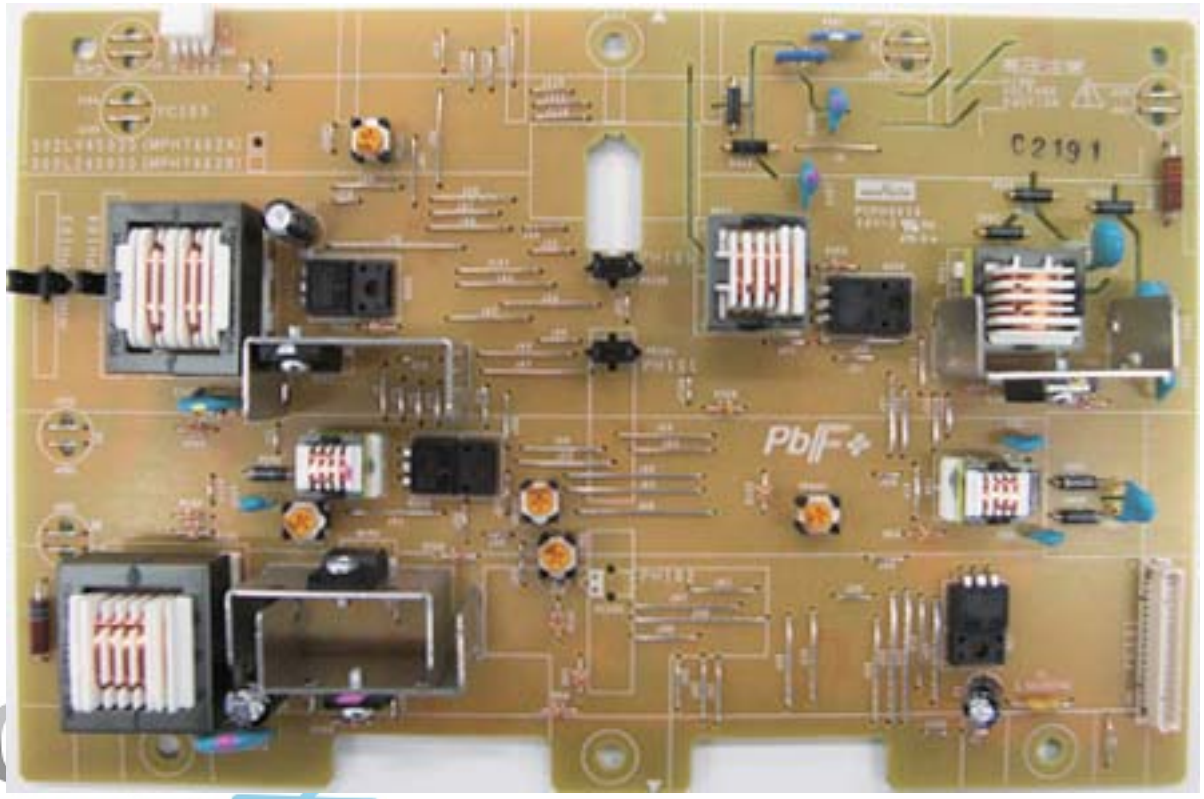

www.tonerplus.com.ua

Figure 2-3-5 High voltage silk-screen diagram and Photograph

Connector	Pin	Signal	I/O	Voltage	Description
YC101	1	+24V3	O	24 V DC	24 V DC power output to EPWB
Connected to the engine PWB	2	TCNT	O	Analog	Transfer control
	3	TRREM	O	0/3.3 V DC	Transfer remote signal
	4	SCNT	O	Analog	Separation control
	5	+3.3V	O	3.3 V DC	3.3 V DC power output
	6	DUJAMSEN2N	I	0/3.3 V DC	DUS2:On/Off
	7	REGSENSN	I	0/3.3 V DC	RS:On/Off
	8	PAPERSEN1N	I	0/3.3 V DC	PS1:On/Off
	9	PAPERSEN2N	I	0/3.3 V DC	PS2:On/Off
	10	BACNT	I	Analog	Developer AC control
	11	BDCNT	I	Analog	Developer DC control
	12	HVCLK	O	0/3.3 V DC	Developer clock signal
	13	MDCCNT	I	Analog	Charger DC control
	14	MACCNT	I	Analog	Charger AC control
	15	MHVCLK	O	0/3.3 V DC	Charger clock signal
	16	MISENS	O	Analog	Charger current detection
	17	GND	-	-	Ground
	18	ENVSENSN	I	0/3.3 V DC	ES:On/Off
YC102	1	+3.3V14	O	3.3 V DC	3.3 V DC power output to FUPRS
Connected to the fuser pressure release sensor	2	GND	-	-	Ground
	3	ENVSENSN	I	0/3.3 V DC	FUPRS:On/Off

TONER
www.tonerplus.com.ua

This page is intentionally left blank.

TONER
www.tonerplus.com.ua

2-4-1 Appendixes

(1) Maintenance kits

1. 60/50/45 ppm model

Maintenance part name		Parts No.	Alternative part No.
Name used in service	Name used in parts list		
MK-3130/MAINTENANCE KIT (500,000 images)	MK-3130/MAINTENANCE KIT	1702MT8NL0	072MT8NO
MK-3132/MAINTENANCE KIT (300,000 sheets)	MK-3132/MAINTENANCE KIT	1702MT8US0	072MT8UO
Transfer roller assembly	ROLLER TRANSFER ASSY	-	-
Drum unit	DRUM UNIT	-	-
Developer unit	DLP UNIT	-	-
Fuser unit	FUSER UNIT(KME)	-	-
Paper feed roller assembly	HOLDER FEED ASSY	-	-
Retard roller assembly	RETARD ROLLER ASSY	-	-

2. 40 ppm model

Maintenance part name		Parts No.	Alternative part No.
Name used in service	Name used in parts list		
MK-3100/MAINTENANCE KIT (300,000 sheets)	MK-3100/MAINTENANCE KIT	1702MS8NLP0	072MS8NO
MK-3102/MAINTENANCE KIT (300,000 images)	MK-3102/MAINTENANCE KIT	1702MT8US0	072MT8UO
Transfer roller assembly	ROLLER TRANSFER ASSY	-	-
Drum unit	DRUM UNIT	-	-
Developer unit	DLP UNIT	-	-
Fuser unit	FUSER UNIT(KME)	-	-
Paper feed roller assembly	HOLDER FEED ASSY	-	-
Retard roller assembly	RETARD ROLLER ASSY	-	-

TONER
www.tonerplus.com.ua

(2) Repetitive defects gauge

First occurrence of defect

29.9 mm/1 3/16" Chager roller

36.8 mm/1 7/16" Registration roller

44.9 mm/1 3/4" Developer roller

61.2 mm/2 7/16" Transfer roller

78.5 mm/3 1/16" Press roller (40 ppm)

84.8 mm/3 5/16" Heat roller (40 ppm)

94.2 mm/3 11/16" Drum/Press roller (60/50/45 ppm)

109.9 mm/4 5/16" Heat roller (60/50/45 ppm)

TONER+
www.tonerplus.com.ua

(3) Firmware environment commands

The printer maintains a number of printing parameters in its memory. These parameters may be changed permanently with the FRPO (Firmware RePrOgram) commands.
This section provides information on how to use the FRPO command and its parameters using examples.

Using FRPO commands for reprogramming the firmware

The current settings of the FRPO parameters are listed as the optional values on the service status page.

Note: Before changing any FRPO parameters, print out a service status page, so you will know the parameter values before the changes are made. To return FRPO parameters to their factory default values, send the FRPO INIT (FRPO-INITialize) command.(!R! FRPO INIT; EXIT;)

The FRPO command is sent to the printer in the following sequence:
!R! FRPO parameter, value; EXIT;
Example: Changing emulation mode to PC-PR201/65A
!R! FRPO P1, 11; EXIT;

FRPO parameters

Item	FRPO	Setting values	Factory setting
Top margin	A1	Integer value in inches	0
	A2	Fraction value in 1/100 inches	0
Left margin	A3	Integer value in inches	0
	A4	Fraction value in 1/100 inches	0
Page length	A5	Integer value in inches	13
	A6	Fraction value in 1/100 inches	61
Page width	A7	Integer value in inches	13
	A8	Fraction value in 1/100 inches	61
Default pattern resolution	B8	0: 300 dpi 1: 600 dpi	0
Copy count	C0	Number of copies to print:1-999	1
Page orientation	C1	0: Portrait 1: Landscape	0
Default font No.	C2 C3 C5	Middle two digits of power-up font Last two digits of power-up font First two digits of power-up font	0 0 0
PCL font switch	C8	0:HP compatibility mode (Characters higher than 127 are not printed.) 32:Conventional mode (Characters higher than 127 are printed. Supported symbol sets: ISO-60 Norway [00D], ISO-15 Italian [00I], ISO-11 Sweden [00S], ISO-6 ASCII [00U], ISO-4 U.K. [01E], ISO-69 France [01F], ISO-21 Germany [01G], ISO-17 Spain [02S], Symbol [19M)	0

TONER
www.tonerplus.com.ua

Item	FRPO	Setting values	Factory setting
Printing concentration	D4	1: Thin. 2: Slightly Thin. 3: Standard 4: Slightly Deep. 5: Deep.	3
Total host buffer size	H8	0 to 99 in units of the size defined by FRPO S5	5
Form feed time-out value	H9	Value in units of 5 seconds (0 to 99).	6
KIR mode	N0	0: Off 2: On	2
Duplex binding	N4	0: Off 1: Long edge 2: Short edge	0
Sleep timer time-out time	N5	1 to 240 minutes [0: Off]	1
Ecoprint level	N6	0: Off 2: On	0
Resolution	N8	0: 300dpi 1: 600dpi 3: 1200dpi	1
Parallel interface mode	O0	0: Standard Mode 1: Fast Mode 5: Nibble (High Speed) Mode 70: Automatic Mode	70
Parallel interface Error control	O2	0: Line Control OFF 2: Compatibility with PCL	2
Default emulation mode	P1	0 : Line printer 1 : IBM proprinter 2 : DIABLO 630 5 : Epson LQ-850 6 : PCL6 (except PCL XL) 8 : KC-GL 9 : KPDL 11 : PC-PR201 12 : IBM 5577 13 : VP-1000 14 : N5200 15 : FMPR-359F1	9(U.S.A) or 6(Euro and other)
Carriage-return action *	P2	0: Ignores 0x0d 1: Carriage-return 2: Carriage-return+linefeed	1
Linefeed action *	P3	0: Ignores 0x0d 1: Linefeed 2: Linefeed+carriage-return	1

TONER
www.tonerplus.com.ua

Item	FRPO	Setting values	Factory setting
Automatic emulation sensing (For KPDL3)	P4	0: AES disabled 1: AES enabled	1(U.S.A) or 0(Euro and other)
Alternative emulation	P5	6: PCL 6	6
Automatic emulation switching trigger (For KPDL3)	P7	0: Page eject commands 1: None 2: Page eject and PRESCRIBE EXIT 3: PRESCRIBE EXIT 4: Formfeed (^L) 6: Page eject, PRESCRIBE EXIT and formfeed 10: Page eject commands; if AES fails, resolves to KPDL	11(U.S.A) or 10(Euro and other)
Command recognition character	P9	ASCII code of 33 to 126	82 (R)
Default stacker	R0	1 (inner tray) 3 5	1
Default paper size	R2	0: Size of the default paper cassette (See R4.) 1: Monarch (3-7/8 × 7-1/2 inches) 2: Business (4-1/8 × 9-1/2 inches) 3: International DL (11 × 22 cm) 4: International C5 (16.2 × 22.9 cm) 5: Executive (7-1/4 × 10-1/2 inches) 6: US Letter (8-1/2 × 11 inches) 7: US Legal (8-1/2 × 14 inches) 8: A4 (21.0 × 29.7 cm) 9: JIS B5 (18.2 × 25.7 cm) 10: A3 (29.7 ´ 42 cm) 11: B4 (25.7 ´ 36.4 cm) 12: US Ledger (11 ´ 17 inches) 13: ISO A5 14: A6 (10.5 × 14.8 cm) 15: JIS B6 (12.8 × 18.2 cm) 16: Commercial #9 (3-7/8 × 8-7/8 inches) 17: Commercial #6 (3-5/8 × 6-1/2 inches) 18: ISO B5 (17.6 × 25 cm) 19: Custom (11.7 × 17.7 inches) 30: C4 (22.9 ´ 32.4 cm) 31: Hagaki (10 × 14.8 cm) 32: Ofuku-hagaki (14.8 × 20 cm) 33: Officio II 39: 8K 40: 16K 42: 216x340 50: Statement 51: Folio 52: Youkei 2 53: Youkei 4	0

TONER
www.tonerplus.com.ua

Item	FRPO	Setting values	Factory setting
Default cassette	R4	0: MP tray 1: Cassette 1 2: Cassette 2 3: Cassette 3	1
MP tray paper size	R7	Same as the R2 values except: 0	6(U.S.A) or 8(Euro and other)
A4/letter equation	S4	0: Off 1: On	1
Host buffer size	S5	0: 10kB (x H8) 1: 100kB (x H8) 2: 1024kB (x H8)	1
RAM disk size	S6	1 to 1024 MB	400
RAM disk mode	S7	0: Off 1: On	1
Wide A4	T6	0: Off 1: On	0
Line spacing	U0	Lines per inch (integer value)	6
Line spacing	U1	Lines per inch (fraction value)	0
Character spacing	U2	Characters per inch (integer value)	10
Character spacing	U3	Characters per inch (fraction value)	0

TONER
www.tonerplus.com.ua

Item	FRPO	Setting values	Factory setting
Country code	U6	0: US-ASCII 1: France 2: Germany 3: UK 4: Denmark 5: Sweden 6: Italy 7: Spain 8: Japan 9: US Legal 10: IBM PC-850 (Multilingual) 11: IBM PC-860 (Portuguese) 12: IBM PC-863 (Canadian French) 13: IBM PC-865 (Norwegian) 14: Norway 15: Denmark 2 16: Spain 2 17: Latin America 21: US ASCII (U7 = 50 SET) 77: HP Roman-8 (U7 = 52 SET)	41
Code set at power up in daisy-wheel emulation	U7	0: Same as the default emulation mode (P1) 1: IBM 6: IBM PC-8 50: US ASCII (U6 = 21 SET) 52: HP Roman-8 (U6 = 77 SET)	53
Font pitch for fixed pitch scalable font	U8	Integer value in cpi: 0 to 99	10
	U9	Fraction value in 1/100 cpi: 0 to 99	0
Font height for the default scalable font	V0	Integer value in 100 points: 0 to 9	0
	V1	Integer value in points: 0 to 99	12
	V2	Fraction value in 1/100 points: 0, 25, 50, 75	0
Default scalable font	V3	Name of typeface of up to 32 characters, enclosed with single or double quotation marks	Courier
Default weight (courier and letter Gothic)	V9	0: Courier = darkness Letter Gothic = darkness 1: Courier = regular Letter Gothic = darkness 4: Courier = darkness Letter Gothic = regular 5: Courier = regular Letter Gothic = regular	5

TONER
www.tonerplus.com.ua

Item	FRPO	Setting values	Factory setting
Paper type for the MP tray	X0	1: Plain 1 2: Transparency 3: Preprinted 4: Label 5: Bond 6: Recycle 7: Vellum 9: Letterhead 10: Color 11: Prepunched 12: Envelope 13: Cardstock 16: Thick 17: High quality 21: Custom1 22: Custom2 23: Custom3 24: Custom4 25: Custom5 26: Custom6 27: Custom7 28: Custom8	1
Paper type for paper cassettes 1	X1	1: Plain 3: Preprinted 5: Bond 6: Recycled 9: Letterhead 10: Color 11: Prepunched 17: High quality 21: Custom1 22: Custom2 23: Custom3 24: Custom4 25: Custom5 26: Custom6 27: Custom7 28: Custom8	1

TONER
www.tonerplus.com.ua

Item	FRPO	Setting values	Factory setting
Paper type for paper cassettes 2 to 5	X2 X3 X4 X5	1: Plain 3: Preprinted 5: Bond 6: Recycled 9: Letterhead 10: Color 11: Prepunched 17: High quality 21: Custom1 22: Custom2 23: Custom3 24: Custom4 25: Custom5 26: Custom6 27: Custom7 28: Custom8	1
PCL paper source	X9	0: Performs paper selection depending on media type. 1: Performs paper selection depending on paper sources.	0
Automatic continue for ‘Press GO’	Y0	0: Off 1: On	0
Automatic continue timer	Y1	Number from 0 to 99 in increments of 5 seconds	6 (30 secons)
Heater ON/OFF switch	Y2	0: Heater OFF at the time of "Ready" 1: Heater ON at the time of "Ready"	0
Error message for device error	Y3	0: Not detect 1: Detect	0

TONER
www.tonerplus.com.ua

Item	FRPO	Setting values	Factory setting
Duplex operation for specified paper type (Prepunched, Preprintedand Letterhead)	Y4	0: Off 1: On	0
Default operation for PDF direct printing	Y5	0: Enlarges or reduces the image to fit in the current paper size. Loads paper from the current paper cassette. 1: Through the image. Loads paper which is the same size as the image. 2: Enlarges or reduces the image to fit in the current paper size. Loads Letter, A4 size paper depending on the image size. 3: Through the image. Loads Letter, A4 size paper depending on the image size. 8: Through the image. Loads paper from the current paper cassette. 9: Through the image. Loads Letter, A4 size paper depending on the image size. 10: Enlarges or reduces the image to fit in the current paper size. Loads Letter, A4 size paper depending on the imagesize.	0
e-MPS error	Y6	0:Does not print the error report and display the error message. 1:Prints the error report. 2:Displays the error message. 3:Prints the error report and displays the error message.	3

TONER
www.tonerplus.com.ua

(4) Wiring diagram (60/50/45 ppm model)

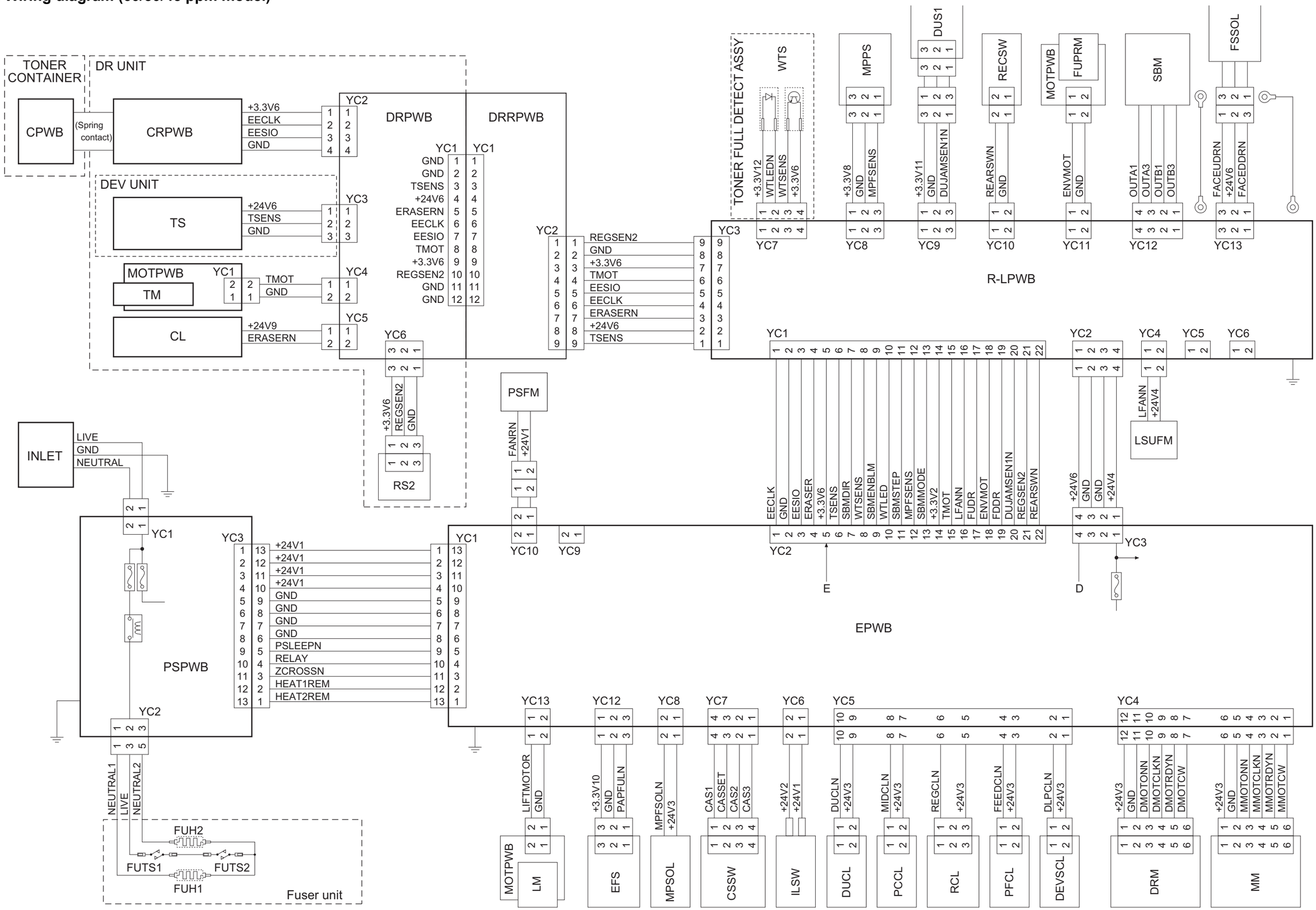

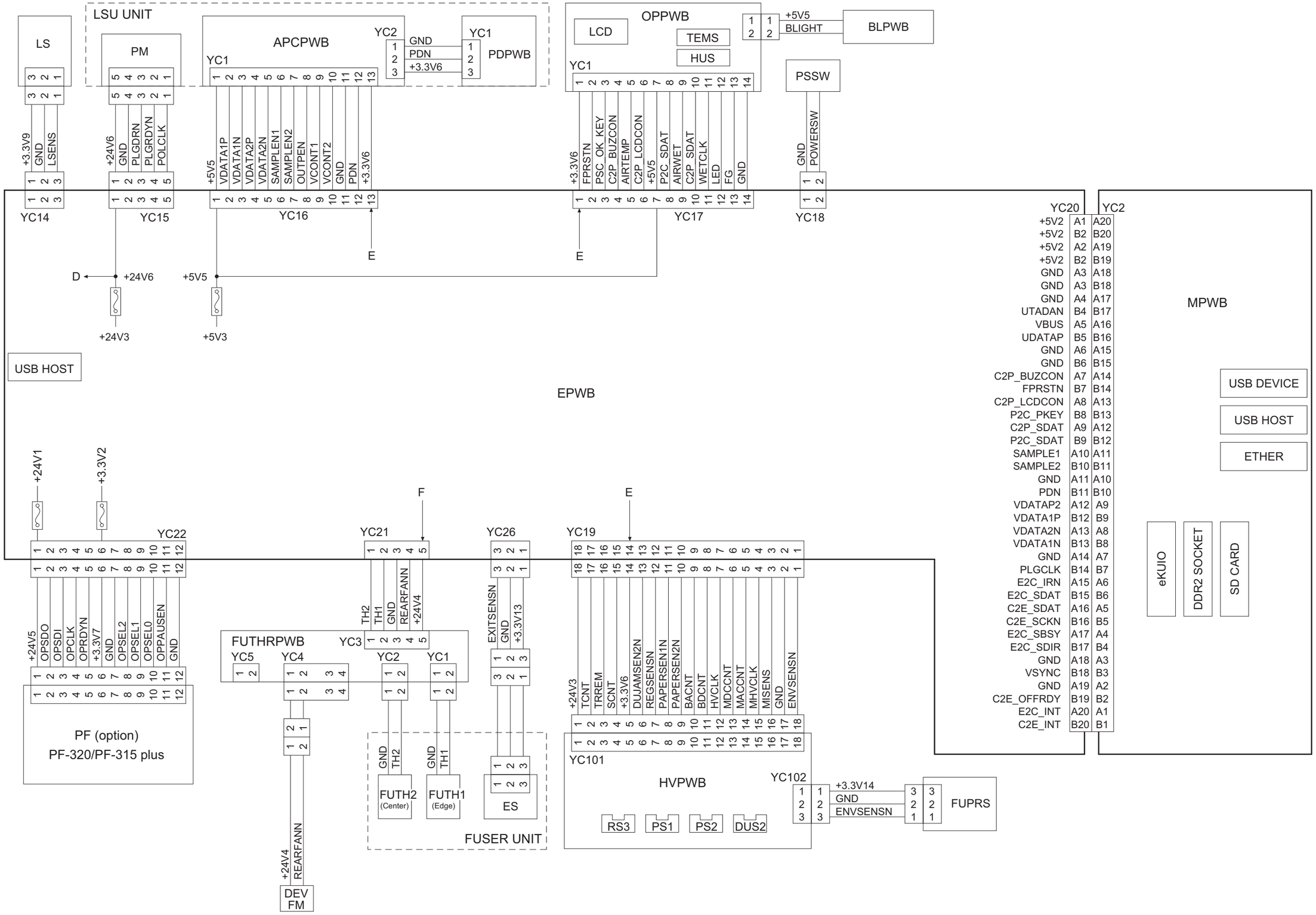
LSU UNIT
LS
PM
APCPWB
YC1
YC2
GND
PDN
+3.3V6
YC1
PDPWB
OPPWB
LCD
TEMS
HUS
YC1
+5V5
BLIGHT
BLPWB
PSSW
+3.3V9
GND
LSENS
YC14
+24V6
GND
PLGDRN
PLGRDYN
POLCLK
YC15
+5V5
VDATA1P
VDATA1N
VDATA2P
VDATA2N
SAMPLEN1
SAMPLEN2
OUTPEN
VCONT1
VCONT2
GND
PDN
+3.3V6
YC16
+3.3V6
FPRSTN
PSC_OK_KEY
C2P_BUZCON
AIRTEMP
C2P_LCDCON
+5V5
P2C_SDAT
AIRWET
C2P_SDAT
WETCLK
LED
FG
GND
YC17
GND
POWERSW
YC18
E
E
D
+24V6
+5V5
+24V3
+5V3
USB HOST
EPWB
YC20
YC2
+5V2
+5V2
+5V2
+5V2
GND
GND
GND
UTADAN
VBUS
UDATAP
GND
GND
C2P_BUZCON
FPRSTN
C2P_LCDCON
P2C_PKEY
C2P_SDAT
P2C_SDAT
SAMPLE1
SAMPLE2
GND
PDN
VDATAP2
VDATA1P
VDATA2N
VDATA1N
GND
PLGCLK
E2C_IRN
E2C_SDAT
C2E_SDAT
C2E_SCKN
E2C_SBSY
E2C_SDIR
GND
VSYNC
GND
C2E_OFFRDY
E2C_INT
C2E_INT
MPWB
USB DEVICE
USB HOST
ETHER
eKUIO
DDR2 SOCKET
SD CARD
+24V1
+3.3V2
YC22
+24V5
OPSDO
OPSDI
OPCLK
OPRDYN
+3.3V7
GND
OPSEL2
OPSEL1
OPSEL0
OPPAUSEN
GND
PF (option)
PF-320/PF-315 plus
F
YC21
TH2
TH1
GND
REARFANN
+24V4
FUTHRPWB
YC3
YC5
YC4
YC2
YC1
+24V4
REARFANN
DEV
FM
GND
TH2
GND
TH1
FUTH2
(Center)
FUTH1
(Edge)
FUSER UNIT
YC26
EXITSENSN
GND
+3.3V13
ES
E
YC19
+24V3
TCNT
TRREM
SCNT
+3.3V6
DUAMSEN2N
REGSENSN
PAPERSEN1N
PAPERSEN2N
BACNT
BDCNT
HVCLK
MDCCNT
MACCNT
MHVCLK
MISENS
GND
ENVSENSN
YC101
HVPWB
RS3
PS1
PS2
DUS2
YC102
+3.3V14
GND
ENVSENSN
FUPRS

(5) Wiring diagram (40ppm model)

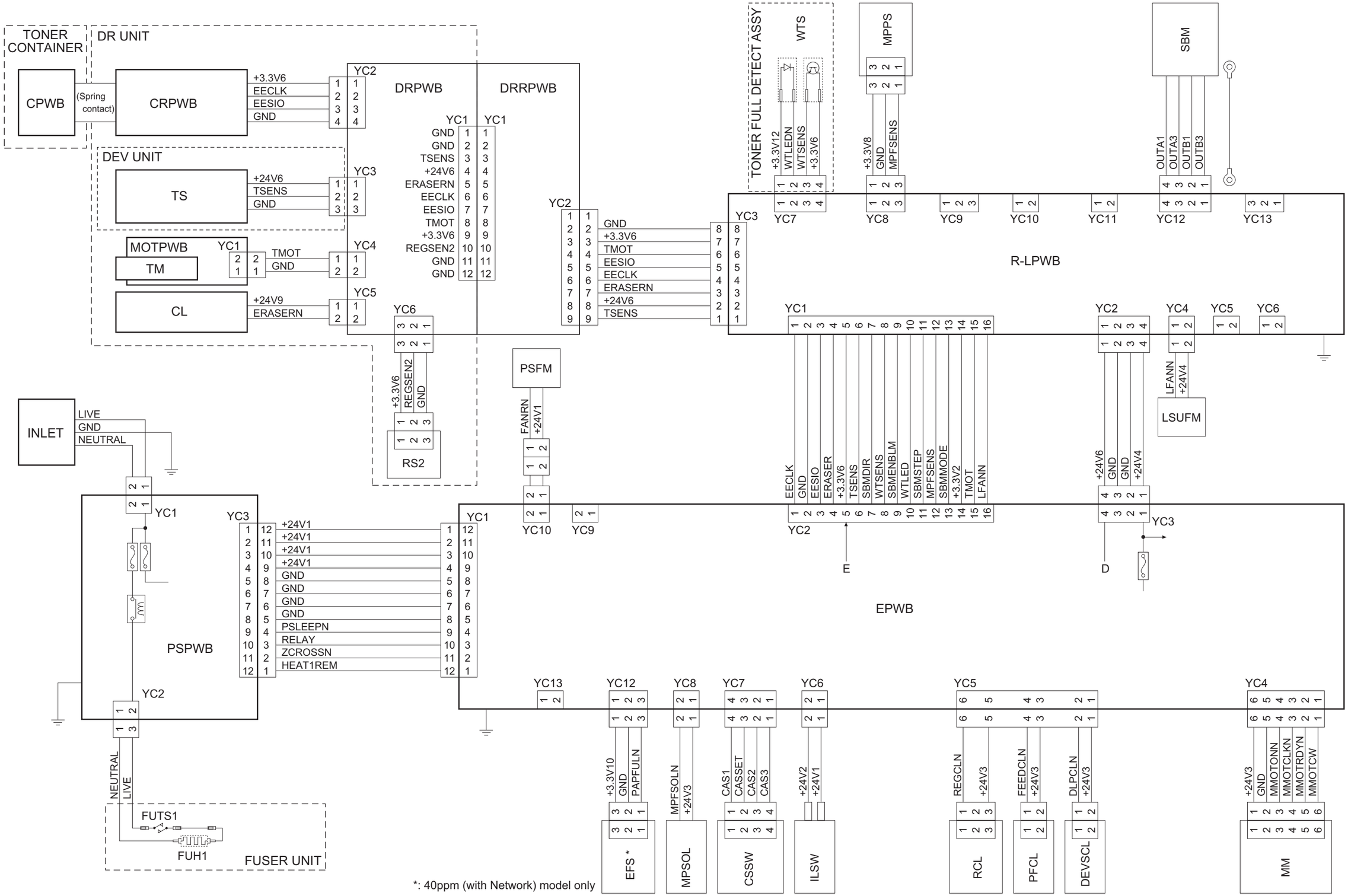

*: 40ppm (with Network) model only

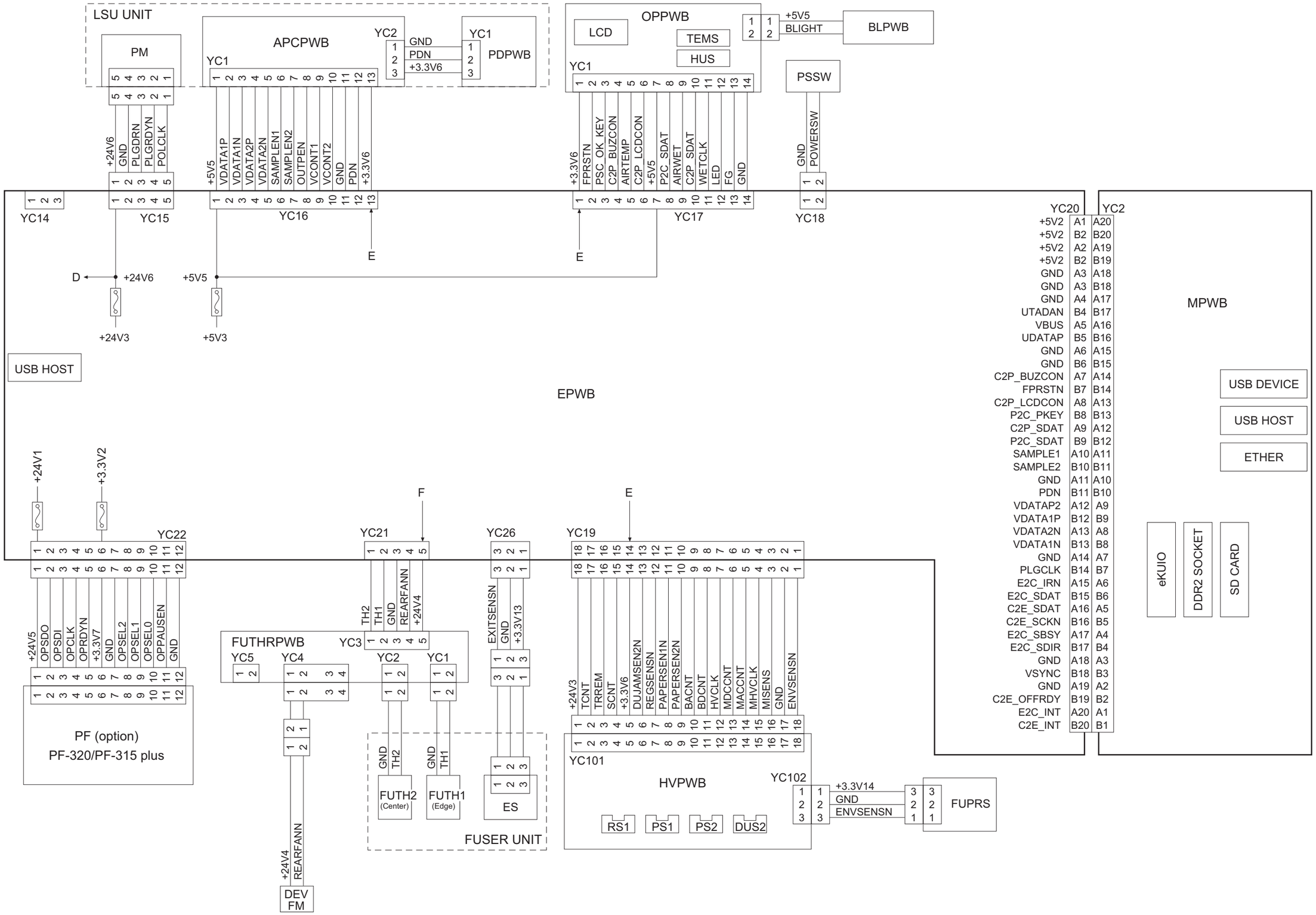
LSU UNIT
PM
APCPWB
YC1
YC2
GND
PDN
+3.3V6
YC1
PDPWB
OPPWB
LCD
TEMS
HUS
YC1
+5V5
BLIGHT
BLPWB
PSSW
+24V6
GND
PLGDRN
PLGRDYN
POLCLK
+5V5
VDATA1P
VDATA1N
VDATA2P
VDATA2N
SAMPLEN1
SAMPLEN2
OUTPEN
VCONT1
VCONT2
GND
PDN
+3.3V6
+3.3V6
FPRSTN
PSC_OK_KEY
C2P_BUZCON
AIRTEMP
C2P_LCDCON
+5V5
P2C_SDAT
AIRWET
C2P_SDAT
WETCLK
LED
FG
GND
GND
POWERSW
YC14
YC15
YC16
YC17
YC18
E
E
D
+24V6
+5V5
+24V3
+5V3
USB HOST
EPWB
YC20
YC2
+5V2 A1 A20
+5V2 B2 B20
+5V2 A2 A19
+5V2 B2 B19
GND A3 A18
GND A3 B18
GND A4 A17
UTADAN B4 B17
VBUS A5 A16
UDATAP B5 B16
GND A6 A15
GND B6 B15
C2P_BUZCON A7 A14
FPRSTN B7 B14
C2P_LCDCON A8 A13
P2C_PKEY B8 B13
C2P_SDAT A9 A12
P2C_SDAT B9 B12
SAMPLE1 A10 A11
SAMPLE2 B10 B11
GND A11 A10
PDN B11 B10
VDATAP2 A12 A9
VDATA1P B12 B9
VDATA2N A13 A8
VDATA1N B13 B8
GND A14 A7
PLGCLK B14 B7
E2C_IRN A15 A6
E2C_SDAT B15 B6
C2E_SDAT A16 A5
C2E_SCKN B16 B5
E2C_SBSY A17 A4
E2C_SDIR B17 B4
GND A18 A3
VSYNC B18 B3
GND A19 A2
C2E_OFFRDY B19 B2
E2C_INT A20 A1
C2E_INT B20 B1
MPWB
USB DEVICE
USB HOST
ETHER
eKUIO
DDR2 SOCKET
SD CARD
+24V1
+3.3V2
YC22
+24V5
OPSDO
OPSDI
OPCLK
OPRDYN
+3.3V7
GND
OPSEL2
OPSEL1
OPSEL0
OPPAUSEN
GND
PF (option)
PF-320/PF-315 plus
F
YC21
TH2
TH1
GND
REARFANN
+24V4
FUTHRPWB
YC3
YC5
YC4
YC2
YC1
+24V4
REARFANN
DEV
FM
YC26
EXITSENSN
GND
+3.3V13
GND
TH2
GND
TH1
FUTH2
(Center)
FUTH1
(Edge)
ES
FUSER UNIT
E
YC19
+24V3
TCNT
TRREM
SCNT
+3.3V6
DUJAMSEN2N
REGSENSN
PAPERSEN1N
PAPERSEN2N
BACNT
BDCNT
HVCLK
MDCCNT
MACCNT
MHVCLK
MISENS
GND
ENVSENSN
YC101
HVPWB
RS1
PS1
PS2
DUS2
YC102
+3.3V14
GND
ENVSENSN
FUPRS

500 sheets paper feeder
Installation Guide

PF-320

303NY5631001

Installation Guide
Installationsanleitung
Guide d'installation
Guida all'installazione
Guía de instalación
安装手册
설치안내서
インストールガイド

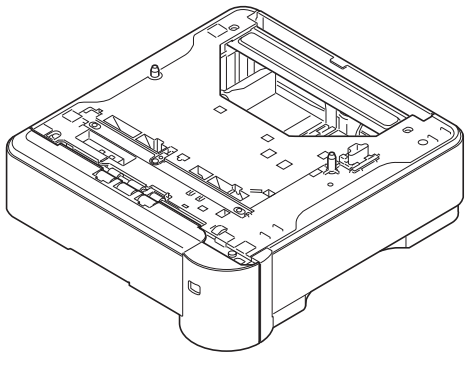

For U.S.A.:

To install the optional paper feeder unit, contact your service representative. This unit is for use only with Laser Printers, Models FS-2100D, FS-2100DN, FS-4100DN, FS-4200DN and FS-4300DN.

For Canada:

This Calss B digital apparatus complies with Canadian ICES-003.
Cet appareil numérique de la classe B est conforme à la norme NMB-003 du Canada.

Installation of PF-320
Installation von PF-320
Installation de PF-320
Installazione di PF-320
Instalación de PF-320
PF-320的安装
PF-320 설치
PF-320の設置

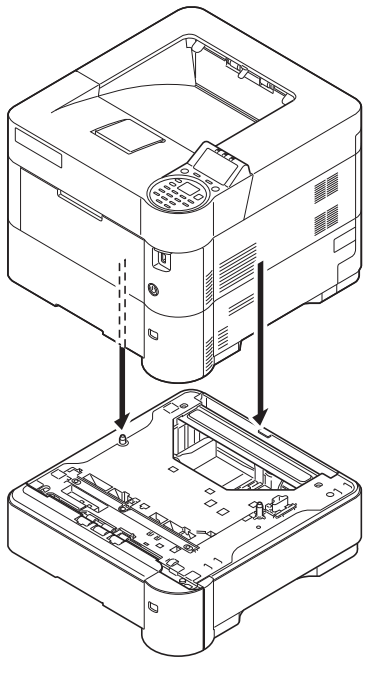

Adjustment of paper size
Justage des Papierformats
Ajustement de format papier
Registrazione del formato carta
Ajuste del tamaño del papel
纸张大小的调整
용지 크기의 조정
用紙サイズの調整

1

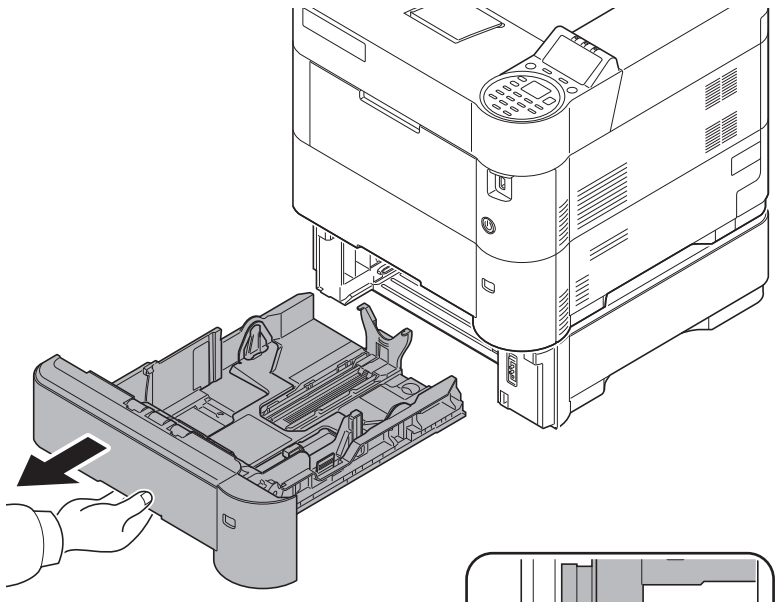

2

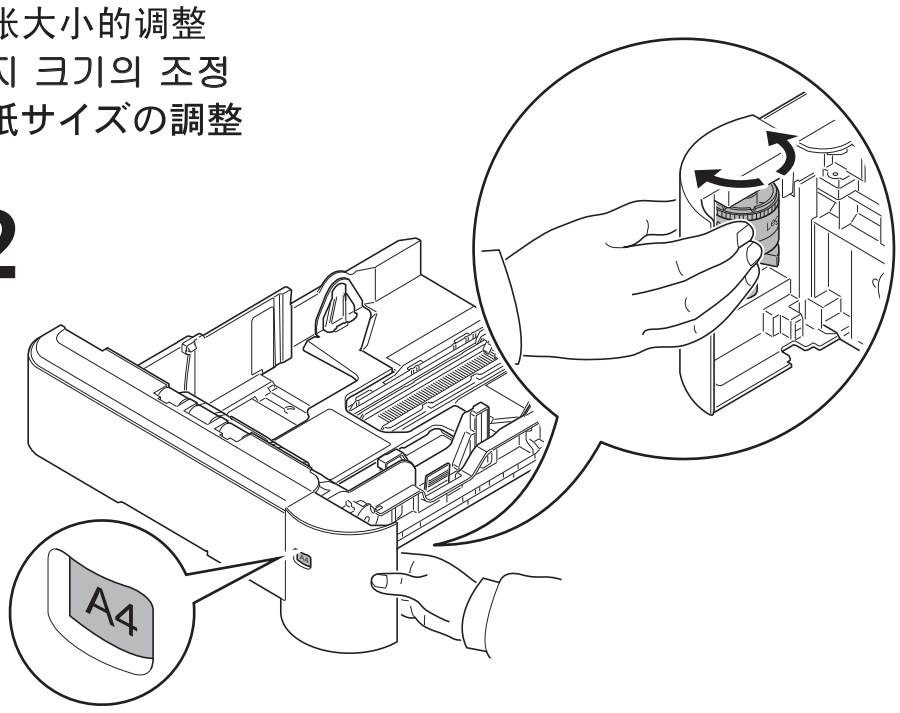

3

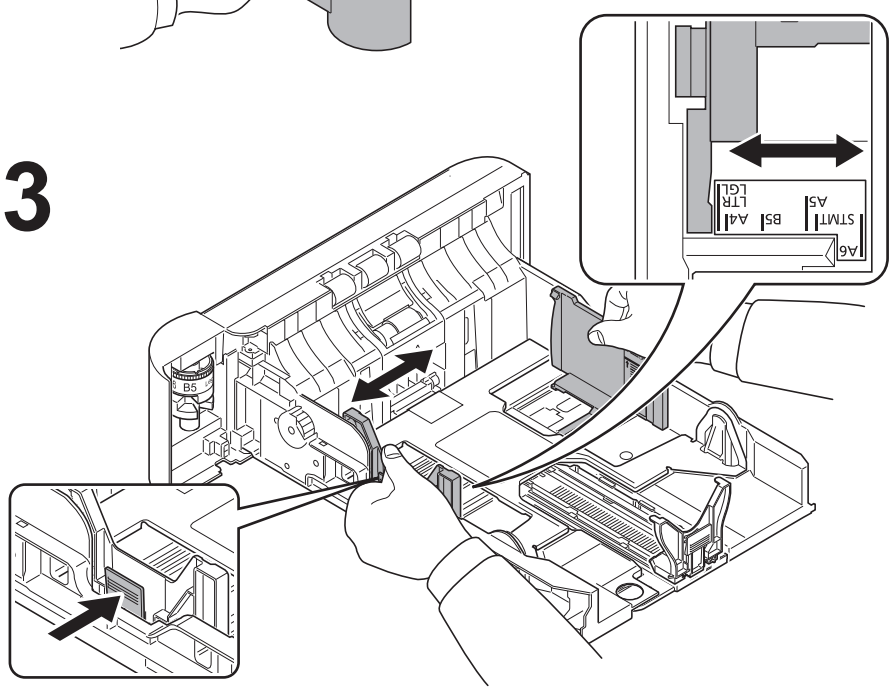

4

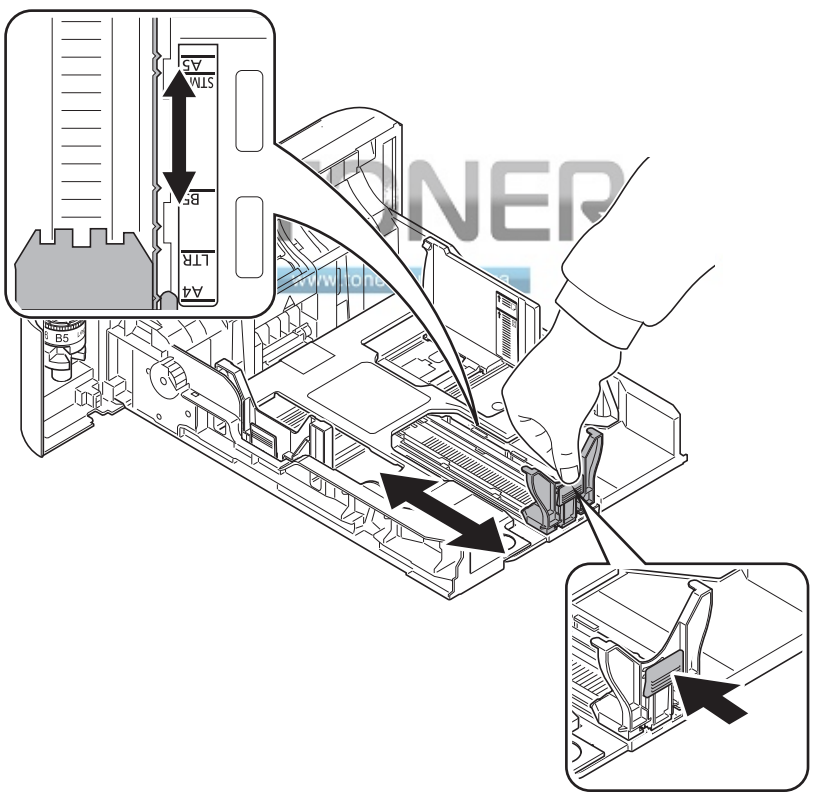

(Legal/Folio/Oficio II)

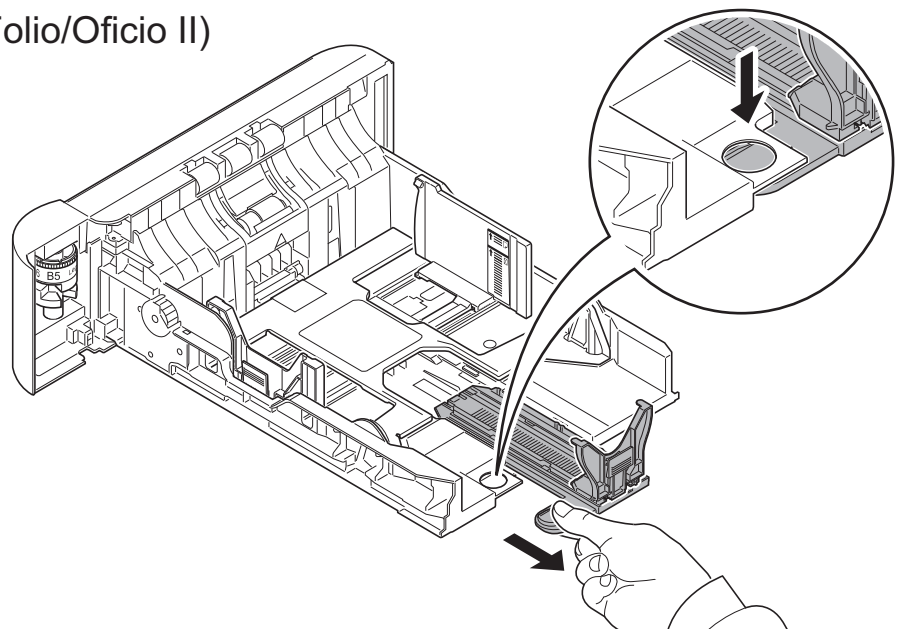

Loading paper
Ladenpapier
Papier de chargement
Carta da caricamento
Papel del cargamento
装纸
용지 적재
用紙のセット

5

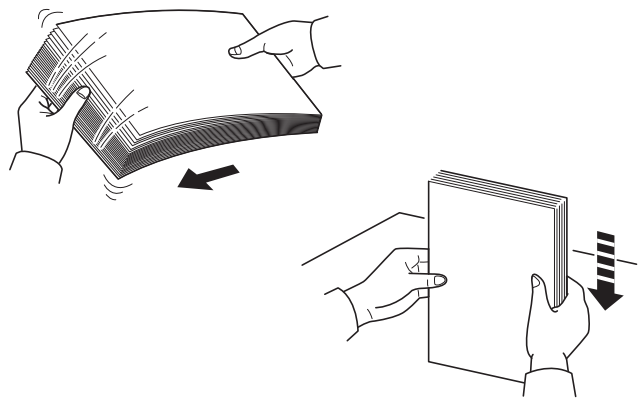

6

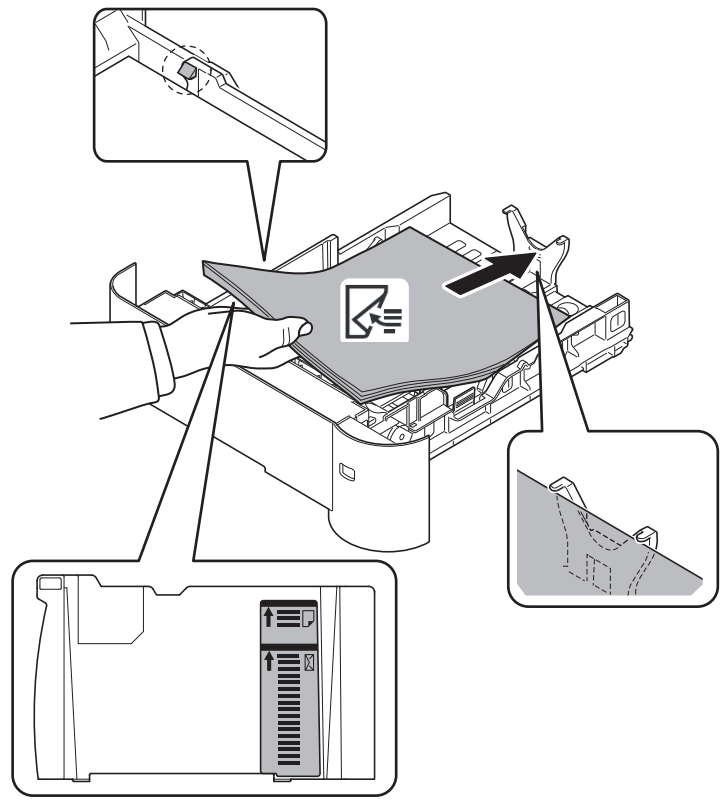

7

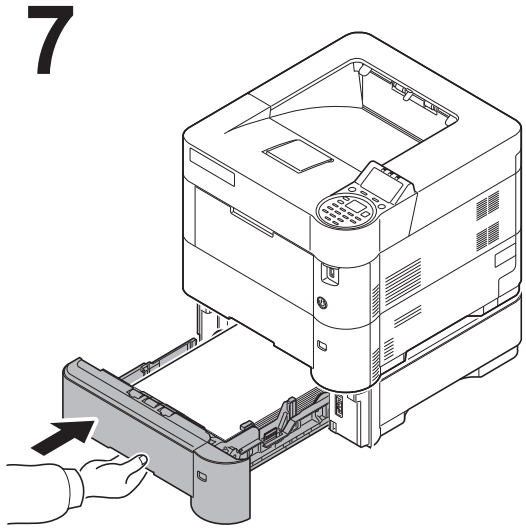

Removing Paper Jams
Entfernen von Papierstaus
Solution pour les bourrages papier
Rimozione degli inceppamenti carta
Eliminación de los atascos de papel
取出卡纸
종이 잼 제거
紙づまりの処理

1

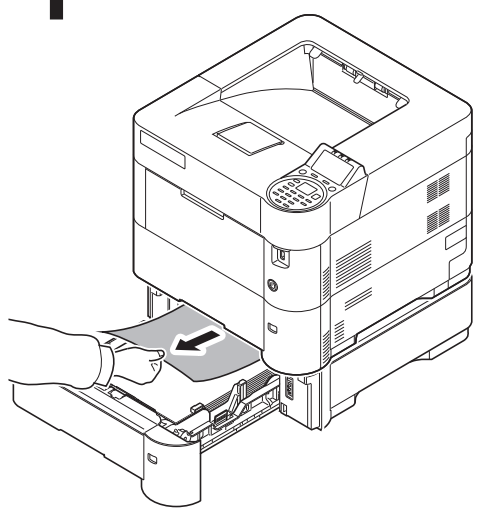

2

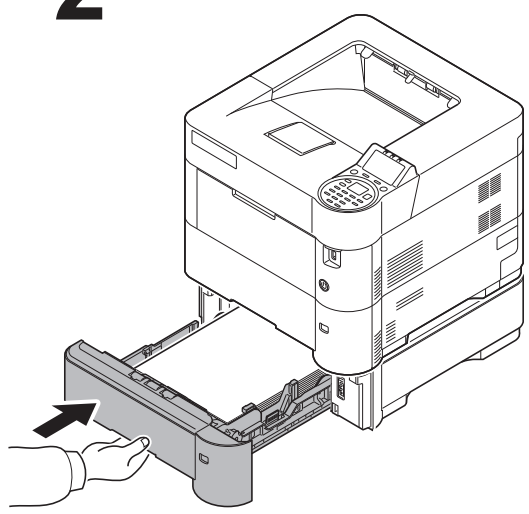

TONER+
www.tonerplus.com.ua

Printed in China 303NY5631001 First edition 2012.6

2000 sheets bulk paper feeder Installation Guide

PF-315+

303KF5632001

Installation Guide
Installationsanleitung
Guide d'installation
Guida all'installazione
Guía de instalación
安装手册
설치안내서
インストールガイド

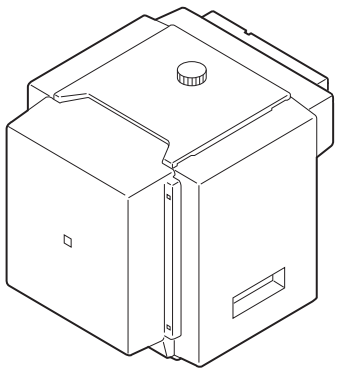

For U.S.A.:

To install the optional paper feeder unit, contact your service representative. This unit is for use only with Laser Printers, Models FS-2100D, FS-2100DN, FS-4100DN, FS-4200DN and FS-4300DN.

For Canada:

This Calss B digital apparatus complies with Canadian ICES-003.
Cet appareil numérique de la classe B est conforme à la norme NMB-003 du Canada.

Installation of PF-315+
Installation von PF-315+
Installation de PF-315+
Installazione di PF-315+
Instalación de PF-315+
PF−315+的安装
PF−315+ 설치
PF−315+の設置

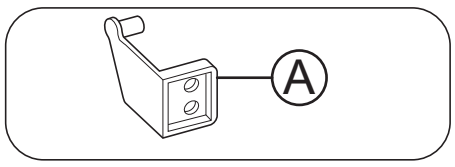

1

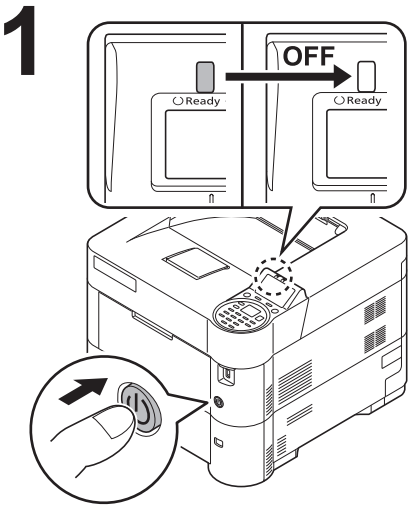

OFF

2

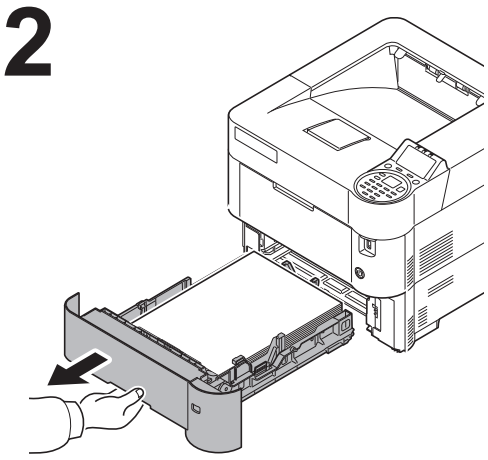

3

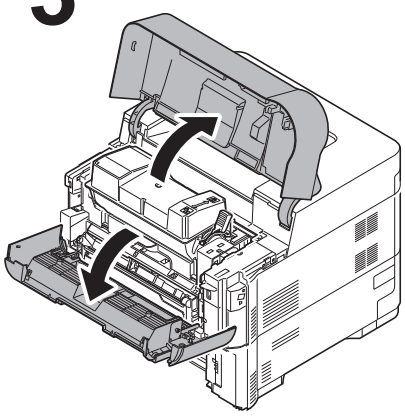

4

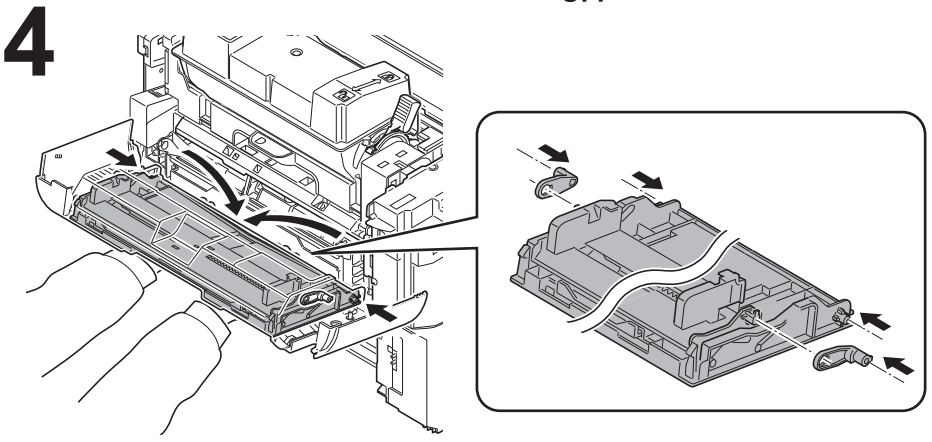

5

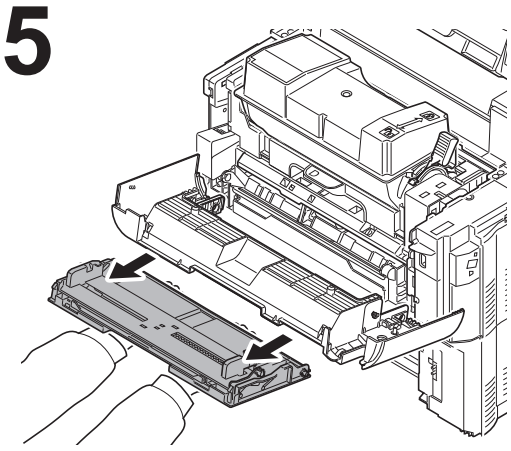

6

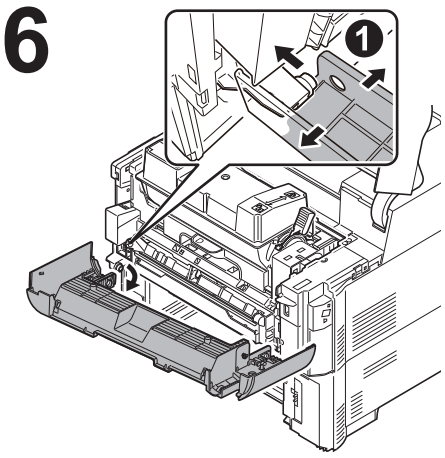

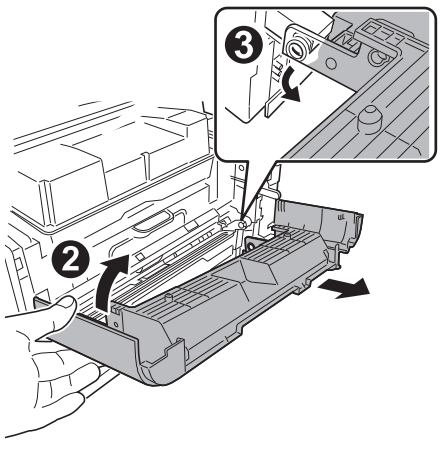

7

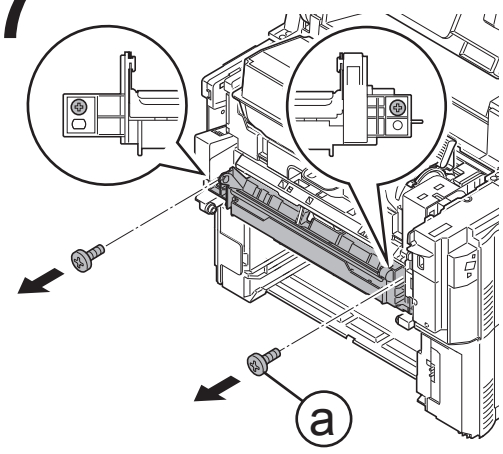

8

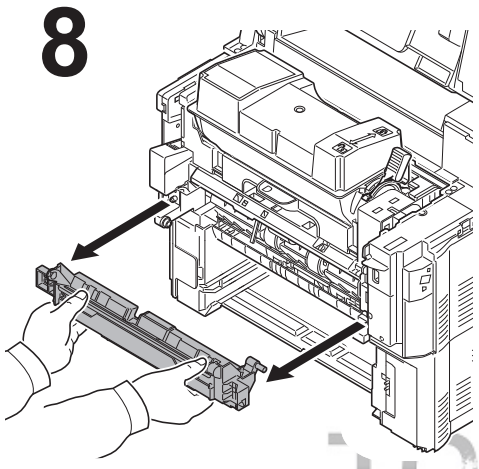

9

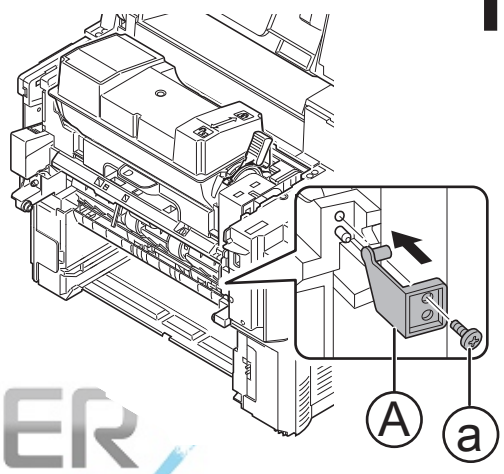

10

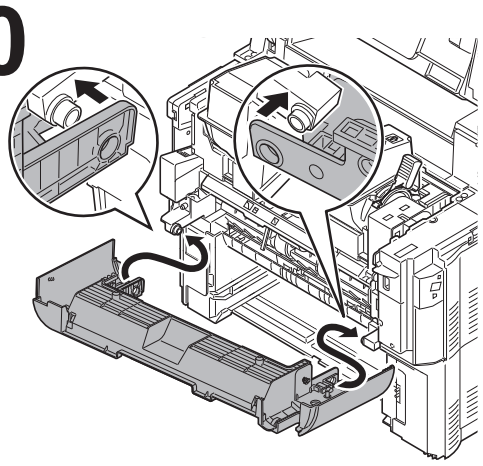

11

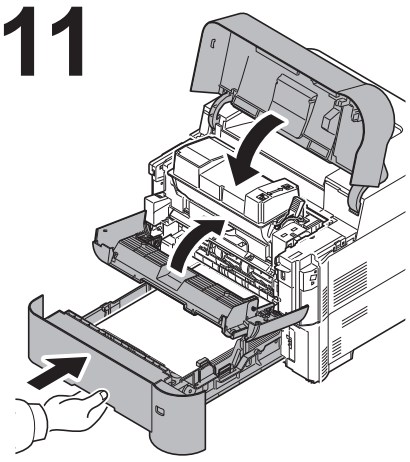

TONER+
www.tonerplus.com.ua

12

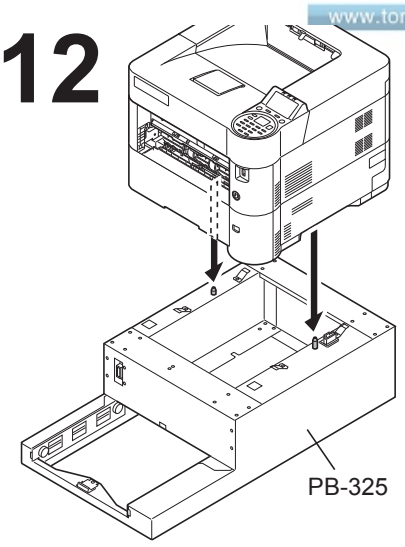

13

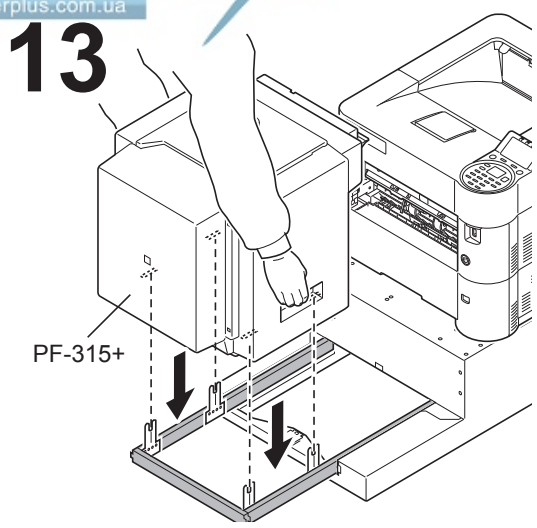

14

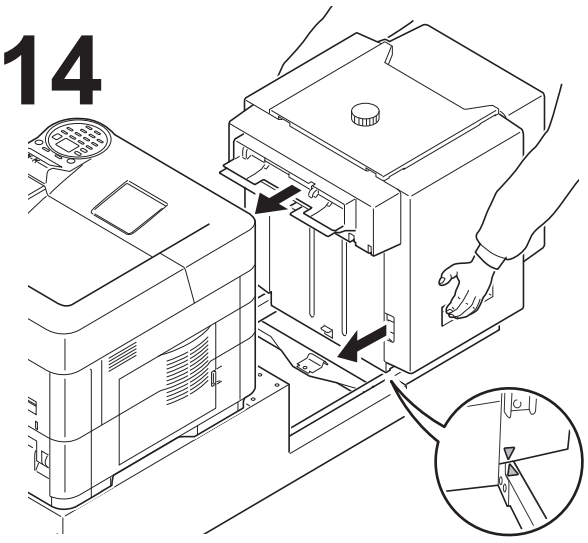

15

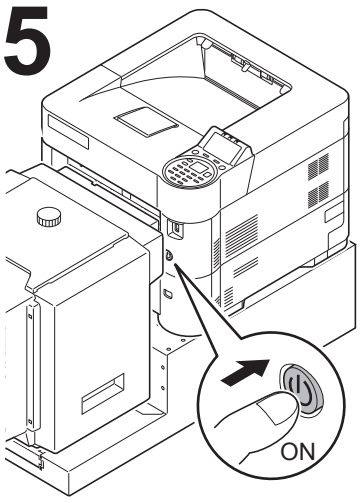

Loading paper
Ladenpapier
Papier de chargement
Carta da caricamento
Papel del cargamento
装纸
용지 적재
用紙のセット

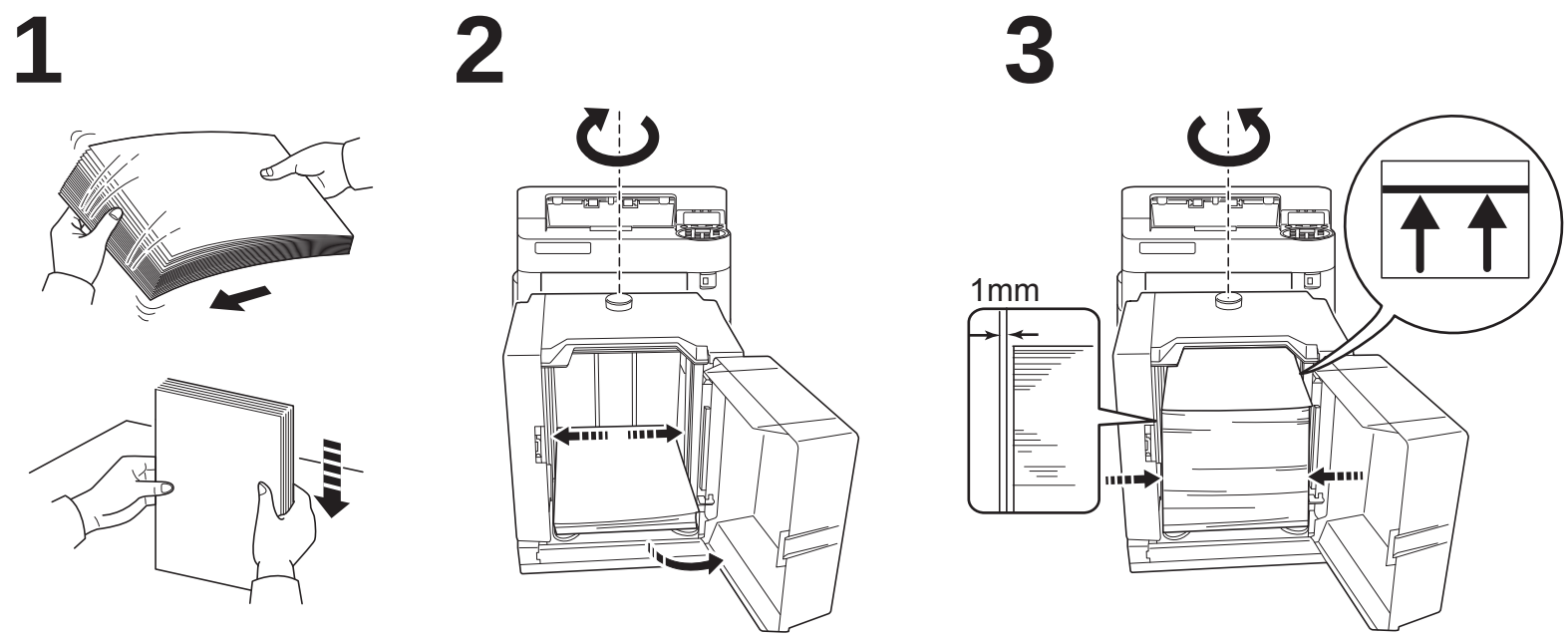

Removing Paper Jams
Entfernen von Papierstaus
Solution pour les bourrages papier
Rimozione degli inceppamenti carta
Eliminación de los atascos de papel
取出卡纸
종이 잼 제거
紙づまりの処理

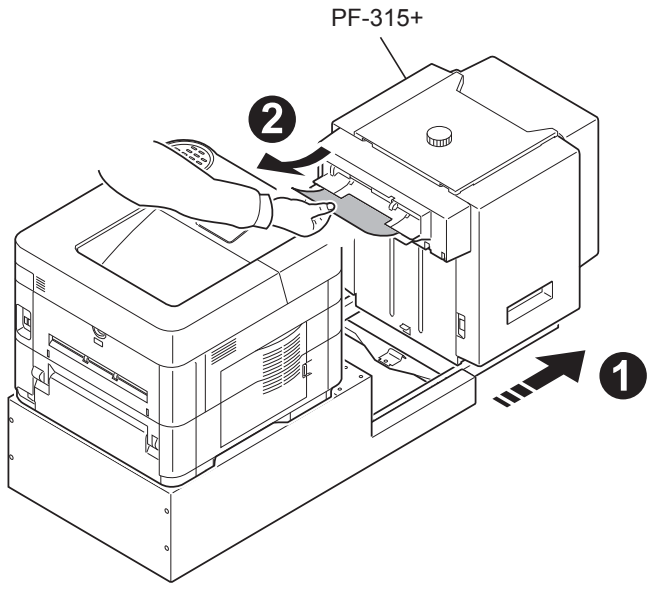

Duplex unit
Duplex Einheit
Unité recto verso
Unità fronte/retro
Unidad dúplex
双面器
양면 장치
両面ユニット

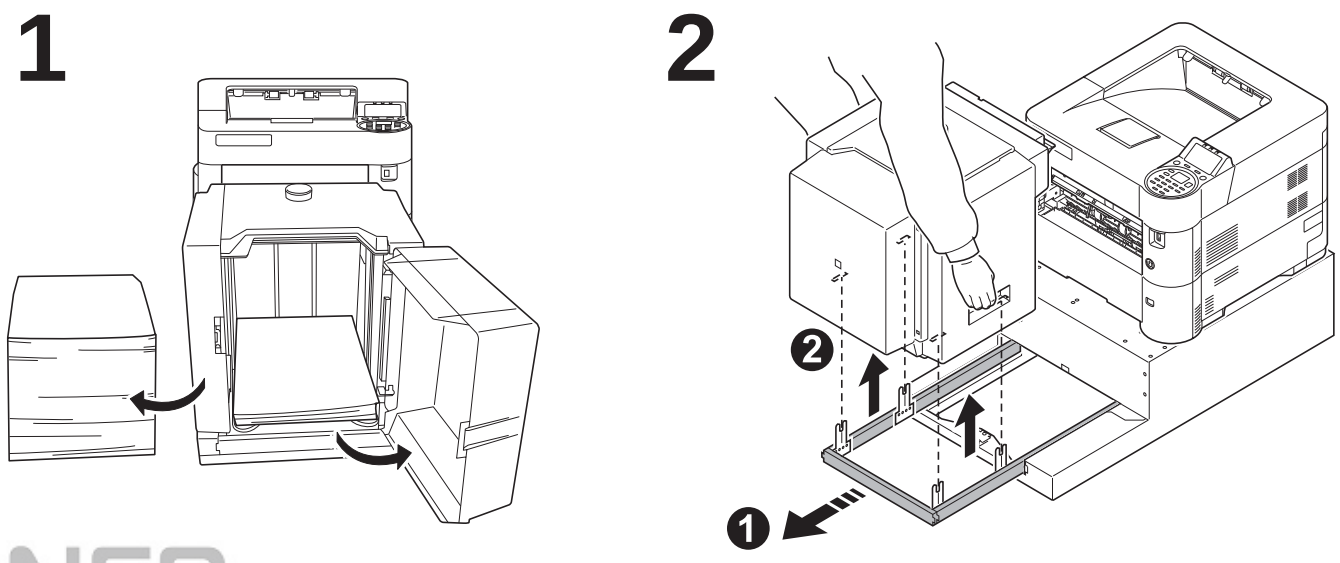

TONER PLUS
www.tonerplus.com.ua

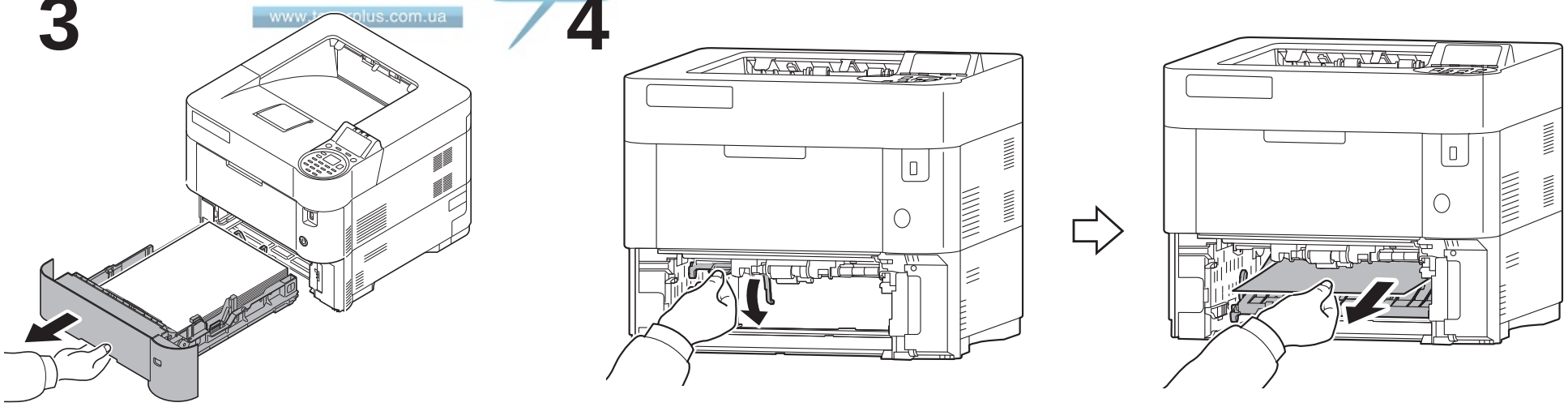

Printed in Japan 303KF5632001 First edition 2012.6

Expanded HDD (SSD) Installation Guide

KYOCERA

305J45631001

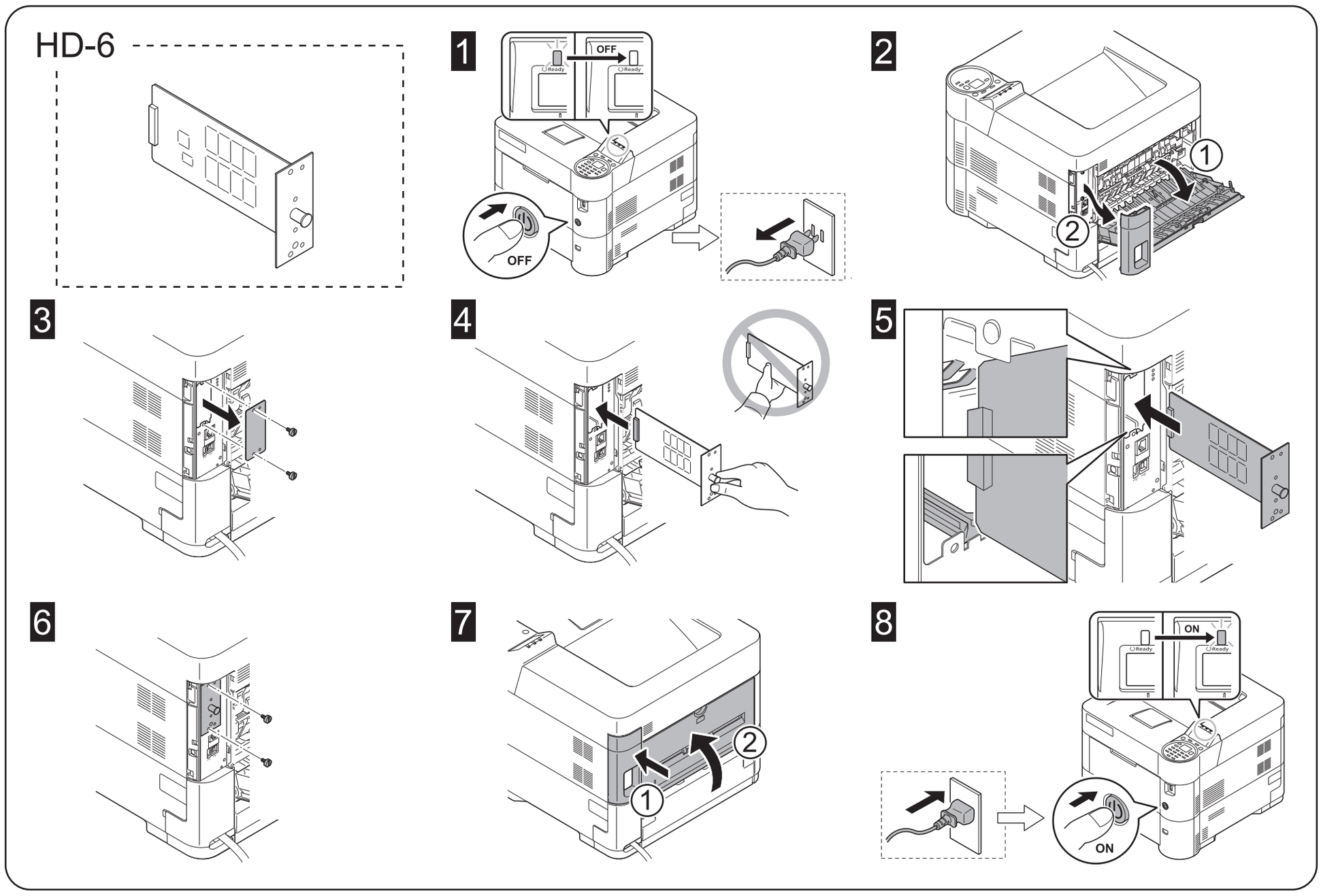

English

Optional SSD HD-6

Installation Guide

Introduction

The HD-6 is an optional SSD for use with the MFPs and the page printers. Please read this Installation Guide thoroughly so that you understand the correct installation method. This SSD can be installed in other models using the same installation procedure.

Packing List

HD-6 1
Installation Guide (this guide) 1

Precautions for Handling the SSD

When handling the SSD, adhere to the following precautions.

- The SSD is delivered in an antistatic bag. To prevent any damage, briefly touch a large metal object to ensure discharge of static electricity before removing the SSD from the bag.
- Never touch the SSD's connector section directly with hands.
- When holding the SSD, avoid contact with the surface of the circuit board. Hold it at the edges.
- Do not apply undue force when installing.

Installing the SSD

CAUTION

Before installing (or removing) the SSD, be sure to turn off the machine's power and disconnect the power cord plug from the AC outlet.

Formatting the SSD

After installing the SSD in the machine, the SSD must to be formatted before used. Formatting is performed from the machine's operation panel.
Refer to the Operation Guide for the formatting of the SSD.

Verifying Installation of the SSD

To verify that the SSD has been correctly installed, try to print out the status page.
Refer to the Operation Guide for the method for printing a status page.

TONER PLUS www.tonerplus.com.ua

Français

SSD HD-6 en option

Guide d'installation

Introduction

Le HD-6 est un SSD optionnel destiné à être utilisé avec les imprimantes multifonctions et les imprimantes par page. Veuillez lire entièrement ce guide d'installation et vous assurer que vous comprenez bien les méthodes d'installation. Ce SSD peut être installé dans d'autres modèles en utilisant la même procédure d'installation.

Contenu de l'emballage

HD-6 1
Guide d'installation (ce manuel) 1

Précautions de manipulation du SSD

Lorsque vous manipulez le SSD, observez les précautions suivantes.

- Le SSD est livré dans un sac antistatique. Avant de le retirer du sac, touchez brièvement un grand objet métallique pour vous décharger de toute électricité statique.Vous éviterez ainsi d'endommager le SSD.
- Ne touchez jamais directement la partie du connecteur du SSD avec les mains.
- Lorsque vous tenez le SSD, ne touchez pas la surface de la carte de circuits imprimés. Saisissez-le par les bords.
- N'appliquez aucune force inutile en l'installant.

Installation du SSD

ATTENTION

Avant d'installer (ou de retirer) le SSD, mettez toujours l'imprimante hors tension et débranchez la fiche du cordon d'alimentation de la prise de courant.

Formatage du SSD

Après avoir installé le SSD dans l'imprimante, vous devez le formater pour pouvoir l'utiliser. Le formatage s'effectue depuis le panneau de commande de l'imprimante.
Consultez le manuel d'utilisation pour formater le SSD.

Vérification de l'installation du SSD

Pour vous assurer que le SSD a été correctement installé, essayez d'imprimer la page d'état de l'imprimante.
Pour connaître la méthode d'impression de la page d'état, consultez le manuel d'utilisation.

Español

SSD HD-6 opcional

Guía de instalación

Introducción

HD-6 es una SSD opcional para utilizar con la copiadora e impresora de hojas. Lea detenidamente esta Guía de instalación para entender los métodos de instalación y operación correctos. Esta SSD puede instalarse en otros modelos utilizando el mismo procedimiento de instalación.

Lista del contenido del paquete

HD-6 1
Guía de instalación (este folleto) 1

Precauciones para el manejo de la SSD

Cuando maneje la SSD, tenga en cuenta las siguientes precauciones.

- La SSD se entrega en una bolsa antiestática. Para evitar cualquier daño, antes de sacar la SSD de la bolsa, toque un objeto metálico grande para descargar la electricidad estática de su cuerpo.
- Nunca toque la sección del conector de la SSD directamente con las manos.
- Cuando sostenga la SSD, no toque con las manos la superficie de la placa del circuito impreso. Sujétela por los bordes.
- No aplique demasiada fuerza al realizar la instalación.

Instalación de la SSD

PRECAUCIÓN

Antes de instalar (o desmontar) la SSD, asegúrese de desconectar la alimentación de la impresora y de desenchufar el cable de alimentación de la toma de corriente de CA.

Inicialización de la SSD (formateo)

Después de instalar la SSD en la impresora, deberá inicializarla (formatearla) antes de utilizarla. La inicialización se realiza desde el panel de control de la impresora.
Consulte la Guía de uso para inicializar (formatear) la SSD.

Verificación de la instalación de la SSD

Para verificar que la SSD ha sido instalada correctamente, trate de imprimir la página de estado de la impresora.
Consulte la Guía de uso para obtener información sobre la impresión de la página de estado de la impresora.

Deutsch

Optionale SSD HD-6 Installationsanleitung

Einführung
Die HD-6 ist eine optionale SSD zur Verwendung mit den MFPs und den Seitendruckern. Bitte lesen Sie sich diese Installationsanleitung sorgfältig durch, damit Sie das Gerät korrekt installieren. Diese SSD kann mithilfe des selben Installationsvorgangs in anderen Modellen eingebaut werden.

Verpackungsinhalt
HD-6 1
Installationsanleitung (diese Anleitung).....1

Vorsichtshinweise beim Umgang mit der SSD
Bitte beachten Sie die folgenden Vorsichtshinweise beim Umgang mit der SSD.
- Die SSD wird in einem Antistatikbeutel geliefert. Um eine Beschädigung der SSD zu vermeiden, sollten Sie kurz einen großen Gegenstand aus Metall berühren, um sich von statischer Elektrizität zu entladen, bevor Sie die SSD aus der Verpackung entfernen.
- Berühren Sie auf keinen Fall die Steckleiste der SSD mit bloßen Händen.
- Achten Sie beim Halten der SSD darauf, eine Berührung der Platinenoberfläche zu vermeiden. Halten Sie die SSD stets an den Kanten der Platine.
- Vermeiden Sie übermäßige Kraftanwendung beim Installieren.

Installation der SSD
VORSICHT
Achten Sie vor dem Installieren (bzw. Entfernen) der SSD unbedingt darauf, den Drucker auszuschalten und das Netzkabel von der Netzsteckdose zu trennen.

Formatierung der SSD
Nach der Installation der SSD im Drucker muss diese vor der Inbetriebnahme formatiert werden. Die Formatierung wird am Bedienfeld des Druckers ausgeführt. Die Vorgehensweise für die Formatierung der SSD finden Sie in der Bedienungsanleitung.

Überprüfung der Installation der SSD
Um eine korrekte Installation der SSD zu überprüfen, drucken Sie die Statusseite aus.
Die Vorgehensweise für das Ausdrucken einer Statusseite finden Sie in der Bedienungsanleitung.

Italiano

SSD HD-6 opzionale Guida all'installazione

Introduzione
HD-6 è un'unità a stato solido (SSD) opzionale per utilizzi con stampanti multifunzione (MFP) e con stampanti a pagine. Si prega di leggere attentamente la presente Guida all'installazione per comprendere il corretto metodo di installazione. Questa SSD può essere installata in altri modelli che utilizzano la stessa procedura di installazione.

Contenuto della confezione
HD-6 1
Guida all'installazione (la presente guida).....1

Precauzioni d'uso per la SSD
Durante l'utilizzo della SSD, adottare le precauzioni che seguono.
- La SSD è spedita in una custodia antistatica. Per evitare eventuali danni, toccare per pochi istanti un oggetto metallico di grandi dimensioni per assicurarsi di scaricare l'elettricità statica prima di rimuovere la SSD dalla custodia.
- Non toccare la sezione del connettore della SSD direttamente con le mani.
- Nell'afferrare la SSD, evitare il contatto con la superficie della scheda a circuito. Afferrarla alle estremità.
- Non esercitare una forza eccessiva durante l'installazione.

Installazione della SSD
ATTENZIONE:
prima di installare (o di rimuovere) la SSD, assicurarsi di aver spento l'alimentazione della macchina e di aver disconnesso la spina del cavo di alimentazione dalla presa CA.

Formattazione della SSD
Dopo aver installato la SSD nella macchina, è necessario formattarla prima dell'utilizzo. La formattazione può essere eseguita dal pannello operativo della macchina.
Per la formattazione della SSD, consultare la Guida alle funzioni.

Verifica dell'installazione della SSD
Per verificare che la SSD sia stata installata correttamente, stampare la pagina di stato.
Per scoprire le modalità di stampa della pagina di stato, consultare la Guida alle funzioni.

简体中文

选装 SSD HD-6 安装手册

前言
HD-6 是一款适用于 MFP 和页式打印机的选装 SSD。为了解正确的安装方法，请仔细通读本《安装手册》。本 SSD 可通过同样的安装步骤安装到其他机型上去。

包装内容列表
HD-6 1
安装手册（本手册） 1

使用本 SSD 的注意事项
使用本 SSD 时，请遵守以下注意事项。
- 本 SSD 被包装在防静电袋中。将 SSD 从包装袋中取出之前，请短暂触摸大件金属物体以消除静电，以免造成损坏。
- 请勿直接用手触摸 SSD 的连接器部分。
- 拿握 SSD 时，请勿接触到电路板的表面。请拿握其边缘。
- 安装时请不要过于用力。

安装本 SSD
注意：
安装（或拆卸）本 SSD 前，请务必关掉机器的电源并将电源线插头从 AC 插座上断开。

格式化本 SSD
将 SSD 安装入机器后，必须在使用之前对 SSD 进行格式化。通过机器的操作面板来执行格式化操作。
有关格式化 SSD 的相关信息，请参阅《操作手册》。

确认本 SSD 安装正确
为确认本 SSD 已经正确安装，请尝试打印状态页。
有关打印状态页的方法，请参阅《操作手册》。

동봉물

옵션 SSD HD-6 토너 설치 안내서

소개
HD-6는 MFP 및 페이지 프린터에 사용되는 옵션 SSD입니다.
본 토너 설치 안내서를 주의 깊게 읽고 올바른 설치 방법을 숙지하시기 바랍니다.
본 SSD는 같은 설치 절차를 적용하여 다른 모델에 설치될 수 있습니다.

포장 내용물
HD-6.....1
토너 설치 안내서 (본 안내서) 1

SSD 취급 시 주의사항
SSD 취급 시, 다음과 같은 주의사항을 지켜주시기 바랍니다.
- SSD는 정전기 방지 봉투에 포장되어 있습니다. SSD를 꺼내기 전에 손상을 예방하기 위해 큰 금속 물체를 잠시 만져서 정전기를 방지하시기 바랍니다.
- SSD 연결부를 직접 손으로 만지지 마십시오.
- SSD를 잡을 때는 회로판 표면에 닿지 않도록 끝부분을 잡으십시오.
- 설치 시 과도한 힘을 가하지 마십시오.

SSD 설치
주의사항
SSD를 설치(또는 제거)하기 전, 기기의 전원을 끄고 AC 아우트렛에서 전원선을 분리하십시오.

SSD 포맷
SSD를 기기에 설치한 뒤, 사용하기 전에 반드시 SSD을 포맷해야 합니다. 기기의 조작 패널에서 포맷을 수행할 수 있습니다. SSD 포맷에 관한 자세한 내용은 사용설명서를 참고하시기 바랍니다.

SSD 설치 확인
SSD가 올바르게 설치되었는지 확인하려면 상태 페이지를 출력해보십시오. 상태 페이지를 출력하는 방법에 관해서는 사용설명서를 참고하시기 바랍니다.

TONER
www.tonerplus.com.ua

日本語

オプションSSD HD-6 インストールガイド

はじめに
HD-6 は京セラ複合機およびプリンター用 SSD ユニットです。本書をよくお読みいただき、正しく装着してください。なお、本オプションはその他の機種でも同様の手順で装着できます。

梱包内容の確認
HD-6 本体 1
インストールガイド(本書) 1

取扱い上の注意
本オプションの取り扱いには、以下のことにご注意ください。
- 本品は静電気防止対策済みの袋に入っています。袋の中から取り出す際は、念のため大きな金属物に触れて身体の静電気を取り除いてください。
- 本品のコネクター部分には手を触れないでください。
- 本品を持つ際は基板の表面に手を触れずに、基板の端を持ってください。
- 装着時は無理な力を加えないでください。

SSD ユニットの装着
注意
本オプションの装着（または取り外し）は、複合機またはプリンターの電源を切り、電源プラグをコンセントから抜いた状態で行ってください。

SSD のフォーマット
本オプション装着後は、使用する前に操作パネルからフォーマットをする必要があります。
SSD のフォーマットは、使用説明書を参照してください。

装着の確認
ステータスページを印刷して、本オプションが正しく装着されたかを確認します。
ステータスページの印刷方法は、使用説明書を参照してください。

Printed in China 305J45631001 First edition 2012.6

IEEE1284 Interface Installation Guide

KYOCERA

303N55631001

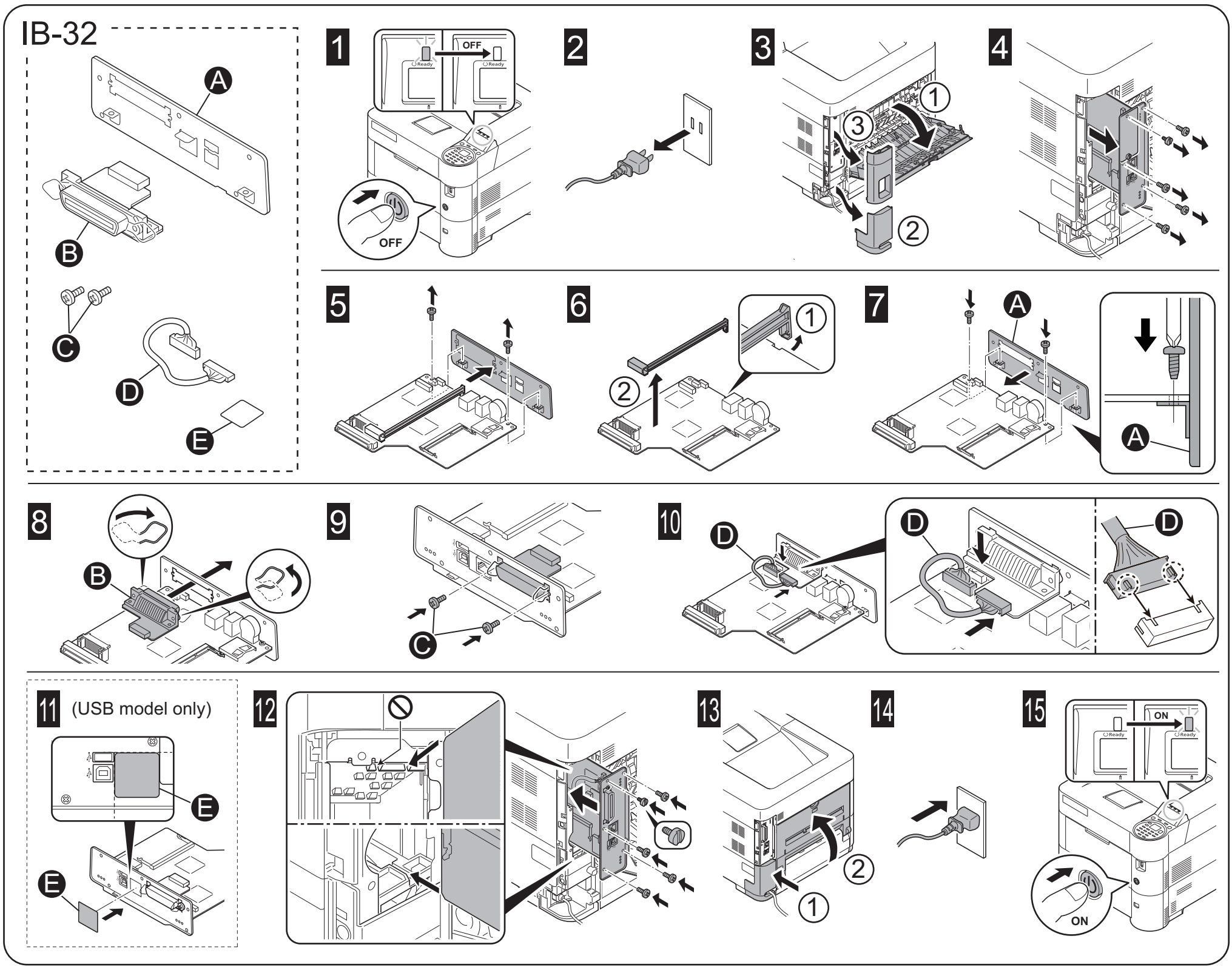

English

Optional Parallel Interface Kit IB-32
Installation Guide

Introduction
The IB-32 is an optional parallel interface kit for use with the page printers. Please read this Installation Guide thoroughly so that you understand the correct installation method.
This parallel interface kit can be installed in other models using the same installation procedure.

Packing List
IB-32 1
Plate 1
Screw 2
Relay cable 1
Seal 1
Installation Guide (this guide) 1

Precautions for Handling the Parallel Interface Kit
When handling the parallel interface kit, adhere to the following precautions.
- The parallel interface kit is delivered in an antistatic bag. To prevent any damage, briefly touch a large metal object to ensure discharge of static electricity before removing the parallel interface kit from the bag.
- Never touch the parallel interface kit's connector section directly with hands.
- When holding the parallel interface kit, avoid contact with the surface of the circuit board. Hold it at the edges.
- Do not apply undue force when installing.

Installing the Parallel Interface Kit
CAUTION
Before installing (or removing) the parallel interface kit, be sure to turn off the machine's power and disconnect the power cord plug from the AC outlet.

Verifying Installation of the Parallel Interface Kit
To verify that the parallel interface kit has been correctly installed, try to print out the status page.
Refer to the Operation Guide for the method for printing a status page.

Français

Kit d'interface parallèle IB-32 en option
Guide d'installation

Introduction
L'IB-32 est un kit d'interface parallèle en option destiné à être utilisé avec les imprimantes par page. Veuillez lire entièrement ce guide d'installation et vous assurer que vous comprenez bien les méthodes d'installation.
Ce kit d'interface parallèle peut être installé dans d'autres modèles à l'aide de la même procédure d'installation.

Contenu de l'emballage
IB-32 1
Plaque 1
Vis 2
Câble de relais 1
Obturateur 1
Guide d'installation (ce manuel) 1

Précautions de manipulation du kit d'interface parallèle
Lorsque vous manipulez le kit d'interface parallèle, observez les précautions suivantes.
- Le kit d'interface parallèle est livré dans un sac antistatique. Avant de le retirer du sac, touchez brièvement un grand objet métallique pour vous décharger de toute électricité statique.Vous éviterez ainsi d'endommager le kit d'interface parallèle.
- Ne touchez jamais directement la partie du connecteur du kit d'interface parallèle avec les mains.
- Lorsque vous tenez le kit d'interface parallèle, ne touchez pas la surface de la carte de circuits imprimés. Saisissez-le par les bords.
- N'appliquez aucune force inutile en l'installant.

Installation du kit d'interface parallèle
ATTENTION
Avant d'installer (ou de retirer) le kit d'interface parallèle, mettez toujours l'imprimante hors tension et débranchez la fiche du cordon d'alimentation de la prise de courant.

Vérification de l'installation du kit d'interface parallèle
Pour vous assurer que le kit d'interface parallèle a été correctement installé, essayez d'imprimer la page d'état de l'imprimante.
Pour connaître la méthode d'impression de la page d'état, consultez le manuel d'utilisation.

Español

Kit de interfaz en paralelo IB-32 opcional
Guía de instalación

Introducción
El IB-32 es un kit de interfaz en paralelo opcional para utilizar con la impresora de hojas. Lea completamente esta Guía de instalación de forma que pueda entender los métodos de instalación y operación correctos.
Este kit de interfaz en paralelo puede instalarse en otros modelos utilizando el mismo procedimiento de instalación.

Lista del contenido del paquete
IB-32 1
Placa 1
Tornillo 2
Cable de relé 1
Sello 1
Guía de instalación (este folleto) 1

Precauciones para el manejo del kit de interfaz en paralelo
Cuando maneje el kit de interfaz en paralelo, tenga en cuenta las siguientes precauciones.
- El kit de interfaz en paralelo se entrega en una bolsa antiestática. Para evitar cualquier daño, antes de sacar el kit de interfaz en paralelo de la bolsa, toque un objeto metálico grande para descargar la electricidad estática de su cuerpo.
- Nunca toque la sección del conector del kit de interfaz en paralelo directamente con las manos.
- Cuando sostenga el kit de interfaz en paralelo, no toque con las manos la superficie de la placa del circuito impreso. Sujétela por los bordes.
- No aplique demasiada fuerza al realizar la instalación.

Instalación del kit de interfaz en paralelo
PRECAUCIÓN
Antes de instalar (o desmontar) el kit de interfaz en paralelo, asegúrese de desconectar la alimentación de la impresora y de desenchufar el cable de alimentación de la toma de corriente de CA.

Verificación de la instalación del kit de interfaz en paralelo
Para verificar que el kit de interfaz en paralelo ha sido instalado correctamente, trate de imprimir la página de estado de la impresora.
Consulte la Guía de uso para obtener información sobre la impresión de la página de estado de la impresora.

TONER
www.tonerplus.com.ua

Deutsch

Optionales Parallel Interface Kit IB-32
Installationsanleitung

Einführung
Das IB-32 ist ein optionales Parallel Interface Kit zur Verwendung mit Seitendruckern. Bitte lesen Sie sich diese Installationsanleitung sorgfältig durch, damit Sie das Gerät korrekt installieren.
Dieses Parallel Interface Kit kann mithilfe des selben Installationsvorgangs in anderen Modellen eingebaut werden.

Verpackungsinhalt
IB-32 1
Platte 1
Schraube 2
Relaiskabel 1
Dichtung 1
Installationsanleitung (diese Anleitung) 1

Vorsichtsmaßnahmen bei der Handhabung des Parallel Interface Kits
Bitte beachten Sie die folgenden Vorsichtshinweise beim Umgang mit dem Parallel Interface Kit.
- Das Parallel Interface Kit wird in einem Antistatikbeutel geliefert. Um eine Beschädigung zu vermeiden, sollten Sie kurz einen großen Gegenstand aus Metall berühren, um sich von statischer Elektrizität zu entladen, bevor Sie das Parallel Interface Kit aus der Verpackung entfernen.
- Berühren Sie auf keinen Fall die Steckleiste des Parallel Interface Kits mit bloßen Händen.
- Achten Sie beim Halten des Parallel Interface Kits darauf, eine Berührung der Platinenoberfläche zu vermeiden. Halten Sie das Parallel Interface Kit stets an den Kanten der Platine.
- Vermeiden Sie übermäßige Kraftanwendung beim Installieren.

Installation des Parallel Interface Kits
VORSICHT
Achten Sie vor dem Installieren (bzw. Entfernen) des Parallel Interface Kits unbedingt darauf, den Drucker auszuschalten und das Netzkabel von der Netzsteckdose zu trennen.

Überprüfung der Installation des Parallel Interface Kits
Um eine korrekte Installation des Parallel Interface Kits zu überprüfen, drucken Sie die Statusseite aus.
Die Vorgehensweise für das Ausdrucken einer Statusseite finden Sie in der Bedienungsanleitung.

Italiano

Kit interfaccia parallela IB-32 opzionale
Guida all'installazione

Introduzione
IB-32 è un kit interfaccia parallela opzionale per utilizzi con stampanti a pagine. Si prega di leggere attentamente la presente Guida all'installazione per comprendere il corretto metodo di installazione.
Questo kit interfaccia parallela può essere installato in altri modelli che utilizzano la stessa procedura di installazione.

Contenuto della confezione
IB-32 1
Vassoio 1
Vite 2
Cavo relè 1
Chiusura 1
Guida all'installazione (la presente guida) 1

Precauzioni d'uso del kit interfaccia parallela
Durante l'utilizzo del kit interfaccia parallela, adottare le precauzioni che seguono.
- Il kit interfaccia parallela è spedito in una custodia antistatica. Per evitare eventuali danni, toccare per pochi istanti un oggetto metallico di grandi dimensioni per assicurarsi di scaricare l'elettricità statica prima di rimuovere il kit interfaccia parallela dalla custodia.
- Non toccare la sezione del connettore del kit interfaccia parallela direttamente con le mani.
- Nell'afferrare il kit interfaccia parallela, evitare il contatto con la superficie della scheda a circuito. Afferrarlo alle estremità.
- Non esercitare una forza eccessiva durante l'installazione.

Istallazione del kit interfaccia parallela
ATTENZIONE:
prima di installare (o di rimuovere) il kit interfaccia parallela, assicurarsi di aver spento l'alimentazione della macchina e di aver disconnesso la spina del cavo di alimentazione dalla presa CA.

Verifica dell'installazione del kit interfaccia parallela
Per verificare che il kit interfaccia parallela sia stato installato correttamente, stampare la pagina di stato.
Per scoprire le modalità di stampa della pagina di stato, consultare la Guida alle funzioni.

简体中文

选装并行接口套件 IB-32
安装手册

前言
IB-32 是一款适用于页式打印机的选装并行接口套件。为了解正确的安装方法，请仔细通读本《安装手册》。
本并行接口套件可通过同样的安装步骤安装到其他机型上去。

包装内容列表
IB-32 1
板 1
螺钉 2
继电器电缆 1
密封件 1
安装手册（本手册） 1

使用本并行接口套件的注意事项
使用本并行接口套件时，请遵守以下注意事项。
- 本并行接口套件被包装在防静电袋中。将并行接口套件从包装袋中取出之前，请短暂触摸大件金属物体以消除静电，以免造成损坏。
- 请勿直接用手触摸并行接口套件的连接器部分。
- 拿握并行接口套件时，请勿接触到电路板的表面。请拿握其边缘。
- 安装时请不要过于用力。

安装本并行接口套件
注意：
安装（或拆卸）本并行接口套件前，请务必关掉机器的电源并将电源线插头从 AC 插座上断开。

确认本并行接口套件安装正确
为确认本并行接口套件已经正确安装，请尝试打印状态页。
有关打印状态页的方法，请参阅《操作手册》。

동봉물

옵션 병렬 인터페이스 키트 IB-32
토너 설치 안내서

소개
IB-32는 페이지 프린터에 사용되는 옵션 병렬 인터페이스 키트입니다.
본 토너 설치 안내서를 주의 깊게 읽고 올바른 설치 방법을 숙지하시기 바랍니다.
본 병렬 인터페이스 키트는 같은 설치 절차를 적용하여 다른 모델에 설치될 수 있습니다.

포장 내용물
IB-32 1
플레이트 1
나사 2
릴레이 케이블 1
실 1
토너 설치 안내서 (본 안내서) 1

병렬 인터페이스 키트 취급 시 주의사항
병렬 인터페이스 키트 취급 시, 다음과 같은 주의사항을 지켜주시기 바랍니다.
- 병렬 인터페이스 키트는 정전기 방지 봉투에 포장되어 있습니다. 병렬 인터페이스 키트를 꺼내기 전에 손상을 예방하기 위해 큰 금속 물체를 잠시 만져서 정전기를 방지하시기 바랍니다.
- 병렬 인터페이스 키트의 연결부를 직접 손으로 만지지 마십시오.
- 병렬 인터페이스 키트를 잡을 때는 회로판 표면에 닿지 않도록 끝부분을 잡으십시오.
- 설치 시 과도한 힘을 가하지 마십시오.

병렬 인터페이스 키트 설치
주의사항
병렬 인터페이스 키트를 설치(또는 제거)하기 전, 기기의 전원을 끄고 AC 아우트렛에서 전원선을 분리하십시오.

병렬 인터페이스 키트 설치 확인
병렬 인터페이스 키트가 올바르게 설치되었는지 확인하려면 상태 페이지를 출력해 보십시오. 상태 페이지를 출력하는 방법에 관해서는 사용설명서를 참고하시기 바랍니다.

TONER
www.tonerplus.com.ua

日本語

オプションパラレルインターフェイスキット IB-32
インストールガイド

はじめに
IB-32 は京セラプリンター用パラレルインターフェイスキットです。本書をよくお読みいただき、正しく装着してください。なお、本オプションはその他の機種でも同様の手順で装着できます。

梱包内容の確認
IB-32 本体 1
プレート 1
ネジ 2
中継線 1
シール 1
インストールガイド(本書) 1

取扱い上の注意
本オプションの取り扱いには、以下のことにご注意ください。
・本品は静電気防止対策済みの袋に入っています。袋の中から取り出す際は、念のため大きな金属物に触れて身体の静電気を取り除いてください。
・本品のコネクター部分には手を触れないでください。
・本品を持つ際は基板の表面に手を触れずに、基板の端を持ってください。
・装着時は無理な力を加えないでください。

パラレルインターフェイスキットの装着
注意
本オプションの装着（または取り外し）は、プリンターの電源を切り、電源プラグをコンセントから抜いた状態で行ってください。

装着の確認
ステータスページを印刷して、本オプションが正しく装着されたかを確認できます。
ステータスページの印刷方法は、使用説明書を参照してください。

Printed in China 303N55631001 First edition 2012.6

Network interface Installation Guide

KYOCERA

305JV5673001

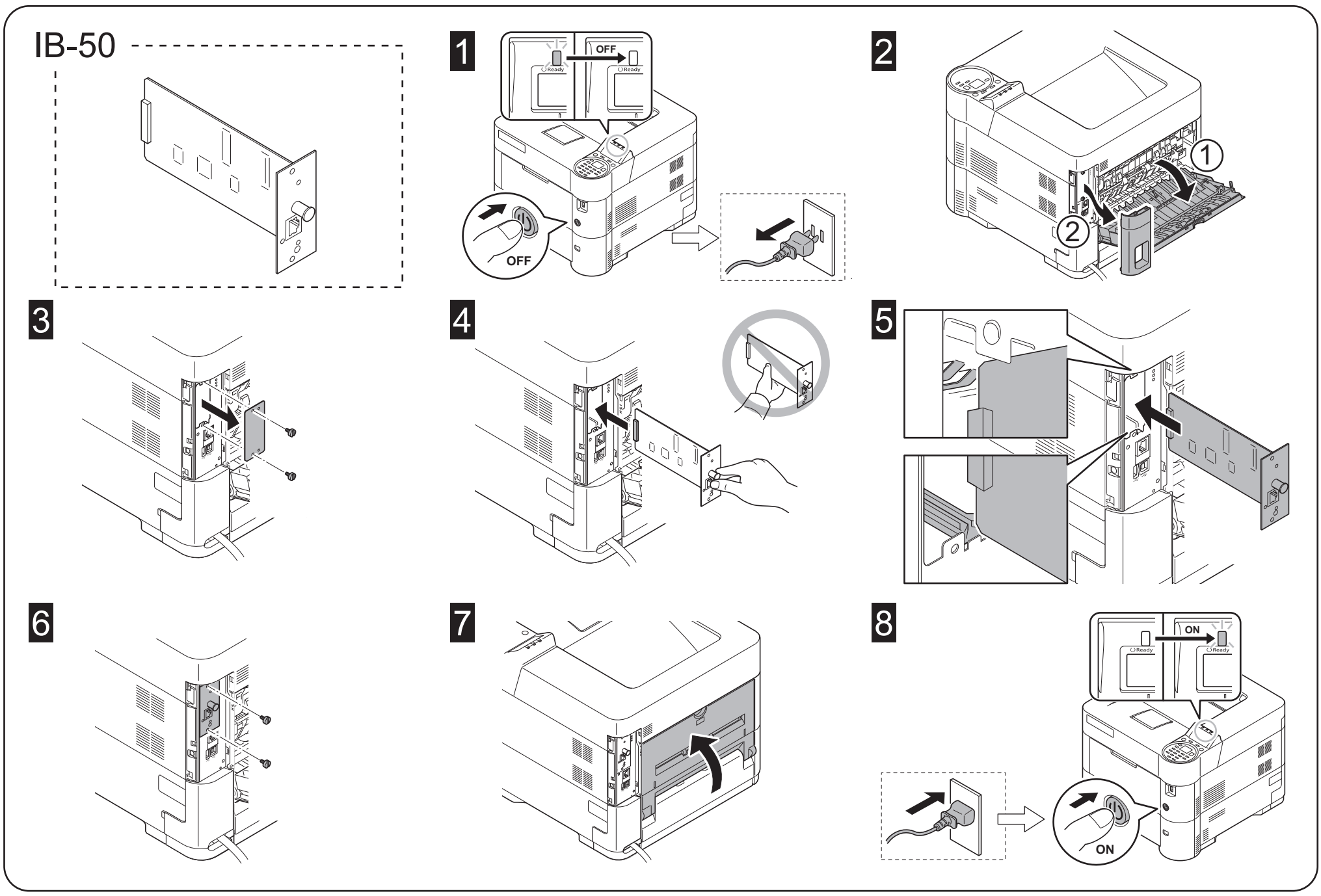

English

Optional Network Interface Kit IB-50
Installation Guide

Introduction

The IB-50 is an optional network interface kit for use with the MFPs and the page printers. Please read this Installation Guide thoroughly so that you understand the correct installation method.
This network interface kit can be installed in other models using the same installation procedure.

Packing List

IB-50 1
Installation Guide (this guide) 1
Setup Guide 1
CD-ROM 1

Precautions for Handling the Network Interface Kit

When handling the network interface kit, adhere to the following precautions.

- The network interface kit is delivered in an antistatic bag. To prevent any damage, briefly touch a large metal object to ensure discharge of static electricity before removing the network interface kit from the bag.
- Never touch the network interface kit's connector section directly with hands.
- When holding the network interface kit, avoid contact with the surface of the circuit board. Hold it at the edges.
- Do not apply undue force when installing.

Installing the Network Interface Kit
CAUTION

Before installing (or removing) the network interface kit, be sure to turn off the machine's power and disconnect the power cord plug from the AC outlet.

Verifying Installation of the Network Interface Kit

To verify that the network interface kit has been correctly installed, try to print out the status page.
Refer to the Operation Guide for the method for printing a status page.

Network settings

Refer to the Operation guide for the network settings.

TONER PLUS
www.tonerplus.com.ua

Français

Kit d'interface réseau IB-50 en option
Guide d'installation

Introduction

L'IB-50 est un kit d'interface réseau en option destiné à être utilisé avec les imprimantes multifonctions et les imprimantes par page. Veuillez lire entièrement ce guide d'installation et vous assurer que vous comprenez bien les méthodes d'installation.

Ce kit d'interface réseau peut être installé dans d'autres modèles à l'aide de la même procédure d'installation.

Contenu de l'emballage

IB-50 1
Guide d'installation (ce manuel) 1
Guide de mise en service 1
CD-ROM 1

Précautions de manipulation du kit d'interface réseau

Lorsque vous manipulez le kit d'interface réseau, observez les précautions suivantes.

- Le kit d'interface réseau est livré dans un sac antistatique. Avant de le retirer du sac, touchez brièvement un grand objet métallique pour vous décharger de toute électricité statique.Vous éviterez ainsi d'endommager le kit d'interface réseau.
- Ne touchez jamais directement la partie du connecteur du kit d'interface réseau avec les mains.
- Lorsque vous tenez le kit d'interface réseau, ne touchez pas la surface de la carte de circuits imprimés. Saisissez-le par les bords.
- N'appliquez aucune force inutile en l'installant.

Installation du kit d'interface réseau
ATTENTION

Avant d'installer (ou de retirer) le kit d'interface réseau, mettez toujours l'imprimante hors tension et débranchez la fiche du cordon d'alimentation de la prise de courant.

Vérification de l'installation du kit d'interface réseau

Pour vous assurer que le kit d'interface réseau a été correctement installé, essayez d'imprimer la page d'état de l'imprimante.
Pour connaître la méthode d'impression de la page d'état, consultez le manuel d'utilisation.

Réglages réseau

Pour connaître les réglages réseau, consultez le manuel d'utilisation.

Español

Kit de interfaz de red IB-50 opcional
Guía de instalación

Introducción

El IB-50 es un kit de interfaz de red opcional para utilizar con la copiadora e impresora de hojas. Lea completamente esta Guía de instalación de forma que pueda entender los métodos de instalación y operación correctos.

Este kit de interfaz de red puede instalarse en otros modelos utilizando el mismo procedimiento de instalación.

Lista del contenido del paquete

IB-50 1
Guía de instalación (este folleto) 1
Guía de configuración 1
CD-ROM 1

Precauciones para el manejo del kit de interfaz de red

Cuando maneje el kit de interfaz de red, tenga en cuenta las siguientes precauciones.

- El kit de interfaz de red se entrega en una bolsa antiestática. Para evitar cualquier daño, antes de sacar el kit de interfaz de red de la bolsa, toque un objeto metálico grande para descargar la electricidad estática de su cuerpo.
- Nunca toque la sección del conector del kit de interfaz de red directamente con las manos.
- Cuando sostenga el kit de interfaz de red, no toque con las manos la superficie de la placa del circuito impreso. Sujétela por los bordes.
- No aplique demasiada fuerza al realizar la instalación.

Instalación del kit de interfaz de red
PRECAUCIÓN

Antes de instalar (o desmontar) el kit de interfaz de red, asegúrese de desconectar la alimentación de la impresora y de desenchufar el cable de alimentación de la toma de corriente de CA.

Verificación de la instalación del kit de interfaz de red

Para verificar que el kit de interfaz de red ha sido instalado correctamente, trate de imprimir la página de estado de la impresora.
Consulte la Guía de uso para obtener información sobre la impresión de la página de estado de la impresora.

Configuración de la red

Consulte la Guía de uso para obtener información sobre la configuración de la red.

Deutsch

Optionales Network Interface Kit IB-50 Installationsanleitung

Einführung
Das IB-50 ist ein optionales Network Interface Kit zur Verwendung mit den MFPs und den Seitendruckern. Bitte lesen Sie sich diese Installationsanleitung sorgfältig durch, damit Sie das Gerät korrekt installieren.
Dieses Network Interface Kit kann mithilfe des selben Installationsvorgangs in anderen Modellen eingebaut werden.

Verpackungsinhalt
IB-50 1
Installationsanleitung (diese Anleitung) 1
Einrichtungsleitfaden 1
CD-ROM 1

Vorsichtsmaßnahmen bei der Handhabung des Network Interface Kits
Bitte beachten Sie die folgenden Vorsichtshinweise beim Umgang mit dem Network Interface Kit.
- Das Network Interface Kit wird in einem Antistatikbeutel geliefert. Um eine Beschädigung des Network Interface Kits zu vermeiden, sollten Sie kurz einen großen Gegenstand aus Metall berühren, um sich von statischer Elektrizität zu entladen, bevor Sie das Network Interface Kit aus der Verpackung entfernen.
- Berühren Sie auf keinen Fall die Steckleiste des Network Interface Kits mit bloßen Händen.
- Achten Sie beim Halten des Network Interface Kits darauf, eine Berührung der Platinenoberfläche zu vermeiden. Halten Sie das Network Interface Kit stets an den Kanten der Platine.
- Vermeiden Sie übermäßige Kraftanwendung beim Installieren.

Installation des Network Interface Kits
VORSICHT
Achten Sie vor dem Installieren (bzw. Entfernen) des Network Interface Kits unbedingt darauf, den Drucker auszuschalten und das Netzkabel von der Netzsteckdose zu trennen.

Überprüfung der Installation des Network Interface Kits
Um eine korrekte Installation des Network Interface Kits zu überprüfen, drucken Sie die Statusseite aus.
Die Vorgehensweise für das Ausdrucken einer Statusseite finden Sie in der Bedienungsanleitung.

Netzwerkeinstellungen
Die Netzwerkeinstellungen finden Sie in der Bedienungsanleitung.

Italiano

Kit interfaccia di rete IB-50 opzionale Guida all'installazione

Introduzione
IB-50 è un kit interfaccia di rete opzionale per utilizzi con stampanti multifunzione (MFP) e con stampanti a pagine. Si prega di leggere attentamente la presente Guida all'installazione per comprendere il corretto metodo di installazione.
Questo kit interfaccia di rete può essere installato in altri modelli che utilizzano la stessa procedura di installazione.

Contenuto della confezione
IB-50 1
Guida all'installazione (la presente guida) 1
Guida alla configurazione 1
CD-ROM 1

Precauzioni d'uso del kit interfaccia di rete
Durante l'utilizzo del kit interfaccia di rete, adottare le precauzioni che seguono.
- Il kit interfaccia di rete è spedito in una custodia antistatica. Per evitare eventuali danni, toccare per pochi istanti un oggetto metallico di grandi dimensioni per assicurarsi di scaricare l'elettricità statica prima di rimuovere il kit interfaccia di rete dalla custodia.
- Non toccare la sezione del connettore del kit interfaccia di rete direttamente con le mani.
- Nell'afferrare il kit interfaccia di rete, evitare il contatto con la superficie della scheda a circuito. Afferrarlo alle estremità.
- Non esercitare una forza eccessiva durante l'installazione.

Istallazione del kit interfaccia di rete
ATTENZIONE:
prima di installare (o di rimuovere) il kit interfaccia di rete, assicurarsi di aver spento l'alimentazione della macchina e di aver disconnesso la spina del cavo di alimentazione dalla presa CA.

Verifica dell'installazione del kit interfaccia di rete
Per verificare che il kit interfaccia di rete sia stato installato correttamente, stampare la pagina di stato.
Per scoprire le modalità di stampa della pagina di stato, consultare la Guida alle funzioni.

Impostazioni di rete
Per le impostazioni di rete, consultare la Guida alle funzioni.

简体中文

选装网络接口套件 IB-50 安装手册

前言
IB-50 是一款适用于 MFP 和页式打印机的选装网络接口套件。为了解正确的安装方法，请仔细通读本《安装手册》。
本网络接口套件可通过同样的安装步骤安装到其他机型上去。

包装内容列表
IB-50 1
安装手册（本手册） 1
设置手册 1
CD-ROM 1

使用本网络接口套件的注意事项
使用本网络接口套件时，请遵守以下注意事项。
- 本网络接口套件被包装在防静电袋中。将网络接口套件从包装袋中取出之前，请短暂触摸大件金属物体以消除静电，以免造成损坏。
- 请勿直接用手触摸网络接口套件的连接器部分。
- 拿握网络接口套件时，请勿接触到电路板的表面。请拿握其边缘。
- 安装时请不要过于用力。

安装本网络接口套件
注意：
安装（或拆卸）本网络接口套件前，请务必关掉机器的电源并将电源线插头从 AC 插座上断开。

确认本网络接口套件安装正确
为确认本网络接口套件已经正确安装，请尝试打印状态页。
有关打印状态页的方法，请参阅《操作手册》。

网络设置
有关网络设置的相关信息，请参阅《操作手册》。

동봉물

옵션 네트워크 인터페이스 키트 IB-50 토너 설치 안내서

소개
IB-50은 MFP와 페이지 프린터에 사용되는 옵션 네트워크 인터페이스 키트입니다. 본 토너 설치 안내서를 주의 깊게 읽고 올바른 설치 방법을 숙지하시기 바랍니다. 본 네트워크 인터페이스 키트는 같은 설치 절차를 적용하여 다른 모델에 설치될 수 있습니다.

포장 내용물
IB-50 1
토너 설치 안내서 (본 안내서) 1
설정 안내서 1
CD-ROM 1

네트워크 인터페이스 키트 취급 시 주의사항
네트워크 인터페이스 키트 취급 시, 다음과 같은 주의사항을 지켜주시기 바랍니다.
- 네트워크 인터페이스 키트는 정전기 방지 봉투에 포장되어 있습니다. 네트워크 인터페이스 키트를 꺼내기 전에 손상을 예방하기 위해 큰 금속 물체를 잠시 만져서 정전기를 방지하시기 바랍니다.
- 네트워크 인터페이스 키트의 연결부를 직접 손으로 만지지 마십시오.
- 네트워크 인터페이스 키트를 잡을 때는, 회로판 표면에 닿지 않도록 끝부분을 잡으십시오.
- 설치 시 과도한 힘을 가하지 마십시오.

네트워크 인터페이스 키트 설치
주의사항
네트워크 인터페이스 키트를 설치(또는 제거)하기 전, 기기의 전원을 끄고 AC 아우트렛에서 전원선을 분리하십시오.

네트워크 인터페이스 키트 설치 확인
네트워크 인터페이스 키트가 올바르게 설치되었는지 확인하려면 상태 페이지를 출력해보십시오. 상태 페이지를 출력하는 방법에 관해서는 사용설명서를 참고하시기 바랍니다.

네트워크 설정
네트워크 설정에 관련된 정보는 사용설명서를 참고하시기 바랍니다.

日本語

オプションネットワークインターフェイスキット IB-50 インストールガイド

はじめに
IB-50 は京セラ複合機およびプリンター用増設ネットワークです。本書をよくお読みいただき、正しく装着してください。なお、本オプションはその他の機種でも同様の手順で装着できます。

梱包内容の確認
IB-50 本体 1
インストールガイド(本書) 1
セットアップガイド 1
CD-ROM 1

取扱い上の注意
本オプションの取り扱いには、以下のことにご注意ください。
- 本品は静電気防止対策済みの袋に入っています。袋の中から取り出す際は、念のため大きな金属物に触れて身体の静電気を取り除いてください。
- 本品のコネクター部分には手を触れないでください。
- 本品を持つ際は基板の表面に手を触れずに、基板の端を持ってください。
- 装着時は無理な力を加えないでください。

ネットワークインターフェイスキットの装着
注意
本オプションの装着（または取り外し）は、複合機またはプリンターの電源を切り、電源プラグをコンセントから抜いた状態で行ってください。

装着の確認
ステータスページを印刷して、本オプションが正しく装着されたかを確認できます。
ステータスページの印刷方法は、使用説明書を参照してください。

ネットワークの設定
ネットワークの設定については、使用説明書を参照してください。

TONER
www.tonerplus.com.ua

Printed in China 305JV5673001 First edition 2012.6

305JV56720-02 June, 2011

IB-50

302JV56720

Setup Guide
Guía de configuración
Manual de instalação
Guide d'installation
Setup-Leitfaden
Installatiehandleiding
Guida all'installazione
설치 안내서
设置向导
設定指南
セットアップガイド

(E) Thank you for purchasing the IB-50 Network Card (hereinafter "IB-50"). Follow the instructions in this setup guide to configure Windows environments for use with the IB-50. Simply follow the steps 1 to 2. For instructions on configuring other environments, refer to the online manual on the CD-ROM.

(S) Gracias por adquirir la tarjeta de red IB-50 (de aquí en adelante, "IB-50"). Siga las instrucciones de esta guía de configuración para configurar los entornos Windows para su uso con el IB-50. Simplemente siga los pasos 1 a 2. Para instrucciones sobre la configuración en otros entornos, consulte el manual en línea del CD-ROM.

(P) Obrigado por comprar a Placa de rede IB-50 (daqui em diante "IB-50"). Siga as instruções deste manual de instalação para configurar ambientes Windows para utilização com o IB-50. Efectue os procedimentos de 1 a 2. Para mais informações sobre como configurar outros ambientes, consulte o manual on-line de CD-ROM.

(F) Nous vous remercions d'avoir acheté la carte réseau IB-50 (ci-après dénommé "IB-50").
Veuillez suivre les instructions du présent guide d'installation pour configurer les environnements Windows pour l'utilisation avec l'IB-50. Suivez simplement les étapes 1 à 2. Pour les instructions relatives à la configuration des autres environnements, reportez-vous au manuel en ligne sur le CD-ROM.

(D) Vielen Dank, dass Sie sich für den Kauf der IB-50 Netzwerkkarte entschieden haben (im Weiteren als "IB-50" bezeichnet). Bitte folgen Sie den Anweisungen dieses Setup-Leitfadens, um Windows-Umgebungen für den Gebrauch mit dem IB-50 zu konfigurieren. Dazu führen Sie einfach Schritt 1 bis 2 aus. Anweisungen zumKonfigurieren anderer Umgebungen finden Sie im Online-Handbuch der CD-ROM.

(N) Wij danken u dat u de IB-50-netwerkkaart hebt aangeschaft (hierna te noemen "IB-50"). Volg de instructies in deze installatiehandleiding om Windows-omgevingen te configureren voor gebruik met de IB-50. Volg stap 1 tot en met 2. Raadpleeg voor instructies voor de configuratie van andere omgevingen de on line handleiding op de CD-ROM.

(I) Grazie per aver acquistato la scheda di rete IB-50 (che d'ora in avanti verrà chiamato "IB-50"). Seguire le istruzioni in questa guida all'installazione per configurare gli ambienti Windows per l'utilizzo con l'IB-50. È sufficiente seguire i passi da 1 a 2 della procedura. Per le istruzioni su come configurare altri ambienti, consultare il manuale online nel CD-ROM.

(CS) 感谢您购买IB-50网卡(下面简称为“IB-50”)。请按照此设置向导中的说明，配置使用IB-50的Windows环境。请执行步骤[1]至[2]。有关其它环境的配置说明，请参见CD-ROM中的联机手册。

(CT) 感謝您購買IB-50網路卡(下面簡稱“IB-50”)。請按照此設定指南中的說明，安裝使用IB-50的Windows環境。請執行步驟[1]至[2]。有關環境之外的安裝說明，請參見CD-ROM中的線上手冊。

(K) IB-50 네트워크 카드 ("IB-50") 를 구입해 주셔서 감사합니다. 이 설치 안내서의 지침에 따라 IB-50 을 설치하여 사용할 수 있도록 Windows 환경을 구성합니다. [1] 단계에서 [2] 단계까지만 수행하면 됩니다. 다른 환경 구성에 대한 지침은 CD-ROM 의 온라인 설명서를 참조하십시오.

(J) このたびは、ネットワークカード IB-50（以降 IB-50）をお買いあげいただき、誠にありがとうございます。
本紙では Windows環境での環境構築方法を記載しています。①から②の手順で操作してください。他の環境での設定方法は付属のCD-ROMに収録されているオンラインマニュアルを参照してください。

- Supported Operating Systems / • Sistemas operativos compatibles /
- Sistemas operativos suportados / • Systèmes d'exploitation pris en charge
- Unterstütze Betriebssysteme /• Ondersteunde besturingssystemen/
- Sistemi operativi supportati /
- 支持的操作系统 / • 支援的操作系統 / • 지원되는 운영 체제 / • 対応OS

Windows 2000/XP/Vista/7/Server 2003/Server 2008
Netware 3.x, 4.x, 5.x, 6.x / MacOS 9.x, 10.x / UNIX

1

Installing the IB-50 in the printer and connecting to the network

Instalación de la IB-50 en la impresora y conexión a la red

Instalando a IB-50 na impressora e conectando à rede

Installation de la IB-50 dans l'imprimante et raccord au réseau

Installation der IB-50 im Drucker und Verbindung zum Netzwerk

De IB-50 in de printer installeren en aansluiten op het netwerk.

Installare la scheda IB-50 nella stampante ed eseguire il collegamento alla rete.

在打印机中安装IB-50
并连接到网络

將 IB-50 安裝到印表機，
並連接到網路

프린터에 IB-50 설치 및
네트워크에 연결

本製品をプリンターに装着しネットワーク環境に接続する

(E) • If you connect the IB-50 to another network later, restore the default settings before doing so.
Refer to the online manual included on the CD-ROM for details on restoring the factory default settings.
Before connecting the IB-50, prepare the network cable.
1. Turn off the printer and unplug the AC power cable from the printer.
2. Install the IB-50 in the printer. Refer to the installation guide of IB-50.
For machines to be installed by a service person, refer to the service manual.
3. Connect the IB-50 to a PC or an Ethernet hub using a network cable.
4. Turn the printer on. Check that at least one of the two green LEDs on the IB-50 turns on.

(S) • Si posteriormente conecta el IB-50 a otra red, antes de hacerlo debe restaurar las configuraciones predeterminadas.
Consulte el manual en línea incluido en el CD-ROM para obtener una información detallada sobre la restauración de la configuración predeterminada de fábrica.
Antes de conectar la IB-50, prepare el cable de red.
1. Apague la impresora y desconecte el cable de alimentación de CA de la impresora.
2. Instale la IB-50 en la impresora. Consulte la guía de instalación de la IB-50.
Para las máquinas instaladas por el técnico del servicio, vea el manual de servicio.
3. Conecte la IB-50 a un PC o a un concentrador Ethernet empleando un cable de red.
4. Encienda la impresora. Verifique que al menos uno de los dos LED verdes de la IB-50 se enciende.

(P) • Se ligar o IB-50 a outra rede posteriormente, restaure as predefinições antes de o fazer.
Consulte o manual on-line incluído no CD-ROM para obter detalhes sobre como restaurar as configurações padrão de fábrica. Antes de conectar a IB-50, prepare o cabo de rede.
1. Desligue a impressora e retire o cabo de alimentação CA da impressora.
2. Instale a IB-50 na impressora. Consulte o guia da instalação da IB-50.
Para as máquinas que devem ser instaladas por pessoal de serviço qualificado, consulte o manual de serviço.
3. Conecte a IB-50 a um PC ou a um hub Ethernet usando um cabo de rede.
4. Ligue a impressora. Verifique se pelo menos um dos dois LEDs verdes na IB-50 está aceso.

(F) • Si vous connectez l'IB-50 à un autre réseau plus tard, vous devrez d'abord rétablir les paramètres par défaut.
Reportez-vous au manuel en ligne inclus sur le CD-ROM pour plus d'informations sur la restauration des paramètres d'origine. Préparez le câble réseau avant de raccorder la IB-50.
1. Éteignez l'imprimante et débranchez le câble d'alimentation.
2. Installez l'IB-50 dans l'imprimante. Reportez-vous au guide d'installation de l'IB-50.
Pour les machines installées par un agent d'entretien, voir le manuel de service.
3. Raccordez la IB-50 sur un ordinateur ou sur un concentrateur Ethernet à l'aide d'un câble réseau.
4. Allumez l'imprimante. Vérifiez qu'au moins un des deux voyants verts sur la IB-50 s'allume.

(D) • Wenn der IB-50 später an ein anderes Netzwerk angeschlossen werden soll, müssen Sie vorher darauf achten, die Standardeinstellungen wiederherzustellen.
Details zur Wiederherstellung der werksseitigen Standardeinstellungen finden Sie im Onlinehandbuch auf der CD-ROM. Stellen Sie vor dem Anschluss der IB-50 das Netzwerkkabel bereit.
1. Den Druckerstrom ausschalten und das Stromkabel vom Drucker abziehen.
2. Installieren Sie die IB-50 im Drucker. Siehe Installationsanweisung der IB-50.
Angaben zu Maschinen, die von Service-Personal zu installieren sind, finden Sie in der Wartungsanleitung.
3. Schließen Sie die IB-50 an einen PC oder an einen Ethernet-Verteiler über ein Netzwerkkabel an.
4. Schalten Sie den Drucker ein. Überprüfen Sie, dass mindestens eine der beiden grünen LEDs an der IB-50 aufleuchtet.

(N) • Wanneer u de IB-50 later op een ander netwerk aansluit, moet u van tevoren de standaardinstellingen herstellen.
Raadpleeg de online-handleiding die op de CD-ROM staat voor details over het herstellen van de fabriekswaarden. Maak de netwerkkabel gereed voordat u de IB-50 aansluit.
1. Schakel de printer uit en maak het netsnoer los van de printer.
2. Installeer de IB-50 in de printer. Raadpleeg hiervoor de installatiehandleiding van de IB-50.
Refereer aan de onderhoudshandleiding voor machines die geïnstalleerd dienen te worden door onderhoudspersoneel.
3. Sluit de IB-50 met behulp van een netwerkkabel aan op een PC of een Ethernet-hub.
4. Zet de printer aan. Controleer of ten minste één van de twee groene LED's op de IB-50 gaat branden.

(I) • Se si collega l'IB-50 a un'altra rete in un secondo momento, ripristinare le impostazioni predefinite prima di farlo.
Fare riferimento al manuale in linea incluso nel CD-ROM per le istruzioni dettagliate su come ripristinare le impostazioni predefinite di fabbrica. Preparare il cavo di rete prima di collegare la scheda IB-50.
1. Spegnere la stampante e scollegare il cavo di alimentazione CA dalla stampante.
2. Installare la scheda IB-50 sulla stampante. Vedere la guida all'installazione di IB-50.
Per le macchine che devono essere installate da un tecnico di assistenza, fare riferimento al manuale d'istruzioni.
3. Collegare la scheda IB-50 a un computer o a un hub Ethernet tramite un cavo di rete.
4. Accendere la stampante. Verificare che almeno uno dei due LED verdi della scheda IB-50 sia acceso.

(CS) 如果此后要将IB-50与其它网络连接，请在连接前恢复默认设置。
有关恢复出厂默认设置的详细信息，请参见CD-ROM上的联机手册。在连接 IB-50之前，准备好网络电缆。
1. 关闭打印机，并从打印机上拔下AC电源电缆。
2. 在打印机中安装 IB-50。请参见 IB-50 的安装手册。
对于维修人员安装机器时，请参照维修手册。
3. 使用网络电缆将IB-50连接到PC或以太网集线器。
4. 打开打印机。检查IB-50上的两个绿色 LED 至少有一个为亮起状态。

(CT) 如果此後要將IB-50與其它網路連接，請在連接前恢復預設設定。
有關恢復預設設定的說明，請參見CD-ROM所隨附的線上手冊。連接IB-50之前，請先準備好網路纜線。
1. 關閉印表機，從印表機上拔下AC電源電纜。
2. 欲安裝 IB-50 至機器，詳見 IB-50 之安裝手冊。
如由服務人員裝機，請參閱技術手冊。
3. 使用網路纜線將IB-50連接到 PC 或 Ethernet 集線器。
4. 開啓印表機。確認IB-50上的兩個綠色LED中至少有一個是開啓的。

(K) 나중에 IB-50 을 다른 네트워크에 연결할 경우 연결하기 전에 기본 설정을 복원합니다.
공장 기본 설정 복원에 대한 자세한 내용은 CD-ROM 에 포함된 온라인 설명서를 참조하십시오.

IB-50 을 연결하기 전에 네트워크 케이블을 준비합니다.
1. 프린터를 끄고 AC 전원 케이블을 프린터에서 분리합니다.
2. 프린터에 IB-50을 설치방법은 설치 설명서를 참조하십시오.
서비스 기사가 설치하는 기계는 서비스 매뉴얼을 참조해 주십시오.
3. 네트워크 케이블을 사용하여 IB-50 을 PC 또는 이더넷 허브에 연결합니다.
4. 프린터의 전원을 켭니다. IB-50 에 있는 두 개의 녹색 LED 중 최소한 하나가 켜져 있는지 확인합니다.

(J) 他のネットワークにつなぎかえる場合は、工場出荷時設定に戻してください。
工場出荷時設定に戻す方法は、CDに収録されているオンラインマニュアルを参照してください 。
接続前にネットワークケーブルを準備してください。
1. プリンターの電源を切り、電源ケーブルをプリンターから抜きます。
2. 別紙（IB-50 ）の手順で IB-50をプリンターに装着します。
サービス担当者が設置する機械は、サービスマニュアルを参照してください。
3. IB-50 と PC またはイーサネットハブをネットワークケーブルで接続します。
4. プリンターの電源を入れます。IB-50の2つの緑のLEDのうちどちらかが点灯することを確認します。

2

Configure the IB-50's IP address

Configurar la dirección IP del IB-50

Configurar o endereço IP do IB-50

Configurez l'adresse IP de l'IB-50

Konfigurieren Sie die IP-Adresse des IB-50

Configureer het IP-adres van de IB-50

Configurare l'indirizzo IP dell'IB-50

配置IB-50的IP地址

設定IB-50的IP位址

IB-50 의 IP 주소 구성

IB-50にIPアドレスを設定する

1.

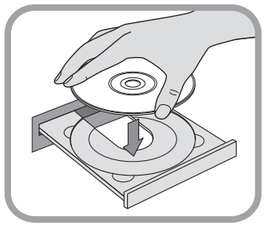

(E) Insert the CD-ROM supplied with the interface card in your CD-ROM drive.

(S) Inserte en la unidad el CD-ROM que se suministra con la tarjeta de interfaz.

(P) Insira o CD-ROM fornecido com a placa de interface na unidade de CD-ROM.

(F) Insérez le CD-ROM fourni avec la carte d'interface dans votre lecteur de CD-ROM.

(D) Die der Schnittstellenkarte beiliegende CD-ROM in das CD-ROM-Laufwerk einlegen.

(N) Plaats de CD-ROM die bij de interfacekaart wordt geleverd, in uw CD-ROM-station.

(I) Inserire il CD-ROM fornito con la scheda di interfaccia nell'unità CD-ROM.

(CS) 将接口卡随附的光盘插入光盘驱动器。

(CT) 將介面卡隨附的光碟插入光碟機。

(K) 사용자의 CD-ROM 드라이브에 인터페이스와 함께 제공되는 CD-ROM 을 삽입합니다.

(J) 付属のCD-ROMをPCにセットします。

2.

(E) Click **Quick Network Setup.**

(S) Pulse Pulse **Quick Network Setup.**

(P) Clique em **Quick Network Setup.**

(F) Cliquez sur **Quick Network Setup.**

(D) Klicken Sie auf **Quick Network Setup.**

(N) Klik op **Quick Network Setup.**

(I) Fare clic su **Quick Network Setup.**

(CS) 单击**Quick Network Setup**。

(CT) 按一下**Quick Network Setup**。

(K) **Quick Network Setup** 를 클릭합니다.

(J) [**Quick Network Setup**]をクリックします。

3.

(E) Click **Next** when the Wizard screen is displayed.

(S) Haga clic en **Siguiente** cuando aparezca la pantalla del Asistente.

(P) Clique em **Avançar** quando a tela do Assistente for exibida.

(F) Cliquez sur **Suivant** lorsque l'écran de l'assistant s'affiche.

(D) Klicken Sie auf **Weiter**, wenn der Bildschirm des Assistenten gezeigt wird.

(N) Klik op **Volgende** wanneer het Wizard-scherm verschijnt

(I) Fare clic su **Avanti** alla visualizzazione della schermata di Installazione guidata stampante.

(CS) 显示向导屏幕时，单击下一步。

(CT) 當精靈畫面顯示時，按一下下一步。

(K) 마법사 화면이 표시되면 다음을 클릭합니다.

(J) ウィザード画面が表示されるので[次へ]をクリックします。

4.

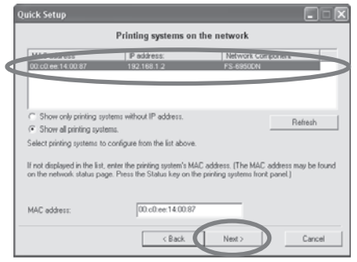

(E) Select the printer that the card is installed in from the list of print servers, and then click **Next.**

If the printer that the card is installed in does not appear in the list of search results :

- Make sure the computer's network environment (IP address) is correctly configured.
- Temporarily disable any security software and the standard firewall built into the operating system (for Windows XP), if applicable.

(S) Seleccione la impresora en la que está instalada la tarjeta en la lista de servidores de impresión y a continuación haga clic en **Siguiente.**

Si la impresora en la que está instalada la tarjeta no aparece en la lista de resultados de búsqueda :

- Asegúrese de que el entorno de red del PC (dirección IP) está correctamente configurado.
- Desactive temporalmente cualquier software de seguridad y el cortafuegos del sistema operativo (en Windows XP), si es aplicable.

(P) Selecione, na lista de servidores de impressão, a impressora na qual a placa está instalada e depois clique em **Avançar.**

Se a impressora na qual a placa está instalada não surgir na lista de resultados da pesquisa :

- Certifique-se de que o ambiente de rede do computador (endereço IP) está configurado correctamente.
- Desactive temporariamente qualquer software de segurança e a firewall standard integrada no sistema operativo (para Windows XP), se aplicável.

(F) Choisissez l'imprimante avec la carte installée dans la liste des serveurs d'impression, et cliquez ensuite sur **Suivant.**

Si l'imprimante avec la carte installée ne figure pas dans la liste des résultats de recherche :

- Vérifiez que l'environnement du réseau de l'ordinateur (l'adresse IP) est correctement configuré.
- Désactivez temporairement tout logiciel de sécurité et le firewall standard intégré par défaut au système d'exploitation (pour Windows XP), le cas échéant.

(D) Wählen Sie den Drucker, in dem die Karte installiert ist, aus der Liste der Druckserver aus, und klicken Sie anschließend auf **Weiter.**

Falls der Drucker, in dem die Karte installiert ist, nicht in der Liste der Suchergebnisse angezeigt wird :

- Vergewissern Sie sich, das die Netzwerkumgebung des PC (IP-Adresse) korrekt konfiguriert ist.
- Sperren Sie ggf. vorübergehend eine momentan aktivierte Sicherheits-Software und die Standard-Firewall des Betriebssystems (bei Windows XP).

(N) Selecteer de printer waarin de kaart is geïnstalleerd, uit de lijst van print-servers en klik daarna op **Volgende.**

Als de printer waarin de kaart is geïnstalleerd, niet in de lijst met zoekresultaten voorkomt :

- Controleer of de netwerkomgeving van de computer (het IP-adres) op de juiste manier is geconfigureerd.
- Schakel beveiligingssoftware en de standaardfirewall die in het besturingssysteem is ingebouwd (voor Windows XP) voorlopig uit, indien van toepassing.

(I) Selezionare la stampante in cui è installata la scheda dall'elenco dei server di stampa, quindi fare clic su **Avanti.**

Se la stampante in cui è installata la scheda non appare nell'elenco dei risultati della ricerca :

- Assicurarsi che l'ambiente di rete del computer (indirizzo IP) sia configurato correttamente.
- Disattivare temporaneamente qualsiasi software di sicurezza e il firewall di serie incorporato nel sistema operativo (per Windows XP), se applicabile.

(CS) 如果安装了该卡的打印机未出现在搜索结果列表中：

- 确认是否正确配置了电脑的网络环境(IP地址)。
- 暂时中断所有正在适用的安全软件和内置于操作系统(Windows XP)的标准防火墙的执行。

(CT) 從列印伺服器清單中選取安裝了網路卡的印表機，然後按一下下一頁。

如果安裝了網路卡的印表機沒有出現在搜尋結果 清單中：

- 確認是否正確設定了電腦的網路環境(IP位址)。
- 暫時中斷所有安全軟體和建於操作系統(Windows XP)的標準防火牆的執行。

(K) 인쇄 서버 목록에서 카드가 설치되어 있는 프린터를 선택하고 다음을 클릭합니다.

카드가 설치되어 있는 프린터가 검색 결과 목록에 표시되지 않는 경우:

- 컴퓨터의 네트워크 환경(IP 주소)이 제대로 구성되어 있는지 확인합니다.
- 운영 체제(Windows XP 용)에 내장되어 있는 보안 소프트웨어와 표준 방화벽을 잠시 사용하지 않도록 설정합니다.

(J) プリントサーバーリストから、装着したプリンターを選択して、[次へ]をクリックします。

検索結果一覧に装着したプリンターが表示されないときは. . .

※PCのネットワーク環境（IPアドレス）が正しく設定されているかを確認してください。

※セキュリティソフトおよび､OS標準のファイアウォール機能（Windows XPの場合）をご利用の場合は、一時的に無効にしてください。

5.

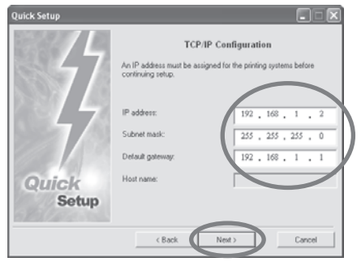

(E) Enter the IP address, Subnet mask, and Default gateway. Click **Next.**

(S) Introduzca la dirección IP, máscara de subred y Gateway por omisión. Pulse **Siguiente.**

(P) Introduza o Endereço IP, a Máscara de sub-rede e a Gateway padrão. Clique em **Avançar.**

(F) Saisissez l'adresse IP, le Masque de sous-réseau et la Passerelle par défaut. Cliquez sur **Suivant.**

(D) Geben Sie IP-Adresse, Subnetzmaske und Standard-Gateway ein, und klicken Sie dann auf **Weiter.**

(N) Voer het IP-adres, het Subnetmasker en de Standaardgateway in. Klik op **Volgende.**

(I) Immettere Indirizzo IP, Maschera sottorete e Gateway predefinito. Fare clic su **Avanti.**

(CS) 键入IP地址、子网掩码和默认网关。单击下一步。

(CT) 輸入IP位址、子網路遮罩和預設閘道。按一下下一頁。

(K) IP 주소, 서브넷 마스크 및 기본 게이트웨이를 입력합니다. 다음을 클릭합니다.

(J) IP アドレス、サブネットマスク、デフォルトゲートウェイを入力し、[次へ]をクリックします。

6.

(E) Confirm the settings and click **Next.**

(S) Confirme las configuraciones y pulse **Siguiente.**

(P) Confirme as configurações e clique em **Avançar.**

(F) Vérifiez les paramètres et cliquez sur **Suivant.**

(D) Überprüfen Sie die vorgenommenen Einstellungen, und klicken Sie dann auf **Weiter.**

(N) Bevestig de instellingen en klik op **Volgende.**

(I) Verificare le impostazioni e fare clic su **Avanti.**

(CS) 确认设置后单击下一步。

(CT) 確認設定後按一下下一頁。

(K) 설정을 확인하고 다음을 클릭합니다.

(J) 設定内容を確認し、[次へ]をクリックします。

7.

(E) When the final installation screen of the **Quick Network Setup** is displayed, click **Finish.**

(S) Cuando aparezca la pantalla de instalación final de **Quick Network Setup.**

(P) Quando aparecer o ecrã de instalação final do **Quick Network Setup**, clique em **Concluir.**

(F) Lorsque l'écran final d'installation de **Quick Network Setup** s'affiche, cliquez sur **Terminer.**

(D) Wenn die letzte Seite der **Quick Network Setup** angezeigt wird, klicken Sie auf **Ende.**

(N) Wanneer het laatste installatiescherm van **Quick Network Setup** wordt weergegeven, klikt u op **Voltooien.**

(I) Quando viene visualizzata la schermata di installazione finale di **Quick Network Setup**, fare clic su **Fine.**

(CS) 显示**Quick Network Setup**的最后安装画面时，单击完成。

(CT) 顯示**Quick Network Setup**的最後安裝畫面時，按一下完成。

(K) **Quick Network Setup**의 마지막 설치 화면이 표시되면 마침을 클릭합니다.

(J) [**Quick Network Setup**]の終了画面が表示されたら、[完了]をクリックします。

8.

(E) For the operation of the IB-50, refer to the online manual on the CD-ROM

(S) Para obtener información sobre la IB-50, consulte el manual en línea del CD-ROM.

(P) Para a operação da IB-50, consulte o manual on-line no CD-ROM.

(F) Pour l'utilisation de l'IB-50, reportez-vous au manuel en ligne sur le CD-ROM.

(D) Um die IB-50 in Betrieb zu nehmen, sehen Sie im Online-Handbuch auf der CD-ROM nach.

(N) Raadpleeg voor de bediening van de IB-50 de onlinehandleiding op de CD-ROM.

(I) Per utilizzare la scheda IB-50, fare riferimento al manuale in linea incluso nel CD-ROM.

(CS) 有关 IB-50 的操作情况，请参见 CD-ROM 中的联机手册。

(CT) 有關 IB-50 的操作方法，請參照 CD-ROM 中的線上手冊。

(K) IB-50 의 조작방법에 대해서 CD-ROM에 포함된 온라인 설명서를 참조하십시오.

(J) IB-50の操作方法についてはCD-ROMに収録されているオンラインマニュアルを参照して下さい。

2011.6
305JV56720-02

Wireless LAN interface
Installation Guide

KYOCERA

For European countries and Australia :

CE N 74

305J55631001

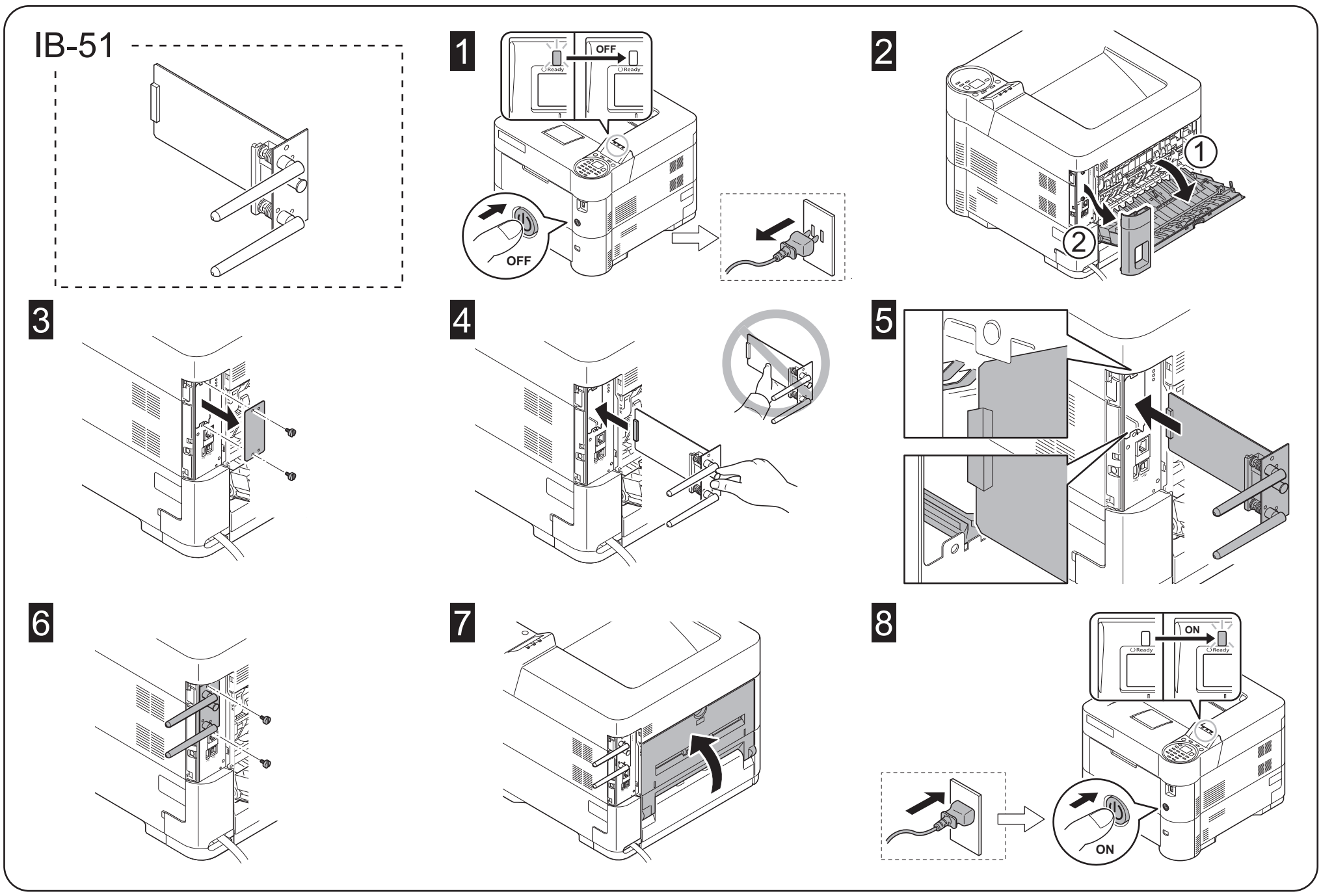

English

Optional Wireless Network Interface Kit IB-51 Installation Guide

Introduction
The IB-51 is an optional wireless network interface kit for use with the MFPs and the page printers. Please read this Installation Guide thoroughly so that you understand the correct installation method.
This wireless network interface kit can be installed in other models using the same installation procedure.

Packing List
IB-51 1
Installation Guide (this guide) 1
CD-ROM 1

Precautions for Handling the Wireless Network Interface Kit
When handling the wireless network interface kit, adhere to the following precautions.
- The wireless network interface kit is delivered in an antistatic bag. To prevent any damage, briefly touch a large metal object to ensure discharge of static electricity before removing the wireless network interface kit from the bag.
- Never touch the wireless network interface kit's connector section directly with hands.
- When holding the wireless network interface kit, avoid contact with the surface of the circuit board. Hold it at the edges.
- Do not apply undue force when installing.

Installing the Wireless Network Interface Kit
CAUTION
Before installing (or removing) the wireless network interface kit, be sure to turn off the machine's power and disconnect the power cord plug from the AC outlet.

Verifying Installation of the Wireless Network Interface Kit
To verify that the wireless network interface kit has been correctly installed, try to print out the status page.
Refer to the Operation Guide for the method for printing a status page.

Network settings
For the network settings and operation procedure, refer to the printer's Operation Guide and the wireless network interface manual.

TONER
www.tonerplus.com.ua

Français

Kit d'interface réseau sans fil IB-51 en option Guide d'installation

Introduction

L'IB-51 est un kit d'interface réseau sans fil en option destiné à être utilisé avec les imprimantes multifonctions et les imprimantes par page. Veuillez lire entièrement ce guide d'installation et vous assurer que vous comprenez bien les méthodes d'installation.

Ce kit d'interface réseau sans fil peut être installé dans d'autres modèles à l'aide de la même procédure d'installation.

Contenu de l'emballage
IB-51 1
Guide d'installation (ce manuel) 1
CD-ROM 1

Précautions de manipulation du kit d'interface réseau sans fil
Lorsque vous manipulez le kit d'interface réseau sans fil, observez les précautions suivantes.
- Le kit d'interface réseau sans fil est livré dans un sac antistatique. Avant de le retirer du sac, touchez brièvement un grand objet métallique pour vous décharger de toute électricité statique.Vous éviterez ainsi d'endommager le kit d'interface réseau sans fil.
- Ne touchez jamais directement la partie du connecteur du kit d'interface réseau sans fil avec les mains.
- Lorsque vous tenez le kit d'interface réseau sans fil, ne touchez pas la surface de la carte de circuits imprimés. Saisissez-le par les bords.
- N'appliquez aucune force inutile en l'installant.

Installation du kit d'interface réseau sans fil
ATTENTION
Avant d'installer (ou de retirer) le kit d'interface réseau sans fil, mettez toujours l'imprimante hors tension et débranchez la fiche du cordon d'alimentation de la prise de courant.

Vérification de l'installation du kit d'interface réseau sans fil
Pour vous assurer que le kit d'interface réseau sans fil a été correctement installé, essayez d'imprimer la page d'état de l'imprimante.
Pour connaître la méthode d'impression de la page d'état, consultez le manuel d'utilisation.

Réglages réseau
Pour les réglages réseau et la procédure d'utilisation, consultez le manuel d'utilisation de l'imprimante et le manuel de l'interface réseau sans fil.

Español

Kit de interfaz de red inalámbrica IB-51 opcional Guía de instalación

Introducción
El IB-51 es un kit de interfaz de red inalámbrica opcional para utilizar con la copiadora e impresora de hojas. Lea completamente esta Guía de instalación de forma que pueda entender los métodos de instalación y operación correctos.
Este kit de interfaz de red inalámbrica puede instalarse en otros modelos utilizando el mismo procedimiento de instalación.

Lista del contenido del paquete
IB-51 1
Guía de instalación (este folleto) 1
CD-ROM 1

Precauciones para el manejo del kit de interfaz de red inalámbrica
Cuando maneje el kit de interfaz de red inalámbrica, tenga en cuenta las siguientes precauciones.
- El kit de interfaz de red inalámbrica se entrega en una bolsa antiestática. Para evitar cualquier daño, antes de sacar el kit de interfaz de red inalámbrica de la bolsa, toque un objeto metálico grande para descargar la electricidad estática de su cuerpo.
- Nunca toque la sección del conector del kit de interfaz de red inalámbrica directamente con las manos.
- Cuando sostenga el kit de interfaz de red inalámbrica, no toque con las manos la superficie de la placa del circuito impreso. Sujétela por los bordes.
- No aplique demasiada fuerza al realizar la instalación.

Instalación del kit de interfaz de red inalámbrica
PRECAUCIÓN
Antes de instalar (o desmontar) el kit de interfaz de red inalámbrica, asegúrese de desconectar la alimentación de la impresora y de desenchufar el cable de alimentación de la toma de corriente de CA.

Verificación de la instalación del kit de interfaz de red inalámbrica
Para verificar que el kit de interfaz de red inalámbrica ha sido instalado correctamente, trate de imprimir la página de estado de la impresora.
Consulte la Guía de uso para obtener información sobre la impresión de la página de estado de la impresora.

Configuración de la red
Si desea obtener información sobre la configuración de la red y el procedimiento de operación, consulte la Guía de uso y el manual de la interfaz de red inalámbrica.

Deutsch

Optionales Wireless Network Interface Kit IB-51 Installationsanleitung

Einführung
Das IB-51 ist ein optionales Wireless Network Interface Kit zur Verwendung mit den MFPs und den Seitendruckern. Bitte lesen Sie sich diese Installationsanleitung sorgfältig durch, damit Sie das Gerät korrekt installieren.
Dieses Wireless Network Interface Kit kann mithilfe des selben Installationsvorgangs in anderen Modellen eingebaut werden.

Verpackungsinhalt
IB-51 1
Installationsanleitung (diese Anleitung) 1
CD-ROM 1

Vorsichtsmaßnahmen bei der Handhabung des Wireless Network Interface Kits
Bitte beachten Sie die folgenden Vorsichtshinweise beim Umgang mit dem Wireless Network Interface Kit.
- Das Wireless Network Interface Kit wird in einem Antistatikbeutel geliefert. Um eine Beschädigung des Wireless Network Interface Kits zu vermeiden, sollten Sie kurz einen großen Gegenstand aus Metall berühren, um sich von statischer Elektrizität zu entladen, bevor Sie das Wireless Network Interface Kit aus der Verpackung entfernen.
- Berühren Sie auf keinen Fall die Steckleiste des Wireless Network Interface Kits mit bloßen Händen.
- Achten Sie beim Halten des Wireless Network Interface Kits darauf, eine Berührung der Platinenoberfläche zu vermeiden. Halten Sie das Wireless Network Interface Kit stets an den Kanten der Platine.
- Vermeiden Sie übermäßige Kraftanwendung beim Installieren.

Installation des Wireless Network Interface Kits
VORSICHT
Achten Sie vor dem Installieren (bzw. Entfernen) des Wireless Network Interface Kits unbedingt darauf, den Drucker auszuschalten und das Netzkabel von der Netzsteckdose zu trennen.

Überprüfung der Installation des Wireless Network Interface Kits
Um eine korrekte Installation des Wireless Network Interface Kits zu überprüfen, drucken Sie die Statusseite aus.
Die Vorgehensweise für das Ausdrucken einer Statusseite finden Sie in der Bedienungsanleitung.

Netzwerkeinstellungen
Netzwerkeinstellungen und Betriebsverfahren finden Sie in Bedienungsanleitung und Anleitung vom Wireless Network Interface.

Italiano

Kit interfaccia di rete wireless IB-51 opzionale Guida all'installazione

Introduzione
IB-51 è un kit interfaccia di rete wireless opzionale per utilizzi con stampanti multifunzione (MFP) e con stampanti a pagine. Si prega di leggere attentamente la presente Guida all'installazione per comprendere il corretto metodo di installazione.
Questo kit interfaccia di rete wireless può essere installato in altri modelli che utilizzano la stessa procedura di installazione.

Contenuto della confezione
IB-51 1
Guida all'installazione (la presente guida) 1
CD-ROM 1

Precauzioni d'uso del kit interfaccia di rete wireless
Durante l'utilizzo del kit interfaccia di rete wireless, adottare le precauzioni che seguono.
- Il kit interfaccia di rete wireless è spedito in una custodia antistatica. Per evitare eventuali danni, toccare per pochi istanti un oggetto metallico di grandi dimensioni per assicurarsi di scaricare l'elettricità statica prima di rimuovere la il kit interfaccia di rete wireless dalla custodia.
- Non toccare la sezione del connettore del kit interfaccia di rete wireless direttamente con le mani.
- Nell'afferrare il kit interfaccia di rete wireless, evitare il contatto con la superficie della scheda a circuito. Afferrarlo alle estremità.
- Non esercitare una forza eccessiva durante l'installazione.

Istallazione del kit interfaccia di rete wireless
ATTENZIONE:
prima di installare (o di rimuovere) il kit interfaccia di rete wireless, assicurarsi di aver spento l'alimentazione della macchina e di aver disconnesso la spina del cavo di alimentazione dalla presa CA.

Verifica dell'installazione del kit interfaccia di rete wireless
Per verificare che il kit interfaccia di rete wireless sia stato installato correttamente, stampare la pagina di stato.
Per scoprire le modalità di stampa della pagina di stato, consultare la Guida alle funzioni.

Impostazioni di rete
Per le impostazioni di rete e la procedura operativa, consultare la Guida alle funzioni della stampante e il manuale dell'interfaccia di rete wireless.

简体中文

选装无线网络接口套件 IB-51 安装手册

前言
IB-51 是一款适用于 MFP 和页式打印机的选装无线网络接口套件。为了解正确的安装方法，请仔细通读本《安装手册》。

本无线网络接口套件可通过同样的安装步骤安装到其他机型上去。

包装内容列表
IB-51 1
安装手册（本手册） 1
CD-ROM 1

使用本无线网络接口套件的注意事项
使用本无线网络接口套件时，请遵守以下注意事项。
- 本无线网络接口套件被包装在防静电袋中。将无线网络接口套件从包装袋中取出之前，请短暂触摸大件金属物体以消除静电，以免造成损坏。
- 请勿直接用手触摸无线网络接口套件的连接器部分。
- 拿握无线网络接口套件时，请勿接触到电路板的表面。请拿握其边缘。
- 安装时请不要过于用力。

安装本无线网络接口套件
注意：
安装（或拆卸）本无线网络接口套件前，请务必关掉机器的电源并将电源线插头从 AC 插座上断开。

确认本无线网络接口套件安装正确
为确认本无线网络接口套件已经正确安装，请尝试打印状态页。
有关打印状态页的方法，请参阅《操作手册》。

网络设置
有关网络设置的操作方法和步骤，请参阅打印机的《操作手册》和无线网络接口手册。

동봉물

옵션 무선 네트워크 인터페이스 키트 IB-51 토너 설치 안내서

소개
IB-51은 MFP와 페이지 프린터에 사용되는 옵션 무선 네트워크 인터페이스 키트입니다. 본 토너 설치 안내서를 주의 깊게 읽고 올바른 설치 방법을 숙지하시기 바랍니다. 본 무선 네트워크 인터페이스 키트는 같은 설치 절차를 적용하여 다른 모델에 설치될 수 있습니다.

포장 내용물
IB-51 1
토너 설치 안내서 (본 안내서) 1
CD-ROM롬 1

무선 네트워크 인터페이스 키트 취급 시 주의사항
무선 네트워크 인터페이스 키트 취급 시, 다음과 같은 주의사항을 지켜주시기 바랍니다.
- 무선 네트워크 인터페이스 키트는 정전기 방지 봉투에 포장되어 있습니다. 무선 네트워크 인터페이스 키트를 꺼내기 전에 손상을 예방하기 위해 큰 금속 물체를 잠시 만져서 정전기를 방지하시기 바랍니다.
- 무선 네트워크 인터페이스 키트의 연결부를 직접 손으로 만지지 마십시오.
- 무선 네트워크 인터페이스 키트를 잡을 때는 회로판 표면에 닿지 않도록 끝부분을 잡으십시오.
- 설치 시 과도한 힘을 가하지 마십시오.

무선 네트워크 인터페이스 키트 설치
주의사항
무선 네트워크 인터페이스 키트를 설치(또는 제거)하기 전, 기기의 전원을 끄고 AC 아우트렛에서 전원선을 분리하십시오.

무선 네트워크 인터페이스 키트 설치 확인
무선 네트워크 인터페이스 키트가 올바르게 설치되었는지 확인하려면 상태 페이지를 출력해보십시오. 상태 페이지를 출력하는 방법에 관해서는 사용설명서를 참고하시기 바랍니다.

네트워크 설정
네트워크 설정 및 사용 절차에 관련된 정보는 프린터의 사용설명서와 무선 네트워크 인터페이스 매뉴얼을 참고하시기 바랍니다.

TONER

日本語

オプションワイヤレスネットワーク インターフェイスキット IB-51 インストールガイド

はじめに
IB-51 は京セラ複合機およびプリンター用ワイヤレスネットワークインターフェイスキットです。本書をよくお読みいただき、正しく装着してください。なお、本オプションはその他の機種でも同様の手順で装着できます。

梱包内容の確認
ワイヤレスネットワークインターフェイス本体 1
インストールガイド(本書) 1
CD-ROM 1

取扱い上の注意
本オプションの取り扱いには、以下のことにご注意ください。
- 本品は静電気防止対策済みの袋に入っています。袋の中から取り出す際は、念のため大きな金属物に触れて身体の静電気を取り除いてください。
- 本品のコネクター部分には手を触れないでください。
- 本品を持つ際は基板の表面に手を触れずに、基板の端を持ってください。
- 装着時は無理な力を加えないでください。

ワイヤレスネットワークインターフェイスキットの装着
注意
本オプションの装着（または取り外し）は、複合機またはプリンターの電源を切り、電源プラグをコンセントから抜いた状態で行ってください。

装着の確認
ステータスページを印刷して、本オプションが正しく装着されたかを確認できます。
ステータスページの印刷方法は、使用説明書を参照してください。

ネットワークの設定
ネットワークの設定、操作手順については、プリンターの使用説明書とワイヤレスネットワークインターフェイスのマニュアルを参照してください。

Printed in China 305J55631001 First edition 2012.6

KYOCERA Document Solutions America, Inc.
Headquarters
225 Sand Road,
Fairfield, New Jersey 07004-0008, USA
Phone: +1-973-808-8444
Fax: +1-973-882-6000

Latin America
8240 NW 52nd Terrace Dawson Building, Suite 100
Miami, Florida 33166, USA
Phone: +1-305-421-6640
Fax: +1-305-421-6666

KYOCERA Document Solutions Canada, Ltd.
6120 Kestrel Rd., Mississauga, ON L5T 1S8,
Canada
Phone: +1-905-670-4425
Fax: +1-905-670-8116

KYOCERA Document Solutions Mexico, S.A. de C.V.
Calle Arquimedes No. 130, 4 Piso, Colonia Polanco
Chapultepec, Delegacion Miguel Hidalgo,
Distrito Federal, C.P. 11560, México
Phone: +52-555-383-2741
Fax: +52-555-383-7804

KYOCERA Document Solutions Brazil, Ltda.
Av.Tambore,1180 Mod.B-09 CEP 06460-000
Tambore-Barueri-SP, Brazil
Phone: +55-11-4195-8496
Fax: +55-11-4195-6167

KYOCERA Document Solutions Australia Pty. Ltd.
Level 3, 6-10 Talavera Road North Ryde N.S.W, 2113,
Australia
Phone: +61-2-9888-9999
Fax: +61-2-9888-9588

KYOCERA Document Solutions New Zealand Ltd.
1-3 Parkhead Place, Albany, Auckland 1330,
New Zealand
Phone: +64-9-415-4517
Fax: +64-9-415-4597

KYOCERA Document Solutions Asia Limited
16/F.,Mita Centre, 552-566, Castle Peak Road
Tsuenwan, NT, Hong Kong
Phone: +852-2610-2181
Fax: +852-2610-2063

KYOCERA Document Solutions (Thailand) Corp., Ltd.
335 Ratchadapisek Road, Bangsue, Bangkok 10800,
Thailand
Phone: +66-2-586-0333
Fax: +66-2-586-0278

KYOCERA Document Solutions Singapore Pte. Ltd.
12 Tai Seng Street #04-01A,
Luxasia Building, Singapore 534118
Phone: +65-6741-8733
Fax: +65-6748-3788

KYOCERA Document Solutions Hong Kong Limited
16/F.,Mita Centre, 552-566, Castle Peak Road
Tsuenwan, NT, Hong Kong
Phone: +852-2429-7422
Fax: +852-2423-2159

KYOCERA Document Solutions Taiwan Corporation
6F., No.37, Sec. 3, Minquan E. Rd.,
Zhongshan Dist., Taipei 104, Taiwan R.O.C.
Phone: +886-2-2507-6709
Fax: +886-2-2507-8432

KYOCERA Document Solutions Korea Co., Ltd.
18F, Kangnam bldg, 1321-1,
Seocho-Dong, Seocho-Gu, Seoul, Korea
Phone: +822-6933-4050
Fax: +822-747-0084

KYOCERA Document Solutions India Private Limited
First Floor, ORCHID CENTRE
Sector-53, Golf Course Road, Gurgaon 122 002,
India
Phone: +91-0124-4671000
Fax: +91-0124-4671001

TONER
www.tonerplus.com.ua

KYOCERA Document Solutions Europe B.V.
Bloemlaan 4, 2132 NP Hoofddorp,
The Netherlands
Phone: +31-20-654-0000
Fax: +31-20-653-1256

KYOCERA Document Solutions Nederland B.V.
Beechavenue 25, 1119 RA Schiphol-Rijk,
The Netherlands
Phone: +31-20-5877200
Fax: +31-20-5877260

KYOCERA Document Solutions (U.K.) Limited
8 Beacontree Plaza,
Gillette Way Reading, Berkshire RG2 0BS,
United Kingdom
Phone: +44-118-931-1500
Fax: +44-118-931-1108

KYOCERA Document Solutions Italia S.p.A.
Via Verdi, 89/91 20063 Cernusco s/N.(MI),
Italy
Phone: +39-02-921791
Fax: +39-02-92179-600

KYOCERA Document Solutions Belgium N.V.
Sint-Martinusweg 199-201 1930 Zaventem,
Belgium
Phone: +32-2-7209270
Fax: +32-2-7208748

KYOCERA Document Solutions France S.A.S.
Espace Technologique de St Aubin
Route de l'Orme 91195 Gif-sur-Yvette CEDEX,
France
Phone: +33-1-69852600
Fax: +33-1-69853409

KYOCERA Document Solutions Espana, S.A.
Edificio Kyocera, Avda. de Manacor No.2,
28290 Las Matas (Madrid), Spain
Phone: +34-91-6318392
Fax: +34-91-6318219

KYOCERA Document Solutions Finland Oy
Atomitie 5C, 00370 Helsinki,
Finland
Phone: +358-9-47805200
Fax: +358-9-47805390

KYOCERA Document Solutions Europe B.V., Amsterdam (NL) Zürich Branch
Hohlstrasse 614, 8048 Zürich,
Switzerland
Phone: +41-44-9084949
Fax: +41-44-9084950

KYOCERA Document Solutions Deutschland GmbH
Otto-Hahn-Strasse 12, 40670 Meerbusch,
Germany
Phone: +49-2159-9180
Fax: +49-2159-918100

KYOCERA Document Solutions Austria GmbH
Eduard-Kittenberger-Gasse 95, 1230 Vienna,
Austria
Phone: +43-1-863380
Fax: +43-1-86338-400

KYOCERA Document Solutions Nordic AB
Esbogatan 16B 164 75 Kista, Sweden
Phone: +46-8-546-550-00
Fax: +46-8-546-550-10

KYOCERA Document Solutions Norge NUF
Postboks 150 Oppsal, 0619 Oslo,
Norway
Phone: +47-22-62-73-00
Fax: +47-22-62-72-00

KYOCERA Document Solutions Danmark A/S
Ejby Industrivej 60, DK-2600 Glostrup,
Denmark
Phone: +45-70223880
Fax: +45-45765850

KYOCERA Document Solutions Portugal Lda.
Rua do Centro Cultural, 41 (Alvalade) 1700-106 Lisboa,
Portugal
Phone: +351-21-843-6780
Fax: +351-21-849-3312

KYOCERA Document Solutions South Africa (Pty) Ltd.
49 Kyalami Boulevard,
Kyalami Business Park 1685 Midrand, South Africa
Phone: +27-11-540-2600
Fax: +27-11-466-3050

KYOCERA Document Solutions Russia LLC
Botanichesky pereulok 5, Moscow, 129090,
Russia
Phone: +7(495)741-0004
Fax: +7(495)741-0018

KYOCERA Document Solutions Middle East
Dubai Internet City, Bldg. 17,
Office 157 P.O. Box 500817, Dubai,
United Arab Emirates
Phone: +971-04-433-0412

KYOCERA Document Solutions Inc.
2-28, 1-chome, Tamatsukuri, Chuo-ku
Osaka 540-8585, Japan
Phone: +81-6-6764-3555
http://www.kyoceradocumentsolutions.com

© 2012 KYOCERA Document Solutions Inc.
KYOCERA is a trademark of KYOCERA Corporation