KYOCERA

FS-3540MFP
FS-3640MFP

SERVICE MANUAL

TONER+
www.tonerplus.com.ua

Published in April 2011
842MD111
2MDSM061
Rev.1

CAUTION

RISK OF EXPLOSION IF BATTERY IS REPLACED BY AN INCORRECT TYPE. DISPOSE OF USED BATTERIES ACCORDING TO THE INSTRUCTIONS.

It may be illegal to dispose of this battery into the municipal waste stream. Check with your local solid waste officials for details in your area for proper disposal.

ATTENTION

IL Y A UN RISQUE D'EXPLOSION SI LA BATTERIE EST REMPLACEE PAR UN MODELE DE TYPE INCORRECT. METTRE AU REBUT LES BATTERIES UTILISEES SELON LES INSTRUCTIONS DONNEES.

Il peut être illégal de jeter les batteries dans des eaux d'égout municipales. Vérifiez avec les fonctionnaires municipaux de votre région pour les détails concernant des déchets solides et une mise au rebut appropriée.

TONER+
www.tonerplus.com.ua

Revision history

Revision	Date	Replaced pages	Remarks
1	6 April 2011	CONTENTS, 1-1-2, 1-1-3, 1-2-2, 1-2-4, 1-3-2, 1-3-7, 1-3-8, 1-3-21, 1-3-22, 1-3-31, 1-3-58 to 1-3-62, 1-4-8, 1-4-10 to 1-4-12, 1-4-27 to 1-4-29, 1-5-18 to 1-5-25, 1-5-44, 2-3-9, 2-3-13 to 2-3-15, 2-4-3, 2-4-7, INSTALLATION GUIDE	

TONER
www.tonerplus.com.ua

This page is intentionally left blank.

TONER+
www.tonerplus.com.ua

Safety precautions

This booklet provides safety warnings and precautions for our service personnel to ensure the safety of their customers, their machines as well as themselves during maintenance activities. Service personnel are advised to read this booklet carefully to familiarize themselves with the warnings and precautions described here before engaging in maintenance activities.

TONER+
www.tonerplus.com.ua

Safety warnings and precautions

Various symbols are used to protect our service personnel and customers from physical danger and to prevent damage to their property. These symbols are described below:

⚠**DANGER:** High risk of serious bodily injury or death may result from insufficient attention to or incorrect compliance with warning messages using this symbol.

⚠**WARNING:** Serious bodily injury or death may result from insufficient attention to or incorrect compliance with warning messages using this symbol.

⚠**CAUTION:** Bodily injury or damage to property may result from insufficient attention to or incorrect compliance with warning messages using this symbol.

Symbols

The triangle (△) symbol indicates a warning including danger and caution. The specific point of attention is shown inside the symbol.

General warning. Warning of risk of electric shock.

Warning of high temperature.

⃠ indicates a prohibited action. The specific prohibition is shown inside the symbol.

General prohibited action. Disassembly prohibited.

● indicates that action is required. The specific action required is shown inside the symbol.

General action required. Remove the power plug from the wall outlet.

Always ground the copier.

TONER
www.tonerplus.com.ua

1. Installation Precautions

WARNING

- Do not use a power supply with a voltage other than that specified. Avoid multiple connections to one outlet: they may cause fire or electric shock. When using an extension cable, always check that it is adequate for the rated current. .....
- Connect the ground wire to a suitable grounding point. Not grounding the copier may cause fire or electric shock. Connecting the earth wire to an object not approved for the purpose may cause explosion or electric shock. Never connect the ground cable to any of the following: gas pipes, lightning rods, ground cables for telephone lines and water pipes or faucets not approved by the proper authorities. .....

CAUTION:

- Do not place the copier on an infirm or angled surface: the copier may tip over, causing injury. .....
- Do not install the copier in a humid or dusty place. This may cause fire or electric shock. .....
- Do not install the copier near a radiator, heater, other heat source or near flammable material. This may cause fire. .....
- Allow sufficient space around the copier to allow the ventilation grills to keep the machine as cool as possible. Insufficient ventilation may cause heat buildup and poor copying performance. .....
- Always handle the machine by the correct locations when moving it. .....
- Always use anti-toppling and locking devices on copiers so equipped. Failure to do this may cause the copier to move unexpectedly or topple, leading to injury. .....
- Avoid inhaling toner or developer excessively. Protect the eyes. If toner or developer is accidentally ingested, drink a lot of water to dilute it in the stomach and obtain medical attention immediately. If it gets into the eyes, rinse immediately with copious amounts of water and obtain medical attention. .....
- Advice customers that they must always follow the safety warnings and precautions in the copier's instruction handbook. .....

TONER+
www.tonerplus.com.ua

2. Precautions for Maintenance

WARNING

- Always remove the power plug from the wall outlet before starting machine disassembly. .....
- Always follow the procedures for maintenance described in the service manual and other related brochures. .....
- Under no circumstances attempt to bypass or disable safety features including safety mechanisms and protective circuits. .....
- Always use parts having the correct specifications. .....
- Always use the thermostat or thermal fuse specified in the service manual or other related brochure when replacing them. Using a piece of wire, for example, could lead to fire or other serious accident. .....
- When the service manual or other serious brochure specifies a distance or gap for installation of a part, always use the correct scale and measure carefully. .....
- Always check that the copier is correctly connected to an outlet with a ground connection. .....
- Check that the power cable covering is free of damage. Check that the power plug is dust-free. If it is dirty, clean it to remove the risk of fire or electric shock. .....
- Never attempt to disassemble the optical unit in machines using lasers. Leaking laser light may damage eyesight. .....
- Handle the charger sections with care. They are charged to high potentials and may cause electric shock if handled improperly. .....

CAUTION

- Wear safe clothing. If wearing loose clothing or accessories such as ties, make sure they are safely secured so they will not be caught in rotating sections. .....
- Use utmost caution when working on a powered machine. Keep away from chains and belts. .....
- Handle the fixing section with care to avoid burns as it can be extremely hot. .....
- Check that the fixing unit thermistor, heat and press rollers are clean. Dirt on them can cause abnormally high temperatures. .....

TONER

- Do not remove the ozone filter, if any, from the copier except for routine replacement. .....
- Do not pull on the AC power cord or connector wires on high-voltage components when removing them; always hold the plug itself. .....
- Do not route the power cable where it may be stood on or trapped. If necessary, protect it with a cable cover or other appropriate item. .....
- Treat the ends of the wire carefully when installing a new charger wire to avoid electric leaks. .....
- Remove toner completely from electronic components. .....
- Run wire harnesses carefully so that wires will not be trapped or damaged. .....
- After maintenance, always check that all the parts, screws, connectors and wires that were removed, have been refitted correctly. Special attention should be paid to any forgotten connector, trapped wire and missing screws. .....
- Check that all the caution labels that should be present on the machine according to the instruction handbook are clean and not peeling. Replace with new ones if necessary. .....
- Handle greases and solvents with care by following the instructions below: .....
  · Use only a small amount of solvent at a time, being careful not to spill. Wipe spills off completely.
  · Ventilate the room well while using grease or solvents.
  · Allow applied solvents to evaporate completely before refitting the covers or turning the power switch on.
  · Always wash hands afterwards.
- Never dispose of toner or toner bottles in fire. Toner may cause sparks when exposed directly to fire in a furnace, etc. .....
- Should smoke be seen coming from the copier, remove the power plug from the wall outlet immediately. .....

3. Miscellaneous

WARNING

- Never attempt to heat the drum or expose it to any organic solvents such as alcohol, other than the specified refiner; it may generate toxic gas. .....
- Keep the machine away from flammable liquids, gases, and aerosols. A fire or an electric shock might occur. .....

TONER plus.com.ua

This page is intentionally left blank.

TONER+
www.tonerplus.com.ua

CONTENTS

1-1 Specifications

1-1-1 Specifications 1-1-1
1-1-2 Parts names 1-1-5
(1) Overall 1-1-5
(2) Operation panel 1-1-6
1-1-3 Machine cross section 1-1-7

1-2 Installation

1-2-1 Installation environment 1-2-1
1-2-2 Unpacking 1-2-2
(1) Unpacking 1-2-2
(2) Removing the tapes 1-2-3
1-2-3 Installing the expansion memory (option) 1-2-7
1-2-4 Installing the memory card (option) 1-2-8

1-3 Maintenance Mode

1-3-1 Maintenance mode 1-3-1
(1) Executing a maintenance item 1-3-1
(2) Maintenance modes item list 1-3-2
(3) Contents of the maintenance mode items 1-3-5
1-3-2 Service mode 1-3-56
(1) Executing a service mode 1-3-56
(2) Description of service mode 1-3-57

1-4 Troubleshooting

1-4-1 Paper misfeed detection 1-4-1
(1) Paper misfeed indication 1-4-1
(2) Paper misfeed detection condition 1-4-1
1-4-2 Self-diagnostic function 1-4-4
(1) Self-diagnostic function 1-4-4
(2) Self diagnostic codes 1-4-5
1-4-3 Image formation problems 1-4-13
(1) Completely blank printout. 1-4-14
(2) All-black printout. 1-4-15
(3) Dropouts. 1-4-16
(4) Black dots. 1-4-16
(5) Black horizontal streaks. 1-4-16
(6) Black vertical streaks. 1-4-17
(7) Unsharpness. 1-4-17
(8) Gray background. 1-4-17
(9) Dirt on the top edge or back of the paper. 1-4-18
(10) Undulated printing at the right edge (scanning start position). 1-4-18
1-4-4 Electric problems 1-4-19
1-4-5 Mechanical problems 1-4-25
1-4-6 Send error code 1-4-27
(1) Scan to SMB error codes 1-4-27
(2) Scan to FTP error codes 1-4-28
(3) Scan to E-mail error codes 1-4-29

TONER
www.tonerplus.com.ua

1-4-7 Error codes 1-4-30
(1) Error code 1-4-30
(2) Table of general classification 1-4-31
(2-1) U004XX error code table: Interrupted phase B 1-4-33
(2-2) U006XX error code table: Problems with the unit 1-4-33
(2-3) U008XX error code table: Page transmission error 1-4-33
(2-4) U009XX error code table: Page reception error 1-4-33
(2-5) U010XX error code table: G3 transmission 1-4-34
(2-6) U011XX error code table: G3 reception 1-4-35
(2-7) U017XX error code table: V.34 transmission 1-4-36
(2-8) U018XX error code table: V.34 reception 1-4-36
(2-9) U044XX error code table: Encrypted transmission 1-4-36

1-5 Assembly and disassembly

1-5-1 Precautions for assembly and disassembly 1-5-1
(1) Precautions 1-5-1
(2) Drum 1-5-1
(3) Toner 1-5-1
(4) How to tell a genuine Kyocera Mita toner container 1-5-2
1-5-2 Outer covers 1-5-3
(1) Detaching and refitting the right cover and left cover 1-5-3
1-5-3 Paper feed section 1-5-6
(1) Detaching and refitting the paper feed assembly (paper feed roller and pickup roller) 1-5-6
(2) Detaching and refitting the retard roller assembly 1-5-7
(3) Detaching and refitting the upper registration and lower roller 1-5-8
(4) Detaching and refitting the MP paper feed roller 1-5-10
1-5-4 Optical section 1-5-11
(1) Detaching and refitting the Document processor 1-5-11
(2) Detaching and refitting the scanner unit 1-5-13
(3) Detaching and refitting the laser scanner unit 1-5-16
(4) Replacing the image scanner unit (ISU) 1-5-19
1-5-5 Developing section 1-5-26
(1) Detaching and refitting the developing unit 1-5-26
1-5-6 Drum section 1-5-27
(1) Detaching and refitting the drum unit 1-5-27
(2) Detaching and refitting the main charger unit 1-5-27
1-5-7 Transfer/separation section 1-5-28
(1) Detaching and refitting the transfer roller and separation brush unit 1-5-28
1-5-8 Fuser section 1-5-30
(1) Detaching and refitting the fuser unit 1-5-30
1-5-9 PWBs 1-5-31
(1) Detaching and refitting the engine PWB 1-5-31
(2) Detaching and refitting the main PWB 1-5-35
(3) Detaching and refitting the power source PWB 1-5-38
(4) Detaching and refitting the FAX control PWB 1-5-43
1-5-10 Others 1-5-44
(1) Detaching and refitting the paper feed drive unit 1-5-44
(2) Detaching and refitting the main drive unit 1-5-46
(3) Direction of installing the principal fan motors 1-5-47

TONER
www.tonerplus.com.ua

1-5-11 Document processor 1-5-48
(1) Detaching and refitting the DP rear cover and DP front cover 1-5-48
(2) Detaching and refitting the DP drive PWB 1-5-49
(3) Detaching and refitting the DP forwarding pulley assembly and DP separation pad assembly.1-5-50

1-6 Requirements on PWB Replacement

1-6-1 Upgrading the firmware 1-6-1
1-6-2 Remarks on engine PWB replacement 1-6-2

2-1 Mechanical Construction

2-1-1 Paper feed/conveying section 2-1-1
(1) Cassette paper feed section 2-1-1
(2) MP tray paper feed section 2-1-3
(3) Paper conveying section 2-1-4
2-1-2 Drum section 2-1-5
2-1-3 Optical section 2-1-6
(1) Scanner unit 2-1-6
(2) Image scanner unit (ISU) 2-1-7
(3) Laser scanner unit 2-1-9
2-1-4 Developing section 2-1-11
2-1-5 Transfer/Separation section 2-1-13
2-1-6 Cleaning section 2-1-14
2-1-7 Fuser section 2-1-16
2-1-8 Eject/Rear unit section 2-1-18
2-1-9 Duplex conveying section 2-1-20
2-1-10 Document processor 2-1-21
(1) Original feed section 2-1-21
(2) Original conveying section 2-1-22
(3) Original switchback/eject sections 2-1-23

2-2 Electrical Parts Layout

2-2-1 Electrical parts layout 2-2-1
(1) PWBs 2-2-1
(2) Switches and sensors 2-2-3
(3) Motors 2-2-5
(4) Other electrical components 2-2-6
(5) Document processor 2-2-7

2-3 Operation of the PWBs

2-3-1 Power source PWB 2-3-1
2-3-2 Engine PWB 2-3-3
2-3-3 Main PWB 2-3-8
2-3-4 Connect-L PWB 2-3-16
2-3-5 Connect-R PWB 2-3-20
2-3-6 DP drive PWB 2-3-23

TONER
www.tonerplus.com.ua

2-4 Appendixes

2-4-1 Appendixes 2-4-1
(1) Wiring diagram 2-4-1
(2) Repetitive defects gauge 2-4-4
(3) Maintenance kits 2-4-5
(4) Firmware Environment Commands 2-4-6
(5) Maintenance Commands 2-4-12

INSTALLATION GUIDE

Card Authentication Kit (C)

TONER
www.tonerplus.com.ua

1-1-1 Specifications

Basic functions

Item		Specifications	
		3 in 1 model (without FAX)	4 in 1 model (with FAX)
Type		Desktop	
Printing method		Electrophotography by semiconductor laser, single drum system	
Originals		Sheet, Book, 3-dimensional objects (maximum original size: Folio/Legal)	
Original feed system		Contact glass: fixed	
Paper weight	Cassette	60 to 120 g/m² (Duplex: 60 to 120 g/m²)	
	MP tray	60 to 220 g/m²	
Paper type	Cassette	Plain, Recycled, Preprinted, Bond, Color (Colour), Prepunched, Letterhead, High Quality, Custom 1 to 8 (Duplex: Same as simplex)	
	MP tray	Plain, Transparency, Rough, Vellum, Labels, Recycled, Preprinted, Bond, Cardstock, Color (Colour), Prepunched, Letterhead, Thick, Envelope, High Quality, Custom 1 to 8	
Paper size	Cassette	A4, B5, A5, A6, Legal, Letter, Statement, Executive, Oficio II, Folio, 16K, Custom	
	MP tray	A4, B5, B5(ISO), A5, A6, B6, Envelope #10, Envelope #9, Envelope #6, Envelope Monarch, Envelope DL, Envelope C5, Hagaki, Oufuku Hagaki, Youkei 2, Youkei 4, Legal, Letter, Statement, Executive, Oficio II, Folio, 16K, Custom	
Zoom level		Manual mode: 25 - 400%, 1% increments Auto mode: 400%, 200%, 141%, 129%, 115%, 90%, 86%, 78%, 70%, 64%, 50%, 25%	
Copying speed	Simplex	A4R : 40 ppm LetterR : 42 ppm Legal : 33 ppm B5R : 33 ppm A5R/A6R : 22 ppm	
	Duplex	A4R : 24.5 ppm LetterR : 26 ppm Legal : 16.5 ppm B5R : 24 ppm A5R : 21 ppm	
First copy time (A4, feed from cassette)		7.0 second or less	
Warm-up time (22°C/71.6°F, 60%RH)		Power on: 22 second or less	
Paper capacity	Cassette	500 sheets (80g/m²)	
	MP tray	100 sheets (80 g/m², plain paper, Letter/A4 or smaller)	
Output tray capacity		500 sheets (80g/m²)	
Continuous printing		1 to 999 sheets	
Scanning system		Flat bed scanning by CCD image sensor	

TONER

Item		Specifications	
		3 in 1 model (without FAX)	4 in 1 model (with FAX)
Photoconductor		a-Si drum (diameter 30 mm)	
Image write system		Semiconductor laser (1 beam)	
Charging system		Contact charger roller method (positive charging)	
Developing system		Mono component dry developing method Toner replenishing: Automatic from the toner container	
Transfer system		Transfer roller (negative-charged)	
Separation system		Small diameter separation, discharger brush (negative-charged)	
Cleaning system		Counter blade cleaning + cleaning roller	
Charge erasing system		Exposure by eraser lamp (LED)	
Fusing system		Heat roller system Heat source: halogen heater Abnormally high temperature protection devices: thermostat	
CPU		PowerPC464 (800MHz)	
Memory	Standard	1024MB	
	Maximum	2048MB	
Interface		USB: 1 port (Hi-speed USB 2.0) USB host: 2 port Ethernet: 1 port (10BASE-T/100BASE-TX/1000BASE-TX)	
Resolution		600×600 dpi	
Operating environment	Temperature	10 to 32.5 °C/50 to 90.5 °F	
	Humidity	15 to 80%	
	Altitude	2,500 m/8,202 ft maximum	
	Brightness	1,500 lux maximum	
Dimensions (W × D× H)		494 × 497.1 × 566.5 mm 19 7/16” × 19 9/16” × 22 5/16”	
Weight		Approx. 26.38 kg / 58.16 lbs	Approx. 26.68 kg / 58.82 lbs
Space Space required (W × D)		Without MP tray: 494 × 497.1 mm 19 7/16” × 19 9/16” With MP tray : 494 × 656.1 mm 19 7/16” × 25 13/16”	
Power source		120 V AC, 60 Hz, more than 10.0 A 220 - 240 V AC, 50/60 Hz, more than 6.0A	
Options		Paper feeder × 3, Expanded memory	

TONER
www.tonerplus.com.ua

Document processor functions

Item	Specifications
Original feed method	Automatic feed
Supported original types	Sheet originals
Original sizes	Maximum: Legal/A4 Minimum: Statement/A5
Original weights	Simplex: 50 to 120 g/m² Duplex: 50 to 110 g/m²
Loading capacity	50 sheets (50 to 80 g/m²) maximum
Dimensions (W × D× H)	490 × 339 × 104 mm 19 5/16” × 13 5/16” × 4 1/8”
Weight	3 kg or less / 6.6 lbs. or less

Printing functions

Item	Specifications
Printing speed	Same as copying speed.
First print time (A4, feed from cassette)	9.5 seconds or less
Resolution	Fast 1200, 600 dpi
Operating system	Windows 2000, Windows XP, Windows XP Professional, Windows Server 2003, Windows Server 2003 x64 Edition, Windows Vista x86 Edition, Windows Vista x64 Edition, Windows 2008 Server, Windows Server 2008 x64 Edition, Windows 7, Apple Macintosh OS 10.x
Interface	USB: 1 port (Hi-speed USB 2.0) USB host: 1 port Ethernet: 1 port (10BASE-T/100BASE-TX/1000BASE-TX)
Page description language	PRESCRIBE

Scanning functions

Item	Specifications
Compatible operation system	Windows 2000 (Service Pack 4), Windows XP, Windows Vista, Windows Server 2003, Windows Server 2008, Windows 7
System requirements	IBM PC/AT compatible CPU: Celeron 600MHz or higher RAM: 128MBor more HDD free space: 20MB or more Interface: USB
Resolution	600 dpi, 400 dpi, 300 dpi, 200 dpi, 200×400 dpi, 200×100 dpi
File format	JPEG, TIFF, PDF, XPS

TONER

Item	Specifications
Scanning speed	1-sided: B/W 35 images/min Color 13 images/min (A4 landscape, 600 dpi, Image quality: Text/Photo original)
Interface	Ethernet (10 BASE-T/100 BASE-TX/1000BASE-TX) USB2.0 (Hi-Speed USB)
Network protocol	TCP/IP
Transmission system	PC transmission SMB Scan to SMB FTP Scan to FTP, FTP over SSL E-mail transmission SNMP Scan to E-mail TWAIN scan WIA scan

Fax functions : 4in1 model (with FAX) only

Item	Specifications
Compatibility	Super G3
Communication line	Subscriber telephone line
Transmission time	3 seconds or less (33600 bps, JBIG, ITU-T A4 #1 chart)
Transmission speed	33600/31200/28800/26400/24000/21600/19200/16800/14400/12000/9600/7200/4800/2400 bps
Coding scheme	JBIG/MMR/MR/MH
Error correction	ECM
Original size	Max. width: 8 1/2"/215 mm Max. length: 14"/355.6 mm
Automatic document feed	Max. 50 sheets
Scanner resolution	Horizontal × Vertical 200 × 100 dpi Normal (8 dot/mm × 3.85 line/mm) 200 × 200 dpi Fine (8 dot/mm × 7.7 line/mm) 200 × 400 dpi Super fine (8 dot/mm × 15.4 line/mm) 400 × 400 dpi Ultra fine (16 dot/mm × 15.4 line/mm)
Printing resolution	600×600 dpi
Gradations	256 shades (Error diffusion)
One-Touch key	100 keys
Multi-Station transmission	Max. 100 destinations
Substitute memory reception	256 sheets or more (when using ITU-T A4 #1)
Image memory capacity	3.5 MB (standard) (for incoming faxed originals)
Report output	Sent result report, FAX RX result report, Activity report, Status page

NOTE: These specifications are subject to change without notice.

TONER

1-1-2 Parts names

(1) Overall

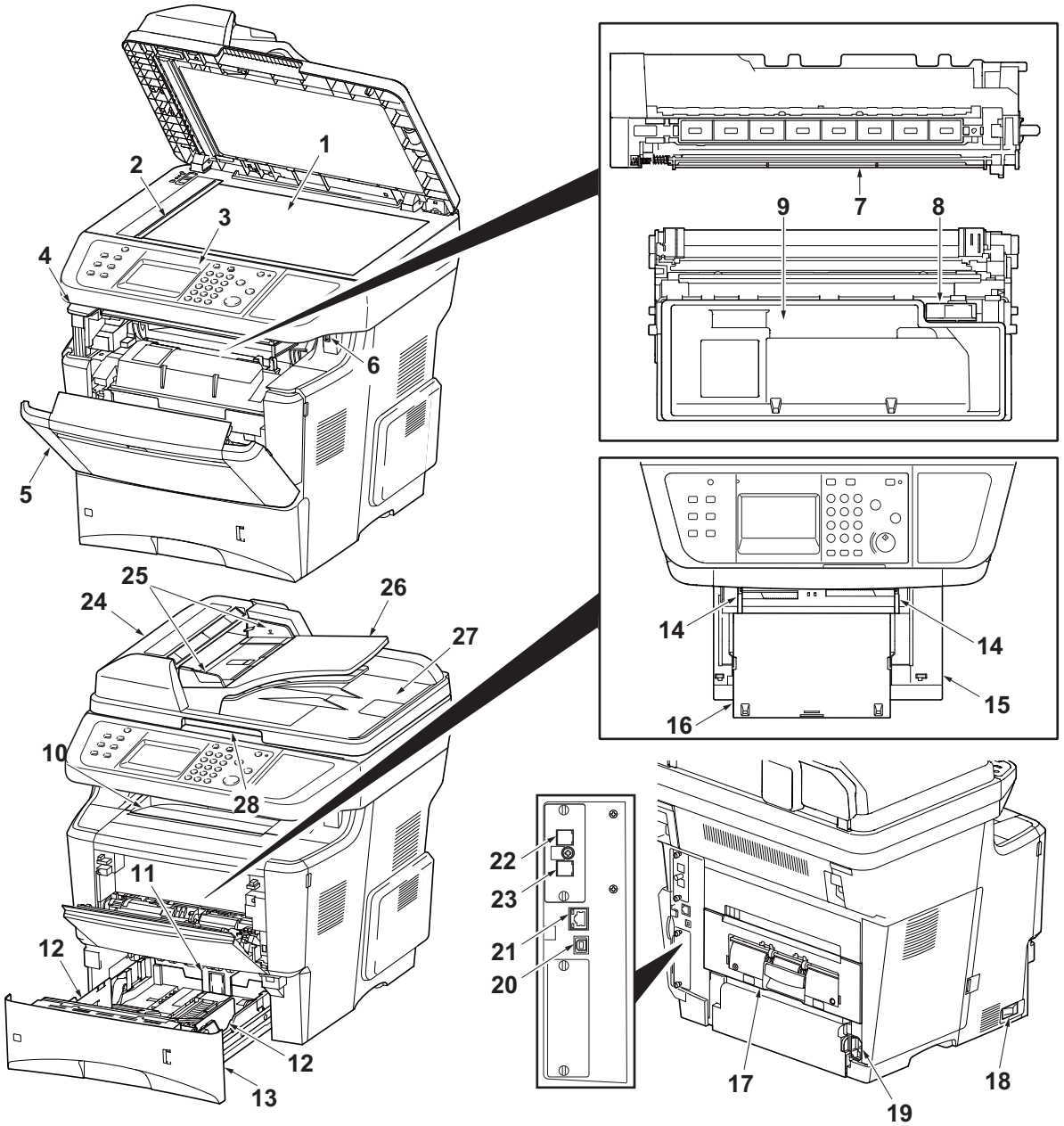

Figure 1-1-1

1. Platen (contact glass)
2. Original size Indicator plate
3. Operation panel
4. Front upper cover
5. Front cover
6. USB Interface connector (front)
7. Drum unit
8. Lock lever
9. Toner container
10. Inner tray
11. Paper length guide
12. Paper width guides
13. Cassette
14. Paper width guides (MP tray)
15. MP (Multi-Purpose) tray
16. MP tray extension
17. Rear unit
18. Main power switch
19. Power cord connector
20. USB Interface connector (rear)
21. Network Interface connector
22. Line connector (L1) *
23. Tel connector (T1) *
24. DP top cover
25. Original width guides
26. Original table
27. Original eject table
28. Opening handle

* 4in1 model (with FAX) only

TONER
www.tonerplus.com.ua

(2) Operation panel

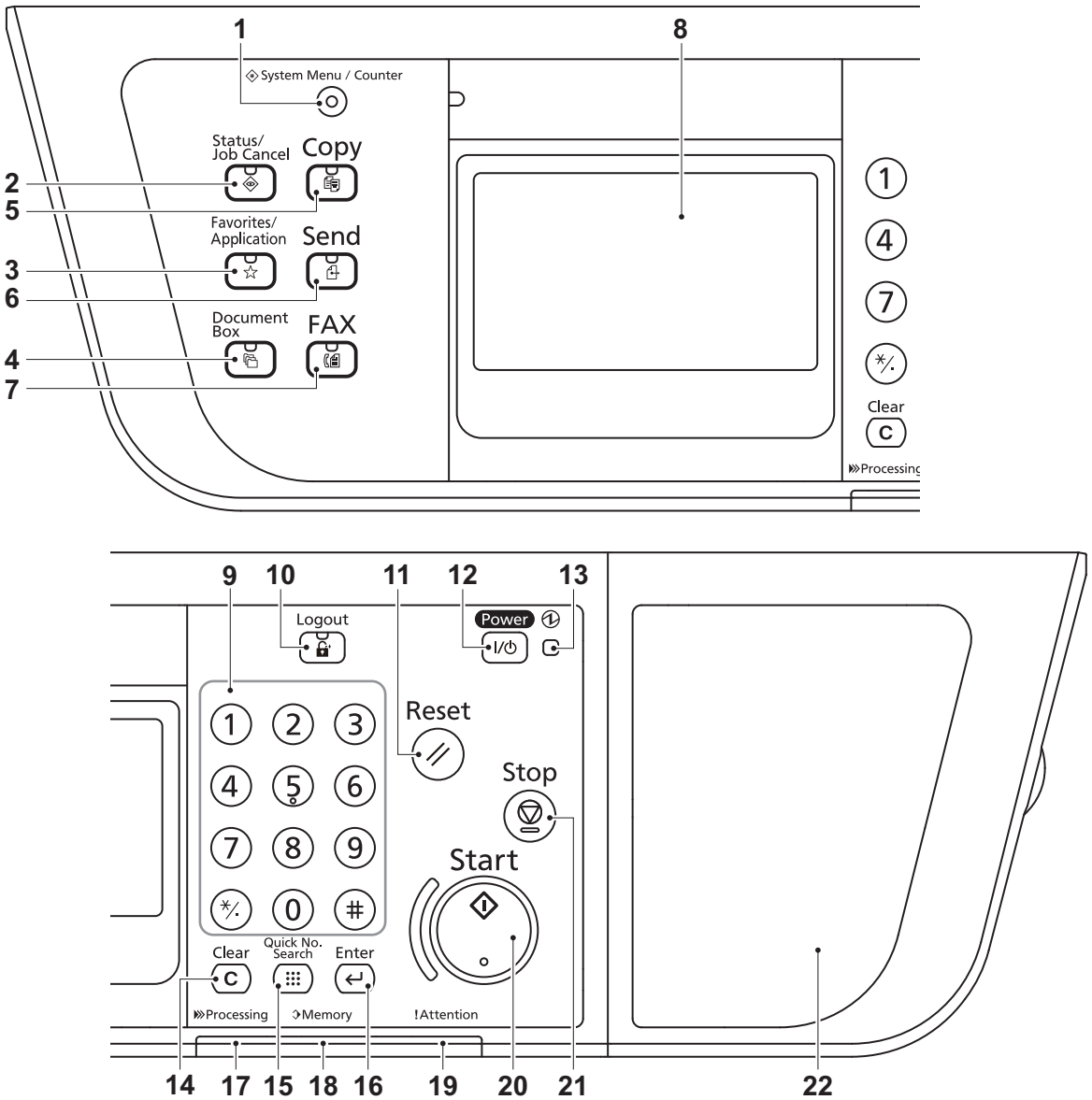

Figure 1-1-2

1. System menu/Counter key
2. Status/Job cancel key
3. Favorites/application key
4. Document box key
5. Copy key
6. Send key
7. FAX key*
8. Auto color key
9. Full color key
10. Black and White key
11. Message display
12. Numeric keys
13. Logout key
14. Reset key
15. Power key
16. Main power LED
17. Clear key
18. Quick No.Search key
19. Enter key
20. Processing indicator
21. Memory indicator
22. Attention indicator
23. Start key
24. Stop key
25. IC Card reader box

*: 4 in 1 model (with FAX) only

TONER
www.tonerplus.com.ua

1-1-3 Machine cross section

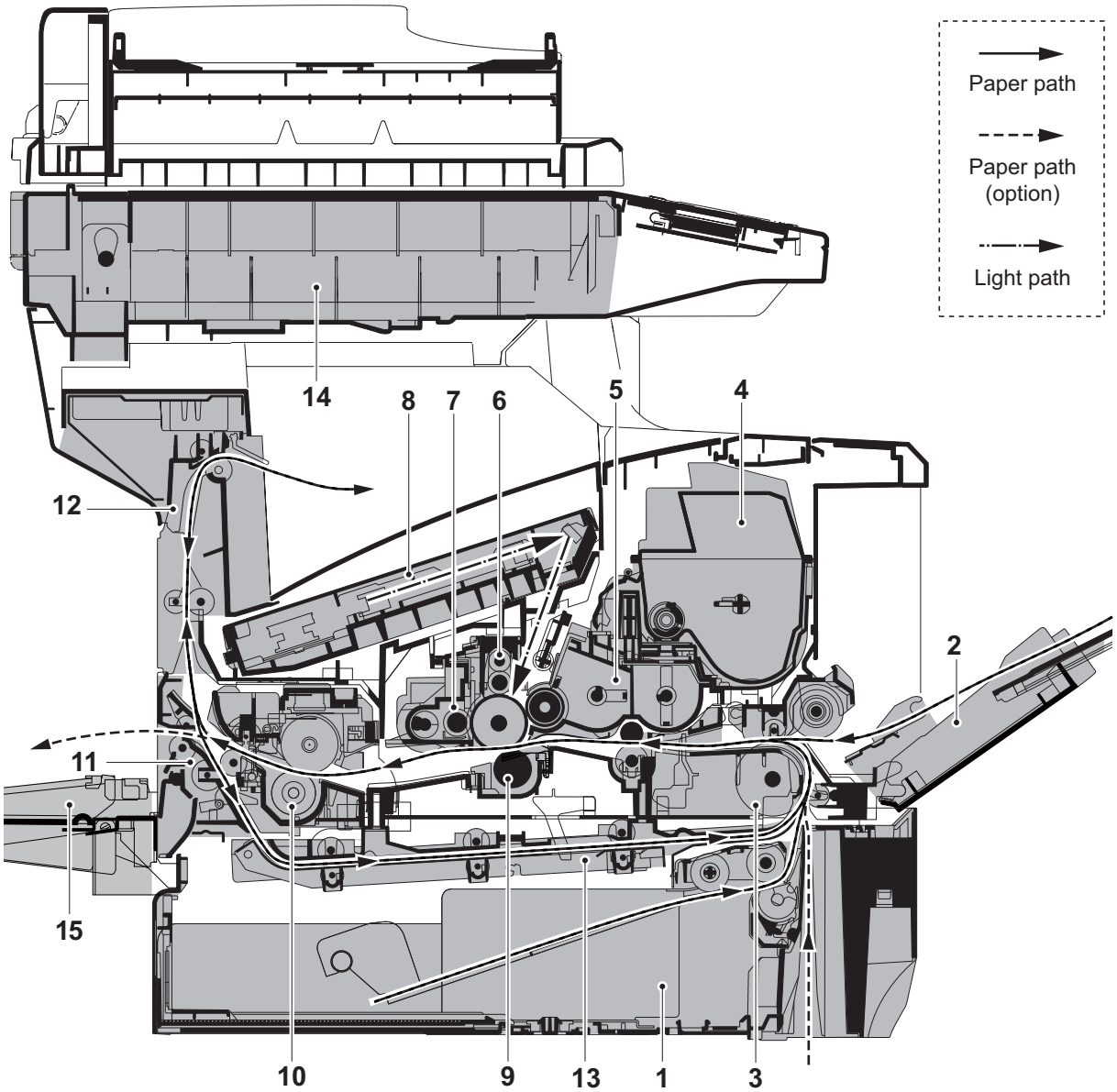

Figure 1-1-3

1. Cassette
2. MP tray
3. Paper feed/conveying section
4. Toner container
5. Developing unit
6. Main charger unit
7. Drum unit
8. Laser scanner unit (LSU)
9. Transfer/separation section
10. Fuser unit
11. Rear unit
12. Eject section
13. Duplex/conveying section
14. Scanner unit

TONER
www.tonerplus.com.ua

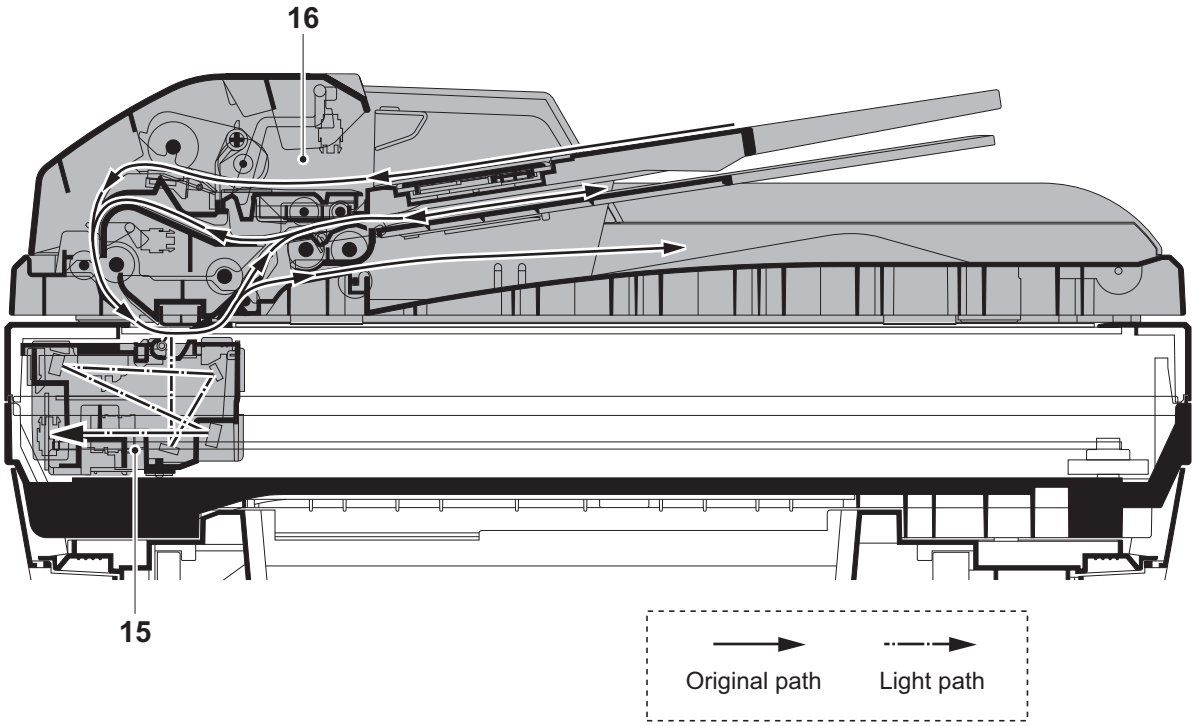

Figure 1-1-4

15. Image scanner unit (ISU)
16. Document processor (DP)

TONER
www.tonerplus.com.ua

1-2-1 Installation environment

1. Temperature: 10 to 32.5°C/50 to 90.5°F
2. Humidity: 15 to 80%RH
3. Power supply:120 V AC, 10.0 A
   220 - 240 V AC, 6.0A
4. Power source frequency: 50 Hz ±2%/60 Hz ±2%
5. Installation location
   Avoid direct sunlight or bright lighting. Ensure that the photoconductor will not be exposed to direct sunlight or other strong light when removing paper jams.
   Avoid locations subject to high temperature and high humidity or low temperature and low humidity; an abrupt change in the environmental temperature; and cool or hot, direct air.
   Avoid places subject to dust and vibrations.
   Choose a surface capable of supporting the weight of the machine.
   Place the machine on a level surface (maximum allowance inclination: 1°).
   Avoid air-borne substances that may adversely affect the machine or degrade the photoconductor, such as mercury, acidic of alkaline vapors, inorganic gasses, NOx, SOx gases and chlorine-based organic solvents.
   Select a well-ventilated location.
6. Allow sufficient access for proper operation and maintenance of the machine.

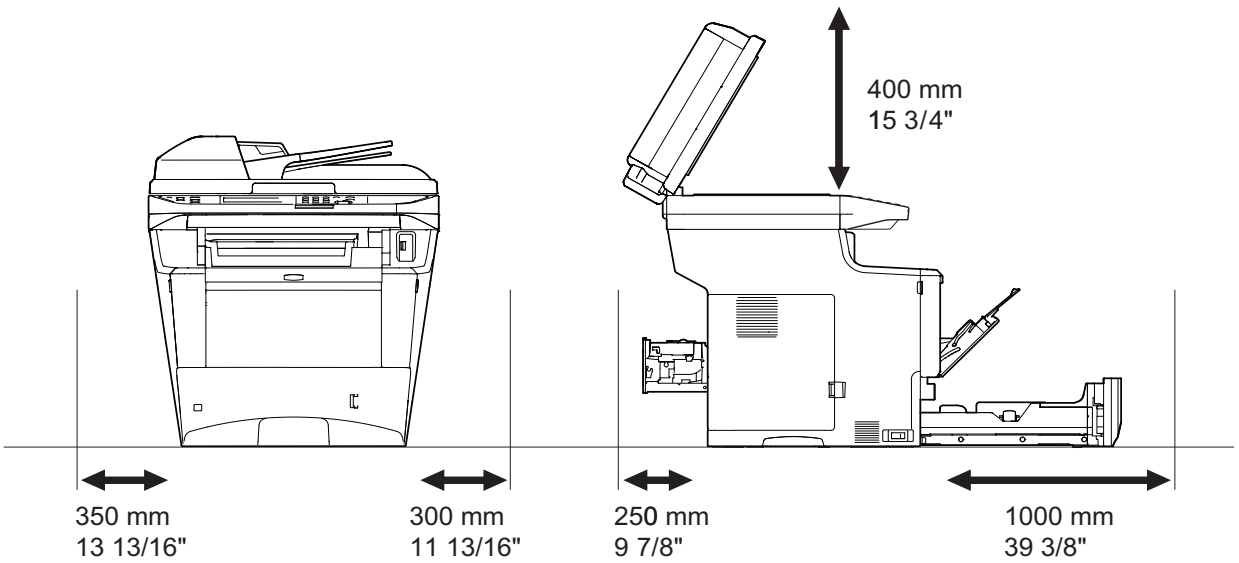

Figure 1-2-1

TONER
www.tonerplus.com.ua

1-2-2 Unpacking

(1) Unpacking

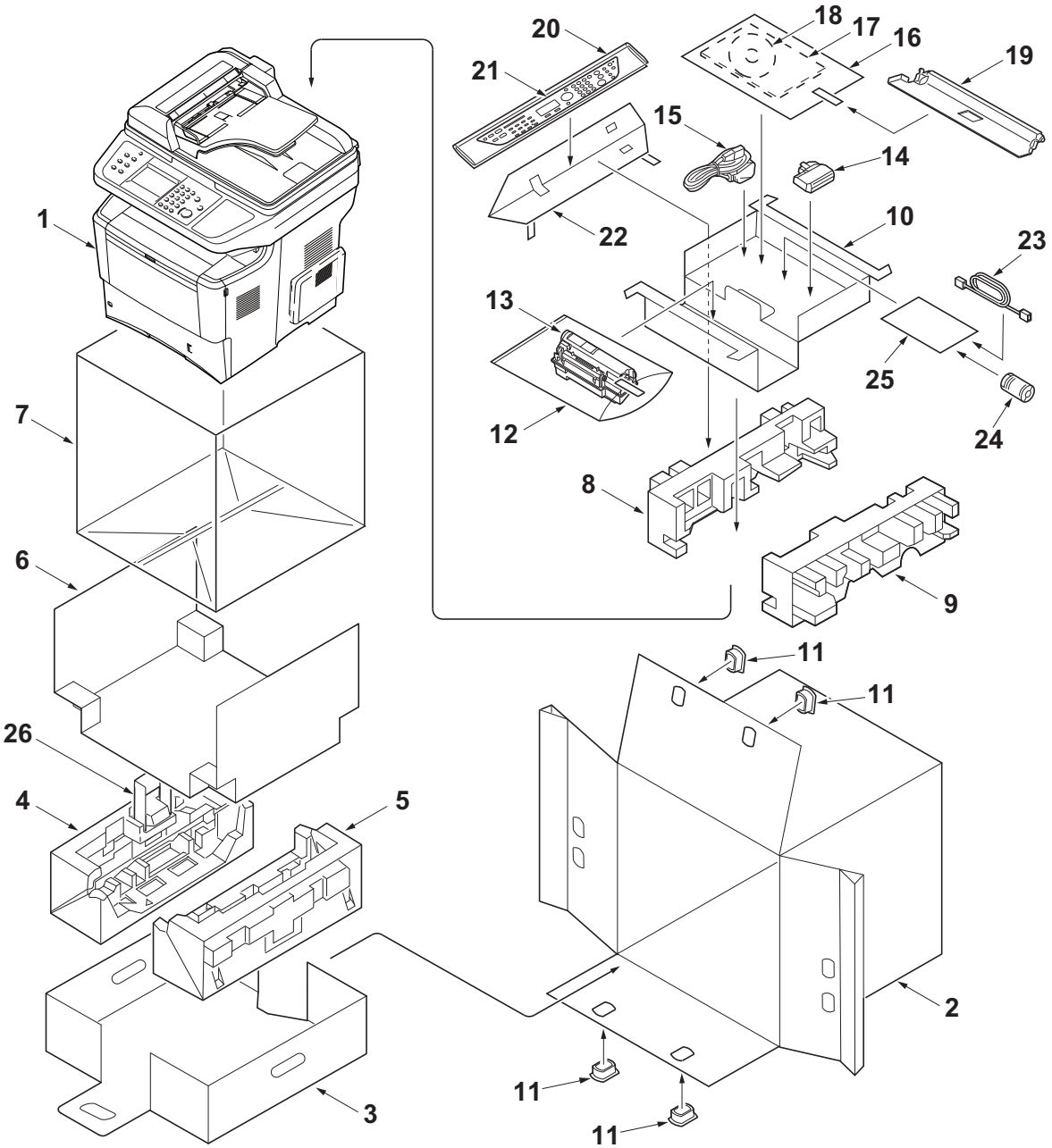

Figure 1-2-2

1. Machine
2. Outer case
3. Bottom case
4. Bottom pad L
5. Bottom pad R
6. Machine spacer
7. Machine cover
8. Top pad L
9. Top pad R
10. Accessory spacer
11. Hinge joints
12. Plastic bag (250×600)
13. Toner container
14. Waste toner box
15. Power cord
16. Plastic bag (240×350)
17. Installation guide etc.
18. CD-ROM *
19. Cassette cover
20. Plastic bag (250×600)
21. Operation labels
22. Operation label pad
23. Modular cable *
24. Ferrite core
25. Plastic bag
26. Machine spacer B

* 120V/240V AC model only.

TONER
www.tonerplus.com.ua

(2) Removing the tapes

<Procedure>

1. Remove the tape.

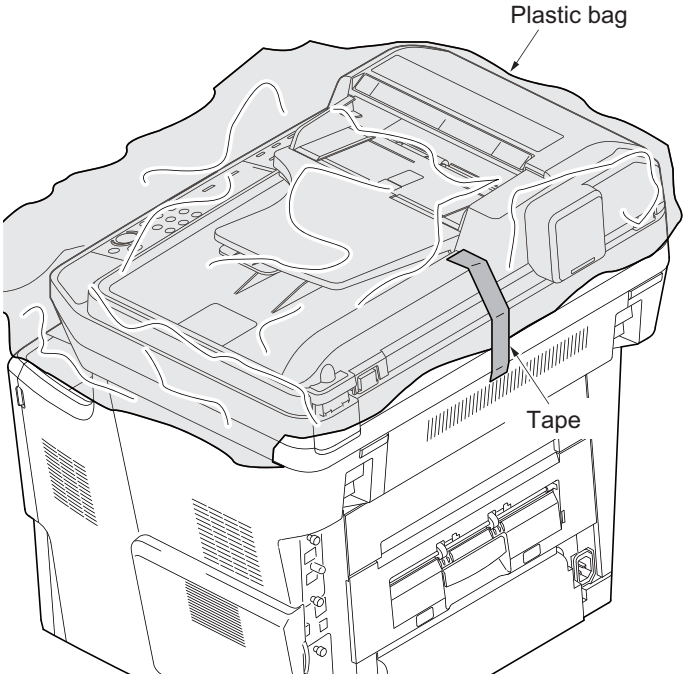

Figure 1-2-3

2. Open the DP.
3. Remove the plastic bag by pulling upwards.
4. Remove two tapes.
5. Remove the sheet and paper.

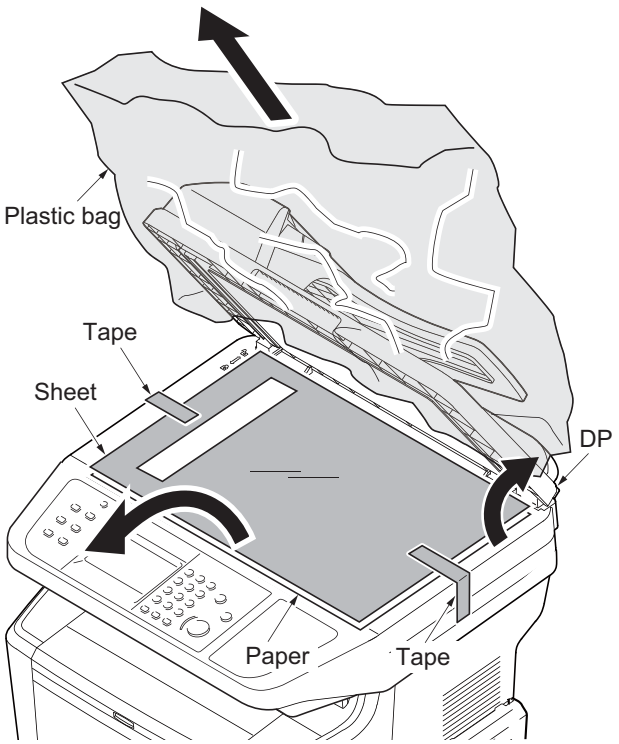

Figure 1-2-4

TONER
www.tonerplus.com.ua

6. Remove the tape A.
7. Move the lock lever to the position of release.
   * : When turning on power if the lock lever is not released, the error message is displayed.
8. Close the DP.
9. Remove ten tapes B.
10. Open the left side cover and then remove the tape C and spacer.
11. Close the left side cover.

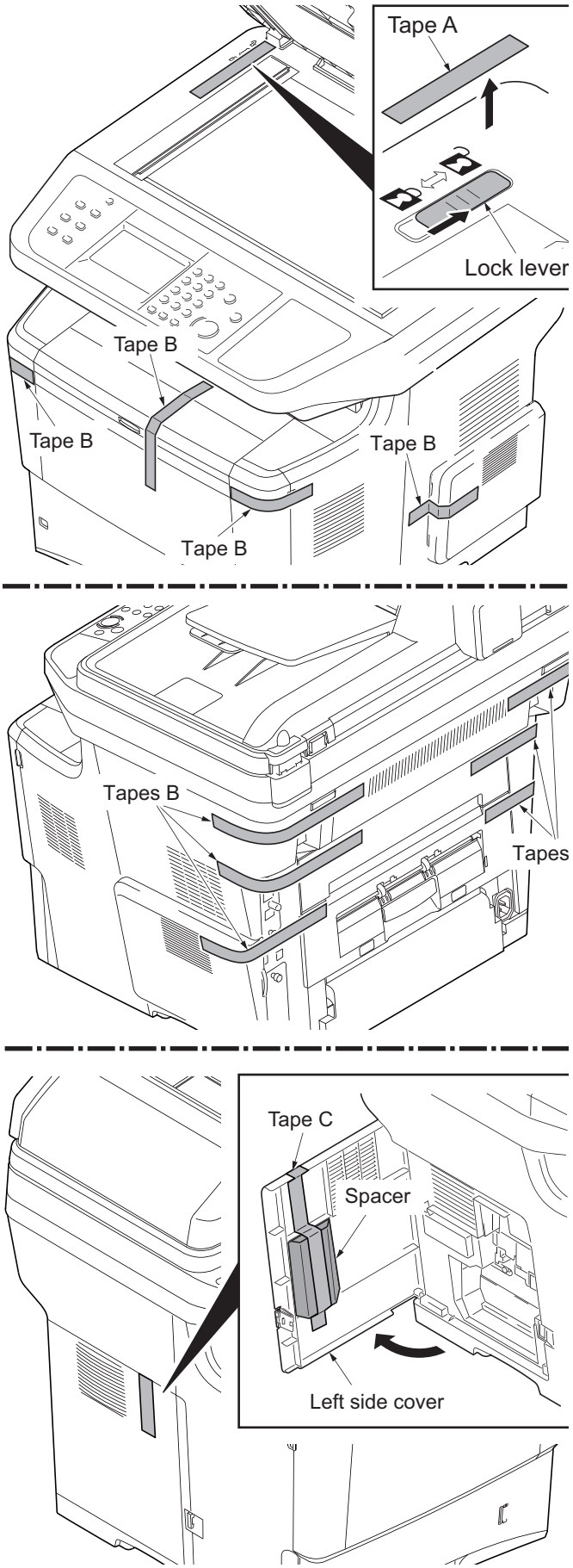

Figure 1-2-5

TONER
www.tonerplus.com.ua

12. Remove the tape.

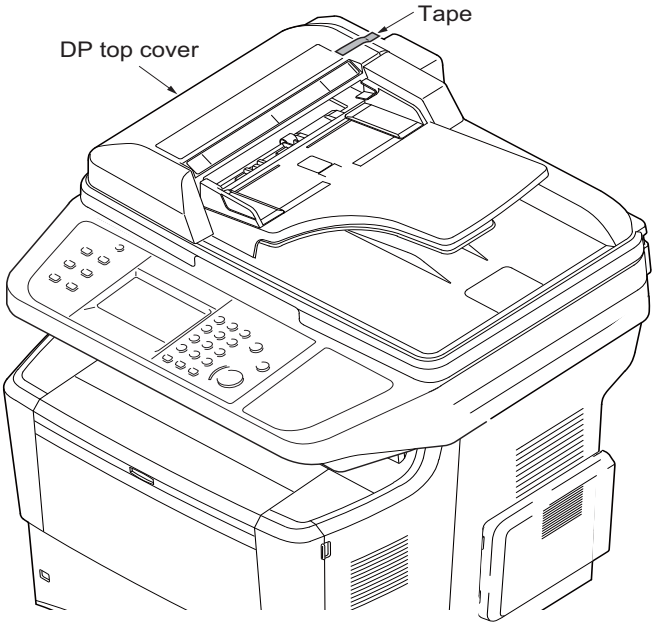

Figure 1-2-6

13. Remove the protection film.

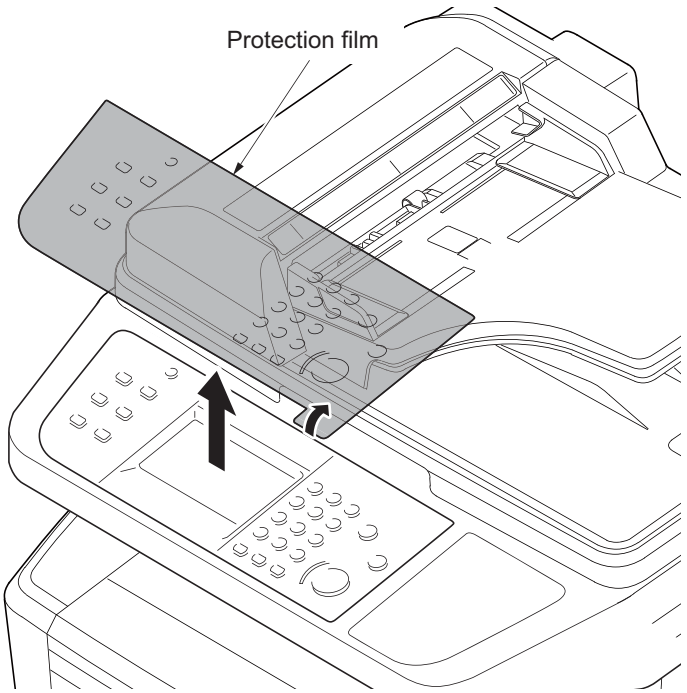

Figure 1-2-7

TONER
www.tonerplus.com.ua

14. Open the front cover.
15. Remove the tape and pad.

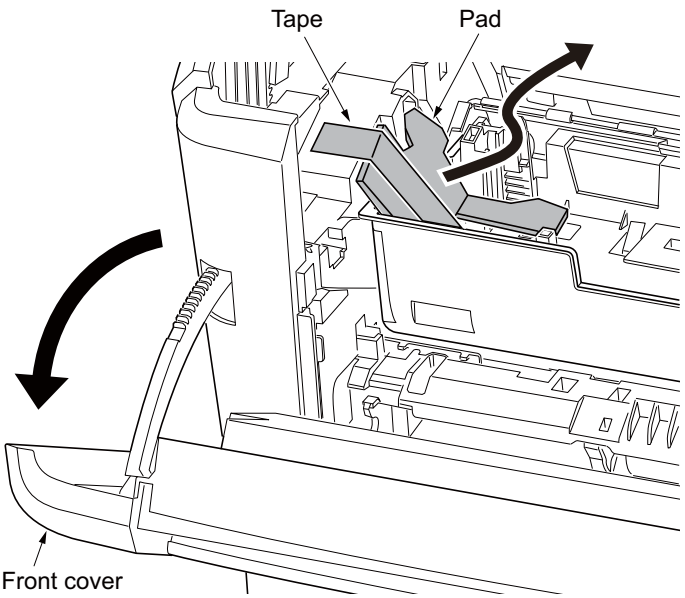

Figure 1-2-8

16. Remove the tape.
17. Close the front cover.

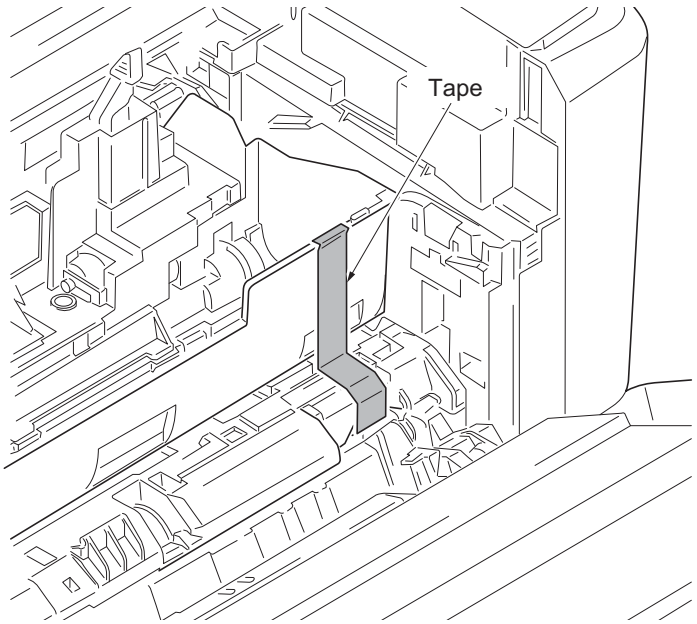

Figure 1-2-9

TONER+
www.tonerplus.com.ua

1-2-3 Installing the expansion memory (option)

<Procedure>

1. Turn off the main power switch.
   Caution: Do not insert or remove expansion memory while machine power is on.
   Doing so may cause damage to the machine and the expansion memory.
2. Remove the right side cover.

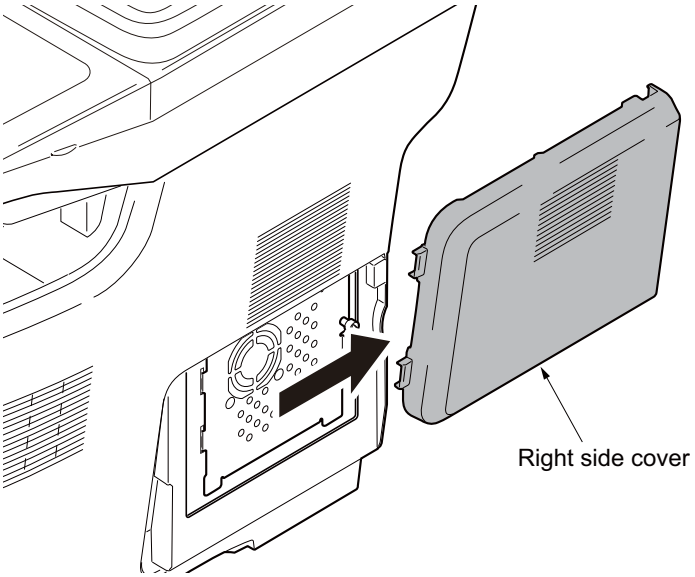

Figure 1-2-10

3. Remove the screw.
4. Open the memory slot cover and then remove the connector of the controller fan motor.
5. Remove the memory slot cover.
6. Insert the expansion memory into the memory socket so that the notches on the memory align with the corresponding protrusions in the slot.
7. Connect the connector of the controller fan motor and then close the memory slot cover.
8. Secure the screw.
9. Refit the right side cover.
10. Print a status page to check the memory expansion.
    If memory expansion has been properly performed, information on the installed memory is printed with the total memory capacity has been increased. Standard memory capacity 256 MB.

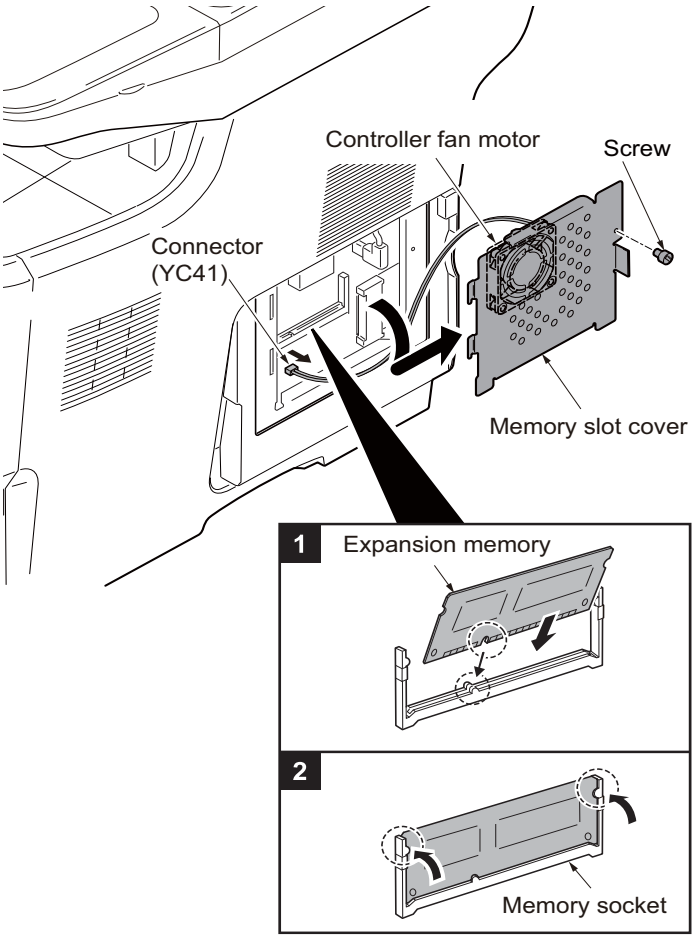

Figure 1-2-11

TONER
www.tonerplus.com.ua

1-2-4 Installing the memory card (option)

<Procedure>

1. Turn off the main power switch.
   Caution: Do not insert or remove memory card while machine power is on. Doing so may cause damage to the machine and the memory card.
2. Remove two screws and then remove the option interface slot cover.
3. Install the memory card into the option interface slot.
4. Refit the option interface slot cover by two screws.

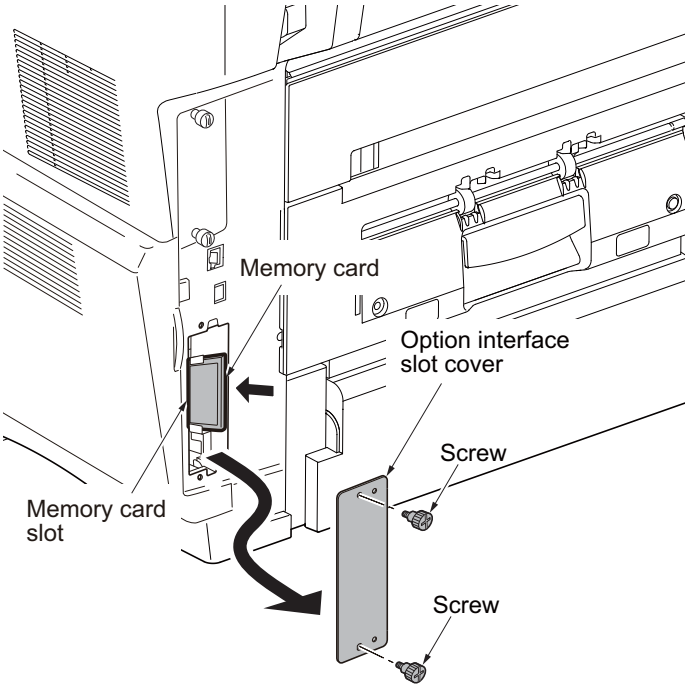

TONER+
www.tonerplus.com.ua

1-3-1 Maintenance mode

The machine is equipped with a maintenance function which can be used to maintain and service the machine.

(1) Executing a maintenance item

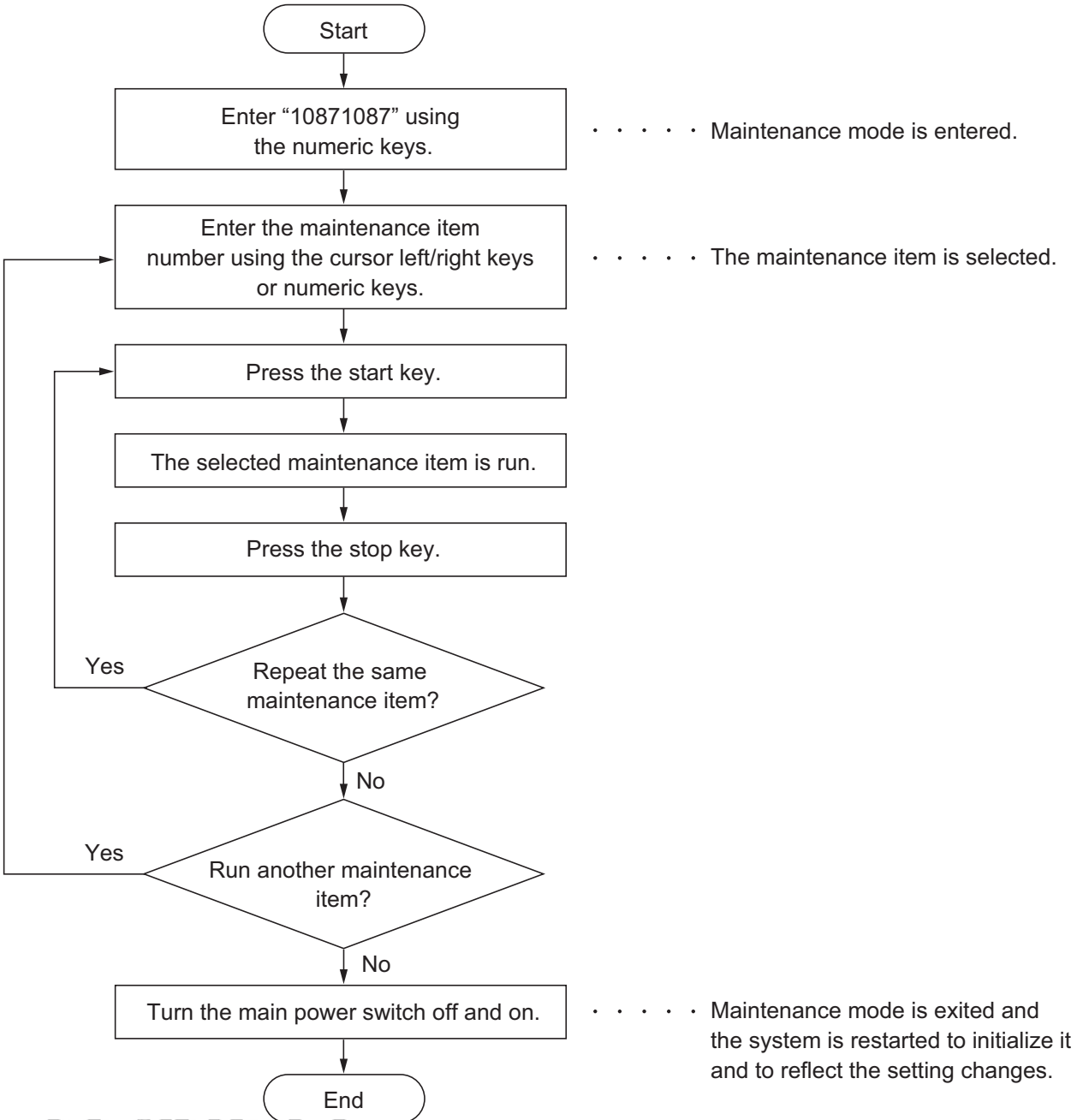

TONER
www.tonerplus.com.ua

(2) Maintenance modes item list

Section	Item No.	Content of maintenance item	Initial setting
General	U000	Outputting an own-status report	-
	U002	Setting the factory default data	-
	U004	Setting the machine number	-
Operation panel and support equipment	U201	Initializing the touch panel	-
	U203	Checking DP operation	-
	U222	Setting the IC card type	Other
	U224	Panel sheet extension	-
Mode setting	U250	Setting the maintenance cycle	100000
	U251	Checking/clearing the maintenance count	-
	U252	Setting the destination	-
	U253	Switching between double and single counts	Double count
	U260	Selecting the timing for copy counting	EJECT
	U285	Setting service status page	ON
	U332	Setting the size conversion factor	1.0
	U345	Setting the value for maintenance due indication	0
Image processing	U411	Adjusting the scanner automatically	-
	U425	Setting the target	-
Fax	U600	Initializing all data	-
	U601	Initializing permanent data	-
	U603	Setting user data 1	DTMF
	U604	Setting user data 2	2 (120 V) 1 (220-240 V)
	U605	Clearing data	-
	U610	Setting system 1 Setting the number of lines to be ignored when receiving a fax at 100% magnification Setting the number of lines to be ignored when receiving a fax in the auto reduction mode Setting the number of lines to be ignored when receiving a fax (A4R/LetterR) in the auto reduction mode	 3 0 0
	U611	Setting system 2 Setting the number of adjustment lines for automatic reduction Setting the number of adjustment lines for automatic reduction when A4 paper is set Setting the number of adjustment lines for automatic reduction when letter size paper is set	 7 22 26

TONER
www.tonerplus.com.ua

Section	Item No.	Content of maintenance item	Initial setting
Fax	U612	Setting system 3 Selecting if auto reduction in the auxiliary direction is to be performed Setting the automatic printing of the protocol list	 ON OFF
	U620	Setting the remote switching mode	ONE
	U625	Setting the transmission system 1 Setting the auto redialing interval Setting the auto redialing interval	 3 (120 V) 2 (220-240 V) 2 (120 V) 3 (220-240 V)
	U630	Setting communication control 1 Setting the communication starting speed Setting the reception speed Setting the waiting period to prevent echo problems at the sender Setting the waiting period to prevent echo problems at the receiver	 14400bps/V17 14400bps 300 75
	U631	Setting communication control 2 Setting ECM transmission Setting ECM reception Setting the frequency of the CED signal	 ON ON 2100
	U632	Setting communication control 3 Setting the DIS signal to 4 bytes Setting the short protocol transmission Setting the reception of a short protocol transmission Setting the CNG detection times in the fax/telephone auto select mode	 OFF ON ON 2TIME
	U633	Setting communication control 4 Enabling/disabling V.34 communication Setting the V.34 symbol speed (3429 Hz) Setting the number of times of DIS signal reception Setting the reference for RTN signal output	 ON ON ONCE 15%
	U634	Setting communication control 5	0
	U640	Setting communication time 1 Setting the one-shot detection time for remote switching Setting the continuous detection time for remote switching	 7 80
	U641	Setting communication time 2 Setting the T0 time-out time Setting the T1 time-out time Setting the T2 time-out time Setting the Ta time-out time Setting the Tb1 time-out time Setting the Tb2 time-out time Setting the Tc time-out time Setting the Td time-out time	 56 36 69 30 20 80 60 9 (120 V) 6 (220-240 V)

TONER
www.toneplus.com.ua

Section	Item No.	Content of maintenance item	Initial setting
Fax	U650	Setting modem 1 Setting the G3 transmission cable equalizer Setting the G3 reception cable equalizer Setting the modem detection level	 0dB 0dB 43dBm
	U651	Setting modem 2 Modem output level DTMF output level (main value) DTMF output level (level difference)	 9 (120 V) 10 (220-240 V) 5 (120 V) 10.5 (220-240 V) 2 (120 V) 2.5 (220-240 V)
	U660	Setting the NCU Setting the connection to PBX/PSTN Setting PSTN dial tone detection Setting busy tone detection Setting for a PBX Setting the loop current detection before dialing	 PSTN ON ON LOOP ON
	U670	Outputting lists	-
	U695	FAX function customize	ON/OFF
	U699	Setting the software switches	-
Others	U910	Clearing the black ratio data	-
	U917	Setting backup data reading/writing	-
	U927	Clearing the all copy counts and machine life counts (one time only)	-
	U977	Data capture mode	-

TONER
www.tonerplus.com.ua

(3) Contents of the maintenance mode items

Item No.	Description
U000	**Outputting an own-status report** **Description** Outputs lists of the current settings of the maintenance items and paper jam and service call occurrences. Outputs the event log. Also sends output data to the USB memory. Printing a report is disabled either when a job is remaining in the buffer or when [Pause All Print Jobs] is pressed to halt printing. **Purpose** To check the current setting of the maintenance items, or paper jam or service call occurrences. Before initializing or replacing the backup RAM, output a list of the current settings of the maintenance items to reenter the settings after initialization or replacement. **Method** 1. Press the start key. 2. Select the item to be output. **Display** / **Output list** MAINTENANCE — List of the current settings of the maintenance modes EVENT — Outputs the event log ALL — Outputs the all reports 3. Press the start key. A list is output. **Method: Send to the USB memory** 1. Press the power key on the operation panel, and after verifying the main power indicator has gone off, switch off the main power switch. 2. Insert USB memory in USB memory slot. 3. Turn the main power switch on. 4. Enter the maintenance item. 5. Press the start key. 6. Select the item to be send. 7. Select [TEXT] or [HTML]. **Display** / **Output list** Print — Outputs the report USB (TEXT) — Sends output data to the USB memory (text type) USB (HTML) — Sends output data to the USB memory (HTML type) 8. Press the start key. Output will be sent to the USB memory. **Completion** Press the stop key. The screen for selecting a maintenance item No. is displayed.

TONER
www.tonerplus.com.ua

Item No.	Description
U000	**Event log**

Event Log

MFP

(2) 06/Apr/2010 08:40

(1) Firmware version 2LX_2000.000.000 2010.04.06

(3) [XXXXXXXX] (4) [XXXXXXXX] (5) [XXXXXXXX]

(7) Paper Jam Log

#	Count.	Event Descriprions
16	1876543	10.01.08.01.01
15	166554	10.01.08.01.02
14	4988	10.01.08.01.01
13	4988	10.01.08.01.02
12	4988	10.01.08.01.01
11	4988	10.01.08.01.02
10	1103	10.01.08.01.01
9	1103	10.01.08.01.02
8	1103	10.01.08.01.01
7	1103	10.01.08.01.02
6	1027	10.01.08.01.01
5	1027	10.01.08.01.02
4	1027	10.01.08.01.01
3	1027	10.01.08.01.02
2	406	10.01.08.01.01
1	36	10.01.08.01.02

10.01.08.01.01
(a) (b) (c) (d) (e)

(8) Service Call Log

#	Count.	Service Code
8	1881214	01.0030
7	178944	01.1010
6	5296	01.4000
5	5295	01.3100
4	2099	01.2000
3	1054	01.2000
2	809	01.2500
1	30	01.2500

(9) Maintenance Log

#	Count.	Item
8	1045571	01.00
7	104511	01.00
6	7045	01.00
5	3454	01.00
4	3454	02.00
3	3454	02.00
2	417	02.00
1	34	02.20

(10) Unknown toner Log

#	Count.	Item
5	3454	01.00
4	3454	01.00
3	3454	01.00
2	406	01.00
1	32	01.00

(11) Counter Log

(f)		(g)		(h)
J0010:000	J0030:000	C0030:001	C2000:001	M00:01
J0011:000	J0031:000	C0070:001	C2200:001	M00:01
J0012:000	J0032:000	C0100:001	C3100:001	
J0020:000	J0040:000	C0120:001	C3200:001	
J0021:002	J0041:002	C0130:001	C3300:001	
.	.	.	.	
.	.	.	.	
.	.	.	.	
.	.	.	.	
.	.	.	.	
.	.	.	.	

(6) [XXXXXXXXXXXXXXXX]

Figure 1-3-1

TONER
www.tonerplus.com.ua

Item No.	Description
U000	**Detail of event log**

No.	Items	Description		
(1)	System version			
(2)	System date			
(3)	Engine soft version			
(4)	Engine boot version			
(5)	Operation panel mask version			
(6)	Machine serial number			
(7)	Paper Jam Log	#	Count.	Event
		Remembers 1 to 16 of occurrence. If the occurrence of the previous paper jam is less than 16, all of the paper jams are logged. When the occurrence excesseds 16, the oldest occurrence is removed.	The total page count at the time of the paper jam.	Log code (2 digit, hexadecimal, 5 categories) (a) Cause of a paper jam (b) Paper source (c) Paper size (d) Paper type (e) Paper eject
		(a) Cause of paper jam (Hexadecimal)		
		Refer to P.1-4-1 for paper jam location 0010: Paper does not arrive at the registration sensor. (MP tray) 0010: Paper does not arrive at the registration sensor. (Cassette) 0010: Paper does not arrive at the registration sensor. (Paper feeder) 0010: Paper does not arrive at the registration sensor. (Duplex) 0011: Paper does not pass the registration sensor 0012: Paper remains at the registration sensor when power is turned on. 0020: Paper does not arrive at the eject sensor. 0021: Paper does not pass the eject sensor. 0022: Paper remains at the eject sensor when power is turned on. 0030: Paper does not arrive at the PF paper feed sensor 1. (Paper feeder 1) 0030: Paper does not arrive at the PF paper feed sensor 1. (Paper feeder 2) 0031: Paper does not pass the PF paper feed sensor 1. (Paper feeder 1) 0032: Paper remains at the PF paper feed sensor 1 when power is turned on. (Paper feeder 1) 0040: Paper does not arrive at the PF paper feed sensor 2. (Paper feeder 2) 0041: Paper does not pass the PF paper sensor 2.(Paper feeder 2) 0042: Paper remains at the PF paper feed sensor 2 when power is turned on. (Paper feeder 2) 0050: Paper does not arrive at the PF paper feed sensor 3. (Paper feeder 3) 0051: Paper does not pass the PF paper sensor 3.(Paper feeder 3) 0052: Paper remains at the PF paper feed sensor 3 when power is turned on. (Paper feeder 3)		

TONER
www.tonerplus.com.ua

Item No.	Description
U000	

No.	Items	Description
(7) cont.	Paper Jam Log	9000: No original feed 9401: An original jam in the original conveying section 1. 9001: An original jam in the original conveying section 2. 9003: An original jam in the original switchback section. 9004: An original jam in the original switchback/feed section. 9011: Top cover open. 00A1: Paper does not arrive at the duplex sensor. 00A2: Paper does not pass the duplex sensor. 00A3: Paper does not arrive at the duplex jam sensor. 00A4: Paper does not pass the duplex jam sensor. 00A5: Paper remains at the duplex sensor or the duplex jam sensor when power is turned on. 00E0: Paper misfeed occurs due to forced stop when an error occurs during printing. 00F0: Paper does not arrive at the paper full sensor. 00F1: Paper misfeed by system error. 00F2: Paper misfeed by system error.
		(b) Detail of paper source (Hexadecimal)
		00: MP tray 01: Cassette 1 02: Cassette 2 (paper feeder 1) 03: Cassette 3 (paper feeder 2) 04: Cassette 4 (paper feeder 3) 05 to 09: Reserved
		(c) Detail of paper size (Hexadecimal)

00: (Not specified) 01: Monarch 02: Business 03: International DL 04: International C5 05: Executive 06: Letter-R 86: Letter-E 07: Legal 08: A4R 88: A4E 09: B5R 89: B5E 0A: A3	0B: B4 0C: Ledger 0D: A5R 0E: A6 0F: B6 10: Commercial #9 11: Commercial #6 12: ISO B5 13: Custom size 1E: C4 1F: Postcard 20: Reply-paid post-card 21: Oficio II	22: Special 1 23: Special 2 24: A3 wide 25: Ledger wide 26: Full bleed paper (12 x 8) 27: 8K 28: 16K-R A8: 16K-E 32: Statement-R B2: Statement-E 33: Folio 34: Western type 2 35: Western type 4

TONER
www.tonerplus.com.ua

Item No.	Description
U000	

No.	Items	Description		
(7) cont.	Paper Jam Log	(d) Detail of paper type (Hexadecimal)		
		01: Plain 02: Transparency 03: Preprinted 04: Labels 05: Bond 06: Recycled 07: Vellum 08: Rough 09: Letterhead	0A: Color 0B: Prepunched 0C: Envelope 0D: Cardstock 0E: Coated 0F: 2nd side 10: Media 16 11: High quality	15: Custom 1 16: Custom 2 17: Custom 3 18: Custom 4 19: Custom 5 1A: Custom 6 1B: Custom 7 1C: Custom 8
		(e) Detail of paper eject location (Hexadecimal)		
		01: Face down (FD)		
(8)	Service Call Log	#	Count.	Service Code
		Remembers 1 to 8 of occurrence of self diagnostics error. If the occurrence of the previous diagnostics error is less than 8, all of the diagnostics errors are logged.	The total page count at the time of the self diagnostics error.	Self diagnostic error code (See page 1-4-5) Example: 01.6000 01: Self diagnostic error 6000: Self diagnostic error code number
(9)	Maintenance Log	#	Count.	Item
		Remembers 1 to 8 of occurrence of replacement. If the occurrence of the previous replacement of toner container is less than 8, all of the occurrences of replacement are logged.	The total page count at the time of the replacement of the toner container.	Code of maintenance replacing item (1 byte, 2 categories) First byte (Replacing item) 01: Toner container 02: Maintenance kit Second byte (Type of replacing item) 00: Black 01: MK-350/MK-370

TONER
www.tonerplus.com.ua

Item No.	Description
U000	

No.	Items	Description		
(10)	Unknown Toner Log	#	Count.	Item
		Remembers 1 to 5 of occurrence of unknown toner detection. If the occurrence of the previous unknown toner detection is less than 5, all of the unknown toner detection are logged.	The total page count at the time of the [Toner Empty] error with using an unknown toner container.	Unknown toner log code (1 byte, 2 categories) First byte 01: Fixed (Toner container) Second byte 00: Fixed (Black)
(11)	Counter Log Comprised of three log counters including paper jams, self diagnostics errors, and replacement of the toner container.	(f) Paper jam	(g) Self diagnostic error	(h) Maintenance item replacing
		Indicates the log counter of paper jams depending on location. Refer to Paper Jam Log. All instances including those are not occurred are displayed.	Indicates the log counter of self diagnostics errors depending on cause. (See page 1-4-5) Example: C6000: 4 Self diagnostics error 6000 has happened four times.	Indicates the log counter depending on the maintenance item for maintenance. T: Toner container 00: Black M: Maintenance kit 00: MK-350/MK-370 Example: T00: 1 The toner container has been replaced once.

TONER
www.tonerplus.com.ua

Item No.	Description
U002	**Setting the factory default data** **Description** Restores the machine conditions to the factory default settings. **Purpose** To move the image scanner unit to the home position. (position in which the frame can be fixed). **Method** 1. Press the start key. 2. Select [MODE1(ALL)]. 3. Press the start key. The imege scanner returns to the home position. 4. Turn the main power switch off and on. * : An error code is displayed in case of an initialization error. When errors occurred, turn main power switch off then on, and execute initialization using maintenance item U002. **Error codes** Codes: 0001 — Controller error Codes: 0020 — Engine error Codes: 0040 — Scanner error
U004	**Setting the machine number** **Description** Sets or displays the machine number. **Purpose** To check or set the machine number. **Method** 1. Press the start key. If the machine serial number of engine PWB matches with that of main PWB Display: MACHINE No. — Operation: Displays the machine serial number If the machine serial number of engine PWB does not match with that of main PWB Display: MACHINE No. (MAIN) — Operation: Displays the machine serial number of main Display: MACHINE No. — Operation: Displays the machine serial number of engine **Setting** Carry out if the machine serial number does not match. 1. Press [EXECUTE]. 2. Press the start key. Writing of serial No. starts. **Completion** Press the stop key. The screen for selecting a maintenance item No. is displayed.

TONER
www.tonerplus.com.ua

Item No.	Description
U201	**Initializing the touch panel** **Description** Automatically correct the positions of the X- and Y-axes of the touch panel. **Purpose** To automatically correct the display positions on the touch panel after it is replaced. **Method** 1. Press the start key. 2. Select the [Initialize] or [Check]. **Method: Initialize** 1. Press the start key. 2. Press the center of the + keys. Be sure to press three + keys displayed in order. The touch panel is adjusted automatically. 3. Press the indicated three + keys, and then check the display. 4. Press the stop key. The screen for selecting a maintenance item No. is displayed. **Method: Check** 1. Press the start key. 2. Press the indicated three + keys, and then check the display. When adjusting the display, press [INITIALIZE] to execute the adjustment automatically. 3. Press the stop key. The screen for selecting a maintenance item No. is displayed. **Completion** Press the stop key. The screen for selecting a maintenance item No. is displayed.

Display	Description
Initialize	Adjusts the display on the panel automatically.
Check	Checks the display on the touch panel.

TONER
www.tonerplus.com.ua

Item No.	Description
U203	**Checking DP operation** **Description** Simulates the original conveying operation separately in the DP. **Purpose** To check the DP operation. **Method** 1. Press the start key. 2. Place an original in the DP if running this simulation with paper. 3. Select the speed to be operated. **Display** / **Description** NORMAL SPEED — Normal reading (600 dpi) HIGH SPEED — High-speed reading 4. Press the start key. 5. Select the item to be operated. **Display** / **Description** CCD ADP (NON P) — Without paper, single-sided original of CCD (continuous operation) CCD ADP — With paper, single-sided original of CCD CCD RADP (NON P) — Without paper, double-sided original of CCD (continuous operation) CCD RADP — With paper, double-sided original of CCD 6. Press the start key. The operation starts. 7. To stop continuous operation, press the stop key. **Completion** Press the stop key. The screen for selecting a maintenance item No. is displayed.

TONER
www.tonerplus.com.ua

Item No.	Description
U222	**Setting the IC card type** **Description** Sets the type of IC card. **Purpose** To change the type of IC card. **Setting** 1. Press the start key. 2. Select the item using the cursor up/down keys. **Display** / **Description** Other: The type of IC card is SSFC. SSFC: The type of IC card is not SSFC. * : Initial setting: Other 3. Press the start key. The setting is set. **Completion** Press the stop key. The screen for selecting a maintenance item No. is displayed.

TONER
www.tonerplus.com.ua

Item No.	Description
U224	**Panel sheet extension** **Description** Changes the image data and the message of the opening screen at the machine startup and the image data and the message of the service call screen to user specified data. **Purpose** Set according to the preference of the user. **Setting** 1. Write the image data or the message data to the USB memory. 2. Insert USB memory in USB memory slot of the machine. 3. Turn the main power switch on. 4. Enter the maintenance item. 5. Press the start key. 6. Select the [Install] or [UnInstall].

Display	Description
Install	Installs the image data or the message data
UnInstall	Restores the original image data or message data

1. Select the item.

Display	Description
Call Msg Top	Service call screen 1
Call Msg Detail	Service call screen 2
Call Msg TEL No.	TEL No. for service call.

1. Press the start key. Installation or uninstallation is started.
2. When normally completed, [Complete] is displayed.

Completion
Press the stop key. The screen for selecting a maintenance item No. is displayed.

TONER
www.tonerplus.com.ua

Item No.	Description
U250	**Setting the maintenance cycle** **Description** Displays, clears and changes the maintenance cycle. **Purpose** To check and change the maintenance cycle. **Method** 1. Press the start key. The currently set maintenance cycle is displayed. **Setting** 1. Select [M.CNT A]. 2. Change the setting using the cursor left/right keys or numeric keys. **Description** | **Setting range** | **Initial setting** Maintenance cycle | 0 to 9999999 | 100000 3. Press the start key. The value is set. **Clearing** 1. Select [CLEAR]. 2. Press the start key. The count is cleared. **Completion** Press the stop key. The screen for selecting a maintenance item No. is displayed.

TONER
www.tonerplus.com.ua

Item No.	Description
U251	**Checking/clearing the maintenance count** **Description** Displays, clears and changes the maintenance count. **Purpose** To check the maintenance count. Also to clear the count during maintenance service (replacing the maintenance kit). **Method** 1. Press the start key. The maintenance count is displayed. **Setting** 1. Select [M.CNT A]. 2. Change the setting using the cursor left/right keys or numeric keys. **Description** | **Setting range** | **Initial setting** Maintenance count | 0 to 9999999 | 0 3. Press the start key. The count is set. **Clearing** 1. Select [CLEAR]. 2. Press the start key. The count is cleared. **Completion** Press the stop key. The screen for selecting a maintenance item No. is displayed.

TONER
www.tonerplus.com.ua

Item No.	Description
U252	**Setting the destination** **Description** Switches the operations and screens of the machine according to the destination. **Purpose** To be executed after initializing the backup RAM, in order to return the setting to the value before replacement or initialization. **Setting** 1. Press the start key. 2. Select the destination. **Display** / **Description** Inch — Inch (North America) specifications Europe Metric — Metric (Europe) specifications Asia Pacific — Metric (Asia Pacific) specifications Australia — Australia specifications China — China specifications Korea — Korea specifications 3. Press the start key. 4. Turn the main power switch off and on. **Supplement** The specified initial settings are provided according to the destinations in the maintenance items below. To change the initial settings in those items, be sure to run maintenance item U021 after changing the destination.
U253	**Switching between double and single counts** **Description** Switches the count system for the total counter and other counters. **Purpose** Used to select, according to the preference of the user (copy service provider), if folio size paper is to be counted as one sheet (single count) or two sheets (double count). **Setting** 1. Press the start key. 2. Select the count system. **Display** / **Description** SGL (ALL) — Single count for all size paper DBL (FOLIO) — Double count for Folio size or larger * : Initial setting: DBL COUNT(FOLIO) 3. Press the start key. The setting is set. **Completion** Press the stop key. The screen for selecting a maintenance item No. is displayed.

TONER www.tonerplus.com.ua

<table>
<tr><th>Item No.</th><th>Description</th></tr>
<tr><td>U260</td><td>

Selecting the timing for copy counting

Description
Changes the copy count timing for the total counter and other counters.
Purpose
To be set according to user request.

Setting
1. Press the start key.
2. Select the copy count timing.

Display	Description
FEED	When secondary paper feed starts
EJECT	When the paper is ejected

* : Initial setting: EJECT

3. Press the start key. The setting is set.

Completion
Press the stop key. The screen for selecting a maintenance item No. is displayed.

</td></tr>
<tr><td>U285</td><td>

Setting service status page

Description
Determines displaying the digital dot coverage report on reporting.
Purpose
According to user request, changes the setting.

Setting
1. Press the start key.
2. Select ON or OFF.

Display	Description
ON	Displays the digital dot coverage
OFF	Not to display the digital dot coverage

* : Initial setting: ON

3. Press the start key. The setting is set.

Completion
Press the stop key. The screen for selecting a maintenance item No. is displayed.

</td></tr>
</table>

TONER
www.tonerplus.com.ua

<table>
<tr><th>Item No.</th><th>Description</th></tr>
<tr><td>U332</td><td>

Setting the size conversion factor

Description
Sets the coefficient of nonstandard sizes in relation to the A4/Letter size. The coefficient set here is used to convert the black ratio in relation to the A4/Letter size and to display the result in user simulation.
Purpose
To set the coefficient for converting the black ratio for nonstandard sizes in relation to the A4/Letter size.

Setting
1. Press the start key.
2. Change the setting using the cursor left/right keys or numeric keys.

Display	Description	Setting range	Initial setting
Calc. Rate	Size parameter	0.1 to 3.0	1.0

3. Press the start key. The value is set.

Completion
Press the stop key. The screen for selecting a maintenance item No. is displayed.

</td></tr>
<tr><td>U345</td><td>

Setting the value for maintenance due indication

Description
Sets when to display a message notifying that the time for maintenance is about to be reached, by setting the number of copies that can be made before the current maintenance cycle ends. When the difference between the number of copies of the maintenance cycle and that of the maintenance count reaches the set value, the message is displayed.
Purpose
To change the time for maintenance due indication.

Setting
1. Press the start key.
2. Select [COUNT].
3. Change the setting using the cursor left/right keys.

Description	Setting range	Initial setting
Time for maintenance due indication (Remaining number of copies that can be made before the current maintenance cycle ends)	0 to 9999	0

4. Press the start key. The value is set.

Clearing
1. Select [CLEAR].
2. Press the start key. The value is cleared.

Completion
Press the stop key. The screen for selecting a maintenance item No. is displayed.

</td></tr>
</table>

TONER
www.tonerplus.com.ua

Item No.	Description
U411	**Adjusting the scanner automatically**

Description
Uses a specified original and automatically adjusts the following items in the scanner and the DP scanning sections.
Scanner section: Original size magnification, leading edge timing, center line, input gamma, input gamma in monochrome mode and matrix
DP scanning section: Original size magnification, leading edge timing, center line

Purpose
To perform automatic adjustment of various items in the scanner and the DP scanning sections.

Method
1. Press the start key.
2. Select the item. The screen for executing is displayed.

Display	Description	Original to be used for adjustment (P/N)
ALL	Performs automatic adjustment in the DP scanning section following automatic adjustment in the scanner section	302FZ56990/ 303LJ57010
ADJUST TABLE	Automatic adjustment in the scanner section	302FZ56990
ADJUST DP	Automatic adjustment in the DP scanning section:	303LJ57010

Method: TABLE
1. Enter the target values which are shown on the specified original (P/N: 302FZ56990) executing maintenance item U425.
2. Set a specified original (P/N: 302FZ56990) on the platen.
3. Enter maintenance item U411.
4. Select [ADJUST TABLE] using the cursor up/down keys.
5. Press the start key. Auto adjustment starts.
6. When automatic adjustment has normally completed, [OK] is displayed. If a problem occurs during auto adjustment, [NG XX] (XX is replaced by an error code) is displayed and operation stops. Should this happen, determine the details of the problem and repeat the procedure from the beginning.
7. To return to the screen for selecting an item, press the stop key.

Method: DP
1. Select [ADJUST DP] using the cursor up/down keys.
2. Set a specified original (P/N: 303LJ57010) in the DP.
3. Press the start key. Auto adjustment starts.
4. When automatic adjustment has normally completed, [OK] is displayed. If a problem occurs during auto adjustment, [NG XX] (XX is replaced by an error code) is displayed and operation stops. Should this happen, determine the details of the problem and repeat the procedure from the beginning.
5. To return to the screen for selecting an item, press the stop key.

TONER
www.tonerplus.com.ua

Item No.	Description
U411	**Error Codes**

Codes	Description
01	Black band detection error (scanner leading edge registration)
02	Black band detection error (scanner center line)
03	Black band detection error (scanner main scanning direction magnification)
04	Black band is not detected (scanner leading edge registration)
05	Black band is not detected (scanner center line)
06	Black band is not detected (scanner main scanning direction magnification)
07	Black band is not detected (scanner auxiliary scanning direction magnification)
08	Black band is not detected (DP main scanning direction magnification far end)
09	Black band is not detected (DP main scanning direction magnification near end)
0a	Black band is not detected (DP auxiliary scanning direction magnification leading edge)
0b	Black band is not detected (DP auxiliary scanning direction magnification leading edge original check)
0c	Black band is not detected (DP auxiliary scanning direction trailing edge)
0d	Black band is not detected (DP auxiliary scanning direction trailing edge 2)
0e	DMA time out
0f	Auxiliary scanning direction magnification error
10	Auxiliary scanning direction leading edge detection error
11	Auxiliary scanning direction trailing edge detection error
12	Auxiliary scanning direction skew 1.5 error
13	Maintenance request error
14	Main scanning direction center line error
15	Main scanning direction skew 1.5 error
16	Main scanning direction magnification error
17	Service call error
18	DP paper misfeed error
19	PWB replacement error
1a	Original error

Completion

Press the stop key. The screen for selecting a maintenance item is displayed.

TONER
www.tonerplus.com.ua

Item No.	Description
U425	**Setting the target** **Description** Enters the lab values that is indicated on the back of the chart (P/N: 302FZ56990) used for adjustment. **Purpose** Performs data input in order to correct for differences in originals during automatic adjustment. **Method** 1. Press the start key. 2. Select the item to be set using the cursor up/down keys.

Display	Description
N875	Setting the N875 patch for the original for adjustment
N475	Setting the N475 patch for the original for adjustment
N125	Setting the N125 patch for the original for adjustment
CYAN	Setting the cyan patch for the original for adjustment
MAGENTA	Setting the magenta patch for the original for adjustment
YELLOW	Setting the yellow patch for the original for adjustment
RED	Setting the red patch for the original for adjustment
GREEN	Setting the green patch for the original for adjustment
BLUE	Setting the blue patch for the original for adjustment
ADJUST ORIGINAL	Setting the main and auxiliary scanning directions

3. Select the item to be set using the cursor up/down keys.

Display	Description	Setting range
L	Setting the L value	0.0 to 100.0
a	Setting the a value	-200.0 to 200.0
b	Setting the b value	-200.0 to 200.0

4. Enters the value that is indicated on the back of the chart using the cursor left/right keys or numeric keys.
5. Press the start key. The value is set.

TONER
www.tonerplus.com.ua

Item No.	Description
U425	**Setting: [ADJUST ORIGINAL]** 1. Measure the distance from the left edge to the black belt (a) of the original at A, B and C. Measurement procedure 1) Measure the distance from the edge to the black belt (a) of the original at A (30 mm from the leading edge), B (148.5 mm from the leading edge) and C (267 mm from the leading edge), respectively. 2) Apply the following formula for the values obtained: ((A + C) / 2 + B) / 2 2. Enter the values solved using the cursor left/right keys or numeric keys in [MAIN]. 3. Press the start key. The value is set. 4. Measure the distance from the leading edge to the black belt (b) of the original at D, E and F. Measurement procedure 1) Measure the distance from the edge to the black belt (b) of the original at D (35 mm from the left edge), E (110 mm from the left edge) and F (185 mm from the left edge), respectively. 2) Apply the following formula for the values obtained: ((D + F) / 2 + E) / 2 5. Enter the values solved using the cursor left/right keys or numeric keys in [SUB LEAD]. 6. Press the start key. The value is set. 7. Measure the length (G) from the edge of the black belt (b) to edge of the black belt (c) of the original. 8. Enter the measured value using the cursor left/right keys or numeric keys in [SUB TAIL]. 9. Press the start key. The value is set. 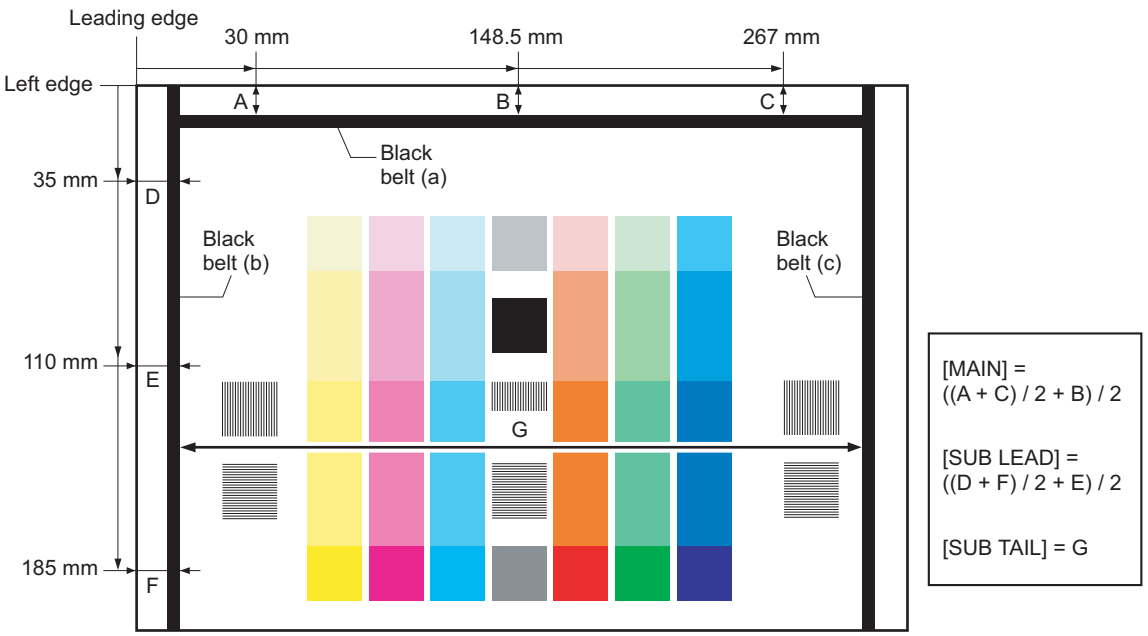 Original for adjustment (P/N: 302FZ56990) **Figure 1-3-2** **Completion** Press the stop key. The screen for selecting a maintenance item No. is displayed.

TONER
www.tonerplus.com.ua

Item No.	Description
U600	**Initializing all data**

Description
Initializes software switches and all data in the backup data on the FAX control PWB, according to the destination and OEM.
Executes the check of the file system, when abnormality of the file system is detected, initializes the file system, communication past record and register setting contents.

Purpose
To initialize the FAX control PWB.

Method
1. Press the start key.
2. Select [Execute]. The screen for entering the destination code and OEM code is displayed.
3. Select [Country Code] and enter a destination code using the numeric keys (refer to the destination code list on following for the destination code).
4. Press the start key.
   There is no operation necessary on this screen.
   The destination code and the OEM code are displayed with the values currently set.
5. Press the start key. Data initialization starts. To cancel data initialization, press the stop key.
6. After data initialization, the entered destination, OEM codes and ROM version are displayed.
   A ROM version displays three kinds, application, boot, and IPL.

Destination code list

Code	Destination	Code	Destination
000	Japan	253	CTR21 (European nations)
009	Australia		Italy
038	China		Germany
080	Hong Kong		Spain
084	Indonesia		U.K.
088	Israel		Netherlands
097	Korea		Sweden
108	Malaysia		France
126	New Zealand		Austria
136	Peru		Switzerland
137	Philippines		Belgium
152	Middle East		Denmark
156	Singapore		Finland
159	South Africa		Portugal
169	Thailand		Ireland
181	U.S.A.		Norway
242	South America	254	Taiwan
243	Saudi Arabia		

TONER
www.tonerplus.com.ua

Item No.	Description
U601	**Initializing permanent data** **Description** Initializes software switches on the FAX control PWB according to the destination and OEM. **Purpose** To initialize the FAX control PWB without changing user registration data. **Method** 1. Press the start key. 2. Select [Execute]. The screen for entering the destination code and OEM code is displayed. 3. Select [Country Code] and enter a destination code using the numeric keys (refer to the destination code list on page 1-3-25 for the destination code). 4. Press the start key. There is no operation necessary on this screen. The destination code and the OEM code are displayed with the values currently set. 5. Press the start key. Data initialization starts. To cancel data initialization, press the back key. 6. After data initialization, the entered destination, OEM codes and ROM version are displayed. A ROM version displays three kinds, application, boot, and IPL.
U603	**Setting user data 1** **Description** Makes user settings to enable the use of the machine as a fax. **Purpose** To be run after installation of the facsimile kit if necessary. **Method** 1. Press the start key. 2. Select [LINE TYPE] and press the start key. 3. Select the setting. **Display** / **Description** DTMF — DTMF 10PPS — 10 PPS 20PPS — 20 PPS * : Initial setting: DTMF 4. Press the start key. The setting is set. **Completion** Press the stop key. The screen for selecting a maintenance item No. is displayed.

TONER
www.tonerplus.com.ua

<table>
<tr><th>Item No.</th><th>Description</th></tr>
<tr><td>U604</td><td>

Setting user data 2

Description
Makes user settings to enable the use of the machine as a fax.
Purpose
Use this if the user wishes to adjust the number of rings that occur before the unit switches into fax receiving mode when fax/telephone auto-select is enabled.

Method
1. Press the start key.
2. Select [RINGS(F/P)#].
3. Change the setting using the cursor left/right keys or numeric keys.

<table>
<tr><th>Description</th><th>Setting range</th><th>Initial setting</th></tr>
<tr><td>Number of fax/telephone rings</td><td>0 to 15</td><td>2 (120 V)/1 (220-240 V)</td></tr>
</table>

* : If you set this to 0, the unit will start fax reception without any ringing.

4. Press the start key. The value is set.

Completion
Press the stop key. The screen for selecting a maintenance item No. is displayed.

</td></tr>
<tr><td>U605</td><td>

Clearing data

Description
Initializes data related to the fax transmission such as transmission history.
Purpose
To clear the transmission history.

Method
1. Press the start key.
2. Select [CLEAR COM.REC.].
3. Press the start key. Initialization processing starts. When processing is finished, [Completed] is displayed.

Completion
Press the stop key. The screen for selecting a maintenance item No. is displayed.

</td></tr>
</table>

TONER
www.tonerplus.com.ua

Item No.	Description
U610	**Setting system 1**

Description
Makes settings for fax reception regarding the sizes of the fax paper and received images and automatic printing of the protocol list.

Method
1. Press the start key.
2. Select the item to be set.

Display	Description
CUT LINE:100%	Sets the number of lines to be ignored when receiving a fax at 100% magnification.
CUT LINE:AUTO	Sets the number of lines to be ignored when receiving a fax in the auto reduction mode.
CUT LINE:A4	Sets the number of lines to be ignored when receiving a fax (A4R/LetterR) in the auto reduction mode.

Setting the number of lines to be ignored when receiving a fax at 100% magnification
Sets the maximum number of lines to be ignored if the received data volume exceeds the recording capacity when recording the data at 100% magnification. If the number of excess lines is below the setting, those lines are ignored. If over the setting, they are recorded on the next page.
1. Change the setting using the cursor left/right keys or numeric keys.

Description	Setting range	Initial setting	Change in value per step
Number of lines to be ignored when receiving at 100%	0 to 22	3	16 lines

* : Increase the setting if a blank second page is output, and decrease it if the received image does not include the entire transmitted data.
2. Press the start key. The value is set.

Setting the number of lines to be ignored when receiving a fax in the auto reduction mode
Sets the maximum number of lines to be ignored if the received data volume exceeds the recording capacity when the data is recorded in the auto reduction mode. If the number of excess lines is below the setting, those lines are ignored. If over the setting, the entire data on a page is further reduced so that it can be recorded on the same page.
1. Change the setting using the cursor left/right keys or numeric keys.

Description	Setting range	Initial setting	Change in value per step
Number of lines to be ignored when receiving in the auto reduction mode	0 to 22	0	16 lines

* : Increase the setting if a page received in the reduction mode is over-reduced and too much trailing edge margin is left. Decrease it if the received image does not include all transmitted data.
2. Press the start key. The value is set.

TONER
www.tonerplus.com.ua

Item No.	Description
U610	**Setting the number of lines to be ignored when receiving a fax (A4R/LetterR) in the auto reduction mode** Sets the maximum number of lines to be ignored if the received data volume exceeds the recording capacity when the data is recorded in the auto reduction mode onto A4R or LetterR paper under the conditions below. If the number of excess lines is below the setting, those lines are ignored. If over the setting, the entire data on a page is further reduced so that it can be recorded on the same page. 1. Change the setting using the cursor left/right keys or numeric keys. **Description** / **Setting range** / **Initial setting** / **Change in value per step** Number of lines to be ignored when receiving a fax (A4R, letter) in the auto reduction mode / 0 to 22 / 0 / 16 lines * : Increase the setting if a page received in the reduction mode is over-reduced and too much trailing edge margin is left. Decrease it if the received image does not include all transmitted data. 2. Press the start key. The value is set. **Completion** Press the stop key. The screen for selecting a maintenance item No. is displayed.

TONER
www.tonerplus.com.ua

Item No.	Description
U611	**Setting system 2** **Description** Sets the number of adjustment lines for automatic reduction. **Method** 1. Press the start key. 2. Select the item to be set. **Display** / **Description** ADJ LINES — Sets the number of adjustment lines for automatic reduction. ADJ LINES(A4) — Sets the number of adjustment lines for automatic reduction when A4 paper is set. ADJ LINES(LT) — Sets the number of adjustment lines for automatic reduction when letter size paper is set. **Setting the number of adjustment lines for automatic reduction** Sets the number of adjustment lines for automatic reduction. 1. Change the setting using the cursor left/right keys or numeric keys. **Description** / **Setting range** / **Initial setting** Number of adjustment lines for automatic reduction / 0 to 22 / 7 2. Press the start key. The value is set. **Setting the number of adjustment lines for automatic reduction when A4 paper is set** Sets the number of adjustment lines for automatic reduction when A4 paper is set. 1. Change the setting using the cursor left/right keys or numeric keys. **Description** / **Setting range** / **Initial setting** Number of adjustment lines for automatic reduction when A4 paper is set / 0 to 22 / 22 2. Press the start key. The value is set. **Setting the number of adjustment lines for automatic reduction when letter size paper is set** Sets the number of adjustment lines for automatic reduction when letter size paper is set. 1. Change the setting using the cursor left/right keys or numeric keys. **Description** / **Setting range** / **Initial setting** Number of adjustment lines for automatic reduction when letter size paper is set / 0 to 26 / 26 2. Press the start key. The value is set. **Completion** Press the stop key. The screen for selecting a maintenance item No. is displayed.

TONER
www.tonerplus.com.ua

Item No.	Description
U612	**Setting system 3** **Description** Makes settings for fax transmission regarding operation and automatic printing of the protocol list. **Method** 1. Press the start key. 2. Select the item to be set. **Selecting if auto reduction in the auxiliary direction is to be performed** Sets whether to receive a long document by automatically reducing it in the auxiliary direction or at 100% magnification. 1. Select the setting using the cursor left/right keys. **Setting the automatic printing of the protocol list** Sets if the protocol list is automatically printed out. 1. Select the setting using the cursor left/right keys. **Setting how trailing edge margins are detected** This determines whether trailing edge margin is detected (to prevent image from being mutilated) while printing a received Fax.

Display	Description
Auto Reduction	Selects if auto reduction in the auxiliary direction is to be performed.
Protocol List	Sets the automatic printing of the protocol list.

Display	Description
On	Auto reduction is performed if the received document is longer than the fax paper.
Off	Auto reduction is not performed.

* : Initial setting: ON

2. Press the start key. The setting is set.

Display	Description
On	The protocol list is automatically printed out after communication.
Off	The protocol list is not printed out automatically.
Err	The protocol list is automatically printed out after communication only if a communication error occurs.

* : Initial setting: OFF

2. Press the start key. The setting is set.

TONER
www.tonerplus.com.ua

<table>
<tr><th>Item No.</th><th>Description</th></tr>
<tr><td>U612</td><td>
1. Select On or Off using the cursor left/right keys.
<table>
<tr><th>Display</th><th>Description</th></tr>
<tr><td>On</td><td>Detects trailing edge margin</td></tr>
<tr><td>Off</td><td>Does not detect trailing edge margin</td></tr>
</table>
* : Initial setting: On
2. Press the start key. The setting is set.

Completion
Press the stop key. The screen for selecting a maintenance item No. is displayed.
</td></tr>
<tr><td>U620</td><td>
Setting the remote switching mode

Description
Sets the signal detection method for remote switching. Be sure to change the setting according to the type of telephone connected to the machine.

Setting
1. Press the start key.
2. Select [REMORT MODE] and press the start key.
3. Select the mode.
<table>
<tr><th>Display</th><th>Description</th></tr>
<tr><td>ONE</td><td>One-shot detection</td></tr>
<tr><td>CONT</td><td>Continuous detection</td></tr>
</table>
* : Initial setting: ONE
4. Press the start key. The setting is set.

Completion
Press the stop key. The screen for selecting a maintenance item No. is displayed.
</td></tr>
<tr><td>U625</td><td>
Setting the transmission system 1

Description
Makes settings for the auto redialing interval and the number of times of auto redialing.
Purpose
Change the setting to prevent the following problems: fax transmission is not possible due to too short redial interval, or fax transmission takes too much time to complete due to too long redial interval.

Method
1. Press the start key.
2. Select the item to be set.
<table>
<tr><th>Display</th><th>Description</th></tr>
<tr><td>INTERVAL</td><td>Setting the auto redialing interval</td></tr>
<tr><td>TIMES</td><td>Setting the number of times of auto redialing</td></tr>
</table>
</td></tr>
</table>

TONER
www.tonerplus.com.ua

<table>
<tr><th>Item No.</th><th>Description</th></tr>
<tr><td>U625</td><td>

Setting the auto redialing interval

1. Change the setting using the cursor left/right keys.

Description	Setting range	Initial setting
Redialing interval	1 to 9 (min.)	3 (120 V)/2 (220-240 V)

2. Press the start key. The value is set.

Setting the number of times of auto redialing

1. Change the setting using the cursor left/right keys or numeric keys.

Description	Setting range	Initial setting
Number of redialing	0 to 15	2 (120 V)/3 (220-240 V)

2. Press the start key. The value is set.

Completion

Press the stop key. The screen for selecting a maintenance item No. is displayed.

</td></tr>
<tr><td>U630</td><td>

Setting communication control 1

Description

Makes settings for fax transmission regarding the communication.

Method

1. Press the start key.
2. Select the item to be set.

Display	Description
TX SPEED	Sets the communication starting speed.
RX SPEED	Sets the reception speed.
TX ECHO	Sets the waiting period to prevent echo problems at the sender.
RX ECHO	Sets the waiting period to prevent echo problems at the receiver.

Setting the communication starting speed

Sets the initial communication speed when starting transmission. When the destination unit has V.34 capability, V.34 is selected for transmission, regardless of this setting.

1. Select the setting.

Display	Description
14400bps/V17	V.17, 14400 bps
9600bps/V29	V.17, 9600 bps
4800bps/V27ter	V.27ter, 4800 bps
2400bps/V27ter	V.27ter, 2400 bps

* : Initial setting: 14400bps/V17

2. Press the start key. The setting is set.

</td></tr>
</table>

TONER
www.tonerplus.com.ua

Item No.	Description
U630	**Setting the reception speed** Sets the reception speed that the sender is informed of using the DIS or NSF signal. When the destination unit has V.34 capability, V.34 is selected, regardless of the setting. 1. Select the setting. **Display** / **Description** 14400bps — V.17, V.33, V.29, V.27ter 9600bps — V.29, V.27ter 4800bps — V.27ter 2400bps — V.27ter (fallback only) * : Initial setting: 14400bps 2. Press the start key. The setting is set. **Setting the waiting period to prevent echo problems at the sender** Sets the period before a DCS signal is sent after a DIS signal is received. Used when problems occur due to echoes at the sender. 1. Select the setting. **Display** / **Description** 500 — Sends a DCS 500 ms after receiving a DIS. 300 — Sends a DCS 300 ms after receiving a DIS. * : Initial setting: 300 2. Press the start key. The setting is set. **Setting the waiting period to prevent echo problems at the receiver** Sets the period before an NSF, CSI or DIS signal is sent after a CED signal is received. Used when problems occur due to echoes at the receiver. 1. Select the setting. **Display** / **Description** 500 — Sends an NSF, CSI or DIS 500 ms after receiving a CED. 75 — Sends an NSF, CSI or DIS 75 ms after receiving a CED. * : Initial setting: 75 2. Press the start key. The setting is set. **Completion** Press the stop key. The screen for selecting a maintenance item No. is displayed.

TONER
www.tonerplus.com.ua

Item No.	Description
U631	**Setting communication control 2** **Description** Makes settings regarding fax transmission. **Method** 1. Press the start key. 2. Select the item to be set. **Display** / **Description** ECM TX — Sets ECM transmission. ECM RX — Sets ECM reception. CED FREQ. — Sets the frequency of the CED signal. **Setting ECM transmission** To be set to OFF when reduction of transmission costs is of higher priority than image quality. This should not be set to OFF when connecting to the IP (Internet Protocol) telephone line. 1. Select the setting. **Display** / **Description** ON — ECM transmission is enabled. OFF — ECM transmission is disabled. * : Initial setting: ON 2. Press the start key. The setting is set. **Setting ECM reception** To be set to OFF when reduction of transmission costs is of higher priority than image quality. This should not be set to OFF when connecting to the IP (Internet Protocol) telephone line. 1. Select the setting. **Display** / **Description** ON — ECM reception is enabled. OFF — ECM reception is disabled. * : Initial setting: ON 2. Press the start key. The setting is set. **Setting the frequency of the CED signal** Sets the frequency of the CED signal. Used as one of the measures to improve transmission performance for international communications. 1. Select the setting. **Display** / **Description** 2100 — 2100 Hz 1100 — 1100 Hz * : Initial setting: 2100 2. Press the start key. The setting is set. **Completion** Press the stop key. The screen for selecting a maintenance item No. is displayed.

TONER
www.tonerplus.com.ua

Item No.	Description
U632	**Setting communication control 3** **Description** Makes settings for fax transmission regarding the communication. **Method** 1. Press the start key. 2. Select the item to be set. **Display** / **Description** DIS 4BYTE — Sets the DIS signal to 4 bytes. SHORT PRTCL TX — Sets the short protocol transmission. SHORT PRTCL RX — Sets the reception of short protocol transmission. NUM OF CNG(F/T) — Sets the CNG detection times in the fax/telephone auto select mode. **Setting the DIS signal to 4 bytes** Sets if bit 33 and later bits of the DIS/DTC signal are sent. 1. Select the setting. **Display** / **Description** ON — Bit 33 and later bits of the DIS/DTC signal are not sent. OFF — Bit 33 and later bits of the DIS/DTC signal are sent. * : Initial setting: OFF 2. Press the start key. The setting is set. **Setting the short protocol transmission** Sets if short protocol transmission is performed. 1. Select the setting. **Display** / **Description** ON — Short protocol transmission is performed. OFF — Short protocol transmission is not performed. * : Initial setting: ON 2. Press the start key. The setting is set. **Setting the reception of a short protocol transmission** Selects whether to receive or ignore transmission using short protocol. If a short protocol transmission is received when an auto switching device is attached to the machine, communication problems, including auto switching inability, sometimes occur. Change the setting to ignore short protocol transmission to prevent such problems. 1. Select the setting. **Display** / **Description** ON — Receives short protocol transmission. OFF — Ignores short protocol transmission. * : Initial setting: ON 2. Press the start key. The setting is set.

TONER www.tonerplus.com.ua

<table>
<tr><th>Item No.</th><th>Description</th></tr>
<tr><td>U632</td><td>
Setting the CNG detection times in the fax/telephone auto select mode
Sets the CNG detection times in the fax/telephone auto select mode.
1. Select the setting using the cursor up/down keys.
<table>
<tr><th>Display</th><th>Description</th></tr>
<tr><td>1TIME</td><td>Detects CNG once.</td></tr>
<tr><td>2TIMES</td><td>Detects CNG twice.</td></tr>
</table>
* : Initial setting: 2TIMES
2. Press the start key. The setting is set.

Completion
Press the stop key. The screen for selecting a maintenance item No. is displayed.
</td></tr>
<tr><td>U633</td><td>
Setting communication control 4

Description
Makes settings for fax transmission regarding the communication.
Purpose
To reduce transmission errors when a low quality line is used.

Method
1. Press the start key.
2. Select the item to be set.
<table>
<tr><th>Display</th><th>Description</th></tr>
<tr><td>V.34</td><td>Enables or disables V.34 communication.</td></tr>
<tr><td>V.34-3429Hz</td><td>Sets the V.34 symbol speed (3429 Hz).</td></tr>
<tr><td>DIS 2RES</td><td>Sets the number of times of DIS signal reception.</td></tr>
<tr><td>RTN CHECK</td><td>Sets the reference for RTN signal output.</td></tr>
</table>
Enabling/disabling V.34 communication
Sets whether V.34 communication is enabled/disabled for transmission and reception.
1. Select the setting.
<table>
<tr><th>Display</th><th>Description</th></tr>
<tr><td>ON</td><td>V.34 communication is enabled for both transmission and reception.</td></tr>
<tr><td>TX</td><td>V.34 communication is enabled for transmission only.</td></tr>
<tr><td>RX</td><td>V.34 communication is enabled for reception only.</td></tr>
<tr><td>OFF</td><td>V.34 communication is disabled for both transmission and reception.</td></tr>
</table>
* : Initial setting: ON
2. Press the start key. The setting is set.
</td></tr>
</table>

TONER
www.tonerplus.com.ua

Item No.	Description
U633	**Setting the V.34 symbol speed (3429 Hz)** Sets if the V.34 symbol speed 3429 Hz is used. 1. Select the setting. **Display** / **Description** ON / V.34 symbol speed 3429 Hz is used. OFF / V.34 symbol speed 3429 Hz is not used. * : Initial setting: ON 2. Press the start key. The setting is set. **Setting the number of times of DIS signal reception** Sets the number of times to receive the DIS signal to once or twice. Used as one of the correction measures for transmission errors and other problems. 1. Select the setting. **Display** / **Description** ONCE / Responds to the first signal. TWICE / Responds to the second signal. * : Initial setting: ONCE 2. Press the start key. The setting is set. **Setting the reference for RTN signal output** Sets the error line rate as the reference for RTN signal output. If transmission errors occur frequently due to the quality of the line, they can be reduced by lowering this setting. 1. Select the setting. **Display** / **Description** 5% / Error line rate of 5% 10% / Error line rate of 10% 15% / Error line rate of 15% 20% / Error line rate of 20% * : Initial setting: 15% 2. Press the start key. The setting is set. **Completion** Press the stop key. The screen for selecting a maintenance item No. is displayed.

TONER
www.tonerplus.com.ua

<table>
<tr><th>Item No.</th><th>Description</th></tr>
<tr><td>U634</td><td>

Setting communication control 5

Description
Sets the maximum number of error bytes judged acceptable when receiving a TCF signal. Used as a measure to ease transmission conditions if transmission errors occur.

Setting
1. Press the start key.
2. Change the setting using the cursor left/right keys or numeric keys.

Description	Setting range	Initial setting
Number of allowed error bytes when detecting TCF	0 to 255	0

3. Press the start key. The value is set.

Completion
Press the stop key. The screen for selecting a maintenance item No. is displayed.

</td></tr>
<tr><td>U640</td><td>

Setting communication time 1

Description
Sets the detection time when one-shot detection is selected for remote switching. (This setting item will be displayed, but the setting made is ineffective.)
Sets the detection time when continuous detection is selected for remote switching. (This setting item will be displayed, but the setting made is ineffective.)

Method
1. Press the start key.
2. Select the item to be set.

Display	Description
TIME (ONE)	Sets the one-shot detection time for remote switching.
TIME (CONT)	Sets the continuous detection time for remote switching.

Setting the one-shot detection time for remote switching
1. Change the setting using the cursor left/right keys.

Description	Setting range	Initial setting
One-shot detection time for remote switching	0 to 255	7

2. Press the start key. The value is set.

Setting the continuous detection time for remote switching
1. Change the setting using the cursor left/right keys.

Description	Setting range	Initial setting
Continuous detection time for remote switching	0 to 255	80

2. Press the start key. The value is set.

Completion
Press the stop key. The screen for selecting a maintenance item No. is displayed.

</td></tr>
</table>

TONER
www.tonerplus.com.ua

Item No.	Description
U641	**Setting communication time 2** **Description** Sets the time-out time for fax transmission. **Purpose** To improve transmission performance for international communications mainly. **Method** 1. Press the start key. 2. Select the item to be set. **Display** / **Description** T0 TIME OUT — Sets the T0 time-out time. T1 TIME OUT — Sets the T1 time-out time. T2 TIME OUT — Sets the T2 time-out time. Ta TIME OUT — Sets the Ta time-out time. Tb1 TIME OUT — Sets the Tb1 time-out time. Tb2 TIME OUT — Sets the Tb2 time-out time. Tc TIME OUT — Sets the Tc time-out time. Td TIME OUT — Sets the Td time-out time. **Setting the T0 time-out time** Sets the time before detecting a CED or DIS signal after a dialing signal is sent. Depending on the quality of the exchange, or when the auto select function is selected at the destination unit, a line can be disconnected. Change the setting to prevent this problem. 1. Change the setting using the cursor left/right keys. **Description** / **Setting range** / **Initial setting** T0 time-out time — 30 to 90 s — 56 2. Press the start key. The value is set. **Setting the T1 time-out time** Sets the time before receiving the correct signal after call reception. No change is necessary for this maintenance item. 1. Change the setting using the cursor left/right keys. **Description** / **Setting range** / **Initial setting** T1 time-out time — 30 to 90 s — 36 2. Press the start key. The value is set.

TONER
www.tonerplus.com.ua

Item No.	Description
U641	

Setting the T2 time-out time

The T2 time-out time decides the following.
From CFR signal output to image data reception
From image data reception to the next signal reception
In ECM, from RNR signal detection to the next signal reception

1. Change the setting using the cursor left/right keys.

Description	Setting range	Initial setting	Change in value per step
T2 time-out time	1 to 255	69	100 ms

2. Press the start key. The value is set.

Setting the Ta time-out time

In the fax/telephone auto select mode, sets the time to continue ringing an operator through the connected telephone after receiving a call as a fax machine (see figure 1-3-3). A fax signal is received within the Ta set time, or the fax mode is selected automatically when the time elapses. In fax/telephone auto select mode, change the setting when fax reception is unsuccessful or a telephone fails to receive a call.

1. Change the setting using the cursor left/right keys.

Description	Setting range	Initial setting
Ta time-out time	1 to 255	30

2. Press the start key. The value is set.

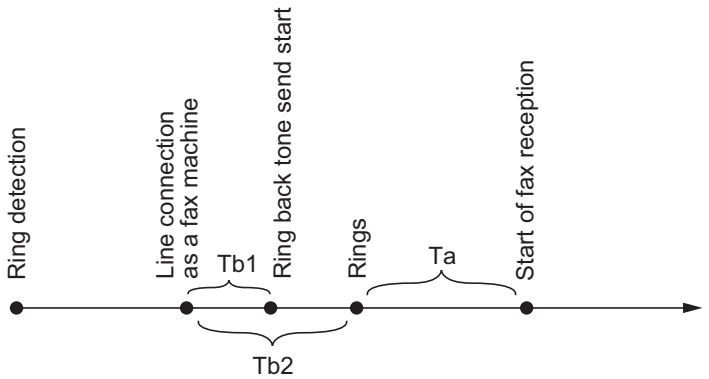

Figure 1-3-3 Ta/Tb1/Tb2 time-out time

Setting the Tb1 time-out time

In the fax/telephone auto select mode, sets the time to start sending the ring back tone after receiving a call as a fax machine (see figure 1-3-3). In fax/telephone auto select mode, change the setting when fax reception is unsuccessful or a telephone fails to receive a call.

1. Change the setting using the cursor left/right keys.

Description	Setting range	Initial setting	Change in value per step
Tb1 time-out time	1 to 255	20	100 ms

2. Press the start key. The value is set.

TONER
www.tonerplus.com.ua

Item No.	Description
U641	

Setting the Tb2 time-out time

In the fax/telephone auto select mode, sets the time to start ringing an operator through the connected telephone after receiving a call as a fax machine (see figure 1-3-3). In the fax/telephone auto select mode, change the setting when fax reception is unsuccessful or a telephone fails to receive a call.

1. Change the setting using the cursor left/right keys.

Description	Setting range	Initial setting	Change in value per step
Tb2 time-out time	1 to 255	80	100 ms

2. Press the start key. The value is set.

Setting the Tc time-out time

In the TAD mode, set the time to check if there are any triggers for shifting to fax reception after a connected telephone receives a call. Only the telephone function is available if shifting is not made within the set Tc time.

In the TAD mode, change the setting when fax reception is unsuccessful or a telephone fails to receive a call.

1. Change the setting using the cursor left/right keys.

Description	Setting range	Initial setting
Tc time-out time	1 to 255	60

2. Press the start key. The value is set.

Setting the Td time-out time

Sets the length of the time required to determine silent status (fax), one of the triggers for Tc time check. In the TAD mode, change the setting when fax reception is unsuccessful or a telephone fails to receive a call. Be sure not to set it too short; otherwise, the mode may be shifted to fax while the unit is being used as a telephone.

1. Change the setting using the cursor left/right keys.

Description	Setting range	Initial setting
Td time-out time	1 to 255	9 (120 V)/6 (220-240 V)

2. Press the start key. The value is set.

Completion

Press the stop key. The screen for selecting a maintenance item No. is displayed.

TONER
www.tonerplus.com.ua

Item No.	Description
U650	**Setting modem 1** **Description** Sets the G3 cable equalizer. Sets the modem detection level. **Purpose** Perform the following adjustment to make the equalizer compatible with the line characteristics. To improve the transmission performance when a low quality line is used. **Method** 1. Press the start key. 2. Select the item to be set. **Setting the G3 transmission cable equalizer** 1. Select [0dB], [4dB], [8dB] or [12dB]. * : Initial setting: 0dB 2. Press the start key. The setting is set. **Setting the G3 reception cable equalizer** 1. Select [0dB], [4dB], [8dB] or [12dB]. * : Initial setting: 0dB 2. Press the start key. The setting is set. **Setting the modem detection level** 1. Select [33dBm], [38dBm], [43dBm] or [48dBm]. * : Initial setting: 43dBm 2. Press the start key. The setting is set. **Completion** Press the stop key. The screen for selecting a maintenance item No. is displayed.

Display	Description
REG. G3 TX EQR	Sets the G3 transmission cable equalizer.
REG. G3 RX EQR	Sets the G3 reception cable equalizer.
RX MODEM LEVEL	Sets the modem detection level.

TONER
www.tonerplus.com.ua

Item No.	Description
U651	**Setting modem 2** **Description** Sets the modem output level. Sets the DTMF output level of a push-button dial telephone. **Purpose** Used if problems occur when sending a signal with a push-button dial telephone. **Setting** 1. Press the start key. 2. Select the item to be set. 3. Change the setting using the cursor left/right keys or numeric keys. 4. Press the start key. The setting is set. **Completion** Press the stop key. The screen for selecting a maintenance item No. is displayed.

Display	Description	Setting range	Initial setting
SGL LV MDM	Modem output level	1 to 15	9 (120 V) 10 (220-240 V)
DTMF LV(C)	DTMF output level (main value)	0 to 15.0	5 (120 V) 10.5 (220-240 V)
DTMF LV(D)	DTMF output level (level difference)	0 to 5.5	2 (120 V) 2.5 (220-240 V)

TONER
www.tonerplus.com.ua

Item No.	Description
U660	**Setting the NCU** **Description** Makes setting regarding the network control unit (NCU). **Purpose** To be set when installing the facsimile kit. **Method** 1. Press the start key. 2. Select the item to be set. **Display** / **Description** EXCHANGE — Sets the connection to PBX/PSTN. DIAL TONE — Sets PSTN dial tone detection. BUSY TONE — Sets busy tone detection. PBX SETTING — Setting for a PBX. DC LOOP — Sets the loop current detection before dialing. **Setting the connection to PBX/PSTN** Selects if a fax is to be connected to either a PBX or public switched telephone network. 1. Select the setting. **Display** / **Description** PSTN — Connected to the public switched telephone network. PBX — Connected to a PBX. * : Initial setting: PSTN 2. Press the start key. The setting is set. **Setting PSTN dial tone detection** Selects if the dial tone is detected to check the telephone is off the hook when a fax is connected to a public switched telephone network. 1. Select the setting. **Display** / **Description** ON — Detects the dial tone. OFF — Does not detect the dial tone. * : Initial setting: ON 2. Press the start key. The setting is set.

TONER
www.tonerplus.com.ua

Item No.	Description
U660	**Setting busy tone detection** When a fax signal is sent, sets whether the line is disconnected immediately after a busy tone is detected, or the busy tone is not detected and the line remains connected until T0 time-out time. Fax transmission may fail due to incorrect busy tone detection. When set to 2, this problem may be prevented. However, the line is not disconnected within the T0 time-out time even if the destination line is busy. 1. Select the setting. **Display** / **Description** ON / Detects busy tone. OFF / Does not detect busy tone. * : Initial setting: ON 2. Press the start key. The setting is set. **Setting for a PBX** Selects the mode to connect an outside call when connected to a PBX. According to the type of the PBX connected, select the mode to connect an outside call. 1. Select the setting. **Display** / **Description** EARTH / Earth mode FLASH / Flashing mode LOOP / Code number mode * : Initial setting: LOOP 2. Press the start key. The setting is set. **Setting the loop current detection before dialing** Sets if the loop current detection is performed before dialing. 1. Select the setting. **Display** / **Description** ON / Performs loop current detection before dialing. OFF / Does not perform loop current detection before dialing. * : Initial setting: ON 2. Press the start key. The setting is set. **Completion** Press the stop key. The screen for selecting a maintenance item No. is displayed.

TONER
www.tonerplus.com.ua

Item No.	Description
U670	**Outputting lists** **Description** Outputs a list of data regarding fax transmissions. Printing a list is disabled either when a job is remaining in the buffer or when [Pause All Print Jobs] is pressed to halt printing. **Purpose** To check conditions of use, settings and transmission procedures of the fax. **Method** 1. Press the start key. 2. Select the item to be output. 3. Press the start key. The selected list is output. **Completion** Press the stop key. The screen for selecting a maintenance item No. is displayed.

Display	Description
SETTING LIST	Outputs a list of software switches, self telephone number, confidential boxes, ROM versions and other information.
ACTION LIST	Outputs a list of error history, transmission line details and other information.
SELF ST REPORT	Outputs a list of settings in maintenance mode (own-status report) regarding fax transmission only.
PROTOCOL LIST	Outputs a list of transmission procedures.
ERROR LIST	Outputs a list of error.
ADDR BOOK(No.)	Outputs address book in order IDs were added
ADDR BOOK(Name)	Outputs address book in order of names
ONE-TOUCH LIST	Outputs a list of one-touch.
GROUP LIST	Outputs a list of group.

TONER
www.tonerplus.com.ua

Item No.	Description
U695	**FAX function customize** **Description** Sets fax batch transmission ON/OFF. Also changes the print size priority at the time of small size reception. **Purpose** To be executed as required. **Setting** 1. Select the setting. **Setting: [FAX BULK TX]** 1. Select [ON] or [OFF]. **Setting: [A5 PT PRI CHG]** 1. Select [ON] or [OFF]. **Completion** Press the stop key. The screen for selecting a maintenance item No. is displayed.

Display	Description
FAX BULK TX	fax batch transmission ON/OFF
A5 PT PRI CHG	Change of print size priority at the time of small size reception

Display	Description
ON	Fax batch transmission is enabled.
OFF	Fax batch transmission is disabled.

* : Initial setting: ON

2. Press the start key. The setting is set.

Display	Description
ON	At the time of A5 size reception: A5→B5→A4
OFF	At the time of A5 size reception: A5→A4→B5

* : Initial setting: OFF

2. Press the start key. The setting is set.

TONER
www.tonerplus.com.ua

Item No.	Description
U699	**Setting the software switches**

Description
Sets the software switches on the FAX control PWB individually.
Purpose
To change the setting when a problem such as split output of received originals occurs.
Since the communication performance is largely affected, normally this setting need not be changed.

Method
1. Press the start key.
2. Press [SW No.].
3. Enter the desired software switch number (3 digits) using the numeric keys and press the enter key.
4. Use numeric keys 7 to 0 to switch each bit between 0 and 1.
5. Press the start key to set the value.

Completion
Press the stop key. The screen for selecting a maintenance item No. is displayed.

List of Software Switches of Which the Setting Can Be Changed

<Communication control procedure>

No.	Bit	Item
36	7654	Coding format in transmission
	3210	Coding format in reception
37	5	33600 bps/V34
	4	31200 bps/V34
	3	28800 bps/V34
	2	26400 bps/V34
	1	24000 bps/V34
	0	21600 bps/V34
38	7	19200 bps/V34
	6	16800 bps/V34
	5	14400 bps/V34
	4	12000 bps/V34
	3	9600 bps/V34
	2	7200 bps/V34
	1	4800 bps/V34
	0	2400 bps/V34
41	3	FSK detection in V.8
42	4	4800 bps when low-speed setting is active
	2	FIF length in transmission of more than 4 times of DIS/DTC signal

TONER
www.tonerplus.com.ua

Item No.	Description
U699	<Communication time setting>

No.	Bit	Item
53	76543210	T3 timeout setting
54	76543210	T4 timeout setting (automatic equipment)
55	76543210	T5 timeout setting
60	76543210	Time before transmission of CNG (1100 Hz) signal
63	76543210	T0 timeout setting (manual equipment)
64	7	Phase C timeout in ECM reception
66	76543210	Timeout 1 in countermeasures against echo
68	76543210	Timeout for FSK detection start in V.8

<Modem setting>

No.	Bit	Item
89	76543	RX gain adjust

<NCU setting>

No.	Bit	Item
121	7654	Dial tone/busy tone detection pattern
122	7654	Busy tone detection pattern
	1	Busy tone detection in automatic FAX/TEL switching
125	76543210	Access code registration for connection to PSTN
126	7654	FAX/TEL automatic switching ringback tone ON/OFF cycle

<Calling time setting>

No.	Bit	Item
133	76543210	DTMF signal transmission time
134	76543210	DTMF signal pause time
141	76543210	Ringer detection cycle (minimum)
142	76543210	Ringer detection cycle (maximum)
143	76543210	Ringer ON time detection
144	76543210	Ringer OFF time detection
145	76543210	Ringer OFF non-detection time
147	76543210	Dial tone detection time (continuous tone)
148	76543210	Allowable dial tone interruption time
149	76543210	Time for transmitting selection signal after closing the DC circuit
151	76543210	Ringer frequency detection invalid time

TONER
www.tonerplus.com.ua

Item No.	Description
U910	**Clearing the black ratio data** **Description** Clears the accumulated black ratio data for A4 sheet. **Purpose** To clear data as required at times such as during maintenance service. **Method** 1. Press the start key. 2. Select [ALL CLEAR]. 3. Press the start key. The accumulated black ratio data is cleared. **Completion** Press the stop key. The screen for selecting a maintenance item No. is displayed.

TONER
www.tonerplus.com.ua

Item No.	Description
U917	**Setting backup data reading/writing** **Description** Retrieves the backup data to a USB memory from the machine; or writes the data from the USB memory to the machine. **Purpose** To store and write data when replacing the control PWB. **Method** 1. Press the power key on the operation panel, and after verifying the power indicator has gone off, switch off the main power switch. 2. Insert USB memory in USB memory slot. 3. Turn the main power switch on. Wait for 10 seconds to allow the machine to recognize the USB memory. 4. Enter the maintenance item. 5. Press the start key. 6. Select [Export] or [Import] and press the start key.

Display	Description
IMPORT	Writing data from the USB memory to the machine
EXPORT	Retrieving from the machine to a USB memory

7. Select the item.

Display	Description	Depending data
ADDRESS BOOK	Address book	-
JOB ACCNT.	Job accounting	-
ONE TOUCH	Information on one-touch key	Address book
USER	User managements	Job accounting
PROGRAM	Program information	Job accountings and user managements
DOCUMENT BOX	Document box information	Job accountings and user managements
FAX FORWARD	FAX transfer information	Job accountings, user managements and document box information

* : Since data are dependent with each other, data other than those assigned are also retrieved or written in.

8. Select [ON].
9. Press the start key. Starts reading or writing.
The progress of selected item is displayed in %.
When an error occurs, the operation is canceled and an error code is displayed.
10. When normally completed, [FIN] is displayed.
11. Turn the main power switch off and on after completing writing when selecting [IMPORT].

TONER
www.tonerplus.com.ua

Item No.	Description
U917	**Error Codes**

Codes	Description	Codes	Description
e002	Parameter error	e31e	User managements error
e003	File write error	e31f	User managements open error
e004	File initialization error	e320	User managements error
e005	File error	e410	Box file open error
e006	Processing error	e411	Box error in writing
e010	Address book clear error (contact)	e412	Box error in reading
e011	Address book open error (contact)	e413	Box list error
e012	Address book list error (contact)	e414	Box list error
e013	Address book list error (contact)	e415	Box error
e014	Address book clear error (group)	e416	Box error
e015	Address book open error (group)	e417	Box open error
e016	Address book list error (group)	e418	Box close error
e017	Address book list error (group)	e419	Box creation error
e110	Job accounting clear error	e41a	Box creation error
e111	Job accounting open error	e41b	Box deletion error
e112	Job accounting open error	e41c	Box movement error
e113	Job accounting error in writing	e510	Program error in writing
e114	Job accounting list error	e511	Program error in reading
e115	Job accounting list error	e710	Fax memory open error
e210	One-touch open error	e711	Fax memory initialization error
e211	One-touch list error	e712	Fax memory list error
e212	One-touch list error	e713	Fax memory error
e310	User managements backup error	e714	Fax memory error
e311	User managements clear error	e715	Fax memory mode error
e312	User managements open error	e716	Fax memory error
e313	User managements open error	e717	Fax memory error
e314	User managements open error	e718	Fax memory mode error
e315	User managements error in writing	e910	File reading error
e316	User managements list error	e911	File writing error
e317	User managements list error	e912	Data mismatch
e318	User managements list error	e913	Log file open error
e319	User managements list error	e914	Log file error in writing
e31a	User managements open error	e915	Directory open error
e31b	User managements error	e916	Directory error in reading
e31c	User managements error	e917	Synchronization error
e31d	User managements open error	e918	Synchronization error

TONER
www.tonerplus.com.ua

Item No.	Description
U917	**Error Codes**

Codes	Description	Codes	Description
d000	Unspecified error	d00b	File reading error
d001	HDD unavailable	d00c	File writing error
d002	USB memory is not inserted	d00d	File copy error
d003	File for writing is not found in the USB	d00e	File compressed error
d004	File for reading is not found in the HDD	d00f	File decompressed error
d005	USB error in writing	d010	Directory open error
d006	USB error in reading	d011	Directory creation error
d007	USB unmount error	d012	File writing error
d008	File rename error	d013	File reading error
d009	File open error	d014	File deletion error
d00a	File close error	d015	File copy error to the USB

Supplement
The following restrictions apply to the data which were imported from 4 in 1 model (with FAX) to 3 in 1 model (without FAX).
Personal address book: FAX-related data are not imported.
Group address book: Group addresses including FAX addresses are not imported.
Job accounting data: Initial values are added for FAX-related data.
One-touch data: Groups assigned with FAX addresses or those including FAX are not imported.
User management data: Initial values are added for out-going FAXes of authentication.
Program data: Not imported. (The same applies when data are imported from 3 in 1 to 4 in 1 model.)

Completion
Press the stop key. The screen for selecting a maintenance item No. is displayed.

U927

Clearing the all copy counts and machine life counts (one time only)

Description
Resets all of the counts back to zero.

Supplement
The total account counter and the machine life counter can be cleared only once if all count values are 1000 or less.

Method
1. Press the start key.
2. Press [EXECUTE].
3. Press the start key. All copy counts and machine life counts are cleared.
   [CAN NOT EXECUTE] is displayed if the count cannot be cleared.

Completion
Press the stop key. The screen for selecting a maintenance item No. is displayed.

TONER
www.tonerplus.com.ua

Item No.	Description
U977	**Data capture mode** **Description** Store the print data sent to the machine into USB memory. **Purpose** In case to occur the error at printing, check the print data sent to the machine. **Method** 1. Insert USB memory in USB memory slot. 2. Turn the main power switch on. 3. Enter the maintenance item. 4. Press the start key. 5. Select [EXECUTE]. 6. Press the start key. 7. Send the print data to the machine. Once the print data is stored into USB memory, OK will be displayed. **Completion** Press the stop key. The screen for selecting a maintenance item No. is displayed.

TONER
www.tonerplus.com.ua

1-3-2 Service mode

The machine is equipped with a maintenance function which can be used to maintain and service the machine.

(1) Executing a service mode

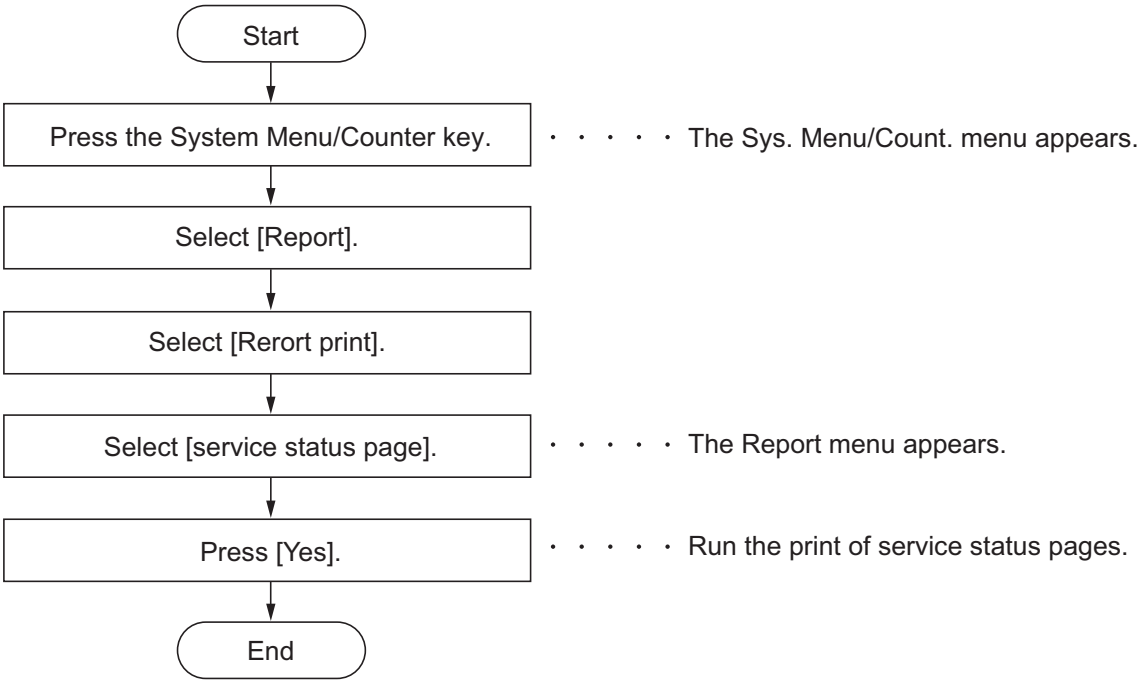

TONER
www.tonerplus.com.ua

(2) Description of service mode

Service items	Description
Service Status	**Printing a status page for service purpose** **Description** Prints a status page for service purpose. The status page includes various settings and service cumulative. **Purpose** To acquire the current printing environmental parameters and cumulative information. **Method** 1. Select [Service status]. 2. Select [YES]. Two pages will be printed. **Completion** Press the System Menu/Counter key.

TONER
www.tonerplus.com.ua

Service items	Description

Service status page (1)

Service Status Page

MFP

(2) 08/03/2011 12:00

(1) Firmware version 2MD_2F00.001.020 2011.02.24 (3) [XXXXXXXX] (4) [XXXXXXXX] (5) [XXXXXXXX]

Controller Information

Memory status

(7) Standard Size 128.0 KB
(8) Option Slot 128.0 KB
(9) Total Size 256.0 KB

Time

(10) Local Time Zone +01:00 Tokio
(11) Date and Time 06/04/2010 12:00
(12) Time Server 10.183.53.13

Installed Options

(13) Paper Feeder Cassette
(14) Memory Card Not Installed
(15) Card Authentication Kit (B) Not Installed
(16) USB Keyboard Connected
(17) USB Keyboard Type US-English

Print Coverage

(18) Average(%) / Usage Page(A4/Letter Conversion)
(19) Total
K: 1.10 / 1111111.11
(20) Copy
K: 1.10 / 1111111.11
(21) Printer
K: 1.10 / 1111111.11
(22) FAX
K: 1.10 / 1111111.11
(23) Period (27/10/2009 - 03/11/2009 08:40)
(24) Last Page (%) 1.00

FAX Information

(25) Rings (Normal) 3
(26) Rings (FAX/TEL) 3
(27) Rings (TAD) 3

(28) FRPO Status

User Top Margin	A1+A2/100	0.00
User Left Margin	A3+A4/100	0.00
PDF mode	Y5	00

1

(6) [XXXXXXXXXXXXXXXX]

Figure 1-3-4

TONER
www.tonerplus.com.ua

Service items	Description

Service status page (2)

Service Status Page

MFP 08/03/2011 12:00

Firmware version 2MD_2F00.001.020 2011.02.24 [XXXXXXXX] [XXXXXXXX] [XXXXXXXX]

Engine Information

(29) NVRAM Version _1F31255_1F31255
(30) Scanner Version 2MD_1200.001.089
(31) FAX Slot1
FAX BOOT Version 2KX_5000.001.001
FAX APL Version 2KX_5100.001.001
FAX IPL Version 2KX_5200.001.001
(32) MAC Address 00:C0:EE:D0:01:0D
(33) DP Counters
Total 1234

Send Information

(34) Date and Time 10/06/30 15:30
(35) Address

1/2 **(36) (37)**
(38) 100/100

(39) 0/0/0/0/0/0/
(40) 0/0/0/0/0/0/
(41) 0/0/0/0/0/0/0/0/
(42) 0000000/0000000/0000000/0000000/0000000/0000000/0000000/
0000000/
F00/U00/0/0/0/30/30/70/70/00/abcde/1/0 **(43) (44) (45) (46) (47) (48) (49) (50) (51) (52) (53) (54) (55)**
(56) 0000/0000/0000/0000/0000/0000/0000/0000/0000/0000/0000/0000/0000/0000/0000/
0000/0000/0000/0000/0000/0000/0000/0000/0000/0000/
(57) 12345678/11223344/00001234abcd567800001234abcd5678/0123456789012345678901234567890 1/0008/00/07
2MD_D100.001.005/t/**(58) (59)**

(60) [ABCDEFGHIJ/] [ABCDEFGHIJ/] [ABCDEFGHIJ/]
(61) [ABCDEFGHIJ/]
(62) 0000000000/F80C001A37/302A183C00/000100013D/8791BEC305/0000003100/000F5D0000/01FD000000/
0000000FB7/0000000000/0000260000/0000000000/0000000000/0000008400/0000000000/011E000F51/00000073
ABCD/ABCDEFGHIJ **(63) (64)**

2 [XXXXXXXXXXXXXXXX]

Figure 1-3-5

TONER
www.tonerplus.com.ua

Service items	Description
	Detail of service status page

No.	Description	Supplement
(1)	Firmware version	-
(2)	System date	-
(3)	Engine soft version	-
(4)	Engine boot version	-
(5)	Operation panel mask version	-
(6)	Machine serial number	-
(7)	Standard memory size	-
(8)	Optional memory size	-
(9)	Total memory size	-
(10)	Local time zone	-
(11)	Report output date	-
(12)	NTP server name	-
(13)	Presence or absence of the optional paper feeder	Paper feeder 2/Paper feeder 3/Paper feeder 4
(14)	Presence or absence of the optional memory card	-
(15)	Presence or absence of the card authentication kit (B)	-
(16)	Presence or absence of the USB Keyboard	Connected/Not Connected
(17)	Type of the USB Keyboard	US-English/US-English with Euro
(18)	Page of relation to the A4/Letter	-
(19)	Average coverage for total	-
(20)	Average coverage for copy	-
(21)	Average coverage for printer	-
(22)	Average coverage for fax	-
(23)	Cleared date and output date	-
(24)	Coverage on the final output page	-
(25)	Number of rings	0 to 15
(26)	Number of rings before automatic switching	0 to 15
(27)	Number of rings before connecting to answering machine	0 to 15
(28)	FRPO setting	-

www.tonerplus.com.ua

Service items	Description

No.	Description	Supplement
(29)	NV RAM version	_ 1F3 1225 _ 1F3 1225 (a) (b) (c) (d) (e) (f) (a) Consistency of the present software version and the database _ (underscore): OK * (Asterisk): NG (b) Database version (c) The oldest time stamp of database version (d) Consistency of the present software version and the ME firmware version _ (underscore): OK * (Asterisk): NG (e) ME firmware version (f) The oldest time stamp of the ME database version Normal if (a) and (d) are underscored, and (b) and (e) are identical with (c) and (f).
(30)	Scanner firmware version	-
(31)	Fax firmware version	-
(32)	Mac address	-
(33)	Number of original feed from DP	-
(34)	The last sent date and time	-
(35)	Transmission address	-
(36)	Destination information	-
(37)	Area information	-
(38)	Margin settings	Top margin/Left margin
(39)	Top offset setting	-
(40)	Left offset setting	-
(41)	Margin/Page length/Page width settings	Top margin integer part/Top margin decimal part/ Left margin integer part/Left margin decimal part/ Page length integer part/Page length decimal part/ Page width integer part/Page width decimal part
(42)	Life counter (The first line)	Machine life/MP tray/Cassette 1/Cassette 2/ Cassette 3/Cassette 4 /Duplex
	Life counter (The second line)	Maintenance kit
(43)	Panel lock information	0: OFF/1: Partial lock/2: Full lock
(44)	USB information	0: Not installed/1: Full speed/2: Hi speed
(45)	Paper handling information	0: Paper source unit select/1: Paper source unit

www.tonerplus.com.ua

Service items	Description

No.	Description	Supplement
(46)	Black and white printing double count mode	0: All single counts 3: Folio, Single count, Less than 330 mm (length)
(47)	Billing counting timing	-
(48)	Temperature (machine inside)	-
(49)	Temperature (machine outside)	-
(50)	Relative temperature (machine outside)	-
(51)	Absolute temperature (machineoutside)	-
(52)	LXI calibration information	-
(53)	Fixed assets number	-
(54)	Job end judgment time-out time	-
(55)	Job end detection mode	-
(56)	Media type attributes 1 to 28 (Not used: 18, 19, 20)	Weight settings 0: Light/1: Normal 1 / 2: Normal 2 / 3: Normal 3/ 4: Heavy 1 / 5: Heavy 2 / 6: Heavy 3 / 7: Extra Heavy Fuser settings 0: High / 1: Middle / 2: Low / 3: Vellum Duplex settings 0: Disable / 1: Enable
(57)	RFID information	-
(58)	RFID reader/writer version information	-
(59)	Toner installation mode information	-
(60)	Soft version of the optional paper feeder	-
(61)	Version of the optional message	-
(62)	Maintenance information	-
(63)	Durm ID	-
(64)	Drum serial number	-

Code conversion

A	B	C	D	E	F	G	H	I	J
0	1	2	3	4	5	6	7	8	9

TONER
www.tonerplus.com.ua

Service items	Description
Network Status	**Printing a status page for network** **Description** Prints a status page for network. **Purpose** To acquire the detailed network setting information. **Method** 1. Enter the Service Setting menu. 2. Select [Network Status]. 3. Press the start key. 4. Press [Yes] (the Left Select key). Network status page will be printed. **Completion** Press the stop key.
New Developer	**Performing toner install** **Description** Replenishes toner rapidly from the toner container into the developing unit. **Purpose** Perform the developer refreshing when the destiny is light or the faint of dark part occurs. **Method** 1. Enter the Service Setting menu. 2. Select [New Developer]. 3. Press the start key. 4. Press [Yes] (the Left Select key). Toner install mode is performed. **Completion** Press the stop key.

TONER
www.tonerplus.com.ua

<table>
<tr><th>Service items</th><th>Description</th></tr>
<tr><td>Auto DrumRefresh</td><td>
Automatic drum refreshing

Description
Sets the specify the duration of automatic drum refreshing.
Purpose
To prevent bleeding of the output image when operating environment is one of high humidity.

Method
1. Enter the Service Setting menu.
2. Select [Auto DrumRefresh].
3. Press the start key.
4. Select the setting.
<table>
<tr><th>Display</th><th>Description</th></tr>
<tr><td>OFF</td><td>Disables automatic drum refreshing</td></tr>
<tr><td>Standard</td><td>Sets the standard duration for automatic drum refreshing (maximum 140 s)</td></tr>
<tr><td>Long</td><td>Sets a longer time for automatic drum refreshing (maximum 180 s)</td></tr>
</table>
5. Press the start key. The setting is set.

Completion
Press the stop key.
</td></tr>
<tr><td>Drum Refresh</td><td>
Performing drum refreshing

Description
To perform drum refreshing.
Purpose
To clean the drum surface when image failure occurs due to the drum. This mode is effective when dew condensation on the drum occurs.

Method
1. Enter the Service Setting menu.
2. Select [Drum Refresh].
3. Press the start key.
4. Press [Yes] (the Left Select key). Drum refresh is performed.

Completion
Press the stop key.
</td></tr>
</table>

TONER
www.tonerplus.com.ua

1-4-1 Paper misfeed detection

(1) Paper misfeed indication

When a paper misfeed occurs, the machine immediately stops printing and displays the paper misfeed message on the operation panel. To remove paper misfeed in the machine, pull out the paper cassette, pull out the rear unit, remove the developing unit or open the duplex cover.

(2) Paper misfeed detection condition

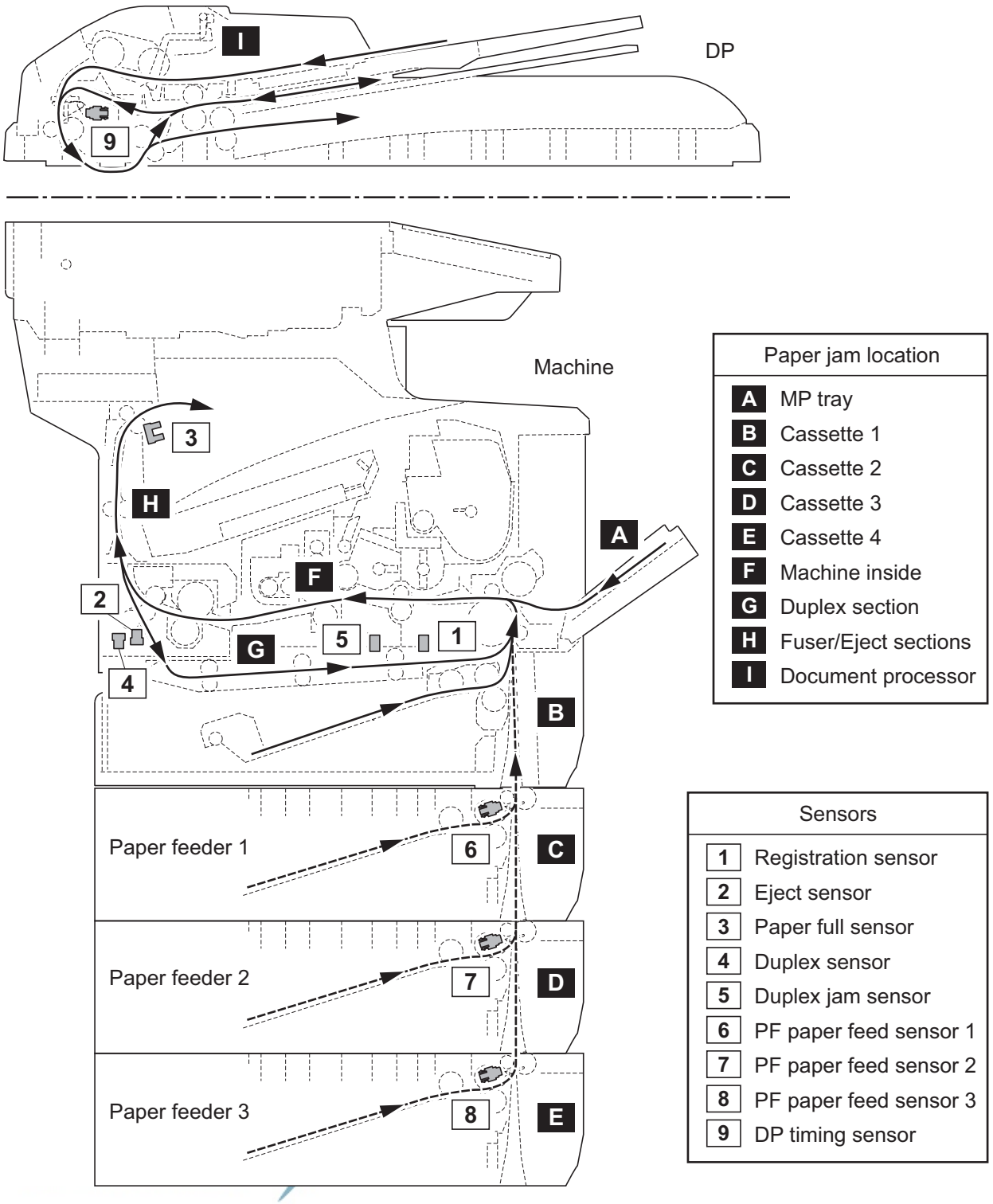

Figure 1-4-1

Section	Code	Conditions	Jam location
Machine	**0010**	Paper does not arrive at the registration sensor (RS) within specified time from start of paper feed (paper feed from MP tray).	**A**
		Paper does not arrive at the registration sensor (RS) within specified time from start of paper feed (paper feed from cassette).	**B**
		Paper does not arrive at the registration sensor (RS) within specified time of PF paper feed sensor turning on (paper feed from paper feeder).	**B**
		Paper does not arrive at the registration sensor (RS) within specified time from start of paper switchback (duplex refeeding).	**G**
	0011	Paper does not pass the registration sensor (RS) within specified time from start of secondary paper feed.	**F**
	0012	Paper remains at the registration sensor (RS) when power is turned on.	**F**
	0020	Paper does not arrive at the eject sensor (ES) within specified time from start of secondary paper feed.	**F**
	0021	Paper does not pass the eject sensor (ES) within specified time of the registration sensor (RS) turning off.	**H**
	0022	Paper remains at the eject sensor (ES) when power is turned on.	**H**
	00A1	Paper does not arrive at the duplex sensor (DUS) within specified time from start of paper switchback.	**H**
	00A2	Paper does not pass the duplex sensor (DUS) within specified time of the duplex sensor (DUS) turning on.	**H**
	00A3	Paper does not arrive at the duplex jam sensor (DUJS) within specified time of the duplex sensor (DUS) turning on.	**G**
	00A4	Paper does not pass the duplex jam sensor (DUJS) within specified time from start of secondary paper feed (duplex refeeding).	**G**
	00A5	Paper remains at the duplex sensor (DUS) or the duplex jam sensor (DUJS) when power is turned on.	**G**
	00E0	Paper misfeed occurs due to forced stop when an error occurs during printing.	**-**
	00F0	Paper does not arrive at the paper full sensor (PFS) within specified time of the eject sensor (ES) turning on.	**H**
	00F1	Paper misfeed by system error.	**-**
	00F2	Paper misfeed by system error.	**-**

TONER
www.tonerplus.com.ua

*: Refer to figure 1-4-2 for paper jam location (see page 1-4-1)

Section	Code	Conditions	Jam location
Paper feeder	**0030**	Paper does not arrive at the PF paper feed sensor 1 within specified time from start of paper feed (paper feed from paper feeder 1).	**C**
		Paper does not arrive at the PF paper feed sensor 1 within specified time of the PF paper feed sensor 2 turning on (paper feed from paper feeder 2).	**C**
		Paper does not arrive at the PF paper feed sensor 1 within specified time of the PF paper feed sensor 3 turning on (paper feed from paper feeder 3).	**C**
	0031	Paper does not pass the PF paper feed sensor 1 within specified time of the PF paper feed sensor 1 turning on.	**C**
	0032	Paper remains at the PF paper feed sensor 1 when power is turned on.	**C**
	0040	Paper does not arrive at the PF paper feed sensor 2 within specified time from start of paper feed (paper feed from paper feeder 2).	**D**
		Paper does not arrive at the PF paper feed sensor 2 within specified time of the PF paper feed sensor 3 turning on (paper feed from paper feeder 3).	**D**
	0041	Paper does not pass the PF paper feed sensor 2 within specified time of the PF paper feed sensor 2 turning on.	**D**
	0042	Paper remains at the PF paper feed sensor 2 when power is turned on.	**D**
	0050	Paper does not arrive at the PF paper feed sensor 3 within specified time from start of paper feed (paper feed from paper feeder 3).	**E**
	0051	Paper does not pass the PF paper feed sensor 3 within specified time of the PF paper feed sensor 3 turning on.	**E**
	0052	Paper remains at the PF paper feed sensor 3 when power is turned on.	**E**
Document processor	**9000**	The DP timing sensor (DPTS) does not turn on within specified time during the first sheet feeding (Retry 5 times).	**I**
	9001	DP timing sensor (DPTS) turns off within the specified time since the sensor turns on.	**I**
	9003	During duplex switchback scanning, the DP timing sensor (DPTS) does not turn off within specified time.	**I**
	9004	During duplex switchback scanning, the DP timing sensor (DPTS) does not turn on within specified time since original switchback operation starts.	**I**
	9011	The DP or DP top cover is opened during original feeding.	**I**
	9401	The DP timing sensor (DPTS) does not turn off within specified time of the DP timing sensor (DPTS) turning on.	**I**

TONER
www.tonerplus.com.ua

*: Refer to figure 1-4-2 for paper jam location (see page 1-4-1)

1-4-2 Self-diagnostic function

(1) Self-diagnostic function

This machine is equipped with self-diagnostic function. When a problem is detected, the machine stops printing and display an error message on the operation panel. An error message consists of a message prompting a contact to service personnel, total print count, and a four-digit error code indicating the type of the error. (The display varies depending on the type of the error.)

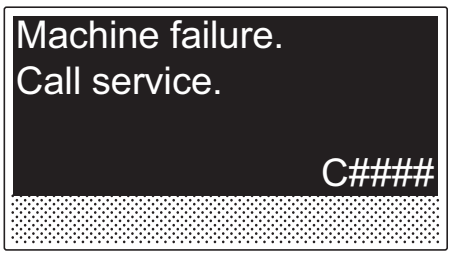

Figure 1-4-2

TONER
www.tonerplus.com.ua

(2) Self diagnostic codes

Code	Contents	Causes	Check procedures/ corrective measures
0030	**FAX control PWB system error** Processing with the fax software was disabled due to a hardware problem.	Defective FAX control PWB.	Replace the fax control PWB and check for correct operation. (see page 1-5-43).
0070	**FAX control PWB incompatible detection error** Abnormal detection of FAX control PWB incompatibility In the initial communication with the FAX control PWB, any normal communication command is not transmitted.	Defective FAX software.	Install the fax software.
		Defective FAX control PWB.	Replace the fax control PWB and check for correct operation. (see page 1-5-43).
0100	**Backup memory device error**	Defective flash memory.	Replace the main PWB and check for correct operation (see page 1-5-35).
		Defective main PWB.	Replace the main PWB and check for correct operation (see page 1-5-35).
0120	**MAC address data error** For data in which the MAC address is invalid.	Defective flash memory.	Replace the main PWB and check for correct operation (see page 1-5-35).
		Defective engine PWB.	Replace the engine PWB and check for correct operation (see page 1-5-31).
0130	**Backup memory read/ write error (main PWB)**	Defective flash memory.	Replace the main PWB and check for correct operation (see page 1-5-35).
		Defective main PWB.	Replace the main PWB and check for correct operation (see page 1-5-35).
0140	**Backup memory data error (main PWB)**	Defective flash memory.	Replace the main PWB and check for correct operation (see page 1-5-35).
		Defective main PWB.	Replace the main PWB and check for correct operation (see page 1-5-35).
0150	**Engine PWB EEPROM error** Detecting engine PWB EEPROM communication error.	Improper installation engine PWB EEPROM.	Check the installation of the EEPROM and remedy if necessary.
		Defective engine PWB.	Replace the engine PWB and check for correct operation (see page 1-5-31).
		Device damage of EEPROM.	Contact the Service Administrative Division.
0170	**Billing counting error** A checksum error is detected in the main and engine backup memories for the billing counters.	Data damage of EEPROM.	Contact the Service Administrative Division.
		Defective PWB.	Replace the main PWB or the engine PWB and check for correct operation (see page 1-5-35).

TONER
www.tonerplus.com.ua

Code	Contents	Causes	Check procedures/ corrective measures
0180	**Machine number mismatch** Machine number of main and engine does not match.	Data damage of EEPROM.	Contact the Service Administrative Division.
0420	**Paper feeder communication error** Communication error between engine PWB and optional paper feeder.	Improper installation paper feeder.	Follow installation instruction carefully again.
		Defective connector cable or poor contact in the connector.	Reinsert the connector. Also check for continuity within the connector cable. If none, remedy or replace the cable. Paper feeder interface and connect-L PWB (YC2) Connect-L PWB (YC6) and engine PWB (YC504)
		Defective engine PWB.	Replace the engine PWB and check for correct operation (see page 1-5-31).
		Defective PF main PWB.	Replace the PF main PWB (Refer to the service manual for the paper feeder).
0830	**FAX control PWB flash program area checksum error** A checksum error occurred with the program of the FAX control PWB.	Defective FAX software.	Install the fax software.
		Defective FAX control PWB.	Replace the FAX control PWB (see page 1-5-43).
0840	**Faults of RTC** The time is judged to go back based on the comparison of the RTC time and the current time or five years or more have passed.	The battery is disconnected from the main PWB.	Check visually and remedy if necessary
		Defective main PWB.	Replace the main PWB and check for correct operation (see page 1-5-35).
0870	**FAX control PWB to main PWB high capacity data transfer error** High-capacity data transfer between the FAX control PWB and the main PWB of the machine was not normally performed even if the data transfer was retried the specified times.	Improper installation FAX control PWB.	Reinstall the FAX control PWB (see page 1-5-43).
		Defective FAX control PWB or main PWB.	Replace the FAX control PWB or main PWB and check for correct operation (see page 1-5-43 or 1-5-35).
0920	**Fax file system error** The backup data is not retained for file system abnormality of flash memory of the FAX control PWB.	Defective FAX control PWB.	Replace the FAX control PWB and check for correct operation (see page 1-5-43).

TONER
www.tonerplus.com.ua

Code	Contents	Causes	Check procedures/ corrective measures
1010	**Lift motor error** During driving the lift motor, a motor overcurrent signal is detected for 5 s. This error is detected five times successively.	Defective bottom plate elevation mechanism in the cassette.	Check to see if the bottom plate can move smoothly and repair it if any problem is found.
		Defective connector cable or poor contact in the connector.	Reinsert the connector. Also check for continuity within the connector cable. If none, remedy or replace the cable. Lift motor and connect-R PWB (YC8) Connect-R PWB (YC2) and engine PWB (YC502)
		Defective drive transmission system of the lift motor.	Check if the gears rotate smoothly. If not, grease the bushes and gears. Check for broken gears and replace if any.
		Defective lift motor.	Replace the lift motor
		Defective engine PWB or connect-R PWB.	Replace the engine PWB or connect-R PWB and check for correct operation (see page 1-5-31).
2000	**Main motor steady-state error** The main motor ready input is not given for 2 s during the main motor is ON.	Defective connector cable or poor contact in the connector.	Reinsert the connector. Also check for continuity within the connector cable. If none, remedy or replace the cable. Main motor and engine PWB (YC501)
		Defective drive transmission system of the main motor.	Check if the rollers and gears rotate smoothly. If not, grease the bushes and gears. Check for broken gears and replace if any.
		Defective main motor.	Replace the main motor.
		Defective engine PWB.	Replace the engine PWB and check for correct operation (see page 1-5-31).
2200	**Drum motor steady-state error** The drum motor ready input is not given for 2 s during the drum motor is ON.	Defective connector cable or poor contact in the connector.	Reinsert the connector. Also check for continuity within the connector cable. If none, remedy or replace the cable. Drum motor and engine PWB (YC11)
		Defective drive transmission system of the drum motor.	Check if the rollers and gears rotate smoothly. If not, grease the bushes and gears. Check for broken gears and replace if any.
		Defective drum motor.	Replace the drum motor.
		Defective engine PWB.	Replace the engine PWB and check for correct operation (see page 1-5-31).

TONER
www.tonerplus.com.ua

Code	Contents	Causes	Check procedures/ corrective measures
3100	**ISU home position error** The home position is not correct when the power is turned on or at the start of copying using the table.	Defective connector cable or poor contact in the connector.	Reinsert the connector. Also check for continuity within the connector cable. If none, remedy or replace the cable. Home position sensor and CCD PWB (YC3) CCD PWB (YC2) and main PWB (YC8) ISU motor and main PWB (YC1004)
		Defective home position sensor.	Replace the home position sensor.
		Defective ISU motor.	Replace the ISU motor.
		Defective CCD PWB.	Replace the scanner unit (see page 1-5-26).
		Defective main PWB.	Replace the main PWB and check for correct operation (see page 1-5-35).
3200	**Exposure lamp error** When input value at the time of exposure lamp illumination does not exceed the threshold value between 5 s.	Defective connector cable or poor contact in the connector.	Reinsert the connector. Also check for continuity within the connector cable. If none, remedy or replace the cable. LED PWB (YC1) and LED drive PWB (YC2) LED drive PWB (YC1) and CCD PWB (YC3) CCD PWB (YC2) and main PWB (YC8)
		Defective exposure lamp or LED drive PWB.	Replace the scanner unit (see page 1-5-19).
		Defective CCD PWB.	Replace the scanner unit (see page 1-5-19).
		Defective main PWB.	Replace the main PWB and check for correct operation (see page 1-5-34).
3500	**Communication error between scanner and ASIC** An error code is detected.	Defective connector cable or poor contact in the connector.	Reinsert the connector. Also check for continuity within the connector cable. If none, remedy or replace the cable. CCD PWB (YC2) and main PWB (YC8)
		Defective CCD PWB.	Replace the scanner unit (see page 1-5-26).
		Defective main PWB.	Replace the main PWB and check for correct operation (see page 1-5-35).
4000	**Polygon motor synchronization error** The polygon motor ready input is not given for 10 s during the polygon motor is ON.	Defective connector cable or poor contact in the connector.	Reinsert the connector. Also check for continuity within the connector cable. If none, remedy or replace the cable. Laser scanner unit and main PWB (YC14)
		Defective polygon motor.	Replace the laser scanner unit (see page 1-5-16).
		Defective main PWB.	Replace the main PWB and check for correct operation (see page 1-5-35).

TONER
www.tonerplus.com.ua

Code	Contents	Causes	Check procedures/ corrective measures
4200	**BD steady-state error**	Defective connector cable or poor contact in the connector.	Reinsert the connector. Also check for continuity within the connector cable. If none, remedy or replace the cable. Laser scanner unit and main PWB (YC16)
		Defective laser scanner unit.	Replace the laser scanner unit (see page 1-5-16).
		Defective main PWB.	Replace the main PWB and check for correct operation (see page 1-5-35).
4700	**VIDEO ASIC device error** Mismatch of reading data from two locations occurs eight times successively. Mismatch between writing data and reading data occurs eight times successively.	Defective connector cable or poor contact in the connector.	Reinsert the connector. Also check for continuity within the connector cable. If none, replace the cable. Main PWB (YC13) and engine PWB (YC12)
		Defective main PWB or engine PWB.	Replace the main PWB or the engine PWB and check for correct operation (see page 1-5-35, 1-5-31).
5100	**Main charger high-voltage error** Five pages have been printed with the main charger output short-circuited.	Drum unit installed incorrectly.	Verify harness is not pinched.
		Engine PWB installed incorrectly.	Verify harness is not pinched.
		Defective engine PWB.	Replace the engine PWB and check for correct operation (see page 1-5-31).
6000	**Broken fuser heater wire** The temperature does not reach 100°C/212°F after the fuser heater has been turned on continuously for 30 s. The temperature does not rise by 1°C/1.8°F after the fuser heater lamp has been turned on continuously for 15 s during warm-up or at standby.(Only when the detection temperature is less than 200°C.)	Defective connector cable or poor contact in the connector.	Reinsert the connector. Also check for continuity within the connector cable. If none, remedy or replace the cable. Fuser heater and power source PWB (YC102) Fuser unit and engine PWB (YC506)
		Deformed connector pin.	See page 1-4-10.
		Defective triac.	See page 1-4-10.
		Fuser thermostat triggered.	Reinsert the fuser unit (see page 1-5-30).
		Broken fuser heater wire.	Replace the fuser unit (see page 1-5-30).
6020	**Abnormally high fuser thermistor 2 temperature** The temperature of the fuser thermistor 2 detects 250°C/482°F or more continuously for 3 s.	Shorted fuser thermistor 2.	Replace the fuser unit (see page 1-5-30).
		Deformed connector pin.	See page 1-4-10.
		Defective triac.	See page 1-4-10.
		Defective engine PWB.	Replace the engine PWB and check for correct operation (see page 1-5-31).

TONER
www.tonerplus.com.ua

Code	Contents	Causes	Check procedures/ corrective measures
6030	**Broken fuser thermistor 2 wire** average AD value input from fuser thermistor 2 for 1.8 seconds is less than one. (Only when the detection temperature is 50°C or more.)	Defective connector cable or poor contact in the connector.	Reinsert the connector. Also check for continuity within the connector cable. If none, remedy or replace the cable. Fuser unit and engine PWB (YC506)
		Deformed connector pin.	See page 1-4-10.
		Defective triac.	See page 1-4-10.
		Broken fuser thermistor 2 wire.	Replace the fuser unit (see page 1-5-30).
		Fuser thermostat triggered.	Reinsert the fuser unit (see page 1-5-30).
		Broken fuser heater wire.	Replace the fuser unit (see page 1-5-30).
6000/ 6020/ 6030 Combined	**Broken fuser heater wire** **Abnormally high fuser thermistor temperature** **Broken fuser thermistor wire**	Deformed connector pin.	If the I/F connector pins of the fuser unit and the main unit are deformed owing to foreign matters, such as paper dusts, replace the connectors or the units including the connectors.
		Defective triac.	Remove the power cord and check that the resistance between terminals T1 and T2 of the triac TRA51 is of several Mega-Ohms and not shorted (see figure 1-4-4). If failed, replace the power source PWB (see page 1-5-38).
		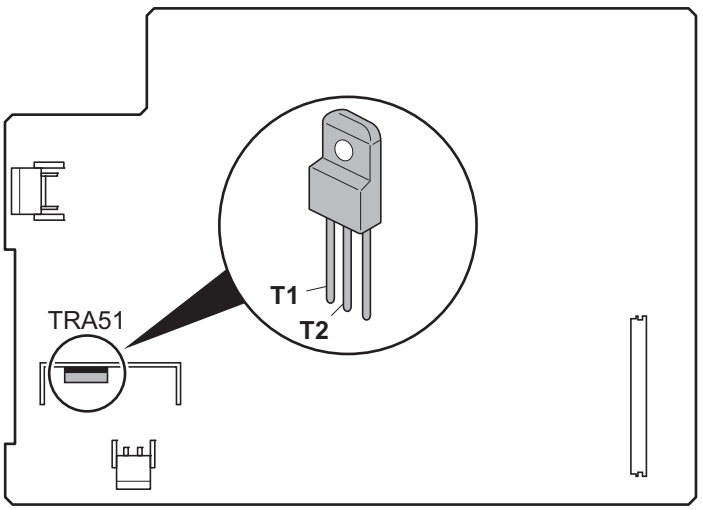 **Figure 1-4-3**	
6220	**Abnormally high fuser thermistor 1 temperature** The temperature of the fuser thermistor 1 detects 255°C/491°F or more continuously for 3 s.	Shorted fuser thermistor 1.	Replace the fuser unit (see page 1-5-30).
		Defective engine PWB.	Replace the engine PWB and check for correct operation (see page 1-5-31).

TONER
www.tonerplus.com.ua

Code	Contents	Causes	Check procedures/ corrective measures
6230	**Broken fuser thermistor 1 wire** average AD value input from fuser thermistor 1 for 1.8 seconds is less than one.	Defective connector cable or poor contact in the connector.	Reinsert the connector. Also check for continuity within the connector cable. If none, remedy or replace the cable. Fuser unit and engine PWB (YC506)
		Broken fuser thermistor 1 wire.	Replace the fuser unit (see page 1-5-30).
		Fuser thermostat triggered.	Reinsert the fuser unit (see page 1-5-30).
		Broken fuser heater wire.	Replace the fuser unit (see page 1-5-30).
6400	**Zero-cross signal error** The zero-cross signal does not reach the engine PWB for more than 2 s.	Defective connector cable or poor contact in the connector.	Reinsert the connector. Also check for continuity within the connector cable. If none, remedy or replace the cable. Power source PWB (YC103) and connect-L PWB (YC1) Connect-L PWB (YC8) and engine PWB (YC503)
		Defective power source PWB.	Replace the power source PWB and check for correct operation (see page 1-5-38).
		Defective engine PWB.	Replace the engine PWB and check for correct operation (see page 1-5-31).
7000	**Toner motor lock error** During driving the toner motor, a motor overcurrent signal is detected for 5 s.	Lump of toner inside toner container.	Replace the toner container.
		Defective drive transmission system of the toner motor.	Replace the developing unit (see page 1-5-26).
		Defective toner motor.	Replace the developing unit (see page 1-5-26).
		Defective engine PWB.	Replace the engine PWB and check for correct operation (see page 1-5-31).
7410	**Drum unit non- installing error** The drum unit is not installed or not installed properly. The drum PWB EEPROM does not communicate normally.	The drum unit is not installed.	Install the drum unit (see page 1-5-27).
		Defective connector cable or poor contact in the connector.	Reinsert the connector. Also check for continuity within the connector cable. If none, remedy or replace the cable. Drum PWB (YC1) and connect-L PWB (YC3)
		Defective drum PWB EEPROM.	Replace the drum unit (see page 1-5-27).
		Defective engine PWB.	Replace the engine PWB and check for correct operation (see page 1-5-31).

TONER
www.tonerplus.com.ua

Code	Contents	Causes	Check procedures/ corrective measures
9500	**BRU communication error**	IPU PWB error	Contact the Service Administrative Division.
9510	**BRU PWB error**		
9520	**BRU PWB data error**		
F000	**Main PWB - operation panel PWB communication error**	Defective main PWB.	Turn the main power switch off/on to restart the machine. If the error is not resolved, replace main PWB.
		Defective operation panel PWB.	Replace the operation panel PWB.
F010	**Main PWB checksum error**	Defective main PWB.	Turn the main power switch off/on to restart the machine. If the error is not resolved, replace main PWB (see page 1-5-30).
F020	**Main PWB RAM checksum error**	Defective main memory (RAM) on the main PWB.	Turn the main power switch off/on to restart the machine. If the error is not resolved, replace main PWB.
		Defective expanded memory (DIMM).	Replace the expanded memory (DIMM).
F040	**Main PWB - engine PWB communication error**	Defective main PWB.	Turn the main power switch off/on to restart the machine. If the error is not resolved, replace main PWB.
		Defective engine PWB.	Replace the engine PWB.
F041	**Main PWB - scanner communication error**	Defective main PWB.	Turn the main power switch off/on to restart the machine. If the error is not resolved, replace main PWB.
F050	**Engine ROM checksum error**	Defective engine PWB.	Replace the engine PWB and check for correct operation (see page 1-5-31).
F051	**Scan engine ROM checksum error**	Defective engine PWB.	Replace the engine PWB and check for correct operation (see page 1-5-31).

TONER
www.tonerplus.com.ua

1-4-3 Image formation problems

(1) Completely blank printout.

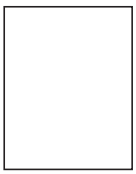

see page 1-4-14

(2) All-black print-out.

see page 1-4-15

(3) Dropouts.

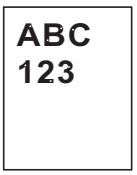

see page 1-4-16

(4) Black dots.

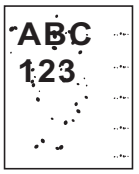

see page 1-4-16

(5) Black horizontal streaks.

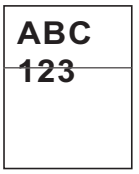

see page 1-4-16

(6) Black vertical streaks.

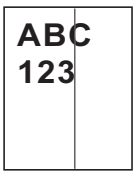

see page 1-4-17

(7) Unsharpness.

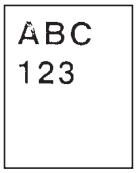

see page 1-4-17

(8) Gray back-ground.

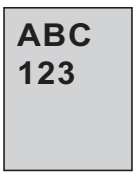

see page 1-4-17

(9) Dirt on the top edge or back of the paper.

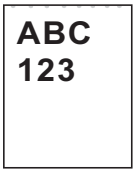

see page 1-4-18

(10) Undulated printing at the right edge (scanning start position).

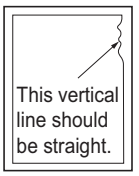

see page 1-4-18

TONER
www.tonerplus.com.ua

(1) Completely blank printout.

Print example	Causes		Check procedures/corrective measures
	Defective transfer bias output.	Poor contact of engine PWB's transfer bias output terminal and machine's contact (spring).	Check the installation position of the engine PWB. Refer to figure 1-4-4 below.
		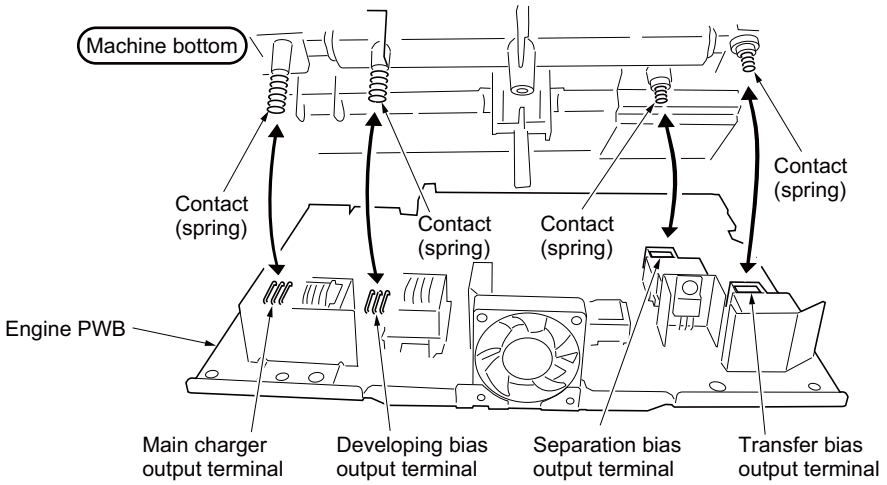 **Figure 1-4-4**	
		Defective engine PWB.	Replace the engine PWB (See page 1-5-31).
	Defective developing bias output.	Poor contact of engine PWB's developing bias output terminal and machine's contact (spring).	Check the installation position of the engine PWB. Refer to figure 1-4-4 above.
		Poor contact of machine's developing bias output terminal and developing unit's contact.	Check the installation of the developing unit. Refer to figure 1-4-5 below.
		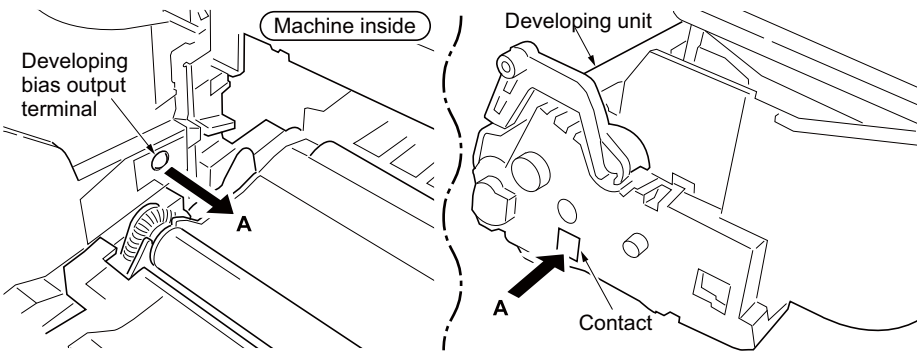 **Figure 1-4-5**	
		Defective engine PWB.	Replace the engine PWB (See page 1-5-31).
	No LSU laser is output.	Defective laser scanner unit.	Replace the laser scanner unit (See page 1-5-16).
		Defective main PWB.	Replace the main PWB (See page 1-5-35).

TONER
www.tonerplus.com.ua

(2) All-black printout.

Print example	Causes		Check procedures/corrective measures
	No main charging.	Defective main charger unit.	Replace the main charger unit (See page 1-5-27).
		Poor contact of engine PWB's main charger output terminal and machine's contact (spring).	Check the installation position of the engine PWB. See page 1-4-14, refer to figure 1-4-4.
		Poor contact of machine's main charger output terminal and main charger unit's contact (spring).	Check the installation of the drum (main charger) unit. Refer to figure 1-4-6 below.
		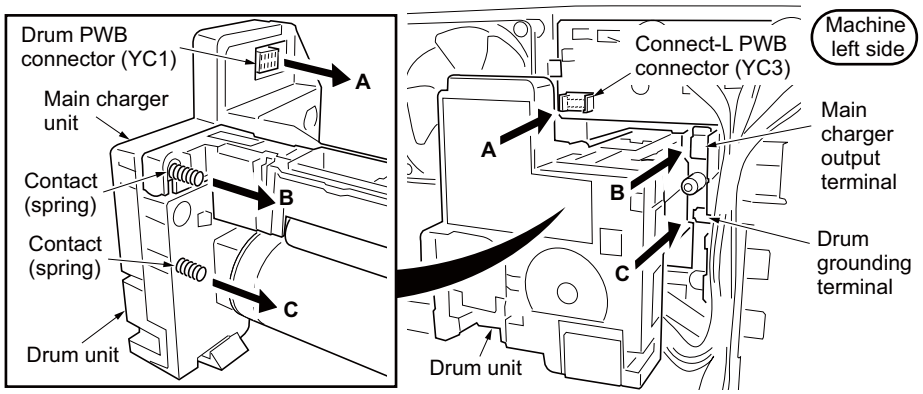 **Figure 1-4-6**	
		Defective engine PWB.	Replace the engine PWB (See page 1-5-31).

TONER
www.tonerplus.com.ua

(3) Dropouts.

Print example	Causes	Check procedures/corrective measures
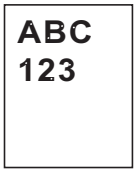	Defective developing roller (developing unit).	If the defects occur at regular intervals of 39 mm/1 9/16" (see page 2-4-4), the problem may be the damaged developing roller (in the developing unit). Replace the developing unit (see page 1-5-26).
	Defective drum unit.	If the defects occur at regular intervals of 94 mm/3 11/16" (see page 2-4-4), the problem may be the damaged drum (in the drum unit). Replace the drum unit (see page 1-5-27).
	Defective fuser unit (heat roller or press roller).	If the defects occur at regular intervals of 82 mm/3 1/4", or 93 mm/3 11/16" (see page 2-4-4), the problem may be the damaged heat roller or press roller (in the fuser unit). Replace fuser unit (see page 1-5-30).
	Defective paper specifications.	Paper with rugged surface or dump tends to cause dropouts. Replace paper with the one that satisfies the paper specifications.
	Defective transfer roller installation.	The transfer roller must be supported by the bushes at the both ends. Clean the bush to remove oil and debris. Replace the transfer roller if necessary (see page 1-5-28).
	Defective transfer bias output.	Replace the engine PWB (see page 1-5-31).

(4) Black dots.

Print example	Causes	Check procedures/corrective measures
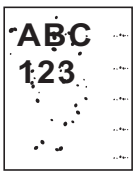	Defective drum unit or developing unit.	If the defects occur at regular intervals of 94 mm/3 11/16" (see page 2-4-4), the problem may be the damaged drum (in the drum unit). Replace drum unit (see page 1-5-26). If the defects occur at random intervals, the toner may be leaking from the developing unit or drum unit. Replace the developing unit or drum unit (see page 1-5-26 or 1-5-27).

(5) Black horizontal streaks.

Print example	Causes	Check procedures/corrective measures
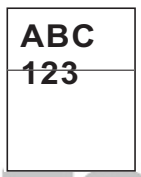	Defective drum unit's ground.	Defective drum unit's ground. The contact (spring) in the drum unit and its counter part, the drum grounding terminal in the printer, must be in a good contact. See page 1-4-14, refer to figure 1-4-4
	Defective drum unit.	Replace the drum unit (see page 1-5-27).

TONER
www.tonerplus.com.ua

(6) Black vertical streaks.

Print example	Causes	Check procedures/corrective measures
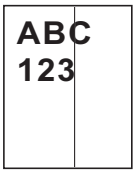	Flawed main charger roller	Replace the main charger unit (see page 1-5-27).
	Defective drum unit.	A streak of toner remaining on drum after printing means that the cleaning blade (in the drum unit) is not working properly. Replace the drum unit (see page 1-5-27).
	Defective developing roller (developing unit).	Replace the developing unit (see page 1-5-26).

(7) Unsharpness.

Print example	Causes	Check procedures/corrective measures
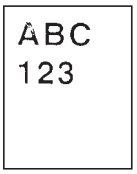	Defective paper specifications.	Replace paper with the one that satisfies the paper specification.
	Defective transfer roller installation.	The transfer roller must be supported by the bushes at the both ends. Clean the bush to remove oil and debris. Replace the transfer roller if necessary (see page 1-5-28).
	Poor contact of engine PWB's transfer bias output terminal and machine's contact (spring).	Check the installation position of the engine PWB. See page 1-4-14, refer to figure 1-4-4.
	EcoPrint mode setting.	The EcoPrint mode can provides faint, unsharp printing because it acts to conserve toner for draft printing purpose. For normal printing, turn the EcoPrint mode off by using the operator panel. For details, refer to the operation guide.

(8) Gray background.

Print example	Causes	Check procedures/corrective measures
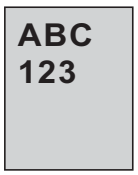	Print density setting.	The print density may be set too high. Try adjusting the print density. For details, refer to the operation guide.
	Defective potential on the drum surface.	Replace the drum unit (see page 1-5-27).
	Defective main charger unit.	Replace the main charger unit (see page 1-5-27).
	Defective developing roller (developing unit).	Replace the developing unit (see page 1-5-26).

TONER
www.tonerplus.com.ua

(9) Dirt on the top edge or back of the paper.

Print example	Causes	Check procedures/corrective measures
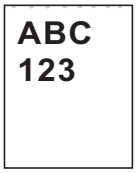	Toner contamination in various parts.	Dirty edges and back of the paper can be caused by toner accumulated on such parts as the paper chute guide, paper conveying paths, the bottom of the drum and developing unit, and the fuser unit inlet. Clean these areas and parts to remove toner.
	Defective transfer roller.	If the transfer roller is contaminated with toner, clean the transfer roller using a vacuum cleaner or by continuously printing a low density page until the symptom has faded away.

(10) Undulated printing at the right edge (scanning start position).

Print example	Causes	Check procedures/corrective measures
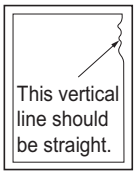	Defective polygon motor (laser scanner unit).	Replace the laser scanner unit (see page 1-5-16).
	Defective main PWB.	Replace the main PWB (see page 1-5-35).

TONER
www.tonerplus.com.ua

1-4-4 Electric problems

Troubleshooting to each failure must be in the order of the numbered symptoms.

Problem	Causes	Check procedures/corrective measures
(1) The machine does not operate when the main power switch is turned on.	1. No electricity at the power outlet.	Measure the input voltage.
	2. The power cord is not plugged in properly.	Check the contact between the power plug and the outlet.
	3. The top cover is not closed completely.	Check the top cover.
	4. Broken power cord.	Check for continuity. If none, replace the cord.
	5. Defective main power switch.	Check for continuity across the contacts. If none, replace the power source PWB (see page 1-5-38).
	6. Defective interlock switch.	Check for continuity across the contacts of interlock switch. If none, replace the power source PWB (see page 1-5-38).
	7. Defective power source PWB.	Replace the power source PWB (see page 1-5-38).
(2) Switchback motor does not operate.	1. Defective connector cable or poor contact in the connector.	Reinsert the connector. Also check for continuity within the connector cable. If none, remedy or replace the cable. Switchback motor and connect-R PWB (YC3) Connect-R PWB (YC1) and engine PWB (YC9)
	2. Defective drive transmission system.	Check if the rollers and gears rotate smoothly. If not, grease the bushes and gears. Check for broken gears and replace if any.
	3. Defective motor.	Replace the switchback motor.
	4. Defective PWB.	Replace the engine PWB or connect-R PWB and check for correct operation (see page 1-5-31).
(3) Toner motor does not operate.	1. Defective connector cable or poor contact in the connector.	Reinsert the connector. Also check for continuity within the connector cable. If none, remedy or replace the cable. Toner motor and developing PWB (YC2) Developing PWB (YC1) and connect-L PWB (YC9) Connect-L PWB (YC8) and engine PWB (YC503)
	2. Defective motor.	Replace the toner motor.
	3. Defective PWB.	Replace the engine PWB or connect-L PWB and check for correct operation (see page 1-5-31).

TONER
www.tonerplus.com.ua

Problem	Causes	Check procedures/corrective measures
(4) Right fan motor does not operate.	1. Defective connector cable or poor contact in the connector.	Reinsert the connector. Also check for continuity within the connector cable. If none, remedy or replace the cable. Right fan motor and connect-R PWB (YC11) Connect-R PWB (YC1) and engine PWB (YC9)
	2. Defective motor.	Replace the right fan motor.
	3. Defective PWB.	Replace the engine PWB or connect-R PWB and check for correct operation (see page 1-5-31).
(5) Left fan motor does not operate.	1. Defective connector cable or poor contact in the connector.	Reinsert the connector. Also check for continuity within the connector cable. If none, remedy or replace the cable. Left fan motor and connect-L PWB (YC4) Connect-L PWB (YC6) and engine PWB (YC504)
	2. Defective motor.	Replace the left fan motor.
	3. Defective PWB.	Replace the engine PWB or connect-L PWB and check for correct operation (see page 1-5-31).
(6) Power source fan motor does not operate.	1. Defective connector cable or poor contact in the connector.	Reinsert the connector. Also check for continuity within the connector cable. If none, remedy or replace the cable. Power source fan motor and connect-L PWB (YC11) Connect-L PWB (YC8) and engine PWB (YC503)
	2. Defective motor.	Replace the power source fan motor.
	3. Defective PWB.	Replace the engine PWB or connect-L PWB and check for correct operation (see page 1-5-31).
(7) Feed fan motor does not operate.	1. Defective connector cable or poor contact in the connector.	Reinsert the connector. Also check for continuity within the connector cable. If none, remedy or replace the cable. Feed fan motor and engine PWB (YC15)
	2. Defective motor.	Replace the feed fan motor.
	3. Defective PWB.	Replace the engine PWB and check for correct operation (see page 1-5-31).
(8) Eject fan motor does not operate.	1. Defective connector cable or poor contact in the connector.	Reinsert the connector. Also check for continuity within the connector cable. If none, remedy or replace the cable. Eject fan motor and connect-R PWB (YC13) Connect-R PWB (YC2) and engine PWB (YC502)
	2. Defective motor.	Replace the eject fan motor.
	3. Defective PWB.	Replace the engine PWB or connect-R PWB and check for correct operation (see page 1-5-31).
(9) Controller fan motor does not operate.	1. Defective connector cable or poor contact in the connector.	Reinsert the connector. Also check for continuity within the connector cable. If none, remedy or replace the cable. Controller fan motor and main PWB (YC41)
	2. Defective motor.	Replace the controller fan motor.
	3. Defective PWB.	Replace the main PWB and check for correct operation (see page 1-5-35).

TONER
www.tonerplus.com.ua

Problem	Causes	Check procedures/corrective measures
(10) ISU motor does not operate.	1. Defective connector cable or poor contact in the connector.	Reinsert the connector. Also check for continuity within the connector cable. If none, remedy or replace the cable. ISU motor and main PWB (YC1004)
	2. Defective drive transmission system.	Check if the gears rotate smoothly. If not, grease the gears. Check for broken gears and replace if any.
	3. Defective motor.	Replace the ISU motor.
	4. Defective PWB.	Replace the main PWB and check for correct operation (see page 1-5-35).
(11) Paper feed clutch does not operate.	1. Defective connector cable or poor contact in the connector.	Reinsert the connector. Also check for continuity within the connector cable. If none, remedy or replace the cable. Paper feed clutch and connect-R PWB (YC5) Connect-R PWB (YC2) and engine PWB (YC502)
	2. Defective clutch.	Replace the paper feed clutch.
	3. Defective PWB.	Replace the engine PWB or connect-R PWB and check for correct operation (see page 1-5-31).
(12) Registration clutch does not operate.	1. Defective connector cable or poor contact in the connector.	Reinsert the connector. Also check for continuity within the connector cable. If none, remedy or replace the cable. Registration clutch and connect-R PWB (YC6) Connect-R PWB (YC2) and engine PWB (YC502)
	2. Defective clutch.	Replace the registration clutch.
	3. Defective PWB.	Replace the engine PWB or connect-R PWB and check for correct operation (see page 1-5-31).
(13) Middle clutch does not operate.	1. Defective connector cable or poor contact in the connector.	Reinsert the connector. Also check for continuity within the connector cable. If none, remedy or replace the cable. Middle clutch and connect-R PWB (YC7) Connect-R PWB (YC2) and engine PWB (YC502)
	2. Defective clutch.	Replace the middle clutch.
	3. Defective PWB.	Replace the engine PWB or connect-R PWB and check for correct operation (see page 1-5-31).
(14) Duplex clutch does not operate.	1. Defective connector cable or poor contact in the connector.	Reinsert the connector. Also check for continuity within the connector cable. If none, remedy or replace the cable. Duplex clutch and connect-R PWB (YC9) Connect-R PWB (YC2) and engine PWB (YC502)
	2. Defective clutch.	Replace the duplex clutch.
	3. Defective PWB.	Replace the engine PWB or connect-R PWB and check for correct operation (see page 1-5-31).
(15) MP solenoid does not operate.	1. Defective connector cable or poor contact in the connector.	Reinsert the connector. Also check for continuity within the connector cable. If none, remedy or replace the cable. MP solenoid and connect-R PWB (YC10) Connect-R PWB (YC1) and engine PWB (YC9)
	2. Defective solenoid.	Replace the MP solenoid.
	3. Defective PWB.	Replace the engine PWB or connect-R PWB and check for correct operation (see page 1-5-31).

TONER
www.tonerplus.com.ua

Problem	Causes	Check procedures/corrective measures
(16) Developing solenoid does not operate.	1. Defective connector cable or poor contact in the connector.	Reinsert the connector. Also check for continuity within the connector cable. If none, remedy or replace the cable. Developing solenoid and connect-R PWB (YC4) Connect-R PWB (YC2) and engine PWB (YC502)
	2. Defective solenoid.	Replace the developing solenoid.
	3. Defective PWB.	Replace the engine PWB or connect-R PWB and check for correct operation (see page 1-5-31).
(17) Feedshift solenoid does not operate.	1. Defective connector cable or poor contact in the connector.	Reinsert the connector. Also check for continuity within the connector cable. If none, remedy or replace the cable. Feedshift solenoid and engine PWB (YC506)
	2. Defective solenoid.	Replace the feedshift solenoid.
	3. Defective PWB.	Replace the engine PWB and check for correct operation (see page 1-5-31).
(18) Cleaning lamp does not turn on.	1. Defective connector cable or poor contact in the connector.	Reinsert the connector. Also check for continuity within the connector cable. If none, remedy or replace the cable. Cleaning lamp and drum PWB (YC2) Drum PWB (YC1) and connect-L PWB (YC3) Connect-L PWB (YC6) and engine PWB (YC504)
	2. Defective cleaning lamp.	Replace the cleaning lamp.
	3. Defective PWB.	Replace the engine PWB or connect-L PWB and check for correct operation (see page 1-5-31).
(19) The message requesting paper to be loaded is shown when paper is present on the cassette.	1. Deformed actuator of the paper sensor.	Check visually and remedy or replace if necessary.
	2. Defective paper sensor.	Replace the engine PWB and check for correct operation (see page 1-5-31).
	3. Defective PWB.	Replace the engine PWB and check for correct operation (see page 1-5-31).
(20) The message requesting paper to be loaded is shown when paper is present on the MP tray.	1. Deformed actuator of the MP paper sensor.	Check visually and remedy or replace if necessary.
	2. Defective MP paper sensor.	Replace the power source PWB and check for correct operation (see page 1-5-38).
	3. Defective PWB.	Replace the power source PWB and check for correct operation (see page 1-5-38).

TONER
www.tonerplus.com.ua

Problem	Causes	Check procedures/corrective measures
(21) The size of paper on the cassette is not displayed correctly.	1. Defective connector cable or poor contact in the connector.	Reinsert the connector. Also check for continuity within the connector cable. If none, remedy or replace the cable. Cassette size switch and connect-L PWB (YC10) Connect-L PWB (YC8) and engine PWB (YC503)
	2. Defective cassette size switch.	Replace the cassette size switch.
	3. Defective PWB.	Replace the engine PWB or connect-L PWB and check for correct operation (see page 1-5-31).
(22) A paper jam in the paper feed, paper conveying, eject or duplex section is indicated when the main power switch is turned on.	1. A piece of paper torn from paper is caught around registration sensor, eject sensor, duplex sensor or duplex jam sensor.	Check visually and remove it, if any.
	2. Defective eject sensor.	Replace the eject sensor.
	3. Defective duplex sensor.	Replace the duplex sensor.
	4. Defective registration sensor or duplex jam sensor.	Replace the engine PWB and check for correct operation (see page 1-5-31).
(23) A message indicating cover open is displayed when the top cover is closed.	1. Deformed actuator of the interlock switch.	Check visually and remedy or replace if necessary.
	2. Defective interlock switch.	Replace the power source PWB and check for correct operation (see page 1-5-38).
(24) DP paper feed motor does not operate.	1. Defective connector cable or poor contact in the connector.	Reinsert the connector. Also check for continuity within the connector cable. If none, remedy or replace the cable. DP paper feed motor and DP drive PWB (YC3) DP drive PWB (YC1) and main PWB (YC1008)
	2. Defective drive transmission system.	Check if the rollers and gears rotate smoothly. If not, grease the bushes and gears. Check for broken gears and replace if any.
	3. Defective motor.	Replace the DP paper feed motor.
	4. Defective PWB.	Replace the DP drive PWB or main PWB and check for correct operation (see page 1-5-49).
(25) DP paper feed clutch does not operate.	1. Defective connector cable or poor contact in the connector.	Reinsert the connector. Also check for continuity within the connector cable. If none, remedy or replace the cable. DP paper feed clutch and DP drive PWB (YC6) DP drive PWB (YC8) and main PWB (YC1005)
	2. Defective clutch.	Replace the DP paper feed clutch.
	3. Defective PWB.	Replace the DP drive PWB or main PWB and check for correct operation (see page 1-5-49).

TONER
www.tonerplus.com.ua

Problem	Causes	Check procedures/corrective measures
(26) DP pressure solenoid does not operate.	1. Defective connector cable or poor contact in the connector.	Reinsert the connector. Also check for continuity within the connector cable. If none, remedy or replace the cable. DP pressure solenoid and DP drive PWB (YC4) DP drive PWB (YC8) and main PWB (YC1005)
	2. Defective solenoid.	Replace the DP pressure solenoid.
	3. Defective PWB.	Replace the DP drive PWB or main PWB and check for correct operation (see page 1-5-49).
(27) DP switchback solenoid does not operate.	1. Defective connector cable or poor contact in the connector.	Reinsert the connector. Also check for continuity within the connector cable. If none, remedy or replace the cable. DP switchback solenoid and DP drive PWB (YC5) DP drive PWB (YC8) and main PWB (YC1005)
	2. Defective solenoid.	Replace the DP switchback solenoid.
	3. Defective PWB.	Replace the DP drive PWB or main PWB and check for correct operation (see page 1-5-49).
(28) An original jams when the main power switch is turned on.	1. A piece of paper torn from an original is caught around the DP timing sensor.	Check visually and remove it, if any.
	2. Defective DP timing sensor.	Replace the DP timing sensor.
(29) A message indicating cover open is displayed when the DP top cover is closed.	1. Defective connector cable or poor contact in the connector.	Reinsert the connector. Also check for continuity within the connector cable. If none, remedy or replace the cable. DP open/close sensor and DP drive PWB (YC2) DP drive PWB (YC8) and main PWB (YC1005)
	2. Defective DP open/close sensor.	Replace the DP open/close sensor.

TONER
www.tonerplus.com.ua

1-4-5 Mechanical problems

Problem	Causes/check procedures	Corrective measures
(1) No primary paper feed.	Check if the surfaces of the following rollers are dirty with paper powder. Pickup roller Paper feed roller MP paper feed roller	Clean with isopropyl alcohol.
	Check if the following rollers is deformed. Pickup roller Paper feed roller MP paper feed roller	Check visually and replace any deformed (see page 1-5-6).
	Defective paper feed clutch installation.	Check visually and remedy if necessary.
(2) No secondary paper feed.	Check if the surfaces of the following rollers are dirty with paper powder. Upper registration roller Lower registration roller	Clean with isopropyl alcohol.
	Defective registration clutch installation.	Check visually and remedy if necessary.
(3) Skewed paper feed.	Paper width guide in a cassette installed incorrectly.	Check the paper width guide visually and remedy or replace if necessary.
(4) Multiple sheets of paper are fed.	Check if the paper is excessively curled.	Change the paper.
	Paper is loaded incorrectly.	Load the paper correctly.
	Check if the retard roller is worn.	Replace the retard roller if it is worn (see page 1-5-7).
(5) Paper jams.	Check if the paper is excessively curled.	Change the paper.
	Check if the contact between the upper and lower registration rollers is correct.	Check visually and remedy if necessary.
	Check if the heat roller or press roller is extremely dirty or deformed.	Check visually and replace the fuser unit (see page 1-5-30).
(6) Toner drops on the paper conveying path.	Check if the drum unit or developing unit is extremely dirty.	Clean the drum unit or developing unit.
(7) Abnormal noise is heard.	Check if the rollers, pulleys and gears operate smoothly.	Grease the bushes and gears.
	Check if the following clutches are installed correctly. Paper feed clutch Registration clutch Middle clutch Duplex clutch	Check visually and remedy if necessary.

TONER
www.tonerplus.com.ua

Problem	Causes/check procedures	Corrective measures
(8) No primary original feed.	Check if the surfaces of the following pulleys are dirty with paper powder. DP forwarding pulley DP feed pulley	Clean with isopropyl alcohol.
	Check if the following pulleys is deformed. DP forwarding pulley DP feed pulley	Check visually and replace any deformed (see page 1-5-50).
(9) Multiple sheets of original are fed.	Original is not correctly set.	Set the original correctly.
	Check if the DP separation pad is worn.	Replace the DP separation pad if it is worn (see page 1-5-50).
(10) Originals jam.	Originals outside the specifications are used.	Use only originals conforming to the specifications.
	Check if the surfaces of the following pulleys are dirty with paper powder. DP forwarding pulley DP feed pulley	Clean with isopropyl alcohol.
	Check if the contact between the conveying roller and conveying pulley is correct.	Check visually and remedy if necessary.
	Check if the contact between the eject roller and eject pulley is correct.	Check visually and remedy if necessary.
	Check if the contact between the switchback roller and switchback pulley is correct.	Check visually and remedy if necessary.

TONER
www.tonerplus.com.ua

1-4-6 Send error code

This section describes the scanning errors and descriptions, preventive actions, as well as corrective actions.
Error codes not described here could fall within software errors.
If such an error is encountered, turn power off then on, and advise the service representative.

(1) Scan to SMB error codes

Code	Contents	Check procedures/corrective measures
1101	Host destined does not exist on the network.	1. Confirm the destined host. 2. Confirm thedevice's network parameters. 3. Confirm the parameters of the network to which the device is connected are correct.
1102	Login to the host has failed.	1. Confirm user name and password. 2. Confirm the parameters of the network to which the device is connected are correct. 3. Check the host if the folder is properly shared.
1103	Destined host, folder, and/or file names are invalid.	1. Check illegal characters are not contained within these names. 2. Check the name of the folder and files conform with the naming syntax. 3. Confirm destined host and folder.
1105	SMB protocol is not enabled.	1. Confirm device's SMB protocols.
2101	Login to the host has failed.	1. Confirm the destined host. 2. Confirm that the LAN cable is properly connected to the device. 3. Check the SMB port number. 4. Confirm the device's network parameters. 5. Confirm the parameters of the network to which the device is connected are correct.
2201	Writing scanned data has failed.	1. Check the file name to save the scanned data. 2. Confirm the device's network parameters. 3. Confirm the parameters of the network to which the device is connected are correct.

TONER
www.tonerplus.com.ua

(2) Scan to FTP error codes

Code	Contents	Check procedures/corrective measures
1101	FTP server does not exist on the network.	1. Check the FTP server name. 2. Confirm device's network parameters. 3. Confirm the parameters of the network to which the device is connected are correct.
1102	Login to the FTP server has failed.	1. Confirm user name and password. 2. Check the FTP server name.
1103	Destined folder is invalid.	1. Check that the illegal characters are not contained within these names. 2. Check the FTP server name.
1105	FTP protocol is not enabled.	1. Confirm device's FTP protocols.
1131	Initializing TLS has failed.	1. Confirm device's security parameters.
1132	TLS negotiation has failed.	1. Confirm device's security parameters. 2. Check the FTP server name.
2101	Access to the FTP server has failed.	1. Check the FTP server name. 2. Confirm that the LAN cable is properly connected to the device. 3. Check the FTP port number. 4. Confirm device's network parameters. 5. Confirm the network parameters the device is connected. 6. Check the FTP server name.
2102	Access to the FTP server has failed. (Connection timeout)	1. Check the FTP server name. 2. Check the FTP port number. 3. Confirm device's network parameters. 4. Confirm the network parameters the device is connected. 5. Check the FTP server name.
2201	Connection with the FTP server has failed.	1. Confirm device's network parameters. 2. Confirm the network parameters the device is connected. 3. Confirm destined folder. 4. Check the FTP server name.
2202	Connection with the FTP server has failed. (Timeout)	1. Confirm device's network parameters. 2. Confirm the network parameters the device is connected.
2231	Connection with the FTP server has failed. (FTPS communication)	1. Confirm device's network parameters. 2. Confirm the network parameters the device is connected.
3101	FTP server responded with an error.	1. Confirm device's network parameters. 2. Confirm the network parameters the device is connected. 3. Check the FTP server.

TONER
www.tonerplus.com.ua

(3) Scan to E-mail error codes

Code	Contents	Check procedures/corrective measures
1101	SMTP/POP3 server does not exist on the network.	1. Check the SMTP/POP3 server name. 2. Confirm device's network parameters. 3. Confirm the parameters of the network to which the device is connected are correct.
1102	Login to the SMTP/POP3 server has failed.	1. Confirm user name and password. 2. Check the SMTP/POP3 server.
1104	The domain the destined address belongs is prohibited by scanning restriction.	1. Confirm device's SMTP parameters.
1105	SMTP protocol is not enabled.	1. Confirm device's SMTP protocols.
1106	Sender’s address is not specified.	1. Confirm device's SMTP protocols.
2101	Connection to the SMTP/POP3 server has failed.	1. Check the SMTP/POP3 server name. 2. Confirm that the LAN cable is properly connected to the device. 3. Check the SMTP/POP3 port number. 4. Confirm device's network parameters. 5. Confirm the network parameters the device is connected. 6. Check the SMTP/POP3 server.
2102	Connection to the SMTP/POP3 server has failed. (Connection timeout)	1. Check the SMTP/POP3 server name. 2. Check the SMTP/POP3 port number. 3. Confirm device's network parameters. 4. Confirm the network parameters the device is connected. 5. Check the SMTP/POP3 server.
2201	Connection to the SMTP/POP3 server has failed.	1. Confirm device's network parameters. 2. Confirm the network parameters the device is connected.
2202	Connection to the SMTP/POP3 server has failed. (Timeout)	1. Confirm device's network parameters. 2. Confirm the network parameters the device is connected.
2204	The size of scanning exceeded its limit.	1. Confirm device's network parameters.
3101	SMTP/POP3 server responded with an error.	1. Confirm device's network parameters. 2. Confirm the network parameters the device is connected. 3. Check the SMTP/POP3 server.
3201	No SMTP authentication is found.	1. Check the SMTP server. 2. The device supports SMTP authentication services including CRAM-MD5, DIGEST-MD5, PLAIN and LOGIN.

TONER
www.tonerplus.com.ua

1-4-7 Error codes

(1) Error code

Error codes are listed on the communication reports, activity report, etc. The codes consist of an error code indication U followed by a 5-digit number. (Error codes for V34 communication errors start with an E indication, followed by five digits.)
The upper three of the five digits indicate general classification of the error and its cause, while the lower two indicate the detailed classification. Items for which detailed classification is not necessary have 00 as the last two digits.

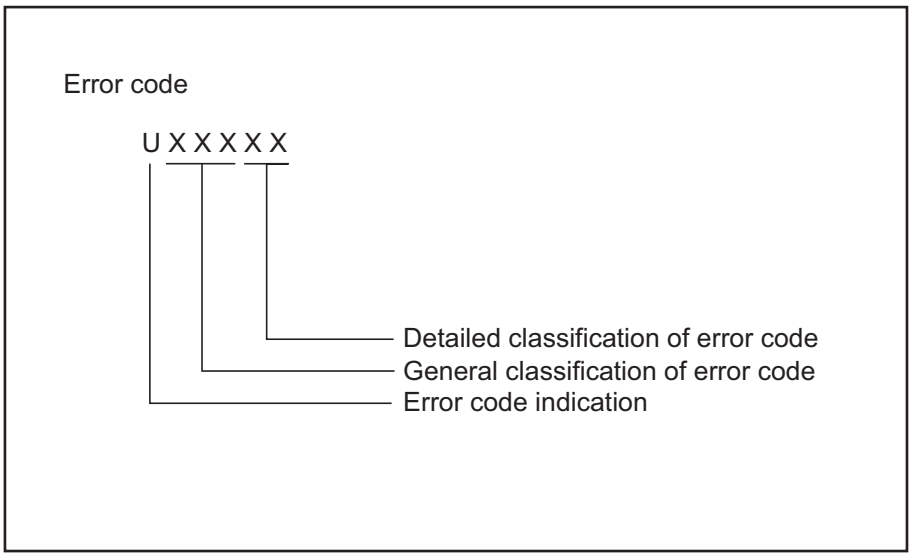

Figure 1-4-7

TONER
www.tonerplus.com.ua

(2) Table of general classification

Error code	Description
U00000	No response or busy after the set number of redials.
U00100	Transmission was interrupted by a press of the stop/clear key.
U00200	Reception was interrupted by a press of the stop/clear key.
U00300	Recording paper on the destination unit has run out during transmission.
U004XX	A connection was made but interrupted during handshake with the receiver unit (refer to 1-4-33 U004XX error code table).
U006XX	Communication was interrupted because of a machine problem (refer to 1-4-33 U006XX error code table).
U00700	Communication was interrupted because of a problem in the destination unit.
U008XX	A page transmission error occurred in G3 mode (refer to 1-4-33 U008XX error code table).
U009XX	A page reception error occurred in G3 mode (refer to 1-4-33 U009XX error code table).
U010XX	Transmission in G3 mode was interrupted by a signal error (refer to 1-4-34 U010XX error code table).
U011XX	Reception in G3 mode was interrupted by a signal error (refer to 1-4-35 U011XX error code table).
U01400	An invalid one-touch key was specified during communication.
U01500	A communication error occurred when calling in V.8 mode.
U01600	A communication error occurred when called in V.8 mode.
U017XX	A communication error occurred before starting T.30 protocol during transmission in V.34 mode (refer to 1-4-36 U017XX error code table).
U018XX	A communication error occurred before starting T.30 protocol during reception in V.34 mode (refer to 1-4-36 U018XX error code table).
U03000	No document was present in the destination unit when polling reception started.
U03200	In interoffice subaddress-based bulletin board reception, data was not stored in the box specified by the destination unit.
U03300	In polling reception from a unit of our make, operation was interrupted due to a mismatch in permit ID or telephone number. Or, in interoffice subaddress-based bulletin board reception, operation was interrupted due to a mismatch in permit ID or telephone number.
U03400	Polling reception was interrupted because of a mismatch in individual numbers (destination unit is either of our make or by another manufacturer).
U03500	In interoffice subaddress-based bulletin board reception, the specified Subaddress confidential box number was not registered in the destination unit.
U03600	An interoffice subaddress-based bulletin board reception was interrupted because of a mismatch in the specified subaddress confidential box number.
U03700	Interoffice subaddress-based bulletin board reception failed because the destination unit had no subaddress-based bulletin board transmission capability, or data was not stored in any subaddress confidential box in the destination unit.
U04000	In interoffice subaddress-based transmission mode, the specified subaddress box number was not registered in the destination unit.

TONER www.tonerplus.com.au

Error code	Description
U04100	Subaddress-based transmission failed because the destination unit had no subaddress-based reception capability.
U04200	In encrypted transmission, the specified encryption box was not registered in the destination unit.
U04300	Encrypted transmission failed because the destination unit had no encrypted communication capability.
U044XX	Communication was interrupted because of an encryption key error during encrypted transmission (refer to 1-4-36 U044XX error code table).
U04500	Encrypted reception was interrupted because of a mismatch in encryption keys.
U05100	Password check transmission or restricted transmission was interrupted because the permit ID's did not agree with.
U05200	Password check reception or restricted reception was interrupted because the permit ID's did not match, the rejected FAX number's did match, or the destination receiver did not return its phone number.
U05300	The password check reception or the restricted reception was interrupted because the permitted numbers did not match, the rejected numbers did match, or the machine in question did not acknowledge its phone number.
U14000	Memory overflowed during confidential reception. Or, in subaddress-based confidential reception, memory overflowed.
U14100	In interoffice subaddress-based transmission, memory overflowed in the destination unit.
U19000	Memory overflowed during memory reception.
U19100	Memory overflowed in the destination unit during transmission.
U19300	Transmission failed because an error occurred during JBIG encoding.

TONER
www.tonerplus.com.ua

(2-1) U004XX error code table: Interrupted phase B

Error code	Description
U00430	Polling request was received but interrupted because of a mismatch in permit number. Or, subaddress-based bulletin board transmission request was received but interrupted because of a mismatch in permit ID in the transmitting unit.
U00431	An subaddress-based bulletin board transmission was interrupted because the specified subaddress confidential box was not registered.
U00432	An subaddress-based bulletin board transmission was interrupted because of a mismatch in Subaddress confidential box numbers.
U00433	Subaddress-based bulletin board transmission request was received but data was not present in the subaddress confidential box.
U00440	Subaddress-based confidential reception was interrupted because the specified subaddress box was not registered.
U00450	The destination transmitter disconnected because the permit ID's did not agree with while the destination transmitter is in password-check transmission or restricted transmission.
U00460	Encrypted reception was interrupted because the specified encryption box number was not registered.
U00462	Encrypted reception was interrupted because the encryption key for the specified encryption box was not registered.

(2-2) U006XX error code table: Problems with the unit

Error code	Description
U00601	Document jam or the document length exceeds the maximum.
U00613	Image writing section problem
U00656	Data was not transmitted to a modem error.
U00690	System error.

(2-3) U008XX error code table: Page transmission error

Error code	Description
U00800	A page transmission error occurred because of reception of a RTN or PIN signal.
U00811	A page transmission error reoccurred after retry of transmission in the ECM mode.

(2-4) U009XX error code table: Page reception error

Error code	Description
U00900	An RTN or PIN signal was transmitted because of a page reception error.
U00910	A page reception error remained after retry of transmission in the ECM mode.

TONER www.tonerplus.com.ua

(2-5) U010XX error code table: G3 transmission

Error code	Description
U01000	An FTT signal was received for a set number of times after TCF signal transmission at 2400 bps. Or, an RTN signal was received in response to a Q signal (excluding EOP) after transmission at 2400 bps.
U01001	Function of the unit differs from that indicated by a DIS signal.
U01016	An MCF signal was received but no DIS signal was received after transmission of an EOM signal, and T1 timeout was detected.
U01019	No relevant signal was received after transmission of a CNC signal, and the preset number of command retransfers was exceeded (between units of our make).
U01020	No relevant signal was received after transmission of a CTC signal, and the preset number of command retransfers was exceeded (ECM).
U01021	No relevant signal was received after transmission of an EOR.Q signal, and the preset number of command retransfers was exceeded (ECM).
U01022	No relevant signal was received after transmission of an RR signal, and the preset number of command retransfers was exceeded (ECM).
U01028	T5 time-out was detected during ECM transmission (ECM).
U01052	A DCN signal was received after transmission of an RR signal (ECM).
U01080	A PIP signal was received after transmission of a PPS.NULL signal.
U01092	During transmission in V.34 mode, communication was interrupted because of an impossible combination of the symbol speed and communication speed.
U01093	A DCN or other inappropriate signal was received during phase B of transmission.
U01094	The preset number of command retransfers for DCS/NSS signals was exceeded during phase B of transmission.
U01095	No relevant signal was received after transmission of a PPS (Q) signal during phase D of transmission, and the preset number of command transfers was exceeded.
U01096	A DCN signal or invalid command was received during phase D of transmission.
U01097	The preset number of command retransfers was exceeded after transmission of an RR signal or no response.

TONER
www.tonerplus.com.ua

(2-6) U011XX error code table: G3 reception

Error code	Description
U01100	Function of the unit differs from that indicated by a DCS signal.
U01101	Function of the unit (excl. communication mode select) differs from that indicated by an NSS signal.
U01102	A DTC (NSC) signal was received when no transmission data was in the unit.
U01110	No response after transmission of a DIS signal.
U01111	No response after transmission of a DTC (NSC) signal.
U01113	No response after transmission of an FTT signal.
U01125	No response after transmission of a CNS signal (between units of our make).
U01129	No response after transmission of an SPA signal (short protocol).
U01141	A DCN signal was received after transmission of a DTC signal.
U01143	A DCN signal was received after transmission of an FTT signal.
U01155	A DCN signal was received after transmission of an SPA signal (short protocol).
U01160	During message reception, transmission time exceeded the maximum transmission time per line.
U01162	Reception was aborted due to a modem malfunction during message reception.
U01191	Communication was interrupted because an error occurred during an image data reception sequence in the V.34 mode.
U01193	There was no response, or a DCN signal or invalid command was received, during phase C/D of reception.
U01194	A DCN signal was received during phase B of reception.
U01195	No message was received during phase C of reception.
U01196	Error line control was exceeded and a decoding error occurred for the message being received.

TONER
www.tonerplus.com.ua

(2-7) U017XX error code table: V.34 transmission

Error code	Description
U01700	A communication error occurred in phase 2 (line probing).
U01720	A communication error occurred in phase 4 (modem parameter exchange).
U01721	Operation was interrupted due to the absence of a common communication speed between units.

U01700: A communication error that occurs at the transmitting unit in the period after transmission of INFO0 before entering phase 3 (primary channel equivalent device training). For example, INFO0/A/Abar (B/Bbar, for polling transmission)/INFOh was not detected.

U01720: A communication error that occurs at the transmitting unit in the period after initiating the control channel before entering the T.30 process. For example, PPh/ALT/MPh/E was not detected.

U01721: In the absence of a common communication speed between units (including when an impossible combination of communication speed and symbol speed occurs) after MPh exchange; 1) a DCN signal was received from the destination unit, and the line was cut; or 2) a DIS (NSF, CSI) signal was received from the destination unit and, in response to the signal, the unit transmitted a DCN signal, and the line was cut.

(2-8) U018XX error code table: V.34 reception

Error code	Description
U01800	A communication error occurred in phase 2 (line probing).
U01810	A communication error occurred in phase 3 (primary channel equivalent device training).
U01820	A communication error occurred in phase 4 (modem parameter exchange).
U01821	Operation was interrupted due to the absence of a common communication speed between units.

U01800: A communication error that occurs at the receiver unit in the period after transmission of INFO0 before entering phase 3 (primary channel equivalent device training). For example, INFO0/B/Bbar (A/Abar, for polling reception)/probing tone was not detected.

U01810: A communication error that occurs at the receiver unit in phase 3 (primary channel equivalent device training). For example, S/Sbar/PP/TRN was not detected.

U01820: A communication error that occurs at the receiver unit in the period after initiating the control channel before entering the T.30 process. For example, PPh/ALT/MPh/E was not detected.

U01821: In the absence of a common communication speed between units (including when an impossible combination of communication speed and symbol speed occurs) after MPh exchange, a DCN signal was transmitted to the destination unit and the line was cut.

(2-9) U044XX error code table: Encrypted transmission

Error code	Description
U04400	Encrypted transmission was interrupted because encryption keys did not agree.

TONER
www.tonerplus.com.ua

1-5-1 Precautions for assembly and disassembly

(1) Precautions

Before starting disassembly, press the Power key on the operation panel to off. Make sure that the Power lamp is off before turning off the main power switch. And then unplug the power cable from the wall outlet.
When the fax kit is installed, be sure to disconnect the modular code before starting disassembly.
When handling PWBs (printed wiring boards), do not touch parts with bare hands.
The PWBs are susceptible to static charge.
Do not touch any PWB containing ICs with bare hands or any object prone to static charge.
When removing the hook of the connector, be sure to release the hook.
Take care not to get the cables caught.
To reassemble the parts, use the original screws. If the types and the sizes of screws are not known, refer to the PARTS LIST.

(2) Drum

Note the following when handling or storing the drum.
When removing the drum unit, never expose the drum surface to strong direct light.
Keep the drum at an ambient temperature between -20°C/-4°F and 40°C/104°F and at a relative humidity not higher than 90% RH. Avoid abrupt changes in temperature and humidity.
Avoid exposure to any substance which is harmful to or may affect the quality of the drum.
Do not touch the drum surface with any object. Should it be touched by hands or stained with oil, clean it.

(3) Toner

Store the toner container in a cool, dark place.
Avoid direct light and high humidity.

TONER+
www.tonerplus.com.ua

(4) How to tell a genuine Kyocera Mita toner container

As a means of brand protection, the Kyocera Mita toner container utilizes an optical security technology to enable visual validation. A validation viewer is required to accomplish this.

Hold the validation viewer over the left side part of the brand protection seal on the toner container. Through each window of the validation viewer, the left side part of the seal should be seen as follows:

A black-colored band when seen through the left side window (●)

A shiny or gold-colored band when seen through the right side window (☼)

The above will reveal that the toner container is a genuine Kyocera Mita branded toner container, otherwise, it is a counterfeit.

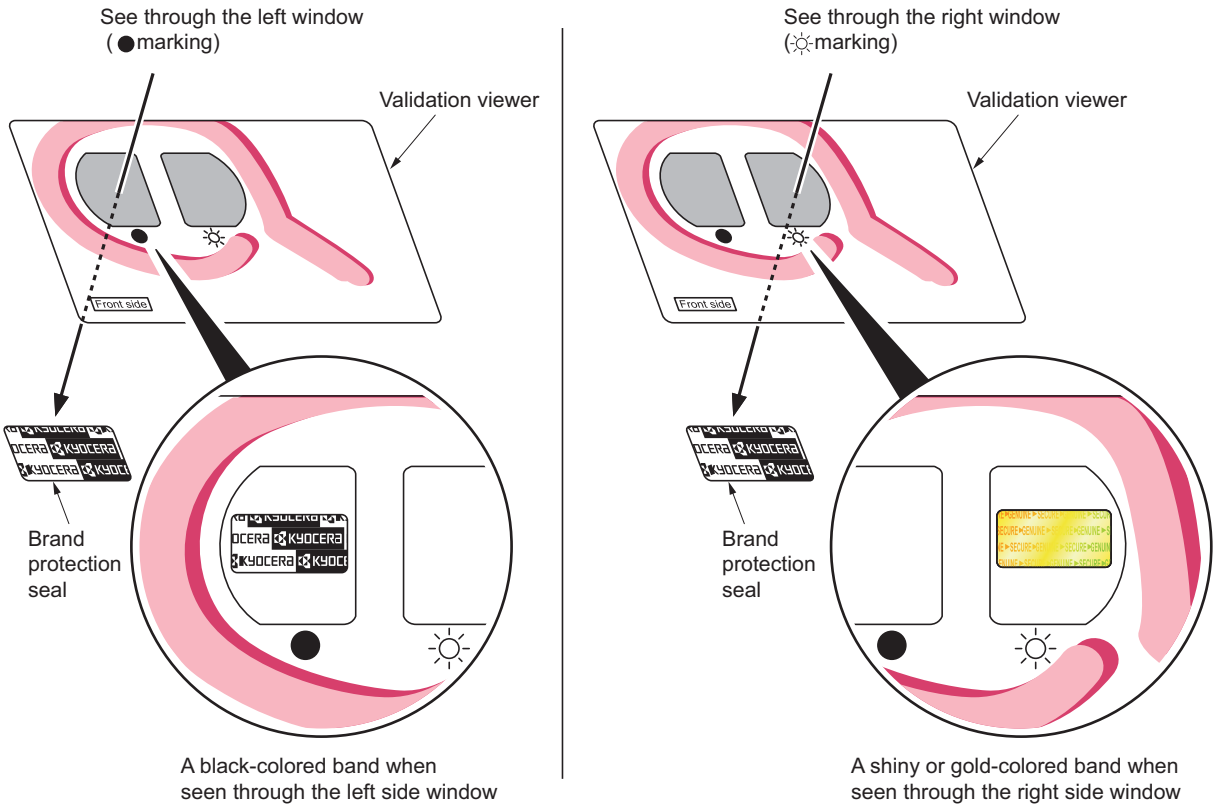

Figure 1-5-1

The brand protection seal has an incision as shown below to prohibit reuse.

TONER
www.tonerplus.com.ua

Figure 1-5-2

1-5-2 Outer covers

(1) Detaching and refitting the right cover and left cover

Procedure

1. Remove the cassette. (See page 1-5-6)
2. Open the front cover.
3. Remove the one screw.
4. Unhook six hooks and then remove the right cover.

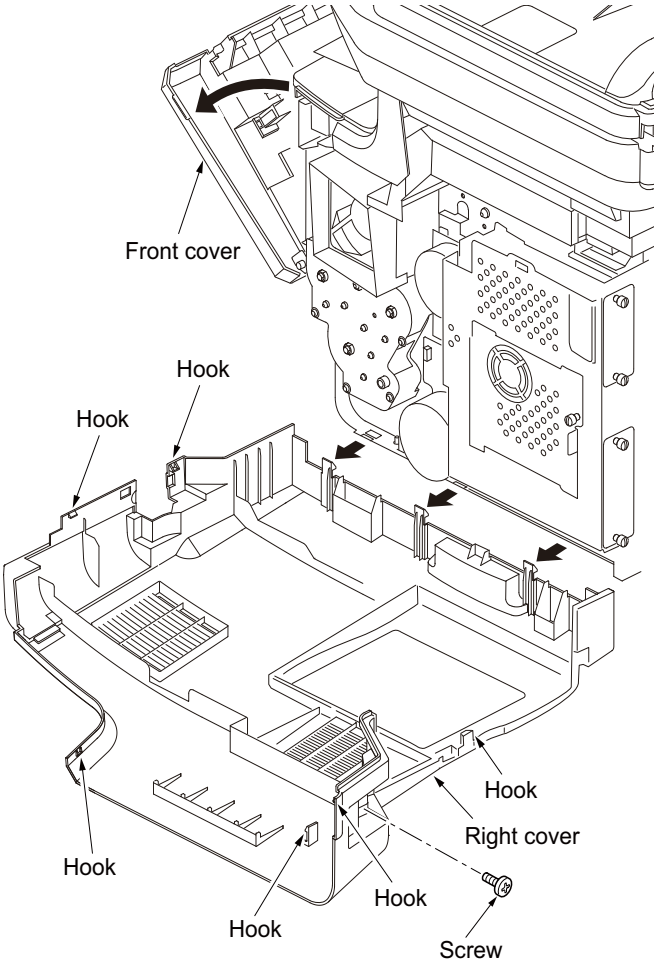

Figure 1-5-3

TONER+
www.tonerplus.com.ua

5. Remove two fulcrum of the front cover.
6. Unhook the hook of the front cover rack and then remove the front cover.

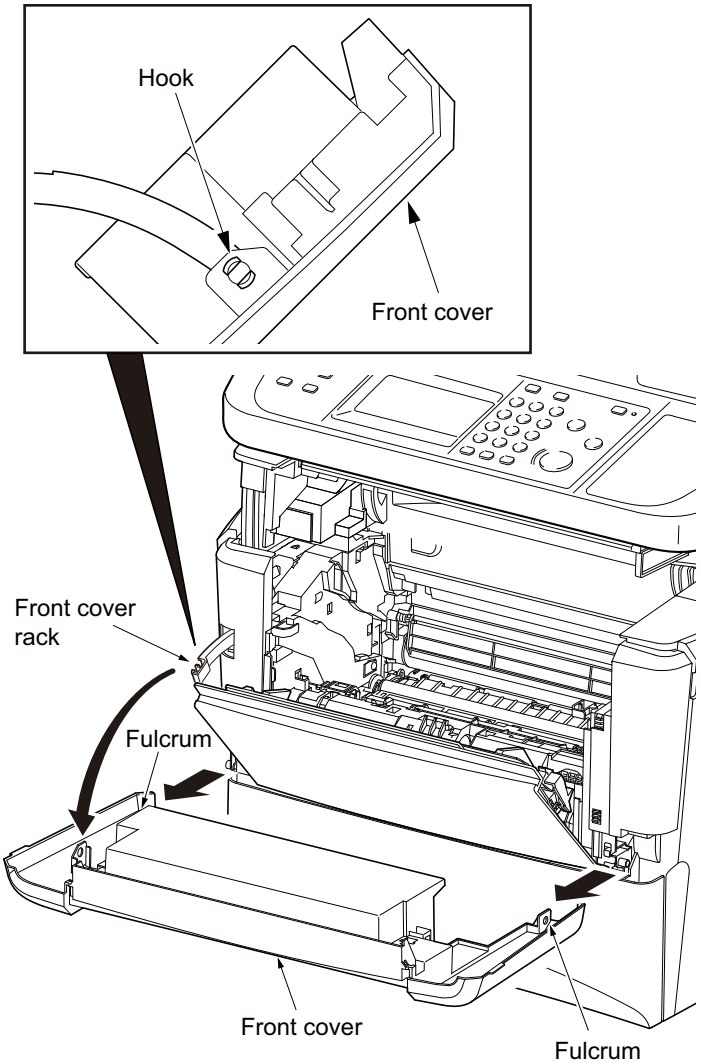

Figure 1-5-4

TONER+
www.tonerplus.com.ua

7. Open the left side cover and then remove the waste toner box. (See page 1-5-27)
8. Remove the one screw and then remove the rear upper cover.
9. Unhook four hooks and then remove the rear upper cover.

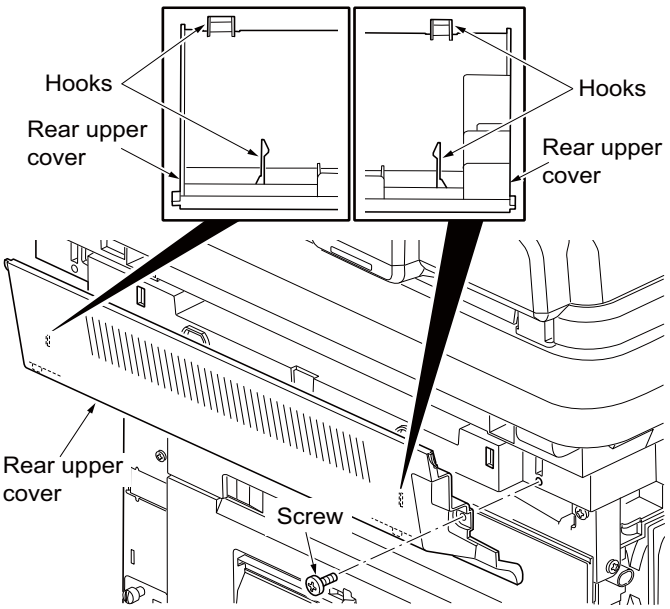

Figure 1-5-5

10. Draw the rear unit.
11. Open the rear middle cover.
12. Unhook seven hooks and then remove the left cover.

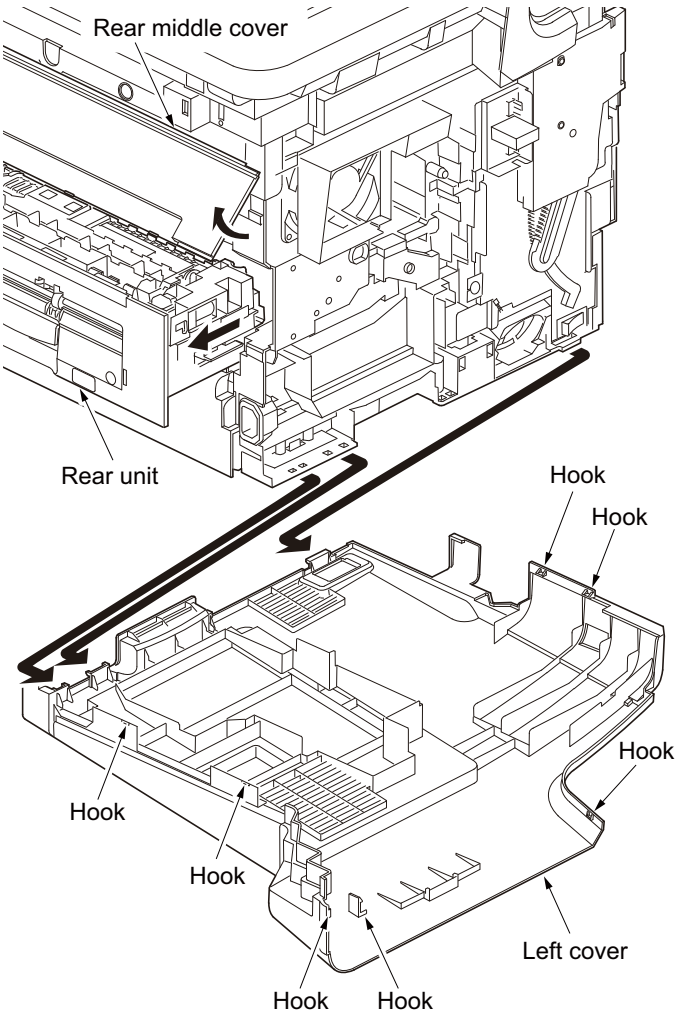

Figure 1-5-6

TONER
www.tonerplus.com.ua

1-5-3 Paper feed section

(1) Detaching and refitting the paper feed assembly (paper feed roller and pickup roller)

Procedure

1. Remove the cassette.
2. While pushing the lock and then slide the paper feed roller pin.
3. While pressing the lever and then remove the paper feed assembly.
4. Check or replace the paper feed assembly and refit all the removed parts.

NOTE:
When the periodic maintenance (replacing the maintenance kit, see page 2-4-5), perform maintenance mode.:
U251 Clearing the maintenance count (see page 1-3-17)

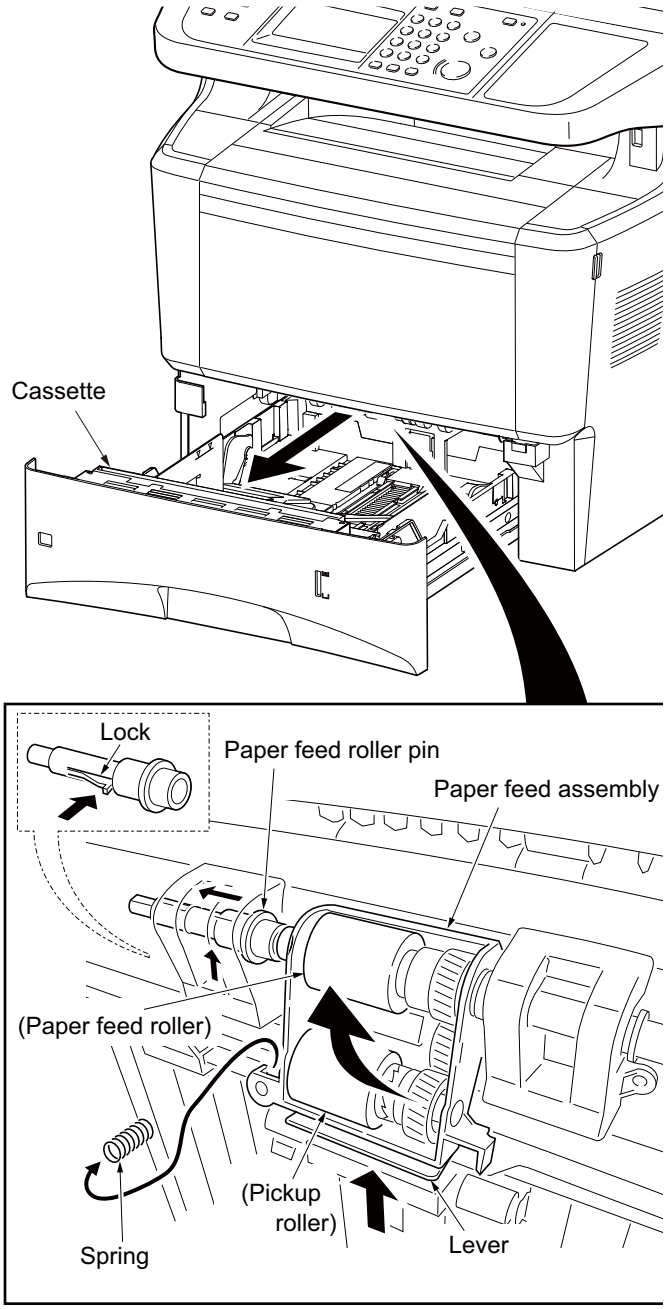

Figure 1-5-7

TONER
www.tonerplus.com.ua

(2) Detaching and refitting the retard roller assembly

Procedure

1. Remove the cassette.
2. Unhook two hooks and then remove the retard guide.

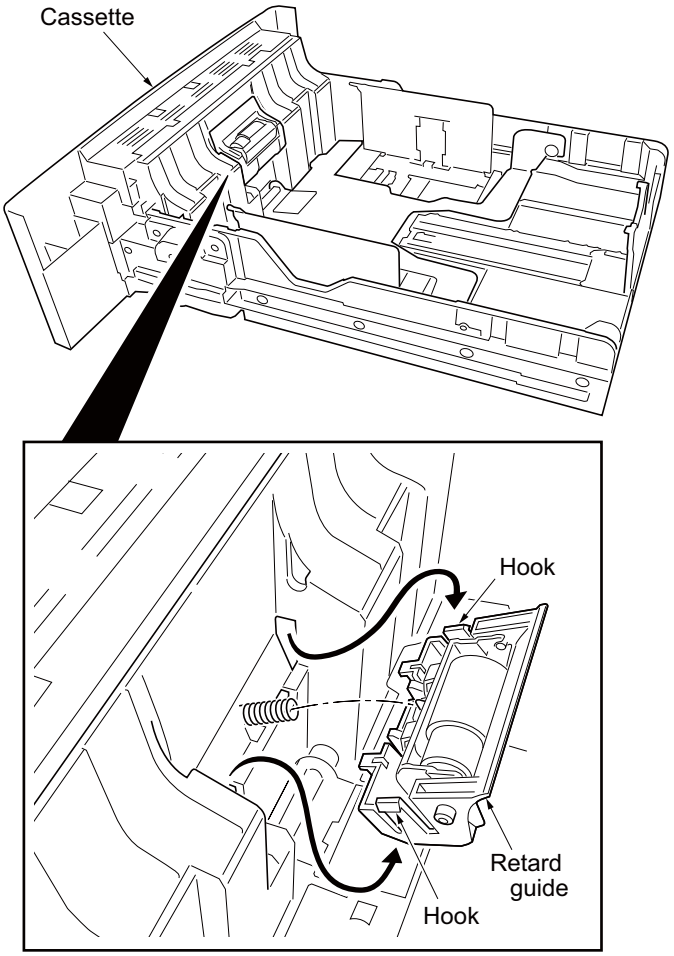

Figure 1-5-8

3. Remove the retard holder (roller) from the retard guide.
4. Check or replace the retard roller and refit all the removed parts.

NOTE:
When the periodic maintenance (replacing the maintenance kit, see page 2-4-5), perform maintenance mode.:
U251 Clearing the maintenance count (see page 1-3-17)

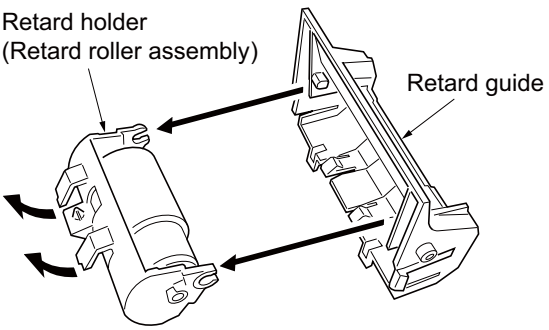

Figure 1-5-9

TONER
www.tonerplus.com.ua

(3) Detaching and refitting the upper registration and lower roller

Procedure

1. Remove the developing unit.
   (See page 1-5-26)
2. Remove the spring.
3. Pull the upper registration roller.

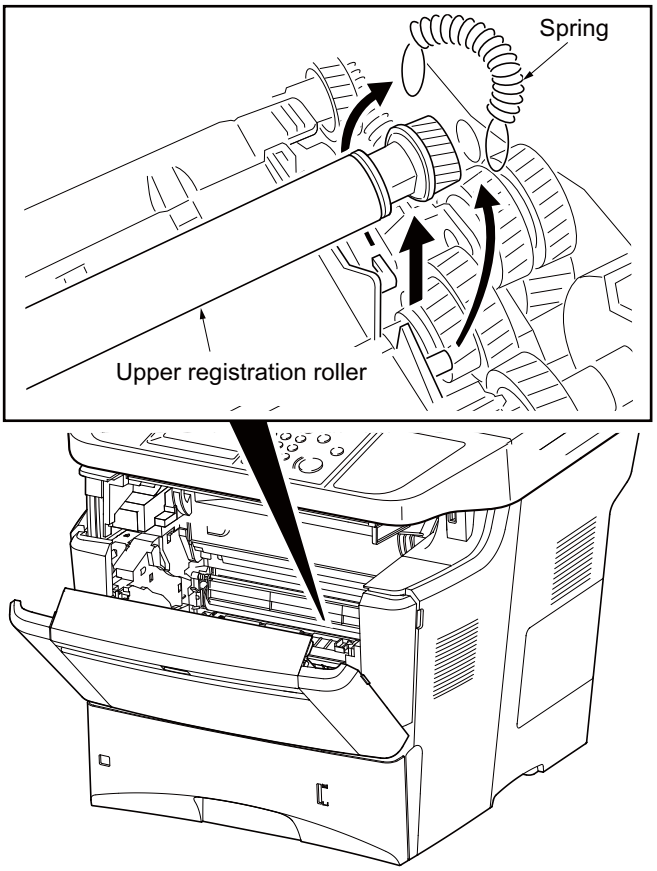

Figure 1-5-10

4. Remove the upper registration roller from the bush.
5. Remove the gear and bush from the upper registration roller.

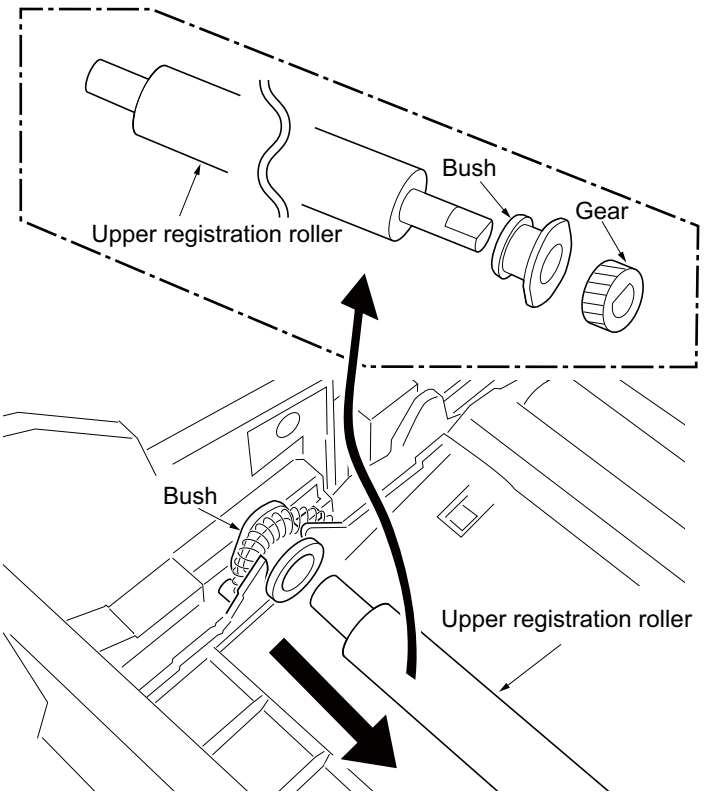

Figure 1-5-11

TONER
www.tonerplus.com.ua

6. Remove the lower registration roller.
7. Remove the stopper, gear and three bushes from the lower registration roller.
8. Check or replace the upper registration and lower roller and refit all the removed parts.

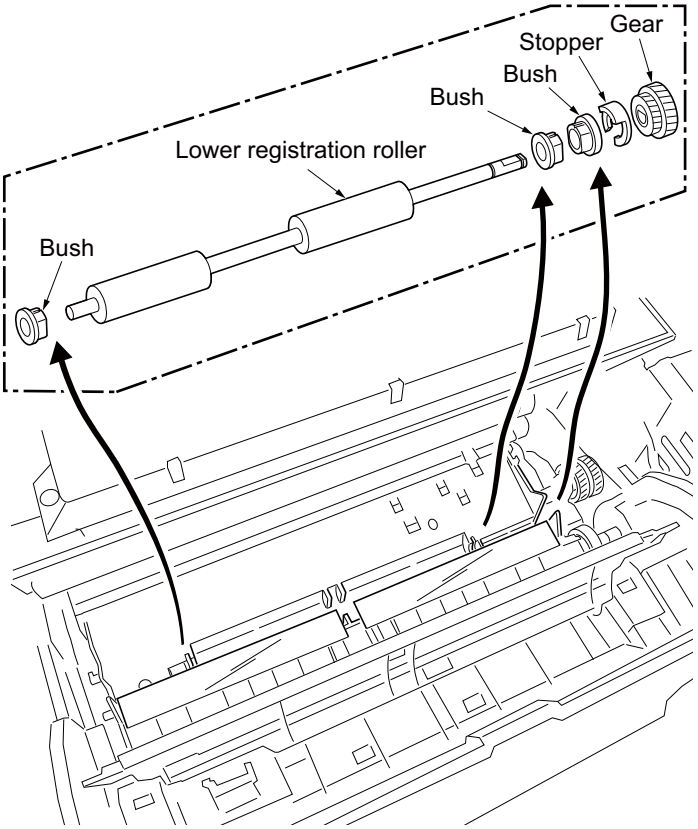

Figure 1-5-12

TONER
www.tonerplus.com.ua

(4) Detaching and refitting the MP paper feed roller

Procedure

1. Open the front cover.
2. Remove the developing unit.
   (See page 1-5-26)
3. Remove the front cover.
   (See page 1-5-3)
4. Pull the MP paper feed tray upwards until it is removed from the machine.

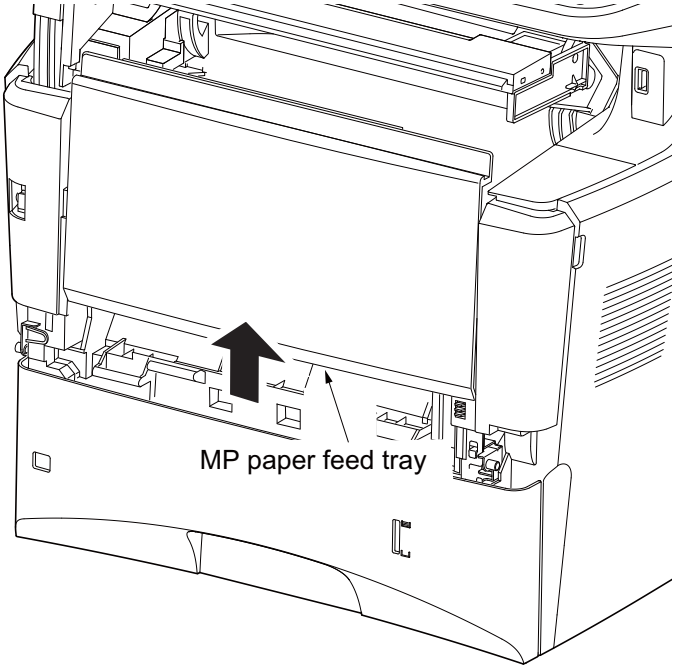

Figure 1-5-13

5. Pull the MP paper feed roller holder. (1)
6. Slide the MP paper feed roller holder. (2)
7. Remove the MP paper feed roller.
8. Check or replace the MP paper feed roller and refit all the removed parts.

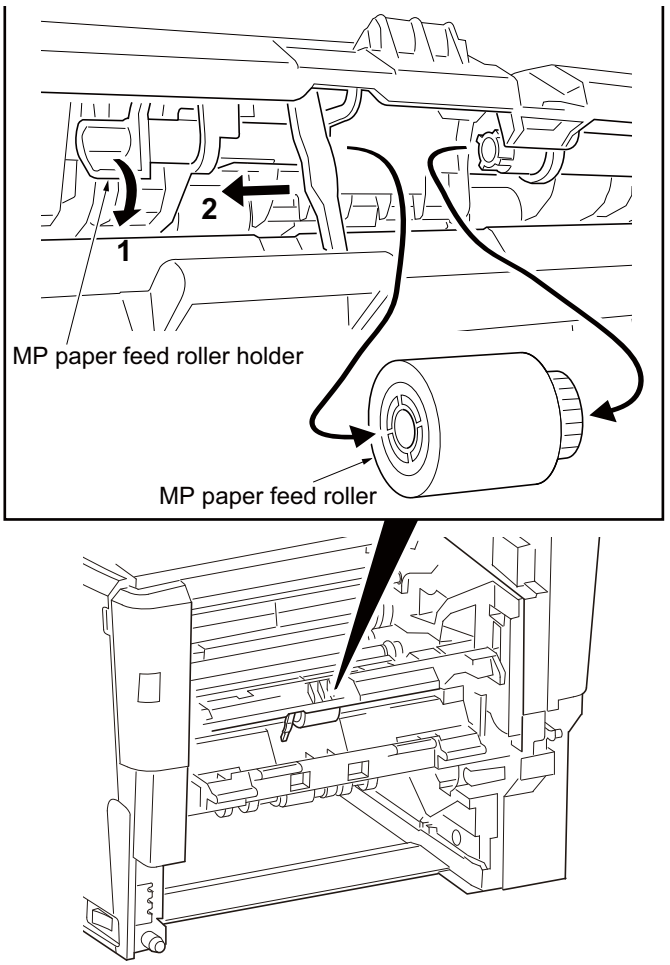

Figure 1-5-14

TONER
www.tonerplus.com.ua

1-5-4 Optical section

(1) Detaching and refitting the Document processor

Procedure

1. Remove the right cover.
   (See page 1-5-3)
2. Remove two connectors from the main PWB.

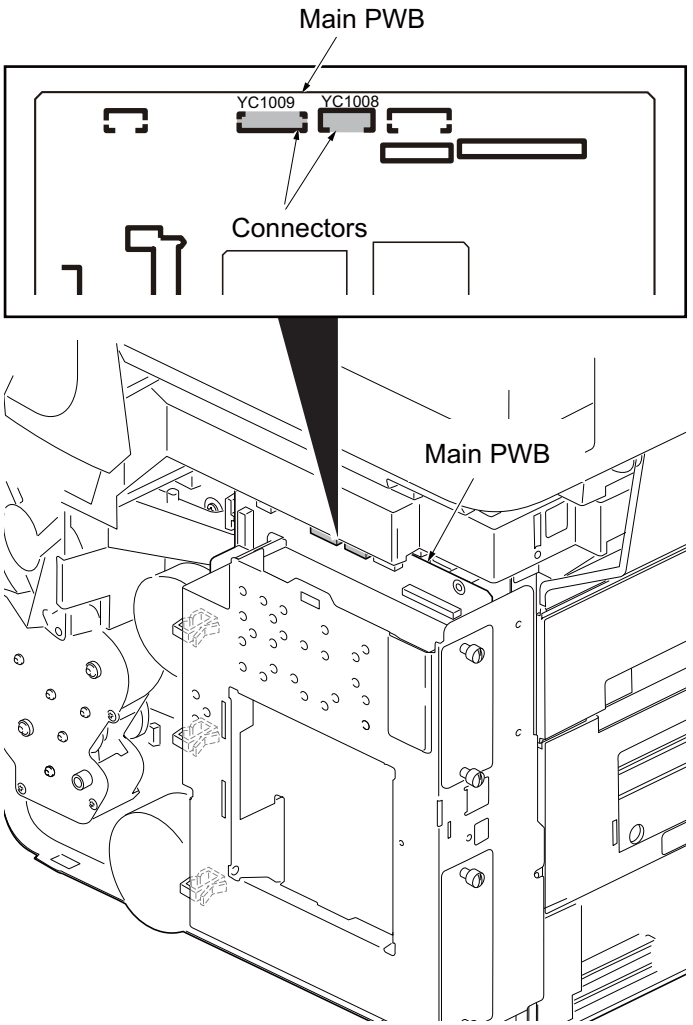

Figure 1-5-15

TONER
www.tonerplus.com.ua

3. Remove the ferrite core.
4. Remove the screw and grounding terminal.
5. Release the clamp and then remove the electrical wires.

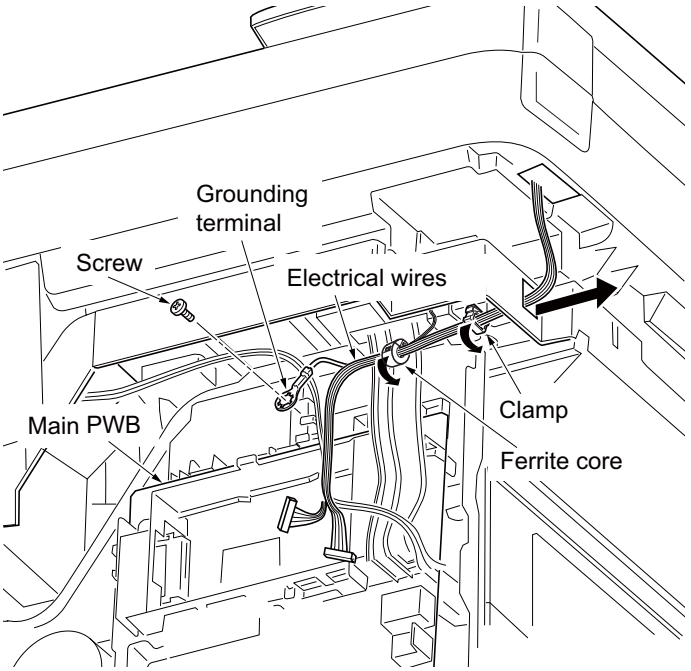

Figure 1-5-16

6. Pull the Document processor out.

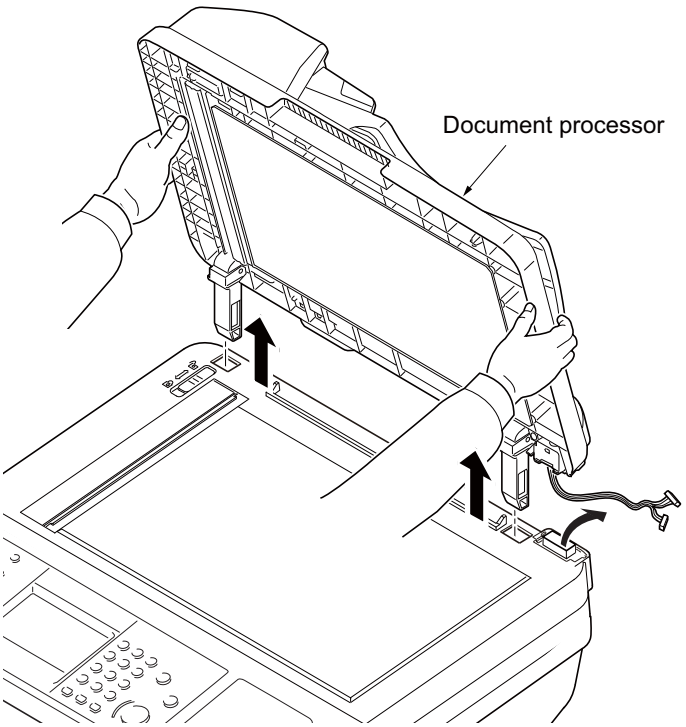

Figure 1-5-17

TONER
www.tonerplus.com.ua

(2) Detaching and refitting the scanner unit

Procedure

1. Remove the right cover and left cover. (See page 1-5-3)
2. Remove the document processor. (See page 1-5-11)
3. Remove the FFC and three connectors and the USB from the main PWB.

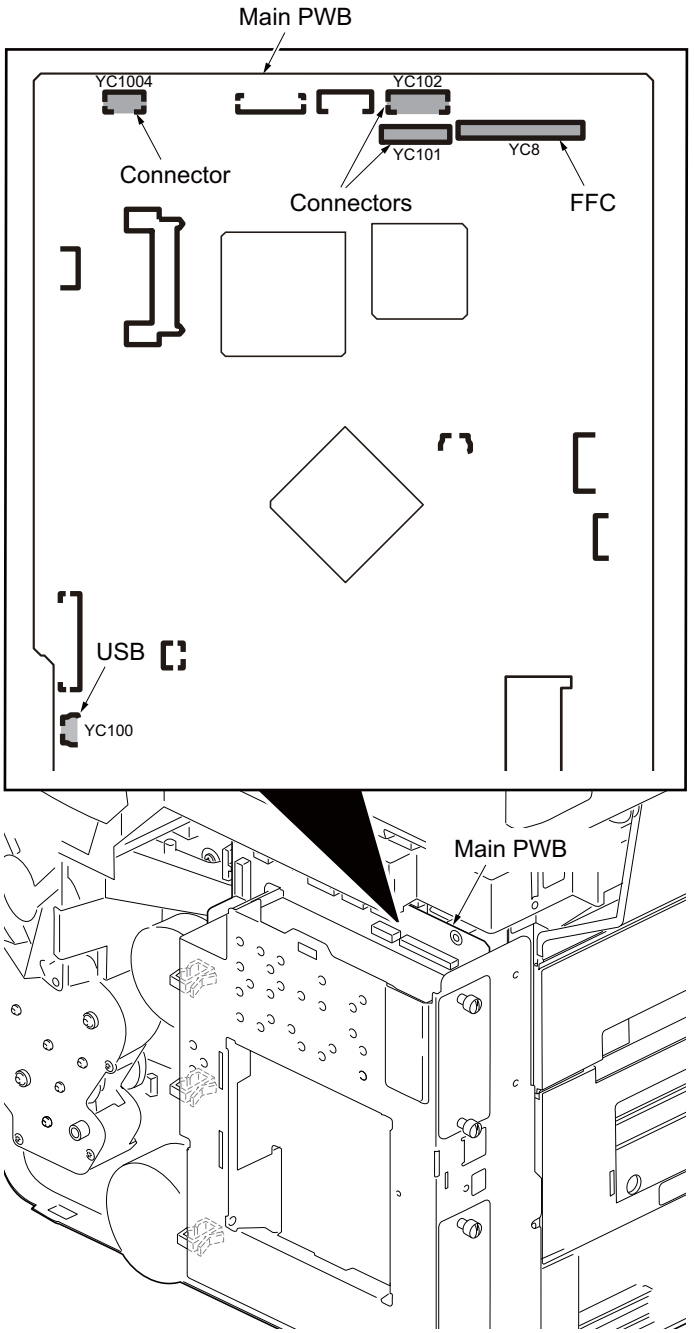

Figure 1-5-18

TONER
www.tonerplus.com.ua

4. Release clamps and then remove the wires.

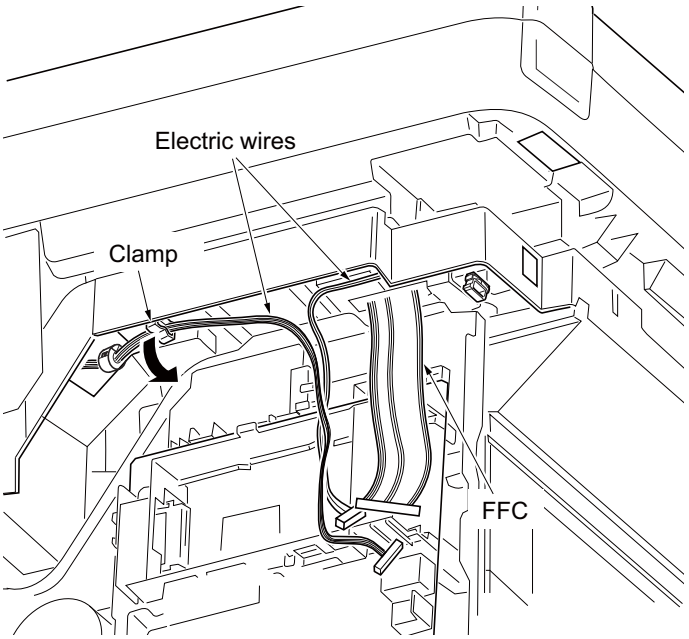

Figure 1-5-19

5. Remove two screws.

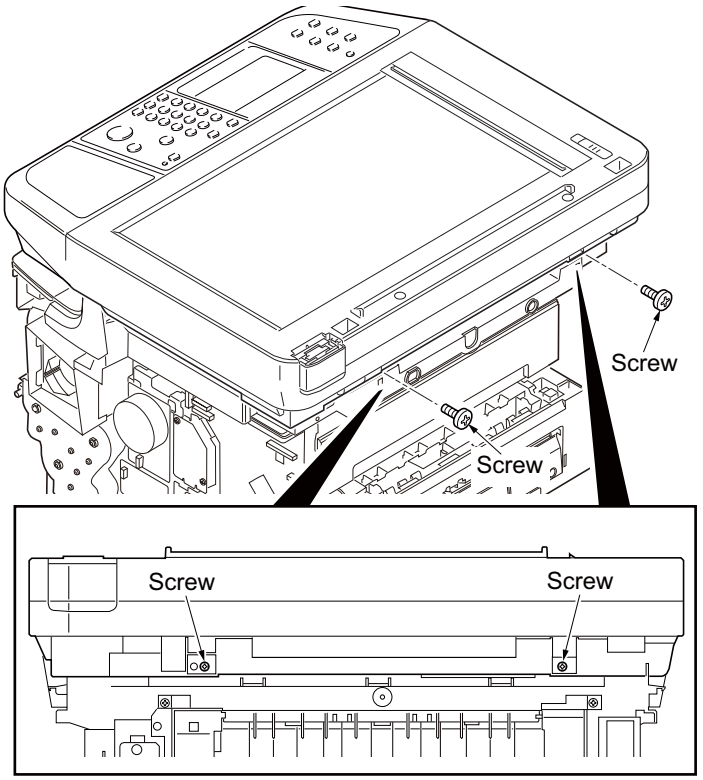

Figure 1-5-20

TONER
www.tonerplus.com.ua

6. Unhook four hooks and then remove the scanner unit.

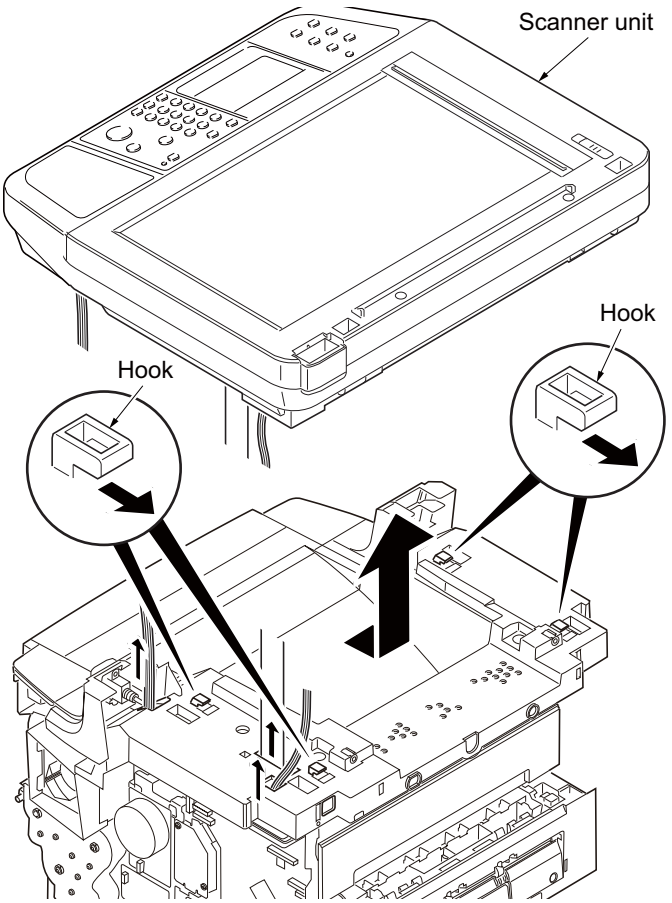

Figure 1-5-21

TONER
www.tonerplus.com.ua

(3) Detaching and refitting the laser scanner unit

Procedure

1. Remove the right cover and left cover. (See page 1-5-3)
2. Remove the document processor. (See page 1-5-11)
3. Remove the scanner unit. (See page 1-5-13)
4. Remove the connector from the main PWB.
5. Remove the screw and grounding terminal.
6. Unhook the hook and then remove the right front upper cover.

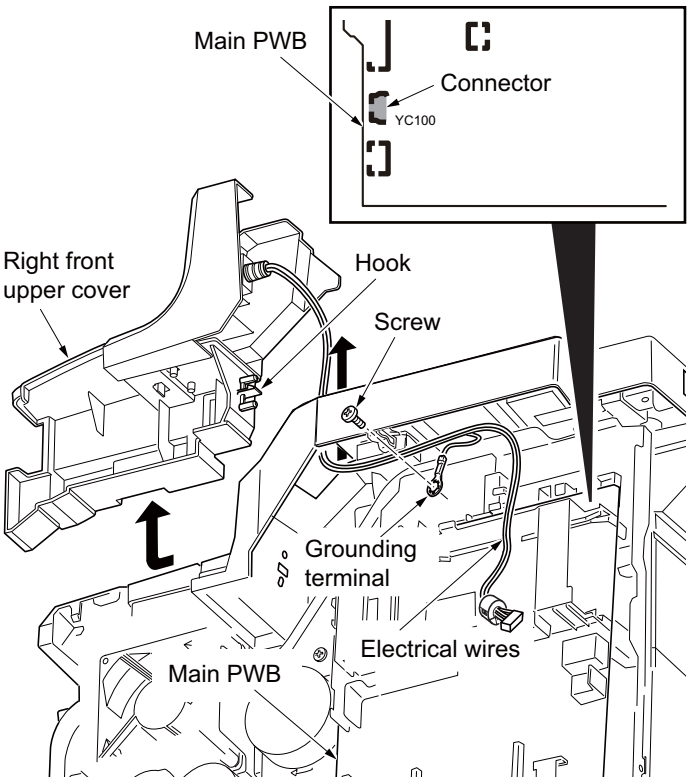

Figure 1-5-22

7. Unhook the hook and then remove the left front upper cover.
8. Remove the one screw on upper cover rack.

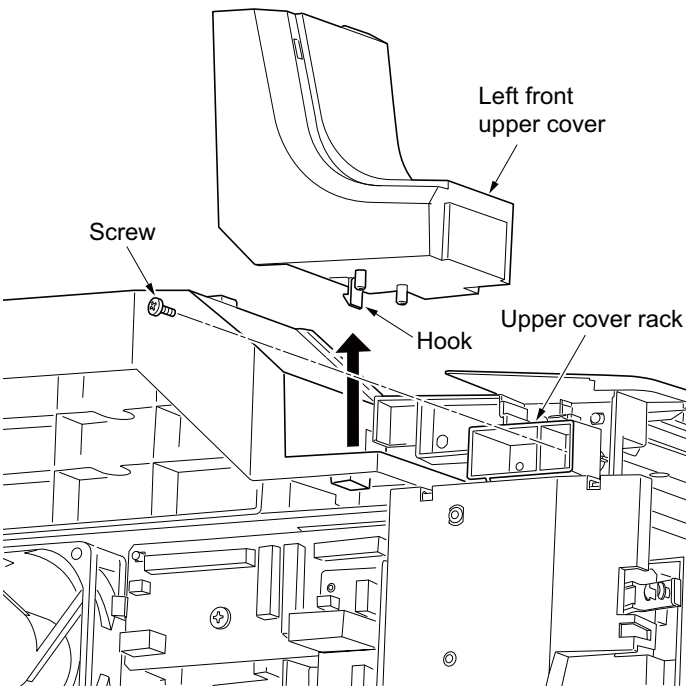

Figure 1-5-23

TONER
www.tonerplus.com.ua

9. Remove two fulcrum of the upper cover.

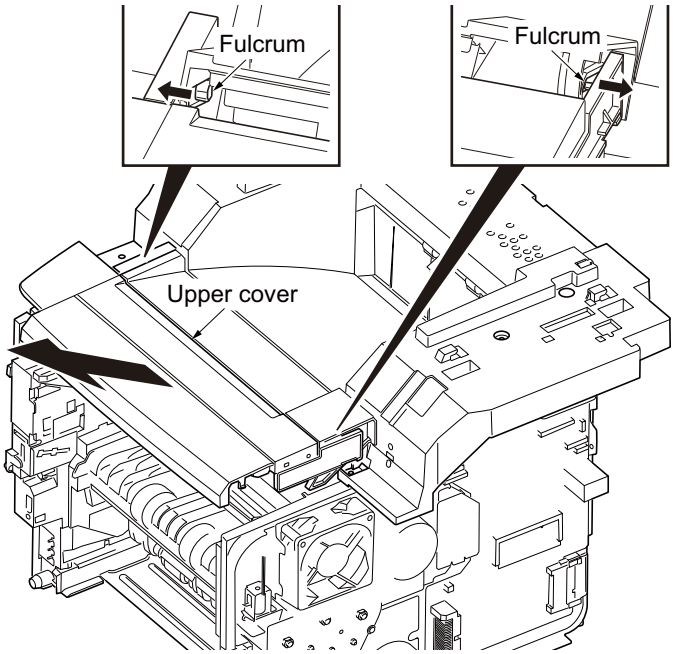

Figure 1-5-24

10. Remove six screws on the inner tray.
11. Remove the inner tray.

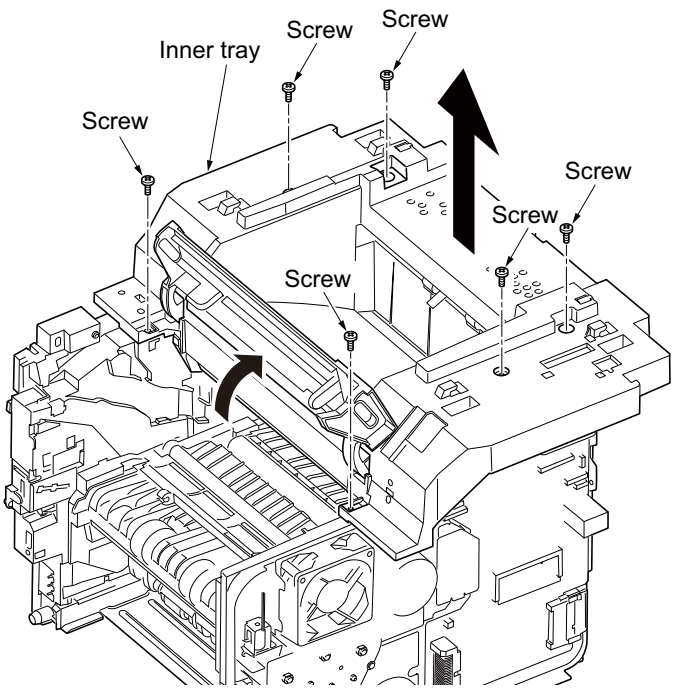

Figure 1-5-25

TONER
www.tonerplus.com.ua

12. Remove two connectors from the main PWB.

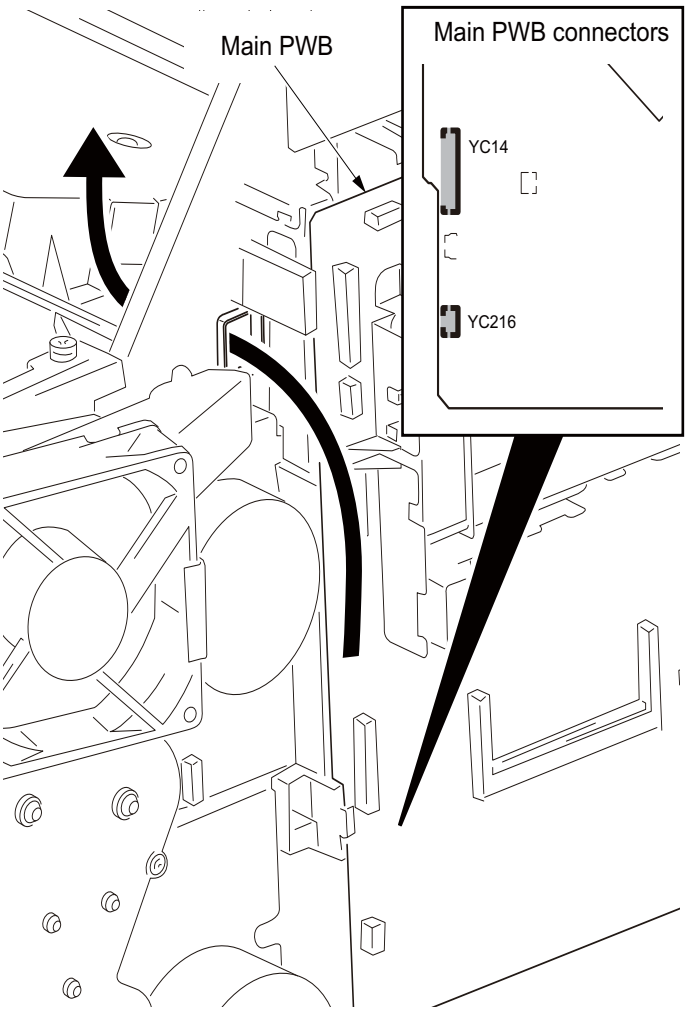

Figure 1-5-26

13. Remove four screws and then remove the laser scanner unit.
14. Check or replace the laser scanner unit and refit all the removed parts.

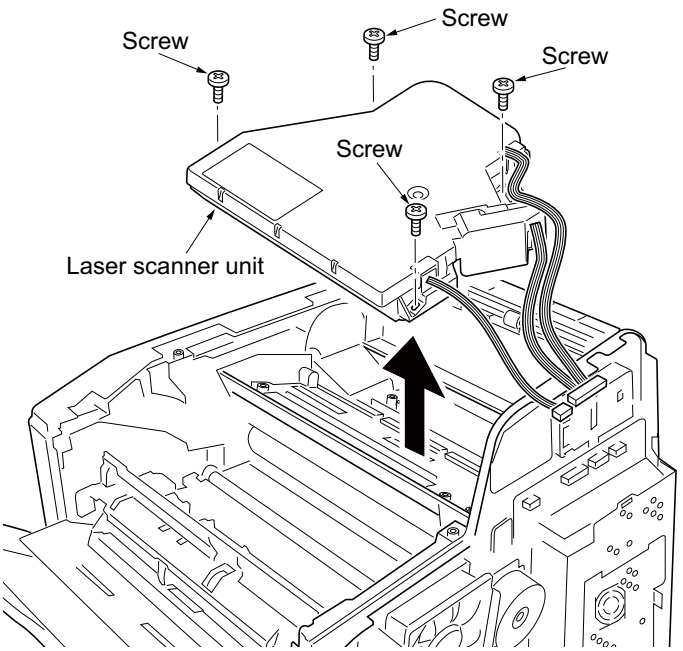

Figure 1-5-27

TONER
www.tonerplus.com.ua

(4) Replacing the image scanner unit (ISU)

Procedure

Removing the image scanner unit (ISU)

1. Remove the scanner unit.
   (See page 1-5-13)
2. Remove the card reader cover.

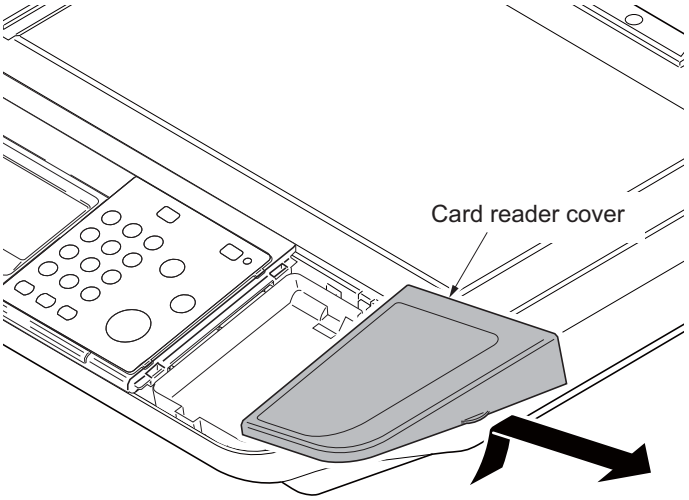

Figure 1-5-28

3. Remove the upper cover by using a pen.
4. Remove the LCD cover.

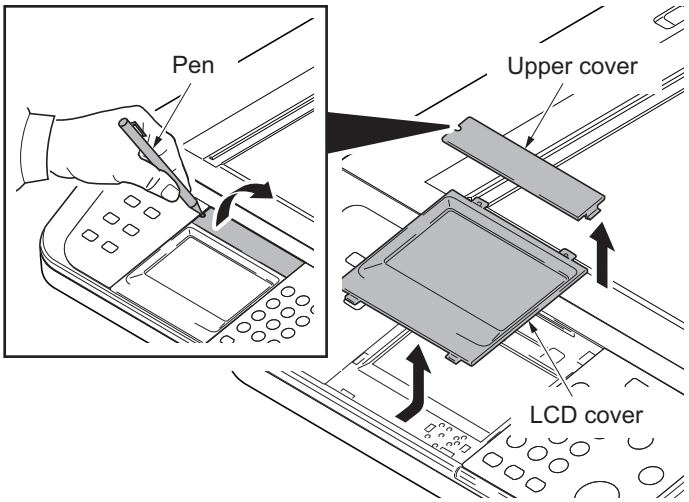

Figure 1-5-29

5. Remove the left operation panel cover.
6. Remove the right operation panel cover.

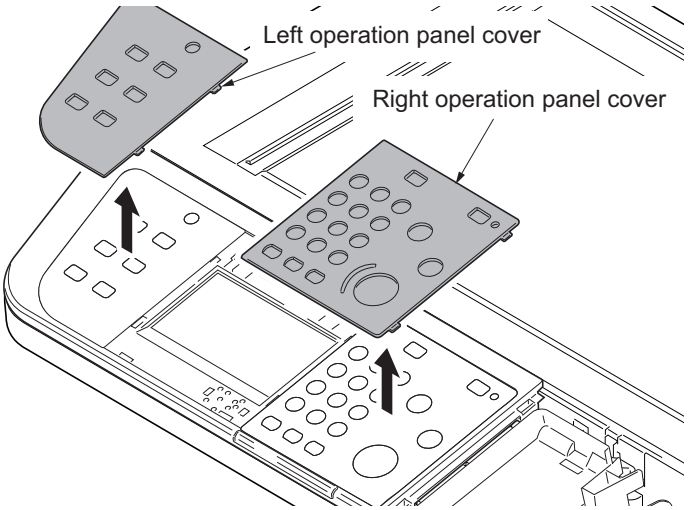

Figure 1-5-30

TONER
www.tonerplus.com.ua

7. Remove the left language sheet.
8. Remove the right language sheet.

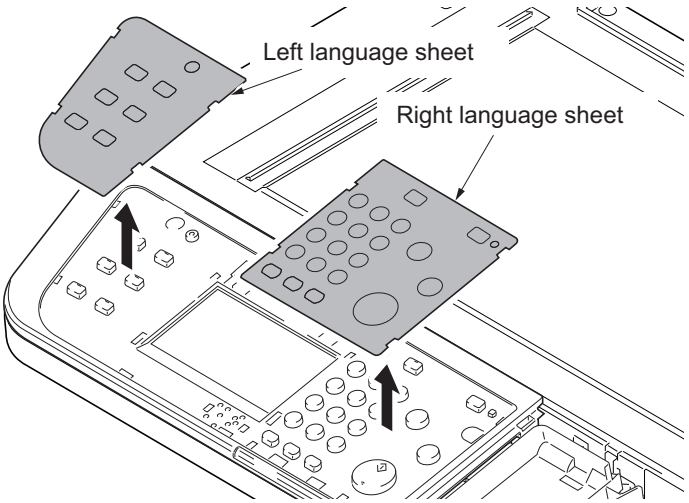

Figure 1-5-31

9. Remove two screws.

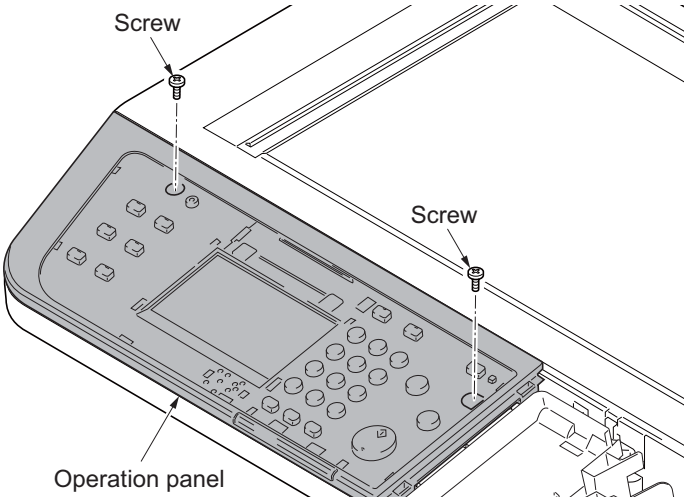

Figure 1-5-32

10. Remove three connectors and then remove the operation panel.

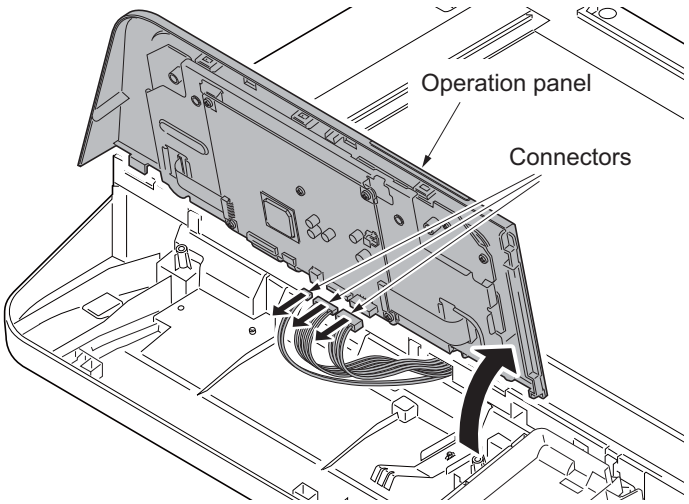

Figure 1-5-33

TONER
www.tonerplus.com.ua

11. Remove two screws.
12. Unhook three hooks and then remove the ISU upper frame.

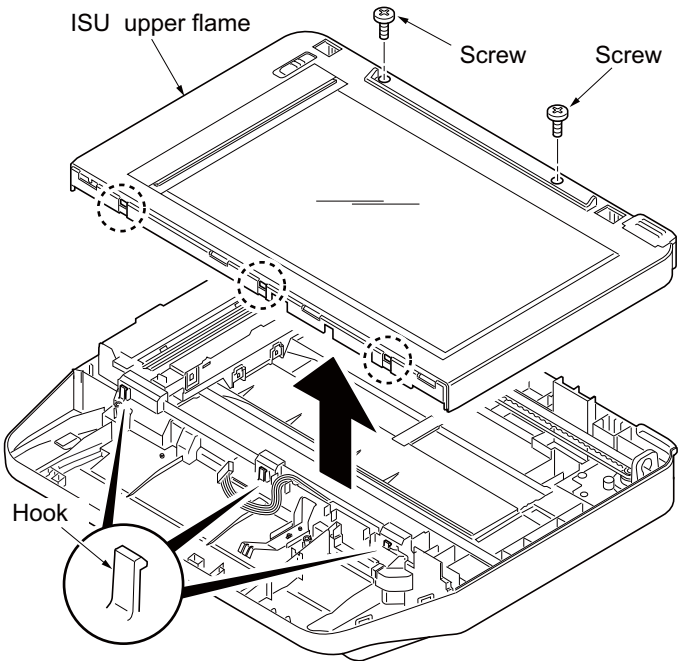

Figure 1-5-34

13. Move the image scanner unit (ISU) in the middle of the ISU shaft.
14. Detach the ISU shaft from the holder by lifting it.
15. Pull the ISU shaft out from the ISU.

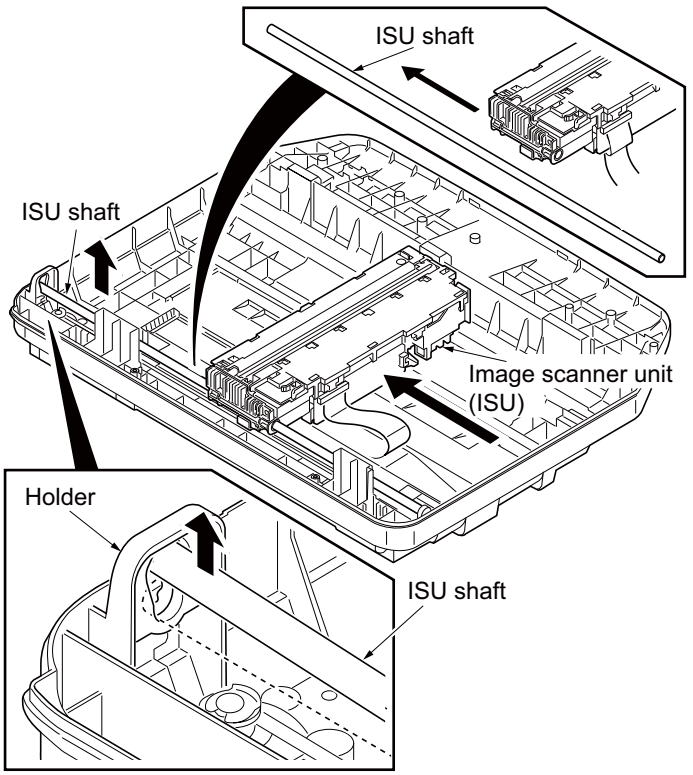

Figure 1-5-35

TONER
www.tonerplus.com.ua

16. Remove the ISU belt from the tension pulley and ISU gear 63/32.
17. Remove the ISU belt from the hooks of the ISU.

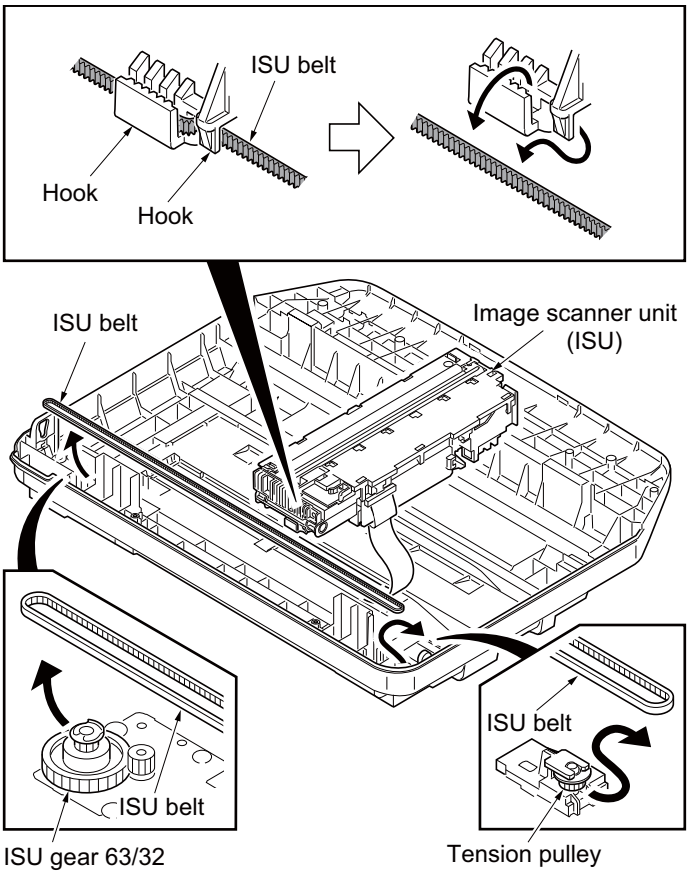

Figure 1-5-36

18. Remove the FFC from the FFC tape D.
19. Remove the ferrite core from the pit.
20. Remove the FFC from the FFC tape A.

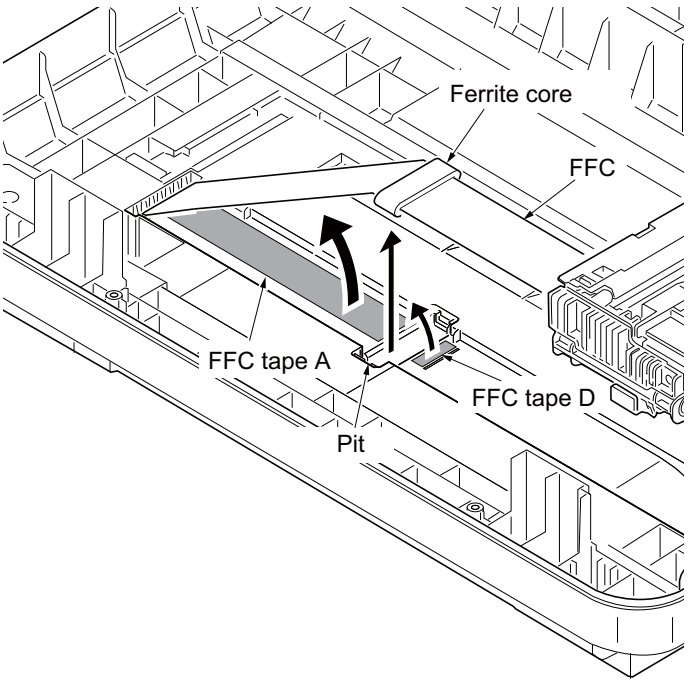

TONER
www.tonerplus.com.ua

Figure 1-5-37

21. Fold the end of the FFC and then pull the FFC out from the ISU lower frame.
22. Remove the FFC tape D and A from the ISU lower frame.
23. Clean the adhesive residue of the FFC tape D and A.

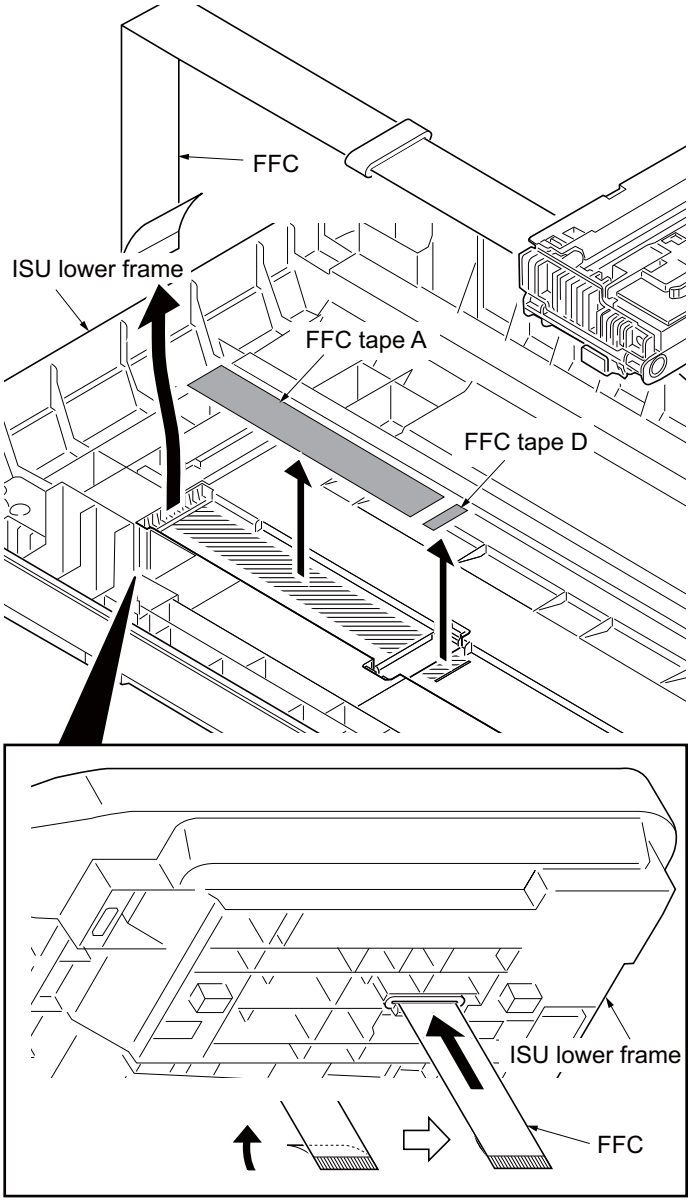

Figure 1-5-38

24. Remove the ferrite core from the FFC.

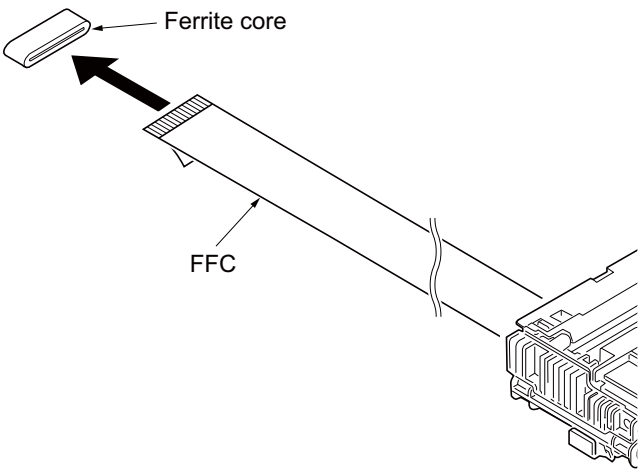

Figure 1-5-39

TONER
www.tonerplus.com.ua

Installing the image scanner unit (ISU)

25. Peel off the protective seal on one side from the FFC tape D.
26. Stick the FFC tape D on the ISU lower frame, aligned with the marking of the frame.
    (Sticking standards: See right figure)
27. Peel off the protective seal on the other side of the FFC tape A.
28. Stick the FFC tape A on the ISU lower frame.
    (At the right for how to correctly sick the tape in position, see the figure.)

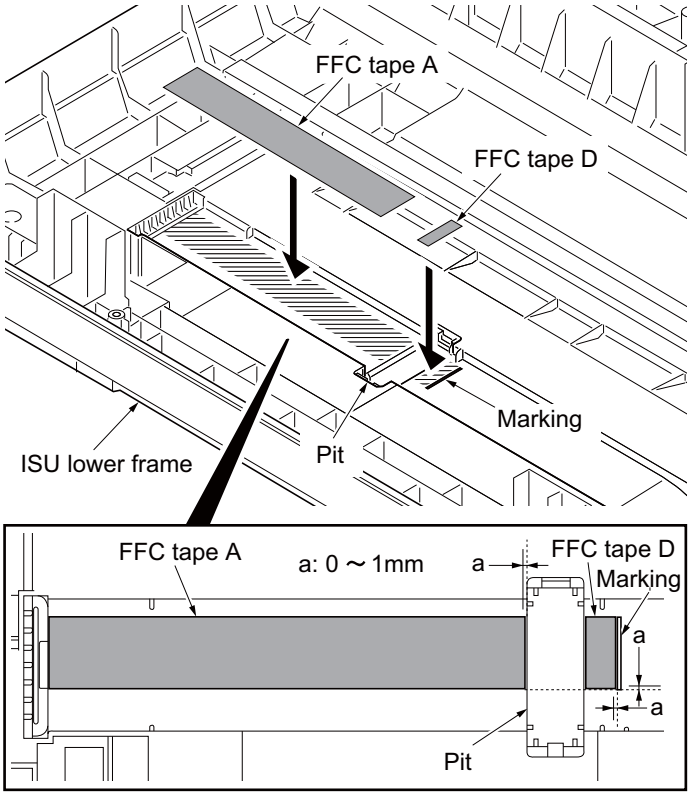

Figure 1-5-40

29. Fix the ferrite core onto the FFC.

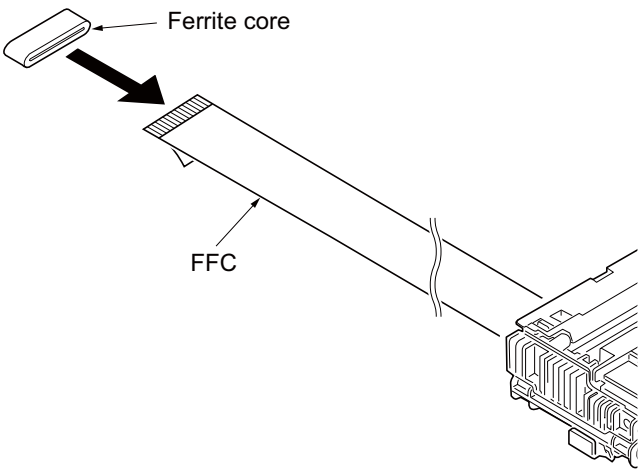

Figure 1-5-41

TONER
www.tonerplus.com.ua

30. Peel off the protective seal from the FFC tape D.
31. Align the line marking on the FFC with the rib on the ISU lower frame, then fix the FFC to the FFC tape D.
32. Install the ferrite core in the pit.
33. Peel off the released paper from the FFC tape A.
34. Stick the FFC on the FFC tape A.

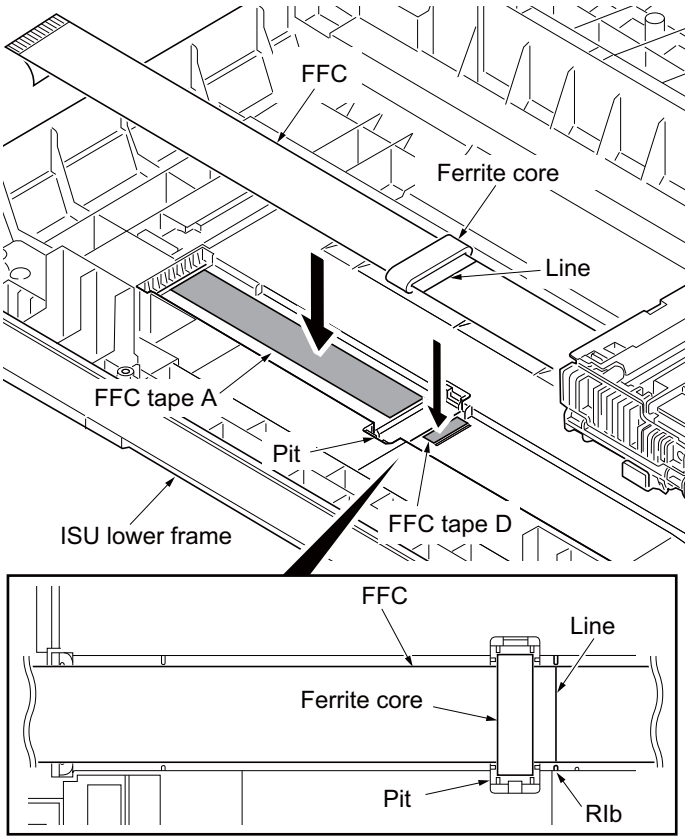

Figure 1-5-42

35. Thread an end of the FFC through the ISU lower frame.
36. Refer to the step 11 to 1 and refit all the removed parts.

NOTE:
When the replacing the image scanner unit (ISU), perform following maintenance modes.

1. U425 Setting the target (see page 1-3-20)
2. U411 Adjusting the scanner automatically (see page 1-3-18)

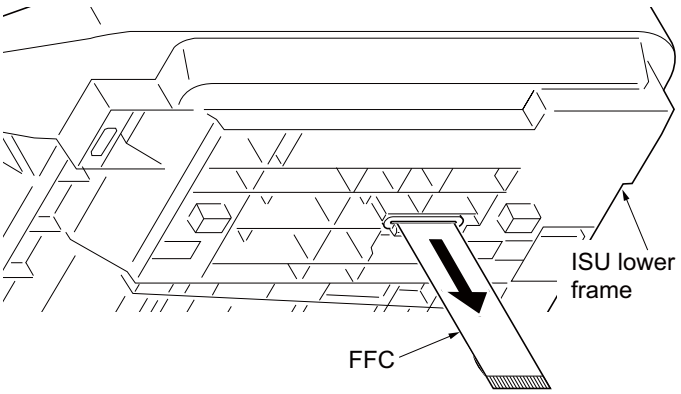

Figure 1-5-43

TONER
www.tonerplus.com.ua

1-5-5 Developing section

(1) Detaching and refitting the developing unit

Procedure

1. Open the front cover.
2. Remove the developing unit.
3. Check or replace the developing unit and refit all the removed parts.

NOTE:
When the periodic maintenance (replacing the maintenance kit, see page 2-4-5), perform maintenance mode.:
U251 Clearing the maintenance count (see page 1-3-17)

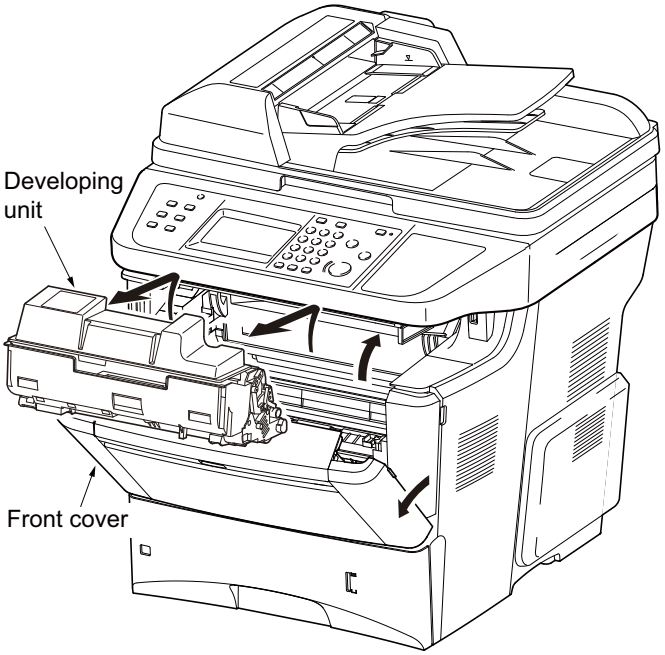

Figure 1-5-44

TONER
www.tonerplus.com.ua

1-5-6 Drum section

(1) Detaching and refitting the drum unit

Procedure

1. Remove the developing unit.
   (See page 1-5-26)
2. Open the left side cover and then remove the waste toner box.
3. Remove the drum stopper.
4. Unlock the drum unit lock and then remove the drum unit.
5. Check or replace the drum unit and refit all the removed parts.

NOTE:
When the periodic maintenance (replacing the maintenance kit, see page 2-4-5), perform maintenance mode.:
U251 Clearing the maintenance count (see page 1-3-17)

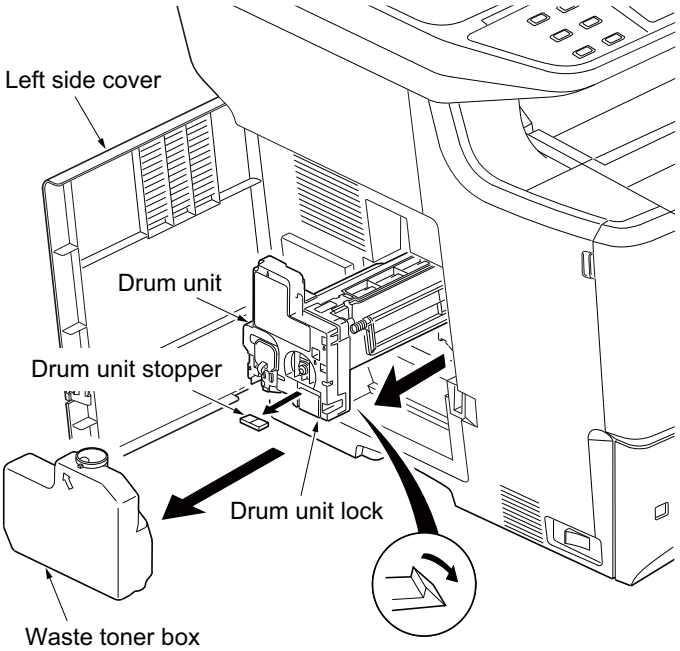

Figure 1-5-45

(2) Detaching and refitting the main charger unit

Procedure

1. Remove the drum unit.
   (See page 1-5-27)
2. Unlock the lock lever and then remove the main charger unit.
3. Check or replace the main charger unit and refit all the removed parts.

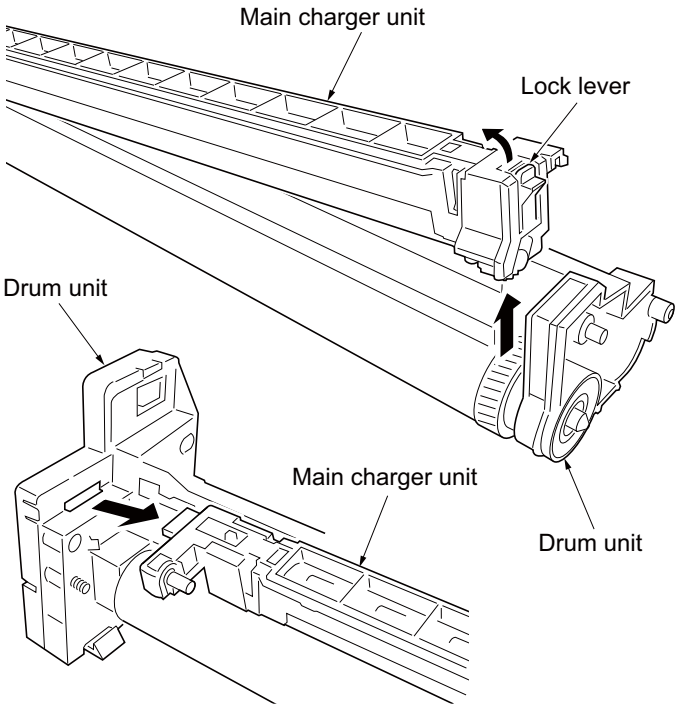

Figure 1-5-46

TONER
www.tonerplus.com.ua

1-5-7 Transfer/separation section

(1) Detaching and refitting the transfer roller and separation brush unit

Procedure

1. Remove the developing unit.
   (See page 1-5-26)
2. Remove the drum unit.
   (See page 1-5-27)
3. Slide the paper chute guide and unhook the hooks.
4. Remove the paper chute guide.

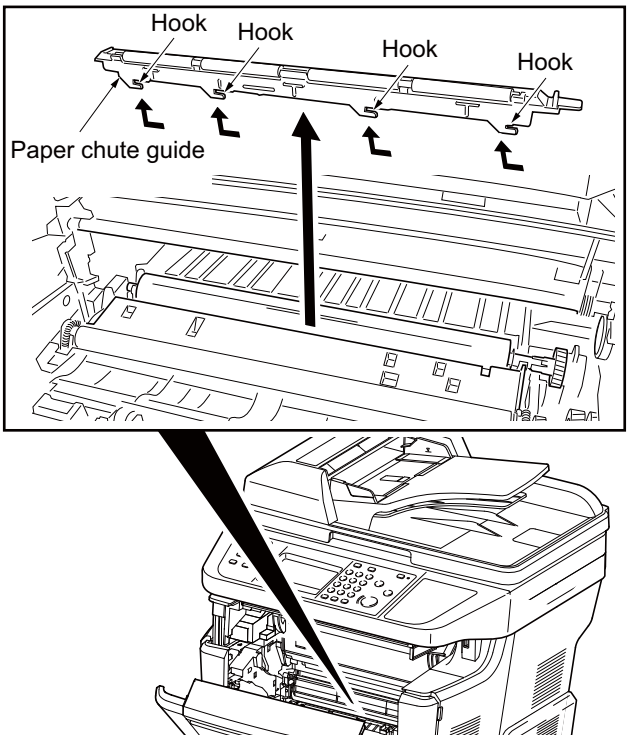

Figure 1-5-47

5. Remove the transfer roller's shaft from the both bushes.

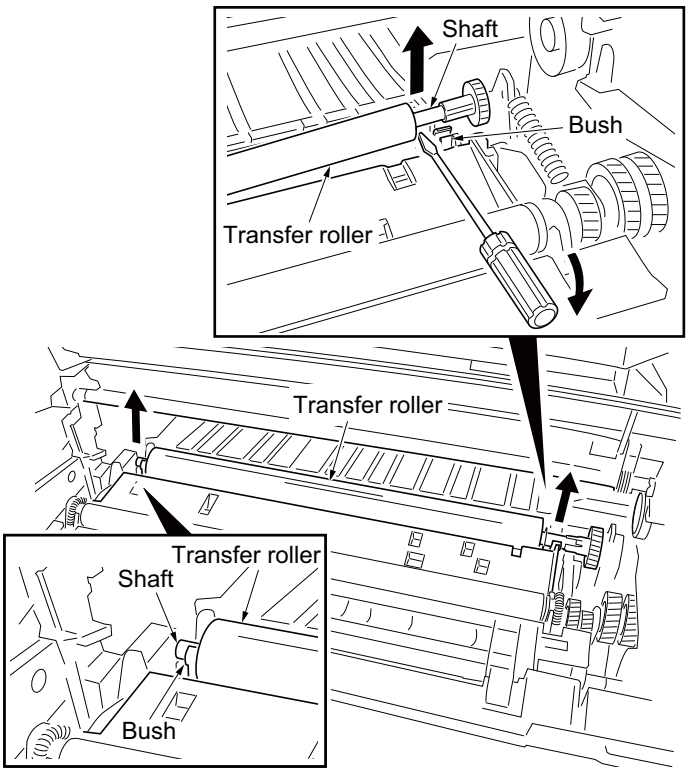

Figure 1-5-48

TONER
www.tonerplus.com.ua

6. Release four hooks and then remove the separation brush unit.
7. Check or replace the transfer roller and separation brush unit and refit all the removed parts.

CAUTION: Note the following, when refitting the transfer roller and separation brush unit.

A: Transferroller
To avoid damaging the bush, place the transfer roller so that its gear does not hit the U-shaped bush.

B: Separation brush unit
While inserting the separation holder in place, align the ends of the holder with the guides until they click in.

(a)The separation brush unit is inserted into the two projections of the frame and does not run on to the projections.

(b)The separation brush unit is firmly in contact with the separation plate of the frame.

NOTE:
When the periodic maintenance (replacing the maintenance kit, see page 2-4-5), perform maintenance mode.:
U251 Clearing the maintenance count (see page 1-3-17)

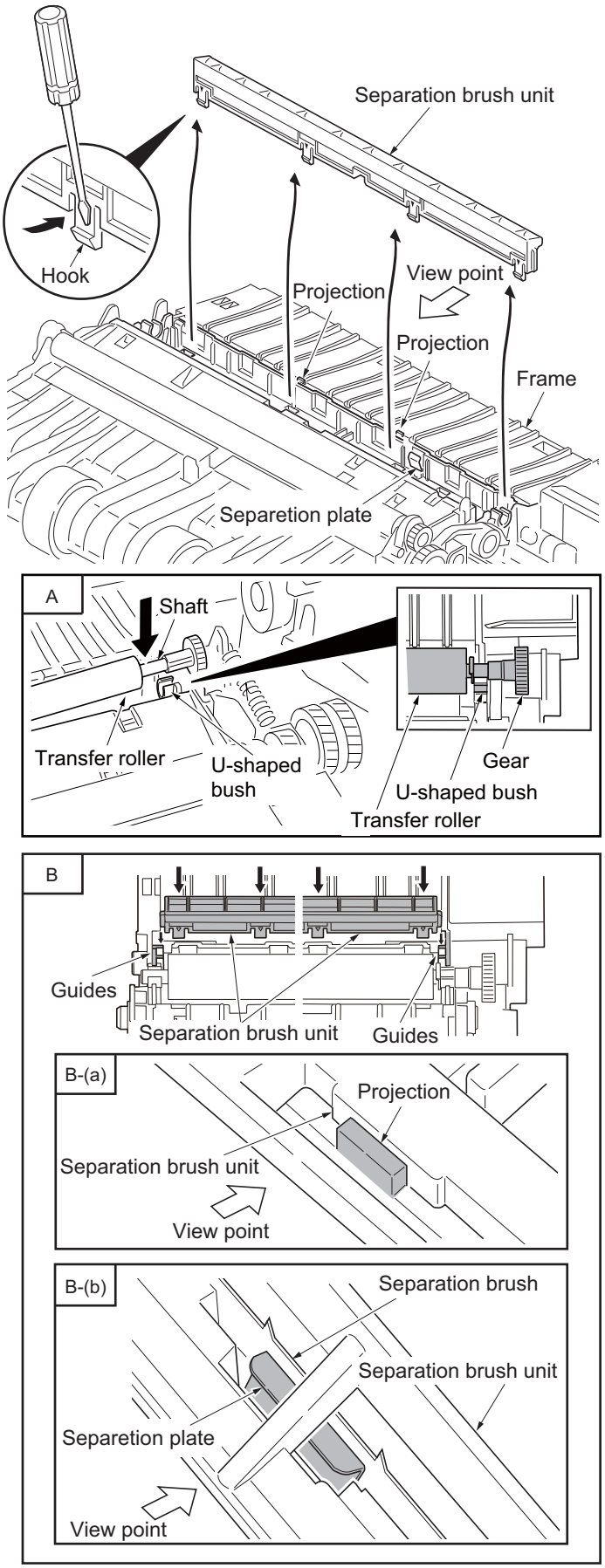

Figure 1-5-49

TONER
www.tonerplus.com.ua

1-5-8 Fuser section

(1) Detaching and refitting the fuser unit

Procedure

1. Draw the rear unit.
2. Insert a flat-blade screwdriver to push the fuser lock (gray colored) on the rear unit and the fuser unit is separated from the rear unit (rails).
   Do it both ends of the rear unit.
3. Check or replace the fuser unit and refit all the removed parts.
   Place the fuser unit on the rear unit (rails) and push the fuser lock so that the fuser lock catches the fuser unit.
   Do it for the both ends of the fuser unit.

NOTE:
When the periodic maintenance (replacing the maintenance kit, see page 2-4-5), perform maintenance mode.:
U251 Clearing the maintenance count (see page 1-3-17)

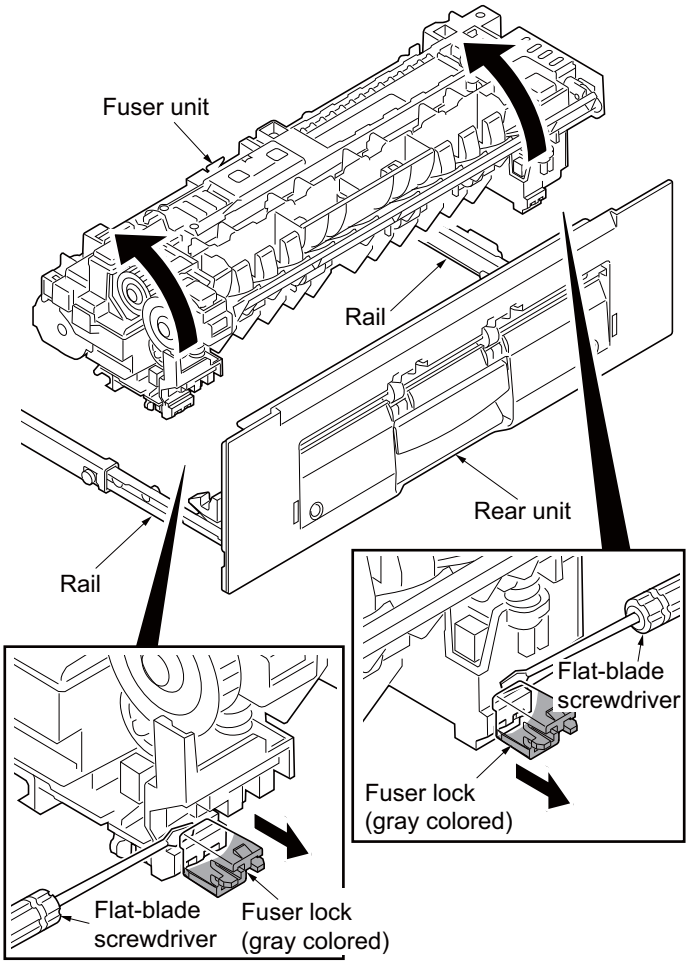

Figure 1-5-50

TONER
www.tonerplus.com.ua

1-5-9 PWBs

(1) Detaching and refitting the engine PWB

Procedure

1. Remove the developing unit. (See page 1-5-26)
2. Remove the drum unit. (See page 1-5-27)
3. Remove the right cover and left cover.(See page 1-5-3)
4. Remove the PSU fan motor. (See page 1-5-38)
5. Stand the main body front side up.
6. Remove five screws and then remove the bottom plate1.
7. Remove two screws and then remove the bottom plate 2.

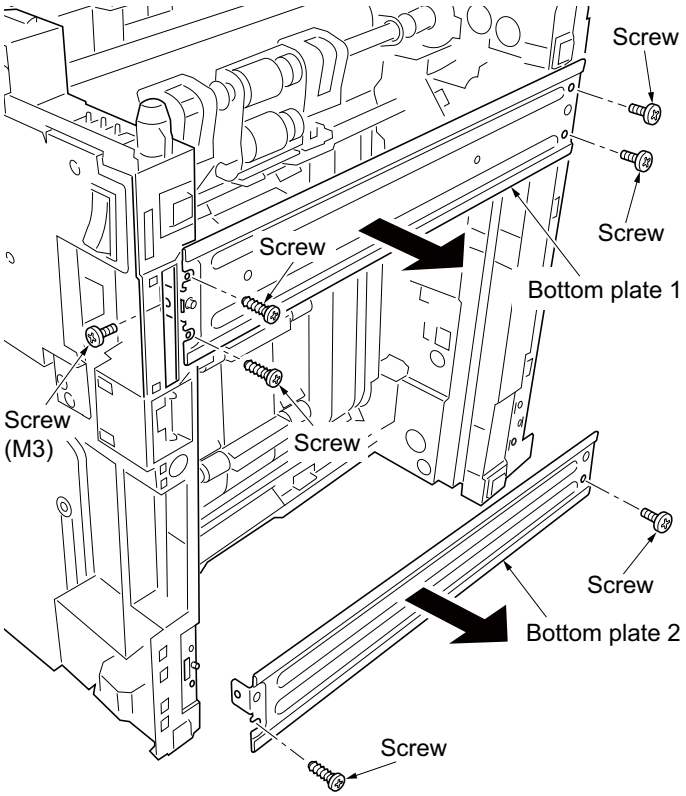

Figure 1-5-51

8. Remove two wires from the hooks and notches.
9. Open the DU guide (duplex cover).

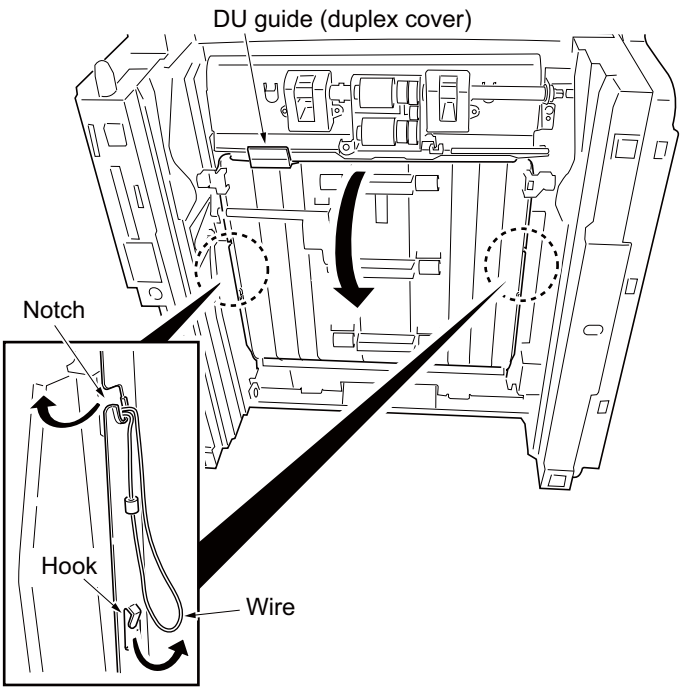

Figure 1-5-52

TONER
www.tonerplus.com.ua

10. Remove the cord cover.
11. Remove the connector.
12. Detach the joint.
13. Remove the six screws and then remove the DU base.

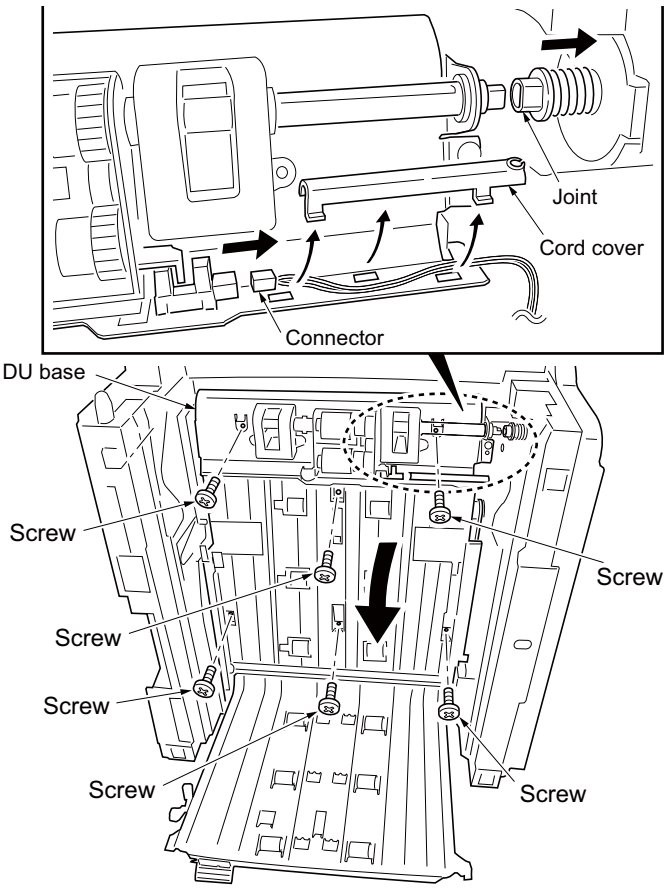

Figure 1-5-53

14. Release four snaps.
15. Remove one tab.
16. Remove five connectors.

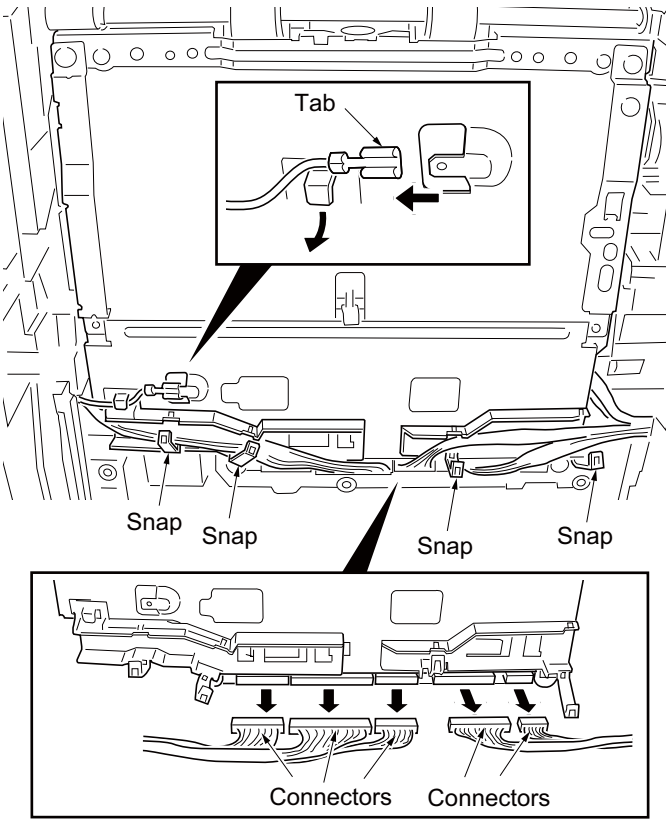

Figure 1-5-54

TONER
www.tonerplus.com.ua

17. Remove four screws.

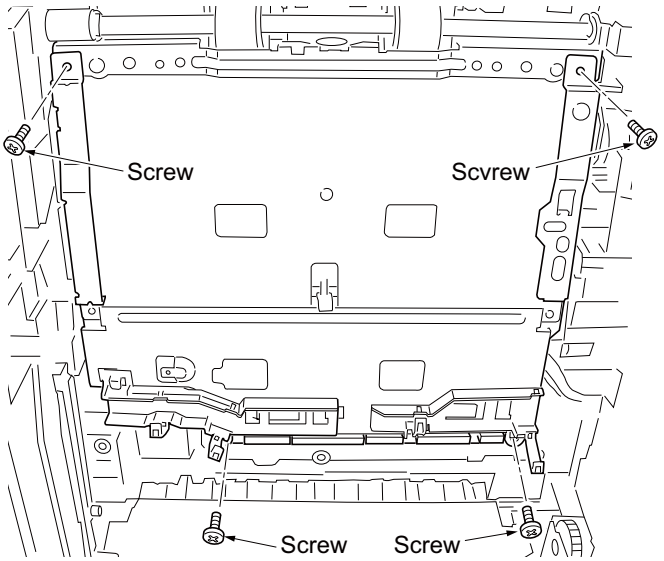

Figure 1-5-55

18. Detach the engine PWB assembly.
19. Remove four connectors.
20. Remove the engine PWB assembly.

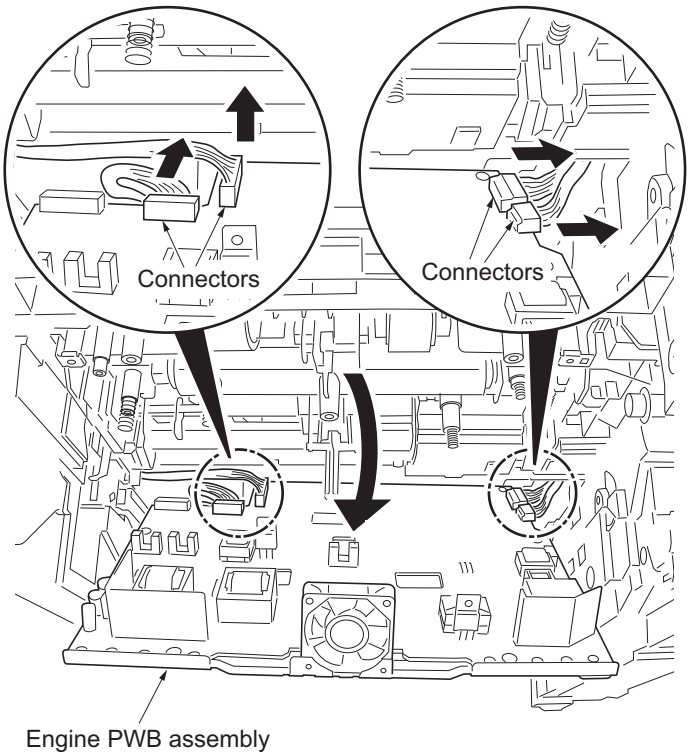

Figure 1-5-56

TONER
www.tonerplus.com.ua

21. Remove one connector.
22. Remove two screws-A and then remove the HV plate.
23. Remove two screws-B and then remove the engine R grounding plate, engine L grounding plate and shield plate.
24. Check or replace the engine PWB and refit all the removed parts.
    To replace the engine PWB, remove the EEPROM from the old engine PWB and mount it to the new engine PWB.

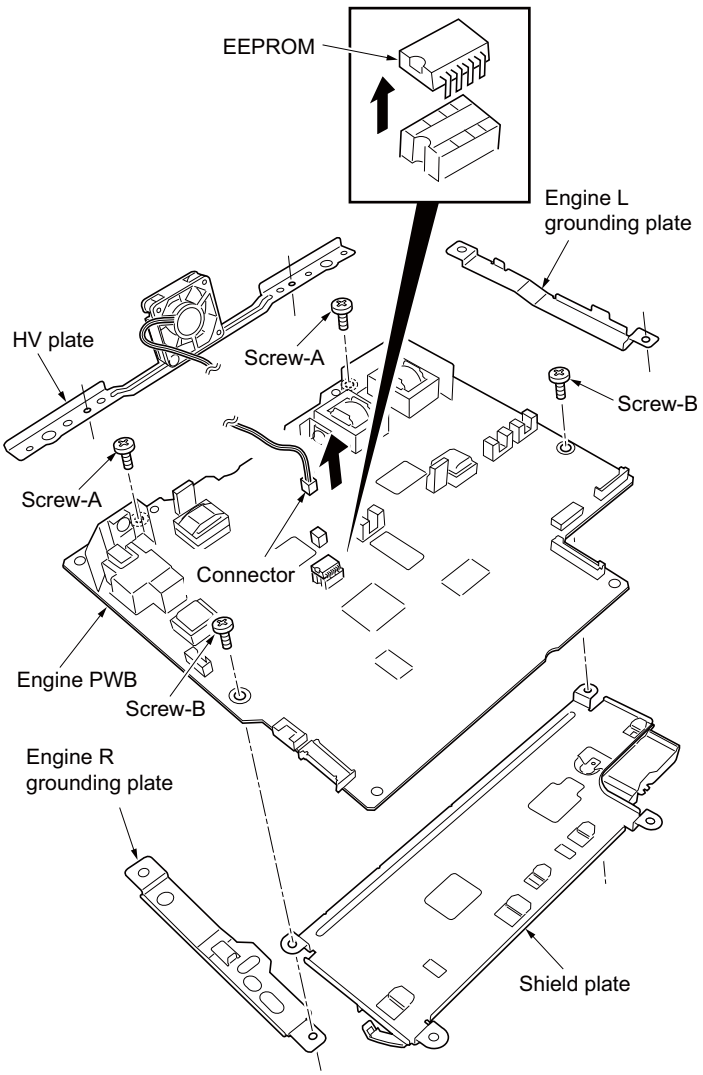

Figure 1-5-57

TONER
www.tonerplus.com.ua

(2) Detaching and refitting the main PWB

Procedure

1. Remove the right cover.
   (See page 1-5-3)
2. Remove the screw.
3. Remove the connector of the controller fan motor and then remove the memory slot cover.

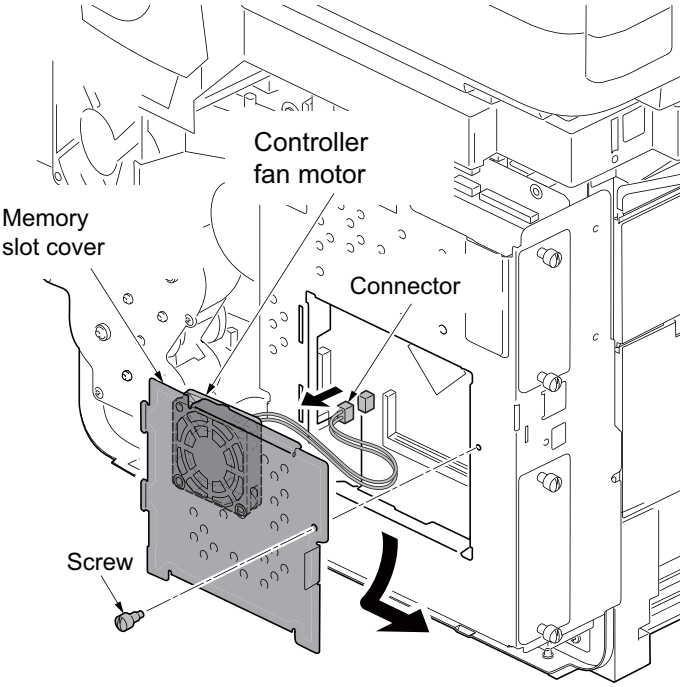

Figure 1-5-58

4. Remove the electrical wires from the three wire saddles.

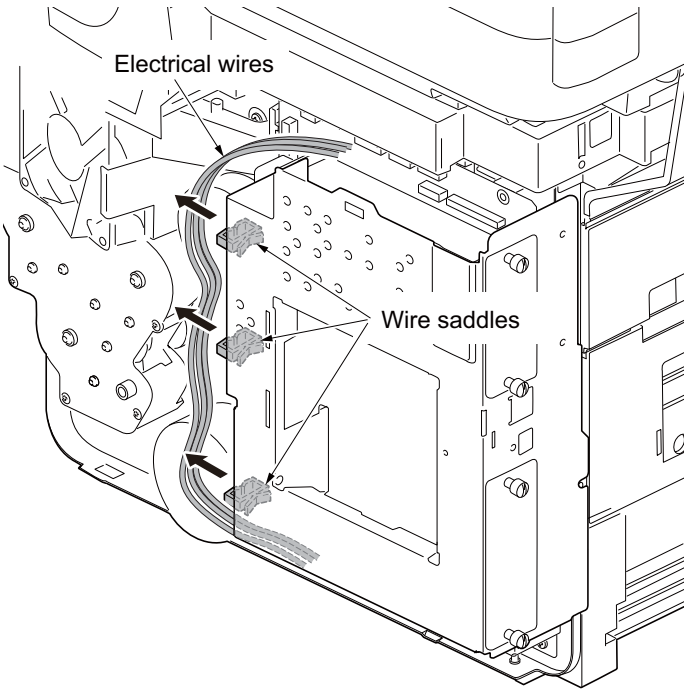

Figure 1-5-59

TONER
www.tonerplus.com.ua

5. Draw the rear unit.
6. Remove seven screws and then remove the controller box.

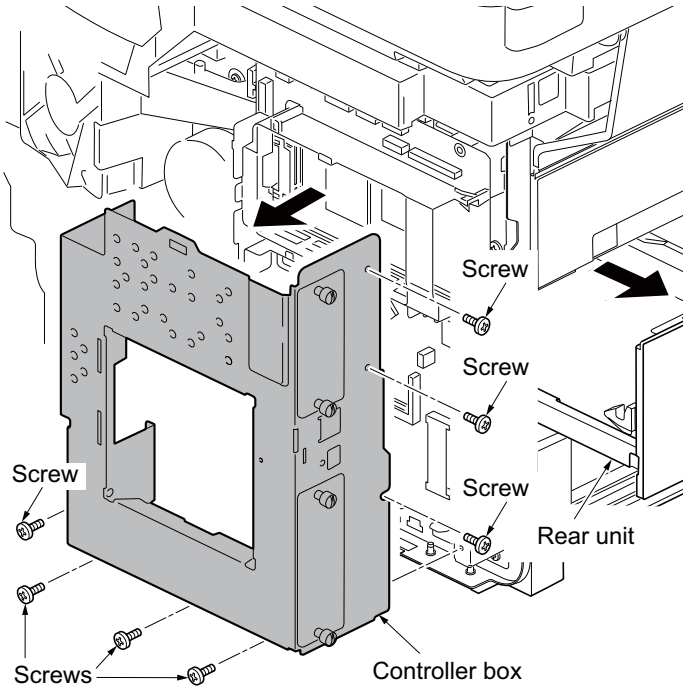

Figure 1-5-60

TONER
www.tonerplus.com.ua

7. Remove fourteen connectors from the main PWB.
8. Remove six screws and then remove the main PWB.
9. Check or replace the main PWB and refit all the removed parts.

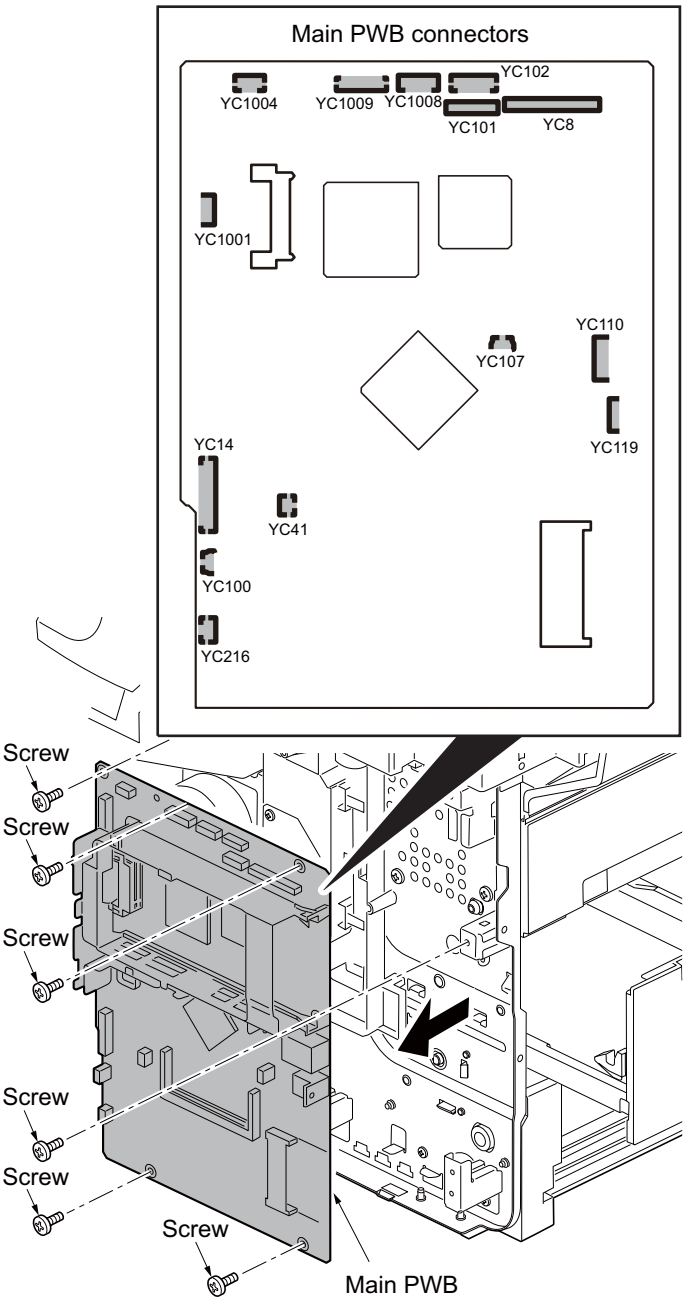

Figure 1-5-61

TONER
www.tonerplus.com.ua

(3) Detaching and refitting the power source PWB

Procedure

1. Remove the right cover and left cover. (See page 1-5-3)
2. Remove the drum unit. (See page 1-5-27)
3. Remove three connectors from the relay PWB.
4. Release three clamps and then remove the wires.

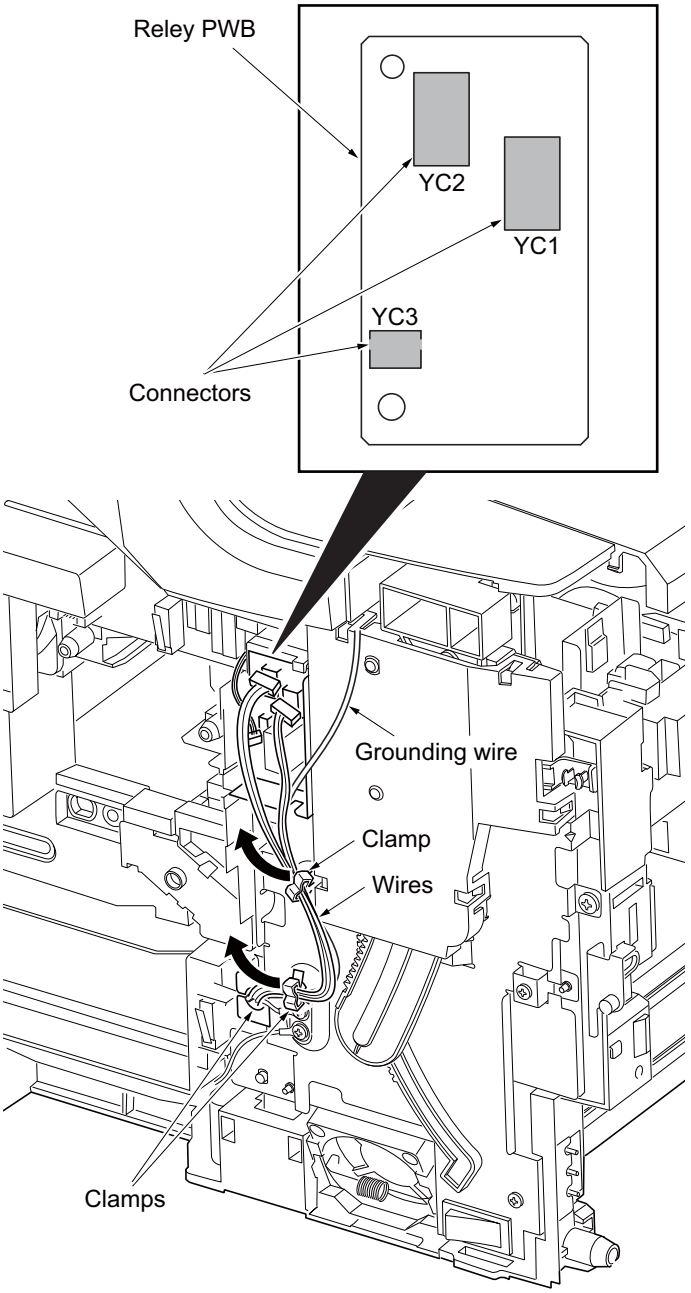

Figure 1-5-62

TONER
www.tonerplus.com.ua

5. Unhook five hooks and then remove the rack cover.
6. Remove the one screw and then remove upper cover rack.
7. Remove the gear and front cover rack each.
8. Unhook two hooks and then remove the gear holder by pulling upwards.

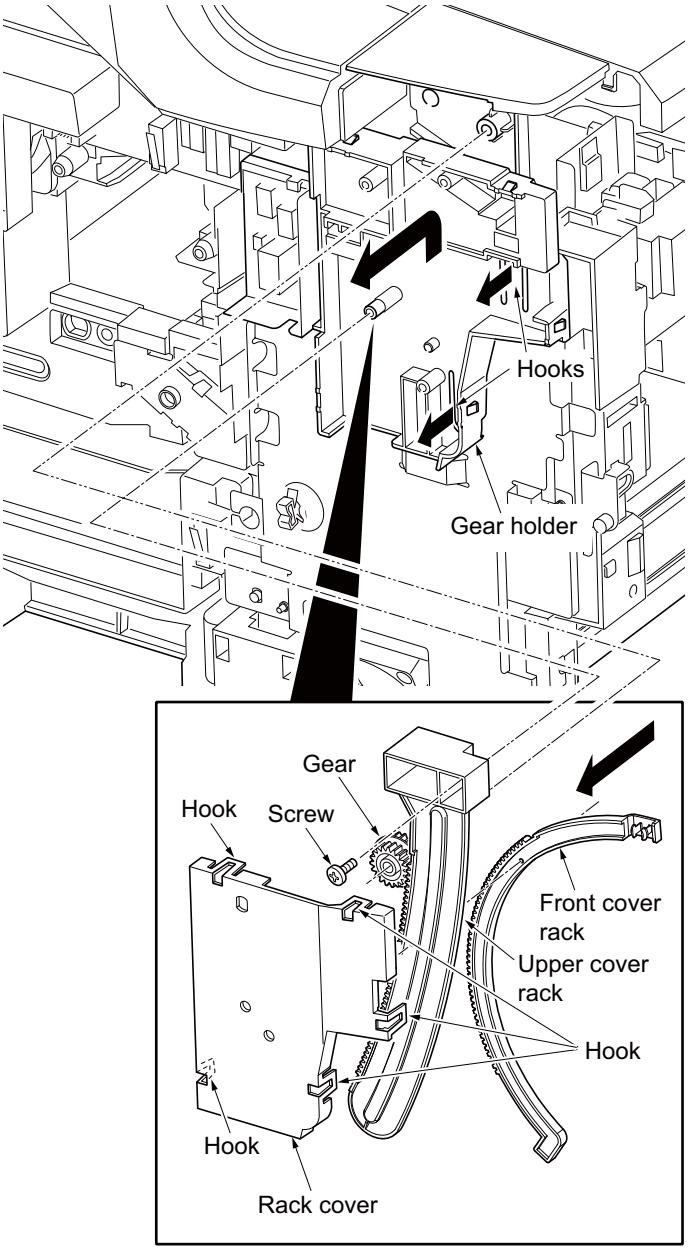

Figure 1-5-63

TONER
www.tonerplus.com.ua

9. Remove one connector (YC11) from the connect-L PWB.
10. Remove the wire from the drum grounding plate and clamp.
11. Release two hooks and then remove the power source fan motor.

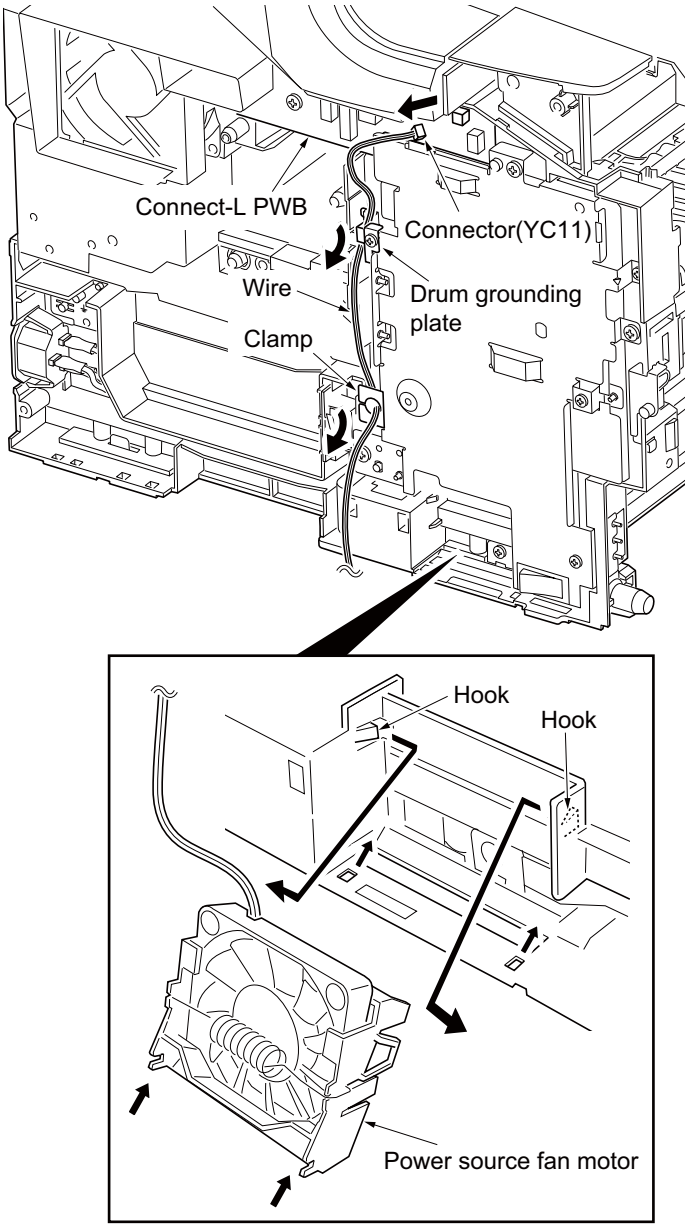

Figure 1-5-64

TONER
www.tonerplus.com.ua

12. Remove seven screws-A and drum grounding plate and two grounding terminals.
13. Remove the AC inlet.

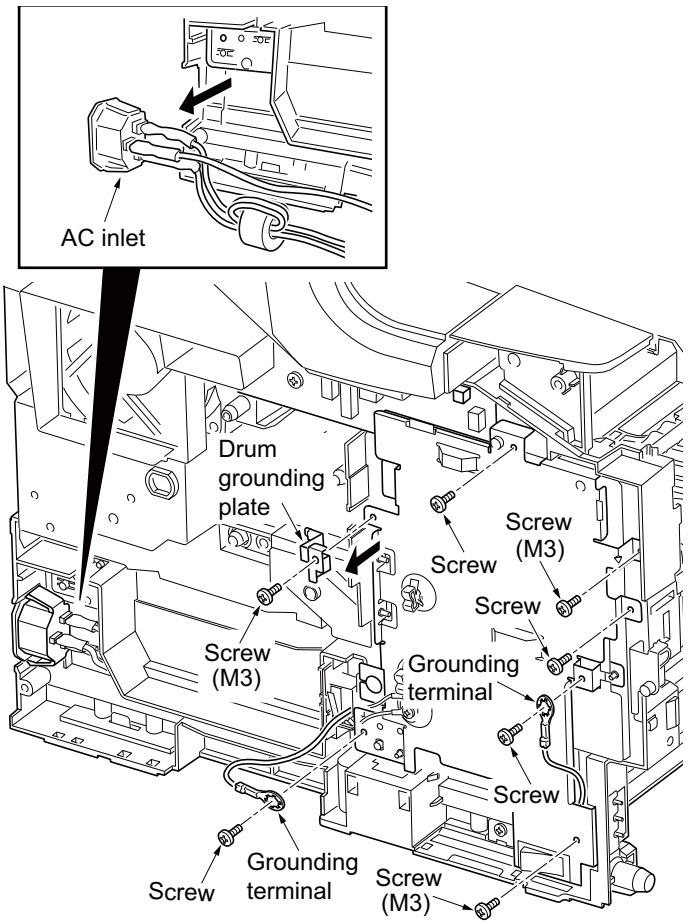

Figure 1-5-65

14. Remove two screws and three grounding terminals.
15. Remove one connector.
16. Remove the PWB connector between connect-L PWB and power source unit.
17. Remove the power source unit.

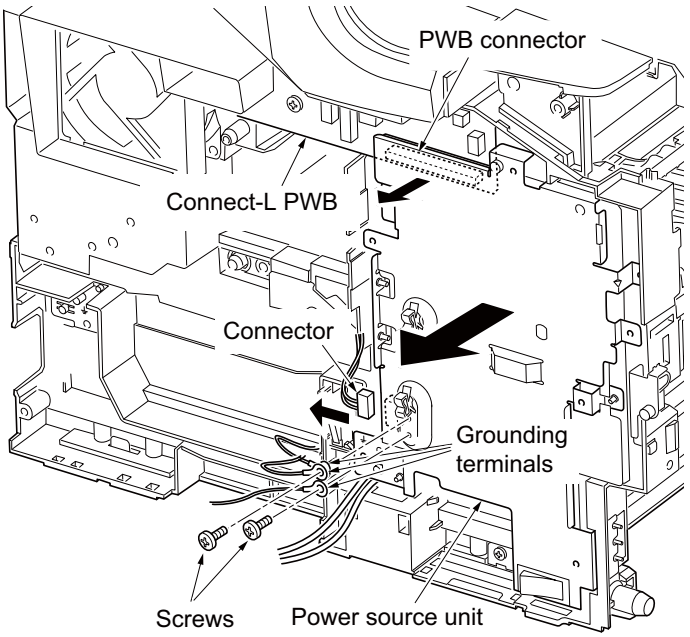

TONER
www.tonerplus.com.ua

Figure 1-5-66

18. Remove one connector.
19. Remove seven screws and then remove the power source PWB.
20. Check or replace the power source PWB and refit all the removed parts.

Note:
While assembling the rack component, align the guiding holes on either the upper cover rack and the front cover rack with each other.

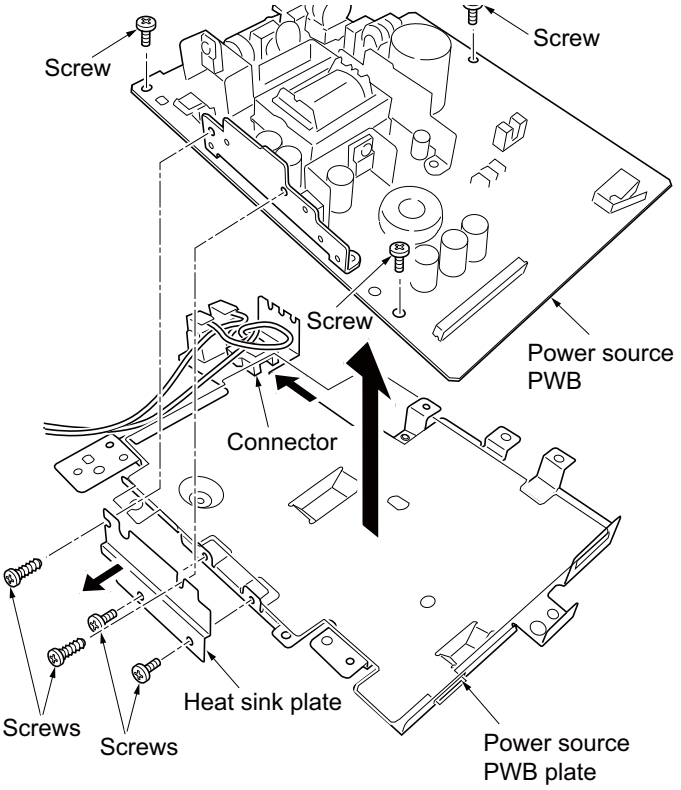

Figure 1-5-67

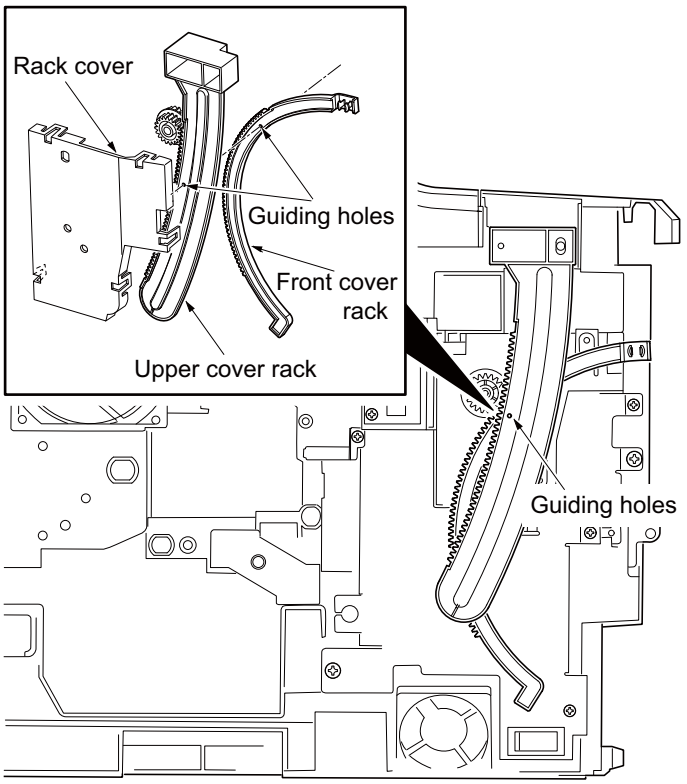

Figure 1-5-68

TONER
www.tonerplus.com.ua

(4) Detaching and refitting the FAX control PWB

Procedure

1. Remove two screws and then remove the FAX control PWB.
2. Check or replace the FAX control PWB and refit all the removed parts.

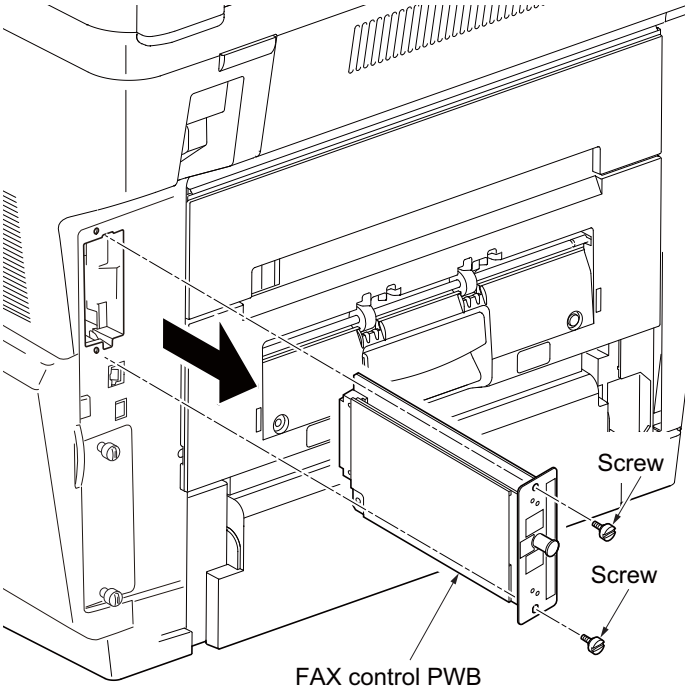

Figure 1-5-69

TONER
www.tonerplus.com.ua

1-5-10 Others

(1) Detaching and refitting the paper feed drive unit

Procedure

1. Remove the cassette.
   (See page 1-5-6)
2. Remove the developing unit.
   (See page 1-5-26)
3. Remove the right cover.
   (See page 1-5-3)
4. Remove five connectors from the connect-R PWB.
5. While opening the one hook and then remove the wire.
6. While opening three hooks and then remove the right fan motor.

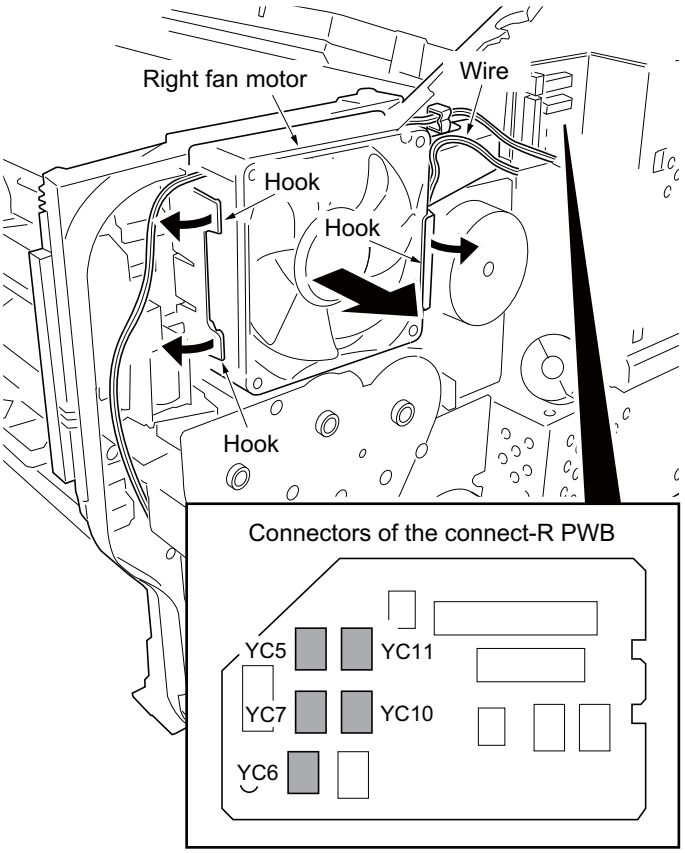

Figure 1-5-70

7. Remove two hooks and then remove the duct.
8. Remove wire from the clamp.

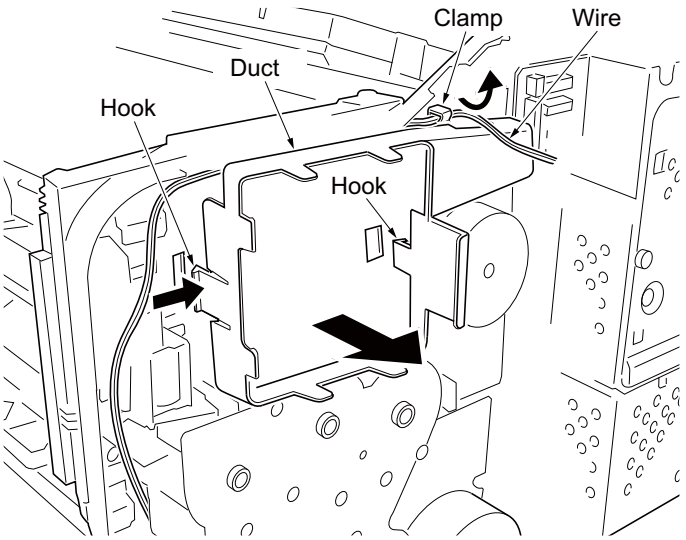

Figure 1-5-71

TONER
www.tonerplus.com.ua

9. Remove three screws and then remove the paper feed drive unit.
10. Check or replace the paper feed drive unit and refit all the removed parts.
    To refit the paper feed drive unit, make sure mesh of gears.

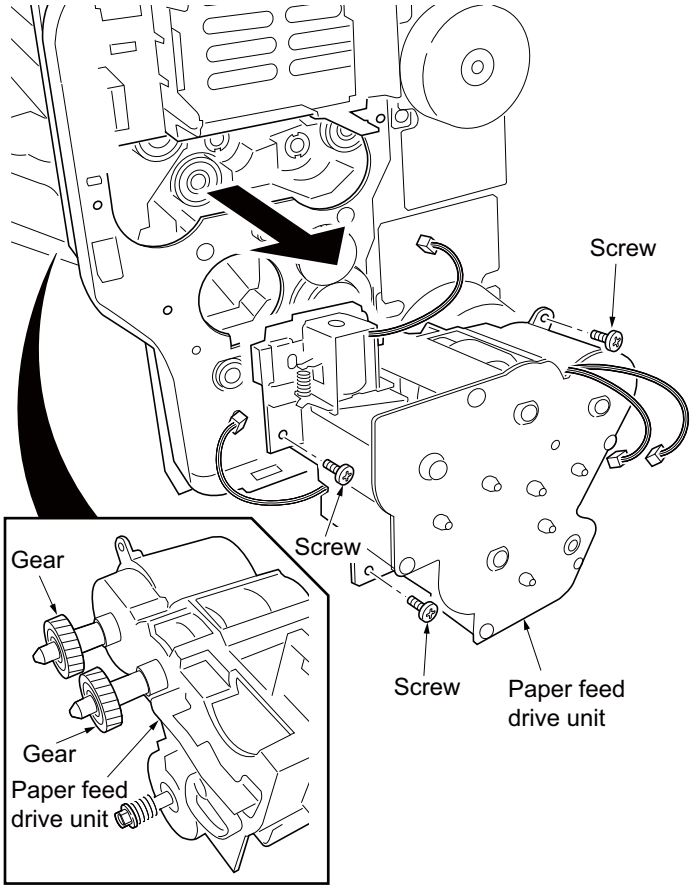

Figure 1-5-72

TONER+
www.tonerplus.com.ua

(2) Detaching and refitting the main drive unit

Procedure

1. Remove the right cover.
   (See page 1-5-3)
2. Remove the controller box.
   (See page 1-5-35)
3. Remove two connectors.
4. Remove five screws and then remove the main drive unit.
5. Check or replace the main drive unit and refit all the removed parts.

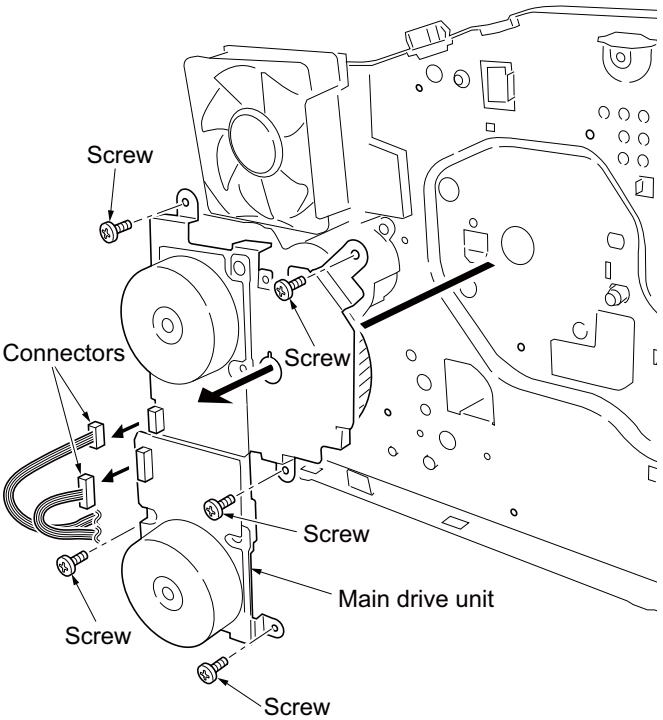

Figure 1-5-73

TONER+
www.tonerplus.com.ua

(3) Direction of installing the principal fan motors

When detaching or refitting the left fan motor or right fan motor or controller fan motor, be careful of the airflow direction (intake or exhaust).

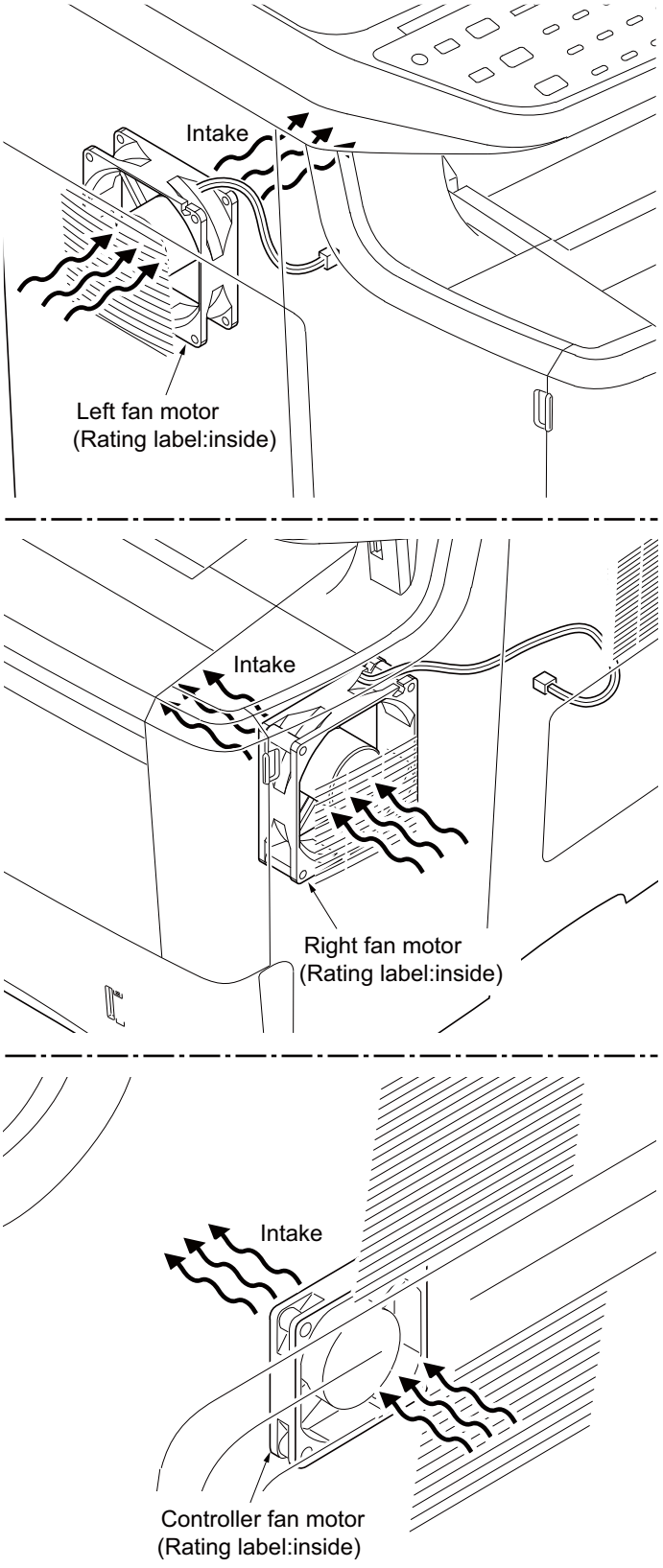

Figure 1-5-74

TONER
www.tonerplus.com.ua

1-5-11 Document processor

(1) Detaching and refitting the DP rear cover and DP front cover

Procedure

1. Open the DP top cover.
2. Remove two screws.
3. Unhook the hook and then remove the DP rear cover.

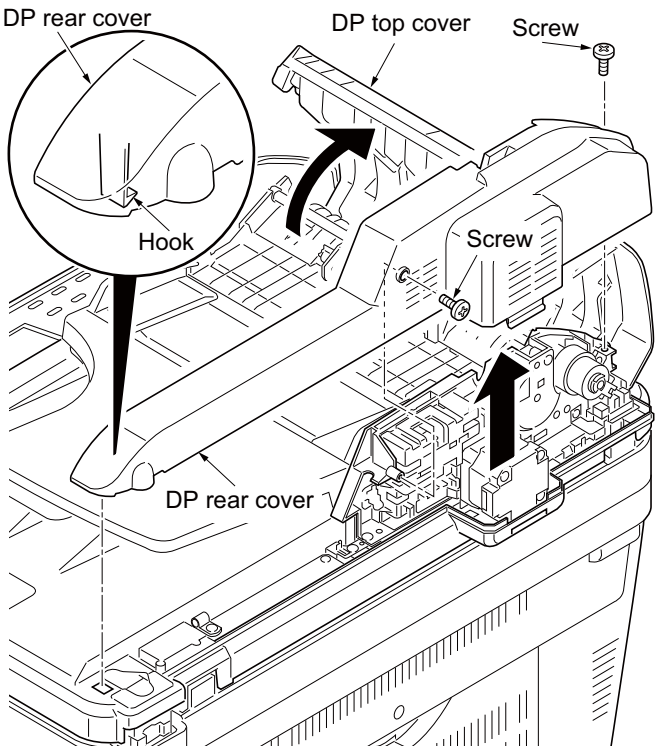

Figure 1-5-75

4. Unhook two hooks and then remove the DP front cover.

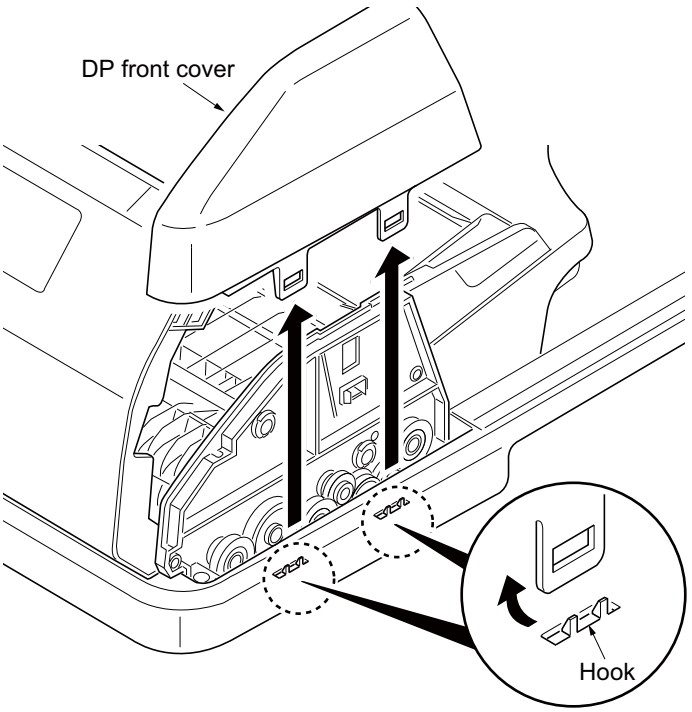

Figure 1-5-76

TONER
www.tonerplus.com.ua

(2) Detaching and refitting the DP drive PWB

Follow the procedure below to check or replace the DP drive PWB.

Procedure

1. Remove the DP rear cover.
   (See page 1-5-48).
2. Remove seven connectors from the DP drive PWB.
3. Remove the screw and then remove the DP drive PWB.
4. Check or replace the DP drive PWB.
   Refit all the removed parts.

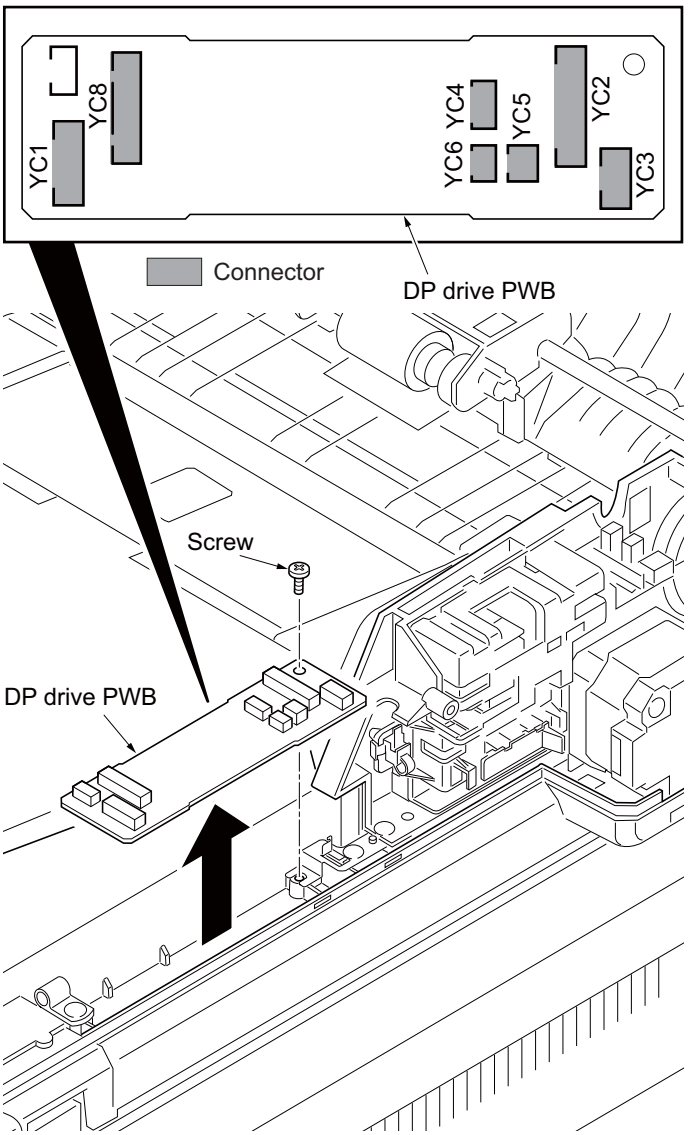

Figure 1-5-77

TONER
www.tonerplus.com.ua

(3) Detaching and refitting the DP forwarding pulley assembly and DP separation pad assembly.

Procedure

1. Open the DP top cover.
2. Unlatch the lock lever and slide the shaft.

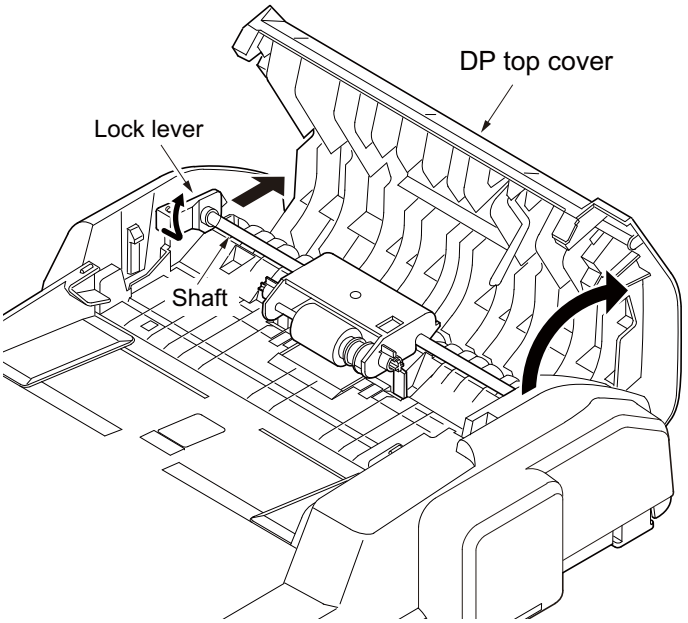

Figure 1-5-78

3. Remove the DP forwarding pulley assembly.

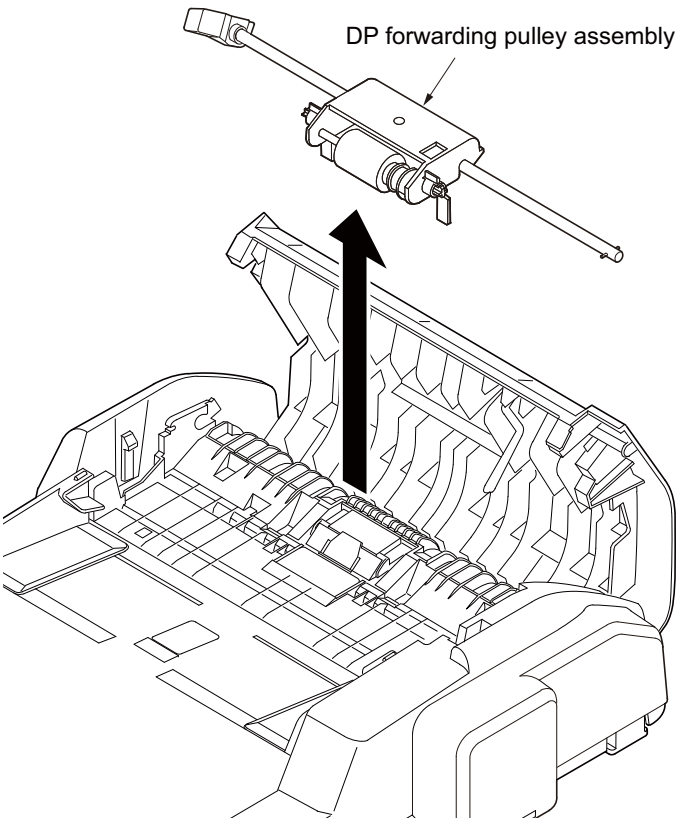

TONER
www.tonerplus.com.ua

Figure 1-5-79

4. Unhook two hooks and remove the DP separation pad assembly.
5. Check or replace the DP forwarding pulley assembly and DP separation pad assembly.
   Refit all the removed parts.

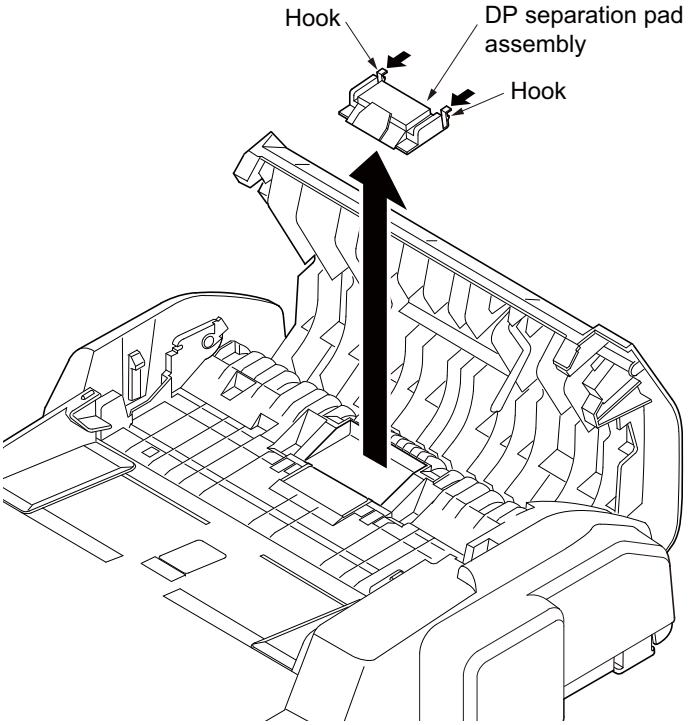

Figure 1-5-80

TONER
www.tonerplus.com.ua

This page is intentionally left blank.

TONER
www.tonerplus.com.ua

1-6-1 Upgrading the firmware

Follow the procedure below to upgrade the firmware of main PWB (main controller and scanner) and engine PWB and FAC control PWB and Option language.

Preparation
Extract the file that has the download firmware and put them in the USB Memory.

Procedure

1. Turn ON the main power switch and confirm if the screen shows “Ready to print” then, turn OFF the main power switch.
2. Insert USB memory that has the firmware in the USB memory slot.
3. Turn ON the main power switch.
4. About 40 seconds later, “FW-Update” will be displayed and blinking the data LED (this shows to start the download).
5. Display the software that now upgrading.

   “FW-Update [CTRL]”
   “FW-Update [ENGIN]”
   “FW-Update [SCAN]”
   “FW-Update [FAX]”
   “FW-Update [OPT]”

6. Display the completion of the upgrade (Data LED is ON condition).
7. ROM version is confirmed by the content of the display.
8. Turn OFF the main power switch and remove the USB memory.

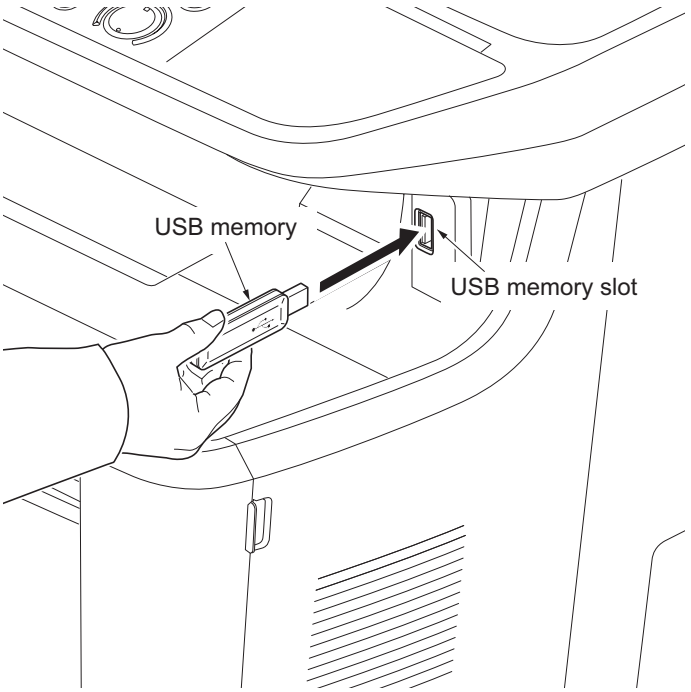

Figure 1-6-1

TONER
www.tonerplus.com.ua

1-6-2 Remarks on engine PWB replacement

When replacing the engine PWB, remove the EEPROM (U7) from the engine PWB that has been removed and then reattach it to the new engine PWB.

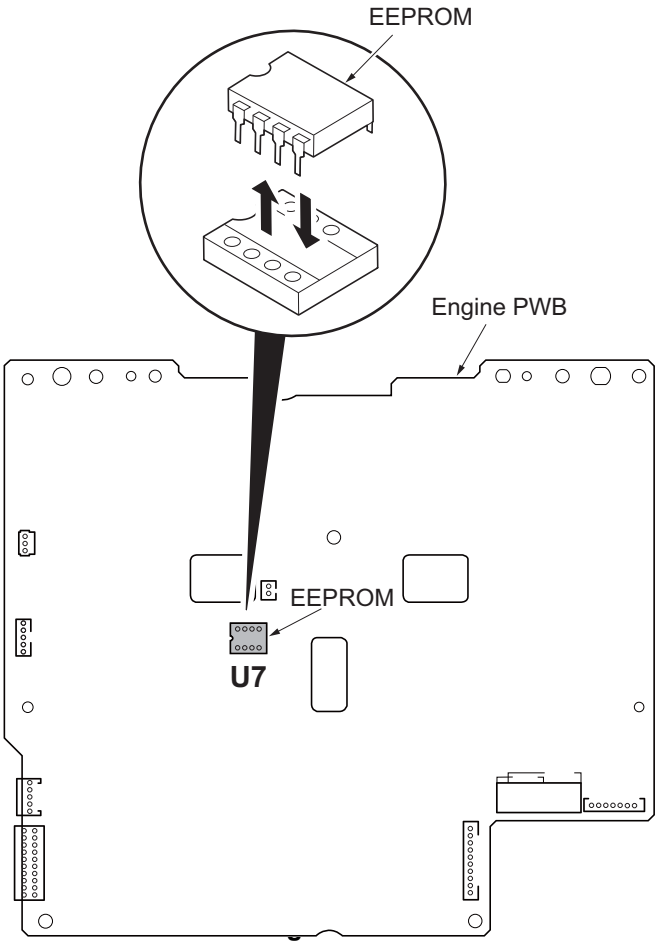

TONER
www.tonerplus.com.ua

2-1-1 Paper feed/conveying section

Paper feed/conveying section consists of the paper feed unit that feeds paper from the cassette and the MP tray paper feed unit that feeds paper from the MP tray, and the paper conveying section that conveys the fed paper to the transfer/separation section.

(1) Cassette paper feed section

Paper cassette is the universal type that is applicable to various paper sizes by adjusting the side guides and paper stopper and approximate 500 pages can be put in. Mechanism in the paper cassette consists of the bottom plate that lifts the paper in order to let it touch the pickup roller and the retard roller that prevents papers from multiple feeding. Paper that is drawn out by the rotation of pickup roller of the cassette paper feed section is then sent in between the feed roller and the retard roller. Function of the built-in torque limiter in the retard roller gives weak resistance force against the rotation. Normally, when only a page is drawn out by the rotation of pickup roller, the paper is conveyed to the machine by the rotation of feed roller on its own. If the pickup roller drew out two lapped pages someway, the upper paper is conveyed by the feed roller and the lower paper stays due to the rotation resistant force of the retard roller because the friction force between papers is smaller than the rotation resistance force of the retard roller and then the multiple paper feed can be prevented.

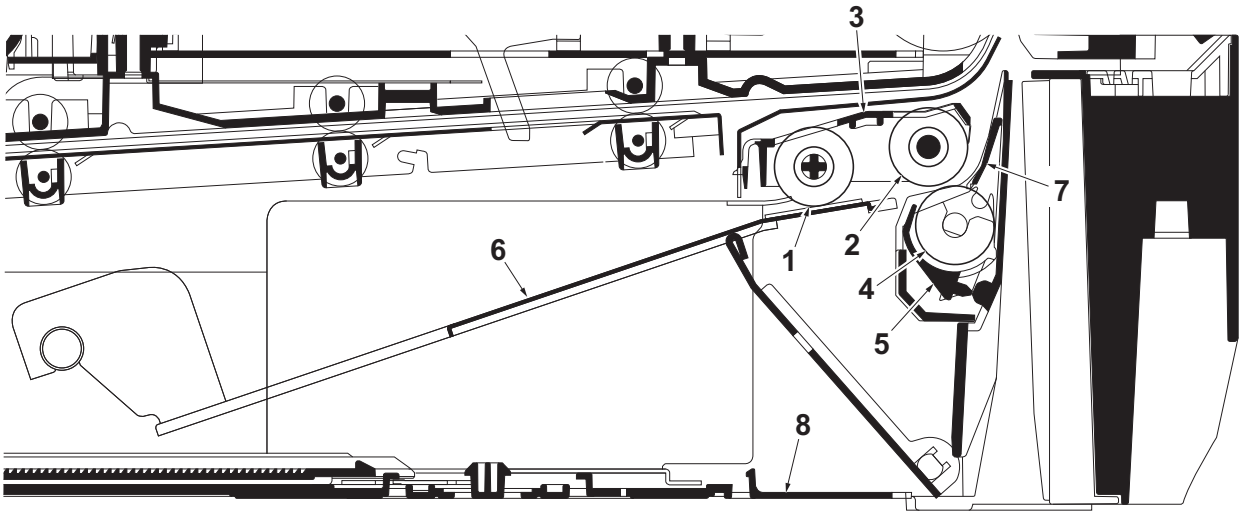

Figure 2-1-1 Cassette paper feed section

1. Pickup roller
2. Paper feed roller
3. Feed holder
4. Retard roller
5. Retard holder
6. Bottom plate
7. Retard guide
8. Cassette base

TONER+
www.tonerplus.com.ua

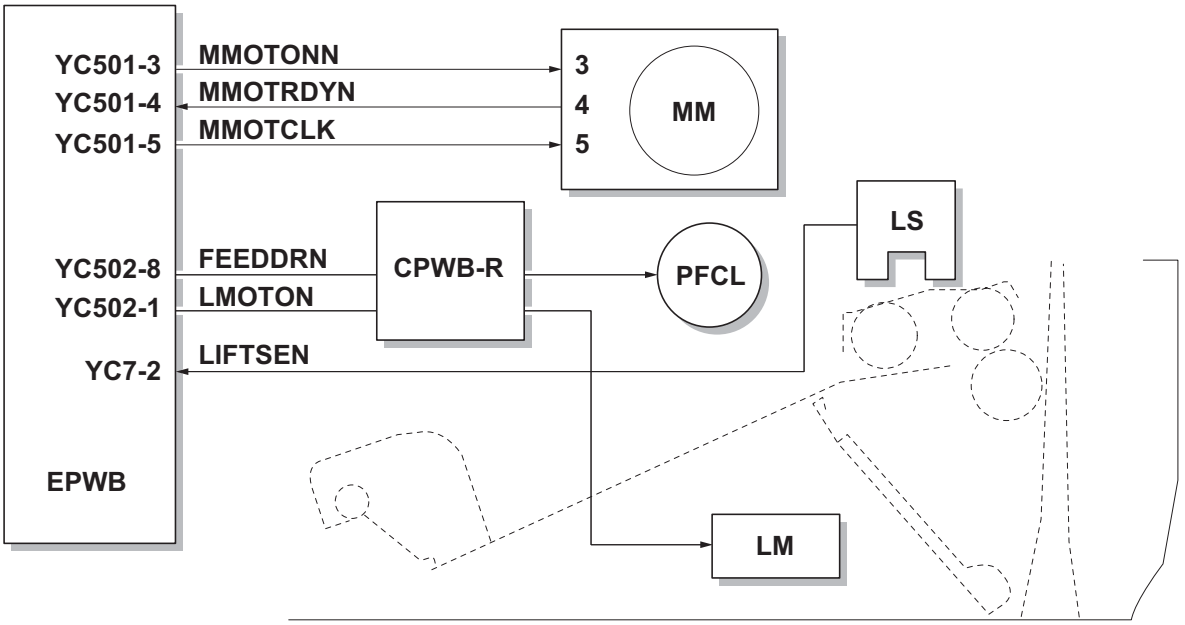

Figure 2-1-2 Cassette paper feed section block diagram

TONER
www.tonerplus.com.ua

(2) MP tray paper feed section

The MP tray can contain about 100 pages. Feeding is performed by the rotation of the MP tray feed roller from the MP tray. Function of the MP tray friction pad prevents papers from multiple feeding.

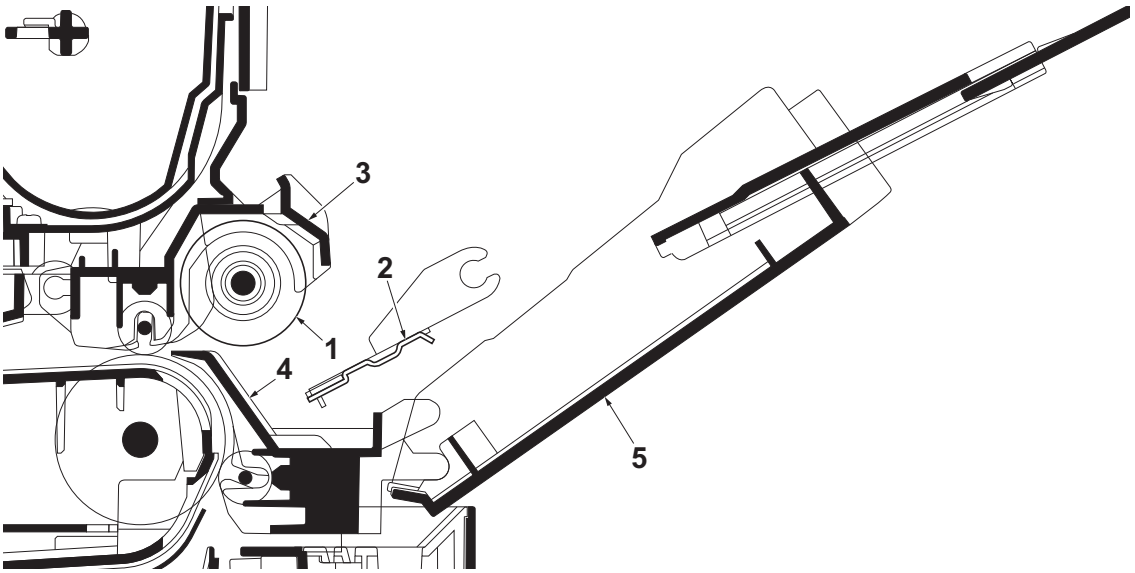

Figure 2-1-3 MP tray paper feed section

1. MP paper feed roller
2. Bottom plate
3. MP tray frame
4. MPF base
5. MP tray cover

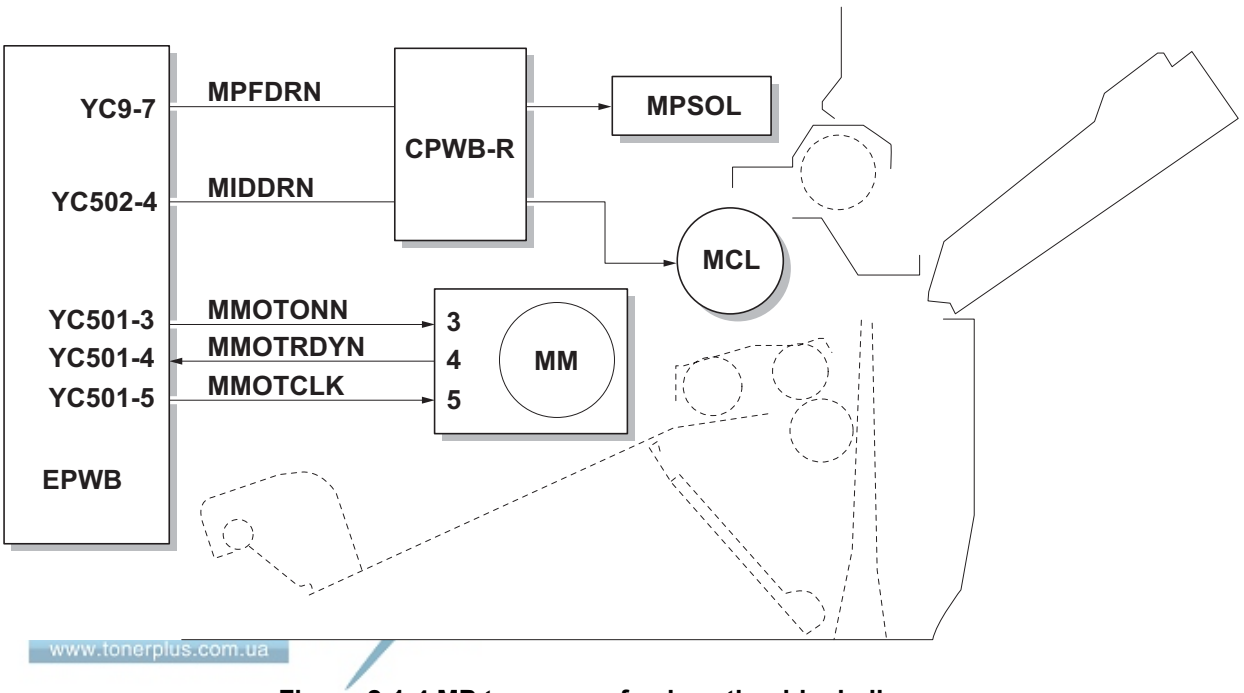

www.tonerplus.com.ua

Figure 2-1-4 MP tray paper feed section block diagram

(3) Paper conveying section

Paper conveying section consists of the parts shown in the following illustration and conveys papers from the paper cassette or the MP tray to the transfer/separation section when papers are fed. Paper by feeding or refeeding is conveyed by the middle roller to the position where the registration sensor (RS) is turned on, and then sent to the transfer/separation section by the upper registration roller and lower registration roller.

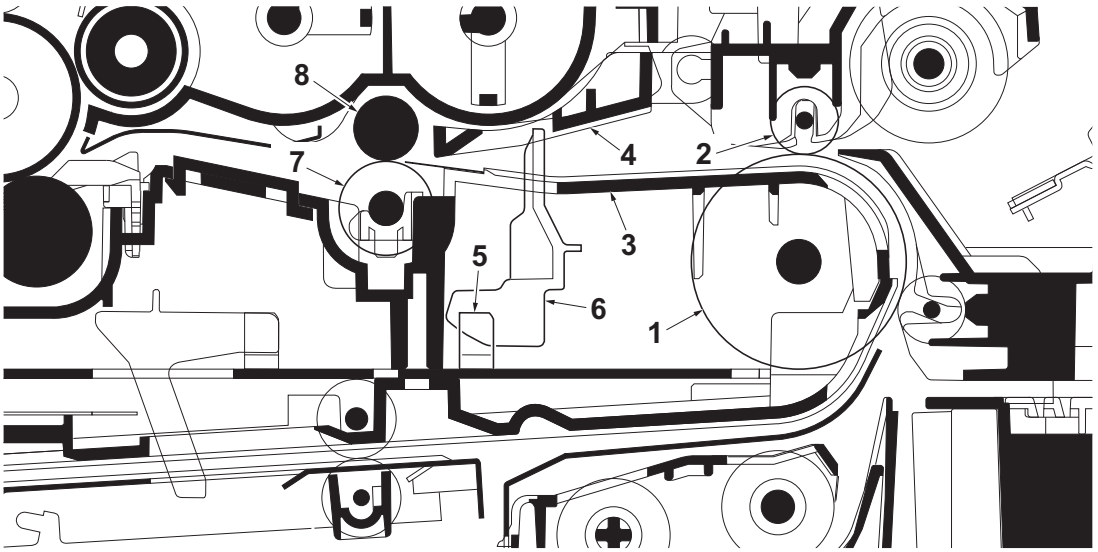

Figure 2-1-5 Paper conveying section

1. Middle roller
2. Feed DU pulley
3. Feed frame
4. Registration upper guide
5. Registration sensor (RS)
6. Actuator (registration sensor)
7. Lower registration roller
8. Upper registration roller

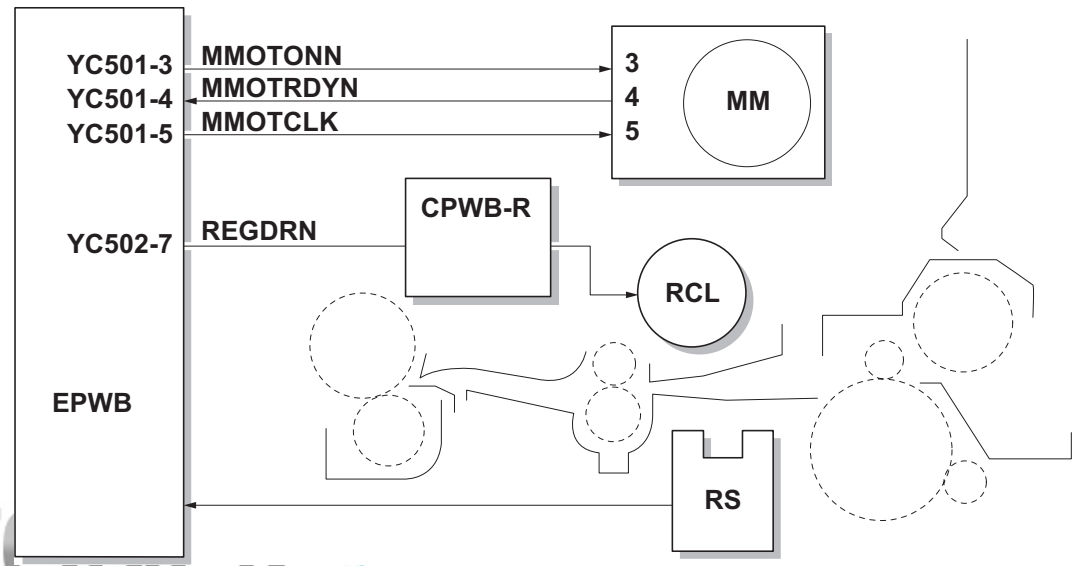

www.tonerplus.com.ua

Figure 2-1-6 Paper conveying section block diagram

2-1-2 Drum section

The drum unit includes a photoconductive drum, eraser lamp, cleaning blade and, a main charger unit. The drum unit is removable with the main charger unit.

.

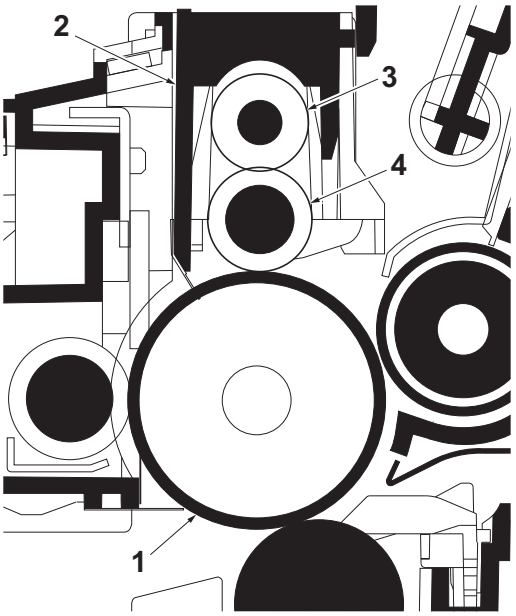

Figure 2-1-7 Drum section

1. Drum
2. Main charger case
3. Charger cleaning roller
4. Main charger roller

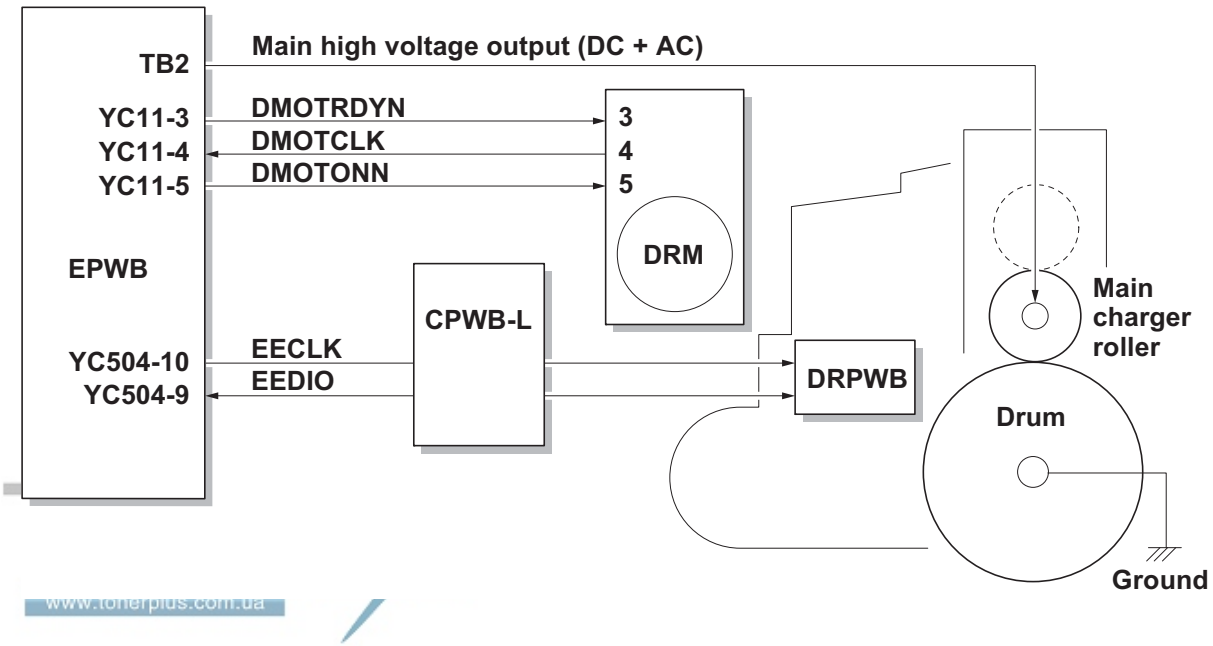

www.tonerplus.com.ua

Figure 2-1-8 Drum section block diagram

2-1-3 Optical section

(1) Scanner unit

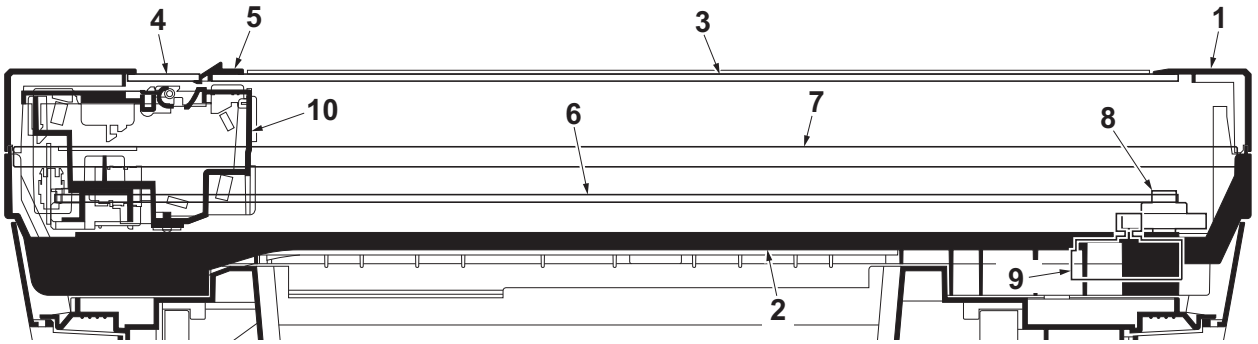

Figure 2-1-9 Scanner unit

1. ISU top frame
2. ISU bottom frame
3. Contact glass
4. DP contact glass
5. Size indicator plate
6. ISU belt
7. ISU shaft
8. ISU gear 63/32
9. ISU motor
10. Image scanner unit (ISU)

TONER
www.tonerplus.com.ua

(2) Image scanner unit (ISU)

The original image is illuminated by the LED and scanned by the CCD image sensor in the CCD PWB (CCD-PWB) via the four mirrors and ISU lens, the reflected light being converted to an electrical signal.
If a document processor (DP) is used, the image scanner unit stops at the position of the DP contact glass and scans sequentially one row of the image on the original in synchronization with the moving timing of the original in the sub scan direction by driving the DP.

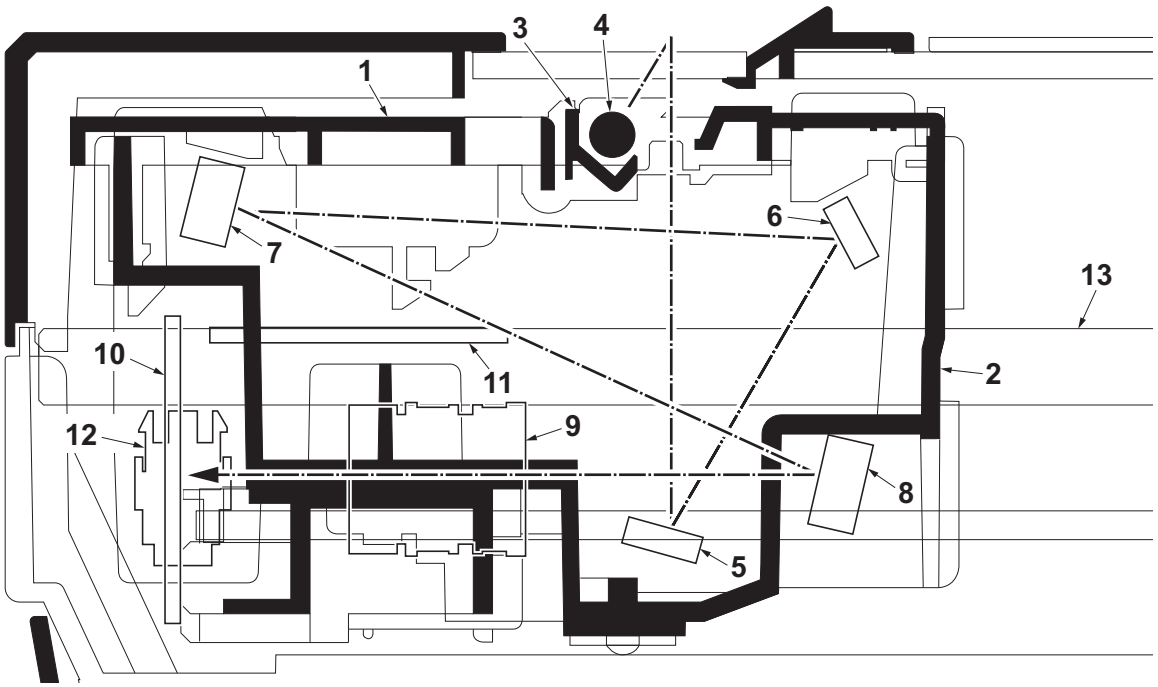

Figure 2-1-10 Image scanner unit (ISU)

1. Lamp mount
2. ISU housing
3. ISU reflector
4. Transparent material
5. Mirror A
6. Mirror B
7. Mirror C
8. Mirror D
9. ISU lens
10. CCD PWB (CCDPWB)
11. Inverter PWB (INPWB)
12. Home position sensor (HPS)
13. ISU shaft

TONER
www.tonerplus.com.ua

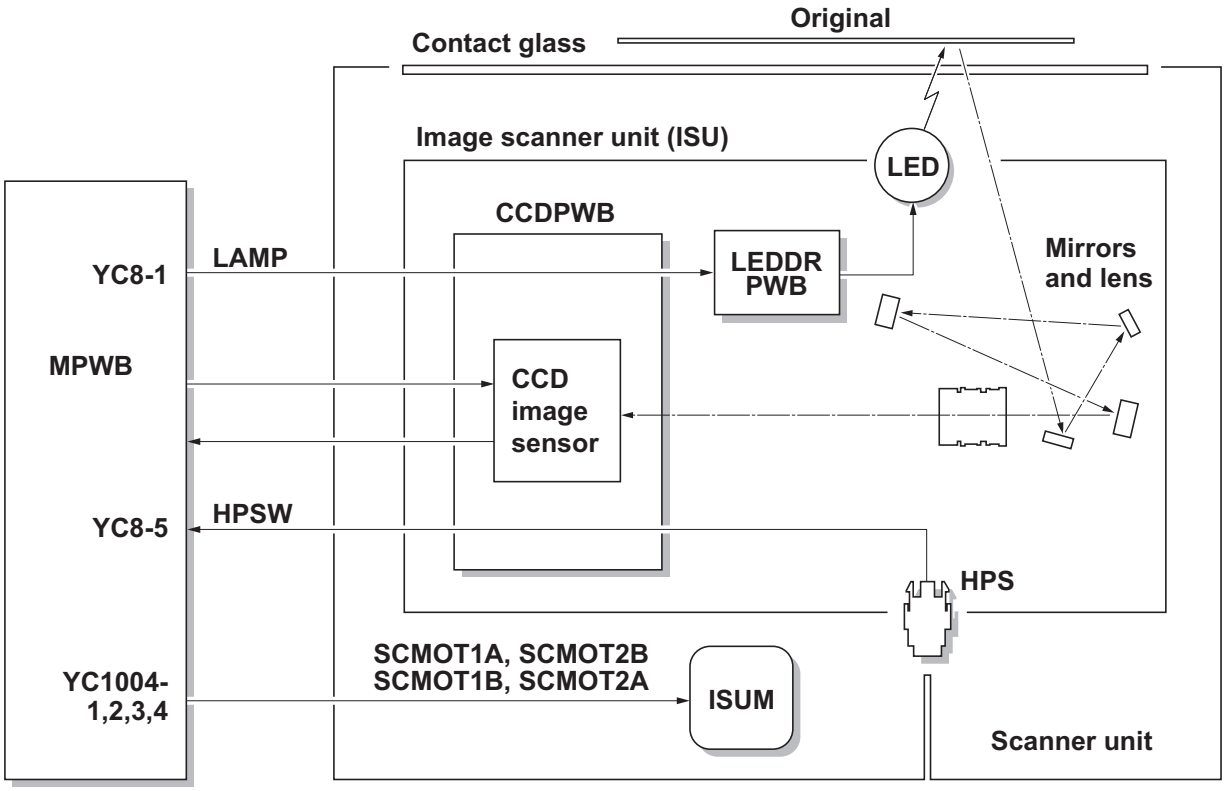

Figure 2-1-11 Scanner unit block diagram

TONER
www.tonerplus.com.ua

(3) Laser scanner unit

The charged surface of the drum is then scanned by the laser beam from the laser scanner unit. The laser beam is dispersed as the polygon motor (PM) revolves to reflect the laser beam over the drum. Various lenses and mirror are housed in the laser scanner unit, adjust the diameter of the laser beam, and focalize it at the drum surface.

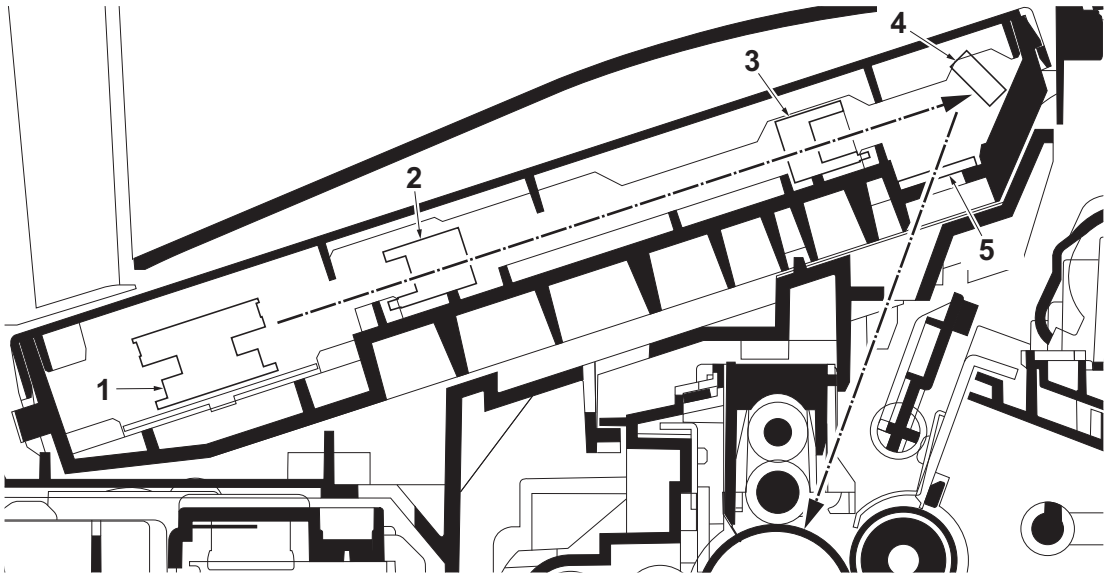

Figure 2-1-12 Laser scanner unit

1. Polygon motor (PM)
2. f-θ sub lens
3. f-θ main lens
4. Direction change mirror
5. Protective glass

TONER+
www.tonerplus.com.ua

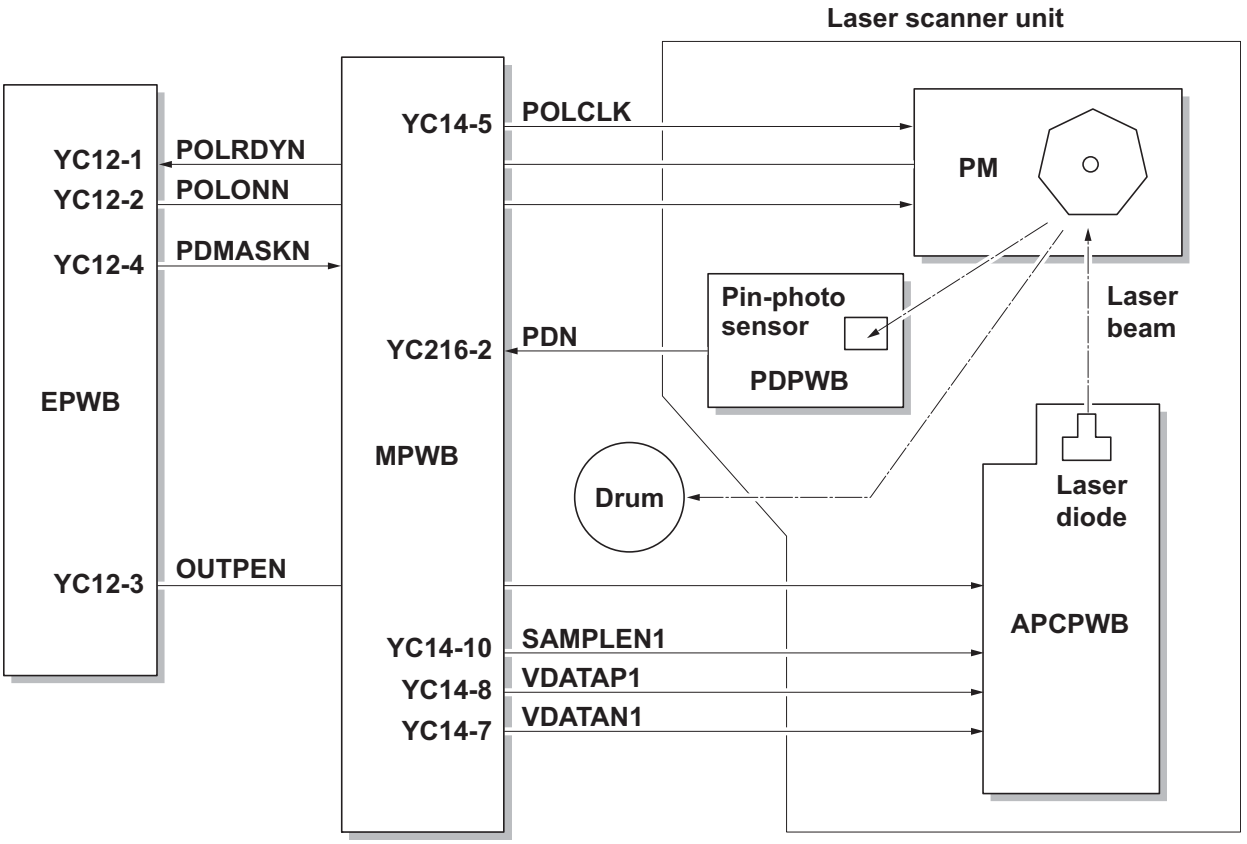

Figure 2-1-13 Laser scanner unit block diagram

TONER
www.tonerplus.com.ua

2-1-4 Developing section

The latent image constituted on the drum is developed into a visible image. The developing roller contains a 3-pole (S-NS) magnet roller and an aluminum cylinder rotating around the magnet roller. Toner attracts to the magnet sleeve since it is powdery ink made of black resin bound to iron particles. Developing blade, magnetized by magnet, is positioned approximately 0.3 mm above the magnet sleeve to constitute a smooth layer of toner in accordance with the magnet sleeve revolution.
The developing roller is applied with the AC-weighted, positive DC power source. Toner on the magnet sleeve is given a positive charge. The positively charged toner is then attracted to the areas of the drum which was exposed to the laser light. (The gap between the drum and the magnet sleeve is approximately 0.32 mm.) The non-exposed areas of the drum repel the positively charged toner as these areas maintain the positive charge.
The developing roller is also AC-biased to ensure contrast in yielding by compensating the toner's attraction and repelling action during development.

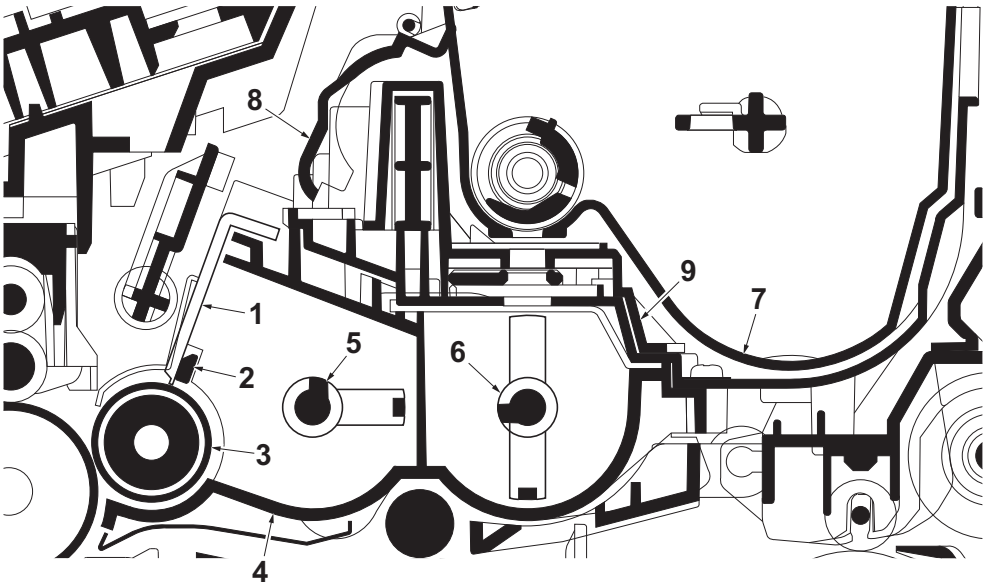

Figure 2-1-14 Developing section

1. Developing blade
2. Blade magnet
3. Developing roller
4. Developer case
5. DLP screw A
6. DLP screw B
7. Toner container
8. Sleeve cover
9. Developer lid

TONER+
www.tonerplus.com.ua

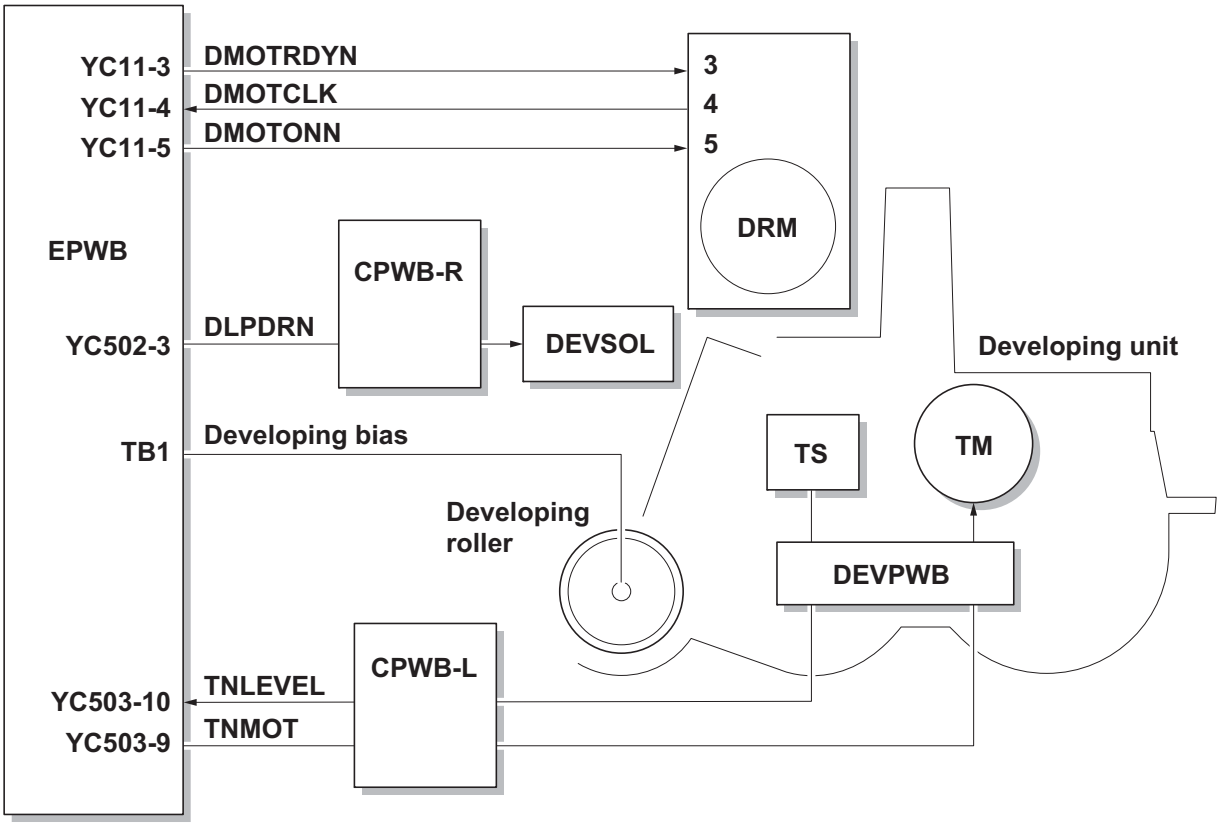

Figure 2-1-15 Developing section block diagram

TONER
www.tonerplus.com.ua

2-1-5 Transfer/Separation section

The image developed by toner on the drum is transferred onto the paper because of the electrical attraction between the toner itself and the transfer roller. The transfer roller is negatively biased so that the positively charged toner is attracted onto the paper while it is pinched by the drum and the transfer roller.

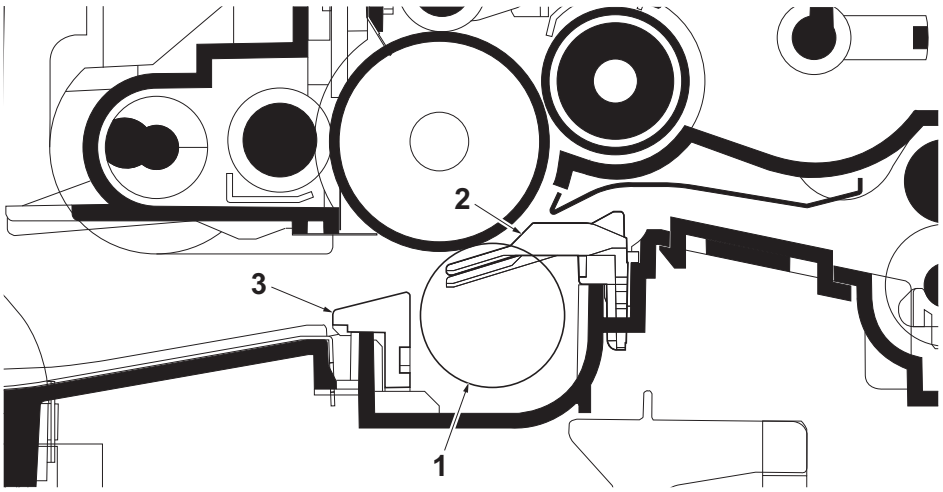

Figure 2-1-16 Transfer/Separation section

1. Transfer roller
2. Paper chute guide
3. Separation brush

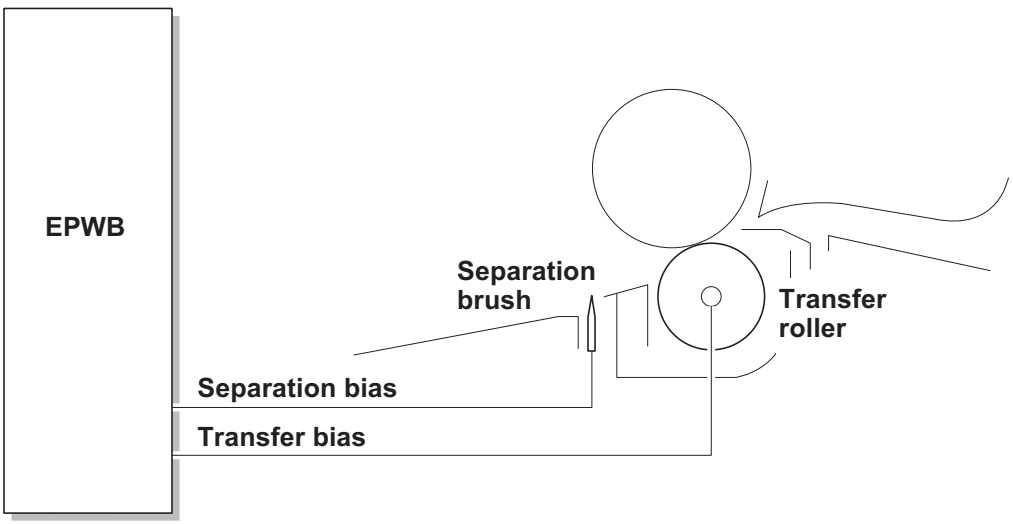

Figure 2-1-17 Transfer/Separation section block diagram

TONER
www.tonerplus.com.ua

2-1-6 Cleaning section

After the transferring process, the drum needs to be physically cleaned of toner which is residual after the development process. The cleaning blade is constantly pressed against the drum and scrapes the residual toner off to the cleaning roller. The waste toner is collected at the output end of the sweep roller and sent to the waste toner box.
After the drum is physically cleaned, it then must be cleaned to the electrically neutral state. This is necessary to erase any residual positive charge, ready to accept the uniform charge for the next print process. The residual charge is canceled by exposing the drum to the light emitted from the cleaning lamp (CL). This lowers the electrical conductivity of the drum surface making the residual charge on the drum surface escape to the ground.

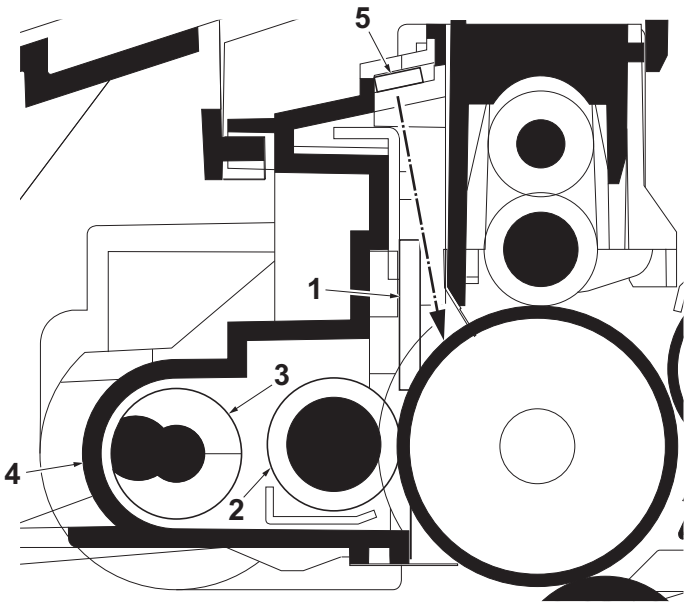

Figure 2-1-18 Cleaning section

1. Cleaning blade
2. Cleaning roller
3. Sweep roller
4. Drum frame
5. Cleaning lamp (CL)

TONER
www.tonerplus.com.ua

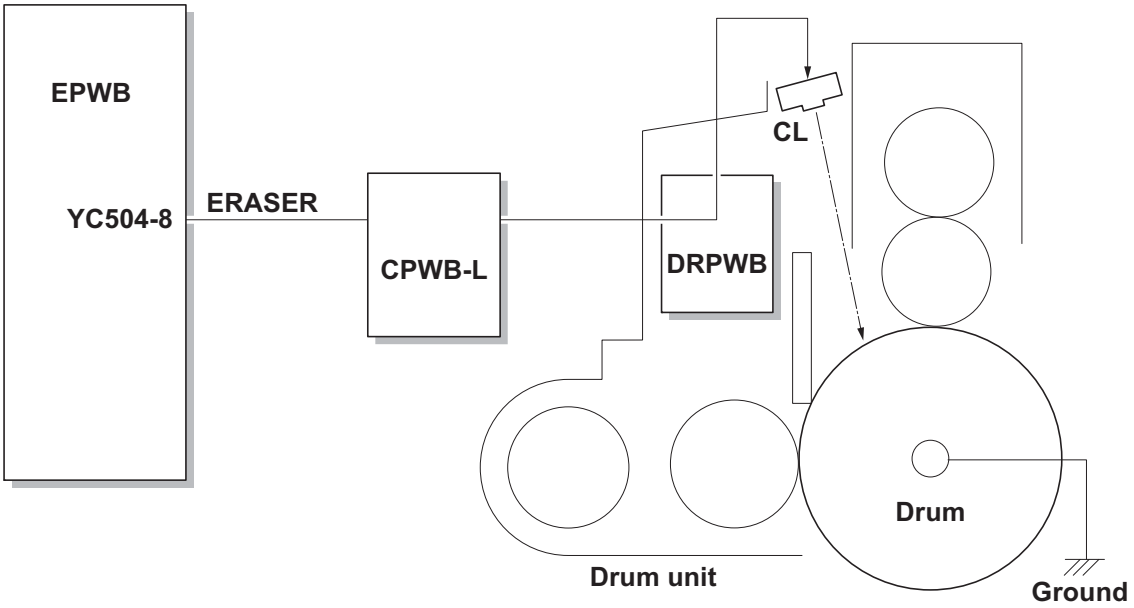

Figure 2-1-19 Cleaning section block diagram

TONER
www.tonerplus.com.ua

2-1-7 Fuser section

The toner on the paper is molten and pressed into the paper as it passes between the heat roller and the press roller in the fuser unit.
The heat roller has a fuser heater (FH) inside which continuously turns on and off by the fuser thermistor (FTH) to maintain the constant temperature onto the heat roller surface.
Should the temperature of the heat roller exceed the predetermined value, the fuser thermostat (FTS) is activated to effectively disconnect the fuser heater (FH) from power.
Fuser temperature is optimized to the paper type. The heat roller is resin coated by florin to prevent toner from accumulating on the roller after a long run. Care must be taken while handling the heat roller not to scratch the roller surface as doing so may result in print problems. The heat roller has four separators (claws) which are continuously in contact with its surface. These separators (claws) prevent the paper on which toner has been fused from being wound around the heat roller causing paper jam.
The press roller is made of the heat-resistant silicone rubber. This roller is used to strongly press the paper towards the heat roller by means of press springs.

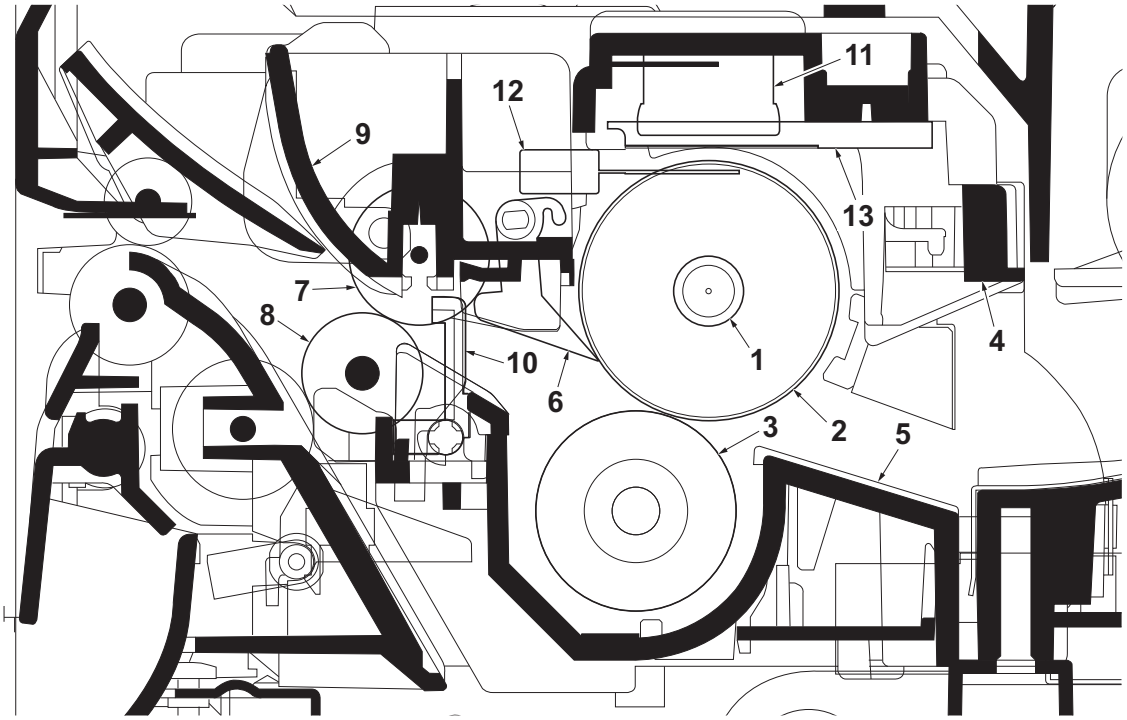

Figure 2-1-20 Fuser section

1. Fuser heater (FH)
2. Heat roller
3. Press roller
4. Fuser upper frame
5. Fuser lower frame
6. Separators
7. Eject pulley
8. Eject roller
9. Feed guide
10. Actuator (eject sensor)
11. Fuser thermostat (FTS)
12. Fuser thermistor 1 (FTH1)
13. Fuser thermistor 2 (FTH2)

TONER
www.tonerplus.com.ua

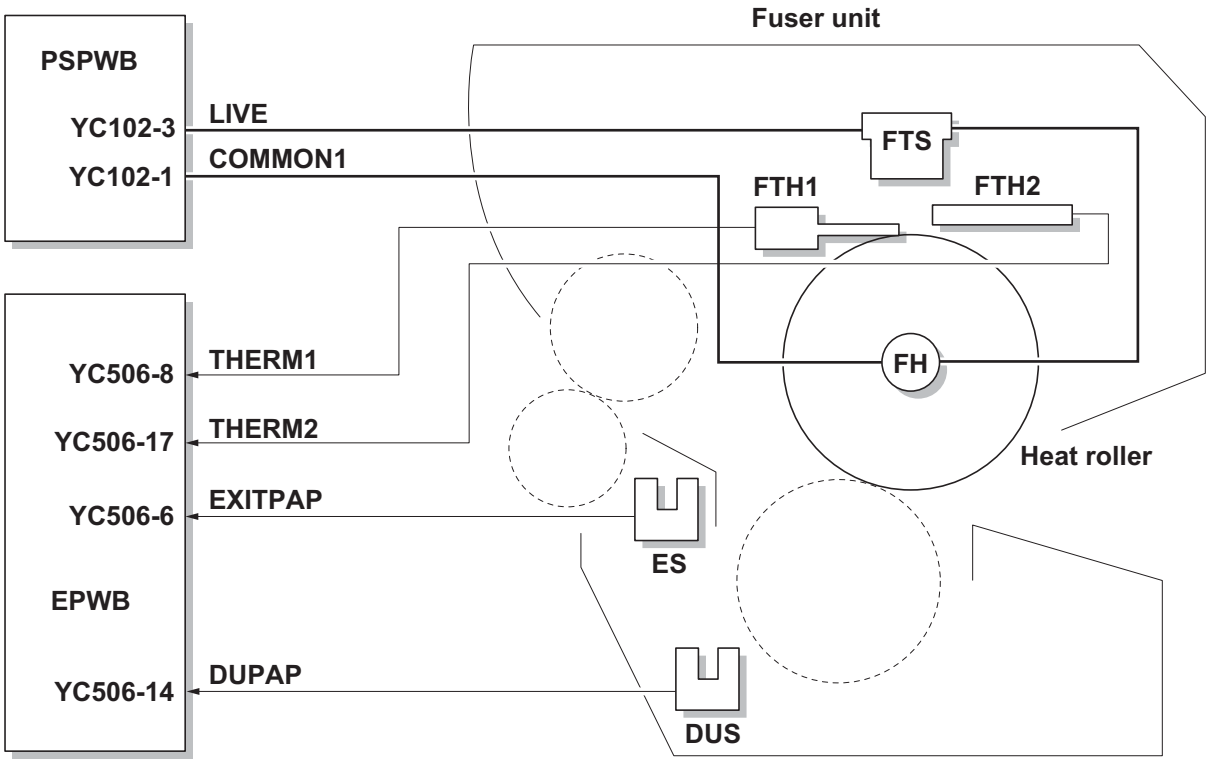

Figure 2-1-21 Fuser section block diagram

TONER
www.tonerplus.com.ua

2-1-8 Eject/Rear unit section

Eject/Rear unit section transports the paper which passed the fuser unit towards the top tray, face up tray or duplex conveying section.

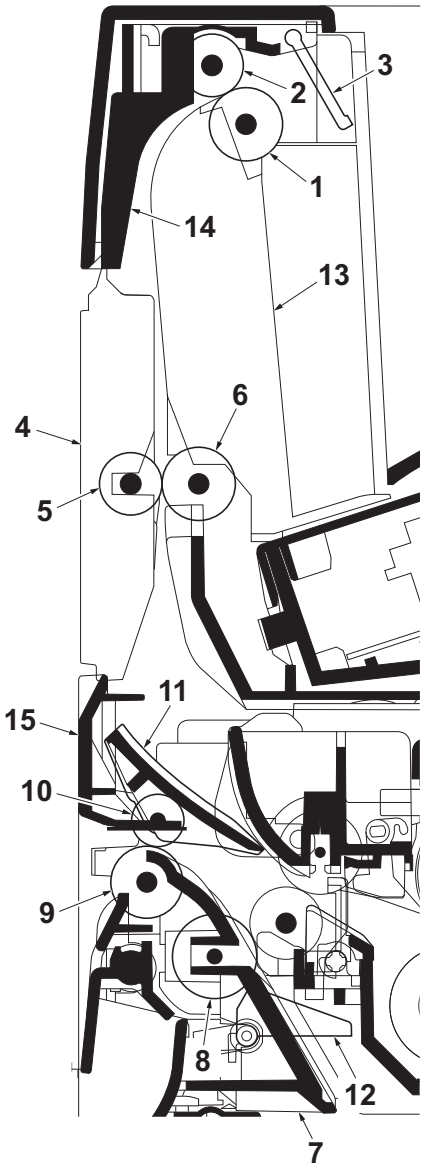

Figure 2-1-22 Eject/Rear unit section

1. Face down upper roller
2. Eject FD pulley
3. Actuator (paper full sensor)
4. FD cover
5. Feed FD pulley
6. Face down lower roller
7. DU guide
8. Feed DU pulley
9. Face up roller
10. Eject FU pulley
11. Face up guide
12. Actuator (duplex sensor)
13. Vertical guide
14. Paper eject guide
15. Rear cover

TONER
www.tonerplus.com.ua

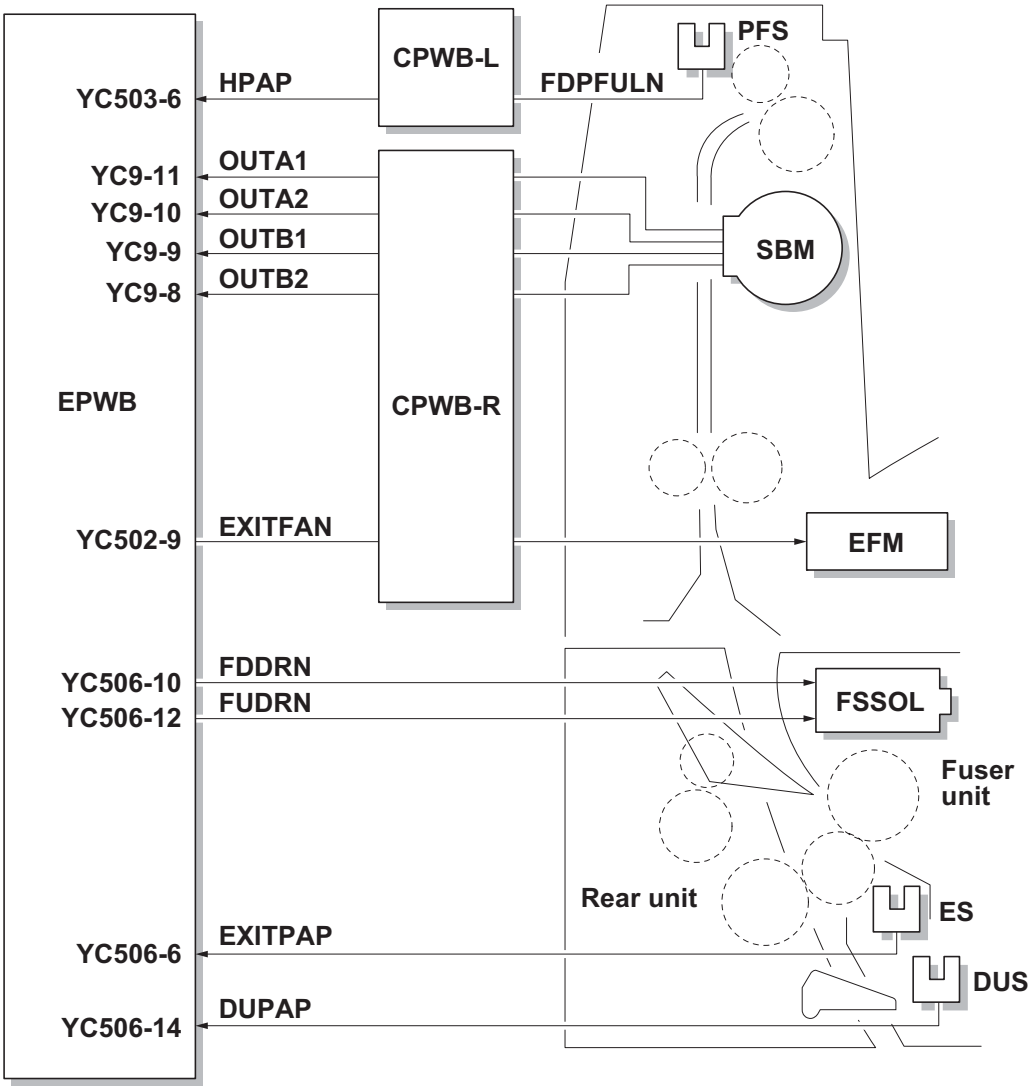

Figure 2-1-23 Eject/rear unit section block diagram

TONER
www.tonerplus.com.ua

2-1-9 Duplex conveying section

Duplex conveying section consists of conveying path which sends the paper sent from the eject/rear unit section to the paper feed/conveying section when duplex printing.

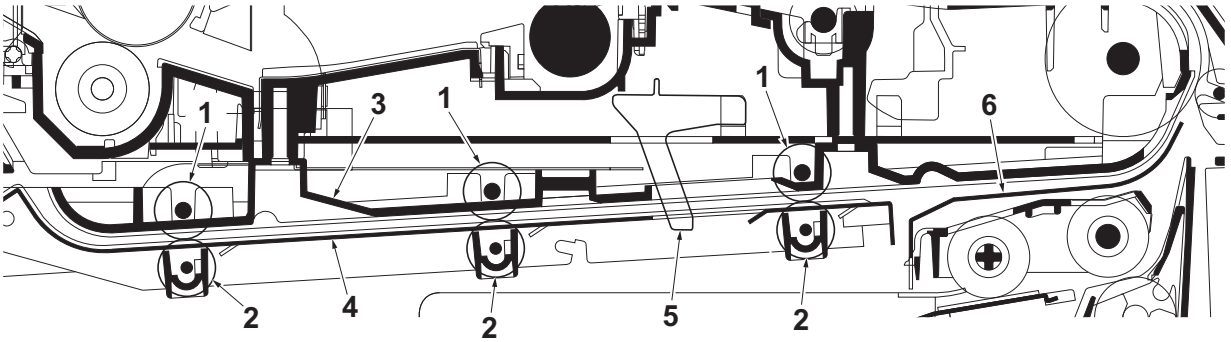

Figure 2-1-24 Duplex conveying section

1. DU roller
2. DU feed pulley
3. DU base
4. DU lower guide
5. Actuator (duplex jam sensor)
6. Feed upper guide

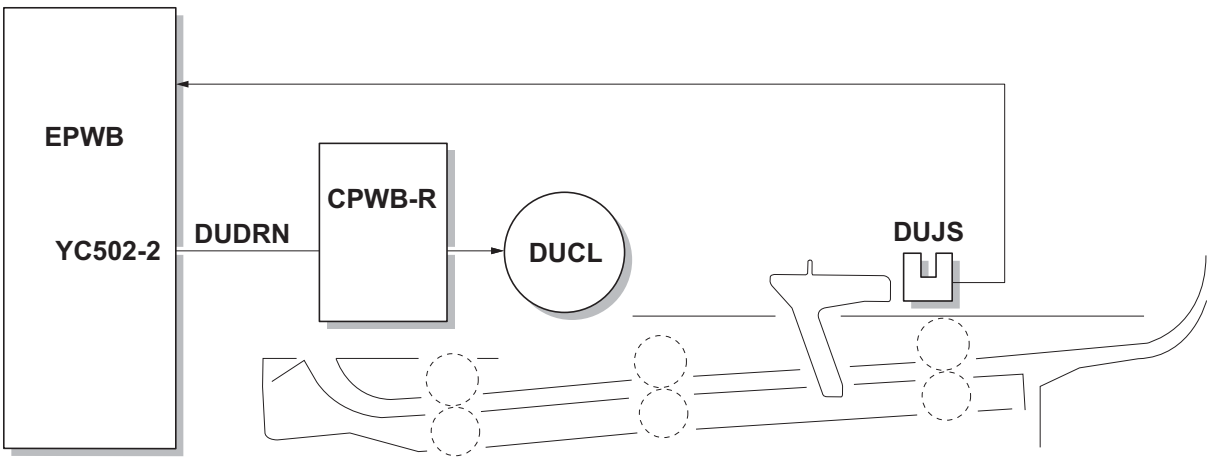

Figure 2-1-25 Duplex conveying section block diagram

TONER
www.tonerplus.com.ua

2-1-10 Document processor

(1) Original feed section

The original feed section consists of the parts shown in figure. An original placed on the original table is conveyed to the original conveying section. Original is fed by the rotation of the DP forwarding pulley and DP feed pulley.

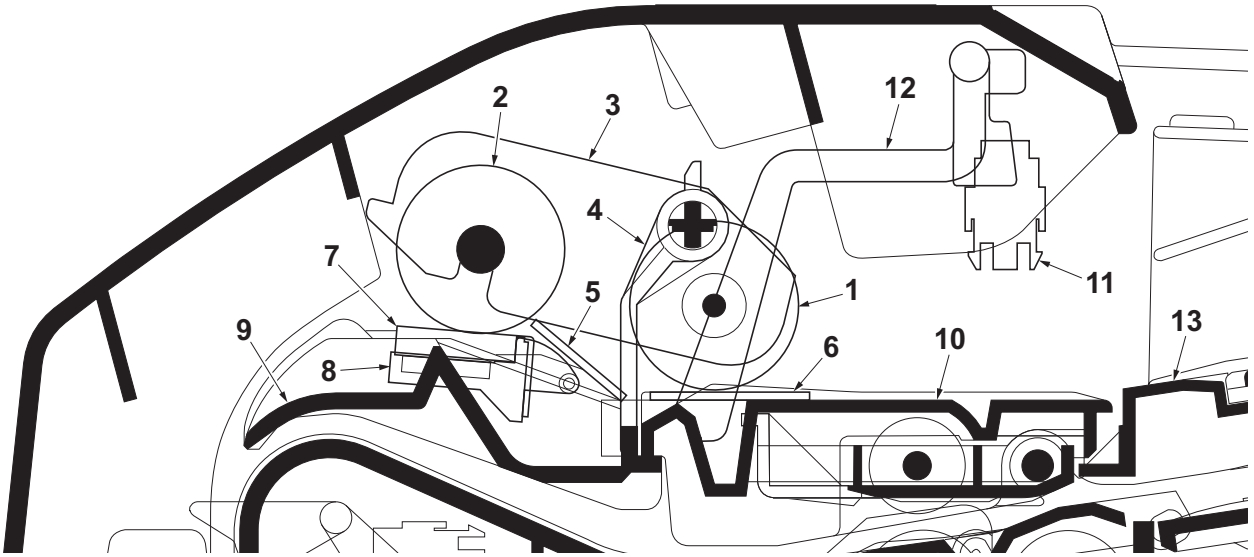

Figure 2-1-26 Original feed section

1. DP forwarding pulley
2. DP feed pulley
3. LF holder
4. PF stopper
5. Front separation pad
6. LF friction plate
7. DP separation pad
8. Separation mount
9. Upper guide
10. Switchback guide
11. DP original sensor (DPOS)
12. Actuator (DP original sensor)
13. Original table

]

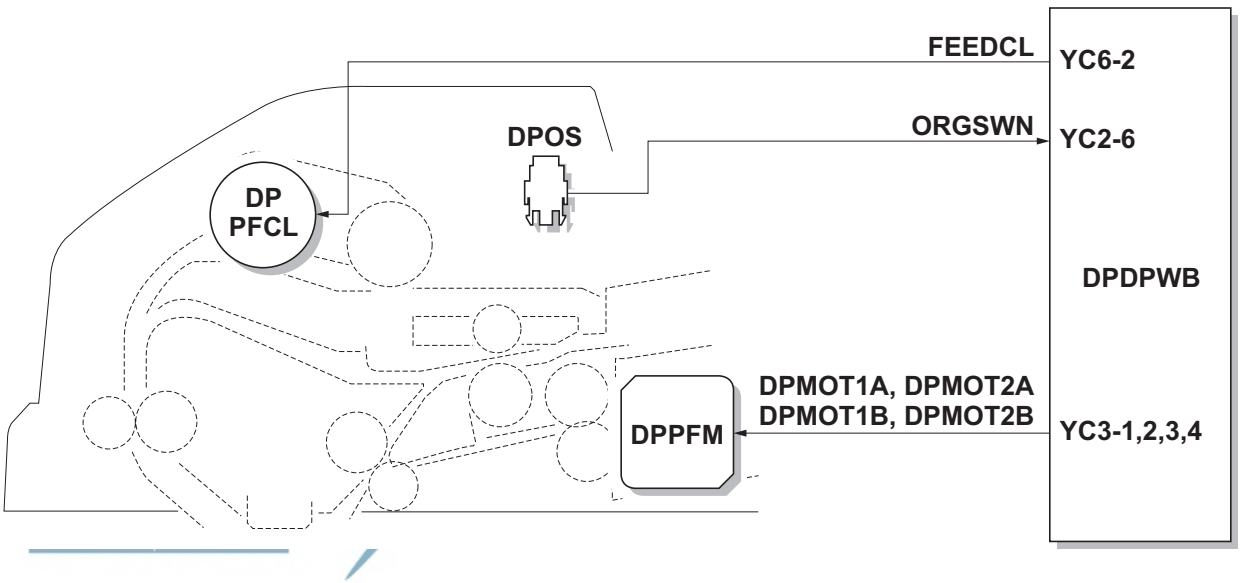

Figure 2-1-27 Original feed section block diagram

(2) Original conveying section

The original conveying section consists of the parts shown in figure. A conveyed original is scanned by the optical section (CCD) of main machine when it passes through the DP contact glass of main machine.

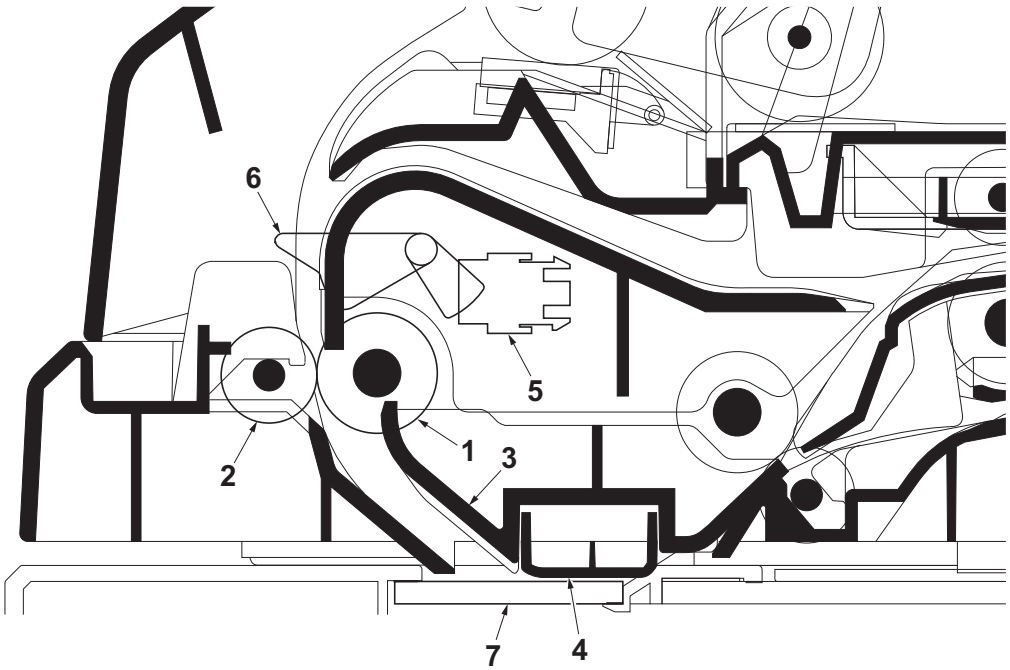

Figure 2-1-28 Original conveying section

1. Conveying roller A
2. Conveying pulley
3. Conveying bottom
4. Reading guide
5. DP timing sensor (DPTS)
6. Actuator (DP timing sensor)
7. DP contact glass

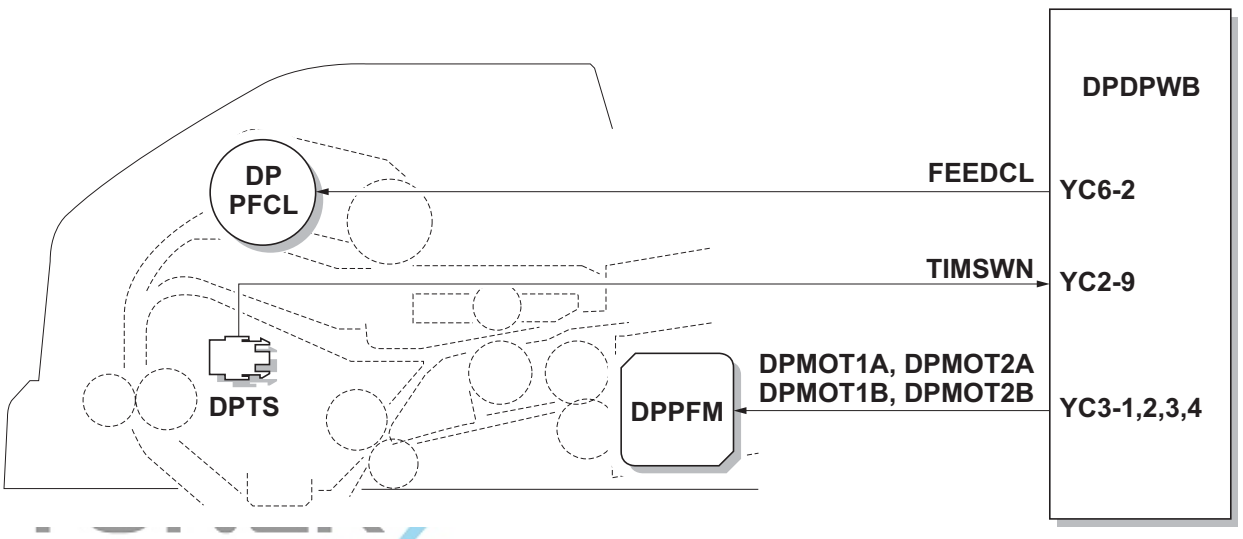

www.tonerplus.com.ua

Figure 2-1-29 Original conveying section block diagram

(3) Original switchback/eject sections

The original switchback/eject sections consists of the parts shown in figure. An original of which scanning is complete is ejected to the original eject table by the eject roller. In the case of duplex switchback scanning, an original is conveyed temporarily to the switchback tray and conveyed again to the original conveying section by the switchback roller.

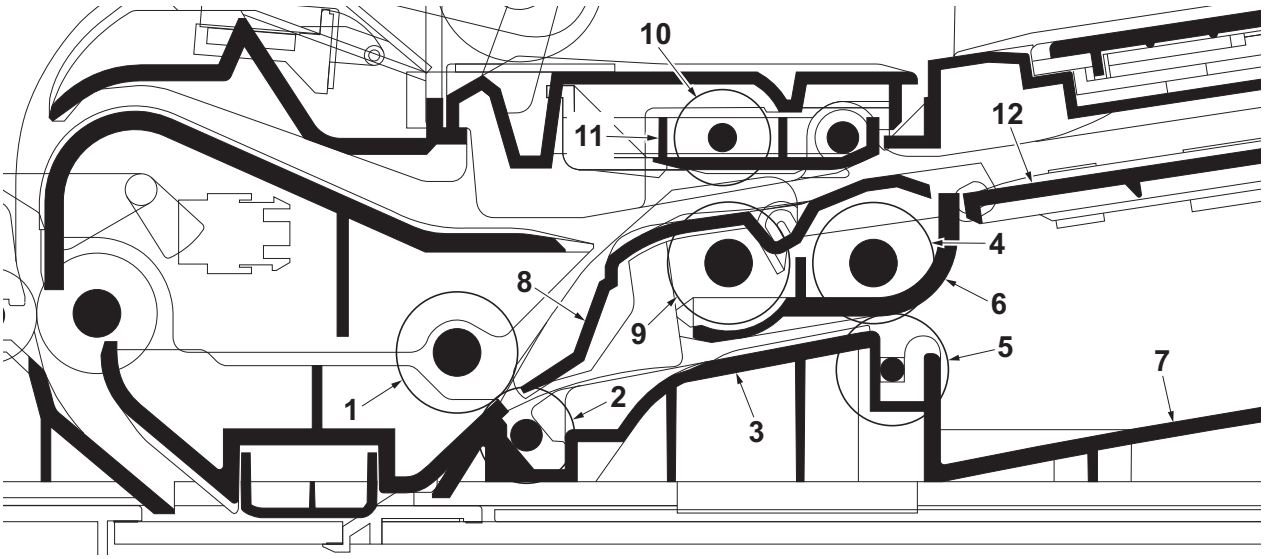

Figure 2-1-30 Original switchback/eject sections

1. Conveying roller B
2. Conveying pulley
3. DP base
4. Eject roller
5. Eject pulley
6. PF housing
7. Original eject table
8. Switchback guide
9. Switchback roller
10. Switchback pulley
11. Switchback pulley mount
12. Switchback tray

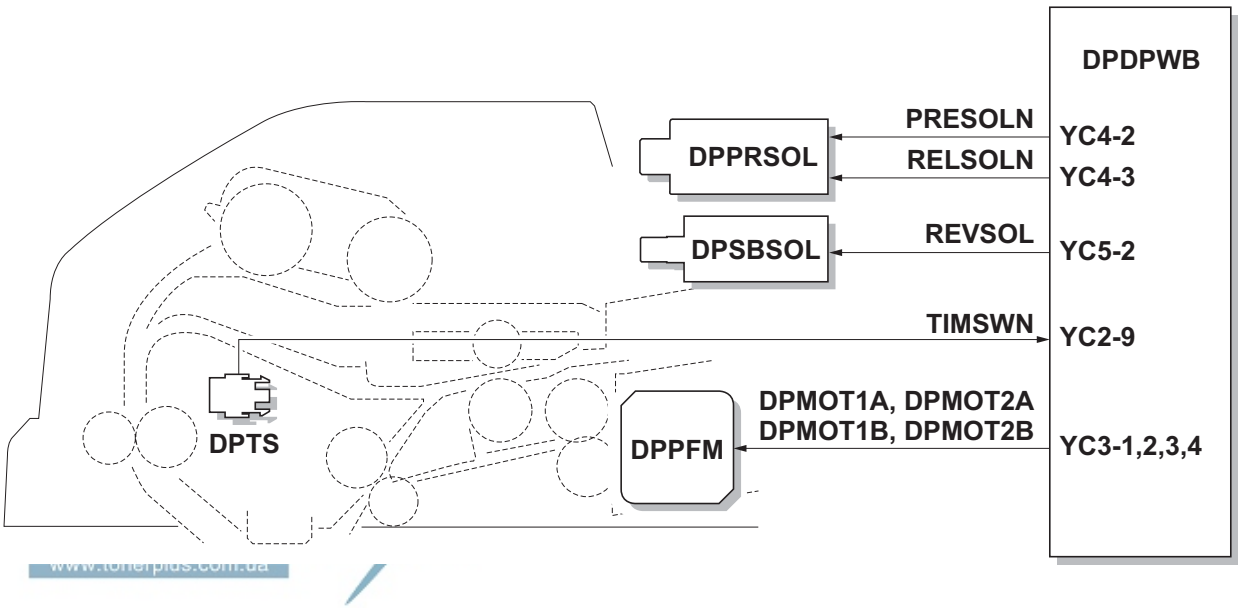

Figure 2-1-31 Original switchback/eject sections block diagram

This page is intentionally left blank.

TONER
www.tonerplus.com.ua

2-2-1 Electrical parts layout

(1) PWBs

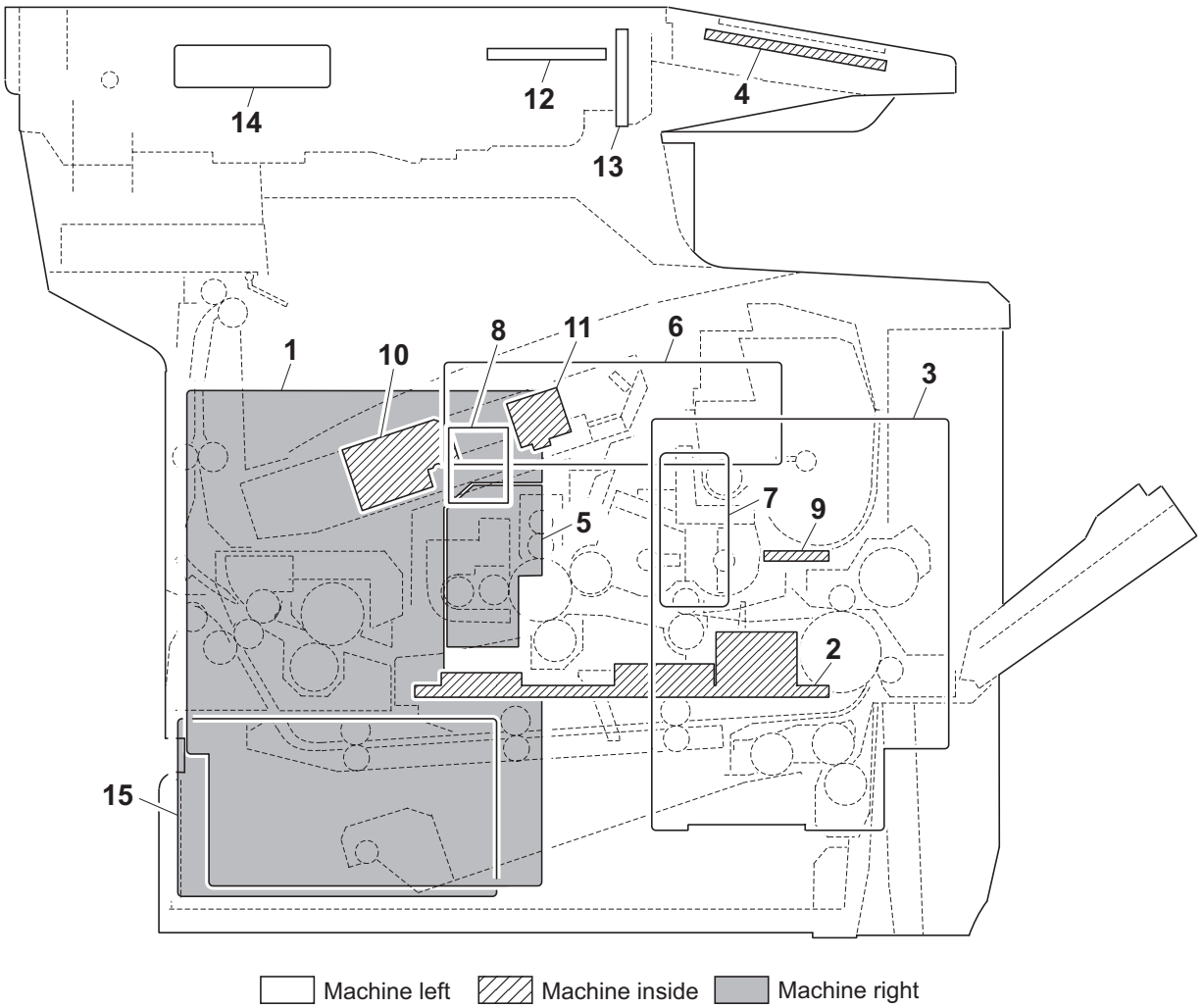

Figure 2-2-1 PWBs

1. Main PWB (MPWB) ..... Controls the software such as the print data processing and provides the interface with computers.
2. Engine PWB (EPWB)..... Controls printer hardware such as high voltage/bias output control, paper conveying system control, and fuser temperature control, etc.
3. Power source PWB (PSPWB) ..... After full-wave rectification of AC power source input, switching for converting to 24 V DC for output. Controls the fuser heater.
4. Operation panel PWB (OPPWB) ..... Consists the LCD, LED indicators and key switches.
5. Connect-R PWB (CPWB-R)..... Interconnects the engine PWB and the electrical parts.
6. Connect-L PWB (CPWB-L)..... Interconnects the engine PWB and the electrical parts.
7. Relay PWB (RYPWB)..... Interconnects the power source PWB and the fuser heater.
8. Drum PWB (DRPWB)..... Relays wirings from electrical components on the drum unit. Drum individual information in EEPROM storage.
9. Developing PWB (DEVPWB)..... Relays wirings from electrical components on the developing unit.
10. APC PWB (APCPWB) ..... Generates and controls the laser beam.

TONER

11. PD PWB (PDPWB) ..... Controls horizontal synchronizing timing of laser beam.
12. LED drive PWB (LEDDRPWB) ..... Controls the LED.
13. LED PWB (LEDPWD) ..... Controls the LED.
14. CCD PWB (CCDPWB)..... Reads the image of originals.
15. FAX control PWB (FCPWB)*..... Modulates, demodulates, compresses, decompresses and smoothes out image data, and converts resolution of image data.

*: Only 4in1 model (with FAX)

List of correspondences of PWB names

No.	Name used in service manual	Name used in parts list
1	Main PWB (MPWB)	PARTS MAIN PWB ASSY EU SP
2	Engine PWB (EPWB)	PARTS ENGINE PWB ASSY SP
3	Power source PWB (PSPWB)	PARTS SWITCHING REGULATOR (U) SP *1
3	Power source PWB (PSPWB)	PARTS SWITCHING REGULATOR (E) SP *2,*3
4	Operation panel PWB (OPPWB)	-
5	Connect-R PWB (CPWB-R)	P.W.BOARD ASSY CONNECT-R
6	Connect-L PWB (CPWB-L)	P.W.BOARD ASSY CONNECT-L
7	Relay PWB (RYPWB)	P.W.BOARD ASSY RELAY
8	Drum PWB (DRPWB)	-
9	Developer PWB (DEVPWB)	-
10	APC PWB (APCPWB)	-
11	PD PWB (PDPWB)	-
12	LED drive PWB (LEDDRPWB)	-
13	LED PWB (LEDPWB)	-
14	CCD PWB (CCDPWB)	-
15	FAX control PWB (FCPWB)	PARTS FAX UNIT(U) SP *1
15	FAX control PWB (FCPWB)	PARTS FAX UNIT(E) SP *2
15	FAX control PWB (FCPWB)	PARTS FAX UNIT(AS) SP *3

*1: 120V
*2: 220V
*3: 240V

TONER
www.tonerplus.com.ua

(2) Switches and sensors

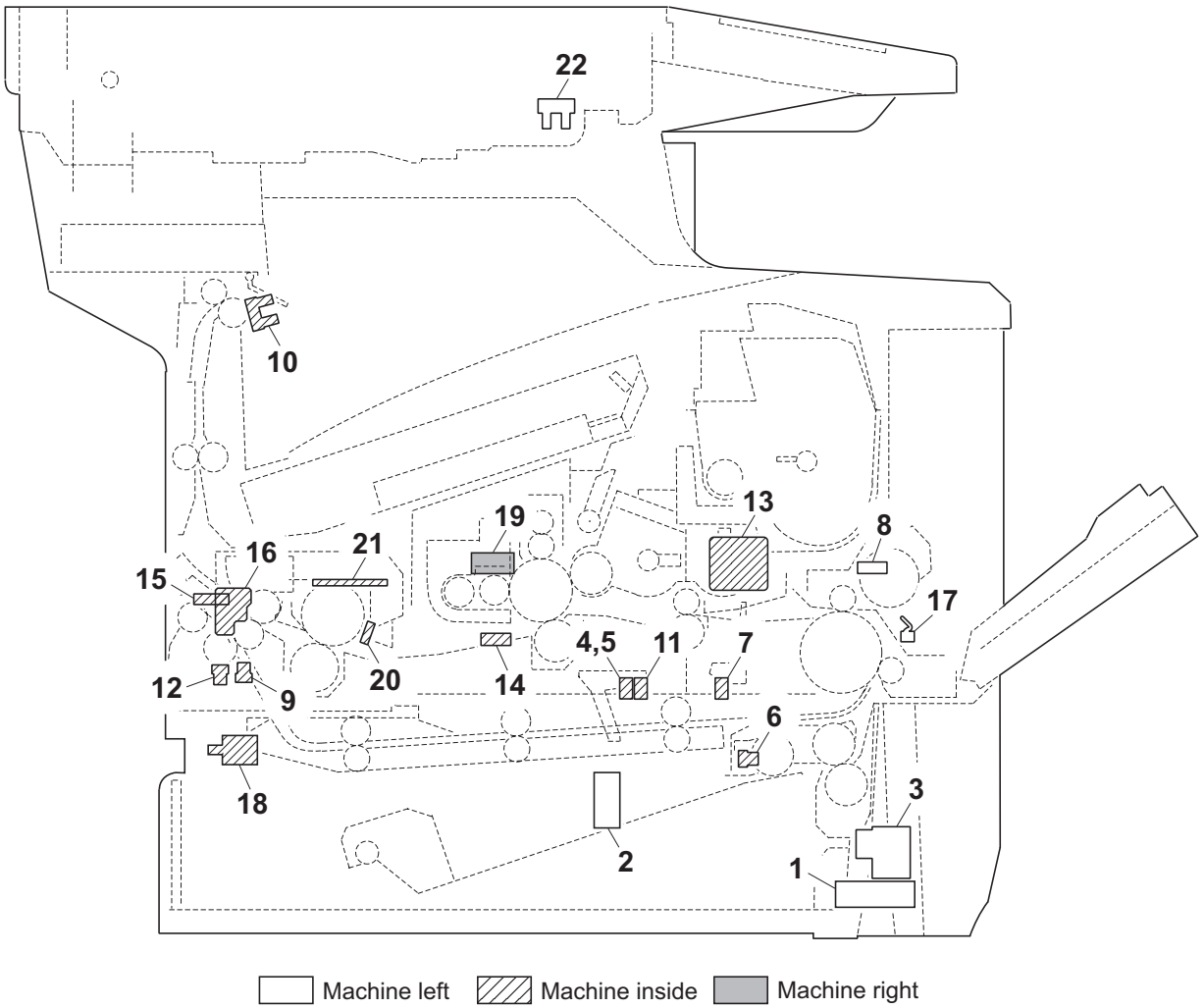

Figure 2-2-2 Switches and sensors

1. Main power switch (MSW) ..... Turns ON/OFF the AC power source.
2. Interlock switch (ILSW) ..... Shuts off 24 V DC power line when the front cover is opened.
3. Cassette size switch (CSSW) ..... Detects the paper size dial setting of the paper setting dial.
4. Paper sensor 1 (PS1) ..... Detects the paper remaining amount level.
5. Paper sensor 2 (PS2) ..... Detects the paper remaining amount level.
6. Lift sensor (LS)..... Detects activation of upper limit of the bottom plate in the paper cassette.
7. Registration sensor (RS)..... Detects the timing of primary feeding.
8. MP paper sensor (MPPS) ..... Detects the presence of paper on the MP tray.
9. Eject sensor (ES) ..... Detects paper jam in the fuser unit.
10. Paper full sensor (PFS)..... Detects whether the face down tray is full.
11. Duplex jam sensor (DUJS) ..... Detects paper jam in the duplex conveying section.
12. Duplex sensor (DUS)..... Detects paper jam in the rear unit.
13. Toner sensor (TS) ..... Detects the toner in the toner container.
14. Waste toner sensor (WTS)..... Detects the waste toner box being full.
15. Envelope switch-R (EVSW-R) ..... Detects the position of the envelope switch (right).
16. Envelope switch-L (EVSW-L)..... Detects the position of the envelope switch (left).
17. Envelope feeder switch (EVFSW)..... Detects optional envelope feeder.

TONER www.tonerplus.com.ua

18. Fuser unit switch (FUSW)..... Detects open/close rear unit (fuser unit).
19. Temperature sensor (TEMS)..... Detects the ambient temperature and absolute humidity.
20. Fuser thermistor 1 (FTH1) ..... Measures the heat roller temperature.
21. Fuser thermistor 2 (FTH2) ..... Measures the heat roller (center) temperature.
22. Home position sensor (HPS) ..... Detects the ISU in the home position.

TONER
www.tonerplus.com.ua

(3) Motors

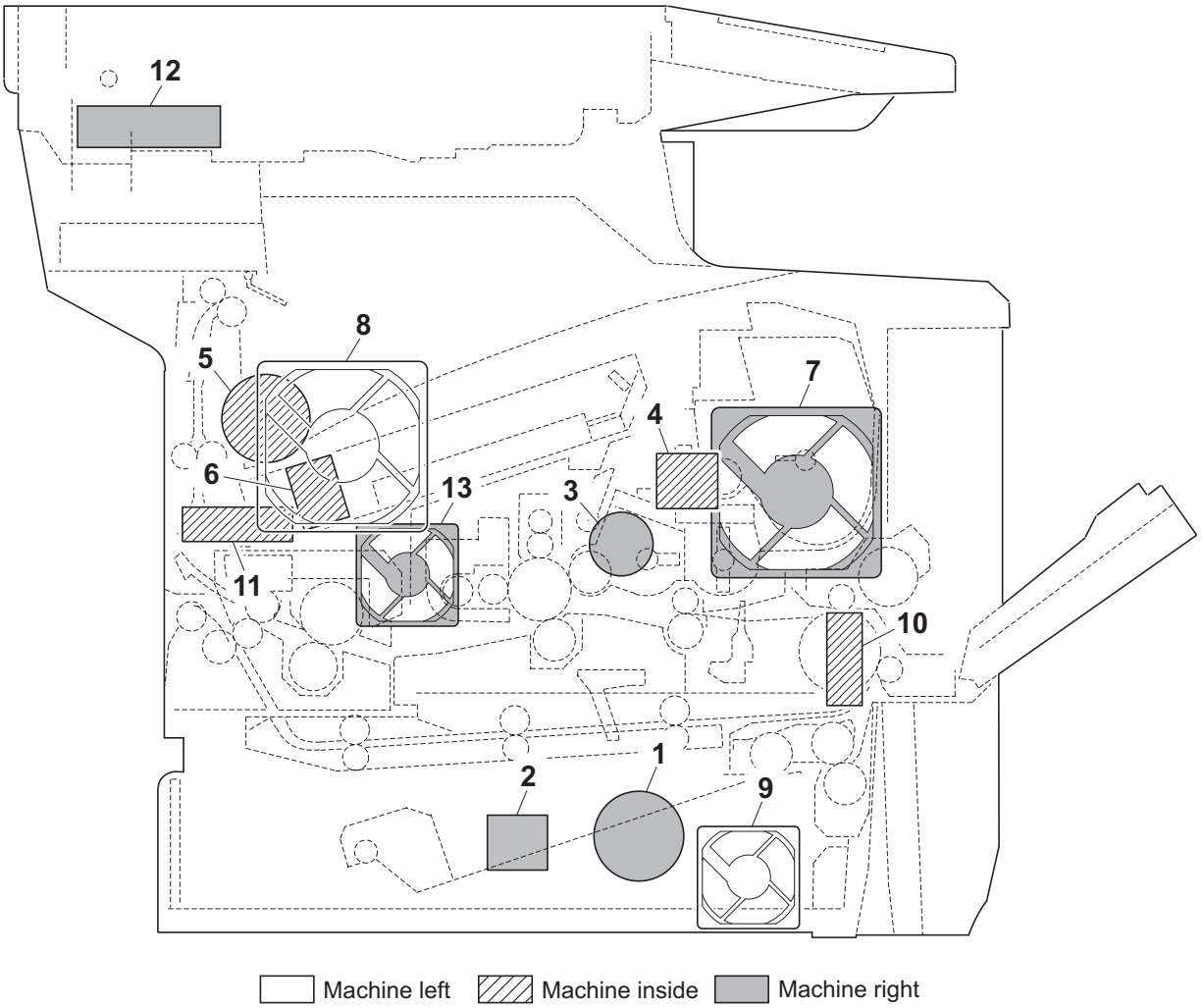

Figure 2-2-3 Motors

1. Main motor (MM)..... Drives the paper feed/conveying section and fuser unit.
2. Lift motor (LM)..... Operates the bottom plate in the paper cassette.
3. Drum motor (DRM) ..... Drives the drum unit and developing unit.
4. Toner motor (TM) ..... Replenishes the developing unit with toner.
5. Switchback motor (SBM) ..... Drives paper eject (switchback) section.
6. Polygon motor (PM)..... Drives the polygon mirror.
7. Right fan motor (RFM) ..... Cools the interior of machine.
8. Left fan motor (LFM) ..... Cools the interior of machine.
9. Power source fan motor (PSFM) ..... Cools the power source unit.
10. Feed fan motor (FFM)..... Cools the paper feed conveying section and duplex conveying section.
11. Eject fan motor (EFM)..... Disperses steam.
12. ISU motor (ISUM) ..... Drives the ISU.
13. Controller fan motor (CONFM)..... Cools the controller section.

TONER
www.tonerplus.com.ua

(4) Other electrical components

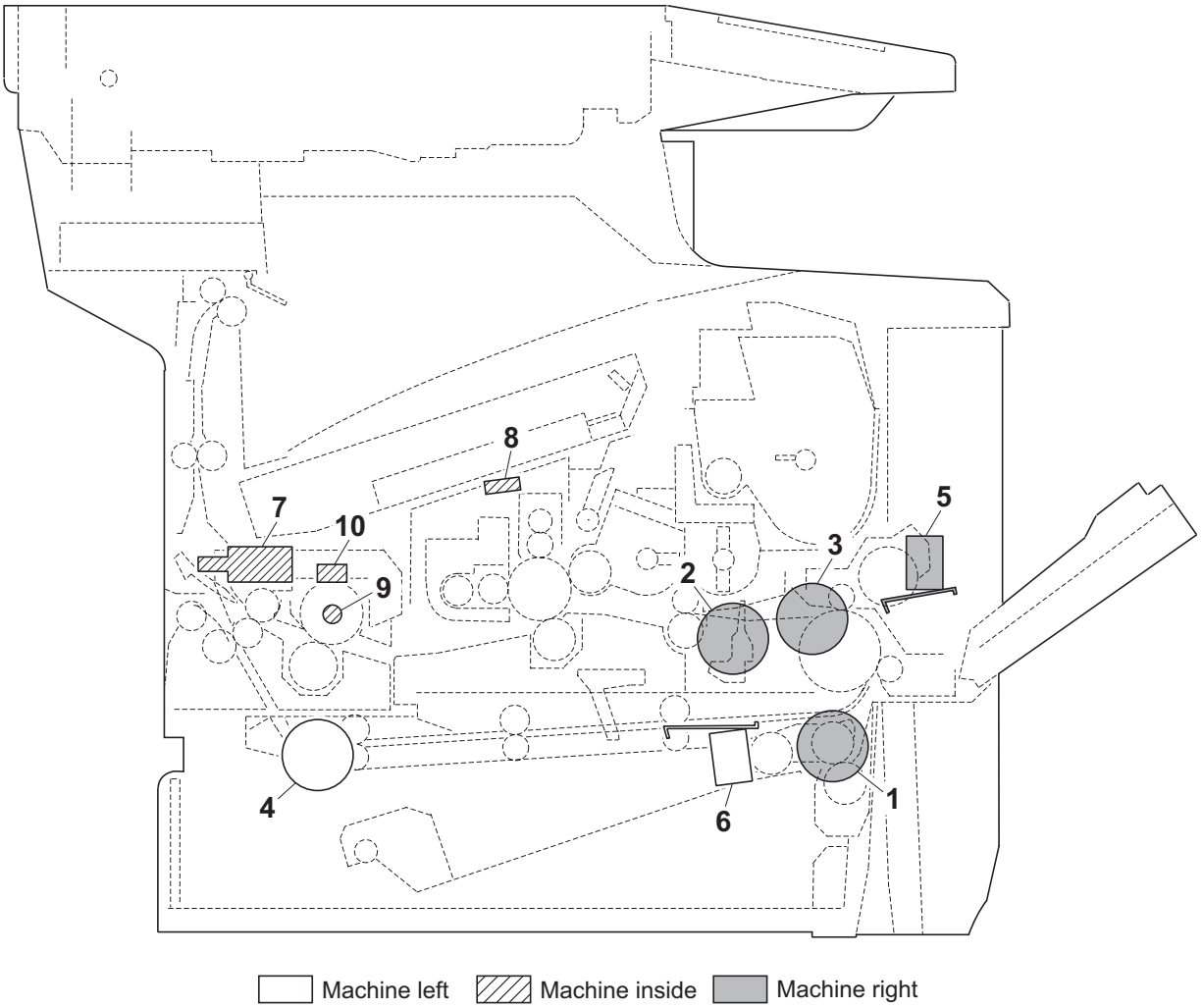

Figure 2-2-4 Other electrical components

1. Paper feed clutch (PFCL) ..... Controls the paper cassette paper feed.
2. Registration clutch (RCL)..... Controls the secondary paper feed.
3. Middle feed clutch (MCL)..... Controls the paper conveying at the conveying section.
4. Duplex clutch (DUCL) ..... Controls the paper conveying at the duplex conveying section.
5. MP solenoid (MPSOL) ..... Controls the primary paper feed from the MP tray.
6. Developing solenoid (DEVSOL)..... Controls the developing unit drive.
7. Feedshift solenoid (FSSOL)..... Switches the output stack between face up and face down.
8. Cleaning lamp (CL)..... Eliminates the residual electrostatic charge on the drum.
9. Fuser heater (FH) ..... Heats the heat roller.
10. Fuser thermostat (FTS)..... Shuts off the power source to the fuser heater lamp when the heat roller reaches extremely high temperature.

TONER
www.tonerplus.com.ua

(5) Document processor

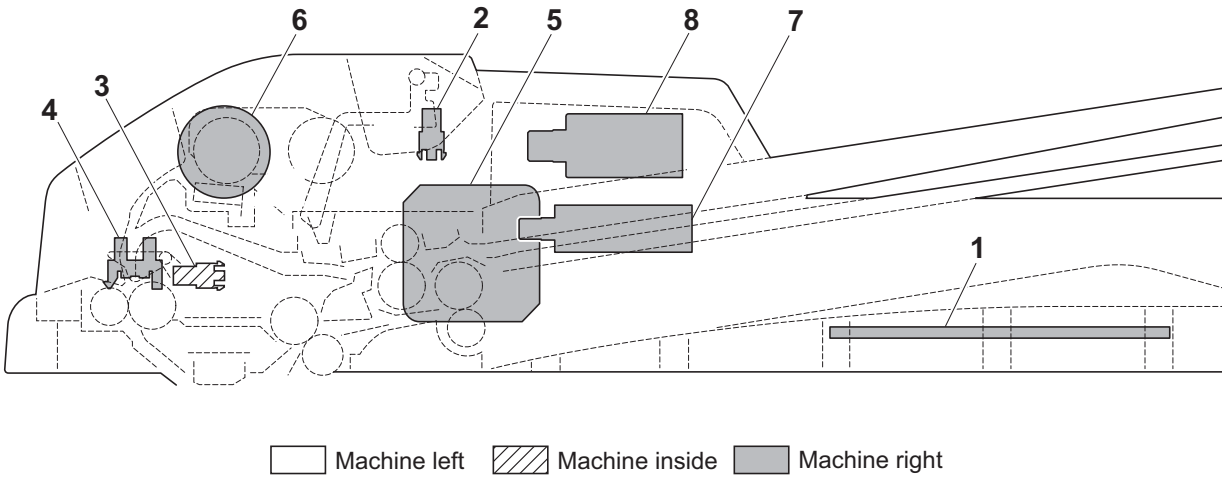

Figure 2-2-5 Document processor

1. DP drive PWB (DPDPWB)..... Consists the solenoids and clutch driver circuit and wiring relay circuit.
2. DP original sensor (DPOS)..... Detects the presence of an original.
3. DP timing sensor (DPTS)..... Detects the original scanning timing.
4. DP open/close sensor (DPOCS)..... Detects the opening/closing of the DP.
5. DP paper feed motor (DPPFM)..... Drives the original feed section.
6. DP paper feed clutch (DPPFCL)..... Controls the drive of the forwarding pulley and feed pulley.
7. DP switchback solenoid (DPSBSOL).... Operates the switchback guide.
8. DP pressure solenoid (DPPRSOL)..... Operates the switchback pulley.

TONER
www.tonerplus.com.ua

This page is intentionally left blank.

TONER
www.tonerplus.com.ua

2-3-1 Power source PWB

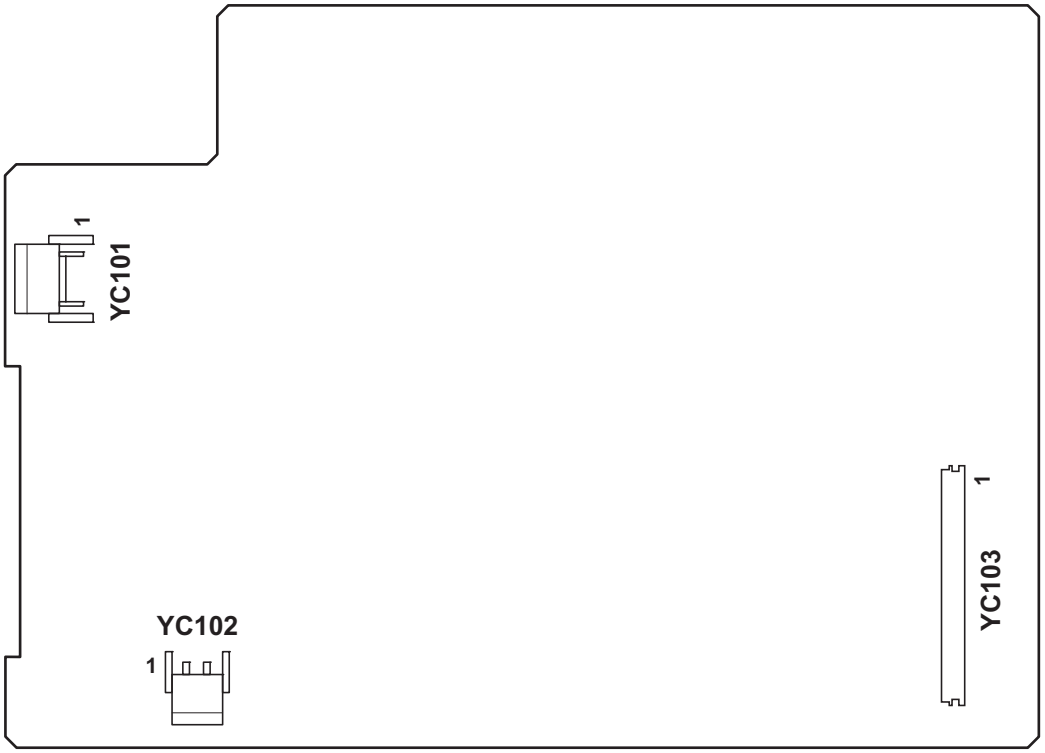

Figure 2-3-1 Power source PWB silk-screen diagram

TONER
www.tonerplus.com.ua

Connector	Pin	Signal	I/O	Voltage	Description
YC101	1	LIVE	I	120 V AC 220-240 V AC	AC power input
Connected to AC inlet and main power switch	2	NEUTRAL	I	120 V AC 220-240 V AC	AC power input
YC102	1	COMMON1	O	120 V AC/0V 220-240 V AC/0V	FH: On/Off
Connected to relay PWB	2	N.C	-	-	Not used
	3	LIVE	O	120 V AC220-240 V AC	AC power to RYPWB
YC103	1	+5V1	O	5 V DC	5 V DC power to CPWB-L
Connected to connect-L PWB	2	+5V1	O	5 V DC	5 V DC power to CPWB-L
	3	+5V1	O	5 V DC	5 V DC power to CPWB-L
	4	+24V1	O	24 V DC	24 V DC power to CPWB-L
	5	HUNITN	O	0/5 V DC	EVFSW: On/Off
	6	HANDSN	O	0/5 V DC	MPPS: On/Off
	7	N.C.	-	-	Not used
	8	HEATONN1	I	0/5 V DC	FH: On/Off
	9	ZCROSS	O	0/5 V DC (pulse)	Zero-cross signal
	10	SWSLEEPN	I	0/5 V DC	Sleep mode signal: On/Off
	11	+24V2	O	24 V DC	24 V DC power to CPWB-L (via ILSW)
	12	GND	-	-	Ground
	13	GND	-	-	Ground
	14	GND	-	-	Ground
	15	GND	-	-	Ground
	16	+24V2	O	24 V DC	24 V DC power to CPWB-L (via ILSW)
	17	+24V2	O	24 V DC	24 V DC power to CPWB-L (via ILSW)

TONER
www.tonerplus.com.ua

2-3-2 Engine PWB

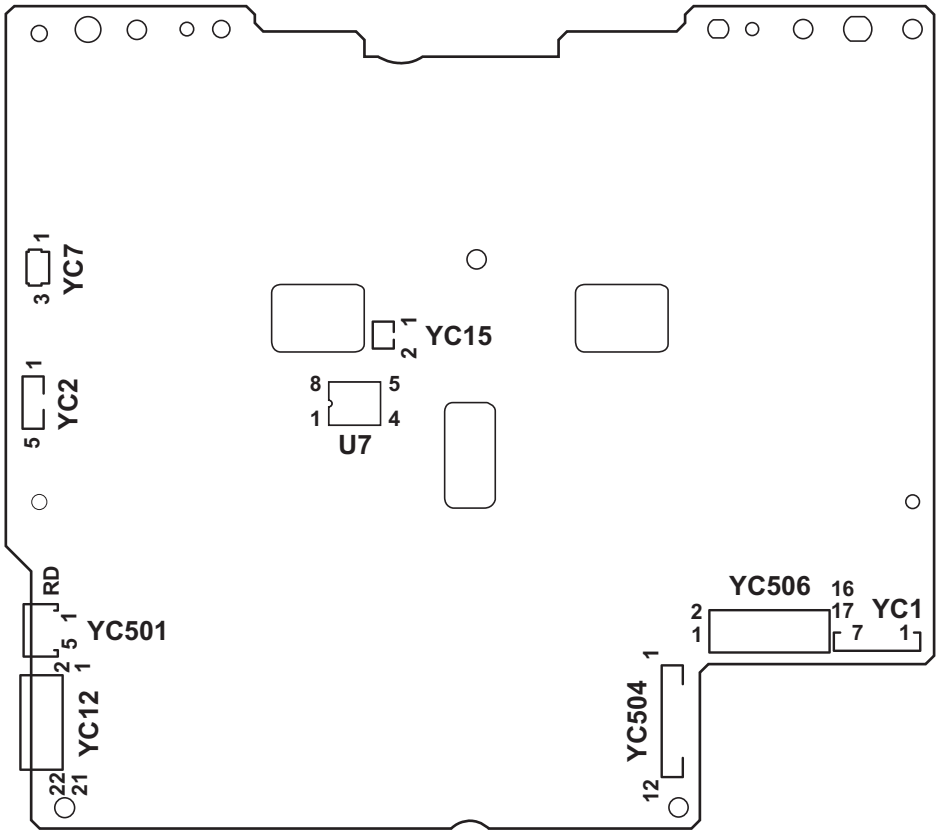

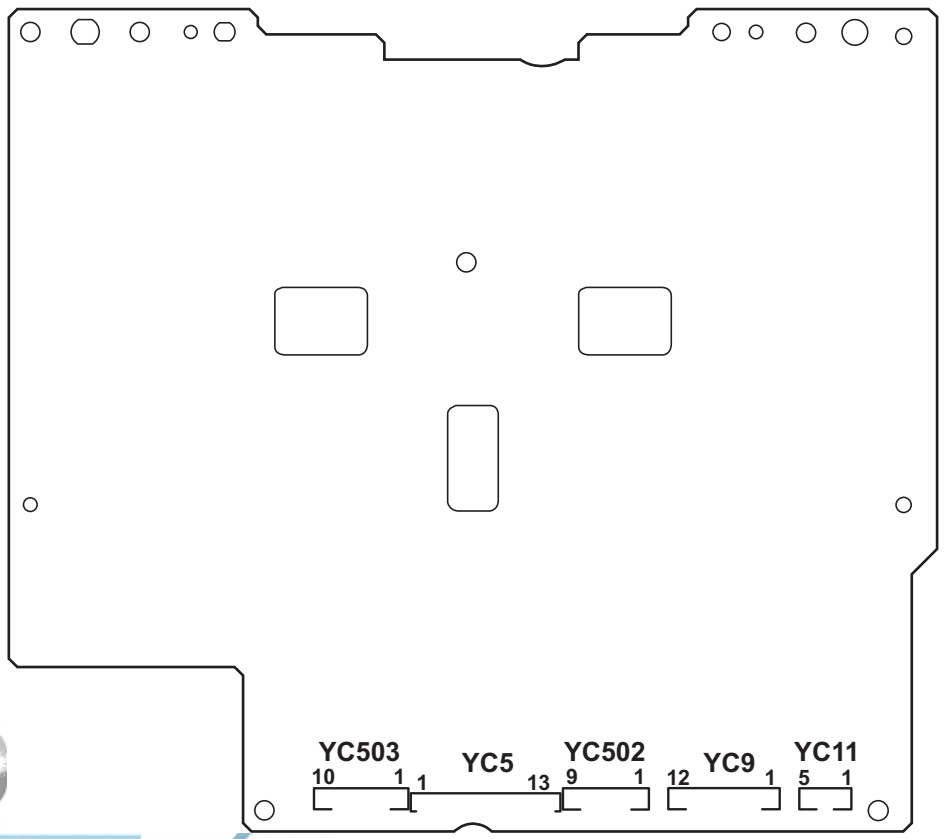

TO
www.tonerplus.com.ua

Figure 2-3-2 Engine PWB silk-screen diagram

Connector	Pin	Signal	I/O	Voltage	Description
YC5	1	OPSDO	O	0/5 V DC (pulse)	Serial communication data signal output
Connected to connect-L PWB	2	+24V2	I	24 V DC	24 V DC power from CPWB-L (via ILSW)
	3	+24V2	I	24 V DC	24 V DC power from CPWB-L (via ILSW)
	4	GND	-	-	Ground
	5	GND	-	-	Ground
	6	GND	-	-	Ground
	7	GND	-	-	Ground
	8	GND	-	-	Ground
	9	+24V1	I	24 V DC	24 V DC power from CPWB-L
	10	+5V1	I	5 V DC	5 V DC power from CPWB-L
	11	+5V1	I	5 V DC	5 V DC power from CPWB-L
	12	+5V1	I	5 V DC	5 V DC power from CPWB-L
	13	+5V2	O	5 V DC	5 V DC power to CPWB-L
YC7	1	GND	-	-	Ground
Connected to lift sensor	2	LIFTSEN	I	0/5 V DC	LS: On/Off
	3	+5V2	O	5 V DC	5 V DC power to LS
YC9	1	WETCLK2	O	0/5 V DC (pulse)	TEMS clock signal
Connected to connect-R PWB			I	Analog	TEMS detection voltage (humidity)
	2	WETCLK1	O	0/5 V DC (pulse)	TEMS clock signal
	3	+5V1	O	5 V DC	5 V DC power to CPWB-R
	4	AIRTEMP	I	Analog	TEMS detection voltage (temperature)
	5	RFANDRN	O	0/12/24 V DC	RFM: Full speed/Half speed/Off
	6	+24V1	O	24 V DC	24 V DC power to CPWB-R
	7	MPFDRN	O	0/24 V DC	MPSOL: On/Off
	8	OUTB2	O	0/24 V DC (pulse)	SBM drive control signal
	9	OUTB1	O	0/24 V DC (pulse)	SBM drive control signal
	10	OUTA2	O	0/24 V DC (pulse)	SBM drive control signal
	11	OUTA1	O	0/24 V DC (pulse)	SBM drive control signal
	12	GND	-	-	Ground
YC11	1	+24V4	O	24 V DC	24 V DC power to DRM
Connected to drum motor	2	GND	-	-	Ground
	3	DMOTRDYN	I	0/5 V DC	DRM ready signal
	4	DMOTCLK	O	0/5 V DC (pulse)	DRM clock signal
	5	DMOTONN	O	0/5 V DC	DRM: On/Off

TONER
www.tonerplus.com.ua

Connector	Pin	Signal	I/O	Voltage	Description
YC12	1	POLRDYN	I	0/5 V DC	PM ready signal
Connected to main PWB	2	POLONN	O	0/5 V DC	PM: On/Off
	3	OUTPEN	O	0/5 V DC	Laser output enable signal
	4	PDMASKN	O	0/5 V DC	Horizontal synchronizing signal
	5	SBSY	O	0/5 V DC	Serial busy signal
	6	SDIR	O	0/5 V DC	Serial communication direction change signal
	7	EGIRN	O	0/5 V DC	Engine interruption signal
	8	EGSI	I	0/5 V DC (pulse)	Serial communication data signal input
	9	EGSO	O	0/5 V DC (pulse)	Serial communication data signal output
	10	SCKN	I	0/5 V DC (pulse)	Serial communication clock signal
	11	EECLK			
	12	EEDIO			
	13	POLCLK			
	14	+24V5	O	24 V DC	24 V DC power to MPWB
	15	+5V1	O	5 V DC	5 V DC power to MPWB
	16	+5V1	O	5 V DC	5 V DC power to MPWB
	17	+5V1	O	5 V DC	5 V DC power to MPWB
	18	GND	-	-	Ground
	19	GND	-	-	Ground
	20	GND	-	-	Ground
	21	+24V4	O	24 V DC	24 V DC power to MPWB
	22	GND	-	-	Ground
YC15	1	+5V1	O	5 V DC	5 V DC power to FFM
Connected to feed fan motor	2	FFANDRN	O	0/2.5/5 V DC	FFM: Full speed/Half speed/Off
YC501	1	+24V4	O	24 V DC	24 V DC power to MM
Connected to main motor	2	GND	-	-	Ground
	3	MMOTONN	O	0/5 V DC	MM ready signal
	4	MMOTRDYN	I	0/5 V DC	MM clock signal
	5	MMOTCLK	O	0/5 V DC (pulse)	MM: On/Off

TONER
www.tonerplus.com.ua

Connector	Pin	Signal	I/O	Voltage	Description
YC502	1	LMOTON	O	0/24 V DC	LM: On/Off
Connected to connect-R PWB	2	DUDRN	O	0/24 V DC	DUCL: On/Off
	3	DLPDRN	O	0/24 V DC	DEVSOL: On/Off
	4	MIDDRN	O	0/24 V DC	MCL: On/Off
	5	+24V2	O	24 V DC	24 V DC power to CPWB-R
	6	+24V2	O	24 V DC	24 V DC power to CPWB-R
	7	REGDRN	O	0/24 V DC	RCL: On/Off
	8	FEEDDRN	O	0/24 V DC	PFCL: On/Off
	9	EXITFAN	O	0/24 V DC	EFM: On/Off
YC503	1	NC	-	-	Not used
Connected to connect-L PWB	2	HEATONN1	O	0/5 V DC	FH: On/Off
	3	ZCROSS	I	0/5 V DC (pulse)	Zero-cross signal
	4	SWSLEEPN	O	0/5 V DC	Sleep mode signal: On/Off
	5	HANDSN	I	0/5 V DC	MPPS: On/Off
	6	HPAP	I	0/5 V DC	EVFSW: On/Off
	7	SWFAN	O	0/24 V DC	PSFM: On/Off
	8	CASET	I	Analog	CSSW detection voltage
	9	TNMOT	O	0/24 V DC	TM: On/Off
	10	TNLEVEL	I	Analog	TS detection voltage
YC504	1	OPSDI	I	0/5 V DC (pulse)	Serial communication data signal input
Connected to connect-L PWB	2	OPSEL2	O	0/5 V DC	Paper feeder select signal (2)
	3	OPSEL1	O	0/5 V DC	Paper feeder select signal (1)
	4	OPSEL0	O	0/5 V DC	Paper feeder select signal (0)
	5	OPRDYN	I	0/5 V DC	Paper feeder ready signal
	6	OPSCLK	O	0/5 V DC (pulse)	Serial communication clock signal
	7	WTNLEDN	O	0/5 V DC (pulse)	WTS (light emission) control signal
	8	ERASER	O	24/0 V DC	CL: On/Off
	9	EEDIO	I/O	0/5 V DC (pulse)	DRPWB EEPROM data signal
	10	EECLK	O	0/5 V DC (pulse)	DRPWB clock signal
	11	LFANDRN	O	0/12/24 V DC	LFM: Full speed/Half speed/Off
	12	WTNFUL	I	0/5 V DC (pulse)	WTS detection signal

TONER
www.tonerplus.com.ua

Connector	Pin	Signal	I/O	Voltage	Description
YC506	1	FUSER-L	I	2 to 5 V DC	EVSW-L detection voltage
Connected to fuser unit	2	FUSER-R	I	2 to 5 V DC	EVSW-R detection voltage
	3	+5V1	O	5 V DC	5 V DC power to fuser unit
	4	THERM3	-	-	Not used
	5	+5V2	O	5 V DC	5 V DC power to ES
	6	EXITPAP	I	0/5 V DC	ES: On/Off
	7	GND	-	-	Ground
	8	THERM1	I	Analog	FTH1 detection voltage
	9	+5V1	O	5 V DC	5 V DC power to FTH1
	10	FDDRN	O	0/24 V DC	FSSOL: On/Off
	11	+24V2	O	24 V DC	24 V DC power to FSSOL
	12	FUDRN	O	0/24 V DC	FSSOL: On/Off
	13	+5V2	O	5 V DC	5 V DC power to DUS
	14	DUPAP	I	0/5 V DC	DUS: On/Off
	15	GND	-	-	Ground
	16	+5V1	O	5 V DC	5 V DC power to FTH2
	17	THERM2	I	Analog	FTH2 detection voltage

TONER
www.tonerplus.com.ua

2-3-3 Main PWB

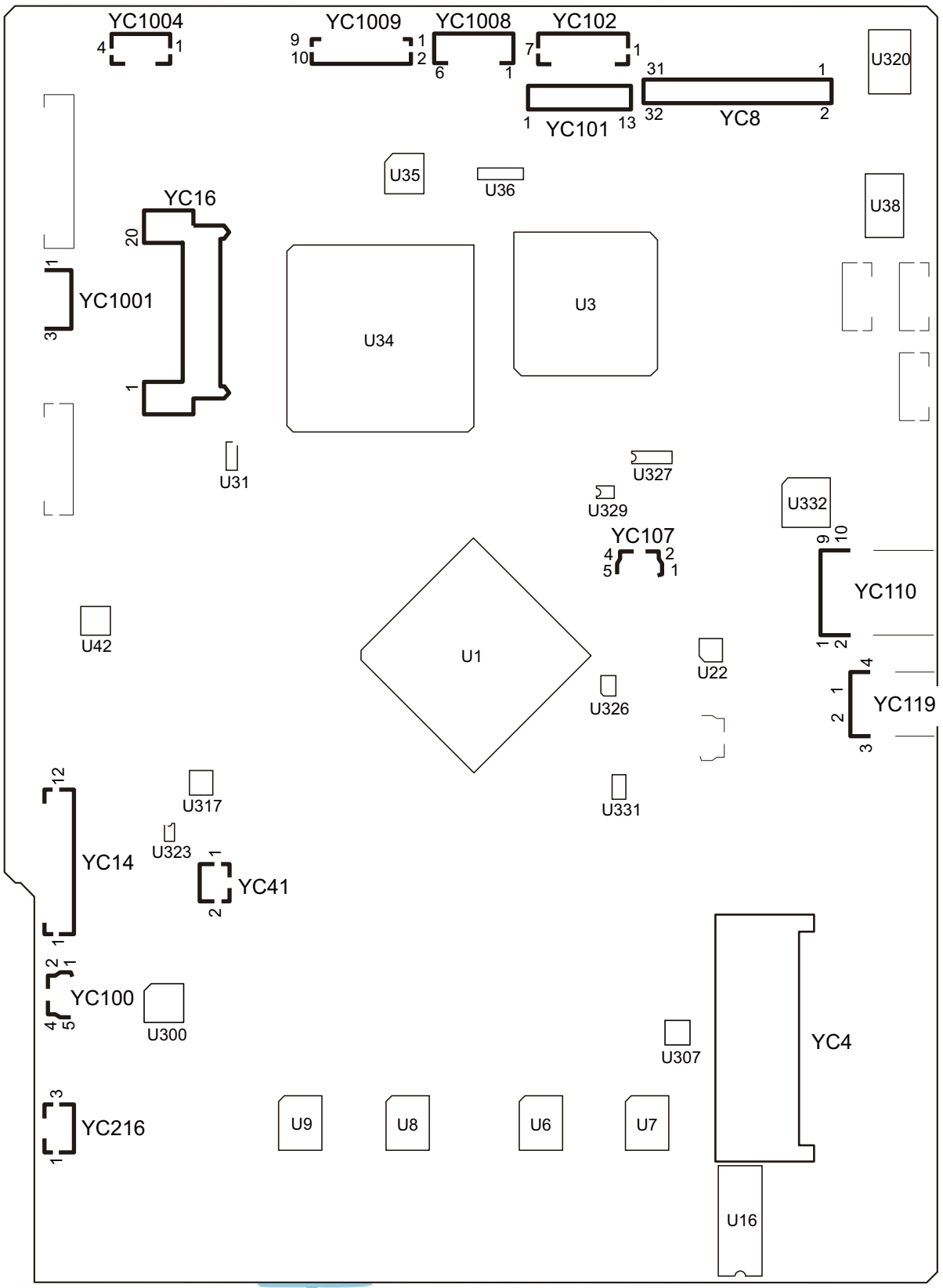

www.tonerplus.com.ua

Figure 2-3-3 Main PWB silk-screen diagram

Connector	Pin	Signal	I/O	Voltage	Description
YC8	1	LAMP	O	0/24 V DC	EL drive signal
Connected to CCD PWB	2	NC	-	-	Not used
	3	GND	-	-	Ground
	4	GND	-	-	Ground
	5	HPSW	I	0/3.3 V DC	HPS: On/Off
	6	+3.3V	O	3.3 V DC	3.3 V DC power to CCDPWB
	7	GND	-	-	Ground
	8	CCDRSN	O	LVDS	CCD reset signal
	9	CCDRSP	O	LVDS	CCD reset signal
	10	GND	-	-	Ground
	11	CCDCLPP	O	LVDS	CCD clamp signal
	12	CCDCLPN	O	LVDS	CCD clamp signal
	13	GND	-	-	Ground
	14	CCDPH1N	O	LVDS	CCD shift register clock signal
	15	CCDPH1P	O	LVDS	CCD shift register clock signal
	16	GND	-	-	Ground
	17	CCDPH2P	O	LVDS	CCD shift register clock signal
	18	CCDPH2N	O	LVDS	CCD shift register clock signal
	19	GND	-	-	Ground
	20	CCDSH	O	0/3.3 V DC	CCD shift gate signal
	21	CCDSW	O	0/3.3 V DC	CCD color/BW change signal
	22	GND	-	-	Ground
	23	CCDDATAR	I	Analog	CCD image output signal (R)
	24	GND	-	-	Ground
	25	CCDDATAG	I	Analog	CCD image output signal (G)
	26	GND	-	-	Ground
	27	CCDDATAB	I	Analog	CCD image output signal (B)
	28	GND	-	-	Ground
	29	+12V	O	DC12V	12 V DC power to CCDPWB
	30	NC	-	-	Not used
	31	+5V1	O	5 V DC	5 V DC power to CCDPWB
	32	+5V1	O	5 V DC	5 V DC power to CCDPWB

TONER
www.tonerplus.com.ua

Connector	Pin	Signal	I/O	Voltage	Description
YC13	1	POLRDYN	O	0/5 V DC	PM ready signal
Connected to engine PWB	2	POLONN	I	0/5 V DC	PM: On/Off
	3	OUTPEN	I	0/5 V DC	Laser output enable signal
	4	PDMASKN	I	0/3.3 V DC	Horizontal synchronizing signal
	5	SBSY	I	0/3.3 V DC	Serial busy signal
	6	SDIR	I	0/3.3 V DC	Serial communication direction change signal
	7	EGIRN	I	0/3.3 V DC	Engine interruption signal
	8	EGSI	O	0/3.3 V DC (pulse)	Serial communication data signal input
	9	EGSO	I	0/3.3 V DC (pulse)	Serial communication data signal output
	10	SCKN	O	0/3.3 V DC (pulse)	Serial communication clock signal
	11	EECLK			
	12	EEDIO			
	13	POLCLK			
YC14	1	+24V5	O	24 V DC	24 V DC power to PM
Connected to laser scanner unit	2	GND	-	-	Ground
	3	POLONN	O	0/5 V DC	PM: On/Off
	4	POLRDYN	I	0/5 V DC	PM ready signal
	5	POLCLK	O	0/5 V DC (pulse)	Serial communication clock signal
	6	GND	-	-	Ground
	7	VDATAN1	O		Video data signal (-)
	8	VDATAP1	O		Video data signal (+)
	9	OUTPEN	O	0/5 V DC	Laser output enable signal
	10	SAMPLEN1	O	0/3.3 V DC	Sample/hold signal
	11	+5V3		5 V DC	5 V DC power to APCPWB
	12	NC	-	-	Not used

Connector	Pin	Signal	I/O	Voltage	Description
YC16	A1	NC	-	-	Not used
Connected to FAX control PWB	B1	NC	-	-	Not used
	A2	NC	-	-	Not used
	B2	TXDREQ	I	0/3.3 V DC	Transmission DMA request signal
	A3	AUDIO	I	0/3.3 V DC	Audio signal
	B3	3.3V	O	3.3 V DC	3.3 V DC power output
	A4	3.3V	O	3.3 V DC	3.3 V DC power output
	B4	A15	O	0/3.3 V DC (pulse)	Address bus signal
	A5	GND	-	-	Ground
	B5	A14	O	0/3.3 V DC (pulse)	Address bus signal
	A6	A13	O	0/3.3 V DC (pulse)	Address bus signal
	B6	A12	O	0/3.3 V DC (pulse)	Address bus signal
	A7	A11	O	0/3.3 V DC (pulse)	Address bus signal
	B7	A10	O	0/3.3 V DC (pulse)	Address bus signal
	A8	A9	O	0/3.3 V DC (pulse)	Address bus signal
	B8	A8	O	0/3.3 V DC (pulse)	Address bus signal
	A9	GND	-	-	Ground
	B9	A7	O	0/3.3 V DC (pulse)	Address bus signal
	A10	A6	O	0/3.3 V DC (pulse)	Address bus signal
	B10	A5	O	0/3.3 V DC (pulse)	Address bus signal
	A11	A4	O	0/3.3 V DC (pulse)	Address bus signal
	B11	A3	O	0/3.3 V DC (pulse)	Address bus signal
	A12	A2	O	0/3.3 V DC (pulse)	Address bus signal
	B12	A1	O	0/3.3 V DC (pulse)	Address bus signal
	A13	GND	-	-	Ground
	B13	3.3V	-	3.3 V DC	3.3 V DC power output
	A14	OP2IFN	O	0/3.3 V DC	Select signal
	B14	OP2ACKN	I	0/3.3 V DC (pulse)	OP2ACKN signal
	A15	OP2IRN	I	0/3.3 V DC	Interruption signal
	B15	5V	-	5 V DC	5 V DC power output
	A16	RDY	O	0/3.3 V DC	Ready signal
	B16	RXDREQ	I	0/3.3 V DC	Reception DMA request signal
	A17	GND	-	-	Ground
	B17	RXDMACKN	O	0/3.3 V DC (pulse)	Reception DMAACK signal
	A18	IORN	O	0/3.3 V DC	Read enable signal
	B18	IOWN	O	0/3.3 V DC	Write enable signal
	A19	RESETN	O	0/3.3 V DC	Reset signal

TONER

Connector	Pin	Signal	I/O	Voltage	Description
YC16	B19	TXDMAACKN	I	0/3.3 V DC	Transmission DMAACK signal
Connected to FAX control PWB	A20	D15	I/O	0/3.3 V DC (pulse)	Data bus signal
	B20	D14	I/O	0/3.3 V DC (pulse)	Data bus signal
	A21	GND	-	-	Ground
	B21	D13	I/O	0/3.3 V DC (pulse)	Data bus signal
	A22	D12	I/O	0/3.3 V DC (pulse)	Data bus signal
	B22	D11	I/O	0/3.3 V DC (pulse)	Data bus signal
	A23	D10	I/O	0/3.3 V DC (pulse)	Data bus signal
	B23	D9	I/O	0/3.3 V DC (pulse)	Data bus signal
	A24	D8	I/O	0/3.3 V DC (pulse)	Data bus signal
	B24	D7	I/O	0/3.3 V DC (pulse)	Data bus signal
	A25	GND	-	-	Ground
	B25	D6	I/O	0/3.3 V DC (pulse)	Data bus signal
	A26	D5	I/O	0/3.3 V DC (pulse)	Data bus signal
	B26	D4	I/O	0/3.3 V DC (pulse)	Data bus signal
	A27	D3	I/O	0/3.3 V DC (pulse)	Data bus signal
	B27	D2	I/O	0/3.3 V DC (pulse)	Data bus signal
	A28	D1	I/O	0/3.3 V DC (pulse)	Data bus signal
	B28	D0	I/O	0/3.3 V DC (pulse)	Data bus signal
	A29	GND	-	-	Ground
	B29	NC	-	-	Not used
	A30	NC	-	-	Not used
	B30	NC	-	-	Not used
YC41	1	+24V6	0	DC24V	24 V DC power output to CONFM
Connected to controller fan motor	2	CONTFANDRN	0	DC0V/24V (pulse)	CONFM driving control signal
YC100	1	VBUS	O	5 V DC	5 V DC power output
Connected to operation panel PWB	2	DATA-	I/O	-	USB data signal
	3	DATA+	I/O	-	USB data signal
	4	NC	-	-	Not used
	5	GND	-	-	Ground

TONER
www.tonerplus.com.ua

Connector	Pin	Signal	I/O	Voltage	Description
YC101	1	GND	-	-	Ground
Connected to operation panel PWB	2	PANEL_STATUS	O	DC0V/3.3V	Operation panel status signal
	3	INT_POWERKEY_N	O	DC0V/3.3V	Power key?On/Off
	4	PANEL_RESET	O	DC0V/3.3V	Reset signal
	5	AUDIO	O	Analog	Audio output signal
	6	LIGHTOFF_POWERON	O	DC0V/3.3V	Sleep return signal
	7	SHUTDOWN	O	DC0V/3.3V	24V down signal
	8	LED_PROCESSIING_N	O	DC0V/3.3V	Processing LED control signal
	9	LED_ATTENSION_N	O	DC0V/3.3V	Attention LED control signal
	10	LED_MEMORY_N	O	DC0V/3.3V	Memory LED control signal
	11	SUSPEND_POWER	O	DC3.3V	3.3 V DC power output to OPPWB
	12	ENERGY_SAVE	O	DC0V/3.3V	Energy save signal
	13	BEEP_POWERON	O	DC0V/3.3V	Sleep return signal
YC102	1	+5V2	O	DC5V	5 V DC power output to OPPWB
Connected to operation panel PWB	2	+5V2	O	DC5V	5 V DC power output to OPPWB
	3	+5V2	O	DC5V	5 V DC power output to OPPWB
	4	GND	-	-	Ground
	5	GND	-	-	Ground
	6	GND	-	-	Ground
	7	NC	-	-	Not used
YC107	1	VBUS	O	5 V DC	5 V DC power output
Connected to USB	2	DATA-	I/O	-	USB data signal
	3	DATA+	I/O	-	USB data signal
	4	GND	-	-	Ground

TONER
www.tonerplus.com.ua

Connector	Pin	Signal	I/O	Voltage	Description
YC108	1	VBUS	O	DC5V	5 V DC power output
Connected to IC card reader	2	DATA-	I/O	-	USB data signal
	3	DATA+	I/O	-	USB data signal
	4	NC	-	-	Not used
	5	GND	-	-	Ground
YC110	1	TCT	O	3.3 V DC	3.3 V DC power output
Connected to ethernet	2	TD+	O	0/3.3 V DC (pulse)	Transmission data
	3	TD-	O	0/3.3 V DC (pulse)	Transmission data
	4	RD+	I	0/3.3 V DC (pulse)	Received data
	5	RD-	I	0/3.3 V DC (pulse)	Received data
	6	RCT	O	3.3 V DC	3.3 V DC power output
	7	100B_LED_K	-	-	100 Base/10 Base display
	8	100B_LED_A	-	-	100 Base/10 Base display
	9	LINK_LED_K	-	-	LINK LED
	10	LINK_LED_A	-	-	LINK LED
YC119	U1	VBUS	O	5 V DC	5 V DC power output
Connected to USB	U2	DATA-	I/O	-	USB data signal
	U3	DATA+	I/O	-	USB data signal
	U4	GND	-	-	Ground
YC215	1	+24V5	I	24 V DC	24 V DC power from EPWB
Connected to engine PWB	2	+5V1	I	5 V DC	5 V DC power from EPWB
	3	+5V1	I	5 V DC	5 V DC power from EPWB
	4	GND	-	-	Ground
	5	+5V1	I	5 V DC	5 V DC power from EPWB
	6	GND	-	-	Ground
	7	GND	-	-	Ground
	8	GND	-	-	Ground
	9	+24V4	I	24 V DC	24 V DC power from EPWB
YC216	1	+3.3V	-	3.3 V DC	3.3 V DC power to PDPWB
Connected to PD PWB	2	PDN	I	0/5 V DC (pulse)	Horizontal synchronizing signal
	3	GND	-	-	Ground
YC1001	1	+24V1	I	24 V DC	24 V DC power from CPWB-L
Connected to connect-L PWB	2	NC	-	-	Not used
	3	GND	-	-	Ground

TONER
www.tonerplus.com.ua

Connector	Pin	Signal	I/O	Voltage	Description
YC1004	1	SCMOT1A	O	0/24 V DC (pulse)	ISUM drive control signal
Connected to ISU motor	2	SCMOT2B	O	0/24 V DC (pulse)	ISUM drive control signal
	3	SCMOT1B	O	0/24 V DC (pulse)	ISUM drive control signal
	4	SCMOT2A	O	0/24 V DC (pulse)	ISUM drive control signal
YC1008	1	MOT1A	O	0/24 V DC (pulse)	DPPFM drive control signal
Connected to DP drive PWB	2	MOT2A	O	0/24 V DC (pulse)	DPPFM drive control signal
	3	MOT1B	O	0/24 V DC (pulse)	DPPFM drive control signal
	4	MOT2B	O	0/24 V DC (pulse)	DPPFM drive control signal
	5	+24V6	O	24 V DC	24 V DC power to PDPWB
	6	GND	-	-	Ground
YC1009	1	FEEDCL	O	0/24 V DC	DPPFCL: On/Off
Connected to DP drive PWB	2	REVSOL	O	0/24 V DC	DPSBSOL: On/Off
	3	PRESOLN	O	0/24 V DC	DPPRSOL: On (Press)/Off
	4	RELSOLN	O	0/24 V DC	DPPRSOL: On (Release)/Off
	5	DPDETN	I	0/3.3 V DC	DP set signal
	6	OPSWN	I	0/3.3 V DC	DPOCS: On/Off
	7	ORGSWN	I	0/3.3 V DC	DPOS: On/Off
	8	TIMSWN	I	0/3.3 V DC	DPTS: On/Off
	9	GND	-	-	Ground
	10	+3.3V	O	3.3 V DC	3.3 V DC power to DPDPWB

TONER
www.tonerplus.com.ua

2-3-4 Connect-L PWB

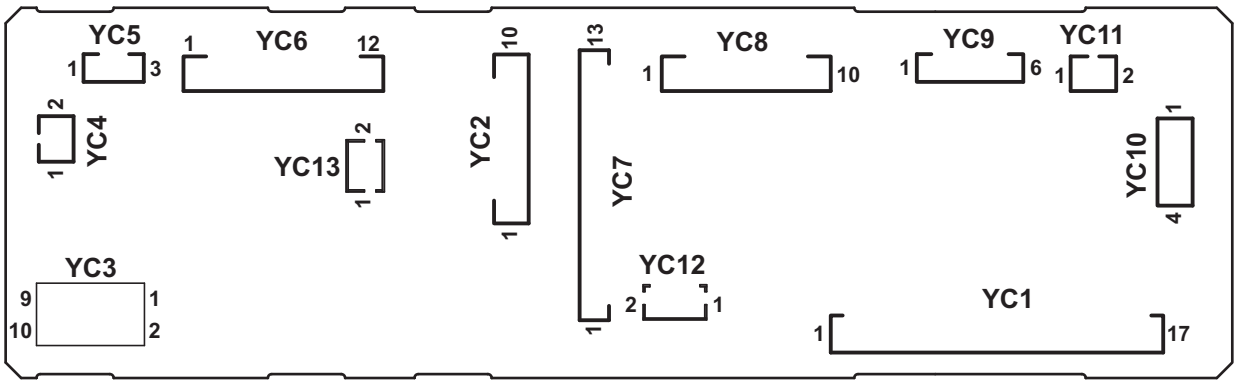

Figure 2-3-4 Connect-L PWB silk-screen diagram

TONER
www.tonerplus.com.ua

Connector	Pin	Signal	I/O	Voltage	Description
YC1	1	+24V2	I	24 V DC	24 V DC power from PSPWB (via ILSW)
Connected to power source PWB	2	+24V2	I	24 V DC	24 V DC power from PSPWB (via ILSW)
	3	GND	-	-	Ground
	4	GND	-	-	Ground
	5	GND	-	-	Ground
	6	GND	-	-	Ground
	7	+24V2	I	24 V DC	24 V DC power from PSPWB (via ILSW)
	8	SWSLEEPN	O	0/5 V DC	Sleep mode signal: On/Off
	9	ZCROSS	I	0/5 V DC (pulse)	Zero-cross signal
	10	HEATONN1	O	0/5 V DC	FH: On/Off
	11	N.C.	-	-	Not used
	12	HANDSN	I	0/5 V DC	MPPS: On/Off
	13	HUNITN	I	0/5 V DC	EVFSW: On/Off
	14	+24V1	I	24 V DC	24 V DC power from PSPWB
	15	+5V1	I	5 V DC	5 V DC power from PSPWB
	16	+5V1	I	5 V DC	5 V DC power from PSPWB
	17	+5V1	I	5 V DC	5 V DC power from PSPWB
YC2	1	+24V1	O	24 V DC	24 V DC power to paper feeder
Connected to paper feeder	2	OPSCLK	O	0/5 V DC (pulse)	Serial communication clock signal
	3	+5V1	O	5 V DC	5 V DC power to paper feeder
	4	OPRDYN	I	0/5 V DC	Paper feeder ready signal
	5	OPSEL0	O	0/5 V DC	Paper feeder select signal (0)
	6	OPSEL1	O	0/5 V DC	Paper feeder select signal (1)
	7	OPSEL2	O	0/5 V DC	Paper feeder select signal (2)
	8	OPSDI	I	0/5 V DC (pulse)	Serial communication data signal input
	9	OPSDO	O	0/5 V DC (pulse)	Serial communication data signal output
	10	GND	-	-	Ground
YC3	1	GND	-	-	Ground
Connected to drum PWB	2	ERASER	O	0/24 V DC	CL: On/Off
	3	GND	-	-	Ground
	4	WTNLEDN	O	0/5 V DC (pulse)	WTS (light emission) control signal
	5	EECLK	O	0/5 V DC (pulse)	DRPWB clock signal
	6	WTNFUL	I	0/5 V DC (pulse)	WTS detection signal
	7	EEDIO	I/O	0/5 V DC (pulse)	DRPWB EEPROM data signal
	8	+5V2	O	5 V DC	5 V DC power to DRPWB
	9	GND	-	-	Ground
	10	+5V2	O	5 V DC	5 V DC power to DRPWB

TONER
www.tonerplus.com.ua

Connector	Pin	Signal	I/O	Voltage	Description
YC4	1	+24V1	O	24 V DC	24 V DC power to LFM
Connected to left fan motor	2	LFANDRN	O	0/12/24 V DC	LFM: Full speed/Half speed/Off
YC5	1	GND	-	-	Ground
Connected to paper full sensor	2	FDPFULN	I	0/5 V DC	PFS: On/Off
	3	+5V2	O	5 V DC	5 V DC power to PFS
YC6	1	WTNFUL	O	0/5 V DC (pulse)	WTS detection signal
Connected to engine PWB	2	LFANDRN	I	0/12/24 V DC	LFM: Full speed/Half speed/Off
	3	EECLK	I	0/5 V DC (pulse)	DRPWB clock signal
	4	EEDIO	I/O	0/5 V DC (pulse)	DRPWB EEPROM data signal
	5	ERASER	I	24/0 V DC	CL: On/Off
	6	WTNLEDN	I	0/5 V DC (pulse)	WTS (light emission) control signal
	7	OPSCLK	I	0/5 V DC (pulse)	Serial communication clock signal
	8	OPRDYN	O	0/5 V DC	Paper feeder ready signal
	9	OPSEL0	I	0/5 V DC	Paper feeder select signal (0)
	10	OPSEL1	I	0/5 V DC	Paper feeder select signal (1)
	11	OPSEL2	I	0/5 V DC	Paper feeder select signal (2)
	12	OPSDI	O	0/5 V DC (pulse)	Serial communication data signal output
YC7	1	OPSDO	I	0/5 V DC (pulse)	Serial communication data signal output
Connected to engine PWB	2	+24V2	O	24 V DC	24 V DC power to EPWB (via ILSW)
	3	+24V2	O	24 V DC	24 V DC power to EPWB (via ILSW)
	4	GND	-	-	Ground
	5	GND	-	-	Ground
	6	GND	-	-	Ground
	7	GND	-	-	Ground
	8	GND	-	-	Ground
	9	+24V1	O	24 V DC	24 V DC power to EPWB
	10	+5V1	O	5 V DC	5 V DC power to EPWB
	11	+5V1	O	5 V DC	5 V DC power to EPWB
	12	+5V1	O	5 V DC	5 V DC power to EPWB
	13	+5V2	I	5 V DC	5 V DC power from EPWB

TONER
www.tonerplus.com.ua

Connector	Pin	Signal	I/O	Voltage	Description
YC8	1	TNLEVEL	O	Analog	TS detection voltage
Connected to engine PWB	2	TNMOT	I	0/24 V DC	TM: On/Off
	3	CASET	O	Analog	CSSW detection voltage
	4	SWFAN	I	0/24 V DC	PSFM: On/Off
	5	HPAP	O	0/5 V DC	EVFSW: On/Off
	6	HANDSN	O	0/5 V DC	MPPS: On/Off
	7	SWSLEEPN	I	0/5 V DC	Sleep mode signal: On/Off
	8	ZCROSS	O	0/5 V DC (pulse)	Zero-cross signal
	9	HEATONN1	I	0/5 V DC	FH: On/Off
	10	NC	-	-	Not used
YC9	1	RFDATA	I/O	0/5 V DC (pulse)	RFID data signal
Connected to developing PWB	2	TNMOT	O	0/24 V DC	TM: On/Off
	3	TNLEVEL	I	Analog	TS detection voltage
	4	+5V2	O	5 V DC	5 V DC power to DEVPWB
	5	GND	-	-	Ground
	6	RFCLK	O	0/5 V DC (pulse)	RFID clock signal
YC10	1	CAS2	I	0/5 V DC	CSSW: On/Off
Connected to cassette size switch	2	CAS1	I	0/5 V DC	CSSW: On/Off
	3	CASET	I	Analog	CSSW detection voltage
	4	CAS0	I	0/5 V DC	CSSW: On/Off
YC11	1	+24V1	O	24 V DC	24 V DC power to PSFM
Connected to power source fan motor	2	SWFAN	O	0/24 V DC	PSFM: On/Off
YC12	1	+24V1	O	24 V DC	24 V DC power to MPWB
Connected to main PWB	2	GND	-	-	Ground
YC13	1	RELAY	O	0/5 V DC	Relay mode signal: On/Off
Connected to relay PWB	2	GND	-	-	Ground

TONER
www.tonerplus.com.ua

2-3-5 Connect-R PWB

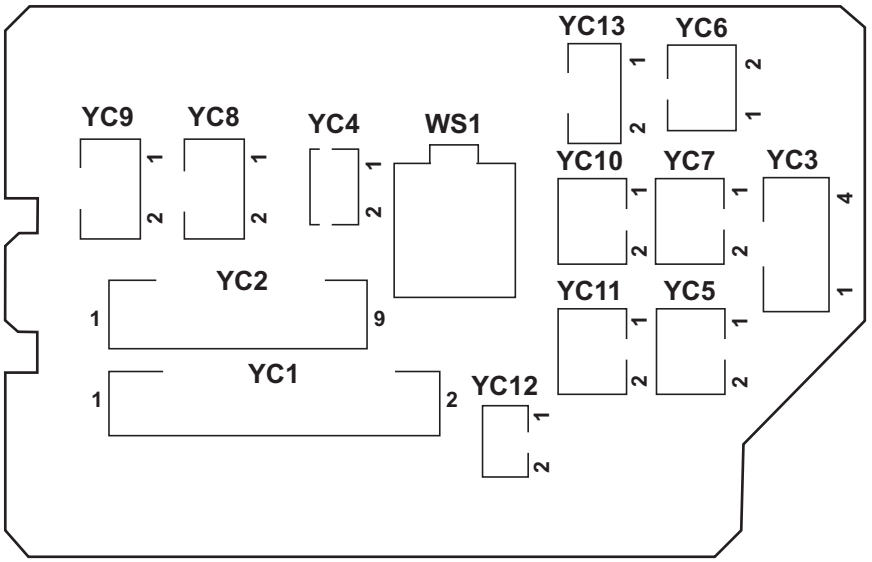

Figure 2-3-5 Connect-R PWB silk-screen diagram

TONER
www.tonerplus.com.ua

Connector	Pin	Signal	I/O	Voltage	Description
YC1	1	GND	-	-	Ground
Connected to engine PWB	2	OUTA1	I	0/24 V DC (pulse)	SBM drive control signal
	3	OUTA2	I	0/24 V DC (pulse)	SBM drive control signal
	4	OUTB1	I	0/24 V DC (pulse)	SBM drive control signal
	5	OUTB2	I	0/24 V DC (pulse)	SBM drive control signal
	6	MPFDRN	I	0/24 V DC	MPSOL: On/Off
	7	+24V1	I	24 V DC	24 V DC power from EPWB
	8	RFANDRN	I	0/12/24 V DC	RFM: Full speed/Half speed/Off
	9	AIRTEMP	O	Analog	TEMS detection voltage (temperature)
	10	+5V1	I	5 V DC	5 V DC power from EPWB
	11	WETCLK1	I	0/5 V DC (pulse)	TEMS clock signal
	12	WETCLK2	I	0/5 V DC (pulse)	TEMS clock signal
			O	Analog	TEMS detection voltage (humidity)
YC2	1	LMOTON	I	0/24 V DC	LM: On/Off
Connected to engine PWB	2	DUDRN	I	0/24 V DC	DUCL: On/Off
	3	DLPDRN	I	0/24 V DC	DEVSOL: On/Off
	4	MIDDRN	I	0/24 V DC	MCL: On/Off
	5	+24V2	I	24 V DC	24 V DC power from EPWB
	6	+24V2	I	24 V DC	24 V DC power from EPWB
	7	REGDRN	I	0/24 V DC	RCL: On/Off
	8	FEEDDRN	I	0/24 V DC	PFCL: On/Off
	9	EXITFAN	I	0/24 V DC	EFM: On/Off
YC3	1	OUTA1	O	0/24 V DC (pulse)	SBM drive control signal
Connected to switchback motor	2	OUTA2	O	0/24 V DC (pulse)	SBM drive control signal
	3	OUTB1	O	0/24 V DC (pulse)	SBM drive control signal
	4	OUTB2	O	0/24 V DC (pulse)	SBM drive control signal
YC4	1	+24V2	O	24 V DC	24 V DC power to DEVSOL
Connected to developing solenoid	2	DLPDRN	O	0/24 V DC	DEVSOL: On/Off
YC5	1	+24V2	O	24 V DC	24 V DC power to PFCL
Connected to paper feed clutch	2	FEEDDRN	O	0/24 V DC	PFCL: On/Off
YC6	1	+24V2	O	24 V DC	24 V DC power to RCL
Connected to registration clutch	2	REGDRN	O	0/24 V DC	RCL: On/Off

TONER
www.tonerplus.com.ua

Connector	Pin	Signal	I/O	Voltage	Description
YC7	1	+24V2	O	24 V DC	24 V DC power to MCL
Connected to middle clutch	2	MIDDRN	O	0/24 V DC	MCL: On/Off
YC8	1	LMOTON	O	0/24 V DC	LM: On/Off
Connected to lift motor	2	GND	-	-	Ground
YC9	1	+24V2	O	24 V DC	24 V DC power to DUCL
Connected to duplex clutch	2	DUDRN	O	0/24 V DC	DUCL: On/Off
YC10	1	+24V2	O	24 V DC	24 V DC power to MPSOL
Connected to MP solenoid	2	MPFDRN	O	0/24 V DC	MPSOL: On/Off
YC11	1	+24V1	O	24 V DC	24 V DC power to RFM
Connected to right fan motor	2	RFANDRN	O	0/12/24 V DC	RFM: Full speed/Half speed/Off
YC12	1	ATRTEMP	O	5 V DC	5 V DC power to FUSW
Connected to fuser unit switch	2	ATRTEMP2	I	0/5 V DC	FUSW: On/Off
YC13	1	+24V1	O	24 V DC	24 V DC power to EFM
Connected to eject fan motor	2	EXITFAN	O	0/24 V DC	EFM: On/Off

TONER
www.tonerplus.com.ua

2-3-6 DP drive PWB

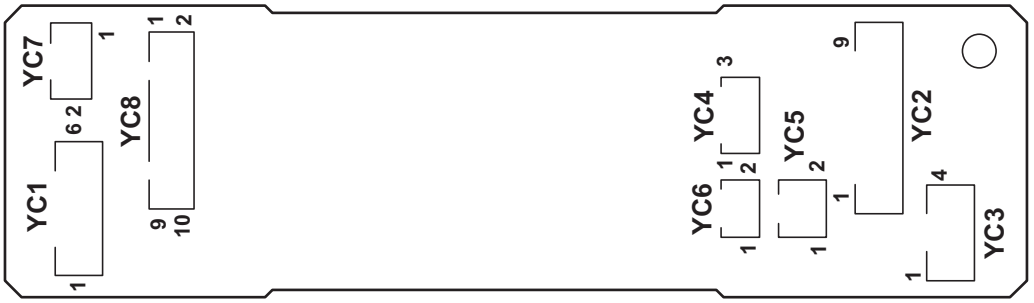

Figure 2-3-6 DP drive PWB silk-screen diagram

TONER
www.tonerplus.com.ua

Connector	Pin	Signal	I/O	Voltage	Description
YC1	1	MOT1A	I	0/24 V DC (pulse)	DPPFM drive control signal
Connected to main PWB	2	MOT2A	I	0/24 V DC (pulse)	DPPFM drive control signal
	3	MOT1B	I	0/24 V DC (pulse)	DPPFM drive control signal
	4	MOT2B	I	0/24 V DC (pulse)	DPPFM drive control signal
	5	+24V6	I	24 V DC	24 V DC power from MPWB
	6	GND	-	-	Ground
YC2	1	PILED	O	3.3 V DC	3.3 V DC power to DPOCS
Connected to DP open/ close sensor, DP original sensor and DP timing sensor	2	GND	-	-	Ground
	3	OPSWN	I	0/3.3 V DC	DPOCS: On/Off
	4	PILED	O	3.3 V DC	3.3 V DC power to DPOS
	5	GND	-	-	Ground
	6	ORGSWN	I	0/3.3 V DC	DPOS: On/Off
	7	PILED	O	3.3 V DC	3.3 V DC power to DPTS
	8	GND	-	-	Ground
	9	TIMSWN	I	0/3.3 V DC	DPTS: On/Off
YC3	1	DPMOT1A	O	0/24 V DC (pulse)	DPPFM drive control signal
Connected to DP paper feed motor	2	DPMOT2A	O	0/24 V DC (pulse)	DPPFM drive control signal
	3	DPMOT1B	O	0/24 V DC (pulse)	DPPFM drive control signal
	4	DPMOT2B	O	0/24 V DC (pulse)	DPPFM drive control signal
YC4	1	+24V6	O	24 V DC	24 V DC power to DPPRSOL
Connected to DP pressure solenoid	2	PRESOLN	O	0/24 V DC	DPPRSOL: ON (Press)/Off
	3	RELSOLN	O	0/24 V DC	DPPRSOL: On (Release)/Off
YC5	1	+24V6	O	24 V DC	24 V DC power to DPSBSOL
Connected to DP switch-back solenoid	2	REVSOL	O	0/24 V DC	DPSBSOL: On/Off
YC6	1	+24V6	O	24 V DC	24 V DC power to DPPFCL
Connected to DP paper feed clutch	2	FEEDCL	O	0/24 V DC	DPPFCL: On/Off

TONER
www.tonerplus.com.ua

Connector	Pin	Signal	I/O	Voltage	Description
YC8	1	+3.3V	I	3.3 V DC	3.3 V DC power from MPWB
Connected to main PWB	2	GND	-	-	Ground
	3	TIMSWN	O	0/3.3 V DC	DPTS: On/Off
	4	ORGSWN	O	0/3.3 V DC	DPOS: On/Off
	5	OPSWN	O	0/3.3 V DC	DPOCS: On/Off
	6	DPDETN	O	0/3.3 V DC	DP set signal
	7	RELSOLN	I	0/24 V DC	DPPRSOL: On (Release)/Off
	8	PRESOLN	I	0/24 V DC	DPPRSOL: ON (Press)/Off
	9	REVSOL	I	0/24 V DC	DPSBSOL: On/Off
	10	FEEDCL	I	0/24 V DC	DPPFCL: On/Off

TONER
www.tonerplus.com.ua

This page is intentionally left blank.

TONER
www.tonerplus.com.ua

2-4-1 Appendixes

(1) Wiring diagram

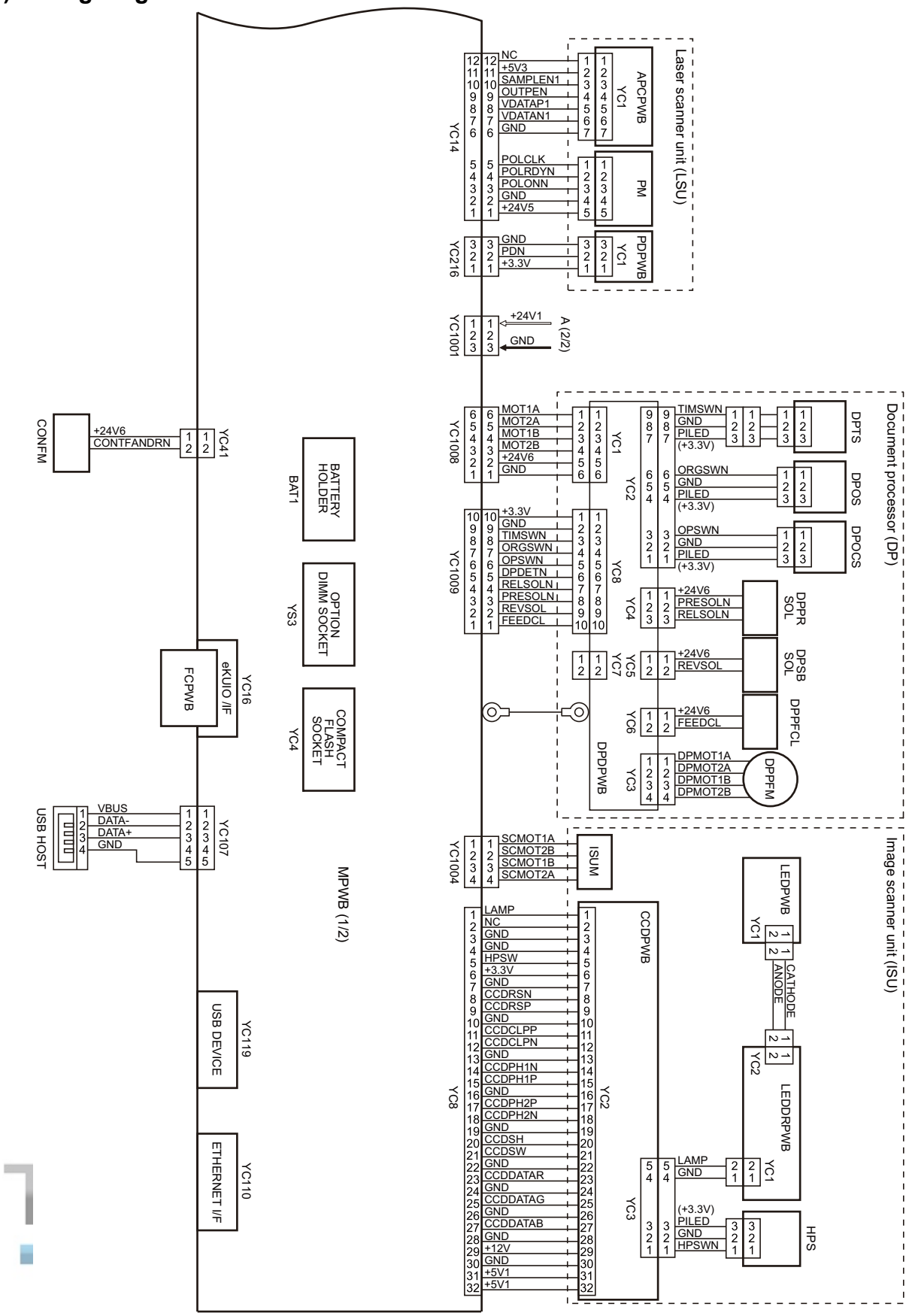

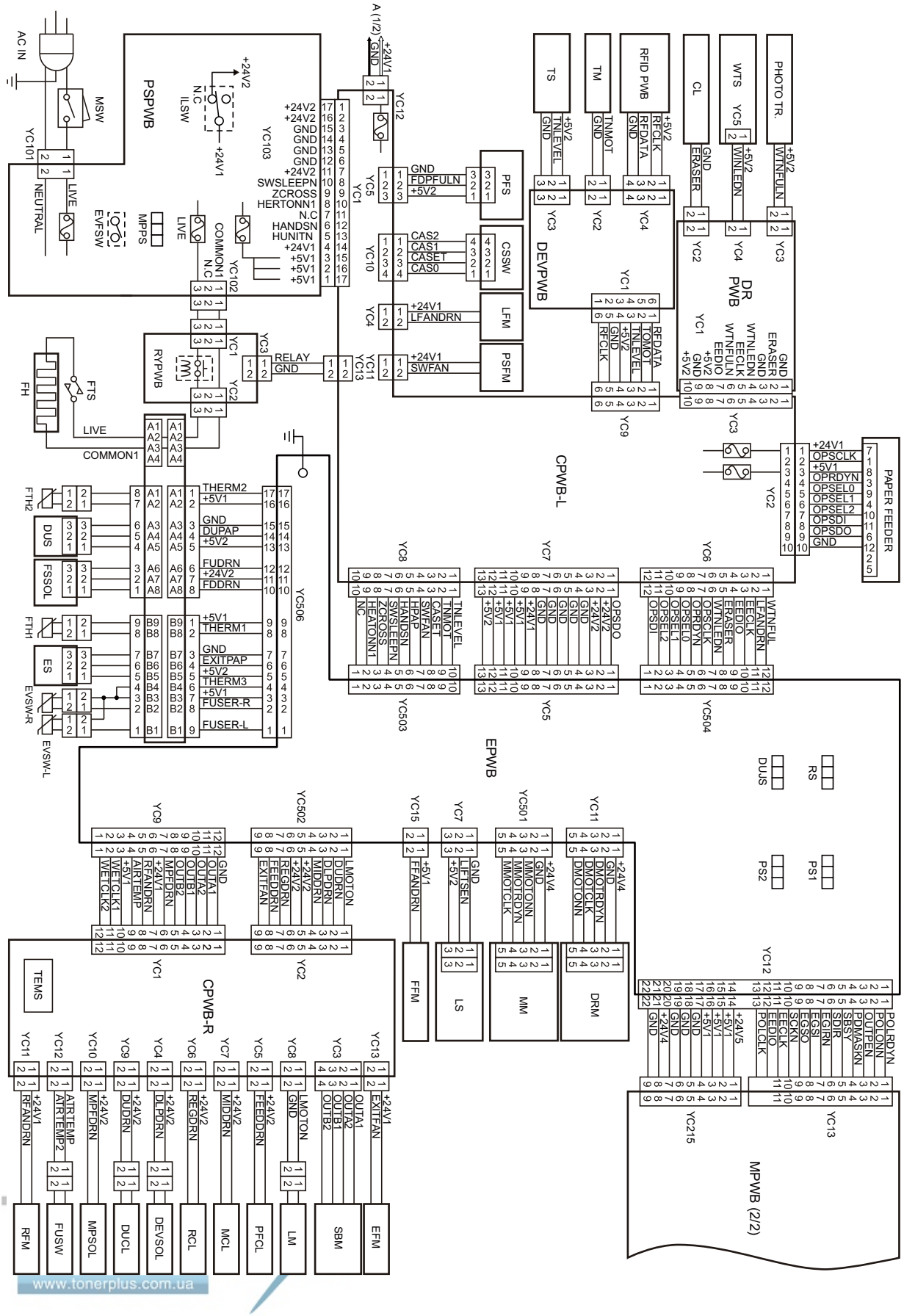

www.tonerplus.com.ua

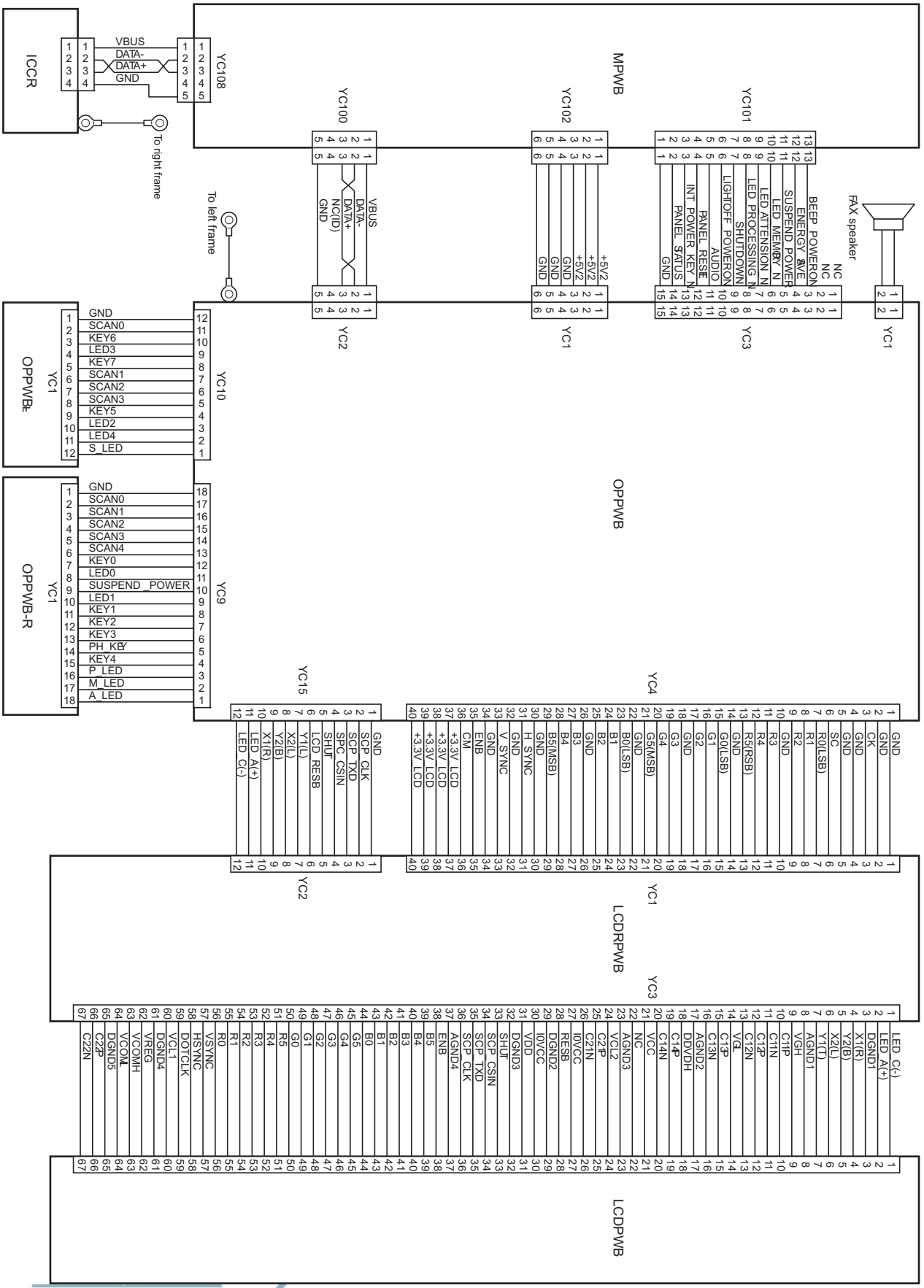
ICCR
VBUS
DATA-
DATA+
GND
YC108
To right frame
To left frame
YC100
VBUS
DATA-
DATA+
NC(ID)
GND
MPWB
YC102
+5V2
+5V2
+5V2
GND
GND
GND
GND
YC101
BEEP_POWERON
ENERGY_SAVE
SUSPEND_POWER
LED_MEMORY_N
LED ATTENSION_N
LED PROCESSING_N
SHUTDOWN
LIGHTOFF_POWERON
AUDIO
PANEL_RESET
INT_POWER_KEY_N
PANEL_STATUS
GND
NC
NC
FAX speaker
YC2
YC1
YC3
YC1
OPPWB-L
GND
SCAN0
KEY6
LED3
KEY7
SCAN1
SCAN2
SCAN3
KEY5
LED2
LED4
S_LED
YC10
OPPWB-R
GND
SCAN0
SCAN1
SCAN2
SCAN3
SCAN4
KEY0
LED0
SUSPEND_POWER
LED1
KEY1
KEY2
KEY3
PH_KEY
KEY4
P_LED
M_LED
A_LED
YC9
OPPWB
YC15
GND
SCP_CLK
SCP_TXD
SPC_CSIN
SHUT
LCD_RESB
Y1(L)
X2(L)
Y2(B)
X1(R)
LED A(+)
LED C(-)
YC4
GND
GND
CK
GND
GND
SC
R0(LSB)
R1
R2
GND
R3
R4
R5(RSB)
GND
G0(LSB)
G1
G2
GND
G3
G4
G5(MSB)
GND
B0(LSB)
B1
B2
GND
B3
B4
B5(MSB)
GND
H_SYNC
GND
V_SYNC
GND
ENB
CM
+3.3V_LCD
+3.3V_LCD
+3.3V_LCD
+3.3V_LCD
YC2
YC1
LCDRPWB
YC3
LED C(-)
LED A(+)
DGND1
X1(R)
Y2(B)
X2(L)
Y1(T)
AGND1
VGH
C11P
C11N
C12P
C12N
VGL
C13P
C13N
AGND2
DDVDH
C14P
C14N
VCC
NC
AGND3
VCL2
C21P
C21N
IOVCC
IOVCC
RESB
DGND2
IOVCC
VDD
DGND3
SHUT
SCP_CSIN
SCP_TXD
SCP_CLK
AGND4
ENB
B5
B4
B3
B2
B1
B0
G5
G4
G3
G2
G1
G0
R5
R4
R3
R2
R1
R0
VSYNC
HSYNC
DOTCLK
VCL1
DGND4
VREG
VCOMH
VCOML
DGND5
C22P
C22N
LCDPWB

(2) Repetitive defects gauge

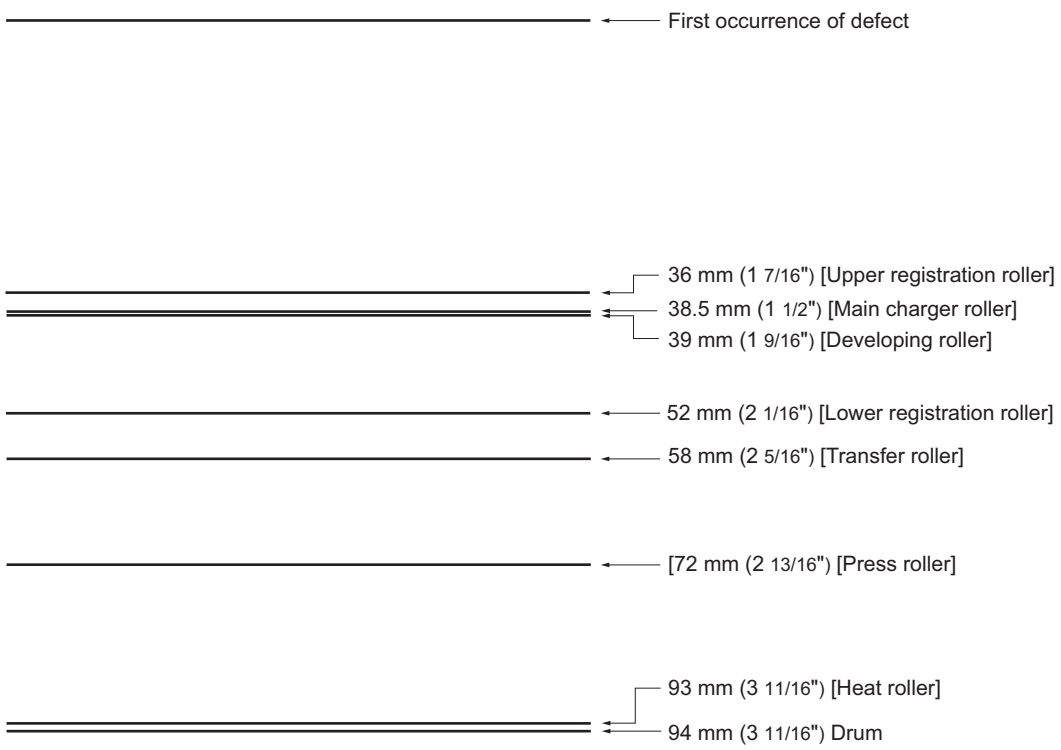

TONER
www.tonerplus.com.ua

(3) Maintenance kits

Maintenance part name		Parts No.	Alternative part No.
Name used in service	Name used in parts list		
Maintenance kit (300,000 pages)	MK-350 B/MAINTENANCE KIT (OPTION)	1702LX7US0 1702LX8AS0 1702LX8NL0	072LX7US 072LX8AS 072LX8NL
Drum unit	DK-320	-	-
Developing unit	DV-350(E) B DV-352(U) B DV-354(AO) B	- - -	- - -
Fuser unit	FK-350(E) FK-350(U)	- -	- -
Retard roller assembly	RETARD ROLLER ASSY	-	-
Paper feed assembly	FEED HOLDER ASSY	-	-
Separation brush unit	DC BRUSH ASSY	-	-
Transfer roller	ROLLER TRANSFER ASSY	-	-
Maintenance kit (150,000 pages)	MK-370/MAINTENANCE KIT (OPTION)	1702LX0UN0	072LX0UN
DP forwarding pulley assembly	-	-	-
DP separation pad assembly	-	-	-

TONER
www.tonerplus.com.ua

(4) Firmware Environment Commands

The printer maintains a number of printing parameters in its memory. There parameters may be changed permanently with the FRPO (Firmware RePrOgram) commands.
This section provides information on how to use the FRPO command and its parameters using examples.

Using FRPO Commands for Reprogramming Firmware

The current settings of the FRPO parameters are listed as optional values on the service status page.

Note: Before changing any FRPO parameter, print out a service status page, so you will know the parameter values before the changes are made. To return FRPO parameters to their factory default values, send the FRPO INIT (FRPO-INITialize) command.(!R! FRPO INIT; EXIT;)

The FRPO command is sent to the printer in the following sequence:
!R! FRPO parameter, value; EXIT;
Example: Changing emulation mode to PC-PR201/65A
!R! FRPO P1, 11; EXIT;

FRPO Parameters

Environment	Parameter	Values	Factory setting
Top margin	A1 A2	Integer value in inches Fraction value in 1/100 inches	0 0
Left margin	A3 A4	Integer value in inches Fraction value in 1/100 inches	0 0
Page length	A5 A6	Integer value in inches Fraction value in 1/100 inches	16 61
Page width	A7 A8	Integer value in inches Fraction value in 1/100 inches	16 61
Default pattern resolution	B8	0: 300 dpi 1: 600 dpi	0
Page orientation	C1	0: Portrait 1: Landscape	0
Default font No. *	C2 C3 C5	Middle two digits of power-up font Last two digits of power-up font First two digits of power-up font	0 0 0
PCL font switch	C8	0:HP compatibility mode (Characters higher than 127 are not printed.) 32:Conventional mode (Characters higher than 127 are printed. Supported symbol sets: ISO-60 Norway [00D], ISO-15 Italian [00I], ISO-11 Sweden [00S], ISO-6 ASCII [00U], ISO-4 U.K. [01E], ISO-69 France [01F], ISO-21 Germany [01G], ISO-17 Spain [02S], Symbol [19M][a])	0
Print density	D4	Number from 1 (Light) to 5 (Dark)	3
Total host buffer size	H8	0 to 99 in units of the size defined by FRPO S5	5
Form feed time-out value	H9	Value in units of 5 seconds (0 to 99).	1

TONER
www.tonerplus.com.ua

Environment	Parameter	Values	Factory setting
Setting of AGFA	I6	Place of 0: Setting of memory of rasterizer of AGFA Place of ten: Font cache mode of FM	0
KIR mode	N0	0: Off 2: On	2
Duplex binding	N4	0: Off 1: Long edge 2: Short edge	0
Sleep timer time-out time	N5	1 to 240 minutes [0: Off]	1
Ecoprint level	N6	0:Off 2:On	0
Function switch in Duplex mode	N7	0: It skips to next page 1: Disregard	0
Default emulation mode	P1	0: Line Printer 1: IBM Proprinter X24E 2: Diablo 630 5: Epson LQ-850 6: PCL 6 9: KPDL	6
Carriage-return action *	P2	0: Ignores 0x0d 1: Carriage-return 2: Carriage-return + linefeed	1
Linefeed action *	P3	0: Ignores 0x0d 1: Linefeed 2: Linefeed + carriage-return	1
Automatic emulation sensing (For KPDL3)	P4	0:AES disabled 1:AES enabled	0
Alternative emulation (For KPDL3)	P5	Same as the P1 values except that 9 is ignored.	6
Automatic emulation switching trigger (For KPDL3)	P7	0: Page eject commands 1: None 2: Page eject and Prescribe EXIT 3: Prescribe EXIT 4: Formfeed (^L) 6: Page eject, Prescribe EXIT and formfeed 10: Page eject commands; if AES fails, resolves to KPDL	10
Command recognition character	P9	ASCII code of 33 to 126	82 (R)

TONER
www.tonerplus.com.ua

Environment	Parameter	Values	Factory setting
Default paper size	R2	0: Size of the default paper cassette (See R4.) 1: Monarch (3-7/8 × 7-1/2 inches) 2: Business (4-1/8 × 9-1/2 inches) 3: International DL (11 × 22 cm) 4: International C5 (16.2 × 22.9 cm) 5: Executive (7-1/4 × 10-1/2 inches) 6: US Letter (8-1/2 × 11 inches) 7: US Legal (8-1/2 × 14 inches) 8: A4 (21.0 × 29.7 cm) 9: JIS B5 (18.2 × 25.7 cm) 13: ISO A5 14: A6 (10.5 × 14.8 cm) 15: JIS B6 (12.8 × 18.2 cm) 16: Commercial #9 (3-7/8 × 8-7/8 inches) 17: Commercial #6 (3-5/8 × 6-1/2 inches) 18: ISO B5 (17.6 × 25 cm) 19: Custom (11.7 × 17.7 inches)f 20: B4 → A4 reduces 21: A3 → A4 reduces 22: A4 → A4 98% reduces 23: Stock form → A4 reduces 31: Hagaki (10 × 14.8 cm)f 32: Ofuku-Hagaki (14.8 × 20 cm)f 33: Officio II 40: 16K 50: Statement 51: Folio 52: Youkei 2 53: Youkei 4	0
Margin setting of emulation	R3	0:Interchangeable to HP 1:All PCL print area	0
Default cassette	R4	0: Multi-purpose tray 1 1: Cassette 1 2: Cassette 2 3: Cassette 3 4: Cassette 4	1
MP tray paper size	R7	Same as the R2 values except: 0	8 (A4)
A4/letter equation	S4	0:Off 1:On	0
Host buffer size	S5	0: 10kB (x H8) 1: 100kB (x H8) 2: 1024kB (x H8)	1
RAM disk size	S6	1 to 1024 MB	400
RAM disk mode	S7	0: Off 1: On	0

TONER
www.tonerplus.com.ua

Environment	Parameter	Values	Factory setting
Wide A4	T6	0:Off 1:On	0
Line spacing *	U0	Lines per inch (integer value)	6
Line spacing *	U1	Lines per inch (fraction value)	0
Character spacing *	U2	Characters per inch (integer value)	10
Character spacing *	U3	Characters per inch (fraction value)	0
KPDL interpreter mode according to I/F	U4	0: ASCII (text mode) 1: Binary (binary mode)	1
Country code	U6	0: US-ASCII 1: France 2: Germany 3: UK 4: Denmark 5: Sweden 6: Italy 7: Spain 8: Japan 9: US Legal 10: IBM PC-850 (Multilingual) 11: IBM PC-860 (Portuguese) 12: IBM PC-863 (Canadian French) 13: IBM PC-865 (Norwegian) 14: Norway 15: Denmark 2 16: Spain 2 17: Latin America 21: US ASCII (U7=50 SET) 77: HP Roman-8 (U7=52 SET)	41
Code set at power up in daisywheel emulation	U7	0: Same as the default emulation mode (P1) 1: IBM 6: IBM PC-8 50: US ASCII (U6=21 SET) 52: HP Roman-8 (U6=77 SET)	53
Font pitch for fixed pitch scalable font	U8	Integer value in cpi: 0 – 99	10
	U9	Fraction value in 1/100 cpi: 0 – 99	0
Font height for the default scalable font *	V0	Integer value in 100 points: 0–9	0
	V1	Integer value in points: 0–99	12
	V2	Fraction value in 1/100 points: 0, 25, 50, 75	0
Default scalable font *	V3	Name of typeface of up to 32 characters, enclosed with single or double quotation marks	Courier

TONER
www.tonerplus.com.ua

Environment	Parameter	Values	Factory setting
Default weight (courier and letter Gothic)	V9	0:Courier = darkness Letter Gothic = darkness 1:Courier = regular letter Gothic = darkness 4:Courier = darkness Letter Gothic = regular 5:Courier = regular letter Gothic = regular	5
Paper type for the MP tray	X0	1: Plain 1 2: Transparency 3: Preprinted 4: Label 5: Bond 6: Recycle 7: Vellum 9: Letterhead 10: Color 11: Prepunched 12: Envelope 13: Cardstock 16: Thick 17: High Quality 21: Custom1 22: Custom2 23: Custom3 24: Custom4 25: Custom5 26: Custom6 27: Custom7 28: Custom8	1
Paper type for paper cassettes 1	X1	1: Plain 3: Preprinted 5: Bond 6: Recycled 9: Letterhead 10: Color 11: Prepunched 17: High Quality 21: Custom1 22: Custom2 23: Custom3 24: Custom4 25: Custom5 26: Custom6 27: Custom7 28: Custom8	1

TONER
www.tonerplus.com.ua

Environment	Parameter	Values	Factory setting
Paper type for paper cassettes 2 to 4	X2 X3 X4	1: Plain 3: Preprinted 5: Bond 6: Recycled 9: Letterhead 10: Color 11: Prepunched 17: High Quality 21: Custom1 22: Custom2 23: Custom3 24: Custom4 25: Custom5 26: Custom6 27: Custom7 28: Custom8	1
PCL paper source	X9	0: Performs paper selection depending on media type. 1: Performs paper selection depending on paper sources.	0
Automatic continue for ‘Press GO’	Y0	0:Off 1:On	0
Automatic continue timer	Y1	number from 0 to 99 in increments of 5 seconds	6 (30secons)
Error message for device error	Y3	0:Not Detect 1:Detect	127
Duplex operation for specified paper type (Prepunched, Preprintedand Letter-head)	Y4	0:Off 1:On	0
Default operation for PDF direct printing	Y5	0: Enlarges or reduces the image to fit in the current paper size. Loads paper from the current paper cassette. 1: Through the image. Loads paper which is the same size as the image. 2: Enlarges or reduces the image to fit in the current paper size. Loads Letter, A4 size paper depending on the image size. 3: Through the image. Loads Letter, A4 size paper depending on the image size. 8: Through the image. Loads paper from the current paper cassette. 9: Through the image. Loads Letter, A4 size paper depending on the image size. 10: Enlarges or reduces the image to fit in the current paper size. Loads Letter, A4 size paper depending on the imagesize.	0

TONER
www.tonerplus.com.ua

a. Characters higher than 127 are printed regardless of the C8 value. However, setting C8 to 0 does not print character code 160.

*. Ignored in some emulation modes.

(5) Maintenance Commands

This section provides information on how to use the maintenance command and its parameters using examples.

Adjusting the print start timing (alternative command for the maintenance mode U034)

Description
Adjusts the leading edge registration or left edge.
Purpose
Make the adjustment if there is a regular error between the leading edges of the copy image and original.
Make the adjustment if there is a regular error between the left edges of the copy image and original.

Format	!R! KCFG“PFRC”,#1 ,#2 ,#3;	
Parameter	#1	Paper source number 0: MP tray 2-6 : Cassette2-6 100: Duplex (e.g. landscape images short-edge bind) 200: Rotated duplex (e.g. portrait images long-edge bind)
	#2	Edge to adjust 1: Leading edge 2: Left edge
	#3	Adjustable range (-128 to +127) number of dot in 600dpi

Example: Set the leading edge of MP tray to +30 dots
!R! KCFG “PFRC”,0,1,30;EXIT;

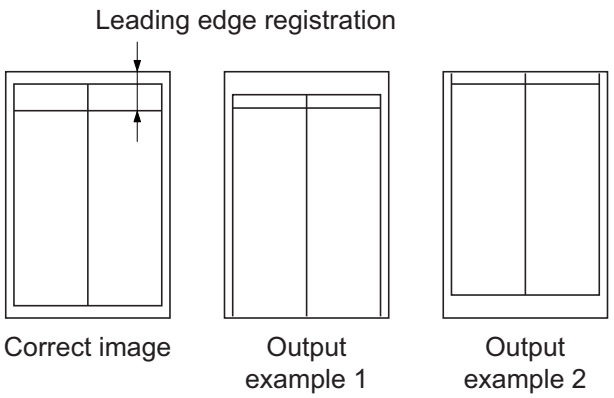

TONER
www.tonerplus.com.ua

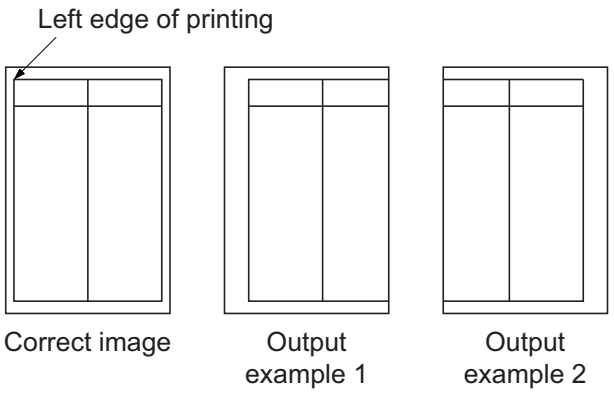

TONER
www.tonerplus.com.ua

Adjusting the scanner magnification (alternative command for the maintenance mode U065)

Description
Adjusts the magnification of the original scanning.
Purpose
Make the adjustment if the magnification in the main scanning direction is incorrect.
Make the adjustment if the magnification in the auxiliary scanning direction is incorrect.

Format	!R! KCFG “SCAN”,8, #1,#2;EXIT;	
Parameter	#1	1: Y SCAN ZOOM Scanner magnification in the main scanning direction 2: X SCAN ZOOM Scanner magnification in the auxiliary scanning direction
	#2	#1=1: Adjustable range: -32 to 127 (in 0.1% increment) (0: default) #2=2 : Adjustable range: -25 to 25 (in 0.1% increment) (0: default)

Example: Y SCAN ZOOM set to 55, X SCAN ZOOM set to 10
!R! KCFG “SCAN”,8,1,55; KCFG “SCAN”,8,2,10;EXIT;

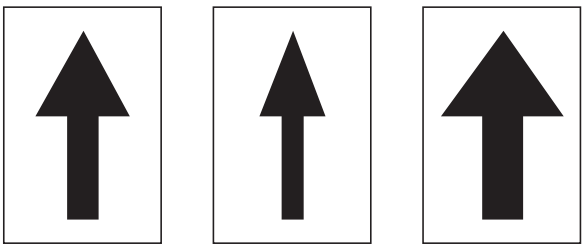

Original | Copy example 1 | Copy example 2

Magnified in the main scanning direction

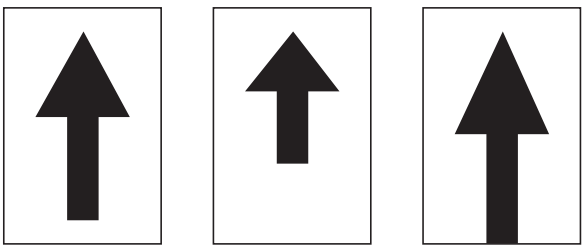

Original | Copy example 1 | Copy example 2

Magnified in the auxiliary scanning direction

TONER
www.tonerplus.com.ua

Adjusting the scanner leading edge registration (alternative command for the maintenance U066)

Description
Adjusts the scanner leading edge registration of the original scanning.
Purpose
Make the adjustment if there is a regular error between the leading edges of the copy image and original.

Format	!R! KCFG “SCAN”,5,#1,#2;EXIT;	
Parameter	#1	1: Scanner leading edge registration 2: Scanner leading edge registration of rotated scan
	#2	Adjustable range: -45 to 45 (in 0.086mm increment) (0: default)

Example: Scanner leading edge registration set to 10 to increase 0.86mm
!R! KCFG “SCAN”,5,1,”10”;EXIT;

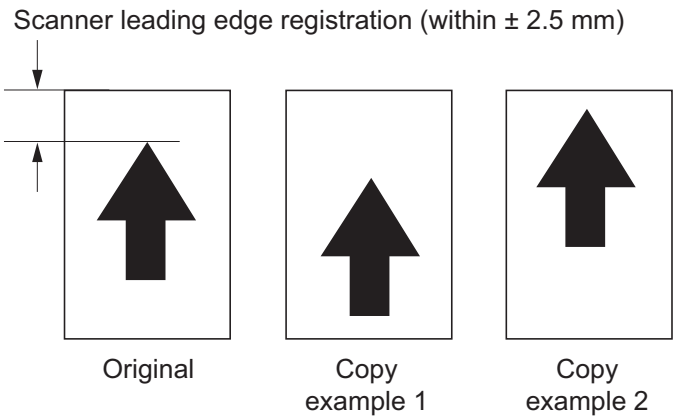

TONER
www.tonerplus.com.ua

Adjusting the scanner center line (alternative command for the maintenance mode U067)

Description
Adjusts the scanner center line of the original scanning.
Purpose
Make the adjustment if there is a regular error between the center lines of the copy image and original.

Format	!R! KCFG “SCAN”,6, #1;#2;EXIT;	
Parameter	#1	1: Scanner center line 2: Scanner center line of rotated scan
	#2	#1=1: Adjustable range: -70 to 70 (in 0.086mm increment) (0: default) #1=2: Adjustable range: -40 to 40 (in 0.086mm increment) (0: default)

Example: Scanner leading edge registration set to 20 to increase 1.72mm
!R! KCFG “SCAN”,6,1,20;EXIT;

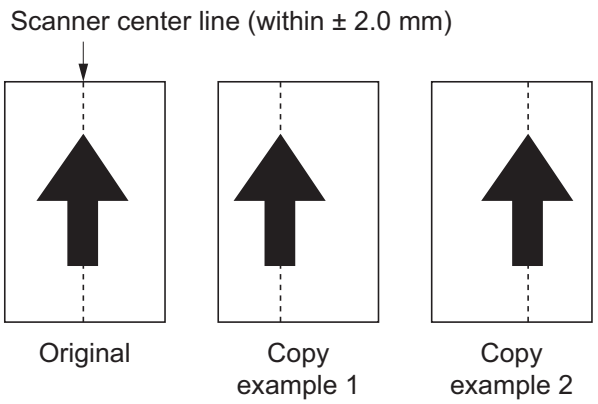

TONER
www.tonerplus.com.ua

Adjusting the scanning position for originals from the DP (alternative command for the maintenance mode U068)

Description
Adjusts the position for scanning originals from the DP. Performs the test copy at the four scanning positions after adjusting.
Purpose
Used when the image fogging occurs because the scanning position is not proper when the DP is used. Execute KCFG “EESS”,4, 107, 1, “#1”; command to adjust the timing of DP leading edge when the scanning position is changed.

Format	!R! KCFG “SCAN”,9, #1,#2;EXIT;	
Parameter	#1	1: DP READ Starting position adjustment for scanning originals 2: BLACK LINE Scanning position for the test copy originals
	#2	#1=1: Adjustable range: -33 to 33 (in 0.086mm increment) (0: default) #1=2: Adjustable range: 0 to 3 (in 0.22mm increment) (0: default)

Example: DP READ set to 15, BLACK LINE set to 3
!R! KCFG “SCAN”,9,1,15; KCFG “SCAN”,9,2,3;EXIT;

TONER
www.tonerplus.com.ua

Adjusting the DP magnification (alternative command for the maintenance mode U070)

Description
Adjusts the DP original scanning speed.
Purpose
Make the adjustment if the magnification is incorrect in the auxiliary scanning direction when the DP is used.

Format	!R! KCFG “SCAN”,4, #1;#2;EXIT;	
Parameter	#1	2: CONVEYING SPEED Magnification in the auxiliary scanning direction
	#2	Adjustable range: --25 to 25 (in 0.1% increment) (0: default)

Example: DP scanning magnification set to 20 to increase 2%
!R! KCFG “SCAN”,4,2,20;EXIT;

Leading edge registration

Original Copy example 1 Copy example 2

TONER
www.tonerplus.com.ua

Adjusting the DP scanning timing (alternative command for the maintenance mode U071)

Description
Adjusts the DP original scanning timing.
Purpose
Make the adjustment if there is a regular error between the leading or trailing edges of the original and the copy image when the DP is used.

Format	!R! KCFG “SCAN”,2,#1,#2;EXIT;	
Parameter	#1	1: FRONT HEAD Leading edge registration (first page) 2: FRONT TAIL Trailing edge registration (first page) 3: BACK HEAD Leading edge registration (second page) 4: BACK TAIL Trailing edge registration (second page) 5: ROTATE Leading edge registration (rotate scan)
	#2	#1=1: Adjustable range: -32 to 32 (in 0.196mm increment) (0: default) #1=2: Adjustable range: -32 to 32 (in 0.196mm increment) (0: default) #1=3: Adjustable range: -45 to 45 (in 0.196mm increment) (0: default) #1=4: Adjustable range: -45 to 45 (in 0.196mm increment) (0: default) #1=5: Adjustable range: -128 to 128 (in 0.196mm increment) (0: default)

Example: FRONT HEAD set to 10, FRONT TAIL set to 15, BACK HEAD set to 10, BACK TAIL 15
!R! KCFG “SCAN”,2,1,10; KCFG “SCAN”,2,2,15; KCFG “SCAN”,2,3,10; KCFG “SCAN”,2,4,15;EXIT;

Leading edge registration

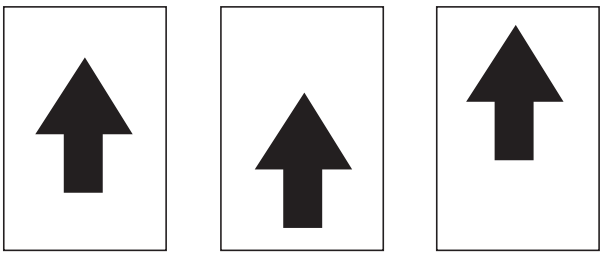

Original | Copy example 1 | Copy example 2

Trailing edge registration

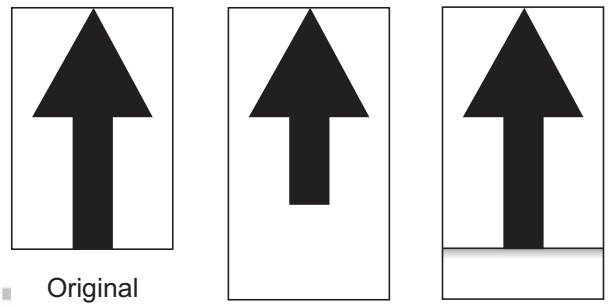

Original | Copy example 1 | Copy example 2

www.tonerplus.com.ua

Adjusting the DP center line (alternative command for the maintenance mode U072)

Description
Adjusts the scanning center line for the DP original.
Purpose
Make the adjustment if there is a regular error between the centers of the original and the copy image when the DP is used.

Format	!R! KCFG “SCAN”,3, #1,#2;EXIT;	
Parameter	#1	1: FRONT Center line (first page) 2: BACK Center line (second page) 3: ROTATE Center line (rotated scan)
	#2	Setting range: -39 to 39 (in 0.086mm increment) (initial: 0)

Example: FRONT set to 15, BACK set to 3
!R! KCFG “SCAN”,3,1,15; KCFG “SCAN”,3,2,3;EXIT;

DP center line

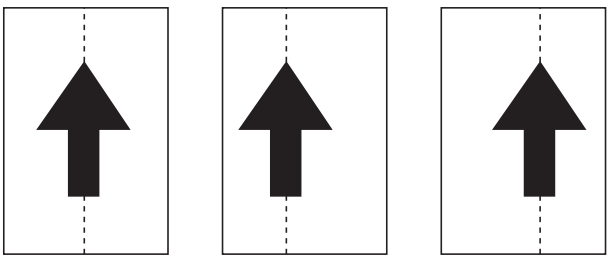

Original | Copy example 1 | Copy example 2

TONER
www.tonerplus.com.ua

INSTALLATION GUIDE FOR
Card Authentication Kit(C)

TONER+
www.tonerplus.com.ua

CARD READER HOLDER (C)

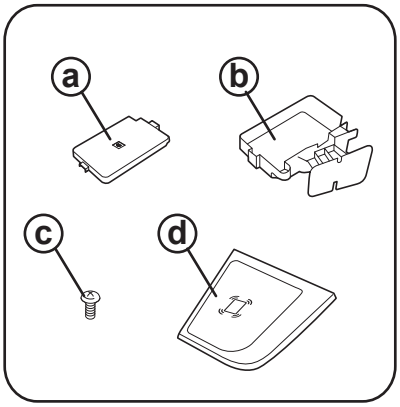

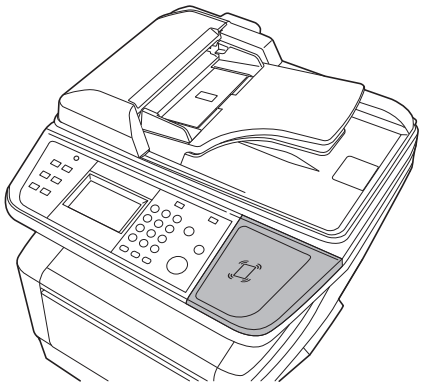

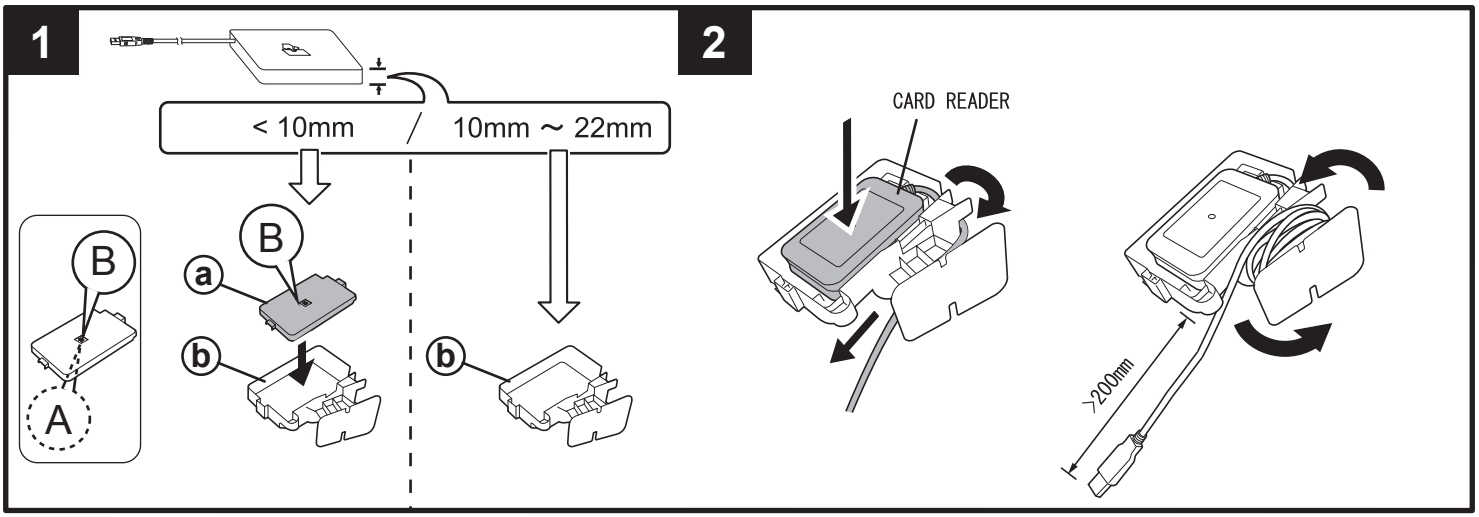

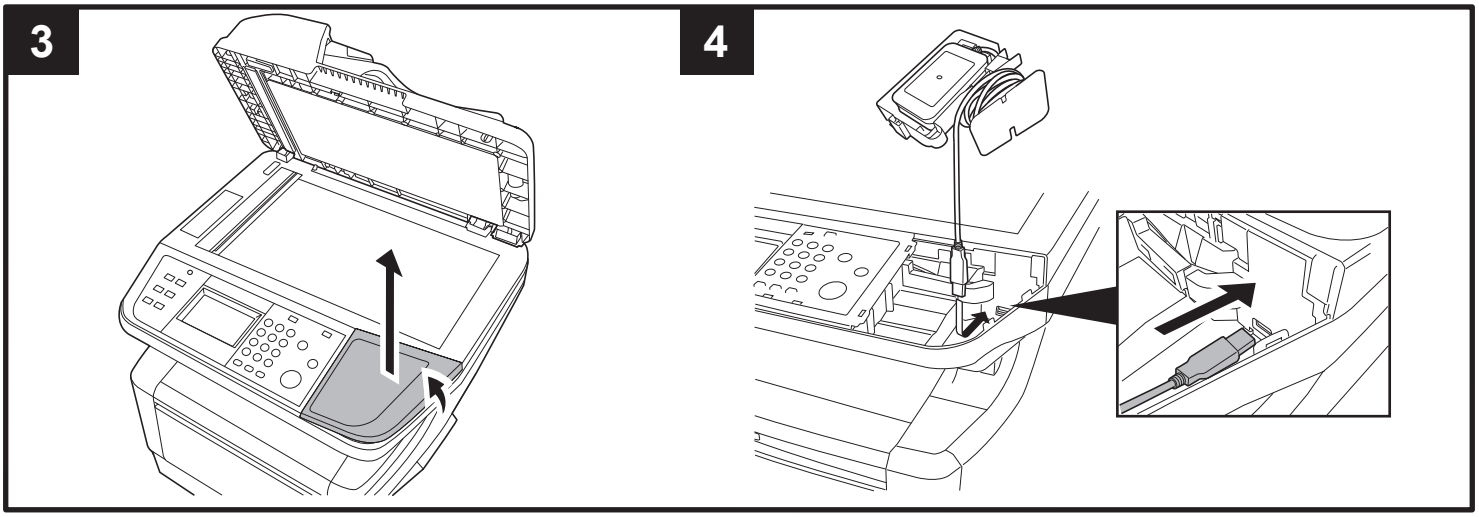

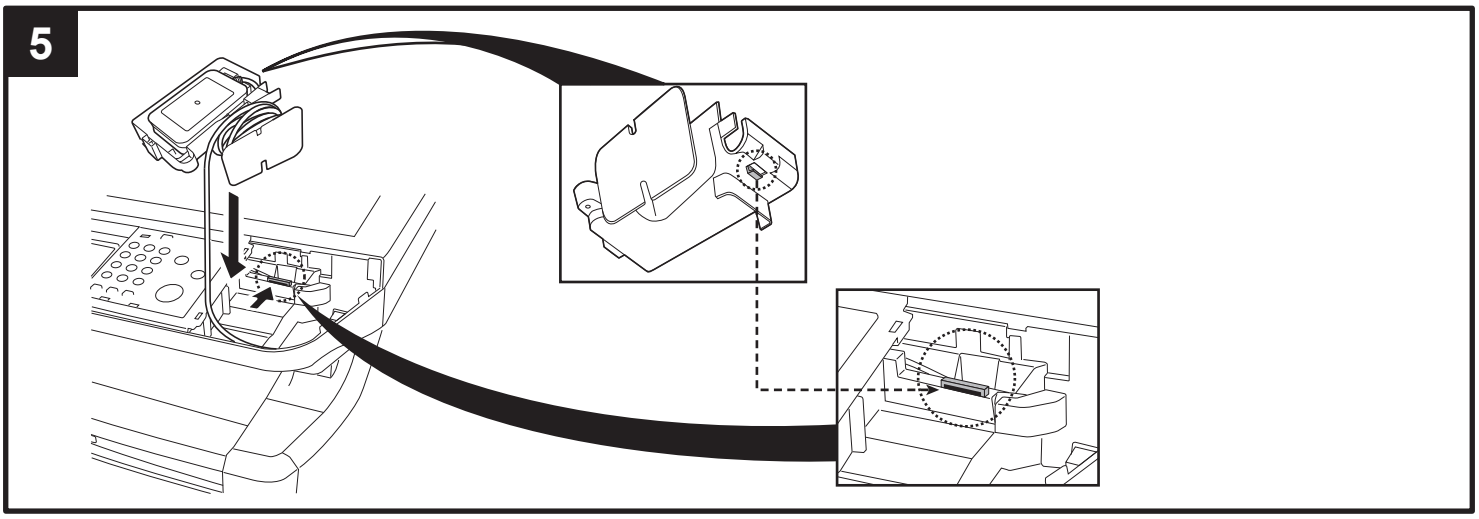

6

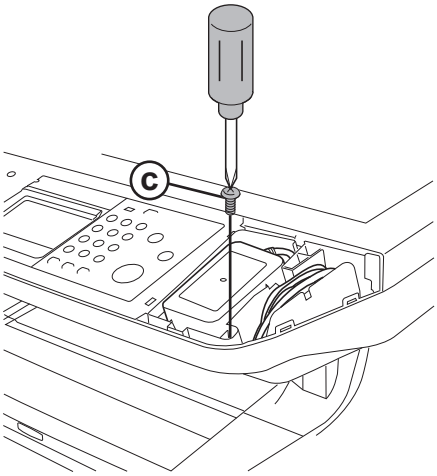

7

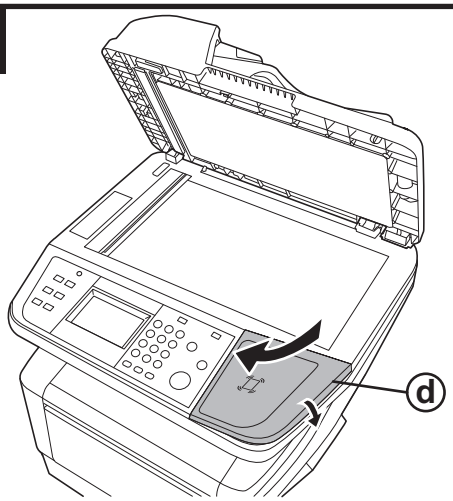

8

ENG Refer to the Card Authentication Kit (B) Operation Guide on the bundled Product Library DVD for descriptions of the Card Authentication Kit options and the procedures for using them.

ES Consulte la Card Authentication Kit (B) Operation Guide, disponible en el Product Library DVD suministrado, para obtener descripciones de las opciones de Card Authentication Kit y los procedimientos de uso.

FR Se reporter au Card Authentication Kit (B) Operation Guide sur le Product Library DVD fourni pour les descriptions des options de Card Authentication Kit et leurs procédures d'utilisation.

DE Siehe auch in Card Authentication Kit (B) Operation Guide auf der Product Library DVD für Erklärungen der Card Authentication Kit Optionen und den Gebrauch.

IT Vedere Card Authentication Kit (B) Operation Guide sul Product Library DVD fornito per la descrizione delle opzioni Card Authentication Kit e le procedure di utilizzo del kit.

CN 有关 Card Authentication Kit 选项的说明以及使用该选项的步骤，请参阅附带的 Product Library DVD 上的Card Authentication Kit (B)操作手册。

TW 有關 Card Authentication Kit 選項和使用它們的步驟的說明，請參閱附帶的 Product Library DVD 上的Card Authentication Kit (B)操作手冊。

KO Card Authentication Kit 옵션과 사용 과정에 관한 설명은 함께 제공된 Product Library DVD 에 있는 Card Authentication Kit (B) 조작 설 명서를 참조하시기 바랍니다 .

JP ICカード認証キットで設定できる内容や操作方法については、付属のProduct Library DVD に収録されているICカード認証キット（B） 使用説明書 を参照してください。

KYOCERA MITA EUROPE B.V.

Bloemlaan 4, 2132 NP Hoofddorp,
The Netherlands
Phone: +31.20.654.0000
Home page: http://www.kyoceramita-europe.com
Email: info@kyoceramita-europe.com

KYOCERA MITA NEDERLAND B.V.

Beechavenue 25, 1119 RA Schiphol-Rijk
The Netherlands
Phone: +31.20.58.77.200

KYOCERA MITA (UK) LTD

8 Beacontree Plaza
Gillette Way Reading Berks RG2 0BS,
U.K.
Phone: +44.1189.311.500

KYOCERA MITA ITALIA S.p.A.

Via G. Verdi, 89 / 91, 20063 Cernusco s/N
Milano, Italy
Phone: +39.02.92179.1

S.A. KYOCERA MITA BELGIUM N.V.

Sint-Martinusweg 199-201, 1930 Zaventem,
Belgium
Phone: +32.2.720.9270

KYOCERA MITA FRANCE S.A.

Espace Technologique de St Aubin
Route de l' Orme
91195 Gif-sur-Yvette CEDEX, France
Phone: +33.1.6985.2600

KYOCERA MITA ESPAÑA S.A.

Edificio Kyocera, Avda de Manacor No. 2,
28290 Las Matas (Madrid),
Spain
Phone: +34.91.631.8392

KYOCERA MITA FINLAND OY

Atomitie 5C, 00370 Helsinki,
Finland
Phone: +358.9.4780.5200

KYOCERA MITA (SCHWEIZ)

Hohlstrasse 614, 8048 Zürich
Switzerland
Phone: +41.44.908.4949

KYOCERA MITA DEUTSCHLAND GMBH

Otto-Hahn-Str. 12 D-40670 Meerbusch,
Germany
Phone: +49.2159.918.0

KYOCERA MITA GMBH AUSTRIA

Eduard-Kittenberger-Gasse 95,
1230 Wien,
Austria
Phone: +43.1.86338

KYOCERA MITA SVENSKA AB

Esbogatan 16B 164 75 Kista,
Sweden
Phone: +46.8.546.55000

KYOCERA MITA NORGE

Postboks 150 Oppsal, NO 0619 Oslo
Olaf Helsetsvei 6, NO 0694 Oslo,
Norway
Phone: +47.22.62.73.00

KYOCERA MITA DANMARK A/S

Ejby Industrivej 60, DK-2600 Glostrup,
Denmark
Phone: +45.7022.3880

KYOCERA MITA PORTUGAL LDA.

Rua do Centro Cultural, 41 (Alvalade) 1700-106 Lisboa,
Portugal
Phone: +351.21.843.6780

KYOCERA MITA SOUTH AFRICA (PTY) LTD.

49 Kyalami Boulevard,
Kyalami Business Park Midrand,
South Africa
Phone: +27.(0)11.540.2600

KYOCERA MITA AMERICA, INC.

Headquarters:
225 Sand Road,
Fairfield, New Jersey 07004-0008,
U.S.A.
Phone: (973) 808-8444

KYOCERA MITA AUSTRALIA PTY. LTD.

Level 3, 6-10 Talavera Road, North Ryde,
N.S.W. 2113 Australia
Phone: (02) 9888-9999

KYOCERA MITA NEW ZEALAND LTD.

1-3 Parkhead Place, Albany
P.O. Box 302 125 NHPC, Auckland,
New Zealand
Phone: (09) 415-4517

KYOCERA MITA Asia Limited

16/F., Mita Centre,
552-566, Castle Peak Road,
Tsuen Wan, New Territories, Hong Kong
Phone: (852)-2610-2181

KYOCERA MITA Corporation

2-28, 1-chome, Tamatsukuri, Chuo-ku
Osaka 540-8585, Japan
Phone: (06) 6764-3555
http://www.kyoceramita.com

©2011 KYOCERA MITA Corporation

KYOCERA is a trademark of Kyocera Corporation

KYOCERA MITA AMERICA, INC.

Headquarters:
225 Sand Road,
Fairfield, New Jersey 07004-0008
TEL : (973) 808-8444
FAX : (973) 882-6000

New York Branch:
30-30 47th Avenue
Long Island City, NY 11101
TEL : (718) 289-2500
FAX : (718) 289-2501

Northeastern Region:
225 Sand Road,
Fairfield, New Jersey 07004-0008
TEL : (973) 808-8444
FAX : (973) 882-4401

Midwestern Region:
201 Hansen Court Suite 119
Wood Dale, Illinois 60191
TEL : (630) 238-9982
FAX : (630) 238-9487

Western Region:
14101 Alton Parkway,
Irvine, California 92618-7006
TEL : (949) 457-9000
FAX : (949) 457-9119

Southeastern Region:
3100 Breckinridge Blvd. NW Building 100,
Suite 105 Duluth, Georgia 30096
TEL : (770) 729-9786
FAX : (770) 729-9873

Southwestern Region:
2825 West Story Road,
Irving, Texas 75038-5299
TEL : (972) 550-8987
FAX : (972) 570-4704

National Operation Center
& National Training Center:
2825 West Story Road,
Irving, Texas 75038-5299
TEL : (972) 659-0055
FAX : (972) 570-5816

Latin America Division:
8240 N.W. 52nd. Terrace Dawson Building,
Suite 108 Miami, Florida 33166
TEL : (305) 421-6640
FAX : (305) 421-6666

KYOCERA MITA CANADA, LTD.

6120 Kestrel Road, Mississauga,
Ontario L5T 1S8, Canada
TEL : (905) 670-4425
FAX : (905) 670-8116

KYOCERA MITA MEXICO, S.A. DE C.V.

Av. 16 de Septiembre #407
Col. Santa Inés,
Azcapotzalco México,
D.F. 02130, México
TEL : (55) 5383-2741
FAX : (55) 5383-7804

KYOCERA MITA Brazil Ltda.

Av. Tambore, 1180 Mob.B-09 CEP 06460-000
Tambore-Barveri-SP,
Brazil
TEL : (55) 11-4195-8496
FAX : (55) 11-4195-6167

KYOCERA MITA Asia Limited

16/F., Mita Centre,
552-566, Castle Peak Road,
Tsuen Wan, New Territories, Hong Kong
Phone: (852)-2610-2181

KYOCERA MITA (Thailand) Corp., Ltd.
335 Ratchadapisek Road, Bangsue,
Bangkok, 10800, Thailand
Phone: (66)-2-586-0333

KYOCERA MITA Singapore Pte Ltd.
121 Genting Lane, 3rd Level,
Singapore 349572
Phone: (65)-6741-8733

KYOCERA MITA Hong Kong Limited
16/F., Mita Centre,
552-566, Castle Peak Road,
Tsuen Wan, New Territories,
Hong Kong
Phone: (852)-2429-7422

KYOCERA MITA Taiwan Corporation
6F., No.37, Sec. 3, Minquan E. Rd.,
Zhongshan Dist., Taipei 104, Taiwan R.O.C.
Phone: (886)-2-2507-6709

KYOCERA MITA Korea Co., Ltd.
18F, Kangnam bldg, 1321-1,
Seocho-Dong, Seocho-Gu, Seoul, Korea
Phone: (822)-6933-4050

KYOCERA MITA India Private Limited
First Floor, ORCHID CENTRE
Sector-53, Golf Course Road, Gurgaon 122
002, India
Phone: (91)-0124-4671000

©2011 KYOCERA MITA Corporation
KYOCERA is a trademark of Kyocera Corporation