KYOCERA

FS-C2026MFP
FS-C2126MFP

SERVICE MANUAL

Published in July 2010
842KX111
2KXSM061
Rev. 1

CAUTION

RISK OF EXPLOSION IF BATTERY IS REPLACED BY AN INCORRECT TYPE. DISPOSE OF USED BATTERIES ACCORDING TO THE INSTRUCTIONS.

It may be illegal to dispose of this battery into the municipal waste stream. Check with your local solid waste officials for details in your area for proper disposal.

ATTENTION

IL Y A UN RISQUE D'EXPLOSION SI LA BATTERIE EST REMPLACEE PAR UN MODELE DE TYPE INCORRECT. METTRE AU REBUT LES BATTERIES UTILISEES SELON LES INSTRUCTIONS DONNEES.

Il peut être illégal de jeter les batteries dans des eaux d'égout municipales. Vérifiez avec les fonctionnaires municipaux de votre région pour les détails concernant des déchets solides et une mise au rebut appropriée.

Revision history

Revision	Date	Replaced pages	Remarks
1	July 7, 2010	1-1-1, 1-1-2, 1-1-4, 1-3-1, 1-3-4, 1-3-18, 1-3-55, 1-3-59 to 1-3-63	-

This page is intentionally left blank.

Safety precautions

This booklet provides safety warnings and precautions for our service personnel to ensure the safety of their customers, their machines as well as themselves during maintenance activities. Service personnel are advised to read this booklet carefully to familiarize themselves with the warnings and precautions described here before engaging in maintenance activities.

Safety warnings and precautions

Various symbols are used to protect our service personnel and customers from physical danger and to prevent damage to their property. These symbols are described below:

⚠**DANGER:** High risk of serious bodily injury or death may result from insufficient attention to or incorrect compliance with warning messages using this symbol.

⚠**WARNING:** Serious bodily injury or death may result from insufficient attention to or incorrect compliance with warning messages using this symbol.

⚠**CAUTION:** Bodily injury or damage to property may result from insufficient attention to or incorrect compliance with warning messages using this symbol.

Symbols

The triangle (△) symbol indicates a warning including danger and caution. The specific point of attention is shown inside the symbol.

 General warning.  Warning of risk of electric shock.

 Warning of high temperature.

⃠ indicates a prohibited action. The specific prohibition is shown inside the symbol.

 General prohibited action.  Disassembly prohibited.

● indicates that action is required. The specific action required is shown inside the symbol.

 General action required.  Remove the power plug from the wall outlet.

 Always ground the copier.

1. Installation Precautions

WARNING

- Do not use a power supply with a voltage other than that specified. Avoid multiple connections to one outlet: they may cause fire or electric shock. When using an extension cable, always check that it is adequate for the rated current. .....
- Connect the ground wire to a suitable grounding point. Not grounding the copier may cause fire or electric shock. Connecting the earth wire to an object not approved for the purpose may cause explosion or electric shock. Never connect the ground cable to any of the following: gas pipes, lightning rods, ground cables for telephone lines and water pipes or faucets not approved by the proper authorities. .....

CAUTION:

- Do not place the copier on an infirm or angled surface: the copier may tip over, causing injury. .....
- Do not install the copier in a humid or dusty place. This may cause fire or electric shock. .....
- Do not install the copier near a radiator, heater, other heat source or near flammable material. This may cause fire. .....
- Allow sufficient space around the copier to allow the ventilation grills to keep the machine as cool as possible. Insufficient ventilation may cause heat buildup and poor copying performance. .....
- Always handle the machine by the correct locations when moving it. .....
- Always use anti-toppling and locking devices on copiers so equipped. Failure to do this may cause the copier to move unexpectedly or topple, leading to injury. .....
- Avoid inhaling toner or developer excessively. Protect the eyes. If toner or developer is accidentally ingested, drink a lot of water to dilute it in the stomach and obtain medical attention immediately. If it gets into the eyes, rinse immediately with copious amounts of water and obtain medical attention. .....
- Advice customers that they must always follow the safety warnings and precautions in the copier's instruction handbook. .....

2. Precautions for Maintenance

WARNING

- Always remove the power plug from the wall outlet before starting machine disassembly. .....
- Always follow the procedures for maintenance described in the service manual and other related brochures. .....
- Under no circumstances attempt to bypass or disable safety features including safety mechanisms and protective circuits. .....
- Always use parts having the correct specifications. .....
- Always use the thermostat or thermal fuse specified in the service manual or other related brochure when replacing them. Using a piece of wire, for example, could lead to fire or other serious accident. .....
- When the service manual or other serious brochure specifies a distance or gap for installation of a part, always use the correct scale and measure carefully. .....
- Always check that the copier is correctly connected to an outlet with a ground connection. .....
- Check that the power cable covering is free of damage. Check that the power plug is dust-free. If it is dirty, clean it to remove the risk of fire or electric shock. .....
- Never attempt to disassemble the optical unit in machines using lasers. Leaking laser light may damage eyesight. .....
- Handle the charger sections with care. They are charged to high potentials and may cause electric shock if handled improperly. .....

CAUTION

- Wear safe clothing. If wearing loose clothing or accessories such as ties, make sure they are safely secured so they will not be caught in rotating sections. .....
- Use utmost caution when working on a powered machine. Keep away from chains and belts. .....
- Handle the fixing section with care to avoid burns as it can be extremely hot. .....
- Check that the fixing unit thermistor, heat and press rollers are clean. Dirt on them can cause abnormally high temperatures. .....

- Do not remove the ozone filter, if any, from the copier except for routine replacement. .....
- Do not pull on the AC power cord or connector wires on high-voltage components when removing them; always hold the plug itself. .....
- Do not route the power cable where it may be stood on or trapped. If necessary, protect it with a cable cover or other appropriate item. .....
- Treat the ends of the wire carefully when installing a new charger wire to avoid electric leaks. .....
- Remove toner completely from electronic components. .....
- Run wire harnesses carefully so that wires will not be trapped or damaged. .....
- After maintenance, always check that all the parts, screws, connectors and wires that were removed, have been refitted correctly. Special attention should be paid to any forgotten connector, trapped wire and missing screws. .....
- Check that all the caution labels that should be present on the machine according to the instruction handbook are clean and not peeling. Replace with new ones if necessary. .....
- Handle greases and solvents with care by following the instructions below: .....
  · Use only a small amount of solvent at a time, being careful not to spill. Wipe spills off completely.
  · Ventilate the room well while using grease or solvents.
  · Allow applied solvents to evaporate completely before refitting the covers or turning the power switch on.
  · Always wash hands afterwards.
- Never dispose of toner or toner bottles in fire. Toner may cause sparks when exposed directly to fire in a furnace, etc. .....
- Should smoke be seen coming from the copier, remove the power plug from the wall outlet immediately. .....

3. Miscellaneous

WARNING

- Never attempt to heat the drum or expose it to any organic solvents such as alcohol, other than the specified refiner; it may generate toxic gas. .....

This page is intentionally left blank.

CONTENTS

1-5 Assembly and disassembly

1-6 Requirements on PWB Replacement

2-1 Mechanical Construction

2-2 Electrical Parts Layout

2-3 Operation of the PWBs

2-4 Appendixes

1-1-1 Specifications

Machine

Item		Specifications	
		3 in 1 model (without FAX)	4 in 1 model (with FAX)
Type		Desktop	
Printing method		Electrophotography by semiconductor laser, tandem (4) drum system	
Originals		Sheet, Book, 3-dimensional objects (maximum original size: Folio/Legal)	
Original feed system		Fixed	
Paper weight	Cassette	60 to 163 g/m² (Duplex: 60 to 163 g/m²)	
	MP tray	60 to 220 g/m²	
Paper type	Cassette	Plain, Recycled, Preprinted, Bond, Color (Colour), Prepunched, Letterhead, Thick, High quality, Custom 1 to 8 (Duplex: Same as simplex)	
	MP tray	Plain, Transparency, Vellum, Labels, Recycled, Preprinted, Bond, Cardstock, Color (Colour), Prepunched, Letterhead, Thick, Envelope, Coated, High quality, Custom 1 to 8	
Paper size	Cassette	A4, A5, A6, B5, Letter, Legal, Statement, Executive, Oficio II, Folio, 16K, Envelope C5, Custom	
	MP tray	A4, A5, A6, B5, ISO B5, B6, Letter, Legal, Statement, Executive, Oficio II, Folio, 16K, Envelope #10, Envelope #9, Envelope #6, Envelope Monarch, Envelope DL, Envelope C5, Postcards, Return postcard, Youkei 2, Youkei 4, Custom	
Zoom level		Manual mode : 25 to 400%, 1% increments Auto mode : 400%, 200%, 141%, 129%, 115%, 90%, 86%, 78%, 70%, 64%, 50%, 25%	
Copying speed	Simplex	A4R : 26 sheets/min LetterR : 28 sheets/min Legal : 23 sheets/min B5R : 28 sheets/min A5R : 28 sheets/min A6R : 28 sheets/min	
	Duplex	A4R : 13 sheets/min LetterR : 13 sheets/min Legal : 12 sheets/min	
First copy time (A4, feed from cassette)	B/W	When using the DP : 11.0 s or less When the DP is not used: 10.0 s or less	
	Color	When using the DP : 13.0 s or less When the DP is not used: 12.0 s or less	
Warm-up time (22 °C/71.6 °F, 60% RH)		Power on : 28 s or less Sleep mode: 20 s or less	
Paper capacity	Cassette	250 sheets (80g/m²)	
	MP tray	50 sheets (80 g/m², plain paper, A4/Letter or less)	
Output tray capacity		150 sheets (80g/m²)	
Continuous copying		1 to 999 sheets	

Item		Specifications	
		3 in 1 model (without FAX)	4 in 1 model (with FAX)
Light source		Exposure lamp	
Scanning system		Flat bed scanning by CCD image sensor	
Photoconductor		OPC drum (diameter 30 mm)	
Image write system		Semiconductor laser	
Charging system		Charger roller	
Developing system		Touch down developing system Developer: 2-component Toner replenishing: Automatic from the toner container	
Transfer system		Primary: Transfer belt Secondary: Transfer roller	
Separation system		Small diameter separation	
Cleaning system		Drum: Counter blade	
Charge erasing system		Exposure by cleaning lamp (LED)	
Fusing system		Heat and pressure fusing with the heat roller and the press roller Heat source: halogen heater Abnormally high temperature protection devices: thermostat	
CPU		PowerPC464 (667MHz)	
Main memory	Standard	768 MB	
	Maximum	1792 MB	
Interface	Standard	USB interface connector: 1 (USB Hi-speed) USB host: 2 Network interface: 1 (10BASE-T/100BASE-TX)	
	Option	KUIO/W slot: 1	
Resolution		600 × 600 dpi	
Operating environment	Temperature	0 to 32.5 °C/50 to 90.5 °F	
	Humidity	15 to 80% RH	
	Altitude	2,500 m/8,202 ft or less	
	Brightness	1,500 lux or less	
Dimensions (W × D × H)		514 × 550 × 580 mm 20 1/4 × 21 5/8 × 22 13/16”	
Weight		36.5 kg / 80.3 lb (with toner container)	
Space required (W × D)		514 × 1020 mm (using MP tray) 20 1/4 × 40 3/16” (using MP tray)	
Power source		120 V AC, 60 Hz, more than 8.9 A 220 - 240 V AC, 50/60 Hz, more than 4.7 A	
Options		Paper feeder × 2, Expanded memory	

Document processor

Item	Specifications
Original feed method	Automatic feed
Supported original types	Sheet originals
Original sizes	Maximum: A4/Legal Minimum : A5/Statement
Original weights	Simplex: 50 to 120 g/m^2 Duplex : 50 to 110 g/m^2
Loading capacity	50 sheets (50 to 80 g/m^2) or less
Dimensions (W × D × H)	490 × 338 × 104 mm 19 5/16 × 13 5/16 × 4 1/8”
Weight	3 kg/ 6.6 lb or less

Printer

Item	Specifications
Printing speed	Same as copying speed.
First print time (A4, feed from cassette)	B/W : 9.0 s or less Color: 10.5 s or less
Resolution	600 dpi
Operating system	Windows 2000, Windows XP, Windows XP Professional, Windows Server 2003, Windows Server 2003 x64 Edition, Windows Vista x86 Edition, Windows Vista x64 Edition, Windows 7 x86 Edition, Windows 7 x64 Edition, Windows Server 2008, Windows Server 2008 x64 Edition, Apple Macintosh OS 10.x
Interface	USB interface connector: 1 (USB Hi-speed) USB host: 2 Network interface: 1 (10BASE-T/100BASE-TX)
Page description language	PRESCRIBE

Scanner

Item		Specifications
Operating system		Windows 2000 (Service Pack 4), Windows XP, Windows Vista, Windows 7, Windows Server 2003, Windows Server 2008
System requirements		IBM PC/AT compatible CPU: Celeron 600 MHz or higher RAM: 128 MB or more HDD free space: 20 MB or more Interface: Ethernet
Resolution		600 dpi, 400 dpi, 300 dpi, 200 dpi
File format		JPEG, TIFF, PDF, XPS
Scanning speed	**Simplex**	B/W : 35 images/min Color: 25 images/min (A4 landscape, 300 dpi, Image quality: Text/Photo original)
	Duplex	B/W : 18 images/min Color: 13 images/min (A4 landscape, 300 dpi, Image quality: Text/Photo original)
Interface		Ethernet (10 BASE-T/100 BASE-TX)
Network protocol		TCP/IP
Transmission system		PC transmission SMB Scan to SMB FTP Scan to FTP, FTP over SSL E-mail transmission SNTP Scan to E-mail TWAIN scan*1 WIA scan*2

*1 Available operating system: Windows 2000 (Service Pack 4), Windows XP, Windows Vista, Windows Server 2008, Windows 7

*2 Available operating system: Windows Vista, Windows Server 2008, Windows 7

FAX (4 in 1 model (with FAX) only)

Item	Specifications
Compatibility	G3
Communication line	Subscriber telephone line
Transmission time	3 s or less (33600 bps, JBIG, ITU-T A4 #1 chart)
Transmission speed	33600/31200/28800/26400/24000/21600/19200/16800/14400/12000/9600/7200/4800/2400 bps
Coding scheme	JBIG/MMR/MR/MH
Error correction	ECM
Original size	Max. width: 8 1/2"/216 mm Max. length: 14"/356 mm
Automatic document feed	Max. 50 sheets
Scanner resolution	Horizontal × Vertical 200 × 100 dpi Normal (8 dot/mm × 3.85 line/mm) 200 × 200 dpi Fine (8 dot/mm × 7.7 line/mm) 200 × 400 dpi Super fine (8 dot/mm × 15.4 line/mm) 400 × 400 dpi Ultra fine (16 dot/mm × 15.4 line/mm)
Printing resolution	600 × 600 dpi
Gradations	256 shades (Error diffusion)
One-Touch key	22 keys
Multi-Station transmission	Max. 100 destinations
Substitute memory reception	256 sheets or more (when using ITU-T A4 #1 chart)
Image memory capacity	3.5 MB (standard) (for incoming faxed originals)
Report output	Sent result report, FAX RX result report, Report for job canceled before sending, Activity report, Status page

NOTE: These specifications are subject to change without notice.

1-1-2 Parts names

(1) Machine (front side)

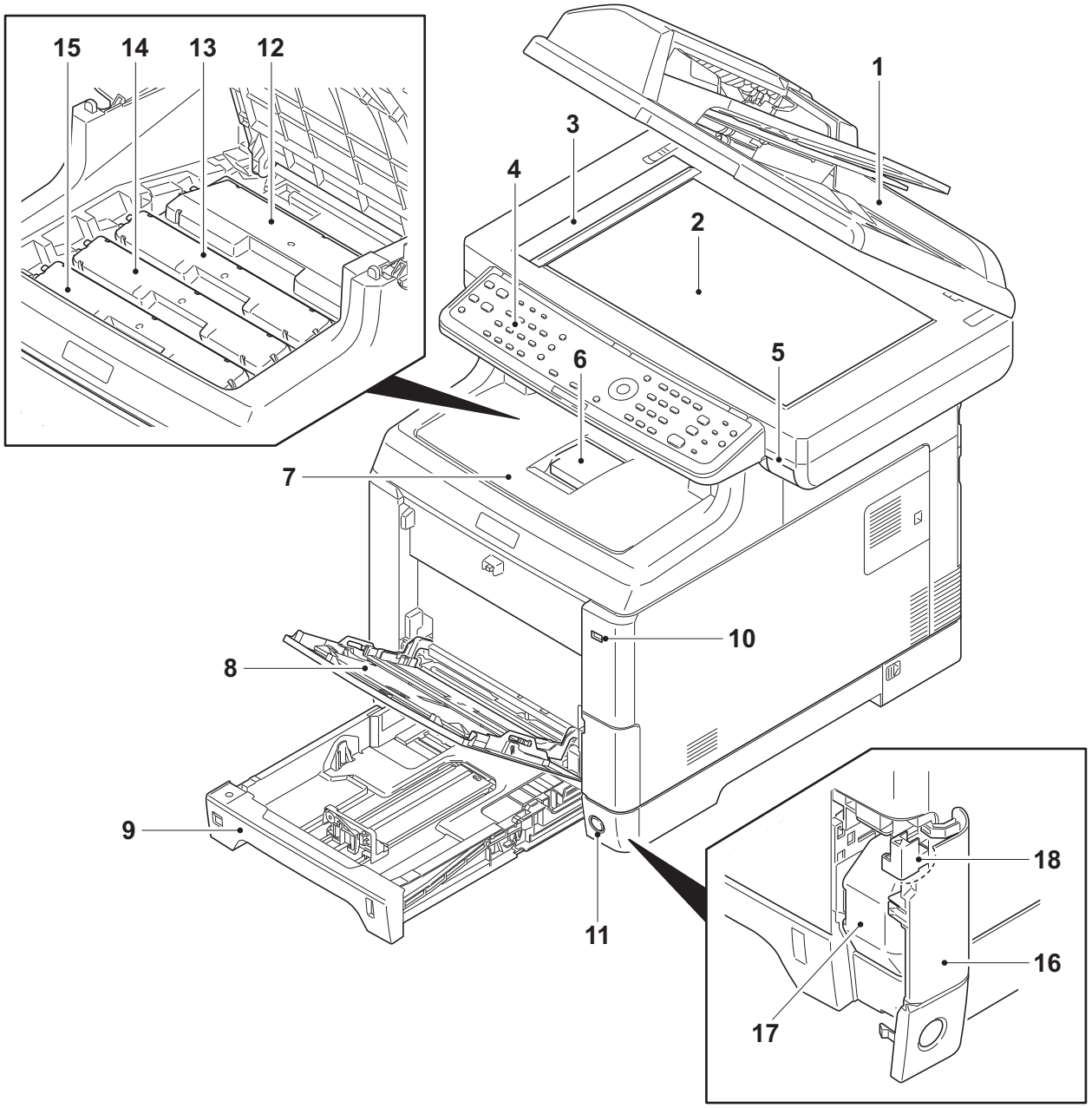

Figure 1-1-1

1. Document processor (DP)
2. Contact glass
3. Original size Indicator plate
4. Operation panel
5. Top tray lever
6. Paper stopper
7. Top tray
8. MP (Multi-Purpose) tray
9. Cassette
10. USB memory slot
11. Main power switch
12. Toner container K
13. Toner container M
14. Toner container C
15. Toner container Y
16. Waste toner cover
17. Waste toner box
18. Lock release button

(2) Machine (rear side)

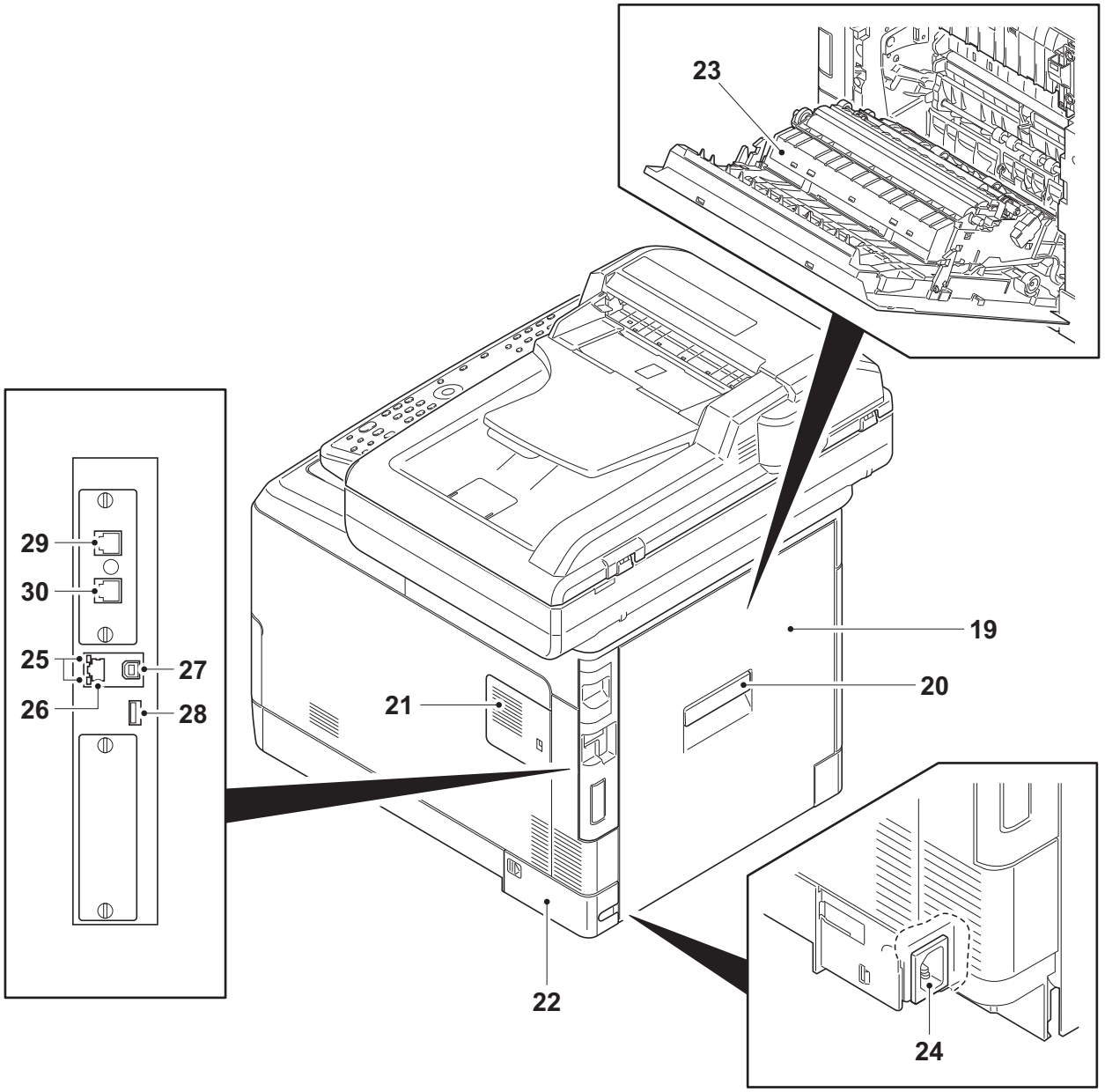

Figure 1-1-2

19. Rear cover
20. Rear cover lever
21. Memory cover
22. Power source cover
23. Paper conveying unit
24. Power cord connector
25. Network indicators
26. Network interface connector
27. USB interface connector
28. USB memory slot
29. LINE connector*
30. TEL connector*

*: 4 in 1 model (with FAX) only

(3) Document processor

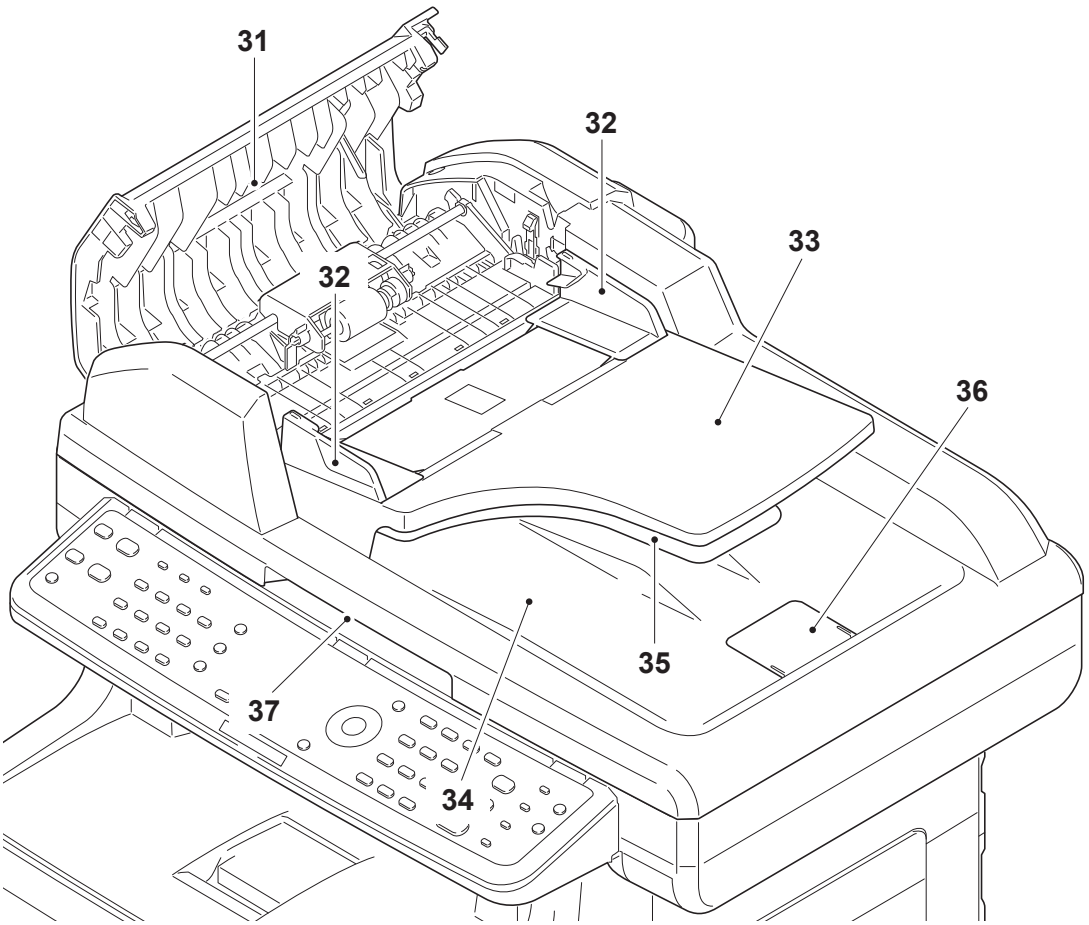

Figure 1-1-3

31. DP top cover
32. Original width guides
33. Original table
34. Original eject table
35. Switchback table
36. Original stopper
37. Opening Handle

(4) Operation panel

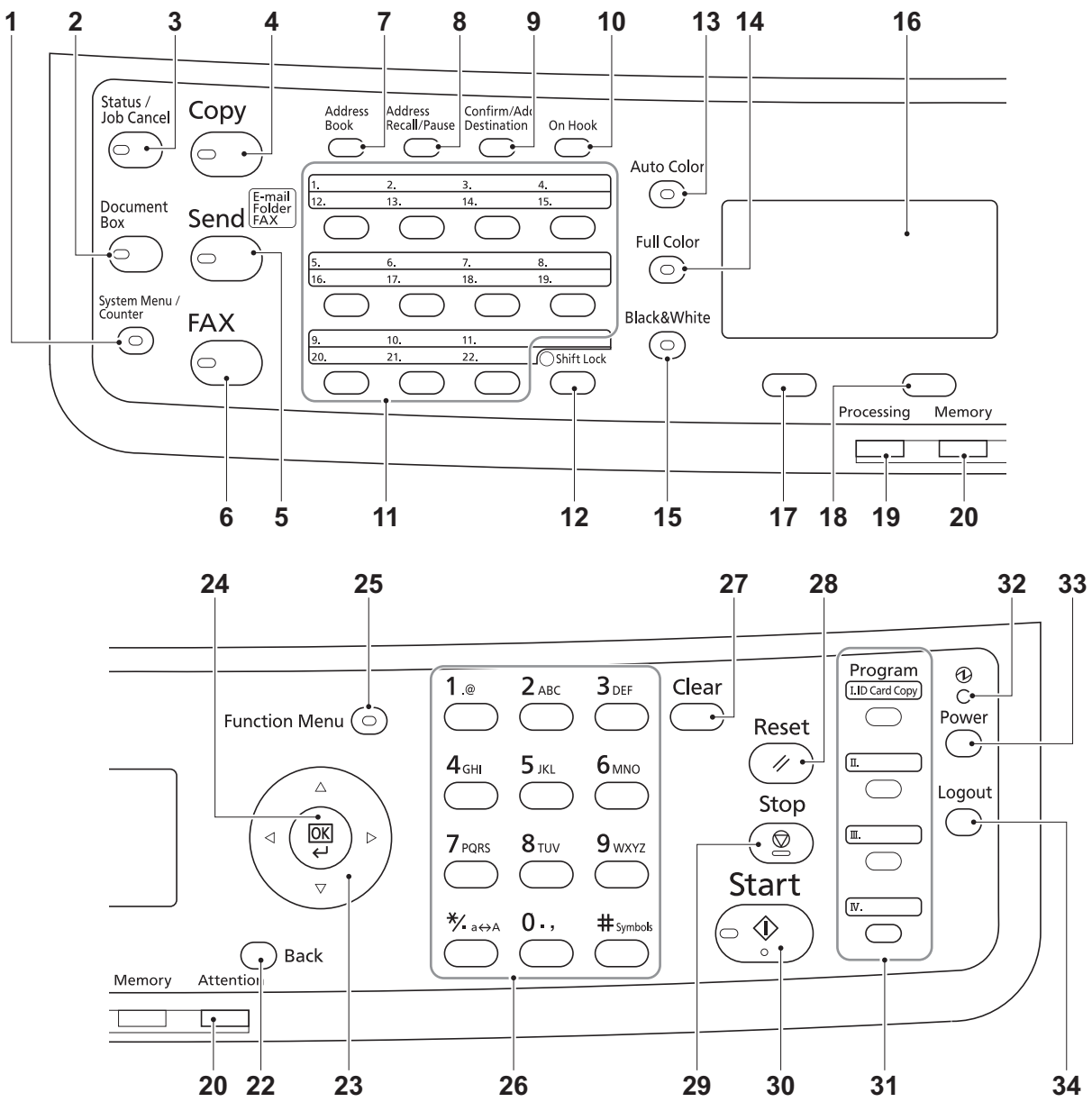

Figure 1-1-4

1. System menu/Counter key
2. Document box key
3. Status/Job cancel key
4. Copy key
5. Send key
6. FAX key*
7. Address book key
8. Address recall/Pause key*
9. Confirm/Add destination key
10. On Hook key*
11. One-touch keys
12. Shift Lock key
13. Auto color key
14. Full color key
15. Black and White key
16. Message display
17. Left Select key
18. Right Select key
19. Processing indicator
20. Memory indicator
21. Attention indicator
22. Back key
23. Cursor keys
24. OK key
25. Function Menu key
26. Numeric keys
27. Clear key
28. Reset key
29. Stop key
30. Start key
31. Program keys
32. Main power LED
33. Power key
34. Logout key

*: 4 in 1 model (with FAX) only

1-1-3 Machine cross section

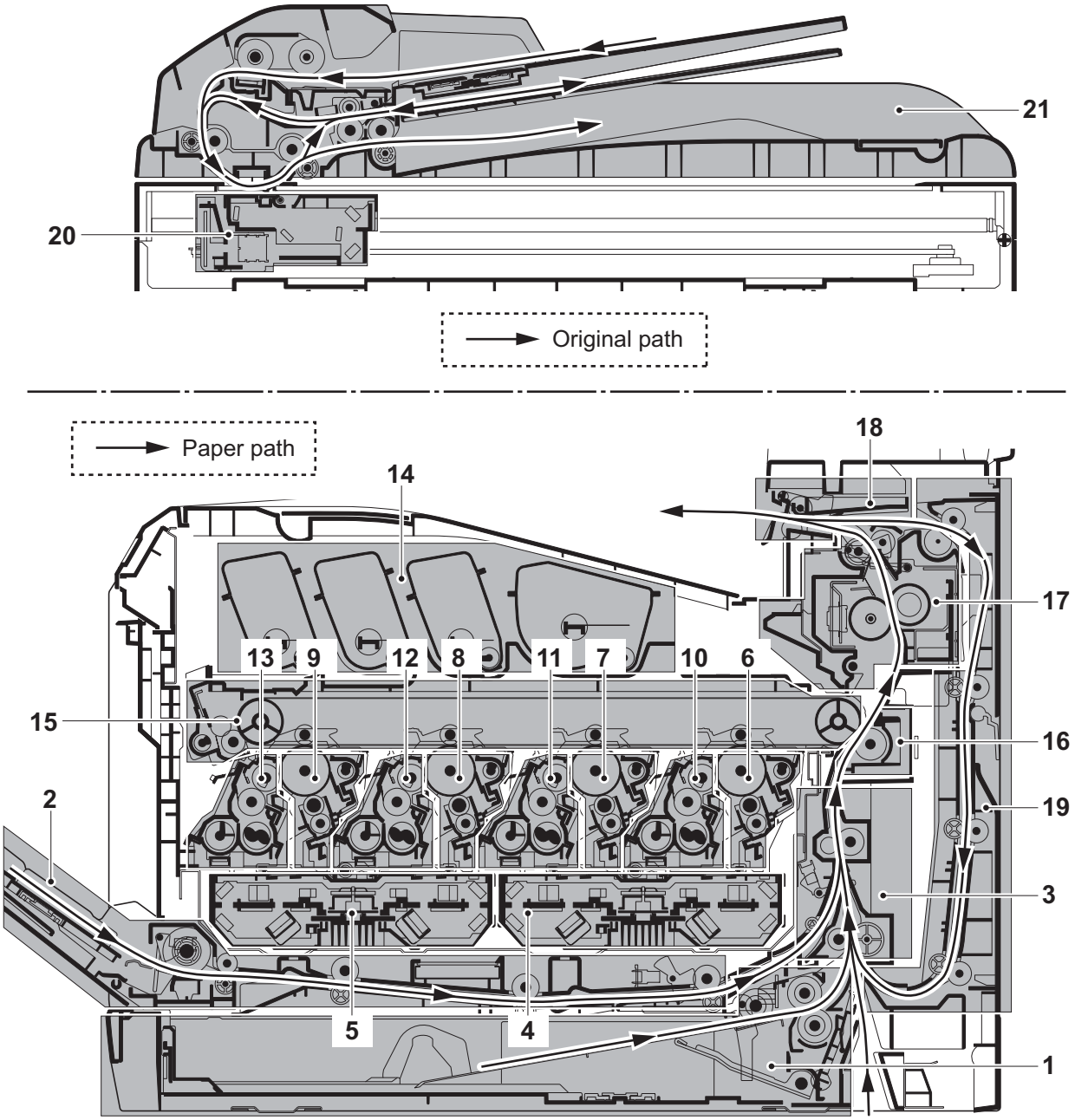

Figure 1-1-5

1. Cassette paper feed section
2. MP tray paper feed section
3. Paper conveying section
4. Laser scanner unit KM
5. Laser scanner unit CY
6. Drum unit K
7. Drum unit M
8. Drum unit C
9. Drum unit Y
10. Developing unit K
11. Developing unit M
12. Developing unit C
13. Developing unit Y
14. Toner container section
15. Primary transfer section
16. Secondary transfer/Separation sections
17. Fuser section
18. Eject/Feed shift sections
19. Duplex section
20. Image scanner unit
21. Document processor

1-2-1 Installation environment

1. Temperature: 10 to 32.5°C/50 to 90.5°F
2. Humidity: 15 to 80% RH
3. Power supply: 120 V AC, 8.9 A
   220 - 240 V AC, 4.7 A
4. Power source frequency: 50 Hz ±2%/60 Hz ±2%
5. Installation location
   Avoid direct sunlight or bright lighting. Ensure that the photoconductor will not be exposed to direct sunlight or other strong light when removing paper jams.
   Avoid locations subject to high temperature and high humidity or low temperature and low humidity; an abrupt change in the environmental temperature; and cool or hot, direct air.
   Avoid places subject to dust and vibrations.
   Choose a surface capable of supporting the weight of the machine.
   Place the machine on a level surface (maximum allowance inclination: 1°).
   Avoid air-borne substances that may adversely affect the machine or degrade the photoconductor, such as mercury, acidic of alkaline vapors, inorganic gasses, NOx, SOx gases and chlorine-based organic solvents.
   Select a well-ventilated location.
6. Allow sufficient access for proper operation and maintenance of the machine.

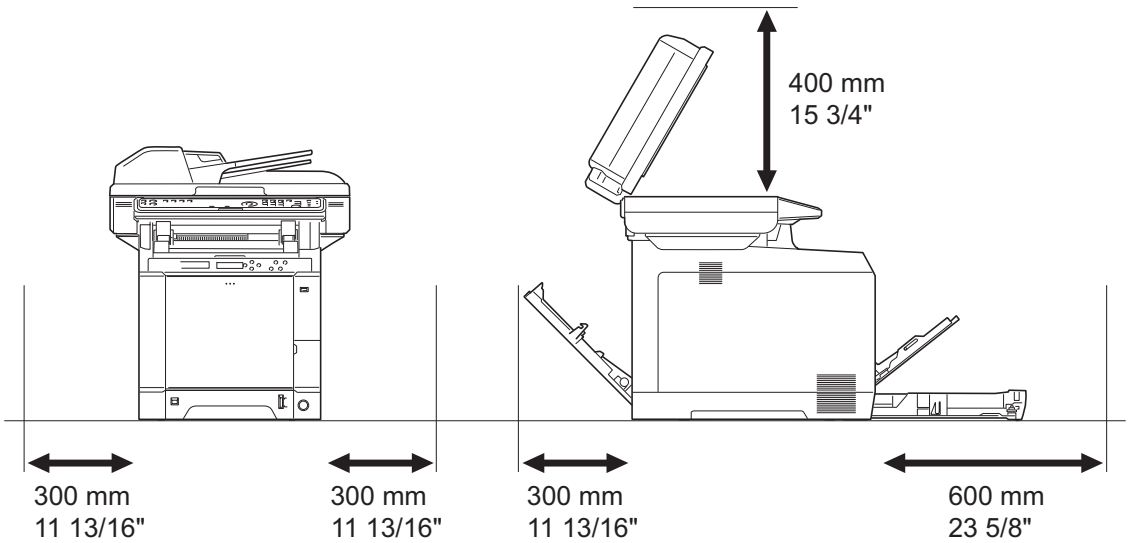

Figure 1-2-1

1-2-2 Unpacking

(1) Unpacking

220-240V AC model

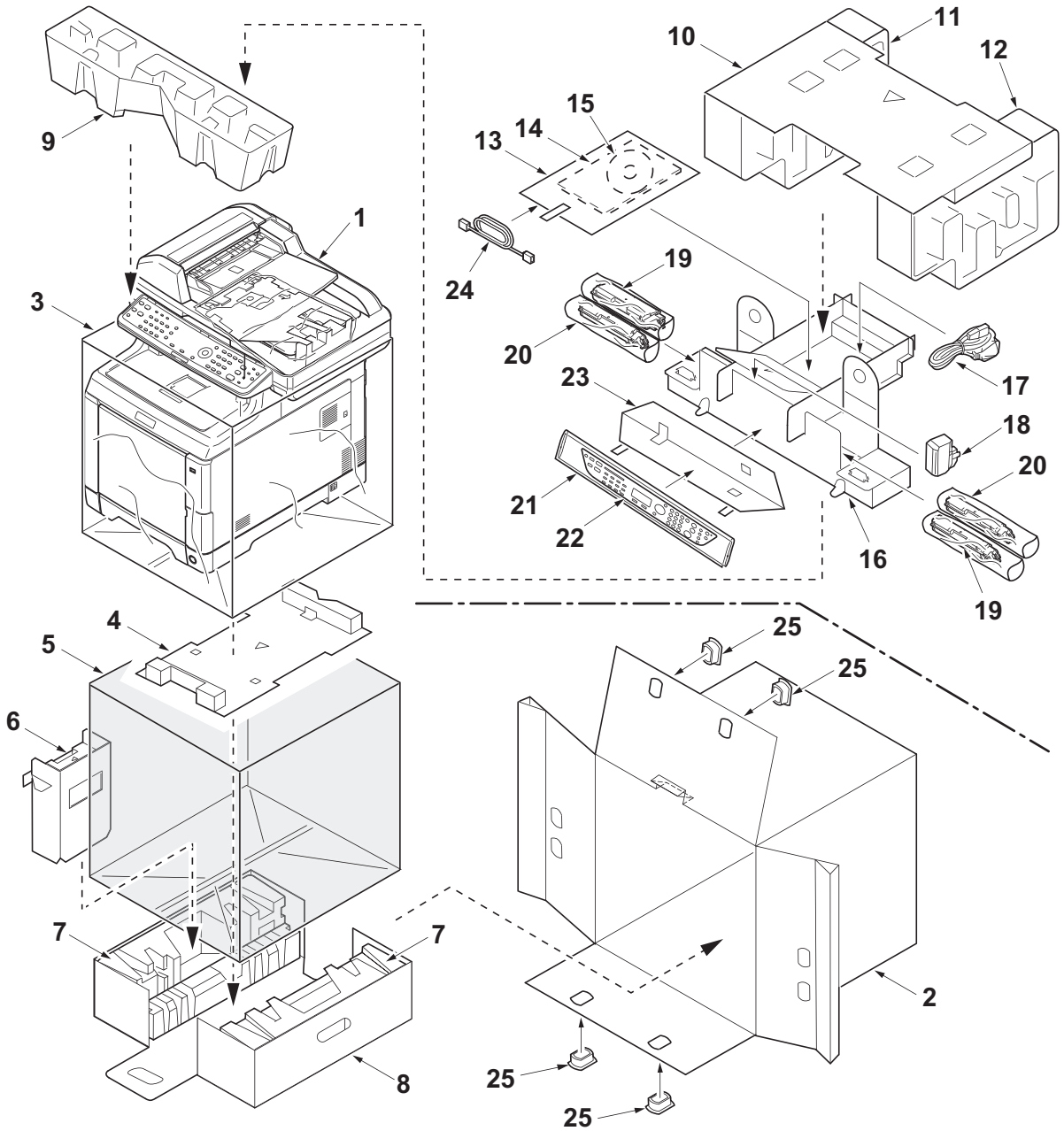

Figure 1-2-2

1. Machine
2. Outer case
3. Machine cover (620 × 580)
4. Bottom spacer
5. Plastic bag (650 × 650)
6. Left spacer
7. Bottom pads
8. Bottom case
9. Front pad
10. Top spacer
11. Top pad L
12. Top pad R
13. Plastic bag (240 × 350)
14. Installation guide etc.
15. CD-ROM*
16. Middle spacer
17. Power cord
18. Waste toner box
19. Toner containers
20. Plastic bags (200 × 450)
21. Plastic bag (250 × 600)
22. Operation labels
23. Operation label pad
24. Modular cable**
25. Hinge joints

*: 240V AC model only.
**: 4in1 model (with FAX) only.

120V AC model

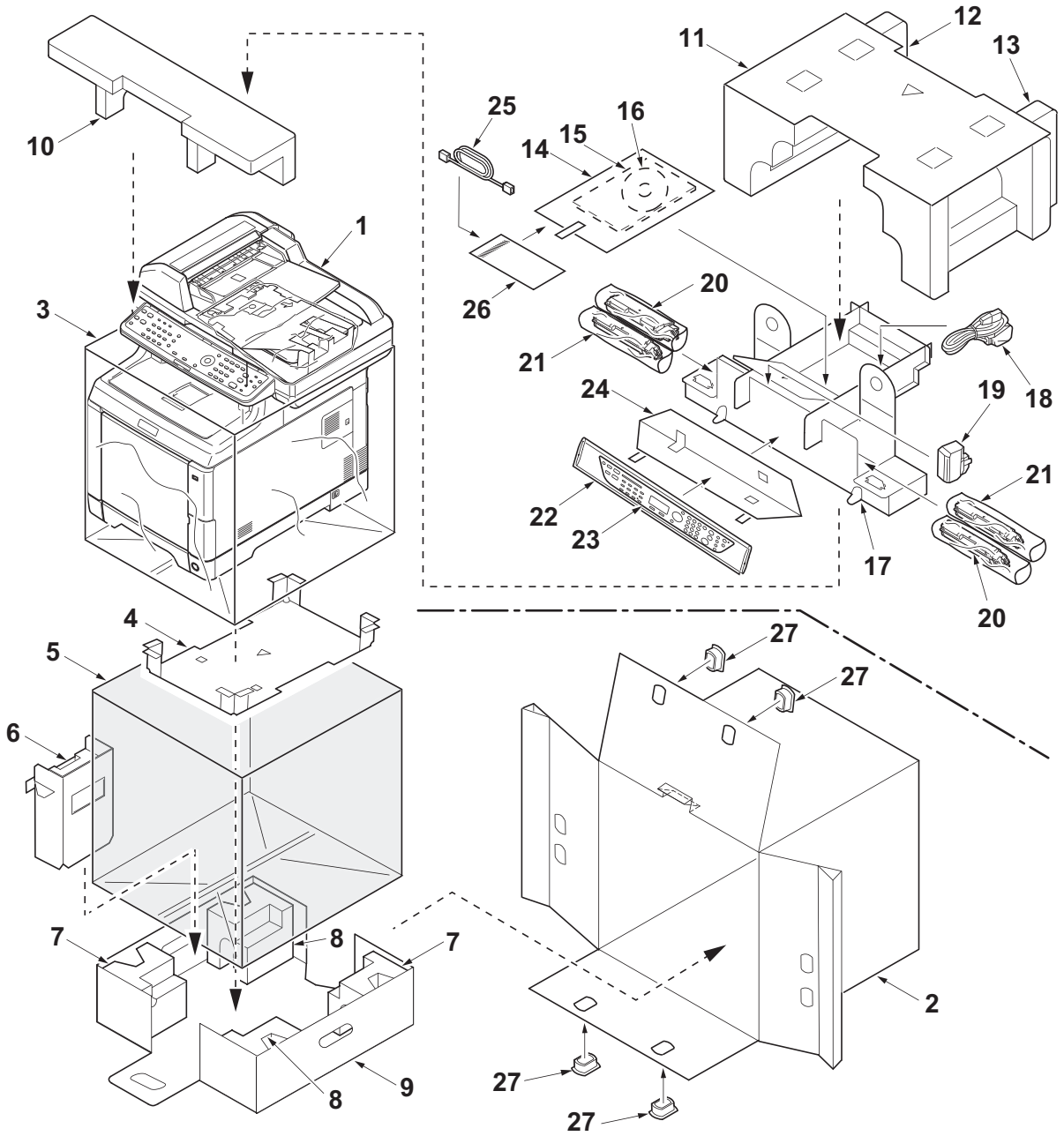

Figure 1-2-3

1. Machine
2. Outer case
3. Machine cover (620 × 580)
4. Bottom spacer
5. Plastic bag (650 × 650)
6. Left spacer
7. Bottom pads A
8. Bottom pads B
9. Bottom case
10. Front pad
11. Top spacer
12. Top pad L
13. Top pad R
14. Plastic bag (240 × 350)
15. Installation guide etc.
16. CD-ROM
17. Middle spacer
18. Power cord
19. Waste toner box
20. Toner containers
21. Plastic bags (200 × 450)
22. Plastic bag (250 × 600)
23. Operation labels
24. Operation label pad
25. Modular cable*
26. Plastic bag*
27. Hinge joints

*: 4in1 model (with FAX) only.

Place the machine on a level surface.

(2) Removing the tapes

Procedure

1. Open the DP.
2. Remove two tapes.
3. Remove two sheets.

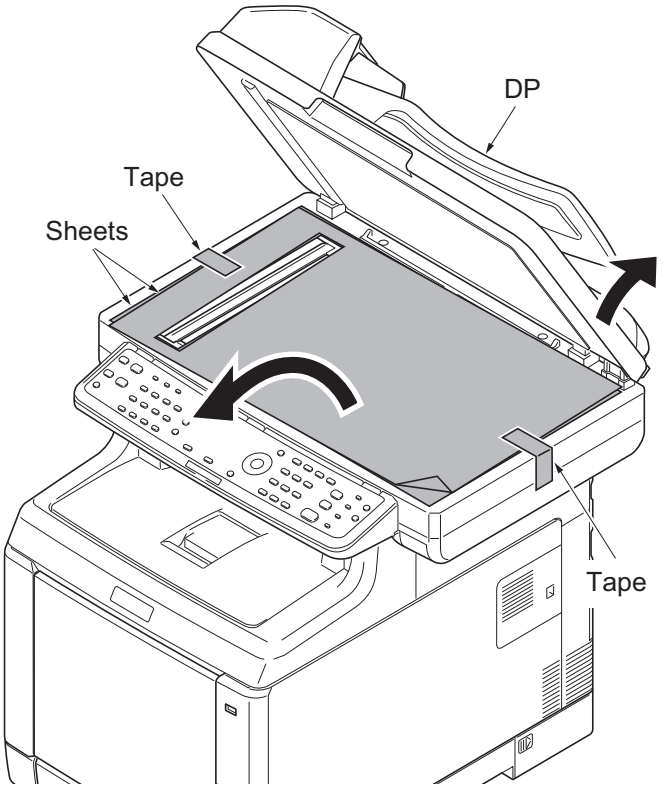

Figure 1-2-4

4. Remove the paper.

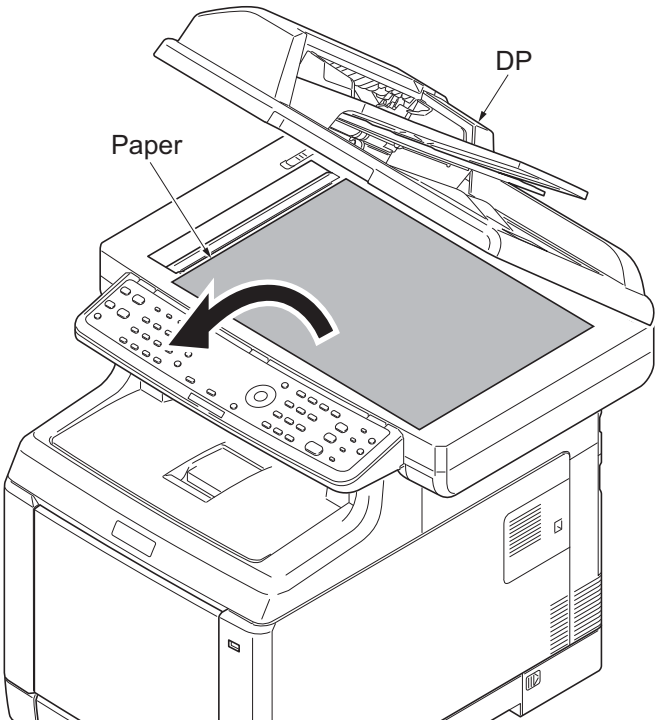

Figure 1-2-5

5. Remove tape A and pad.
6. Remove tape B.
7. Close the DP.

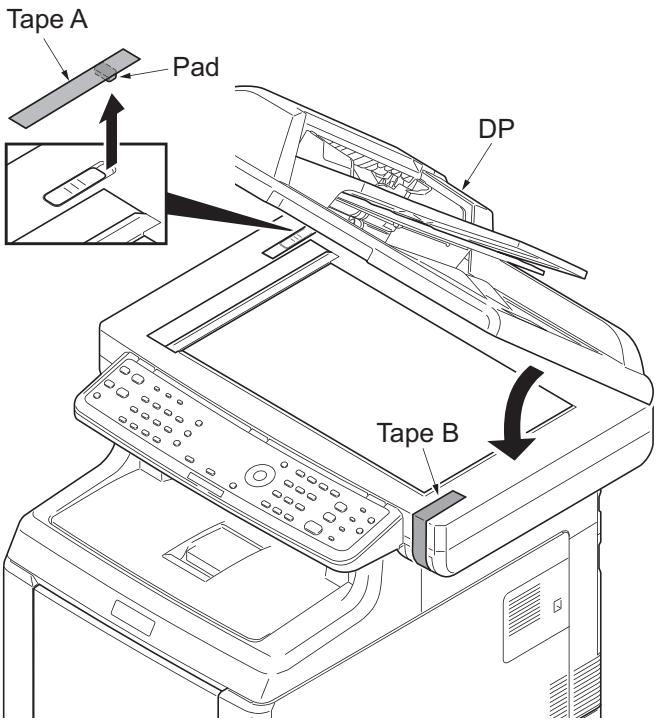

Figure 1-2-6

8. Remove three tapes.

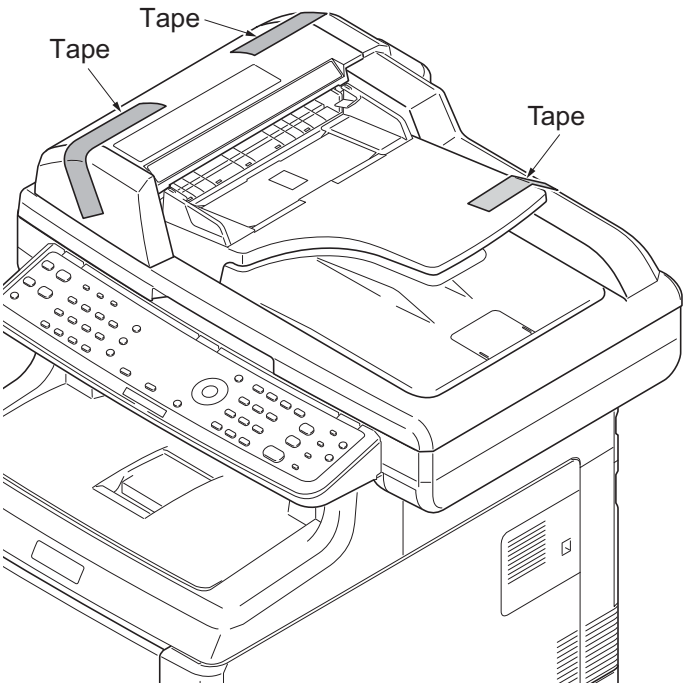

Figure 1-2-7

9. Open the DP top cover.
10. Remove two tapes.
11. Close the DP top cover.

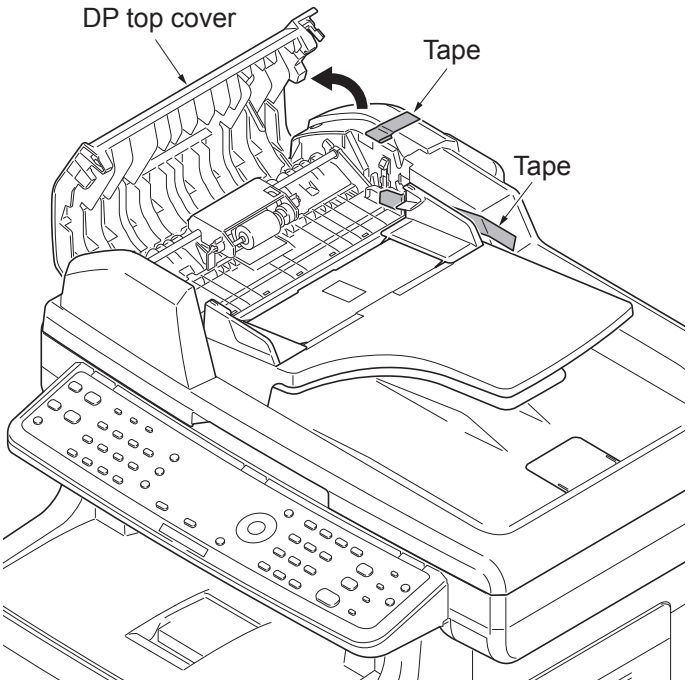

Figure 1-2-8

12. Remove five tapes.

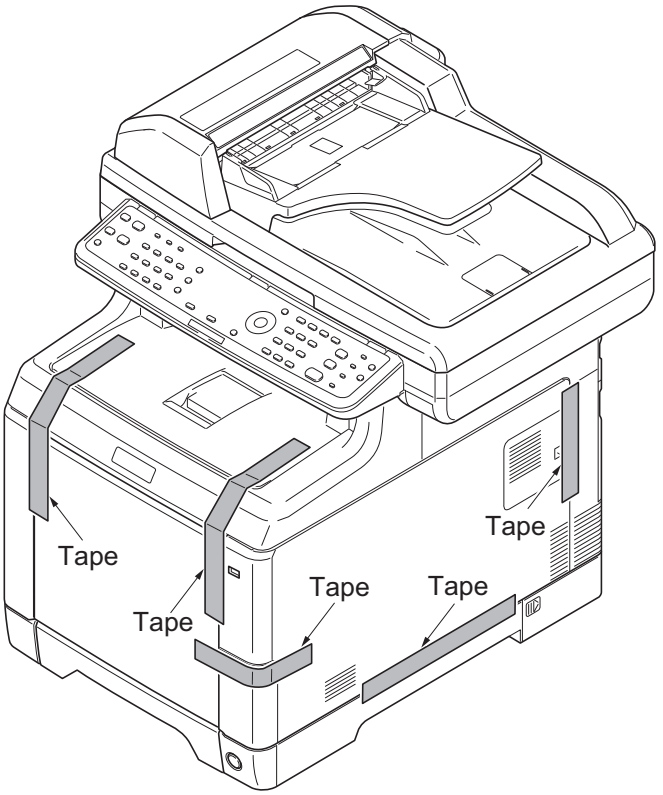

Figure 1-2-9

13. Remove four tapes.

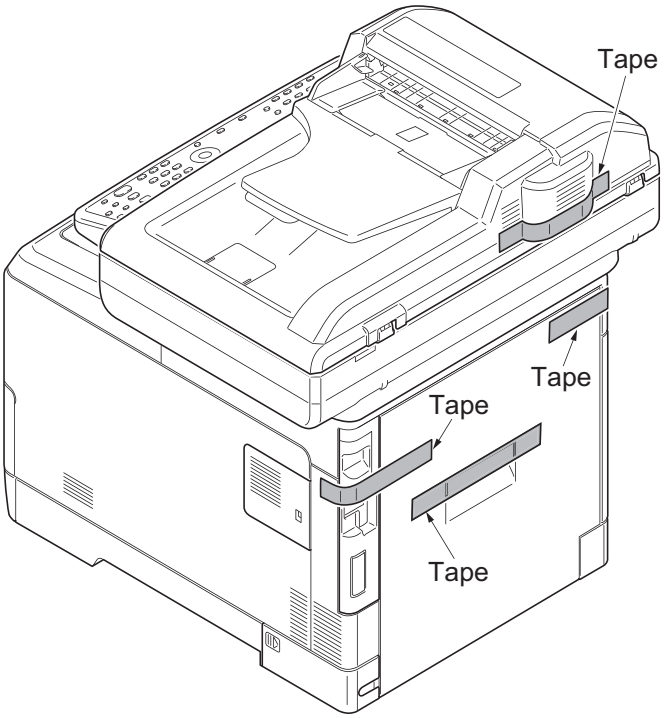

Figure 1-2-10

14. Open the top tray.
15. Remove pads A and B.
16. Close the top tray.

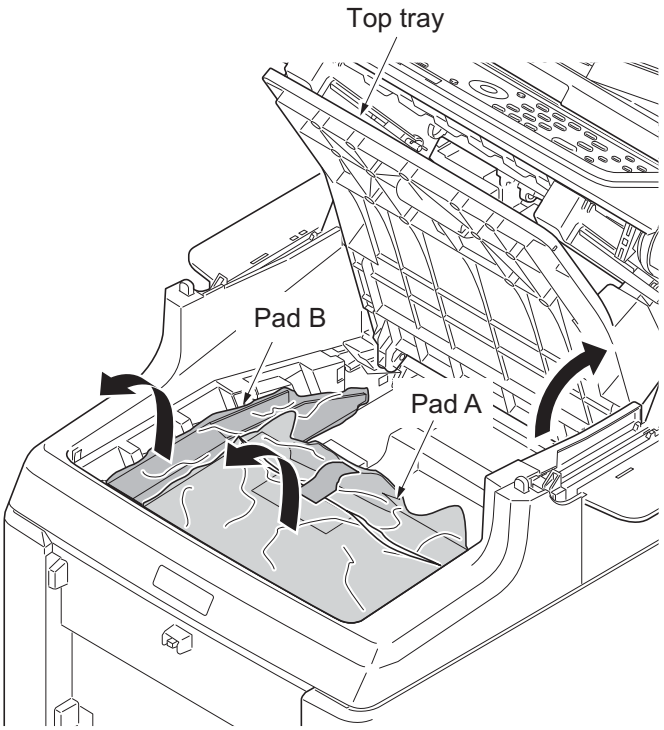

Figure 1-2-11

1-2-3 Installing the expansion memory (option)

Procedure

1. Turn off the main power switch.
   Caution: Do not insert or remove expansion memory while machine power is on.
   Doing so may cause damage to the machine and the expansion memory.
2. Remove the memory cover.

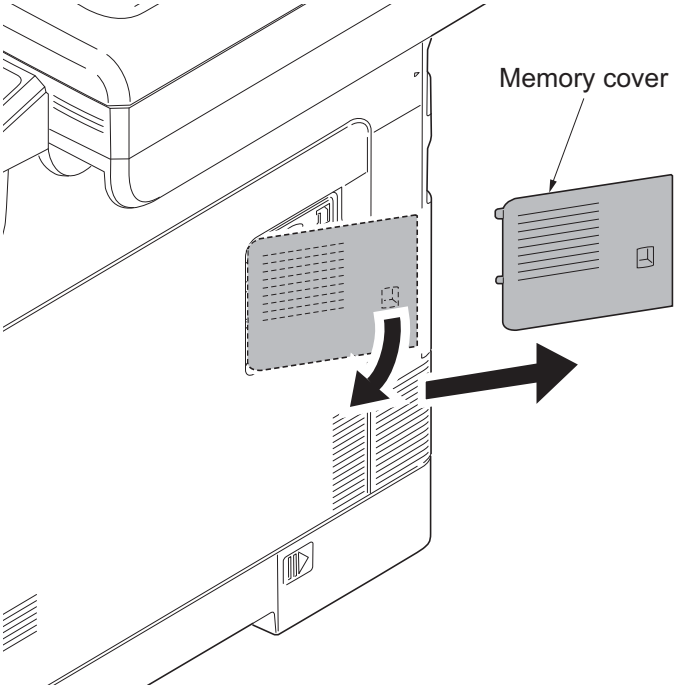

Figure 1-2-12

3. Unlock the lock and then open the fan holder.

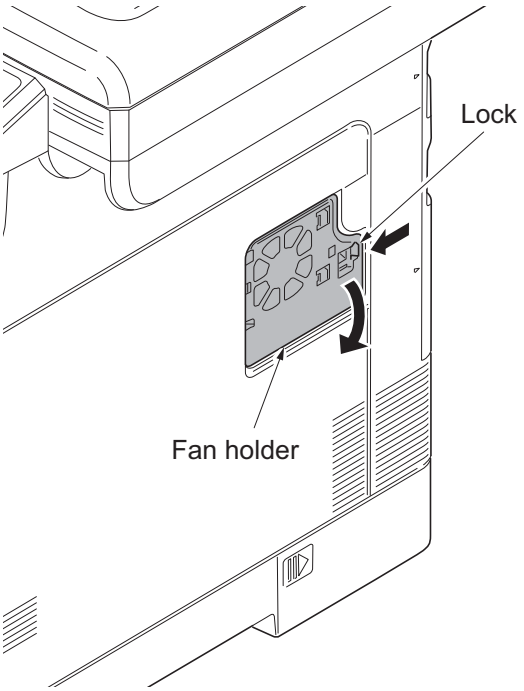

Figure 1-2-13

4. Insert the expansion memory into the memory socket so that the notches on the memory align with the corresponding protrusions in the slot.
5. Close the fan holder.
6. Refit the memory cover.
7. Print a status page to check the memory expansion (see page 1-3-57).
   If memory expansion has been properly performed, information on the installed memory is printed with the total memory capacity has been increased. Standard memory capacity 768 MB.

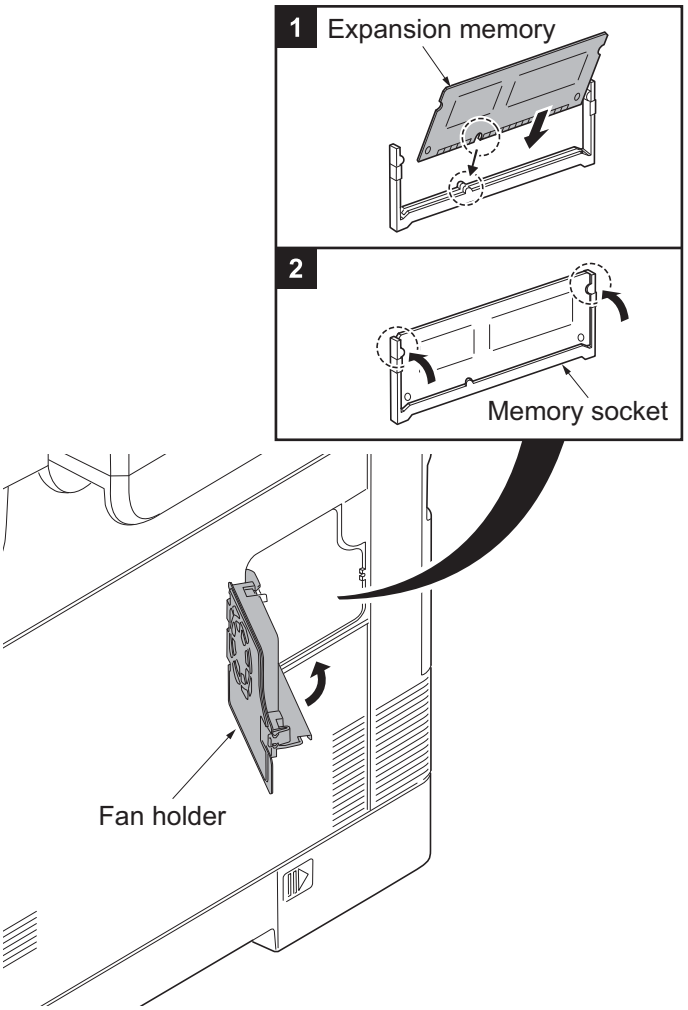

Figure 1-2-14

This page is intentionally left blank.

1-3-1 Maintenance mode

The machine is equipped with a maintenance function which can be used to maintain and service the machine.

(1) Executing a maintenance item

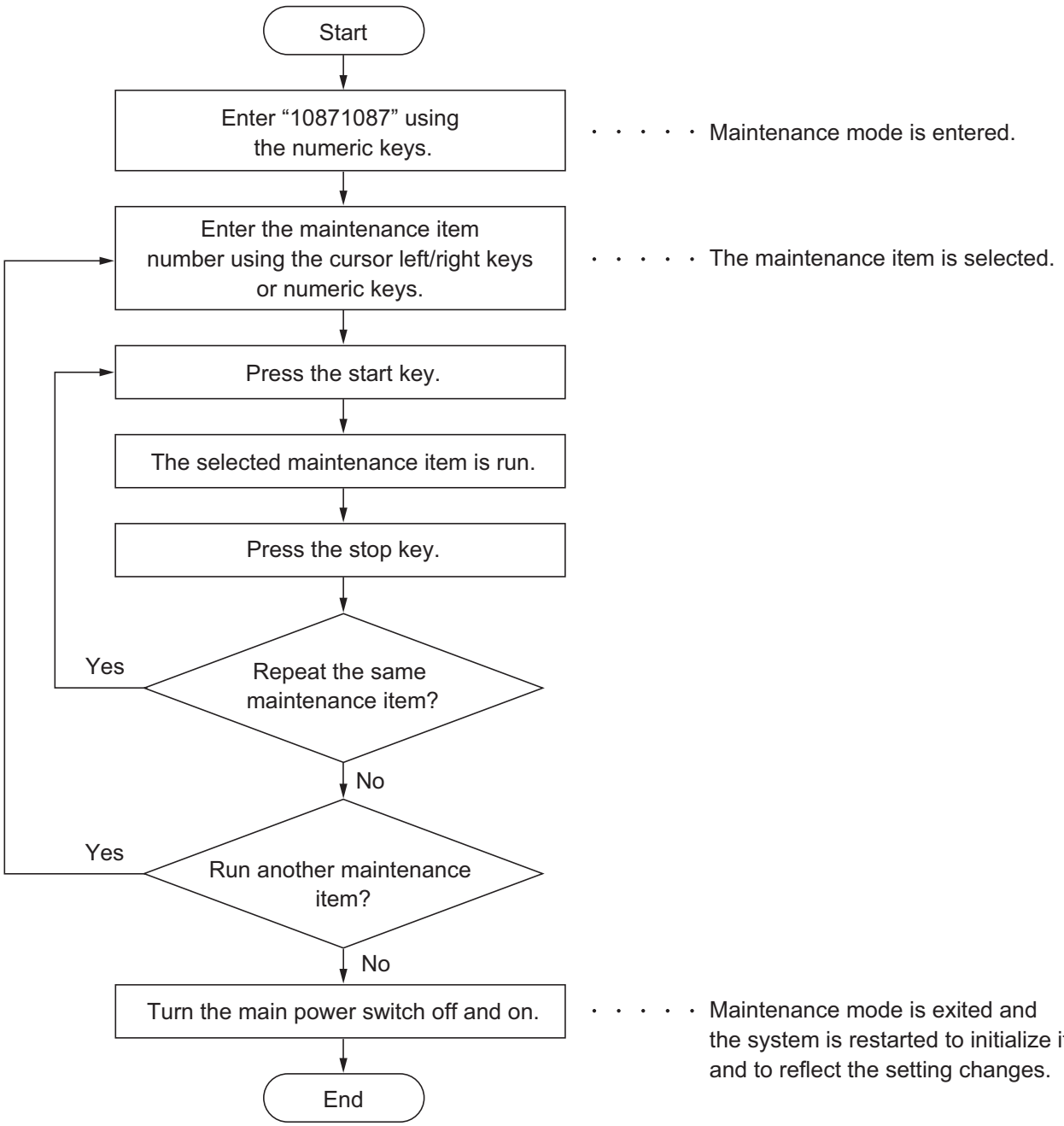

(2) Maintenance modes item list

Section	Item No.	Content of maintenance item	Initial setting
General	U000	Outputting an own-status report	-
	U002	Setting the factory default data	-
Operation panel and support equipment	U203	Checking DP operation	-
	U222	Setting the IC card type	Other
Mode setting	U250	Setting the maintenance cycle	100000
	U251	Checking/clearing the maintenance count	0
	U253	Switching between double and single counts	Double count
	U260	Selecting the timing for copy counting	Eject
	U285	Setting service status page	On
	U332	Setting the size conversion factor	1.0
	U345	Setting the value for maintenance due indication	0
Image processing	U410	Adjusting the halftone automatically	-
	U411	Adjusting the scanner automatically	-
	U425	Setting the target	-
Fax	U600	Initializing all data	-
	U601	Initializing permanent data	-
	U603	Setting user data 1	DTMF
	U604	Setting user data 2	2 (120 V) 1 (220-240 V)
	U605	Clearing data	-
	U610	Setting system 1 Setting the number of lines to be ignored when receiving a fax at 100% magnification Setting the number of lines to be ignored when receiving a fax in the auto reduction mode Setting the number of lines to be ignored when receiving a fax (A4R/LetterR) in the auto reduction mode	 3 0 0
	U611	Setting system 2 Setting the number of adjustment lines for automatic reduction Setting the number of adjustment lines for automatic reduction when A4 paper is set Setting the number of adjustment lines for automatic reduction when letter size paper is set	 7 22 26
	U612	Setting system 3 Selecting if auto reduction in the auxiliary direction is to be performed Setting the automatic printing of the protocol list Setting how trailing edge margins are detected	 On Off On

Section	Item No.	Content of maintenance item	Initial setting
Fax	U620	Setting the remote switching mode	One
	U625	Setting the transmission system 1 Setting the auto redialing interval Setting the number of times of auto redialing	 3 (120 V) 2 (220-240 V) 2 (120 V) 3 (220-240 V)
	U630	Setting communication control 1 Setting the communication starting speed Setting the reception speed Setting the waiting period to prevent echo problems at the sender Setting the waiting period to prevent echo problems at the receiver	 14400bps/V17 14400bps 300 75
	U631	Setting communication control 2 Setting ECM transmission Setting ECM reception Setting the frequency of the CED signal	 On On 2100
	U632	Setting communication control 3 Setting the DIS signal to 4 bytes Setting the CNG detection times in the fax/telephone auto select mode	 Off 2Time
	U633	Setting communication control 4 Enabling/disabling V.34 communication Setting the number of times of DIS signal reception Setting the number of times of DIS signal reception Setting the reference for RTN signal output	 On On Once 15%
	U634	Setting communication control 5	0
	U640	Setting communication time 1 Setting the one-shot detection time for remote switching Setting the continuous detection time for remote switching	 7 80
	U641	Setting communication time 2 Setting the T0 time-out time Setting the T1 time-out time Setting the T2 time-out time Setting the Ta time-out time Setting the Tb1 time-out time Setting the Tb2 time-out time Setting the Tc time-out time Setting the Td time-out time	 56 36 69 30 20 80 60 9 (120 V) 6 (220-240 V)
	U650	Setting modem 1 Setting the G3 transmission cable equalizer Setting the G3 reception cable equalizer Setting the modem detection level	 0dB 0dB -43dBm

Section	Item No.	Content of maintenance item	Initial setting
Fax	U651	Setting modem 2 Modem output level DTMF output level (main value) DTMF output level (level difference)	 9 (120 V) 10 (220-240 V) 5 (120 V) 10.5 (220-240 V) 2 (120 V) 2.5 (220-240 V)
	U660	Setting the NCU Setting the connection to PBX/PSTN Setting PSTN dial tone detection Setting busy tone detection Setting for a PBX Setting the loop current detection before dialing	 PSTN On On Loop On
	U670	Outputting lists	-
	U695	FAX function customize	On/Off
	U699	Setting the software switches	-
Others	U910	Clearing the digital dot coverage data	-
	U917	Setting backup data reading/writing	-
	U920	Checking the copy counts	-
	U927	Clearing the all copy counts and machine life counts (one time only)	-
	U928	Checking machine life counts	-
	U977	Data capture mode	-
	U995	Memory data Individual setting	-

(3) Contents of the maintenance mode items

Item No.	Description
U000	**Outputting an own-status report** **Description** Outputs lists of the current settings of the maintenance items and paper jam and service call occurrences. Outputs the event log. Also sends output data to the USB memory. **Purpose** To check the current setting of the maintenance items, or paper jam or service call occurrences. Before initializing or replacing the backup RAM, output a list of the current settings of the maintenance items to reenter the settings after initialization or replacement. **Method** 1. Press the start key. 2. Select the item to be output using the cursor up/down keys. **Display** / **Output list** Maintenance / List of the current settings of the maintenance modes Event / Outputs the event log All / Outputs the all reports 3. Press the start key. A list is output. **Method: Send to the USB memory** 1. Press the power key on the operation panel, and after verifying the main power indicator has gone off, switch off the main power switch. 2. Insert USB memory in USB memory slot. 3. Turn the main power switch on. 4. Enter the maintenance item. 5. Press the start key. 6. Select the item to be send. 7. Select [Text] or [HTML]. **Display** / **Output list** Print / Outputs the report USB (Text) / Sends output data to the USB memory (text type) USB (HTML) / Sends output data to the USB memory (HTML type) 8. Press the start key. Output will be sent to the USB memory. **Completion** Press the stop key. The screen for selecting a maintenance item No. is displayed.

Item No.	Description
U000	**Event log**

Event Log

MFP

(2) 06/Apr/2010 08:40

(1) Firmware version 2KX_2000.000.000 2010.04.06

(3) [XXXXXXXX] (4) [XXXXXXXX] (5) [XXXXXXXX]

(7) Paper Jam Log

#	Count.	Event Descriprions
16	1876543	501.01.08.01.01
15	166554	4020.01.08.01.01
14	4988	501.01.08.01.01
13	4988	4020.01.08.01.01
12	4988	501.01.08.01.01
11	4988	4020.01.08.01.01
10	1103	501.01.08.01.01
9	1103	4020.01.08.01.01
8	1103	501.01.08.01.01
7	1103	4020.01.08.01.01
6	1027	501.01.08.01.01
5	1027	4020.01.08.01.01
4	1027	501.01.08.01.01
3	1027	4020.01.08.01.01
2	406	501.01.08.01.01
1	36	4020.01.08.01.01

501.01.08.01.01
(a) (b) (c) (d) (e)

(8) Service Call Log

#	Count.	Service Code
8	1881214	01.6000
7	178944	01.2100
6	5296	01.4000
5	5295	01.6000
4	2099	01.2100
3	1054	01.4000
2	809	01.6000
1	30	01.2100

(9) Maintenance Log

#	Count.	Item
8	1045571	01.00
7	104511	01.00
6	7045	01.00
5	3454	01.00
4	3454	01.01
3	3454	01.01
2	417	01.01
1	34	01.01

(10) Unknown toner Log

#	Count.	Item
5	3454	01.00
4	3454	01.00
3	3454	01.00
2	406	01.00
1	32	01.00

(11) Counter Log

(f)

J100: 0	J512: 0	J4201: 0
J105: 0	J513: 0	J4202: 0
J106: 0	J518: 0	J4203: 0
J110: 0	J519: 0	J4208: 0
J111: 0	J1020: 0	J4209: 0
.	.	.
.	.	.
.	.	.
.	.	.
.	.	.
.	.	.

(g)

C0030: 1	C2100: 1
C0070: 1	C2200: 1
C0100: 1	C2300: 1
C0120: 1	C2330: 1
C0130: 1	C2340: 1
.	.
.	.
.	.
.	.
.	.
.	.

(h) T00: 1
T01: 1

(6) [XXXXXXXXXXXXXXXX]

Figure 1-3-1

Item No.	Description
U000	**Detail of event log**

No.	Items	Description		
(1)	System version			
(2)	System date			
(3)	Engine soft version			
(4)	Engine boot version			
(5)	Operation panel mask version			
(6)	Machine serial number			
(7)	Paper Jam Log	#	Count.	Event
		Remembers 1 to 16 of occurrence. If the occurrence of the previous paper jam is less than 16, all of the paper jams are logged. When the occurrence excesseds 16, the oldest occurrence is removed.	The total page count at the time of the paper jam.	Log code (2 digit, hexadecimal, 5 categories) (a) Cause of a paper jam (b) Paper source (c) Paper size (d) Paper type (e) Paper eject
		(a) Cause of paper jam (Hexadecimal)		
		Refer to P.1-4-1 for paper jem location 0100: Controller sequence error 0105: Registration sensor not detected 0106: Controller sequence error 0110: Top tray open 0111: Rear cover open 0112: Front cover open 0113: MP tray open 0120: Controller sequence error 0121: Controller sequence error 0211: Rear cover open (paper feeder 1) 0212: Rear cover open (paper feeder 2) 0501: No paper feed from cassette 1 0502: No paper feed from cassette 2 0503: No paper feed from cassette 3 0508: No paper feed from duplex section 0509: No paper feed from MP tray 0511: Multiple sheets in cassette 1 0512: Multiple sheets in cassette 2 0513: Multiple sheets in cassette 3 0518: Multiple sheets in duplex section 0519: Multiple sheets in MP tray 1020: MP feed sensor is turned ON 1403: PF feed sensor 1 does not turn ON 1413: PF feed sensor 1 does not turn OFF 1420: PF feed sensor 1 is turned ON 1620: PF feed sensor 2 is turned ON		

Item No.	Description
U000	

No.	Items	Description
(7) cont.	Paper Jam Log	4002: Registration sensor does not turn ON (Paper feeder 1) 4003: Registration sensor does not turn ON (Paper feeder 2) 4009: Registration sensor does not turn ON (MP tray) 4012: Registration sensor does not turn OFF (Paper feeder 1) 4013: Registration sensor does not turn OFF (Paper feeder 2) 4019: Registration sensor does not turn OFF (MP tray) 4020: Registration sensor is turned ON 4201: Eject sensor does not turn ON (Cassette) 4202: Eject sensor does not turn ON (Paper feeder 1) 4203: Eject sensor does not turn ON (Paper feeder 2) 4208: Eject sensor does not turn ON (Duplex) 4209: Eject sensor does not turn ON (MP tray) 4211: Eject sensor does not turn OFF (Cassette) 4212: Eject sensor does not turn OFF (Paper feeder 1) 4213: Eject sensor does not turn OFF (Paper feeder 2) 4218: Eject sensor does not turn OFF (Duplex) 4219: Eject sensor does not turn OFF (MP tray) 4220: Eject sensor is turned ON 9010: DP top cover open 9400: No original feed 9401: An original jam in the original switchback section 2 9410: An original jam in the original conveying section 9411: An original jam in the original switchback section 1
		(b) Detail of paper source (Hexadecimal)
		00: MP tray 01: Cassette 1 02: Cassette 2 (paper feeder 1) 03: Cassette 3 (paper feeder 2) 04 to 09: Reserved
		(c) Detail of paper size (Hexadecimal)

00: (Not specified) 01: Monarch 02: Business 03: International DL 04: International C5 05: Executive 06: Letter-R 86: Letter-E 07: Legal 08: A4R 88: A4E 09: B5R 89: B5E 0A: A3	0B: B4 0C: Ledger 0D: A5R 0E: A6 0F: B6 10: Commercial #9 11: Commercial #6 12: ISO B5 13: Custom size 1E: C4 1F: Postcard 20: Reply-paid post-card 21: Oficio II	22: Special 1 23: Special 2 24: A3 wide 25: Ledger wide 26: Full bleed paper (12 x 8) 27: 8K 28: 16K-R A8: 16K-E 32: Statement-R B2: Statement-E 33: Folio 34: Western type 2 35: Western type 4

Item No.	Description
U000	

No.	Items	Description		
(7) cont.	Paper Jam Log	(d) Detail of paper type (Hexadecimal)		
		01: Plain 02: Transparency 03: Preprinted 04: Labels 05: Bond 06: Recycled 07: Vellum 08: Rough 09: Letterhead	0A: Color 0B: Prepunched 0C: Envelope 0D: Cardstock 0E: Coated 0F: 2nd side 10: Media 16 11: High quality	15: Custom 1 16: Custom 2 17: Custom 3 18: Custom 4 19: Custom 5 1A: Custom 6 1B: Custom 7 1C: Custom 8
		(e) Detail of paper eject location (Hexadecimal)		
		01: Face down (FD)		
(8)	Service Call Log	#	Count.	Service Code
		Remembers 1 to 8 of occurrence of self diagnostics error. If the occurrence of the previous diagnostics error is less than 8, all of the diagnostics errors are logged.	The total page count at the time of the self diagnostics error.	Self diagnostic error code (See page 1-4-7) Example: 01.6000 01: Self diagnostic error 6000: Self diagnostic error code number
(9)	Maintenance Log	#	Count.	Item
		Remembers 1 to 8 of occurrence of replacement. If the occurrence of the previous replacement of toner container is less than 8, all of the occurrences of replacement are logged.	The total page count at the time of the replacement of the toner container.	Code of maintenance replacing item (1 byte, 2 categories) First byte (Replacing item) 01: Toner container Second byte (Type of replacing item) 00: Black 01: Cyan 02: Magenta 03: Yellow First byte (Replacing item) 02: Maintenance kit Second byte (Type of replacing item) 00: - 01: -

Item No.	Description
U000	

No.	Items	Description		
(10)	Unknown Toner Log	#	Count.	Item
		Remembers 1 to 5 of occurrence of unknown toner detection. If the occurrence of the previous unknown toner detection is less than 5, all of the unknown toner detection are logged.	The total page count at the time of the toner empty error with using an unknown toner container.	Unknown toner log code (1 byte, 2 categories) First byte 01: Toner container (Fixed) Second byte 00: Black 01: Cyan 02: Magenta 03: Yellow
(11)	Counter Log Comprised of three log counters including paper jams, self diagnostics errors, and replacement of the toner container.	(f) Paper jam	(g) Self diagnostic error	(h) Maintenance item replacing
		Indicates the log counter of paper jams depending on location. Refer to Paper Jam Log. All instances including those are not occurred are displayed.	Indicates the log counter of self diagnostics errors depending on cause. (See page 1-4-7) Example: C6000: 4 Self diagnostics error 6000 has happened four times.	Indicates the log counter depending on the maintenance item for maintenance. T: Toner container 00: Black 01: Cyan 02: Magenta 03: Yellow M: Maintenance kit 00: - 01: - Example: T00: 1 The toner container has been replaced once.

Item No.	Description
U002	**Setting the factory default data** **Description** Restores the machine conditions to the factory default settings. **Purpose** To move the mirror frame of the scanner to the position for transport (position in which the frame can be fixed). **Method** 1. Press the start key. 2. Select [Mode1(All)] using the cursor up/down keys. 3. Press the start key. The mirror frame of the scanner returns to the position for transport. 4. Turn the main power switch off and on. * : An error code is displayed in case of an initialization error. When errors occurred, turn main power switch off then on, and execute initialization using maintenance item U002. **Error codes** Codes: 0001 — Controller error 0020 — Engine error 0040 — Scanner error

Item No.	Description
U203	**Checking DP operation** **Description** Simulates the original conveying operation separately in the DP. **Purpose** To check the DP operation. **Method** 1. Press the start key. 2. Place an original in the DP if running this simulation with paper. 3. Select the speed to be operated using the cursor up/down keys. **Display** / **Description** Normal Speed — Normal reading (600 dpi) High Speed — High-speed reading 4. Press the start key. 5. Select the item to be operated using the cursor up/down keys. **Display** / **Description** CCD ADP (Non-P) — Without paper, single-sided original of CCD (continuous operation) CCD ADP — With paper, single-sided original of CCD CCD RADP (Non-P) — Without paper, double-sided original of CCD (continuous operation) CCD RADP — With paper, double-sided original of CCD 6. Press the start key. The operation starts. 7. To stop continuous operation, press the stop key. **Completion** Press the stop key. The screen for selecting a maintenance item No. is displayed.

<table>
<tr><th>Item No.</th><th>Description</th></tr>
<tr><td>U222</td><td>

Setting the IC card type

Description
Sets the type of IC card.
Purpose
To change the type of IC card.

Setting
1. Press the start key.
2. Select the item using the cursor up/down keys.

Display	Description
Other	The type of IC card is SSFC.
SSFC	The type of IC card is not SSFC.

* : Initial setting: Other

3. Press the start key. The setting is set.

Completion
Press the stop key. The screen for selecting a maintenance item No. is displayed.

</td></tr>
<tr><td>U250</td><td>

Setting the maintenance cycle

Description
Displays, clears and changes the maintenance cycle.
Purpose
To check and change the maintenance cycle.

Method
1. Press the start key. The currently set maintenance cycle is displayed.

Setting
1. Select [M.Cnt A] using the cursor up/down keys.
2. Change the setting using the cursor left/right keys or numeric keys.

Description	Setting range	Initial setting
Maintenance cycle	0 to 9999999	100000

3. Press the start key. The value is set.

Clearing
1. Select [Clear] using the cursor up/down keys.
2. Press the start key. The count is cleared.

Completion
Press the stop key. The screen for selecting a maintenance item No. is displayed.

</td></tr>
</table>

Item No.	Description
U251	**Checking/clearing the maintenance count** **Description** Displays, clears and changes the maintenance count. **Purpose** To check the maintenance count. Also to clear the count during maintenance service (replacing the maintenance kit). **Method** 1. Press the start key. The maintenance count is displayed. **Setting** 1. Select [M.Cnt A] using the cursor up/down keys. 2. Change the setting using the cursor left/right keys or numeric keys. **Description** | **Setting range** | **Initial setting** Maintenance count | 0 to 9999999 | 0 3. Press the start key. The count is set. **Clearing** 1. Select [Clear] using the cursor up/down keys. 2. Press the start key. The count is cleared. **Completion** Press the stop key. The screen for selecting a maintenance item No. is displayed.

Item No.	Description
U253	**Switching between double and single counts** **Description** Switches the count system for the total counter and other counters. **Purpose** Used to select, according to the preference of the user (copy service provider), if folio size paper is to be counted as one sheet (single count) or two sheets (double count). **Setting** 1. Press the start key. 2. Select the item using the cursor up/down keys. **Display** / **Description** Color / Count system of color mode B/W / Count system of black/white mode 3. Press the start key. 4. Select the count system using the cursor up/down keys. **Display** / **Description** SGL Count(All) / Single count for all size paper DBL Count(Folio) / Double count for Folio size or larger * : Initial setting: DBL Count(Folio) 5. Press the start key. The setting is set. **Completion** Press the stop key. The screen for selecting a maintenance item No. is displayed.
U260	**Selecting the timing for copy counting** **Description** Changes the copy count timing for the total counter and other counters. **Purpose** To be set according to user request. **Setting** 1. Press the start key. 2. Select the copy count timing using the cursor up/down keys. **Display** / **Description** Feed / When secondary paper feed starts Eject / When the paper is ejected * : Initial setting: Eject 3. Press the start key. The setting is set. **Completion** Press the stop key. The screen for selecting a maintenance item No. is displayed.

<table>
<tr><th>Item No.</th><th>Description</th></tr>
<tr><td>U285</td><td>

Setting service status page

Description
Determines displaying the digital dot coverage report on reporting.
Purpose
According to user request, changes the setting.

Setting
1. Press the start key.
2. Select On or Off using the cursor up/down keys.

Display	Description
On	Displays the digital dot coverage
Off	Not to display the digital dot coverage

* : Initial setting: On

3. Press the start key. The setting is set.

Completion
Press the stop key. The screen for selecting a maintenance item No. is displayed.

</td></tr>
<tr><td>U332</td><td>

Setting the size conversion factor

Description
Sets the coefficient of nonstandard sizes in relation to the A4/Letter size. The coefficient set here is used to convert the black ratio in relation to the A4/Letter size and to display the result in user simulation.
Purpose
To set the coefficient for converting the black ratio for nonstandard sizes in relation to the A4/Letter size.

Setting
1. Press the start key.
2. Change the setting using the cursor left/right keys or numeric keys.

Display	Description	Setting range	Initial setting
Rate	Size parameter	0.1 to 3.0	1.0

3. Press the start key. The value is set.

Completion
Press the stop key. The screen for selecting a maintenance item No. is displayed.

</td></tr>
</table>

Item No.	Description
U345	**Setting the value for maintenance due indication** **Description** Sets when to display a message notifying that the time for maintenance is about to be reached, by setting the number of copies that can be made before the current maintenance cycle ends. When the difference between the number of copies of the maintenance cycle and that of the maintenance count reaches the set value, the message is displayed. **Purpose** To change the time for maintenance due indication. **Setting** 1. Press the start key. 2. Select [Cnt] using the cursor up/down keys. 3. Change the setting using the cursor left/right keys. **Description** | **Setting range** | **Initial setting** Time for maintenance due indication (Remaining number of copies that can be made before the current maintenance cycle ends) | 0 to 9999 | 0 4. Press the start key. The value is set. **Clearing** 1. Select [Clear] using the cursor up/down keys. 2. Press the start key. The value is cleared. **Completion** Press the stop key. The screen for selecting a maintenance item No. is displayed.

Item No.	Description
U410	**Adjusting the halftone automatically** **Description** Carries out processing for the data acquisition that is required in order to perform either automatic adjustment of the halftone or the ID correction operation. **Purpose** Performed when the quality of reproduced halftones has dropped. **Method** 1. Select [Normal Mode]. 2. Press the start key. A test patterns 1 and 2 are outputted. 3. Place the output test pattern 1 as the original. Place approximately 20 sheets of white paper on the test pattern 1 and set them. 4. Press the start key. Adjustment is made (first time). 5. Place the output test pattern 2 as the original. Place approximately 20 sheets of white paper on the test pattern 2 and set them. 6. Press the start key. Adjustment is made (second time). 7. When normally completed, [Finish] is displayed. If a problem occurs during auto adjustment, error code is displayed. **Error codes**

Codes	Description	Codes	Description
S001	Patch not detected	E001	Engine status error
S002	Original deviation in the main scanning direction	E002	Engine sensor error
		EFFF	Engine other error
S003	Original deviation in the auxiliary scanning direction	C001	Controller error
		C100	Adjustment value error
S004	Original inclination error	C200	Adjustment value error
S005	Original type error	CFFF	Controller other error
SFFF	Scanner other error		

Completion
Press the stop key. The screen for selecting a maintenance item is displayed.

Item No.	Description
U411	**Adjusting the scanner automatically** **Description** Uses the adjustment original suppled with DP and automatically adjusts the following items in the scanner and the DP scanning sections. Scanner section: Original size magnification, leading edge timing, center line, input gamma, input gamma in monochrome mode and matrix DP scanning section: Original size magnification, leading edge timing, center line **Purpose** To perform automatic adjustment of various items in the scanner and the DP scanning sections. **Method** 1. Press the start key. 2. Select the item. The screen for executing is displayed. **Method: Table** 1. Enter the target values which are shown on the specified original (P/N: 302FZ56990) executing maintenance item U425. 2. Set a specified original (P/N: 302FZ56990) on the platen. 3. Enter maintenance item U411. 4. Select [Table] using the cursor up/down keys. 5. Press the start key. Auto adjustment starts. 6. When automatic adjustment has normally completed, [OK] is displayed. If a problem occurs during auto adjustment, [NG XX] (XX is replaced by an error code) is displayed and operation stops. Should this happen, determine the details of the problem and repeat the procedure from the beginning. 7. To return to the screen for selecting an item, press the stop key. **Method: DP** 1. Select [DP] using the cursor up/down keys. 2. Set a specified original (P/N: 303LJ57010) in the DP. 3. Press the start key. Auto adjustment starts. 4. When automatic adjustment has normally completed, [OK] is displayed. If a problem occurs during auto adjustment, [NG XX] (XX is replaced by an error code) is displayed and operation stops. Should this happen, determine the details of the problem and repeat the procedure from the beginning. 5. To return to the screen for selecting an item, press the stop key.

Display	Description	Original to be used for adjustment (P/N)
All	Performs automatic adjustment in the DP scanning section following automatic adjustment in the scanner section	302FZ56990/ 303LJ57010
Table	Automatic adjustment in the scanner section	302FZ56990
DP	Automatic adjustment in the DP scanning section:	303LJ57010

Item No.	Description
U411	**Error Codes**

Codes	Description
01	Black band detection error (scanner leading edge registration)
02	Black band detection error (scanner center line)
03	Black band detection error (scanner main scanning direction magnification)
04	Black band is not detected (scanner leading edge registration)
05	Black band is not detected (scanner center line)
06	Black band is not detected (scanner main scanning direction magnification)
07	Black band is not detected (scanner auxiliary scanning direction magnification)
08	Black band is not detected (DP main scanning direction magnification far end)
09	Black band is not detected (DP main scanning direction magnification near end)
0a	Black band is not detected (DP auxiliary scanning direction magnification leading edge)
0b	Black band is not detected (DP auxiliary scanning direction magnification leading edge original check)
0c	Black band is not detected (DP auxiliary scanning direction trailing edge)
0d	Black band is not detected (DP auxiliary scanning direction trailing edge 2)
0e	DMA time out
0f	Auxiliary scanning direction magnification error
10	Auxiliary scanning direction leading edge detection error
11	Auxiliary scanning direction trailing edge detection error
12	Auxiliary scanning direction skew 1.5 error
13	Maintenance request error
14	Main scanning direction center line error
15	Main scanning direction skew 1.5 error
16	Main scanning direction magnification error
17	Service call error
18	DP paper misfeed error
19	PWB replacement error
1a	Original error

Completion

Press the stop key. The screen for selecting a maintenance item is displayed.

Item No.	Description
U425	**Setting the target** **Description** Enters the lab values that is indicated on the back of the chart (P/N: 302FZ56990) used for adjustment. **Purpose** Performs data input in order to correct for differences in originals during automatic adjustment. **Method** 1. Press the start key. 2. Select the item to be set using the cursor up/down keys.

Display	Description
N875	Setting the N875 patch for the original for adjustment
N475	Setting the N475 patch for the original for adjustment
N125	Setting the N125 patch for the original for adjustment
C	Setting the cyan patch for the original for adjustment
M	Setting the magenta patch for the original for adjustment
Y	Setting the yellow patch for the original for adjustment
R	Setting the red patch for the original for adjustment
G	Setting the green patch for the original for adjustment
B	Setting the blue patch for the original for adjustment
Adjust Original	Setting the main and auxiliary scanning directions

3. Select the item to be set using the cursor up/down keys.

Display	Description	Setting range
L	Setting the L value	0.0 to 100.0
a	Setting the a value	-200.0 to 200.0
b	Setting the b value	-200.0 to 200.0

4. Enters the value that is indicated on the back of the chart using the cursor left/right keys or numeric keys.
5. Press the start key. The value is set.

Item No.	Description
U425	**Setting: [Adjust Original]** 1. Measure the distance from the left edge to the black belt (a) of the original at A, B and C. Measurement procedure 1) Measure the distance from the edge to the black belt (a) of the original at A (30 mm from the leading edge), B (148.5 mm from the leading edge) and C (267 mm from the leading edge), respectively. 2) Apply the following formula for the values obtained: ((A + C) / 2 + B) / 2 2. Enter the values solved using the cursor left/right keys or numeric keys in [Main]. 3. Press the start key. The value is set. 4. Measure the distance from the leading edge to the black belt (b) of the original at D, E and F. Measurement procedure 1) Measure the distance from the edge to the black belt (b) of the original at D (35 mm from the left edge), E (110 mm from the left edge) and F (185 mm from the left edge), respectively. 2) Apply the following formula for the values obtained: ((D + F) / 2 + E) / 2 5. Enter the values solved using the cursor left/right keys or numeric keys in [Sub Lead]. 6. Press the start key. The value is set. 7. Measure the length (G) from the edge of the black belt (b) to edge of the black belt (c) of the original. 8. Enter the measured value using the cursor left/right keys or numeric keys in [Sub Tail]. 9. Press the start key. The value is set. 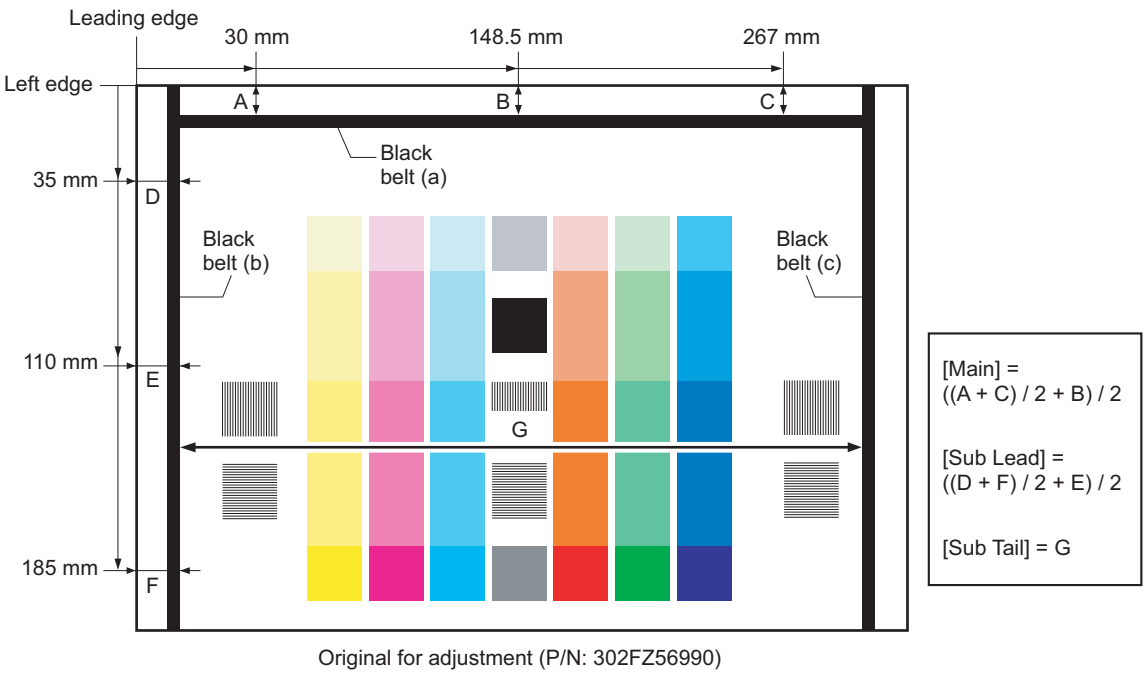 Original for adjustment (P/N: 302FZ56990) **Figure 1-3-2** **Completion** Press the stop key. The screen for selecting a maintenance item No. is displayed.

Item No.	Description
U600	**Initializing all data**

Description
Initializes software switches and all data in the backup data on the FAX control PWB, according to the destination and OEM.
Executes the check of the file system, when abnormality of the file system is detected, initializes the file system, communication past record and register setting contents.

Purpose
To initialize the FAX control PWB.

Method
1. Press the start key.
2. Select [Execute]. The screen for entering the destination code and OEM code is displayed.
3. Select [Country Code] and enter a destination code using the numeric keys (refer to the destination code list on following for the destination code).
4. Press the start key.
   There is no operation necessary on this screen.
   The destination code and the OEM code are displayed with the values currently set.
5. Press the start key. Data initialization starts. To cancel data initialization, press the stop key.
6. After data initialization, the entered destination, OEM codes and ROM version are displayed.
   A ROM version displays three kinds, application, boot, and IPL.

Destination code list

Code	Destination	Code	Destination
000	Japan	253	CTR21 (European nations)
009	Australia		Italy
038	China		Germany
080	Hong Kong		Spain
084	Indonesia		U.K.
088	Israel		Netherlands
097	Korea		Sweden
108	Malaysia		France
126	New Zealand		Austria
136	Peru		Switzerland
137	Philippines		Belgium
152	Middle East		Denmark
156	Singapore		Finland
159	South Africa		Portugal
169	Thailand		Ireland
181	U.S.A.		Norway
242	South America	254	Taiwan
243	Saudi Arabia		

Item No.	Description
U601	**Initializing permanent data** **Description** Initializes software switches on the FAX control PWB according to the destination and OEM. **Purpose** To initialize the FAX control PWB without changing user registration data. **Method** 1. Press the start key. 2. Select [Execute]. The screen for entering the destination code and OEM code is displayed. 3. Select [Country Code] and enter a destination code using the numeric keys (refer to the destination code list on page 1-3-23 for the destination code). 4. Press the start key. There is no operation necessary on this screen. The destination code and the OEM code are displayed with the values currently set. 5. Press the start key. Data initialization starts. To cancel data initialization, press the back key. 6. After data initialization, the entered destination, OEM codes and ROM version are displayed. A ROM version displays three kinds, application, boot, and IPL.
U603	**Setting user data 1** **Description** Makes user settings to enable the use of the machine as a fax. **Purpose** To be executed as required. **Method** 1. Press the start key. 2. Select [Line Type] and press the start key. 3. Select the setting using the cursor up/down keys. **Display** / **Description** DTMF / DTMF 10PPS / 10 PPS 20PPS / 20 PPS * : Initial setting: DTMF 4. Press the start key. The setting is set. **Completion** Press the stop key. The screen for selecting a maintenance item No. is displayed.

<table>
<tr><th>Item No.</th><th>Description</th></tr>
<tr><td>U604</td><td>

Setting user data 2

Description
Makes user settings to enable the use of the machine as a fax.
Purpose
Use this if the user wishes to adjust the number of rings that occur before the unit switches into fax receiving mode when fax/telephone auto-select is enabled.

Method
1. Press the start key.
2. Change the setting using the cursor left/right keys or numeric keys.

<table>
<tr><th>Description</th><th>Setting range</th><th>Initial setting</th></tr>
<tr><td>Number of fax/telephone rings</td><td>0 to 15</td><td>2 (120 V)/1 (220-240 V)</td></tr>
</table>

* : If you set this to 0, the unit will start fax reception without any ringing.

3. Press the start key. The value is set.

Completion
Press the stop key. The screen for selecting a maintenance item No. is displayed.

</td></tr>
<tr><td>U605</td><td>

Clearing data

Description
Initializes data related to the fax transmission such as transmission history.
Purpose
To clear the transmission history.

Method
1. Press the start key.
2. Select [Comm REC].
3. Press the start key. Initialization processing starts. When processing is finished, [Completed] is displayed.

Completion
Press the stop key. The screen for selecting a maintenance item No. is displayed.

</td></tr>
</table>

Item No.	Description
U610	**Setting system 1**

Description
Makes settings for fax reception regarding the sizes of the fax paper and received images and automatic printing of the protocol list.

Method
1. Press the start key.
2. Select the item to be set using the cursor up/down keys.

Display	Description
Cut Line:100%	Sets the number of lines to be ignored when receiving a fax at 100% magnification.
Cut Line:Auto	Sets the number of lines to be ignored when receiving a fax in the auto reduction mode.
Cut Line:A4	Sets the number of lines to be ignored when receiving a fax (A4R/LetterR) in the auto reduction mode.

Setting the number of lines to be ignored when receiving a fax at 100% magnification
Sets the maximum number of lines to be ignored if the received data volume exceeds the recording capacity when recording the data at 100% magnification. If the number of excess lines is below the setting, those lines are ignored. If over the setting, they are recorded on the next page.
1. Change the setting using the cursor left/right keys or numeric keys.

Description	Setting range	Initial setting	Change in value per step
Number of lines to be ignored when receiving at 100%	0 to 22	3	16 lines

* : Increase the setting if a blank second page is output, and decrease it if the received image does not include the entire transmitted data.
2. Press the start key. The value is set.

Setting the number of lines to be ignored when receiving a fax in the auto reduction mode
Sets the maximum number of lines to be ignored if the received data volume exceeds the recording capacity when the data is recorded in the auto reduction mode. If the number of excess lines is below the setting, those lines are ignored. If over the setting, the entire data on a page is further reduced so that it can be recorded on the same page.
1. Change the setting using the cursor left/right keys or numeric keys.

Description	Setting range	Initial setting	Change in value per step
Number of lines to be ignored when receiving in the auto reduction mode	0 to 22	0	16 lines

* : Increase the setting if a page received in the reduction mode is over-reduced and too much trailing edge margin is left. Decrease it if the received image does not include all transmitted data.
2. Press the start key. The value is set.

Item No.	Description
U610	**Setting the number of lines to be ignored when receiving a fax (A4R/LetterR) in the auto reduction mode** Sets the maximum number of lines to be ignored if the received data volume exceeds the recording capacity when the data is recorded in the auto reduction mode onto A4R or LetterR paper under the conditions below. If the number of excess lines is below the setting, those lines are ignored. If over the setting, the entire data on a page is further reduced so that it can be recorded on the same page. 1. Change the setting using the cursor left/right keys or numeric keys. **Description** / **Setting range** / **Initial setting** / **Change in value per step** Number of lines to be ignored when receiving a fax (A4R, letter) in the auto reduction mode / 0 to 22 / 0 / 16 lines * : Increase the setting if a page received in the reduction mode is over-reduced and too much trailing edge margin is left. Decrease it if the received image does not include all transmitted data. 2. Press the start key. The value is set. **Completion** Press the stop key. The screen for selecting a maintenance item No. is displayed.

Item No.	Description
U611	**Setting system 2** **Description** Sets the number of adjustment lines for automatic reduction. **Method** 1. Press the start key. 2. Select the item to be set using the cursor up/down keys. **Display** / **Description** Adj Lines — Sets the number of adjustment lines for automatic reduction. Adj Lines(A4) — Sets the number of adjustment lines for automatic reduction when A4 paper is set. Adj Lines(LT) — Sets the number of adjustment lines for automatic reduction when letter size paper is set. **Setting the number of adjustment lines for automatic reduction** Sets the number of adjustment lines for automatic reduction. 1. Change the setting using the cursor left/right keys or numeric keys. **Description** / **Setting range** / **Initial setting** Number of adjustment lines for automatic reduction / 0 to 22 / 7 2. Press the start key. The value is set. **Setting the number of adjustment lines for automatic reduction when A4 paper is set** Sets the number of adjustment lines for automatic reduction when A4 paper is set. 1. Change the setting using the cursor left/right keys or numeric keys. **Description** / **Setting range** / **Initial setting** Number of adjustment lines for automatic reduction when A4 paper is set / 0 to 22 / 22 2. Press the start key. The value is set. **Setting the number of adjustment lines for automatic reduction when letter size paper is set** Sets the number of adjustment lines for automatic reduction when letter size paper is set. 1. Change the setting using the cursor left/right keys or numeric keys. **Description** / **Setting range** / **Initial setting** Number of adjustment lines for automatic reduction when letter size paper is set / 0 to 26 / 26 2. Press the start key. The value is set. **Completion** Press the stop key. The screen for selecting a maintenance item No. is displayed.

Item No.	Description
U612	**Setting system 3** **Description** Makes settings for fax transmission regarding operation and automatic printing of the protocol list. This determines how trailing edge margin is detected (to prevent image from being mutilated) while printing a received Fax. **Method** 1. Press the start key. 2. Select the item to be set using the cursor up/down keys. **Selecting if auto reduction in the auxiliary direction is to be performed** Sets whether to receive a long document by automatically reducing it in the auxiliary direction or at 100% magnification. 1. Select the setting using the cursor left/right keys. * : Initial setting: On 2. Press the start key. The setting is set. **Setting the automatic printing of the protocol list** Sets if the protocol list is automatically printed out. 1. Select the setting using the cursor left/right keys. * : Initial setting: Off 2. Press the start key. The setting is set.

Display	Description
Auto Reduction	Selects if auto reduction in the auxiliary direction is to be performed.
Protocol List	Sets the automatic printing of the protocol list.
Detect Trail	Sets how trailing edge margins are detected

Display	Description
On	Auto reduction is performed if the received document is longer than the fax paper.
Off	Auto reduction is not performed.

Display	Description
On	The protocol list is automatically printed out after communication.
Err	The protocol list is automatically printed out after communication only if a communication error occurs.
Off	The protocol list is not printed out automatically.

<table>
<tr><th>Item No.</th><th>Description</th></tr>
<tr><td>U612</td><td>

Setting how trailing edge margins are detected

This determines whether trailing edge margin is detected (to prevent image from being mutilated) while printing a received Fax.

1. Select On or Off using the cursor left/right keys.

Display	Description
On	Detects trailing edge margin
Off	Does not detect trailing edge margin

* : Initial setting: On

2. Press the start key. The setting is set.

Completion

Press the stop key. The screen for selecting a maintenance item No. is displayed.

</td></tr>
<tr><td>U620</td><td>

Setting the remote switching mode

Description

Sets the signal detection method for remote switching. Be sure to change the setting according to the type of telephone connected to the machine.

Setting

1. Press the start key.
2. Select [Remort Mode] and press the start key.
3. Select the mode using the cursor up/down keys.

Display	Description
One	One-shot detection
Cont	Continuous detection

* : Initial setting: One

4. Press the start key. The setting is set.

Completion

Press the stop key. The screen for selecting a maintenance item No. is displayed.

</td></tr>
</table>

Item No.	Description
U625	**Setting the transmission system 1**

Description
Makes settings for the auto redialing interval and the number of times of auto redialing.
Purpose
Change the setting to prevent the following problems: fax transmission is not possible due to too short redial interval, or fax transmission takes too much time to complete due to too long redial interval.

Method
1. Press the start key.
2. Select the item to be set using the cursor up/down keys.

Display	Description
Interval	Setting the auto redialing interval
Times	Setting the number of times of auto redialing

Setting the auto redialing interval
1. Change the setting using the cursor left/right keys.

Description	Setting range	Initial setting
Redialing interval	1 to 9 (min.)	3 (120 V)/2 (220-240 V)

2. Press the start key. The value is set.

Setting the number of times of auto redialing
1. Change the setting using the cursor left/right keys or numeric keys.

Description	Setting range	Initial setting
Number of redialing	0 to 15	2 (120 V)/3 (220-240 V)

2. Press the start key. The value is set.

Completion
Press the stop key. The screen for selecting a maintenance item No. is displayed.

Item No.	Description
U630	**Setting communication control 1** **Description** Makes settings for fax transmission regarding the communication. **Method** 1. Press the start key. 2. Select the item to be set using the cursor up/down keys.

Display	Description
TX Speed	Sets the communication starting speed.
RX Speed	Sets the reception speed.
TX Echo	Sets the waiting period to prevent echo problems at the sender.
RX Echo	Sets the waiting period to prevent echo problems at the receiver.

Setting the communication starting speed

Sets the initial communication speed when starting transmission. When the destination unit has V.34 capability, V.34 is selected for transmission, regardless of this setting.

1. Select the setting using the cursor up/down keys.

Display	Description
14400bps/V17	V.17, 14400 bps
9600bps/V29	V.17, 9600 bps
4800bps/V27ter	V.27ter, 4800 bps
2400bps/V27ter	V.27ter, 2400 bps

* : Initial setting: 14400bps/V17

2. Press the start key. The setting is set.

Setting the reception speed

Sets the reception speed that the sender is informed of using the DIS or NSF signal. When the destination unit has V.34 capability, V.34 is selected, regardless of the setting.

1. Select the setting using the cursor up/down keys.

Display	Description
14400bps	V.17, V.33, V.29, V.27ter
9600bps	V.29, V.27ter
4800bps	V.27ter
2400bps	V.27ter (fallback only)

* : Initial setting: 14400bps

2. Press the start key. The setting is set.

Item No.	Description
U630	**Setting the waiting period to prevent echo problems at the sender** Sets the period before a DCS signal is sent after a DIS signal is received. Used when problems occur due to echoes at the sender. 1. Select the setting using the cursor up/down keys. **Display** / **Description** 500 / Sends a DCS 500 ms after receiving a DIS. 300 / Sends a DCS 300 ms after receiving a DIS. * : Initial setting: 300 2. Press the start key. The setting is set. **Setting the waiting period to prevent echo problems at the receiver** Sets the period before an NSF, CSI or DIS signal is sent after a CED signal is received. Used when problems occur due to echoes at the receiver. 1. Select the setting using the cursor up/down keys. **Display** / **Description** 500 / Sends an NSF, CSI or DIS 500 ms after receiving a CED. 75 / Sends an NSF, CSI or DIS 75 ms after receiving a CED. * : Initial setting: 75 2. Press the start key. The setting is set. **Completion** Press the stop key. The screen for selecting a maintenance item No. is displayed.

Item No.	Description
U631	**Setting communication control 2** **Description** Makes settings regarding fax transmission. **Method** 1. Press the start key. 2. Select the item to be set using the cursor up/down keys. **Display** / **Description** ECM TX — Sets ECM transmission. ECM RX — Sets ECM reception. CED Freq — Sets the frequency of the CED signal. **Setting ECM transmission** To be set to Off when reduction of transmission costs is of higher priority than image quality. This should not be set to Off when connecting to the IP (Internet Protocol) telephone line. 1. Select the setting using the cursor up/down keys. **Display** / **Description** On — ECM transmission is enabled. Off — ECM transmission is disabled. * : Initial setting: On 2. Press the start key. The setting is set. **Setting ECM reception** To be set to Off when reduction of transmission costs is of higher priority than image quality. This should not be set to Off when connecting to the IP (Internet Protocol) telephone line. 1. Select the setting using the cursor up/down keys. **Display** / **Description** On — ECM reception is enabled. Off — ECM reception is disabled. * : Initial setting: On 2. Press the start key. The setting is set. **Setting the frequency of the CED signal** Sets the frequency of the CED signal. Used as one of the measures to improve transmission performance for international communications. 1. Select the setting using the cursor up/down keys. **Display** / **Description** 2100 — 2100 Hz 1100 — 1100 Hz * : Initial setting: 2100 2. Press the start key. The setting is set. **Completion** Press the stop key. The screen for selecting a maintenance item No. is displayed.

Item No.	Description
U632	**Setting communication control 3** **Description** Makes settings for fax transmission regarding the communication. **Method** 1. Press the start key. 2. Select the item to be set using the cursor up/down keys. **Display** / **Description** DIS 4Byte — Sets the DIS signal to 4 bytes. Num OF CNG(F/T) — Sets the CNG detection times in the fax/telephone auto select mode. **Setting the DIS signal to 4 bytes** Sets if bit 33 and later bits of the DIS/DTC signal are sent. 1. Select the setting using the cursor up/down keys. **Display** / **Description** On — Bit 33 and later bits of the DIS/DTC signal are not sent. Off — Bit 33 and later bits of the DIS/DTC signal are sent. * : Initial setting: Off 2. Press the start key. The setting is set. **Setting the CNG detection times in the fax/telephone auto select mode** Sets the CNG detection times in the fax/telephone auto select mode. 1. Select the setting using the cursor up/down keys. **Display** / **Description** 1Time — Detects CNG once. 2Time — Detects CNG twice. * : Initial setting: 2Time 2. Press the start key. The setting is set. **Completion** Press the stop key. The screen for selecting a maintenance item No. is displayed.

Item No.	Description
U633	**Setting communication control 4**

Description
Makes settings for fax transmission regarding the communication.
Purpose
To reduce transmission errors when a low quality line is used.

Method
1. Press the start key.
2. Select the item to be set using the cursor up/down keys.

Display	Description
V.34	Enables or disables V.34 communication.
V.34-3429Hz	Sets the V.34 symbol speed (3429 Hz).
DIS 2Res	Sets the number of times of DIS signal reception.
RTN Check	Sets the reference for RTN signal output.

Enabling/disabling V.34 communication
Sets whether V.34 communication is enabled/disabled for transmission and reception.
1. Select the setting using the cursor up/down keys.

Display	Description
On	V.34 communication is enabled for both transmission and reception.
TX	V.34 communication is enabled for transmission only.
RX	V.34 communication is enabled for reception only.
Off	V.34 communication is disabled for both transmission and reception.

* : Initial setting: On
2. Press the start key. The setting is set.

Setting the V.34 symbol speed (3429 Hz)
Sets if the V.34 symbol speed 3429 Hz is used.
1. Select the setting using the cursor up/down keys.

Display	Description
On	V.34 symbol speed 3429 Hz is used.
Off	V.34 symbol speed 3429 Hz is not used.

* : Initial setting: On
2. Press the start key. The setting is set.

<table>
<tr><th>Item No.</th><th>Description</th></tr>
<tr><td>U633</td><td>

Setting the number of times of DIS signal reception

Sets the number of times to receive the DIS signal to once or twice. Used as one of the correction measures for transmission errors and other problems.

1. Select the setting using the cursor up/down keys.

Display	Description
Once	Responds to the first signal.
Twice	Responds to the second signal.

* : Initial setting: Once

2. Press the start key. The setting is set.

Setting the reference for RTN signal output

Sets the error line rate as the reference for RTN signal output. If transmission errors occur frequently due to the quality of the line, they can be reduced by lowering this setting.

1. Select the setting using the cursor up/down keys.

Display	Description
5%	Error line rate of 5%
10%	Error line rate of 10%
15%	Error line rate of 15%
20%	Error line rate of 20%

* : Initial setting: 15%

2. Press the start key. The setting is set.

Completion

Press the stop key. The screen for selecting a maintenance item No. is displayed.

</td></tr>
<tr><td>U634</td><td>

Setting communication control 5

Description

Sets the maximum number of error bytes judged acceptable when receiving a TCF signal. Used as a measure to ease transmission conditions if transmission errors occur.

Setting

1. Press the start key.
2. Change the setting using the cursor left/right keys or numeric keys.

Description	Setting range	Initial setting
Number of allowed error bytes when detecting TCF	0 to 255	0

3. Press the start key. The value is set.

Completion

Press the stop key. The screen for selecting a maintenance item No. is displayed.

</td></tr>
</table>

Item No.	Description
U640	**Setting communication time 1** **Description** Sets the detection time when one-shot detection is selected for remote switching. (This setting item will be displayed, but the setting made is ineffective.) Sets the detection time when continuous detection is selected for remote switching. (This setting item will be displayed, but the setting made is ineffective.) **Method** 1. Press the start key. 2. Select the item to be set using the cursor up/down keys. **Display** / **Description** Time (One) — Sets the one-shot detection time for remote switching. Time (Cont) — Sets the continuous detection time for remote switching. **Setting the one-shot detection time for remote switching** 1. Change the setting using the cursor left/right keys. **Description** / **Setting range** / **Initial setting** One-shot detection time for remote switching / 0 to 255 / 7 2. Press the start key. The value is set. **Setting the continuous detection time for remote switching** 1. Change the setting using the cursor left/right keys. **Description** / **Setting range** / **Initial setting** Continuous detection time for remote switching / 0 to 255 / 80 2. Press the start key. The value is set. **Completion** Press the stop key. The screen for selecting a maintenance item No. is displayed.

Item No.	Description
U641	**Setting communication time 2** **Description** Sets the time-out time for fax transmission. **Purpose** To improve transmission performance for international communications mainly. **Method** 1. Press the start key. 2. Select the item to be set using the cursor up/down keys. **Display** / **Description** T0 Time Out — Sets the T0 time-out time. T1 Time Out — Sets the T1 time-out time. T2 Time Out — Sets the T2 time-out time. Ta Time Out — Sets the Ta time-out time. Tb1 Time Out — Sets the Tb1 time-out time. Tb2 Time Out — Sets the Tb2 time-out time. Tc Time Out — Sets the Tc time-out time. Td Time Out — Sets the Td time-out time. **Setting the T0 time-out time** Sets the time before detecting a CED or DIS signal after a dialing signal is sent. Depending on the quality of the exchange, or when the auto select function is selected at the destination unit, a line can be disconnected. Change the setting to prevent this problem. 1. Change the setting using the cursor left/right keys. **Description** / **Setting range** / **Initial setting** T0 time-out time — 30 to 90 s — 56 2. Press the start key. The value is set. **Setting the T1 time-out time** Sets the time before receiving the correct signal after call reception. No change is necessary for this maintenance item. 1. Change the setting using the cursor left/right keys. **Description** / **Setting range** / **Initial setting** T1 time-out time — 30 to 90 s — 36 2. Press the start key. The value is set.

Item No.	Description
U641	

Setting the T2 time-out time

The T2 time-out time decides the following.
From CFR signal output to image data reception
From image data reception to the next signal reception
In ECM, from RNR signal detection to the next signal reception

1. Change the setting using the cursor left/right keys.

Description	Setting range	Initial setting	Change in value per step
T2 time-out time	1 to 255	69	100 ms

2. Press the start key. The value is set.

Setting the Ta time-out time

In the fax/telephone auto select mode, sets the time to continue ringing an operator through the connected telephone after receiving a call as a fax machine (see figure 1-3-3). A fax signal is received within the Ta set time, or the fax mode is selected automatically when the time elapses. In fax/telephone auto select mode, change the setting when fax reception is unsuccessful or a telephone fails to receive a call.

1. Change the setting using the cursor left/right keys.

Description	Setting range	Initial setting
Ta time-out time	1 to 255	30

2. Press the start key. The value is set.

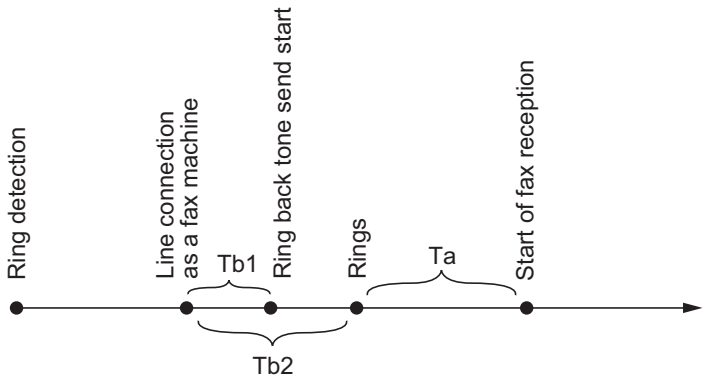

Figure 1-3-3 Ta/Tb1/Tb2 time-out time

Setting the Tb1 time-out time

In the fax/telephone auto select mode, sets the time to start sending the ring back tone after receiving a call as a fax machine (see figure 1-3-3). In fax/telephone auto select mode, change the setting when fax reception is unsuccessful or a telephone fails to receive a call.

1. Change the setting using the cursor left/right keys.

Description	Setting range	Initial setting	Change in value per step
Tb1 time-out time	1 to 255	20	100 ms

2. Press the start key. The value is set.

Item No.	Description
U641	**Setting the Tb2 time-out time** In the fax/telephone auto select mode, sets the time to start ringing an operator through the connected telephone after receiving a call as a fax machine (see figure 1-3-3). In the fax/telephone auto select mode, change the setting when fax reception is unsuccessful or a telephone fails to receive a call. 1. Change the setting using the cursor left/right keys. **Description** | **Setting range** | **Initial setting** | **Change in value per step** Tb2 time-out time | 1 to 255 | 80 | 100 ms 2. Press the start key. The value is set. **Setting the Tc time-out time** In the TAD mode, set the time to check if there are any triggers for shifting to fax reception after a connected telephone receives a call. Only the telephone function is available if shifting is not made within the set Tc time. In the TAD mode, change the setting when fax reception is unsuccessful or a telephone fails to receive a call. 1. Change the setting using the cursor left/right keys. **Description** | **Setting range** | **Initial setting** Tc time-out time | 1 to 255 | 60 2. Press the start key. The value is set. **Setting the Td time-out time** Sets the length of the time required to determine silent status (fax), one of the triggers for Tc time check. In the TAD mode, change the setting when fax reception is unsuccessful or a telephone fails to receive a call. Be sure not to set it too short; otherwise, the mode may be shifted to fax while the unit is being used as a telephone. 1. Change the setting using the cursor left/right keys. **Description** | **Setting range** | **Initial setting** Td time-out time | 1 to 255 | 9 (120 V)/6 (220-240 V) 2. Press the start key. The value is set. **Completion** Press the stop key. The screen for selecting a maintenance item No. is displayed.

Item No.	Description
U650	**Setting modem 1** **Description** Sets the G3 cable equalizer. Sets the modem detection level. **Purpose** Perform the following adjustment to make the equalizer compatible with the line characteristics. To improve the transmission performance when a low quality line is used. **Method** 1. Press the start key. 2. Select the item to be set using the cursor up/down keys. **Setting the G3 transmission cable equalizer** 1. Select [0dB], [4dB], [8dB] or [12dB] using the cursor up/down keys. * : Initial setting: 0dB 2. Press the start key. The setting is set. **Setting the G3 reception cable equalizer** 1. Select [0dB], [4dB], [8dB] or [12dB] using the cursor up/down keys. * : Initial setting: 0dB 2. Press the start key. The setting is set. **Setting the modem detection level** 1. Select [-33dBm], [-38dBm], [-43dBm] or [-48dBm] using the cursor up/down keys. * : Initial setting: -43dBm 2. Press the start key. The setting is set. **Completion** Press the stop key. The screen for selecting a maintenance item No. is displayed.

Display	Description
Reg G3 TX Eqr	Sets the G3 transmission cable equalizer.
Reg G3 RX Eqr	Sets the G3 reception cable equalizer.
RX Mdm Level	Sets the modem detection level.

Item No.	Description
U651	**Setting modem 2** **Description** Sets the modem output level. Sets the DTMF output level of a push-button dial telephone. **Purpose** Used if problems occur when sending a signal with a push-button dial telephone. **Setting** 1. Press the start key. 2. Select the item to be set using the cursor up/down keys. 3. Change the setting using the cursor left/right keys or numeric keys. 4. Press the start key. The setting is set. **Completion** Press the stop key. The screen for selecting a maintenance item No. is displayed.

Display	Description	Setting range	Initial setting
Sgl LV Mdm	Modem output level	1 to 15	9 (120 V) 10 (220-240 V)
DTMF LV(C)	DTMF output level (main value)	0 to 15.0	5 (120 V) 10.5 (220-240 V)
DTMF LV(D)	DTMF output level (level difference)	0 to 5.5	2 (120 V) 2.5 (220-240 V)

Item No.	Description
U660	**Setting the NCU** **Description** Makes setting regarding the network control unit (NCU). **Purpose** To be executed as required. **Method** 1. Press the start key. 2. Select the item to be set using the cursor up/down keys. **Display** / **Description** Exchange — Sets the connection to PBX/PSTN. Dial Tone — Sets PSTN dial tone detection. Busy Tone — Sets busy tone detection. PBX Setting — Setting for a PBX. DC Loop — Sets the loop current detection before dialing. **Setting the connection to PBX/PSTN** Selects if a fax is to be connected to either a PBX or public switched telephone network. 1. Select the setting using the cursor up/down keys. **Display** / **Description** PSTN — Connected to the public switched telephone network. PBX — Connected to a PBX. * : Initial setting: PSTN 2. Press the start key. The setting is set. **Setting PSTN dial tone detection** Selects if the dial tone is detected to check the telephone is off the hook when a fax is connected to a public switched telephone network. 1. Select the setting using the cursor up/down keys. **Display** / **Description** On — Detects the dial tone. Off — Does not detect the dial tone. * : Initial setting: On 2. Press the start key. The setting is set.

Item No.	Description
U660	**Setting busy tone detection** When a fax signal is sent, sets whether the line is disconnected immediately after a busy tone is detected, or the busy tone is not detected and the line remains connected until T0 time-out time. Fax transmission may fail due to incorrect busy tone detection. When set to 2, this problem may be prevented. However, the line is not disconnected within the T0 time-out time even if the destination line is busy. 1. Select the setting using the cursor up/down keys. **Display** / **Description** On / Detects busy tone. Off / Does not detect busy tone. * : Initial setting: On 2. Press the start key. The setting is set. **Setting for a PBX** Selects the mode to connect an outside call when connected to a PBX. According to the type of the PBX connected, select the mode to connect an outside call. 1. Select the setting using the cursor up/down keys. **Display** / **Description** Flash / Flashing mode Loop / Code number mode * : Initial setting: Loop 2. Press the start key. The setting is set. **Setting the loop current detection before dialing** Sets if the loop current detection is performed before dialing. 1. Select the setting using the cursor up/down keys. **Display** / **Description** On / Performs loop current detection before dialing. Off / Does not perform loop current detection before dialing. * : Initial setting: On 2. Press the start key. The setting is set. **Completion** Press the stop key. The screen for selecting a maintenance item No. is displayed.

Item No.	Description
U670	**Outputting lists** **Description** Outputs a list of data regarding fax transmissions. Printing a list is disabled either when a job is remaining in the buffer or when [Pause All Print Jobs] is pressed to halt printing. **Purpose** To check conditions of use, settings and transmission procedures of the fax. **Method** 1. Press the start key. 2. Select the item to be output using the cursor up/down keys. 3. Press the start key. The selected list is output. **Completion** Press the stop key. The screen for selecting a maintenance item No. is displayed.

Display	Description
Sys Conf Report	Outputs a list of software switches, self telephone number, confidential boxes, ROM versions and other information.
Action List	Outputs a list of error history, transmission line details and other information.
Self Sts Report	Outputs a list of settings in maintenance mode (own-status report) regarding fax transmission only.
Protocol List	Outputs a list of transmission procedures.
Error List	Outputs a list of error.
Addr List(No.)	Outputs address book in order IDs were added
Addr List(Idx)	Outputs address book in order of names
One-touch List	Outputs a list of one-touch.
Group List	Outputs a list of group.

Item No.	Description
U695	**FAX function customize** **Description** Sets fax batch transmission ON/OFF. Also changes the print size priority at the time of small size reception. **Purpose** To be executed as required. **Setting** 1. Select the setting using the cursor up/down keys. **Setting: [FAX Bulk TX]** 1. Select On or Off using the cursor left/right keys. * : Initial setting: On 2. Press the start key. The setting is set. **Setting: [A5 Pt Pri Chg]** 1. Select ON or OFF using the cursor left/right keys. * : Initial setting: Off 2. Press the start key. The setting is set. **Completion** Press the stop key. The screen for selecting a maintenance item No. is displayed.

Display	Description
FAX Bulk TX	fax batch transmission On/Off
A5 Pt Pri Chg	Change of print size priority at the time of small size reception

Display	Description
On	Fax batch transmission is enabled.
Off	Fax batch transmission is disabled.

Display	Description
On	At the time of A5 size reception: A5→B5→A4
Off	At the time of A5 size reception: A5→A4→B5

Item No.	Description
U699	**Setting the software switches**

Description
Sets the software switches on the FAX control PWB individually.
Purpose
To change the setting when a problem such as split output of received originals occurs.
Since the communication performance is largely affected, normally this setting need not be changed.

Method
1. Press the start key.
2. Press [SW No.].
3. Enter the desired software switch number (3 digits) using the numeric keys and press the enter key.
4. Use numeric keys 7 to 0 to switch each bit between 0 and 1.
5. Press the start key to set the value.

Completion
Press the stop key. The screen for selecting a maintenance item No. is displayed.

List of Software Switches of Which the Setting Can Be Changed

<Communication control procedure>

No.	Bit	Item
36	7654	Coding format in transmission
	3210	Coding format in reception
37	5	33600 bps/V34
	4	31200 bps/V34
	3	28800 bps/V34
	2	26400 bps/V34
	1	24000 bps/V34
	0	21600 bps/V34
38	7	19200 bps/V34
	6	16800 bps/V34
	5	14400 bps/V34
	4	12000 bps/V34
	3	9600 bps/V34
	2	7200 bps/V34
	1	4800 bps/V34
	0	2400 bps/V34
41	3	FSK detection in V.8
42	4	4800 bps when low-speed setting is active
	2	FIF length in transmission of more than 4 times of DIS/DTC signal

Item No.	Description
U699	<Communication time setting>

No.	Bit	Item
53	76543210	T3 timeout setting
54	76543210	T4 timeout setting (automatic equipment)
55	76543210	T5 timeout setting
60	76543210	Time before transmission of CNG (1100 Hz) signal
63	76543210	T0 timeout setting (manual equipment)
64	7	Phase C timeout in ECM reception
66	76543210	Timeout 1 in countermeasures against echo
68	76543210	Timeout for FSK detection start in V.8

<Modem setting>

No.	Bit	Item
89	76543	RX gain adjust

<NCU setting>

No.	Bit	Item
121	7654	Dial tone/busy tone detection pattern
122	7654	Busy tone detection pattern
	1	Busy tone detection in automatic FAX/TEL switching
125	76543210	Access code registration for connection to PSTN
126	7654	FAX/TEL automatic switching ringback tone ON/OFF cycle

<Calling time setting>

No.	Bit	Item
133	76543210	DTMF signal transmission time
134	76543210	DTMF signal pause time
141	76543210	Ringer detection cycle (minimum)
142	76543210	Ringer detection cycle (maximum)
143	76543210	Ringer ON time detection
144	76543210	Ringer OFF time detection
145	76543210	Ringer OFF non-detection time
147	76543210	Dial tone detection time (continuous tone)
148	76543210	Allowable dial tone interruption time
149	76543210	Time for transmitting selection signal after closing the DC circuit
151	76543210	Ringer frequency detection invalid time

<table>
<tr><th>Item No.</th><th>Description</th></tr>
<tr><td>U699</td><td>

<Function setting>

No.	Bit	Item
217	7	Setting the output priority when A5 size reception

</td></tr>
<tr><td>U910</td><td>

Clearing the digital dot coverage data

Description
Clears the accumulated data for the digital dot coverage per A4 size paper.
Purpose
To clear data as required at times such as during maintenance service.

Method
1. Press the start key.
2. Select [Execute] using the cursor up/down keys.
3. Press the start key. The digital dot coverage data is cleared.

Completion
Press the stop key. The screen for selecting a maintenance item No. is displayed.

</td></tr>
</table>

Item No.	Description
U917	**Setting backup data reading/writing** **Description** Retrieves the backup data to a USB memory from the machine; or writes the data from the USB memory to the machine. **Purpose** To store and write data when replacing the HDD. **Method** 1. Press the power key on the operation panel, and after verifying the power indicator has gone off, switch off the main power switch. 2. Insert USB memory in USB memory slot. 3. Turn the main power switch on. Wait for 10 seconds to allow the machine to recognize the USB memory. 4. Enter the maintenance item. 5. Press the start key. 6. Select [Export] or [Import] using the cursor up/down keys and press the start key.

Display	Description
Import	Writing data from the USB memory to the machine
Export	Retrieving from the machine to a USB memory

7. Select the item using the cursor up/down keys.

Display	Description	Depending data
Address Book	Address book	-
Job Account	Job accounting	-
One Touch	Information on one-touch key	Address book
User	User managements	Job accounting
Program	Program information	Job accountings and user managements
Document Box	Document box information	Job accountings and user managements
Fax Forward	FAX transfer information	Job accountings, user managements and document box information

* : Since data are dependent with each other, data other than those assigned are also retrieved or written in.

8. Select [On] using the cursor left/right keys.
9. Press the start key. Starts reading or writing.
The progress of selected item is displayed in %.
When an error occurs, the operation is canceled and an error code is displayed.
10. When normally completed, [Fin] is displayed.
11. Turn the main power switch off and on after completing writing when selecting [Import].

Item No.	Description
U917	**Error Codes**

Codes	Description	Codes	Description
e002	Parameter error	e31e	User managements error
e003	File write error	e31f	User managements open error
e004	File initialization error	e320	User managements error
e005	File error	e410	Box file open error
e006	Processing error	e411	Box error in writing
e010	Address book clear error (contact)	e412	Box error in reading
e011	Address book open error (contact)	e413	Box list error
e012	Address book list error (contact)	e414	Box list error
e013	Address book list error (contact)	e415	Box error
e014	Address book clear error (group)	e416	Box error
e015	Address book open error (group)	e417	Box open error
e016	Address book list error (group)	e418	Box close error
e017	Address book list error (group)	e419	Box creation error
e110	Job accounting clear error	e41a	Box creation error
e111	Job accounting open error	e41b	Box deletion error
e112	Job accounting open error	e41c	Box movement error
e113	Job accounting error in writing	e510	Program error in writing
e114	Job accounting list error	e511	Program error in reading
e115	Job accounting list error	e710	Fax memory open error
e210	One-touch open error	e711	Fax memory initialization error
e211	One-touch list error	e712	Fax memory list error
e212	One-touch list error	e713	Fax memory error
e310	User managements backup error	e714	Fax memory error
e311	User managements clear error	e715	Fax memory mode error
e312	User managements open error	e716	Fax memory error
e313	User managements open error	e717	Fax memory error
e314	User managements open error	e718	Fax memory mode error
e315	User managements error in writing	e910	File reading error
e316	User managements list error	e911	File writing error
e317	User managements list error	e912	Data mismatch
e318	User managements list error	e913	Log file open error
e319	User managements list error	e914	Log file error in writing
e31a	User managements open error	e915	Directory open error
e31b	User managements error	e916	Directory error in reading
e31c	User managements error	e917	Synchronization error
e31d	User managements open error	e918	Synchronization error

Item No.	Description
U917	**Error Codes**

Codes	Description	Codes	Description
d000	Unspecified error	d00b	File reading error
d001	HDD unavailable	d00c	File writing error
d002	USB memory is not inserted	d00d	File copy error
d003	File for writing is not found in the USB	d00e	File compressed error
d004	File for reading is not found in the HDD	d00f	File decompressed error
d005	USB error in writing	d010	Directory open error
d006	USB error in reading	d011	Directory creation error
d007	USB unmount error	d012	File writing error
d008	File rename error	d013	File reading error
d009	File open error	d014	File deletion error
d00a	File close error	d015	File copy error to the USB

Supplement

The following restrictions apply to the data which were imported from 4 in 1 models (with FAX) to 3 in 1 models (without FAX).
Personal address book: FAX-related data are not imported.
Group address book: Group addresses including FAX addresses are not imported.
Job accounting data: Initial values are added for FAX-related data.
One-touch data: Groups assigned with FAX addresses or those including FAX are not imported.
User management data: Initial values are added for out-going FAXes of authentication.
Program data: Not imported. (The same applies when data are imported from 3 in 1 to 4 in 1 models.)

Completion

Press the stop key. The screen for selecting a maintenance item No. is displayed.

Item No.	Description
U920	**Checking the copy counts** **Description** Checks the copy counts. **Purpose** To check the copy counts. **Method** 1. Press the start key. The current counts are displayed. **Completion** Press the stop key. The screen for selecting a maintenance item No. is displayed.
U927	**Clearing the all copy counts and machine life counts (one time only)** **Description** Resets all of the counts back to zero. **Supplement** The total account counter and the machine life counter can be cleared only once if all count values are 1000 or less. **Method** 1. Press the start key. 2. Select [Execute] using the cursor up/down keys. 3. Press the start key. All copy counts and machine life counts are cleared. **Completion** Press the stop key. The screen for selecting a maintenance item No. is displayed.

Display	Description
Color Copy	Count value of color copy
B/W Copy	Count value of black/white copy
Color Prn	Count value of color print
B/W Prn	Count value of black/white print
B/W Fax	Count value of black/white FAX

<table>
<tr><th>Item No.</th><th>Description</th></tr>
<tr><td>U928</td><td>
Checking machine life counts

Description
Displays the machine life counts.
Purpose
To check the machine life counts.

Method
1. Press the start key. The current machine life counts is displayed.
<table>
<tr><th>Display</th><th>Description</th></tr>
<tr><td>Life Cont</td><td>Machine life counts</td></tr>
</table>

Completion
Press the stop key. The screen for selecting a maintenance item No. is displayed.
</td></tr>
<tr><td>U977</td><td>
Data capture mode

Description
Store the print data sent to the machine into USB memory.
Purpose
In case to occur the error at printing, check the print data sent to the machine.

Method
1. Insert USB memory in USB memory slot.
2. Turn the main power switch on.
3. Enter the maintenance item.
4. Press the start key.
5. Select [Execute].
6. Press the start key.
7. Send the print data to the machine.
Once the print data is stored into USB memory, [OK] will be displayed.

Completion
Press the stop key. The screen for selecting a maintenance item No. is displayed.
</td></tr>
<tr><td>U995</td><td>
Memory data Individual setting

Description
Displays the memory data.
Purpose
This mode need not be executed. When the status report is output, the setting is displayed.

Completion
Press the stop key. The screen for selecting a maintenance item No. is displayed.
</td></tr>
</table>

1-3-2 Service mode

The machine is equipped with a maintenance function which can be used to maintain and service the machine.

(1) Executing a service mode

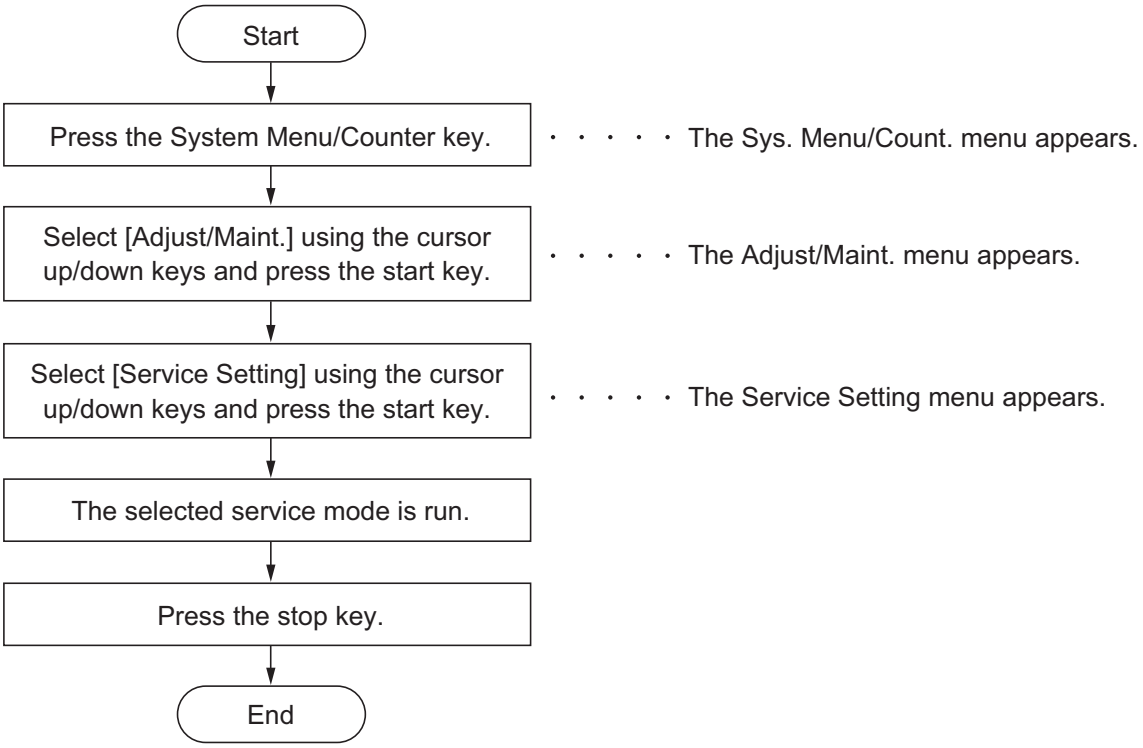

(2) Description of service mode

Service items	Description
Service Status	**Printing a status page for service purpose** **Description** Prints a status page for service purpose. The status page includes various settings and service cumulative. **Purpose** To acquire the current printing environmental parameters and cumulative information. **Method** 1. Enter the Service Setting menu. 2. Select [Service Status] using the cursor up/down keys. 3. Press the start key. 4. Press [Yes] (the Left Select key). Two pages will be printed. **Completion** Press the stop key.

Service items	Description
	Service status page (1)

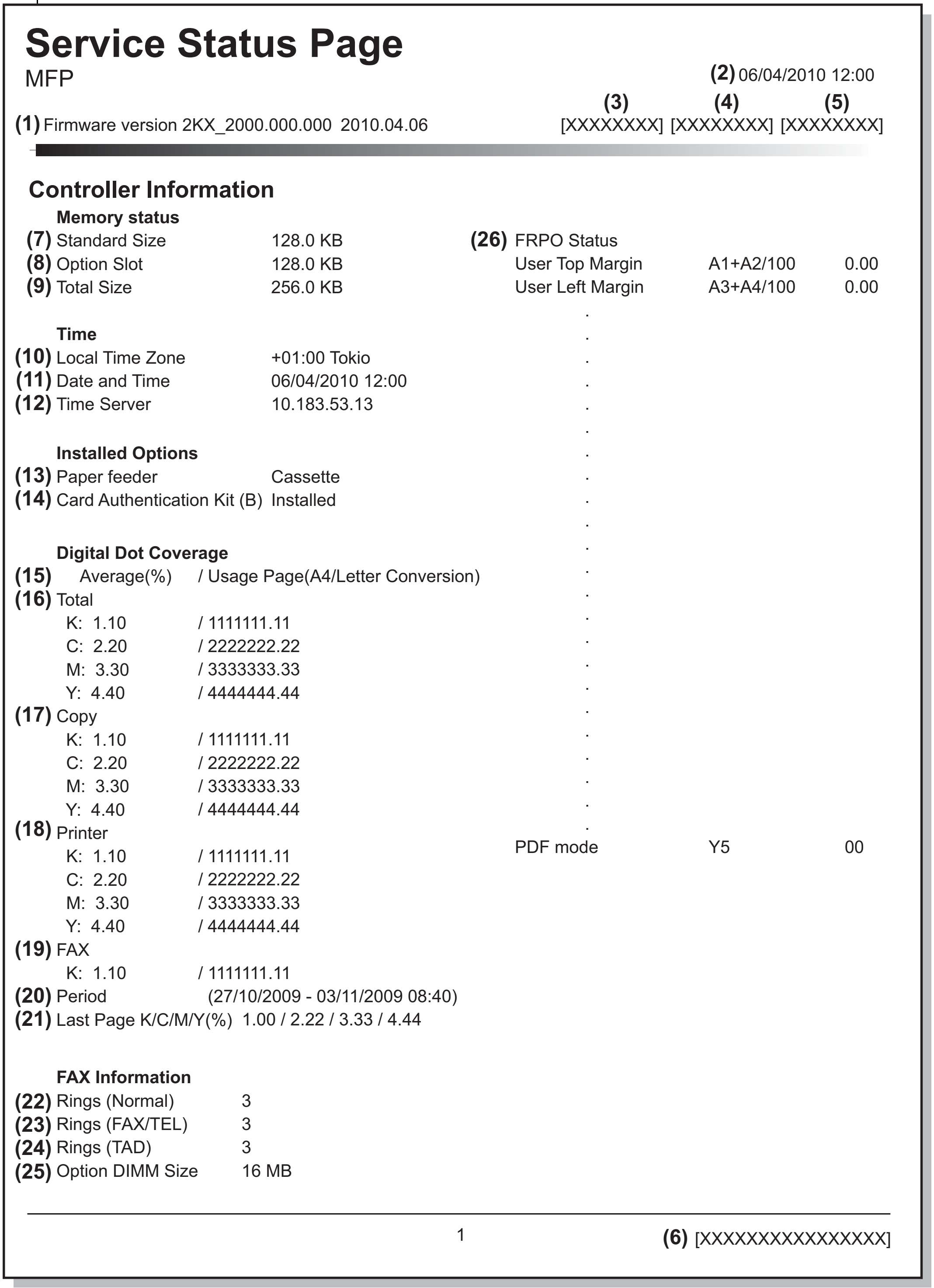

Service Status Page

MFP

(2) 06/04/2010 12:00

(1) Firmware version 2KX_2000.000.000 2010.04.06

(3) [XXXXXXXX] (4) [XXXXXXXX] (5) [XXXXXXXX]

Controller Information

Memory status

(7)	Standard Size	128.0 KB
(8)	Option Slot	128.0 KB
(9)	Total Size	256.0 KB

Time

(10)	Local Time Zone	+01:00 Tokio
(11)	Date and Time	06/04/2010 12:00
(12)	Time Server	10.183.53.13

Installed Options

(13)	Paper feeder	Cassette
(14)	Card Authentication Kit (B)	Installed

Digital Dot Coverage

(15) Average(%) / Usage Page(A4/Letter Conversion)

(16) Total

K: 1.10 / 1111111.11
C: 2.20 / 2222222.22
M: 3.30 / 3333333.33
Y: 4.40 / 4444444.44

(17) Copy

K: 1.10 / 1111111.11
C: 2.20 / 2222222.22
M: 3.30 / 3333333.33
Y: 4.40 / 4444444.44

(18) Printer

K: 1.10 / 1111111.11
C: 2.20 / 2222222.22
M: 3.30 / 3333333.33
Y: 4.40 / 4444444.44

(19) FAX

K: 1.10 / 1111111.11

(20) Period (27/10/2009 - 03/11/2009 08:40)

(21) Last Page K/C/M/Y(%) 1.00 / 2.22 / 3.33 / 4.44

FAX Information

(22)	Rings (Normal)	3
(23)	Rings (FAX/TEL)	3
(24)	Rings (TAD)	3
(25)	Option DIMM Size	16 MB

(26) FRPO Status

User Top Margin	A1+A2/100	0.00
User Left Margin	A3+A4/100	0.00
PDF mode	Y5	00

1

(6) [XXXXXXXXXXXXXXXX]

Figure 1-3-4

Service items	Description

Service status page (2)

Service Status Page

MFP 06/04/2010 12:00

Firmware version 2KX_2000.000.000 2010.04.06 [XXXXXXXX] [XXXXXXXX] [XXXXXXXX]

Engine Information

(27) NVRAM Version _1F31225_1F31225
(28) Scanner Version 2KX_1200.001.089
(29) FAX
FAX BOOT Version 2KX_5000.001.001
FAX APL Version 2KX_5100.001.001
FAX IPL Version 2KX_5200.001.001
(30) MAC Address 00:C0:EE:D0:01:0D
(31) DP Counters
Total 1234

Send Information

(32) Date and Time 10/04/06
(33) Address

1/2 (34) (35)
(36) 100/100
(37) 0/0/0/0/0
(38) 0/0/0/0/0
(39) 0/0/0/0/0/0/0/0/
(40) 0000000/0000000/0000000/0000000/0000000/0000000/
0000000/0000000/0000000/0000000/0000000/0000000/0000000/0000000/0000000/0000000/
F00/U00/0/0/0/0/30/30/70/70/abcde/1/0 (41) (42) (43) (44) (45) (46) (47) (48) (49) (50) (51) (52) (53)
(54) 0000/0000/0000/0000/0000/0000/0000/0000/0000/0000/0000/0000/0000/0000/0000/
0000/0000/0000/0000/0000/0000/0000/0000/0000/0000/
(55) 0000/0000/0000/0000/0000/0000/0000/0000/0000/0000/0000/0000/0000/0000/0000/0000/
0000/0000/0000/0000/0000/0000/0000/0000/0000/0000/0000/0000/0000/0000/0000/0000/
(56) 12345678/11223344/00001234abcd567800001234abcd5678/0123456789012345678901234567890 1/0008/00/07
12345678/11223344/00001234abcd567800001234abcd5678/0123456789012345678901234567890 1/0008/00/07
12345678/11223344/00001234abcd567800001234abcd5678/0123456789012345678901234567890 1/0008/00/07
12345678/11223344/00001234abcd567800001234abcd5678/0123456789012345678901234567890 1/0008/00/07
2KX_D100.001.005/0/ (57) (58)
[ABCDEFGHIJ][ABCDEFGHIJ] (59)
[2KX_0000.001.005][ ] (60) (61)
(62) 0000000000/F80C001A37/302A183C00/000100013D/8791BEC305/0000003100/000F5D0000/01FD000000/
0000000000/0000000000/0000000FB7/0000000000/0000260000/0000000000/0000000000/0000008400/
0/3/ (63) (64)
(65) ABCDEFGHIJ/ABCDEFGHIJ/ABCDEFGHIJ/ABCDEFGHIJ/

2 [XXXXXXXXXXXXXXXX]

Figure 1-3-5

Service items	Description
	Detail of service status page

No.	Description	Supplement
(1)	Firmware version	-
(2)	System date	-
(3)	Engine soft version	-
(4)	Engine boot version	-
(5)	Operation panel mask version	-
(6)	Machine serial number	-
(7)	Standard memory size	-
(8)	Optional memory size	-
(9)	Total memory size	-
(10)	Local time zone	-
(11)	Report output date	Day/Month/Year hour:minute
(12)	NTP server name	-
(13)	Presence or absence of the optional paper feeder	Paper feeder 1/Paper feeder 2/Not Installed
(14)	Presence or absence of the optional IC card authentication kit	Installed/Not Installed/Trial
(15)	Page of relation to the A4/Letter	-
(16)	Average coverage for total	Black/Cyan/Magenta/Yellow
(17)	Average coverage for copy	Black/Cyan/Magenta/Yellow
(18)	Average coverage for printer	Black/Cyan/Magenta/Yellow
(19)	Average coverage for fax	Black/Cyan/Magenta/Yellow
(20)	Cleared date and output date	-
(21)	Coverage on the final output page	-
(22)	Number of rings	0 to 15
(23)	Number of rings before automatic switching	0 to 15
(24)	Number of rings before connecting to answering machine	0 to 15
(25)	Optional DIMM size	-
(26)	FRPO setting	-

Service items	Description

No.	Description	Supplement
(27)	NV RAM version	_ 1F3 1225 _ 1F3 1225 (a) (b) (c) (d) (e) (f) (a) Consistency of the present software version and the database _ (underscore): OK * (Asterisk): NG (b) Database version (c) The oldest time stamp of database version (d) Consistency of the present software version and the ME firmware version _ (underscore): OK * (Asterisk): NG (e) ME firmware version (f) The oldest time stamp of the ME database version Normal if (a) and (d) are underscored, and (b) and (e) are identical with (c) and (f).
(28)	Scanner firmware version	-
(29)	Fax firmware version	-
(30)	Mac address	-
(31)	Number of original feed from DP	-
(32)	The last sent date and time	-
(33)	Transmission address	-
(34)	Destination information	-
(35)	Area information	-
(36)	Margin settings	Top margin/Left margin
(37)	Top offset for each paper source	MP tray/Cassette 2/Cassette 3/Duplex/ Page rotation
(38)	Left offset for each paper source	MP tray/Cassette 2/Cassette 3/Duplex/ Page rotation
(39)	Margin/Page length/Page width settings	Top margin integer part/Top margin decimal part/ Left margin integer part/Left margin decimal part/ Page length integer part/Page length decimal part/ Page width integer part/Page width decimal part
(40)	Life counter (The first line)	Machine life/MP tray/Cassette 1/Cassette 2/ Cassette 3 /Duplex
	Life counter (The second line)	Maintenance kit

Service items	Description

No.	Description	Supplement
(41)	Panel lock information	0: OFF/1: Partial lock/2: Full lock
(42)	USB information	U00: Not installed/U01: Full speed/U02: Hi speed
(43)	Paper handling information	0: Paper source unit select/1: Paper source unit
(44)	Color printing double count mode	0: All single counts 3: Folio, Single count, Less than 330 mm (length)
(45)	Black and white printing double count mode	0: All single counts 3: Folio, Single count, Less than 330 mm (length)
(46)	Billing counting timing	-
(47)	Temperature (machine inside)	-
(48)	Temperature (machine outside)	-
(49)	Relative temperature (machine outside)	-
(50)	Absolute temperature (machine outside)	-
(51)	Fixed assets number	-
(52)	Job end judgment time-out time	-
(53)	Job end detection mode	-
(54)	Media type attributes 1 to 28 (Not used: 18, 19, 20)	Weight settings 0: Light 1: Normal 1 2: Normal 2 3: Normal 3 4: Heavy 1 5: Heavy 2 6: Heavy 3 7: Extra Heavy Fuser settings 0: High 1: Middle 2: Low 3: Vellum Duplex settings 0: Disable 1: Enable
(55)	Calibration information	Black/Cyan/Magenta/Yellow
(56)	RFID information	-
(57)	RFID reader/writer version information	-
(58)	Toner install mode information	0: Off t: On
(59)	Soft version of the optional paper feeder	Cassette 2/Cassette 3
(60)	Version of the optional message	-
(61)	Color table version	-
(62)	Maintenance information	-

Service items	Description

No.	Description	Supplement
(63)	Altitude	0: Standard 1: High altitude 1 2: High altitude 2
(64)	Main charger correction	1 to 5
(65)	Drum serial number	Black/Cyan/Magenta/Yellow

Code conversion

A	B	C	D	E	F	G	H	I	J
0	1	2	3	4	5	6	7	8	9

Network Status

Printing a status page for network

Description
Prints a status page for network.
Purpose
To acquire the detailed network setting information.

Method
1. Enter the Service Setting menu.
2. Select [Network Status] using the cursor up/down keys.
3. Press the start key.
4. Press [Yes] (the Left Select key). Network status page will be printed.

Completion
Press the stop key.

Service items	Description
Test Page	**Printing a test page** **Description** Four colors are printed respectively with halftones of three different levels. **Purpose** To check the activation of the developer and drum units of four colors. **Method** 1. Enter the Service Setting menu. 2. Select [Test Page] using the cursor up/down keys. 3. Press the start key. 4. Press [Yes] (the Left Select key). Test page will be printed. 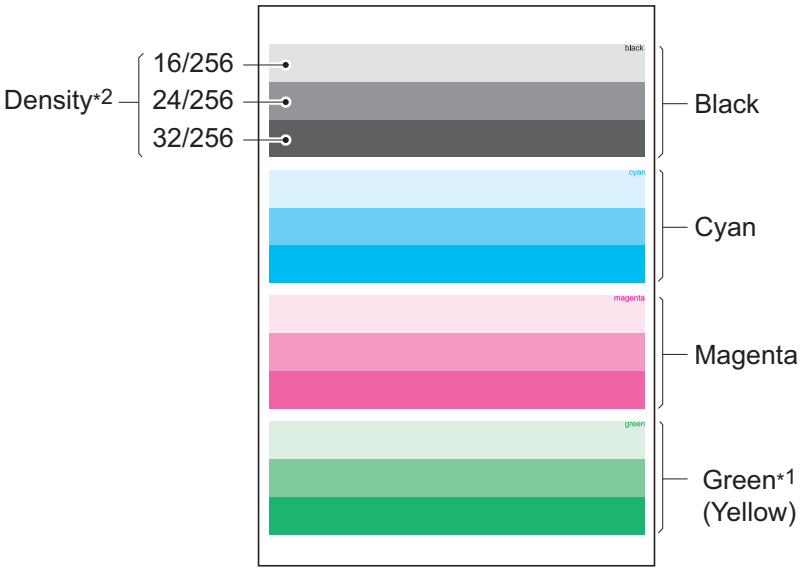 *1: Since focusing in yellow is hardly readable, yellow is mixed with cyan for more readability, resulting in green. *2: Each portion of colors has three different magnitude of halftones (bands). If focus is excessively lost, dots are not recognizable with the 16/256 band, resulting in uneven density. It also results in vertical streaks in the 24/256 and/or 32/256 bands. **Figure 1-3-6** **Completion** Press the stop key.

Service items	Description
Developer Setting	**Entering initial value for replacing the developing unit** **Description** After replacing the developing unit, enter the initial value (6-digit data) assigned on a label attached to the package or developing unit. **Purpose** To set the initial value after replacing the developing unit. **Method** 1. Enter the Service Setting menu. 2. Select [DeveloperSetting] using the cursor up/down keys. 3. Press the start key. Enter the initial value (6-digit data) using the cursor up/down keys. 4. Press the start key. The initial value is set. 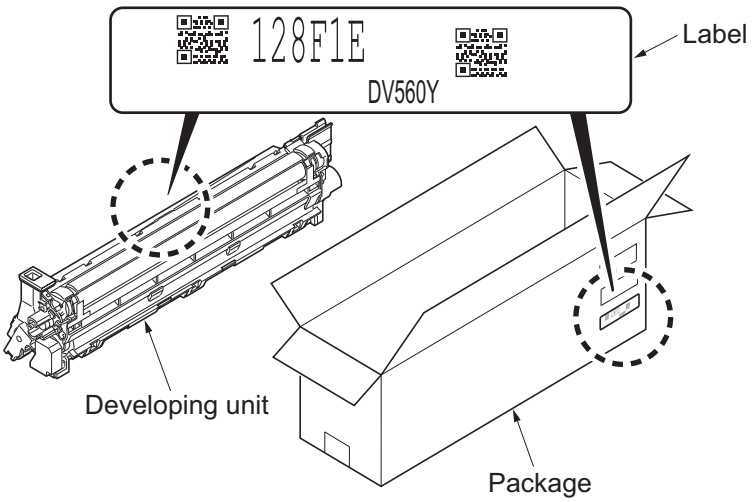 **Figure 1-3-7** **Completion** Press the stop key.

Service items	Description
Developer Refresh	**Performing developer refresh** **Description** The laser output of the image data for developer refreshing is carried out, and operation to exposure, developing, and primary transfer is performed by 10 pages (paper is not fed). **Purpose** To perform cleaning when faulty images occur and a line appears longitudinally. **Method** 1. Enter the Service Setting menu. 2. Select [DeveloperRefresh] using the cursor up/down keys. 3. Press the start key. 4. Press [Yes] (the Left Select key). Developer refresh is performed.  Toner image on the transfer belt **Figure 1-3-8** **Completion** Press the stop key.

Service items	Description
Laser Scanner Cleaning	**Performing LSU cleaning** **Description** The LSU cleaning motor drives the cleaning pad which in turn wipes clean the LSU dust shield glass. **Purpose** To perform cleaning when the printed image is bad and stripes are seen in the vertical direction. **Method** 1. Enter the Service Setting menu. 2. Select [LaserScanner Cln] using the cursor up/down keys. 3. Press the start key. 4. Press [Yes] (the Left Select key). LSU cleaning is performed. **Completion** Press the stop key.
Drum surface refreshing	**Performing drum surface refreshing** **Description** Rotates the drum approximately 2 minutes with toner lightly on the overall drum. The cleaning blade in the drum unit scrapes toner off the drum surface to clean it. **Purpose** To clean the drum surface when image failure occurs due to the drum. This mode is effective when dew condensation on the drum occurs. **Method** 1. Enter the Service Setting menu. 2. Select [Drum Refresh] using the cursor up/down keys. 3. Press the start key. 4. Press [Yes] (the Left Select key). Drum surface refreshing is performed. **Completion** Press the stop key.

Service items	Description
Altitude adjustment	**Setting altitude adjustment** **Description** Sets the altitude adjustment mode. **Purpose** Used when print quality deteriorates in an installation at the altitude of 1,500 meters or higher. **Method** 1. Enter the Service Setting menu. 2. Select [Altitude Adj.] using the cursor up/down keys. 3. Press the start key. 4. Select [Normal], [High 1] or [High 2)] using the cursor up/down keys. 5. Press the start key. The setting is set. **Completion** Press the stop key.
Main charger adjustment	**Setting main charger output** **Description** Sets the main charger output. This is excutable only when the altitude adjustment mode is set to [Normal]. **Purpose** Execute when the image density declines or an offset has occurred. **Method** 1. Enter the Service Setting menu. 2. Select [MC] using the cursor up/down keys. 3. Press the start key. 4. Select [1], [2] or [3] using the cursor up/down keys. 5. Press the start key. The setting is set. **Completion** Press the stop key.

Service items	Description
FAX country code	**FAX Country Code** **Description** Initializes software switches and all data in the backup data on the FAX control PWB, according to the destination. **Purpose** To initialize the FAX control PWB. **Method** 1. Enter the Service Setting menu. 2. Select [FAX Country Code] using the cursor up/down keys. 3. Press the start key. 4. Enter a destination code using the numeric keys. 5. Press the start key. The setting is set. 6. Press the start key. Data initialization starts. **Destination code list**

Code	Destination	Code	Destination
000	Japan	253	CTR21 (European nations)
009	Australia		Italy
038	China		Germany
080	Hong Kong		Spain
084	Indonesia		U.K.
088	Israel		Netherlands
097	Korea		Sweden
108	Malaysia		France
126	New Zealand		Austria
136	Peru		Switzerland
137	Philippines		Belgium
152	Middle East		Denmark
156	Singapore		Finland
159	South Africa		Portugal
169	Thailand		Ireland
181	U.S.A.		Norway
242	South America	254	Taiwan
243	Saudi Arabia		

Completion
Press the stop key.

Service items	Description
FAX call Setting	**FAX call setting** **Description** Selects if a fax is to be connected to either a PBX or public switched telephone network. Selects the mode to connect an outside call when connected to a PBX. Access code registration for connection to PSTN. **Purpose** To be executed as required. **Method** 1. Enter the Service Setting menu. 2. Select [FAX Call Set.] using the cursor up/down keys. 3. Press the start key. **Display** / **Description** Exchange Select. — Setting the connection to PBX/PSTN PBX Setting — Setting for a PBX Dial No. to PSTN — Setting access code to PSTN **Setting the connection to PBX/PSTN** 1. Select [Exchange Select.] using the cursor up/down keys. 2. Press the start key. 3. Select [PBX] or [PSTN] using the cursor up/down keys. 4. Press the start key. The setting is set. **Setting for PBX** 1. Select [PBX Setting] using the cursor up/down keys. 2. Press the start key. 3. Select [Loop], [Flash] or [Earth] using the cursor up/down keys. 4. Press the start key. The setting is set. **Setting access code to PSTN** 1. Select [Dial No. to PSTN] using the cursor up/down keys. 2. Press the start key. 3. Enter access code using the numeric keys. (0 to 9, 00 to 99) 4. Press the start key. The setting is set. **Completion** Press the stop key.

Service items	Description
Remote diagnostics	**Setting remote diagnostics** **Description** Sets the remote diagnostics. **Purpose** Used to establish communication between the machine and the service facility when a problem is encounted. **Method** 1. Enter the Service Setting menu. 2. Select [Remote Diag.Set.] using the cursor up/down keys. 3. Press the start key. 4. Select [On] using the cursor up/down keys. 5. Press the start key. The setting is set. 6. Select [Remote Diag. ID] using the cursor up/down keys. 7. Press the start key. 8. Enter the prespecified remote diagnostics ID number (0000 to 9999) using the numeric keys. 9. Press the start key. The setting is set. **Completion** Press the stop key.

This page is intentionally left blank.

1-4-1 Paper misfeed detection

(1) Paper misfeed indication

When a paper misfeed occurs, the machine immediately stops printing and displays the paper misfeed message on the operation panel. To remove paper misfed in the machine, pull out the cassette, open the rear cover or paper conveying unit.

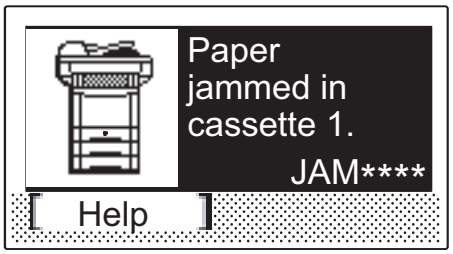

Figure 1-4-1 Paper misfeed indication

(2) Paper misfeed detection condition

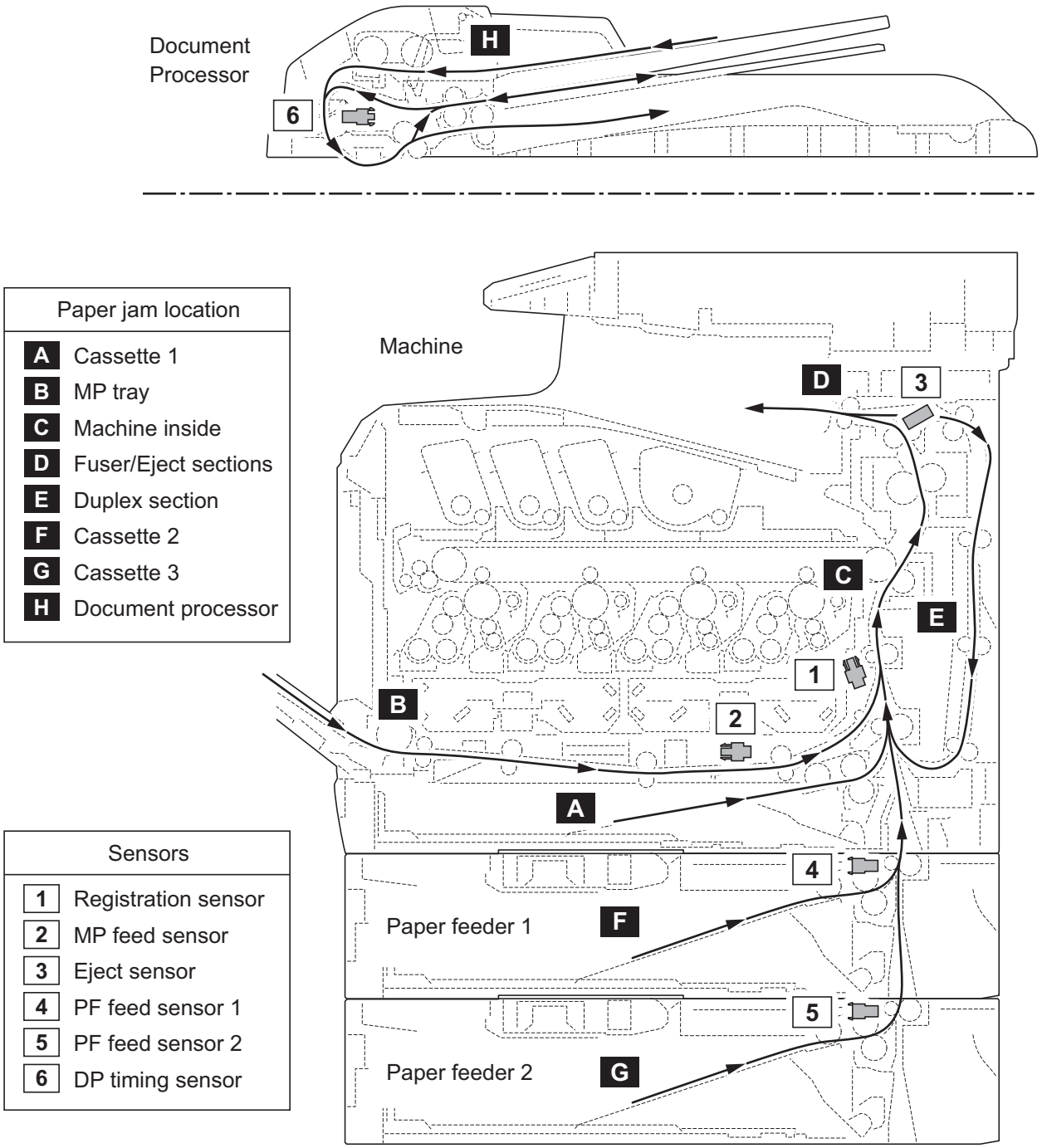

Figure 1-4-2 Paper jam location

Code	Contents	Conditions	Jam location*
0100	Controller sequence error	Secondary paper feed request given by the controller is unreachable.	C
0105	Registration sensor not detected	Activation of the registration sensor (on/off) is undetected for 90 s during printing.	-
0106	Controller sequence error	Paper feeding request for duplex printing given by the controller is unreachable.	E
0110	Top tray open	The top tray is opened during printing.	-
0111	Rear cover open	The rear cover is opened during printing.	-
0112	Front cover open	The waste toner cover is opened during printing.	-
0113	MP tray open	The MP tray is opened during printing.	-
0120	Controller sequence error	Paper feed request was received from the duplex section despite the absence of paper in the duplex section.	E
0121	Controller sequence error	The controller issued the duplex section a request for more pages than the duplex print cycle contains.	E
0211	Rear cover open (paper feeder 1)	The rear cover of paper feeder 1 is opened during printing.	-
0212	Rear cover open (paper feeder 2)	The rear cover of paper feeder 2 is opened during printing.	-
0501	No paper feed from cassette 1	The registration sensor (RS) does not turn on during paper feed from cassette.	A
0502	No paper feed from cassette 2	PF feed sensor 1 (PFFS1) does not turn on during paper feed from paper feeder 1.	F
0503	No paper feed from cassette 3	PF feed sensor 2 (PFFS2) does not turn on during paper feed from paper feeder 2.	G
0508	No paper feed from duplex section	The registration sensor (RS) does not turn on during paper feed from duplex section.	E
0509	No paper feed from MP tray	MP feed sensor (MPFS) does not turn on during paper feed from MP tray.	B
0511	Multiple sheets in cassette 1	The registration sensor (RS) does not turn off during paper feed from cassette.	A
0512	Multiple sheets in cassette 2	PF feed sensor 1 (PFFS1) does not turn off during paper feed from paper feeder 1.	F
0513	Multiple sheets in cassette 3	PF feed sensor 2 (PFFS2) does not turn off during paper feed from paper feeder 2.	G
0518	Multiple sheets in duplex section	The registration sensor (RS) does not turn off during paper feed from duplex section.	E
0519	Multiple sheets in MP tray	MP feed sensor (MPFS) does not turn off during paper feed from MP tray.	B

*: Refer to figure 1-4-2 for paper jam location (see page 1-4-2).

Code	Contents	Conditions	Jam location*
1020	MP feed sensor is turned ON	MP feed sensor (MPFS) is turned on when the power is turned on.	B
1403	PF feed sensor 1 does not turn ON	PF feed sensor 1 (PFFS1) does not turn on during paper feed from paper feeder 2.	F
1413	PF feed sensor 1 does not turn OFF	PF feed sensor 1 (PFFS1) does not turn off during paper feed from paper feeder 2.	F
1420	PF feed sensor 1 is turned ON	PF feed sensor 1 (PFFS1) is turned on when the power is turned on.	F
1620	PF feed sensor 2 is turned ON	PF feed sensor 2 (PFFS2) is turned on when the power is turned on.	G
4002	Registration sensor does not turn ON	The registration sensor (RS) does not turn on during paper feed from paper feeder 1.	A
4003		The registration sensor (RS) does not turn on during paper feed from paper feeder 2.	A
4009		The registration sensor (RS) does not turn on during paper feed from MP tray.	A
4012	Registration sensor does not turn OFF	The registration sensor (RS) does not turn off during paper feed from paper feeder 1.	C
4013		The registration sensor (RS) does not turn off during paper feed from paper feeder 2.	C
4019		The registration sensor (RS) does not turn off during paper feed from MP tray.	C
4020	Registration sensor is turned ON	The registration sensor (RS) is turned on when the power is turned on.	C
4201	Eject sensor does not turn ON	The eject sensor (ES) does not turn on during paper feed from cassette.	C
4202		The eject sensor (ES) does not turn on during paper feed from paper feeder 1.	C
4203		The eject sensor (ES) does not turn on during paper feed from paper feeder 2.	C
4208		The eject sensor (ES) does not turn on during paper feed from duplex section.	C
4209		The eject sensor (ES) does not turn on during paper feed from MP tray.	C

*: Refer to figure 1-4-2 for paper jam location (see page 1-4-2).

Code	Contents	Conditions	Jam location*
4211	Eject sensor does not turn OFF	The eject sensor (ES) does not turn off during paper feed from cassette.	D
4212		The eject sensor (ES) does not turn off during paper feed from paper feeder 1.	D
4213		The eject sensor (ES) does not turn off during paper feed from paper feeder 2.	D
4218		The eject sensor (ES) does not turn off during paper feed from duplex section.	D
4219		The eject sensor (ES) does not turn off during paper feed from MP tray.	D
4220	Eject sensor is turned ON	The eject sensor (ES) is turned on when the power is turned on.	D
9010	DP top cover open	The DP top cover is opened during original feeding. The DP timing sensor (DPTS) turns on when starting the original paper feed.	H
9400	No original feed	The DP timing sensor (DPTS) does not turn on within specified time during the first sheet feeding (Retry 5 times).	H
		The DP timing sensor (DPTS) does not turn on within specified time during the second sheet feeding (Retry 5 times).	H
9401	An original jam in the original switchback section 2	During original switchback operation, DP timing sensor (DPTS) does not turn off within specified time of the DP paper feed motor (DPPFM) turning on.	H
9410	An original jam in the original conveying section	The DP timing sensor (DPTS) does not turn off within specified time of the DP paper feed motor (DPPFM) turning on.	H
9411	An original jam in the original switchback section 1	The DP timing sensor (DPTS) does not turn on within specified time of the DP paper feed motor (DPPFM) turning off.	H

*: Refer to figure 1-4-2 for paper jam location (see page 1-4-2).

1-4-2 Self-diagnostic function

(1) Self-diagnostic function

This machine is equipped with self-diagnostic function. When a problem is detected, the machine stops printing and display an error message on the operation panel. An error message consists of a message prompting a contact to service personnel and a four-digit error code indicating the type of the error.

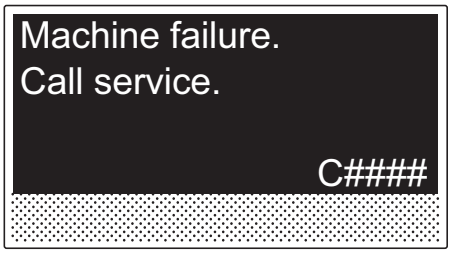

Figure 1-4-3

(2) Self diagnostic codes

If the part causing the problem was not supplied, use the unit including the part for replacement.

Code	Contents	Causes	Check procedures/ corrective measures
0030	**FAX control PWB system error** Processing with the fax software was disabled due to a hardware problem.	Defective FAX control PWB.	Replace the fax control PWB and check for correct operation. (see page 1-5-35).
0070	**FAX control PWB incompatible detection error** Abnormal detection of FAX control PWB incompatibility In the initial communication with the FAX control PWB, any normal communication command is not transmitted.	Defective FAX software.	Install the fax software.
		Defective FAX control PWB.	Replace the fax control PWB and check for correct operation. (see page 1-5-35).
0100	**Backup memory device error**	Defective flash memory.	Replace the main PWB and check for correct operation (see page 1-5-29).
		Defective main PWB.	Replace the main PWB and check for correct operation (see page 1-5-29).
0120	**MAC address data error** For data in which the MAC address is invalid.	Defective flash memory.	Replace the main PWB and check for correct operation (see page 1-5-29).
		Defective engine PWB.	Replace the engine PWB and check for correct operation (see page 1-5-26).
0130	**Backup memory read/write error (main PWB)**	Defective flash memory.	Replace the main PWB and check for correct operation (see page 1-5-29).
		Defective main PWB.	Replace the main PWB and check for correct operation (see page 1-5-29).
0140	**Backup memory data error (main PWB)**	Defective flash memory.	Replace the main PWB and check for correct operation (see page 1-5-29).
		Defective main PWB.	Replace the main PWB and check for correct operation (see page 1-5-29).
0150	**Engine PWB EEPROM error** Detecting engine PWB EEPROM communication error.	Improper installation engine PWB EEPROM.	Check the installation of the EEPROM and remedy if necessary.
		Defective engine PWB.	Replace the engine PWB and check for correct operation (see page 1-5-26).
		Device damage of EEPROM.	Contact the Service Administrative Division.
0170	**Billing counting error** A checksum error is detected in the main and engine backup memories for the billing counters.	Data damage of EEPROM.	Contact the Service Administrative Division.
		Defective PWB.	Replace the main PWB or the engine PWB and check for correct operation (see page 1-5-29, 1-5-26).

Code	Contents	Causes	Check procedures/ corrective measures
0180	**Machine number mismatch** Machine number of main and engine does not match.	Data damage of EEPROM.	Contact the Service Administrative Division.
0600	**Expanded memory (DIMM) installing error** The expansion memory modules (DIMM) are not correctly mounted.	Improper installation expanded memory (DIMM).	Check the installation of the expanded memory (DIMM).
0610	**Expanded memory (DIMM) error** The expansion memory modules (DIMM) mounted on the main PWB does not operate correctly.	Defective expanded memory (DIMM).	Replace the expanded memory (DIMM) and check for correct operation (see page 1-2-8).
		Defective main PWB.	Replace the main PWB and check for correct operation (see page 1-5-29).
0640	**Hard disk error** The hard disk cannot be accessed.	Defective hard disk.	Replace the hard disk and check for correct operation.
		Defective main PWB.	Replace the main PWB and check for correct operation (see page 1-5-29).
0830	**FAX control PWB flash program area checksum error** A checksum error occurred with the program of the FAX control PWB.	Defective FAX software.	Install the fax software.
		Defective FAX control PWB.	Replace the FAX control PWB (see page 1-5-35).
0840	**Faults of RTC** The time is judged to go back based on the comparison of the RTC time and the current time or five years or more have passed.	The battery is disconnected from the main PWB.	Check visually and remedy if necessary
		Defective main PWB.	Replace the main PWB and check for correct operation (see page 1-5-29).
0870	**FAX control PWB to main PWB high capacity data transfer error** High-capacity data transfer between the FAX control PWB and the main PWB of the machine was not normally performed even if the data transfer was retried the specified times.	Improper installation FAX control PWB.	Reinstall the FAX control PWB (see page 1-5-35).
		Defective FAX control PWB or main PWB.	Replace the FAX control PWB or main PWB and check for correct operation (see page 1-5-35 or 1-5-29).
0920	**Fax file system error** The backup data is not retained for file system abnormality of flash memory of the FAX control PWB.	Defective FAX control PWB.	Replace the FAX control PWB and check for correct operation (see page 1-5-35).

Code	Contents	Causes	Check procedures/ corrective measures
0930	**EEPROM bus error**	Defective drum PWB (EEPROM).	Replace the drum unit (see page 1-5-20).
		Defective engine PWB (EEPROM).	Replace the engine PWB and check for correct operation (see page 1-5-26).
		Defective engine PWB.	Replace the engine PWB and check for correct operation (see page 1-5-26).
		Defective main PWB.	Replace the main PWB and check for correct operation (see page 1-5-29).
1010	**Lift motor error** When the lift motor is driven, the motor over-current detection signal is detected continuously for 50 times (5 s) at 100 ms intervals. After the lift motor is driven, the ON status of lift sensor cannot be detected for 8 s. The cassette installed confirmation message is displayed on the operation panel, and even if the cassette is opened and closed, the cassette installed confirmation message is displayed 5 times successively.	Defective bottom plate elevation mechanism in the cassette.	Check to see if the bottom plate can move smoothly and repair it if any problem is found.
		Defective connector cable or poor contact in the connector.	Reinsert the connector. Also check for continuity within the connector cable. If none, replace the cable. Lift motor and engine PWB (YC27)
		Defective drive transmission system of the lift motor.	Check if the gears rotate smoothly. If not, grease the bushes and gears. Check for broken gears and replace if any.
		Defective lift motor.	Replace the lift motor
		Defective engine PWB.	Replace the engine PWB and check for correct operation (see page 1-5-26).
1020	**PF lift motor error (paper feeder 1)** When the lift motor is driven, the motor over-current detection signal is detected continuously for 50 times (5 s) at 100 ms intervals. After the lift motor is driven, the ON status of lift sensor cannot be detected for 8 s. The cassette installed confirmation message is displayed on the operation panel, and even if the cassette is opened and closed, the cassette installed confirmation message is displayed 5 times successively.	Defective bottom plate elevation mechanism in the cassette.	Check to see if the bottom plate can move smoothly and repair it if any problem is found.
		Defective connector cable or poor contact in the connector.	Reinsert the connector. Also check for continuity within the connector cable. If none, replace the cable. PF lift motor and PF main PWB (YC7)
		Defective drive transmission system of the PF lift motor.	Check if the gears rotate smoothly. If not, grease the bushes and gears. Check for broken gears and replace if any.
		Defective PF lift motor.	Replace the PF lift motor
		Defective PF main PWB.	Replace the PF main PWB (Refer to the service manual for the paper feeder).

Code	Contents	Causes	Check procedures/ corrective measures
1030	**PF lift motor error (paper feeder 2)** When the lift motor is driven, the motor over-current detection signal is detected continuously for 50 times (5 s) at 100 ms intervals. After the lift motor is driven, the ON status of lift sensor cannot be detected for 8 s. The cassette installed confirmation message is displayed on the operation panel, and even if the cassette is opened and closed, the cassette installed confirmation message is displayed 5 times successively.	Defective bottom plate elevation mechanism in the cassette.	Check to see if the bottom plate can move smoothly and repair it if any problem is found.
		Defective connector cable or poor contact in the connector.	Reinsert the connector. Also check for continuity within the connector cable. If none, replace the cable. PF lift motor and PF main PWB (YC7)
		Defective drive transmission system of the PF lift motor.	Check if the gears rotate smoothly. If not, grease the bushes and gears. Check for broken gears and replace if any.
		Defective PF lift motor.	Replace the PF lift motor
		Defective PF main PWB.	Replace the PF main PWB (Refer to the service manual for the paper feeder).
1500	**PF heater 1 high temperature error (paper feeder 1)** A temperature higher than 75°C/167°F is detected.	Defective connector cable or poor contact in the connector.	Reinsert the connector. Also check for continuity within the connector cable. If none, replace the cable. PF fan motor 1 and PF main PWB (YC111)
		Shorted PF thermistor 1.	Replace the top heater unit (Refer to the service manual for the paper feeder).
		Defective PF fan motor 1.	Replace the top heater unit (Refer to the service manual for the paper feeder).
		Defective PF main PWB.	Replace the PF main PWB (Refer to the service manual for the paper feeder).
1510	**PF heater 2 high temperature error (paper feeder 1)** A temperature higher than 75°C/167°F is detected.	Defective connector cable or poor contact in the connector.	Reinsert the connector. Also check for continuity within the connector cable. If none, replace the cable. PF fan motor 2 and PF main PWB (YC111)
		Shorted PF thermistor 2.	Replace the side heater unit (Refer to the service manual for the paper feeder).
		Defective PF fan motor 2.	Replace the side heater unit (Refer to the service manual for the paper feeder).
		Defective PF main PWB.	Replace the PF main PWB (Refer to the service manual for the paper feeder).

Code	Contents	Causes	Check procedures/ corrective measures
1520	**PF heater 1 high temperature error (paper feeder 2)** A temperature higher than 75°C/167°F is detected.	Defective connector cable or poor contact in the connector.	Reinsert the connector. Also check for continuity within the connector cable. If none, replace the cable. PF fan motor 1 and PF main PWB (YC111)
		Shorted PF thermistor 1.	Replace the top heater unit (Refer to the service manual for the paper feeder).
		Defective PF fan motor 1.	Replace the top heater unit (Refer to the service manual for the paper feeder).
		Defective PF main PWB.	Replace the PF main PWB (Refer to the service manual for the paper feeder).
1530	**PF heater 2 high temperature error (paper feeder 2)** A temperature higher than 75°C/167°F is detected.	Defective connector cable or poor contact in the connector.	Reinsert the connector. Also check for continuity within the connector cable. If none, replace the cable. PF fan motor 2 and PF main PWB (YC111)
		Shorted PF thermistor 2.	Replace the side heater unit (Refer to the service manual for the paper feeder).
		Defective PF fan motor 2.	Replace the side heater unit (Refer to the service manual for the paper feeder).
		Defective PF main PWB.	Replace the PF main PWB (Refer to the service manual for the paper feeder).
1600	**PF heater 1 low temperature error (paper feeder 1)** An external temperature higher than + 5°C/+ 9°F is not detected when one minute elapses after PF heater 1 is turned on.	Defective connector cable or poor contact in the connector.	Reinsert the connector. Also check for continuity within the connector cable. If none, replace the cable. PF heater 1 and PF heater PWB (YC1) PF heater PWB (YC3) and PF main PWB (YC113) PF thermistor 1 and PF main PWB (YC114)
		PF thermistor 1 installed incorrectly.	Check the installation of the PF thermistor 1.
		Defective PF thermistor 1.	Replace the top heater unit (Refer to the service manual for the paper feeder).
		Broken PF heater 1.	Replace the top heater unit (Refer to the service manual for the paper feeder).
		Defective PF heater PWB or PF main PWB.	Replace the PF heater PWB or PF main PWB (Refer to the service manual for the paper feeder).

Code	Contents	Causes	Check procedures/ corrective measures
1610	**PF heater 2 low temperature error (paper feeder 1)** An external temperature higher than + 5°C/+ 9°F is not detected when one minute elapses after PF heater 2 is turned on.	Defective connector cable or poor contact in the connector.	Reinsert the connector. Also check for continuity within the connector cable. If none, replace the cable. PF heater 2 and PF heater PWB (YC2) PF heater PWB (YC3) and PF main PWB (YC113) PF thermistor 2 and PF main PWB (YC115)
		PF thermistor 2 installed incorrectly.	Check the installation of the PF thermistor 2.
		Defective PF thermistor 2.	Replace the side heater unit (Refer to the service manual for the paper feeder).
		Broken PF heater 2.	Replace the side heater unit (Refer to the service manual for the paper feeder).
		Defective PF heater PWB or PF main PWB.	Replace the PF heater PWB or PF main PWB (Refer to the service manual for the paper feeder).
1620	**PF heater 1 low temperature error (paper feeder 2)** An external temperature higher than + 5°C/+ 9°F is not detected when one minute elapses after PF heater 1 is turned on.	Defective connector cable or poor contact in the connector.	Reinsert the connector. Also check for continuity within the connector cable. If none, replace the cable. PF heater 1 and PF heater PWB (YC1) PF heater PWB (YC3) and PF main PWB (YC113) PF thermistor 1 and PF main PWB (YC114)
		PF thermistor 1 installed incorrectly.	Check the installation of the PF thermistor 1.
		Defective PF thermistor 1.	Replace the top heater unit (Refer to the service manual for the paper feeder).
		Broken PF heater 1.	Replace the top heater unit (Refer to the service manual for the paper feeder).
		Defective PF heater PWB or PF main PWB.	Replace the PF heater PWB or PF main PWB (Refer to the service manual for the paper feeder).

Code	Contents	Causes	Check procedures/ corrective measures
1630	**PF heater 2 low temperature error (paper feeder 2)** An external temperature higher than + 5°C/+ 9°F is not detected when one minute elapses after PF heater 2 is turned on.	Defective connector cable or poor contact in the connector.	Reinsert the connector. Also check for continuity within the connector cable. If none, replace the cable. PF heater 2 and PF heater PWB (YC2) PF heater PWB (YC3) and PF main PWB (YC113) PF thermistor 2 and PF main PWB (YC115)
		PF thermistor 2 installed incorrectly.	Check the installation of the PF thermistor 2.
		Defective PF thermistor 2.	Replace the side heater unit (Refer to the service manual for the paper feeder).
		Broken PF heater 2.	Replace the side heater unit (Refer to the service manual for the paper feeder).
		Defective PF heater PWB or PF main PWB.	Replace the PF heater PWB or PF main PWB (Refer to the service manual for the paper feeder).
1800	**Paper feeder communication error** Communication error between engine PWB and optional paper feeder.	Improper installation paper feeder.	Follow installation instruction carefully again.
		Defective connector cable or poor contact in the connector.	Reinsert the connector. Also check for continuity within the connector cable. If none, replace the cable. PF main PWB (YC3) and engine PWB (YC33)
		Defective engine PWB.	Replace the engine PWB and check for correct operation (see page 1-5-26).
		Defective PF main PWB.	Replace the PF main PWB (Refer to the service manual for the paper feeder).
2100	**Developing motor error** The developing motor ready input is not given for 5 s during the main motor is ON.	Defective connector cable or poor contact in the connector.	Reinsert the connector. Also check for continuity within the connector cable. If none, replace the cable. Developing motor and engine PWB (YC14)
		Defective drive transmission system of the developing motor.	Check if the rollers and gears rotate smoothly. If not, grease the bushes and gears. Check for broken gears and replace if any.
		Defective developing motor.	Replace the developing motor.
		Defective engine PWB.	Replace the engine PWB and check for correct operation (see page 1-5-26).

Code	Contents	Causes	Check procedures/ corrective measures
2200	**Drum motor error** The drum motor ready input is not given for 5 s during the drum motor is ON.	Defective connector cable or poor contact in the connector.	Reinsert the connector. Also check for continuity within the connector cable. If none, replace the cable. Drum motor and engine PWB (YC13)
		Defective drive transmission system of the drum motor.	Check if the rollers and gears rotate smoothly. If not, grease the bushes and gears. Check for broken gears and replace if any.
		Defective drum motor.	Replace the drum motor.
		Defective engine PWB.	Replace the engine PWB and check for correct operation (see page 1-5-26).
2330	**Fuser pressure release motor error** When the fuser pressure release motor is driven, the motor over-current detection signal is detected continuously for 8 times (800 ms) at 100 ms intervals.	Defective connector cable or poor contact in the connector.	Reinsert the connector. Also check for continuity within the connector cable. If none, replace the cable. Fuser pressure release motor and engine PWB (YC38)
		Defective drive transmission system of the fuser pressure release motor.	Check if the rollers and gears rotate smoothly. If not, grease the bushes and gears. Check for broken gears and replace if any.
		Defective fuser pressure release motor.	Replace the fuser pressure release motor.
		Defective engine PWB.	Replace the engine PWB and check for correct operation (see page 1-5-26).
2340	**Fuser pressure release motor time-out error** When the fuser pressure release motor is driven, the envelope switch (EVSW) is not detectable for 6 s.	Defective connector cable or poor contact in the connector.	Reinsert the connector. Also check for continuity within the connector cable. If none, replace the cable. Fuser pressure release motor and engine PWB (YC38)
		Defective drive transmission system of the fuser pressure release motor.	Check if the rollers and gears rotate smoothly. If not, grease the bushes and gears. Check for broken gears and replace if any.
		Defective fuser pressure release motor.	Replace the fuser pressure release motor.
		Defective engine PWB.	Replace the engine PWB and check for correct operation (see page 1-5-26).

Code	Contents	Causes	Check procedures/ corrective measures
2500	**Paper feed motor error** The drum motor ready input is not given for 5 s during the paper feed motor is ON.	Defective connector cable or poor contact in the connector.	Reinsert the connector. Also check for continuity within the connector cable. If none, replace the cable. Paper feed motor and engine PWB (YC3)
		Defective drive transmission system of the paper feed motor.	Check if the rollers and gears rotate smoothly. If not, grease the bushes and gears. Check for broken gears and replace if any.
		Defective paper feed motor.	Replace the paper feed motor.
		Defective engine PWB.	Replace the engine PWB and check for correct operation (see page 1-5-26).
2600	**PF paper feed motor error (paper feeder 1)** The drum motor ready input is not given for 2 s during the PF paper feed motor is ON.	Defective connector cable or poor contact in the connector.	Reinsert the connector. Also check for continuity within the connector cable. If none, replace the cable. PF paper feed motor and PF main PWB (YC6)
		Defective drive transmission system of the PF paper feed motor.	Check if the rollers and gears rotate smoothly. If not, grease the bushes and gears. Check for broken gears and replace if any.
		Defective PF paper feed motor.	Replace the PF paper feed motor.
		Defective PF main PWB.	Replace the PF main PWB (Refer to the service manual for the paper feeder).
2610	**PF paper feed motor error (paper feeder 2)** The drum motor ready input is not given for 2 s during the PF paper feed motor is ON.	Defective connector cable or poor contact in the connector.	Reinsert the connector. Also check for continuity within the connector cable. If none, replace the cable. PF paper feed motor and PF main PWB (YC6)
		Defective drive transmission system of the PF paper feed motor.	Check if the rollers and gears rotate smoothly. If not, grease the bushes and gears. Check for broken gears and replace if any.
		Defective PF paper feed motor.	Replace the PF paper feed motor.
		Defective PF main PWB.	Replace the PF main PWB (Refer to the service manual for the paper feeder).

Code	Contents	Causes	Check procedures/ corrective measures
2730	**Developing release motor error** When the developing release motor is driven, the motor over-current detection signal is detected continuously for 8 times (800 ms) at 100 ms intervals.	Defective connector cable or poor contact in the connector.	Reinsert the connector. Also check for continuity within the connector cable. If none, replace the cable. Developing release motor and engine PWB (YC35)
		Defective drive transmission system of the developing release motor.	Check if the rollers and gears rotate smoothly. If not, grease the bushes and gears. Check for broken gears and replace if any.
		Defective developing release motor.	Replace the developing release motor.
		Defective engine PWB.	Replace the engine PWB and check for correct operation (see page 1-5-26).
2740	**Developing release motor time-out error** When the developing release motor is driven, the developing release switch (DEVRSW) is not detectable for 1 s.	Defective connector cable or poor contact in the connector.	Reinsert the connector. Also check for continuity within the connector cable. If none, replace the cable. Developing release motor and engine PWB (YC35)
		Defective drive transmission system of the developing release motor.	Check if the rollers and gears rotate smoothly. If not, grease the bushes and gears. Check for broken gears and replace if any.
		Defective developing release motor.	Replace the developing release motor.
		Defective engine PWB.	Replace the engine PWB and check for correct operation (see page 1-5-26).
2820	**Fuser motor error** The fuser motor ready input is not given for 5 s during the fuser motor is ON.	Defective connector cable or poor contact in the connector.	Reinsert the connector. Also check for continuity within the connector cable. If none, replace the cable. Fuser motor and engine PWB (YC15)
		Defective drive transmission system of the fuser motor.	Check if the rollers and gears rotate smoothly. If not, grease the bushes and gears. Check for broken gears and replace if any.
		Defective fuser motor.	Replace the fuser motor.
		Defective engine PWB.	Replace the engine PWB and check for correct operation (see page 1-5-26).

Code	Contents	Causes	Check procedures/ corrective measures
3100	**ISU home position error** The home position is not correct when the power is turned on or at the start of copying using the table.	Defective connector cable or poor contact in the connector.	Reinsert the connector. Also check for continuity within the connector cable. If none, replace the cable. Home position sensor and CCD PWB (YC3) CCD PWB (YC1) and main PWB (YC8) ISU motor and main PWB (YC36)
		Defective home position sensor.	Replace the home position sensor.
		Defective ISU motor.	Replace the ISU motor.
		Defective CCD PWB.	Replace the scanner unit (see page 1-5-47).
		Defective main PWB.	Replace the main PWB and check for correct operation (see page 1-5-29).
3200	**Exposure lamp error** When input value at the time of exposure lamp illumination does not exceed the threshold value between 5 s.	Defective connector cable or poor contact in the connector.	Reinsert the connector. Also check for continuity within the connector cable. If none, replace the cable. Exposure lamp and inverter PWB (CN2) Inverter PWB (CN1) and CCD PWB (YC3) CCD PWB (YC1) and main PWB (YC8)
		Defective exposure lamp.	Replace the scanner unit (see page 1-5-47).
		Defective inverter PWB or CCD PWB.	Replace the scanner unit (see page 1-5-47).
		Defective main PWB.	Replace the main PWB and check for correct operation (see page 1-5-29).
3300	**AGC error** After AGC, correct input is not obtained at CCD.	Defective connector cable or poor contact in the connector.	Reinsert the connector. Also check for continuity within the connector cable. If none, replace the cable. Inverter PWB (CN1) and CCD PWB (YC3) CCD PWB (YC1) and main PWB (YC8)
		Defective exposure lamp.	Replace the scanner unit (see page 1-5-47).
		Defective inverter PWB or CCD PWB.	Replace the scanner unit (see page 1-5-47).
		Defective main PWB.	Replace the main PWB and check for correct operation (see page 1-5-29).

Code	Contents	Causes	Check procedures/ corrective measures
3500	**Communication error between scanner and ASIC** An error code is detected.	Defective connector cable or poor contact in the connector.	Reinsert the connector. Also check for continuity within the connector cable. If none, replace the cable. CCD PWB (YC1) and main PWB (YC8)
		Defective CCD PWB.	Replace the scanner unit (see page 1-5-47).
		Defective main PWB.	Replace the main PWB and check for correct operation (see page 1-5-29).
4001	**Polygon motor KM error** The polygon motor KM ready input is not given for 10 s during the polygon motor is ON.	Defective connector cable or poor contact in the connector.	Reinsert the connector. Also check for continuity within the connector cable. If none, replace the cable. Laser scanner unit KM and engine PWB (YC31)
		Defective polygon motor KM.	Replace the laser scanner unit KM (see page 1-5-44).
		Defective engine PWB.	Replace the engine PWB and check for correct operation (see page 1-5-26).
4002	**Polygon motor CY error** The polygon motor CY ready input is not given for 10 s during the polygon motor is ON.	Defective connector cable or poor contact in the connector.	Reinsert the connector. Also check for continuity within the connector cable. If none, replace the cable. Laser scanner unit CY and engine PWB (YC31)
		Defective polygon motor CY.	Replace the laser scanner unit CY (see page 1-5-44).
		Defective engine PWB.	Replace the engine PWB and check for correct operation (see page 1-5-26).
4201	**Laser output error (black)** The pin photo signal is not output from PD PWB K for one second while laser is emitted.	Defective connector cable or poor contact in the connector.	Reinsert the connector. Also check for continuity within the connector cable. If none, replace the cable. APC PWB K and engine PWB (YC31)
		Defective APC PWB K.	Replace the laser scanner unit KM (see page 1-5-44).
		Defective PD PWB K.	Replace the laser scanner unit KM (see page 1-5-44).
		Defective engine PWB.	Replace the engine PWB and check for correct operation (see page 1-5-26).

Code	Contents	Causes	Check procedures/ corrective measures
4202	**Laser output error (cyan)** The pin photo signal is not output from PD PWB C for one second while laser is emitted.	Defective connector cable or poor contact in the connector.	Reinsert the connector. Also check for continuity within the connector cable. If none, replace the cable. APC PWB C and engine PWB (YC32)
		Defective APC PWB C.	Replace the laser scanner unit CY (see page 1-5-44).
		Defective PD PWB C.	Replace the laser scanner unit CY (see page 1-5-44).
		Defective engine PWB.	Replace the engine PWB (see page 1-5-26).
4203	**Laser output error (magenta)** The pin photo signal is not output from PD PWB M for one second while laser is emitted.	Defective connector cable or poor contact in the connector.	Reinsert the connector. Also check for continuity within the connector cable. If none, replace the cable. APC PWB M and engine PWB (YC31)
		Defective APC PWB M.	Replace the laser scanner unit KM (see page 1-5-44).
		Defective PD PWB M.	Replace the laser scanner unit KM (see page 1-5-44).
		Defective engine PWB.	Replace the engine PWB (see page 1-5-26).
4204	**Laser output error (yellow)** The pin photo signal is not output from PD PWB Y for one second while laser is emitted.	Defective connector cable or poor contact in the connector.	Reinsert the connector. Also check for continuity within the connector cable. If none, replace the cable. APC PWB Y and engine PWB (YC32)
		Defective APC PWB Y.	Replace the laser scanner unit CY (see page 1-5-44).
		Defective PD PWB Y.	Replace the laser scanner unit CY (see page 1-5-44).
		Defective engine PWB.	Replace the engine PWB (see page 1-5-26).
4600	**LSU cleaning motor error** When the LSU cleaning motor is driven, the motor over-current detection signal is detected continuously for 50 times (5 s) at 100 ms intervals.	Defective connector cable or poor contact in the connector.	Reinsert the connector. Also check for continuity within the connector cable. If none, replace the cable. LSU cleaning motor and engine PWB (YC36)
		Defective drive transmission system of the LSU cleaning motor.	Check if the rollers and gears rotate smoothly. If not, grease the bushes and gears. Check for broken gears and replace if any.
		Defective LSU cleaning motor.	Replace the LSU cleaning motor.
		Defective engine PWB.	Replace the engine PWB and check for correct operation (see page 1-5-26).

Code	Contents	Causes	Check procedures/ corrective measures
4700	**VIDEO ASIC device error**	Defective connector cable or poor contact in the connector.	Reinsert the connector. Also check for continuity within the connector cable. If none, replace the cable. Main PWB (YC39) and relay PWB (YC3) Relay PWB (YC2, 4) and engine PWB (YC8, 9)
		Defective main PWB or engine PWB.	Replace the main PWB or the engine PWB and check for correct operation (see page 1-5-29, 1-5-26).
5301	**Broken cleaning lamp K wire** When the cleaning lamp K is driven, the lamp over-current detection signal is detected continuously for 10 times (1 s) at 100 ms intervals.	Defective connector cable or poor contact in the connector.	Reinsert the connector. Also check for continuity within the connector cable. If none, replace the cable. Drum unit K and Drum relay PWB (YC2) Drum relay PWB (YC1) and engine PWB (YC34)
		Defective cleaning lamp K.	Replace the drum unit K. (see page 1-5-20).
		Defective engine PWB.	Replace the engine PWB and check for correct operation (see page 1-5-26).
5302	**Broken cleaning lamp C wire** When the cleaning lamp C is driven, the lamp over-current detection signal is detected continuously for 10 times (1 s) at 100 ms intervals.	Defective connector cable or poor contact in the connector.	Reinsert the connector. Also check for continuity within the connector cable. If none, replace the cable. Drum unit C and Drum relay PWB (YC4) Drum relay PWB (YC1) and engine PWB (YC34)
		Defective cleaning lamp C.	Replace the drum unit C. (see page 1-5-20).
		Defective engine PWB.	Replace the engine PWB and check for correct operation (see page 1-5-26).
5303	**Broken cleaning lamp M wire** When the cleaning lamp M is driven, the lamp over-current detection signal is detected continuously for 10 times (1 s) at 100 ms intervals.	Defective connector cable or poor contact in the connector.	Reinsert the connector. Also check for continuity within the connector cable. If none, replace the cable. Drum unit M and Drum relay PWB (YC3) Drum relay PWB (YC1) and engine PWB (YC34)
		Defective cleaning lamp M.	Replace the drum unit M. (see page 1-5-20).
		Defective engine PWB.	Replace the engine PWB and check for correct operation (see page 1-5-26).

Code	Contents	Causes	Check procedures/ corrective measures
5304	**Broken cleaning lamp Y wire** When the cleaning lamp Y is driven, the lamp over-current detection signal is detected continuously for 10 times (1 s) at 100 ms intervals.	Defective connector cable or poor contact in the connector.	Reinsert the connector. Also check for continuity within the connector cable. If none, replace the cable. Drum unit Y and Drum relay PWB (YC5) Drum relay PWB (YC1) and engine PWB (YC34)
		Defective cleaning lamp Y.	Replace the drum unit Y. (see page 1-5-20).
		Defective engine PWB.	Replace the engine PWB and check for correct operation (see page 1-5-26).
6000	**Broken fuser heater wire** The detected temperature of fuser thermistor does not rise 1°C/1.8°F after the fuser heater has been turned on continuously for 10 s in warming up. The fuser temperature does not reach 100°C/212°F after the fuser heater has been turned on continuously for 30 s in warming up. The detected temperature of fuser thermistor does not reach the specified temperature (ready indication temperature) after the fuser heater has been turned on continuously for 60 s in warming up. The detected temperature of fuser thermistor does not rise 1°C/1.8°F after the fuser heater has been turned on continuously for 10 s during printing.	Defective connector cable or poor contact in the connector.	Reinsert the connector. Also check for continuity within the connector cable. If none, replace the cable. Fuser heater and power source PWB (YC102) Fuser unit and eject PWB (YC3) Eject PWB (YC1) and engine PWB (YC19)
		Fuser thermostat triggered.	Reinsert the fuser unit (see page 1-5-25).
		Broken fuser heater wire.	Replace the fuser unit (see page 1-5-25).
		Defective engine PWB.	Replace the engine PWB and check for correct operation (see page 1-5-26).
6020	**Abnormally high fuser thermistor temperature** The fuser thermistor detects a temperature higher than 240°C/464°F. By the activation of the high temperature error detection circuit (230°C/446°F or more) of fuser thermistor, the illumination of fuser heater was forcibly turned off and 10 s has elapsed.	Shorted fuser thermistor.	Replace the fuser unit (see page 1-5-25).
		Defective engine PWB.	Replace the engine PWB and check for correct operation (see page 1-5-26).

Code	Contents	Causes	Check procedures/ corrective measures
6030	**Broken fuser thermistor wire** Input from fuser thermistor is 3 or less (A/D value) continuously for 1 s.	Defective connector cable or poor contact in the connector.	Reinsert the connector. Also check for continuity within the connector cable. If none, replace the cable. Fuser unit and eject PWB (YC3) Eject PWB (YC1) and engine PWB (YC19)
		Broken fuser thermistor wire.	Replace the fuser unit (see page 1-5-25).
		Fuser thermostat triggered.	Reinsert the fuser unit (see page 1-5-25).
		Broken fuser heater wire.	Replace the fuser unit (see page 1-5-25).
		Defective engine PWB.	Replace the engine PWB and check for correct operation (see page 1-5-26).
6400	**Zero-cross signal error** The zero-cross signal does not reach the engine PWB for more than 1 s.	Defective connector cable or poor contact in the connector.	Reinsert the connector. Also check for continuity within the connector cable. If none, replace the cable. Power source PWB (YC103) and relay PWB (YC1) Relay PWB (YC4) and engine PWB (YC9)
		Defective power source PWB or engine PWB.	Replace the power source PWB or the engine PWB and check for correct operation (see page 1-5-28, 1-5-26).
7001	**Toner motor K error** When the toner motor K is driven, the motor over-current detection signal is detected continuously for 50 times (5 s) at 100 ms intervals.	Defective connector cable or poor contact in the connector.	Reinsert the connector. Also check for continuity within the connector cable. If none, replace the cable. Toner motor K and engine PWB (YC23)
		Defective drive transmission system of the toner motor K.	Check if the rollers and gears rotate smoothly. If not, grease the bushes and gears. Check for broken gears and replace if any.
		Defective toner motor K.	Replace the toner motor K.
		Defective engine PWB.	Replace the engine PWB and check for correct operation (see page 1-5-26).

Code	Contents	Causes	Check procedures/ corrective measures
7002	**Toner motor C error** When the toner motor C is driven, the motor over-current detection signal is detected continuously for 50 times (5 s) at 100 ms intervals.	Defective connector cable or poor contact in the connector.	Reinsert the connector. Also check for continuity within the connector cable. If none, replace the cable. Toner motor C and engine PWB (YC25)
		Defective drive transmission system of the toner motor C.	Check if the rollers and gears rotate smoothly. If not, grease the bushes and gears. Check for broken gears and replace if any.
		Defective toner motor C.	Replace the toner motor C.
		Defective engine PWB.	Replace the engine PWB and check for correct operation (see page 1-5-26).
7003	**Toner motor M error** When the toner motor M is driven, the motor over-current detection signal is detected continuously for 50 times (5 s) at 100 ms intervals.	Defective connector cable or poor contact in the connector.	Reinsert the connector. Also check for continuity within the connector cable. If none, replace the cable. Toner motor M and engine PWB (YC24)
		Defective drive transmission system of the toner motor M.	Check if the rollers and gears rotate smoothly. If not, grease the bushes and gears. Check for broken gears and replace if any.
		Defective toner motor M.	Replace the toner motor M.
		Defective engine PWB.	Replace the engine PWB and check for correct operation (see page 1-5-26).
7004	**Toner motor Y error** When the toner motor Y is driven, the motor over-current detection signal is detected continuously for 50 times (5 s) at 100 ms intervals.	Defective connector cable or poor contact in the connector.	Reinsert the connector. Also check for continuity within the connector cable. If none, replace the cable. Toner motor Y and engine PWB (YC26)
		Defective drive transmission system of the toner motor Y.	Check if the rollers and gears rotate smoothly. If not, grease the bushes and gears. Check for broken gears and replace if any.
		Defective toner motor Y.	Replace the toner motor Y.
		Defective engine PWB.	Replace the engine PWB and check for correct operation (see page 1-5-26).

Code	Contents	Causes	Check procedures/ corrective measures
7401	**Developing unit K non-installing error** No density detection signal is output from toner sensor K in developing unit K.	Defective connector cable or poor contact in the connector.	Reinsert the connector. Also check for continuity within the connector cable. If none, replace the cable. Developing unit K and Drum relay PWB (YC6) Drum relay PWB (YC1) and engine PWB (YC34)
		Defective toner sensor K.	Replace the developing unit K (see page 1-5-18).
		Defective engine PWB.	Replace the engine PWB and check for correct operation (see page 1-5-26).
7402	**Developing unit C non-installing error** No density detection signal is output from toner sensor C in developing unit C.	Defective connector cable or poor contact in the connector.	Reinsert the connector. Also check for continuity within the connector cable. If none, replace the cable. Developing unit C and Drum relay PWB (YC10) Drum relay PWB (YC1) and engine PWB (YC34)
		Defective toner sensor C.	Replace the developing unit C (see page 1-5-18).
		Defective engine PWB.	Replace the engine PWB and check for correct operation (see page 1-5-26).
7403	**Developing unit M non-installing error** No density detection signal is output from toner sensor M in developing unit M.	Defective connector cable or poor contact in the connector.	Reinsert the connector. Also check for continuity within the connector cable. If none, replace the cable. Developing unit M and Drum relay PWB (YC7) Drum relay PWB (YC1) and engine PWB (YC34)
		Defective toner sensor M.	Replace the developing unit M (see page 1-5-18).
		Defective engine PWB.	Replace the engine PWB and check for correct operation (see page 1-5-26).
7404	**Developing unit Y non-installing error** No density detection signal is output from toner sensor Y in developing unit Y.	Defective connector cable or poor contact in the connector.	Reinsert the connector. Also check for continuity within the connector cable. If none, replace the cable. Developing unit Y and Drum relay PWB (YC13) Drum relay PWB (YC1) and engine PWB (YC34)
		Defective toner sensor Y.	Replace the developing unit Y (see page 1-5-18).
		Defective engine PWB.	Replace the engine PWB and check for correct operation (see page 1-5-26).

Code	Contents	Causes	Check procedures/ corrective measures
7411	**Drum unit K non- installing error** The EEPROM of drum PWB K does not communicate normally.	Installation of incompatible drum unit K.	Install drum unit K compatible with the specifications to the machine.
		Defective connector cable or poor contact in the connector.	Reinsert the connector. Also check for continuity within the connector cable. If none, replace the cable. Drum unit K and Drum relay PWB (YC2) Drum relay PWB (YC1) and engine PWB (YC34)
		Defective drum PWB K.	Replace the drum unit K (see page 1-5-20).
		Defective engine PWB.	Replace the engine PWB and check for correct operation (see page 1-5-26).
7412	**Drum unit C non- installing error** The EEPROM of drum PWB C does not communicate normally.	Installation of incompatible drum unit C.	Install drum unit C compatible with the specifications to the machine.
		Defective connector cable or poor contact in the connector.	Reinsert the connector. Also check for continuity within the connector cable. If none, replace the cable. Drum unit C and Drum relay PWB (YC4) Drum relay PWB (YC1) and engine PWB (YC34)
		Defective drum PWB C.	Replace the drum unit C (see page 1-5-20).
		Defective engine PWB.	Replace the engine PWB and check for correct operation (see page 1-5-26).
7413	**Drum unit M non- installing error** The EEPROM of drum PWB M does not communicate normally.	Installation of incompatible drum unit M.	Install drum unit M compatible with the specifications to the machine.
		Defective connector cable or poor contact in the connector.	Reinsert the connector. Also check for continuity within the connector cable. If none, replace the cable. Drum unit M and Drum relay PWB (YC3) Drum relay PWB (YC1) and engine PWB (YC34)
		Defective drum PWB M.	Replace the drum unit M (see page 1-5-20).
		Defective engine PWB.	Replace the engine PWB and check for correct operation (see page 1-5-26).

Code	Contents	Causes	Check procedures/ corrective measures
7414	**Drum unit Y non- installing error** The EEPROM of drum PWB Y does not communicate normally.	Installation of incompatible drum unit Y.	Install drum unit Y compatible with the specifications to the machine.
		Defective connector cable or poor contact in the connector.	Reinsert the connector. Also check for continuity within the connector cable. If none, replace the cable. Drum unit Y and Drum relay PWB (YC5) Drum relay PWB (YC1) and engine PWB (YC34)
		Defective drum PWB Y.	Replace the drum unit Y (see page 1-5-20).
		Defective engine PWB.	Replace the engine PWB and check for correct operation (see page 1-5-26).
9500			Contact the Service Administrative Division.
9510			Contact the Service Administrative Division.
9520			Contact the Service Administrative Division.
9530	**Backup data error** The serial number of the machine written on the EEPROM of the engine PWB differs with that is written on both the flash memory of the engine PWB and the EEPROM of the drum PWB as a backup.	Replacing both the engine PWB and the drum unit at the same time.	Check that the machine operates properly by reverting the engine controller and the drum unit to the old ones. To replace the engine PWB and the drum unit at the same time, turn on the machine after replacing either one. Check that the machine operates properly and then turn off the machine. Replace the other and turn on the machine to check that the machine operates properly. Be sure to replace one by one.
F000	**Main PWB - operation panel PWB communication error**	Defective main PWB.	Turn the main power switch off/on to restart the machine. If the error is not resolved, replace main PWB (see page 1-5-29).
		Defective operation panel PWB.	Replace the operation panel PWB and check for correct operation.
F010	**Main PWB checksum error**	Defective main PWB.	Turn the main power switch off/on to restart the machine. If the error is not resolved, replace main PWB (see page 1-5-29).
F020	**Main PWB RAM checksum error**	Defective main memory (RAM) on the main PWB.	Turn the main power switch off/on to restart the machine. If the error is not resolved, replace main PWB (see page 1-5-29).
		Defective expanded memory (DIMM).	Replace the expanded memory (DIMM) (see page 1-2-8).

Code	Contents	Causes	Check procedures/ corrective measures
F040	**Main PWB - print engine communication error**	Defective main PWB.	Turn the main power switch off/on to restart the machine. If the error is not resolved, replace main PWB (see page 1-5-29).
		Defective engine PWB.	Replace the engine PWB and check for correct operation (see page 1-5-26).
F041	**Main PWB - scanner engine communication error**	Defective main PWB.	Turn the main power switch off/on to restart the machine. If the error is not resolved, replace main PWB (see page 1-5-29).
		Defective engine PWB.	Replace the engine PWB and check for correct operation (see page 1-5-26).
F050	**Print engine ROM checksum error**	Defective engine PWB.	Turn the main power switch off/on to restart the machine. If the error is not resolved, replace engine PWB (see page 1-5-26).
F051	**Scanner engine ROM checksum error**	Defective engine PWB.	Turn the main power switch off/on to restart the machine. If the error is not resolved, replace engine PWB (see page 1-5-26).
F278	**Power supply in drive system error**	Main power switch was turned off without using the power key, or a power failure has occurred.	Turn on power. (To switch off power, first press the power key until the main power indicator goes off, then turn the main power switch off.)

1-4-3 Image formation problems

If the part causing the problem was not supplied, use the unit including the part for replacement.

(1) No image appears (entirely white).

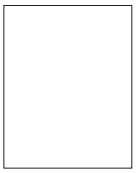

See page 1-4-29

(2) No image appears (entirely black).

See page 1-4-29

(3) A specific color is printed solid.

See page 1-4-30

(4) The back side gets dirty.

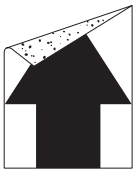

See page 1-4-30

(5) Image is too light.

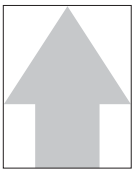

See page 1-4-30

(6) The background is colored.

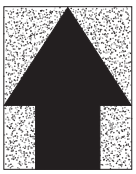

See page 1-4-31

(7) White streaks are printed vertically.

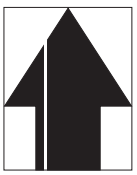

See page 1-4-31

(8) Black streaks are printed vertically.

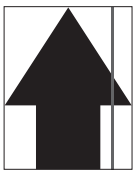

See page 1-4-31

(9) Streaks are printed horizontally.

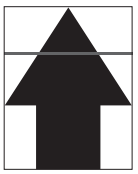

See page 1-4-32

(10) Spots are printed.

See page 1-4-32

(11) The leading edge of image begins to print too early or too late.

See page 1-4-32

(12) Paper is wrinkled.

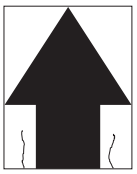

See page 1-4-32

(13) Offset occurs.

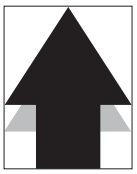

See page 1-4-33

(14) Part of image is missing.

See page 1-4-33

(15) Fusing is loose.

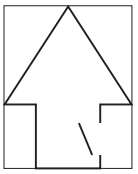

See page 1-4-33

(16) Colors are printed offset to each other.

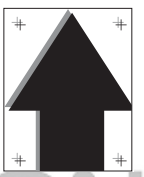

See page 1-4-34

(1) No image appears (entirely white).

Print example	Causes		Check procedures/corrective measures
	Defective transfer bias output.	Defective connector cable or poor contact in the connector.	Reinsert the connector. Also check for continuity within the connector cable. If none, replace the cable. High voltage PWB and engine PWB (YC11)
		Defective high voltage PWB.	Replace the high voltage PWB (see page 1-5-34).
		Defective engine PWB.	Replace the engine PWB (see page 1-5-26).
	Defective developing bias output.	Defective connector cable or poor contact in the connector.	Reinsert the connector. Also check for continuity within the connector cable. If none, replace the cable. High voltage PWB and engine PWB (YC11)
		Defective high voltage PWB.	Replace the high voltage PWB (see page 1-5-34).
		Defective engine PWB.	Replace the engine PWB (see page 1-5-26).
	No LSU laser is output.	Defective laser scanner unit.	Replace the laser scanner unit KM/CY (see page 1-5-44).
		Defective engine PWB.	Replace the engine PWB (see page 1-5-26).

(2) No image appears (entirely black).

Print example	Causes		Check procedures/corrective measures
	No main charging.	Defective connector cable or poor contact in the connector.	Reinsert the connector. Also check for continuity within the connector cable. If none, replace the cable. High voltage PWB and engine PWB (YC11)
		Defective main charger unit.	Replace the drum unit (see page 1-5-20).
		Defective high voltage PWB.	Replace the high voltage PWB (see page 1-5-34).
		Defective engine PWB.	Replace the engine PWB (see page 1-5-26).
	Exposure lamp fails to light.	Defective connector cable or poor contact in the connector.	Reinsert the connector. Also check for continuity within the connector cable. If none, replace the cable. Exposure lamp and inverter PWB (CN2) Inverter PWB (CN1) and CCD PWB (YC3) CCD PWB (YC1) and main PWB (YC8)
		Defective inverter PWB or CCD PWB.	Replace the scanner unit (see page 1-5-47).
		Defective main PWB.	Replace the main PWB (see page 1-5-29).
	The laser is activated simultaneously for all colors.	Defective laser scanner unit.	Replace the laser scanner unit KM/CY (see page 1-5-44).

(3) A specific color is printed solid.

Print example	Causes	Check procedures/corrective measures
	Defective main charger unit which corresponds to the color causing the problem.	Replace the drum unit for the color that causes an error (see page 1-5-20).
	Laser of laser scanner unit for solid color printing is ON. Defective laser scanner unit.	Replace the laser scanner unit KM/CY (see page 1-5-44).

(4) The back side gets dirty.

Print example	Causes	Check procedures/corrective measures
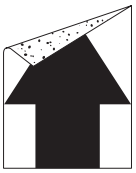	Dirty secondary transfer roller.	Clean the secondary transfer roller.
	Dirty paper conveying path.	Clean the paper conveying path.
	Dirty heat roller and press roller.	Clean the heat roller and press roller.

(5) Image is too light.

Print example	Causes		Check procedures/corrective measures
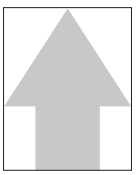	Defective developing bias output.	Defective developing unit.	Replace the developing unit for the color that causes an error (see page 1-5-18).
		Defective high voltage PWB.	Replace the high voltage PWB (see page 1-5-34).
		Defective engine PWB.	Replace the engine PWB (see page 1-5-26).
	Defective drum unit.		Decrease the surface potential by performing the main charger adjustment (see page 1-3-68). When the problem is not cleared, replace the drum unit (see page 1-5-20).
	Defective transfer bias output.	Defective high voltage PWB.	Replace the high voltage PWB (see page 1-5-34).
		Defective engine PWB.	Replace the engine (see page 1-5-26).
	Defective color calibration.		Perform the color calibration (Refer to operation guide).
	Insufficient toner.		If the display shows the message requesting toner replenishment, replace the container.
	Insufficient agitation of toner container.		Shake the toner container vertically approximately 10 times.
	Paper damp.		Check the paper storage conditions, replace the paper.

(6) The background is colored.

Print example	Causes		Check procedures/corrective measures
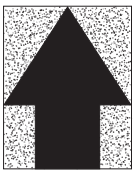	Defective color calibration.		Perform the color calibration (Refer to operation guide).
	Defective developing bias output.	Defective developing unit.	Replace the developing unit for the color that causes an error (see page 1-5-18).
		Defective high voltage PWB.	Replace the high voltage PWB (see page 1-5-34).
		Defective engine PWB.	Replace the engine PWB (see page 1-5-26).
	Defective drum surface charging.	Defective drum unit.	Replace the drum unit (see page 1-5-20).
		Defective high voltage PWB.	Replace the high voltage PWB (see page 1-5-34).
		Defective engine PWB.	Replace the engine PWB (see page 1-5-26).

(7) White streaks are printed vertically.

Print example	Causes	Check procedures/corrective measures
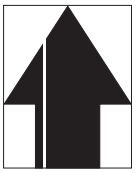	Foreign object in one of the developing units.	Replace the developing unit for the color that causes an error (see page 1-5-18).
	Adhesion of soiling to transfer belt.	Clean the transfer belt. Replace the intermediate transfer unit if it is extremely dirty (see page 1-5-21).
	Adhesion of soiling to transfer roller.	Clean the transfer roller. Replace the transfer roller if it is extremely dirty (see page 1-5-24).
	Dirty LSU dust shield glass.	Perform the LSU dust shield glass cleaning.

(8) Black streaks are printed vertically.

Print example	Causes	Check procedures/corrective measures
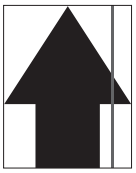	Dirty contact glass.	Clean the contact glass.
	Dirty slit glass.	Clean the slit glass.
	Dirty or flawed drum.	Perform the drum surface refreshing (see page 1-3-67). Flawed drum. Replace the drum unit (see page 1-5-20).
	Deformed or worn cleaning blade in the drum unit.	Replace the drum unit (see page 1-5-20).
	Worn primary transfer belt.	Replace the intermediate transfer unit (see page 1-5-21).
	Defective transfer roller.	Replace the transfer roller (see page 1-5-24).

(9) Streaks are printed horizontally.

Print example	Causes	Check procedures/corrective measures
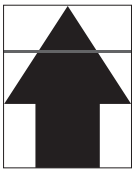	Dirty or flawed drum.	Perform the drum surface refreshing (see page 1-3-67). Flawed drum. Replace the drum unit (see page 1-5-20).
	Dirty developing section.	Clean any part contaminated with toner in the developing section.
	Poor contact of grounding terminal of drum unit.	Check the installation of the drum unit. If it operates incorrectly, replace it (see page 1-5-20).

(10) Spots are printed.

Print example	Causes	Check procedures/corrective measures
	Dirty contact glass.	Clean the contact glass.
	Dirty or flawed drum.	Perform the drum surface refreshing (see page 1-3-67). Flawed drum. Replace the drum unit (see page 1-5-20).
	Deformed or worn cleaning blade in the drum unit.	Replace the drum unit (see page 1-5-20).
	Flawed developing roller.	Replace the developing unit (see page 1-5-18).
	Dirty heat roller and press roller.	Clean the heat roller and press roller.

(11) The leading edge of image begins to print too early or too late.

Print example	Causes	Check procedures/corrective measures
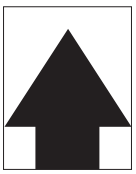	Paper feed clutch or registration clutch operating incorrectly.	Check the installation of the clutch. If it operates incorrectly, replace it.

(12) Paper is wrinkled.

Print example	Causes	Check procedures/corrective measures
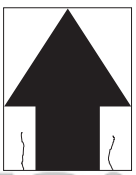	Paper curled.	Check the paper storage conditions.
	Paper damp.	Check the paper storage conditions.

(13) Offset occurs.

Print example	Causes	Check procedures/corrective measures
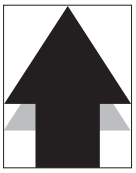	Defective drum surface charging.	Perform the drum surface refreshing (see page 1-3-67). When the problem is not cleared, increase the surface potential by performing the main charger adjustment (see page 1-3-68).
	Deformed or worn cleaning blade in the drum unit.	Replace the drum unit (see page 1-5-20).
	Defective transfer belt cleaning.	Replace the intermediate transfer unit (see page 1-5-21).
	Defective fuser unit.	Replace the fuser unit (see page 1-5-25).
	Wrong types of paper.	Check if the paper meets specifications. Replace paper.

(14) Part of image is missing.

Print example	Causes	Check procedures/corrective measures
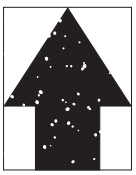	Paper damp.	Check the paper storage conditions.
	Paper creased.	Replace the paper.
	Drum condensation.	Perform the drum surface refreshing (see page 1-3-67).
	Dirty or flawed drum.	Perform the drum surface refreshing (see page 1-3-67). Flawed drum. Replace the drum unit (see page 1-5-20).
	Dirty transfer belt.	Clean the transfer belt. Replace the intermediate transfer unit if it is extremely dirty (see page 1-5-21).
	Dirty transfer roller.	Clean the transfer roller. Replace the transfer roller if it is extremely dirty (see page 1-5-24).

(15) Fusing is loose.

Print example	Causes	Check procedures/corrective measures
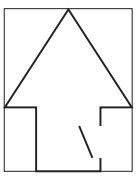	Wrong types of paper.	Check if the paper meets specifications, replace paper.
	Flawed heat roller or press roller.	Replace the fuser unit (see page 1-5-25).

(16) Colors are printed offset to each other.

Print example	Causes	Check procedures/corrective measures
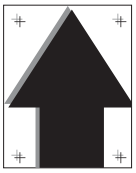	Defective color calibration.	Perform the color calibration (refer to operation guide).
	Slip the mirror position of laser scanner unit.	Perform the normal color registration. When the problem is not cleared, perform the detail color registration adjustment (refer to operation guide).

1-4-4 Electric problems

If the part causing the problem was not supplied, use the unit including the part for replacement.
Troubleshooting to each failure must be in the order of the numbered symptoms.

Problem	Causes	Check procedures/corrective measures
(1) The machine does not operate when the main power switch is turned on.	1. No electricity at the power outlet.	Measure the input voltage.
	2. The power cord is not plugged in properly.	Check the contact between the power plug and the outlet.
	3. The top tray is not closed completely.	Check the top tray.
	4. Broken power cord.	Check for continuity. If none, replace the cord.
	5. Defective main power switch.	Check for continuity across the contacts. If none, replace the power source PWB (see page 1-5-28).
	6. Defective interlock switch.	Check for continuity across the contacts of interlock switch. If none, replace the power source PWB (see page 1-5-28).
	7. Defective power source PWB.	Replace the power source PWB (see page 1-5-28).
(2) Duplex motor does not operate.	1. Defective connector cable or poor contact in the connector.	Reinsert the connector. Also check for continuity within the connector cable. If none, replace the cable. Duplex motor and engine PWB (YC37)
	2. Defective drive transmission system.	Check if the rollers and gears rotate smoothly. If not, grease the bushes and gears. Check for broken gears and replace if any.
	3. Defective motor.	Replace the duplex motor.
	4. Defective PWB.	Replace the engine PWB and check for correct operation (see page 1-5-26).
(3) Right fan motor does not operate.	1. Defective connector cable or poor contact in the connector.	Reinsert the connector. Also check for continuity within the connector cable. If none, replace the cable. Right fan motor and main PWB (YC42)
	2. Defective motor.	Replace the right fan motor.
	3. Defective PWB.	Replace the main PWB and check for correct operation (see page 1-5-29).
(4) Left fan motor does not operate.	1. Defective connector cable or poor contact in the connector.	Reinsert the connector. Also check for continuity within the connector cable. If none, replace the cable. Left fan motor and engine PWB (YC29)
	2. Defective motor.	Replace the left fan motor.
	3. Defective PWB.	Replace the engine PWB and check for correct operation (see page 1-5-26).

Problem	Causes	Check procedures/corrective measures
(5) Controller fan motor does not operate.	1. Defective connector cable or poor contact in the connector.	Reinsert the connector. Also check for continuity within the connector cable. If none, replace the cable. Controller fan motor and main PWB (YC41)
	2. Defective motor.	Replace the controller fan motor.
	3. Defective PWB.	Replace the main PWB and check for correct operation (see page 1-5-29).
(6) Fuser fan motor does not operate.	1. Defective connector cable or poor contact in the connector.	Reinsert the connector. Also check for continuity within the connector cable. If none, replace the cable. Fuser fan motor and engine PWB (YC40)
	2. Defective motor.	Replace the fuser fan motor.
	3. Defective PWB.	Replace the engine PWB and check for correct operation (see page 1-5-26).
(7) Container fan motor does not operate.	1. Defective connector cable or poor contact in the connector.	Reinsert the connector. Also check for continuity within the connector cable. If none, replace the cable. Container fan motor and engine PWB (YC28)
	2. Defective motor.	Replace the container fan motor.
	3. Defective PWB.	Replace the engine PWB and check for correct operation (see page 1-5-26).
(8) ISU motor does not operate.	1. Defective connector cable or poor contact in the connector.	Reinsert the connector. Also check for continuity within the connector cable. If none, replace the cable. ISU motor and main PWB (YC36)
	2. Defective drive transmission system.	Check if the rollers and gears rotate smoothly. If not, grease the bushes and gears. Check for broken gears and replace if any.
	3. Defective motor.	Replace the ISU motor.
	4. Defective PWB.	Replace the main PWB and check for correct operation (see page 1-5-29).
(9) Paper feed clutch does not operate.	1. Defective connector cable or poor contact in the connector.	Reinsert the connector. Also check for continuity within the connector cable. If none, replace the cable. Paper feed clutch and engine PWB (YC3)
	2. Defective clutch.	Replace the paper feed clutch.
	3. Defective PWB.	Replace the engine PWB and check for correct operation (see page 1-5-26).
(10) MP feed clutch does not operate.	1. Defective connector cable or poor contact in the connector.	Reinsert the connector. Also check for continuity within the connector cable. If none, replace the cable. MP feed clutch and engine PWB (YC3)
	2. Defective clutch.	Replace the MP feed clutch.
	3. Defective PWB.	Replace the engine PWB and check for correct operation (see page 1-5-26).

Problem	Causes	Check procedures/corrective measures
(11) Registration clutch does not operate.	1. Defective connector cable or poor contact in the connector.	Reinsert the connector. Also check for continuity within the connector cable. If none, replace the cable. Registration clutch and engine PWB (YC3)
	2. Defective clutch.	Replace the registration clutch.
	3. Defective PWB.	Replace the engine PWB and check for correct operation (see page 1-5-26).
(12) Middle clutch does not operate.	1. Defective connector cable or poor contact in the connector.	Reinsert the connector. Also check for continuity within the connector cable. If none, replace the cable. Middle clutch and engine PWB (YC3)
	2. Defective clutch.	Replace the middle clutch.
	3. Defective PWB.	Replace the engine PWB and check for correct operation (see page 1-5-26).
(13) MP solenoid does not operate.	1. Defective connector cable or poor contact in the connector.	Reinsert the connector. Also check for continuity within the connector cable. If none, replace the cable. MP solenoid and engine PWB (YC4)
	2. Defective solenoid.	Replace the MP solenoid.
	3. Defective PWB.	Replace the engine PWB and check for correct operation (see page 1-5-26).
(14) The message requesting paper to be loaded is shown when paper is present on the cassette.	1. Defective connector cable or poor contact in the connector.	Reinsert the connector. Also check for continuity within the connector cable. If none, replace the cable. Cassette PWB (YC1) and engine PWB (YC21)
	2. Deformed actuator of the paper sensor.	Check visually and replace if necessary.
	3. Defective paper sensor.	Replace the cassette PWB.
	4. Defective PWB.	Replace the engine PWB and check for correct operation (see page 1-5-26).
(15) The message requesting paper to be loaded is shown when paper is present on the MP tray.	1. Defective connector cable or poor contact in the connector.	Reinsert the connector. Also check for continuity within the connector cable. If none, replace the cable. MP paper sensor and engine PWB (YC16)
	2. Deformed actuator of the MP paper sensor.	Check visually and replace if necessary.
	3. Defective MP paper sensor.	Replace the MP paper sensor.
	4. Defective PWB.	Replace the engine PWB and check for correct operation (see page 1-5-26).
(16) The size of paper on the cassette is not displayed correctly.	1. Defective connector cable or poor contact in the connector.	Reinsert the connector. Also check for continuity within the connector cable. If none, replace the cable. Cassette size switch and engine PWB (YC17)
	2. Defective cassette size switch.	Replace the cassette size switch.
	3. Defective PWB.	Replace the engine PWB and check for correct operation (see page 1-5-26).

Problem	Causes	Check procedures/corrective measures
(17) A paper jam in the paper feed, paper conveying or eject section is indicated when the main power switch is turned on.	1. A piece of paper torn from paper is caught around registration sensor, MP feed sensor or eject sensor.	Check visually and remove it, if any.
	2. Defective registration sensor.	Replace the registration sensor.
	3. Defective MP feed sensor.	Replace the MP feed sensor.
	4. Defective eject sensor.	Replace the eject PWB.
(18) A message indicating cover open is displayed when the top tray or rear cover is closed.	1. Deformed actuator of the interlock switch.	Check visually and replace if necessary.
	2. Defective interlock switch.	Replace the interlock switch.
(19) DP paper feed motor does not operate.	1. Defective connector cable or poor contact in the connector.	Reinsert the connector. Also check for continuity within the connector cable. If none, replace the cable. DP paper feed motor and DP drive PWB (YC3) DP drive PWB (YC1) and main PWB (YC32)
	2. Defective drive transmission system.	Check if the rollers and gears rotate smoothly. If not, grease the bushes and gears. Check for broken gears and replace if any.
	3. Defective motor.	Replace the DP paper feed motor.
	4. Defective PWB.	Replace the DP drive PWB or main PWB and check for correct operation (see page 1-5-60, 1-5-29).
(20) DP paper feed clutch does not operate.	1. Defective connector cable or poor contact in the connector.	Reinsert the connector. Also check for continuity within the connector cable. If none, replace the cable. DP paper feed clutch and DP drive PWB (YC6) DP drive PWB (YC8) and main PWB (YC32)
	2. Defective clutch.	Replace the DP paper feed clutch.
	3. Defective PWB.	Replace the DP drive PWB or main PWB and check for correct operation (see page 1-5-60, 1-5-29).
(21) DP pressure solenoid does not operate.	1. Defective connector cable or poor contact in the connector.	Reinsert the connector. Also check for continuity within the connector cable. If none, replace the cable. DP pressure solenoid and DP drive PWB (YC4) DP drive PWB (YC8) and main PWB (YC32)
	2. Defective solenoid.	Replace the DP pressure solenoid.
	3. Defective PWB.	Replace the DP drive PWB or main PWB and check for correct operation (see page 1-5-60, 1-5-29).

Problem	Causes	Check procedures/corrective measures
(22) DP switchback solenoid does not operate.	1. Defective connector cable or poor contact in the connector.	Reinsert the connector. Also check for continuity within the connector cable. If none, replace the cable. DP switchback solenoid and DP drive PWB (YC5) DP drive PWB (YC8) and main PWB (YC32)
	2. Defective solenoid.	Replace the DP switchback solenoid.
	3. Defective PWB.	Replace the DP drive PWB or main PWB and check for correct operation (see page 1-5-60, 1-5-29).
(23) An original jams when the main power switch is turned on.	1. A piece of paper torn from an original is caught around the DP timing sensor.	Check visually and remove it, if any.
	2. Defective DP timing sensor.	Replace the DP timing sensor.
(24) A message indicating cover open is displayed when the DP top cover is closed.	1. Defective connector cable or poor contact in the connector.	Reinsert the connector. Also check for continuity within the connector cable. If none, replace the cable. DP open/close sensor and DP drive PWB (YC2) DP drive PWB (YC8) and main PWB (YC32)
	2. Defective DP open/close sensor.	Replace the DP open/close sensor.

1-4-5 Mechanical problems

If the part causing the problem was not supplied, use the unit including the part for replacement.

Problem	Causes/check procedures	Corrective measures
(1) No primary paper feed.	Check if the surfaces of the following rollers are dirty with paper powder. Pickup roller Paper feed roller MP paper feed roller	Clean with isopropyl alcohol.
	Check if the following rollers is deformed. Pickup roller Paper feed roller MP paper feed roller	Check visually and replace any deformed (see page 1-5-14, 1-5-16).
	Defective paper feed clutch installation.	Check visually and remedy if necessary.
(2) No secondary paper feed.	Check if the surfaces of the following rollers are dirty with paper powder. Front registration roller Rear registration roller	Clean with isopropyl alcohol.
	Defective registration clutch installation.	Check visually and remedy if necessary.
(3) Skewed paper feed.	Paper width guide in a cassette installed incorrectly.	Check the paper width guide visually and remedy or replace if necessary.
(4) Multiple sheets of paper are fed.	Check if the paper is excessively curled.	Change the paper.
	Paper is loaded incorrectly.	Load the paper correctly.
	Check if the retard roller is worn.	Replace the retard roller if it is worn (see page 1-5-12).
(5) Paper jams.	Check if the paper is excessively curled.	Change the paper.
	Check if the contact between the front and rear registration rollers is correct.	Check visually and remedy if necessary.
	Check if the heat roller or press roller is extremely dirty or deformed.	Check visually and replace the fuser unit (see page 1-5-25).
(6) Toner drops on the paper conveying path.	Check if the drum unit or developing unit is extremely dirty.	Clean the drum unit or developing unit.
(7) Abnormal noise is heard.	Check if the rollers, pulleys and gears operate smoothly.	Grease the bushes and gears.
	Check if the following clutches are installed correctly. Paper feed clutch MP feed clutch Registration clutch Middle clutch	Check visually and remedy if necessary.

Problem	Causes/check procedures	Corrective measures
(8) No primary original feed.	Check if the surfaces of the following pulleys are dirty with paper powder. DP forwarding pulley DP feed pulley	Clean with isopropyl alcohol.
	Check if the following pulleys is deformed. DP forwarding pulley DP feed pulley	Check visually and replace any deformed (see page 1-5-55).
(9) Multiple sheets of original are fed.	Original is not correctly set.	Set the original correctly.
	Check if the DP separation pad is worn.	Replace the DP separation pad if it is worn (see page 1-5-59).
(10) Originals jam.	Originals outside the specifications are used.	Use only originals conforming to the specifications.
	Check if the surfaces of the following pulleys are dirty with paper powder. DP forwarding pulley DP feed pulley	Clean with isopropyl alcohol.
	Check if the contact between the conveying roller and conveying pulley is correct.	Check visually and remedy if necessary.
	Check if the contact between the eject roller and eject pulley is correct.	Check visually and remedy if necessary.
	Check if the contact between the switchback roller and switchback pulley is correct.	Check visually and remedy if necessary.

1-4-6 Send error code

(1) Scan to SMB error codes

Code	Display	Causes	Check procedures/corrective measures
1101	**Host name error**	Enter the disable host name of SMB server.	Enter the correct host name in COMMAND CENTER.
1102	**User/Password or Folder/Shared name error**	Domain name is not entered.	Enter the user name with the form of either [Domain¥User], [Domain/User] or [Domain@User].
		Assign disable user/pass-word.	Enter the correct user name/password.
		Assign disable folder/ shared name.	Enter the correct folder/shared name.
		Assign the user who is not allowed to access to folder.	Check the access limit of destination folder.
		Host name error.	Check if the prohibited letters are used to shared name. ` ~ ! @ # $ ^ & * ( ) = + [ ] { } \ | ; : ' " < > / ?
1103	**Folder path or File name error**	Domain name is not enter	Enter the user name with the form of either [Domain¥User], [Domain/User] or [Domain@User].
		Assign disable folder path.	Enter correct folder path.
		Assign the user who is not allowed to access to folder.	Check the access limit of destination folder.
1105	**Protocol error**	SMB protocol is set to OFF.	Enable SMB protocol in COMMAND CEN-TER.
2101	**Server connect error**	Enter the disable host name/IP address.	Enter the correct host name or IP address.
		Assign the wrong port number.	Enter the correct port number.
		Network is not connected.	Check if the server is operating properly. Check the network connection (cable. net-work condition within LAN, etc.).
2201	**Network transfer error**	Error occurs on the net-work.	Check the network connection (cable. net-work condition within LAN, etc.).
2203	**Response wait with timeout error**	Response is not returned from the server above specified time.	Check the network connection (cable. net-work condition within LAN, etc.).
9181	**Page max count over error**	The number of pages of a send file exceeded 999 pages.	Set the number of pages as 999 or less.

(2) Scan to FTP error codes

Code	Contents	Causes	Check procedures/corrective measures
1101	**Host name error**	Enter the disable host name of FTP server.	Enter the correct host name in COMMAND CENTER.
1102	**User/Password error**	Domain name is not entered.	Enter the user name with the form of either [Domain¥User] or [Domain/User].
		Assign disable user/pass-word.	Enter the correct user name/password.
1103	**Folder path or File name error**	Connect to the folder which is not permitted for reference/writing.	Enter correct user name/password. Check the access limit of destination folder.
		Assign disable folder path.	Enter correct folder path.
1105	**Protocol error**	FTP protocol is set to OFF.	Enable FTP protocol in COMMAND CEN-TER
2101	**Server connect error**	Enter the disable host name/IP address.	Enter the correct host name or IP address.
		Assign the wrong port number.	Enter the correct port number.
		Network is not connected.	Check if the server is operating properly. Check the network connection (cable. net-work condition within LAN, etc.).
2102	**Connect with time-out error**	The server is unable to communicate.	Check if the server is operating properly.
		Send the server which does not support FTP server.	Enter the correct host name or IP address.
2103	**Response wait with timeout error**	The server is unable to communicate.	Check if the server is operating properly.
2201	**Network transfer error**	Error occurs on the net-work.	Check the network connection (cable. net-work condition within LAN, etc.).
2202	**Network transfer with timeout error**	Error occurs on the net-work.	Check the network connection (cable. net-work condition within LAN, etc.).
2203	**Response wait with timeout error**	Response is not returned from the server above specified time.	Check the network connection (cable. net-work condition within LAN, etc.).
3101	**Server response error**	The server is error status.	Check if the server is working properly.
9181	**Page max count over error**	The number of pages of a send file exceeded 999 pages.	Set the number of pages as 999 or less.

(3) Scan to E-mail error codes

Code	Display	Causes	Check procedures/corrective measures
1101	**Server name error**	Enter the disable SMTP/ POP3 server name.	Enter the correct server name in COMMAND CENTER.
1102	**User/Password error**	Assign disable user/password.	Enter the correct user name/password.
1104	**No recipient address**	The destination address is not specified.	Specify the destination address.
1105	**Protocol error**	SMTP protocol is set to OFF.	Enable SMTP protocol in COMMAND CENTER
2101	**Server connect error**	Select [Other authenticate] when authenticating POP before SMTP.	Select valid POP3 user other than [Other].
		The specified server is not SMTP server.	Enter the correct server name in COMMAND CENTER.
		Network is not connected.	Check if the server is operating properly. Check the network connection (cable. network condition within LAN, etc.).
2102	**Connect with timeout error**	The server is unable to communicate.	Check if the server is operating properly.
2103	**Response wait with timeout error**	The server is unable to communicate.	Check if the server is operating properly.
2201	**Response wait with timeout error**	Error occurs on the network.	Check the network connection (cable. network condition within LAN, etc.).
2202	**Network transfer error**	Error occurs on the network.	Check the network connection (cable. network condition within LAN, etc.).
2203	**Response wait with timeout error**	Response is not returned from the server above specified time.	Check the network connection (cable. network condition within LAN, etc.).
2204	**E-Mail size limit error**	The size of E-mail exceeds its limit.	Change the E-mail size limit] in COMMAND CENTER.
3101	**Server response error**	The server is error status.	Check if the server is working properly.
		Server setting is not authenticated normally.	Check the settings for client/server authentication.
3201	**Authentication Mechanism error**	Unsupported SMTP Authentication Mechanism is found.	Check the settings for client/server Authentication Mechanism.
9181	**Page max count over error**	The number of pages of a send file exceeded 999 pages.	Set the number of pages as 999 or less.

(4) Software trouble error codes

Code	Display	Causes	Check procedures/corrective measures
5101	**Not yet connected**	Operation handle error. Error for stored status in the operation handle.	Turn the main power switch off and on.
5102	**Already connected**	Operation handle error. Error for stored status in the operation handle.	Turn the main power switch off and on.
5103	**Not yet opened**	Error for stored status in the operation handle.	Turn the main power switch off and on.
5104	**Already opened error**	Error for stored status in the operation handle.	Turn the main power switch off and on.
7101	**Memory Allocation error**	Insufficient memory space.	Turn the main power switch off and on.
7102	**Socket create error**	Unable to create a communication socket.	Turn the main power switch off and on.
720f	**Unknown error**	Unable to determine the cause.	Turn the main power switch off and on.

1-4-7 Error codes

(1) Error code

Error codes are listed on the communication reports, activity report, etc. The codes consist of an error code indication U followed by a 5-digit number. (Error codes for V34 communication errors start with an E indication, followed by five digits.)
The upper three of the five digits indicate general classification of the error and its cause, while the lower two indicate the detailed classification. Items for which detailed classification is not necessary have 00 as the last two digits.

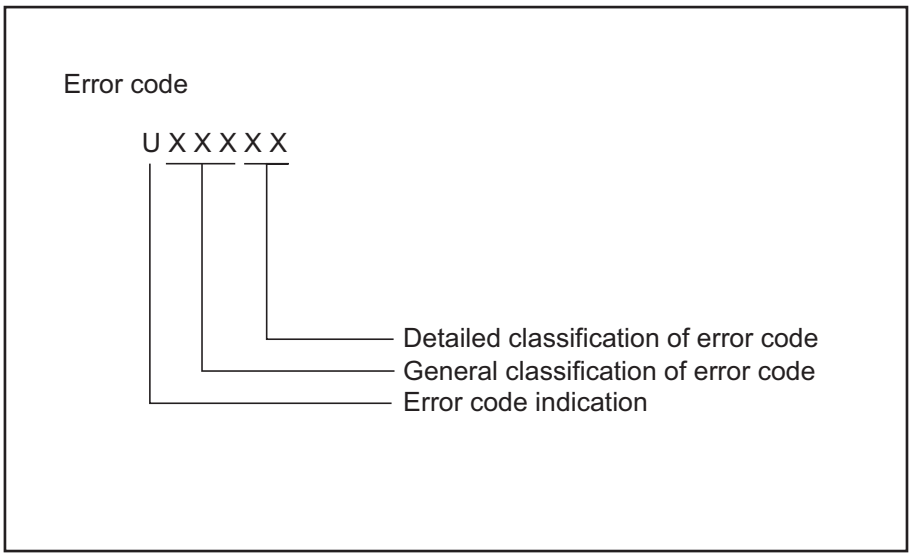

Figure 1-4-4

(2) Table of general classification

Error code	Description
U00000	No response or busy after the set number of redials.
U00100	Transmission was interrupted by a press of the stop/clear key.
U00200	Reception was interrupted by a press of the stop/clear key.
U00300	Recording paper on the destination unit has run out during transmission.
U004XX	A connection was made but interrupted during handshake with the receiver unit (refer to 1-4-49 U004XX error code table).
U006XX	Communication was interrupted because of a machine problem (refer to 1-4-49 U006XX error code table).
U00700	Communication was interrupted because of a problem in the destination unit.
U008XX	A page transmission error occurred in G3 mode (refer to 1-4-49 U008XX error code table).
U009XX	A page reception error occurred in G3 mode (refer to 1-4-49 U009XX error code table).
U010XX	Transmission in G3 mode was interrupted by a signal error (refer to 1-4-50 U010XX error code table).
U011XX	Reception in G3 mode was interrupted by a signal error (refer to 1-4-51 U011XX error code table).
U01400	An invalid one-touch key was specified during communication.
U01500	A communication error occurred when calling in V.8 mode.
U01600	A communication error occurred when called in V.8 mode.
U017XX	A communication error occurred before starting T.30 protocol during transmission in V.34 mode (refer to 1-4-52 U017XX error code table).
U018XX	A communication error occurred before starting T.30 protocol during reception in V.34 mode (refer to 1-4-52 U018XX error code table).
U03000	No document was present in the destination unit when polling reception started.
U03200	In interoffice subaddress-based bulletin board reception, data was not stored in the box specified by the destination unit.
U03300	In polling reception from a unit of our make, operation was interrupted due to a mismatch in permit ID or telephone number. Or, in interoffice subaddress-based bulletin board reception, operation was interrupted due to a mismatch in permit ID or telephone number.
U03400	Polling reception was interrupted because of a mismatch in individual numbers (destination unit is either of our make or by another manufacturer).
U03500	In interoffice subaddress-based bulletin board reception, the specified Subaddress confidential box number was not registered in the destination unit.
U03600	An interoffice subaddress-based bulletin board reception was interrupted because of a mismatch in the specified subaddress confidential box number.
U03700	Interoffice subaddress-based bulletin board reception failed because the destination unit had no subaddress-based bulletin board transmission capability, or data was not stored in any subaddress confidential box in the destination unit.
U04000	In interoffice subaddress-based transmission mode, the specified subaddress box number was not registered in the destination unit.

Error code	Description
U04100	Subaddress-based transmission failed because the destination unit had no subaddress-based reception capability.
U04200	In encrypted transmission, the specified encryption box was not registered in the destination unit.
U04300	Encrypted transmission failed because the destination unit had no encrypted communication capability.
U04400	Encrypted transmission was interrupted because encryption keys did not agree.
U04500	Encrypted reception was interrupted because of a mismatch in encryption keys.
U05100	Password check transmission or restricted transmission was interrupted because the permit ID's did not agree with.
U05200	Password check reception or restricted reception was interrupted because the permit ID's did not match, the rejected FAX number's did match, or the destination receiver did not return its phone number.
U05300	The password check reception or the restricted reception was interrupted because the permitted numbers did not match, the rejected numbers did match, or the machine in question did not acknowledge its phone number.
U14000	Memory overflowed during confidential reception. Or, in subaddress-based confidential reception, memory overflowed.
U14100	In interoffice subaddress-based transmission, memory overflowed in the destination unit.
U19000	Memory overflowed during memory reception.
U19100	Memory overflowed in the destination unit during transmission.
U19300	Transmission failed because an error occurred during JBIG encoding.

(2-1) U004XX error code table: Interrupted phase B

Error code	Description
U00430	Polling request was received but interrupted because of a mismatch in permit number. Or, subaddress-based bulletin board transmission request was received but interrupted because of a mismatch in permit ID in the transmitting unit.
U00431	An subaddress-based bulletin board transmission was interrupted because the specified subaddress confidential box was not registered.
U00432	An subaddress-based bulletin board transmission was interrupted because of a mismatch in Subaddress confidential box numbers.
U00433	Subaddress-based bulletin board transmission request was received but data was not present in the subaddress confidential box.
U00440	Subaddress-based confidential reception was interrupted because the specified subaddress box was not registered.
U00450	The destination transmitter disconnected because the permit ID's did not agree with while the destination transmitter is in password-check transmission or restricted transmission.
U00460	Encrypted reception was interrupted because the specified encryption box number was not registered.
U00462	Encrypted reception was interrupted because the encryption key for the specified encryption box was not registered.

(2-2) U006XX error code table: Problems with the unit

Error code	Description
U00601	Document jam or the document length exceeds the maximum.
U00613	Image writing section problem
U00656	Data was not transmitted to a modem error.
U00690	System error.

(2-3) U008XX error code table: Page transmission error

Error code	Description
U00800	A page transmission error occurred because of reception of a RTN or PIN signal.
U00811	A page transmission error reoccurred after retry of transmission in the ECM mode.

(2-4) U009XX error code table: Page reception error

Error code	Description
U00900	An RTN or PIN signal was transmitted because of a page reception error.
U00910	A page reception error remained after retry of transmission in the ECM mode.

(2-5) U010XX error code table: G3 transmission

Error code	Description
U01000	An FTT signal was received for a set number of times after TCF signal transmission at 2400 bps. Or, an RTN signal was received in response to a Q signal (excluding EOP) after transmission at 2400 bps.
U01001	Function of the unit differs from that indicated by a DIS signal.
U01016	An MCF signal was received but no DIS signal was received after transmission of an EOM signal, and T1 timeout was detected.
U01019	No relevant signal was received after transmission of a CNC signal, and the preset number of command retransfers was exceeded (between units of our make).
U01020	No relevant signal was received after transmission of a CTC signal, and the preset number of command retransfers was exceeded (ECM).
U01021	No relevant signal was received after transmission of an EOR.Q signal, and the preset number of command retransfers was exceeded (ECM).
U01022	No relevant signal was received after transmission of an RR signal, and the preset number of command retransfers was exceeded (ECM).
U01028	T5 time-out was detected during ECM transmission (ECM).
U01052	A DCN signal was received after transmission of an RR signal (ECM).
U01080	A PIP signal was received after transmission of a PPS.NULL signal.
U01092	During transmission in V.34 mode, communication was interrupted because of an impossible combination of the symbol speed and communication speed.
U01093	A DCN or other inappropriate signal was received during phase B of transmission.
U01094	The preset number of command retransfers for DCS/NSS signals was exceeded during phase B of transmission.
U01095	No relevant signal was received after transmission of a PPS (Q) signal during phase D of transmission, and the preset number of command transfers was exceeded.
U01096	A DCN signal or invalid command was received during phase D of transmission.
U01097	The preset number of command retransfers was exceeded after transmission of an RR signal or no response.

(2-6) U011XX error code table: G3 reception

Error code	Description
U01100	Function of the unit differs from that indicated by a DCS signal.
U01101	Function of the unit (excl. communication mode select) differs from that indicated by an NSS signal.
U01102	A DTC (NSC) signal was received when no transmission data was in the unit.
U01110	No response after transmission of a DIS signal.
U01111	No response after transmission of a DTC (NSC) signal.
U01113	No response after transmission of an FTT signal.
U01125	No response after transmission of a CNS signal (between units of our make).
U01129	No response after transmission of an SPA signal (short protocol).
U01141	A DCN signal was received after transmission of a DTC signal.
U01143	A DCN signal was received after transmission of an FTT signal.
U01155	A DCN signal was received after transmission of an SPA signal (short protocol).
U01160	During message reception, transmission time exceeded the maximum transmission time per line.
U01162	Reception was aborted due to a modem malfunction during message reception.
U01191	Communication was interrupted because an error occurred during an image data reception sequence in the V.34 mode.
U01193	There was no response, or a DCN signal or invalid command was received, during phase C/D of reception.
U01194	A DCN signal was received during phase B of reception.
U01195	No message was received during phase C of reception.
U01196	Error line control was exceeded and a decoding error occurred for the message being received.

(2-7) U017XX error code table: V.34 transmission

Error code	Description
U01700	A communication error occurred in phase 2 (line probing).
U01720	A communication error occurred in phase 4 (modem parameter exchange).
U01721	Operation was interrupted due to the absence of a common communication speed between units.

U01700: A communication error that occurs at the transmitting unit in the period after transmission of INFO0 before entering phase 3 (primary channel equivalent device training). For example, INFO0/A/Abar (B/Bbar, for polling transmission)/INFOh was not detected.

U01720: A communication error that occurs at the transmitting unit in the period after initiating the control channel before entering the T.30 process. For example, PPh/ALT/MPh/E was not detected.

U01721: In the absence of a common communication speed between units (including when an impossible combination of communication speed and symbol speed occurs) after MPh exchange; 1) a DCN signal was received from the destination unit, and the line was cut; or 2) a DIS (NSF, CSI) signal was received from the destination unit and, in response to the signal, the unit transmitted a DCN signal, and the line was cut.

(2-8) U018XX error code table: V.34 reception

Error code	Description
U01800	A communication error occurred in phase 2 (line probing).
U01810	A communication error occurred in phase 3 (primary channel equivalent device training).
U01820	A communication error occurred in phase 4 (modem parameter exchange).
U01821	Operation was interrupted due to the absence of a common communication speed between units.

U01800: A communication error that occurs at the receiver unit in the period after transmission of INFO0 before entering phase 3 (primary channel equivalent device training). For example, INFO0/B/Bbar (A/Abar, for polling reception)/probing tone was not detected.

U01810: A communication error that occurs at the receiver unit in phase 3 (primary channel equivalent device training). For example, S/Sbar/PP/TRN was not detected.

U01820: A communication error that occurs at the receiver unit in the period after initiating the control channel before entering the T.30 process. For example, PPh/ALT/MPh/E was not detected.

U01821: In the absence of a common communication speed between units (including when an impossible combination of communication speed and symbol speed occurs) after MPh exchange, a DCN signal was transmitted to the destination unit and the line was cut.

1-5-1 Precautions for assembly and disassembly

(1) Precautions

Before starting disassembly, press the Power key on the operation panel to off. Make sure that the Power lamp is off before turning off the main power switch. And then unplug the power cable from the wall outlet.
When the fax kit is installed, be sure to disconnect the modular code before starting disassembly.
When handling PWBs (printed wiring boards), do not touch parts with bare hands.
The PWBs are susceptible to static charge.
Do not touch any PWB containing ICs with bare hands or any object prone to static charge.
When removing the hook of the connector, be sure to release the hook.
Take care not to get the cables caught.
To reassemble the parts, use the original screws. If the types and the sizes of screws are not known, refer to the PARTS LIST.

(2) Drum

Note the following when handling or storing the drum.
When removing the drum unit, never expose the drum surface to strong direct light.
Keep the drum at an ambient temperature between -20°C/-4°F and 40°C/104°F and at a relative humidity not higher than 85% RH. Avoid abrupt changes in temperature and humidity.
Avoid exposure to any substance which is harmful to or may affect the quality of the drum.
Do not touch the drum surface with any object. Should it be touched by hands or stained with oil, clean it.

(3) Toner

Store the toner container in a cool, dark place.
Avoid direct light and high humidity.

(4) How to tell a genuine Kyocera Mita toner container

As a means of brand protection, the Kyocera Mita toner container utilizes an optical security technology to enable visual validation. A validation viewer is required to accomplish this.

Hold the validation viewer over the left side part of the brand protection seal on the toner container. Through each window of the validation viewer, the left side part of the seal should be seen as follows:

A black-colored band when seen through the left side window (●)

A shiny or gold-colored band when seen through the right side window (☼)

The above will reveal that the toner container is a genuine Kyocera Mita branded toner container, otherwise, it is a counterfeit.

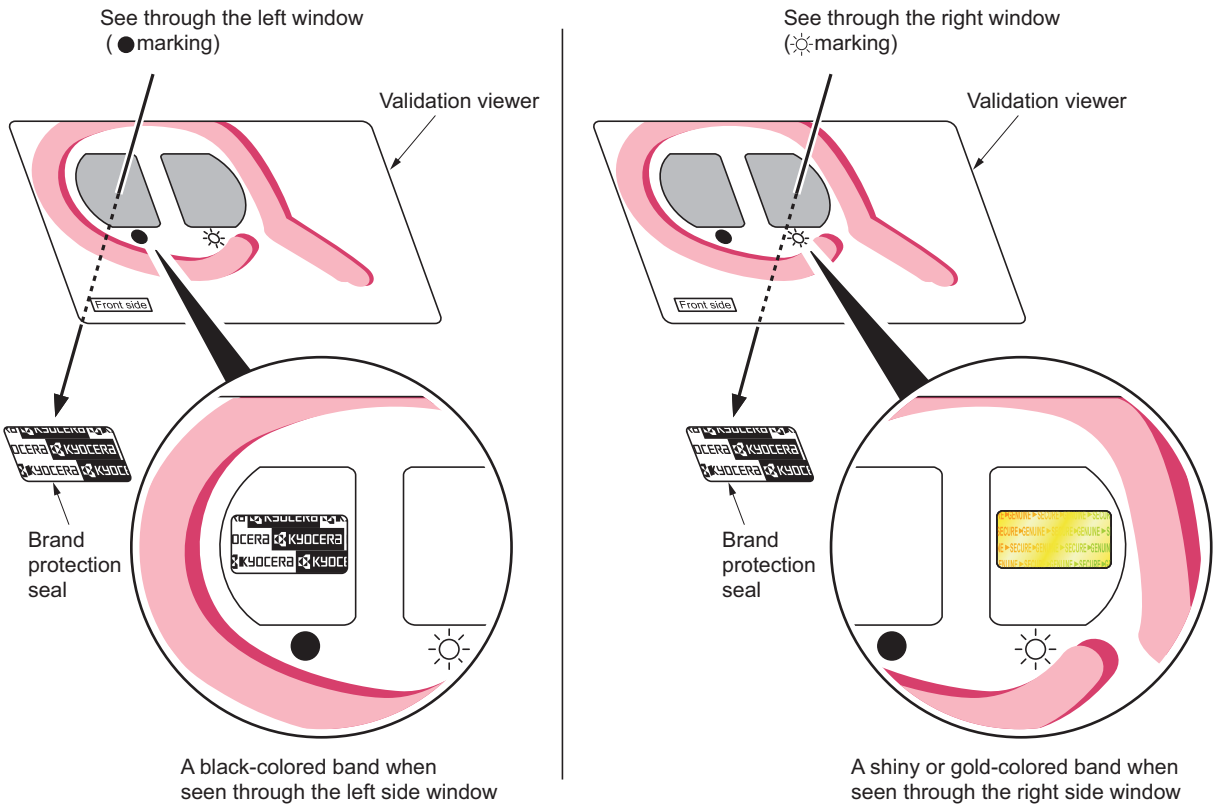

Figure 1-5-1

The brand protection seal has an incision as shown below to prohibit reuse.

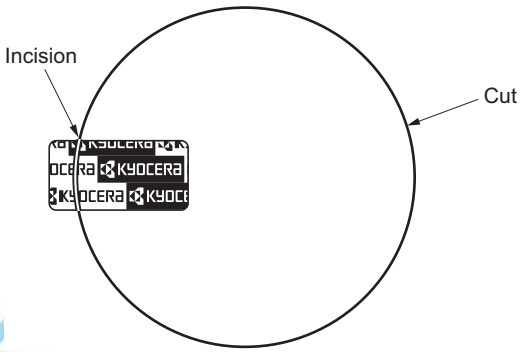

Figure 1-5-2

1-5-2 Outer covers

(1) Detaching and refitting the rear upper cover, right upper cover, left upper cover and front cover

Procedure

1. Open the paper conveying unit.
2. Release the hook and then remove the IF cover.

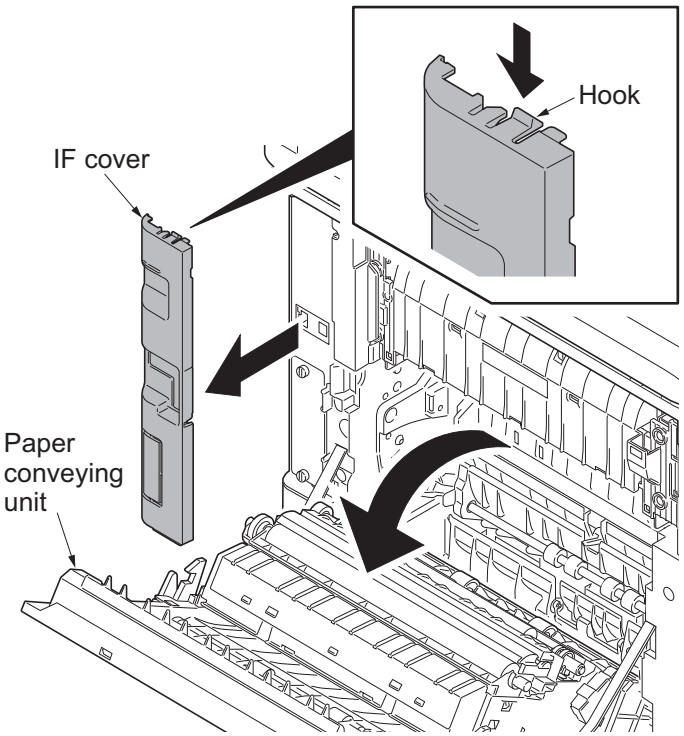

Figure 1-5-3

3. Remove two screws and then remove the rear upper cover.

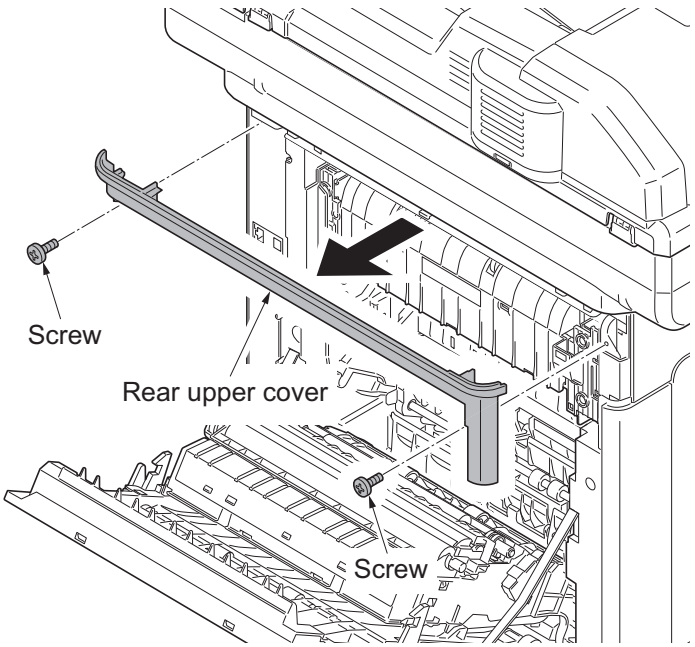

Figure 1-5-4

4. Pull the top tray lever and open the top tray.
5. Release the hook. Slide the right upper cover backward and then remove it.

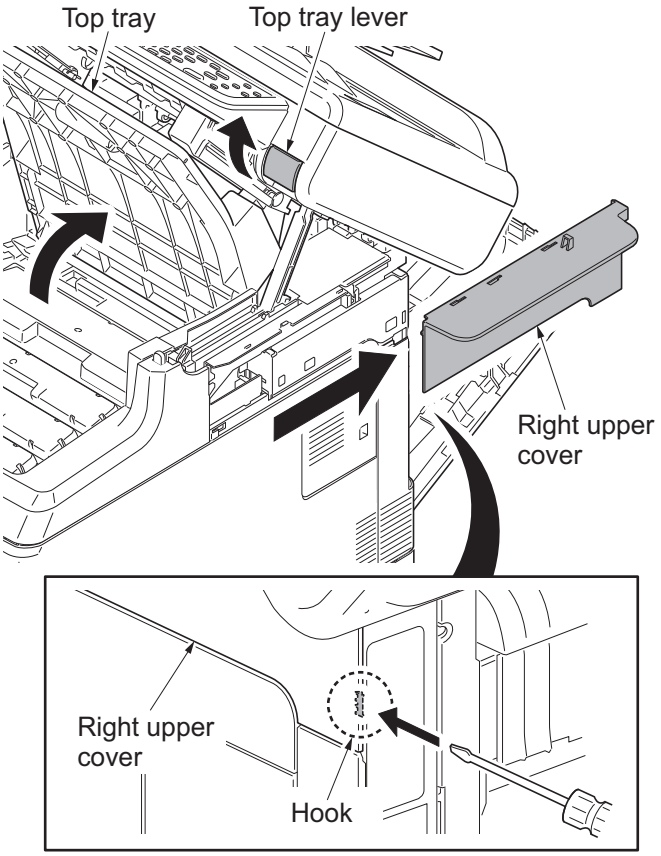

Figure 1-5-5

6. Release the hook. Slide the left upper cover backward and then remove it.

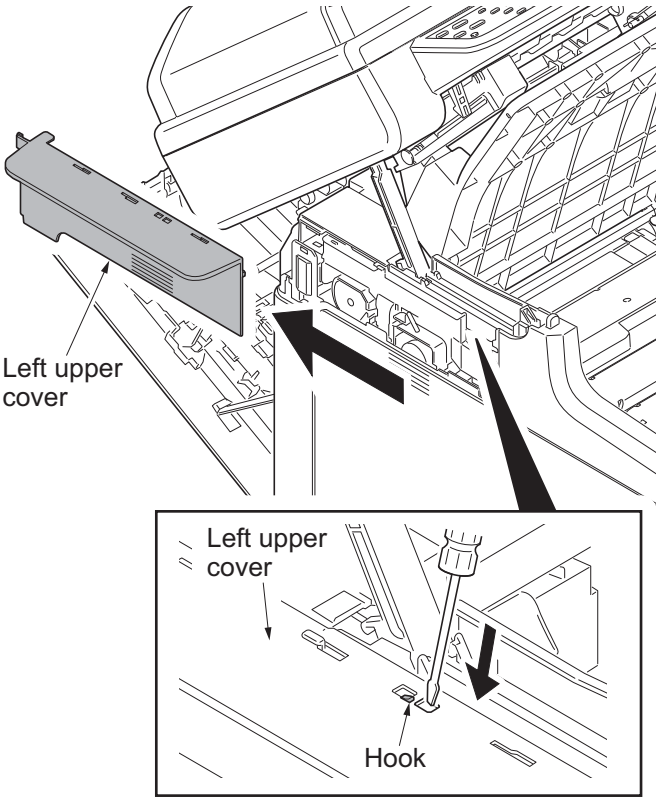

Figure 1-5-6

7. Release five hooks (hook A → B) and then remove the front cover.

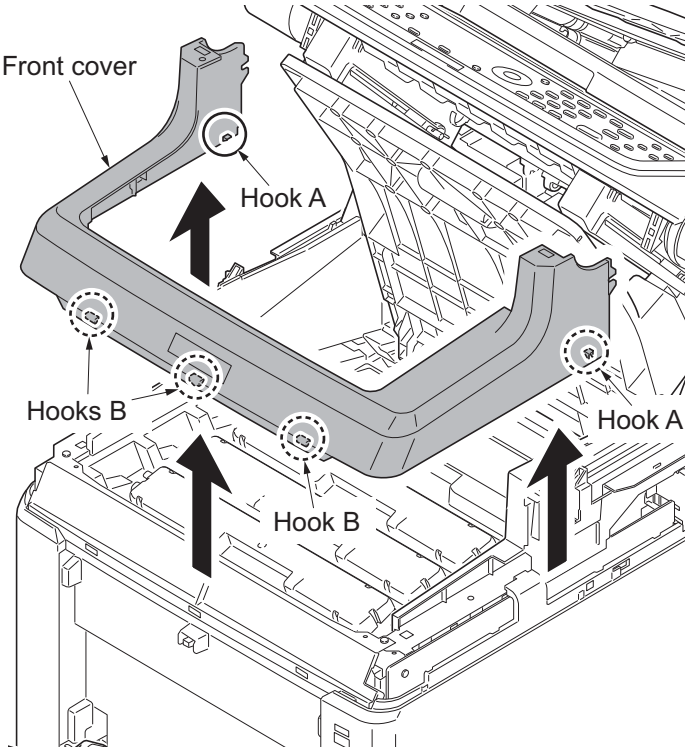

Figure 1-5-7

(2) Detaching and refitting the right rear cover, right cover and right lower cover

Procedure

1. Remove the rear upper cover, right upper cover, left upper cover and front cover (see page 1-5-3).
2. Slide the power source cover backward and then remove it.

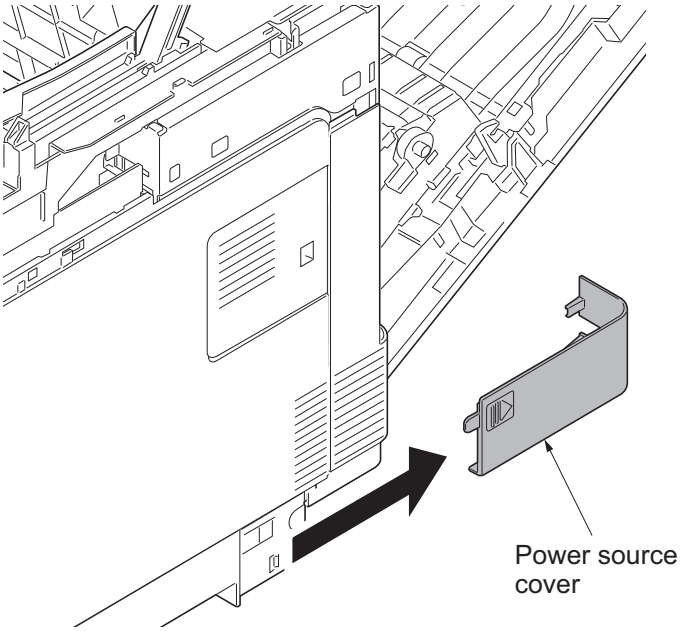

Figure 1-5-8

3. Remove the screw.
4. Release four hooks. Slide the right rear cover backward and then remove it.

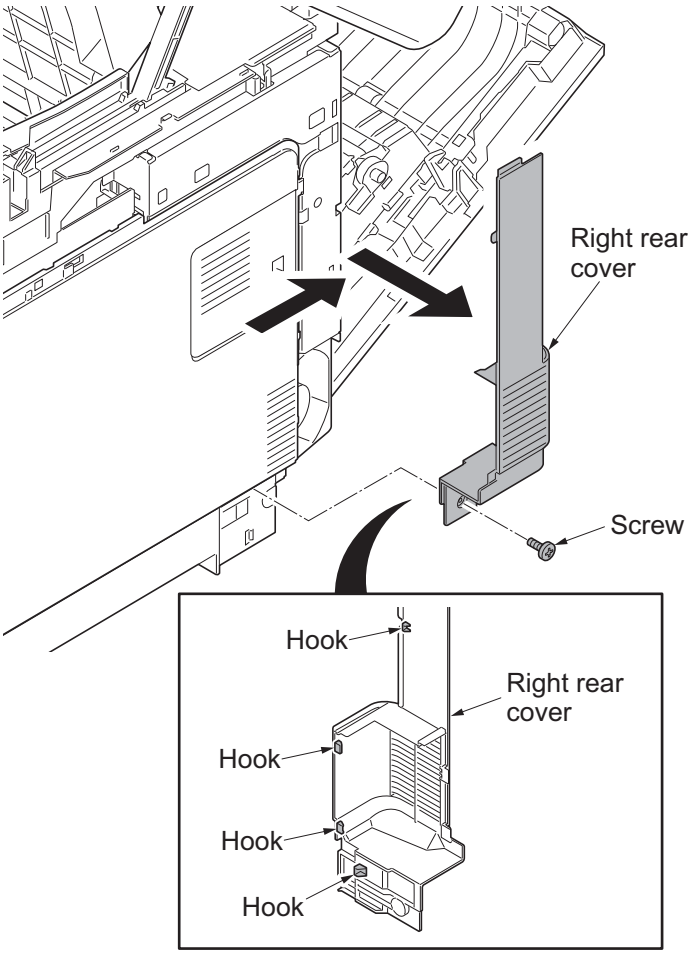

Figure 1-5-9

5. Open the memory cover and then remove it.

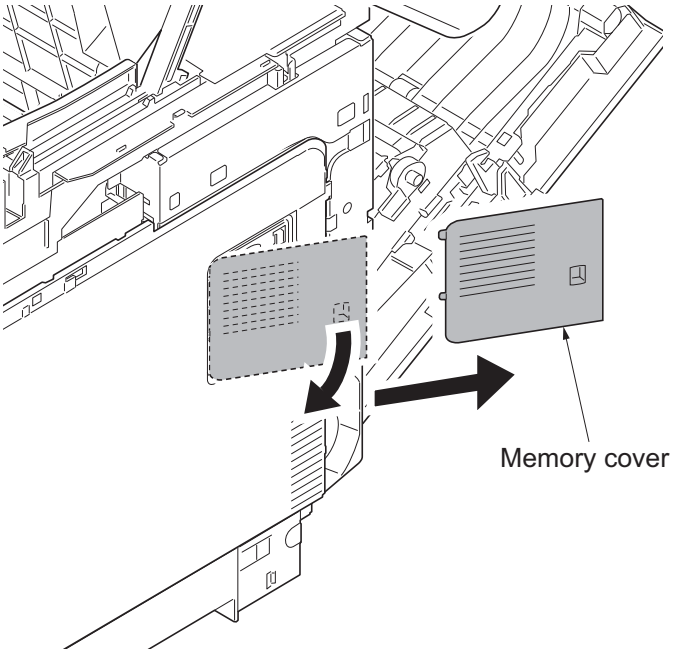

Figure 1-5-10

6. Release four hooks (hook A → B). Slide the right cover forward and then remove it.
7. Remove the waste toner cover.

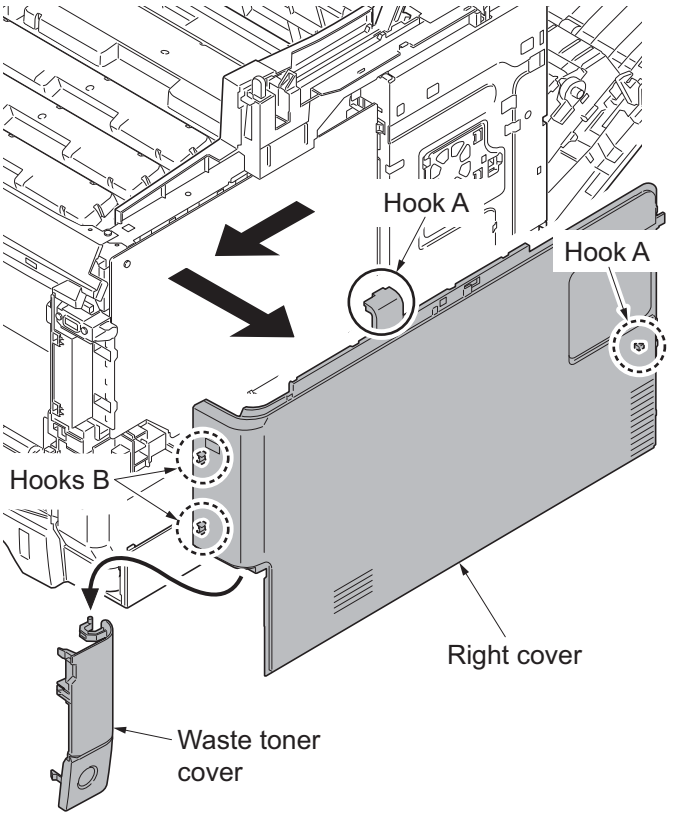

Figure 1-5-11

8. Release the hook. Slide the right lower cover forward and then remove it.

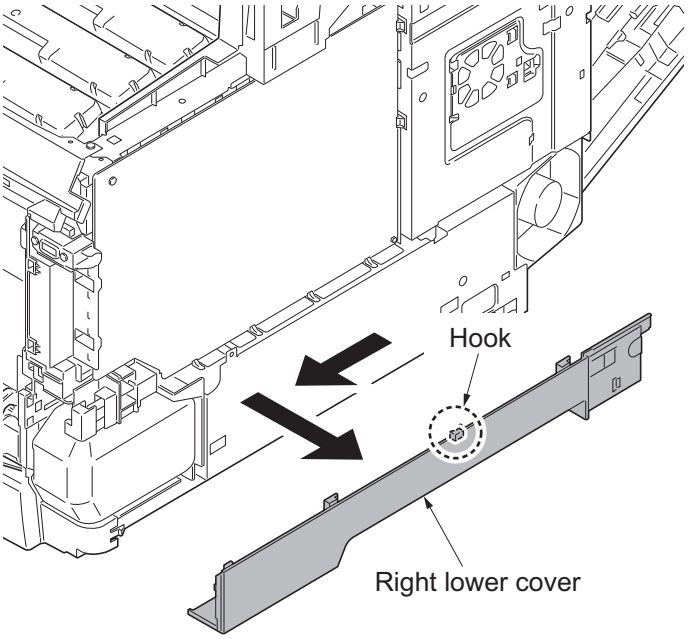

Figure 1-5-12

(3) Detaching and refitting the left rear cover, left cover and left lower cover

Procedure

1. Remove the rear upper cover, right upper cover, left upper cover and front cover (see page 1-5-3).
2. Release the hook. Slide the left rear cover upward and then remove it.

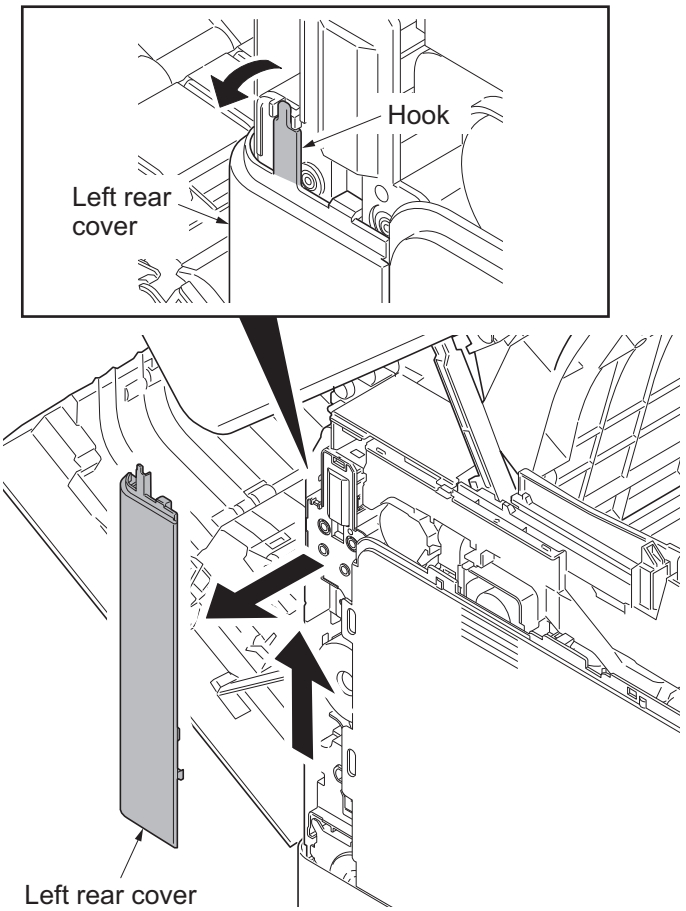

Figure 1-5-13

3. Release four hooks (hook A → B) and then remove the left cover.

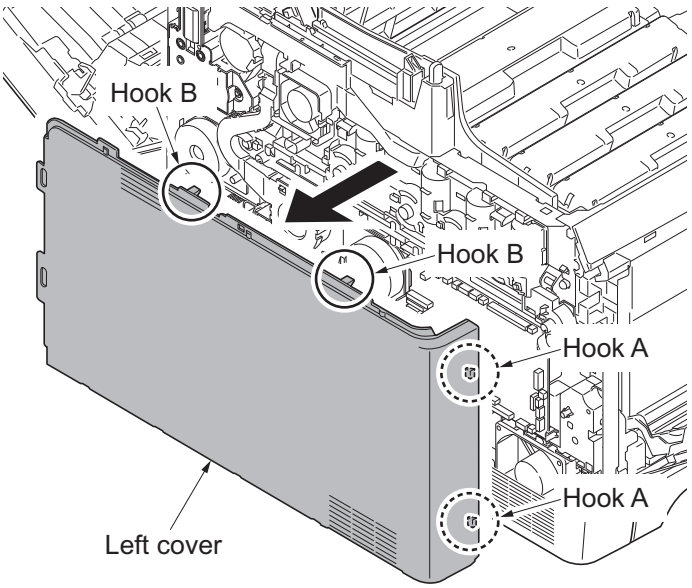

Figure 1-5-14

4. Remove the screw.
5. Release three hooks (hook A → B) and then remove the left lower cover.

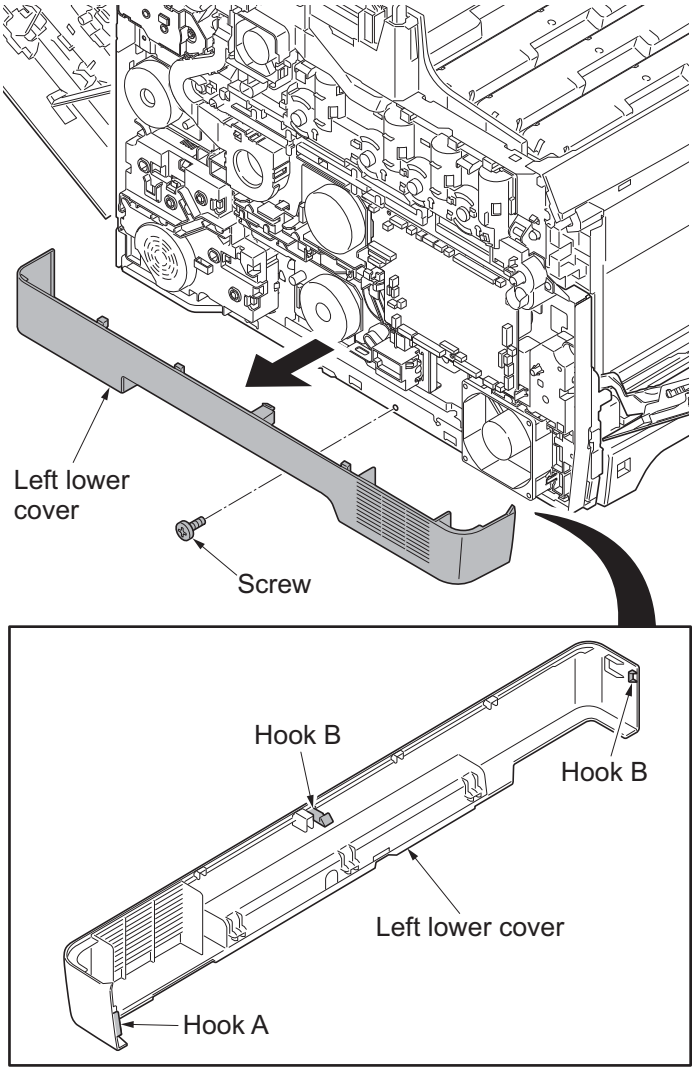

Figure 1-5-15

(4) Detaching and refitting the inner cover

Procedure

1. Remove the rear upper cover, right upper cover, left upper cover and front cover (see page 1-5-3).
2. Remove the right rear cover, right cover and right lower cover (see page 1-5-6).
3. Remove the left rear cover, left cover and left lower cover (see page 1-5-9).
4. Release four hooks and then remove the inner cover.

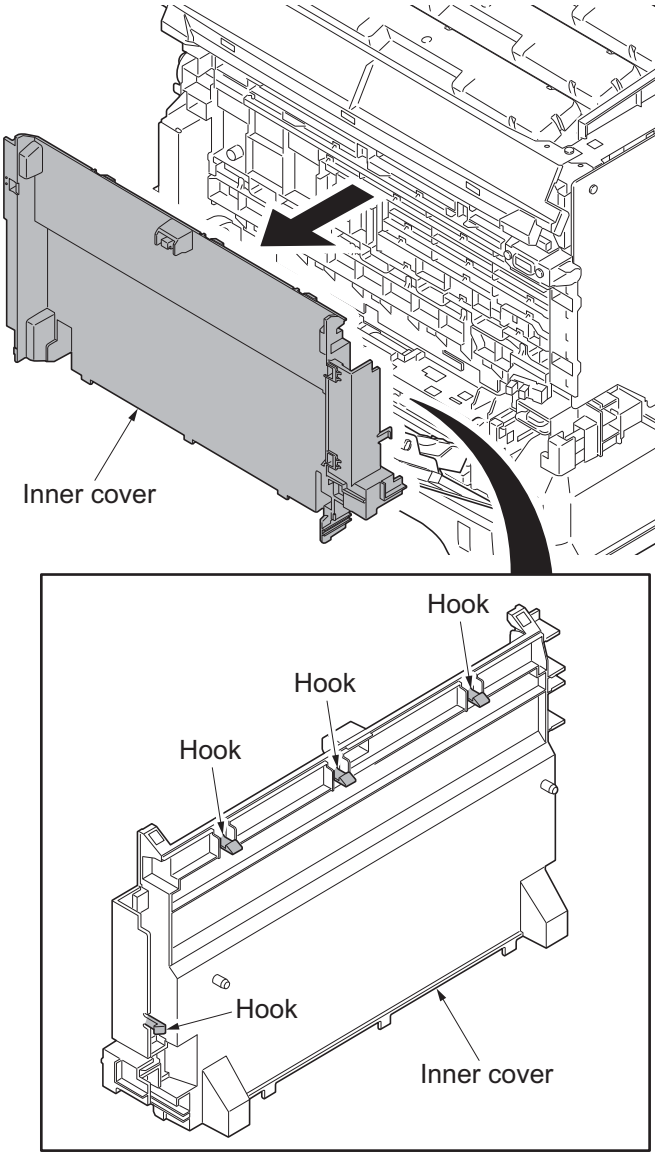

Figure 1-5-16

1-5-3 Paper feed section

(1) Detaching and refitting the retard roller unit

Procedure

1. Remove the cassette.

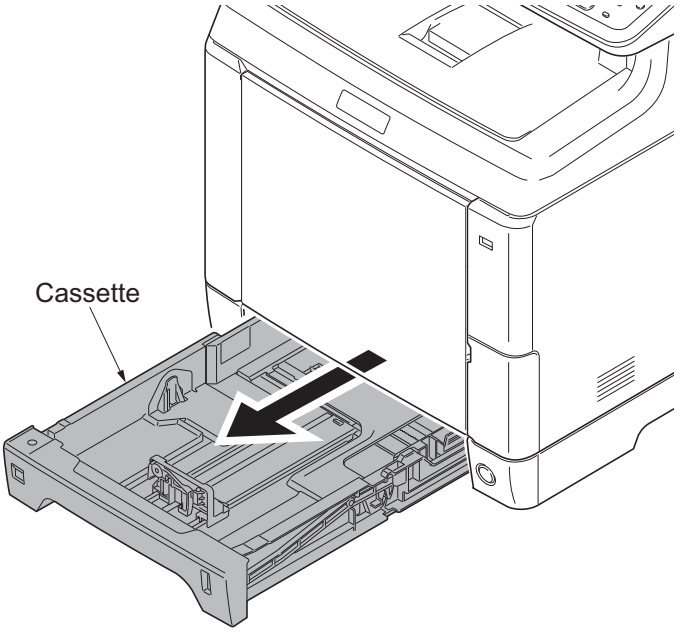

Figure 1-5-17

2. Open the paper conveying unit.
3. Pull the middle roller unit forward to the hook.
4. While pressing the right and left hooks outwards, unlatch the shaft from the rail and remove the middle roller unit.

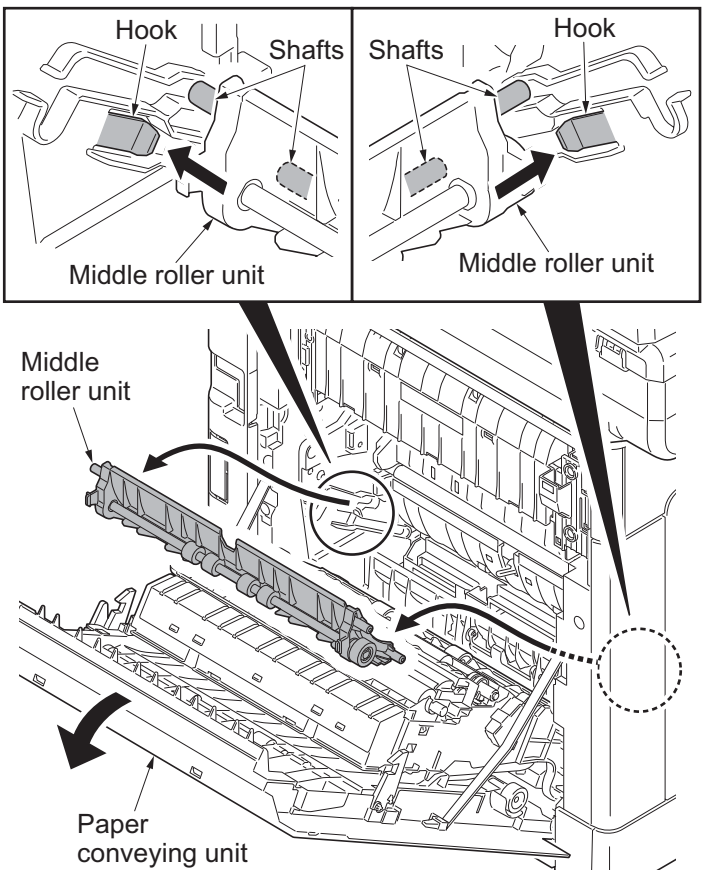

Figure 1-5-18

5. Pull the retard cover down and remove.
6. Release two hooks and then remove the retard roller unit.
7. Check or replace the retard roller unit and refit all the removed parts.

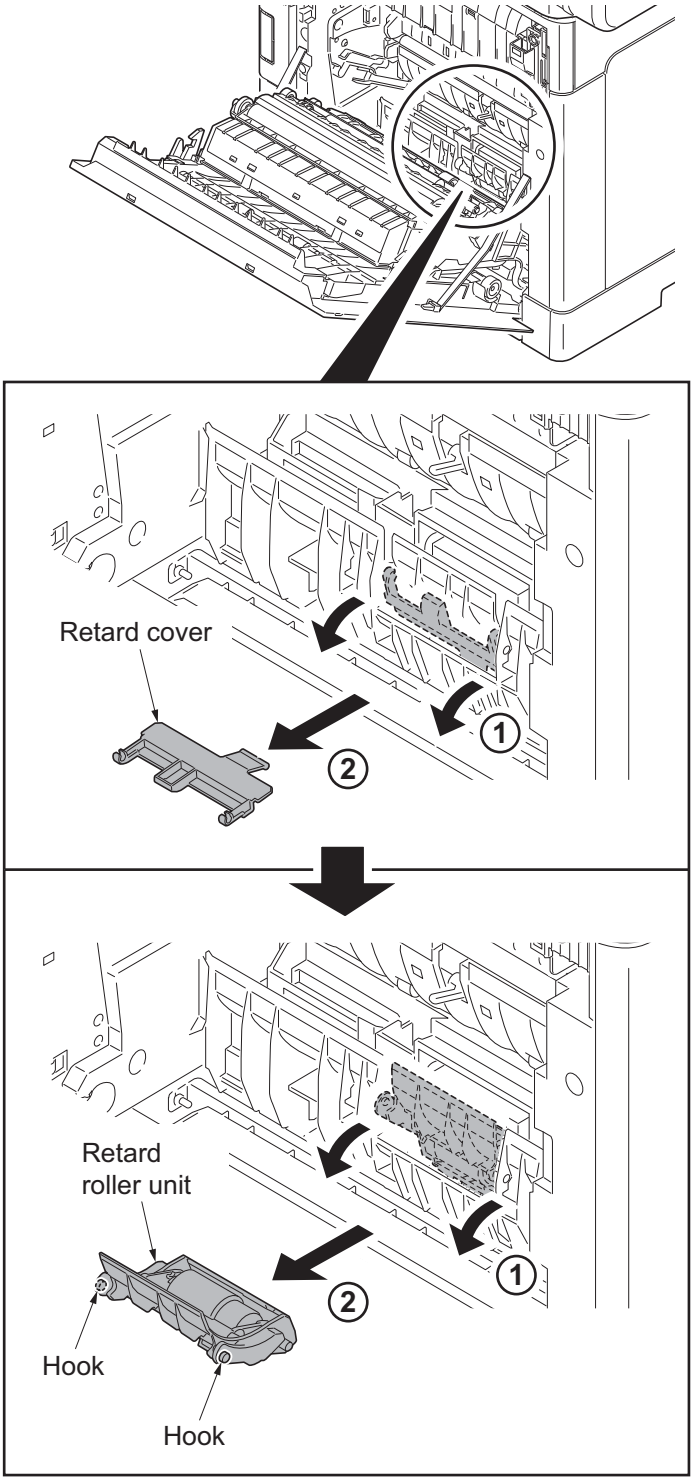

Figure 1-5-19

(2) Detaching and refitting the paper feed roller unit

Procedure

1. Remove the retard roller unit (see page 1-5-12).
2. Turn forward the lever of the feed pin to release the lock.
3. Slide the feed pin.

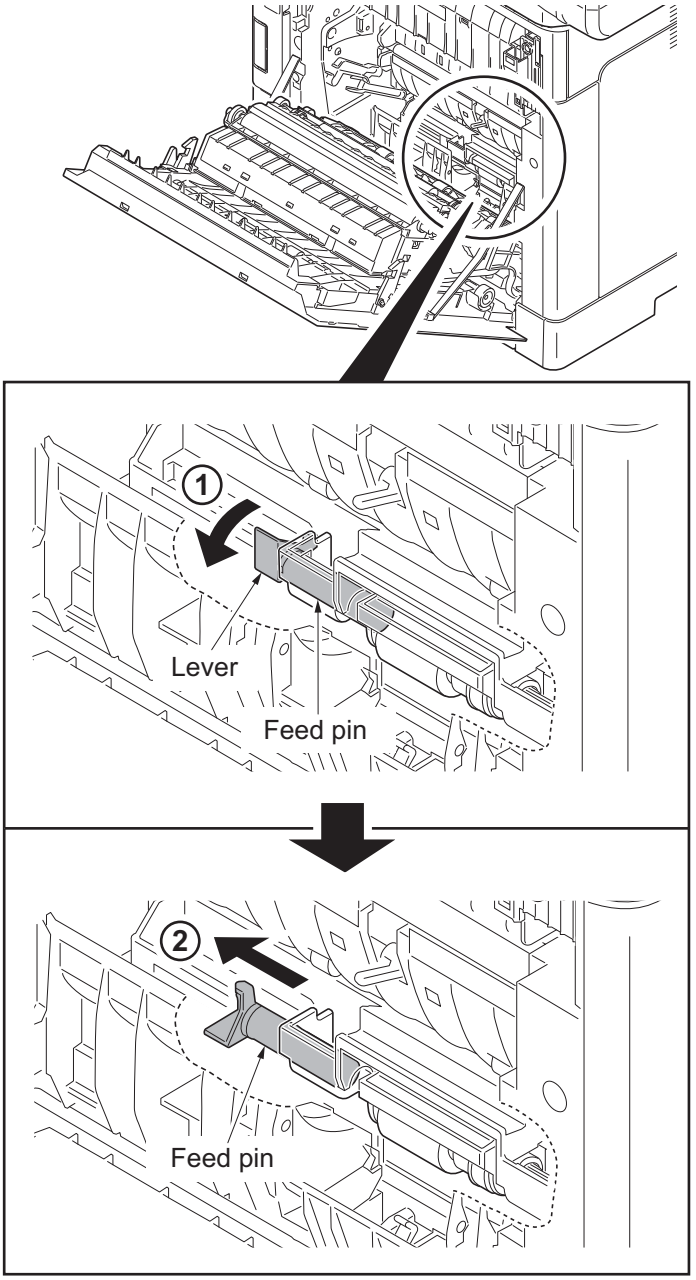

Figure 1-5-20

4. Remove the paper feed roller unit.
5. Check or replace the paper feed roller unit and refit all the removed parts.

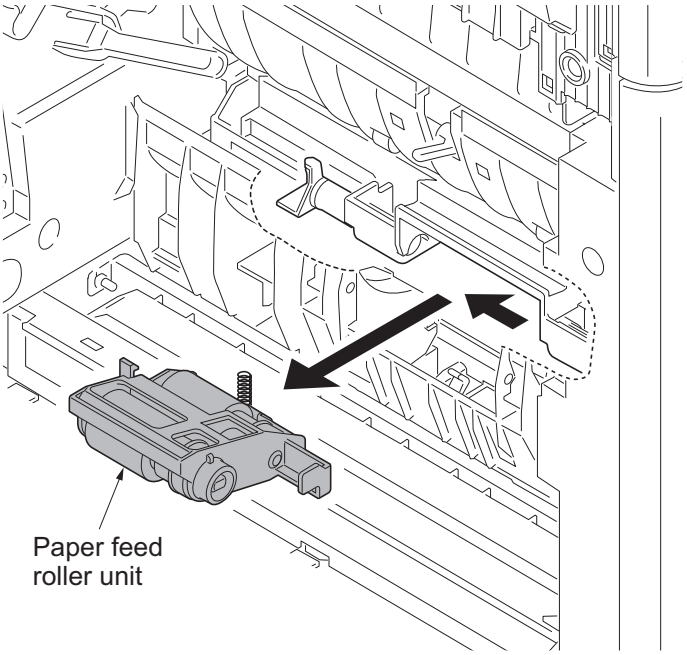

Figure 1-5-21

(3) Detaching and refitting the MP paper feed roller

Procedure

1. Remove the cassette.
2. Raise the MP tray cover upward. Release two hooks and then remove the MP tray cover.

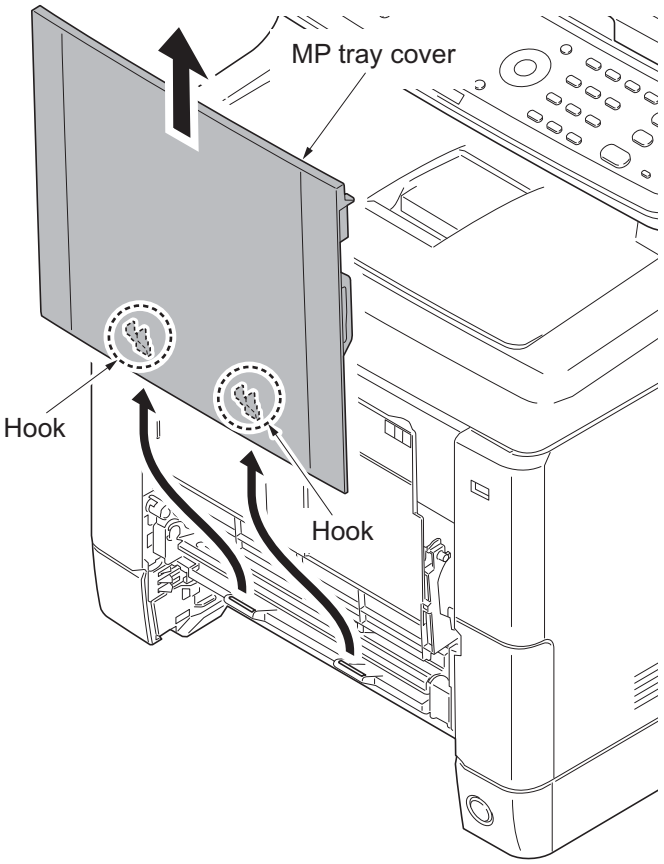

Figure 1-5-22

3. Open the conveying lower cover.

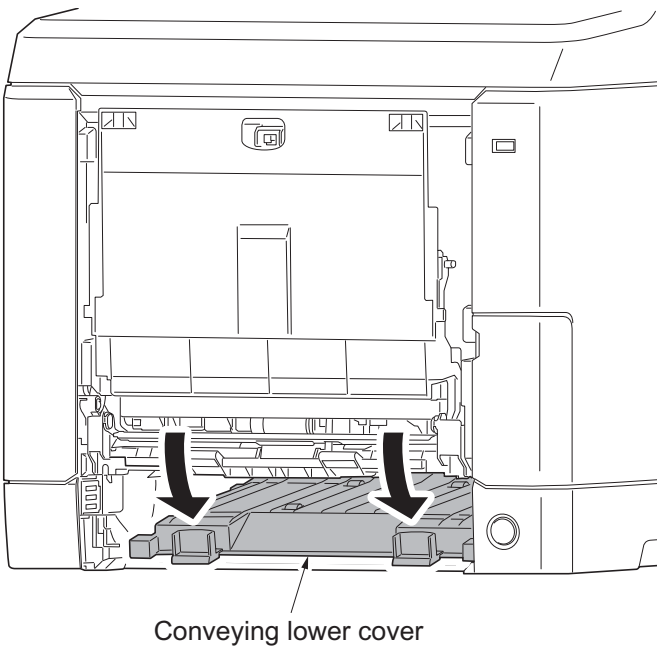

Figure 1-5-23

4. Remove two screws and then remove the MP paper feed lower unit.

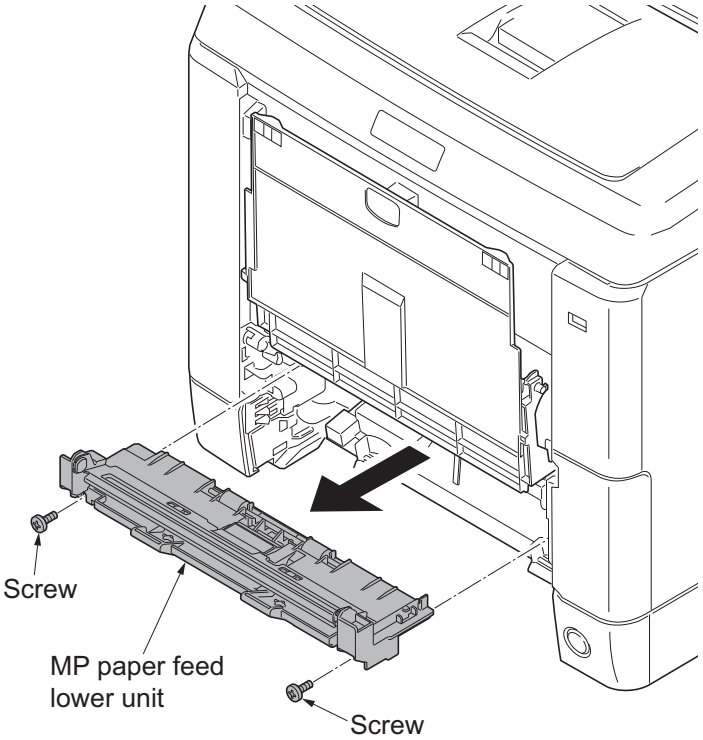

Figure 1-5-24

5. Pull the hook forward and then slide the MP feed shaft.
6. Remove the MP paper feed roller.
7. Check or replace the Mp paper feed roller and refit all the removed parts.

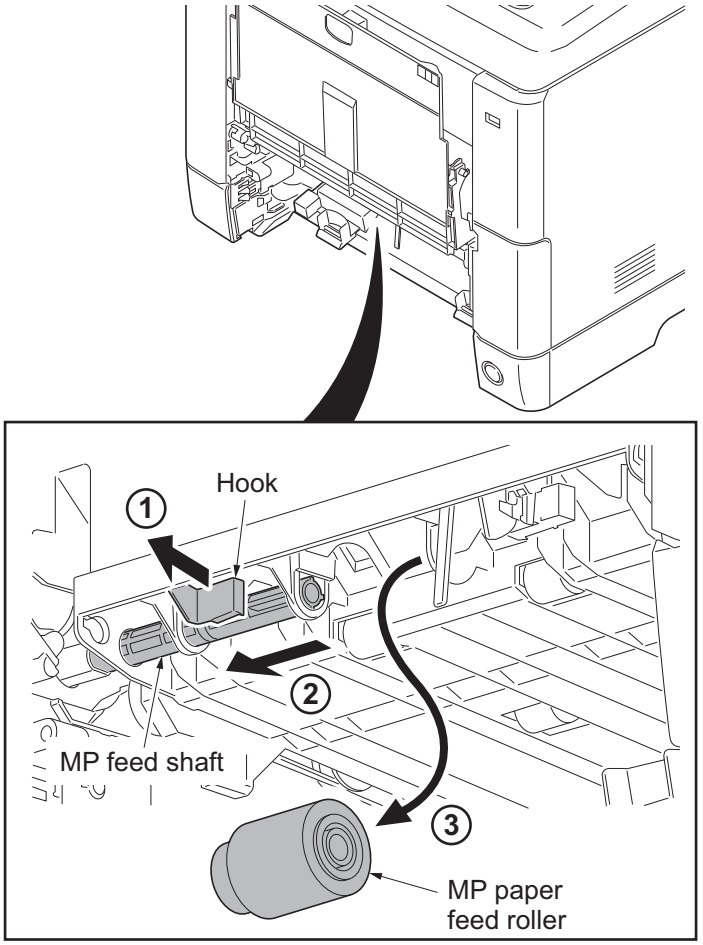

Figure 1-5-25

1-5-4 Developing section

(1) Detaching and refitting the developing unit

Procedure

1. Remove the intermediate transfer unit (see page 1-5-21).
2. Remove drum units (K, M, C, Y).
3. Pinch the lever of developing unit.
4. Remove developing units (K, M, C, Y).

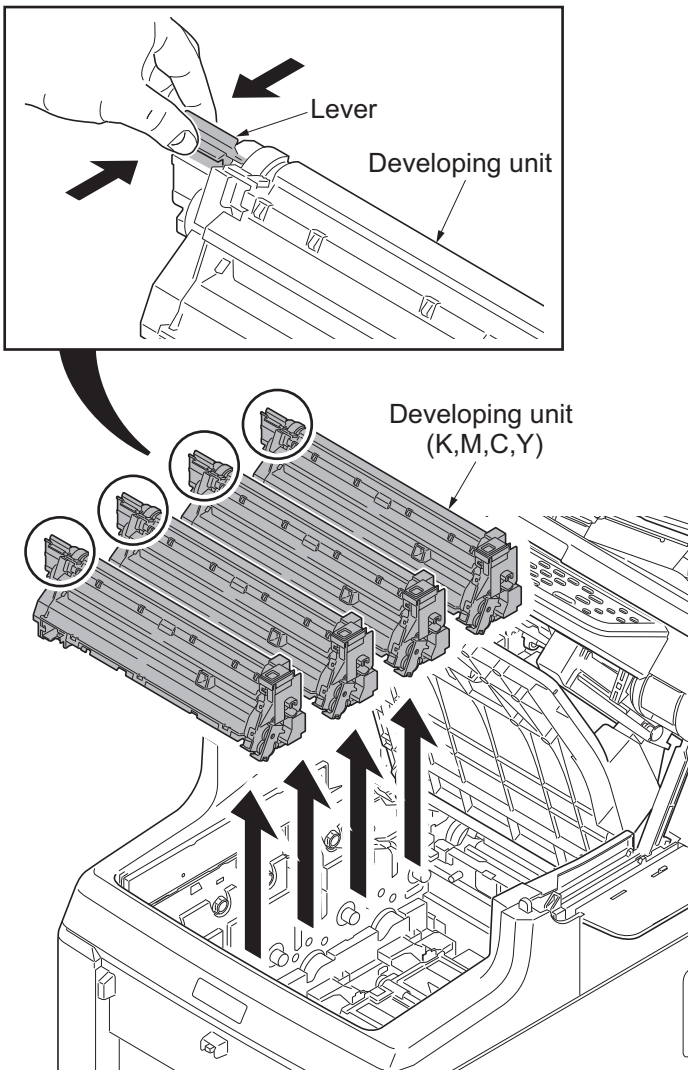

Figure 1-5-26

5. Check or replace the developing unit and refit all the removed parts.

NOTE:

*: Remove the cap before installing the new developing unit.

*: When reinstalling the developing unit, press it down until the lever of developing unit is engaged with the notch.

*: If it is difficult to engage the lever, press the unit down while rotating the gear to engage it.

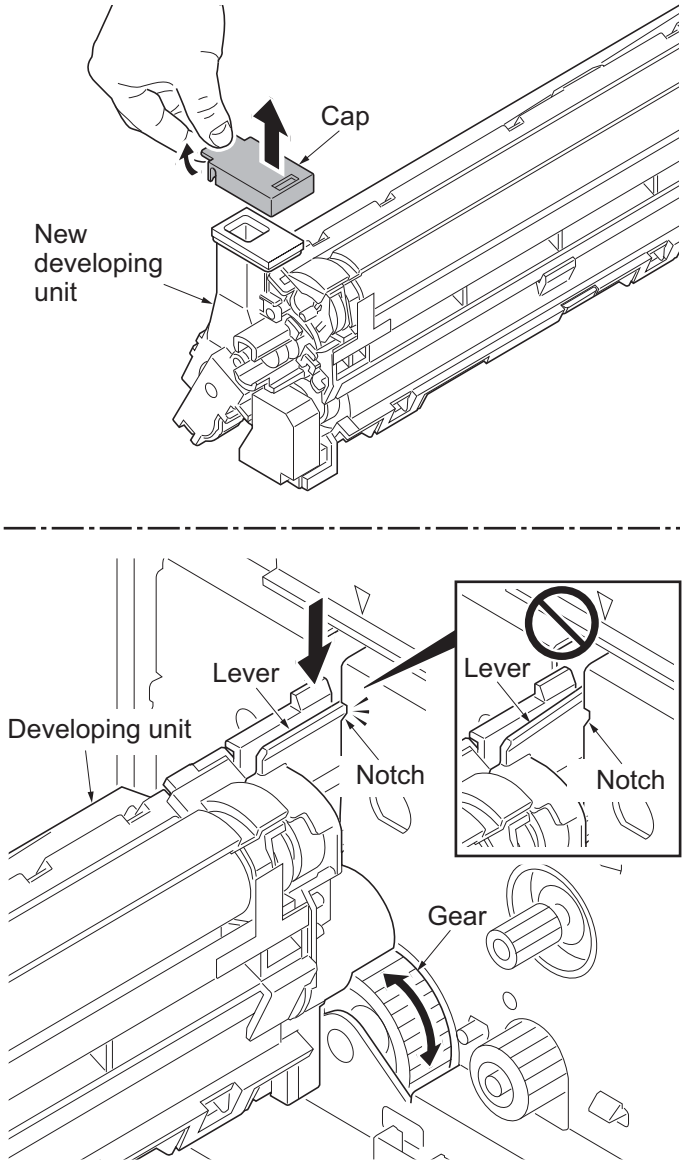

Figure 1-5-27

1-5-5 Drum section

(1) Detaching and refitting the drum unit

Procedure

1. Remove the intermediate transfer unit (see page 1-5-21).
2. Remove drum units (K, M, C, Y).
3. Check or replace the drum unit and refit all the removed parts.

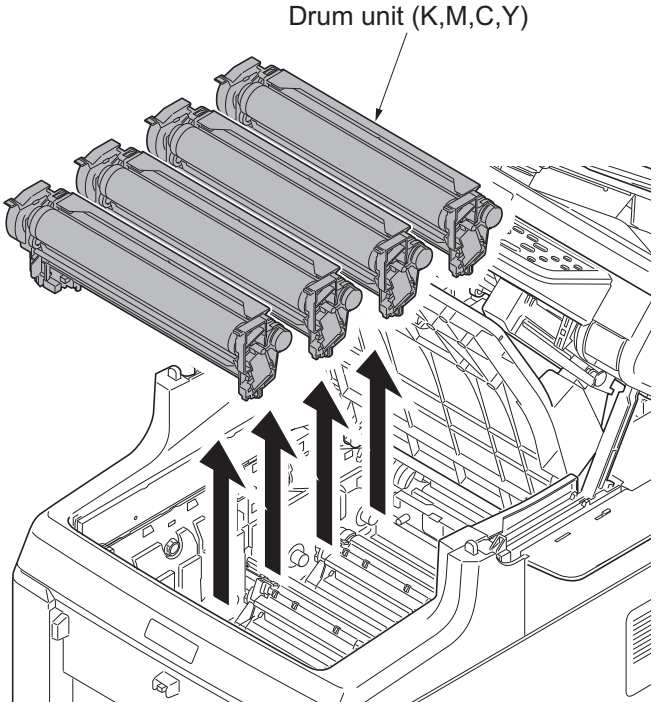

Figure 1-5-28

1-5-6 Transfer/Separation section

(1) Detaching and refitting the intermediate transfer unit

Procedure

1. Open the top tray and the paper conveying unit.
2. Remove toner containers (K, M, C, Y).

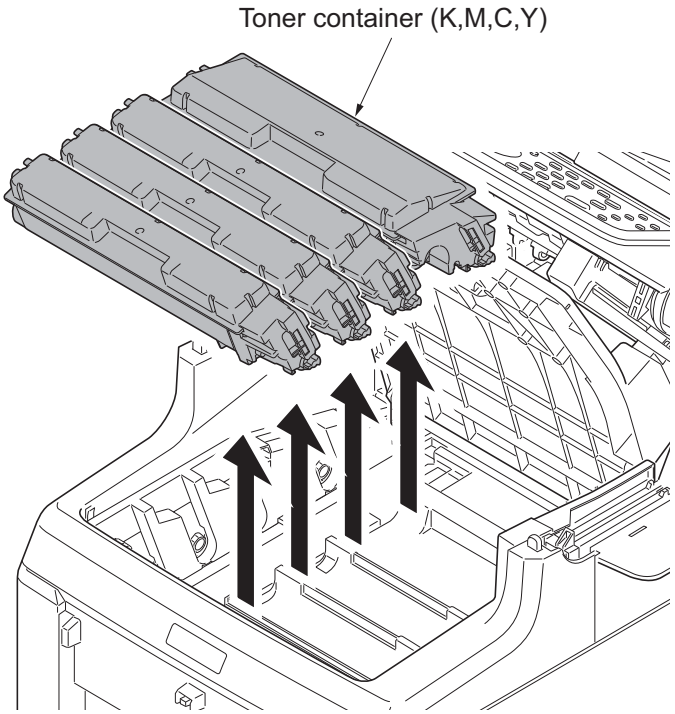

Figure 1-5-29

3. Slide the container guide forward and then remove it.

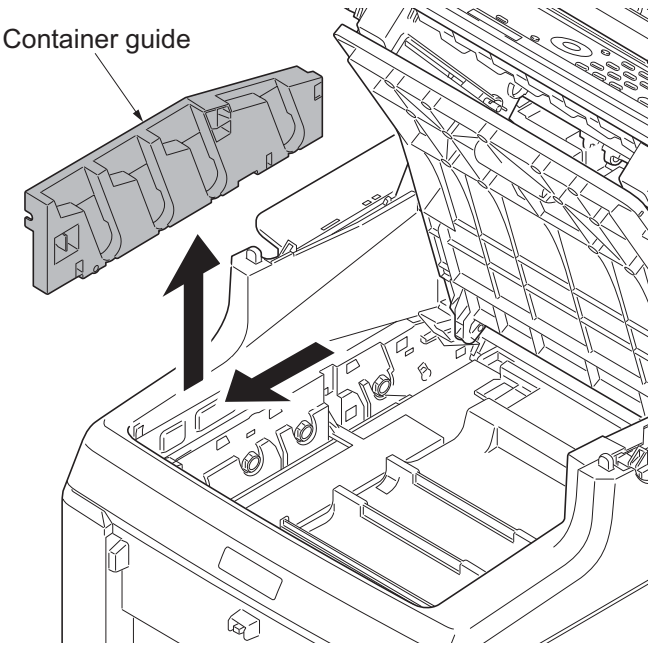

Figure 1-5-30

4. Open the RFID holder.

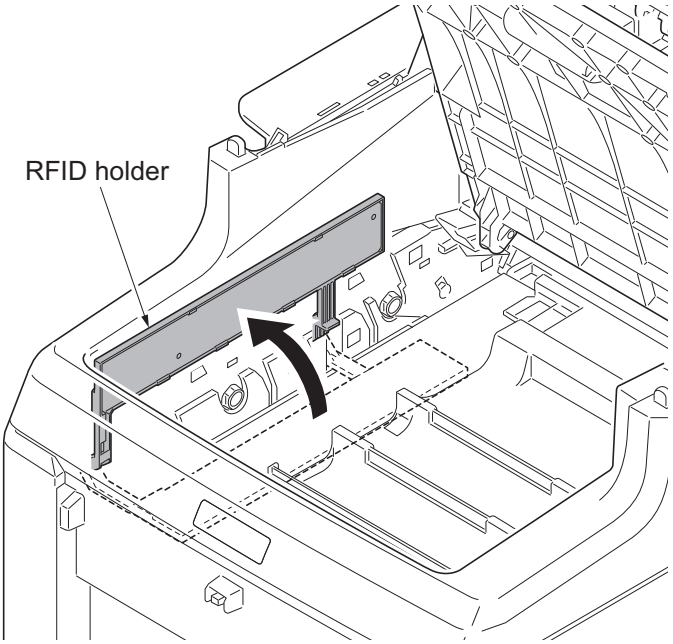

Figure 1-5-31

5. Slide the shutter forward and seal the toner inlet.
6. Remove the screw.

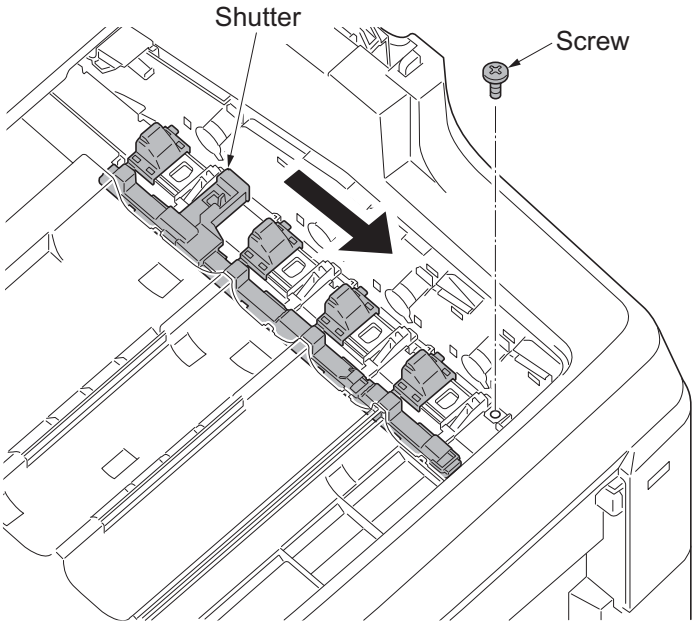

Figure 1-5-32

7. Remove the intermediate transfer unit.
8. Check or replace the intermediate transfer unit and refit all the removed parts.

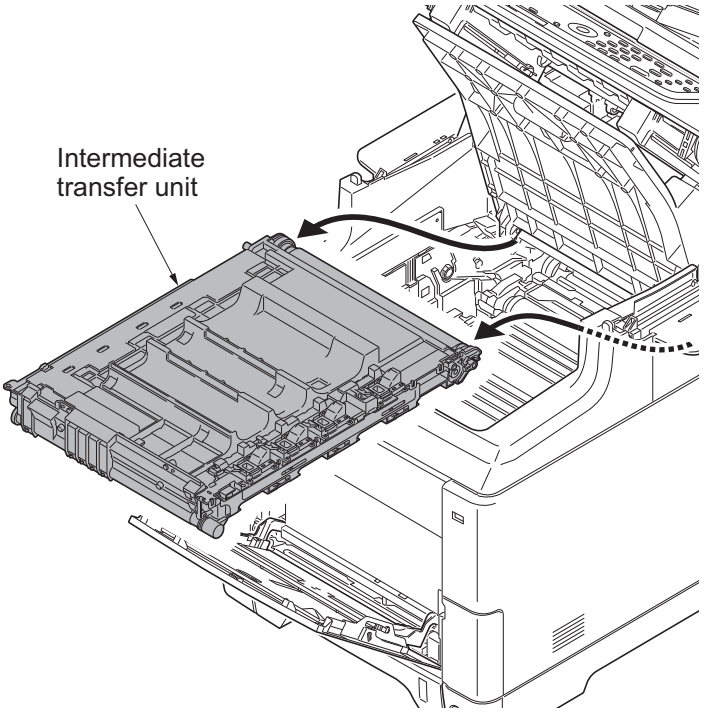

Figure 1-5-33

(2) Detaching and refitting the transfer roller unit

Procedure

1. Open the paper conveying unit.
2. Release two hooks and then remove the transfer roller unit.
3. Check or replace the transfer roller unit and refit all the removed parts.

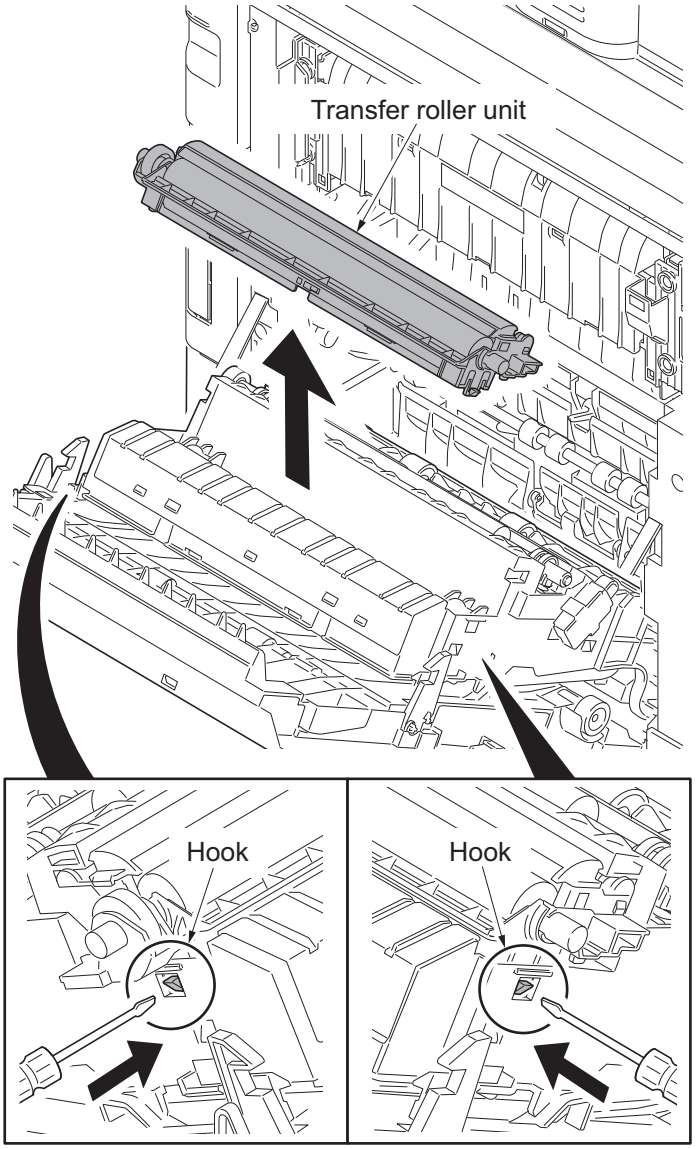

Figure 1-5-34

1-5-7 Fuser section

(1) Detaching and refitting the fuser unit

Procedure

1. Open the paper conveying unit.
2. Remove the IF cover (see page 1-5-3).
3. Remove the screw and then fuser wire cover.

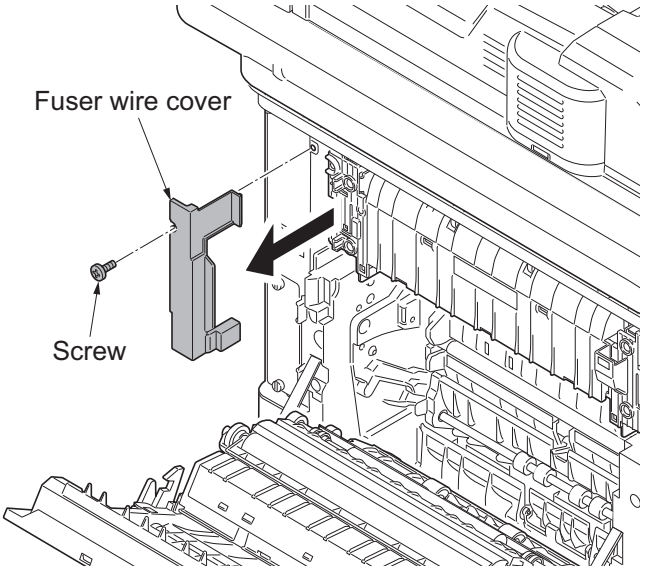

Figure 1-5-35

4. Remove three connectors.
5. Remove two screws and then remove the fuser unit.
6. Check or replace the fuser unit and refit all the removed parts.

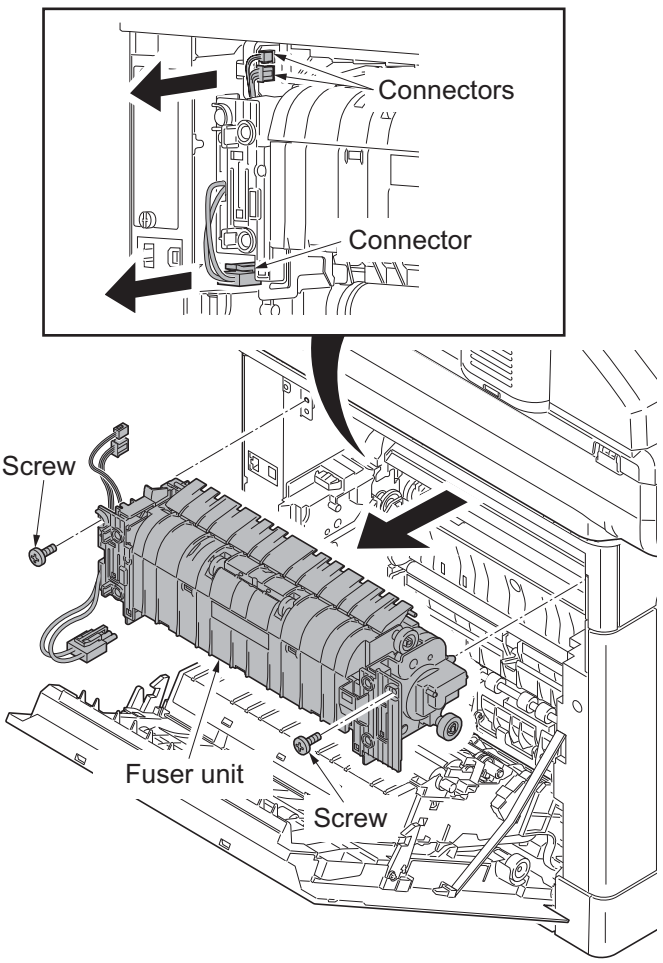

Figure 1-5-36

1-5-8 PWBs

(1) Detaching and refitting the engine PWB

Procedure

1. Remove the left cover (see page 1-5-9).
2. Remove all connectors from the engine PWB.

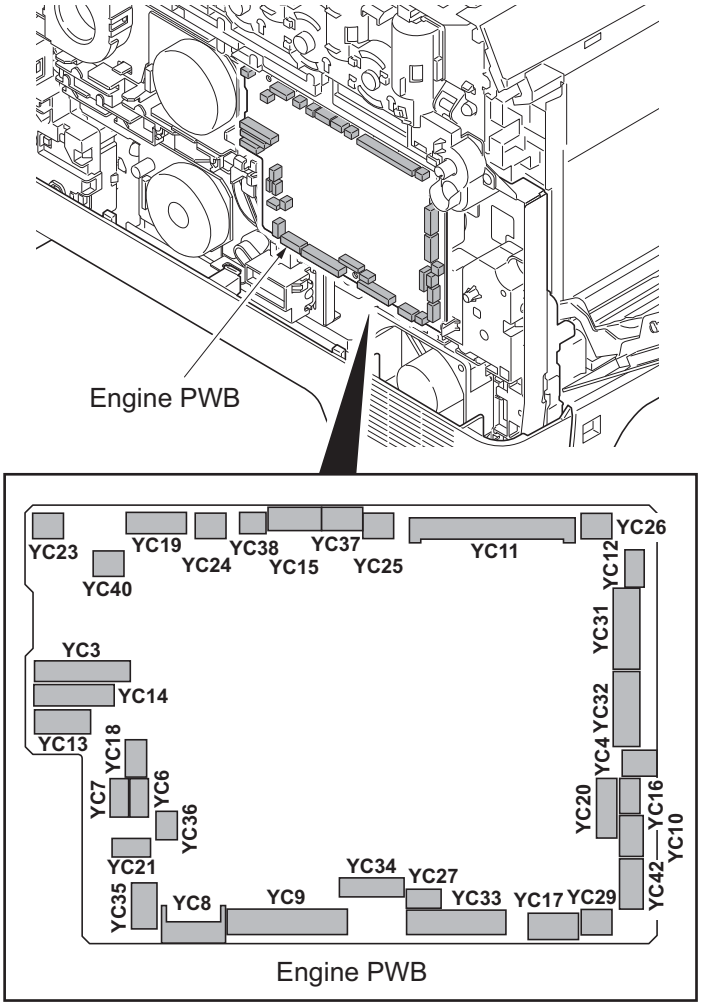

Figure 1-5-37

3. Remove three screws and then remove the engine PWB.
4. Check or replace the engine PWB and refit all the removed parts.

*: To replace the engine PWB, remove the EEPROM (U1) from the old engine PWB and mount it to the new engine PWB.

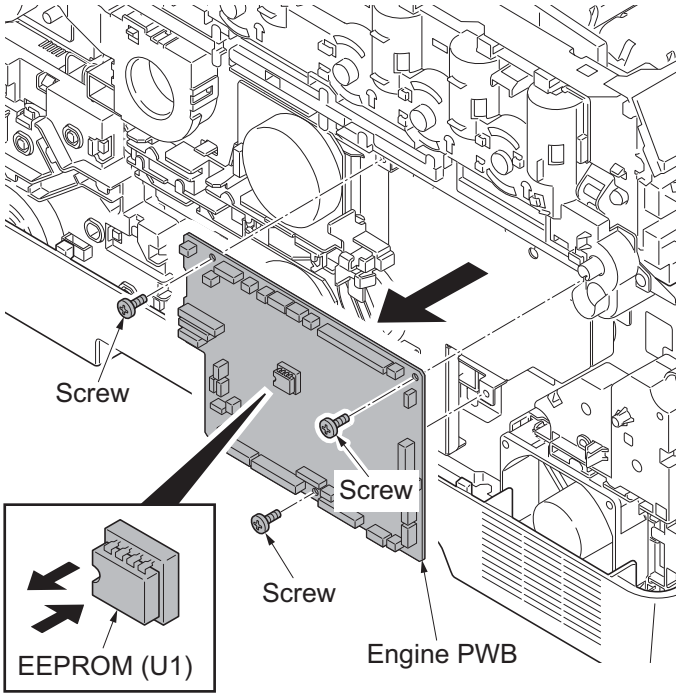

Figure 1-5-38

(2) Detaching and refitting the power source PWB

Procedure

1. Remove the right rear cover, right cover and right lower cover (see page 1-5-6).
2. Remove three screws and then remove the power source shield.
   Screws A and B are unidentical, therefore, do not mix up.

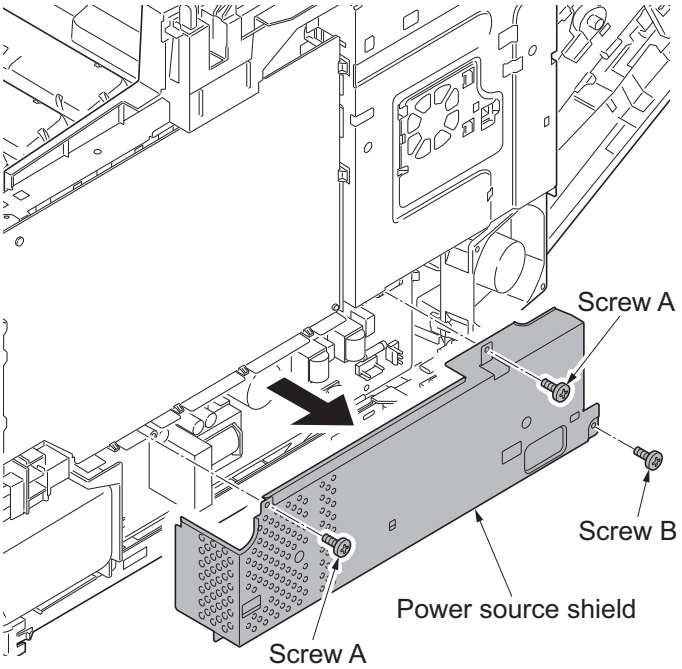

Figure 1-5-39

3. Remove all connectors from power source PWB.
4. Remove two screws.
5. Release three hooks and then remove the power source PWB.
6. Check or replace the power source PWB and refit all the removed parts.

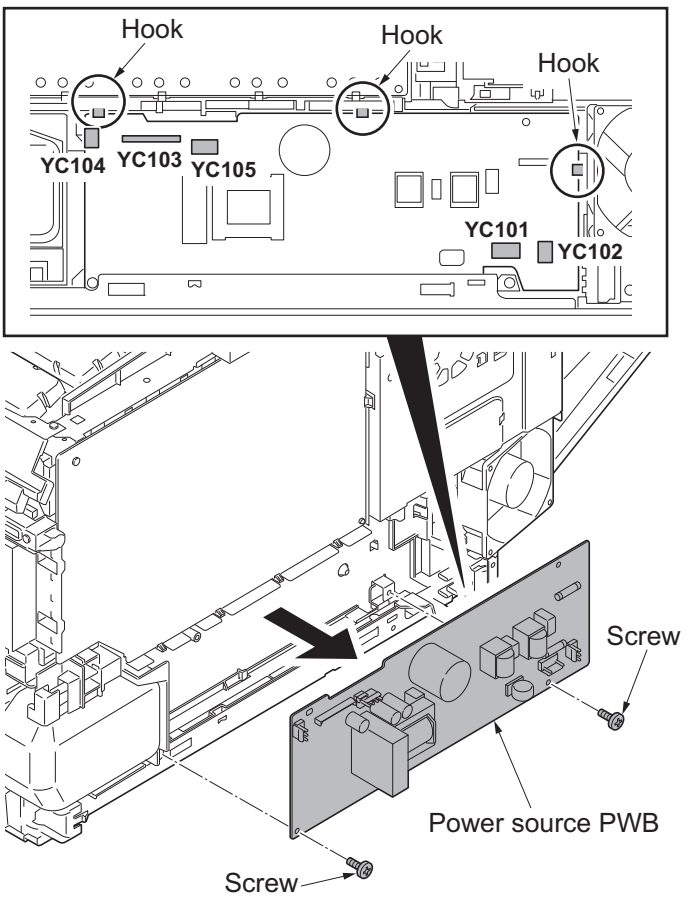

Figure 1-5-40

(3) Detaching and refitting the main PWB

Procedure

1. Remove the FAX control PWB, if installed (see page 1-5-35).
2. Remove the right rear cover, right cover and right lower cover (see page 1-5-6).
3. Remove three screws and then remove the power source shield.
   Screws A and B are unidentical, therefore, do not mix up.

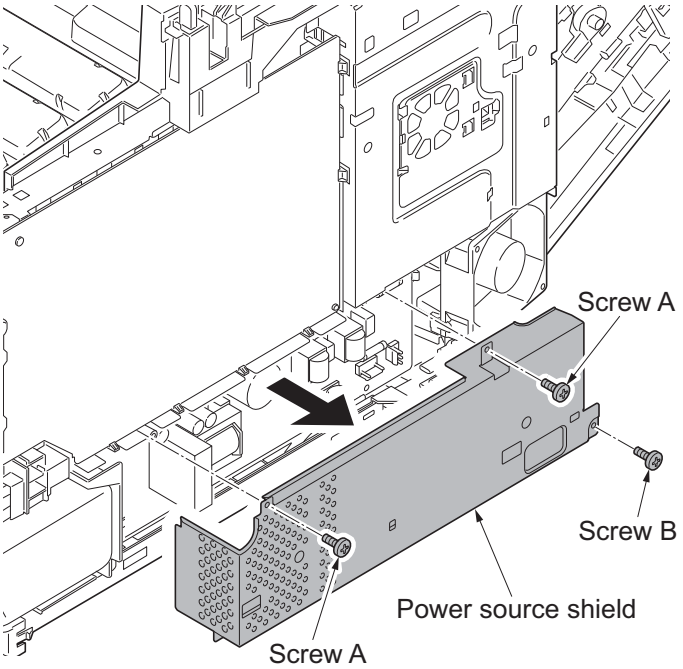

Figure 1-5-41

4. Open the fan bracket.
5. Slide the fan plate. Release four hooks and then remove the fan plate.

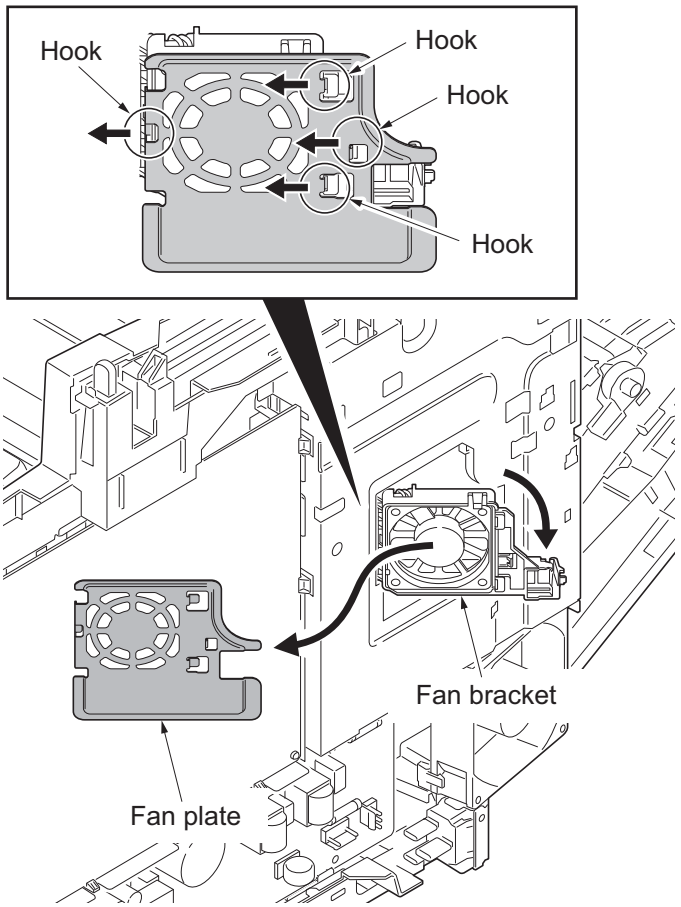

Figure 1-5-42

6. Remove the screw and then remove the fuser wire cover.

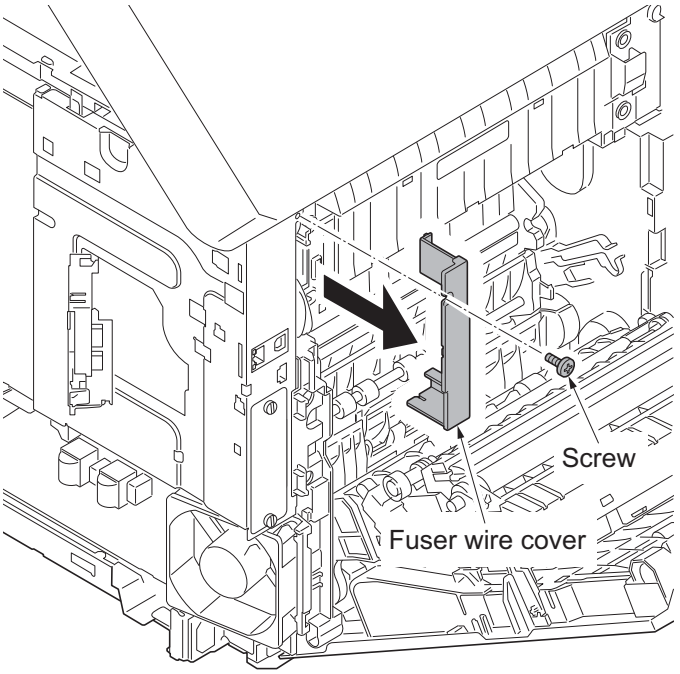

Figure 1-5-43

7. Remove five screws and then remove the controller shield.

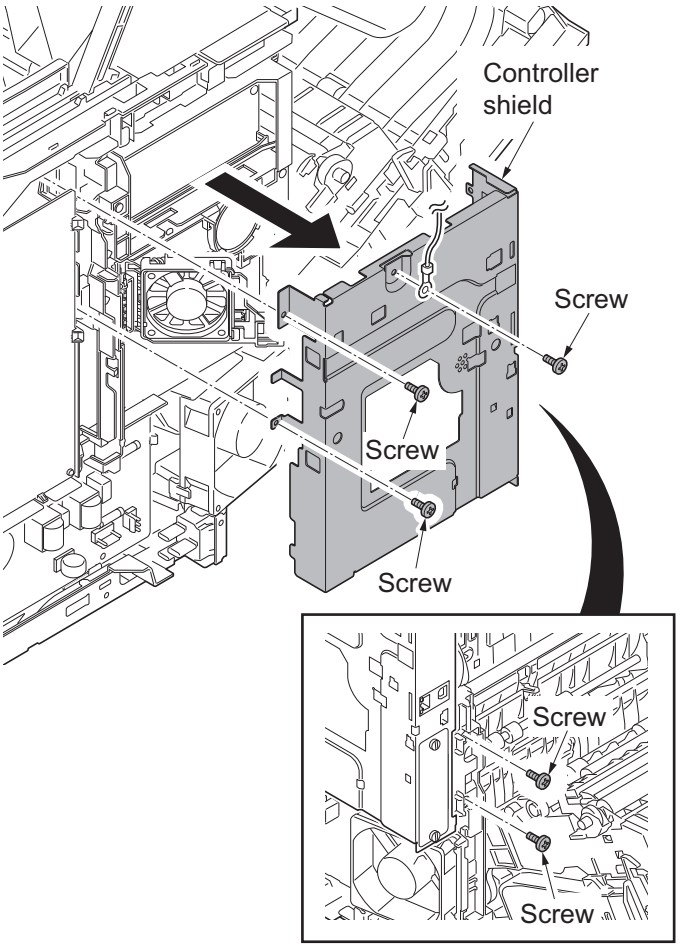

Figure 1-5-44

8. Remove the connector (YC41) of the controller fan motor.
9. Open the fan bracket and then remove it.

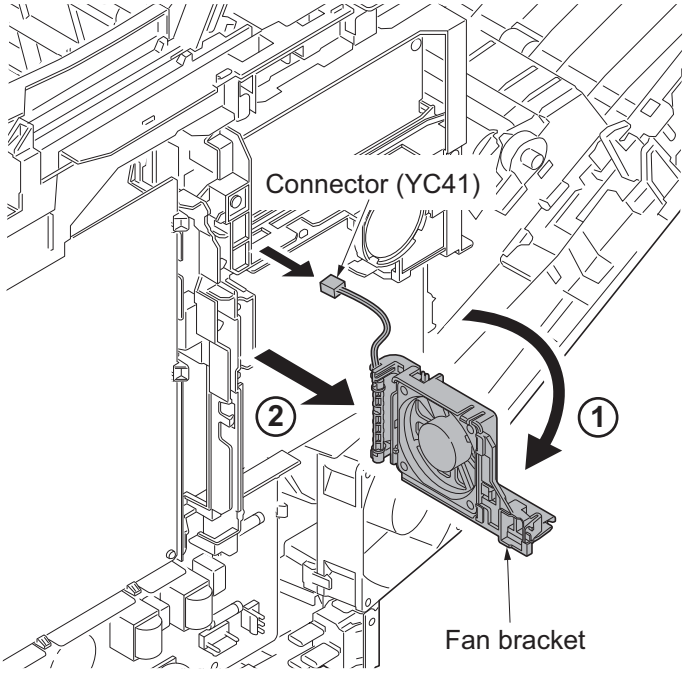

Figure 1-5-45

10. Remove seven connectors (YC15, YC37, YC41, YC40, YC38, YC39 and YC42) from the main PWB.

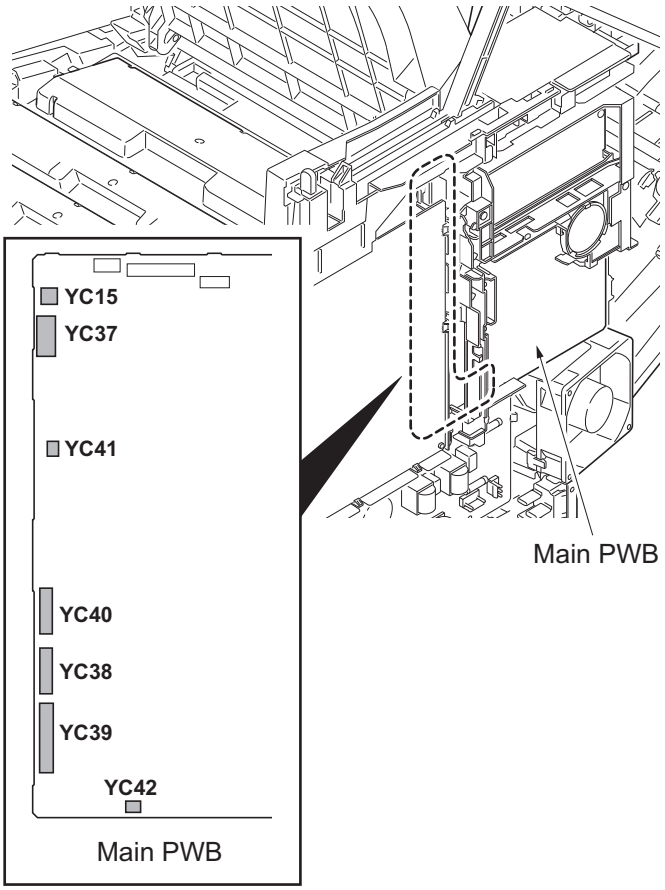

Figure 1-5-46

11. Remove two screws.
12. Release three hooks and then remove the wire holder.

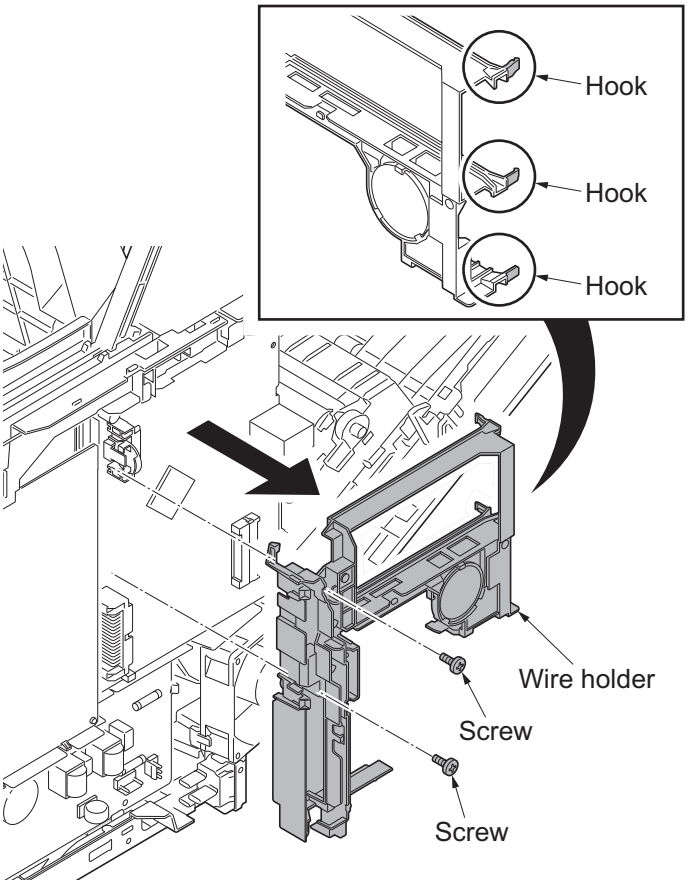

Figure 1-5-47

13. Remove three connectors (YC36, YC32, YC12) and two FFCs (YC8, YC43) from the main PWB.

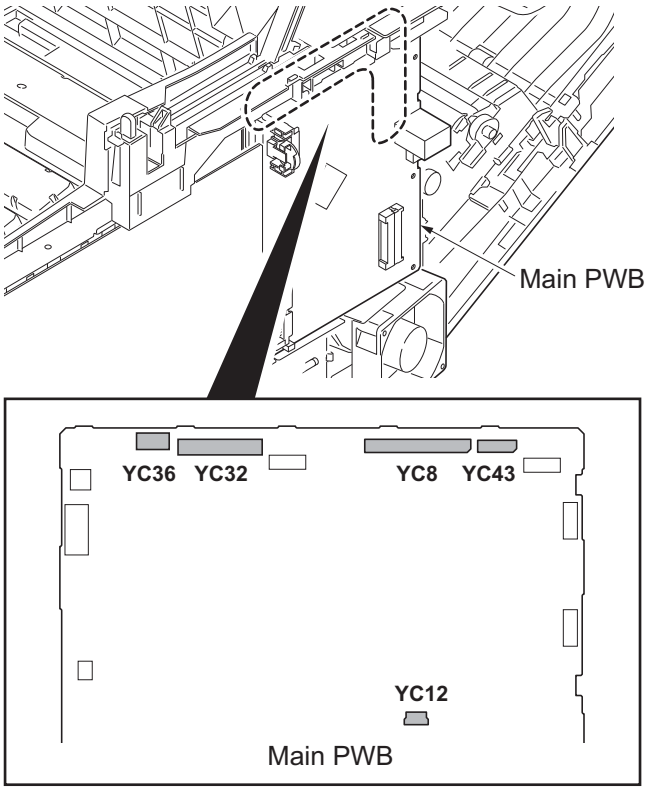

Figure 1-5-48

14. Remove five screws and then remove the main PWB.
15. Check or replace the main PWB and refit all the removed parts.

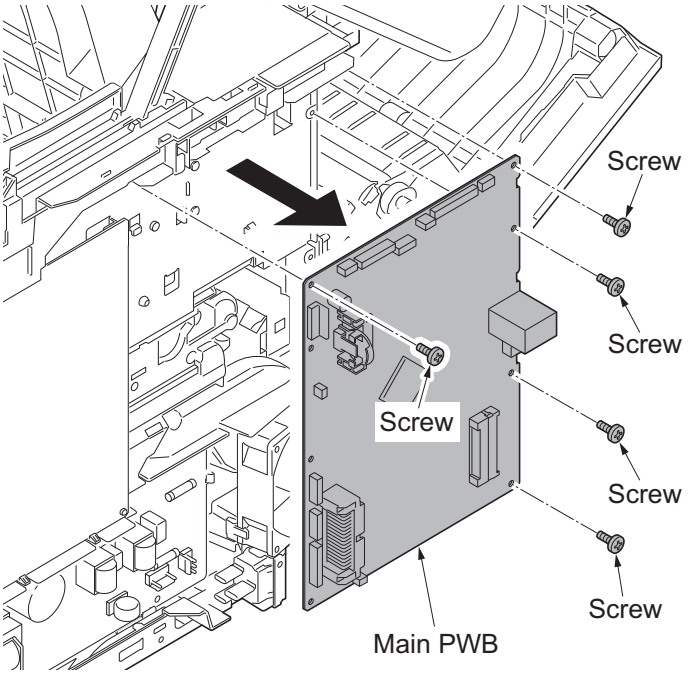

Figure 1-5-49

(4) Detaching and refitting the high voltage PWB

Procedure

1. Remove the right rear cover and right cover (see page 1-5-6).
2. Remove the FFC from the high voltage PWB.

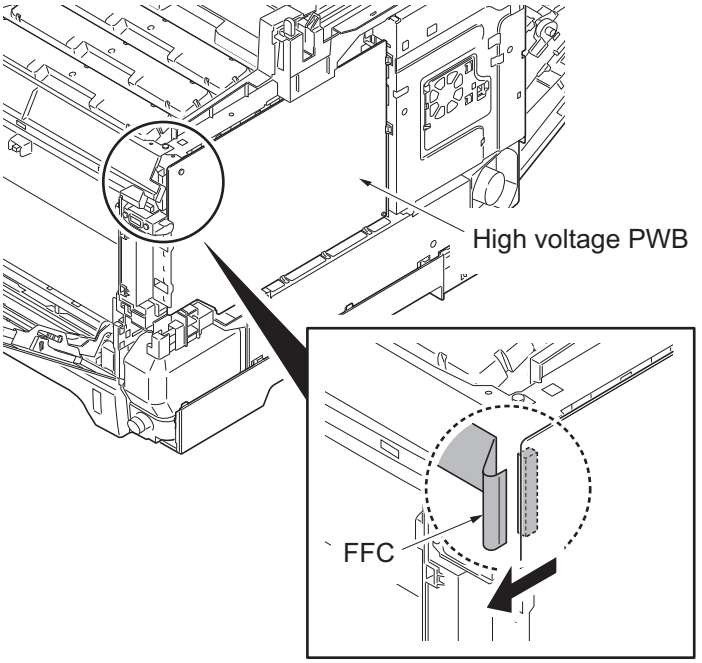

Figure 1-5-50

3. Remove the screw.
4. Release eight hooks and then remove the high voltage PWB.
5. Check or replace the high voltage PWB and refit all the removed parts.

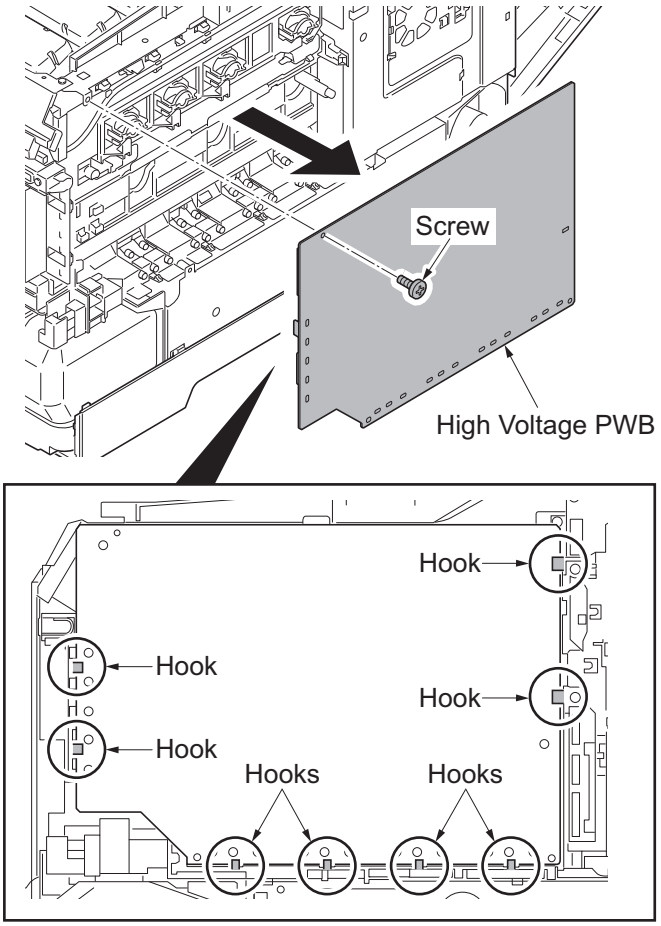

Figure 1-5-51

(5) Detaching and refitting the FAX control PWB (4 in 1 model (with FAX) only)

Procedure

1. Remove the IF cover (see page 1-5-3).
2. Remove two screws and then remove the FAX control PWB.
3. Check or replace the FAX control PWB and refit all the removed parts.

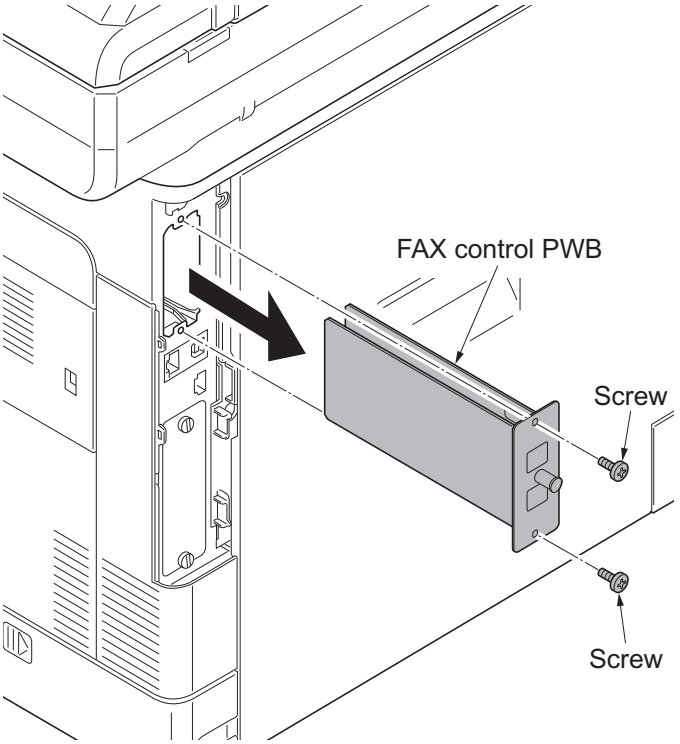

Figure 1-5-52

1-5-9 Drive section

(1) Detaching and refitting the MP feed drive unit

Procedure

1. Remove the rear upper cover, right upper cover, left upper cover and front cover (see page 1-5-3).
2. Remove the right rear cover and right cover (see page 1-5-6).
3. Remove the left rear cover, left cover and left lower cover (see page 1-5-9).
4. Remove the inner cover (see page 1-5-11).
5. Remove the engine PWB (see page 1-5-26).
6. Release three hooks and then remove the left fan motor.

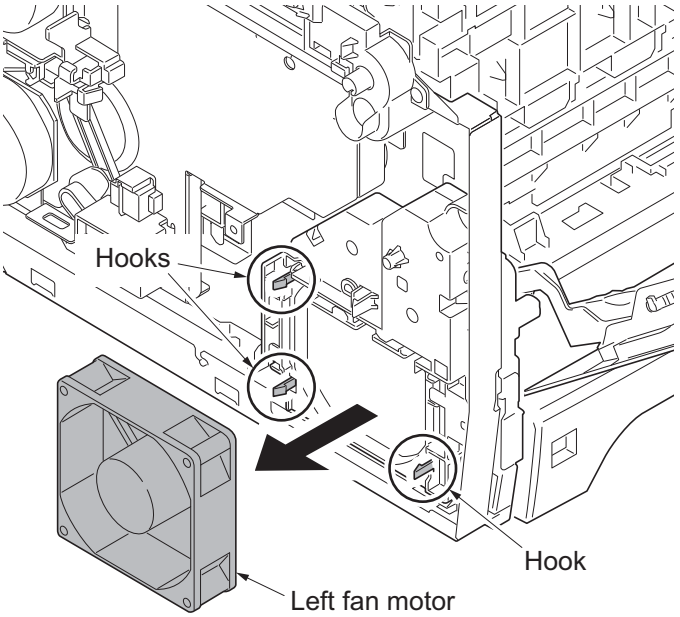

Figure 1-5-53

7. Turn the cam inside the device to the position indicated.
8. Remove three screws and then remove MP feed drive unit.
9. Check or replace the MP feed drive unit and refit all the removed parts.

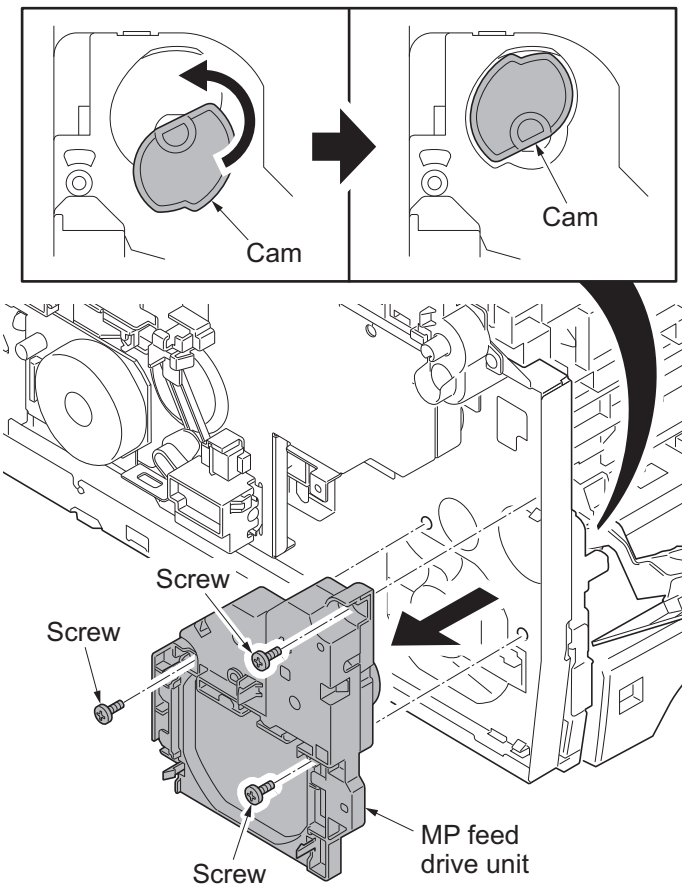

Figure 1-5-54

(2) Detaching and refitting the drum/developing drive unit

Procedure

1. Remove drum units (K, M, C, Y) and developing units (K, M, C, Y) (see page 1-5-20, 18).
2. Remove the rear upper cover, right upper cover, left upper cover and front cover (see page 1-5-3).
3. Remove the left rear cover, left cover and left lower cover (see page 1-5-9).
4. Remove the engine PWB (see page 1-5-26).
5. Remove the screw and release the hook, and then remove the developing fan unit.

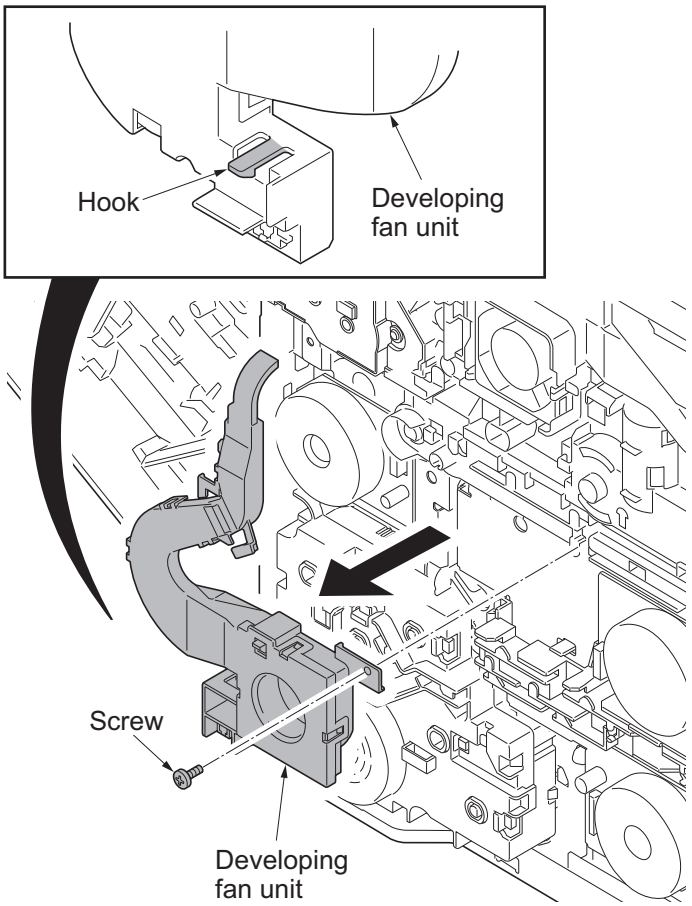

Figure 1-5-55

6. Remove the screw and then remove the ID guide.

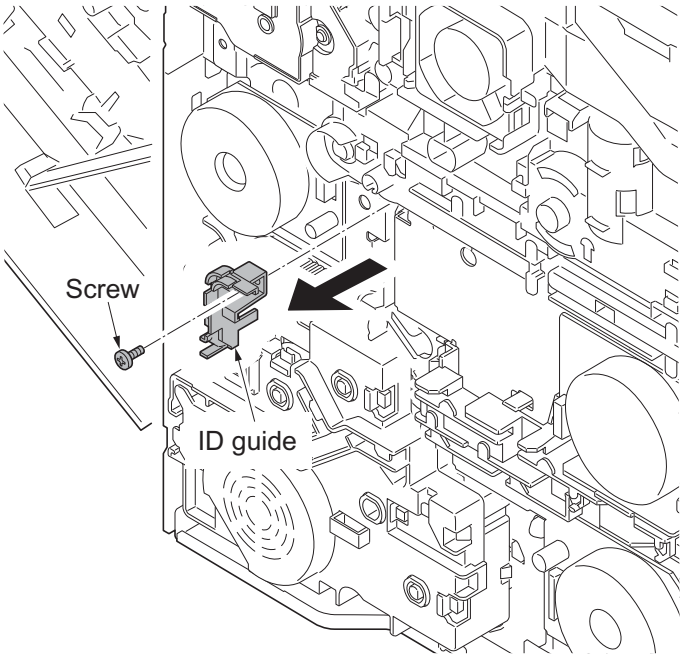

Figure 1-5-56

7. Remove five screws and then remove drum/developing drive unit.
8. Check or replace the drum/developing drive unit and refit all the removed parts.

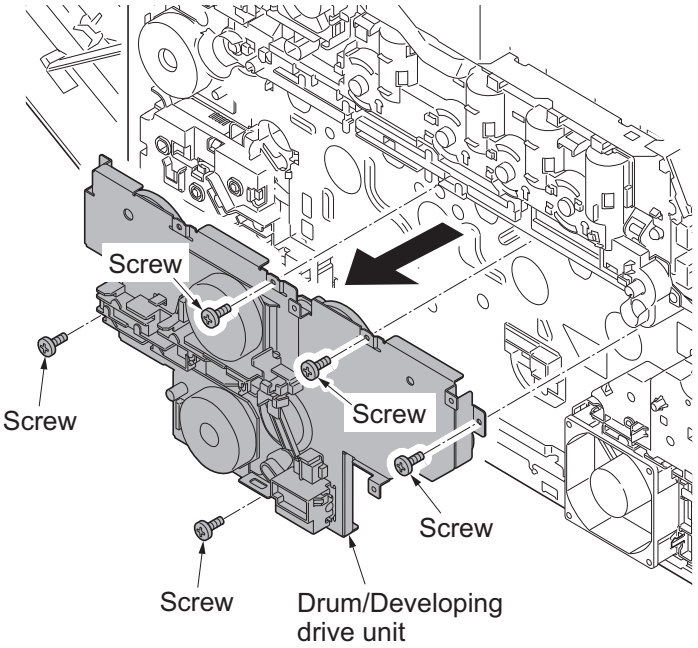

Figure 1-5-57

(3) Detaching and refitting the paper feed drive unit

Procedure

1. Remove the rear upper cover, right upper cover, left upper cover and front cover (see page 1-5-3).
2. Remove the left rear cover, left cover and left lower cover (see page 1-5-9).
3. Remove connector (YC3) from engine PWB.

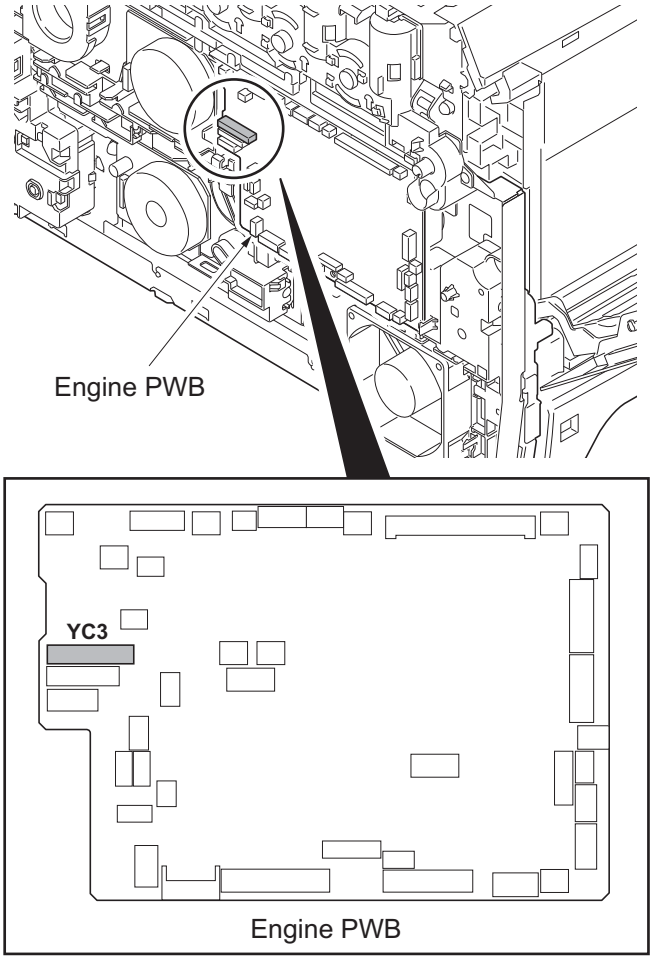

Figure 1-5-58

4. Remove four screws and then remove the paper feed drive unit.
5. Check or replace the paper feed drive unit and refit all the removed parts.

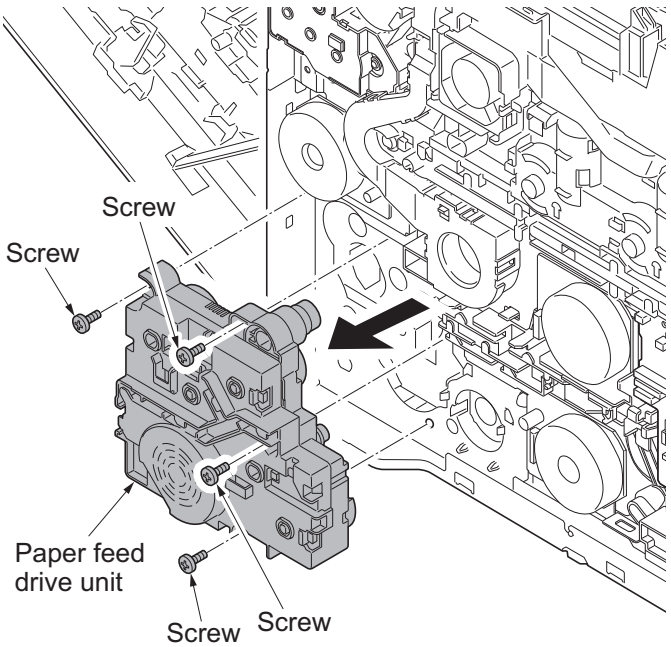

Figure 1-5-59

(4) Detaching and refitting the fuser pressure drive unit

Procedure

1. Remove the fuser unit (see page 1-5-25).
2. Remove the rear upper cover, right upper cover, left upper cover and front cover (see page 1-5-3).
3. Remove the left rear cover and left cover (see page 1-5-9).
4. Remove connector (YC38) from engine PWB.

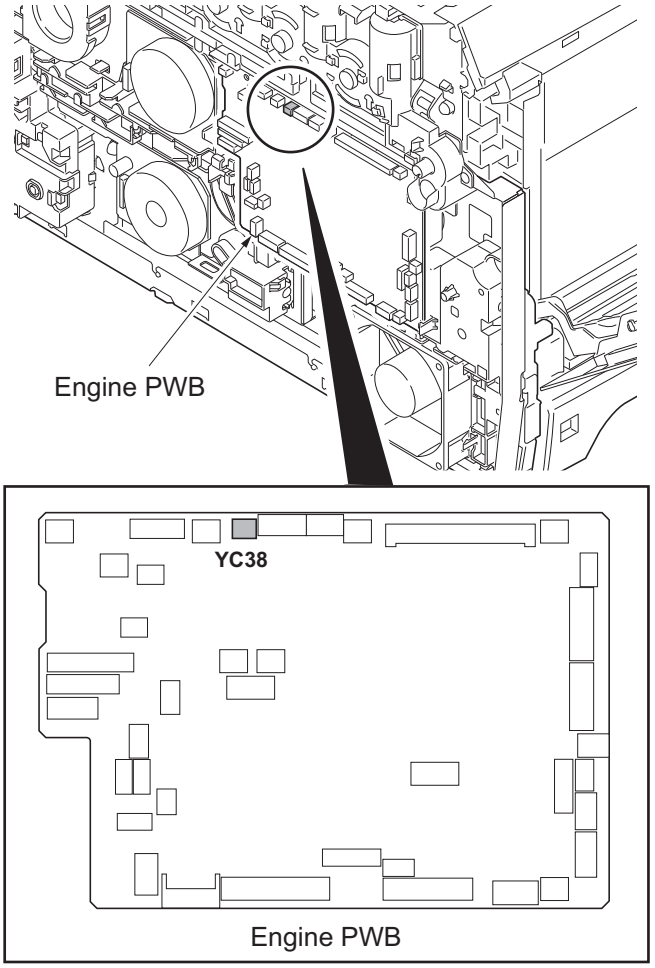

Figure 1-5-60

5. Remove the developing fan unit (see page 1-5-37).
6. Remove three screws.
7. Release two hooks remove the fuser pressure drive unit.
8. Check or replace the fuser pressure drive unit and refit all the removed parts.

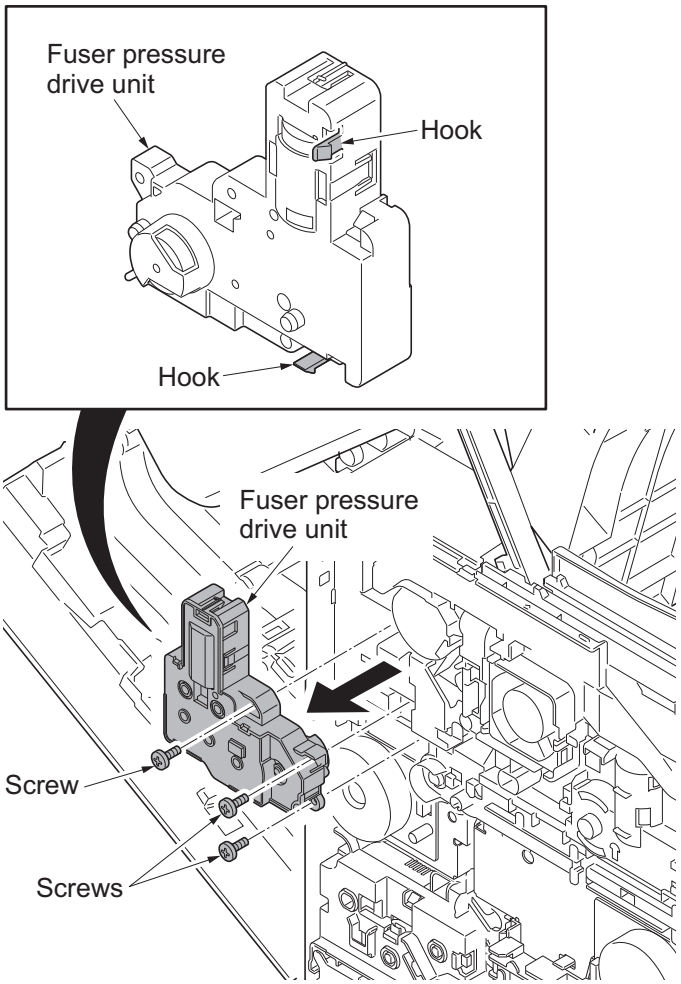

Figure 1-5-61

(5) Detaching and refitting the middle transfer drive unit

Procedure

1. Remove the intermediate transfer unit (see page 1-5-21).
2. Remove the rear upper cover, right upper cover, left upper cover and front cover (see page 1-5-3).
3. Remove the left rear cover and left cover (see page 1-5-9).
4. Remove the fuser pressure drive unit (see page 1-5-40).
5. Remove connector (YC15) from engine PWB.

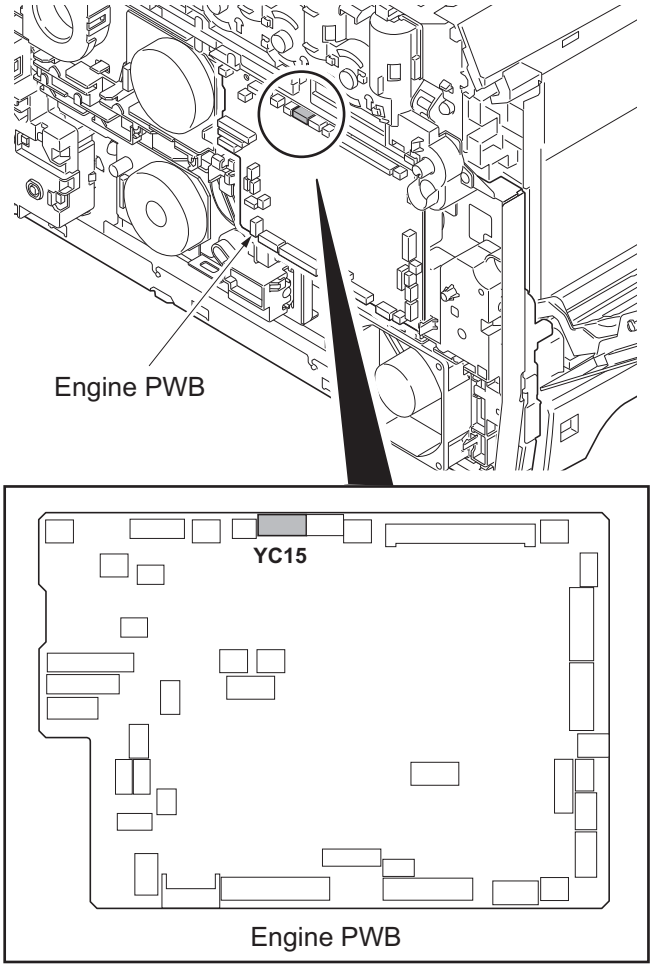

Figure 1-5-62

6. Remove the screw and then remove the ID guide.

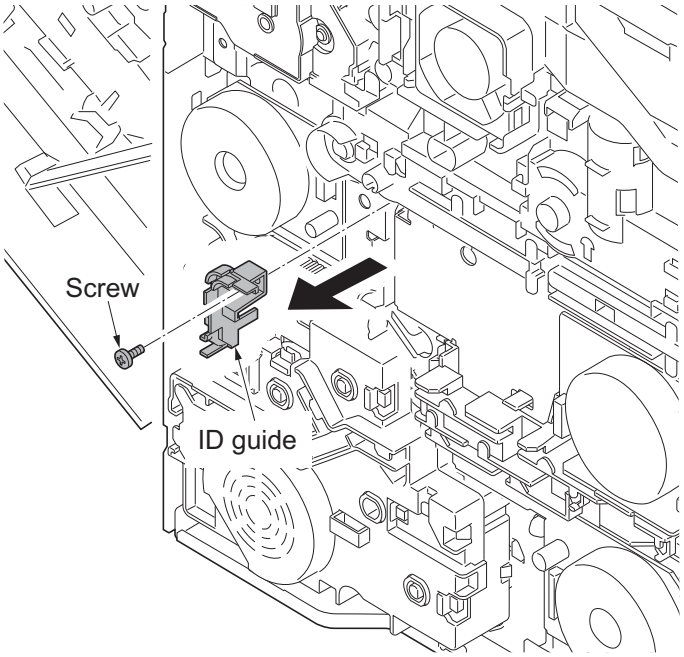

Figure 1-5-63

7. Remove three screws and then remove the middle transfer drive unit.
8. Check or replace the middle transfer drive unit and refit all the removed parts.

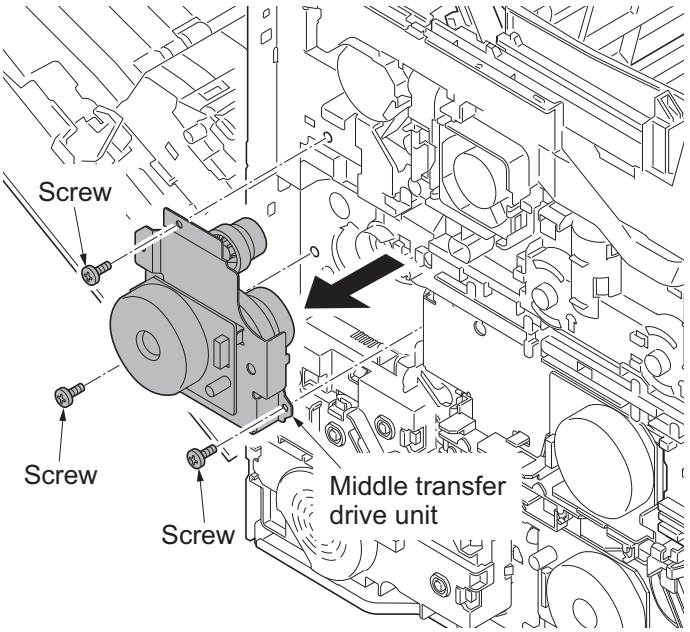

Figure 1-5-64

1-5-10 Optical section

(1) Detaching and refitting the laser scanner unit

Procedure

1. Remove the intermediate transfer unit (see page 1-5-21).
2. Remove drum units (K, M, C, Y) and developing units (K, M, C, Y) (see page 1-5-20, 18).
3. Remove the rear upper cover, right upper cover, left upper cover and front cover (see page 1-5-3).
4. Remove the left rear cover and left cover (see page 1-5-9).
5. Remove two connectors (YC32, YC32) from engine PWB.

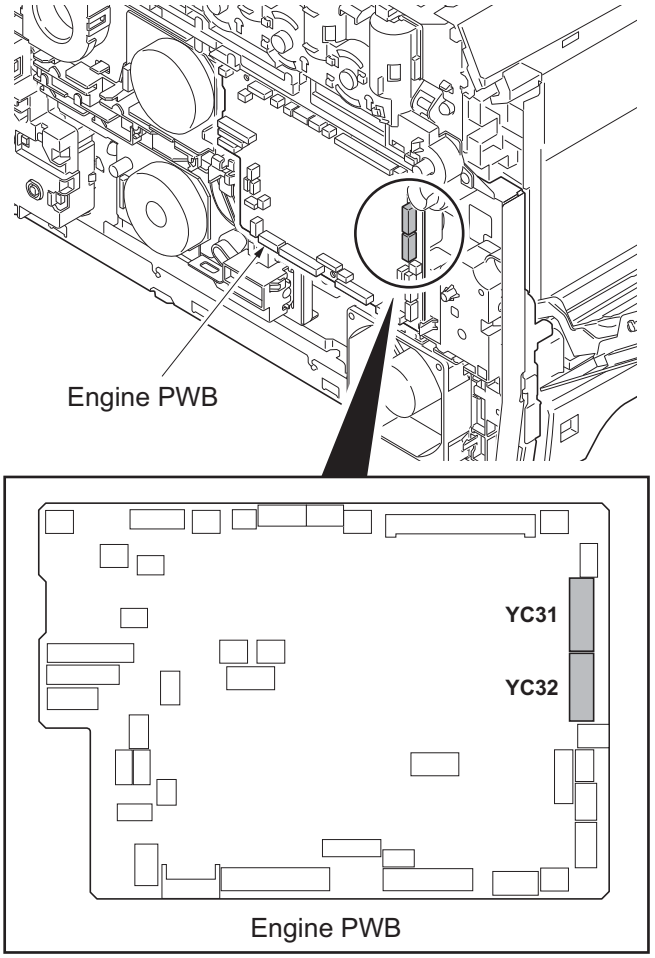

Figure 1-5-65

6. Draw two connectors (YC31, YC32) into the machine inside.

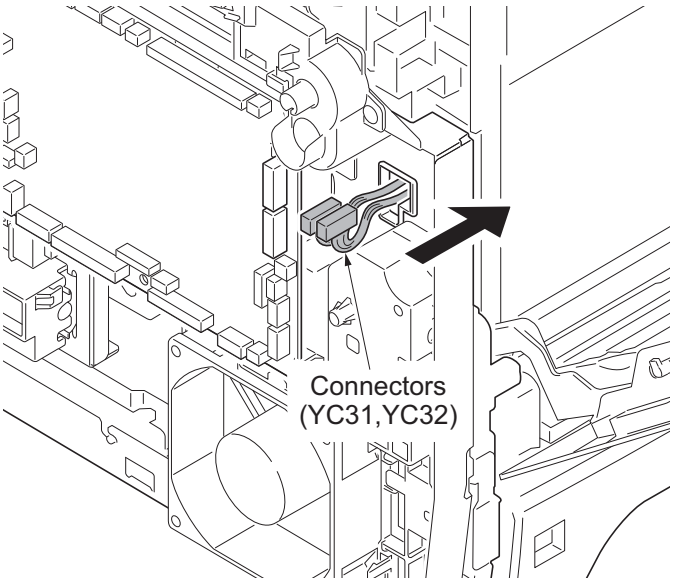

Figure 1-5-66

7. Remove the right rear cover, right cover and right lower cover (see page 1-5-6).
8. Remove the controller shield (see page 1-5-29).
9. Remove two connectors (YC38, YC40) from main PWB.

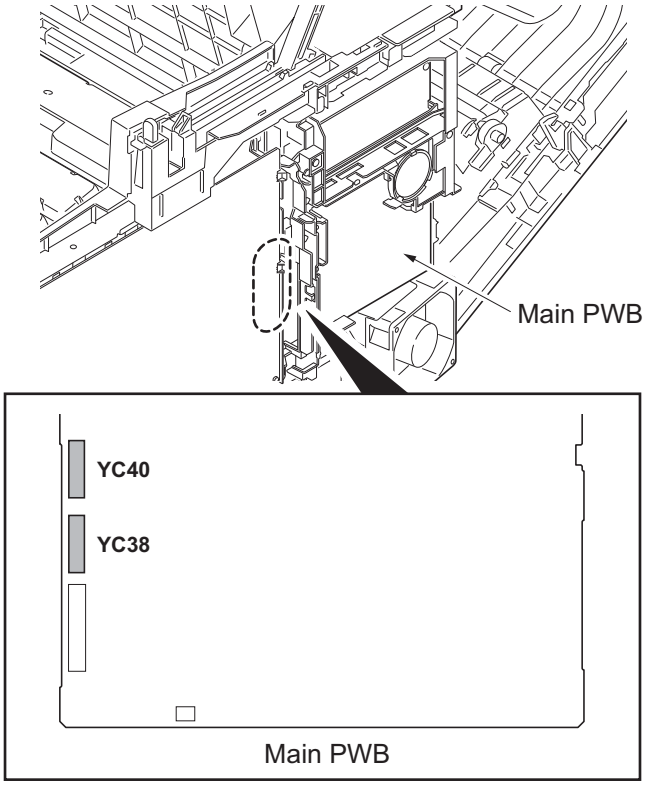

Figure 1-5-67

10. Draw two connectors (YC38, YC40) into the machine inside.

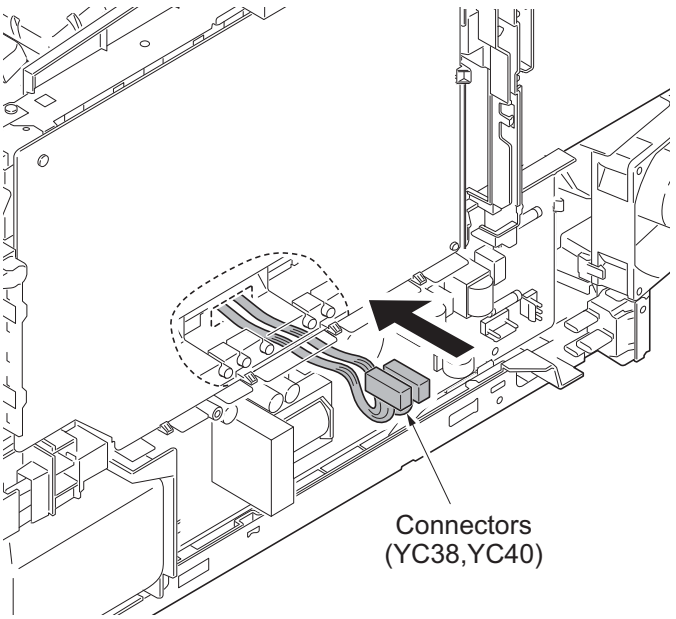

Figure 1-5-68

11. Remove each three screws and then remove laser scanner unit (KM, CY).
12. Check or replace the laser scanner unit and refit all the removed parts.

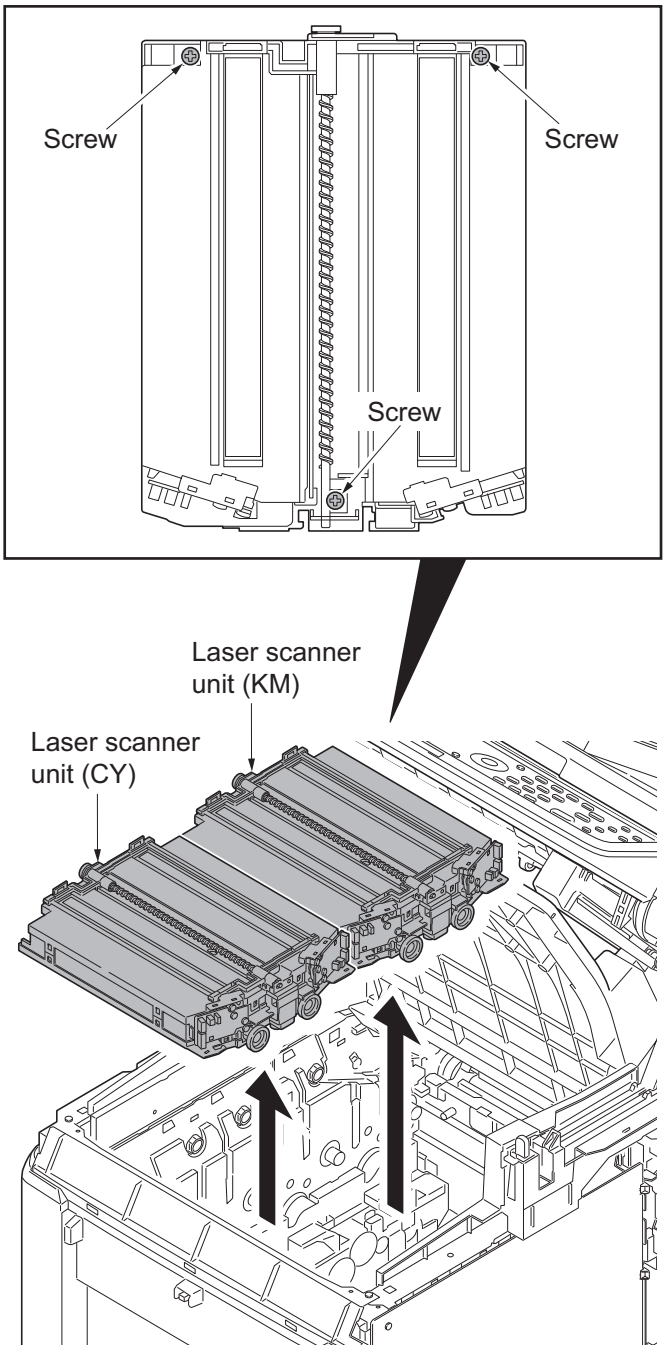

Figure 1-5-69

(2) Detaching and refitting the scanner unit

Procedure

1. Remove the document processor (see page 1-5-51).
2. Remove the connector (YC36) and two FFCs (YC8, YC43) from main PWB.
3. Open the scanner unit.

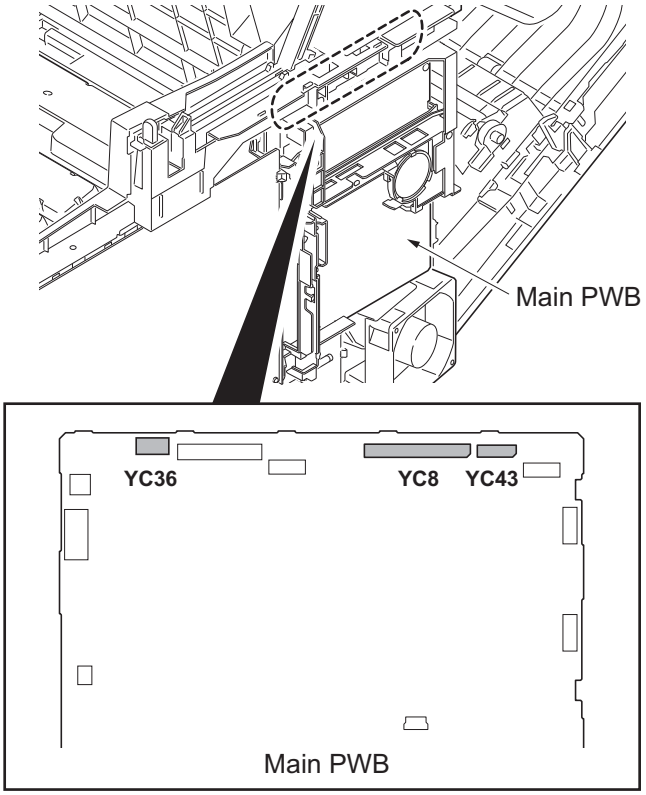

Figure 1-5-70

4. Remove the motor wire, CCD wire and LCD wire from the wire holder.

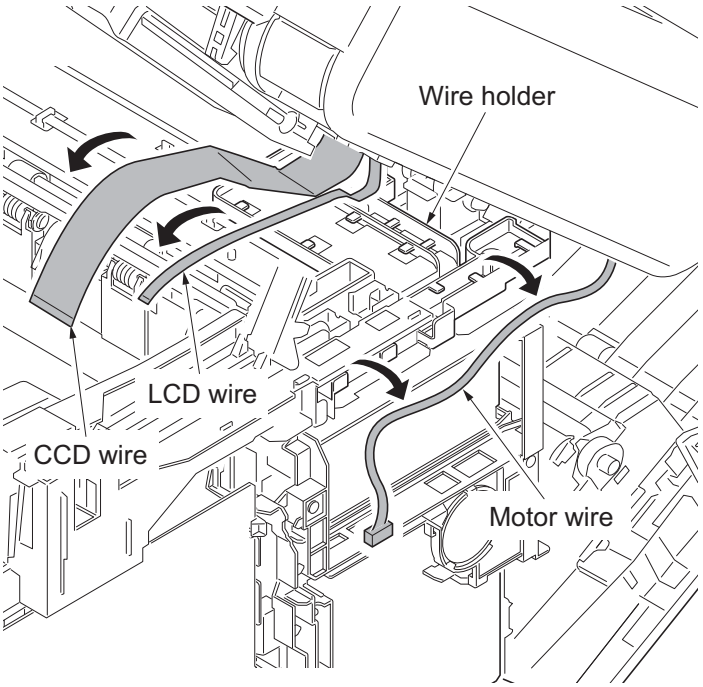

Figure 1-5-71

5. Release each four hooks and then remove left and right rails.

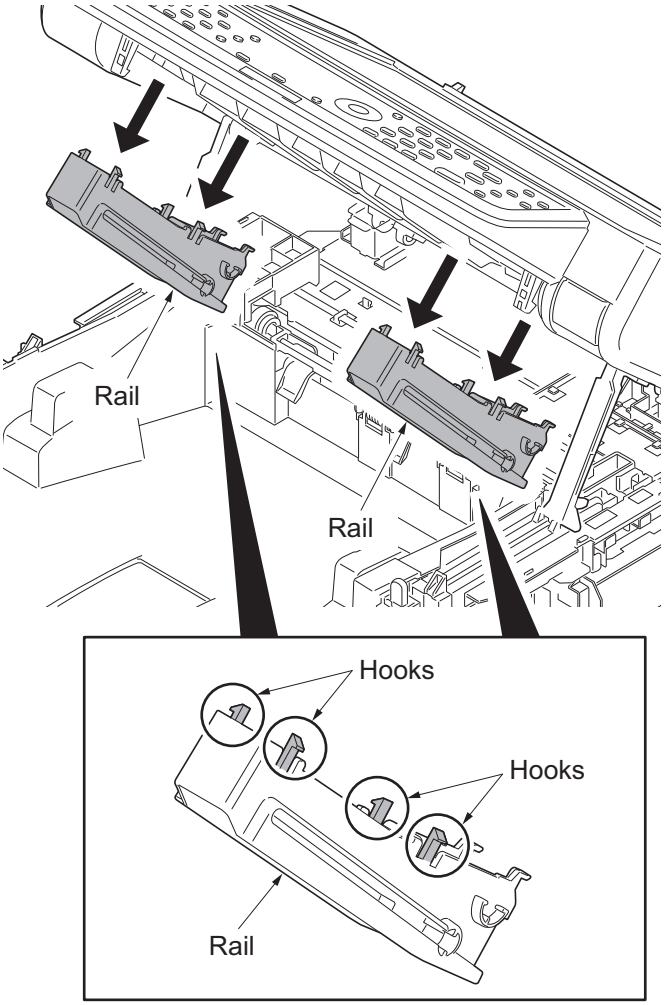

Figure 1-5-72

6. Remove two springs from left and right rails.

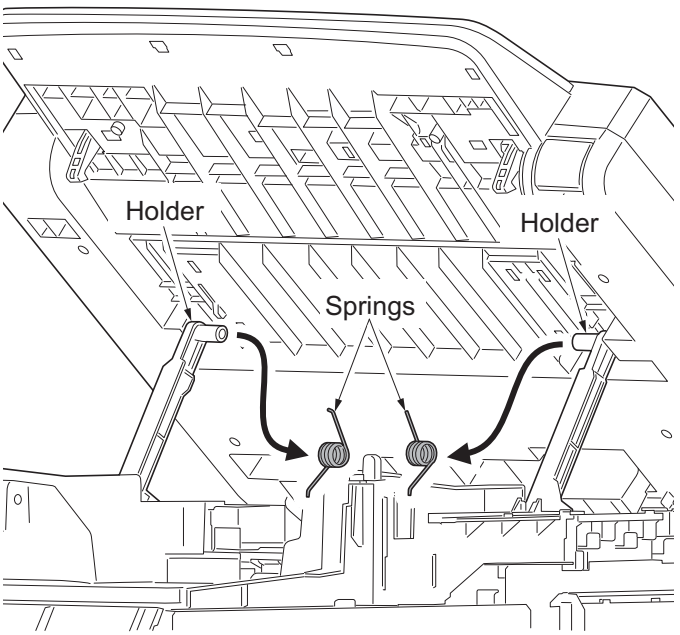

Figure 1-5-73

7. Remove left and right rails from the scanner unit.

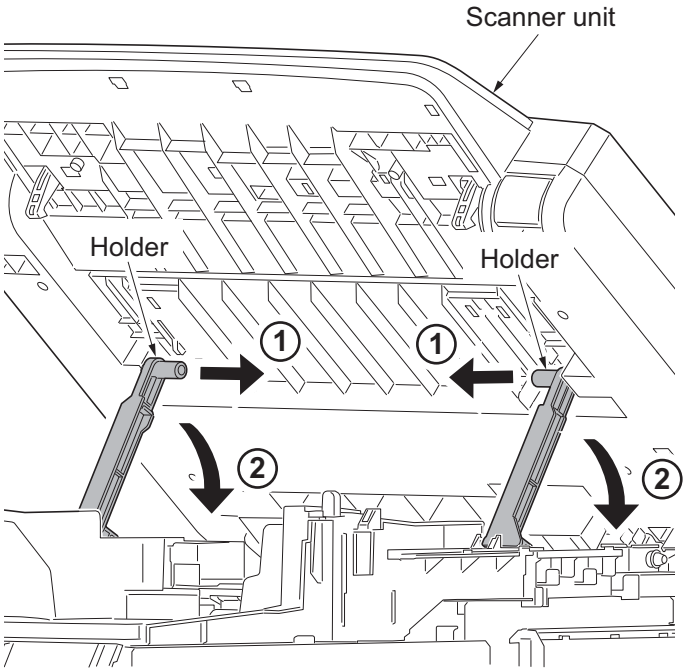

Figure 1-5-74

8. Remove left and right washers and springs and then pull pins out.

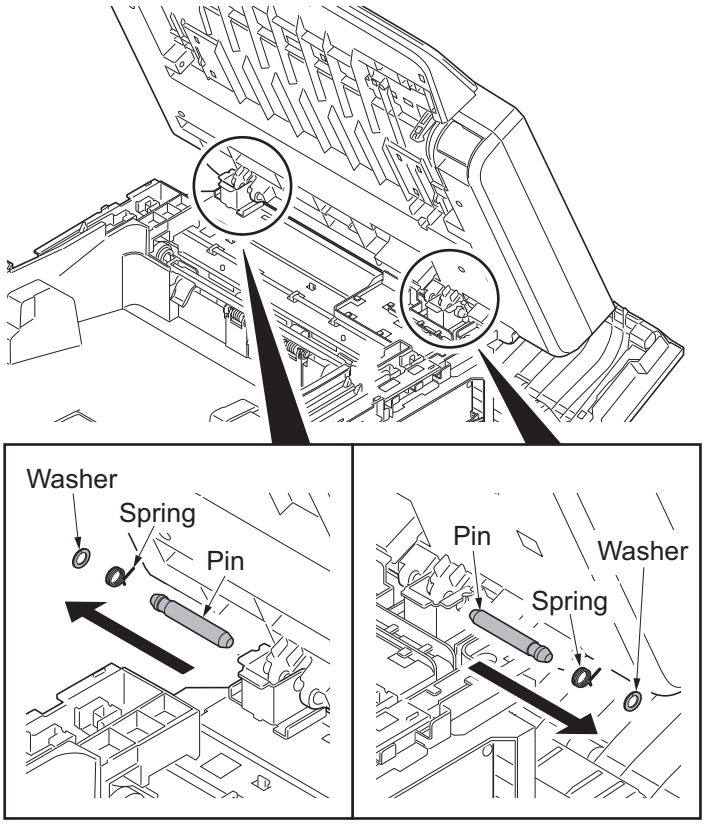

Figure 1-5-75

9. Remove the scanner unit.

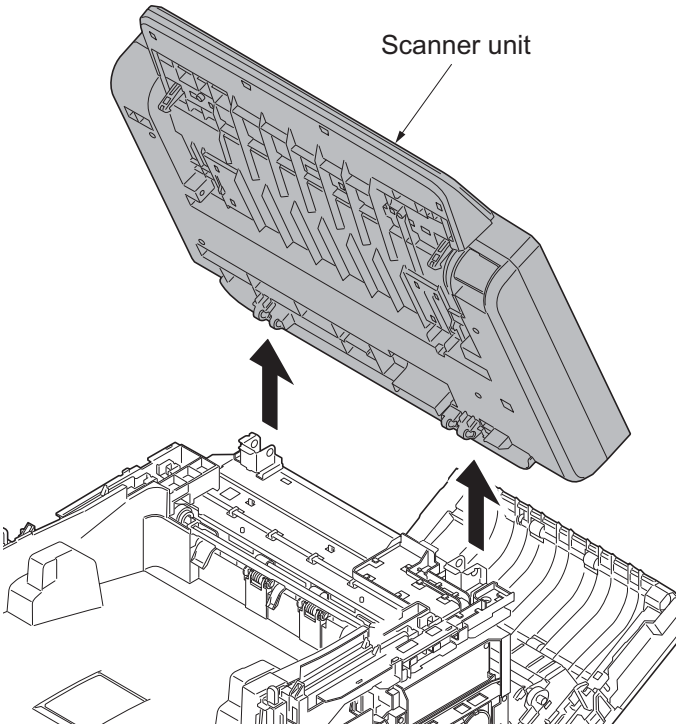

Figure 1-5-76

1-5-11 Document processor

(1) Detaching and refitting the document processor

Procedure

1. Remove the rear upper cover, right upper cover, left upper cover and front cover (see page 1-5-3).
2. Remove left and right pins and then close the top tray.

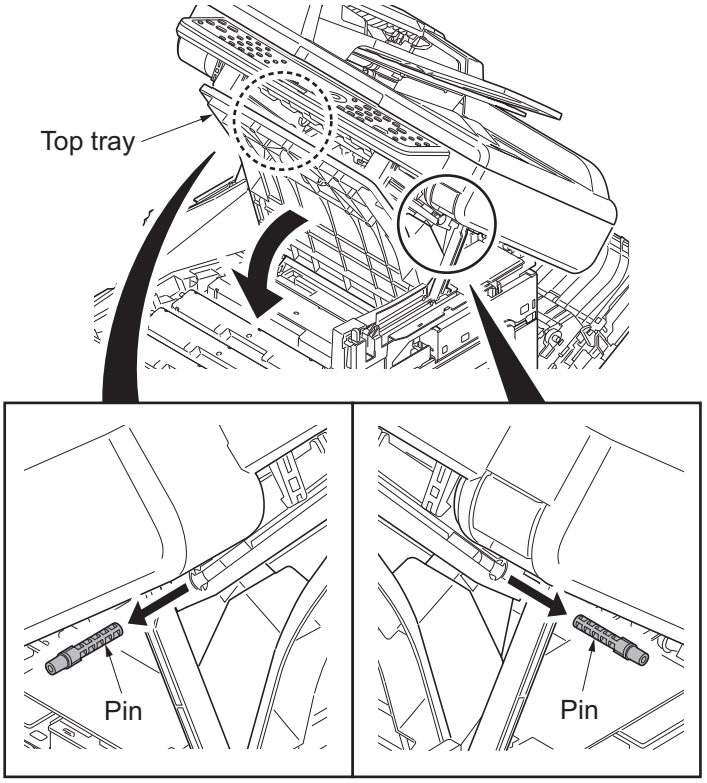

Figure 1-5-77

3. Release four hooks and then remove the upper middle cover.

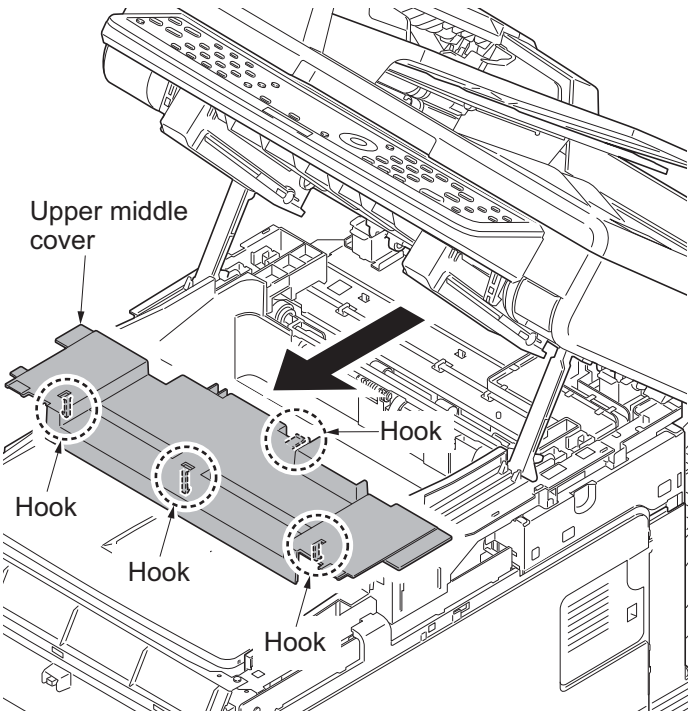

Figure 1-5-78

4. Remove the right rear cover, right cover and right lower cover (see page 1-5-6).
5. Remove the controller shield (see page 1-5-29).
6. Remove connector (YC32) from main PWB.

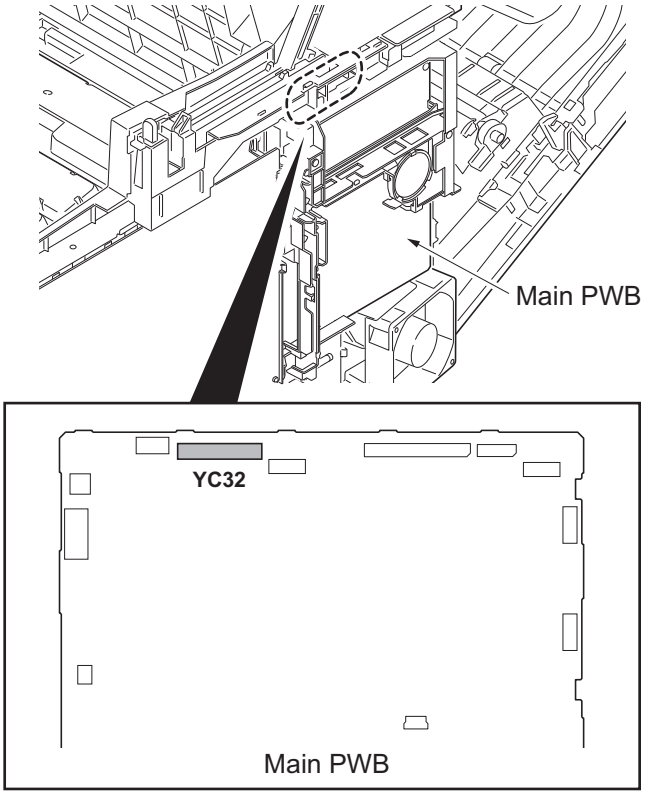

Figure 1-5-79

7. Remove the DP wire and ground wire from wire holder.
8. Close the scanner unit.

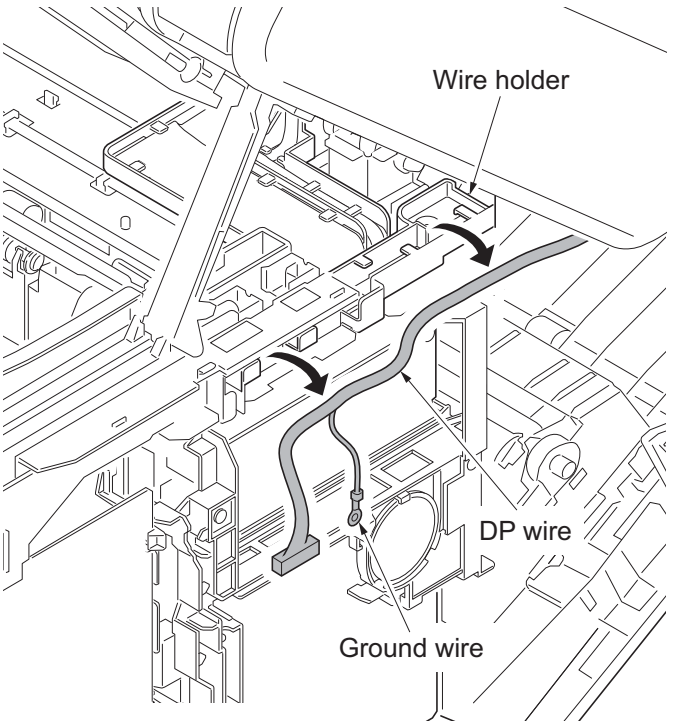

Figure 1-5-80

9. Press the DP lock lever through the hole at the bottom right side of the scanner unit, and open the document processor.

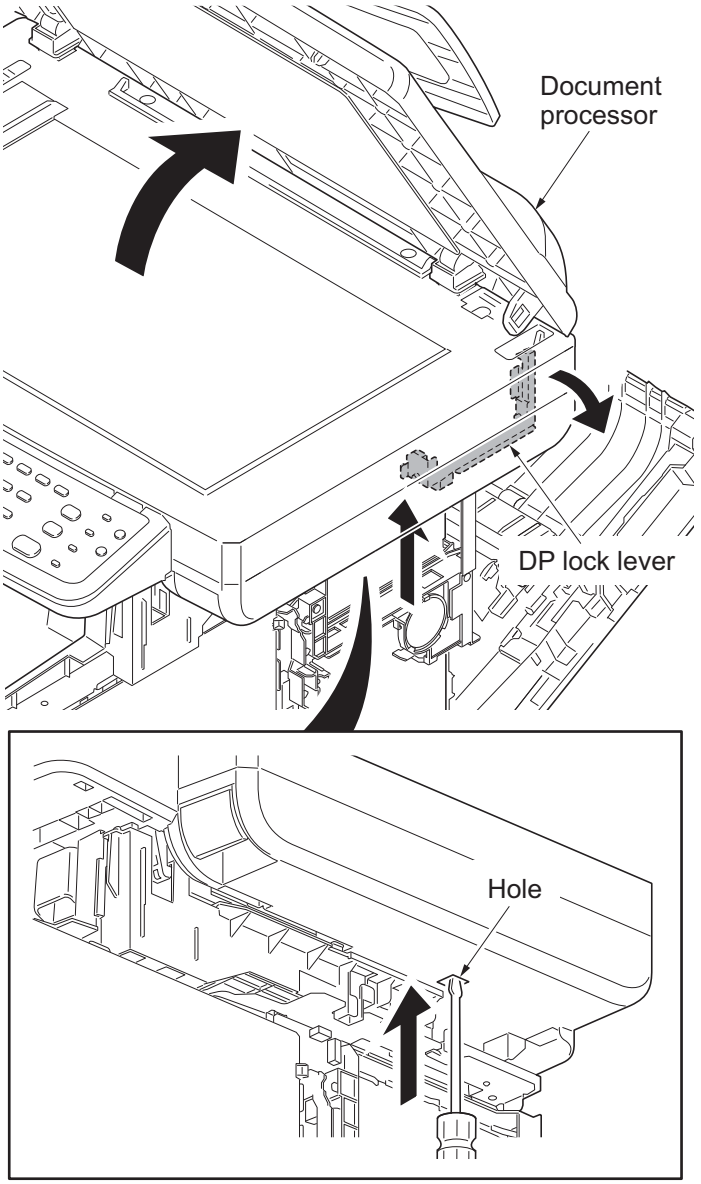

Figure 1-5-81

10. Remove the wire cover.

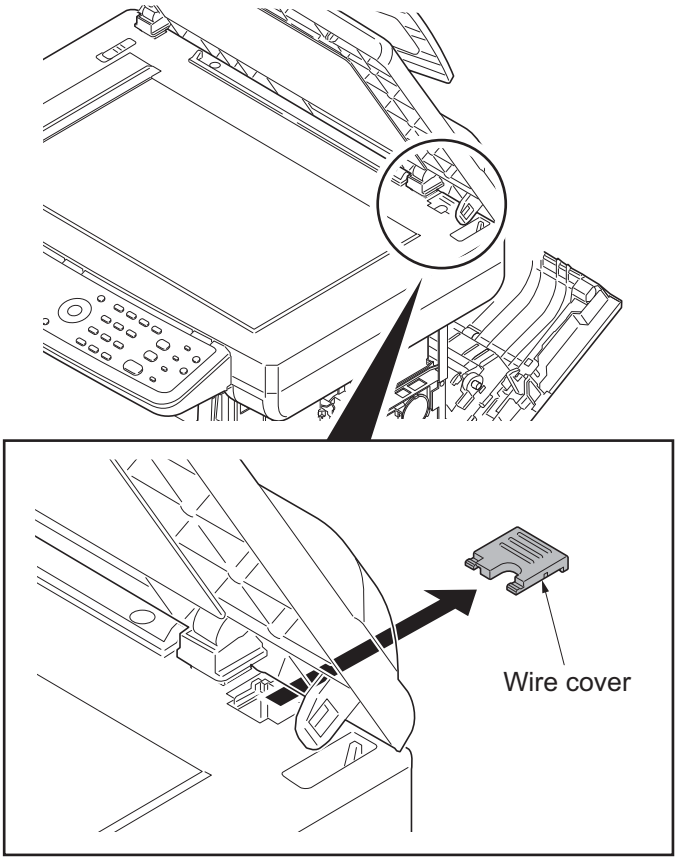

Figure 1-5-82

11. Remove the document processor.

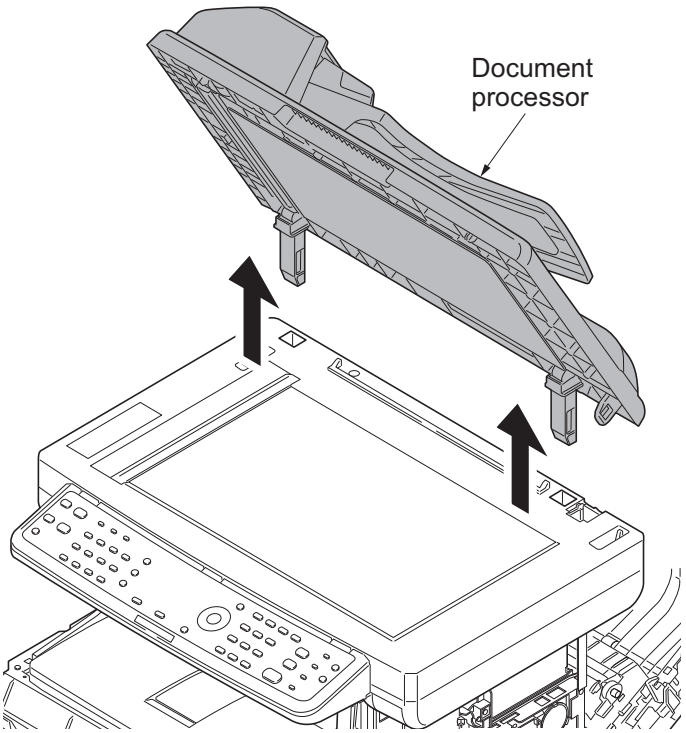

Figure 1-5-83

(2) Detaching and refitting the DP paper feed pulley unit

Procedure

1. Open the DP top cover.
2. Remove the screw.
3. Release three hooks and then remove the DP rear cover.

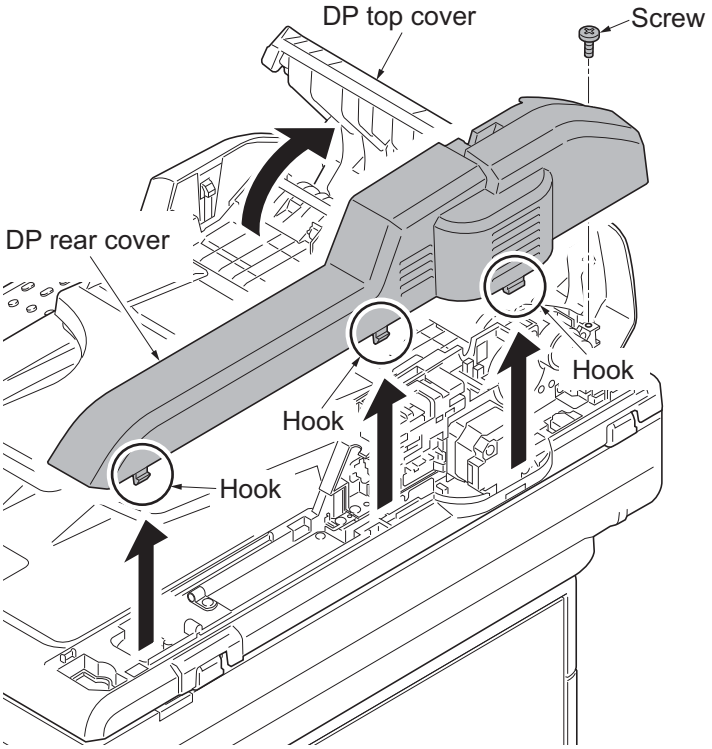

Figure 1-5-84

4. Release two hooks and then remove the DP front cover.

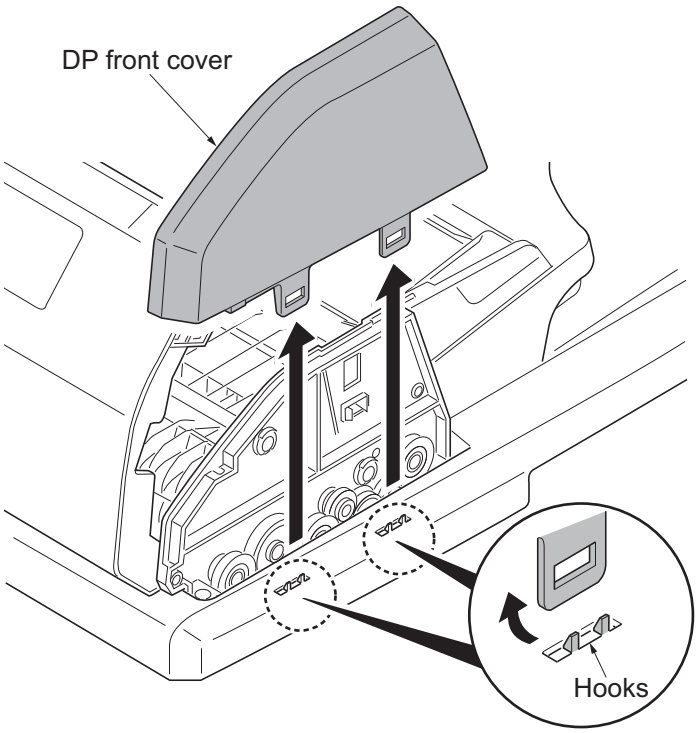

Figure 1-5-85

5. Remove the stop ring and bush.

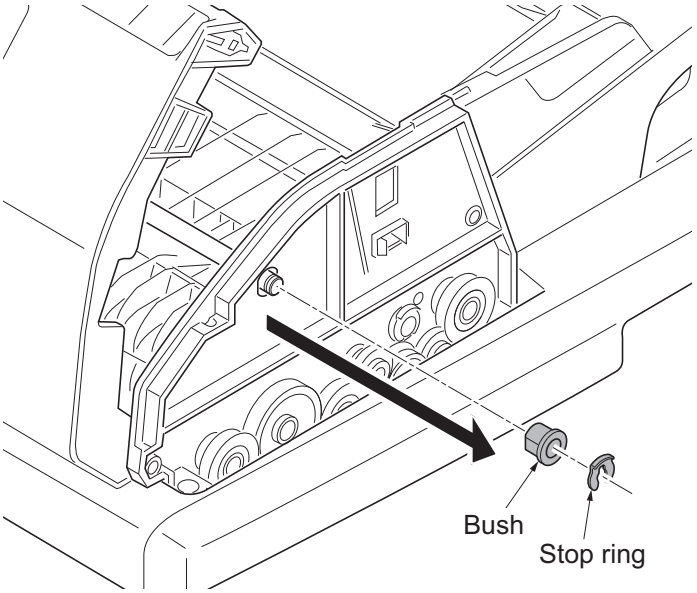

Figure 1-5-86

6. Remove the stop ring A and then remove the DP paper feed clutch from the PF shaft.
7. Remove the stop ring B and then remove the PF collar, spring, spring collar, pin and bush from the PF shaft.

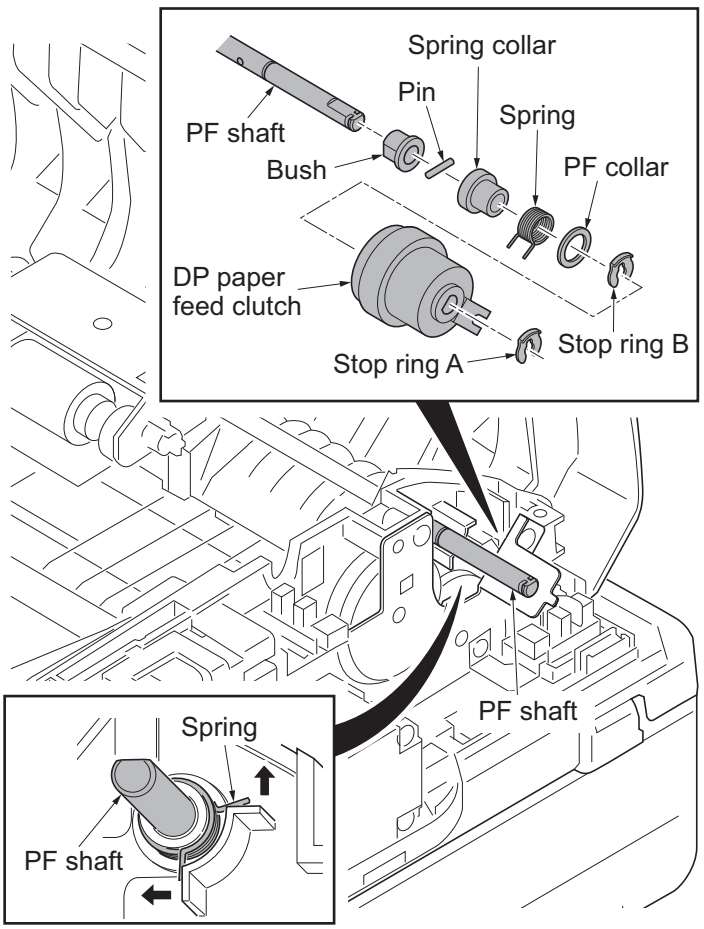

Figure 1-5-87

8. Remove the DP forwarding pulley unit.

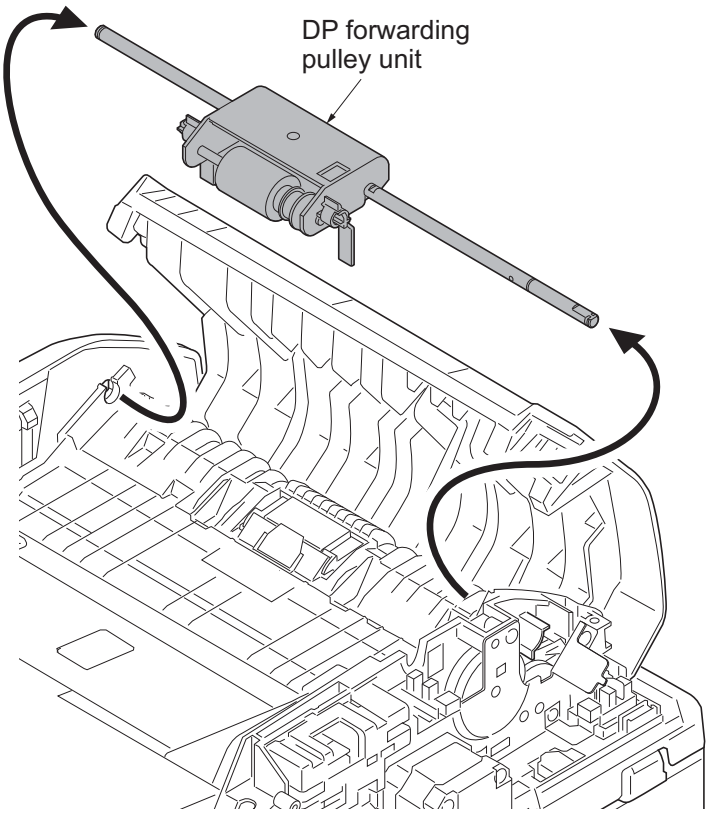

Figure 1-5-88

9. Remove the stop ring A.
10. Remove the DP feed pulley unit from the LF holder.
11. Remove the stop ring B.
12. Remove the PF collar, spring, spring collar and pin from the PF shaft.
13. Remove the DP feed pulley, one-way clutch, PF pulley gear and pin from the PF shaft.

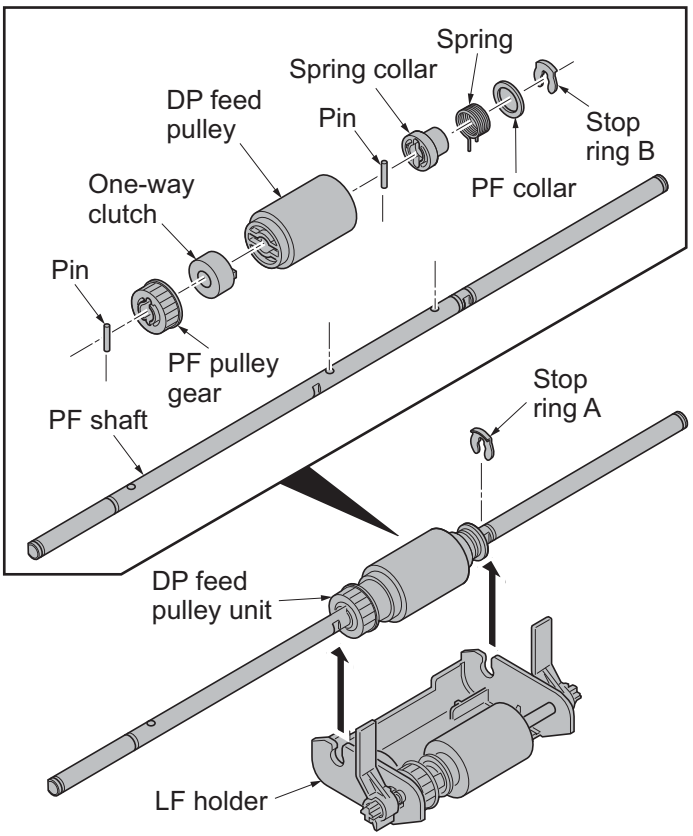

Figure 1-5-89

14. Remove the PF stopper from the LF holder.
15. Remove the stop ring.
16. Pull out the LF shaft and then remove the LF gear 18, joint gear and DP forwarding pulley.
17. Check or replace the DP feed pulley and DP forwarding pulley, and refit all the removed parts.

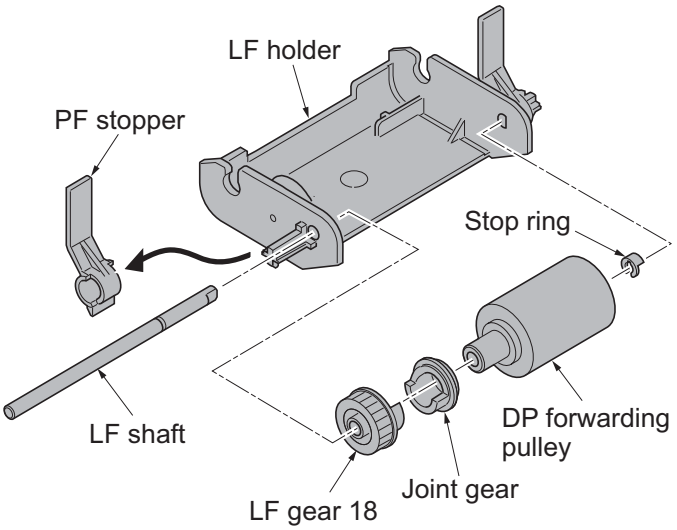

Figure 1-5-90

(3) Detaching and refitting the DP separation pad

Procedure

1. Remove the DP paper feed pulley unit (see page 1-5-55).
2. Remove the DP separation pad.
3. Check or replace the DP separation pad and refit all the removed parts.

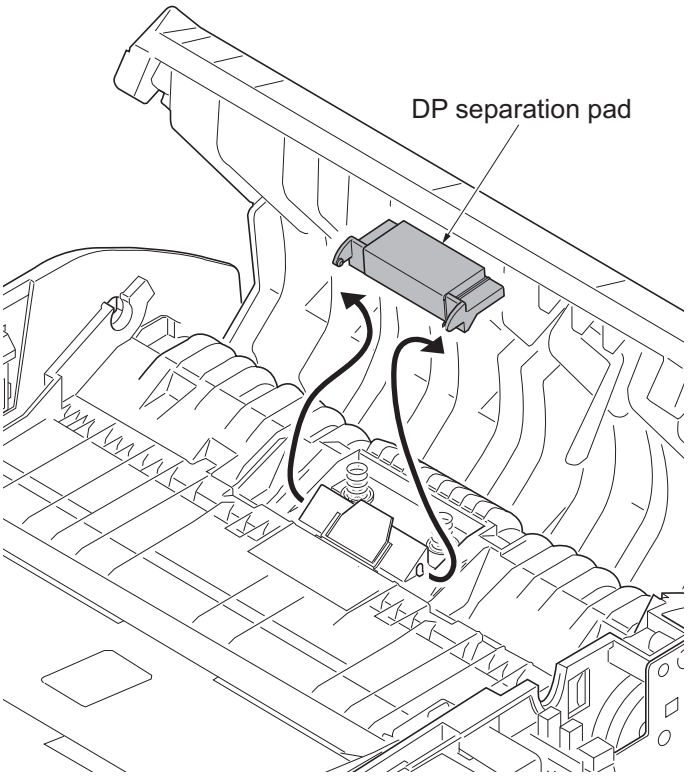

Figure 1-5-91

(4) Detaching and refitting the DP drive PWB

Procedure

1. Remove the DP rear cover (see page 1-5-55).
2. Remove all connectors from DP drive PWB.
3. Remove the screw and then remove the DP drive PWB.
4. Check or replace the DP drive PWB and refit all the removed parts.

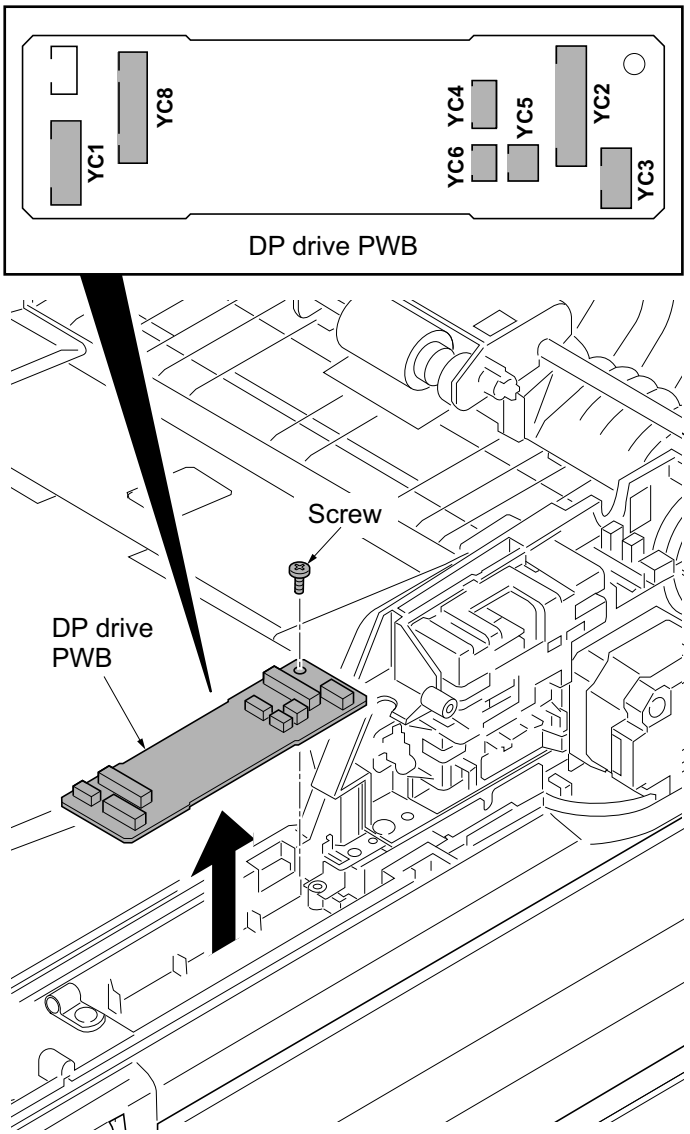

Figure 1-5-92

1-5-12 Others

(1) Detaching and refitting the paper conveying unit

Procedure

1. Open the rear cover.
2. Remove left and right straps.

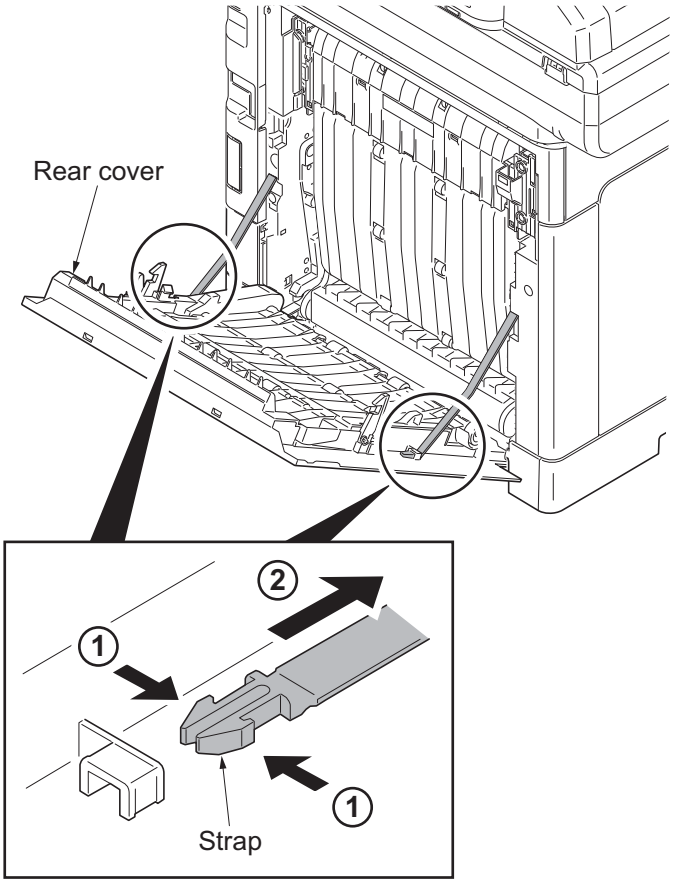

Figure 1-5-93

3. Remove the rear cover unit.

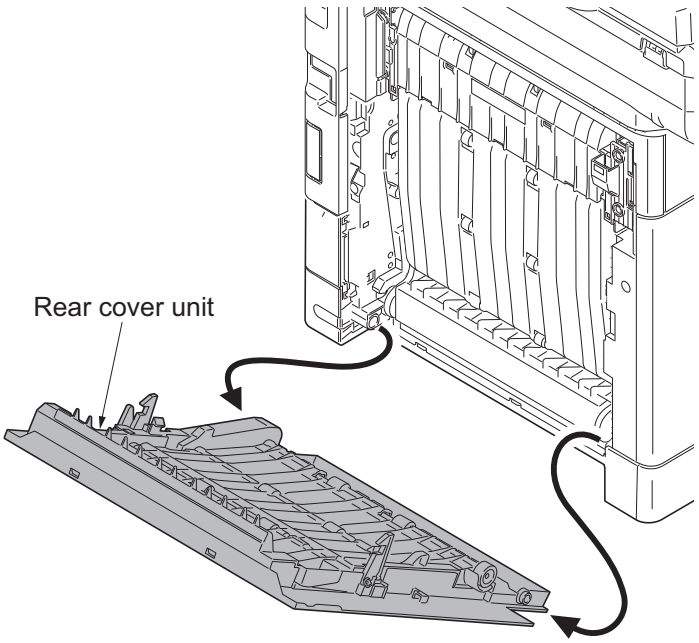

Figure 1-5-94

4. Remove the paper conveying unit.

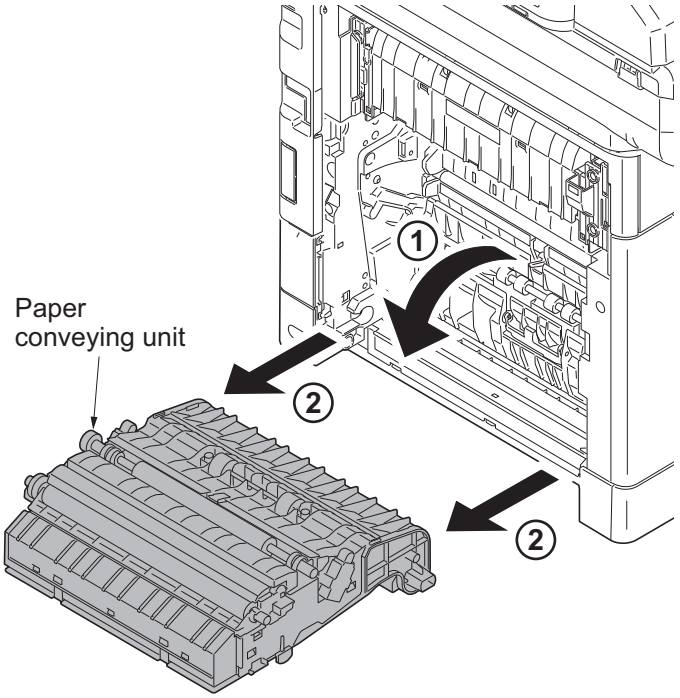

Figure 1-5-95

(2) Detaching and refitting the operation panel

Procedure

1. Release four hooks and then remove the operation panel.
2. Remove the FFC from connector.
3. Check or replace the operation panel and refit all the removed parts.

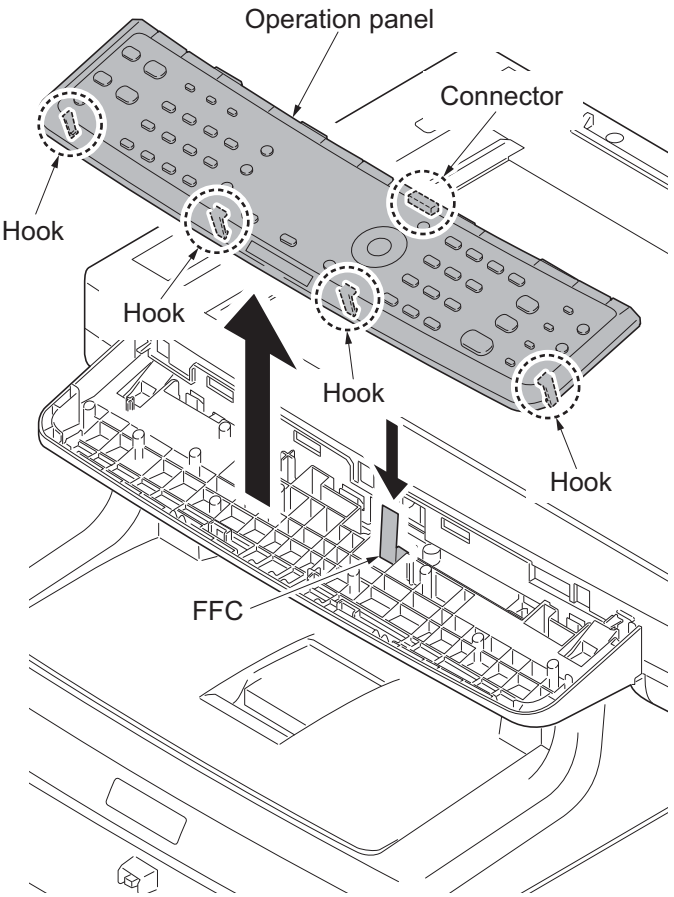

Figure 1-5-96

(3) Direction of installing the principal fan motors

When detaching or refitting the fan motors, be careful of the airflow direction (intake or exhaust).

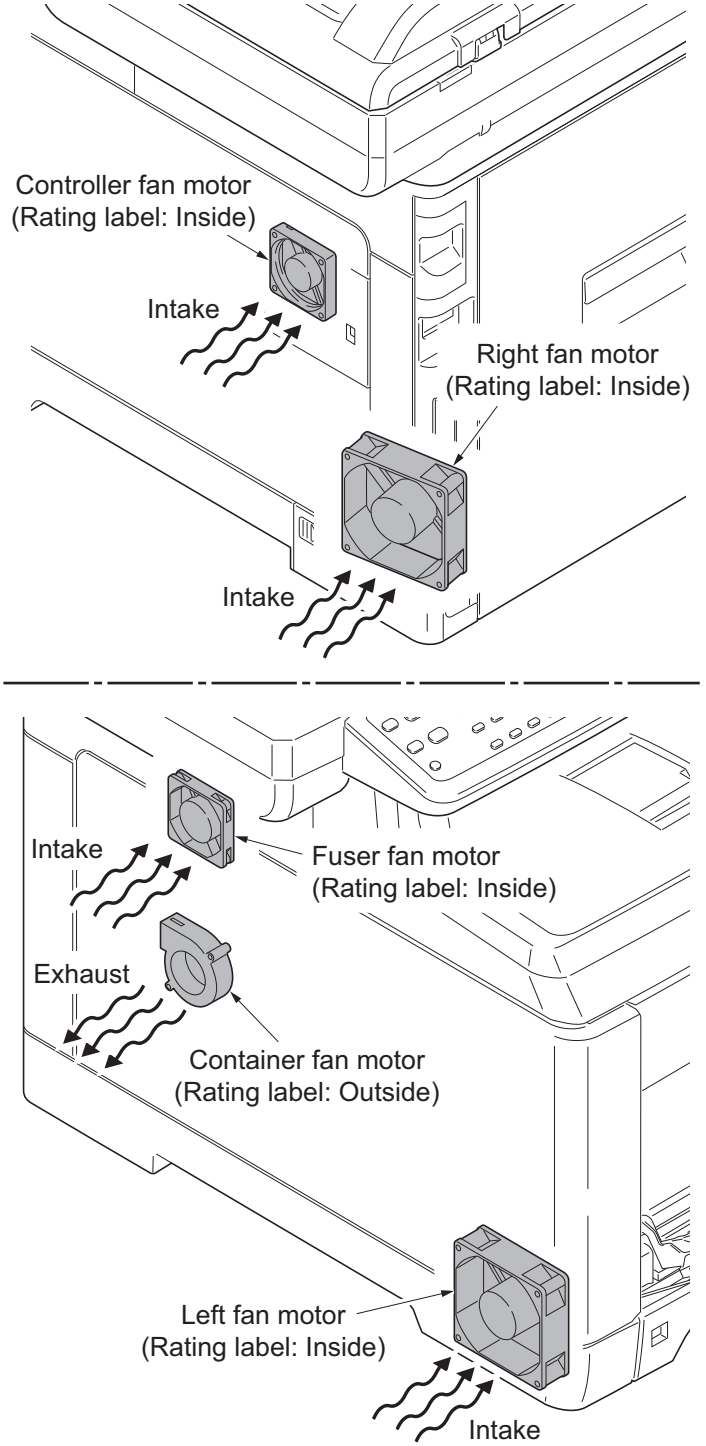

Figure 1-5-97

1-6-1 Upgrading the firmware

Follow the procedure below to upgrade the firmware of main PWB (main controller and scanner), engine PWB, FAX control PWB*, optional language, optional paper feeder and color table.

Preparation

Extract the file that has the download firmware and put them in the USB Memory.

Procedure

1. Turn ON the main power switch and confirm if the screen shows “Ready to print” then, turn OFF the main power switch.
2. Insert USB memory that has the firmware in the USB memory slot.
3. Turn ON the main power switch.
4. About 40 seconds later, “FW-Update” will be displayed and blinking the data LED (this shows to start the download).
5. Display the software that now upgrading.

   “FW-Update [CTRL]”
   “FW-Update [ENGIN]”
   “FW-Update [PF1]”
   “FW-Update [PF2]”
   “FW-Update [SCAN]”
   “FW-Update [FAX]” *
   “FW-Update [OPT]”
   “FW-Update [CLT]”

6. Display the completion of the upgrade (Data LED is ON condition).
7. ROM version is confirmed by the content of the display.
8. Turn OFF the main power switch and remove the USB memory.

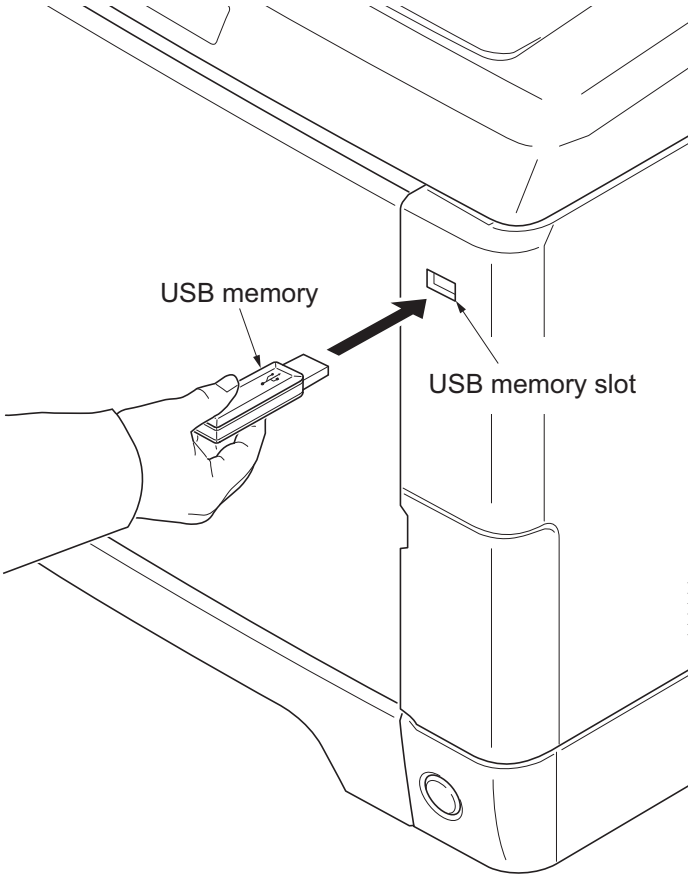

Figure 1-6-1

*: 4 in 1 model (with FAX) only.

1-6-2 Remarks on engine PWB replacement

When replacing the engine PWB, remove the EEPROM (U1) from the engine PWB that has been removed and then reattach it to the new engine PWB.

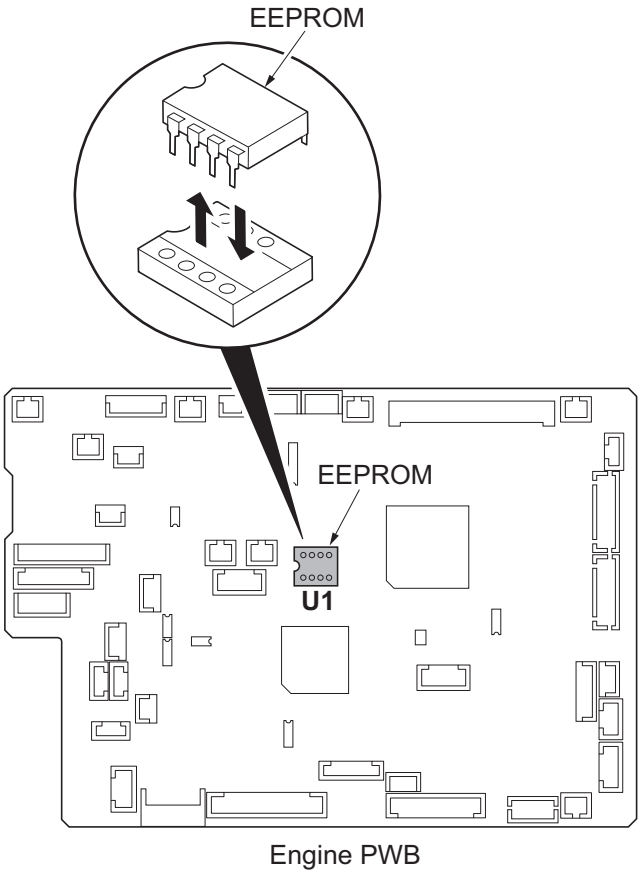

Figure 1-6-2

2-1-1 Paper feed/conveying section

Paper feed/conveying section consists of the paper feed unit that feeds paper from the cassette and the MP tray paper feed unit that feeds paper from the MP tray, and the paper conveying section that conveys the fed paper to the transfer/separation section.

(1) Cassette paper feed section

The cassette can contain 250 sheets. The sheet from the cassette is pulled out by rotation of the pickup roller and sent to the paper conveying section by rotation of the paper feed roller. Also the retard roller prevents multiple feeding of paper.

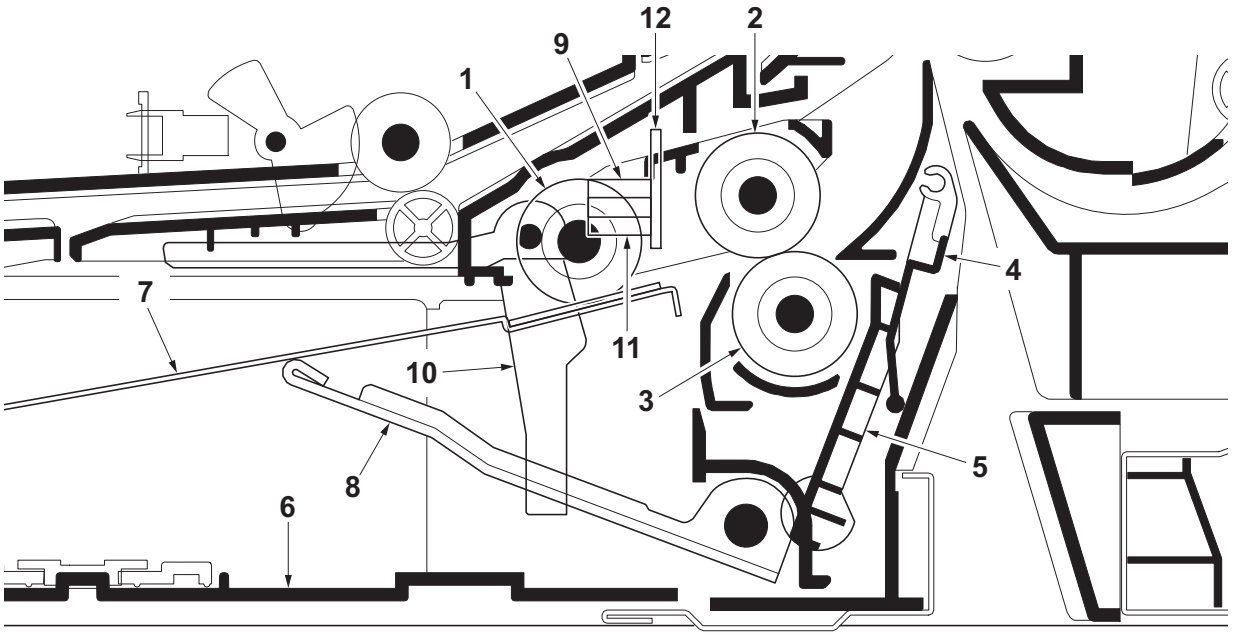

Figure 2-1-1 Cassette paper feed section

1. Pickup roller
2. Paper feed roller
3. Retard roller
4. Retard cover
5. Paper hook
6. Cassette base
7. Bottom plate
8. Lift work plate
9. Paper sensor (PS)
10. Actuator (paper sensor)
11. Lift sensor (LS)
12. Cassette PWB (CPWB)

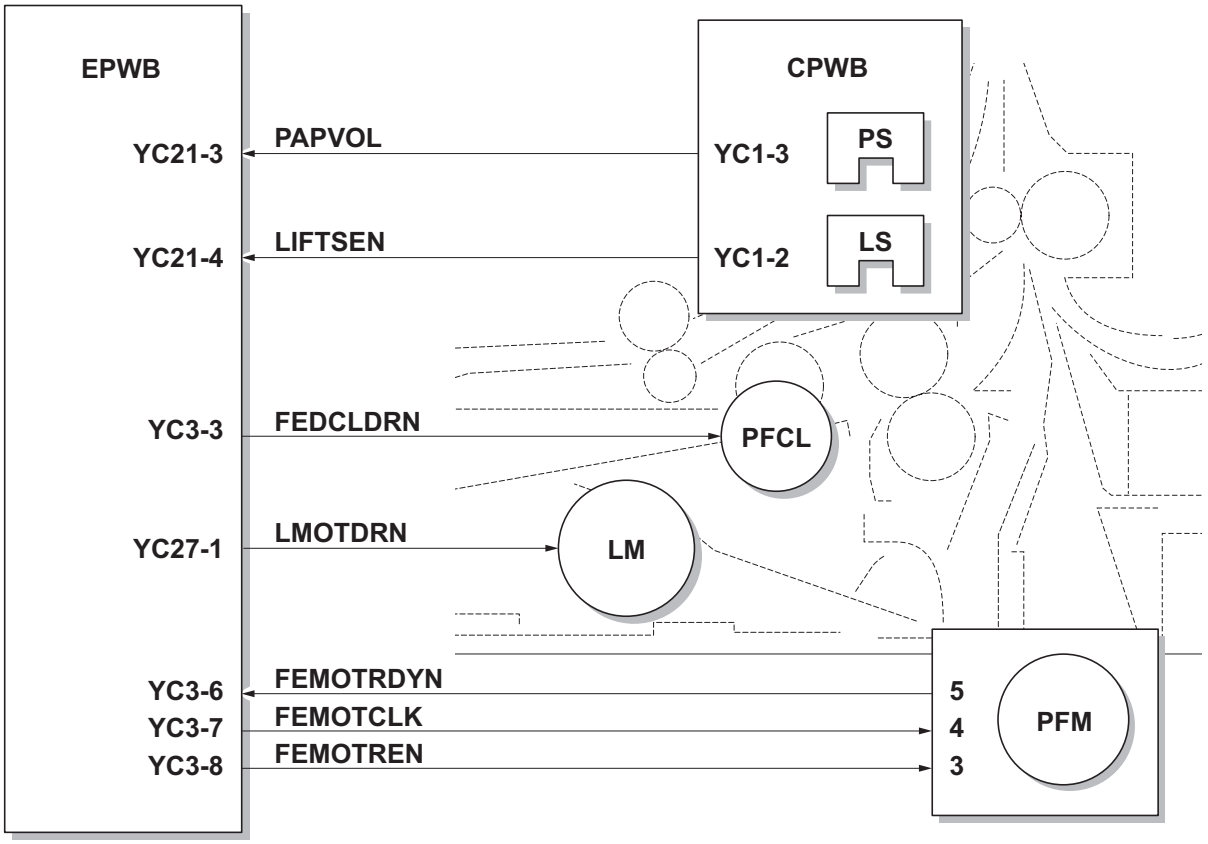

Figure 2-1-2 Cassette paper feed section block diagram

(2) MP tray paper feed section

The MP tray can contain 50 sheets. Feeding from the MP tray is performed by the rotation of the MP paper feed roller. Also, function of the MPF separation pad prevents paper from multiple feeding.

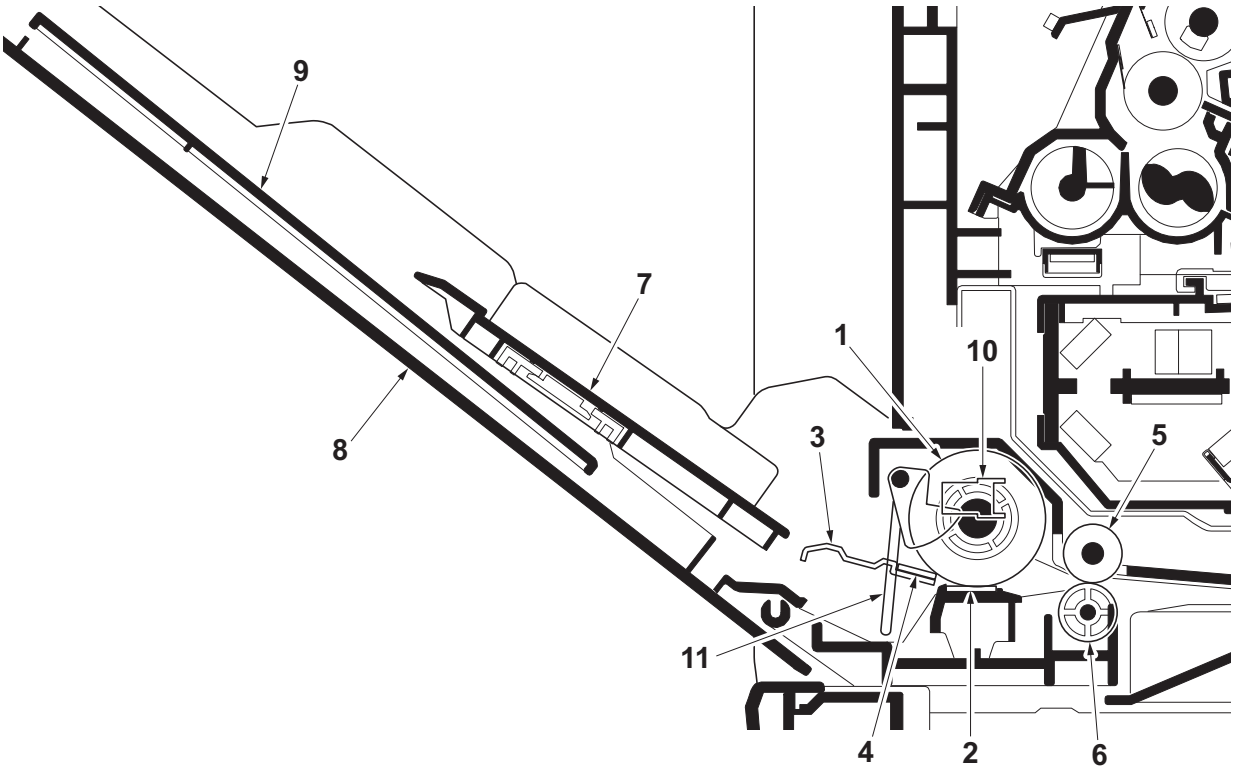

Figure 2-1-3 MP tray paper feed section

1. MP paper feed roller
2. MPF separation pad
3. MPF bottom plate
4. Friction pad
5. MPF feed roller
6. Feed pulley
7. MPF base
8. MPF cover
9. MPF tray
10. MP paper sensor (MPPS)
11. Actuator (MP paper sensor)

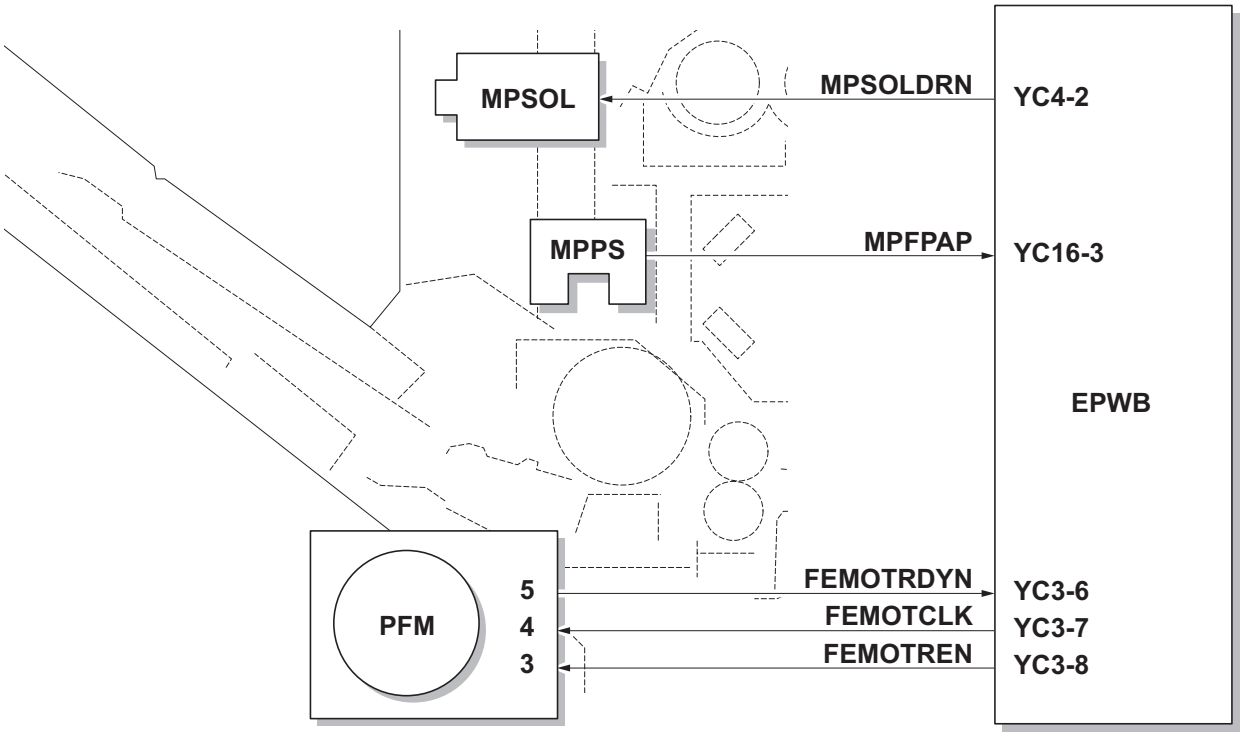

Figure 2-1-4 MP tray paper feed section block diagram

(3) Paper conveying section

The paper conveying section conveys paper to the transfer/separation section as paper feeding from the cassette or MP tray, or as paper refeeding for duplex printing. Paper by feeding is conveyed by the middle roller to the position where the registration sensor (RS) is turned on, and then sent to the transfer/separation section by the front registration roller and rear registration roller.

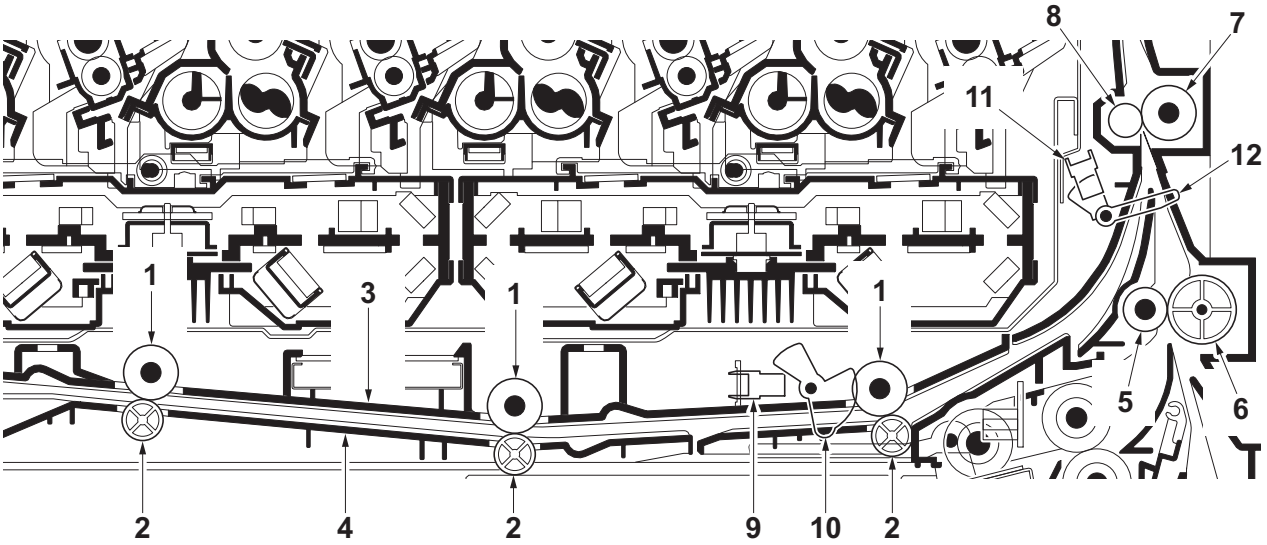

Figure 2-1-5 Paper conveying section

1. MPF feed rollers
2. Feed pulleys
3. MPF feed upper guide
4. MPF feed lower guide
5. Middle roller
6. Middle pulley
7. Front registration roller
8. Rear registration roller
9. MP feed sensor (MPFS)
10. Actuator (MP feed sensor)
11. Registration sensor (RS)
12. Actuator (registration sensor)

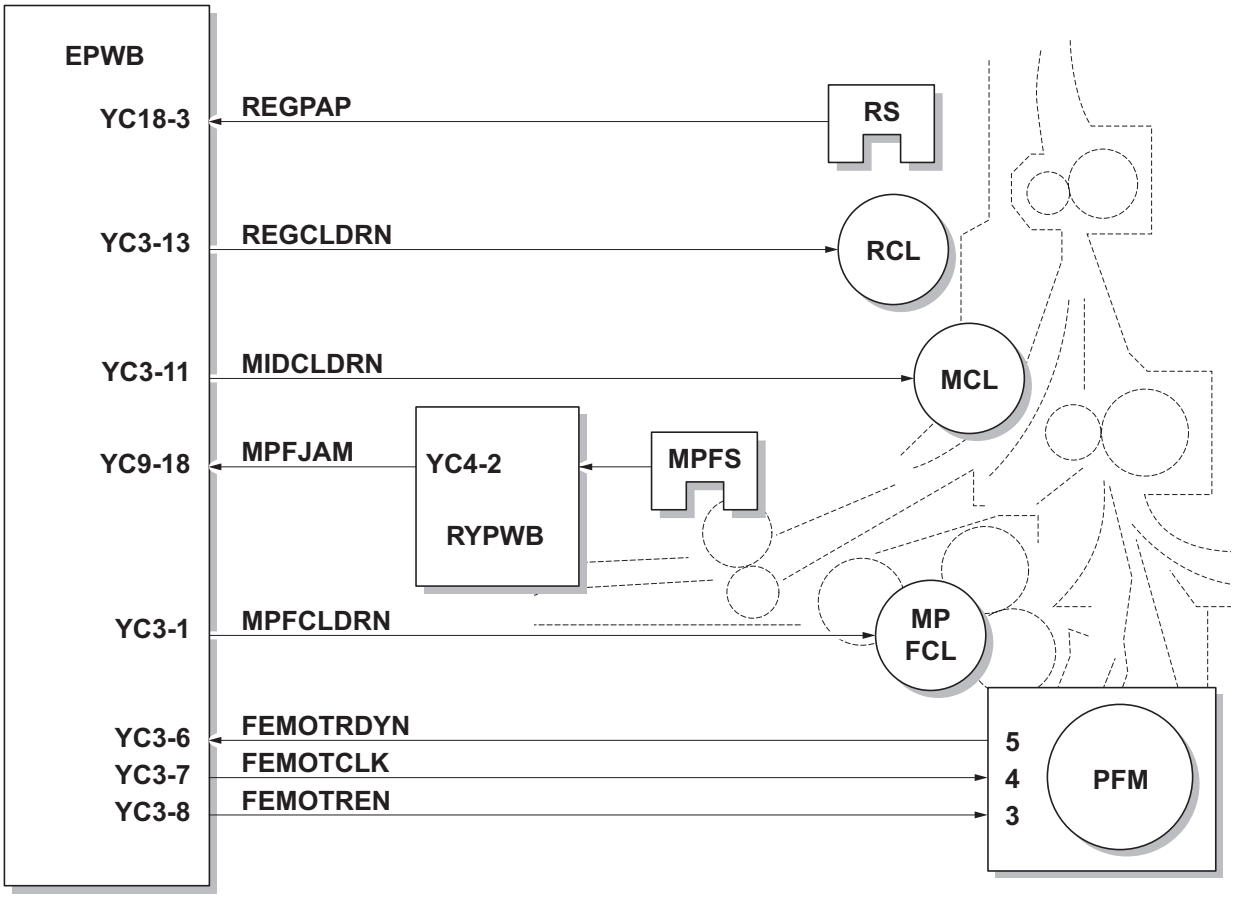

Figure 2-1-6 Paper conveying section block diagram

2-1-2 Drum section

The drum section consists of the drum, the charger roller unit, and the cleaning unit, and the drum surface is uniformly charged in preparation for formation of residual image by laser beam.
After transfer is complete, toner remaining on the drum surface is chipped off with the cleaning blade and is collected to the waste toner box with the drum screw. The cleaning lamp (CL) consists of LEDs and removes residual charge on the drum before main charging.
.

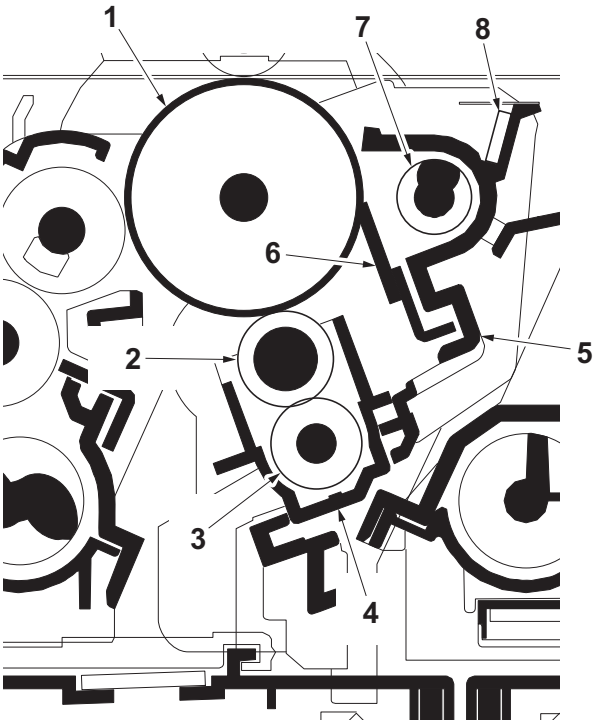

Figure 2-1-7 Drum section

1. Drum
2. Charger roller
3. Charger cleaning roller
4. Charger case
5. Drum frame
6. Cleaning blade
7. Drum screw
8. Cleaning lamp (CL)

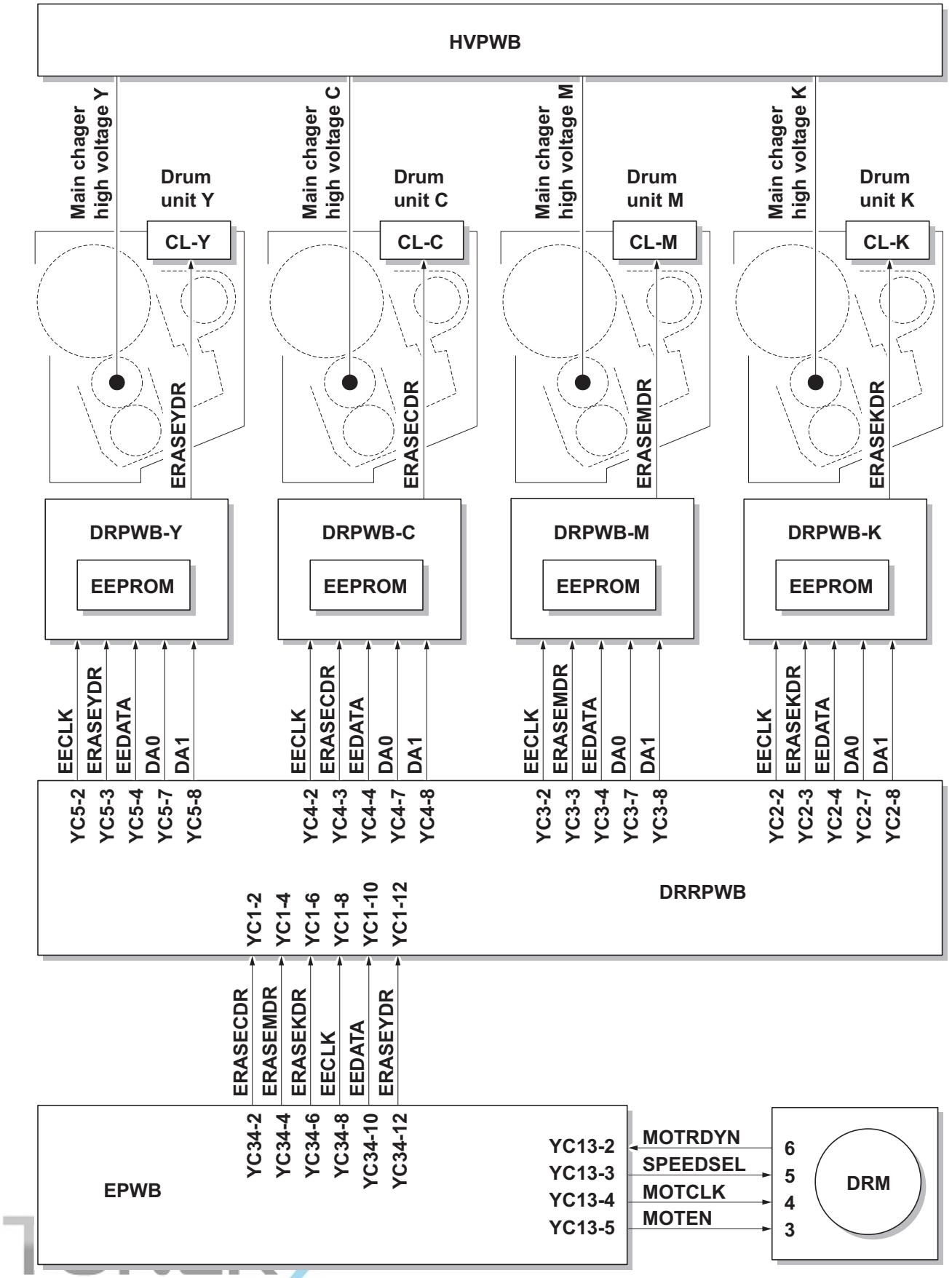

Figure 2-1-8 Drum section block diagram

2-1-3 Developing section

The developing unit consists of the sleeve roller that forms the magnetic brush, the magnet roller, the developing blade and the developing screws that agitate the toner. Also, the toner sensor (TS) checks whether or not toner remains in the developing unit.

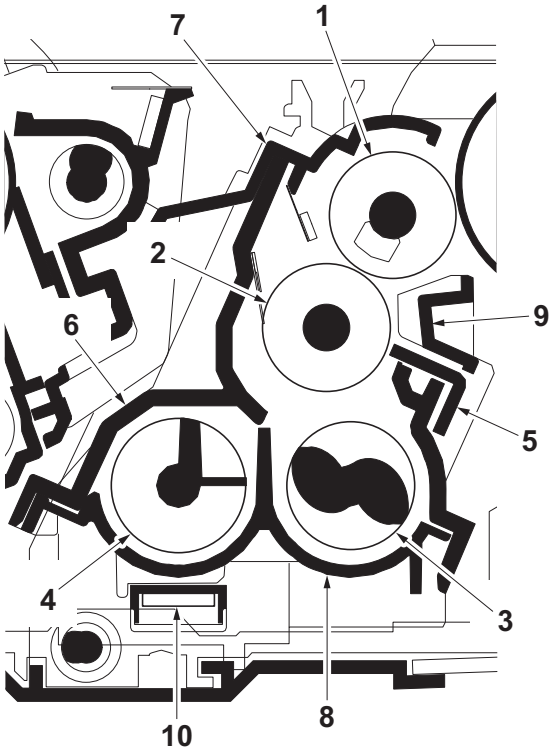

Figure 2-1-9 Developing section

1. Sleeve roller
2. Magnet roller
3. Developing screw A
4. Developing screw B
5. Developing blade
6. Developer case
7. Upper developer cover
8. Developer base
9. Sleeve cover
10. Toner sensor (TS)

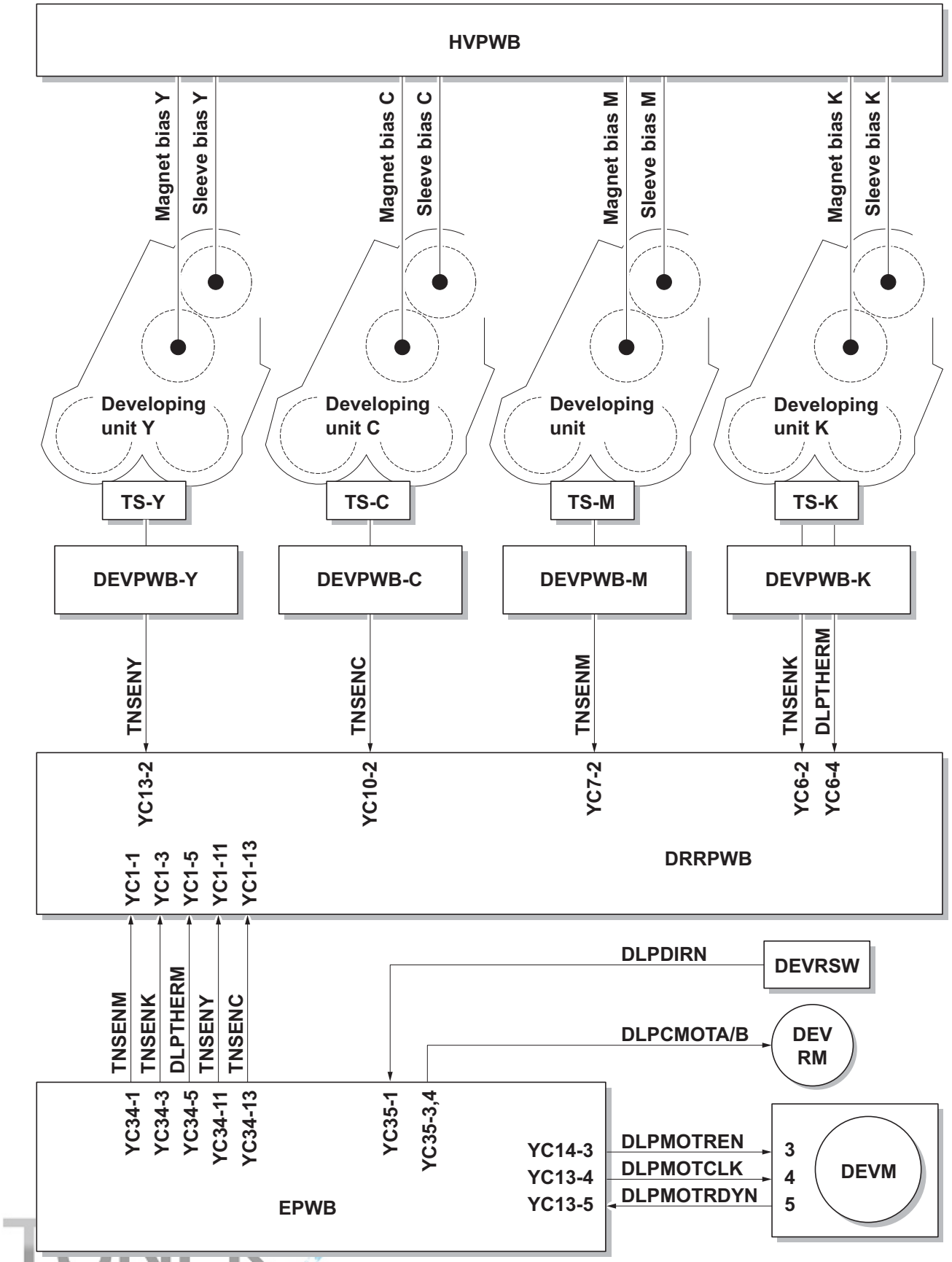

Figure 2-1-10 Developing section block diagram

2-1-4 Optical section

The optical section consists of the image scanner section for scanning and the laser scanner section for printing.

(1) Image scanner section

The original image is illuminated by the exposure lamp (EL) and scanned by the CCD image sensor in the CCD PWB (CCDPWB) via the four mirrors and ISU lens, the reflected light being converted to an electrical signal.
If a document processor is used, the image scanner unit stops at the position of the DP contact glass and scans sequentially one row of the image on the original in synchronization with the moving timing of the original in the sub scan direction by driving the DP.

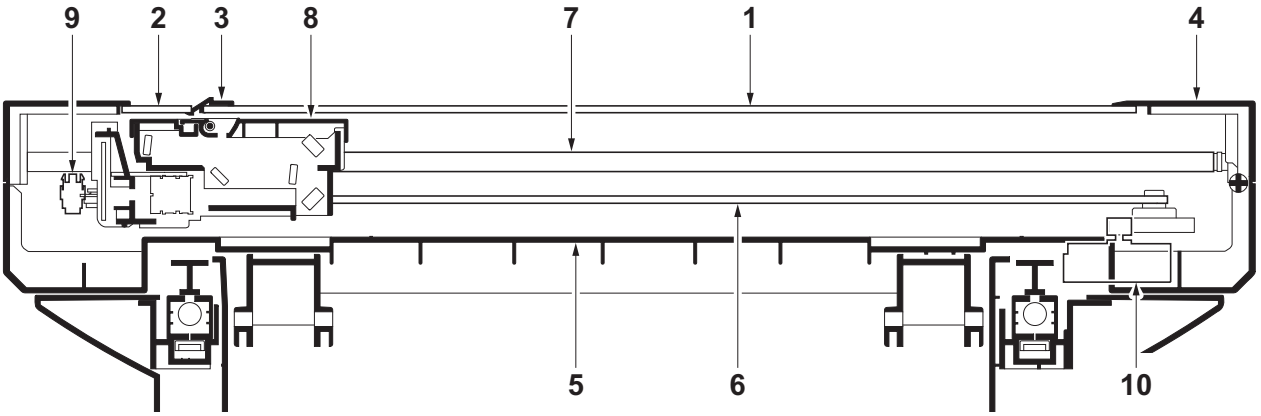

Figure 2-1-11 Scanner unit

1. Contact glass
2. DP contact glass
3. Original size indicator plate
4. ISU top frame
5. ISU bottom frame
6. ISU belt
7. ISU shaft
8. Image scanner unit (ISU)
9. Home position sensor (HPS)
10. ISU motor (ISUM)

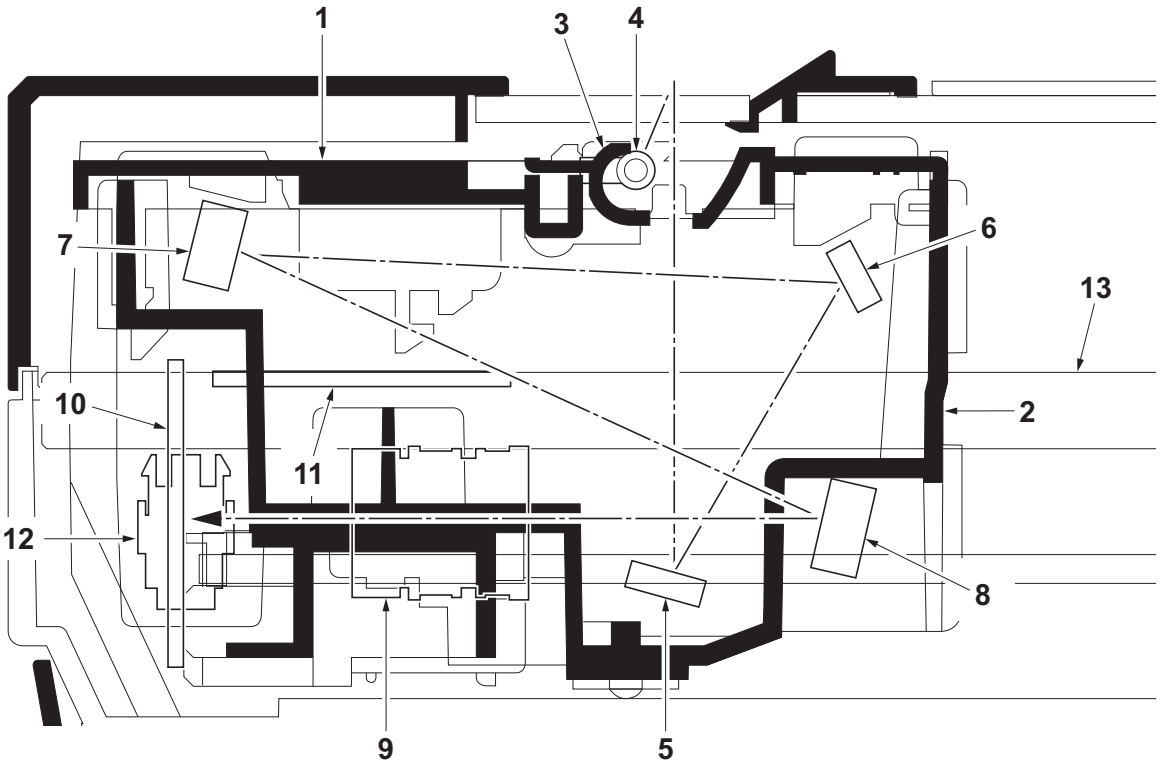

Figure 2-1-12 Image scanner unit (ISU)

1. Lamp mount
2. ISU housing
3. ISU reflector
4. Exposure lamp (EL)
5. Mirror A
6. Mirror B
7. Mirror C
8. Mirror D
9. ISU lens
10. CCD PWB (CCDPWB)
11. Inverter PWB (INPWB)
12. Home position sensor (HPS)
13. ISU shaft

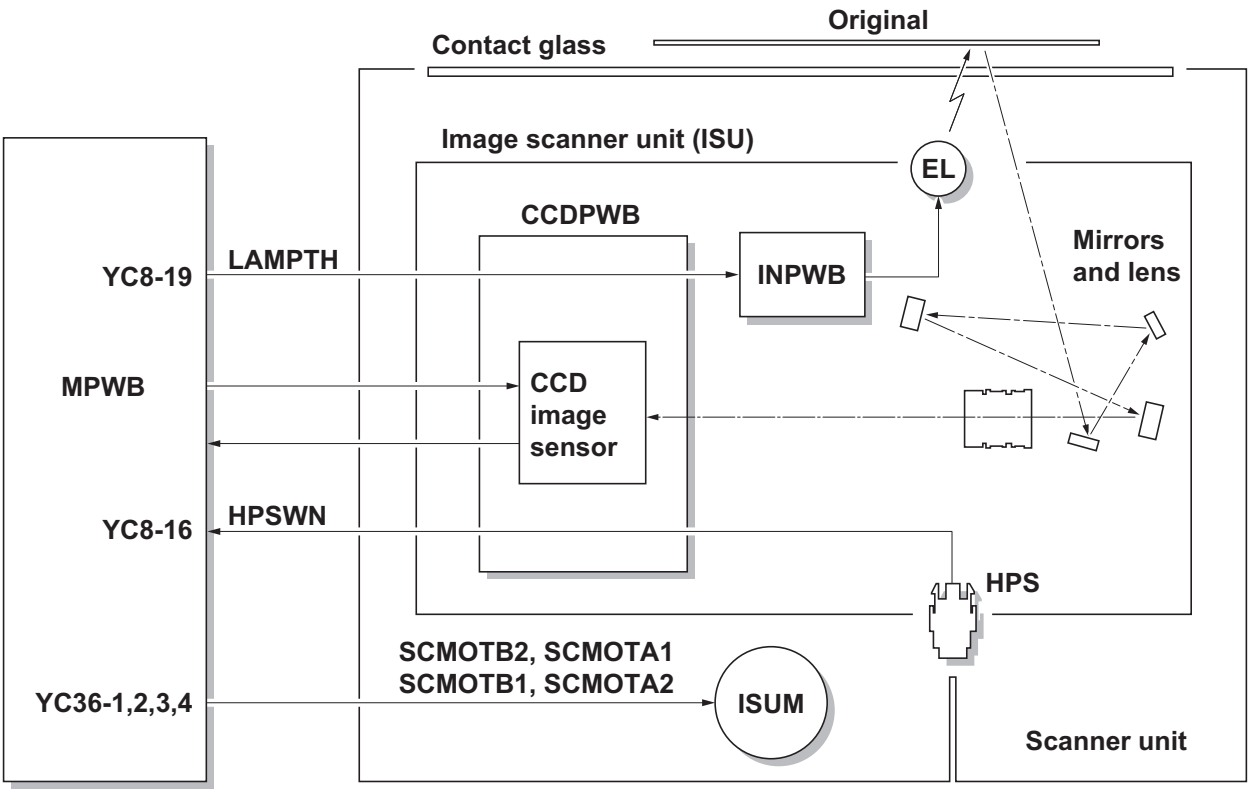

Figure 2-1-13 Scanner unit block diagram

(2) Laser scanner section

The charged surface of the drum is then scanned by the laser beam from the laser scanner unit. The laser beam is dispersed as the polygon motor (PM) revolves to reflect the laser beam over the drum. Various lenses and mirror are housed in the laser scanner unit, adjust the diameter of the laser beam, and focalize it at the drum surface. Also the LSU cleaning motor (LSUCM) is activated to conduct automatically cleaning of the LSU dust shield glass.

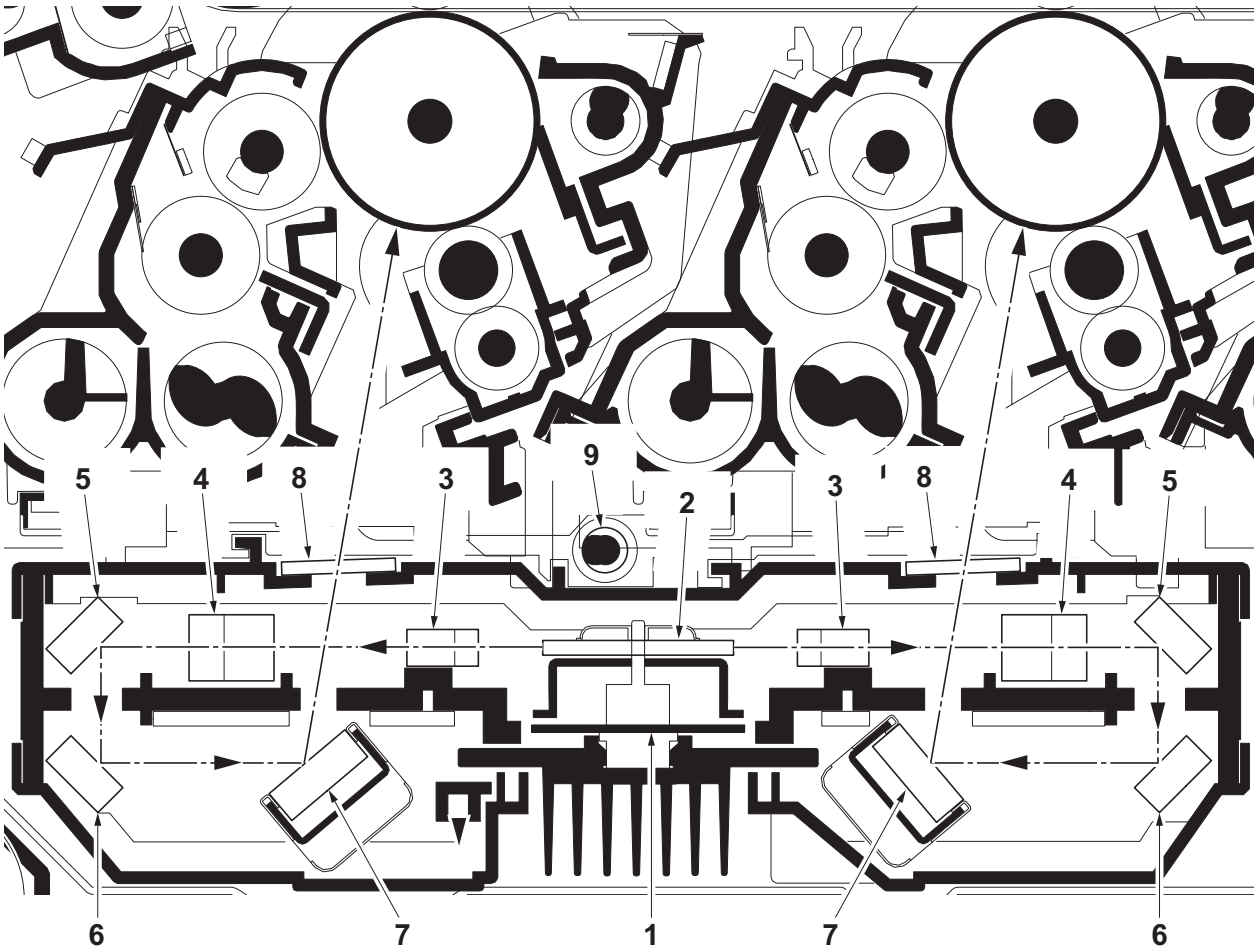

Figure 2-1-14 Laser scanner unit (LSU)

1. Polygon motor (PM)
2. Polygon mirror
3. f-θ lens A
4. f-θ lens B
5. Mirror A
6. Mirror B
7. Mirror C
8. LSU dust shield glass
9. LSU spiral

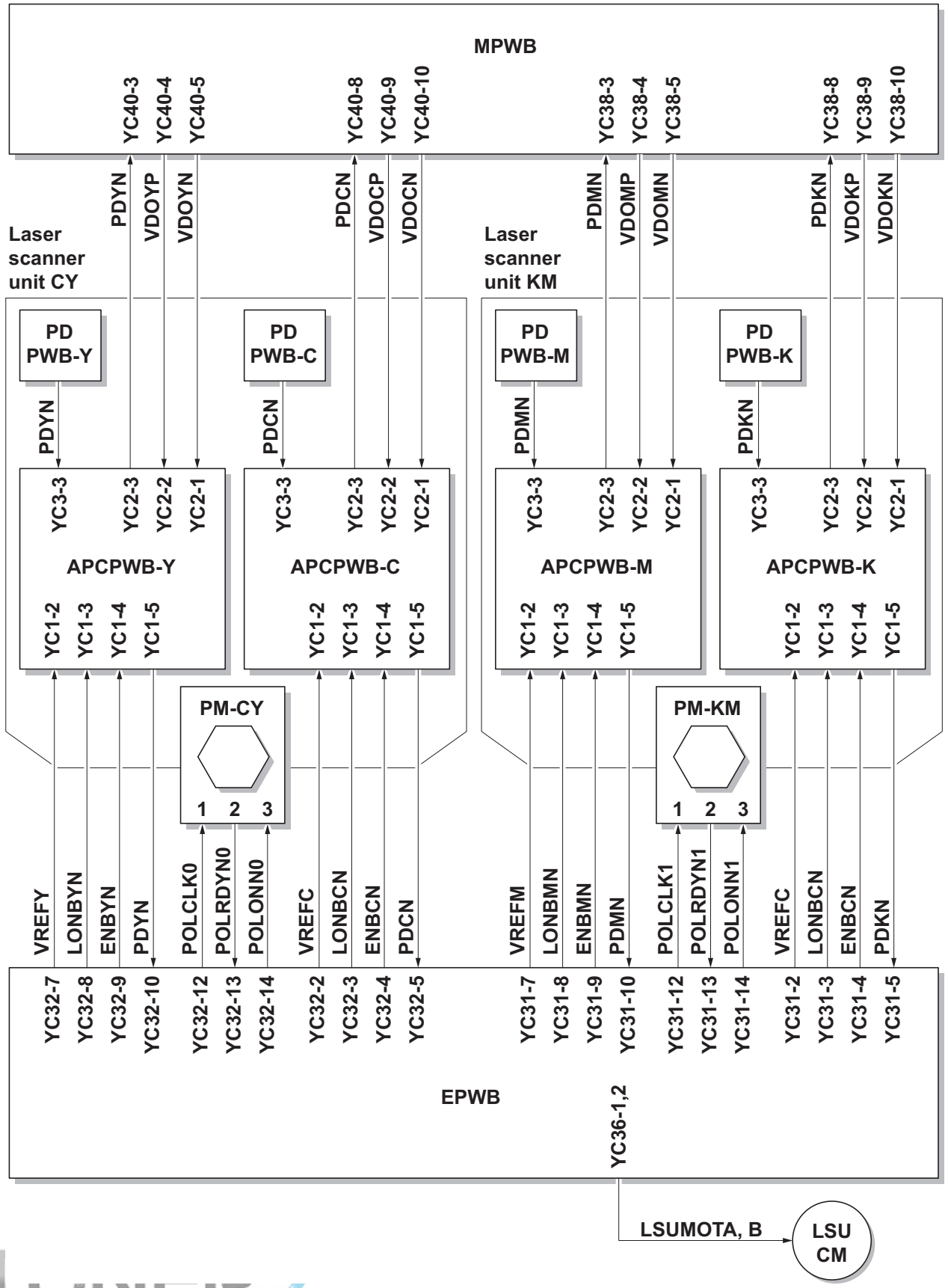

Figure 2-1-15 Laser scanner unit block diagram

2-1-5 Transfer/Separation section

The transfer/separation section consists of the intermediate transfer unit section and the secondary transfer roller section.

(1) Intermediate transfer unit section

The intermediate transfer unit section consists of the transfer cleaning unit, the transfer belt, and the four primary transfer rollers for respective color drums, and forms a full-color toner image by superimposing and transferring single-color toner images formed on each drum onto the transfer belt. Also with the ID sensors (IDS) mounted on the machine frame, the toner density on the transfer belt is measured.
The transfer cleaning unit collects toner remaining on the transfer belt after secondary transfer and forwards it as waste toner to the waste toner box.

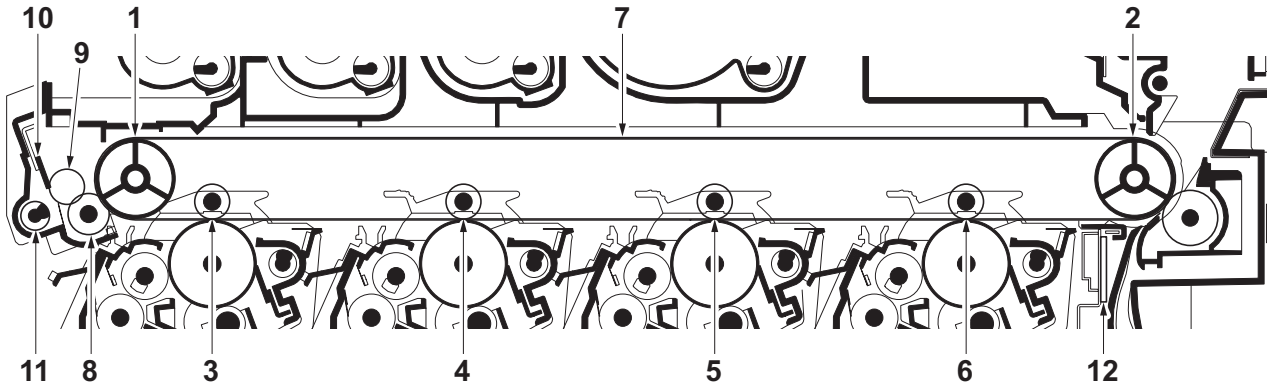

Figure 2-1-16 Intermediate transfer unit section

1. Tension roller
2. Drive roller
3. Primary transfer roller K
4. Primary transfer roller M
5. Primary transfer roller C
6. Primary transfer roller Y
7. Transfer belt
8. Cleaning fur brush
9. Cleaning roller
10. Cleaning blade
11. Cleaning screw
12. ID sensors (IDS)

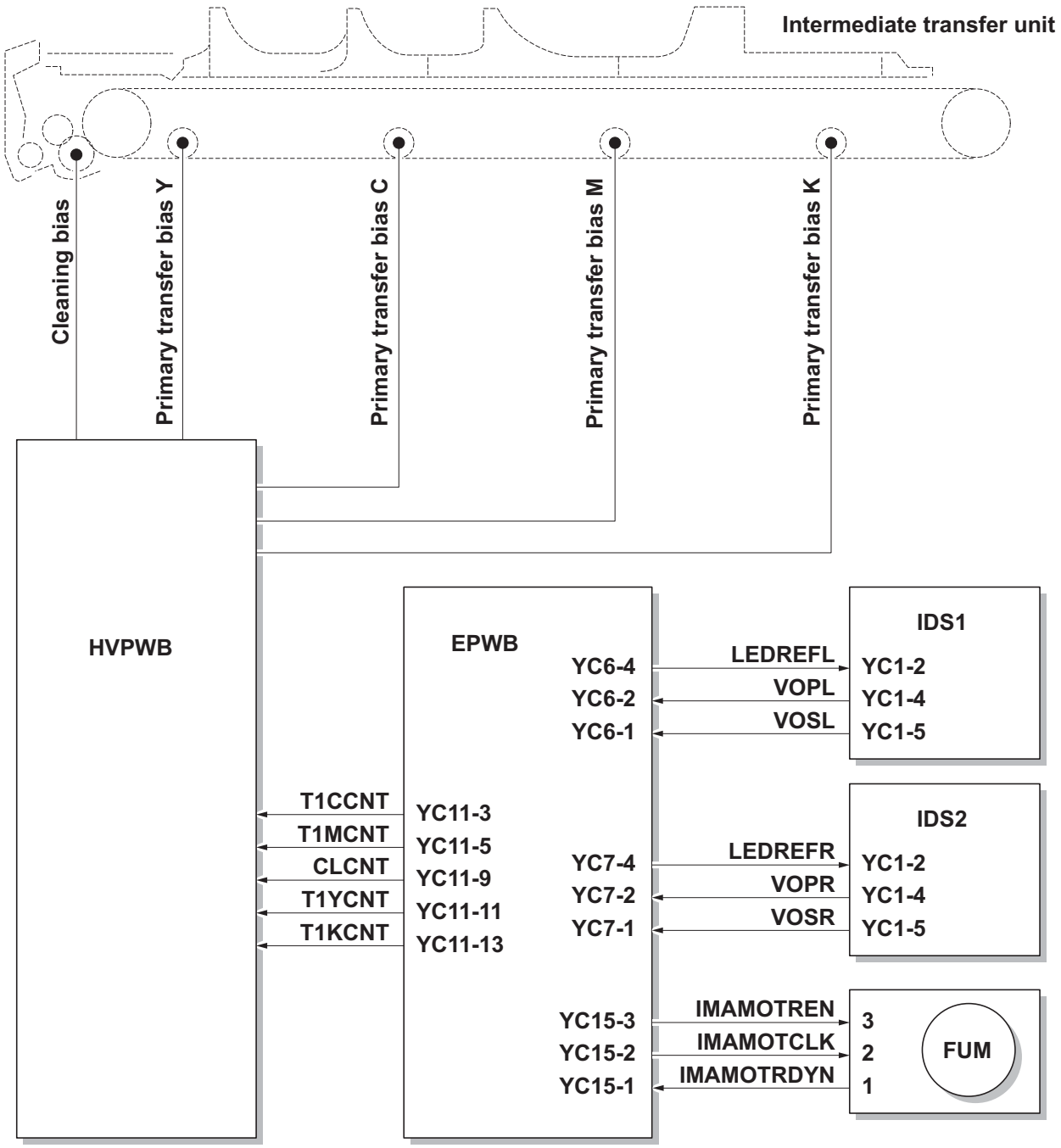

Figure 2-1-17 Intermediate transfer unit section block diagram

(2) Secondary transfer roller section

The secondary transfer roller section consists of the secondary transfer roller mounted to the paper conveying unit and the separation brush. To the secondary transfer roller, DC bias is applied from the high voltage PWB (HVPWB). The toner image formed on the transfer belt is transferred to the paper by the potential difference and the paper is separated by curvature separation.

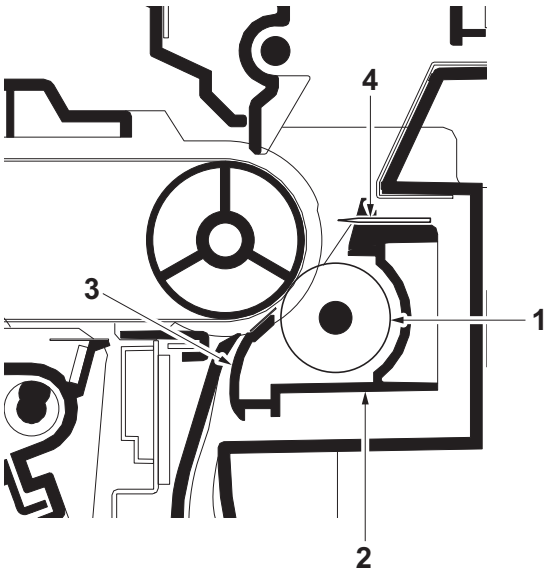

Figure 2-1-18 Secondary transfer roller section

1. Secondary transfer roller
2. Brush holder
3. Paper chute guide
4. Separation brush

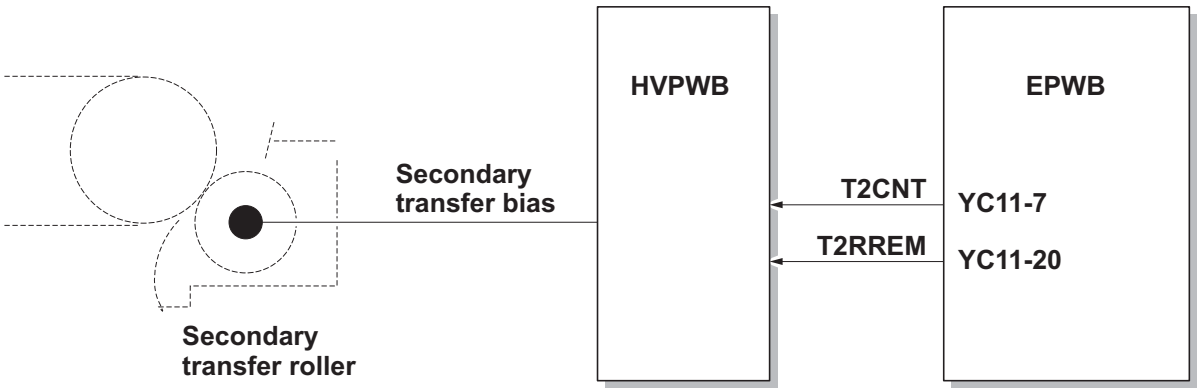

Figure 2-1-19 Secondary transfer roller section block diagram

2-1-6 Fuser section

The paper sent from the transfer/separation section is interleaved between the heat roller and the press roller. The heat roller is heated by the fuser heater (FH), and the toner is fused by heat and pressure and fixed onto the paper because the press roller is pressed by the fuser press spring. The surface temperature of heat roller is detected by the fuser thermistor (FTH) and controlled by the engine PWB (EPWB). If the fuser section shows extremely high temperature, the power line will be shut off and the fuser heater (FH) is forced to turn off.

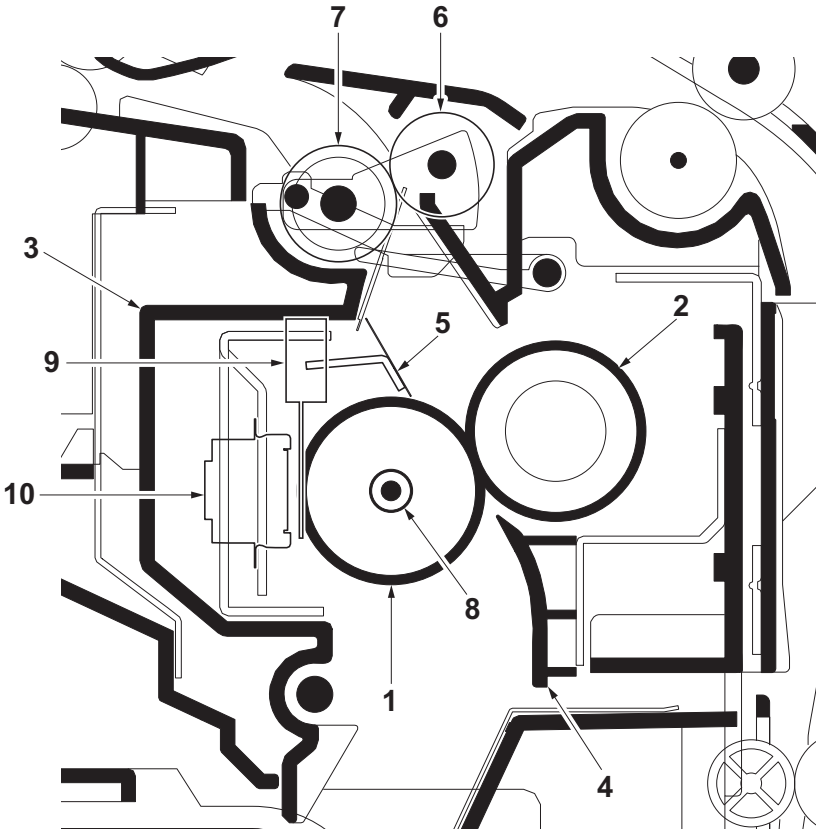

Figure 2-1-20 Fuser section

1. Heat roller
2. Press roller
3. Upper fuser frame
4. Fuser paper guide
5. Separators
6. Eject roller
7. Eject pulley
8. Fuser heater (FH)
9. Fuser thermistor (FTH)
10. Fuser thermostat (FTS)

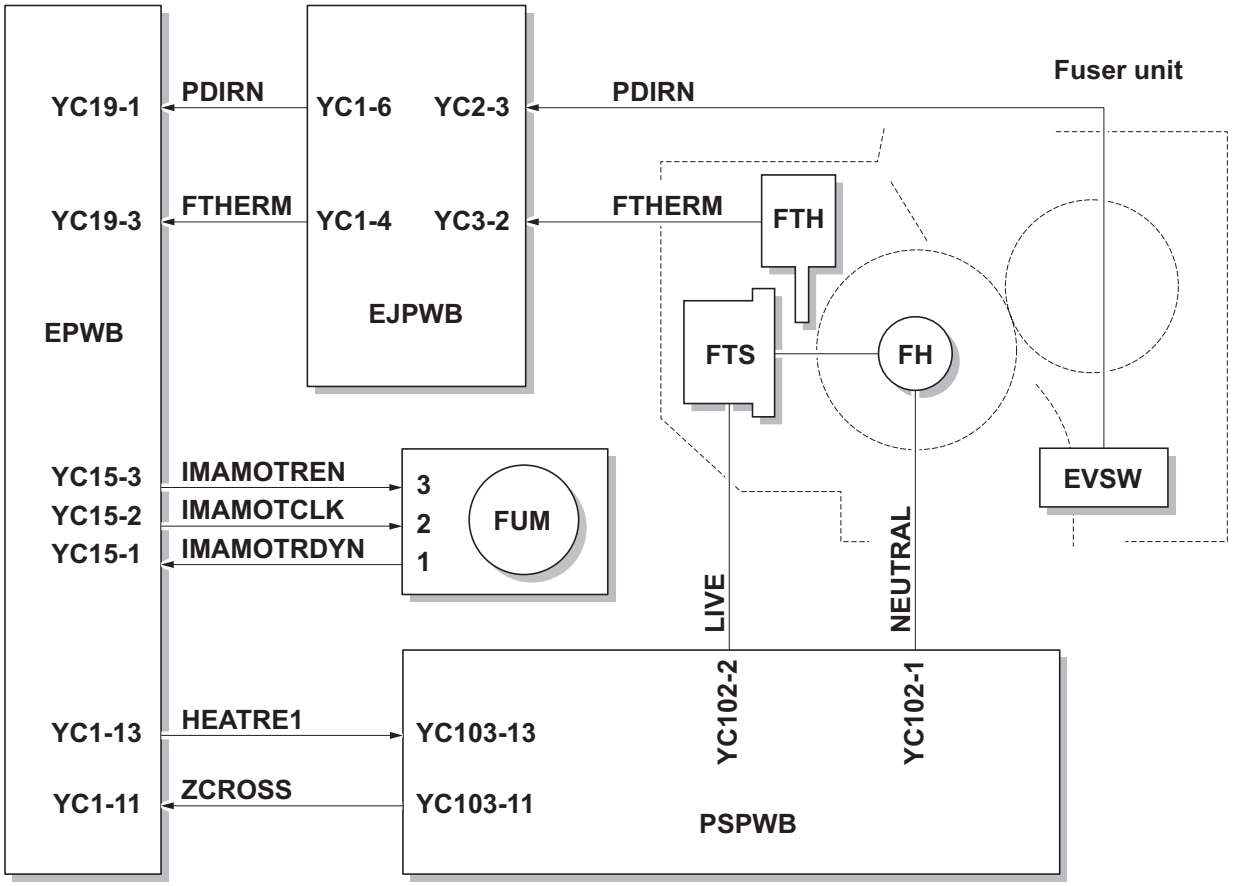

Figure 2-1-21 Fuser section block diagram

2-1-7 Eject/Feedshift section

The paper eject/feedshift section consists of the conveying path which sends the paper that has passed the fuser section to the top tray or the duplex conveying section.

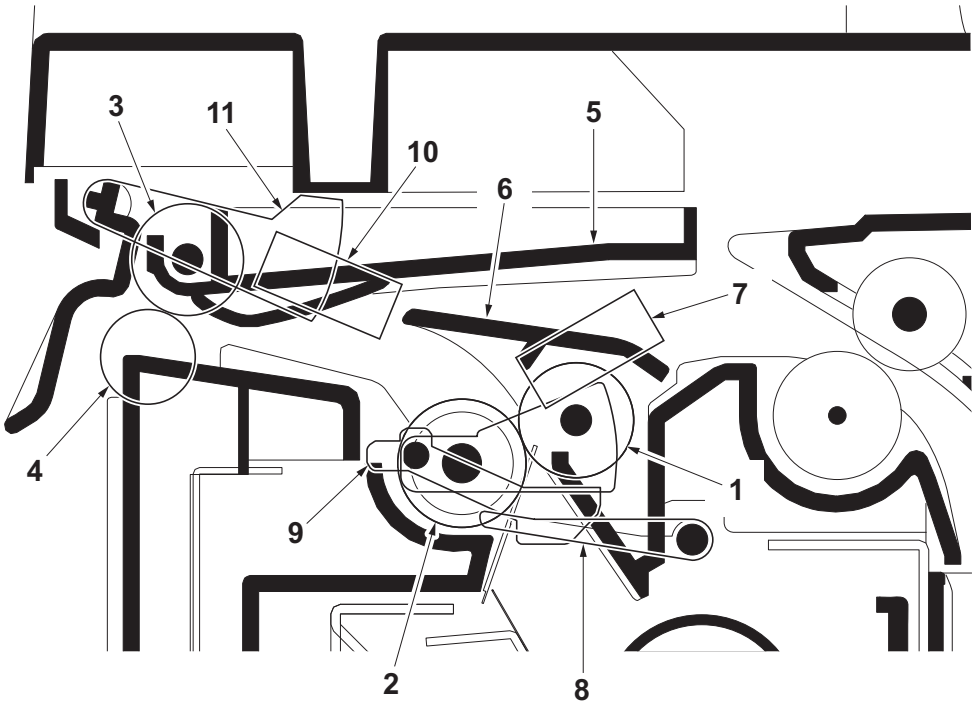

Figure 2-1-22 Eject/Feed shift section

1. Eject roller
2. Eject pulley
3. Eject roller
4. Eject pulley
5. Upper eject guide
6. Change guide
7. Eject sensor (ES)
8. Actuator (eject sensor)
9. Actuator (eject sensor)
10. Paper full sensor
11. Actuator (paper full sensor)

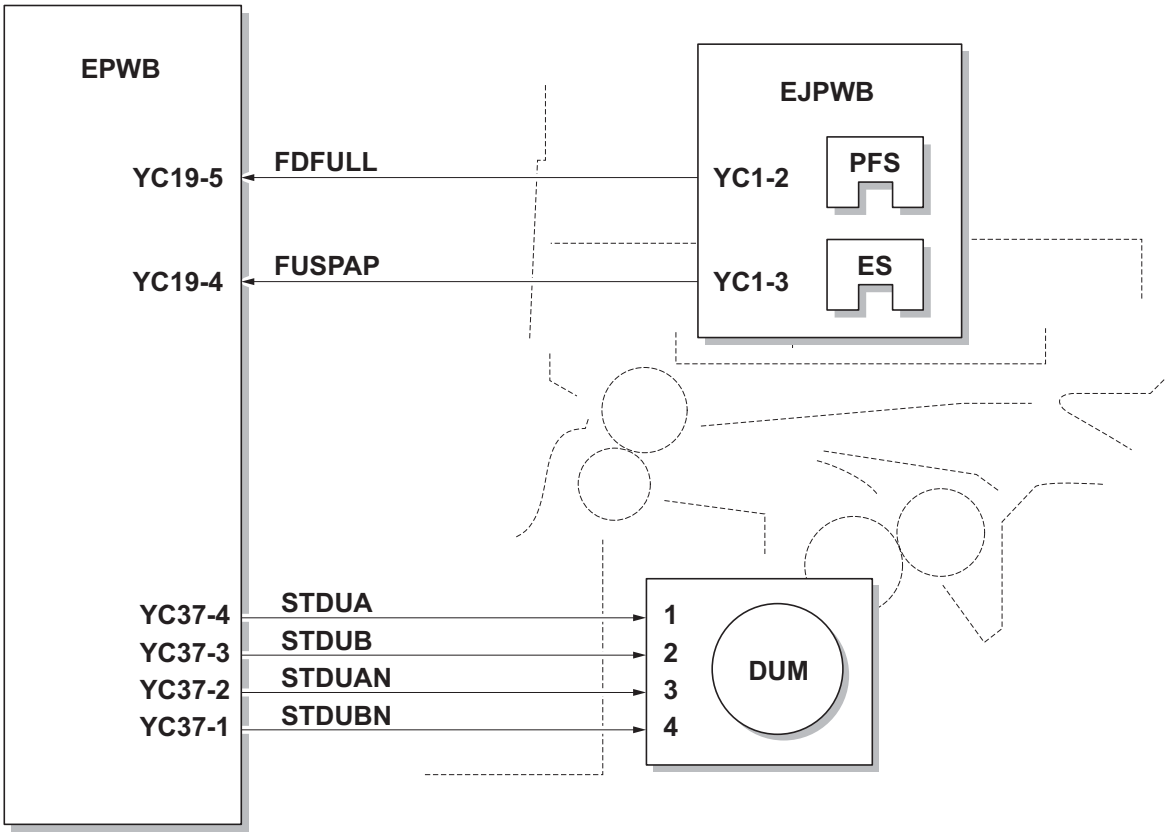

Figure 2-1-23 Eject/Feed shift section block diagram

2-1-8 Duplex conveying section

The duplex conveying section consists of conveying path which sends the paper sent from the eject/feedshift section to the paper feed/conveying section when duplex printing.

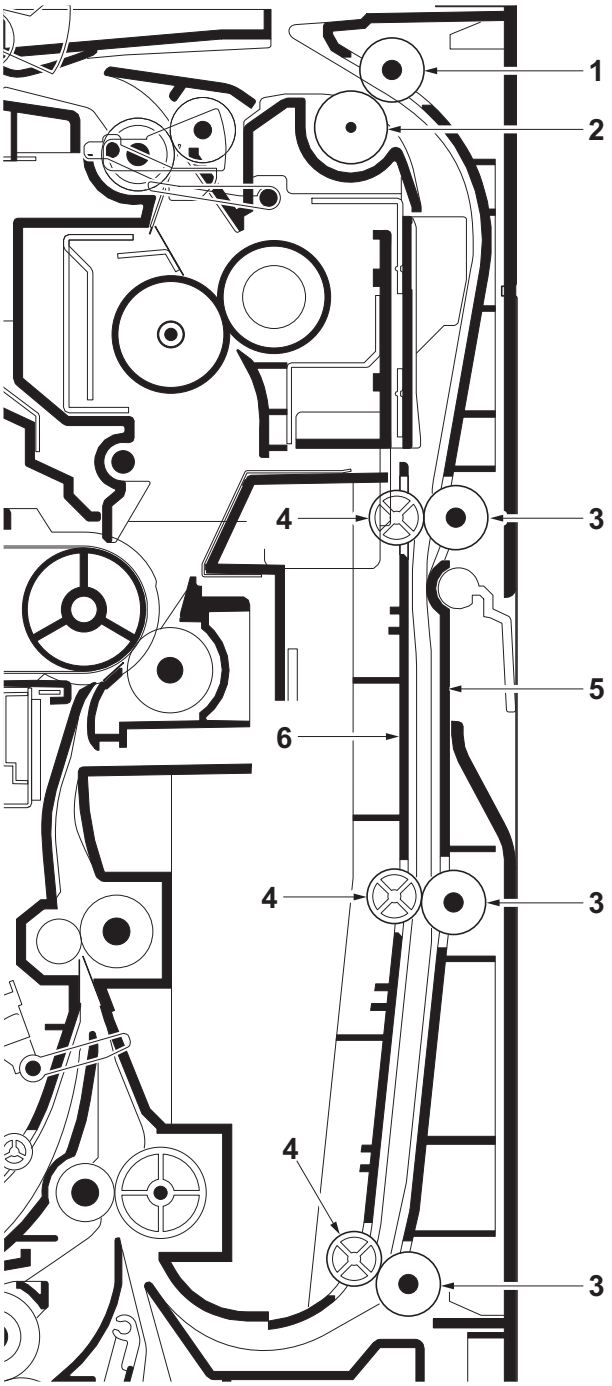

Figure 2-1-24 Duplex conveying section

1. Duplex roller L
2. Eject pulley
3. Duplex rollers S
4. Duplex pulleys
5. Duplex frame
6. Duplex feed guide

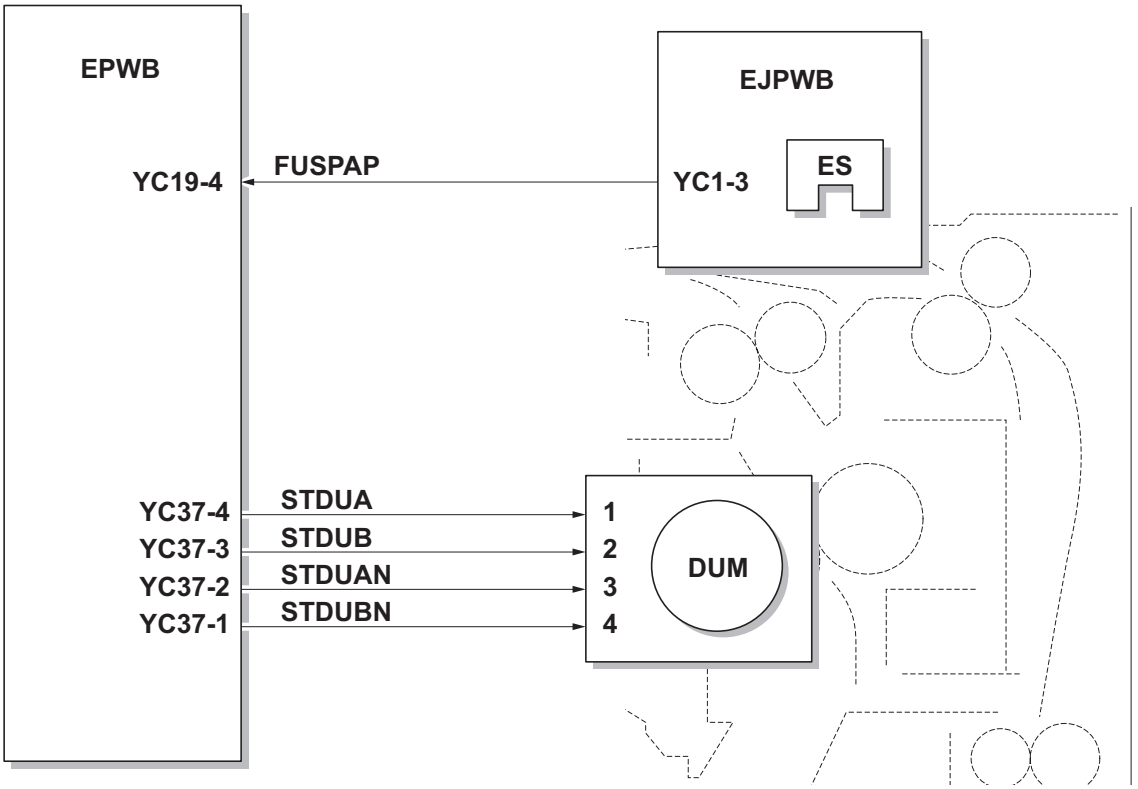

Figure 2-1-25 Duplex conveying section block diagram

2-1-9 Document processor

(1) Original feed section

The original feed section consists of the parts shown in figure. An original placed on the original table is conveyed to the original conveying section. Original is fed by the rotation of the DP forwarding pulley and DP feed pulley.

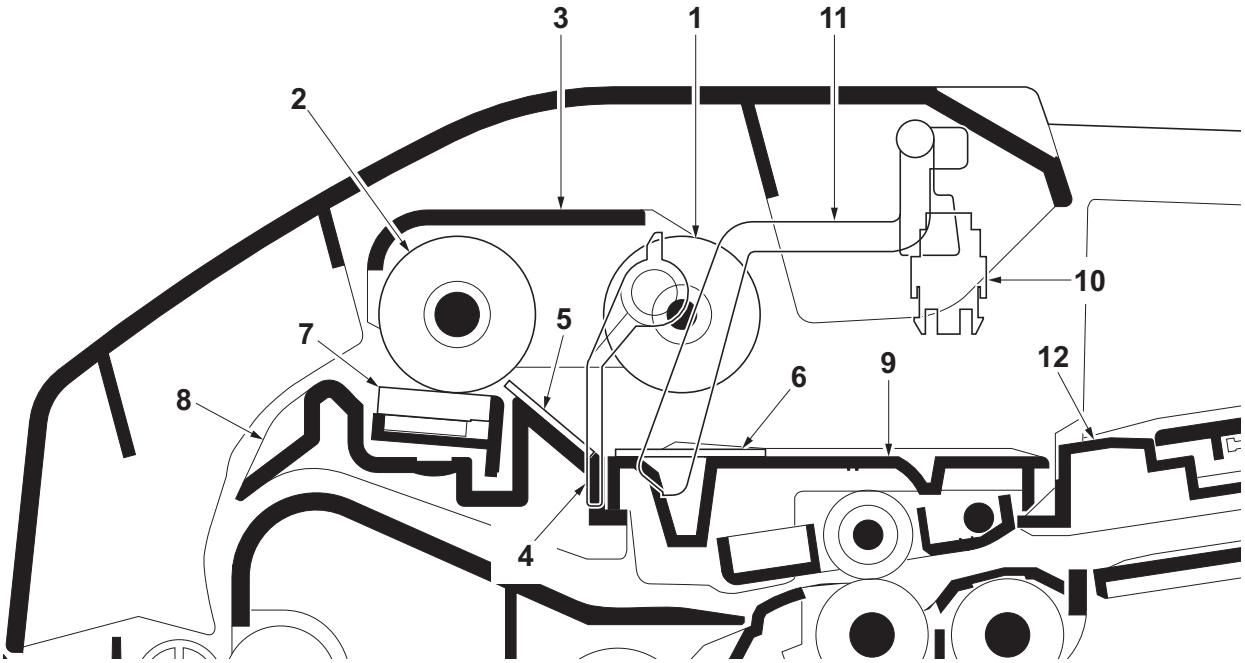

Figure 2-1-26 Original feed section

1. DP forwarding pulley
2. DP feed pulley
3. LF holder
4. PF stopper
5. Front separation pad
6. LF friction plate
7. DP separation pad
8. Upper guide
9. Switchback guide
10. DP original sensor (DPOS)
11. Actuator (DP original sensor)
12. Original table

]

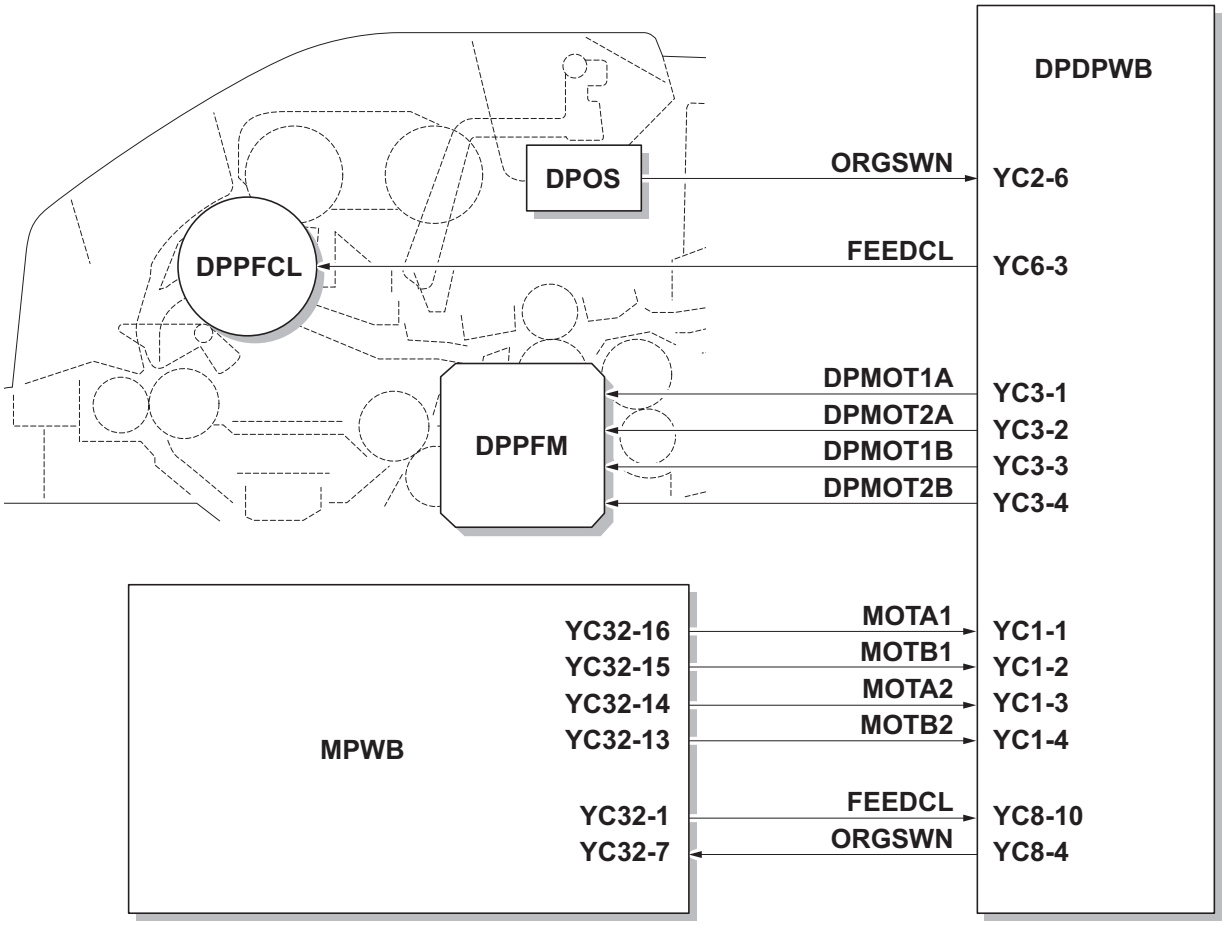

Figure 2-1-27 Original feed section block diagram

(2) Original conveying section

The original conveying section consists of the parts shown in figure. A conveyed original is scanned by the optical section (CCD) of main machine when it passes through the DP contact glass of main machine.

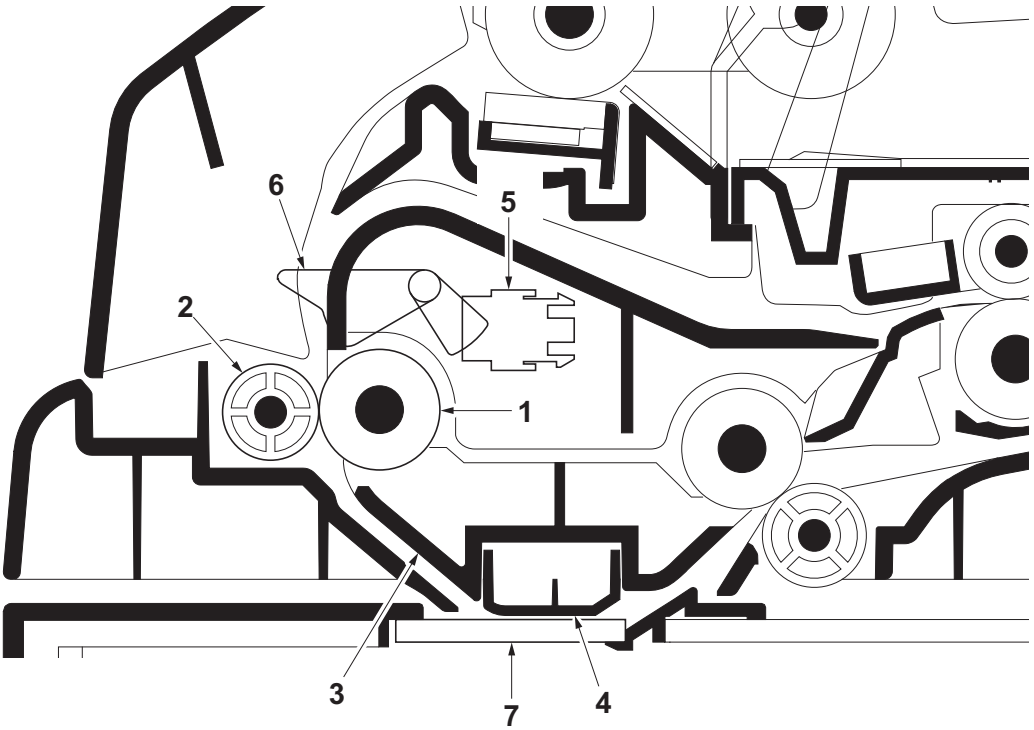

Figure 2-1-28 Original conveying section

1. Conveying roller A
2. Conveying pulley
3. Conveying bottom
4. Reading guide
5. DP timing sensor (DPTS)
6. Actuator (DP timing sensor)
7. DP contact glass

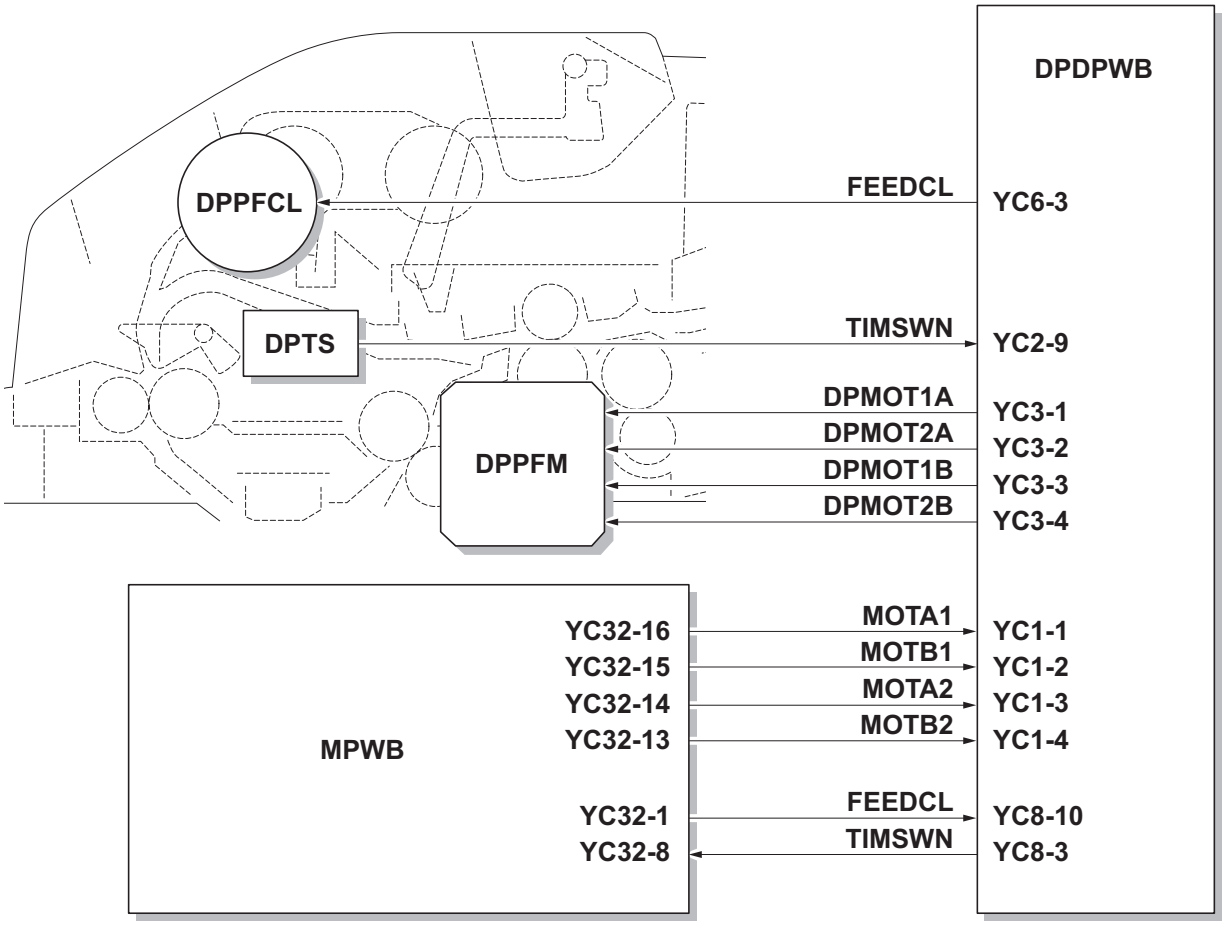

Figure 2-1-29 Original conveying section block diagram

(3) Original switchback/eject sections

The original switchback/eject sections consists of the parts shown in figure. An original of which scanning is complete is ejected to the original eject table by the eject roller. In the case of duplex switchback scanning, an original is conveyed temporarily to the switchback tray and conveyed again to the original conveying section by the switchback roller.

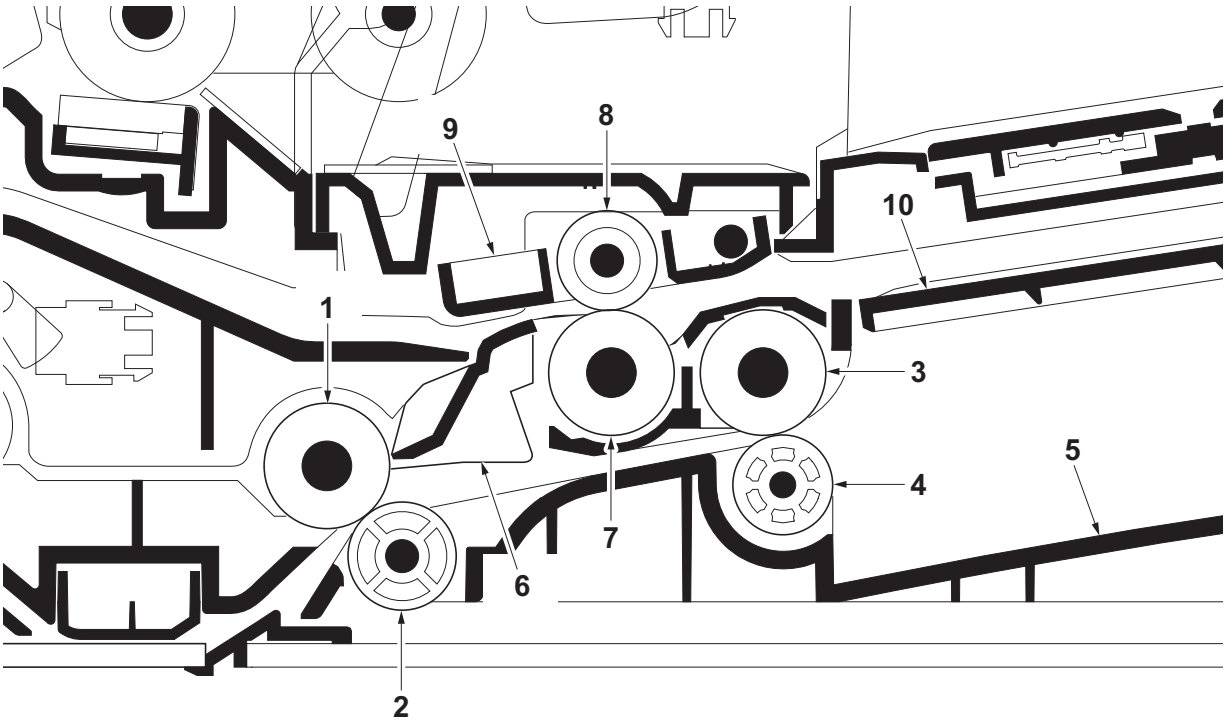

Figure 2-1-30 Original switchback/eject sections

1. Conveying roller B
2. Conveying pulley
3. Eject roller
4. Eject pulley
5. Original eject table
6. Switchback guide
7. Switchback roller
8. Switchback pulley
9. Switchback pulley mount
10. Switchback tray

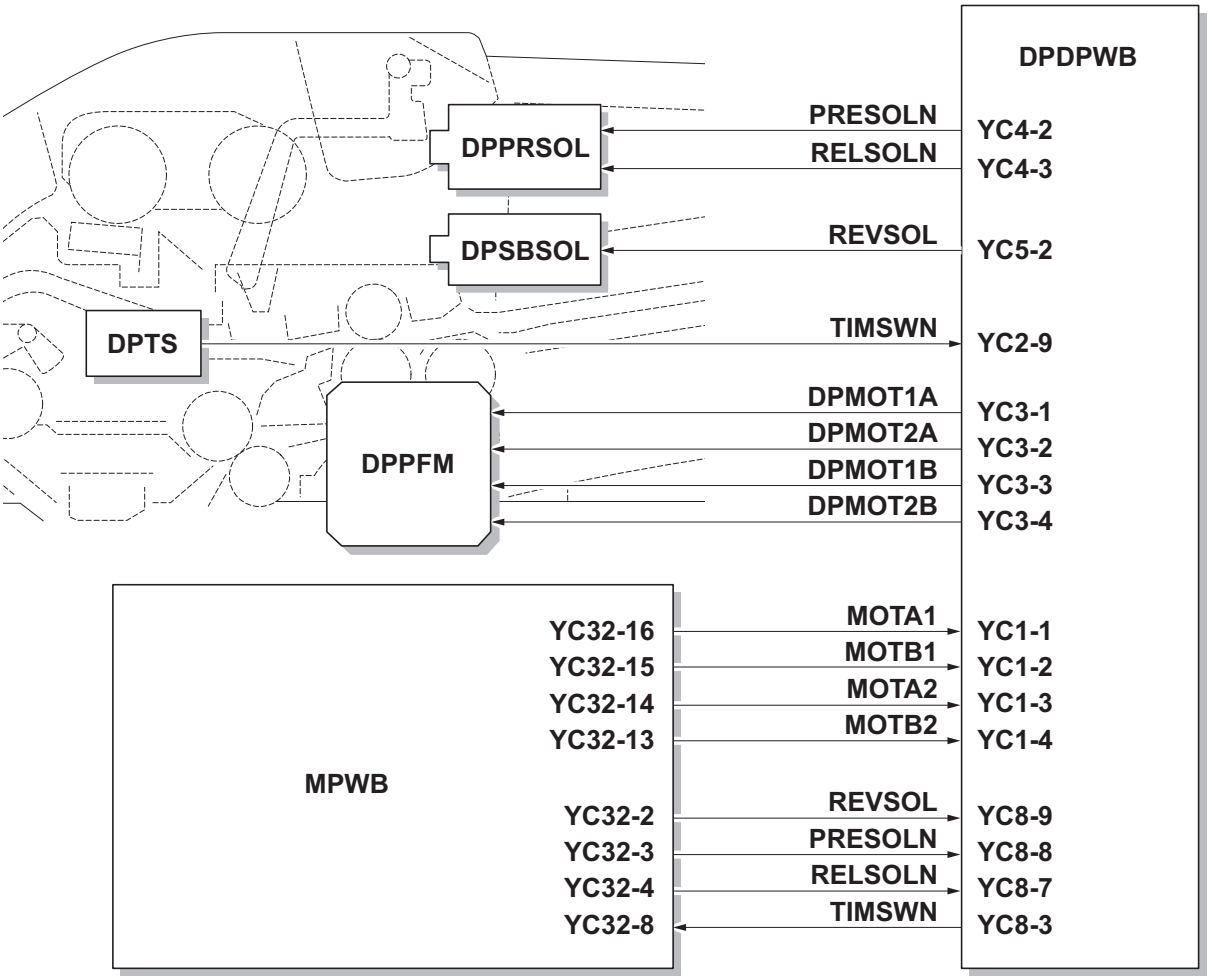

Figure 2-1-31 Original switchback/eject sections block diagram

2-2-1 Electrical parts layout

(1) PWBs

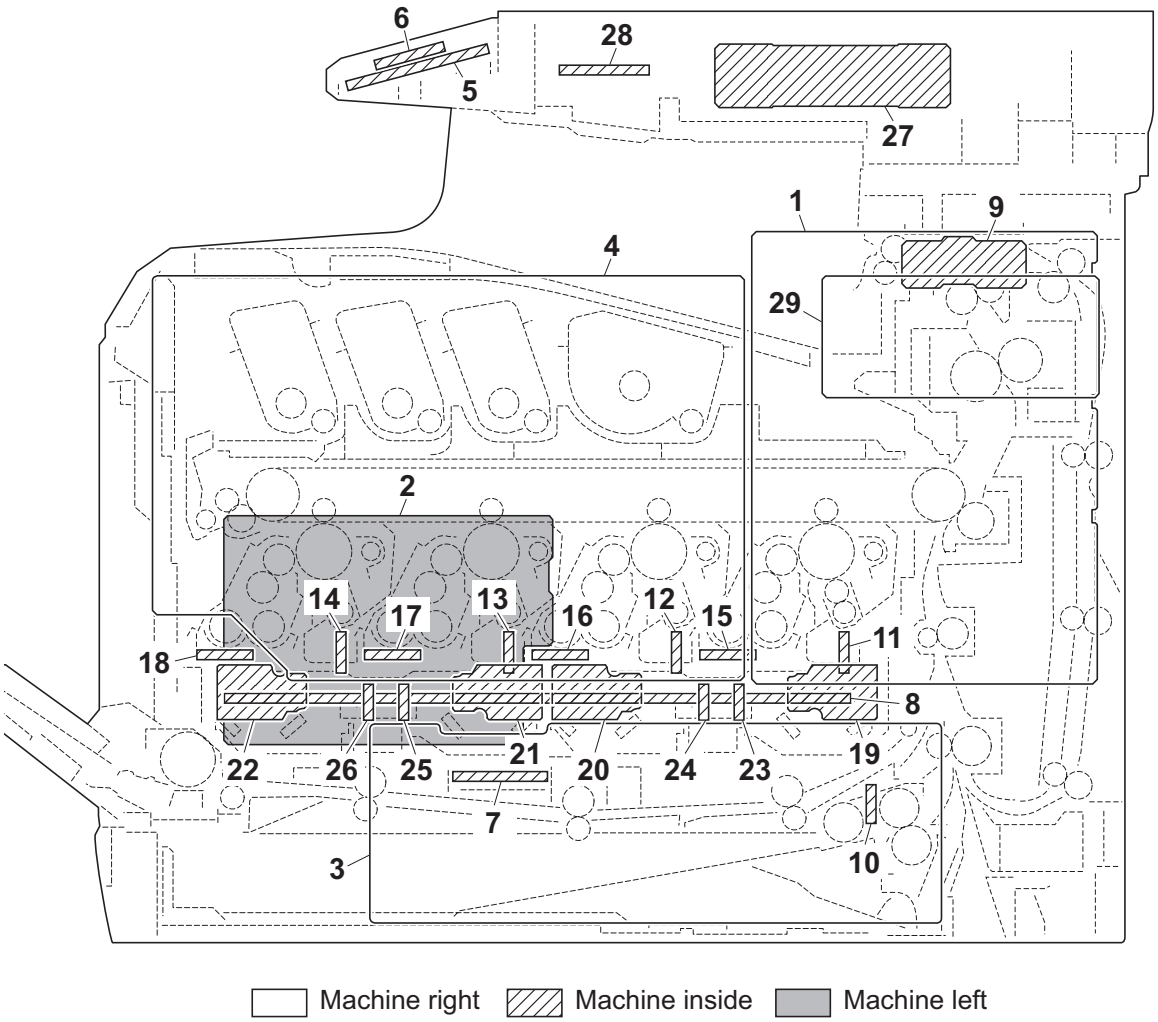

Figure 2-2-1 PWBs

1. Main PWB (MPWB) ..... Controls the software such as the print data processing and provides the interface with computers.
2. Engine PWB (EPWB)..... Controls printer hardware such as high voltage/bias output control, paper conveying system control, and fuser temperature control, etc.
3. Power source PWB (PSPWB) ..... After full-wave rectification of AC power source input, switching for converting to 24 V DC for output. Controls the fuser heater.
4. High voltage PWB (HVPWB) ..... Generates main charging, developing bias, transfer bias and cleaning bias.
5. Operation panel PWB (OPPWB) ..... Consists the LCD, LED indicators and key switches.
6. LCD PWB (LCDPWB)..... Controls the LCD display.
7. Relay PWB (RPWB) ..... Consists of wiring relay circuit between main PWB and engine PWB and power source PWB.
8. Drum relay PWB (DRRPWB)..... Consists of wiring relay circuit between engine PWB and the drum units and developing units.

9. Eject PWB (EJPWB)..... Consists of wiring relay circuit between engine PWB and each electrical component (eject section).
10. Cassette PWB (CPWB) ..... Interconnects the engine PWB and each electrical component (cassette section).
11. Drum PWB K (DRPWB-K) ..... Relays wirings from electrical components on the drum unit K. Drum individual information in EEPROM storage.
12. Drum PWB M (DRPWB-M)..... Relays wirings from electrical components on the drum unit M. Drum individual information in EEPROM storage.
13. Drum PWB C (DRPWB-C)..... Relays wirings from electrical components on the drum unit C. Drum individual information in EEPROM storage.
14. Drum PWB Y (DRPWB-Y) ..... Relays wirings from electrical components on the drum unit Y. Drum individual information in EEPROM storage.
15. Developing PWB K (DEVPWB-K)..... Relays wirings from electrical components on the developing unit K.
16. Developing PWB M (DEVPWB-M)..... Relays wirings from electrical components on the developing unit M.
17. Developing PWB C (DEVPWB-C) ..... Relays wirings from electrical components on the developing unit C.
18. Developing PWB Y (DEVPWB-Y)..... Relays wirings from electrical components on the developing unit Y.
19. APC PWB K (APCPWB-K) ..... Generates and controls the laser beam (black).
20. APC PWB M (APCPWB-M) ..... Generates and controls the laser beam (magenta).
21. APC PWB C (APCPWB-C)..... Generates and controls the laser beam (cyan).
22. APC PWB Y (APCPWB-Y) ..... Generates and controls the laser beam (yellow).
23. PD PWB K (PDPWB-K) ..... Controls horizontal synchronizing timing of laser beam (black).
24. PD PWB M (PDPWB-M)..... Controls horizontal synchronizing timing of laser beam (magenta).
25. PD PWB C (PDPWB-C)..... Controls horizontal synchronizing timing of laser beam (cyan).
26. PD PWB Y (PDPWB-Y) ..... Controls horizontal synchronizing timing of laser beam (yellow).
27. CCD PWB (CCDPWB)..... Reads the image of originals.
28. Inverter PWB (INPWB) ..... Controls the exposure lamp.
29. Fax control PWB (FCPWB)* ..... Modulates, demodulates, compresses, decompresses and smoothes out image data, and converts resolution of image data.

*: 4 in 1 model (with FAX) only.

List of correspondences of PWB names

No.	Name used in service manual	Name used in parts list
1	Main PWB (MPWB)	PARTS PWB MAIN ASSY SP
2	Engine PWB (EPWB)	PARTS PWB ENGINE ASSY SP
3	Power source PWB (PSPWB)	PARTS SWITCHING REGULATOR SP
4	High voltage PWB (HVPWB)	PARTS HIGH VOLTAGE UNIT SP
5	Operation panel PWB (OPPWB)	-
6	LCD PWB (LCDPWB)	-
7	Relay PWB (RPWB)	-
8	Drum relay PWB (DRRPWB)	-
9	Eject PWB (EJPWB)	PARTS PWB ASSY EXIT SP
10	Cassette PWB (CPWB)	PARTS PWB ASSY CASSETTE SP
11	Drum PWB K (DRPWB-K)	-
12	Drum PWB M (DRPWB-M)	-
13	Drum PWB C (DRPWB-C)	-
14	Drum PWB Y (DRPWB-Y)	-
15	Developing PWB K (DEVPWB-K)	-
16	Developing PWB M (DEVPWB-M)	-
17	Developing PWB C (DEVPWB-C)	-
18	Developing PWB Y (DEVPWB-Y)	-
19	APC PWB K (APCPWB-K)	-
20	APC PWB M (APCPWB-M)	-
21	APC PWB C (APCPWB-C)	-
22	APC PWB Y (APCPWB-Y)	-
23	PD PWB K (PDPWB-K)	-
24	PD PWB M (PDPWB-M)	-
25	PD PWB C (PDPWB-C)	-
26	PD PWB Y (PDPWB-Y)	-
27	CCD PWB (CCDPWB)	-
28	Inverter PWB (INPWB)	-
29	Fax control PWB (FCPWB)	PARTS FAX UNIT J SP

(2) Switches and sensors

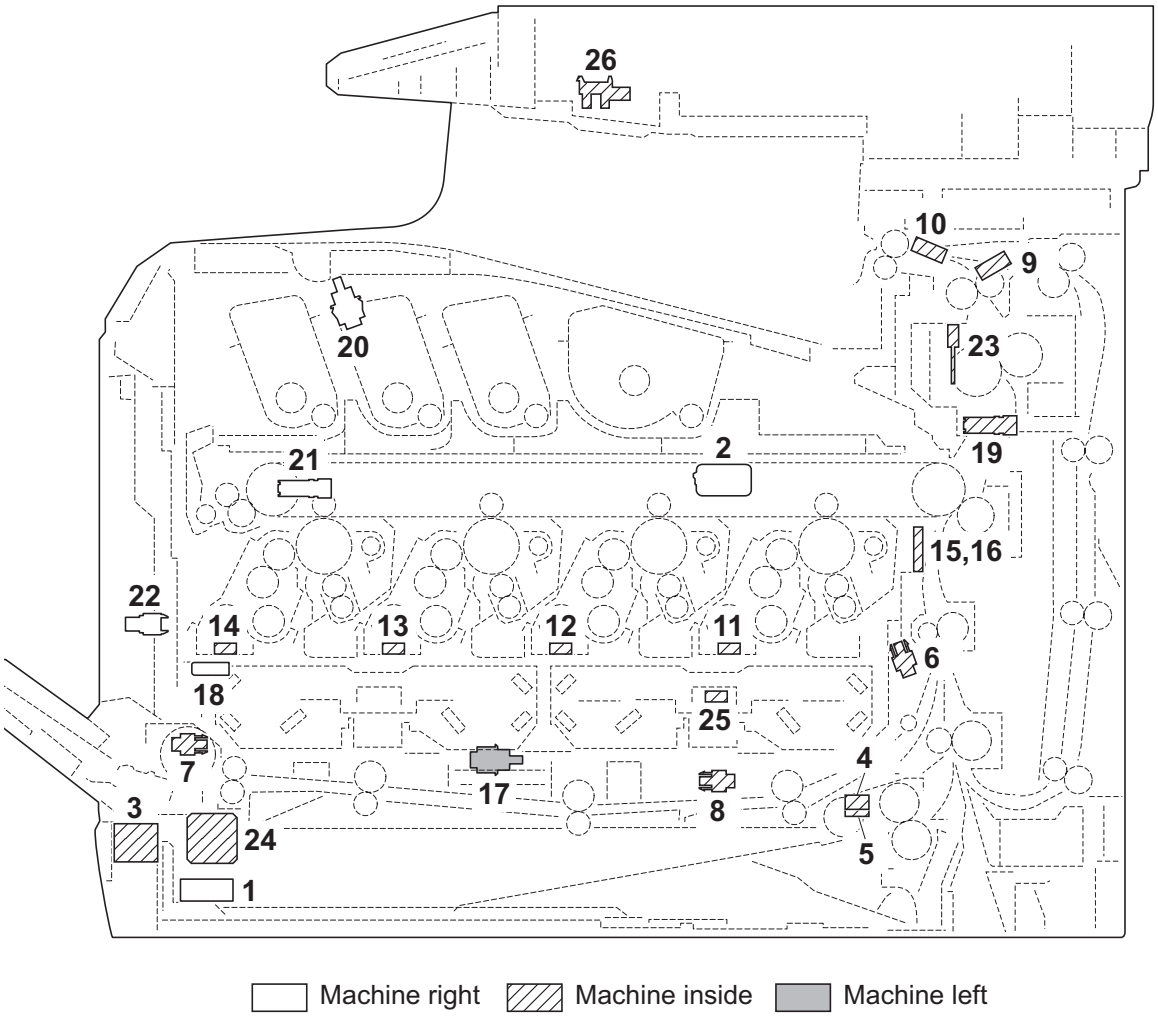

Figure 2-2-2 Switches and sensors

1. Main power switch (MSW) ..... Turns ON/OFF the AC power source.
2. Interlock switch (ILSW) ..... Shuts off 24 V DC power line when the top tray and rear cover are opened.
3. Cassette size switch (CSSW) ..... Detects the paper size dial setting of the paper setting dial.
4. Paper sensor (PS) ..... Detects the presence of paper in the cassette.
5. Lift sensor (LS)..... Detects activation of upper limit of the bottom plate.
6. Registration sensor (RS)..... Controls the secondary paper feed start timing.
7. MP paper sensor (MPPS) ..... Detects the presence of paper on the MP tray.
8. MP feed sensor (MPFS) ..... Detects a paper misfeed in the MP conveying section.
9. Eject sensor (ES) ..... Detects a paper misfeed in the fuser or eject section.
10. Paper full sensor (PFS)..... Detects the paper full in the top tray.
11. Toner sensor K (TS-K) ..... Detects the toner density in the developing unit K.
12. Toner sensor K (TS-M)..... Detects the toner density in the developing unit M.
13. Toner sensor K (TS-C)..... Detects the toner density in the developing unit C.
14. Toner sensor K (TS-Y)..... Detects the toner density in the developing unit Y.
15. ID sensor 1 (IDS1) ..... Measures image density for color calibration.
16. ID sensor 2 (IDS2) ..... Measures image density for color calibration.

17. Developing release switch
    (DEVRSW)..... Detects separation of developing units M, C and Y.
18. Waste toner sensor (WTS)..... Detects when the waste toner box is full.
19. Envelope switch (EVSW)..... Detects the envelope mode setting.
20. Top tray switch (TTSW)..... Breaks the safety circuit when the top tray is opened.
21. Toner container switch (TCSW) ..... Detects the presence of the toner container.
22. Waste toner cover switch (WTCSW)..... Breaks the safety circuit when the waste toner cover is opened.
23. Fuser thermistor (FTH) ..... Detects the heat roller temperature.
24. Outer temperature sensor (OTEMS)..... Detects the outside temperature and humidity.
25. Inner temperature sensor (ITEMS) ..... Detects the inside temperature.
26. Home position sensor (HPS) ..... Detects the ISU in the home position.

(3) Motors

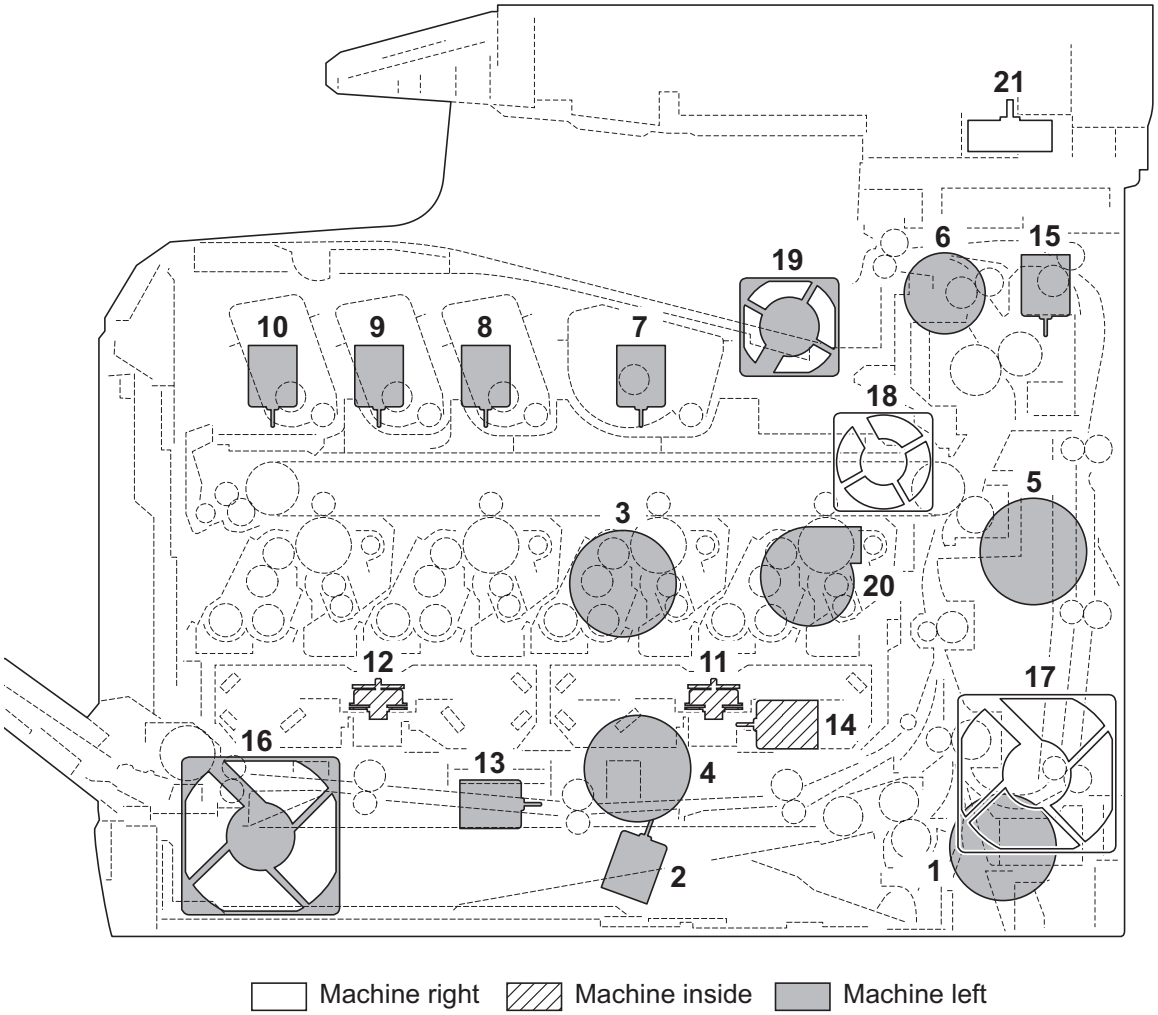

Figure 2-2-3 Motors

1. Paper feed motor (PFM) ..... Drives the paper feed section.
2. Lift motor (LM)..... Operates the bottom plate.
3. Drum motor (DRM) ..... Drives the drum unit.
4. Developing motor (DEVM)..... Drives the developing unit.
5. Fuser motor (FUM) ..... Drives the transfer section and the fuser section.
6. Duplex motor (DUM)..... Drives the duplex section.
7. Toner motor K (TM-K) ..... Replenishes toner to the developing unit K
8. Toner motor M (TM-M)..... Replenishes toner to the developing unit M
9. Toner motor C (TM-C)..... Replenishes toner to the developing unit C
10. Toner motor Y (TM-Y) ..... Replenishes toner to the developing unit Y
11. Polygon motor KM (PM-KM)..... Drives the polygon mirror KM.
12. Polygon motor CY (PM-CY)..... Drives the polygon mirror CY.
13. Developing release motor (DEVRM)..... Drives separation of developing units M, C and Y.
14. LSU cleaning motor (LSUCM) ..... Drives LSU dust shield glass cleaning system.
15. Fuser pressure release motor (FPRM) ..... Drives fuser pressure release.
16. Left fan motor (LFM) ..... Cools the interior of machine.
17. Right fan motor (RFM) ..... Cools the interior of machine.

18. Controller fan motor (CONFM)..... Cools the controller section.
19. Fuser fan motor (FUFM) ..... Cools the fuser section.
20. Container fan motor (CFM) ..... Cools the toner container section.
21. ISU motor (ISUM) ..... Drives the ISU.

(4) Others

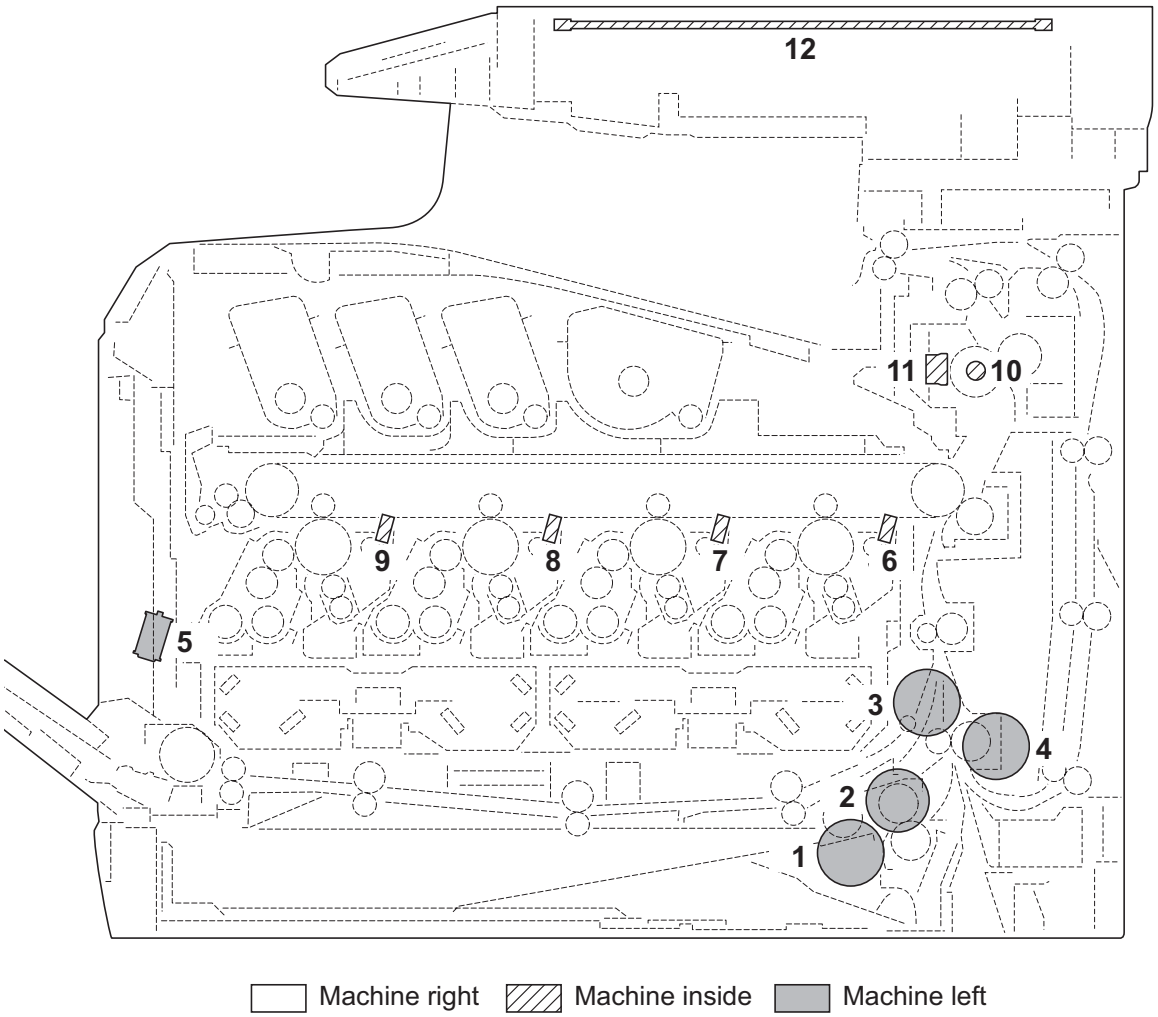

Figure 2-2-4 Others

1. Paper feed clutch (PFCL) ..... Primary paper feed from cassette.
2. MP feed clutch (MPFCL)..... Controls the drive of MP conveying section.
3. Registration clutch (RCL)..... Controls the secondary paper feed.
4. Middle clutch (MCL)..... Controls the drive of conveying section.
5. MP solenoid (MPSOL) ..... Controls the MP bottom plate.
6. Cleaning lamp K (CL-K)..... Eliminates the residual electrostatic charge on the drum (black).
7. Cleaning lamp M (CL-M)..... Eliminates the residual electrostatic charge on the drum (magenta).
8. Cleaning lamp C (CL-C)..... Eliminates the residual electrostatic charge on the drum (cyan).
9. Cleaning lamp Y (CL-Y)..... Eliminates the residual electrostatic charge on the drum (yellow).
10. Fuser heater (FH) ..... Heats the heat roller.
11. Fuser thermal cutout..... Prevents overheating of the heat roller.
12. Exposure lamp (EL) ..... Exposes originals.

(5) Document processor

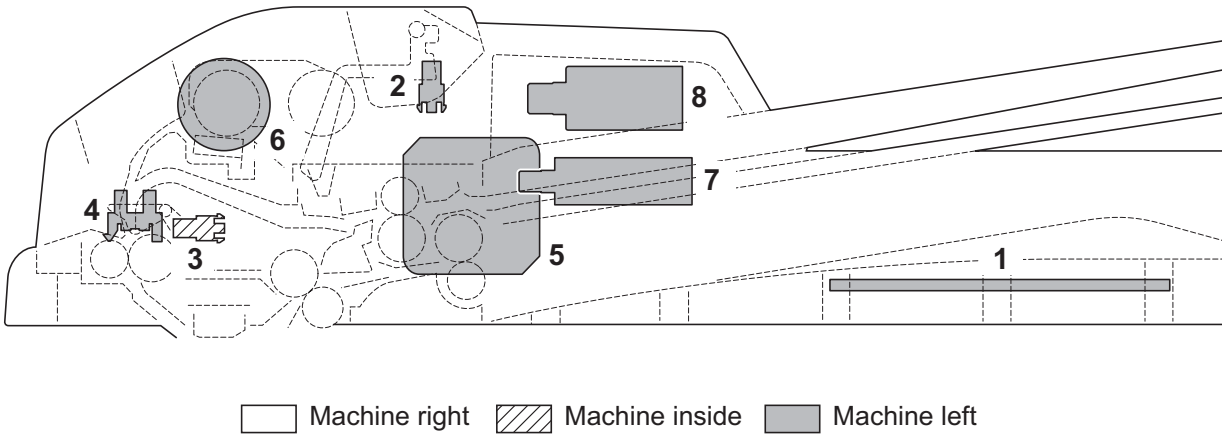

Figure 2-2-5 Document processor

1. DP drive PWB (DPDPWB ..... Consists the solenoids and clutch driver circuit and wiring relay circuit.
2. DP original sensor (DPOS) ..... Detects the presence of an original.
3. DP timing sensor (DPTS)..... Detects the original scanning timing.
4. DP open/close sensor (DPOCS)..... Detects the opening/closing of the DP.
5. DP paper feed motor (DPPFM)..... Drives the original feed section.
6. DP paper feed clutch (DPPFCL)..... Controls the drive of the DP forwarding pulley and DP feed pulley.
7. DP switchback solenoid (DPSBSOL).... Operates the switchback guide.
8. DP pressure solenoid (DPPRSOL)..... Operates the switchback pulley.

This page is intentionally left blank.

2-3-1 Power source PWB

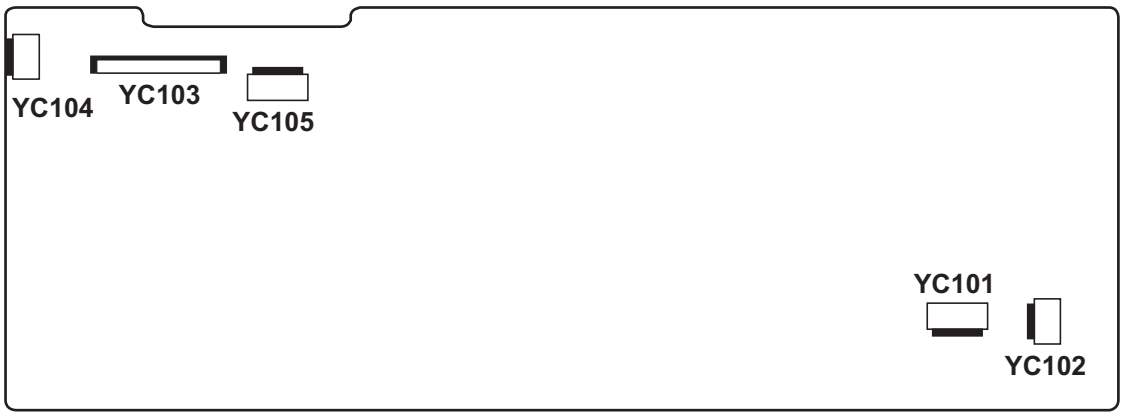

Figure 2-3-1 Power source PWB silk-screen diagram

Connector	Pin	Signal	I/O	Voltage	Description
YC101	1	LIVE	I	120 V AC 220-240 V AC	AC power input
Connected to AC inlet and main power switch	2	NEUTRAL	I	120 V AC 220-240 V AC	AC power input
YC102	1	NEUTRAL	O	120 V AC/0 V 220-240 V AC/0 V	FH: On/Off
Connected to fuser heater	2	LIVE	O	120 V AC 220-240 V AC	AC power to FH
YC103	1	+24V1	O	24 V DC	24 V DC power to RYPWB
Connected to relay PWB	2	GND	-	-	Ground
	3	GND	-	-	Ground
	4	GND	-	-	Ground
	5	GND	-	-	Ground
	6	+24V2	O	24 V DC	24 V DC power to RYPWB (via ILSW)
	7	+24V2	O	24 V DC	24 V DC power to RYPWB (via ILSW)
	8	+24V2	O	24 V DC	24 V DC power to RYPWB (via ILSW)
	9	+24V2	O	24 V DC	24 V DC power to RYPWB (via ILSW)
	10	PSSLEEPN	I	0/3.3 V DC	Sleep mode signal: On/Off
	11	ZCROSS	O	0/3.3 V DC (pulse)	Zero-cross signal
	12	RELAY	I	0/3.3 V DC	Relay signal
	13	HEATRE1	I	0/3.3 V DC	FH: On/Off
YC104	1	+24V1	O	24 V DC	24 V DC power to ILSW
Connected to interlock switch	2	N.C	-	-	Not used
	3	+24V2	I	24 V DC	24 V DC power from ILSW
YC105	1	+24V1	O	24 V DC	24 V DC power to MPWB
Connected to main PWB	2	GND	-	-	Ground
	3	GND	-	-	Ground
	4	+5V1	O	5 V DC	5 V DC power to MPWB

2-3-2 Engine PWB

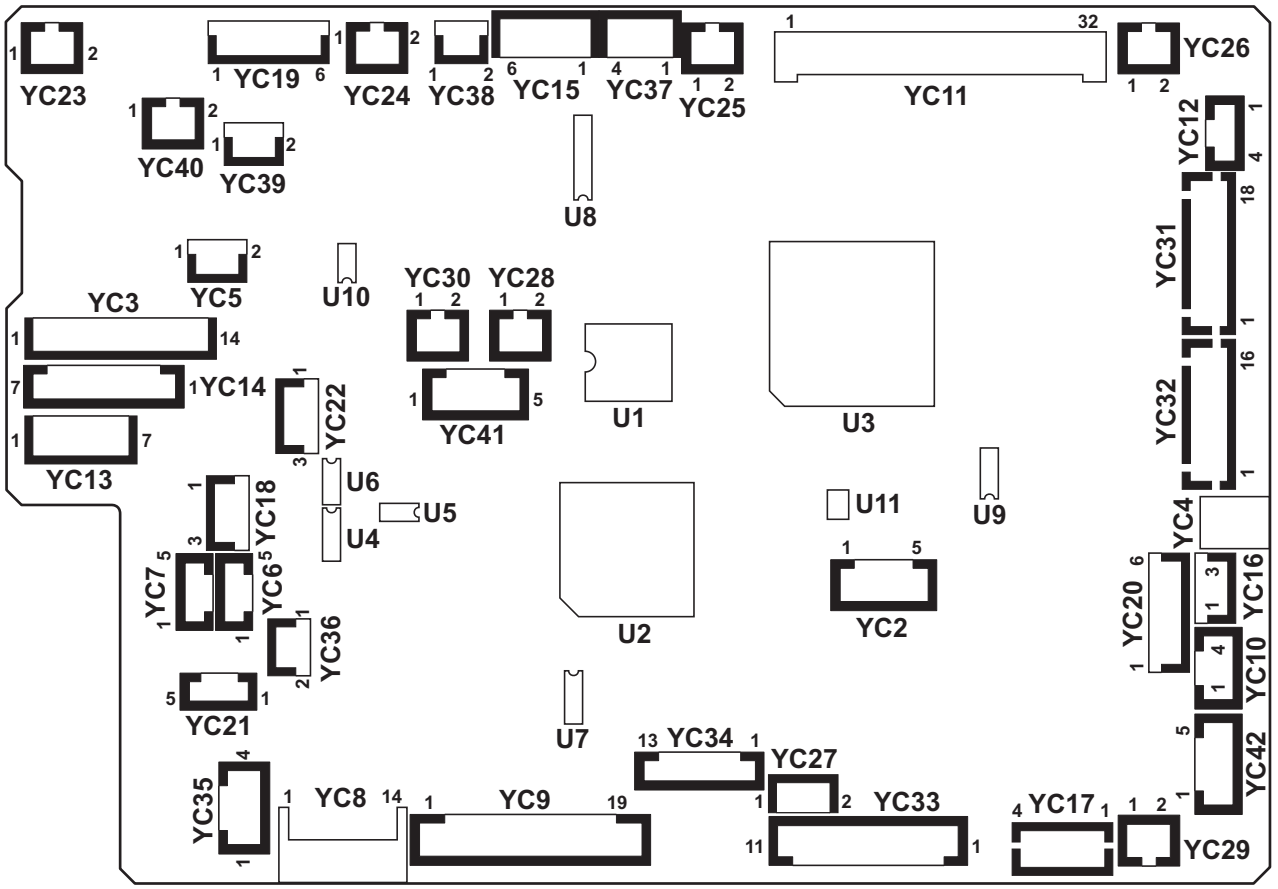

Figure 2-3-2 Engine PWB silk-screen diagram

Connector	Pin	Signal	I/O	Voltage	Description
YC3	1	MPFCLDRN	O	0/24 V DC	MPFCL: On/Off
Connected to MP feed clutch, paper feed clutch, paper feed motor, middle clutch and registration clutch	2	+24V3	O	24 V DC	24 V DC power to MPFCL
	3	FEDCLDRN	O	0/24 V DC	PFCL: On/Off
	4	+24V3	O	24 V DC	24 V DC power to PFCL
	5	N.C.	-	-	Not used
	6	FEMOTRDYN	I	0/3.3 V DC	PFM ready signal
	7	FEMOTCLK	O	0/3.3 V DC (pulse)	PFM clock signal
	8	FEMOTREN	O	0/3.3 V DC	PFM: On/Off
	9	GND	-	-	Ground
	10	+24V3	O	24 V DC	24 V DC power to PFM
	11	MIDCLDRN	O	0/24 V DC	MCL: On/Off
	12	+24V3	O	24 V DC	24 V DC power to MCL
	13	REGCLDRN	O	0/24 V DC	RCL: On/Off
	14	+24V3	O	24 V DC	24 V DC power to RCL
YC4	1	+24V3	O	24 V DC	24 V DC power to MPSOL
Connected to MP solenoid	2	MPSOLDRN	I	0/24 V DC	MPSOL: On/Off
YC6	1	VOSL	I	Analog	IDS1 detection signal
Connected to ID sensor 1	2	VOPL	I	Analog	IDS1 detection signal
	3	GND	-	-	Ground
	4	LEDREFL	O	Analog	IDS1 control signal
	5	+3.3V2	O	3.3 V DC	3.3 V DC power to IDS1
YC7	1	VOSR	I	Analog	IDS2 detection signal
Connected to ID sensor 2	2	VOPR	I	Analog	IDS2 detection signal
	3	GND	-	-	Ground
	4	LEDREFR	O	Analog	IDS2 control signal
	5	+3.3V2	O	3.3 V DC	3.3 V DC power to IDS2

Connector	Pin	Signal	I/O	Voltage	Description
YC8	1	+24V1	I	24 V DC	24 V DC power from RYPWB
Connected to relay PWB	2	GND	-	-	Ground
	3	GND	-	-	Ground
	4	GND	-	-	Ground
	5	GND	-	-	Ground
	6	+24V3	O	24 V DC	24 V DC power from RYPWB
	7	+24V3	O	24 V DC	24 V DC power from RYPWB
	8	+24V3	O	24 V DC	24 V DC power from RYPWB
	9	+24V3	O	24 V DC	24 V DC power from RYPWB
	10	GND	-	-	Ground
	11	SLEEPN	O	0/3.3 V DC	Sleep mode signal: On/Off
	12	HYPINT	O	0/3.3 V DC	Interruption signal
	13	I2CINT	I	0/3.3 V DC (pulse)	Communication signal
	14	+3.3V2	I	3.3 V DC	3.3 V DC power from RYPWB
YC9	1	TCONTN	O	0/3.3 V DC	TCSW: On/Off
Connected to relay PWB	2	EGHOLD	I	0/3.3 V DC	Engine hold signal
	3	ZCROSS	I	0/3.3 V DC (pulse)	Zero-cross signal
	4	RELAY	O	0/3.3 V DC	Power relay signal
	5	HEATRE1	O	0/3.3 V DC	FH: On/Off
	6	(HEATRE2)	-	-	Not used
	7	VSYNC	O	0/3.3 V DC	Horizontal synchronizing signal
	8	EGIRN	O	0/3.3 V DC	Engine interruption signal
	9	SBSY	O	0/3.3 V DC	Serial busy signal
	10	SDIR	O	0/3.3 V DC	Serial communication direction change signal
	11	SI	I	0/3.3 V DC (pulse)	Serial communication data signal input
	12	SO	O	0/3.3 V DC (pulse)	Serial communication data signal output
	13	SCKN	I	0/3.3 V DC (pulse)	Serial communication clock signal
	14	N.C.	-	-	Not used
	15	I2CSCL	I	0/3.3 V DC (pulse)	EEPROM clock signal
	16	GND	-	-	Ground
	17	I2CSDA	I/O	0/3.3 V DC (pulse)	EEPROM data signal
	18	MPFJAM	I	0/3.3 V DC	MPFS: On/Off
	19	+3.3V1_MFP	I	3.3 V DC	3.3 V DC power from RYPWB

Connector	Pin	Signal	I/O	Voltage	Description
YC10	1	LEDA	O	3.3 V DC	3.3 V DC power to WTS
Connected to waste toner sensor	2	LEDK	O	0/3.3 V DC (pulse)	WTS LED emitter signal
	3	PTRE	I	Analog	WTS detection signal
	4	PTRC	O	3.3 V DC	3.3 V DC power to WTS
YC11	1	+24V3	O	24 V DC	24 V DC power to HVPWB
Connected to high voltage PWB	2	+24V3	O	24 V DC	24 V DC power to HVPWB
	3	T1CCNT	O	PWM	Primary transfer bias control voltage (Cyan)
	4	HVCLKY	O	0/3.3 V DC (pulse)	Developing bias clock signal (Yellow)
	5	T1MCNT	O	PWM	Primary transfer bias control voltage (Magenta)
	6	HVCLKC	O	0/3.3 V DC (pulse)	Developing bias clock signal (Cyan)
	7	T2CNT	O	PWM	Secondary transfer bias control voltage
	8	BCMCNT	O	PWM	Developing magnet bias control voltage (Cyan)
	9	CLCNT	O	PWM	Cleaning bias control voltage
	10	BKMCNT	O	PWM	Developing magnet bias control voltage (Black)
	11	T1YCNT	O	PWM	Primary transfer bias control voltage (Yellow)
	12	BKSCNT	O	PWM	Developing sleeve bias control voltage (Black)
	13	T1KCNT	O	PWM	Primary transfer bias control voltage (Black)
	14	BYSCNT	O	PWM	Developing sleeve bias control voltage (Yellow)
	15	MYCNT	O	PWM	Main charger control voltage (Yellow)
	16	BMMCNT	O	PWM	Developing magnet bias control voltage (Magenta)
	17	MKCNT	O	PWM	Main charger control voltage (Black)
	18	BYMCNT	O	PWM	Developing magnet bias control voltage (Yellow)
	19	MCCNT	O	PWM	Main charger control voltage (Cyan)
	20	T2RREM	O	0/3.3 V DC (pulse)	Secondary transfer bias reverse signal
	21	MMCNT	O	PWM	Main charger control voltage (Magenta)
	22	BMSCNT	O	PWM	Developing sleeve bias control voltage (Magenta)
	23	MISENS	I	Analog	Main charger AC current signal
	24	BKACNT	O	PWM	Developing AC bias control voltage (Black)

Connector	Pin	Signal	I/O	Voltage	Description
YC11	25	BCACNT	O	PWM	Developing AC bias control voltage (Cyan)
Connected to high voltage PWB	26	BMACNT	O	PWM	Developing AC bias control voltage (Magenta)
	27	BYACNT	O	PWM	Developing AC bias control voltage (Yellow)
	28	HVCLKK	O	0/3.3 V DC (pulse)	Developing bias clock signal (Black)
	29	BCSCNT	O	PWM	Developing sleeve bias control voltage (Cyan)
	30	HVCLKM	O	0/3.3 V DC (pulse)	Developing bias clock signal (Magenta)
	31	GND	-	-	Ground
	32	GND	-	-	Ground
YC13	1	MOTREV (GND)	-	-	Ground
Connected to drum motor	2	MOTRDYN	I	0/3.3 V DC	DRM ready signal
	3	SPEEDSEL	O	0/3.3 V DC	DRM speed selection signal
	4	MOTCLK	O	0/3.3 V DC (pulse)	DRM clock signal
	5	MOTEN	O	0/3.3 V DC	DRM: On/Off
	6	GND	-	-	Ground
	7	+24V3	O	24 V DC	24 V DC power to DRM
YC14	1	+24V3	O	24 V DC	24 V DC power to DEVM
Connected to developing motor	2	GND	-	-	Ground
	3	DLPMOTREN	O	0/3.3 V DC	DEVM: On/Off
	4	DLPMOTCLK	O	0/3.3 V DC (pulse)	DEVM clock signal
	5	DLPMOT RDYN	I	0/3.3 V DC	DEVM ready signal
	6	MOTREV	O	0/3.3 V DC	DEVM drive switch signal
YC15	1	IMAMOT RDYN	I	0/3.3 V DC	FUM ready signal
Connected to fuser motor	2	IMAMOTCLK	O	0/3.3 V DC (pulse)	FUM clock signal
	3	IMAMOTREN	O	0/3.3 V DC	FUM: On/Off
	4	GND	-	-	Ground
	5	+24V3	O	24 V DC	24 V DC power to FUM
YC16	1	+3.3V2_LED1	O	3.3 V DC	3.3 V DC power to MPPS
Connected to MP paper sensor	2	GND	-	-	Ground
	3	MPFPAP	I	0/3.3 V DC	MPPS: On/Off

Connector	Pin	Signal	I/O	Voltage	Description
YC17	1	CAS2	I	0/3.3 V DC	CSSW (SW2): On/Off
Connected to cassette size switch	2	CAS1	I	0/3.3 V DC	CSSW (SW1): On/Off
	3	COM	-	-	Ground
	4	CAS0	I	0/3.3 V DC	CSSW (SW0): On/Off
YC18	1	+3.3V2_LED2	O	3.3 V DC	3.3 V DC power to RS
Connected to registration sensor	2	GND	-	-	Ground
	3	REGPAP	I	0/3.3 V DC	RS: On/Off
YC19	1	PDIRN	I	0/3.3 V DC	EVSW: On/Off
Connected to eject PWB	2	+3.3V2	O	3.3 V DC	3.3 V DC power to EJPWB
	3	FTHERM	I	Analog	FTH detection voltage
	4	FUSPAP	I	0/3.3 V DC	ES: On/Off
	5	FDFULL	I	0/3.3 V DC	PFS: On/Off
	6	GND	-	-	Ground
YC20	1	+3.3V2_LED3	O	3.3 V DC	3.3 V DC power to TCSW
Connected to toner con-tainer switch and waste toner cover switch	2	GND	-	-	Ground
	3	TCONTN	I	0/3.3 V DC	TCSW: On/Off
	4	+3.3V2_LED7	O	3.3 V DC	3.3 V DC power to WTCSW
	5	GND	-	-	Ground
	6	WSTOPN	I	0/3.3 V DC	WTCSW: On/Off
YC21	1	GND	-	-	Ground
Connected to cassette PWB	2	PAPVOL2	-	-	Not used
	3	PAPVOL1	I	0/3.3 V DC	PS: On/Off
	4	LIFTSEN	I	0/3.3 V DC	LS: On/Off
	5	+3.3V2	O	3.3 V DC	3.3 V DC power to CPWB
YC23	1	+24V3	O	24 V DC	24 V DC power to TM-K
Connected to toner motor K	2	TNMKDRN	O	0/24 V DC	TM-K: On/Off
YC24	1	+24V3	O	24 V DC	24 V DC power to TM-M
Connected to toner motor M	2	TNMMDRN	O	0/24 V DC	TM-M: On/Off
YC25	1	+24V3	O	24 V DC	24 V DC power to TM-C
Connected to toner motor C	2	TNMCDRN	O	0/24 V DC	TM-C: On/Off
YC26	1	+24V3	O	24 V DC	24 V DC power to TM-Y
Connected to toner motor Y	2	TNMYDRN	O	0/24 V DC	TM-Y: On/Off

Connector	Pin	Signal	I/O	Voltage	Description
YC27	1	LMOTDRN	O	0/24 V DC	LM: On/Off
Connected to lift motor	2	GND	-	-	Ground
YC28	1	+24V1	O	24 V DC	24 V DC power to CFM
Connected to container fan motor	2	TCONTFAN DRN	O	0/12/24 V DC	CFM: Full speed/Half speed/Off
YC29	1	+24V1	O	24 V DC	24 V DC power to LFM
Connected to left fan motor	2	LFANDRN	O	0/12/24 V DC	LFM: Full speed/Half speed/Off
YC30	1	TCONTN	O	0/3.3 V DC	TTSW: On/Off
Connected to top tray switch	2	GND	-	-	Ground
YC31	1	GND	-	-	Ground
Connected to laser scanner unit KM	2	VREFK	O	Analog	APCPWB-K laser power standard voltage
	3	LONBKN	O	0/3.3 V DC	APCPWB-K sample/hold signal
	4	ENBKN	O	0/3.3 V DC	APCPWB-K laser enable signal
	5	PDKN	I	0/3.3 V DC (pulse)	Horizontal synchronizing signal
	6	GND	-	-	Ground
	7	VREFM	O	Analog	APCPWB-M laser power standard voltage
	8	LONBMN	O	0/3.3 V DC	APCPWB-M sample/hold signal
	9	ENBMN	O	0/3.3 V DC	APCPWB-M laser enable signal
	10	PDMN	I	0/3.3 V DC (pulse)	Horizontal synchronizing signal
	11	LSUTHERMM	I	Analog	ITEMS detection voltage
	12	POLCLK1	O	0/3.3 V DC (pulse)	PM-KM clock signal
	13	POLRDYN1	I	0/3.3 V DC	PM-KM ready signal
	14	POLONN1	O	0/3.3 V DC	PM-KM: On/Off
	15	GND	-	-	Ground
	16	+24V3	O	24 V DC	24 V DC power to PM-KM
	17	N.C.	-	-	Not used
	18	N.C.	-	-	Not used

Connector	Pin	Signal	I/O	Voltage	Description
YC32	1	GND	-	-	Ground
Connected to laser scanner unit CY	2	VREFC	O	Analog	APCPWB-C laser power standard voltage
	3	LONBCN	O	0/3.3 V DC	APCPWB-C sample/hold signal
	4	ENBCN	O	0/3.3 V DC	APCPWB-C laser enable signal
	5	PDCN	I	0/3.3 V DC (pulse)	Horizontal synchronizing signal
	6	GND	-	-	Ground
	7	VREFY	O	Analog	APCPWB-Y laser power standard voltage
	8	LONBYN	O	0/3.3 V DC	APCPWB-Y sample/hold signal
	9	ENBYN	O	0/3.3 V DC	APCPWB-Y laser enable signal
	10	PDYN	I	0/3.3 V DC (pulse)	Horizontal synchronizing signal
	11	LSUTHERMY	-	-	Not used
	12	POLCLK0	O	0/3.3 V DC (pulse)	PM-CY clock signal
	13	POLRDYN0	I	0/3.3 V DC	PM-CY ready signal
	14	POLONN0	O	0/3.3 V DC	PM-CY: On/Off
	15	GND	-	-	Ground
	16	+24V3	O	24 V DC	24 V DC power to PM-CY
YC33	1	GND	-	-	Ground
Connected to paper feeder	2	OPSCLK	O	0/3.3 V DC (pulse)	Paper feeder clock signal
	3	OPRDYN	O	0/3.3 V DC	Paper feeder ready signal
	4	OPSDI	I	0/3.3 V DC (pulse)	Paper feeder serial communication data signal input
	5	OPSDO	O	0/3.3 V DC (pulse)	Paper feeder serial communication data signal output
	6	+3.3V1	O	3.3 V DC	3.3 V DC power to paper feeder
	7	GND	-	-	Ground
	8	OPSEL0	O	0/3.3 V DC	Paper feeder selection signal
	9	OPSEL1	O	0/3.3 V DC	Paper feeder selection signal
	10	OPSEL2	O	0/3.3 V DC	Paper feeder selection signal
	11	+24V3	O	24 V DC	24 V DC power to paper feeder

Connector	Pin	Signal	I/O	Voltage	Description
YC34	1	TNSENM	I	Analog	TS-M detection voltage
Connected to drum relay PWB	2	ERASECDR	O	0/24 V DC	CL-C: On/Off
	3	TNSENK	I	Analog	TS-K detection voltage
	4	ERASEMDR	O	0/24 V DC	CL-M: On/Off
	5	DLPTHERM	I	Analog	DEVTH detection voltage
	6	ERASEKDR	O	0/24 V DC	CL-K: On/Off
	7	+3.3V2	O	3.3 V DC	3.3 V DC power to DRRPWB
	8	EECLK	O	0/3.3 V DC (pulse)	EEPROM clock signal
	9	GND	-	-	Ground
	10	EEDATA	I/O	0/3.3 V DC (pulse)	EEPROM data signal
	11	TNSENY	I	Analog	TS-Y detection voltage
	12	ERASEYDR	O	0/24 V DC	CL-Y: On/Off
	13	TNSENC	I	Analog	TS-C detection voltage
YC35	1	DLPDIRN	I	0/3.3 V DC	DEVRSW: On/Off
Connected to developing release switch and developing release motor	2	GND	-	-	Ground
	3	DLPCMOTA	O	24/0 V DC	DEVRM: Forward/Stop (Reverse)
	4	DLPCMOTB	O	24/0 V DC	DEVRM: Reverse/Stop (Forward)
YC36	1	LSUMOTA	O	24/0 V DC	LSUCM: Forward/Stop (Reverse)
Connected to LSU clean-ing motor	2	LSUMOTB	O	24/0 V DC	LSUCM: Reverse/Stop (Forward)
YC37	1	STDUA	O	0/24 V DC (pulse)	DUM drive control signal
Connected to duplex motor	2	STDUB	O	0/24 V DC (pulse)	DUM drive control signal
	3	STDUAN	O	0/24 V DC (pulse)	DUM drive control signal
	4	STDUBN	O	0/24 V DC (pulse)	DUM drive control signal
YC38	1	PREMOTDRN	O	0/24 V DC	FPRM: On/Off
Connected to fuser pres-sure release motor	2	GND	-	-	Ground
YC40	1	+24V1	O	24 V DC	24 V DC power to FUFM
Connected to fuser fan motor	2	FUFANDRN	O	0/12/24 V DC	FUFM: Full speed/Half speed/Off

Connector	Pin	Signal	I/O	Voltage	Description
YC42	1	GND	-	-	Ground
Connected to outer temperature sensor	2	AIRTEMP	I	Analog	OTEMS detection voltage (temperature)
	3	WETCLK0	O	0/3.3 V DC (pulse)	OTEMS clock signal
	4	WETCLK1	O	0/3.3 V DC (pulse)	OTEMS clock signal
	5	AIRWETOUT	I	Analog	OTEMS detection voltage (humidity)

2-3-3 Main PWB

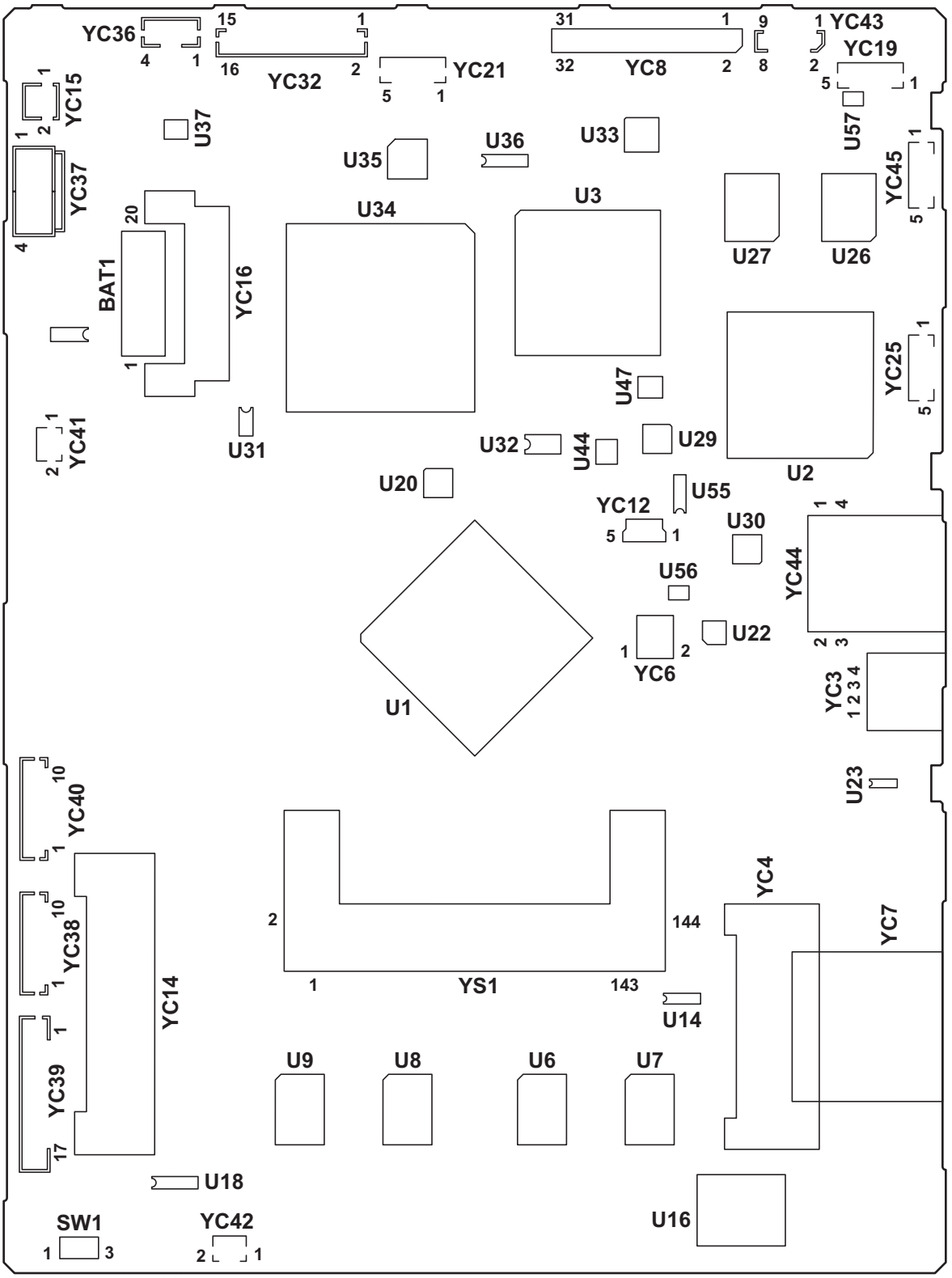

Figure 2-3-3 Main PWB silk-screen diagram

Connector	Pin	Signal	I/O	Voltage	Description
YC3	1	VBUS	O	5 V DC	5 V DC power output
Connected to USB	2	DATA-	I/O	-	USB data signal
	3	DATA+	I/O	-	USB data signal
	4	GND	-	-	Ground
YC8	1	CCDSW	O	0/3.3 V DC	CCD color/BW change signal
Connected to CCD PWB	2	CCDSH	O	0/3.3 V DC	CCD shift gate signal
	3	CCDCLPN	O	LVDS	CCD clamp signal
	4	CCDCLPP	O	LVDS	CCD clamp signal
	5	NC	-	-	Not used
	6	CCDRSP	O	LVDS	CCD reset signal
	7	CCDRSN	O	LVDS	CCD reset signal
	8	NC	-	-	Not used
	9	CCDPH1N	O	LVDS	CCD shift register clock signal
	10	CCDPH1P	O	LVDS	CCD shift register clock signal
	11	NC	-	-	Not used
	12	CCDPH2P	O	LVDS	CCD shift register clock signal
	13	CCDPH2N	O	LVDS	CCD shift register clock signal
	14	NC	-	-	Not used
	15	+3.3VS	O	3.3 V DC	3.3 V DC power to CCDPWB
	16	HPSWN	I	0/3.3 V DC	HPS: On/Off
	17	NC	-	-	Not used
	18	+24V_LAMP	O	24 V DC	24 V DC power to CCDPWB
	19	LAMPTH	O	0/3.3 V DC	EL drive signal
	20	GND_LAMP	-	-	Ground
	21	NC	-	-	Not used
	22	GND	-	-	Ground
	23	CCDDATAB	I	Analog	CCD image output signal (B)
	24	GND	-	-	Ground
	25	CCDDATAG	I	Analog	CCD image output signal (G)
	26	GND	-	-	Ground
	27	CCDDATAR	I	Analog	CCD image output signal (R)
	28	GND	-	-	Ground
	29	NC	-	-	Not used
	30	+5V1	O	5 V DC	5 V DC power to CCDPWB
	31	NC	-	-	Not used
	32	+12VS	O	DC12V	12 V DC power to CCDPWB

Connector	Pin	Signal	I/O	Voltage	Description
YC12	1	VBUS	O	5 V DC	5 V DC power output
Connected to USB	2	DATA-	I/O	-	USB data signal
	3	DATA+	I/O	-	USB data signal
	4	GND	-	-	Ground
	5	GND	-	-	Ground
YC14	A1	NC	-	-	Not used
Connected to FAX control PWB	B1	NC	-	-	Not used
	A2	NC	-	-	Not used
	B2	NC	-	-	Not used
	A3	GND	-	-	Ground
	B3	3.3V	O	3.3 V DC	3.3 V DC power output
	A4	3.3V	O	3.3 V DC	3.3 V DC power output
	B4	A15	O	0/3.3 V DC (pulse)	Address bus signal
	A5	GND	-	-	Ground
	B5	A14	O	0/3.3 V DC (pulse)	Address bus signal
	A6	A13	O	0/3.3 V DC (pulse)	Address bus signal
	B6	A12	O	0/3.3 V DC (pulse)	Address bus signal
	A7	A11	O	0/3.3 V DC (pulse)	Address bus signal
	B7	A10	O	0/3.3 V DC (pulse)	Address bus signal
	A8	A9	O	0/3.3 V DC (pulse)	Address bus signal
	B8	A8	O	0/3.3 V DC (pulse)	Address bus signal
	A9	GND	-	-	Ground
	B9	A7	O	0/3.3 V DC (pulse)	Address bus signal
	A10	A6	O	0/3.3 V DC (pulse)	Address bus signal
	B10	A5	O	0/3.3 V DC (pulse)	Address bus signal
	A11	A4	O	0/3.3 V DC (pulse)	Address bus signal
	B11	A3	O	0/3.3 V DC (pulse)	Address bus signal
	A12	A2	O	0/3.3 V DC (pulse)	Address bus signal
	B12	A1	O	0/3.3 V DC (pulse)	Address bus signal
	A13	GND	-	-	Ground
	B13	3.3V	O	3.3 V DC	3.3 V DC power output
	A14	OP2IFN	O	0/3.3 V DC	Select signal
	B14	OP2ACKN	I	0/3.3 V DC (pulse)	OP2ACKN signal
	A15	OP2IRN	I	0/3.3 V DC	Interruption signal
	B15	5V	O	5 V DC	5 V DC power output
	A16	RDY	O	0/3.3 V DC	Ready signal

Connector	Pin	Signal	I/O	Voltage	Description
YC14	B16	RXDREQ	I	0/3.3 V DC	Reception DMA request signal
Connected to FAX control PWB	A17	GND	-	-	Ground
	B17	RXDMACKN	O	0/3.3 V DC (pulse)	Reception DMACK signal
	A18	IORN	O	0/3.3 V DC	Read enable signal
	B18	IOWN	O	0/3.3 V DC	Write enable signal
	A19	RESETN	O	0/3.3 V DC	Reset signal
	B19	VOLTDETECT	-	-	Ground
	A20	D15	I/O	0/3.3 V DC (pulse)	Data bus signal
	B20	D14	I/O	0/3.3 V DC (pulse)	Data bus signal
	A21	GND	-	-	Ground
	B21	D13	I/O	0/3.3 V DC (pulse)	Data bus signal
	A22	D12	I/O	0/3.3 V DC (pulse)	Data bus signal
	B22	D11	I/O	0/3.3 V DC (pulse)	Data bus signal
	A23	D10	I/O	0/3.3 V DC (pulse)	Data bus signal
	B23	D9	I/O	0/3.3 V DC (pulse)	Data bus signal
	A24	D8	I/O	0/3.3 V DC (pulse)	Data bus signal
	B24	D7	I/O	0/3.3 V DC (pulse)	Data bus signal
	A25	GND	-	-	Ground
	B25	D6	I/O	0/3.3 V DC (pulse)	Data bus signal
	A26	D5	I/O	0/3.3 V DC (pulse)	Data bus signal
	B26	D4	I/O	0/3.3 V DC (pulse)	Data bus signal
	A27	D3	I/O	0/3.3 V DC (pulse)	Data bus signal
	B27	D2	I/O	0/3.3 V DC (pulse)	Data bus signal
	A28	D1	I/O	0/3.3 V DC (pulse)	Data bus signal
	B28	D0	I/O	0/3.3 V DC (pulse)	Data bus signal
	A29	GND	-	-	Ground
	B29	NC	-	-	Not used
	A30	NC	-	-	Not used
	B30	NC	-	-	Not used
YC15	1	OUT-	O	Analog	Speaker sound signal (-)
Connected to speaker	2	OUT+	O	Analog	Speaker sound signal (+)

Connector	Pin	Signal	I/O	Voltage	Description
YC32	1	FEEDCL	O	0/24 V DC	DPPFCL: On/Off
Connected to DP drive PWB	2	REVSOL	O	0/24 V DC	DPSBSOL: On/Off
	3	PRESOLN	O	0/24 V DC	DPPRSOL: On (Press)/Off
	4	RELSOLN	O	0/24 V DC	DPPRSOL: On (Release)/Off
	5	DPDETN	I	0/3.3 V DC	DP set signal
	6	OPSWN	I	0/3.3 V DC	DPOCS: On/Off
	7	ORGSWN	I	0/3.3 V DC	DPOS: On/Off
	8	TIMSWN	I	0/3.3 V DC	DPTS: On/Off
	9	GND	-	-	Ground
	10	+3.3V2	O	3.3 V DC	3.3 V DC power to DPDPWB
	11	GND	-	-	Ground
	12	+24V2	O	24 V DC	24 V DC power to PDPWB
	13	MOTB2	O	0/24 V DC (pulse)	DPPFM drive control signal
	14	MOTA2	O	0/24 V DC (pulse)	DPPFM drive control signal
	15	MOTB1	O	0/24 V DC (pulse)	DPPFM drive control signal
	16	MOTA1	O	0/24 V DC (pulse)	DPPFM drive control signal
YC36	1	SCMOTB2	O	0/24 V DC (pulse)	ISUM drive control signal
Connected to ISU motor	2	SCMOTA1	O	0/24 V DC (pulse)	ISUM drive control signal
	3	SCMOTB1	O	0/24 V DC (pulse)	ISUM drive control signal
	4	SCMOTA2	O	0/24 V DC (pulse)	ISUM drive control signal
YC37	1	+24V1	I	24 V DC	24 V DC power from PSPWB
Connected to power source PWB	2	GND	-	-	Ground
	3	GND	-	-	Ground
	4	+5V1	I	5 V DC	5 V DC power from PSPWB
YC38	1	GND	-	-	Ground
Connected to laser scanner unit KM	2	+3.3V3	O	3.3 V DC	3.3 V DC power to APCPWB-M
	3	PDMN	I	0/3.3 V DC (pulse)	Horizontal synchronizing signal
	4	VDOMP	O	LVDS	APCPWB-M video data signal (+)
	5	VDOMN	O	LVDS	APCPWB-M video data signal (-)
	6	GND	-	-	Ground
	7	+3.3V3	O	3.3 V DC	3.3 V DC power to APCPWB-K
	8	PDKN	I	0/3.3 V DC (pulse)	Horizontal synchronizing signal
	9	VDOKP	O	LVDS	APCPWB-K video data signal (+)
	10	VDOKN	O	LVDS	APCPWB-K video data signal (-)

Connector	Pin	Signal	I/O	Voltage	Description
YC39	1	+3.3V1_MFP	O	3.3 V DC	3.3 V DC power to RYPWB
Connected to relay PWB	2	I2CSDA	I/O	0/3.3 V DC (pulse)	EEPROM data signal
	3	GND	-	-	Ground
	4	I2CSCL	O	0/3.3 V DC (pulse)	EEPROM clock signal
	5	SCKN	O	0/3.3 V DC (pulse)	Serial communication clock signal
	6	SO	I	0/3.3 V DC (pulse)	Serial communication data signal input
	7	SI	O	0/3.3 V DC (pulse)	Serial communication data signal output
	8	SDIR	I	0/3.3 V DC	Serial communication direction change signal
	9	SBSY	I	0/3.3 V DC	Serial busy signal
	10	EGIRN	I	0/3.3 V DC	Engine interruption signal
	11	VSYNC	I	0/3.3 V DC (pulse)	Horizontal synchronizing signal
	12	+3.3V2	O	3.3 V DC	3.3 V DC power to RYPWB
	13	GND	-	-	Ground
	14	EGHOLD	O	0/3.3 V DC	Engine hold signal
	15	I2CINT	O	0/3.3 V DC (pulse)	Communication signal
	16	HYPINT	I	0/3.3 V DC	Interruption signal
	17	PSSLEEPN	O	0/3.3 V DC	Sleep mode signal: On/Off
YC40	1	GND	-	-	Ground
Connected to laser scanner unit CY	2	+3.3V3	O	3.3 V DC	3.3 V DC power to APCPWB-Y
	3	PDYN	I	0/3.3 V DC (pulse)	Horizontal synchronizing signal
	4	VDOYP	O	LVDS	APCPWB-Y video data signal (+)
	5	VDOYN	O	LVDS	APCPWB-Y video data signal (-)
	6	GND	-	-	Ground
	7	+3.3V3	O	3.3 V DC	3.3 V DC power to APCPWB-C
	8	PDCN	I	0/3.3 V DC (pulse)	Horizontal synchronizing signal
	9	VDOCP	O	LVDS	APCPWB-C video data signal (+)
	10	VDOCN	O	LVDS	APCPWB-C video data signal (-)
YC41	1	+24V1	O	24 V DC	24 V DC power to CONFM
Connected to controller fan motor	2	CONTFAN DRN	O	0/12/24 V DC	CONFM: Full speed/Half speed/Off
YC42	1	+24V1	O	24 V DC	24 V DC power to RFM
Connected to right fan motor	2	RFANDRN	O	0/12/24 V DC	RFM: Full speed/Half speed/Off

Connector	Pin	Signal	I/O	Voltage	Description
YC43	1	+5V1	-	5 V DC	5 V DC power to OPPWB
Connected to operation panel PWB	2	POWERKEY	I	0/3.3 V DC	Power key input signal
	3	FPRSTN	O	0/3.3 V DC	OPPWB reset signal
	4	PANTXD	O	0/3.3 V DC (pulse)	OPPWB transmission data
	5	PANRXD	I	0/3.3 V DC (pulse)	OPPWB received data
	6	+3.3V	O	3.3 V DC	3.3 V DC power to OPPWB
	7	PANEL_ MODE1	O	0/3.3 V DC	OPPWB mode signal
	8	GND	-	-	Ground
	9	PANEL_ MODE0	O	0/3.3 V DC	OPPWB mode signal
YC44	1	TCT	O	3.3 V DC	3.3 V DC power output
Connected to ethernet	2	TD+	O	0/3.3 V DC (pulse)	Transmission data
	3	TD-	O	0/3.3 V DC (pulse)	Transmission data
	4	RD+	I	0/3.3 V DC (pulse)	Received data
	5	RD-	I	0/3.3 V DC (pulse)	Received data
	6	RCT	O	3.3 V DC	3.3 V DC power output
	7	CAT PHY	O	0/3.3 V DC	Control signal
	8	ANO PHY	O	3.3 V DC	3.3 V DC power output
	9	CAT MAC	-	-	Ground
	10	ANO MAC	O	0/3.3 V DC	Control signal

2-3-4 Drum relay PWB

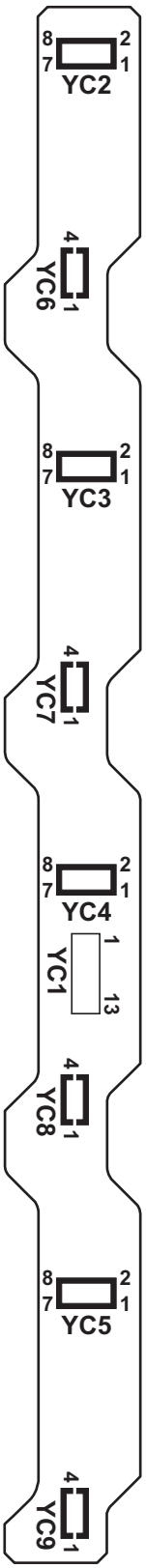

Figure 2-3-4 Drum relay PWB silk-screen diagram

Connector	Pin	Signal	I/O	Voltage	Description
YC1	1	TNSENM	O	Analog	TS-M detection voltage
Connected to engine PWB	2	ERASECDR	I	0/24 V DC	CL-C: On/Off
	3	TNSENK	O	Analog	TS-K detection voltage
	4	ERASEMDR	I	0/24 V DC	CL-M: On/Off
	5	DLPTHERM	O	Analog	DEVTH detection voltage
	6	ERASEKDR	I	0/24 V DC	CL-K: On/Off
	7	+3.3V2	I	3.3 V DC	3.3 V DC power from EPWB
	8	EECLK	I	0/3.3 V DC (pulse)	EEPROM clock signal
	9	GND	-	-	Ground
	10	EEDATA	I/O	0/3.3 V DC (pulse)	EEPROM data signal
	11	TNSENY	O	Analog	TS-Y detection voltage
	12	ERASEYDR	I	0/24 V DC	CL-Y: On/Off
	13	TNSENC	O	Analog	TS-C detection voltage
YC2	1	GND	-	-	Ground
Connected to drum PWB K	2	EECLK	O	0/3.3 V DC (pulse)	EEPROM clock signal
	3	ERASEKDR	O	0/24 V DC	CL-K: On/Off
	4	EEDATA	I/O	0/3.3 V DC (pulse)	EEPROM data signal
	5	N.C.	-	-	Not used
	6	+3.3V2	O	3.3 V DC	3.3 V DC power to DRPWB-K
	7	DA0	-	-	Not used
	8	DA1	-	-	Not used
YC3	1	GND	-	-	Ground
Connected to drum PWB M	2	EECLK	O	0/3.3 V DC (pulse)	EEPROM clock signal
	3	ERASEMDR	O	0/24 V DC	CL-M: On/Off
	4	EEDATA	I/O	0/3.3 V DC (pulse)	EEPROM data signal
	5	N.C.	-	-	Not used
	6	+3.3V2	O	3.3 V DC	3.3 V DC power to DRPWB-M
	7	DA0	-	-	Ground
	8	DA1	-	-	Not used
YC4	1	GND	-	-	Ground
Connected to drum PWB C	2	EECLK	O	0/3.3 V DC (pulse)	EEPROM clock signal
	3	ERASECDR	O	0/24 V DC	CL-C: On/Off
	4	EEDATA	I/O	0/3.3 V DC (pulse)	EEPROM data signal
	5	N.C.	-	-	Not used
	6	+3.3V2	O	3.3 V DC	3.3 V DC power to DRPWB-C
	7	DA0	-	-	Not used
	8	DA1	-	-	Ground

Connector	Pin	Signal	I/O	Voltage	Description
YC5	1	GND	-	-	Ground
Connected to drum PWB Y	2	EECLK	O	0/3.3 V DC (pulse)	EEPROM clock signal
	3	ERASEYDR	O	0/24 V DC	CL-Y: On/Off
	4	EEDATA	I/O	0/3.3 V DC (pulse)	EEPROM data signal
	5	N.C.	-	-	Not used
	6	+3.3V2	O	3.3 V DC	3.3 V DC power to DRPWB-Y
	7	DA0	-	-	Ground
	8	DA1	-	-	Ground
YC6	1	GND	-	-	Ground
Connected to developing PWB K	2	TNSENK	I	Analog	TS-K detection voltage
	3	+3.3V2	O	3.3 V DC	3.3 V DC power to DEVPWB-K
	4	DLPTHERM	I	Analog	DEVTH detection voltage
YC7	1	GND	-	-	Ground
Connected to developing PWB M	2	TNSENM	I	Analog	TS-M detection voltage
	3	+3.3V2	O	3.3 V DC	3.3 V DC power to DEVPWB-M
	4	N.C.	-	-	Not used
YC10	1	GND	-	-	Ground
Connected to developing PWB C	2	TNSENC	I	Analog	TS-C detection voltage
	3	+3.3V2	O	3.3 V DC	3.3 V DC power to DEVPWB-C
	4	N.C.	-	-	Not used
YC13	1	GND	-	-	Ground
Connected to developing PWB Y	2	TNSENY	I	Analog	TS-Y detection voltage
	3	+3.3V2	O	3.3 V DC	3.3 V DC power to DEVPWB-Y
	4	N.C.	-	-	Not used

2-3-5 DP drive PWB

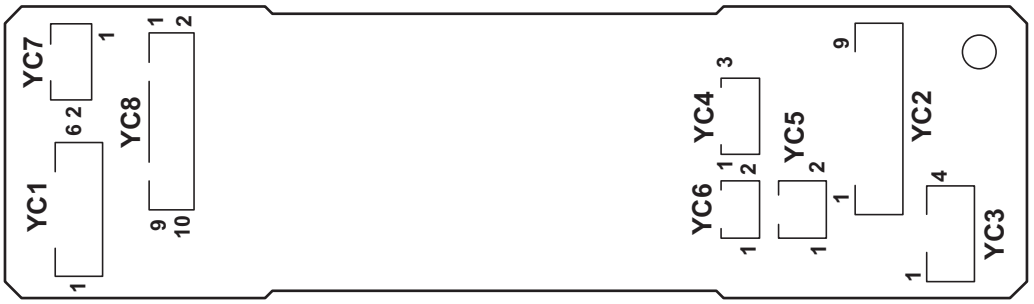

Figure 2-3-5 DP drive PWB silk-screen diagram

Connector	Pin	Signal	I/O	Voltage	Description
YC1	1	MOTA1	I	0/24 V DC (pulse)	DPPFM drive control signal
Connected to main PWB	2	MOTB1	I	0/24 V DC (pulse)	DPPFM drive control signal
	3	MOTA2	I	0/24 V DC (pulse)	DPPFM drive control signal
	4	MOTB2	I	0/24 V DC (pulse)	DPPFM drive control signal
	5	+24V2	I	24 V DC	24 V DC power from MPWB
	6	GND	-	-	Ground
YC2	1	+3.3V2	O	3.3 V DC	3.3 V DC power to DPOCS
Connected to DP open/ close sensor, DP original sensor and DP timing sensor	2	GND	-	-	Ground
	3	OPSWN	I	0/3.3 V DC	DPOCS: On/Off
	4	+3.3V2	O	3.3 V DC	3.3 V DC power to DPOS
	5	GND	-	-	Ground
	6	ORGSWN	I	0/3.3 V DC	DPOS: On/Off
	7	+3.3V2	O	3.3 V DC	3.3 V DC power to DPTS
	8	GND	-	-	Ground
	9	TIMSWN	I	0/3.3 V DC	DPTS: On/Off
YC3	1	DPMOT1A	O	0/24 V DC (pulse)	DPPFM drive control signal
Connected to DP paper feed motor	2	DPMOT2A	O	0/24 V DC (pulse)	DPPFM drive control signal
	3	DPMOT1B	O	0/24 V DC (pulse)	DPPFM drive control signal
	4	DPMOT2B	O	0/24 V DC (pulse)	DPPFM drive control signal
YC4	1	+24V2	O	24 V DC	24 V DC power to DPPRSOL
Connected to DP pressure solenoid	2	PRESOLN	O	0/24 V DC	DPPRSOL: On (Press)/Off
	3	RELSOLN	O	0/24 V DC	DPPRSOL: On (Release)/Off
YC5	1	+24V2	O	24 V DC	24 V DC power to DPSBSOL
Connected to DP switch-back solenoid	2	REVSOL	O	0/24 V DC	DPSBSOL: On/Off
YC6	1	+24V2	O	24 V DC	24 V DC power to DPPFCL
Connected to DP paper feed clutch	2	FEEDCL	O	0/24 V DC	DPPFCL: On/Off

Connector	Pin	Signal	I/O	Voltage	Description
YC8	1	+3.3V2	I	3.3 V DC	3.3 V DC power from MPWB
Connected to main PWB	2	GND	-	-	Ground
	3	TIMSWN	O	0/3.3 V DC	DPTS: On/Off
	4	ORGSWN	O	0/3.3 V DC	DPOS: On/Off
	5	OPSWN	O	0/3.3 V DC	DPOCS: On/Off
	6	DPDETN	O	0/3.3 V DC	DP set signal
	7	RELSOLN	I	0/24 V DC	DPPRSOL: On (Release)/Off
	8	PRESOLN	I	0/24 V DC	DPPRSOL: On (Press)/Off
	9	REVSOL	I	0/24 V DC	DPSBSOL: On/Off
	10	FEEDCL	I	0/24 V DC	DPPFCL: On/Off

This page is intentionally left blank.

2-4-1 Appendixes

(1) Repetitive defects gauge

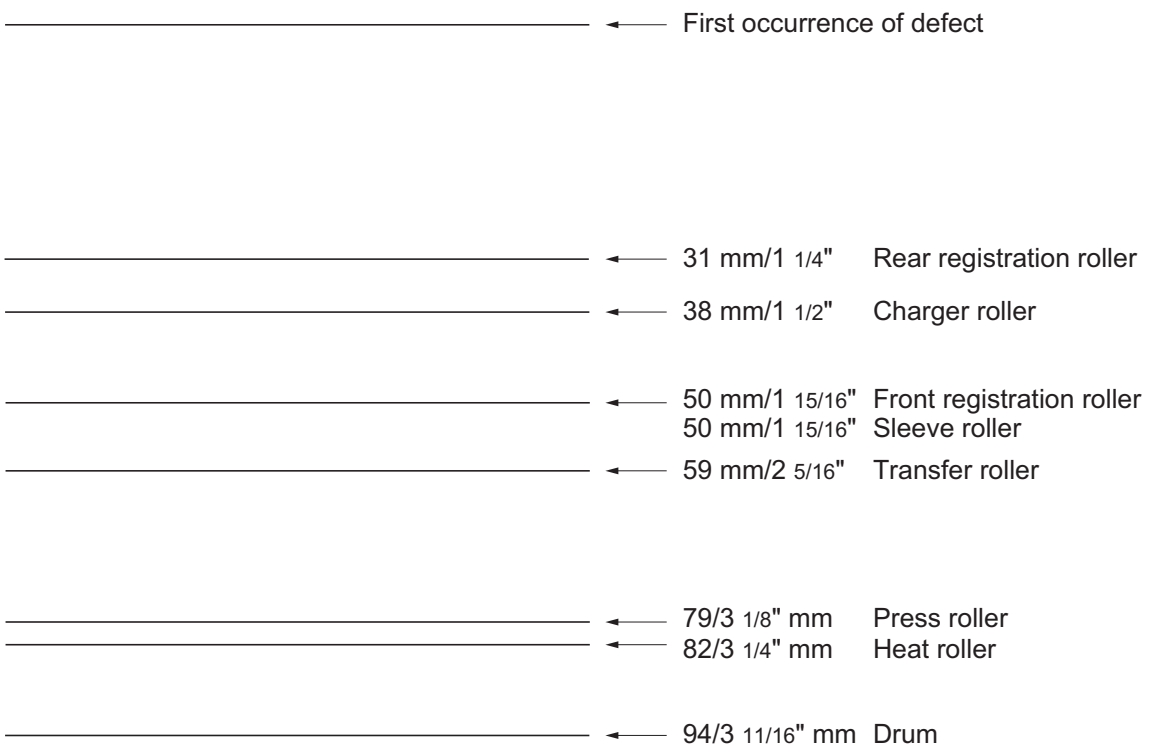

(2) Firmware environment commands

The printer maintains a number of printing parameters in its memory. There parameters may be changed permanently with the FRPO (Firmware RePrOgram) commands.
This section provides information on how to use the FRPO command and its parameters using examples.

Using FRPO commands for reprogramming firmware

The current settings of the FRPO parameters are listed as optional values on the service status page.

Note: Before changing any FRPO parameter, print out a service status page, so you will know the parameter values before the changes are made. To return FRPO parameters to their factory default values, send the FRPO INIT (FRPO-INITialize) command.(!R! FRPO INIT; EXIT;)

The FRPO command is sent to the printer in the following sequence:
!R! FRPO parameter, value; EXIT;
Example: Changing emulation mode to PC-PR201/65A
!R! FRPO P1, 11; EXIT;

FRPO parameters

Item	FRPO	Setting values	Factory setting
Top margin	A1 A2	Integer value in inches Fraction value in 1/100 inches	0 0
Left margin	A3 A4	Integer value in inches Fraction value in 1/100 inches	0 0
Page length	A5 A6	Integer value in inches Fraction value in 1/100 inches	16 61
Page width	A7 A8	Integer value in inches Fraction value in 1/100 inches	16 61
Default pattern resolution	B8	0: 300 dpi 1: 600 dpi	0
Page orientation	C1	0: Portrait 1: Landscape	0
Default font No. *	C2 C3 C5	Middle two digits of power-up font Last two digits of power-up font First two digits of power-up font	0 0 0
Print density	D4	Number from 1 (Light) to 5 (Dark)	3
Total host buffer size	H8	0 to 99 in units of the size defined by FRPO S5	5
Form feed time-out value	H9	Value in units of 5 seconds (0 to 99).	1
Reduce ratio	J0	0: 100 % 5: 70 % 6: 81 % 7: 86 % 8: 94 % 9: 98 %	0

Item	FRPO	Setting values	Factory setting
Offset (horizontal direction)	K0	Integer value in centimeters (-7 to +7)	0
	K1	Fraction value in 1/100 centimeters (-99 to +99)	0
Offset (vertical direction)	K2	Integer value in centimeters (-7 to +7)	0
	K3	Fraction value in 1/100 centimeters (-99 to +99)	0
KIR mode	N0	0: Off 2: On	2
Duplex binding	N4	0: Off 1: Long edge 2: Short edge	0
Sleep timer time-out time	N5	1 to 240 minutes [0: Off]	15
Ecoprint level	N6	0: Off 2: On	0
Printing resolution	N8	0: 300dpi 1: 600dpi 3: 1200dpi	1
Default emulation mode	P1	6: PCL 5e 9: KPDL (option) 11: PC-PR201/65A 12: IBM 5577 13: VP-1000	6
Carriage-return action *	P2	0: Ignores 0x0d 1: Carriage-return 2: Carriage-return+linefeed	1
Linefeed action *	P3	0: Ignores 0x0d 1: Linefeed 2: Linefeed+carriage-return	1
Automatic emulation sensing (For KPDL3)	P4	0: AES disabled 1: AES enabled	0
Alternative emulation (For KPDL3)	P5	Same as the P1 values except that 9 is ignored.	6
Automatic emulation switching trigger (For KPDL3)	P7	0: Page eject commands 1: None 2: Page eject and prescribe EXIT 3: Prescribe EXIT 4: Formfeed (^L) 6: Page eject, prescribe EXIT and formfeed 10: Page eject commands; if AES fails, resolves to KPDL	10
Command recognition character	P9	ASCII code of 33 to 126	82 (R)

Item	FRPO	Setting values	Factory setting
Default paper size	R2	0: Size of the default paper cassette (See R4.) 1: Monarch (3-7/8 × 7-1/2 inches) 2: Business (4-1/8 × 9-1/2 inches) 3: International DL (11 × 22 cm) 4: International C5 (16.2 × 22.9 cm) 5: Executive (7-1/4 × 10-1/2 inches) 6: US Letter (8-1/2 × 11 inches) 7: US Legal (8-1/2 × 14 inches) 8: A4 (21.0 × 29.7 cm) 9: JIS B5 (18.2 × 25.7 cm) 13: ISO A5 14: A6 (10.5 × 14.8 cm) 15: JIS B6 (12.8 × 18.2 cm) 16: Commercial #9 (3-7/8 × 8-7/8 inches) 17: Commercial #6 (3-5/8 × 6-1/2 inches) 18: ISO B5 (17.6 × 25 cm) 19: Custom (11.7 × 17.7 inches) 20: B4→A4 reduces 21: A3→A4 reduces 22: A4→A4 98% reduces 23: Stock form→A4 reduces 31: Hagaki (10 × 14.8 cm) 32: Ofuku-hagaki (14.8 × 20 cm) 33: Officio II 40: 16K 50: Statement 51: Folio 52: Youkei 2 53: Youkei 4	0
Default cassette	R4	0: MP tray 1: Cassette 1 2: Cassette 2 3: Cassette 3 4: Cassette 4	1
MP tray paper size	R7	Same as the R2 values except: 0	8 (A4)
A4/letter equation	S4	0: Off 1: On	0
Host buffer size	S5	0: 10kB (x H8) 1: 100kB (x H8) 2: 1024kB (x H8)	1
Wide A4	T6	0: Off 1: On	0
Line spacing *	U0	Lines per inch (integer value)	6
Line spacing *	U1	Lines per inch (fraction value)	0
Character spacing *	U2	Characters per inch (integer value)	10
Character spacing *	U3	Characters per inch (fraction value)	0

Item	FRPO	Setting values	Factory setting
Country code	U6	0: US-ASCII 1: France 2: Germany 3: UK 4: Denmark 5: Sweden 6: Italy 7: Spain 8: Japan 9: US Legal 10: IBM PC-850 (Multilingual) 11: IBM PC-860 (Portuguese) 12: IBM PC-863 (Canadian French) 13: IBM PC-865 (Norwegian) 14: Norway 15: Denmark 2 16: Spain 2 17: Latin America 21: US ASCII (U7 = 50 SET) 77: HP Roman-8 (U7 = 52 SET)	0
Code set at power up in daisy-wheel emulation	U7	0: Same as the default emulation mode (P1) 1: IBM 6: IBM PC-8 50: US ASCII (U6 = 21 SET) 52: HP Roman-8 (U6 = 77 SET)	0
Font pitch for fixed pitch scalable font	U8	Integer value in cpi: 0 to 99	10
	U9	Fraction value in 1/100 cpi: 0 to 99	0
Font height for the default scalable font *	V0	Integer value in 100 points: 0 to 9	0
	V1	Integer value in points: 0 to 99	12
	V2	Fraction value in 1/100 points: 0, 25, 50, 75	0
Default scalable font *	V3	Name of typeface of up to 32 characters, enclosed with single or double quotation marks	Courier
Default weight (courier and letter Gothic)	V9	0: Courier = darkness Letter Gothic = darkness 1: Courier = regular Letter Gothic = darkness 4: Courier = darkness Letter Gothic = regular 5: Courier = regular Letter Gothic = regular	5

Item	FRPO	Setting values	Factory setting
Paper type for the MP tray	X0	1: Plain 1 2: Transparency 3: Preprinted 4: Label 5: Bond 6: Recycle 7: Vellum 9: Letterhead 10: Color 11: Prepunched 12: Envelope 13: Cardstock 16: Thick 17: High quality 21: Custom1 22: Custom2 23: Custom3 24: Custom4 25: Custom5 26: Custom6 27: Custom7 28: Custom8	1
Paper type for paper cassettes 1	X1	1: Plain 3: Preprinted 5: Bond 6: Recycled 9: Letterhead 10: Color 11: Prepunched 17: High quality 21: Custom1 22: Custom2 23: Custom3 24: Custom4 25: Custom5 26: Custom6 27: Custom7 28: Custom8	1

Item	FRPO	Setting values	Factory setting
Paper type for paper cassettes 2 to 4	X2 X3 X4	1: Plain 3: Preprinted 5: Bond 6: Recycled 9: Letterhead 10: Color 11: Prepunched 17: High quality 21: Custom1 22: Custom2 23: Custom3 24: Custom4 25: Custom5 26: Custom6 27: Custom7 28: Custom8	1
PCL paper source	X9	0: Performs paper selection depending on media type. 1: Performs paper selection depending on paper sources.	0
Automatic continue for ‘Press GO’	Y0	0: Off 1: On	0
Automatic continue timer	Y1	Number from 0 to 99 in increments of 5 seconds	6 (30 secons)
Error message for device error	Y3	0: Not detect 1: Detect	0
Duplex operation for specified paper type (Prepunched, Preprintedand Letterhead)	Y4	0: Off 1: On	0
Default operation for PDF direct printing	Y5	0: Enlarges or reduces the image to fit in the current paper size. Loads paper from the current paper cassette. 1: Through the image. Loads paper which is the same size as the image. 2: Enlarges or reduces the image to fit in the current paper size. Loads Letter, A4 size paper depending on the image size. 3: Through the image. Loads Letter, A4 size paper depending on the image size. 8: Through the image. Loads paper from the current paper cassette. 9: Through the image. Loads Letter, A4 size paper depending on the image size. 10: Enlarges or reduces the image to fit in the current paper size. Loads Letter, A4 size paper depending on the imagesize.	0

*: Ignored in some emulation modes.

This page is intentionally left blank.

(3) Wiring diagram

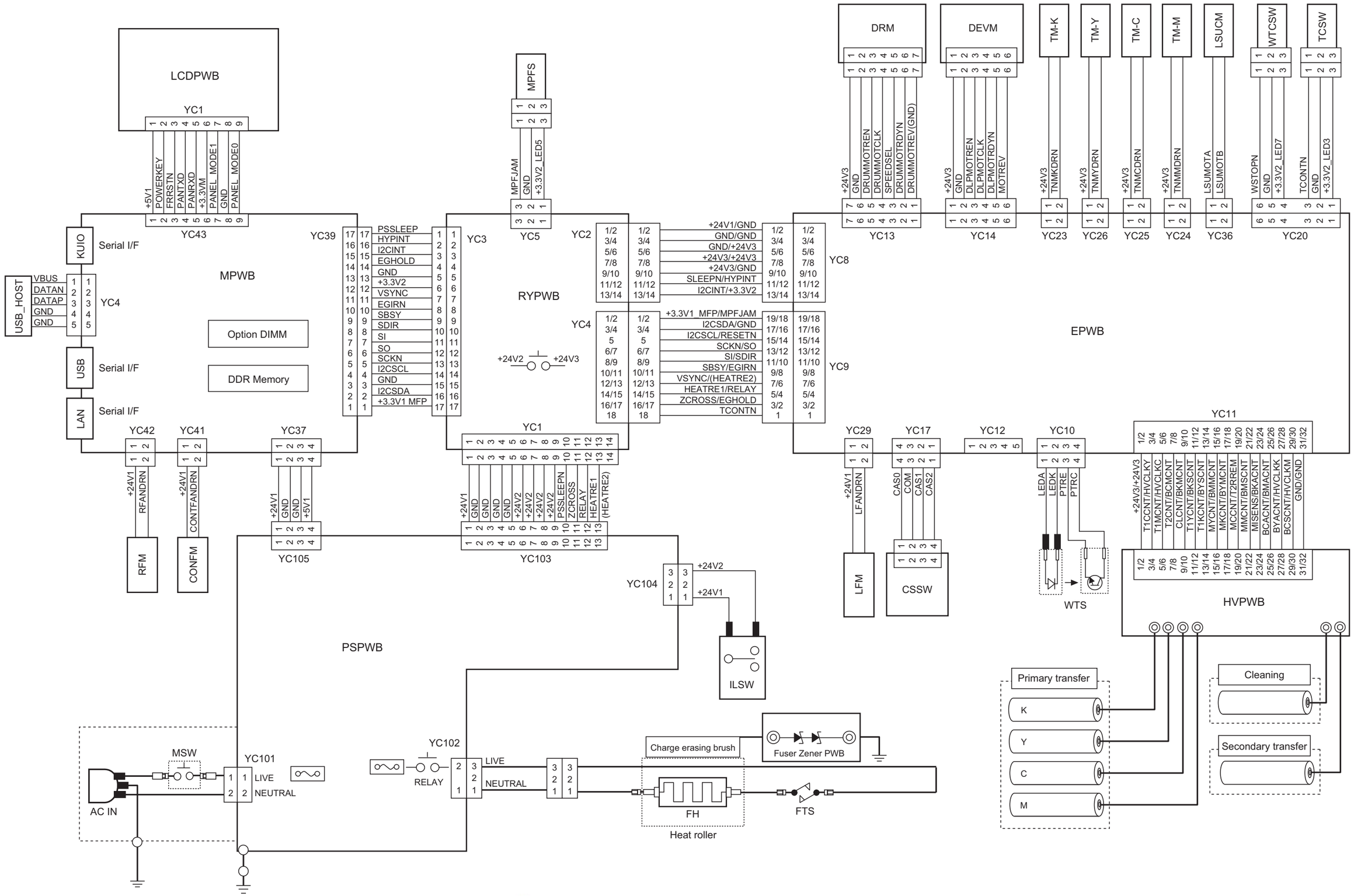

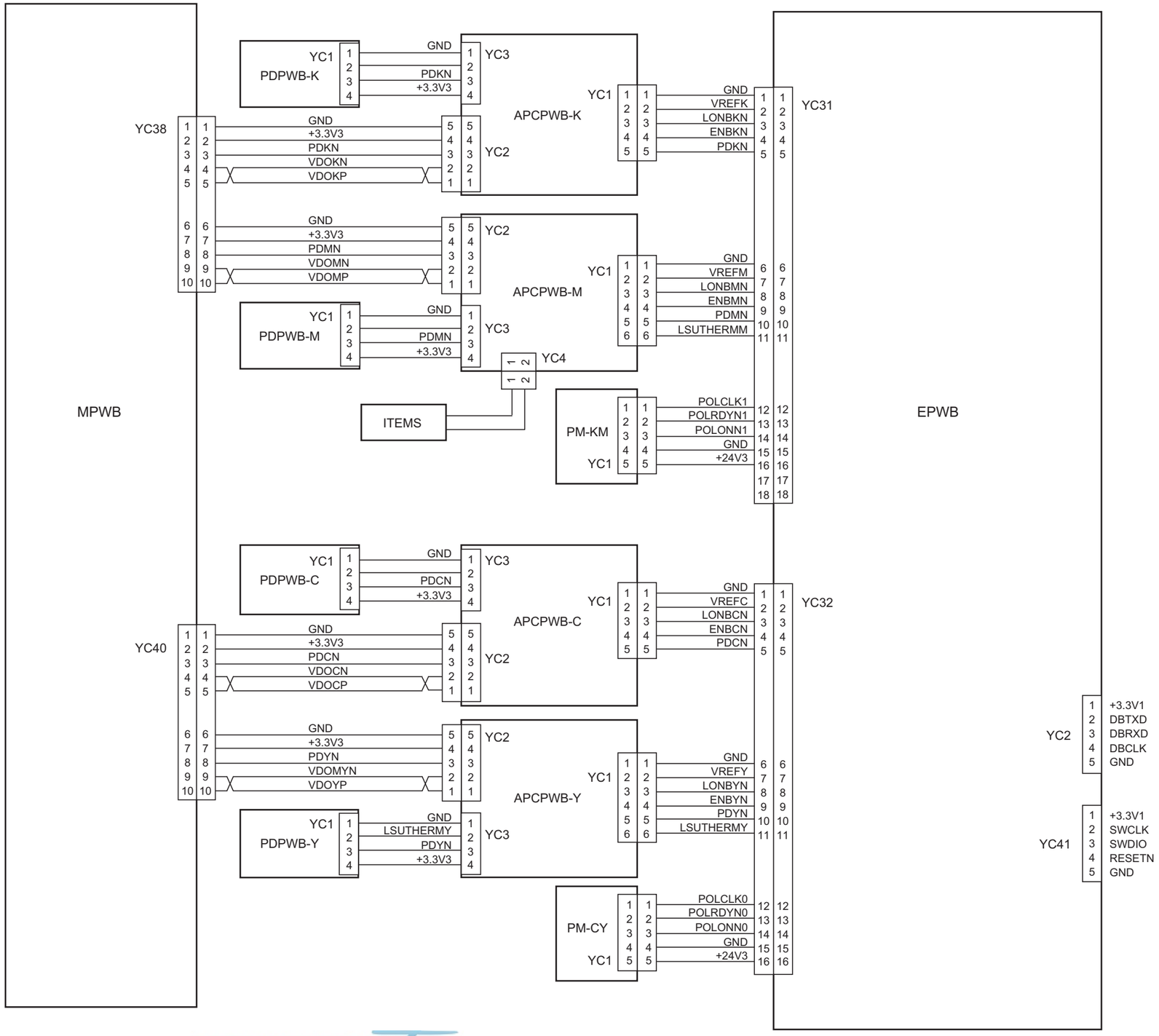

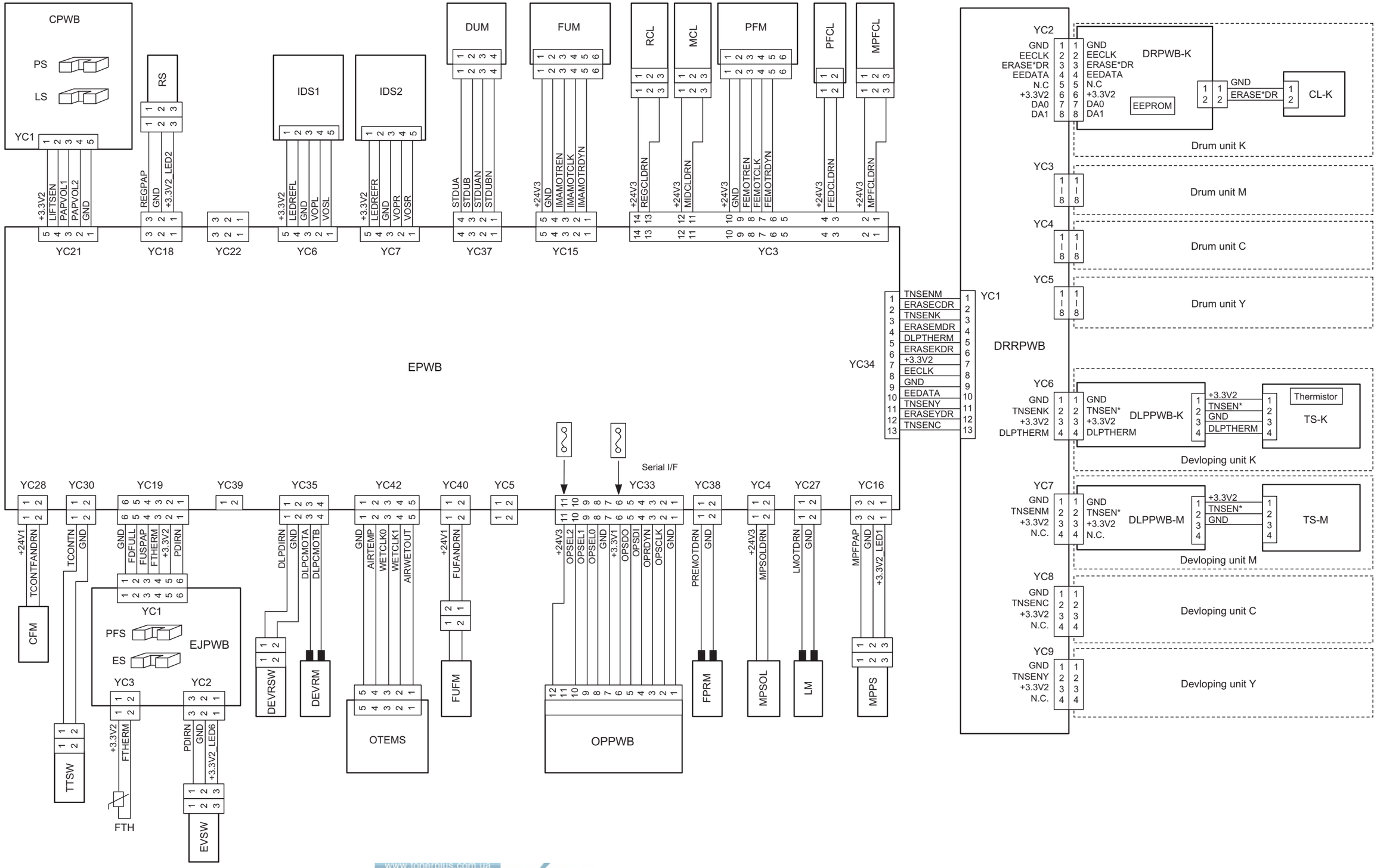

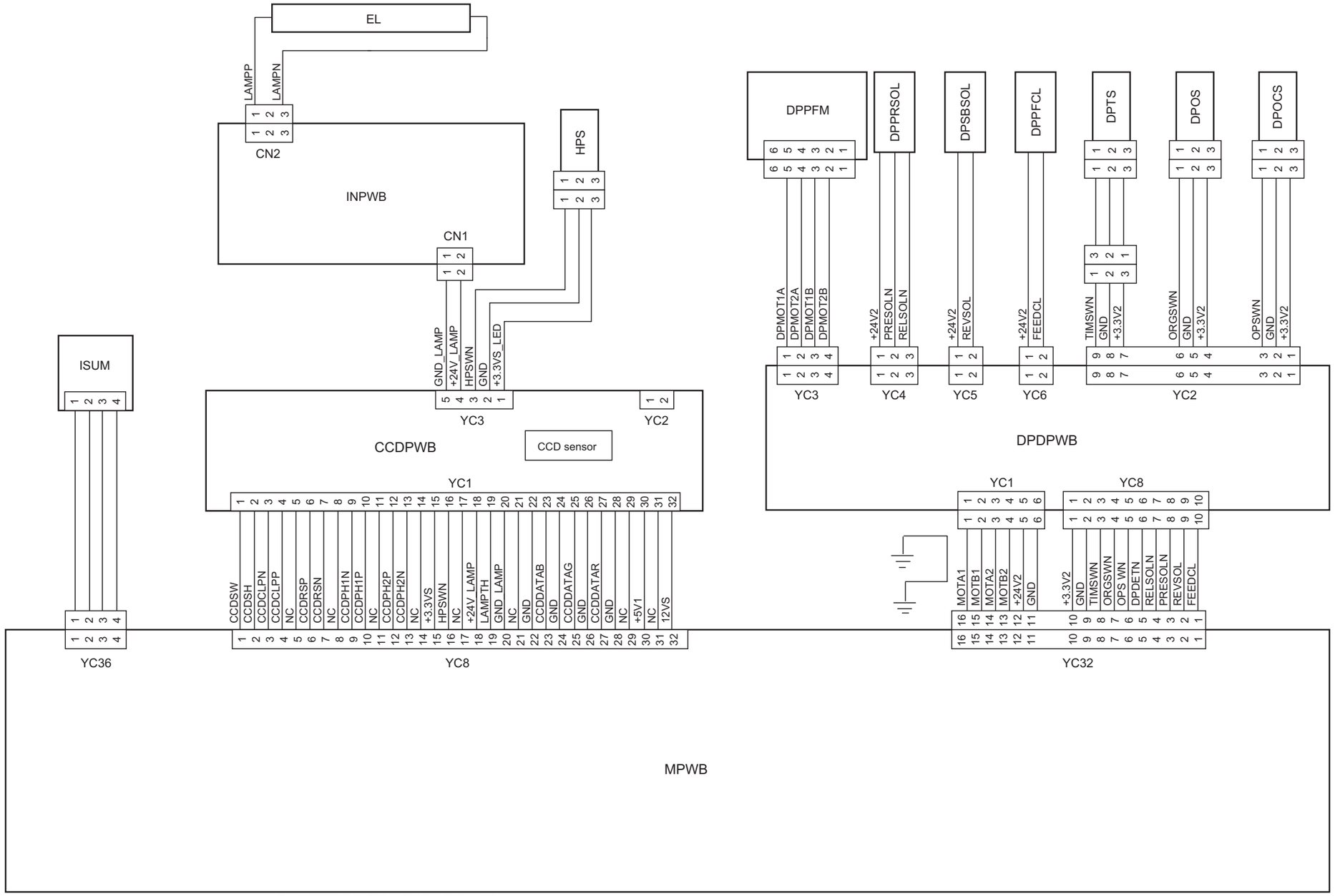

KYOCERA MITA EUROPE B.V.

Bloemlaan 4, 2132 NP Hoofddorp,
The Netherlands
Phone: +31.20.654.0000
Home page: http://www.kyoceramita-europe.com
Email: info@kyoceramita-europe.com

KYOCERA MITA NEDERLAND B.V.
Beechavenue 25, 1119 RA Schiphol-Rijk
The Netherlands
Phone: +31.20.58.77.200

KYOCERA MITA (UK) LTD
8 Beacontree Plaza
Gillette Way Reading Berks RG2 0BS,
U.K.
Phone: +44.1189.311.500

KYOCERA MITA ITALIA S.p.A.
Via G. Verdi, 89 / 91, 20063 Cernusco s/N
Milano, Italy
Phone: +39.02.92179.1

S.A. KYOCERA MITA BELGIUM N.V.
Sint-Martinusweg 199-201, 1930 Zaventem,
Belgium
Phone: +32.2.720.9270

KYOCERA MITA FRANCE S.A.
Parc Les Algorithmes Saint Aubin
91194 GIF-SUR-YVETTE,
France
Phone: +33.1.6985.2600

KYOCERA MITA ESPAÑA S.A.
Edificio Kyocera, Avda de Manacor No. 2,
28290 Las Matas (Madrid),
Spain
Phone: +34.91.631.8392

KYOCERA MITA FINLAND OY
Atomitie 5C, 00370 Helsinki,
Finland
Phone: +358.9.4780.5200

KYOCERA MITA (SCHWEIZ)
Hohlstrasse 614, 8048 Zürich
Switzerland
Phone: +41.44.908.4949

KYOCERA MITA DEUTSCHLAND GMBH
Otto-Hahn-Str. 12 D-40670 Meerbusch,
Germany
Phone: +49.2159.918.0

KYOCERA MITA GMBH AUSTRIA
Eduard-Kittenberger-Gasse 95,
1230 Wien,
Austria
Phone: +43.1.86338

KYOCERA MITA SVENSKA AB
Esbogatan 16B 164 75 Kista,
Sweden
Phone: +46.8.546.55000

KYOCERA MITA NORGE
Postboks 150 Oppsal, NO 0619 Oslo
Olaf Helsetsvei 6, NO 0694 Oslo,
Norway
Phone: +47.22.62.73.00

KYOCERA MITA DANMARK A/S
Ejby Industrivej 1, DK-2600 Glostrup,
Denmark
Phone: +45.7022.3880

KYOCERA MITA PORTUGAL LDA.
Rua do Centro Cultural, 41 (Alvalade) 1700-106 Lisboa,
Portugal
Phone: +351.21.843.6780

KYOCERA MITA SOUTH AFRICA (PTY) LTD.
49 Kyalami Boulevard,
Kyalami Business Park Midrand,
South Africa
Phone: +27.(0)11.540.2600

KYOCERA MITA AMERICA, INC.

Headquarters:
225 Sand Road,
Fairfield, New Jersey 07004-0008,
U.S.A.
Phone: (973) 808-8444

KYOCERA MITA AUSTRALIA PTY. LTD.
Level 3, 6-10 Talavera Road, North Ryde,
N.S.W. 2113 Australia
Phone: (02) 9888-9999

KYOCERA MITA NEW ZEALAND LTD.
1-3 Parkhead Place, Albany
P.O. Box 302 125 NHPC, Auckland,
New Zealand
Phone: (09) 415-4517

KYOCERA MITA (THAILAND) CORP., LTD.
9/209 Ratchada-Prachachem Road,
Bang Sue, Bangkok 10800, Thailand
Phone: (02) 586-0333

KYOCERA MITA SINGAPORE PTE LTD.
121 Genting Lane, 3rd Level,
Singapore 349572
Phone: 67418733

KYOCERA MITA HONG KONG LIMITED
16/F., Mita Centre,
552-566, Castle Peak Road,
Tsuen Wan, New Territories,
Hong Kong
Phone: 24297422

KYOCERA MITA TAIWAN Corporation.
6F., No.37, Sec. 3, Minquan E. Rd.,
Zhongshan Dist., Taipei 104, Taiwan R.O.C.
Phone: (02) 25076709

KYOCERA MITA Corporation

2-28, 1-chome, Tamatsukuri, Chuo-ku
Osaka 540-8585, Japan
Phone: (06) 6764-3555
http://www.kyoceramita.com

Printed in Holland

KYOCERA MITA AMERICA, INC.

Headquarters:
225 Sand Road,
Fairfield, New Jersey 07004-0008
TEL : (973) 808-8444
FAX : (973) 882-6000

New York Branch:
1410 Broadway 23rd floor
New York, NY 10018
TEL : (917) 286-5400
FAX : (917) 286-5402

Northeastern Region:
225 Sand Road,
Fairfield, New Jersey 07004-0008
TEL : (973) 808-8444
FAX : (973) 882-4401

Midwestern Region:
201 Hansen Court Suite 119
Wood Dale, Illinois 60191
TEL : (630) 238-9982
FAX : (630) 238-9487

Western Region:
14101 Alton Parkway,
Irvine, California 92618-7006
TEL : (949) 457-9000
FAX : (949) 457-9119

Southeastern Region:
1500 Oakbrook Drive,
Norcross, Georgia 30093
TEL : (770) 729-9786
FAX : (770) 729-9873

Southwestern Region:
2825 West Story Road,
Irving, Texas 75038-5299
TEL : (972) 550-8987
FAX : (972) 252-9786

National Operation Center
& National Training Center:
2825 West Story Road,
Irving, Texas 75038-5299
TEL : (972) 659-0055
FAX : (972) 570-5816

Latin America Division:
8240 N.W. 52nd. Terrace Dawson Building,
Suite 108 Miami, Florida 33166
TEL : (305) 421-6640
FAX : (305) 421-6666

KYOCERA MITA CANADA, LTD.

6120 Kestrel Road, Mississauga,
Ontario L5T 1S8, Canada
TEL : (905) 670-4425
FAX : (905) 670-8116

KYOCERA MITA MEXICO, S.A. DE C.V.

Av. 16 de Septiembre #407
Col. Santa Inés,
Azcapotzalco México,
D.F. 02130, México
TEL : (55) 5383-2741
FAX : (55) 5383-7804

Printed in U.S.A.