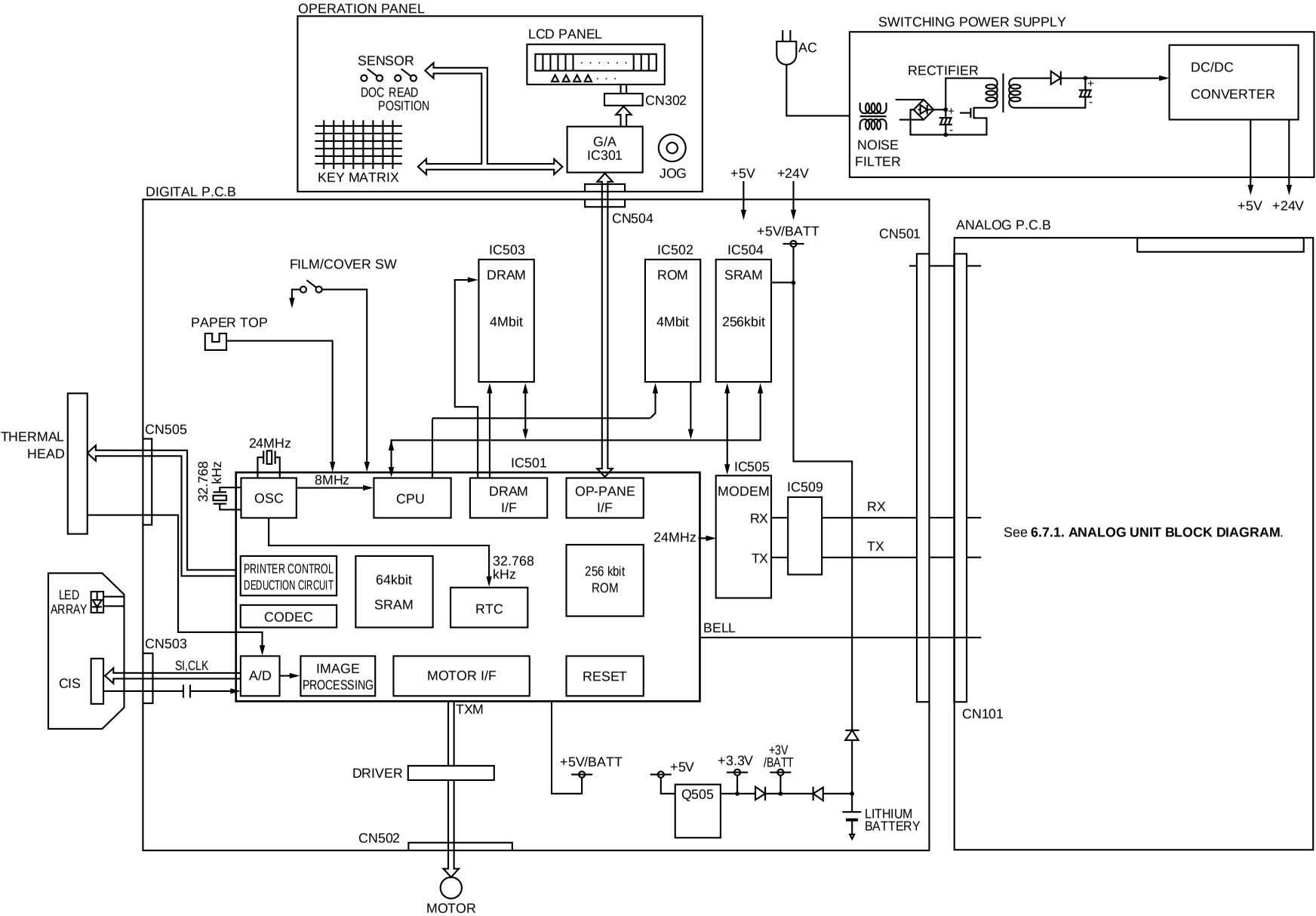
OPERATION PANEL
LCD PANEL
SENSOR
DOC READ POSITION
CN302
KEY MATRIX
G/A IC301
JOG
SWITCHING POWER SUPPLY
AC
RECTIFIER
DC/DC CONVERTER
NOISE FILTER
+5V
+24V
DIGITAL P.C.B
CN504
+5V/BATT
CN501
ANALOG P.C.B
IC503
DRAM 4Mbit
IC502
ROM 4Mbit
IC504
SRAM 256kbit
FILM/COVER SW
PAPER TOP
THERMAL HEAD
CN505
24MHz
32.768 kHz
IC501
OSC
8MHz
CPU
DRAM I/F
OP-PANE I/F
IC505
MODEM
RX
TX
IC509
24MHz
See 6.7.1. ANALOG UNIT BLOCK DIAGRAM.
PRINTER CONTROL DEDUCTION CIRCUIT
64kbit SRAM
32.768 kHz
RTC
256 kbit ROM
CODEC
LED ARRAY
BELL
CN503
CIS
SI,CLK
A/D
IMAGE PROCESSING
MOTOR I/F
RESET
CN101
TXM
DRIVER
+5V/BATT
+5V
+3.3V
+3V /BATT
Q505
LITHIUM BATTERY
CN502
MOTOR