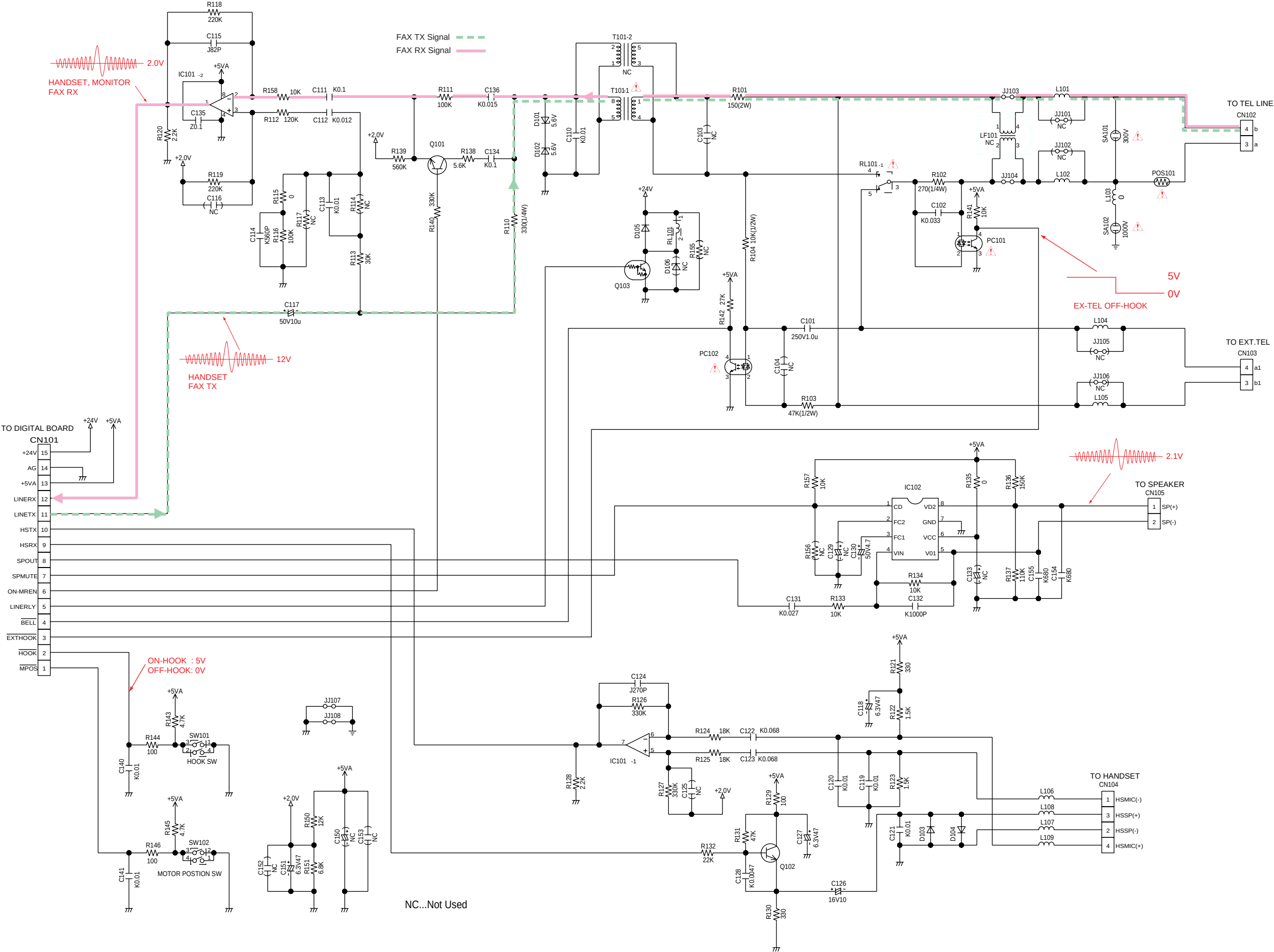
FAX TX Signal
FAX RX Signal
2.0V
HANDSET, MONITOR
FAX RX
12V
HANDSET
FAX TX
TO TEL LINE
CN102
TO EXT.TEL
CN103
TO DIGITAL BOARD
CN101
+24V
AG
+5VA
LINERX
LINETX
HSTX
HSRX
SPOUT
SPMUTE
ON-MREN
LINERLY
BELL
EXTHOOK
HOOK
MPOS
ON-HOOK : 5V
OFF-HOOK: 0V
5V
0V
EX-TEL OFF-HOOK
2.1V
TO SPEAKER
CN105
SP(+)
SP(-)
IC102
CD
FC2
FC1
VIN
VD2
GND
VCC
V01
IC101 -1
IC101 -2
Q101
Q102
Q103
PC101
PC102
RL101 -1
T101-1
T101-2
NC
HOOK SW
SW101
MOTOR POSTION SW
SW102
JJ107
JJ108
TO HANDSET
CN104
HSMIC(-)
HSSP(+)
HSSP(-)
HSMIC(+)
NC...Not Used