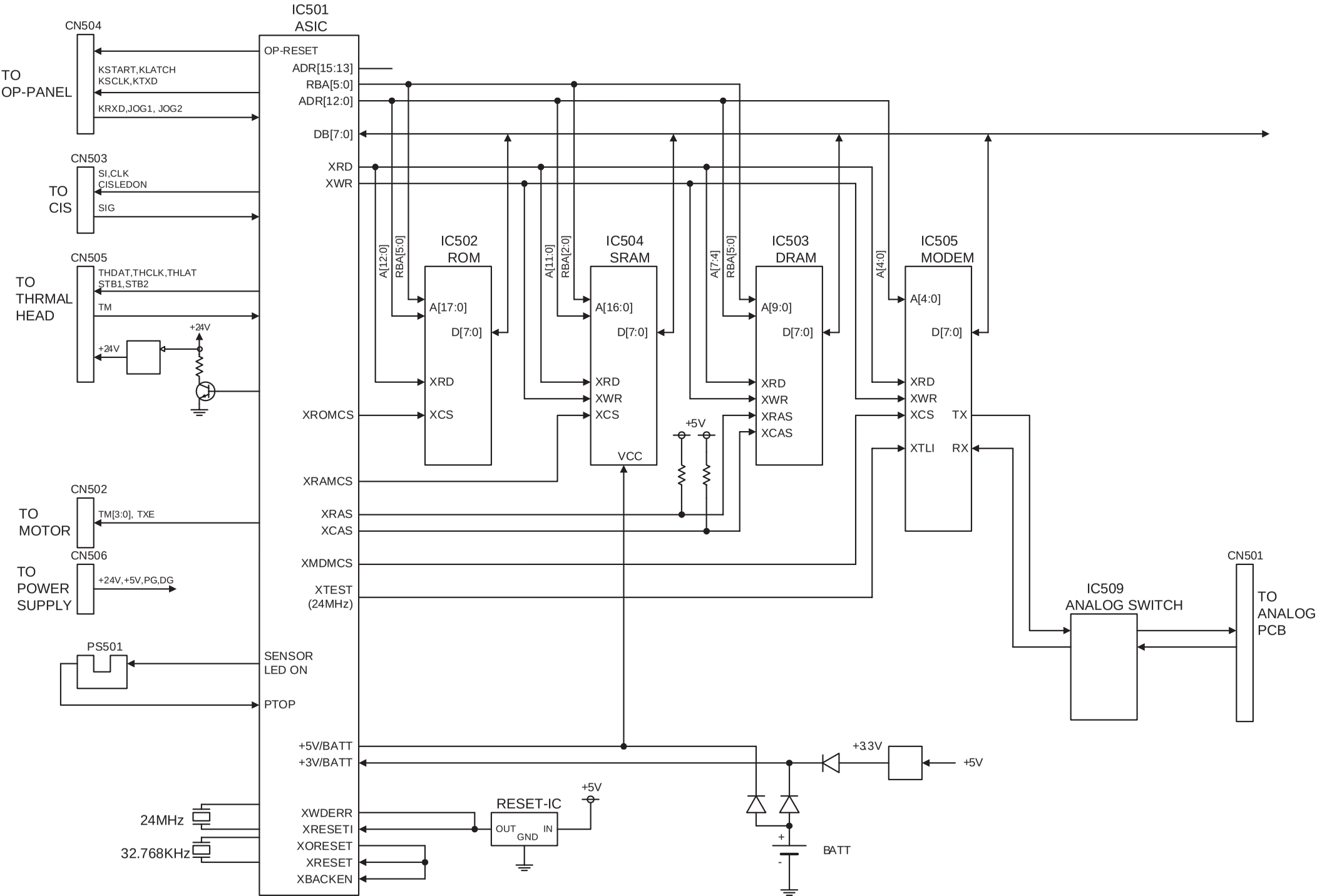
IC501
ASIC
CN504
TO
OP-PANEL
KSTART,KLATCH
KSCLK,KTXD
KRXD,JOG1, JOG2
CN503
TO
CIS
SI,CLK
CISLEDON
SIG
CN505
TO
THRMAL
HEAD
THDAT,THCLK,THLAT
STB1,STB2
TM
+24V
+24V
CN502
TO
MOTOR
TM[3:0], TXE
CN506
TO
POWER
SUPPLY
+24V,+5V,PG,DG
PS501
SENSOR
LED ON
PTOP
24MHz
32.768KHz
OP-RESET
ADR[15:13]
RBA[5:0]
ADR[12:0]
DB[7:0]
XRD
XWR
XROMCS
XRAMCS
XRAS
XCAS
XMDMCS
XTEST
(24MHz)
+5V/BATT
+3V/BATT
XWDERR
XRESETI
XORESET
XRESET
XBACKEN
A[12:0]
RBA[5:0]
IC502
ROM
A[17:0]
D[7:0]
XRD
XCS
A[11:0]
RBA[2:0]
IC504
SRAM
A[16:0]
D[7:0]
XRD
XWR
XCS
VCC
A[7:4]
RBA[5:0]
IC503
DRAM
A[9:0]
D[7:0]
XRD
XWR
XRAS
XCAS
A[4:0]
IC505
MODEM
A[4:0]
D[7:0]
XRD
XWR
XCS
TX
XTLI
RX
+5V
+5V
RESET-IC
OUT
GND
IN
+5V
+3.3V
+5V
BATT
IC509
ANALOG SWITCH
CN501
TO
ANALOG
PCB