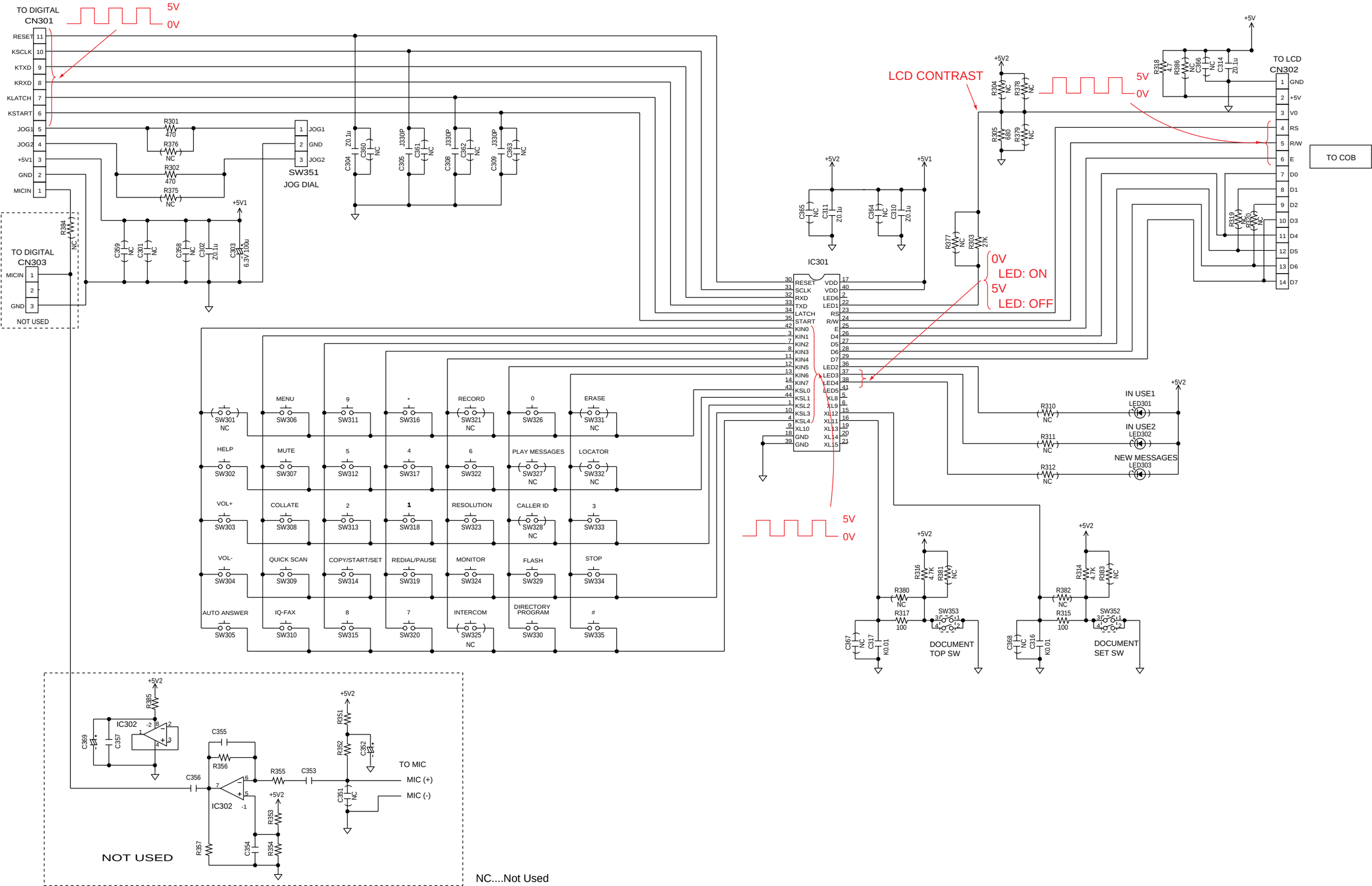
TO DIGITAL CN301
5V
0V
RESET
KSCLK
KTXD
KRXD
KLATCH
KSTART
JOG1
JOG2
+5V1
GND
MICIN
SW351
JOG DIAL
TO DIGITAL CN303
NOT USED
IC301
LCD CONTRAST
TO LCD CN302
TO COB
0V
LED: ON
5V
LED: OFF
IN USE1
IN USE2
NEW MESSAGES
MENU
RECORD
ERASE
HELP
MUTE
PLAY MESSAGES
LOCATOR
VOL+
COLLATE
RESOLUTION
CALLER ID
VOL-
QUICK SCAN
COPY/START/SET
REDIAL/PAUSE
MONITOR
FLASH
STOP
AUTO ANSWER
IQ-FAX
INTERCOM
DIRECTORY PROGRAM
DOCUMENT TOP SW
DOCUMENT SET SW
IC302
TO MIC
MIC (+)
MIC (-)
NOT USED
NC....Not Used