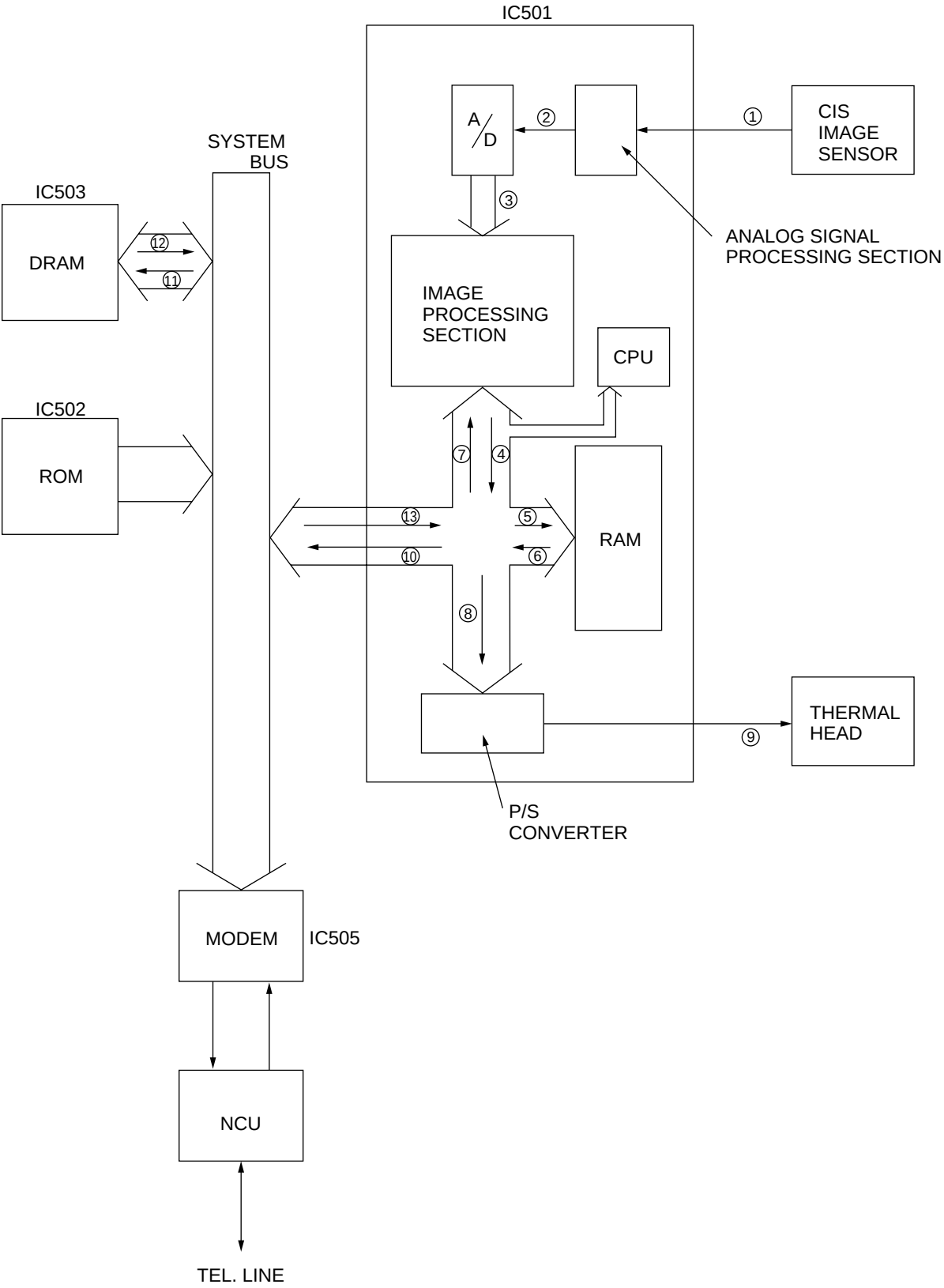
IC501
A/D
②
①
CIS IMAGE SENSOR
SYSTEM BUS
IC503
③
DRAM
⑫
⑪
ANALOG SIGNAL PROCESSING SECTION
IMAGE PROCESSING SECTION
CPU
IC502
ROM
⑦
④
⑬
⑤
RAM
⑩
⑥
⑧
THERMAL HEAD
⑨
P/S CONVERTER
MODEM
IC505
NCU
TEL. LINE