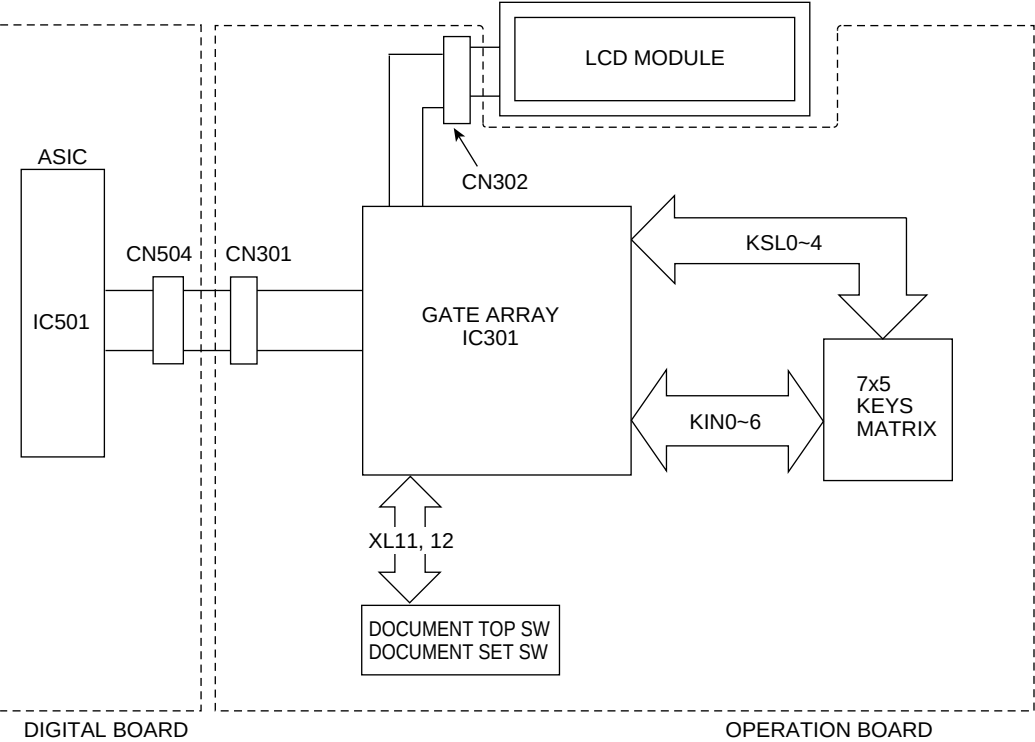
LCD MODULE
CN302
ASIC
IC501
CN504
CN301
GATE ARRAY
IC301
KSL0~4
KIN0~6
7x5
KEYS
MATRIX
XL11, 12
DOCUMENT TOP SW
DOCUMENT SET SW
DIGITAL BOARD
OPERATION BOARD