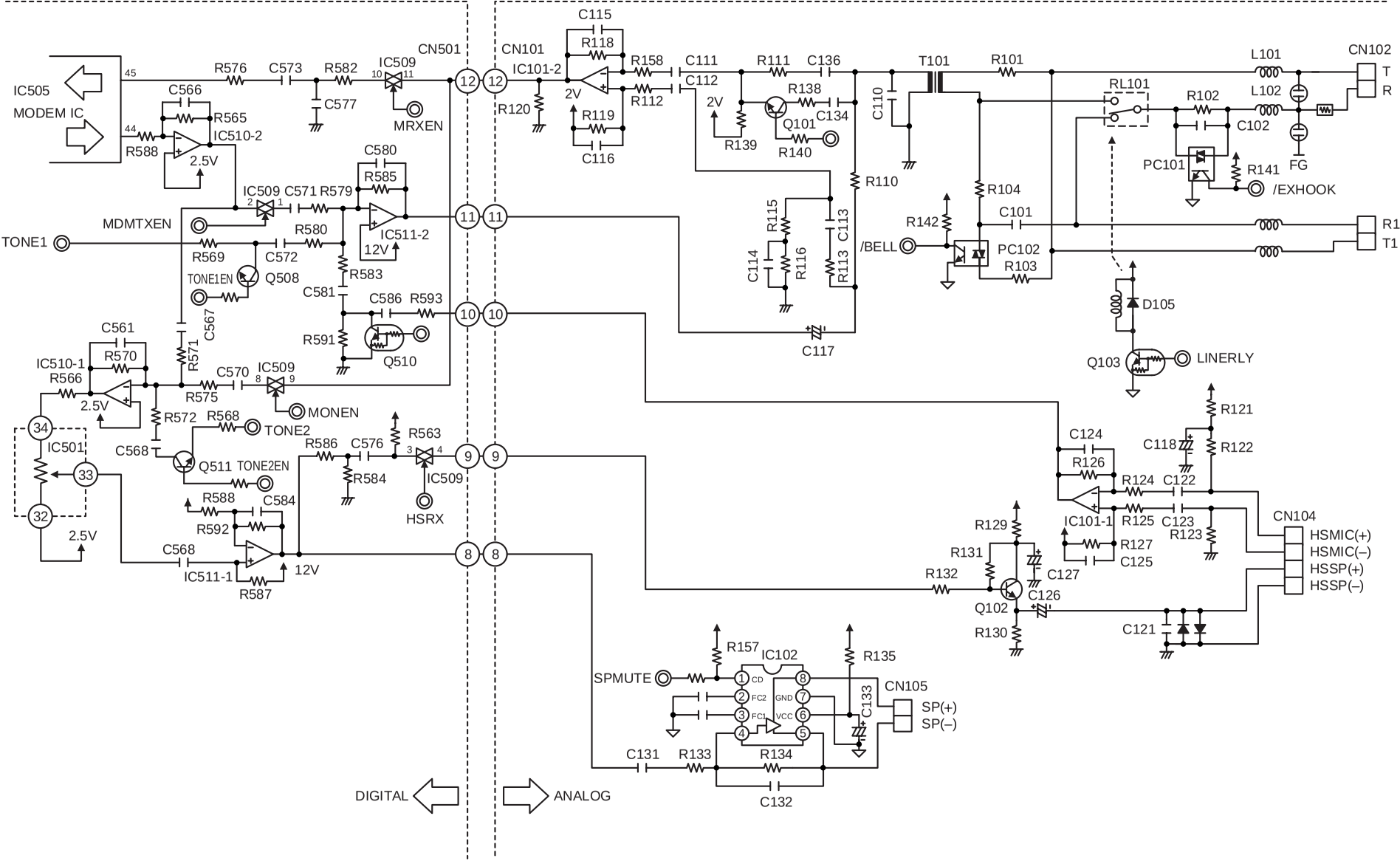
IC505
MODEM IC
CN501
CN101
IC101-2
CN102
T
R
L101
L102
FG
RL101
R102
C102
PC101
R141
/EXHOOK
T101
R101
R158
C111
C112
R111
C136
R138
C134
Q101
R140
R139
2V
R118
C115
R119
C116
R120
R112
C110
R110
R104
C101
R142
/BELL
PC102
R103
R115
C114
R116
R113
C113
C117
D105
Q103
LINERLY
R121
R122
C118
C124
R126
R124
C122
R125
C123
R123
IC101-1
R127
C125
CN104
HSMIC(+)
HSMIC(–)
HSSP(+)
HSSP(–)
R129
R131
R132
C127
C126
Q102
R130
C121
R576
C573
R582
IC509
MRXEN
C566
R565
IC510-2
R588
2.5V
C577
C580
R585
IC511-2
12V
IC509
C571
R579
MDMTXEN
TONE1
R569
C572
R580
R583
TONE1EN
Q508
C581
C586
R593
R591
Q510
C567
R571
C561
R570
IC510-1
R566
C570
R575
IC509
MONEN
R572
R568
TONE2
C568
Q511
TONE2EN
IC501
R586
C576
R563
R584
IC509
HSRX
R588
C584
R592
C568
IC511-1
R587
12V
2.5V
SPMUTE
R157
IC102
R135
CD
FC2
FC1
GND
VCC
C133
CN105
SP(+)
SP(–)
C131
R133
R134
C132
DIGITAL
ANALOG