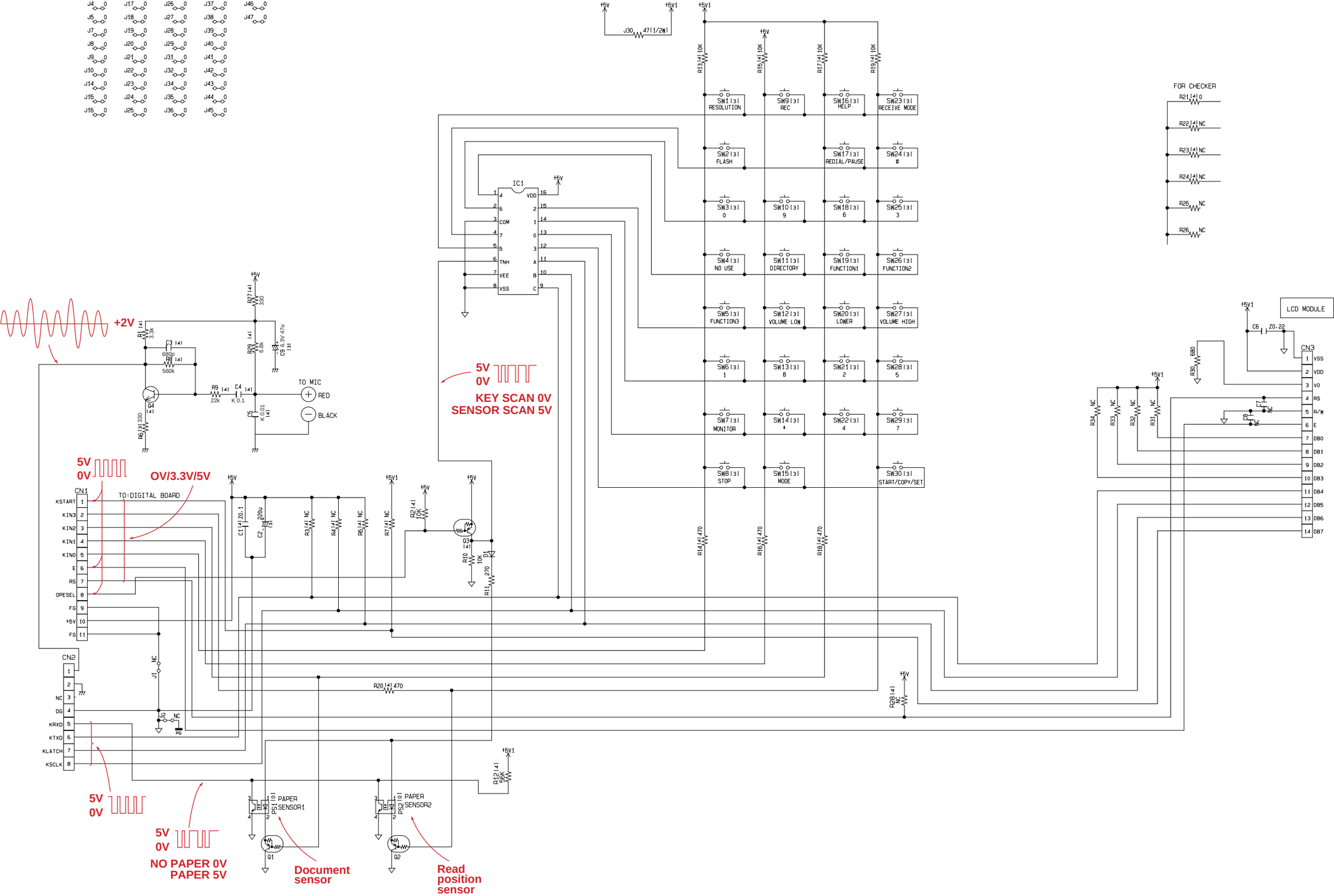
+2V
5V
0V
KEY SCAN 0V
SENSOR SCAN 5V
OV/3.3V/5V
TO:DIGITAL BOARD
NO PAPER 0V
PAPER 5V
Document sensor
Read position sensor
TO MIC
RED
BLACK
LCD MODULE
FOR CHECKER
IC1
CN1
CN2
CN3
PAPER SENSOR1
PAPER SENSOR2
RESOLUTION
REC
HELP
RECEIVE MODE
FLASH
REDIAL/PAUSE
#
NO USE
DIRECTORY
FUNCTION1
FUNCTION2
FUNCTION3
VOLUME LOW
LOWER
VOLUME HIGH
MONITOR
STOP
MODE
START/COPY/SET