COPYRIGHT © 1999 CANON ELECTRONICS INC.

Printed in Japan
Impreimé au Japon

Use of this manual should be strictly supervised to avoid disclosure of confidential information.

PREFACE

This Service Manual describes necessary basic information for after-sales service and maintenance for maintaining the product quality and functions of the DR-5020/5080C.

Contents

Chapter 1: General Description
Features, specifications, names of parts, description of operation

Chapter 2: Basic Description
Outline of principle of image processing

Chapter 3: Functions & Operation
Description of principle of operation of electrical and mechanical systems

Chapter 4: Disassembly & Reassembly
Description of disassembly, reassembly, and adjustment

Chapter 5: Installation
Location and installation procedure

Chapter 6: Maintenance & Servicing
Parts to be replaced periodically, consumable parts

Chapter 7: Troubleshooting
Troubleshooting and service modes

Appendix: General circuit diagrams, etc.

Information in this manual is subject to change. Notification of such changes will be given in Service Information Bulletins.

Thoroughly read the information contained in this Service Manual and the Service Information Bulletins to gain a correct and deeper understanding of the machine. This is one way of fostering response for ensuring the prolonged quality and function, and for investigating the cause of trouble during troubleshooting.

Quality Assurance Center
Canon Electronics Inc.

COPYRIGHT © 1999 CANON ELECTRONICS INC. CANON DR-5020/5080C REV.0 JUNE 1999 PRINTED IN JAPAN (IMPRIME AU JAPON)

CONTENTS

CHAPTER 1 GENERAL DESCRIPTION

I. FEATURES 1-1
II. SPECIFICATIONS 1-2
III. PRECAUTIONS 1-5
IV. NAMES OF PARTS 1-6
V. EXPLANATION OF OPERATION 1-7
VI. REGULAR INSPECTION BY USERS 1-10

CHAPTER 2 BASIC DESCRIPTION

I. OUTLINE 2-1
II. IMAGE READING ASSEMBLY 2-3
III. IMAGE PROCESSING 2-6

CHAPTER 3 FUNCTIONS & OPERATION

I. OUTLINE 3-1
II. EXPOSURE SYSTEM 3-11
III. DOCUMENT FEED SYSTEM 3-12
IV. DESCRIPTION OF ELECTRICAL CIRCUITS 3-19
V. OPTIONS 3-37
VI. INTERFACE 3-43
VII. POWER SUPPLY 3-46
VIII. LAYOUT OF ELECTRICAL COMPONENTS 3-49
IX. LIST OF VARIABLE RESISTORS, SWITCHES & LEDS FOR EACH CIRCUIT BOARD 3-52

CHAPTER 4 DISASSEMBLY & REASSEMBLY

I. EXTERNAL 4-1
II. DRIVE (MOTORS) 4-11
III. FEED (ROLLERS) 4-16
IV. EXPOSURE 4-27
V. ELECTRICAL (PCBS, ETC.) 4-30

CHAPTER 5 INSTALLATION

I. SELECTION OF LOCATION 5-1
II. UNPACKING & INSTALLATION 5-2
III. IMPRINTER MOUNTING PROCEDURE 5-4
IV. RED LED MOUNTING PROCEDURE 5-8
V. MEMORY 128MB MOUNTING PROCEDURE 5-10

COPYRIGHT © 1999 CANON ELECTRONICS INC. CANON DR-5020/5080C REV.0 JUNE 1999 PRINTED IN JAPAN (IMPRIME AU JAPON)

CHAPTER 6 MAINTENANCE & SERVICING

I. BASIC PERIODIC SERVICING PROCEDURE 6-1
II. PARTS TO BE REPLACED PERIODICALLY 6-2
III. CONSUMABLE PARTS 6-3
IV. PERIODIC SERVICING LIST 6-4

CHAPTER 7 TROUBLESHOOTING

I. ERROR INDICATION AND DISPOSITION 7-1
II. IMAGE TROUBLESHOOTING 7-4
III. OPERATION TROUBLESHOOTING .. 7-7
IV. FEED TROUBLESHOOTING 7-15
V. SERVICE MODES 7-16
VI. AFTER REPLACING PARTS 7-35

APPENDIX

I. GENERAL CIRCUIT DIAGRAM A-1
II. LIST OF SPECIAL TOOLS A-3

COPYRIGHT © 1999 CANON ELECTRONICS INC. CANON DR-5020/5080C REV.0 JUNE 1999 PRINTED IN JAPAN (IMPRIME AU JAPON)

CHAPTER 1

GENERAL DESCRIPTION

I. FEATURES 1-1
II. SPECIFICATIONS 1-2
III. PRECAUTIONS 1-5
IV. NAMES OF PARTS 1-6
V. EXPLANATION OF OPERATION 1-7
VI. REGULAR INSPECTION BY USERS 1-10

COPYRIGHT © 1999 CANON ELECTRONICS INC. CANON DR-5020/5080C REV.0 JUNE 1999 PRINTED IN JAPAN (IMPRIME AU JAPON)

I. FEATURES

1. Capable of scanning A3/Ledger size document

Standard sizes up to A3/Ledger size can be scanned.

2. High speed scanning

Approx. 50 sheets can be scanned per minute.
(When 200 dpi × 200 dpi binary is output using A4 size CCITT No. 1 documents)

3. High durability

Expected life is 6 million sheets feeding A4/LTR size documents.
(Replacements of consumables and periodically replaced parts are required)

4. Gray scale output and color output (DR-5080C only)

Up to 8 bits of gray scale and 8 bits of color output of each color, RGB, are available.

5. Additional functions by options

Imprinter, barcode decoder and others can be attached.

Expected life of product

Whichever of the following two conditions comes

1) 5 years
2) 6,000,000 sheets fed (A4/LTR size)

Windows is a registered trademark of Microsoft Corporation in the U.S. and other countries.
Other company names and product names mentioned in this manual are registered trademarks or trademarks of respective companies.

II. SPECIFICATIONS

Category	Item	Specifications	
		DR-5080C	DR-5020
Appearance/Installation	1. Configuration	Desktop type	
	2. Power supply	100 VAC 50/60 Hz 120 VAC 60 Hz 230 VAC 50 Hz	
	3. Weight	196N (20kgf)	
	4. Temperature range	15 to 27.5°C (59 to 81.5°F)	
	5. Humidity range	25 to 75% RH	
	6. Max. power consumption or input current	100 V model : 120 W 120 V model : 1.0 A 230 V model : 0.5 A	
	7. Noise	Operation : 72 dB or less, except buzzer noise and when very high speed feed Standby : 40 dB or less	
	8. Dimensions	Tray opened : 427 (W) × 663 (D) × 291 (H) mm Tray closed : 427 (W) × 485 (D) × 262 (H) mm	
	9. Output interface	SCSI-2 (Available for Fast SCSI)	
Document scan	1. Photosensitive element	Contact Sensor (CMOS CIS)	
	2. Picture element	Density of element 300 dpi, 3488 effective elements (295.3 mm)	
	3. Light source	RGB 3 colors 1 line LED	Yellow-green 1 line LED
	4. Scanning method	Movement of documents	
	5. Scanning mode	Front side/Back side/Both sides	
	6. Image output mode	1) Binary 2) Gray scale (2/4/8 bit) 3) Color (3/6/12/24 bit)	1) Binary
	7. Output resolution (Horizontal × Vertical)	1) 400 dpi × 400 dpi 2) 300 dpi × 300 dpi 3) 200 dpi × 200 dpi 4) 300 dpi × 150 dpi 5) 200 dpi × 100 dpi 6) Optional setting: Every 10 dpi between 300 dpi and 200 dpi Horizontal and vertical resolution are same.	

Table 1-1 (cont.)

 COPYRIGHT © 1999 CANON ELECTRONICS INC. CANON DR-5020/5080C REV.0 JUNE 1999 PRINTED IN JAPAN (IMPRIME AU JAPON)

Category	Item	Specifications	
		DR-5080C	DR-5020
Document feed	1. Pickup method	Automatic / Manual	
	2. Document size	1) Typical size A3/A4/A5/A6, B4/B5/B6, LDR/LGL/LTR 2) Atypical size Width: 55 to 297 mm, Length: 70 to 432 mm 3) Thickness Automatic: 0.06 to 0.15 mm, Manual: 0.05 to 0.20 mm	
	3. Document requirements	1) Carbon-backed paper: Cannot be used 2) Pressure sensitive paper: Can be used (face-up only) 3) Perforations for binding: Can not be used 4) Curled paper: 5 mm or less	
	4. Max. pickup storage	1) A4/LTR or under: Document height 45 mm (or 500 sheets) 2) Over A4/LTR: Document height 20 mm (or 200 sheets)	
	5. Pickup start mode	1) Semi-Auto: Automatic pickup when start button is pushed 2) Auto: Automatic pickup when document is set 3) Manual: Manual pickup when document is set 4) Remote: Pickup by operation of personal computer	
	6. Feed speed	1) Very high speed: 587 mm/sec. (200 dpi × 100 dpi) 2) High speed: 391 mm/sec. (300 dpi × 150 dpi) 3) Medium speed: 293 mm/sec. (200 dpi × 200 dpi) 4) Low speed: 195 mm/sec. (300 dpi × 300 dpi) 5) Very low speed: 146 mm/sec. (400 dpi × 400 dpi) * When binary or gray scale mode is selected	
	7. Delivery direction	Face down	
	8. Max. delivery storage	1) A4/LTR or under: Document height 45 mm (or 500 sheets) 2) Over A4/LTR: Document height 20 mm (or 200 sheets)	
	9. Number of scanned documents	Document size: A4 Unit: Sheets/min.	

Mode		200 × 100	200 × 200	400 × 400
Binary	Simplex	84.0	49.5	19.0
	Duplex	84.0	49.5	19.0
Gray scale (8 bit)	Simplex	61.0	30.5	10.0
	Duplex	44.5	22.5	6.5
Color (24 bit)	Simplex	20.5	10.0	3.0
	Duplex	15.0	7.5	2.0

* These number may differ depending on the computer used or other conditions. DR-5020 is binary only.

Table 1-1 (cont.)

Category	Item	Specifications	
		DR-5080C	DR-5020
Image processing	1. Density adjustment	256 gradations (13 gradations for operation panel)	
	2. Automatic density (AE)	Possible only for binary (Binary AE)	
	3. Edge emphasis	5 steps	
	4. Contrast adjustment	13 steps	
	5. Black compensation	Possible (Black clump and Dark compensation)	
	6. Shading compensation	Possible	
	7. Gamma compensation	Possible	
	8. Image resolution conversion	Possible (Horizontal and Vertical)	
	9. Binarizing	Simple binary/Error diffusion	
	10. Neg./Pos. reversion	Possible	
	11. Others	Thin line complement/Dot erasing/Notch compensation	
Others	1. Other functions	1) Double feed detection by paper thickness 2) Double feed detection by paper length 3) Add-on 4) Function sheet 5) Dropout color (only LED colors)	
	2. Software packed	1) ISIS/TWAIN device driver 2) Canon device drive/Sample software (Scanning Utility 5000)	
	3. Options	1) Extension memory	1) Red LED unit
		2) Imprinter 3) Bar code decoder 4) Endorser	

Table 1-1

These specifications are subject to change without notice for improvement of the machine.

COPYRIGHT © 1999 CANON ELECTRONICS INC.
CANON DR-5020/5080C REV.0 JUNE 1999 PRINTED IN JAPAN (IMPRIME AU JAPON)

III. PRECAUTIONS

This section describes items that require particular care, for example, regarding human safety. These precautions must be observed. Explain to the user items that relate to user safety, and instruct the user to take appropriate actions.

1. Electromagnetic Wave Interference Countermeasures

This machine complies with the electromagnetic wave interference standards (VCCI-A, FCC-A, etc.). However, the user might have to carry out separate countermeasures if the machine causes electromagnetic wave interference.

Do not change nor modify this machine's specifications. If this has been carried out, its use may be forcibly discontinued on site. If this machine's specifications have been changed, or the machine has been disassembled and reassembled, follow the instructions described in this manual or in Service Information Bulletins.

The "CAUTION LABEL" is affixed on the rear of the machine.

This device complies with Part 15 of the FCC Rules. Operation is subject to the following two conditions: (1) This device may not cause harmful interference, and (2) this device must accept any interfernce received, inculuding interference that may cause undesired operation.

This Class A digital apparatus meets all requirements of the Canadian Interference-Causing Equipment Regulations.

Cet appareil numérique de la classe A respecte toutes les exigences du Règlement sur le matériel brouilleur du Canada.

CAUTION LABEL (120V machines)

2. Power OFF in emergency

When such anomalies as abnormal noise, smoke, heat and odor occur, turn the power off immediately and unplug the power cord.

As it may cause injury, be careful not to get clothing (ties, long hairs, etc.) caught in the machine. If happened, turn the power off immediately.

Also, do not insert fingers in the feed assembly or under the document board while feeding documents.

3. Instruction Manual

Read the instruction manual thoroughly before using this machine.

IV. NAMES OF PARTS

1. Front view

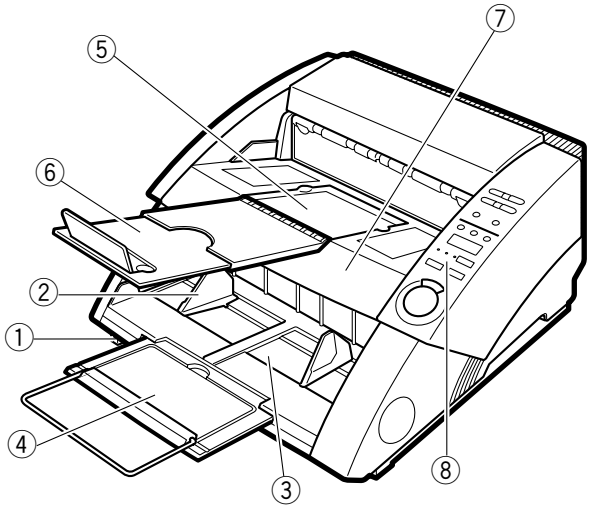

① Power switch
② Document guide
③ Document tray
④ Document tray extension
⑤ Document eject (delivery) tray
⑥ Document eject (delivery) tray extension
⑦ Upper unit
⑧ Operation panel

Fig. 1-1

2. Rear view

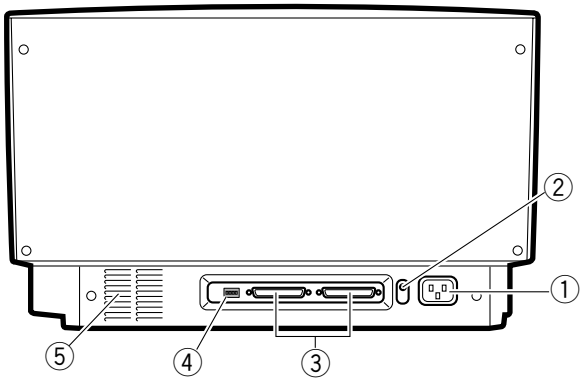

① Power cord connector
② Grounding terminal
③ SCSI connector
④ DIP switch
⑤ Air vent

Fig. 1-2

COPYRIGHT © 1999 CANON ELECTRONICS INC.
CANON DR-5020/5080C REV.0 JUNE 1999 PRINTED IN JAPAN (IMPRIME AU JAPON)

V. EXPLANATION OF OPERATION

1. Basic operation

The basic operational procedure for recording is as follows.

For details, refer to the instruction manual.

1) Turn the power of the machine on. “0000” will appear on the counter display of the operation panel.
2) Turn a personal computer on.
3) Start up the application software.
4) Set the feeding and recording conditions.
5) Place documents.
6) Start feeding.
7) After the recording is completed, quit the application software.
8) Turn the personal computer off.
9) Turn the power of the machine off.

Note 1: As to the system requirements for the personal computer and others, refer to the instruction manual.

Note 2: As to the driver software and the application software, refer to the instruction manuals of each software.

Note 3: For use of trays, refer to the instruction manual.

2. Operation Screen

The operation screen of the “Scanning Utility 5000” packed with this machine is as shown below.

As to the operation screens of other driver software and application software, refer to the instruction manuals of each software.

1) “Start up” screen
It appears by starting up the application software.
Start with this screen to carry out the various operations.

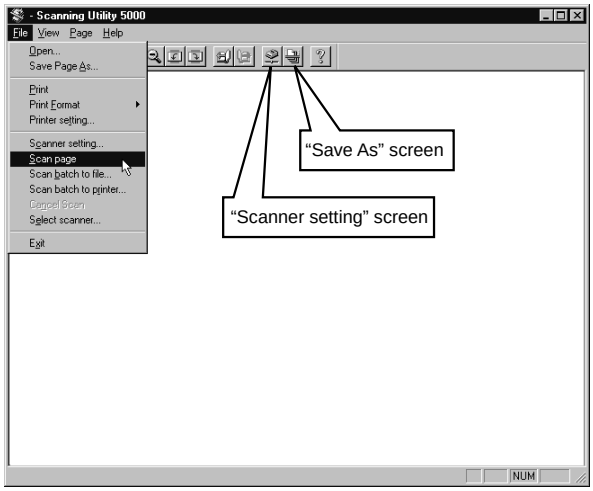

Fig. 1-3

2) “Scanner setting” screen
It appears by selecting “File” - “Scanner setting” is selected on the “Start up” screen, or clicking in the tool bar.
Set the basic conditions on this screen.

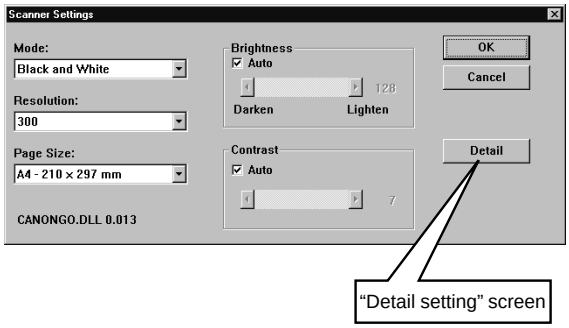

Fig. 1-4

3) “Detail setting” screen
It appears by clicking “Details” on the “Scanner setting” screen.
Set the details on this screen.

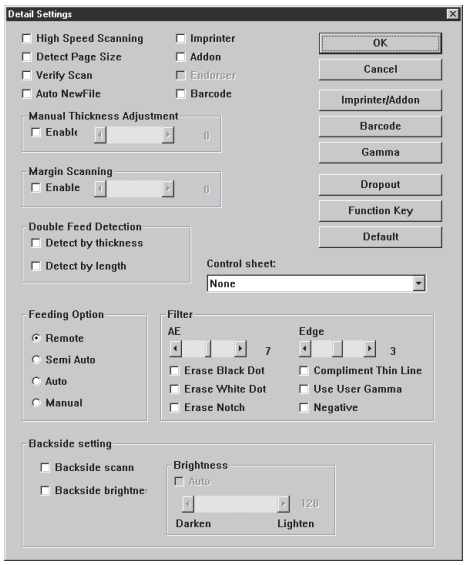

Fig. 1-5

4) “Save As” screen
It appears by selecting “File” - “Scan batch to file” on the “Start up” screen, or clicking in the tool bar.
Determine the files to be saved on this screen.

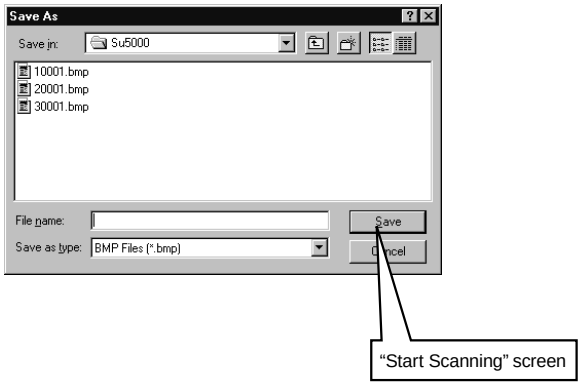

Fig. 1-6

5) “Start Scanning” screen
It appears by clicking “Save” on the “Save As” screen.
Operate the simplex/duplex switching, the partition setting, and the scanning (feeding) start/stop.

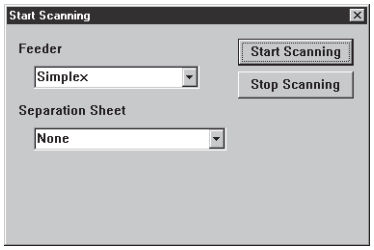

Fig. 1-7

Note: It also appears when “File” - “Scan batch to print” is selected on the “Start up” screen, when the placed documents are run out, or when the scanning is suspended.

 COPYRIGHT © 1999 CANON ELECTRONICS INC. CANON DR-5020/5080C REV.0 JUNE 1999 PRINTED IN JAPAN (IMPRIME AU JAPON)

3. Operation Panel

The layout of the operation panel of this machine is as shown below.

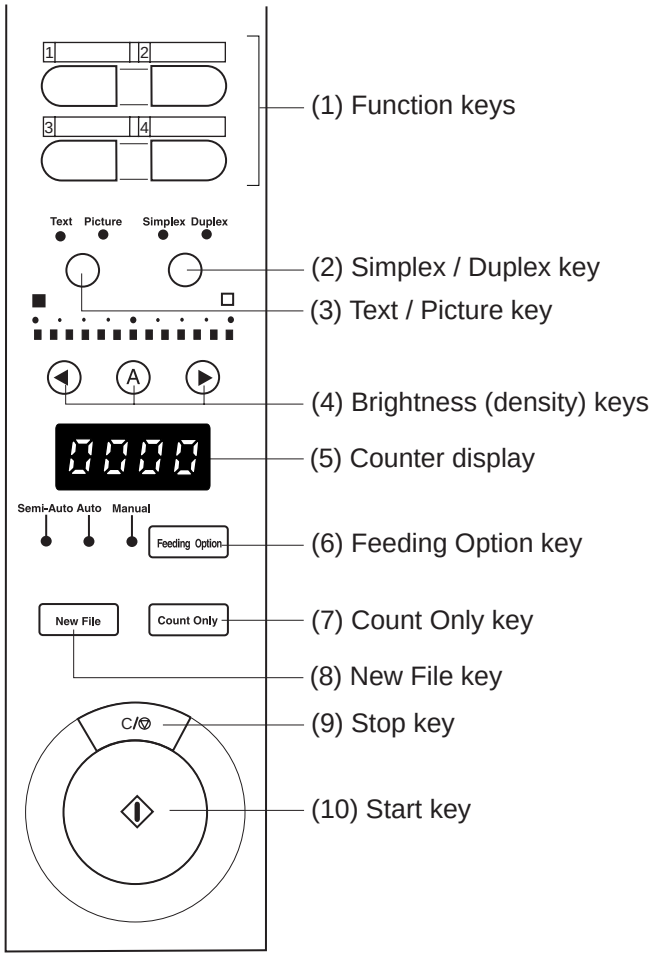

Fig. 1-8

VI. REGULAR INSPECTION BY USERS

Fully explain to the user that the following locations must be cleaned about once every week, and that the power must be turned OFF and the power pulg must be disconnected before the user starts cleaning.

1. Exterior

- Covers
  Wipe with a cloth moistened with water or neutral detergent, and then wipe dry.

2. Optical Path

- Guide glass (Upper, Lower)
  Wipe with a cloth moistened with water, and then wipe dry.

3. Document Feed

Wipe the following rollers with a cloth moistened with water, and then wipe dry:

- Pick-up roller
- Feed roller
- Separation roller
- Registration roller (Upper, Lower)
- Upper reading rollers (two pcs.)

Note: Clean each of the rollers rotating them in the feed direction.

Moreover, as the power cord is plugged to the outlet for a long period of time, dust lay on the connected part and may cause leakage, fire and electric shock. To prevent this, instruct users to clean it regularly.

For the option (impriter, etc.), refer to the instruction manual about regular inspection by users.

 COPYRIGHT © 1999 CANON ELECTRONICS INC. CANON DR-5020/5080C REV.0 JUNE 1999 PRINTED IN JAPAN (IMPRIME AU JAPON)

CHAPTER 2

BASIC DESCRIPTION

This chapter describes the basic knowledge required for this machine. For a more detailed description of operations and functions, see Chapter 3, Functions and Operation.

I. OUTLINE 2-1
II. IMAGE READING ASSEMBLY 2-3
III. IMAGE PROCESSING 2-6

COPYRIGHT © 1999 CANON ELECTRONICS INC. CANON DR-5020/5080C REV.0 JUNE 1999 PRINTED IN JAPAN (IMPRIME AU JAPON)

I. OUTLINE

Fig. 2-1 shows a block diagram of the image processing.

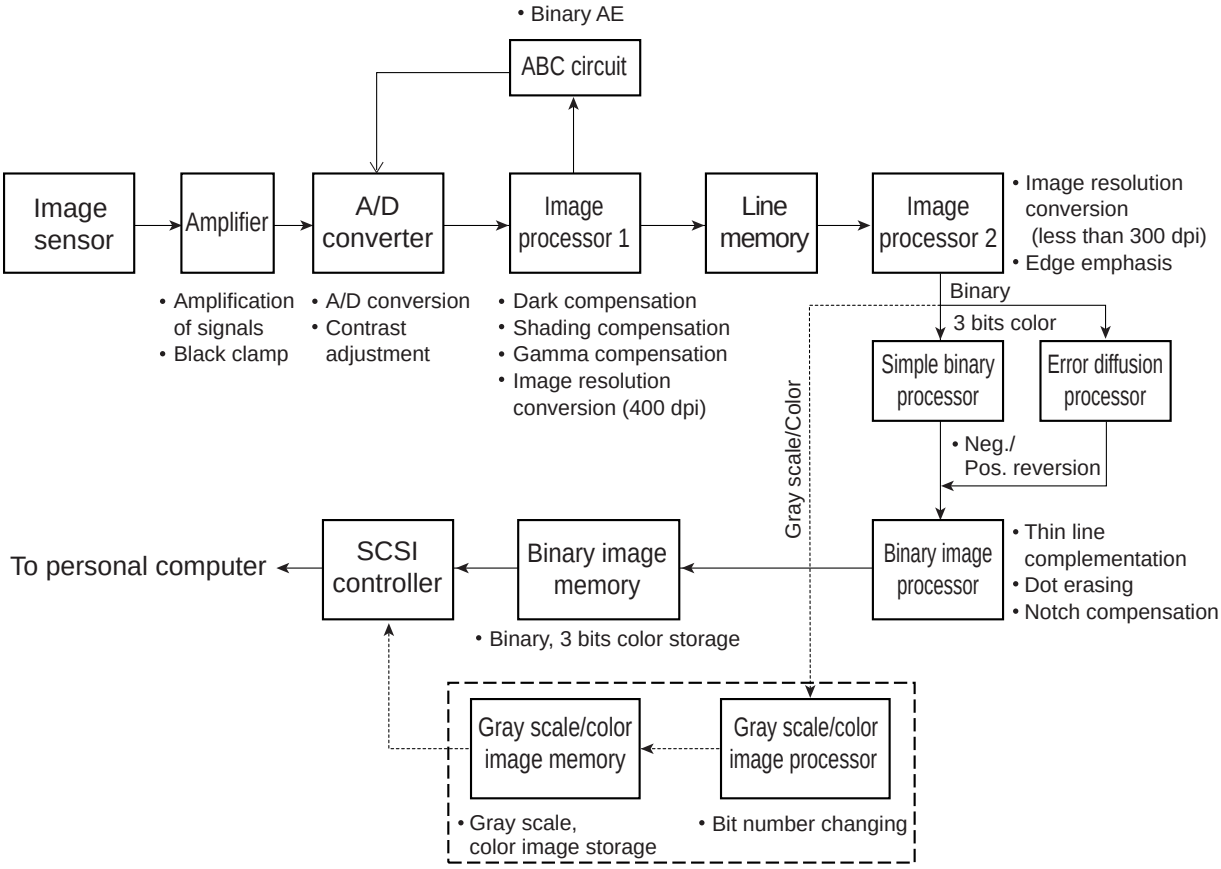

Fig. 2-1

Electric signals (analog) proportional to the density of each picture element, read by the image sensor, are sent one after another to the amplifier. After the signals are amplified and black clumped by the amplifier, they are sent to the A/D converter. At the A/D converter, the signals are contrast adjusted and at the same time converted to the digital signals proportional to the density.

Next, they are sent to the image processor 1 where the following image processing is carried out.

- Dark compensation
- Shading compensation
- Gamma compensation
- Image resolution change (from 300 dpi to 400 dpi)

At this time, if binary AE is selected, the signals are sent to the ABC circuit and judged for density.

The digital signals, after being processed by image processor 1, are sent, via the line memory, to image processor 2 where the following is carried out.

- Image resolution change (less than 300 dpi)
- Edge emphasis

In case of binary mode, the data processed by image processor 2 are binarized by the simple binary processor or the error diffusion processor. At this time, if neg./pos. reversion is selected, the reversing process is carried out and then the signals are sent to the binary image processor. The following processes are carried out at the binary image processor.

- Thin line complement
- Dot erasing
- Notch compensation

The image data thus processed, after being stored in the binary image memory, are sent, via the SCSI controller, to the personal computer.

In case of gray scale or color mode, the data processed by image processor 2 are sent to the gray scale/color image processor. At the gray scale/color image processor, the bit number of the gray scale data is changed and, after being stored in the gray scale/color memory, the data is sent, via the SCSI controller, to the personal computer.

However, in the case of 3 bits color processing is carried out by the same flow as the binary mode.

 COPYRIGHT © 1999 CANON ELECTRONICS INC. CANON DR-5020/5080C REV.0 JUNE 1999 PRINTED IN JAPAN (IMPRIME AU JAPON)

II. IMAGE READING ASSEMBLY

1. Outline

Fig. 2-2 shows a composite diagram of the image reading assembly.

First, the front and back of a document are illuminated by two, upper and lower, LED arrays. The reflected light is detected by photosensitive elements and converted into electrical signals.

The image of the document is broken down into picture elements by the photosensitive elements, and the electrical signals, which correspond to the density of each picture element, are subjected to various processes by the image processor of the main CPU PCB assembly.

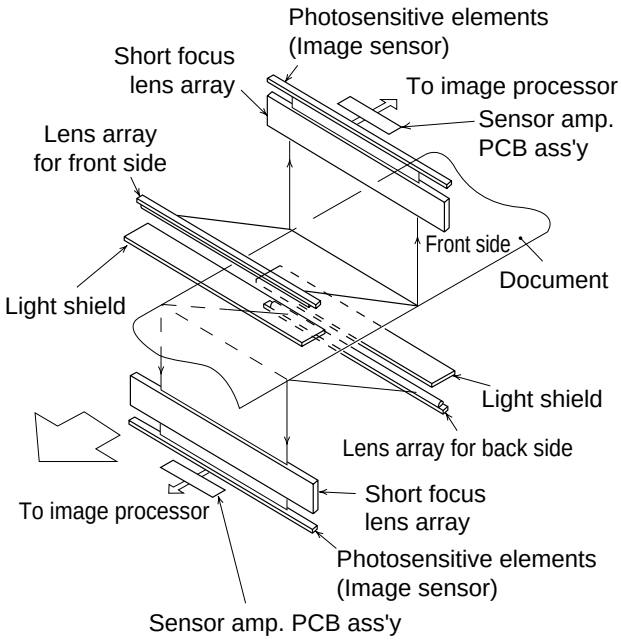

Fig. 2-2

2. Image Sensor

In this machine, CMOS CIS (Contact Image Sensor) is used as a photosensitive element device.

Although this sensor has a CMOS structure, its function is the same as BASIS used in the previous machines.

On a single PCB assembly, there are 3,510 photosensitive elements lined up every 84.7 µm in a row and 15 chips which respectively contain a circuit to provide the scanning function. In this manual, this entire PCB assembly is called the image sensor.

Fig. 2-3 is the equivalent circuit of one photosensitive element (single picture element).

The function of one photosensitive element is explaned as follows.

First, by turning on the T_{RES} terminal signal, the potential of the buffer 1 (BUF1) gate is made the same as the bias potential, and by turning off the T_{RES} terminal signal. The voltage converted light by the photo-diode (PD) is accumulated in butter 1.

Next, by turning on the T_M terminal signal, the accumulated voltage is stored in the condenser memory (CM), read out by buffer 2 (BUF2), and voltage E_{OUT} corresponding to the density is obtained.

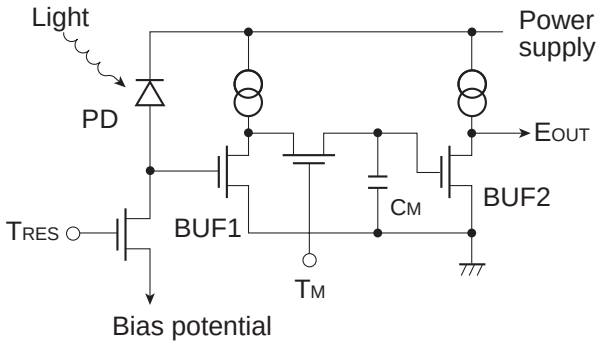

Fig. 2-3

3. LED Array

Yellow-green LEDs are used in the LED array of DR-5020.

DR-5080 uses 3 color LEDs, Red/Green/Blue (RGB), in its LED array so it is able to read color documents. The 3 color LEDs are arranged as shown in Fig. 2-4.

In the case of color mode, its composition is read by illuminating the RGB LEDs in succession and detecting the respective reflected RGB light with the image sensor. The reading position slides a very little, because the document is fed with a constant speed.

In case of binary and gray scale mode, the white light generated by illuminating the RGB LEDs simultaneously is read.

Fig. 2-4

4. Short Focus Lens Array

The short focus lens has a fiber type configuration as shown in Fig. 2-5. The characteristic of this lens is that only a short focal distance is required.

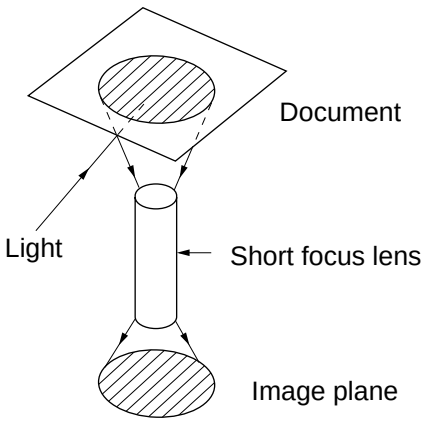

Fig. 2-5

Light rays entering the lens are repeatedly reflected inside the lens as shown in Fig. 2-6. The interval between these light ray reflections is proportionate to the wave length of the incident light.

For instance, when the lens is shorter than the ratio of the light wave length as in (A) of Fig. 2-6, the emerging light rays are focused. When it is longer as in (B), the emerging light rays are diffused. When the lens matches the ratio of the wave lengths as in (C), the emerging light rays are parallel rays and the image of the document is focused in its original size on the image plane.

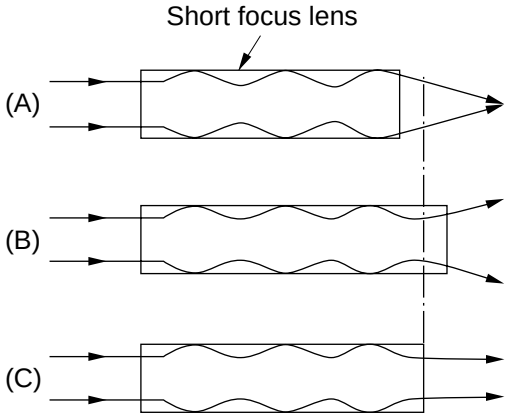

Fig. 2-6

In this machine, short focus lenses that do not produce RGB color aberrations are used. Also, in order to increase the amount of light entering into the lenses, the short focus lenses are arranged in two rows (Refer to Fig. 2-7).

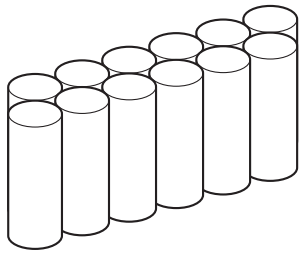

Fig. 2-7

 COPYRIGHT © 1999 CANON ELECTRONICS INC. CANON DR-5020/5080C REV.0 JUNE 1999 PRINTED IN JAPAN (IMPRIME AU JAPON)

5. Sensor Amplifier PCB Assembly

A sensor amplifier PCB assembly is equipped, it lowers impedance so as to lessen the effect of noise for the output from the image sensor.

When the image sensor reads an image, a voltage proportionate to the density of the image and a standard voltage are output from the image sensor. The sensor amp. circuit amplifies and outputs the difference between the voltage proportionate to the image density and the standard voltage. (Refer to Fig. 2-8.)

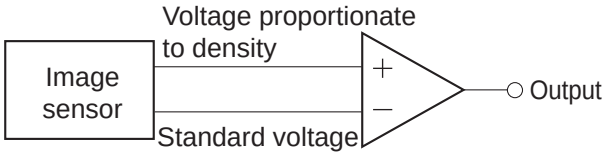

Fig. 2-8

6. Image Data

This machine scans an image and outputs it as image data to a personal computer.

DR-5020 outputs binary image data and DR-5080C selects and outputs binary image data, gray scale image data and color image data.

The following describes the differences between the respective image data.

a. Binary image data

Image data that expresses an image in two values, black and white, is called binary image data.

As binary image data has just two tones, black and white, per picture element, it cannot output gray and other half tones. (Refer to Fig. 2-9.)

There are two processing, simple binary processing which divides tones into two at the specified level and error diffusion processing which compensates the reproducibility of the tones.

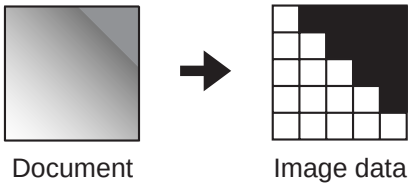

Fig. 2-9

b. Gray scale image data (DR-5080C only)

DR-5080C can produce gray scale image data.

Image data which can express not only black and white but gray and other half tones is called gray scale image data.

The number of tones become greater the more the number of bits per picture element. (Refer to Fig. 2-10.)

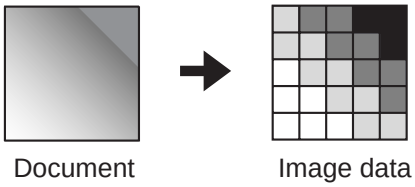

Fig. 2-10

c. Color image data (DR-5080C only)

DR-5080C can produce color image data.

It expresses color by the mixed ratios of the three basic colors of light, red (R), green (G), and blue (B). (Refer to Fig. 2-11.)

Each picture element contains RGB data and, as in gray scale image data, each data has its tone.

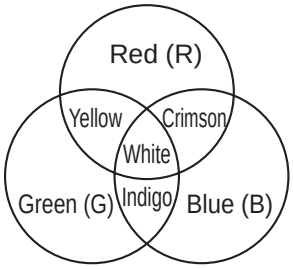

Fig. 2-11

III. Image Processing

The following describes the various image processings. (Refer to Fig. 2-1 for the whole block diagram.)

1. Black Clamp

Amplifying and black clamping of signals are carried out at the amplifier.

The light from the LEDs can not reach some parts of the photosensitive elements of the image sensor. The signals of those parts are called black level signals.

The difference between the voltage proportionate to the image density and the standard voltage is output from the image sensor.

As the true signal is the difference between the voltage proportionate to the image density and the black level signal, if the black level signal differs from the standard voltage, the true signal will not be amplified. (Refer to Fig. 2-12.)

Making the black level signal the same as the standard voltage is called black clamping. This process makes it possible to amplify the true signal.

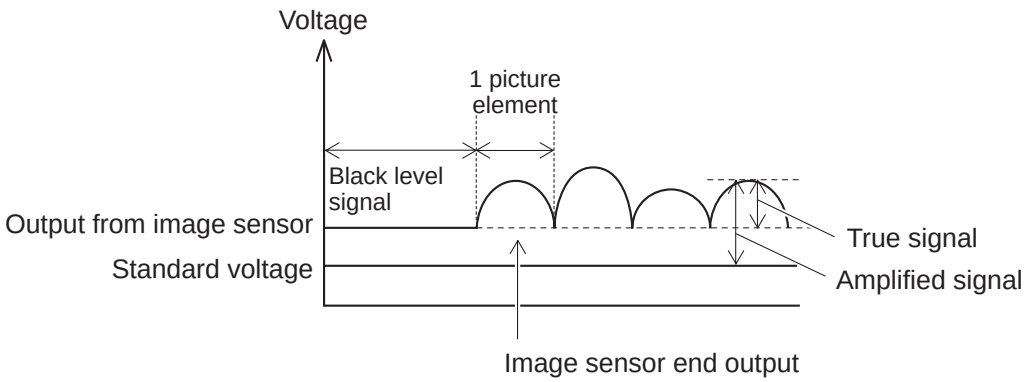

Fig. 2-12

2. A/D Conversion

As mentioned previously, the signals sent from the image sensor are analog signals. These signals are converted into digital signals in order to process them into an image.

Fig. 2-13 shows the outputs of digital signals after A/D conversion when they are 4 bit signals. (The input voltages shown differ from the actual values.)

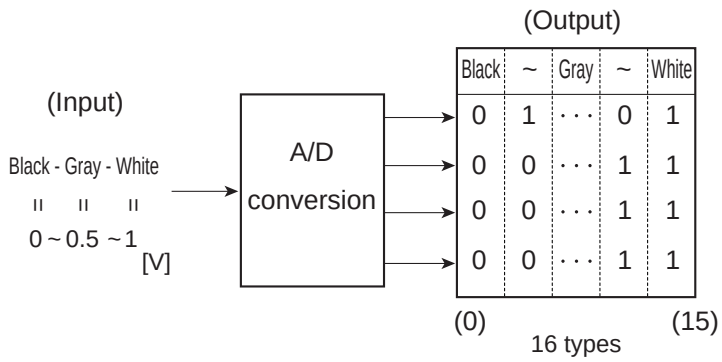

Fig. 2-13

COPYRIGHT © 1999 CANON ELECTRONICS INC.
CANON DR-5020/5080C REV.0 JUNE 1999 PRINTED IN JAPAN (IMPRIME AU JAPON)

If it were only necessary to judge whether the image density of the document was black or white, the output need be only one bit. However, actually, it is necessary to reproduce half tones such as gray.

If the output is 4 bits, it is possible to output 16 types of values. Consequently, the input signal (analog) which changes from 1 [V] to 0 [V] as the image of the document changes progressively through white, gray, and black, is converted to a digital signal of one of the above 16 levels corresponding to the particular values.

This machine outputs 8 bits, so 256 tonal values can be obtained.

As the number of output bits increases, the resulting digital signal represents the changes in image density of the document more faithfully with good tonality.

3. Contrast Adjustment

In addition to the analog signals from the image sensor, a white comparison voltage (VH) and a black comparison voltage (VL) are input into the A/D converter. The analog signals are converted to digital signals proportionate to the density of the document in accordance with the levels between those two voltages. (Refer to Fig. 2-14 and Fig. 2-15.)

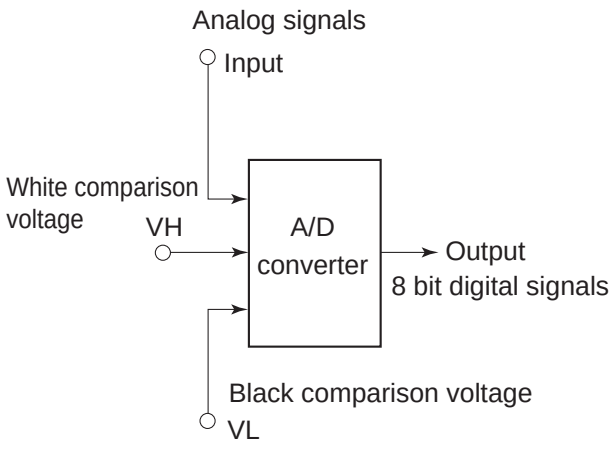

Fig. 2-14

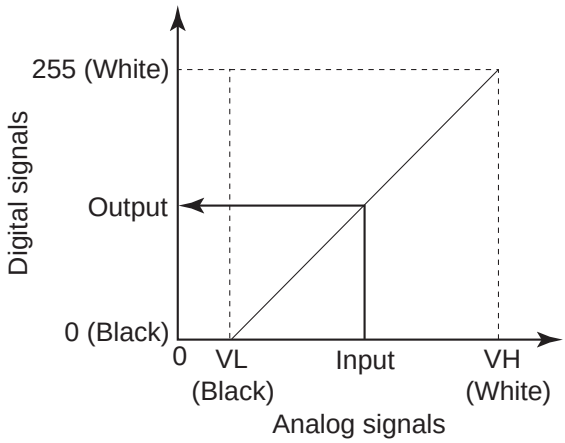

Fig. 2-15

This machine adjusts contrast by changing the white comparison voltage. Fig. 2-16 shows the differences in output caused by the changes in comparison voltage.

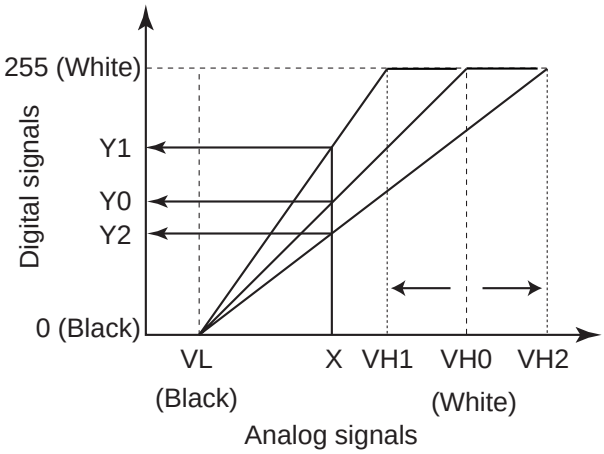

Fig. 2-16

The analog signal input is X, the white comparison voltage when contrast is not adjusted is VH0, and output is Y0.

When the white comparison voltage is changed from VH0 to VH1, the tilt of the straight line of the A/C conversion becomes greater, and an output Y1 brighter than Y0 is obtained from input X. The whole input signals are converted more brightly and contrast becomes higher.

When the white comparison voltage is changed from VH0 to VH2, the tilt of the straight line of the A/C conversion becomes smaller, and an output Y2 darker than Y0 is obtained from input X. The whole input signals are converted more darkly and contrast becomes lower.

4. Dark Compensation

The dark output of the photosensitive elements in the image sensor (the output when light does not reach the elements) differs with each element. Therefore, the output at reading a black document is not definite, because it becomes the added output with different values depending on each element. To compensate this output is called dark compensation.

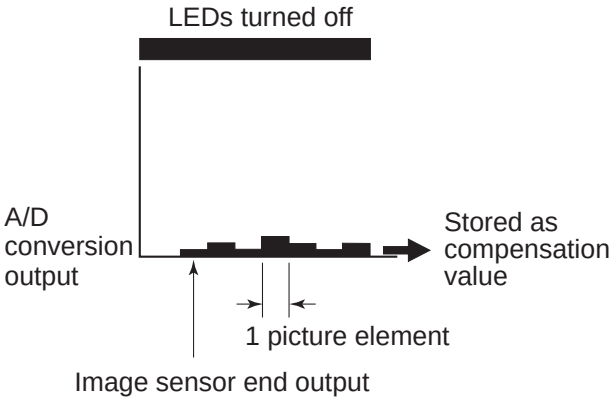

Fig. 2-17

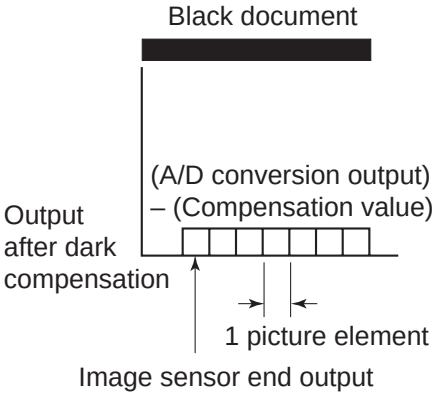

Fig. 2-18

Compensation is done by storing in memory as compensation values the output from the image sensor on the condition that LEDs are turned off, and then subtracting the compensation values from the output when an image is scanned. (Refer to Fig. 2-17 and Fig. 2-18.)

Black clamping together with dark compensation is sometimes called the black compensation.

COPYRIGHT © 1999 CANON ELECTRONICS INC.
CANON DR-5020/5080C REV.0 JUNE 1999 PRINTED IN JAPAN (IMPRIME AU JAPON)

5. Shading Compensation (White Compensation)

The output from the image sensor for each picture element can not be a uniform value, even if all the reflected light is detected by image sensor from a document whose whole density is uniform in the scanning direction. The reasons are as follows;

1) The light intensity of each LED is different.
2) The light intensity irradiated on the image sensor differs depending on each individual short focus lens.
3) Each sensitivity of photosensitive elements in the image sensor is different.

To compensate unevenness in the output from the image sensor, as mentioned above, is called shading compensation.

In other words, when the reflected light from a document with uniform density is detected by image sensor, as each output from image sensor is different, compensation is carried out by multiplying each image sensor output (corresponding to each picture element) with a fixed compensation factor so that all the outputs are equal. (Refer to Fig. 2-19 and Fig. 2-20.)

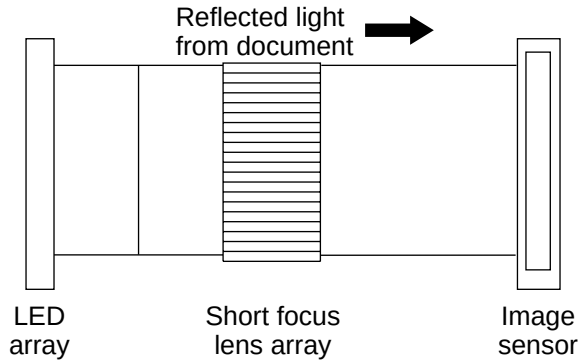

Fig. 2-19

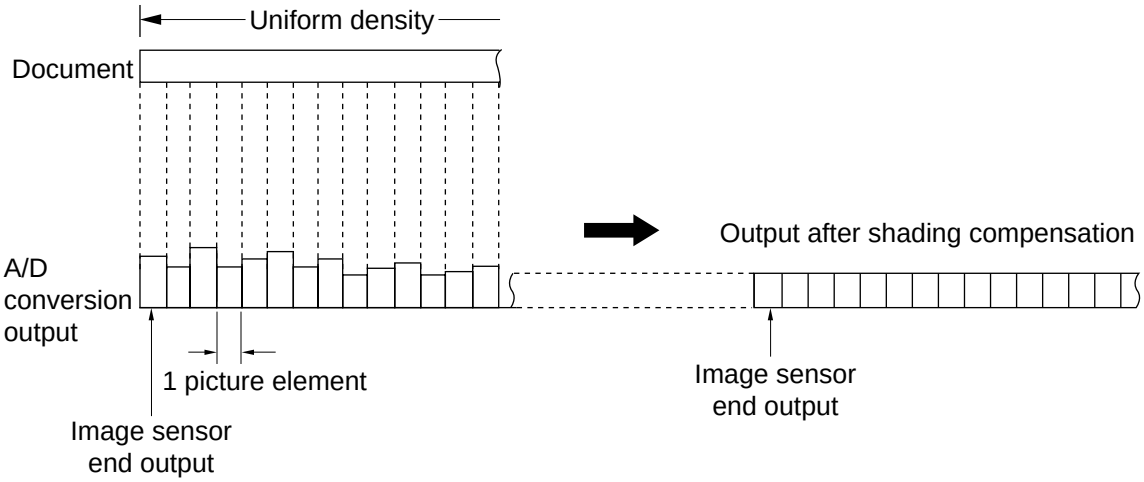

Fig. 2-20

Fig. 2-21 shows the output of a picture element (A) of the image sensor when the document density changes from black to white, and the output of the standard value of the image sensor, if the A/D conversion output is assumed to be 4 bits.

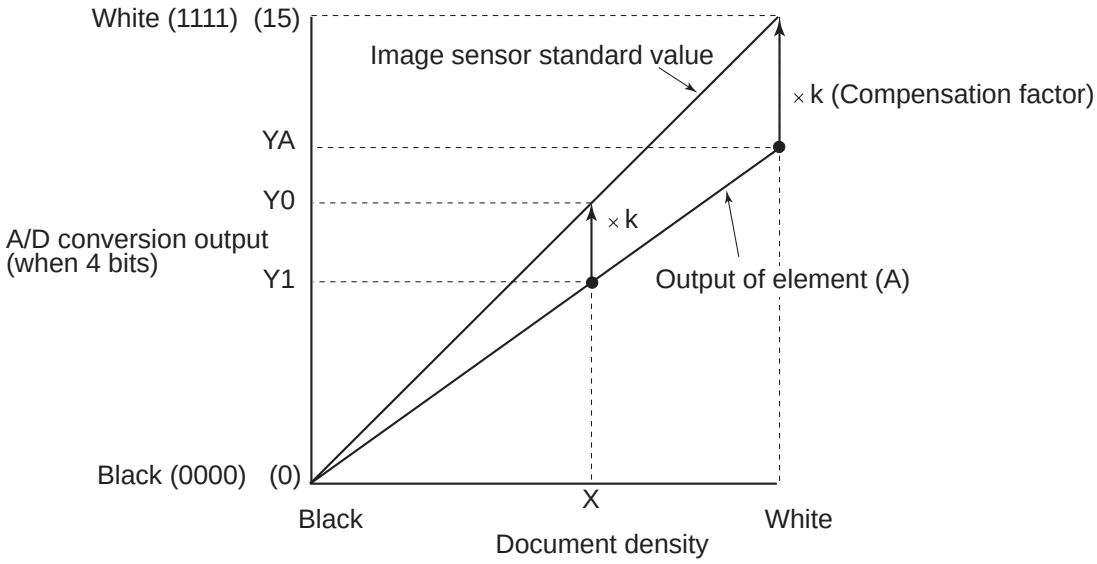

Fig. 2-21

At first, a standard white sheet is scanned, and the respective output data of the image sensors is stored in memory.

Then, comparing with the standard value of image sensor, the compensation factor is calculated so as to make each output data level from image sensor to be uniform. And it is stored in the index table RAM.

Output YA of element (A) is stored in memory when a standard white sheet is scanned. Compensation factor k required to obtain the same output from element (A) as the image sensor's standard value is calculated and stored in the index table RAM.

When scanning a document actually and its image density is X, the output Y0 after shading compensation is obtained by multiplying the pre-compensation output Y1 with the compensation factor k.

 COPYRIGHT © 1999 CANON ELECTRONICS INC.

6. Gamma Compensation (Tone Compensation)

As there is a difference between the density of a document detected by an image sensor and sensitive density by human eyes, it is necessary to compensate the output in order to obtain the appropriate density depending on the type of document.

This is called gamma compensation (tone compensation).

a. Binary mode

Fig. 2-22 shows the relationship of gamma compensation in binary mode (simple binary and error diffusion). In binary mode, the output is compensated on the dark side so that characters come out sharp and clear.

Also, density adjustment in simple binary mode is done by selecting slice level but as the slice level is fixed for error diffusion, density adjustment is carried out by changing the gamma compensation curve and thus changing the output.

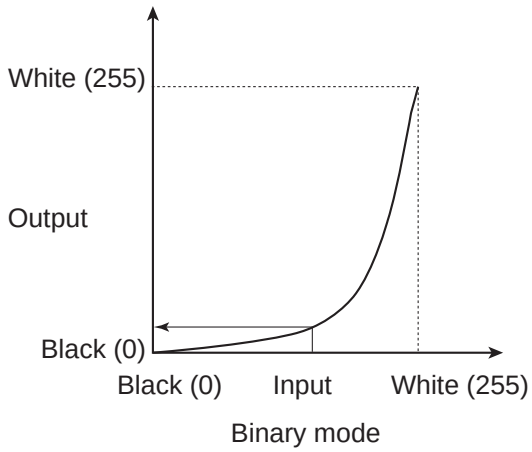

Fig. 2-22

b. Gray scale and color modes

Fig. 2-23 shows the relationship of gamma compensation in gray scale and color modes. Contrary to binary mode, in gray scale and color modes, compensation is carried out to obtain a faithful reproduction from a light image to a dark image.

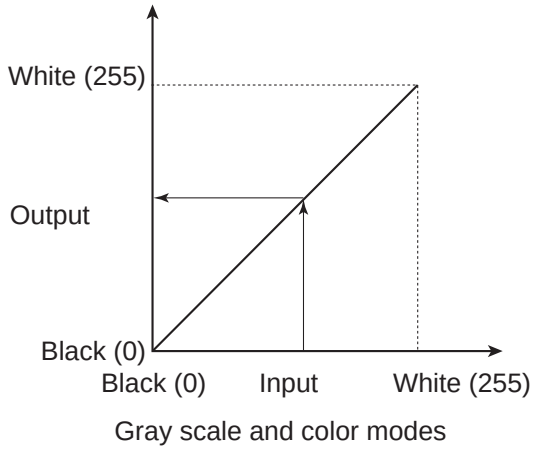

Fig. 2-23

7. Binary AE (Automatic density)

Binary AE is a process for automatically adjusting density in accordance with the density of the background of the document.

This machine judges the density of each line and then adjusts density by adjusting the level of A/D conversion from the next line it scans. The circuit that carries out this process is called ABC circuit.

Density is judged by the number of the brightest picture elements in one line.

The number of the brightest picture elements in one line is counted and when it becomes more than the value prescribed depending on the size of the document, the white comparison voltage is gradually changed in each line until it becomes the voltage of the brightest picture elements.

Fig. 2-24 shows the difference in output caused by binary AE when a document with characters on the colored background is scanned.

If the analog signal of the brightest picture elements in the colored background is X, then the output after normal A/D conversion becomes Y0, and the background color is replaced with black picture elements when binarized.

When binary AE is selected, the white comparison voltage VH is lowered to VH1 by judging the density, output of X after A/D conversion becomes Y1, and the background is replaced with white picture elements when binarized.

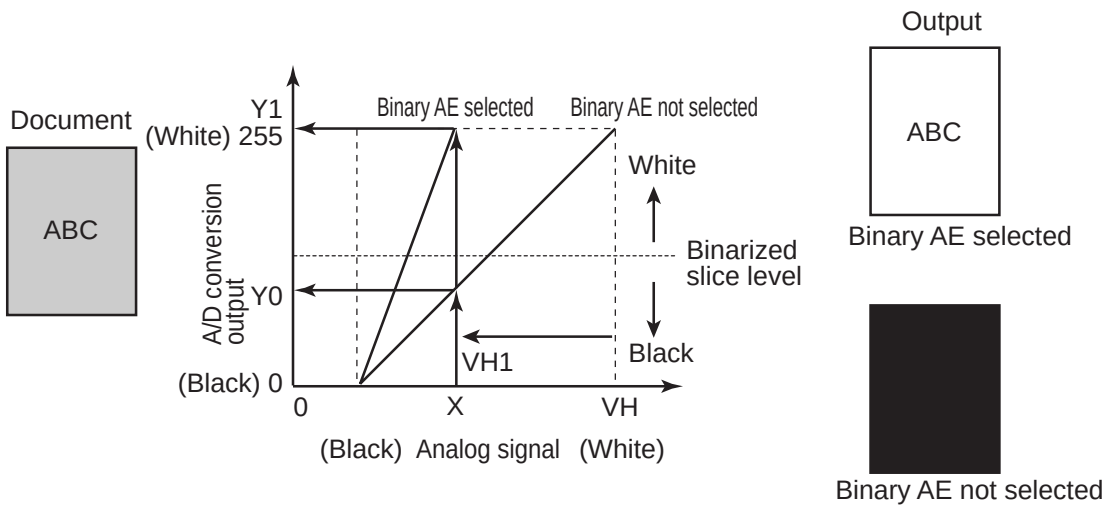

Fig. 2-24

 COPYRIGHT © 1999 CANON ELECTRONICS INC. CANON DR-5020/5080C REV.0 JUNE 1999 PRINTED IN JAPAN (IMPRIME AU JAPON)

8. Line Memory

Line memory is used for comparing the image density of the former and the next when processing the image by edge emphasis.

In the case of DR-5020, by being equipped with two line memories, it can compare the data of three lines. (Refer to Fig. 2-25.)

The following shows the flow of image data of each line. The data of the three lines are called Line 1, Line 2, and Line 3 in the order in which they are read from the image sensor.

1) Line 1 is read into image processor 2. At the same time, it is written into line memory (A).
2) Line 2 is read into image processor 2. Line 1 is read from line memory (A) and at the same time, Line 2 is written into line memory (A). Line 1 is written into line memory (B).
3) Line 3 is read into image processor 2. Line 2 is read from line memory (A) and at the same time, Line 3 is written into line memory (A). Line 1 is read from line memory (B) and at the same time, Line 2 is written into line memory (B).

The data of subsequent lines are successively read and written in the same manner.

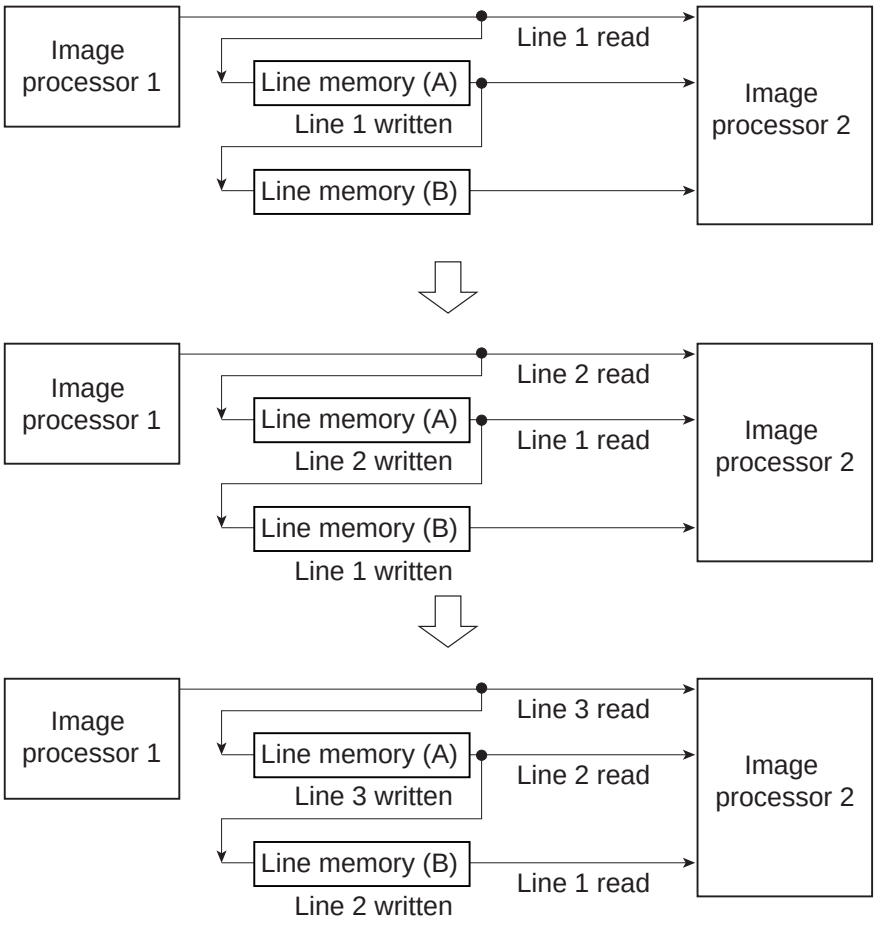

Fig. 2-25

DR-5080C uses six line memories in order to process color image data. (Refer to Fig. 2-26.)

When the color mode is selected, data of each color RGB is sent in successively one line at a time. In order to carry out edge emphasis, three times the line memory is required to compare the former and the next RGB lines. Also, since only two line memories are required for binary and gray scale mode, the line memories are switched.

When processing color image data, switching is done by selecting A1 or A2. Data of each color is read from line memory (A) successively to (B), (C), (D), (E), and (F). In the case of binary and gray scale image data, switching is done by selecting B1 or B2, and the same process as in the preceding Fig. 2-25 is carried out.

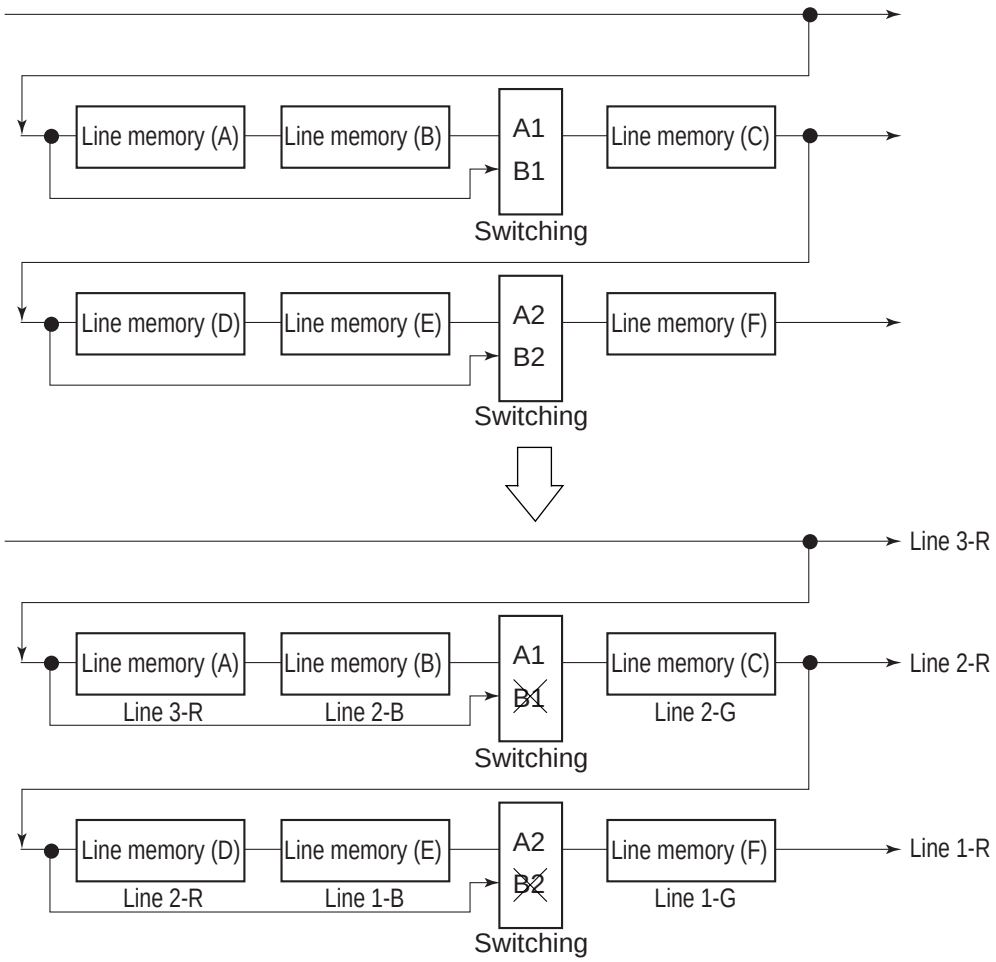

Fig. 2-26

 COPYRIGHT © 1999 CANON ELECTRONICS INC.

9. Resolution Conversion

Resolutions, in the horizontal scanning direction, can be selected in this machine from 400 dpi and, 300 dpi to 200 dpi (optionally set at 10 dpi intervals). In the vertical scanning direction, the resolution is basically the same as the resolution selected at horizontal scanning direction. But a half resolution can be selected, when the resolution of horizontal is 300 dpi or 200 dpi. It is called high speed scanning.

a. Vertical scanning direction

The document is scanned in the vertical scanning direction, with changing the feed speed of the document. In the case of 200 dpi, feed speed is made 1.5 times that of 300 dpi, and in the case of 150 dpi, twice the speed. (Refer to Fig. 2-27.)

• Conversion of Vertical Scanning Resolution

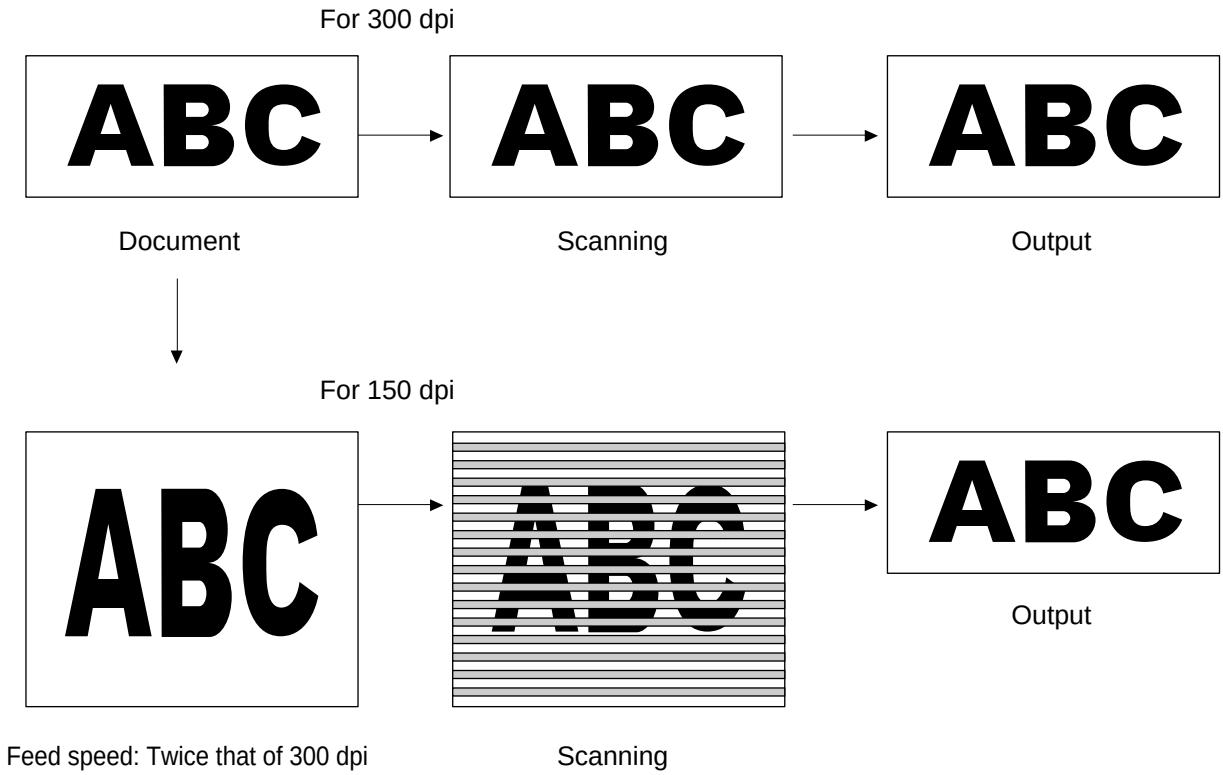

Fig. 2-27

b. Horizontal scanning direction

Conversion of the horizontal scanning resolution to less than 300 dpi is done by thinning out the standard clocks for image processing in accordance with the resolution.

When Converting to 150 dpi, use the standard clocks thinned out to 1/2 as the operating clocks. (Refer to Fig. 2-28.)

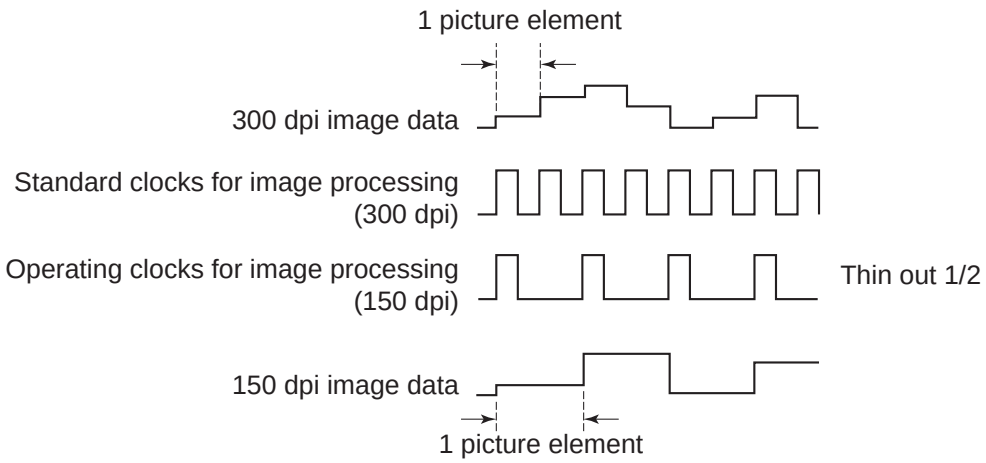

Fig. 2-28

The resolution of the image sensor of this machine is 300 dpi, so conversion to 400 dpi is processed artificially by calculation.

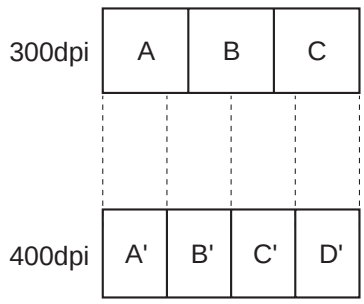

A'=A
B'= 1/3A + 2/3B
C'= 2/3B + 1/3C
D'=C

Fig. 2-29

Calculations for each three picture elements of one line are made as in Fig. 2-29 and, by increasing the three picture elements to four picture elements, 300 dpi is made to become 400 dpi.

The changes in output in such a case are shown in Fig. 2-30.

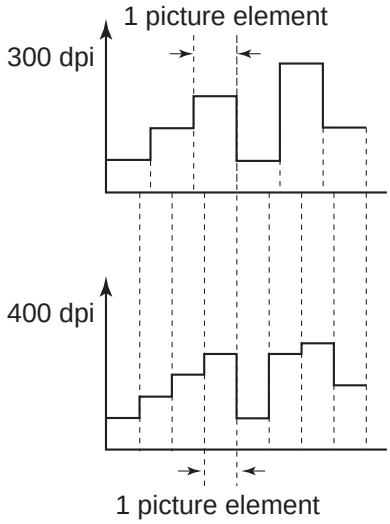

Fig. 2-30

 COPYRIGHT © 1999 CANON ELECTRONICS INC.

10. Edge Emphasis

Edge emphasis is a kind of processing which emphasizes light and shade in order to make the image appear sharp. (Refer to Fig. 2-31.)

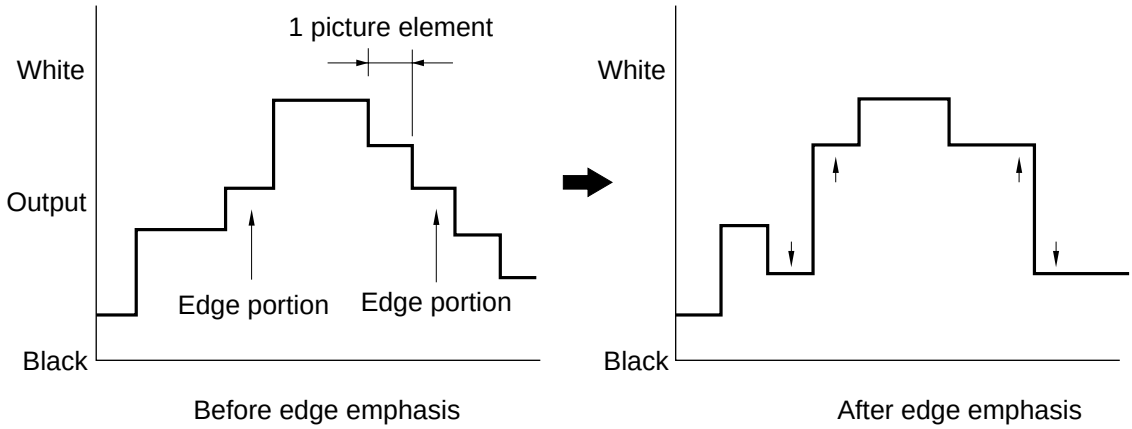

Fig. 2-31

Density processing is performed by comparing the data in the conversion table provided for performing edge emphasis, with the target picture element. (Refer to Fig. 2-32.)

The stages in edge emphasis can be changed by changing the conversion table and reproduction ratio (B) of the conversion table.

If the density of the target picture element is increased fourfold and the density of the other four points multiplied by –1, the overall density will remain unchanged.

Arithmetic processing in the horizontal scanning direction is done at the same time with data read. Arithmetic processing in the vertical scanning direction is done by using the line memory to convert the data in the previous line.

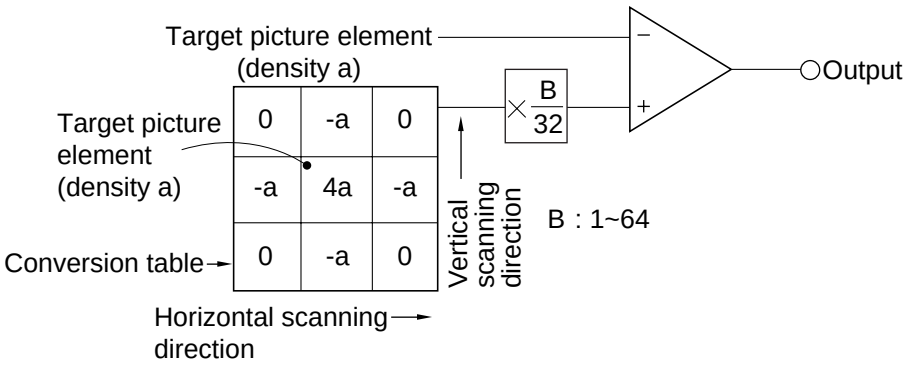

Fig. 2-32

11. Simple Binarizing

As mentioned previously, binary image data can only express picture elements in either “black” or “white.”

In order to separate one picture element into either black or white, signals corresponding to the image density of the document must be cut off at a certain level, and anything above that level judged as “white” and anything below as “black.” This is called binarizing. And, the level at which picture elements is to be divided into white or black is called the “slice level” (or threshold value).

To binarize by changing the slice level without the error diffusion processing (refer to next item), is called the simple binarizing. This is good for text documents.

For example, when the image sensor output is converted to 4 bit digital signals by A/D conversion, one of the values from “0” to “15” is set as the slice level, and compared with the digital signals. (Refer to Fig. 2-33.)

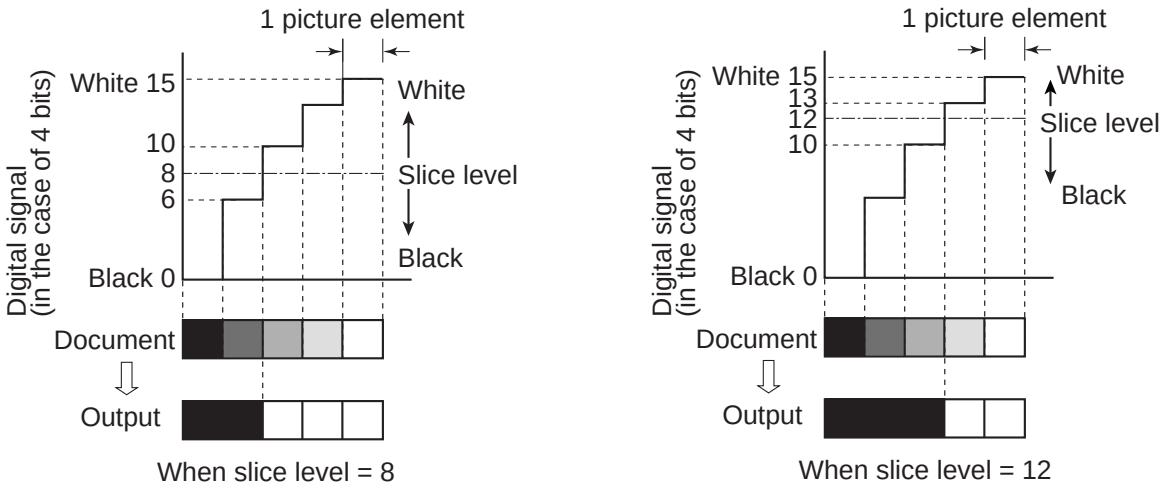

Fig. 2-33

 COPYRIGHT © 1999 CANON ELECTRONICS INC.

Fig. 2-34 shows examples of when digital signal output after A/D conversion is 4 bits and slice level is “8.” (This machine processes with 8 bits)

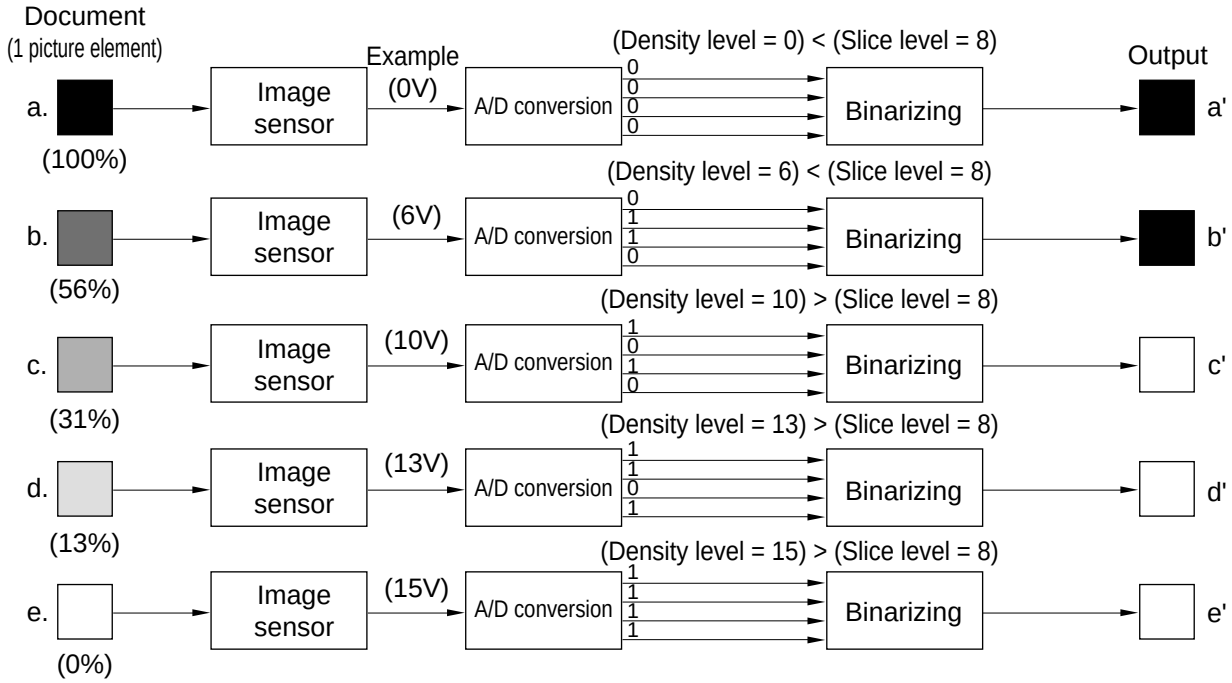

Fig. 2-34

12. Error Diffusion

Error diffusion processing is used to binarize for the document which has gray color like a picture and photo.

The value of 1 picture element of input image data is compared with the slice level. When it is smaller than the slice level, it is output as “0” and when it is bigger than the slice level, it is output as “15” (in the case of 4 bits).

The difference between the values of the input and output picture elements is then added to the next picture element to be processed.

The resultant picture element value with the added value is successively subjected to the next process as the input picture element value. As a result, the input picture element converted into a simply-binarized value and the average value of the overall density of the output image that has been processed using the error diffusion process, are practically the same.

Specific examples of these are shown in Fig. 2-35 to Fig. 2-36.

Processing is done with the density slice level “8.” First, when processing the first row of Line 1, since density (12) is bigger than the slice level “8,” the output density is “15” and the resultant error is –3 (=12–15). (Refer to Fig. 2-35.)

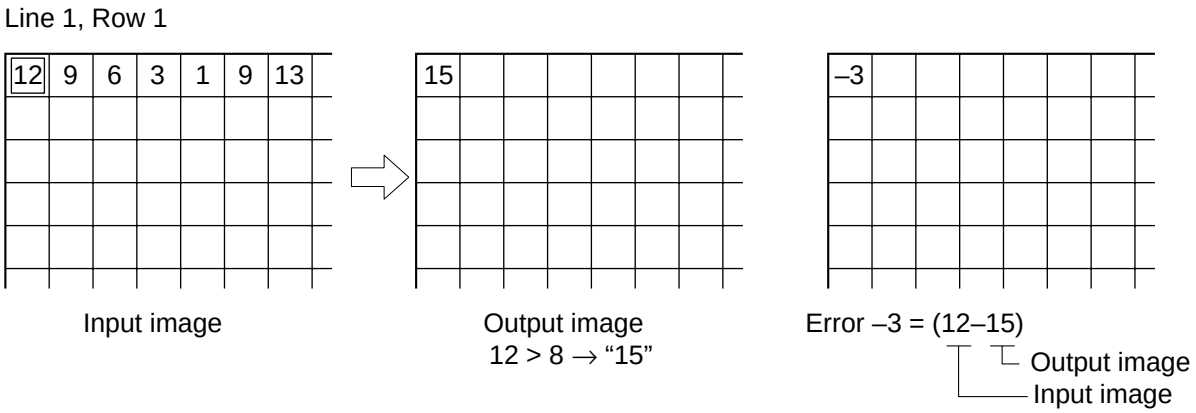

Fig. 2-35

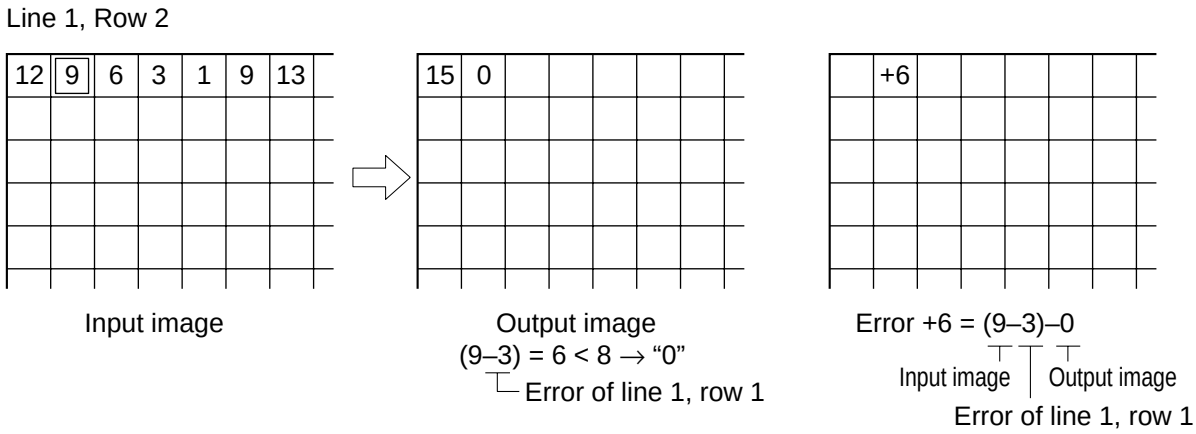

Fig. 2-36

 COPYRIGHT © 1999 CANON ELECTRONICS INC. CANON DR-5020/5080C REV.0 JUNE 1999 PRINTED IN JAPAN (IMPRIME AU JAPON)

Next, when processing the second row of Line 1, since the error is diffused to the right, the density of the picture element of Line 1, 2nd Row becomes “6” (= 9–3).

As this value is smaller than the slice level, the output density is “0” and the error becomes “+6” [= (9–3) –0]. (Refer to Fig. 2-36.)

As the density of the picture element of Line 1, 3rd Row is “12” (= 6 + 6) and thus bigger than the slice level “8,” the output density becomes “15” and the error becomes “–3” [= (6 + 6) –15]. (Refer to Fig. 3-37.)

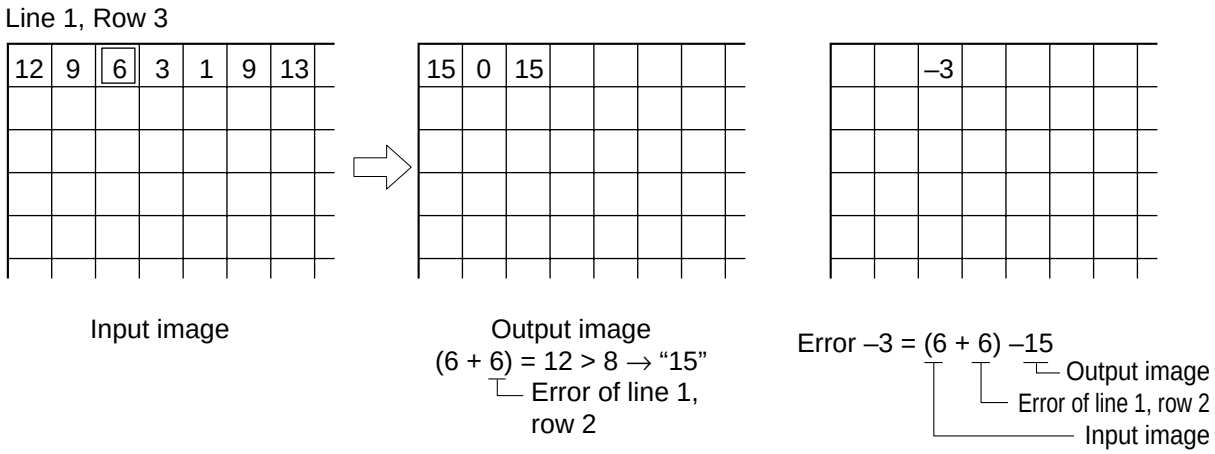

Fig. 2-37

If the rest is processed in the same manner, the images become as Fig. 2-38.

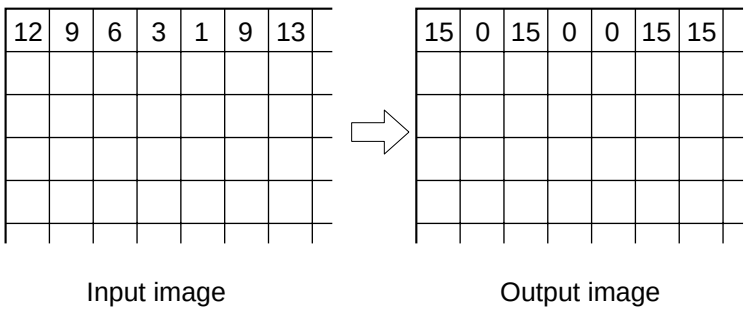

Fig. 2-38

In the case of Line 2, the processing is carried out using the density of Line 2, 1st Row as the standard. If the rest is processed in the same manner, the image becomes as Fig. 2-39.

12	9	6	3	1	9	13
10	13	5	4	2	7	13
9	12	6	3	1	10	9
11	8	5	0	3	5	10
12	9	2	7	6	9	11

Input image

15	0	15	0	0	15	15
15	15	0	0	0	15	15
15	0	15	0	0	15	0
15	0	15	0	0	0	15
15	0	15	0	0	15	15

Output image

Fig. 2-39

Fig. 2-40 shows the results of binarizing with error diffusion processing and binarizing without error diffusion processing (simple binarizing).

12	9	6	3	1	9	13
10	13	5	4	2	7	13
9	12	6	3	1	10	9
11	8	5	0	3	5	10
12	9	2	7	6	9	11

Digital signal output

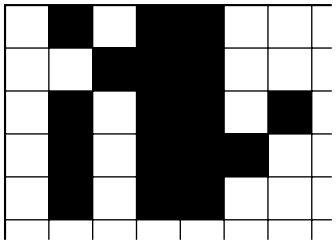

With error diffusion processing

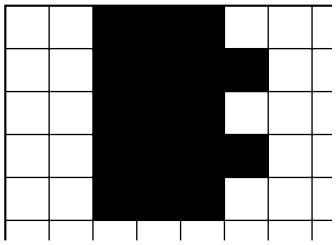

Without error diffusion processing

Fig. 2-40

 COPYRIGHT © 1999 CANON ELECTRONICS INC. CANON DR-5020/5080C REV.0 JUNE 1999 PRINTED IN JAPAN (IMPRIME AU JAPON)

13. Neg./Pos. Reversion (RIF)

The density level of image data is reversed against the document, as shown in Fig. 2-41, by reversing the binary data. It is called Negative/ Positive reversion or RIF (Reverse Image Function).

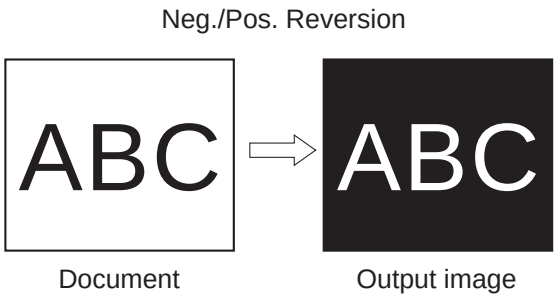

Fig. 2-41

14. Thin Line Complementation

Thin line complementation is the process of compensating for any omission in binary output when a thin line is scanned. (Refer to Fig. 2-42.)

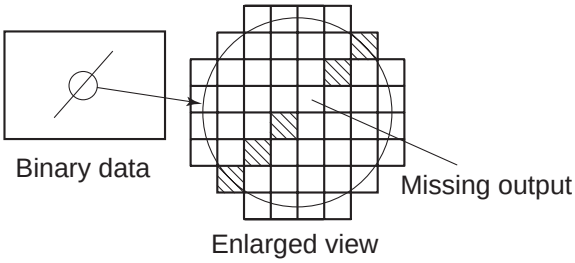

Fig. 2-42

Thin line complementation is done using a conversion table such as shown in Fig. 2-43.

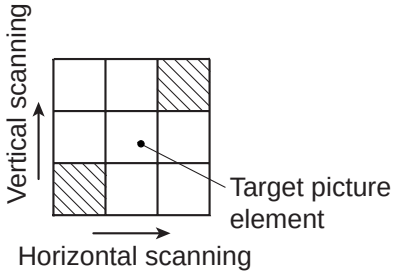

Fig. 2-43

A target picture element is judged to be included in a line under the following conditions and its output is reversed.

1) The 2 dots above and below the target picture element differ in color from the target picture element and the other 6 dots are the same color as the target picture element.
(Fig. 2-44a)

2) The 2 dots to the right and left of the target picture element differ in color from the target picture element and the other 6 dots are the same color as the target picture element.
(Fig. 2-44b)

3) The 2 dots to the upper left and lower right of the target picture element differ in color from the target picture element and the other 6 dots are the same color as the target picture element.
(Fig. 2-44c)

4) The 2 dots to the lower left and upper right of the target picture element differ in color from the target picture element and the other 6 dots are the same color as the target picture element.
(Fig. 2-44d)

Fig. 2-44a

Fig. 2-44b

Fig. 2-44c

Fig. 2-44d

Note: In this machine, the image processings, thin line complementation, dot erasing, and notch compensation is done in order.

15. Dot Erasing

Dot erasing is the process of erasing any unnecessary small black dots in binary data.

It is called black dot erasing. (Refer to Fig. 2-45.)

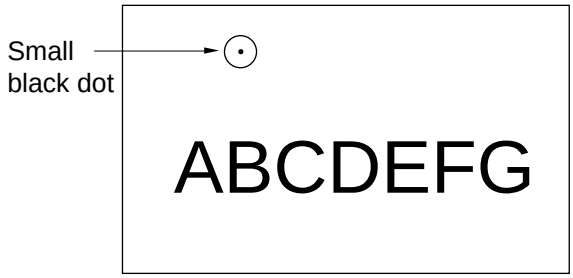

Fig. 2-45

This is a function for preventing the occurrence of a lot of small dots like sand soil as a result of edge emphasis as mentioned previously, if scanning a document with colored background or a dirty document.

Owing to this process, isolated dots on the image can be erased and the image is clearer, and at the same time, image compression ratio at encoding becomes higher and recording into the recording media can be more efficient.

For dot erasing, the conversion table shown in Fig. 2-46 is used.

When all the colors of the 8 dots around the target picture element differ from that of the target picture element, the target picture element is judged an “isolated dot” and erased.

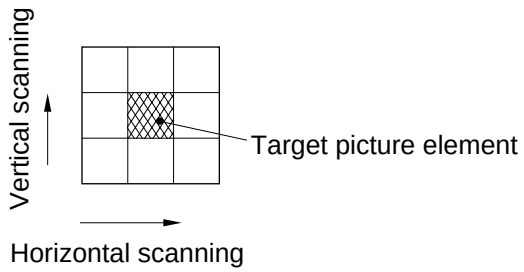

Fig. 2-46

The white dots in a document with black background can be erased by the same principle. It is called white dot erasing.

16. Notch Compensation

Notch compensation is the process of compensating for any unevenness in binary output when horizontal and vertical straight lines are scanned. (Refer to Fig. 2-47.)

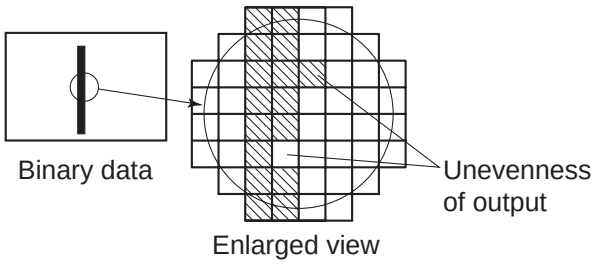

Fig. 2-47

Notch compensation is done using a conversion table such as shown in Fig. 2-48.

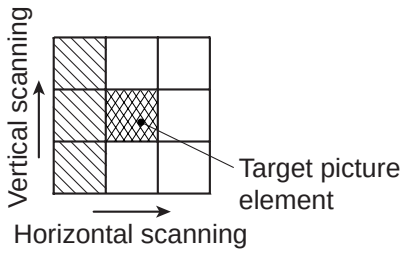

Fig. 2-48

 COPYRIGHT © 1999 CANON ELECTRONICS INC. CANON DR-5020/5080C REV.0 JUNE 1999 PRINTED IN JAPAN (IMPRIME AU JAPON)

A target picture element is judged a notch under the following conditions and its output is reversed.

1) The 3 dots to the right of the target picture element (right, upper right, and lower right) are the same color as the target picture element and the other 5 dots are a different color.
(Fig. 2-49a)

2) The 3 dots to the left of the target picture element (left, upper left, and lower left) are the same color as the target picture element and the other 5 dots are a different color.
(Fig. 2-49b)

3) The 3 dots above the target picture element (top, top right, and top left) are the same color as the target picture element and the other 5 dots are a different color.
(Fig. 2-49c)

4) The 3 dots below the target picture element (bottom, bottom right, and bottom left) are the same color as the target picture element and the other 5 dots are a different color.
(Fig. 2-49d)

Fig. 2-49a

Fig. 2-49b

Fig. 2-49c

Fig. 2-49d

Also, notch compensation uses the data resulting after processing the preceding line to process the next line.

Fig. 2-50 shows an example of 3 dots × 7 lines.

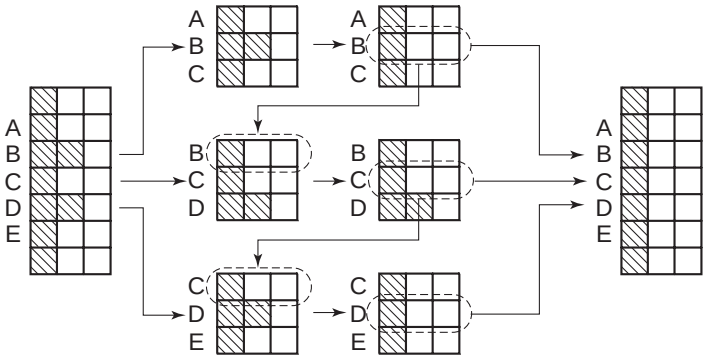

Fig. 2-50

17. Bit Number Changing

As this machine processes with 8 bits, DR-5080C can output multi valued data having 256 tones per one picture element, and by changing the number of bits of the image data, the number of tones of the image can be changed.

By lowering the number of tones, the compression ratio when compressing an image can be heightened.

4 bits multi valued data uses 4 upper-level bits of 8 bits multi valued data and has 16 tones.

2 bits multi valued data uses 2 upper-level bits of 8 bits multi valued data and has 4 tones. (Refer to Fig.s 2-51.)

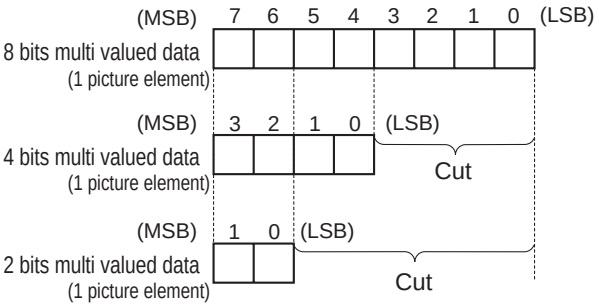

Fig. 2-51

In the case of color images, as each color of RGB, has tones, by changing the number of bits, 24 bits color respectively becomes 12 bits color and 6 bits color.

• 3 bits color

The tones of 3 bits color is 1 bit per picture element of each RGB color. In other words, the data of each RGB is binary, so the same processing as binary image data can be carried out.

It is not done by changing the number of bits.

18. Dropout Color

DR-5080C can be set so that it does not scan red, green or blue (the same colors as RGB of LEDs) in the document. It is called the dropout color.

When a dropout color is specified, the output becomes binary.

When red is specified as the dropout color, scanning is done with only the red LEDs illuminated. When the red in the document is the same color as the LED light, the reflected light has the same quantity of light as the white part and is detected as white. (Refer to Fig. 2-52.)

With DR-5020, red can be made the dropout color by changing the LED unit to the red LED (option).

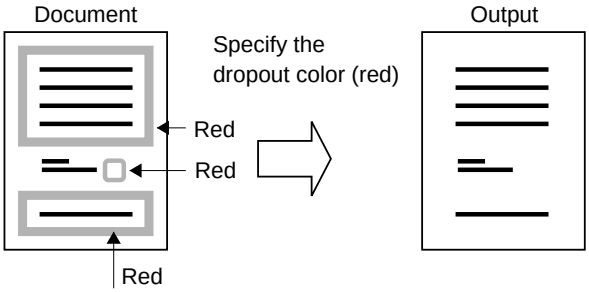

Fig. 2-52

COPYRIGHT © 1999 CANON ELECTRONICS INC.
CANON DR-5020/5080C REV.0 JUNE 1999 PRINTED IN JAPAN (IMPRIME AU JAPON)

With DR-5080C, it can be set a part of specified without the dropout color. This part is called a non-dropout area.

When red is specified as the dropout color, normally red stamp is not output, but by specifying a non-dropout area, the red stamp in that area can be made to be output. (Refer to Fig. 2-53.)

The starting and ending positions of the non-dropout area are specified by their distance from the leading edge of the paper.

A non-dropout area is read by simultaneously illuminating the LEDs of the 3 colors, RGB, and reading them as white light.

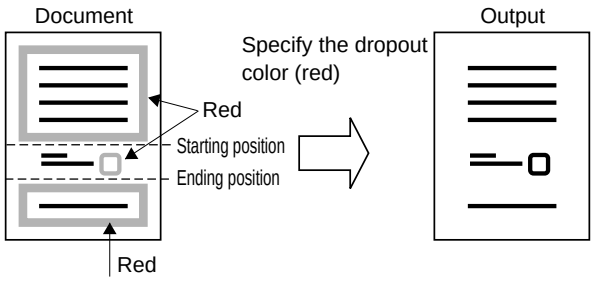

Fig. 2-53

19. Image compression

Image compression processing is not done within this machine, because it does not have priority for improvement of scanning speed. So, image compression processing is done within the personal computer.

When specifying a file format of recorded image data, a kind of image compression is decided. And, the kind of image compression will be restricted, depending on a kind of image output mode. For details, please refer to Instructions Manual.

- TIFF format → MMR
- JPEG format → JPEG
- JBIG format → JBIG
- BMP format → Non-compression

CHAPTER 3

FUNCTIONS & OPERATION

1. In this Chapter explanations are given about the purpose and role of each function and its relationship to the electrical and mechanical systems, and about the operational timing by functions of each component. In diagrams, ▬▬▬ represents mechanical drive paths, and ⟶ indicates the flow of electrical signals.
2. Signals in digital circuits are identified as "H" for High and "L" for Low. However, voltages differ depending on the circuit.
   Further, as PCB assemblies are not repaired at the customer's premises, only outlines of the operation of the circuits by means of block diagrams are given here.

I. OUTLINE 3-1
II. EXPOSURE SYSTEM 3-11
III. DOCUMENT FEED SYSTEM 3-12
IV. DESCRIPTION OF ELECTRICAL CIRCUITS 3-19
V. OPTIONS 3-37
VI. INTERFACE 3-43
VII. POWER SUPPLY 3-46
VIII. LAYOUT OF ELECTRICAL COMPONENTS 3-49
IX. LIST OF VARIABLE RESISTORS, SWITCHES & LEDS FOR EACH CIRCUIT BOARD 3-52

COPYRIGHT © 1999 CANON ELECTRONICS INC. CANON DR-5020/5080C REV.0 JUNE 1999 PRINTED IN JAPAN (IMPRIME AU JAPON)

I. OUTLINE

1. System Configuration

System configuration is as shown in Fig. 3-1.

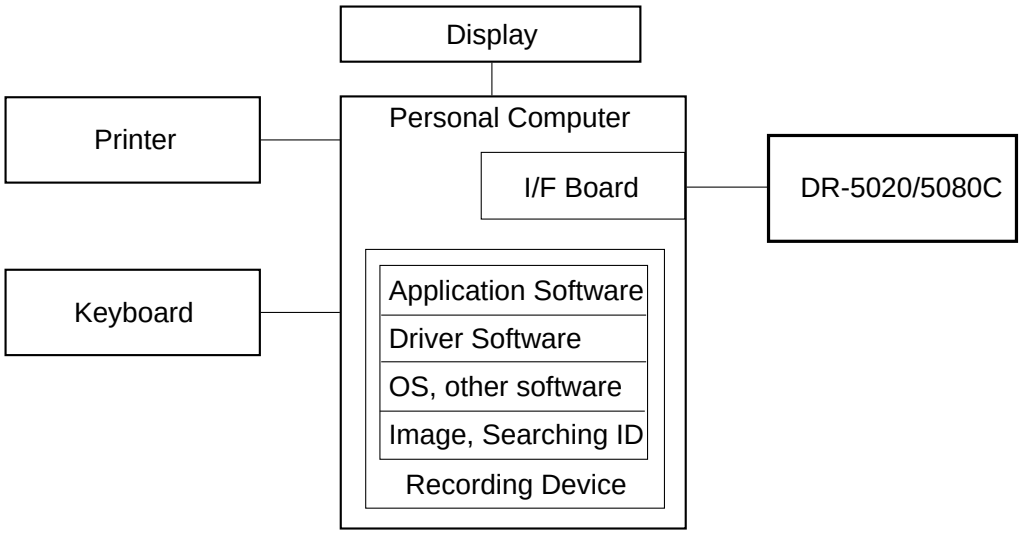

Fig. 3-1

Item	Function/Specification
DR-5020/5080C	Inputs images
Personal Computer	Controls the system, and is PC/AT compatible machine CPU : Pentium, Clock: Min. 133 MHz OS : Windows 95/98 or NT4.0 Workstation RAM : Min. 64 MB
Display	Displays image, and displays searching and setting screen, etc.
Printer	Prints out image
Keyboard	Instructs image input, searching, etc.
Recording Device	Records image, searching ID and, softwares
I/F Board	Interfaces with SCSI SCSI board for PC/AT compatible machine and driven by wnaspi32.dll Recommended: Adaptec AHA-2940AU, AHA-1540CP, etc.
Application Software	Software for recording and searching image
Driver Software	Software for operating DR-5020/5080C

Note: For details of the software supplied with DR-5020/5080C, refer to the instruction manuals of each software.

Table 3-1

COPYRIGHT © 1999 CANON ELECTRONICS INC.

2. Machine Configuration

Machine configuration is as shown in Fig. 3-2.

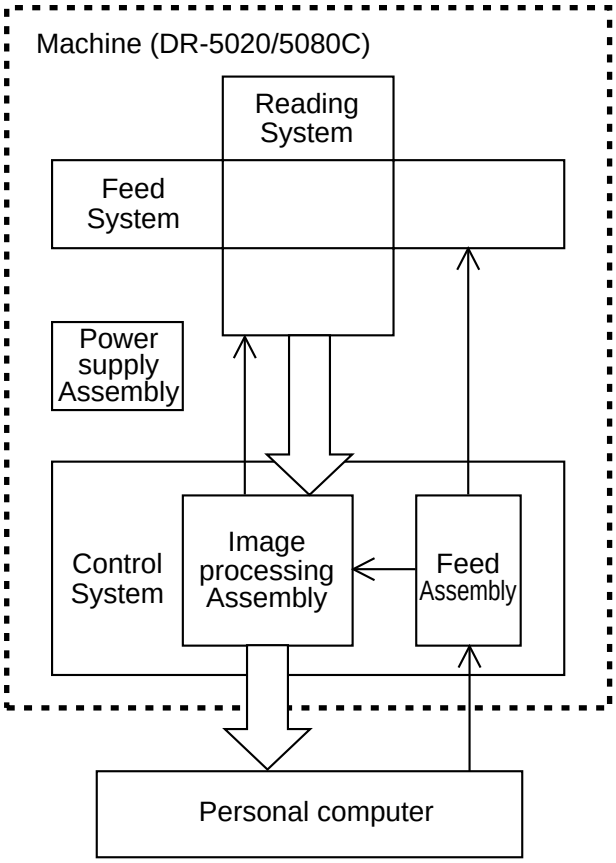

Fig. 3-2

a. Feed System
Pickup, feeds and delivers documents.

b. Reading System
Reads out image data with image sensors.

c. Control System
The control system consists of the image processing assembly and the feed assembly.
The image processing assembly controls the reading system and processes the image data read out by the reading system.
The feed assembly controls the feed system.

d. Power Supply Assembly
The power supply assembly converts the AC power supplied from outside into +24 VDC and supplies the converted power to the various PCB assemblies.

 COPYRIGHT © 1999 CANON ELECTRONICS INC. CANON DR-5020/5080C REV.0 JUNE 1999 PRINTED IN JAPAN (IMPRIME AU JAPON)

3. Main Drive

This machine employs four motors to feed the document - the main motor (M1), the pickup motor (M2), the feeding motor (M3), and the separation motor (M5). There is also a gap adjusting motor (M4) which is used to move the gap adjusting cam to adjust the gap of the feeding roller and the separation roller, and a document board motor (M6) which is used to raise and lower the document board.

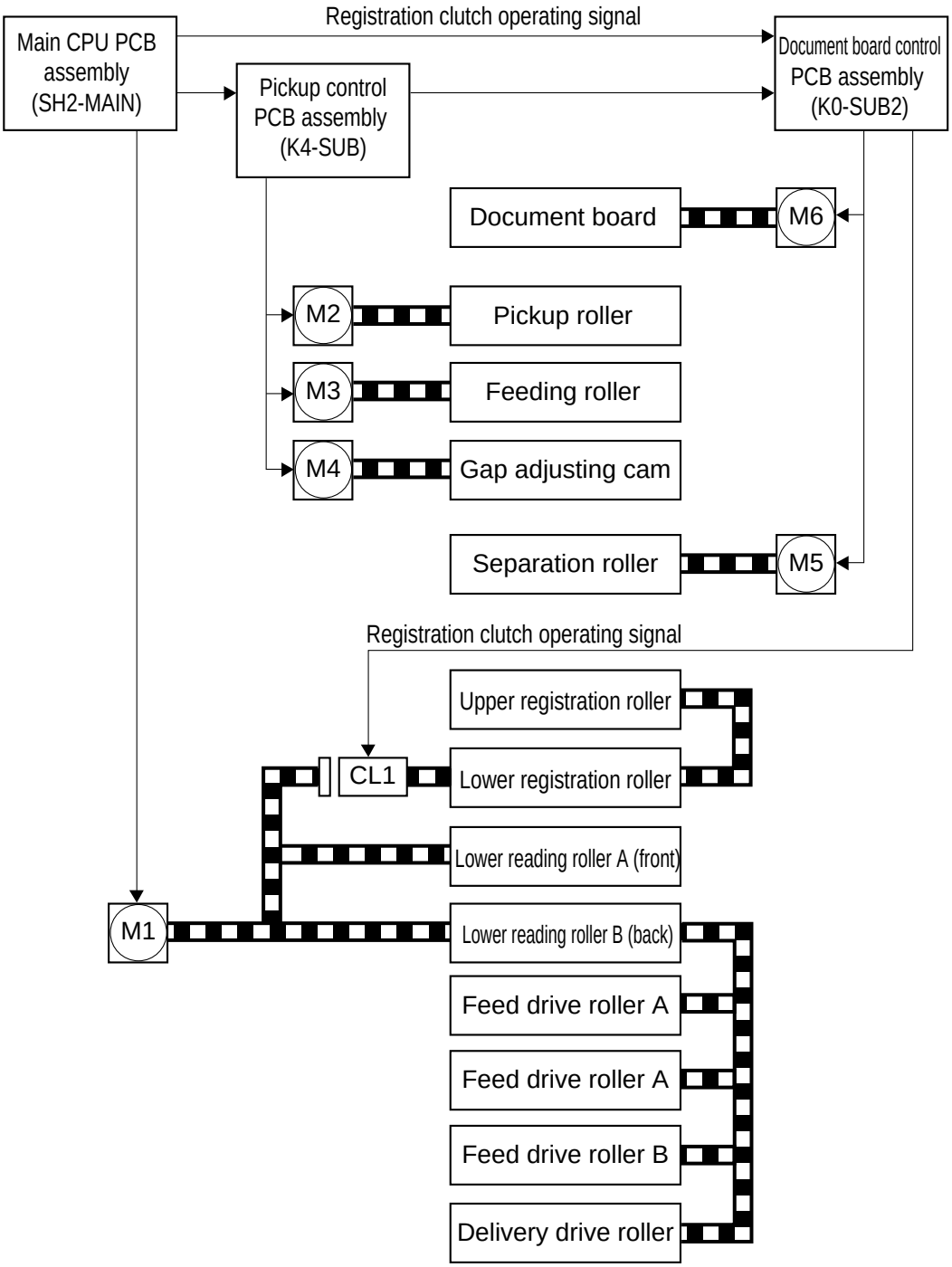

Fig. 3-3

4. Outline of Electrical Circuits

This machine uses three CPU PCB assemblies a main CPU PCB assembly (SH2-MAIN), a pickup control PCB assembly (K4-SUB), and a document board control PCB assembly (K0-SUB2). Fig. 3-4 is a block diagram of the PCB assemblies.

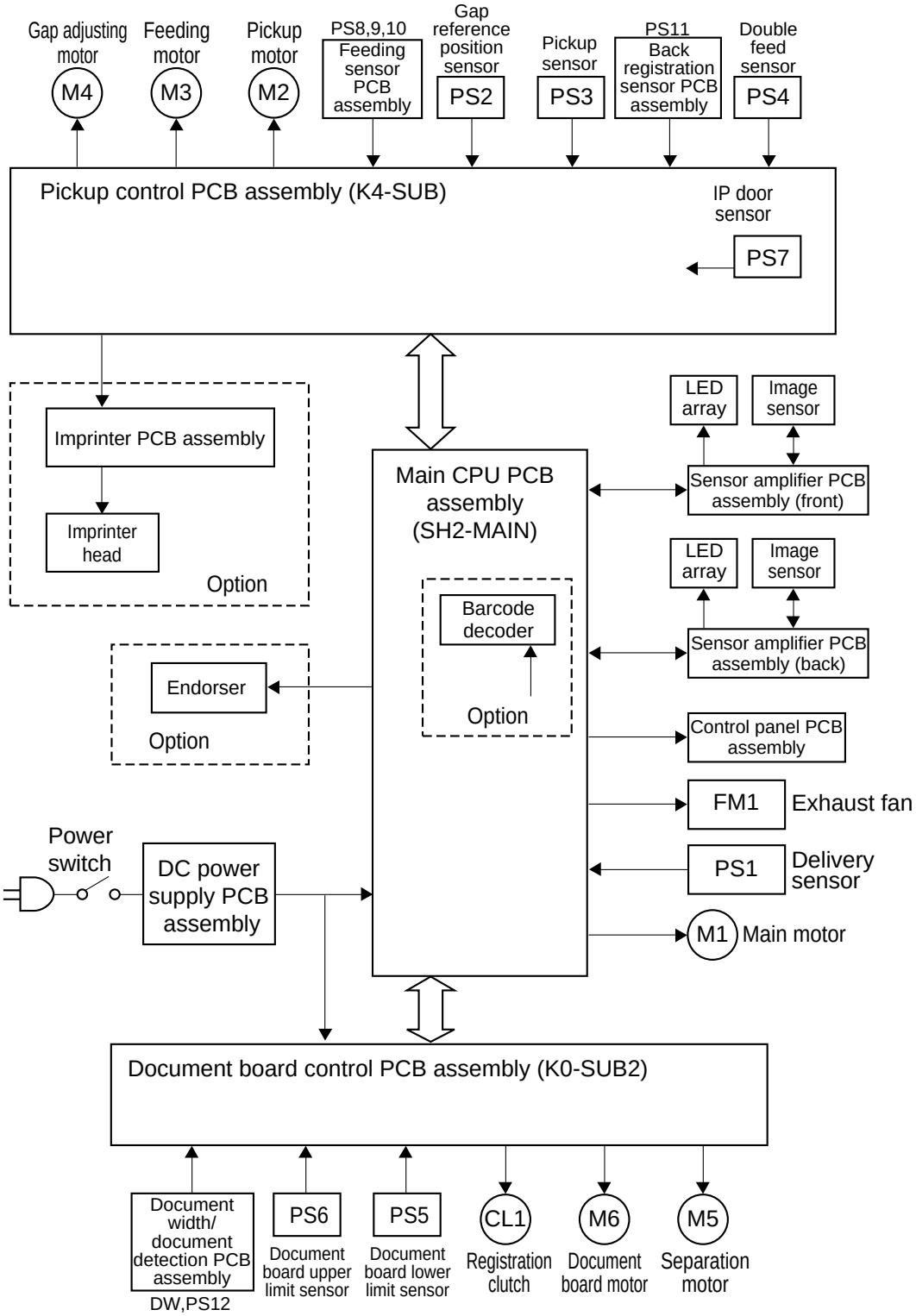

Fig. 3-4

COPYRIGHT © 1999 CANON ELECTRONICS INC.
CANON DR-5020/5080C REV.0 JUNE 1999 PRINTED IN JAPAN (IMPRIME AU JAPON)

The main electrical control of this machine is performed by a single CPU on the main CPU PCB assembly.

The main functions of SH2-CPU (IC135) are:

- Generation of operational timing on main CPU PCB assembly.
- Control of image data processing.
- Control of main motor and reading assembly
- Instructions to pickup control PCB assembly and document board control PCB assembly

CPU (K4-CPU) on the pickup control PCB assembly performs pickup control of the document based on signals from the main CPU PCB assembly.

CPU (K0-CPU) on the document board control PCB assembly performs document board control and other functions based on signals from the main CPU PCB assembly and the pickup control PCB assembly.

Fig. 3-5 shows the signals between PCB assemblies.

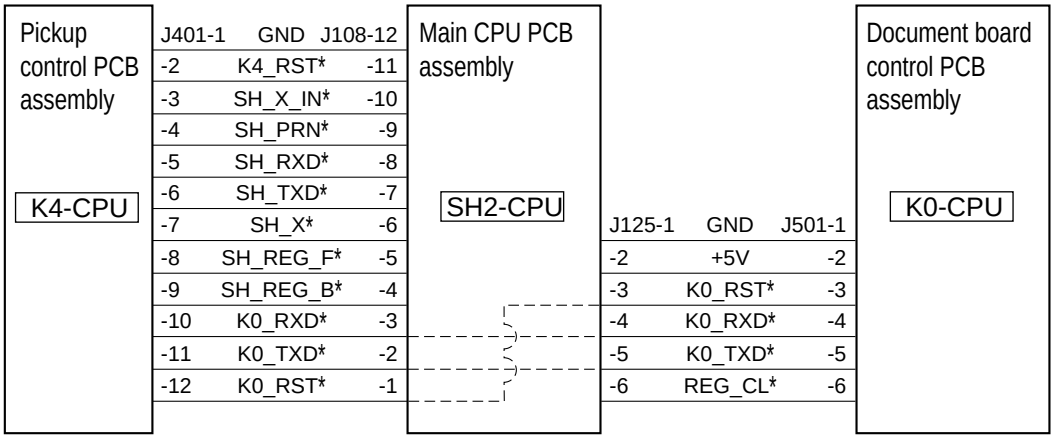

K4_RST*	:	K4-CPU reset signal
SH_X_IN*	:	Spare
SH_PRN*	:	Imprinter (option) print starting position instruction
SH_RXD*, SH_TXD*	:	For communication with SH2-CPU and K4-CPU
SH_X*	:	Signal to permit driving registration roller
SH_REG_F*	:	Front registration sensor document sensing signal
SH_REG-B*	:	Back registration sensor document sensing signal
K0_RXD*, K0_TXD*	:	For communication with K4-CPU and K0-CPU
K0_RST*	:	K0-CPU reset signal
REG_CL*	:	Registration clutch operating signal

Note: The asterisk " *" after the name of the signal denotes the signal is a low active signal.

Fig. 3-5

5. Input to and Output from Main PCB Assemblies

a. Main CPU PCB assembly (SH2-MAIN)

Fig. 3-6 shows the input to and output from the main CPU PCB assembly.

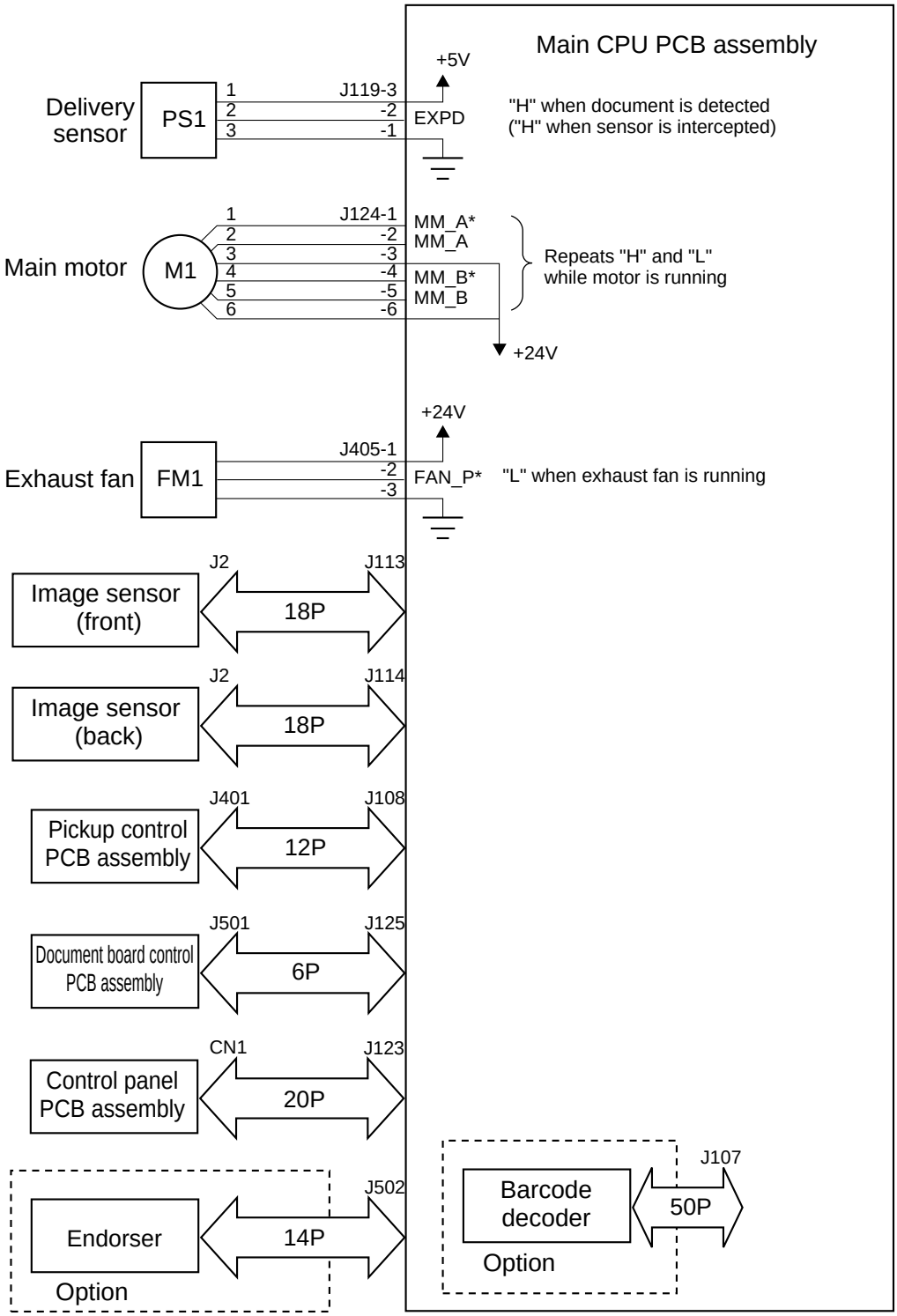

Fig. 3-6

COPYRIGHT © 1999 CANON ELECTRONICS INC.
CANON DR-5020/5080C REV.0 JUNE 1999 PRINTED IN JAPAN (IMPRIME AU JAPON)

b. Pickup Control PCB assembly (K4-SUB)

Figs. 3-7 and 3-8 show the input to and output from the pickup control PCB assembly.

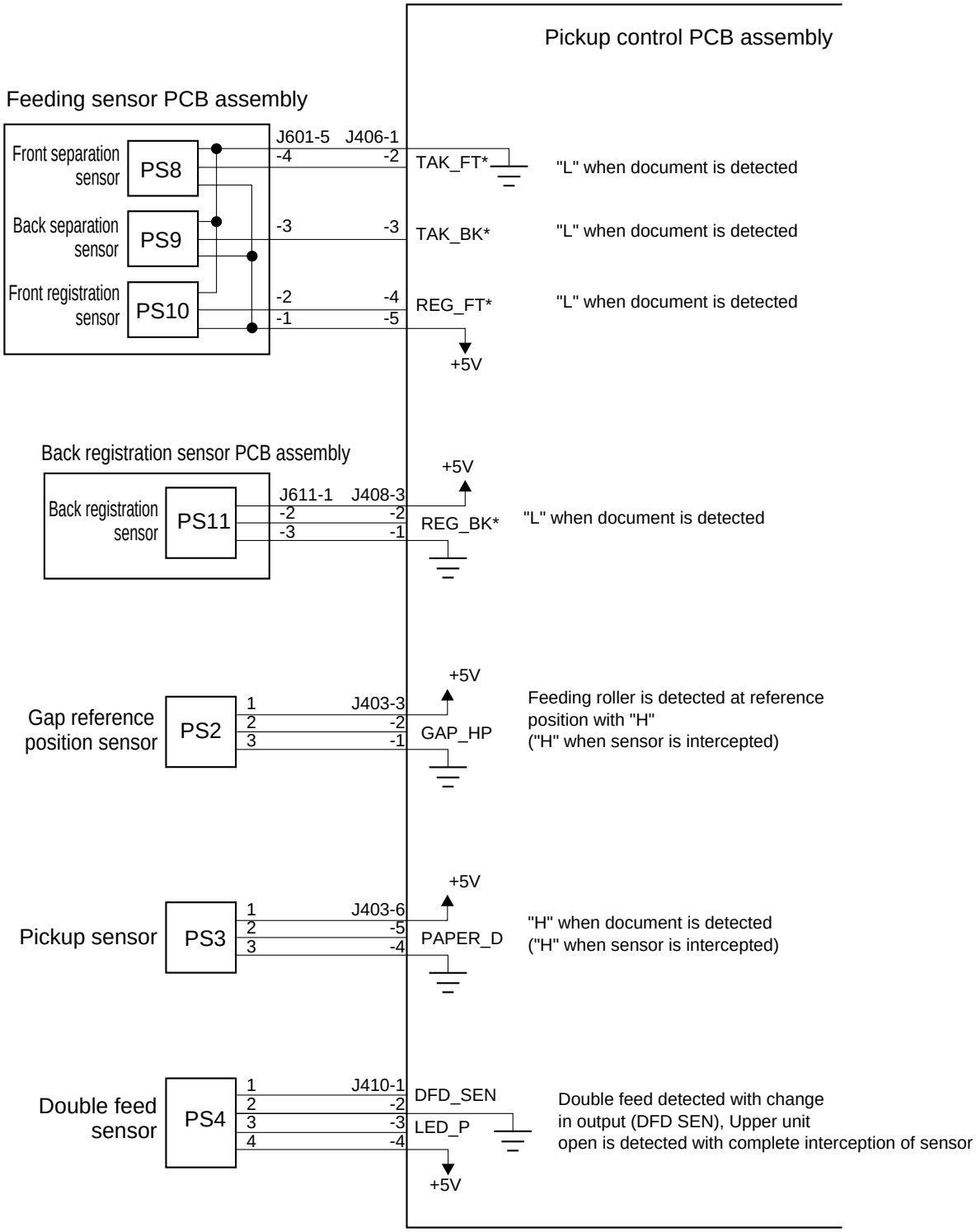

Fig. 3-7

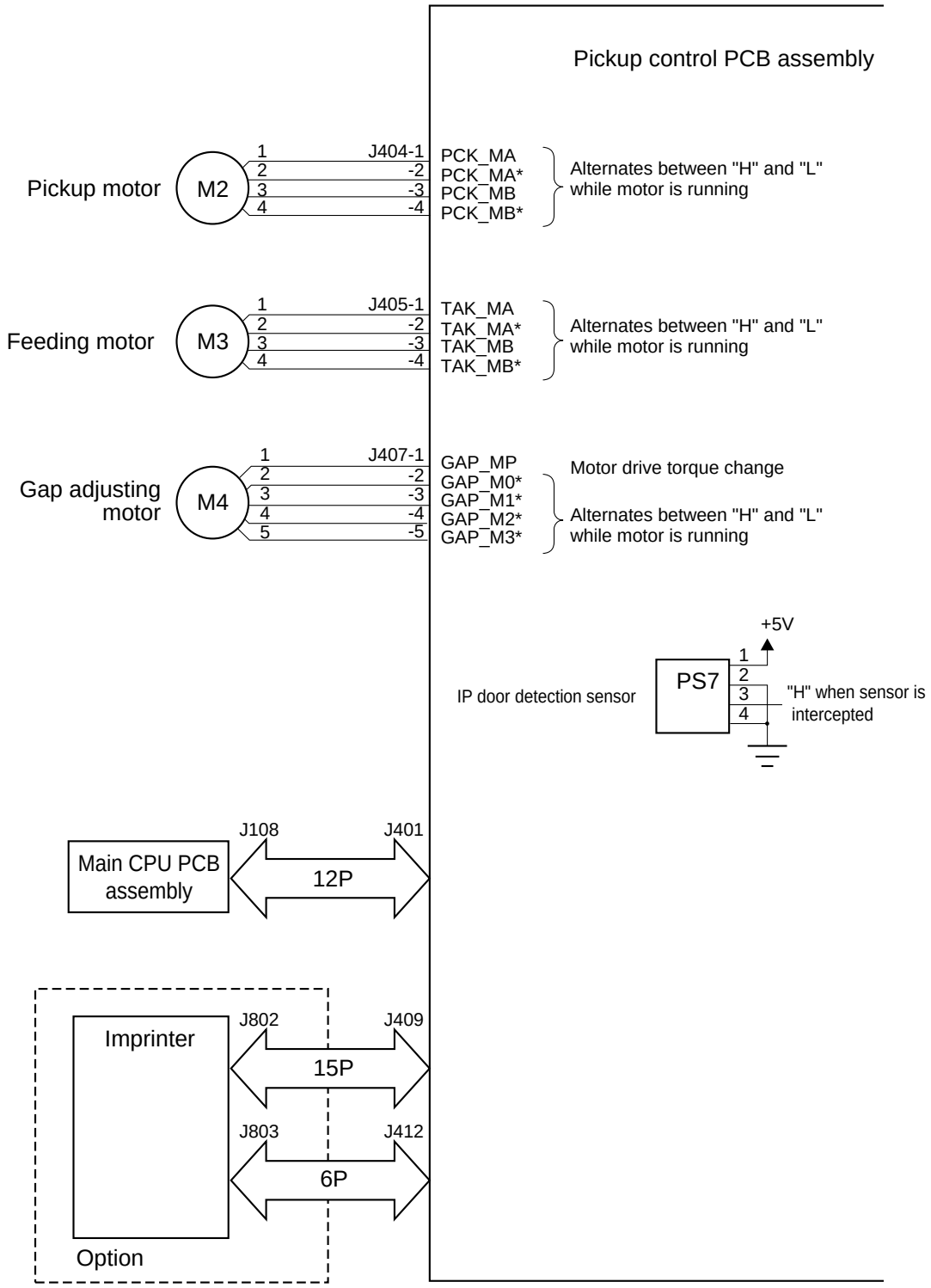

Fig. 3-8

COPYRIGHT © 1999 CANON ELECTRONICS INC.
CANON DR-5020/5080C REV.0 JUNE 1999 PRINTED IN JAPAN (IMPRIME AU JAPON)

c. Document Board Control PCB assembly (K0-SUB2)

Fig. 3-9 shows the input to and output from the document board control PCB assembly.

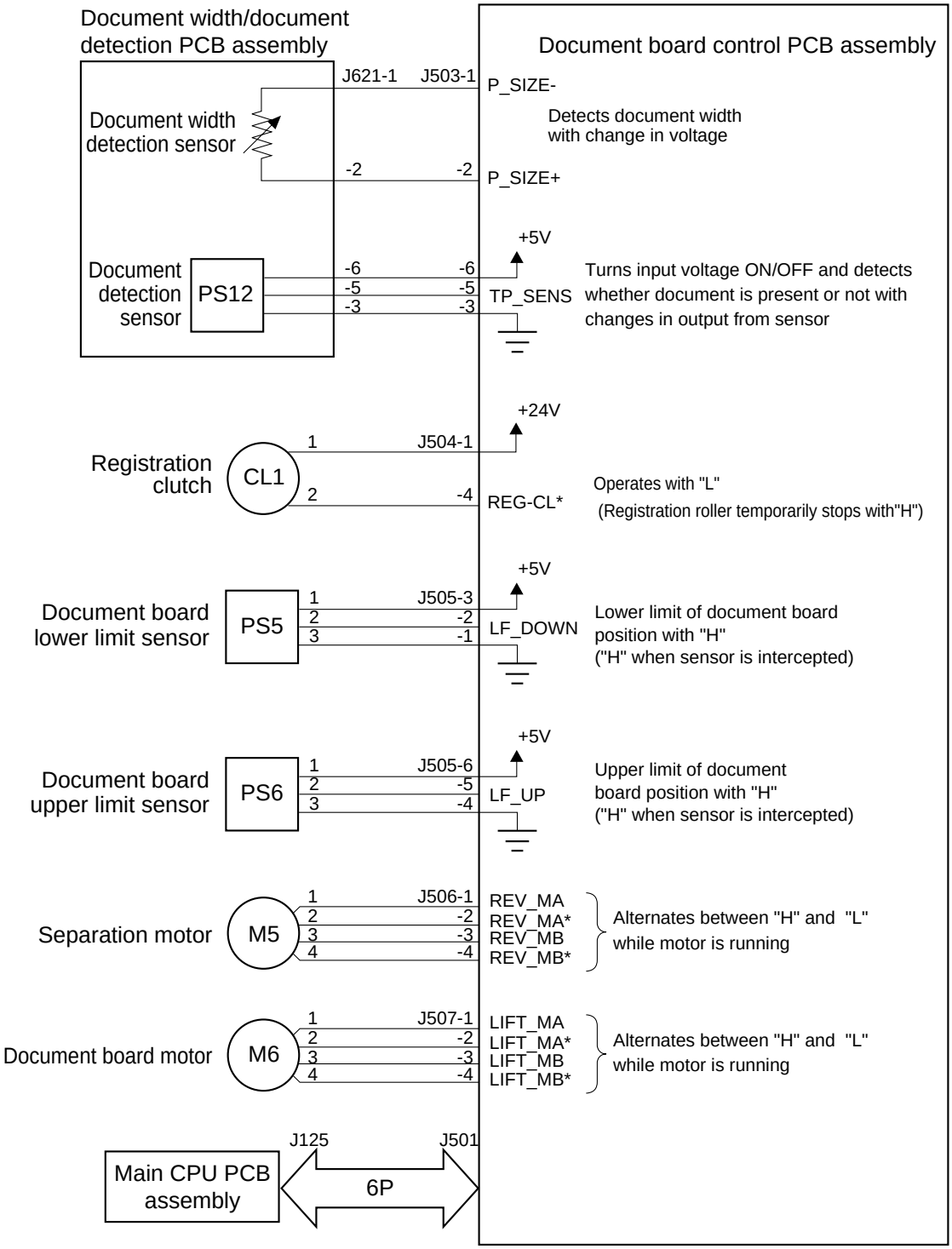

Fig. 3-9

6. Power ON Sequence

Fig. 3-10 shows the sequence of this machine when power is turned ON.

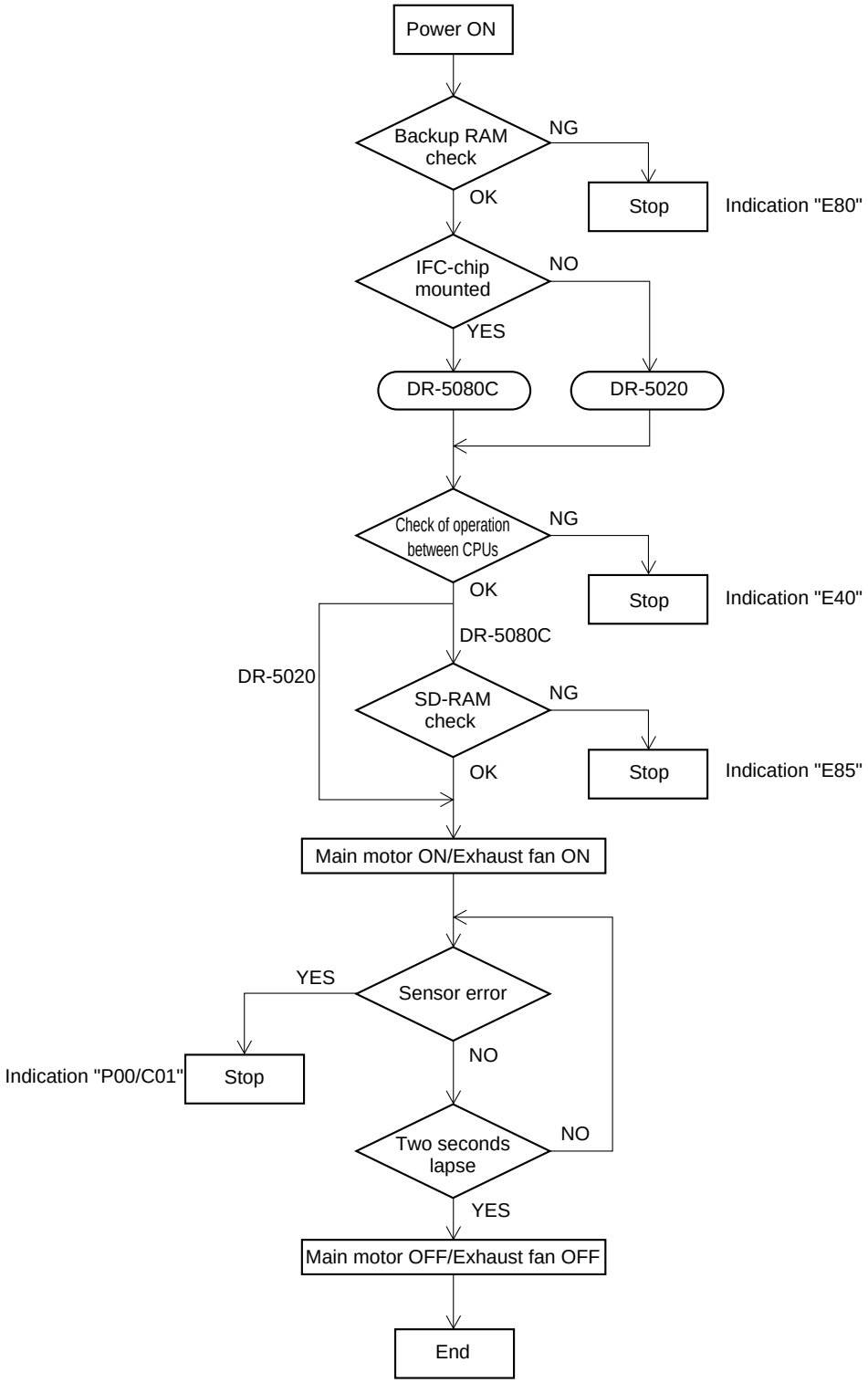

Fig. 3-10

 COPYRIGHT © 1999 CANON ELECTRONICS INC. CANON DR-5020/5080C REV.0 JUNE 1999 PRINTED IN JAPAN (IMPRIME AU JAPON)

II. EXPOSURE SYSTEM

1. Image Reading Assembly

Fig. 3-11 shows the image reading assembly.

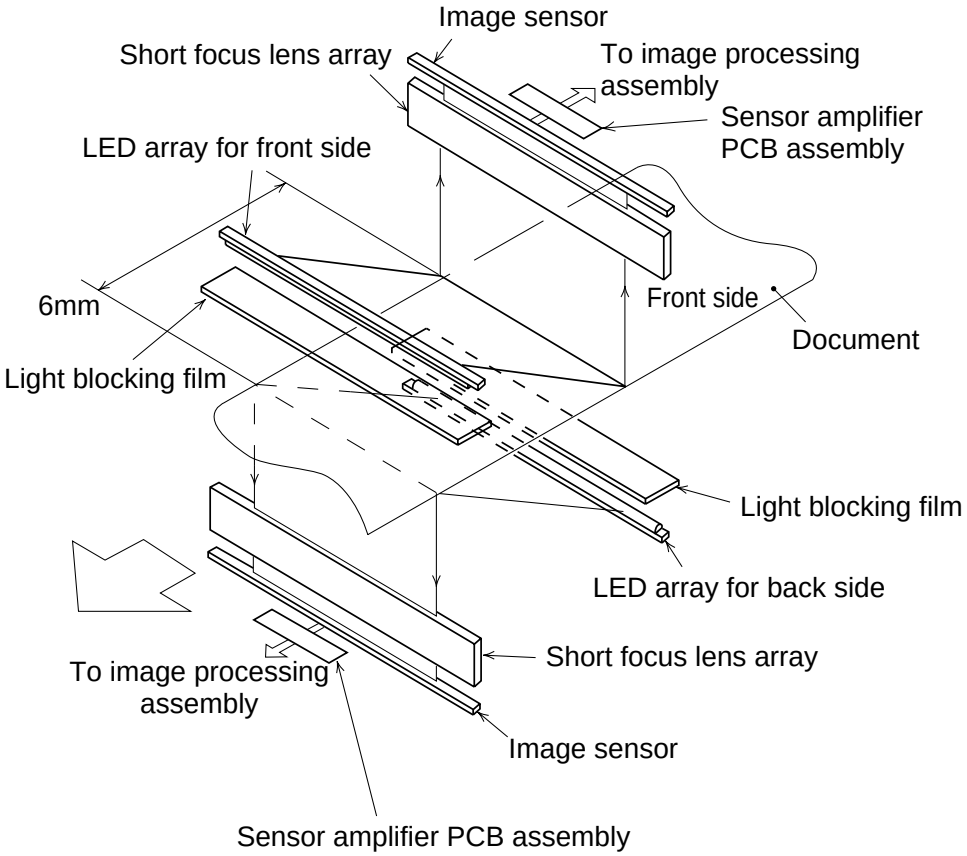

Fig. 3-11

The document is illuminated front and back at the image reading area by two LED arrays while being fed with the speed depend on the output mode and resolution.

The light reflected from the document converges, via the short focus lens arrays, on to the image sensor to form an image of equal size.

The front and back sides of the document are read at points that are offset by 6 mm in order to prevent the image on the back side of the document from being read through to the front side.

Light reflected from the document is photoelectrically converted by the image sensors and the resulting signals are variously processed by the image processing assembly.

While the image is being read out, light in the vertical direction from the LED array is blocked by a light blocking film. By this means, the outside of the document is made “black.”

III. DOCUMENT FEED SYSTEM

A. OUTLINE

Fig. 3-12 shows the cross section of the document feed system and Fig. 3-13 shows the timing chart.

The various drive rollers are rotated by having drive transmitted from motors via gears and timing belts.

Also various sensors for control are positioned in the system.

The document feed system is equipped with the following mechanisms.

- Document board driving mechanism
  During pickup, this assembly raises the document board, and when pickup is finished, lowers it.

- Pickup roller load changing mechanism
  To change the pickup roller load, makes the pickup operation better for the thin and soft document include the pressure sensitive paper.

- Manual pickup switch-over mechanism
  This mechanism is designed to switch over from automatic pickup to manual pickup. When the manual pickup is selected, the drive of the separation roller stops to cancel the separation function.

- Automatic paper thickness adjustment and skew feed correction mechanism
  Adjusts paper thickness and corrects skew feed by moving the feeding roller up or down automatically. For details, refer to the next section, B.

The roller parts of the lower registration roller and the lower reading roller, and part of the roller part of the feed drive roller are made of metal. This serves to reduce changes in the outside dimensions of the roller parts and variations in feed speed.

 COPYRIGHT © 1999 CANON ELECTRONICS INC. CANON DR-5020/5080C REV.0 JUNE 1999 PRINTED IN JAPAN (IMPRIME AU JAPON)

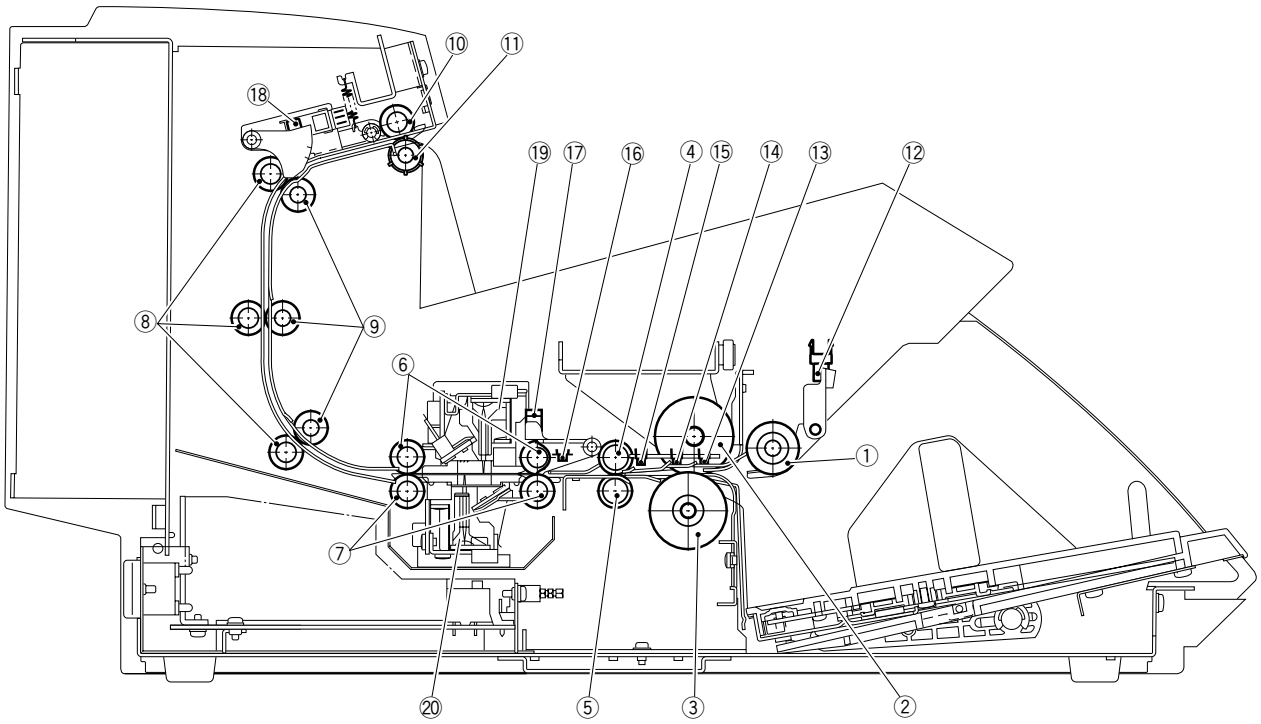

① Pickup roller (drive)
② Feeding roller (drive)
③ Separation roller (drive)
④ Upper registration roller (drive)
⑤ Lower registration roller (drive)
⑥ Upper reading roller
⑦ Lower reading roller (drive)
⑧ Feed drive roller
⑨ Feed follower roller
⑩ Delivery drive roller
⑪ Delivery follower roller
⑫ Pickup sensor
⑬ Front separation sensor
⑭ Back separation sensor
⑮ Front registration sensor
⑯ Back registration sensor
⑰ Double feed sensor
⑱ Delivery sensor
⑲ Upper reading unit
⑳ Lower reading unit

Fig. 3-12

Feed conditions: 1. Automatic pickup 2. Automatic paper thickness adjustment
3. Two sheets 4. Non temporary stop

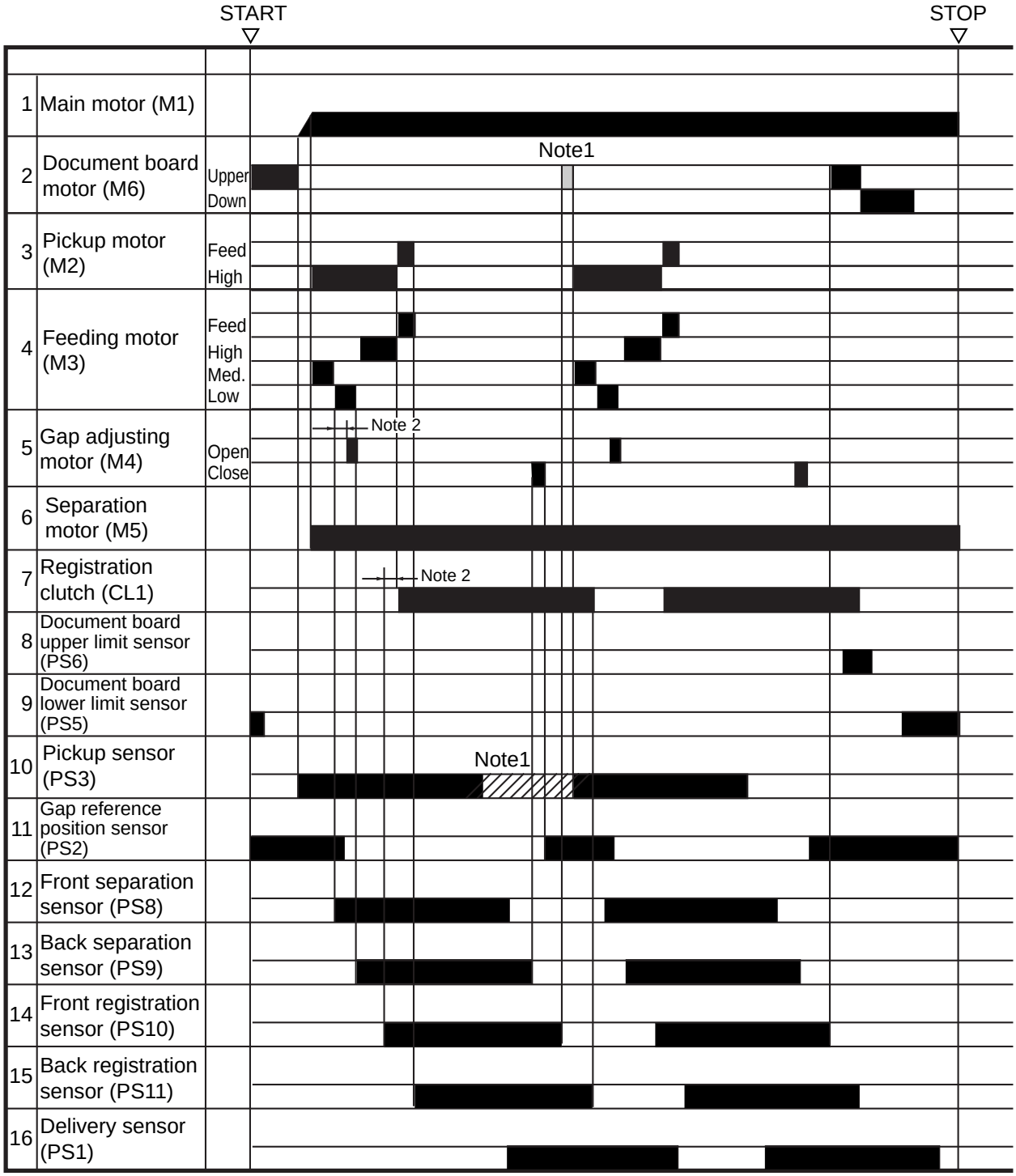

Note 1: For the thick documents, the pickup sensor with the oblique line area is OFF and the document board motor with the gray area is ON, then the document board goes up until the pickup sensor turn ON. For the thin documents, the document board does not go up.

Note 2: This is a waiting time for the screw feed correction.

Fig. 3-13

 COPYRIGHT © 1999 CANON ELECTRONICS INC. CANON DR-5020/5080C REV.0 JUNE 1999 PRINTED IN JAPAN (IMPRIME AU JAPON)

B. AUTOMATIC PAPER THICKNESS ADJUSTMENT AND SKEW FEED CORRECTION

1. Document Feed Flow

The following describes the document feed flow. Refer to Fig. 3-14.

1) The document is picked up by the pickup roller and arrives at the feeding roller and separation roller position.
2) As the feeding roller is underneath and there is no gap between the feeding roller and the separation roller, the document strikes the face of the roller.
3) As the pickup roller continues to rotate, if the document is skewed it is corrected.
4) The leading edge of the document is detected by the front separation sensor, and after the time set for skew correction is over, the feeding roller moves up.
5) The document is fed out when a gap for a single document has opened.
6) When the leading edge of the document is detected by the back separation sensor, the feeding roller stops moving up.
7) The document fed out strikes the face of the upper and lower registration rollers and is again corrected for skew feed.
8) The leading edge of the document is detected by the front registration sensor, and after the time set for skew correction is over, the registration clutch comes ON.
9) The upper and lower registration rollers start rotating, and the document is fed out.

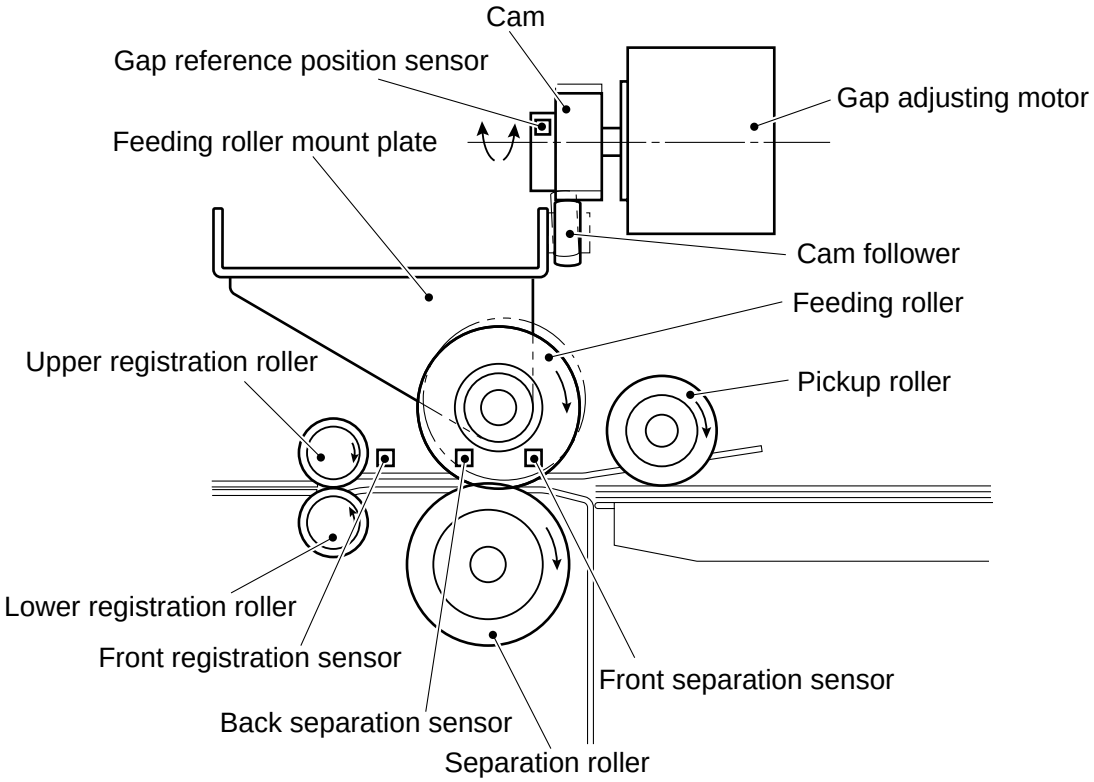

Fig. 3-14

2. Feeding Roller Raising and Lowering Drive Flow

A cam has been force-fitted on to the output shaft of the gap adjusting motor. This cam is in contact with a cam follower which is attached to the feeding roller mount plate. Refer to Fig. 3-14.

The following describes the raising and lowering drive flow of the feeding roller.

a. Raising

1) The leading edge of the document is detected by the front separation sensor, and after the time set for skew feed correction is over, the gap adjusting motor starts rotating.
2) When the gap adjusting motor rotates the cam follower rises. The feeding roller mount plate is under tension by a tension spring.
3) When the cam follower rises, the feeding roller mount plate tilts.
4) When the feeding roller mount plate tilts, the feeding roller rises.
5) When the leading edge of the document is detected by the back separation sensor, the gap adjusting motor stops.

b. Lowering

1) When the trailing edge of the document is detected by the back separation sensor, the gap adjusting motor starts to rotate in reverse.
2) The cam pushes the cam follower and makes the feeding roller descend.
3) When the gap reference position sensor comes ON, the gap adjusting motor stops.

3. Manual Paper Thickness Adjusting

For the documents which are thick or thin very much, the automatic paper thickness adjusting may not work. Therefore the manual paper thickness adjusting is selected.

When this manual mode is selected, the documents are fed through the fixed gap which is set in advance. Also, the skew correction does not work.

 COPYRIGHT © 1999 CANON ELECTRONICS INC. CANON DR-5020/5080C REV.0 JUNE 1999 PRINTED IN JAPAN (IMPRIME AU JAPON)

C. FEED ERROR DETECTION

1. Document jam

This machine is equipped with the sensors to detect document jams.

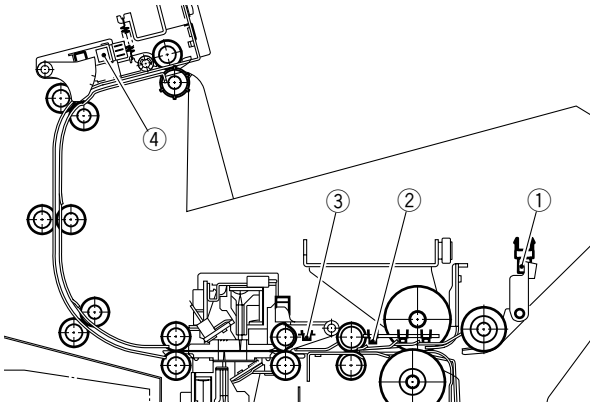

Fig. 3-15

No.	Sensor No.	Sensor Name
①	PS3	Pickup sensor
②	PS10	Front registration sensor
③	PS11	Back registration sensor
④	PS1	Delivery sensor

Table 3-2

An error code corresponding to the detected condition shall be displayed on the operation panel. The conditions of the respective error codes are as follows.

Note 1: In case that two conditions or more of error codes occur, the error code of the condition detected first shall be displayed.

Note 2: Each specified time depends on the feeding speed.

1) Error Code: P01

It took more than 30 seconds for a document to reach the front registration sensor after detected by the pickup sensor. (Delay jam at the front registration)

Usually the pickup error code “P80” is displayed first.

2) Error Code: P02

It took more than the specified time for a document to pass through the front registration sensor after detected by the back registration sensor. (Stagnation jam at the front registration)

3) Error Code: P04

It took more than the specified time for a document to reach the back registration sensor after detected by the front registration sensor. (Delay jam at the back registration)

4) Error Code: P08

It took more than the specified time for a document to pass through the back registration sensor after the passing of the document was detected by the front registration sensor. (Stagnation jam at the back registration)

5) Error Code: P10

It took more than the specified time for a document to reach the delivery sensor after detected by the back registration sensor. (Delay jam at the delivery)

6) Error Code: P20

It took more than the specified time for a document to pass through the delivery sensor after detected by the deliver sensor. (Stagnation jam at the delivery)

COPYRIGHT © 1999 CANON ELECTRONICS INC.

2.Pickup error detection

When the machine can not pickup the document, the document board retries the up and down three times maximum. Though the machine can not pickup the document, the error code "P80" is displayed. The conditions of the pickup error are as follows.

1) It took more than the specified time for a document to reach the front separation sensor (PS8) after detected by the pickup sensor (PS3).
2) It took more than the specified time for a document to reach the back separation sensor (PS9) after detected by the front separation sensor.
3) It took more than the specified time for a document to reach the front registration sensor (PS10) after detected by the back separation sensor.

3. Skew feed detection

Skew feed detection is carried out by the image sensor of the upper reading unit. It shall be judged as an error when there are more than 2 degrees of skew as a result of calculating the data of the right and left edge positions on the leading edge of the document and those at the 30mm fed point. The error code is “P18”.

4. Double feed detection

Double feed detection is carried out by the double feed sensor (PS4). The output from the double feed sensor changes in an analog-like manner according to the rotating amount (angle) of the sensor lever at the passing of a document. By this change, not only the existence of the document but also the thickness of the document is detected. Moreover, this change is used for the detection to open and close the upper unit.

In the case that the double feed detection is set, it is judged as an double feed error when the second or later detected documents exceed the ranges between 0.8 and 1.5 times in thickness, or ± 50 mm in length based on the first detected document.

1) Error Code: d01
   Detected by thickness.
2) Error Code: d02
   Detected by length.
3) Error Code: d03
   Detected by both thickness and length.

 COPYRIGHT © 1999 CANON ELECTRONICS INC. CANON DR-5020/5080C REV.0 JUNE 1999 PRINTED IN JAPAN (IMPRIME AU JAPON)

IV. DESCRIPTION OF ELECTRICAL CIRCUITS

A. MAIN CPU PCB ASSEMBLY

1. Outline

The main CPU PCB assembly (SH2-MAIN) mainly performs image processing.

Fig. 3-16 shows a block diagram of the flow of image data. The block diagram shows the main elements.

The analog signals output from the image sensor in four blocks are made into a composite by an amplifier and an analog switch. They are then converted to 8-bit digital signals by an A/D converter and sent to the image processing controller (CIS-Chip).

The image data input into the image processing controller are subjected to re-arranging of the picture elements and a combining of the front and back. After that, dark compensation, shading compensation, and gamma compensation are performed.

If binary AE is selected, the image data is output to the ABC circuit and judged for density by the CPU.

If a resolution of 400 dpi is selected, the resolution is converted and sent to the binary image processing controller (IFB-Chip) via the line memory.

At the binary image processing controller, edge emphasis is carried out using the line memory. If, at that time a resolution of less than 300 dpi is selected, the resolution is converted by thinning out the read-in clock.

After edge emphasis has been carried out, binarizing is performed by simple binarizing or by error diffusion. Error diffusion processing is carried out by an error diffusion processing controller (GENESIS).

If neg./pos. reversion is selected, the processing is performed when binarizing is carried out.

Thin line complementation, dot erasing and notch compensation, are carried out on the binarized image data. After that, the data is stored in binary image memory and transmitted to external equipment via an SCSI protocol controller (SPC-Chip).

When processing gray scale and color image data with DR-5080C, the data is sent to the gray scale/color image processing controller (IFC-Chip) after edge emphasis.

At the gray scale/color image processing controller, after storing the image data in gray scale/color image memory, the data is transmitted to external equipment via the SCSI protocol controller (SPC-Chip).

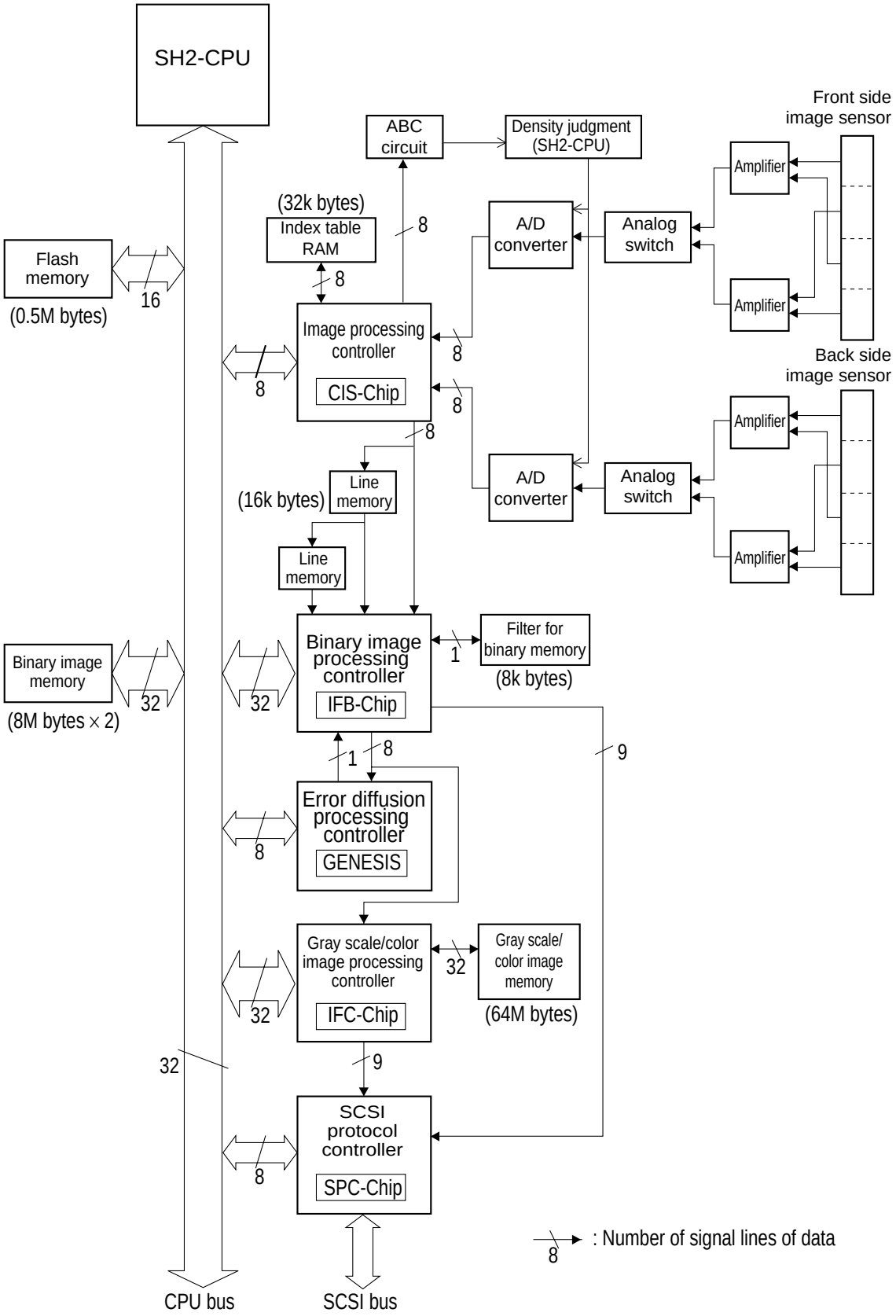

Fig. 3-16

 COPYRIGHT © 1999 CANON ELECTRONICS INC.

2. CPU Circuit

Table 3-3 shows the main function of the IC and Fig. 3-17 shows a block diagram of the main CPU PCB assembly.

Control of this machine is performed by a 32-bit CPU (IC135).

IC101 (IFC-Chip)	Gate array for gray scale and color image processing (DR-5080C only)
IC111, IC114	Line memory (16k bytes × 2)
IC112, IC113, IC115, IC116	Line memory for color image data processing (16k bytes × 4) (DR-5080C only)
IC117	Index table RAM (32k bytes)
IC121 (CIS-Chip)	Gate array for driving image sensor and for gray scale image processing
IC133	Flash memory for writing various kinds of data (0.5M bytes)
IC135 (CPU)	Microprocessor which controls this machine
IC145 (SPC-Chip)	Gate array for controlling interface for SCSI
IC155, IC513 (GENESIS)	Gate array for error diffusion processing
IC156	Memory for thin line complement, dot erasing and notch compensation (8k bytes)
IC164 (IFB-Chip)	Gate array for binarizing and image processing
IC531, IC532	Memory for binary and 3-bit color image data (8M bytes × 2)
SD-RAM	Memory for gray scale and color image data (64M bytes) (DR-5080C only)

Table 3-3

COPYRIGHT © 1999 CANON ELECTRONICS INC.

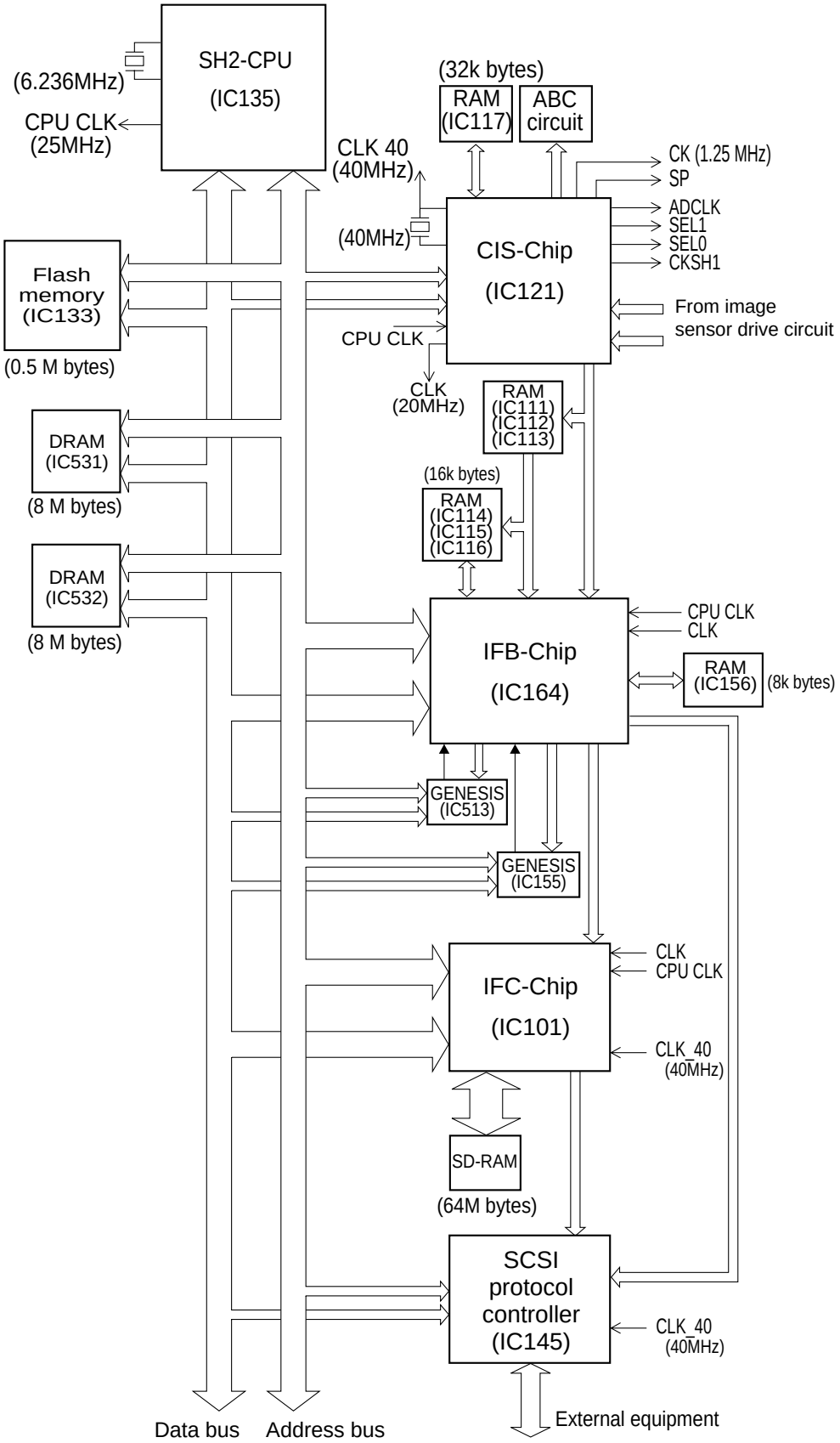

Fig. 3-17

 COPYRIGHT © 1999 CANON ELECTRONICS INC.

3. Image Sensor Drive Circuit

a. Outline

This circuits consists of the amplifiers, analog switches and A/D converters.

It amplifies and combines the four blocks of analog signals that are output from the image sensor. After that, the signals are converted to digital signals and output to the image processing controller (CIS-Chip).

b. Configuration of Image Sensor

Fig. 3-18 shows the configuration of the image sensor.

The image sensor used in this machine is made up of 15 chips. Each chip has 234 photosensitive elements arranged in it.

The 15 chips are divided into four blocks of 4 : 4 : 4 : 3. The document is read at the same time by the four blocks and analog signals are output from each block.

The first 7 bits of chip 1 and the last 7 bits of chip 15 of the image sensor are not in use.

The maximum number of picture elements of the image sensor is:

15 (the number of chips) × 234 (the number of elements per chip) - 14 (the number of elements not in use) = 3496 picture elements.

But each 32 bits processing is done in the image processing, 3,488 multiple of 32 are effective picture elements. (When the output resolution is 300 dpi.)

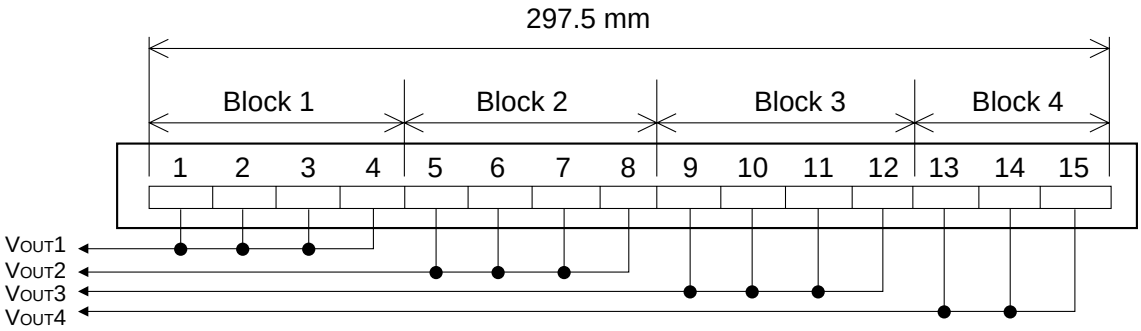

Fig. 3-18

There are two image sensors in this machine, which respectively read the image on the front and back of the document.

The data of each block are output at the same time in order to speed up the reading of image data. Also, the front side and the back side data are output at the same time.

Fig. 3-19 shows the timing chart of the operation of the image sensor.

SP is the line interval signal indicating a one line interval.

CK is the image sensor drive clock and operates at 1.25 MHz.

The four blocks of signals output are denoted as $V_{out}1$ $V_{out}2$, $V_{out}3$, and $V_{out}4$.

The 1 to 26 pulse intervals of the CK signals of $V_{out}1$ $V_{out}2$, $V_{out}3$, and $V_{out}4$ are the clamp intervals (52 bits).

The 27 to 30 pulse intervals of the CK signals of $V_{out}1$ are the dummy bits (7 bits) and are the invalid bits of the image sensor.

In $V_{out}1$, 30 to 495 pulse intervals of CK signals are effective bits and are output from the 8th bit to the 936th bit as image signals (S1 to S929).

Blocks $V_{out}2$ and $V_{out}3$ are all effective bits, so 27 to 495 pulse intervals of CK signals are output as image signals (S930 to S1865, and S1866 to S2801).

In $V_{out}4$, 27 to 374 pulse intervals of CK signals are effective bits and are output from the 1st bit to the 695th bit as image signals (S2802 to S3496).

The 374 to 378 pulse intervals of CK signals of Vout4 are dummy bits (7 bits) and the invalid bits of the image sensor.

Finally 3,496 (S1 to S3496) image signals per one line are output. For the color mode, 3496 image signals for each color RGB are output.

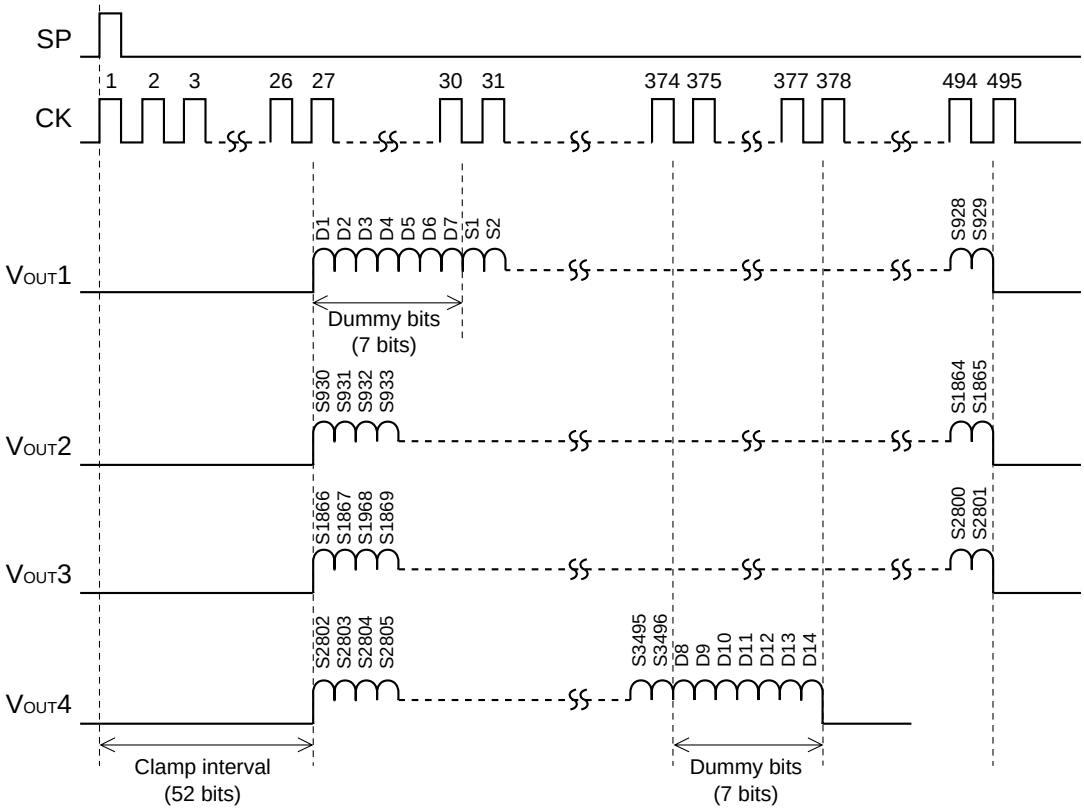

Fig. 3-19

 COPYRIGHT © 1999 CANON ELECTRONICS INC. CANON DR-5020/5080C REV.0 JUNE 1999 PRINTED IN JAPAN (IMPRIME AU JAPON)

c. Operation

Fig. 3-20 shows the block diagram of the image sensor drive circuit.

The four blocks of analog signals from the image sensor are respectively output to the main CPU PCB assembly as $V_{out}1$, $V_{out}2$, $V_{out}3$, and $V_{out}4$.

Image sensor drive clock (CK) and line interval signals (SP) are input in the image sensor.

When line interval signal comes ON, the potential held synchronizes with the drive clock and is transmitted successively.

The analog signals output from the image sensor are amplified by amplifiers and are converted by A/D converters into 8-bit digital signals.

After that, they are sent to the image processing controller (CIS-Chip) where image data re-arrangement and combining of front and back are carried out.

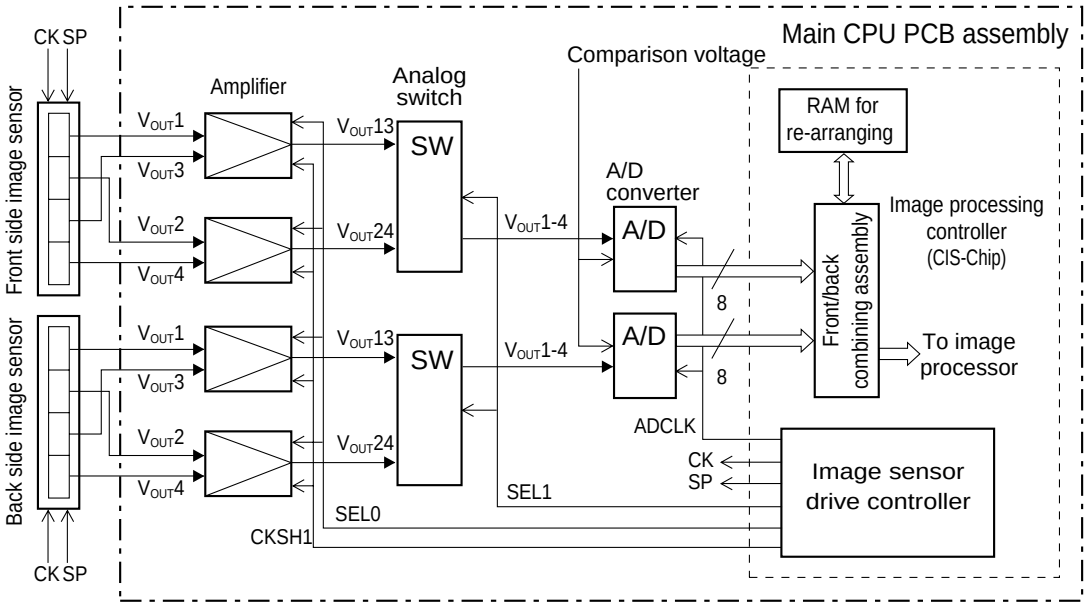

SP	:	Line interval signal
CK	:	Image sensor drive clock
CKSH1	:	Amplifier read timing signal
SEL0	:	Amplifier read switching signal
SEL1	:	Analog switch switching signal
ADCLK	:	A/D conversion sampling signal

Fig. 3-20

Fig. 3-21 is the procedure by which the analog signals output from one image sensor are combined. But, $V_{OUT}2$ and $V_{OUT}4$ are omitted in this figure, and this is for the binary and gray scale mode.

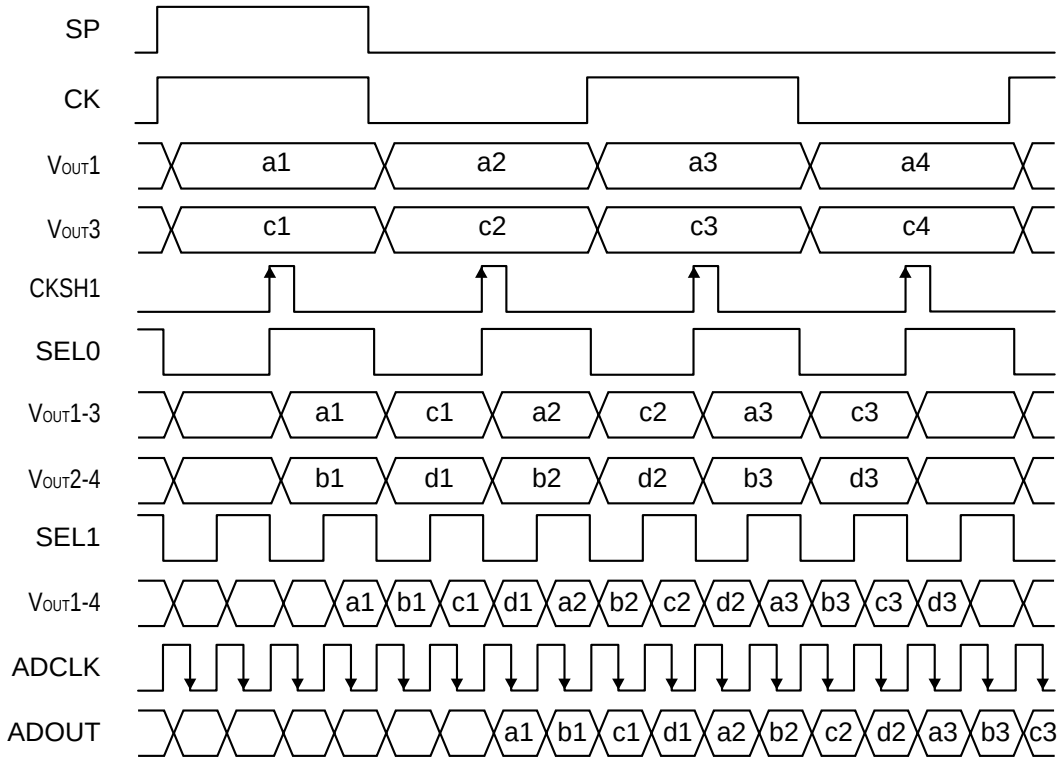

Fig. 3-21

The picture elements output from $V_{out}1$ are each expressed as a1, a2, a3 and so on. Similarly, the output from $V_{out}2$ is expressed as b1, b2, b3, ..., the output from $V_{out}3$ as c1, c2, c3, ..., and the output from $V_{out}4$ as d1, d2, d3, ...

The analog signal of each element of the 4 blocks is synchronized with the image sensor drive clock, and successively output and input into amplifiers as $V_{out}1$, $V_{out}2$, $V_{out}3$, and $V_{out}4$.

$V_{out}1$ and $V_{out}3$, and $V_{out}2$ and $V_{out}4$ are input into the same amplifiers. The amplifiers combine the analog signals by means of read timing signals (CKSH1) and switching signals (SEL0)

The signals output from the amplifiers are respectively output as $V_{out}13$ and $V_{out}24$.

The analog switch combines $V_{out}13$ and $V_{out}24$ by means of switching signals (SEL1), and outputs the resultant signals as $V_{out}1$-4.

The A/D converter converts $V_{out}1$-4 into 8-bit digital signals by means of A/D sampling signals (ADCLK), and outputs the signals to the image processing controller.

As the sequence of the picture elements of one line of combined image data has been interchanged, the picture elements are re-arranged using the RAM for that purpose in the image processing controller, and sent out with the front and back as one set to the image processor.

 COPYRIGHT © 1999 CANON ELECTRONICS INC.

4. Image Processing Controller Circuit (CIS-Chip)

a. Outline

This circuit performs image processing of the image data output from the image sensor drive circuit, and outputs the result to the binary image processing controller (IFB-Chip).

This circuit has the following functions.

- Image processing
- Generating of standard clock for image processing
- Generating of drive timing signals for two (front and back) image sensors
- Controlling of LED for scanning color image data

b. Operation

Fig. 3-22 shows the block diagram of the image processing controller (CIS-Chip)

The image data from the image sensor drive circuit of the front side and back side of the document are sent at the same time to the image processing controller.

The front and back combining assembly in the image processing controller re-arranges the image data in one line and combines the front and back sides. (Refer to Fig. 3-23) The RAM in the image processing controller is used in these processes.

The combined image data is sent to the image processor where dark compensation, shading compensation and gamma compensation are carried out.

The compensation factor for shading compensation is stored in the index table RAM. The compensation values for dark compensation and gamma compensation are stored in the RAM in the image processing controller.

If binary AE is selected, the image data is sent to the ABC circuit and density judgment is made by the SH2-CPU.

If 400 dpi resolution is selected, processing is carried out by the resolution converter.

After that, the data is output to the binary image processing controller (IFB-Chip).

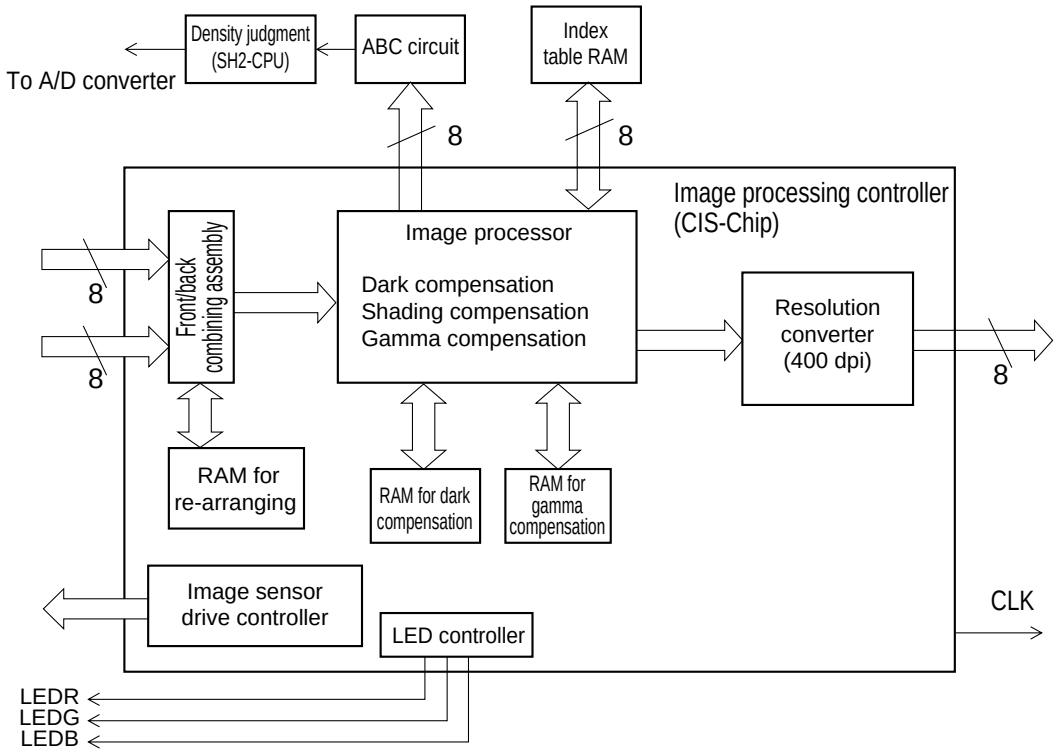

LEDR : Control signal of red (R) LED
LEDG : Control signal of green (G) LED
LEDB : Control signal of blue (B) LED
CLK : Standard clock for image processing

Fig. 3-22

- Input into front/back combining assembly

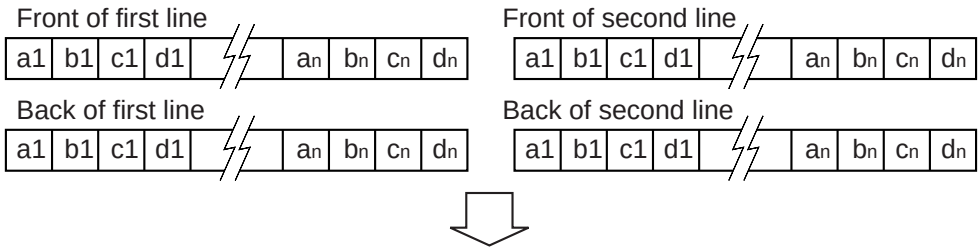

- Output from front/back combining assembly

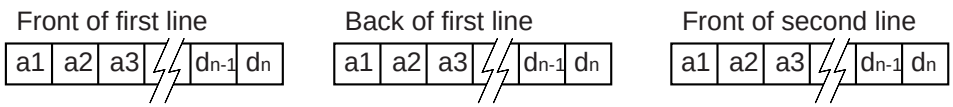

Fig. 3-23

 COPYRIGHT © 1999 CANON ELECTRONICS INC. CANON DR-5020/5080C REV.0 JUNE 1999 PRINTED IN JAPAN (IMPRIME AU JAPON)

5. Binary Image Processing Controller Circuit (IFB-Chip)

a. Outline

This circuit performs image processing of the image data output from the image processing controller (CIS-Chip), and after storing in the binary image memory, outputs the data to the SCSI protocol controller (SPC-Chip).

If gray scale or color mode is selected, the data is output to the gray scale/color image processing controller (IFC-Chip).

This circuit has the following functions.

- Image processing
- Serial/parallel conversion for transmitting image data at high speed

b. Description of Circuit

Fig. 3-24 shows the block diagram of the binary image processing controller (IFB-Chip).

Note that the numbers in the diagram correspond to the numbers (① to ⑧)in this description.

1) The 8 bit image data output from the image processing controller is input into the binary image processing controller via line memory. ①
   Operation of edge emphasis in the vertical scanning direction is performed using line memory.
   If a resolution less than 300 dpi is selected, resolution conversion is performed by thinning out the read timing signals at this time.
   The read timing signals for resolution conversion are generated in the binary image processing controller based on the standard clock (CLK) for image processing.
2) After edge emphasis is carried out, binarizing of the image data is performed.
   If simple binarizing is selected, the data is sent to the simple binarizing processor and binarized. ②
   If error diffusion is selected, the data is sent to the error diffusion processing controller, ③ where error diffusion processing is performed, and then returned to the binary image processing controller.
   At this point, if a gray scale or color image is to be processed with DR-5080C, the data is sent to the gray scale/color image processing controller. ④
3) The binarized image data undergoes thin line complementation, dot erasing, and notch compensation at the binary image processor. ⑤
   The memory for binary filter is used in these processes.
4) After image processing has been performed, the data is converted to 32 bit parallel signals for high speed transmission, ⑥ and stored in the binary image memory by DMA transmission via CPU bus. ⑦
5) The image data stored in the binary image memory is again DMA transmitted via the CPU bus and returned to the binary image processing controller. The data is then sent via the exclusive 9 bit bus to the SCSI protocol controller. ⑧

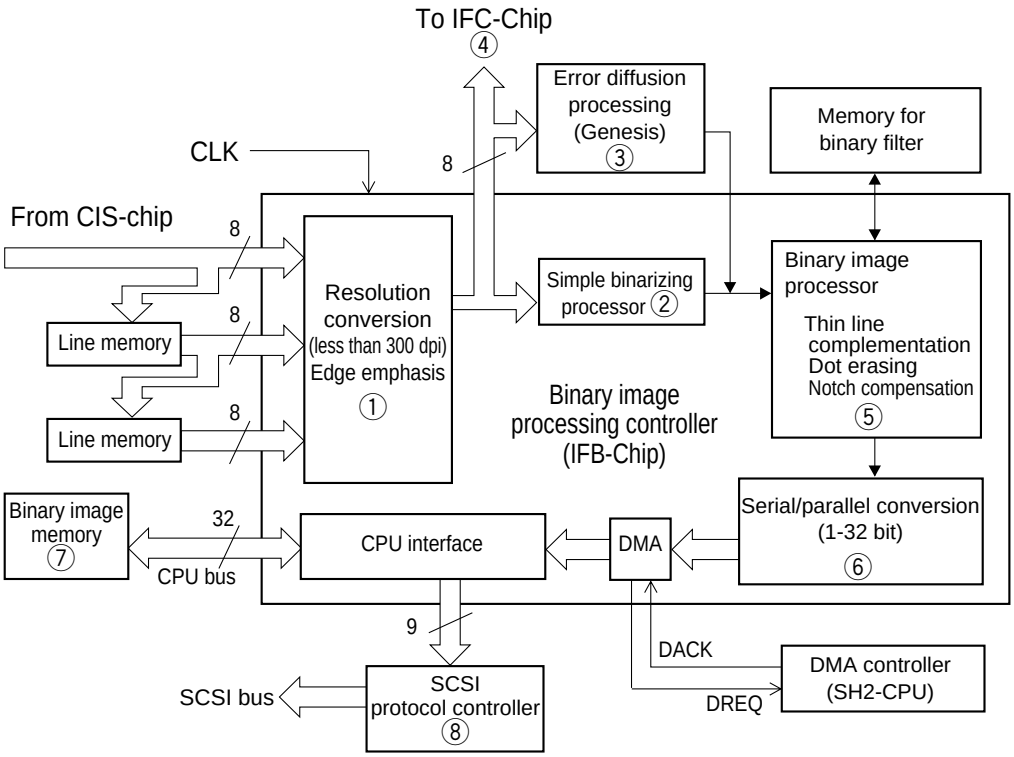

DREQ : DMA transmission request signal
DACK : DMA request acknowledgment signal
CLK : Standard clock for image processing

Fig. 3-24

Information

- DMA (Direct Memory Access)
  This is transmission of data directly between memory and device without going through the CPU. Control is performed by the DMA controller.

 COPYRIGHT © 1999 CANON ELECTRONICS INC.

6. Gray Scale/Color Image Processing Controller Circuit (IFC-Chip, DR-5080C only)

a. Outline

This circuit stores the 8 bit gray scale or color image data output from the binary image processing controller (IFB-Chip) in gray scale/color image memory, and outputs the data to the SCSI protocol controller (SPC-Chip).

This circuit has the following functions.

- Bit number changing of image data
- Parallel/parallel conversion for high speed transmission of image data
- Control of gray scale/color image memory

b. Description of Circuit

Fig. 3-25 shows the block diagram of the gray scale/color image processing controller (IFC-Chip)

The 8 bit gray scale or color image data output from the binary image processing controller (IFB-Chip) is converted to 32 bit parallel signals for high speed transmission, and stored in gray scale/color image memory by DMA transmission. At this time, if there is bit number changing, the data is stored in memory after bit number changing has been performed.

The image data stored in gray scale/color image memory is again DMA transmitted and returned to the gray scale/color image processing controller. After that, the data is sent via the exclusive 9 bit bus to the SCSI protocol controller.

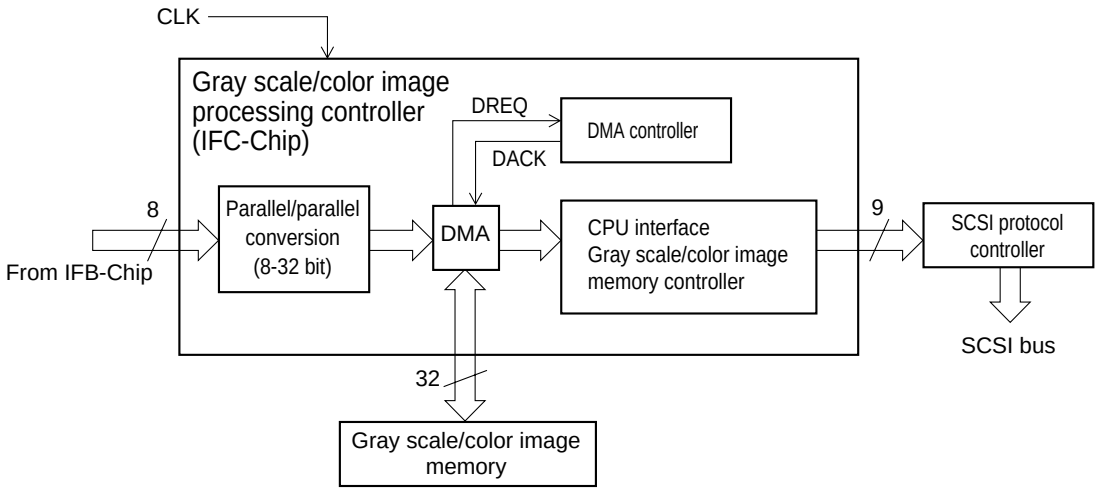

DREQ : DMA transmission request signal
DACK : DMA request acknowledgment signal
CLK : Standard clock for image processing

Fig. 3-25

B. PICKUP CONTROL PCB ASSEMBLY

Fig. 3-26 shows the block diagram of the pickup control PCB assembly (K4-SUB).

K4-CPU in the pickup control PCB assembly has the following functions.

- Control of document pickup on command from main CPU PCB assembly
- Control of pickup motor, feeding motor, and gap adjusting motor
- Instructions to document board control PCB assembly
- Processing of signals from various sensors
- Printing of imprinter (option)

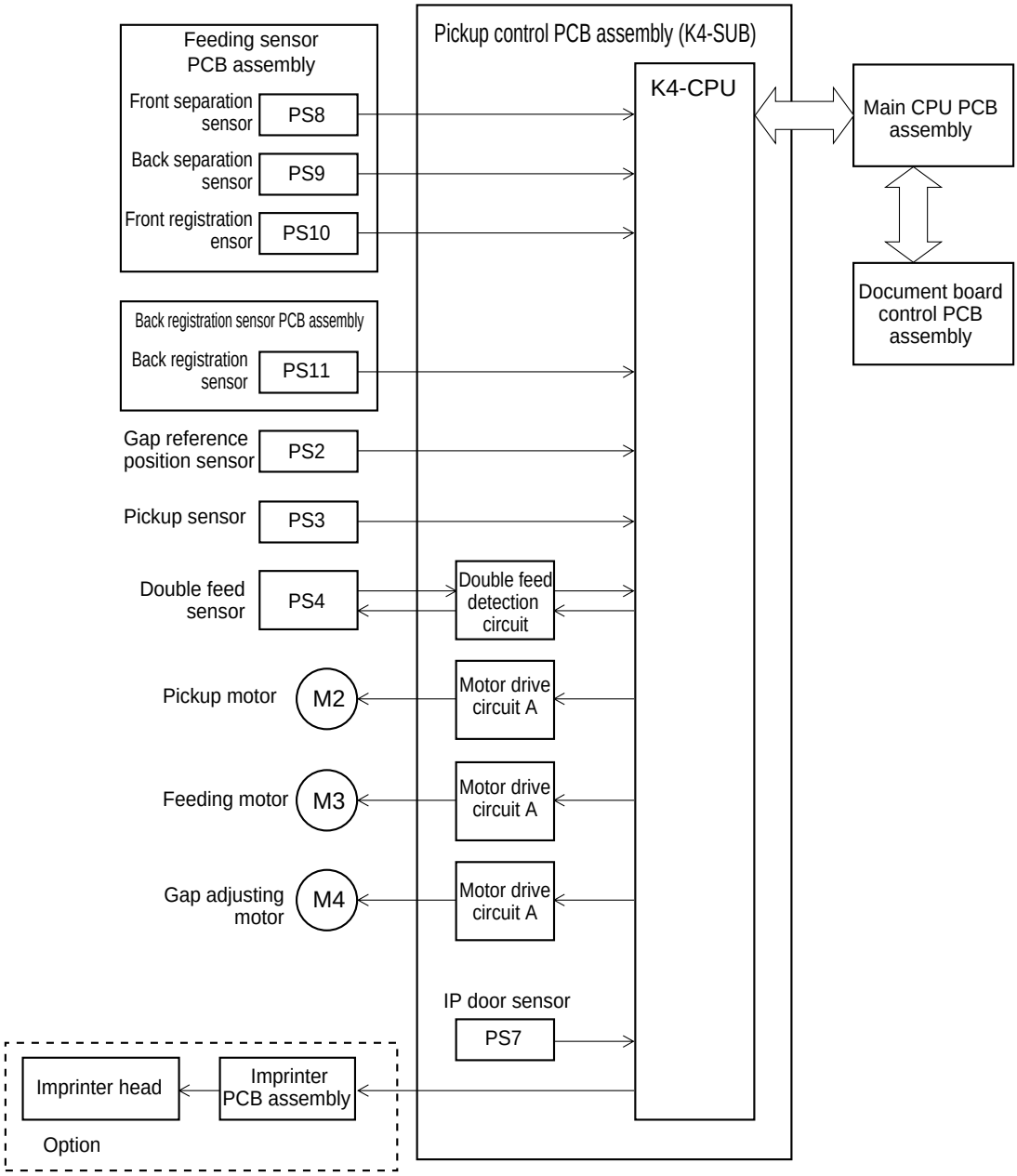

Fig. 3-26

 COPYRIGHT © 1999 CANON ELECTRONICS INC. CANON DR-5020/5080C REV.0 JUNE 1999 PRINTED IN JAPAN (IMPRIME AU JAPON)

C. DOCUMENT BOARD CONTROL PCB ASSEMBLY

Fig. 3-27 shows the block diagram of the document board control PCB assembly (K0-SUB2).

K0-CPU in the document board control PCB assembly has the following functions.

- Control of separation motor and document board motor on command from the pickup control PCB assembly
- Control of registration clutch on command from main CPU PCB assembly
- Processing of signals from various sensors

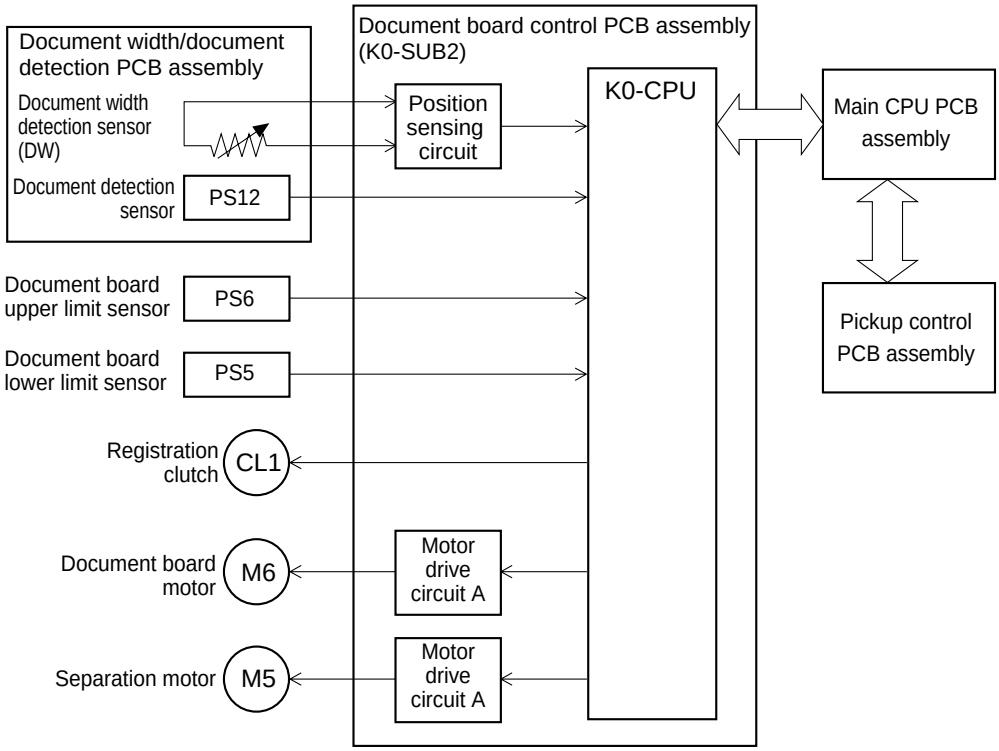

Fig. 3-27

D. MOTOR DRIVE CIRCUITS

This machine uses six stepping motors.

The following drive circuits are used in the six stepping motors.

M1	Main motor	Main motor drive circuit
M2	Pickup motor	Motor drive circuit A
M3	Feeding motor	Motor drive circuit A
M4	Gap adjusting motor	Motor drive circuit B
M5	Separation motor	Motor drive circuit A
M6	Document board motor	Motor drive circuit A

Table 3-4

1. Main Motor Drive Circuit

The main motor drive circuit is used in the main motor. The main motor is a 4-phase stepping motor.

The angle of rotation of the motor is 1.8·/step with 2 phase excitation.

Fig. 3-28 shows the block diagram of the drive circuit.

The drive circuit drives the motor with signals from the main CPU PCB assembly. The main motor changes the excitation mode by combinations of M1, M2, and M3 signals. Vref0, Vref1, and Vref2 signals are combined to change the motor drive current.

Table 3-5 shows examples of the combination of signals.

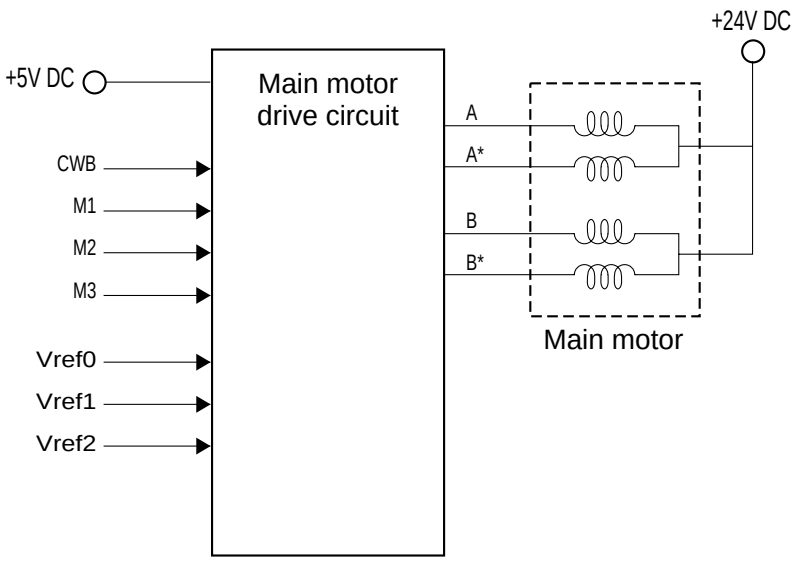

CWB : Setting of rotating direction
M1, M2, M3 : Switching of excitation mode
Vref0, Vref1, Vref2 : Setting of electric current

Fig. 3-28

 COPYRIGHT © 1999 CANON ELECTRONICS INC. CANON DR-5020/5080C REV.0 JUNE 1999 PRINTED IN JAPAN (IMPRIME AU JAPON)

Binary/gray scale	Color	Excitation pattern	M1	M2	M3	Vref0	Vref1	Vref2
100~149 dpi		2 phase excitation	L	L	H	H	L	L
150~199 dpi		1 - 2 phase excitation	L	L	L	L	H	L
200~299 dpi		W1 - 2 phase excitation	H	L	L	H	H	L
300~399 dpi	100~149 dpi	W1 - 2 phase excitation	H	L	L	L	L	H
400 dpi	150~199 dpi	2W1 - 2 phase excitation	L	H	L	H	L	H
	200~299 dpi	4W1 - 2 phase excitation	H	H	L	L	H	H
	300 dpi or more	4W1 - 2 phase excitation	H	H	L	H	H	H

Table 3-5

2. Motor Drive Circuit A

Motor drive circuit A is used in the pickup motor, feeding motor, separation motor, and document board motor. Fig. 3-29 shows the block diagram of the drive circuit.

The circuit drives the motors by changing the electric current and direction of flow (polarity) of A phase and B phase. The stepping motors are 2 phase and the angle of rotation is 7.5·/step.

Various excitation patterns can be output by combinations of each input signals.

Table 3-6 shows the input and output.

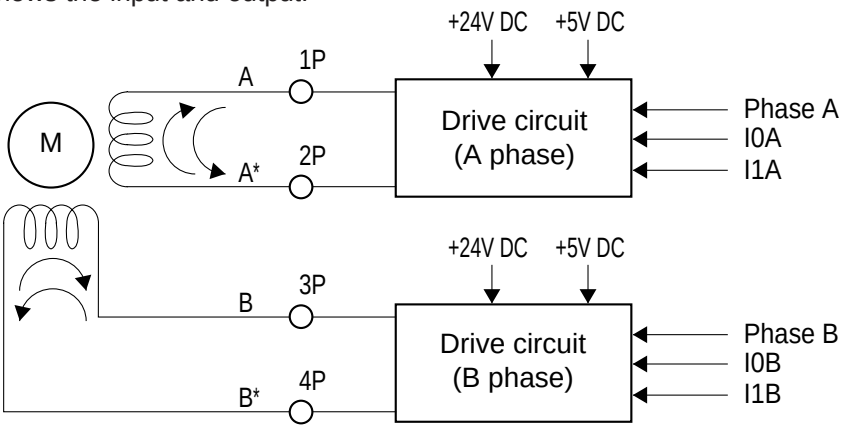

Fig. 3-29

Phase A / Phase B	Direction of current
L	A*→A / B*→B
H	A→A* / B→B*

I0A / I0B	I1A / I1B	Output current
L	L	500 mA
H	L	333 mA
L	H	167 mA
H	H	0 mA

Table 3-6

3. Motor Drive Circuit B

Motor drive circuit B is used in the gap adjusting motor. Fig. 3-30 shows the block diagram of the drive circuit.

The gap adjusting motor is a 4 phase stepping motor and is driven by 1 - 2 phase excitation. The angle of rotation of the motor is 3.75·/step with 1 - 2 phase excitation.

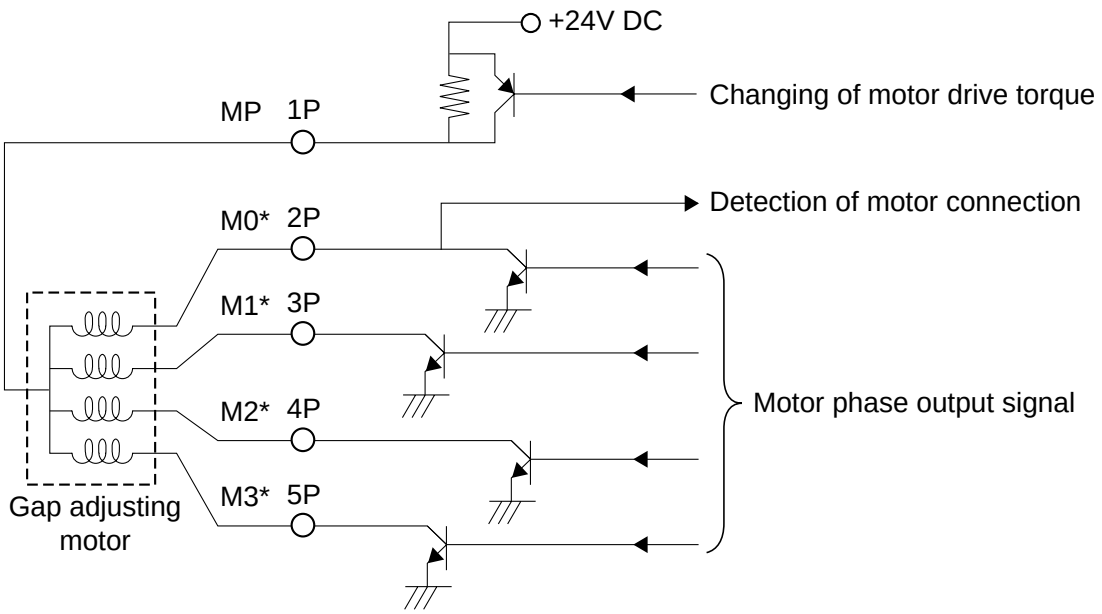

Fig. 3-30

 COPYRIGHT © 1999 CANON ELECTRONICS INC. CANON DR-5020/5080C REV.0 JUNE 1999 PRINTED IN JAPAN (IMPRIME AU JAPON)

V. OPTIONS

1. Imprinter (DR-5020/5080C)

a. Outline

This machine is capable of printing characters on the document if an imprinter is installed in the machine.

The printing position in the width direction is set by selecting one of the 15 installation holes in the machine. The printing position in the feed direction is set from the personal computer at a position 5 mm or more from the leading edge of the document.

The printing ink is stored in the ink container which is an integral part of the IP head. The IP head is a consumable and is replaced by the user when it runs out of ink.

For setting the printing positions and for other operating methods, refer to the instruction manual.

The installation of the imprinter is done by the service technician. Refer to Chapter 5, Installation, on how to install the imprinter.

Table 3-7 shows the main specification and Fig. 3-31 shows the layout.

No.	Item	Specification
1	Printing method	On demand type, ink jet method
2	Configuration	
	1) Main body	a) Imprinter (IP) PCB assembly
		b) IP mount unit
		c) IP drain pad unit
		d) IP PCB cable assembly
		e) FPC stopper 2
	2) Consumable	IP head
3	IP head related	
	1) Image density	12 nozzles/slant 1 row (about 50 dpi)
	2) Font	a) 9 × 9 dots
		b) 12 × 12 dots
	3) Ink	Water base ink, Color : Black
	4) Setting method	With lever
4	Printed related	
	1) Characters	a) Numerals : 0 to 9
		b) Alphabet : A to Z (Capital/small letter)
		c) Symbols : Refer to instruction manual
	2) Number of figures	Max. 32
	3) Printing direction	a) Printing direction : Parallel to feed direction
		b) Character direction : Set angle of rotation
	4) Printing position	a) Width direction : Select one from 15 installation holes
		b) Feed direction : Set 5 mm or more from leading edge
5	Power source	Supplied from DR-5020/5080C

Table 3-7

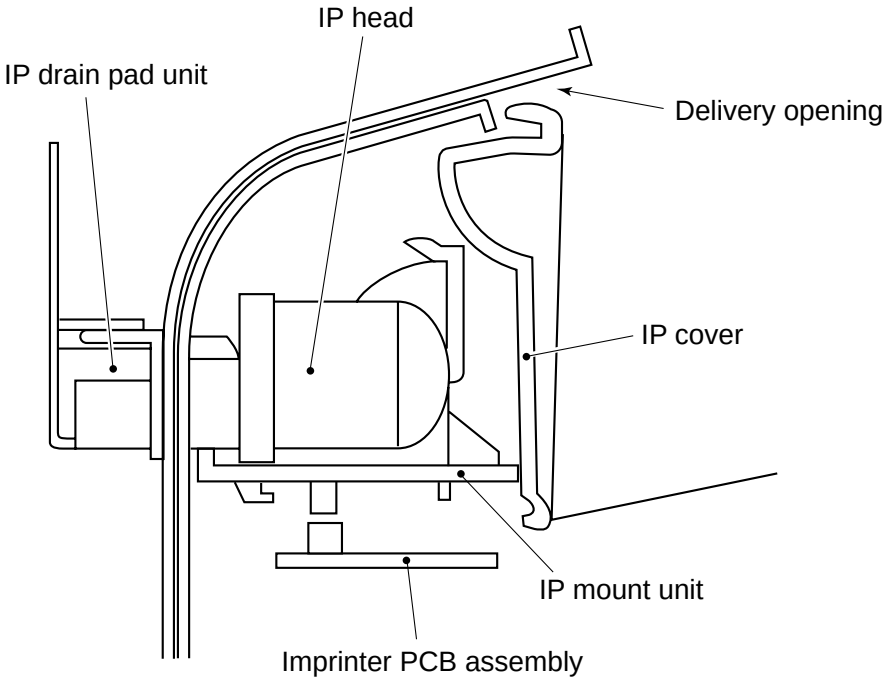

Fig. 3-31

 COPYRIGHT © 1999 CANON ELECTRONICS INC. CANON DR-5020/5080C REV.0 JUNE 1999 PRINTED IN JAPAN (IMPRIME AU JAPON)

b. Electrical circuit

Fig. 3-32 shows the signals of the PCB assemblies.

Pickup control PCB assembly (K4-SUB)				Imprinter PCB assembly				IP head
	J412-1	+24V	J803-6		J801-1	P-PWR	J17-1	
	-2	+5V	-5		-2	P-OUT11*	-2	
	-3	P-CLK	-4		-3	P-OUT12*	-3	
	-4	PP-SEN	-3		-4	P-OUT10*	-4	
	-5	GND	-2		-5	P-OUT1*	-5	
	-6	GND	-1		-6	P-OUT2*	-6	
	J409-1	P-IN1*	J802-15		-7	P-OUT3*	-7	
	-2	P-IN2*	-14		-8	P-OUT4*	-8	
	-3	P-IN3*	-13		-9	P-OUT5*	-9	
	-4	P-IN4*	-12		-10	P-OUT6*	-10	
	-5	P-IN5*	-11		-11	P-OUT7*	-11	
	-6	P-IN6*	-10		-12	P-OUT9*	-12	
	-7	P-IN7*	-9		-13	P-OUT8*	-13	
	-8	P-IN8*	-8					
	-9	P-IN9*	-7					
	-10	P-IN10*	-6					
	-11	P-IN11*	-5					
	-12	P-IN12*	-4					
	-13	P-REV*	-3					
	-14	P-PWR-D	-2					
	-15	P-PWR-S	-1					

P-CLK : Imprinter drive clock
PP-SEN : Head position sensing signal
P-IN1* to P-IN12* : Drive signal input
P-REV* : Drive voltage sensing signal
P-PWR-D : +38 V drive signal
P-PWR-S : +38 V sensing signal
P-OUT1* to P-OUT12* : Drive signal output

Fig. 3-32

Fig. 3-33 shows the block diagram of the imprinter PCB assembly.

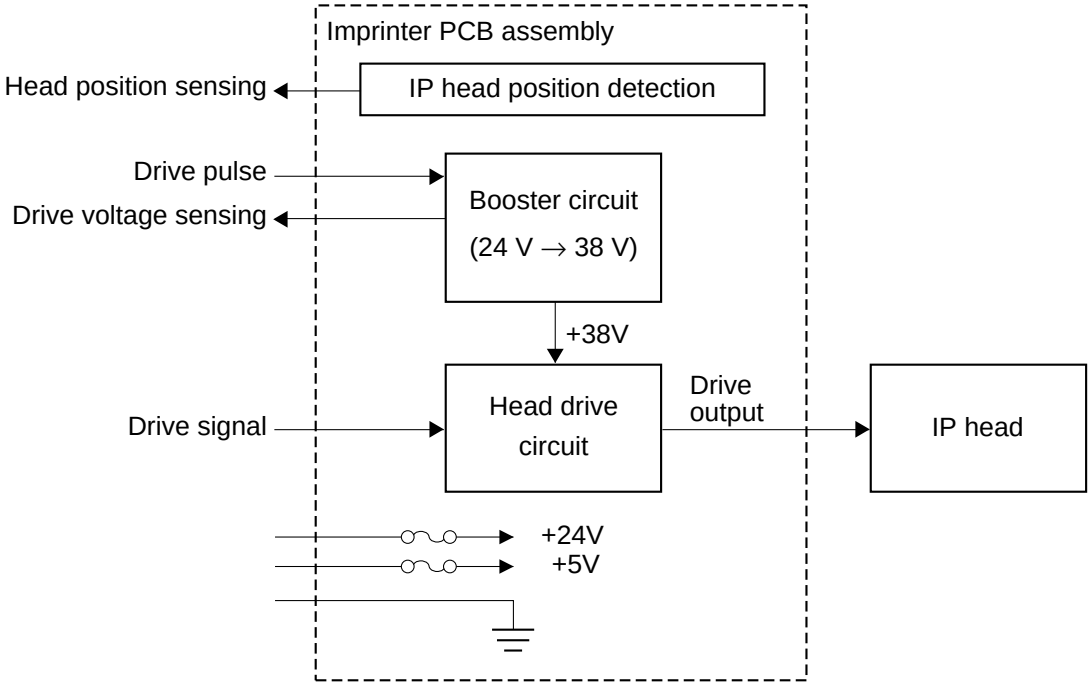

Fig. 3-33

 COPYRIGHT © 1999 CANON ELECTRONICS INC. CANON DR-5020/5080C REV.0 JUNE 1999 PRINTED IN JAPAN (IMPRIME AU JAPON)

2. Barcode Decoder (DR-5020/5080C)

a. Outline

This machine is capable of reading barcodes if a barcode decoder is installed in the main CPU PCB assembly.

The types of barcodes that can be read are UPC, EAN/JAN, Codabar, Code25/ITF, Code39, and Code128.

For how to operate the barcode decoder and other details, refer to the instruction manual.

The barcode decoder is installed by the service technician. For the method of installation, refer to Fig. 3-34.

Table 3-8 shows the main specifications.

No.	Item	Specification
1	Types	1) UPC 2) EAN/JAN 3) Codabar 4) Code25/ITF 5) Code39 6) Code128
2	Image mode	Binary or gray scale (not color)
3	Reading face	Front side or back side (not both sides)
4	Direction	Vertical to feed direction
5	Tilt	Shall be within ± 3°
6	Number	Four steps or less per one document (not side rows)

Table 3-8

b. Electrical circuits

The barcode decoder is made up of two PCB assemblies, a PCB assembly (BCR-CONV) which binarizes gray scale data for barcode use, and a PCB assembly (BCR-DEC) which decodes the barcode from that data.

The two integrated PCB assemblies are connected to the connector (J107) of the main CPU PCB assembly.

The layout is shown in Fig. 3-34.

The image data that is input into the barcode decoder is the gray scale data that is output from the line memory on the main CPU PCB assembly.

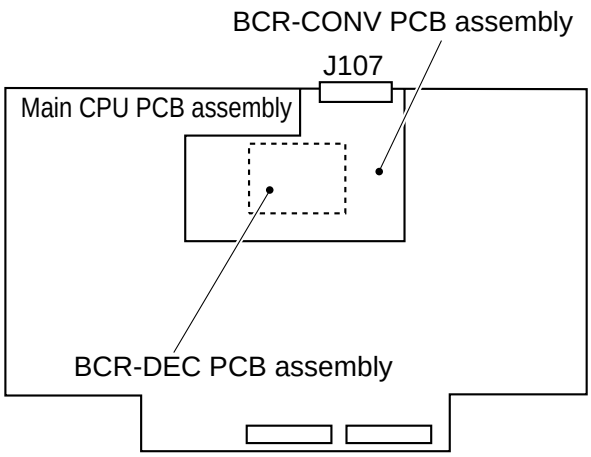

Fig. 3-34

3. Others

a. 128 MB Memory (DR-5080C)

DR-5080C is equipped with a 64 MB image memory for gray scale and color as standard equipment, but when the data size is great such as in 24 bit color output mode, the memory will not be able to cope. In such a case, it may be made possible by changing the 64 MB memory with a 128 MB memory.

The image memory is connected to the connector (J116) of the main CPU PCB assembly. On how to install the memory, refer to Chapter 5, Installation.

b. Red LED (DR-5020)

DR-5020 uses a yellow green LED unit, but by changing to a red LED unit, red dropout color becomes possible. On how to install the LED, refer to Chapter 5, Installation.

c. Endorser (DR-5020/5080C)

The endorser for DR-5020/5080C is expected to be placed on the market several months after sale of DR-5020/5080C has started.

Technical information will be issued separately, so refer to it when it is issued.

 COPYRIGHT © 1999 CANON ELECTRONICS INC. CANON DR-5020/5080C REV.0 JUNE 1999 PRINTED IN JAPAN (IMPRIME AU JAPON)

VI. INTERFACE

1. Outline

When sending data from this machine to a personal computer, the data is transmitted by an interface. This machine uses SCSI-2 (Small Computer System Interface-2) as the interface.

Also, as it handles Fast SCSI, data transmission of a maximum of 10 MB/sec. is possible.

Fig. 3-35 shows the input and output of data used by SCSI, and Table 3-9 shows the connectors and names of the signals.

The connector numbers of the main CPU PCB assembly are J105 and J106.

Fig. 3-35

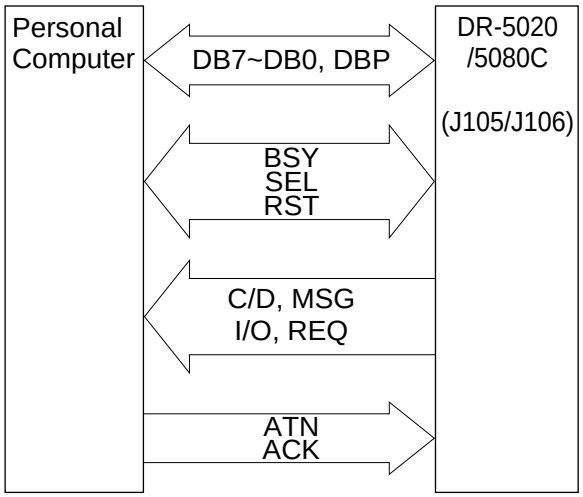

Pin No.	Name of Signal	Remarks
1-12	GND*	(Ground)
13	Open	(Non-connection)
14-25	GND	(Ground)
26	DB0*	(Data Bit 0)
27	DB1*	(Data Bit 1)
28	DB2*	(Data Bit 2)
29	DB3*	(Data Bit 3)
30	DB4*	(Data Bit 4)
31	DB5*	(Data Bit 5)
32	DB6*	(Data Bit 6)
33	DB7*	(Data Bit 7)
34	DBP*	(Odd Parity Data Bit)
35-37	GND	(Ground)
38	TERMPWR	(Termination Power)
39-40	GND	(Ground)
41	ATN*	(Attention)
42	GND	(Ground)
43	BSY*	(Busy)
44	ACK*	(Acknowredge)
45	RST*	(Reset)
46	MSG*	(Message)
47	SEL*	(Select)
48	C/D*	(Control/Data)
49	REQ*	(Request)
50	I/O*	(Input/Output)

The asterisk "*"at the end of the name of a signal denotes the signal is a low active one.

Table 3-9

The route of the data, SCSI bus, is made up of data signals (1 byte + parity bit = 9 signals) and control signals (9 signals) for a total of 18.

2. Control Method

The following is a brief explanation of the method of controlling DR-5020/5080C using SCSI bus.

Data is transmitted by setting the required state (phase) with control signals. Table 3-10 shows the explanation of the various phases.

The equipment connected to the SCSI bus is called the SCSI device. Also, the side that issues the command for data transmission is called the "initiator" and the side receiving the command and providing the data is called the "target." (Refer to Fig. 3-36)

No.	Name	Explanation	
1	BUS FREE phase	State in which SCSI bus is not used in any SCSI device	Phase which decides the state of use of the SCSI
2	ARBITRATION phase	Decides the SCSI device to use the SCSI bus	
3	SELECTION phase	Decides target when the initiator uses the SCSI bus	
4	RESELECTION phase	Target requests initiator for reconnection	
5	COMMAND phase	Command from initiator to target	Transmission phase of data
6	DATA phase	Data input/output is carried out in accordance with command	
7	STATUS phase	Denotes the result of whatever was carried out in accordance with command	
8	MESSAGE phase	Control data is being input/output between initiator and target	

Table 3-10

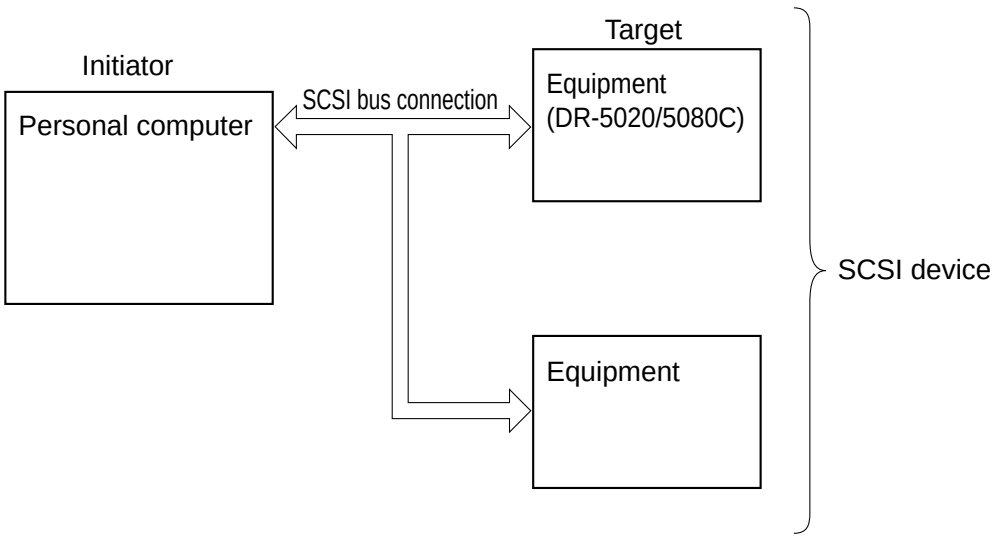

Fig. 3-36

 COPYRIGHT © 1999 CANON ELECTRONICS INC. CANON DR-5020/5080C REV.0 JUNE 1999 PRINTED IN JAPAN (IMPRIME AU JAPON)

Table 3-11 shows the basic communication sequence.

No.	Personal computer side	Direction of communication	DR-5020/5080C side
1	Command to start recording	→→	
2			Feed starts
3	Command inquiring about whether or not there is data and the state of feed	→→	
4		←←	Availability or not of data and status of feed
5	1) If during feeding and there is no data, return to No. 3. 2) If feeding is stopped and there is no data, go to No. 9. 3) If there is data, go to No. 6.		
6	Data read command	→→	
7		←←	Data output
8	1) Return to No. 6 until there is no more data for 1 page of document. 2) Return to No. 3 when there is no more data for 1 page of document.		
9	End		

Table 3-11

VII. POWER SUPPLY

1. Outline

The DC power supply PCB assembly of this machine is capable of handling power supply input of 100 to 240 VAC.

Fig. 3-37 shows the block diagram of the DC power supply PCB assembly.

AC power is supplied to the DC power supply PCB assembly by turning on the power switch.

The 100 to 240 VAC power supplied is converted by rectifying bridge to unsmoothed 100 to 240 VUN and sent to the booster assembly. At the booster assembly, the power is temporarily raised to 380 VUN and then converted to DC voltage. After that, it is converted to 24 V by a DC/DC converter and output to the various PCB assemblies.

A fuse is used in the DC power supply PCB assembly to protect against overcurrent.

Only + 24 VDC is output from the DC power supply PCB assembly and the necessary voltage is then generated by the DC/DC converter in each PCB assembly.

Fig. 3-38 shows the power supply related block diagram.

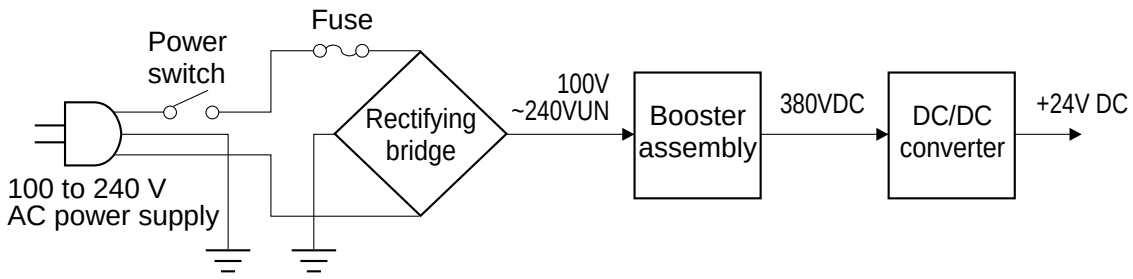

Fig. 3-37

 COPYRIGHT © 1999 CANON ELECTRONICS INC. CANON DR-5020/5080C REV.0 JUNE 1999 PRINTED IN JAPAN (IMPRIME AU JAPON)

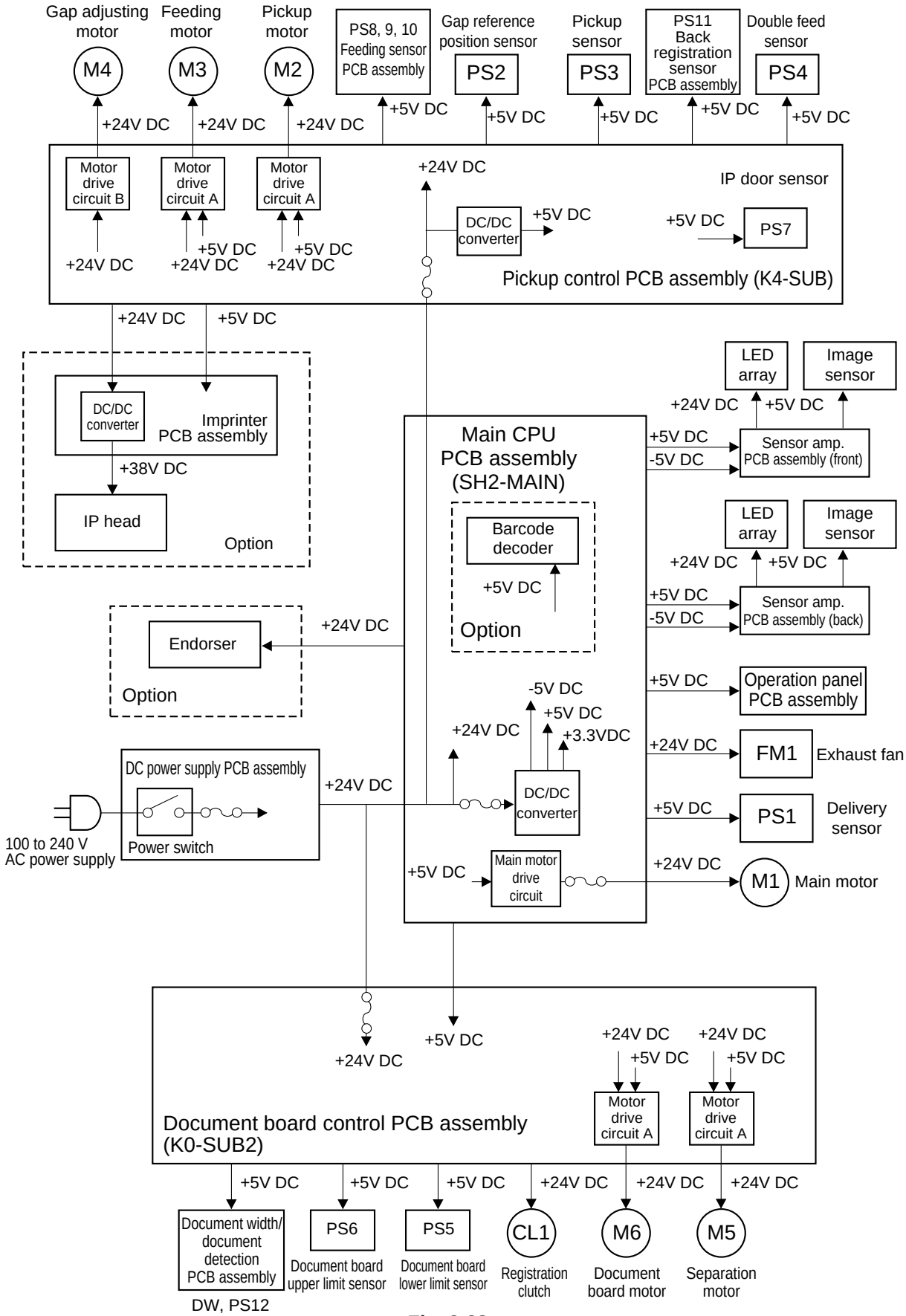
Gap adjusting motor
M4
Feeding motor
M3
Pickup motor
M2
PS8, 9, 10 Feeding sensor PCB assembly
Gap reference position sensor
PS2
Pickup sensor
PS3
PS11 Back registration sensor PCB assembly
Double feed sensor
PS4
+24V DC
+5V DC
Motor drive circuit B
Motor drive circuit A
Motor drive circuit A
DC/DC converter
IP door sensor
PS7
Pickup control PCB assembly (K4-SUB)
DC/DC converter
Imprinter PCB assembly
+38V DC
IP head
Option
LED array
Image sensor
Sensor amp. PCB assembly (front)
Main CPU PCB assembly (SH2-MAIN)
Barcode decoder
Sensor amp. PCB assembly (back)
Endorser
Operation panel PCB assembly
-5V DC
+3.3VDC
FM1
Exhaust fan
DC power supply PCB assembly
Power switch
100 to 240 V AC power supply
DC/DC converter
PS1
Delivery sensor
Main motor drive circuit
M1
Main motor
Motor drive circuit A
Document board control PCB assembly (K0-SUB2)
Document width/ document detection PCB assembly
DW, PS12
PS6
Document board upper limit sensor
PS5
Document board lower limit sensor
CL1
Registration clutch
M6
Document board motor
M5
Separation motor

Fig. 3-38

2. Protective Function of Power Supply Circuit

The DC power supply PCB assembly is a switching regulator type.

If the load goes into a short circuit state due to some abnormality, and there is an overcurrent, the protective function is activated and output is stopped. Also, if the DC/DC converter generating ± 5 VDC and + 3.3 VDC in the main CPU PCB assembly breaks down causing +24 VDC to be applied, the protective function is activated and output is stopped.

When output stops, it can be automatically restored by turning the power switch off, eliminating the cause of the short circuit, discharging the capacitor (for about 10 minutes) and then turning on the power switch.

A fuse is used as protection in each PCB assembly. If an overcurrent flows into the DC/DC converter, the fuse blows and stops the power supply to the PCB assembly.

A fuse is also used for protection of the main motor. If an overcurrent flows into the part of the main motor where + 24 VDC is supplied, the fuse blows and stops the power supply to the main motor.

3. Battery

The following lithium battery is equipped in the main CPU PCB assembly as memory backup.

Maker : SANYO Electric Co., Ltd.
Model : CR14250SE
Voltage : + 3 VDC
Capacity : 850 mAh

When replacing the battery, a battery identical to the above should be used.

Also, when disposing of a used battery or a PCB assembly equipped with a battery, the instructions of the maker and the regulations of the region should be followed.

> ⚠ CAUTION:
> Replace the lithium battery with SANYO CR14250SE only. Use of another battery may present a risk of fire or explosion. The battery may present a fire or chemical burn hazard if mistreated. Do not recharge, disassemble or dispose of in fire.
> Keep the battery out of reach of children and discard used battery promptly.

 COPYRIGHT © 1999 CANON ELECTRONICS INC. CANON DR-5020/5080C REV.0 JUNE 1999 PRINTED IN JAPAN (IMPRIME AU JAPON)

VIII. LAYOUT OF ELECTRICAL COMPONENTS

A. Switches and Sensors

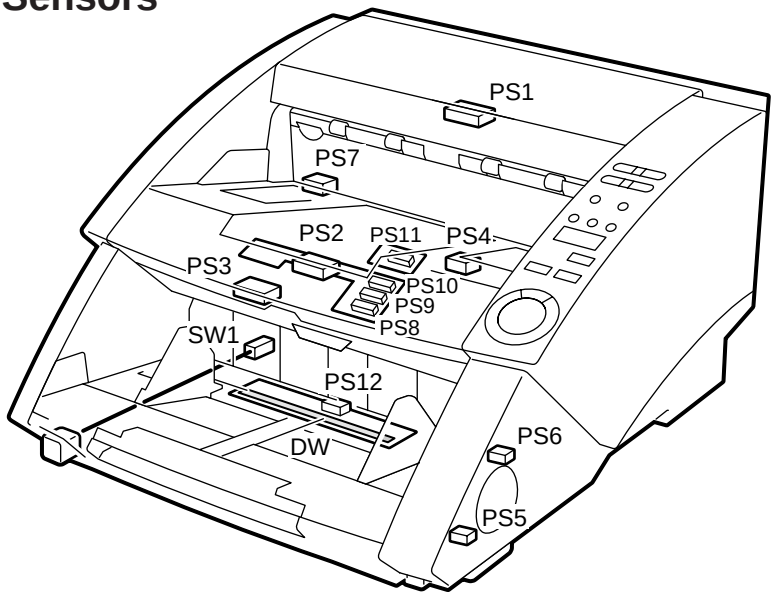

Fig. 3-39

Symbol	Name	Code	Function
	Micro-Switch	Sw1	Power ON/OFF
PS	Photo interrupter	PS1	Detection of document in delivery
		PS2	Detection of gap reference position
		PS3	Detection of document in pickup
		PS4	Detection of double feed, and upper unit open/close
		PS5	Detection of Lower limit for document board
		PS6	Detection of Upper limit for document board
		PS7	Detection of IP cover open/close
		PS8	Detection of document at front separation
		PS9	Detection of document at back separation
		PS10	Detection of document at frond registration
		PS11	Detection of document at back registration, and document length
		PS12	Detection of document on document board
	Slide resistance sensor	DW	Detection of document width

Table 3-12

B. Clutches and Motors

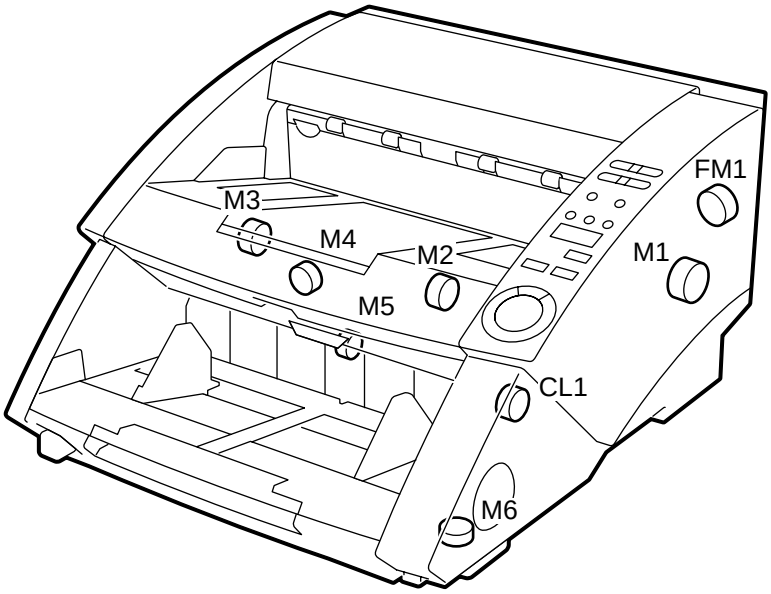

Fig. 3-40

Symbol	Name	Code	Function
CL	Clutch	CL1	Drive the Registration rollers ON/OFF
M	Motor	M1 M2 M3 M4 M5 M6	Feed the document (main moter) Drive the pickup roller Drive the feeding roller Ajust the gap Drive the separation roller Drive the document board up/down
FM	Fan motor	FM1	Cool the inside of machine (exhaust)

Table 3-13

 COPYRIGHT © 1999 CANON ELECTRONICS INC.

C. PCB assemblies and Units

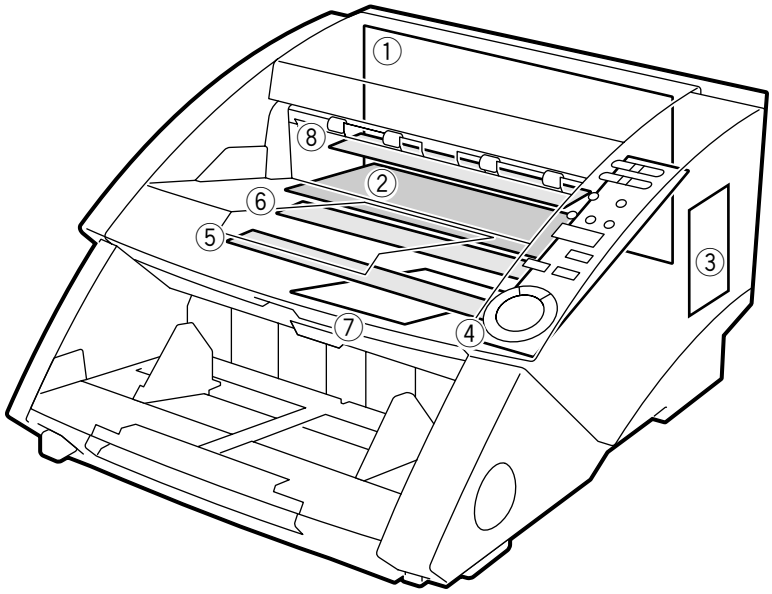

Fig. 3-41

Code	Name	Function
①	Main CPU PCB assembly (SH2-MAIN)	Image processing and main control
②	Pickup control PCB assembly (K4-SUB)	Control of the document feed
③	Document board control PCB assembly (K0-SUB2)	Control of the document board and the separation roller
④	Operation panel PCB assembly	Setting the conditions and display
⑤	Lower reading Unit	Reading the back side of document
⑥	Upper reading unit	Reading the front side of document
⑦	DC power supply PCB assembly	DC power supply
⑧	Imprinter PCB assembly	Driving the Imprinter

Note: For the PCB assemblies related with sensor, refer to the “A. Switches and Sensors.”

Table 3-14

IX. LIST OF VARIABLE RESISTORS, SWITCHES & LEDS FOR EACH CIRCUIT BOARD

Only the VRs (variable resistors), SWs (switches) and LEDs mounted on the PCB assemblies that are necessary for servicing the machine at the field are described below.

VRs, SWs and LEDs not listed in the tables are for factory adjustment only. Special tools and measuring instruments are required to perform adjustments and checks using these VRs, SWs and LEDs. Often a high degree of accuracy is demanded. For this reason, do not touch these VRs, SWs and LEDs at the field.

Note: This machine does not have the VRs that may be adjusted in the field.

A. Main CPU PCB Assembly (SH2-MAIN)

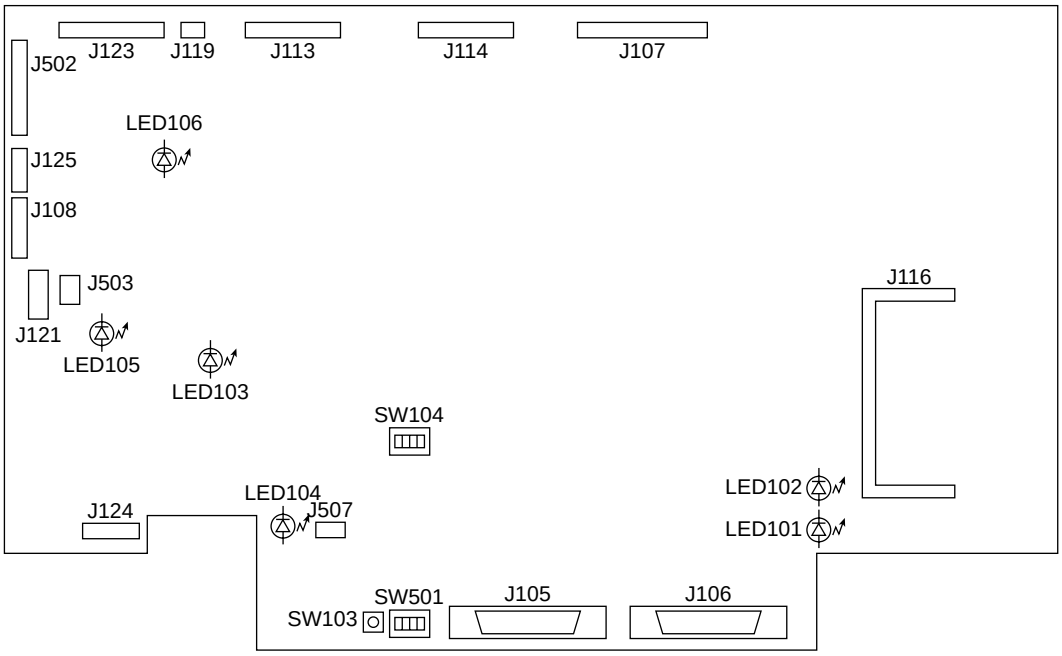

Fig. 3-42

 COPYRIGHT © 1999 CANON ELECTRONICS INC. CANON DR-5020/5080C REV.0 JUNE 1999 PRINTED IN JAPAN (IMPRIME AU JAPON)

<table>
<tr><th>LED No.</th><th>Display</th></tr>
<tr><td>LED101
LED102</td><td>• Display the states of CPU
<table>
<tr><th>LED101</th><th>LED102</th><th>Meaning</th></tr>
<tr><td>OFF</td><td>flashing</td><td>Operating normally DR-5080C</td></tr>
<tr><td>flashing</td><td>OFF</td><td>Operating normally DR-5020</td></tr>
<tr><td>flashing</td><td>flashing</td><td>Writing the software</td></tr>
</table></td></tr>
<tr><td>LED103
LED104
LED105
LED106</td><td>• +5V normal → lit
• +3.3V normal → lit
• +24V normal → lit
• -5V normal → lit</td></tr>
</table>

Table 3-15

<table>
<tr><th>Switch No.</th><th>Setting</th></tr>
<tr><td>SW103</td><td>• Switch for the service mode while pressing this switch, press the stop key on the operation panel, enter the service mode.
Note: Do not turn the power switch on, while pressing this switch. If it is done, turn the power off immediately.</td></tr>
<tr><td>SW104</td><td>• Switch for the designing section. Turn all switch off. Do not change the setting in the field.
 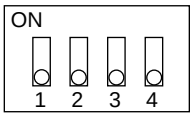
</td></tr>
<tr><td>SW501</td><td>• Switch for SCSI related
1: Terminater ON/OFF
2 to 4: SCSI ID setting For the details, refer to the instruction manual.
Intial setting
Terminater: OFF
SCSI ID: 2
 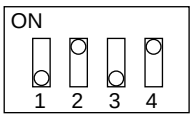
</td></tr>
</table>

Table 3-16

B. Pickup control PCB Assembly (K4-SUB)

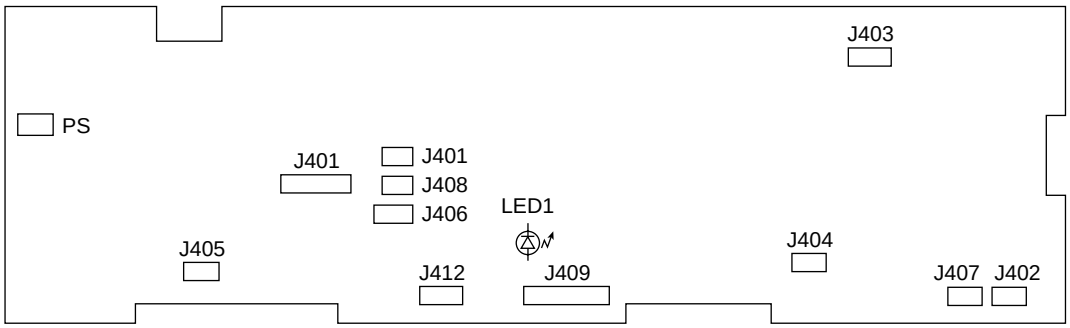

Fig. 3-43

LED No.	Display
LED1	• CPU operates normally → flashing

Table 3-17

 COPYRIGHT © 1999 CANON ELECTRONICS INC. CANON DR-5020/5080C REV.0 JUNE 1999 PRINTED IN JAPAN (IMPRIME AU JAPON)

C. Document board control PCB Assembly (K0-SUB2)

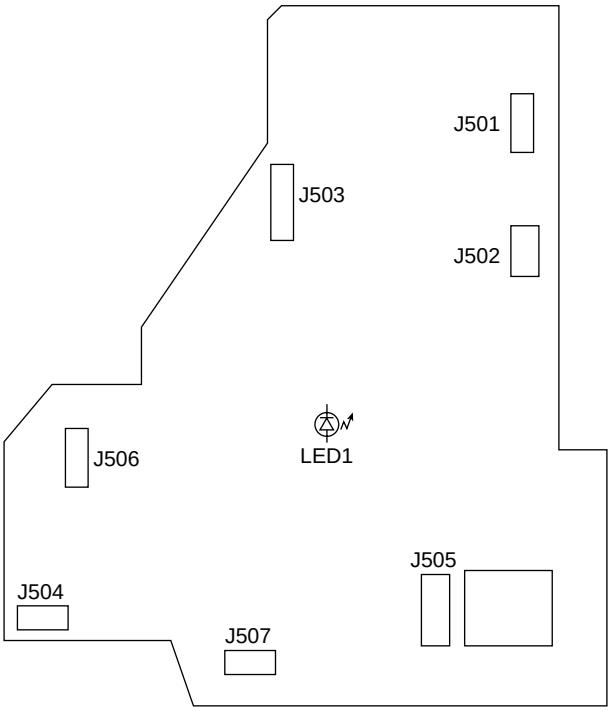

Fig. 3-44

LED No.	Display
LED1	• CPU operates normally → flashing

Table 3-18

Chapter 4

DISASSEMBLY & REASSEMBLY

This chapter describes the disassembly and reassembly procedure.
When disassembling and reassembling the machine, observe the following.

1. Before starting the disassembly and reassembly operations be sure to disconnect the power to the machine for safety sake.
2. Reassembly can be performed in the opposite way to disassembly unless otherwise mentioned.
3. In reassembly, do not confuse the type of screws (length and diameter) and their location.
4. To ensure positive continuity of electricity, a toothed washer is used as a ground retaining screw. Be sure to use this washer when reassembling the machine.
5. As a rule, do not operate the machine with any part removed.

I. EXTERNAL 4-1
II. DRIVE (MOTORS) 4-11
III. FEED (ROLLERS) 4-16
IV. EXPOSURE 4-27
V. ELECTRICAL (PCBS, ETC.) 4-30

COPYRIGHT © 1999 CANON ELECTRONICS INC. CANON DR-5020/5080C REV.0 JUNE 1999 PRINTED IN JAPAN (IMPRIME AU JAPON)

I. EXTERNAL

A. Outside Covers

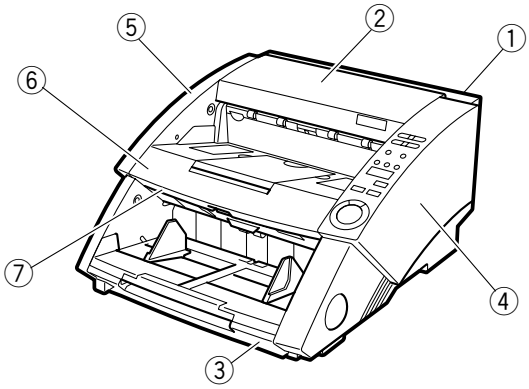

Fig. 4-101

	Screw	Hook
① Rear cover	(7)	[0]
② Top cover	(1)	[2]
③ Lower front cover	(0)	[4]
④ Right cover assembly	(2)	[1]
⑤ Left cover assembly	(2)	[1]
⑥ Upper delivery cover assembly	(4)	[0]
⑦ Front delivery cover	(4)	[0]

Note 1: The figures in ( ) and [ ] mean the numbers of fixing screw and mounting hooks, respectively.

1. Rear cover

1) Remove seven screws ①, and remove the rear cover ②.

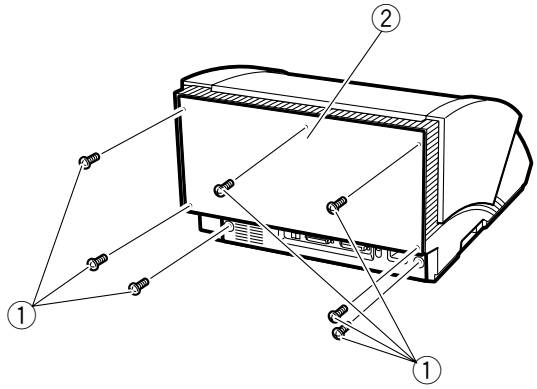

① Screw ② Rear cover

Fig. 4-102

2. Top cover

1) Remove the rear cover.
2) Remove one screw ① (self-tapping) and detach two hooks ②, and remove the top cover ③.

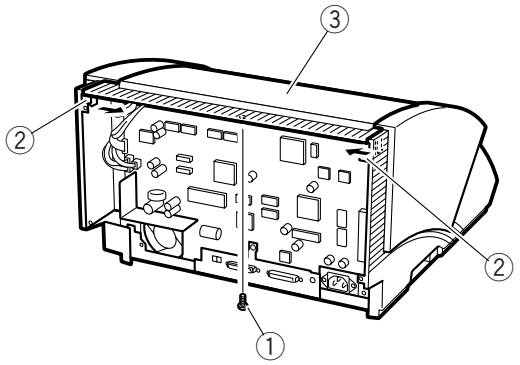

① Screw ② Hook
③ Top cover

Fig. 4-103

Note 1: Be careful as the blind plates A/B ① sometimes fall of their own weight.
Note 2: When reassembling, make sure to insert the positioning boss ② of the top cover into the hole in the main body.

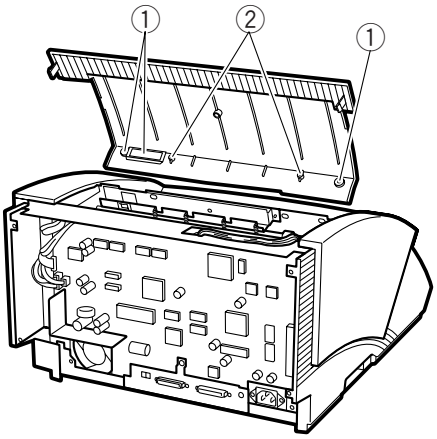

① Blind plates A/B ② Boss

Fig. 4-104

3. Lower front cover

1) Insert a thin and flat-tipped tool (screw driver or nipper etc.) between the pin ① and stopper ② and pull out the pins, remove the stoppers, and then remove the lower side of the safety shield ③.

Note 1: Do not make a hurt at removing the pin and stopper.

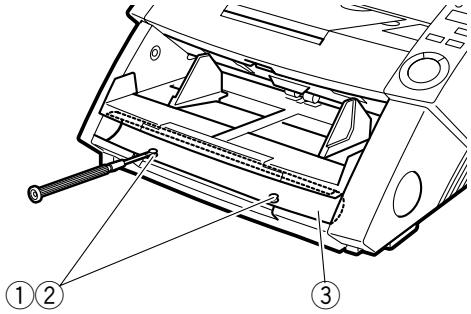

① Pin ② Stopper
③ Safety shield

Fig. 4-105

 COPYRIGHT © 1999 CANON ELECTRONICS INC.

2) Detach the four hooks ① (two on each side), and remove the lower front cover ②.

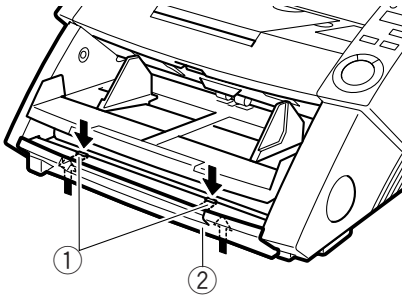

① Hook ② Front cover

Fig. 4-106

Note 1: The work will be easier to do if the document board is stopped in its topmost position.

Note 2: If the pin and the stopper should become deformed or damaged, replaced them with new parts.

Note 3: When inserting the pin and stopper, be careful as they are tight.

4. Right cover (assembly)

1) Remove the top cover.
2) Remove the lower front cover.
3) Remove two screws ① (of which one screw is the self-tapping), detach one hook ②, and pull out the right cover assembly ③.

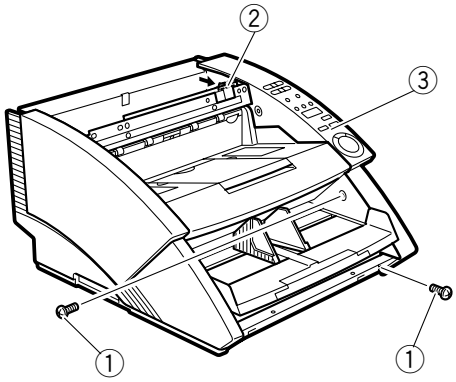

① Screw ② Hook
③ Right cover assembly

Fig. 4-107

4) Disconnect one connector ①, and remove the right cover assembly ②.

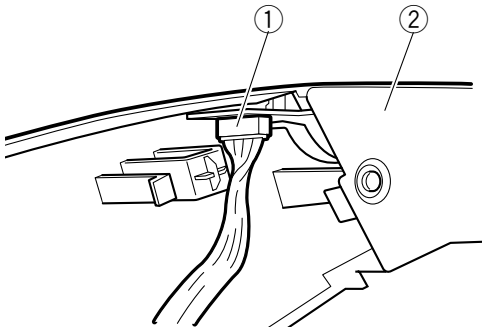

① Connector ② Right cover assembly

Fig. 4-108

5) Remove two screws ① (self-tapping), and remove the right inner cover ②. Be careful as a leaf spring ③ is fastened together with the right inner cover.

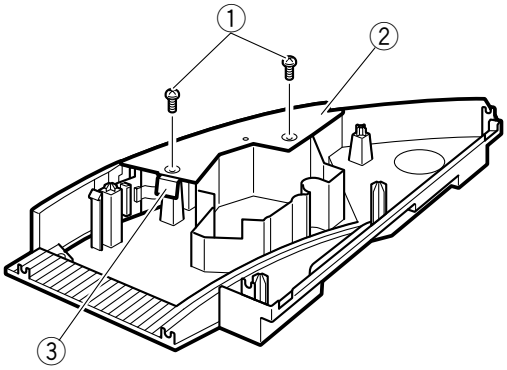

① Screw ② Right inner cover
③ Leaf spring

Fig. 4-109

6) Remove three screws ① (self-tapping), remove the operation panel ②, and separate the right cover ③.

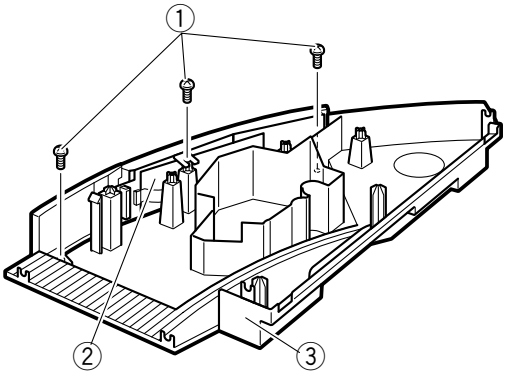

① Screw ② Operation panel
③ Right cover

Fig. 4-110

Note 1: When reassembling the leaf spring, make sure it is facing in the proper direction. After the right cover assembly is assembled in the main body, the tipped face of the leaf spring should contact with the side plate of the main body.

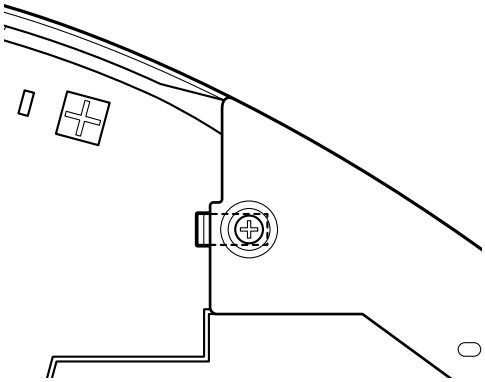

Fig. 4-111

 COPYRIGHT © 1999 CANON ELECTRONICS INC.

5. Left cover (assembly)

1) Remove the top cover.
2) Remove the lower front cover.
3) Remove two screws ① (of which one screw is the self-tapping), detach one hook ②, and remove the left cover assembly ③.

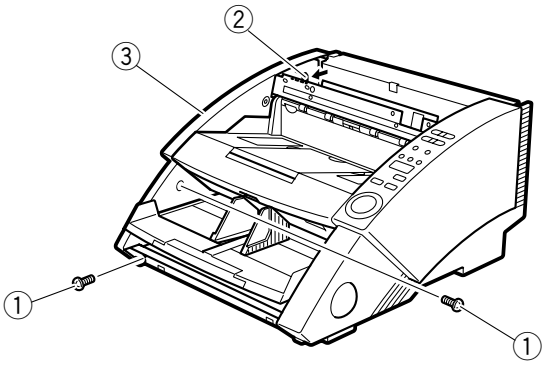

① Screw ② Hook
③ Left cover assembly

Fig. 4-112

4) Remove two screws ① (self-tapping), remove the left inner cover ② and separate the left cover ③. Be careful as a leaf spring ④ is fastened together with the left inner cover.
5) Remove three screws (self-tapping), remove the operation panel, and separate the right cover.

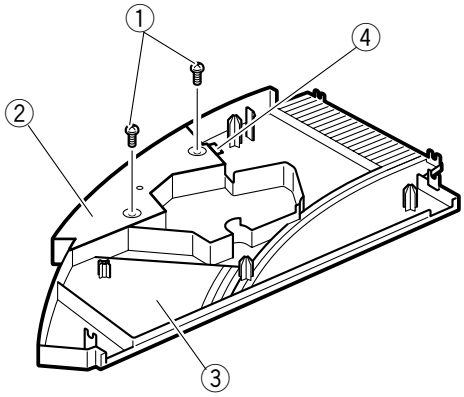

① Screw ② Left inner cover
③ Left cover ④ Leaf spring

Fig. 4-113

Note 1: When reassembling the leaf spring, make sure it is facing in the proper direction. After the left cover assembly is assembled in the main body, the tipped face of the leaf spring should contact with the side plate of the main body.

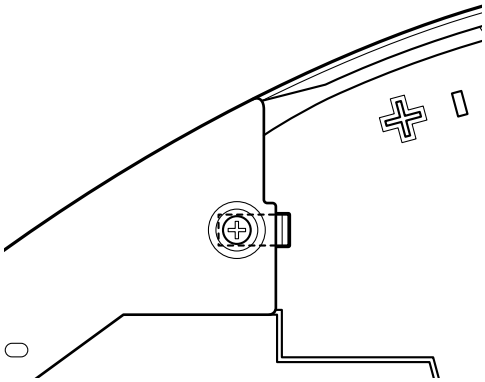

Fig. 4-114

6. Upper delivery cover (assembly)

1) Remove four screws ① (two on each side), and remove the upper delivery cover assembly ②.

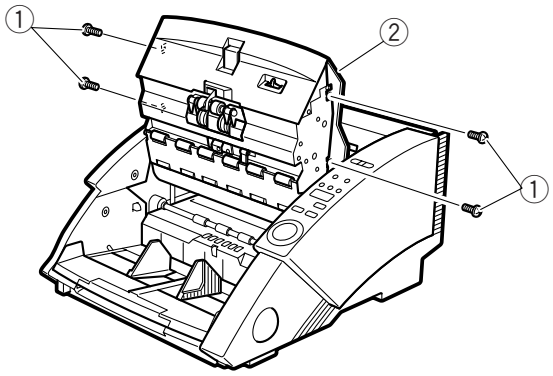

① Screw
② Upper delivery cover assembly

Fig. 4-115

2) Loosen one screw ①, detach the end of the spring ② at the reverse side. Be careful not to lose or deform the spring.

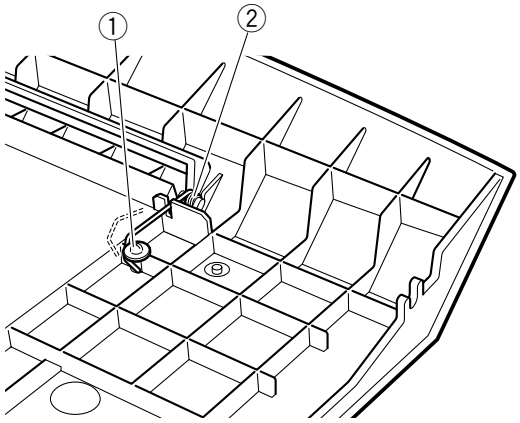

① Screw ② Spring

Fig. 4-116

3) Remove the delivery tray assembly ① while turning it.

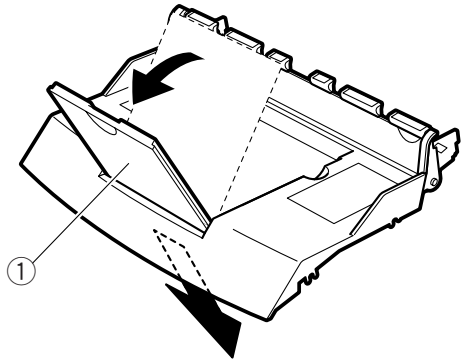

① Delivery tray assembly

Fig. 4-117

4) Remove the bosses on the both sides warping the IP cover ① and separate it from the upper delivery cover ②.

Note 1: In the case that the fixing hooks of the IP cover are not cut off, stretch the upper delivery cover slightly by pulling the both sides to release the fixing hooks.

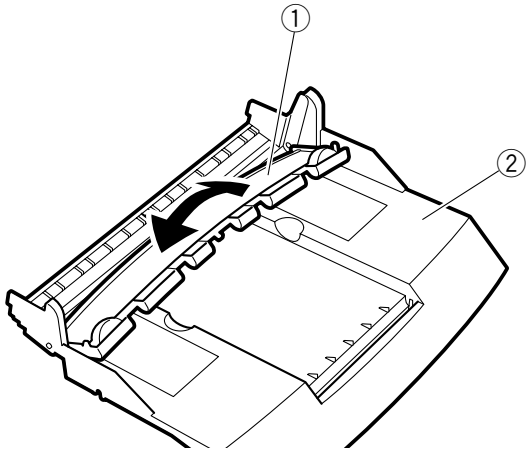

① IP cover ② Upper delivery cover

Fig. 4-118

 COPYRIGHT © 1999 CANON ELECTRONICS INC. CANON DR-5020/5080C REV.0 JUNE 1999 PRINTED IN JAPAN (IMPRIME AU JAPON)

7. Front delivery cover

1) Remove the upper delivery cover assembly.
2) Remove four screws ①, and remove the front delivery cover ②. Be careful because when the front delivery cover is removed, the open/close button shaft assembly will come off.

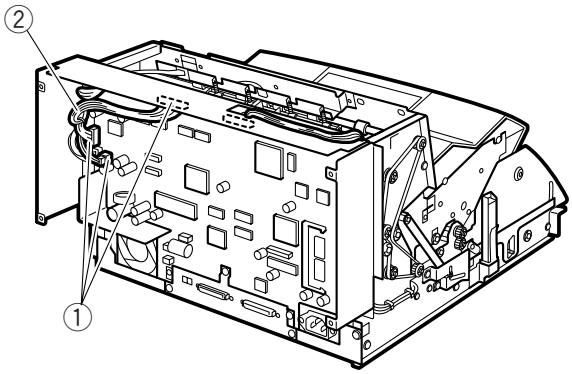

① Screw ② Front delivery cover

Fig. 4-119

Note 1: When reassembling the open/close button shaft assembly ①, hook the left and right arms ② on the lock release arm ③.

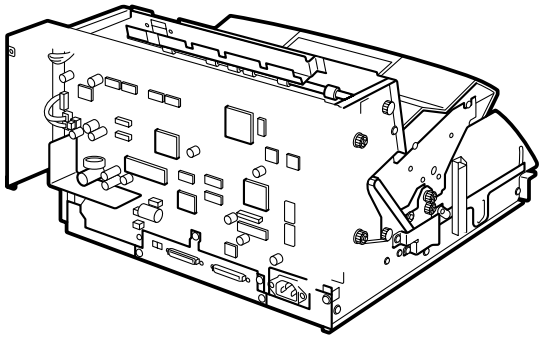

① Open/close button shaft assembly
② Arm ③ Lock release arm

Fig. 4-120

4) Remove two screws ① (one on each side), and take off the pivot assemblies ②.

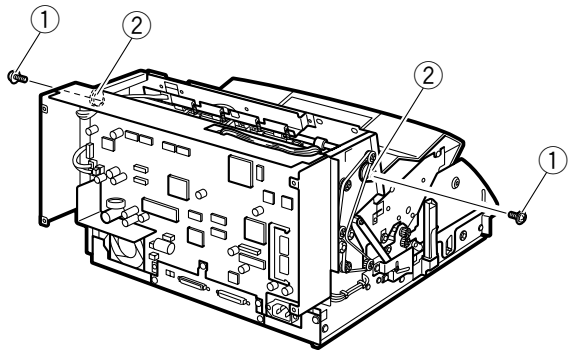

① Screw ② Pivot assembly

Fig. 4-123

5) Hold the upper unit ①, and, while paying attention to the cable assembly ②, disengage the damper gear ③, and remove the upper unit.

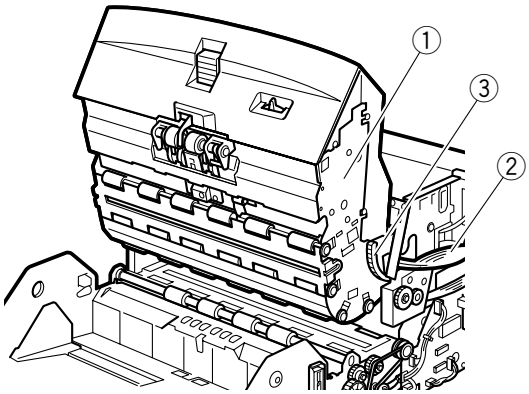

① Upper unit ② Cable assembly
③ Damper gear

Fig. 4-124

Note 1: Be careful not to scratch or damage the reading glasses and the rollers.

Note 2: When reassembling, if the lock is activated in the closed state, first release the left lock mechanism and then reattach the lock plate. Check that the lock catches when the upper unit is opened.

2. Document board assembly

1) Remove the left cover assembly and the right cover assembly.
2) Remove two screws ① and remove the catch arm assembly ②.

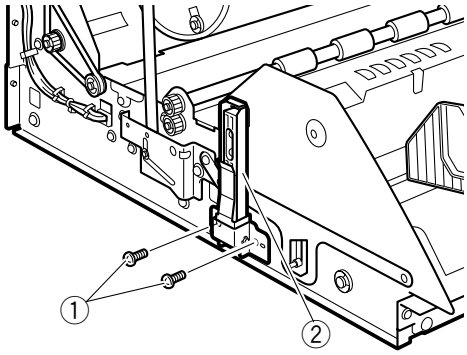

① Screw ② Catch arm assembly

Fig. 4-125

3) Remove one screw ①, and remove the document board arm (left) ② and the link plate ③.

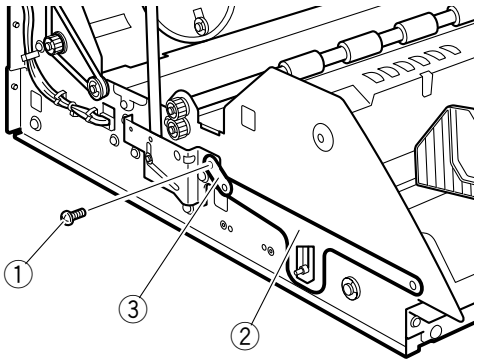

① Screw
② Document board arm (left)
③ Link plate

Fig. 4-126

 COPYRIGHT © 1999 CANON ELECTRONICS INC.

4) Remove four screws ①, and remove the document board drive assembly ②, Then remove the document board raising/lowering sensor assembly ③.

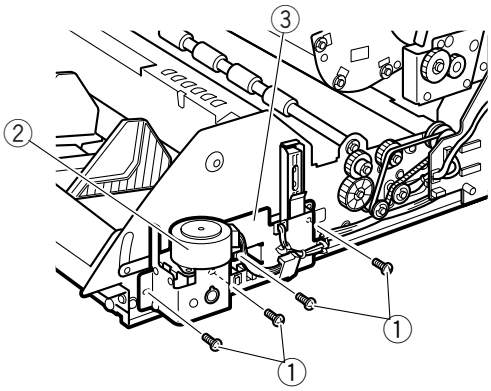

① Screw
② Document board drive assembly
③ Document board raising/lowering sensor assembly

Fig. 4-127

5) Remove two screws ①, and remove the catch arm assembly ② and then the document board arm (right) ③.

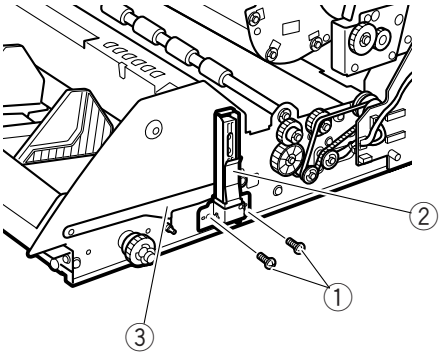

① Screw
② Catch arm assembly
③ Document board arm (right)

Fig. 4-128

6) Lift up the document board assembly ①, disconnect one connector ②, and remove the document board assembly.

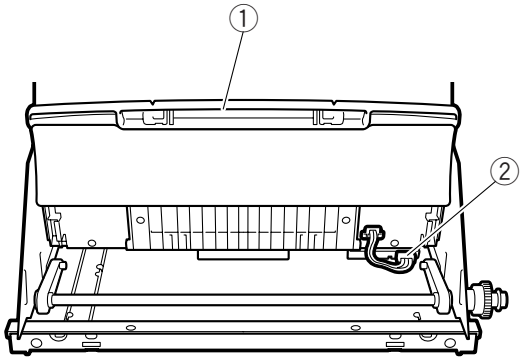

① Document board assembly
② Connector

Fig. 4-129

Note 1: When reassembling, after connecting the connector, place the left and right guides ① of the back of the document board assembly in the protruding portion of the document board raising/lowering arm ②.

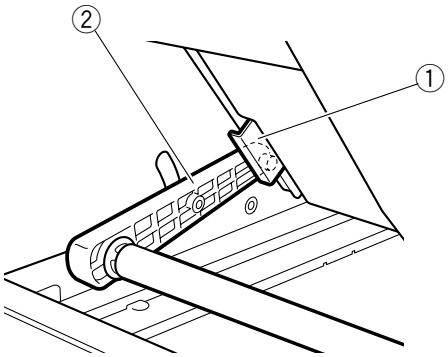

① Left and right guide
② Document board raising/lowering arm

Fig. 4-130

Note 2: Use M3 × 4 screws. If longer screws are used, there are places where they will strike the parts in the back.

3. Document guide

1) Remove the document board assembly.
2) Remove eight screws ① (self-tapping), and remove the safety shield ②, the expandable tray mount plate ③ and the expandable tray assembly ④.

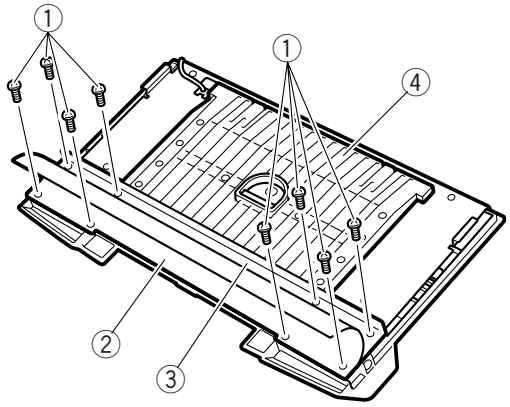

① Screw ② Safety shield
③ Expandable tray mount plate
④ Expandable tray assembly

Fig. 4-131

3) Remove six screws ① (self-tapping), and remove the document board reinforcing plate ②.

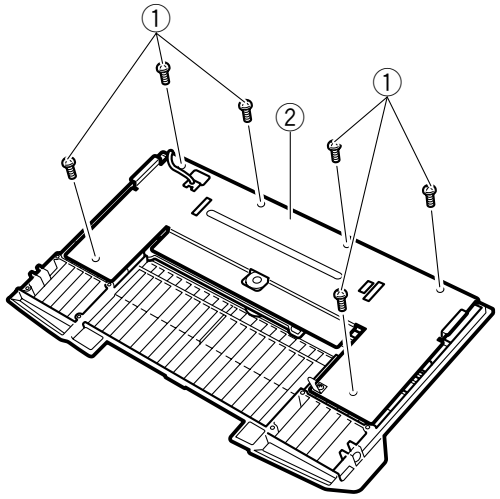

① Screw
② Document board reinforcing plate

Fig. 4-132

4) Remove four screws ① (two on each side, M2.6 × 5, self-tapping), and remove the document board guides (left and right). Do not make dirty the contacts and the contact faces on the PCB assembly.

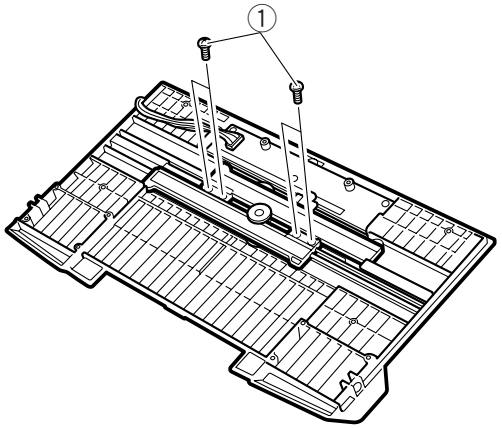

① Screw

Fig. 4-133

Note 1: When reassembling, arrange the document guides ① in symmetrical positions on the left and right sides.

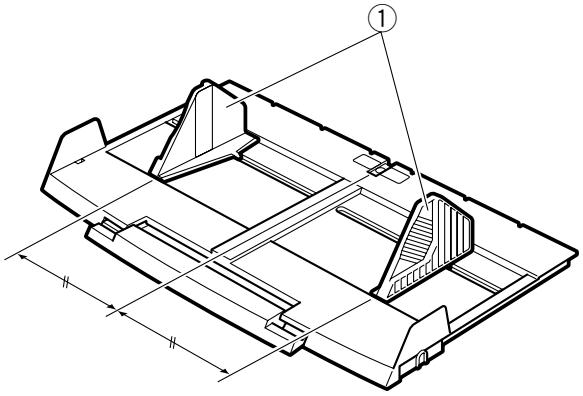

① Document guide

Fig. 4-134

 COPYRIGHT © 1999 CANON ELECTRONICS INC. CANON DR-5020/5080C REV.0 JUNE 1999 PRINTED IN JAPAN (IMPRIME AU JAPON)

II. DRIVE (MOTORS)

1. Main motor

1) Remove the DC power supply PCB assembly. For details, refer to another section.
2) Remove the document board control PCB assembly (K0-SUB2). For details, refer to another section.
3) Remove two screws ①, and remove the belt ②, then the main motor ③.

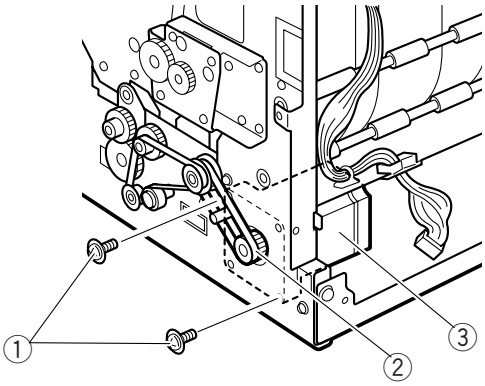

① Screw ② Belt
③ Main motor

Fig. 4-201

Note 1: When reassembling, secure the main motor so that the belt does not loosen.

2. Document board motor

1) Remove the right cover assembly.
2) Disconnect one connector ①, remove two screws ②, and then remove the document board drive assembly ③. When the document board drive assembly is removed, be careful because the bushing may come off.

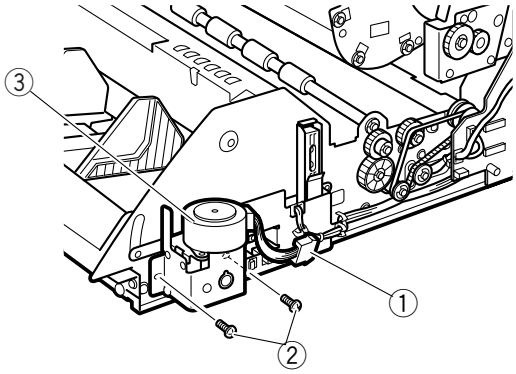

① Connector ② Screw
③ Document board assembly

Fig. 4-202

3) Remove two screws ①, and remove the document board motor ②.

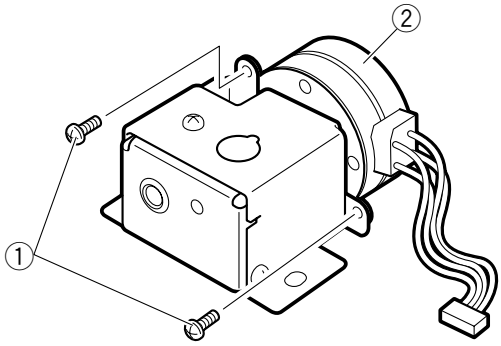

① Screw ② Document board motor

Fig. 4-203

Note 1: When reassembling the document board drive assembly, place the protruding portion of the bushing ① in the groove of the mount plate.

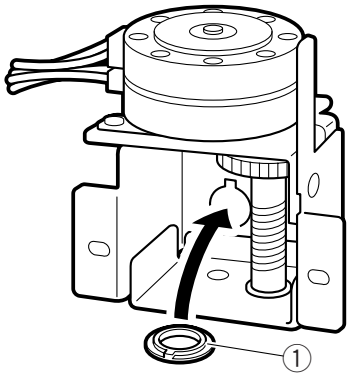

① Bushing

Fig. 4-204

3. Pickup motor

1) Remove the upper delivery cover assembly.
2) Disconnect one connector ①, remove two screws ②, and then remove the pickup motor ③.

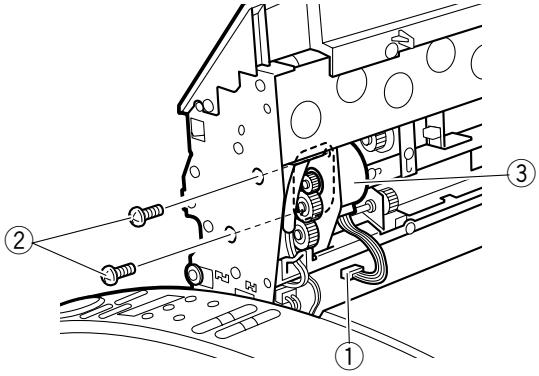

① Connector ② Screw
③ Pickup motor

Fig. 4-205

4. Feeding motor

1) Remove the upper delivery cover assembly.
2) Disconnect one connector ①, remove two screws ②, and then remove the feeding motor ③.

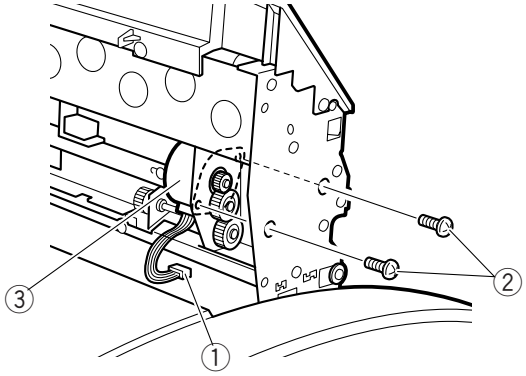

① Connector ② Screw
③ Pcikup motor

Fig. 4-206

5. Gap adjusting motor

1) Remove the front delivery cover assembly.
2) Move the open/close button shaft assembly ① horizontally and take it off.

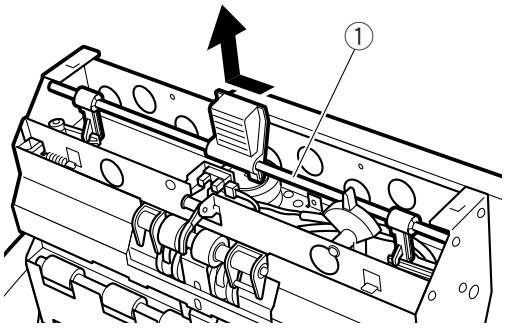

① Open/close button shaft assembly

Fig. 4-207

 COPYRIGHT © 1999 CANON ELECTRONICS INC. CANON DR-5020/5080C REV.0 JUNE 1999 PRINTED IN JAPAN (IMPRIME AU JAPON)

3) Disconnect one connector ① and then remove the spring ②. Turn the shutter ③ and disengage it from the sensor ④ of the sensing portion.

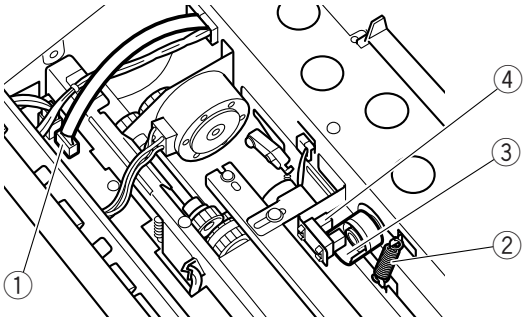

① Connector ② Spring
③ Shutter ④ Sensor

Fig. 4-208

4) Remove one screw ① and remove the pickup sensor assembly ②.

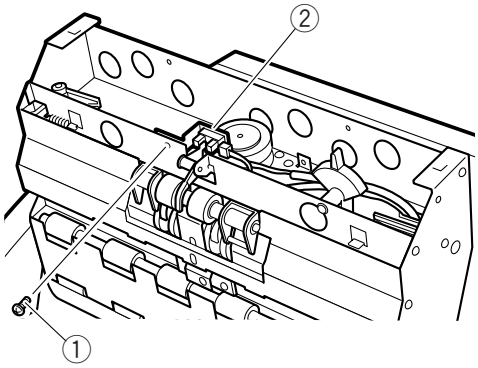

① Screw
② Pickup sensor assembly

Fig. 4-209

5) Remove two screws ①, shift the gap adjusting motor assembly ② to the left and remove it. Be careful not to damage the pickup sensor lever ③.

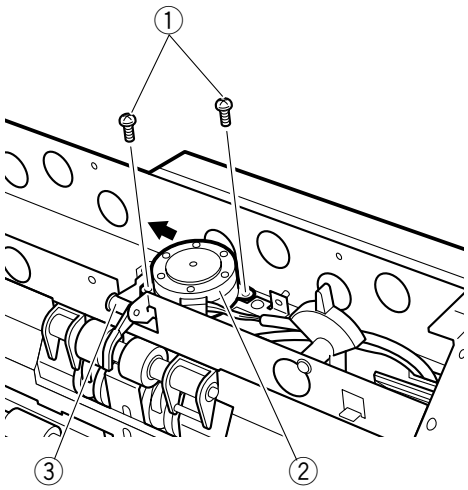

① Screw
② Gap adjusting motor assembly
③ Pickup sensor lever

Fig. 4-210

6) Remove washer ②, spring ③ and shutter ④ in that order while detaching the three hooks ①, and separate the gap adjusting motor ⑤. Be careful not to damage the hooks.

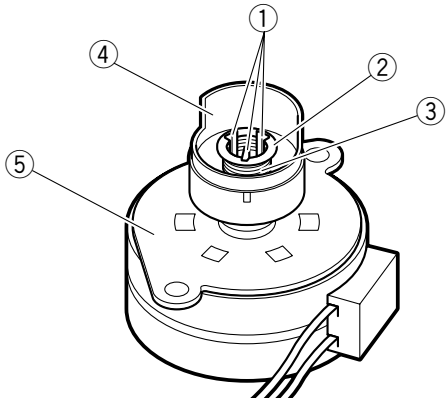

① Hook ② Washer
③ Spring ④ Shutter
⑤ Gap adjusting motor

Fig. 4-211

Note 1: When reassembling, place the cam ① on top of the cam follower ②.

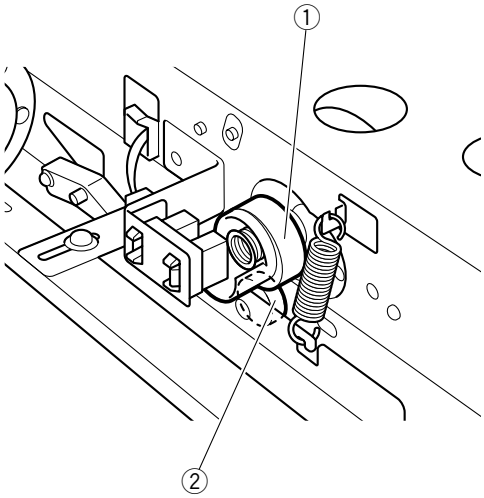

① Cam ② Cam follower

Fig. 4-212

Note 2: After reassembling, position the cam and shutter properly, and check and adjust the gap reference position. For details, refer to the section on troubleshooting in chapter 7.

6. Separation motor

1) Remove the lower registration roller. For details, refer to another section.
   If the document board assembly is removed, start from the step 2.
2) Remove the separation roller. For details, refer to another section.
3) Disconnect one connector ①, remove three screws ②, and shift the separation roller base assembly ③ to the left.

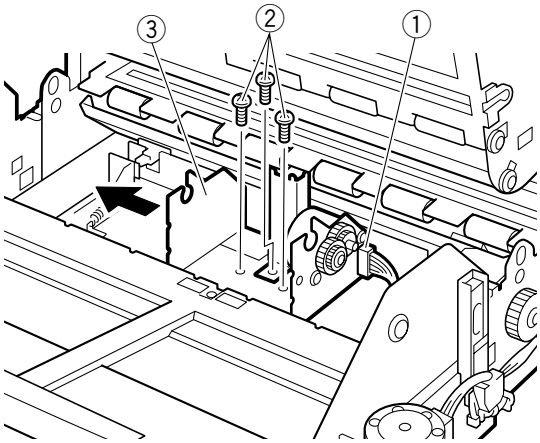

① Connector ② Screw
③ Separation roller base assembly

Fig. 4-213

4) Remove two screws ①, disconnect one connector ②, and remove the separation motor ③.

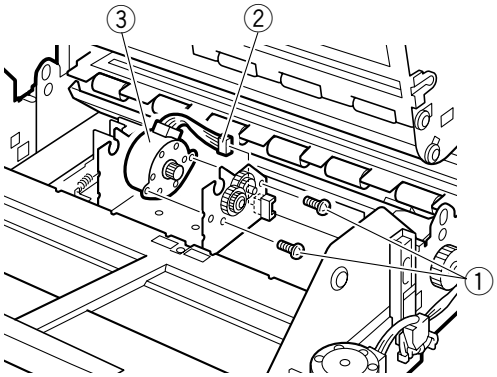

① Screw ② Connector
③ Separation motor

Fig. 4-214

 COPYRIGHT © 1999 CANON ELECTRONICS INC. CANON DR-5020/5080C REV.0 JUNE 1999 PRINTED IN JAPAN (IMPRIME AU JAPON)

7. Registration clutch

1) Remove the lower registration roller. For details, refer to another section.
2) Remove one screw ① and remove the cover ②.

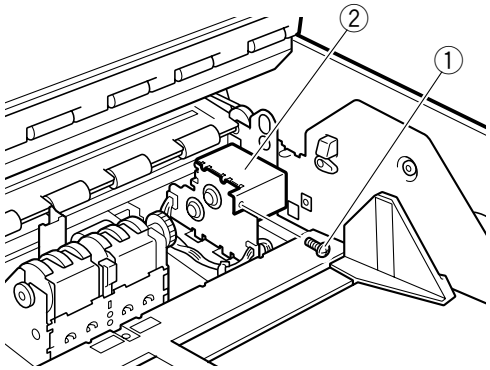

① Screw ② Cover

Fig. 4-215

3) Remove one E-ring ①, and then remove the gear ② and ball bearing ③.

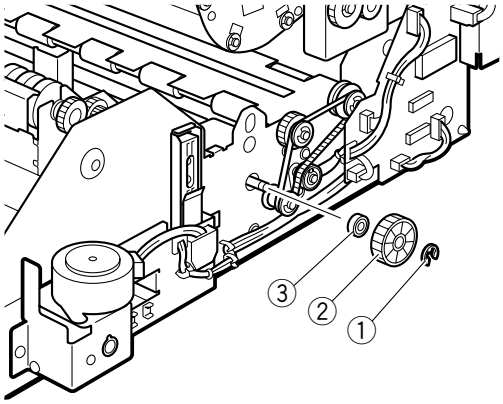

① E-ring ② Gear
③ Ball bearing

Fig. 4-216

4) Disconnect one connector ①, remove one E-ring ② and pull out the clutch shaft assembly ③ from the left. And remove the registration clutch ④.

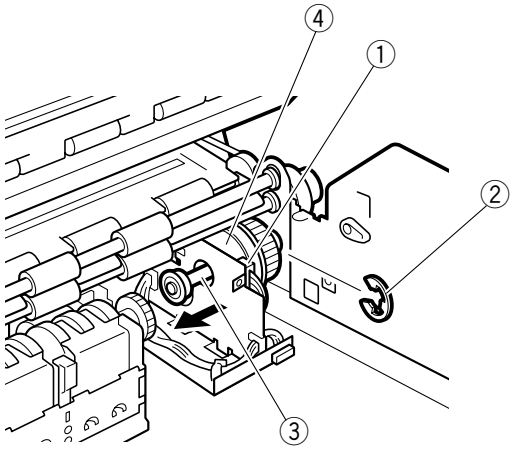

① Connector ② E-ring
③ Clutch shaft assembly
④ Registration clutch

Fig. 4-217

Note 1: When reassembling, place the positioning groove ① of the registration clutch on the protruding portion ② of the mount plate.

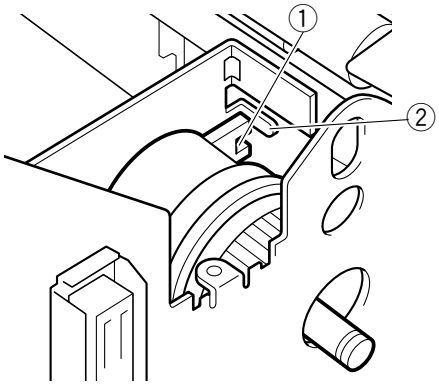

① Positioning groove ② Protruding portion

Fig. 4-218

III. FEED (ROLLERS)

1. Pickup roller

1) Lift up the sensor lever ①, push the pickup roller ② against the left, move and remove it.

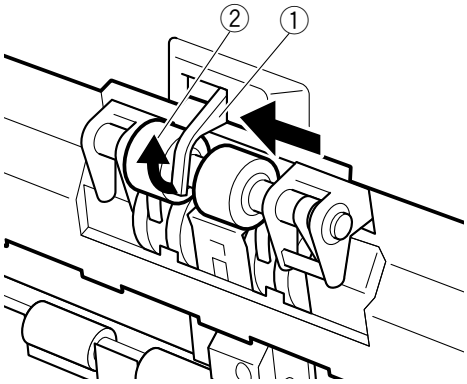

① Sensor lever ② Pickup roller

Fig. 4-301

Note 1: When reassembling, match the groove of the pickup roller ① to the pin ② position.

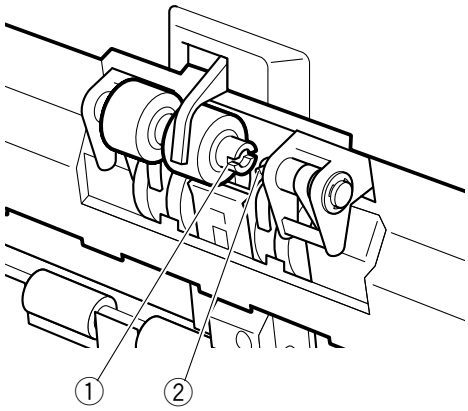

① Groove of the pickup roller
② Pin

Fig. 4-302

2. Feeding roller

1) Remove four screws ① (two on each side), and pull out the upper pickup guide plate ②.

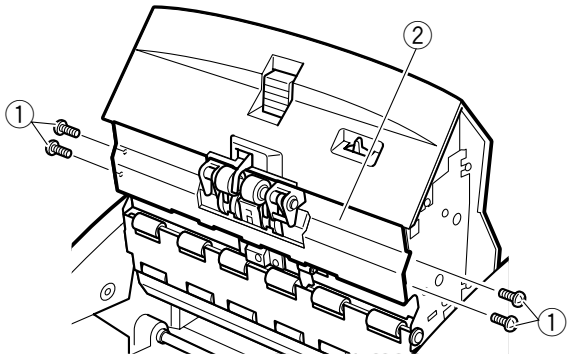

① Screw
② Upper pick up guide plate

Fig. 4-303

2) Disconnect one connector ① and remove the pickup guide plate ②.

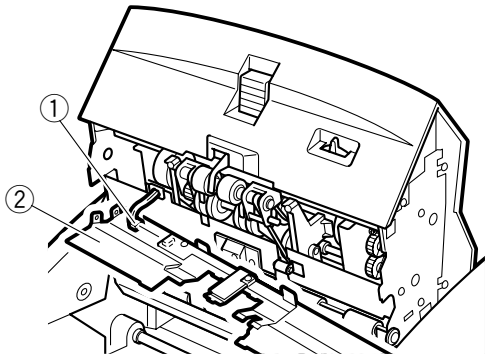

① Connector ② Pickup guide plate

Fig. 4-304

 COPYRIGHT © 1999 CANON ELECTRONICS INC. CANON DR-5020/5080C REV.0 JUNE 1999 PRINTED IN JAPAN (IMPRIME AU JAPON)

3) Remove two E-rings ①, and remove the ball bearings ②, washer ③ and wave washers ④.

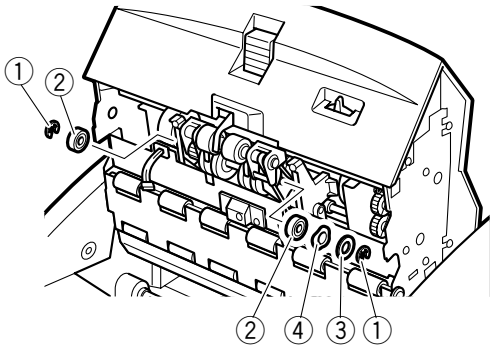

① E-ring ② Ball bearing
③ Washer ④ Wave washer

Fig. 4-305

4) Remove the belt ① and then remove the feeding roller assembly ②.

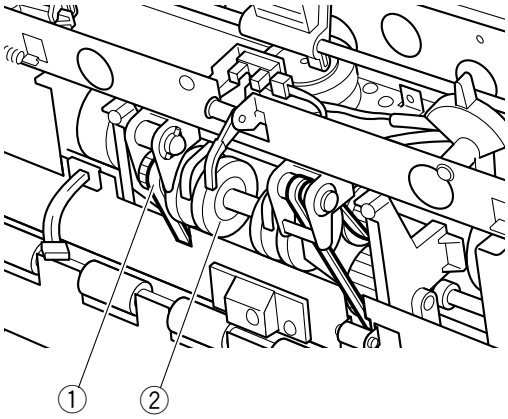

① Belt ② Feeding roller assembly

Fig. 4-306

5) Remove one E-ring ①, remove the pulley ② and separate the feeding roller ③.

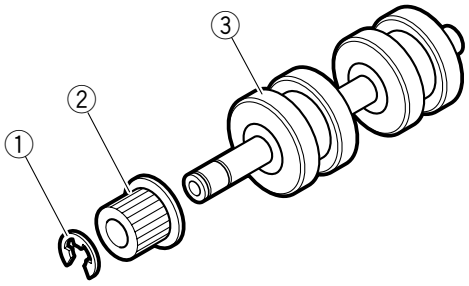

① E-ring ② Pulley
③ Feeding roller

Fig. 4-307

3. Separation roller

1) Remove two screws ① (M3×6, black), and remove the lower entry guide plate ②.

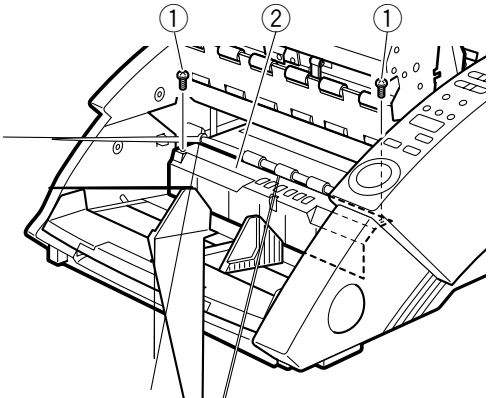

① Screw ② Entry guide plate

Fig. 4-308

2) Remove two hexagon socket head bolts ①, and remove the guide plate assembly ②.

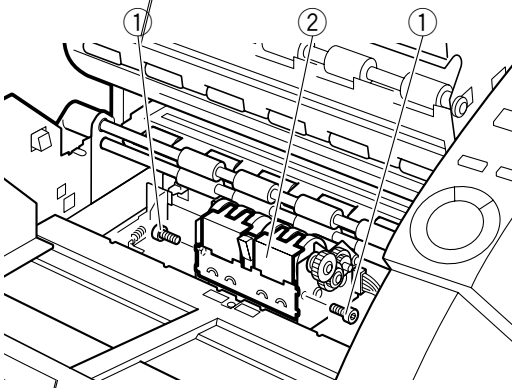

① Hexagon socket head bolt
② Guide plate assembly

Fig. 4-309

3) Remove two plastic rings ①, gear ②, pin ③, washer ④ and ball bearings ⑤, and then remove the separation roller ⑥. Be careful not to drop and lose the pin.

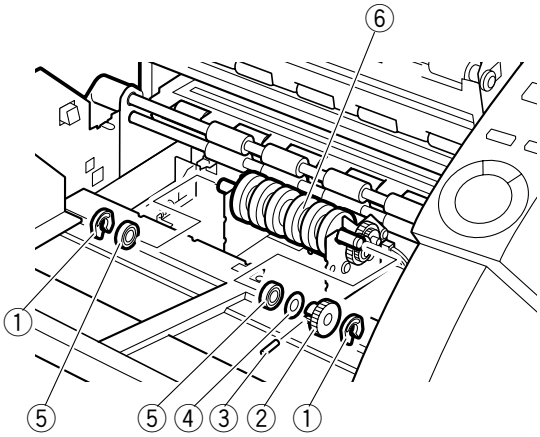

① Plastic ring ② Gear
③ Pin ④ Washer
⑤ Ball bearing ⑥ Separation roller

Fig. 4-310

Note 1: When reassembling, be careful not to touch the guide plate assembly and the separation roller.

 COPYRIGHT © 1999 CANON ELECTRONICS INC.

4. Upper registration roller

1) Remove the left cover assembly and the right cover assembly.
2) Remove two screws ① (M3×6, black), and remove the lower entry guide plate ②.

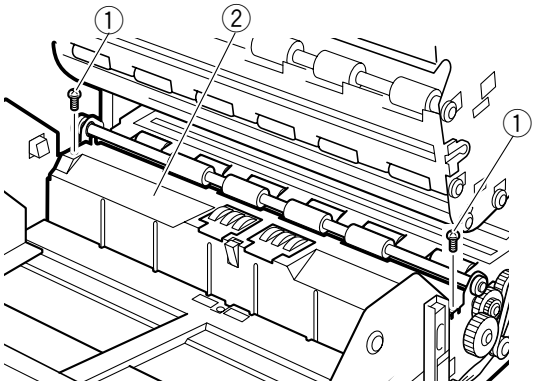

① Screw ② Lower entry guide plate

Fig. 4-311

3) Turn the upper registration guide plate ① and remove it.

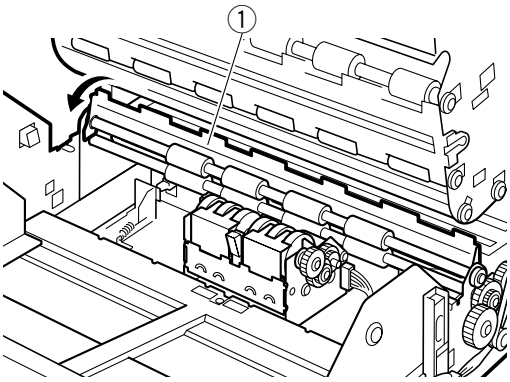

① Upper registration guide plate

Fig. 4-312

4) Remove two springs ① (one from each side) by taking them off the hooks.

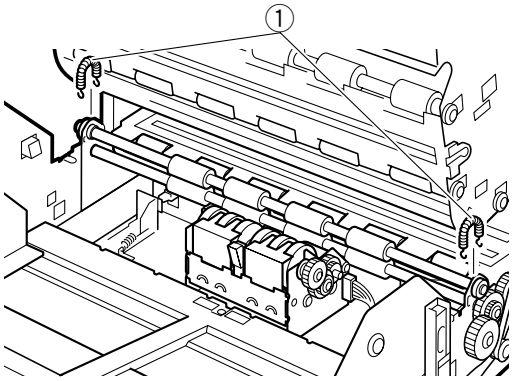

① Spring

Fig. 4-313

5) Remove two E-rings ① (one from each side), remove the gear ② and metal bushings ③, and then remove the upper registration roller ④.

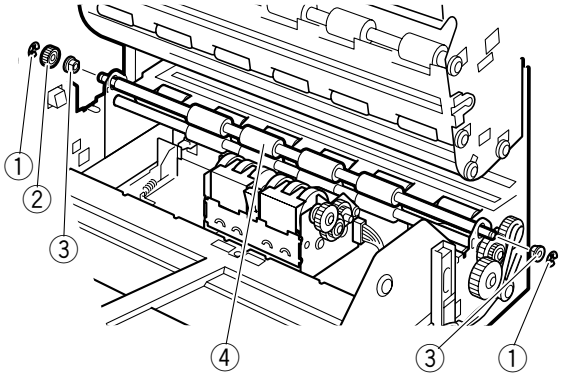

① E-ring ② Gear
③ Metal bushing ④ Upper registration roller

Fig. 4-314

Note 1: When reassembling, if the right side metal bushing does not go in, remove the right side E-ring ① of the lower registration roller, and then remove the gear ②.

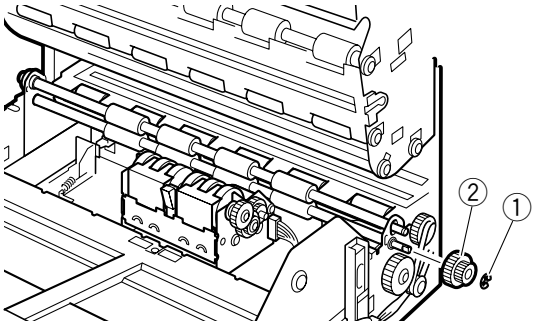

① E-ring ② Gear

Fig. 4-315

5. Lower registration roller

1) Remove the upper registration roller.
2) Remove two screws ① (one from each side), and remove the lower registration guide plate ②.

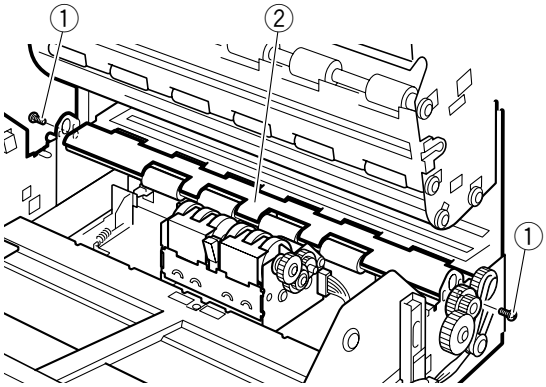

① Screw
② Lower registration guide plate

Fig. 4-316

3) Remove two E-rings ① (one from each side), remove the gear ②, remove the ball bearings ③, and then remove the lower registration roller ④.

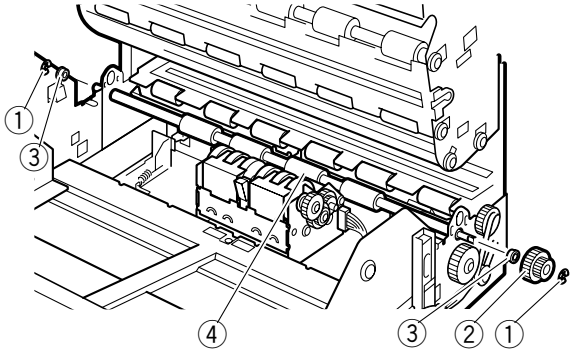

① E-ring ② Gear
③ Ball bearing ④ Lower registration roller

Fig. 4-317

 COPYRIGHT © 1999 CANON ELECTRONICS INC. CANON DR-5020/5080C REV.0 JUNE 1999 PRINTED IN JAPAN (IMPRIME AU JAPON)

6. Upper reading roller (feed follower roller 1: 2 pieces)

1) Remove the upper reading unit. For details, refer to another section.
2) Remove two E-rings ① (one from each side) per one roller.

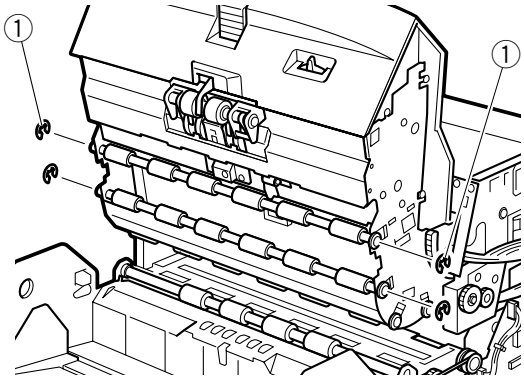

① E-ring

Fig. 4-318

3) Remove the leaf spring ① from the groove, remove the metal bushing ② and leaf spring at the same time, and then remove the upper reading roller ③ (feed follower roller 1).

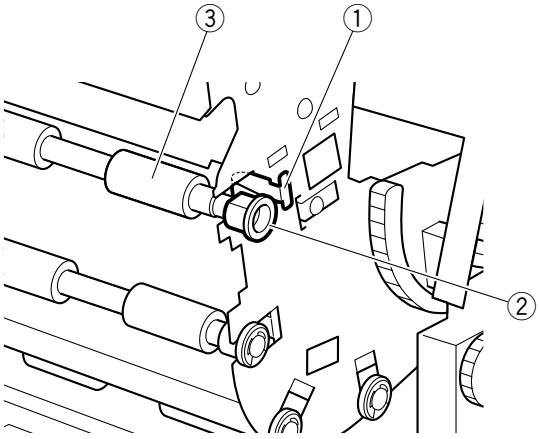

① Leaf spring ② Metal bushing
③ Upper reading roller

Fig. 4-319

Note 1: These rollers are the two feed follower rollers 1 on the upper reading unit.

7. Belt (right)

1) Remove the right cover assembly.
2) Loosen one screw ①, remove one E-ring ② and flange ③, and then remove the belt (right) ④.

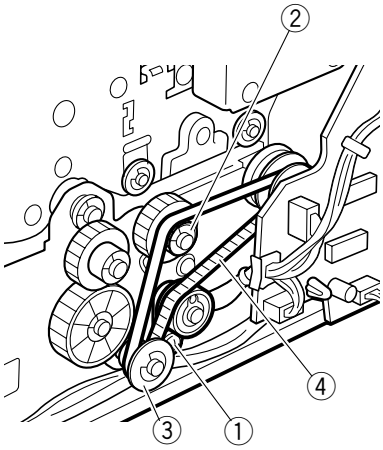

① Screw ② E-ring
③ Flange ④ Belt (right)

Fig. 4-320

Note 1: When reassembling, make sure the belt is not loose.

8. Belt (left)

1) Remove the left cover assembly.
2) Loosen one screw ① and remove the belt (left) ②.

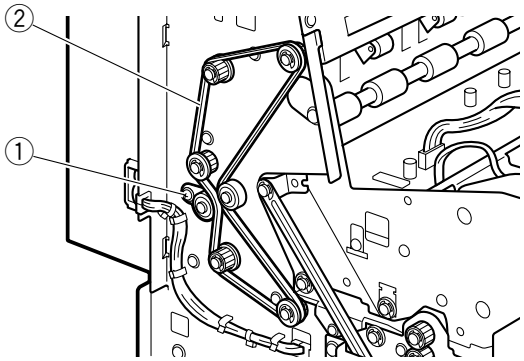

① Screw ② Belt (left)

Fig. 4-321

Note 1: When reassembling, make sure the belt is not loose. Also, make sure not to make a mistake in the direction of flange side with the pulley.

9. Lower reading roller A (front side)

1) Remove the lower reading unit. For details, refer to another section.
2) Remove the belt (right).
3) Remove two E-rings ① (one from each side), remove the flange ②, pulley ③, ball bearings ④, and washer ⑤, and then remove the lower reading roller A ⑥ (front side).

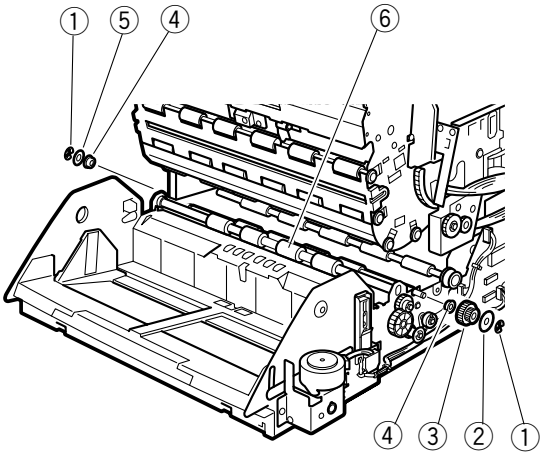

① E-ring ② Flange
③ Pulley ④ Ball bearing
⑤ Washer ⑥ Lower reading roller A

Fig. 4-322

 COPYRIGHT © 1999 CANON ELECTRONICS INC. CANON DR-5020/5080C REV.0 JUNE 1999 PRINTED IN JAPAN (IMPRIME AU JAPON)

10. Lower reading roller B (rear side)

1) Remove the lower reading unit. For details, refer to another section.
2) Remove the document board control PCB assembly (K0-SUB2). For details, refer to another section.
3) Remove the belt (left).
4) Remove two E-rings ① (one from each side), remove the flange ②, pulleys ③, and ball bearings ④, and then remove the lower reading roller B ⑤ (rear side).

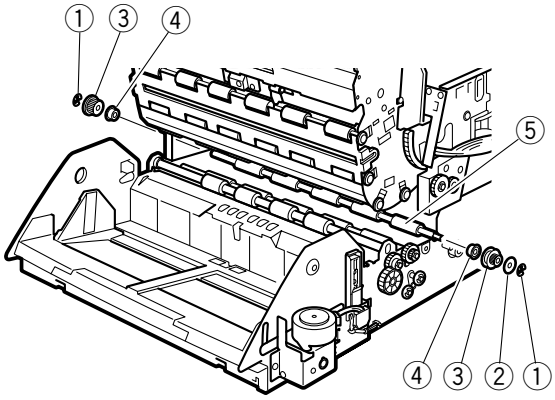

① E-ring ② Flange
③ Pulley ④ Ball bearing
⑤ Lower reading roller B

Fig. 4-323

11. Feed drive roller A

1) Remove the back plate assembly. For details, refer to another section.
2) Remove the document board control PCB assembly (K0-SUB2). For details, refer to another section.
3) Remove the belt (left).
4) Remove two E-rings ① (one from each side) per one roller, remove the pulley ②, washer ③, and ball bearings ④, and then remove the feed drive roller A ⑤.

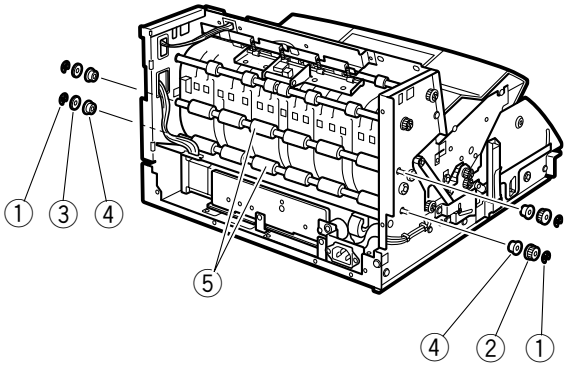

① E-ring ② Pulley
③ Washer ④ Ball bearing
⑤ Feed drive roller A

Fig. 4-324

Note 1: When reassembling the belt, make sure it is not loose.

12. Feed drive roller B

1) Remove the left cover assembly and the right cover assembly.
2) Remove the belt (left).
3) Remove two E-rings ① (one from each side), remove the pulley ②, washer ③ and ball bearings ④ in that order, and then remove the feed drive roller B ⑤.

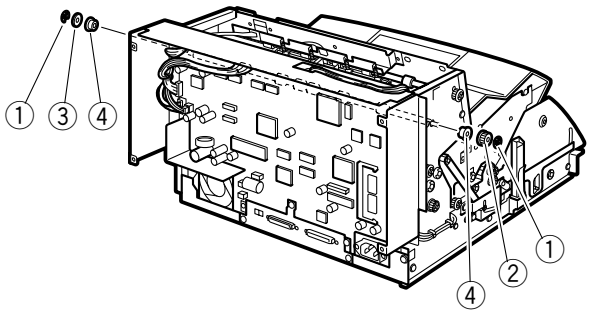

① E-ring ② Pulley
③ Washer ④ Ball bearing
⑤ Feed drive roller B

Fig. 4-325

13. Delivery drive roller

1) Remove the left cover assembly and the right cover assembly.
2) Remove the belt (left).
3) Remove four springs ①, remove two screws ②, and then remove the spring mount plate ③.

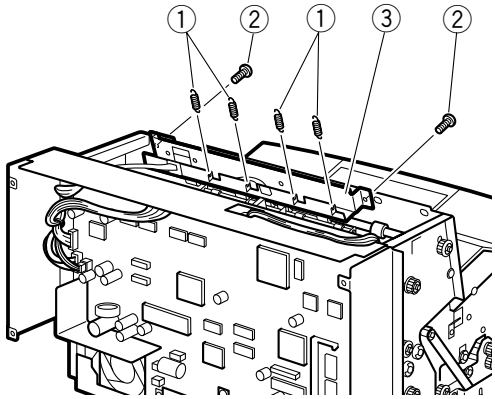

① Spring ② Screw
③ Spring mount plate

Fig. 4-326

4) Remove two E-rings ① (one from each side), remove the pulley ②, washer ③ and ball bearings ④, and then remove the delivery drive roller ⑤.

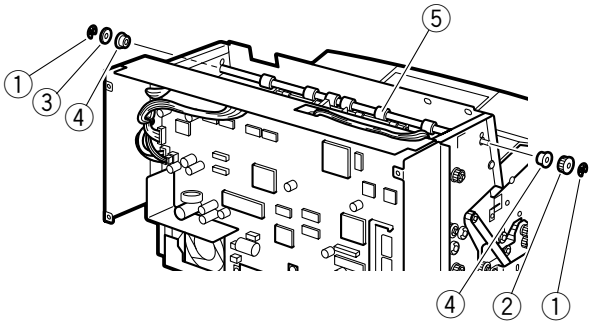

① E-ring ② Pulley
③ Washer ④ Ball bearing
⑤ Delivery drive roller

Fig. 4-327

 COPYRIGHT © 1999 CANON ELECTRONICS INC. CANON DR-5020/5080C REV.0 JUNE 1999 PRINTED IN JAPAN (IMPRIME AU JAPON)

14. Feed follower roller 1 and 2

1) Remove the upper unit. For details, refer to another section.
2) Remove six screws ① (three from each side) and then remove the guide plate assembly ②.

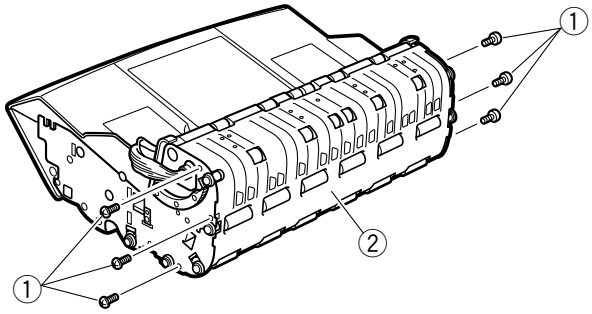

① Screw ② Guide plate assembly

Fig. 4-328

3) Remove two E-rings ① (one from each side) per one roller.

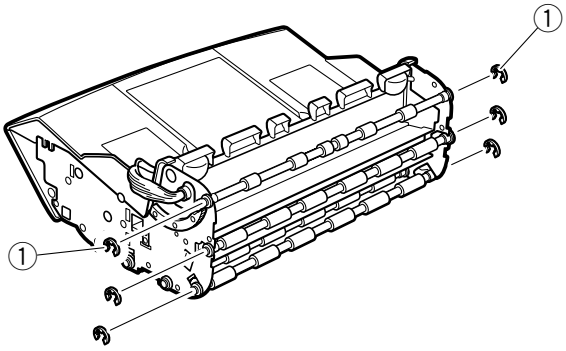

① E-ring

Fig. 4-329

4) Remove the leaf spring ① from the groove, remove the metal bushing ② and leaf spring at the same time, and then remove feed follower roller 1 ③ and feed follower roller 2 ④.

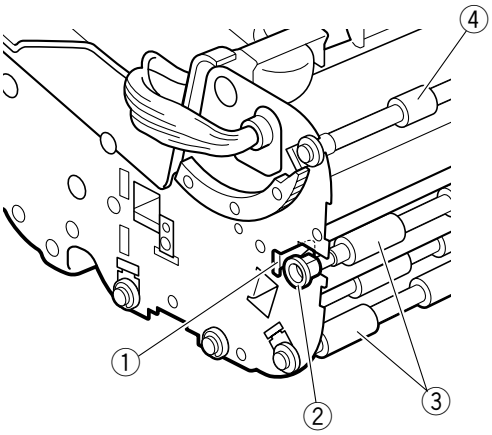

① Leaf spring ② Metal bushing
③ Feed follower roller 1 ④ Feed follower roller 2

Fig. 4-330

Note 1: The rear feed follower roller 1 can also be removed by first removing the upper delivery cover assembly and then carrying out the above procedure from step 3.

15. Delivery follower roller assembly

1) Remove the upper unit. For details, refer to another section.
2) Remove six screws (three from each side) and then remove the guide plate assembly.
3) Remove one screw ① per one roller assembly and then remove the delivery follower roller assembly ②.

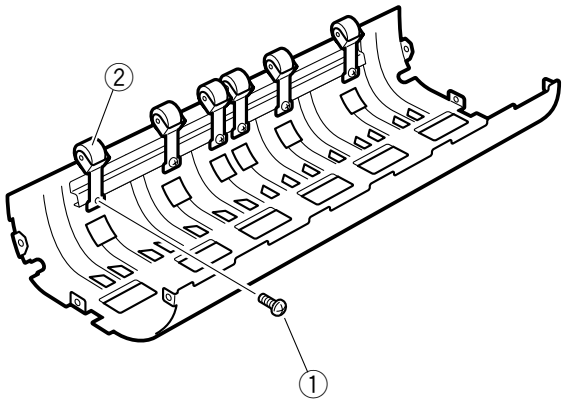

① Screw
② Delivery follower roller assembly

Fig. 4-331

Note 1: The shape of the two roller assemblies in the middle is different from that of the two roller assemblies on each side.

 COPYRIGHT © 1999 CANON ELECTRONICS INC.

IV. EXPOSURE

1. Upper reading unit

1) Remove the left cover assembly and the right cover assembly.
2) Remove two screws ① (stepped) and pull out the upper reading unit ② to the front.

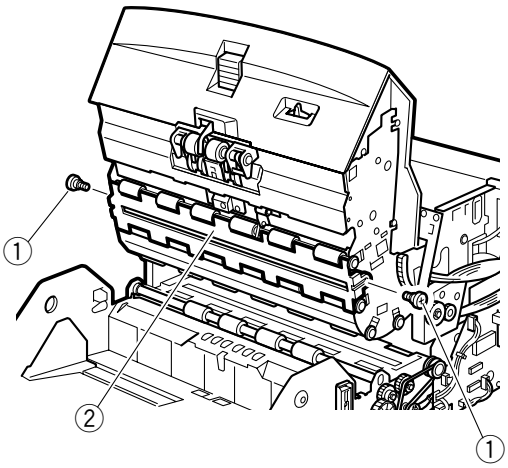

① Screw ② Upper reading unit

Fig. 4-401

3) Disconnect one connector ① and take out the upper reading unit ②.

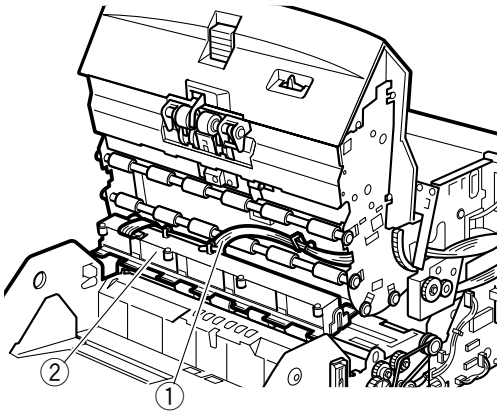

① Connector ② Upper reading unit

Fig. 4-402

Note 1: When reassembling, assemble the unit so that the cut out for the double feed sensor lever 2 is in the front.

2. Lower reading unit

1) Remove the left cover assembly and the right cover assembly.
2) Remove two screws ① (stepped), lift the lower reading unit ②, and while turning the upper registration guide plate ③, pull out the unit to the left.

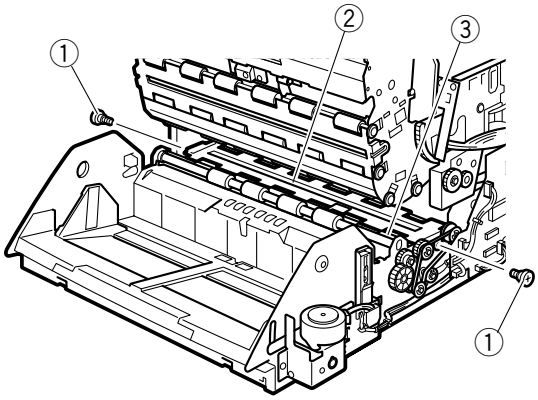

① Screw ② Lower reading unit
③ Upper registration guide plate

Fig. 4-403

3) Disconnect one connector ①, and take out the lower reading unit ②.

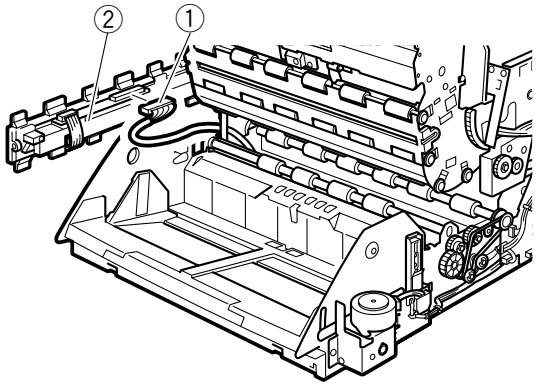

① Connector ② Lower reading unit

Fig. 4-404

Note 1: When reassembling, be careful not to pinch or jam the connected cable assembly.

Note 2: When reassembling, assemble the unit so that the face of double feed sensor reference plate touching with the double feed sensor lever 2 is in the front. Also, make sure that the upper registration guide plate is on top of the front side of the unit.

3. Upper LED unit

1) Remove the upper reading unit.
2) Disconnect one connector ①, remove two screws ② and then remove the PCB assembly ③.

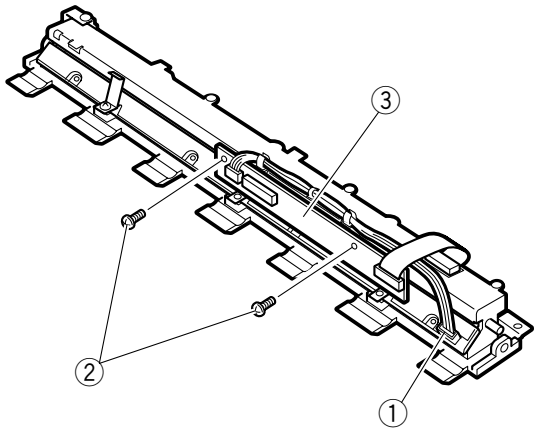

① Connector ② Screw
③ PCB assembly

Fig. 4-405

3) Remove three screws ①, and remove the leaf spring ② and then the LED unit ③.

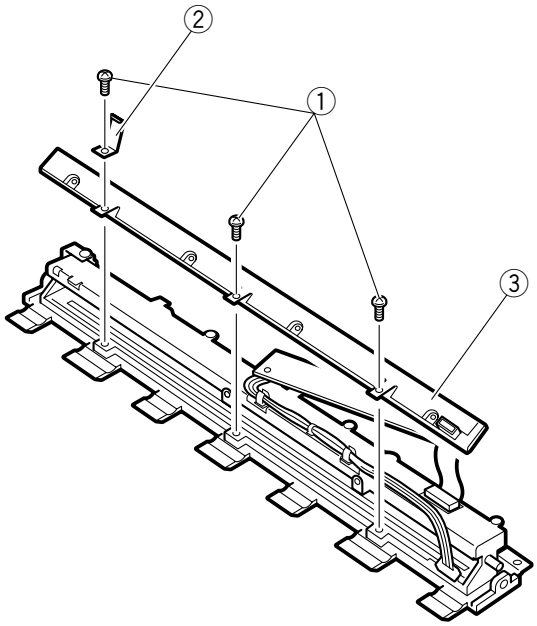

① Screw ② Leaf spring
③ LED unit

Fig. 4-406

 COPYRIGHT © 1999 CANON ELECTRONICS INC. CANON DR-5020/5080C REV.0 JUNE 1999 PRINTED IN JAPAN (IMPRIME AU JAPON)

Note 1: When reassembling, secure the leaf spring so that its tip comes in contact with the metal portion.

Note 2: The upper LED unit and the lower LED unit are identical parts.

4. Lower LED unit

1) Remove the lower reading unit.
2) Disconnect one connector ①, remove three screws ②, and then remove the leaf spring ③ and the LED unit ④.

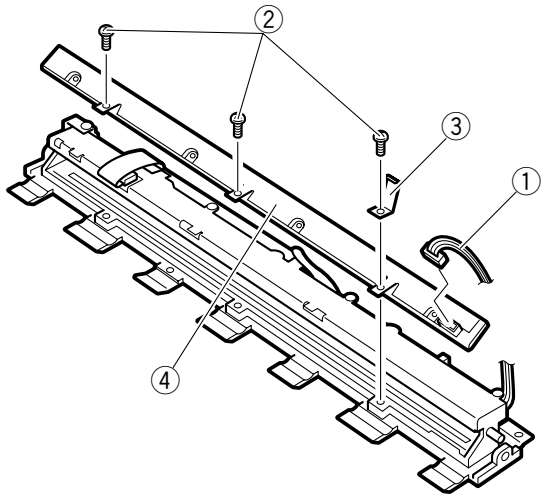

① Connector ② Screw
③ Leaf spring ④ LED unit

Fig. 4-407

Note 1: When reassembling, secure the leaf spring so that its tip comes in contact with the metal portion.

Note 2: The upper LED unit and the lower LED unit are identical parts.

V. ELECTRICAL (PCBs, ETC.)

1. Main CPU PCB Assembly (SH2-MAIN)

1) Remove the rear cover.
2) Disconnect all connectors, remove 11 screws ①, and remove the PCB assembly unit ②.

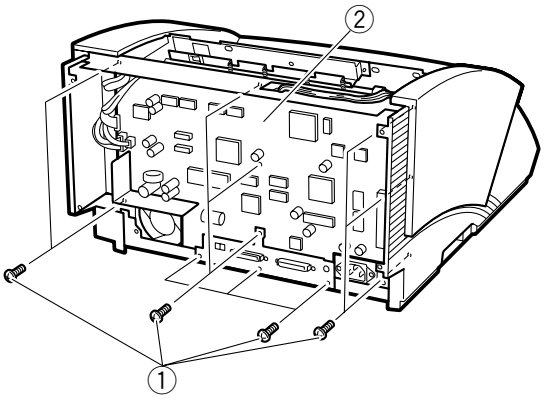

① Screw ② PCB assembly unit

Fig. 4-501

3) Remove five screws ①, remove the connector cover ②, and then separate the main CPU PCB assembly ③. In the case of DR-5080C, remove the memory ④.

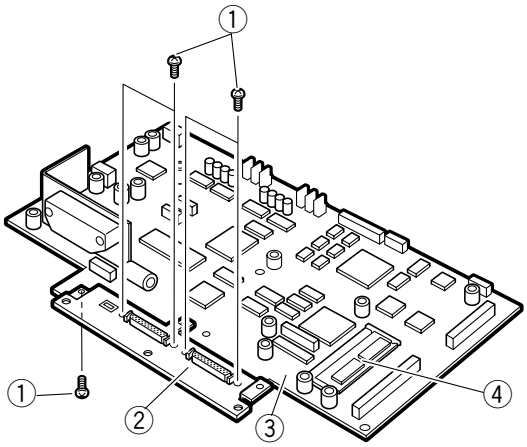

① Screw ② Connecter cover
③ Main CPU PCB assembly
④ Memory

Fig. 4-502

2. Pickup control PCB assembly (K4-SUB)

1) Remove the upper delivery cover assembly.
2) Disconnect all connectors, and remove four screws ①.

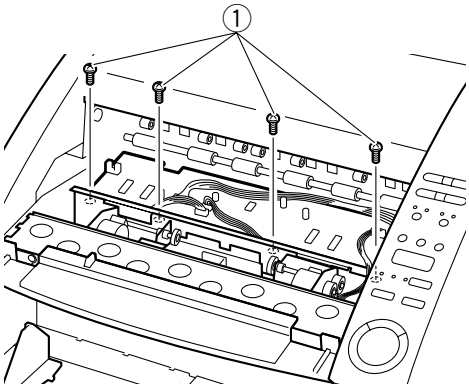

① Screw

Fig. 4-503

3) Lift and tilt the front of the pickup control PCB assembly ①, remove it from the left and right guides ②, and then remove the PCB assembly.

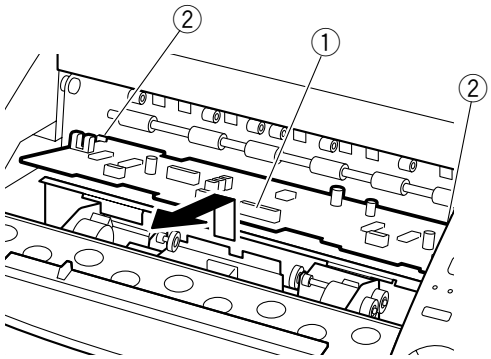

① Pickup control PCB assembly
② Guide

Fig. 4-504

 COPYRIGHT © 1999 CANON ELECTRONICS INC. CANON DR-5020/5080C REV.0 JUNE 1999 PRINTED IN JAPAN (IMPRIME AU JAPON)

3. Document board control PCB assembly (K0-SUB2)

1) Remove the right cover assembly.
2) Disconnect all connectors, remove one screw ①, remove two locking supports ②, and then remove the document board control PCB assembly ③.

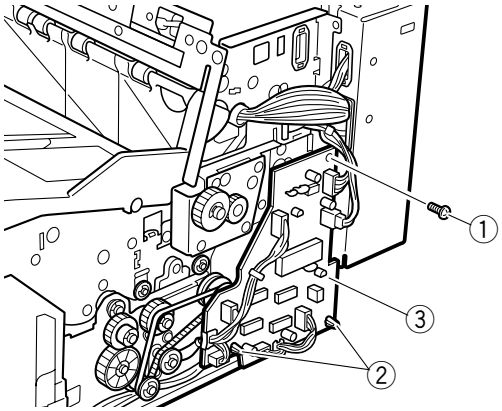

① Screw ② Locking support
③ Document board control PCB

Fig. 4-505

4. Back plate assembly

1) Remove the left cover assembly and the right cover assembly.
2) Disconnect all connectors, pull out the cable assembly from the hole, remove seven screws ①, and then remove the back plate assembly ②.

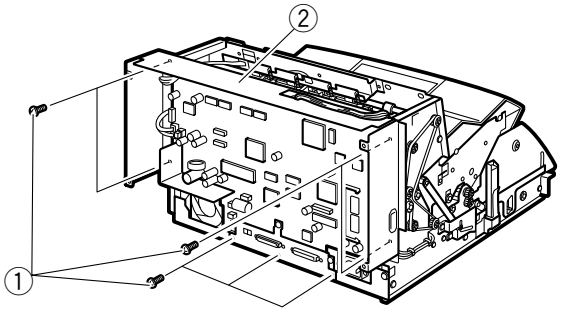

① Screw ② Back plate assembly

Fig. 4-506

Note 1: When reassembling, fit the positioning tab of the main body side into the hole and insert the tab.

5. DC power supply PCB assembly

1) Remove the back plate assembly.
2) Remove four screws ① (round-tipped), and pull out the DC power supply PCB assembly ②.

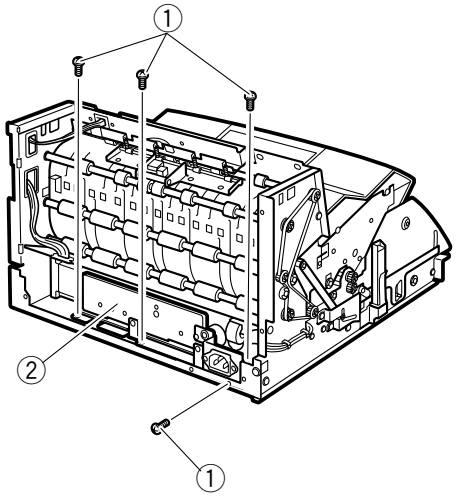

① Screw
② DC power supply PCB assembly

Fig. 4-507

3) Disconnect two connectors ①, and remove the DC power supply PCB assembly ②.

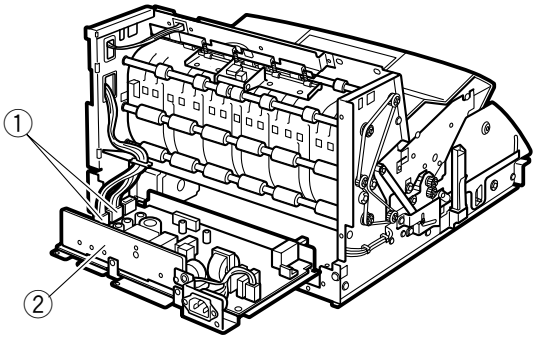

① Connector
② DC power supply PCB assembly

Fig. 4-508

Note 1: When reassembling, make sure to keep the power switch turned off (the state in which the front end is extending out a long way). Also, make sure to connect the 4P connector to CN3.

Note 2: As there is a positioning hole ① and a leaf spring ② in the rear of the main body, when assembling the PCB assembly into the main body, set the position, then insert the PCB assembly while keeping it in contact with the bottom face.

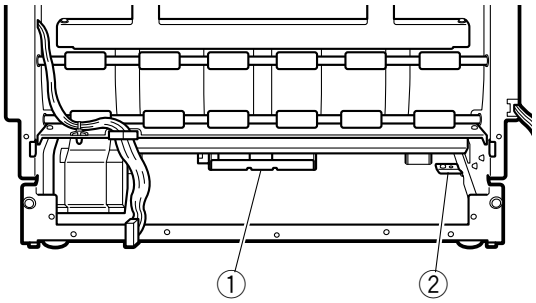

① Positioning hole ② Leaf spring

Fig. 4-509

6. Exhaust fan

1) Remove the back plate assembly.
2) Remove two screws ① and remove the exhaust fan ②.

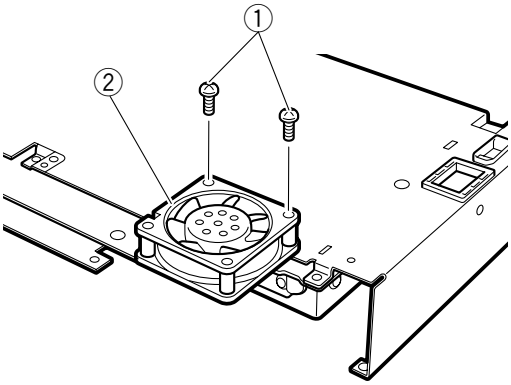

① Screw ② Exhaust fan

Fig. 4-510

7. Document width/document detection PCB assembly

1) Remove the document board assembly.
2) Remove eight screws ① (self-tapping), remove the safety shield ②, the expandable tray mount plate ③, and the expandable tray assembly ④.

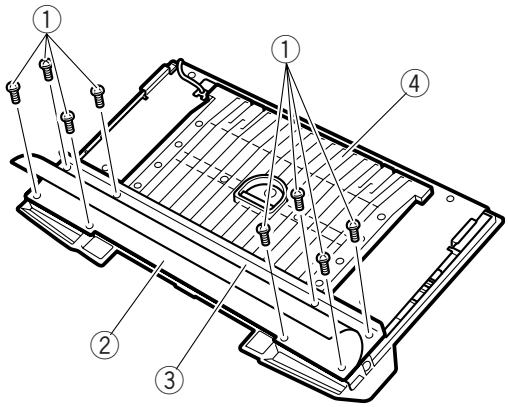

① Screw ② Safety shield
③ Expandable tray mount plate
④ Expandable tray assembly

Fig. 4-511

3) Remove six screws ① (self-tapping) and remove the document board reinforcing plate ②.

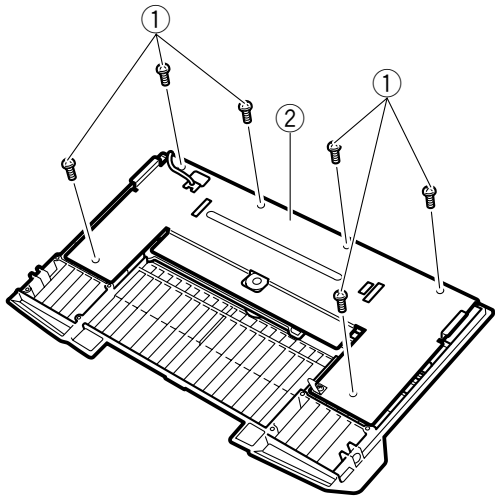

① Screw
② Document board reinforcing plate

Fig. 4-512

 COPYRIGHT © 1999 CANON ELECTRONICS INC.

4) Remove three screws ① (M2.6 × 5, self-tapping) and remove the document width/document detection PCB assembly ②. Be careful not to distort the contacts ③.

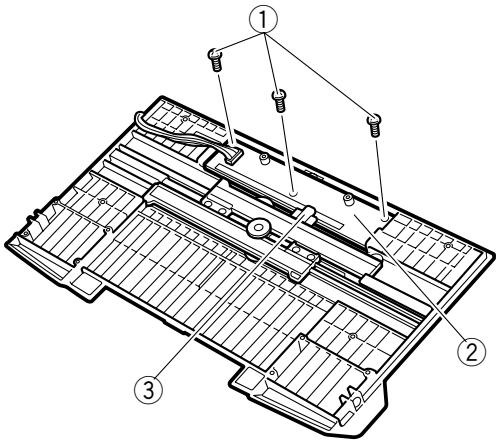

① Screw
② Document width/document detection PCB assembly
③ Contacts

Fig. 4-513

Note 1: Do not make dirty the contacts and the contact faces on the PCB assembly. Also, the document detection window ① may fall of its own weight so be careful.

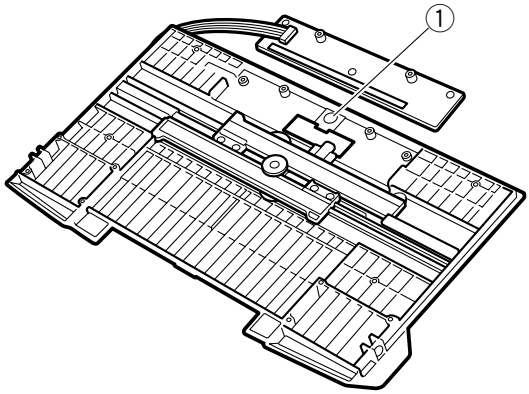

① Document detection window

Fig. 4-514

8. Operation panel PCB assembly

This is included in the Operation panel. Do not remove from the operation panel.

For the disassembling of operation panel, refer to the section of the right cover (assembly).

CHAPTER 5

INSTALLATION

This product undergoes exhaustive adjustment and testing before it is shipped from the factory.

Installation after unpacking at the field is important for demonstrating the machine's performance to be the same as when it passed factory inspections.

The service technician must fully understand the machine's performance before installing and inspecting the machine at a suitable environment according to the described procedure.

I. SELECTION OF LOCATION 5-1
II. UNPACKING & INSTALLATION 5-2
III. IMPRINTER MOUNTING PROCEDURE 5-4
IV. RED LED MOUNTING PROCEDURE 5-8
V. MEMORY 128MB MOUNTING PROCEDURE 5-10

COPYRIGHT © 1999 CANON ELECTRONICS INC. CANON DR-5020/5080C REV.0 JUNE 1999 PRINTED IN JAPAN (IMPRIME AU JAPON)

I. SELECTION OF LOCATION

It is recommended that the customer engineer personally inspects the customer's premises before installing any machine. The location should meet the following requirements.

■ The power supply should be connected to an outlet capable of supplying the voltage shown on the rating plate plus or minus 10%. A grounding plug must be used.

Grounding Items
1) Power outlet grounding terminal
2) Earth lead that has been grounded for office equipment

■ The temperature should be between 15 to 27.5°C (59 to 81.5°F), and relative humidity between 25 and 75% RH. In particular, do not install the machine near water faucets, humidifiers, hot water heaters, and refrigerators.

■ The machine should not be exposed to open flame, dust, ammonia or other corrosive gases, direct sunlight, intensive vibration or near machinery that generates electromagnetic waves.

- Prevent cigarette smoke from coming into direct contact with the machine.
- In applications where installation of the machine in the direct sunlight is unavoidable, a heavy curtain should be installed on the windows to protect the machine.

■Maintain sufficient space around the machine during operation and maintenance, and to allow ventilation.

- The exhaust fan and power cord are located at the rear of the machine. So, do not push the machine against the wall.
- Allow sufficient space on both sides of the machine so that you can insert your hands to lift it up when the machine is to be moved.

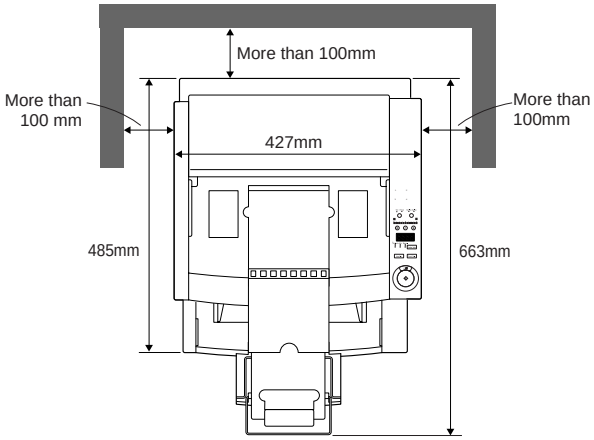

Fig. 5-1

II. UNPACKING & INSTALLATION

If the machine (in its shipping container) has been stored in a cold location, it should not be unpacked in a warm room until it has had time to warm up. Otherwise, moisture may condense on the metal and glass parts, resulting in trouble. At least one hour should be allowed for the machine to warm up to room temperature before the shipping container is opened.

No.	Procedure	Inspection and Remarks
1	Open the container and take out the parts and other materials packed inside. Check if anything is missing. The container weight approx. 245N (25kgf). Its external dimensions are approx. 600 (W) × 670 (D) × 430 (H) mm. ① Main body ② Power cord ③ Grounding wire (100V model only) ④ Removable tray ⑤ Delivery support plate ⑥ Instruction manual (Driver software) ⑦ ISIS/TWAIN device driver ⑧ Device driver license agreement (for ISIS/TWAIN) ⑨ Instruction manual (Hardware) ⑩ Instruction manual (Application software) ⑪ Canon device driver + Scanning utility 5000 ⑫ Device driver license agreement (for Canon) ⑬ Function sheets ⑭ Function key label ⑮ Warranty card (100V and 120V models only) ⑯ Customer registration card (100V model only)	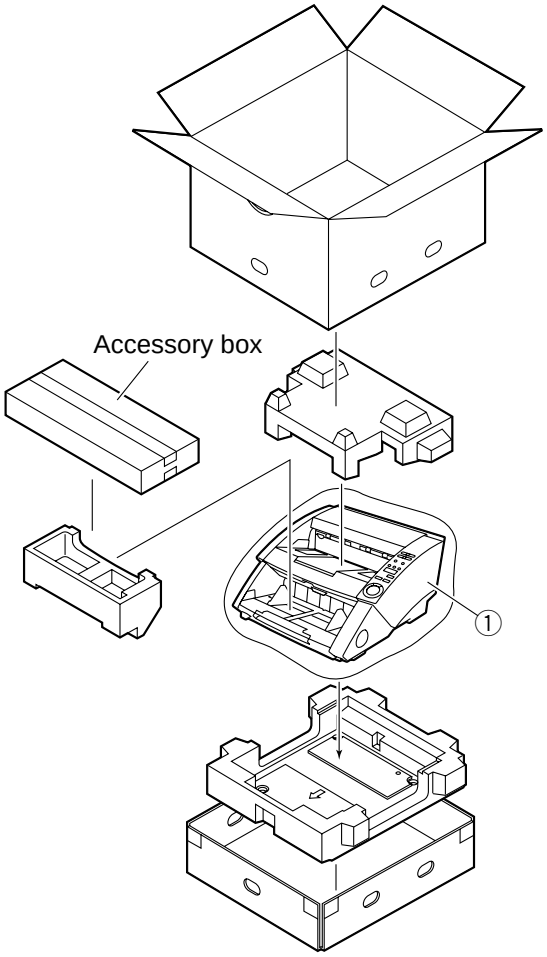 • Accessory box 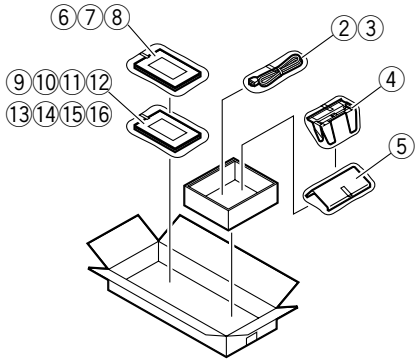

 COPYRIGHT © 1999 CANON ELECTRONICS INC. CANON DR-5020/5080C REV.0 JUNE 1999 PRINTED IN JAPAN (IMPRIME AU JAPON)

No.	Procedure	Inspection and Remarks
2	Move the main body to where it is to be installed. **Note:** When moving it, hold the bottom center at the right and left sides of the cover with both hands. The machine weighs approx. 196N (20 kgf).	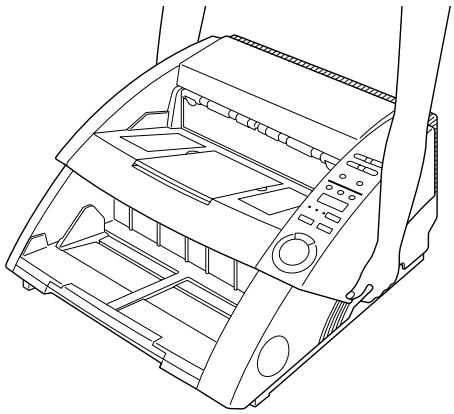
3	Peel off all the filament tapes securing the various parts. Also remove the protective pad from the document guide assembly.	Check all the covers for possible damage incurred during transportation.
4	Open the upper unit and remove the protective sheet from the reading glasses.	
5	Connect the power cord. In the case of 100V model, connect the grounding wire also.	
6	Connect a personal computer to the main body using a SCSI cable. Change the SCSI ID and terminator settings if necessary.	
7	After turning on the power of the machine, turn on the power of the personal computer. **Note:** Before turning on the power of the personal computer, make sure that “0000” appears on the counter display of the operation panel.	
8	Install the driver software and application software in the personal computer. For details, refer to the instruction manual.	
9	Check if the machine operates normally. For details on how to operate it, refer to the instruction manual. Affix the function key labels if necessary.	

COPYRIGHT © 1999 CANON ELECTRONICS INC.

III. IMPRINTER MOUNTING PROCEDURE

No.	Procedure	Inspection and Remarks
1	Open the container and take out the parts and other materials packed inside. Check if anything is missing. ① IP mount unit ② IP PCB assembly ③ IP cable assembly ④ IP drain unit ⑤ IP plate spring 1 ⑥ IP plate spring 2 ⑦ Screws (M3 × 6, BH, black): 2 screws ⑧ Screws (M3 × 6, self-tapping, black): 4 screws ⑨ FPC stopper 2 ⑩ IP operation label ⑪ Instruction manual ⑫ Warranty card (100V model only) **Note:** IP head is sold separately.	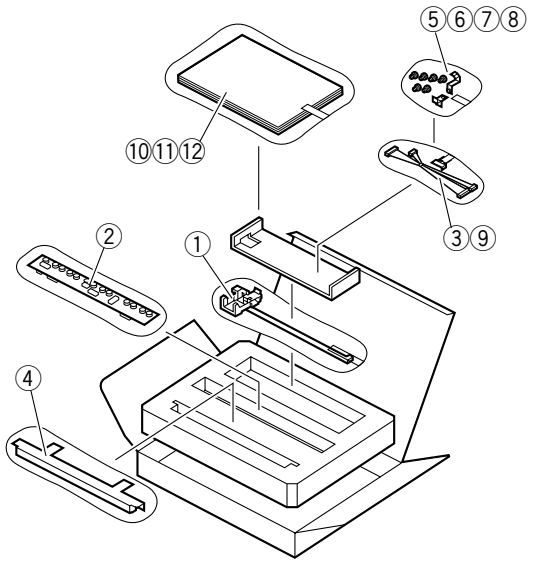
2	Remove the rear cover of the main body. **Note:** For details on how to disassemble it, refer to Chapter 4, the Disassembly/Assembly section.	
3	Remove the upper cover.	
4	Install the IP drain unit. Make the IP drain unit fixed by pressing it to the IP head side.	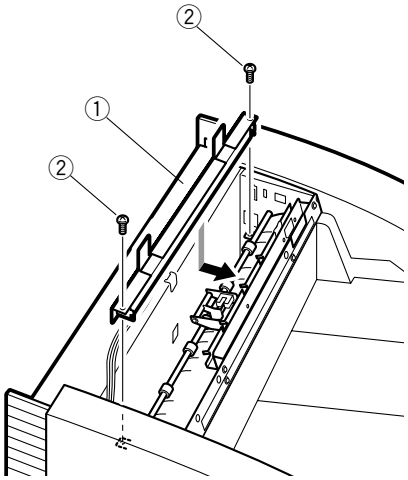 ① IP drain unit ② Screws (M3 × 6, BH, black): 2 screws

 COPYRIGHT © 1999 CANON ELECTRONICS INC. CANON DR-5020/5080C REV.0 JUNE 1999 PRINTED IN JAPAN (IMPRIME AU JAPON)

No.	Procedure	Inspection and Remarks
5	Remove the delivery upper cover assembly.	
6	Cut off the fixing hooks (1 on the right, 1 on the left) of the IP cover with a cutting nipper. Do not cut off the opening/closing hooks (1 on the right, 1 on the left). Treat the cutting edges.	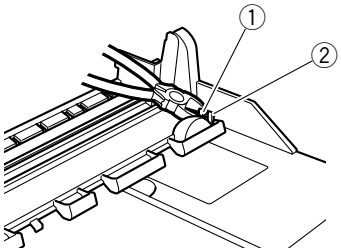 ① Fixing hook ② Opening/closing hook
7	Install the IP mount unit. 1) Peel off the separate paper from the adhesive double coated tape stuck on the back of FPC, and then affix the FPC straight on the upper delivery cover. 2) Insert the FPC stopper 2 and make it fixed.	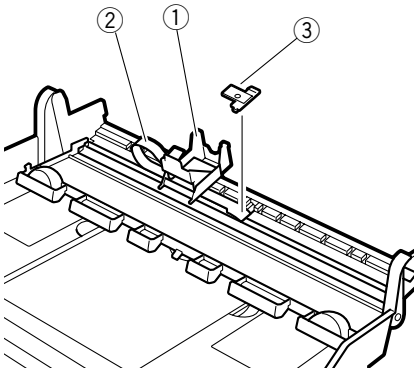 ① IP mount unit ② FPC ③ FPC stopper 2
8	Connect the FPC in the IP mount unit to the connector of the IP PCB assembly.	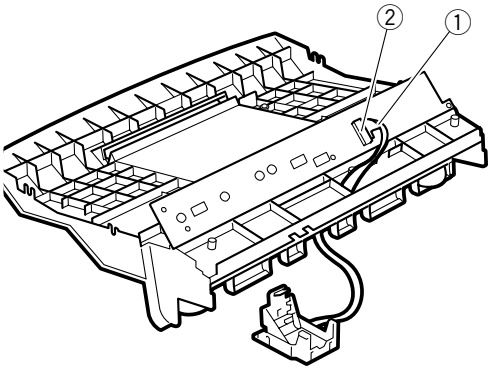 ① FPC ② Connector

No.	Procedure	Inspection and Remarks
9	Mount the IP PCB assembly, IP plate spring 1 and IP plate spring 2. The each spring should be inserted between the IP PCB assembly and the upper delivery cover, and fastened together by the screws.	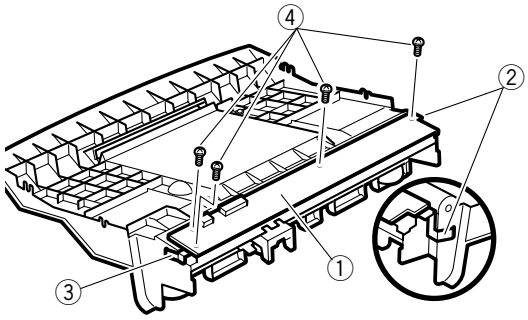 ① IP PCB assembly ② IP plate spring 1 ③ IP plate spring 2 ④ Screws (M3 × 6, self-tapping, black): 4 screws
10	Peel off the separate paper from the IP operation label and affix the label on the inside of the IP cover. Match the directions of the label and the main body so that how to mount the IP head is understood when opening the IP cover from the front side of the main body.	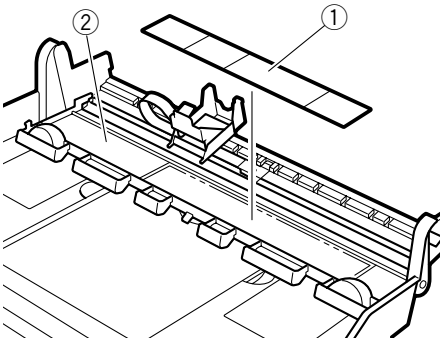 ① IP operation label ② IP cover
11	Insert the IP cable assembly into the connectors (2 connectors) of the IP PCB assembly, and then insert the other end of the cable into the connectors (2 connectors) of the pickup control PCB assembly. In order to prevent the connectors from disengaging, connect them in the specified order.	• Connecting the IP cable assembly 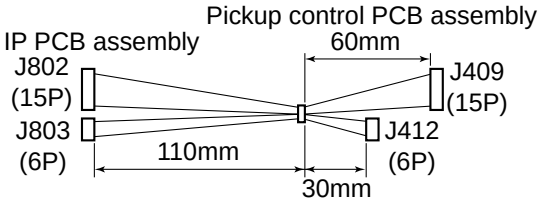 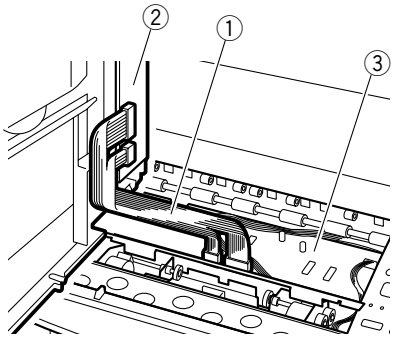 ① IP cable assembly ② IP PCB assembly ③ Pickup control PCB assembly

 COPYRIGHT © 1999 CANON ELECTRONICS INC.

No.	Procedure	Inspection and Remarks
12	Attach the upper delivery cover. Fasten the screws pressing the cover down so that it does not rise.	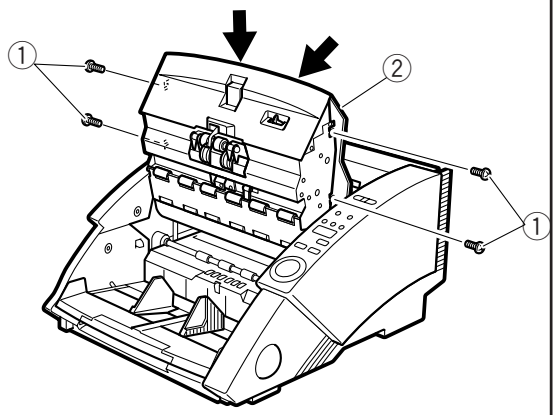 ① Screw ② Upper delivery cover
13	Attach the IP head. For details on how to attach it, refer to the instruction manual for the imprinter or the IP operation label. Clean the external cover or the inside when they are stained with the ink during operation.	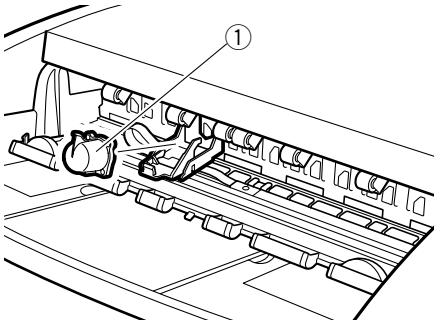 ① IP head
14	Check if the imprinter operates normally. For details on how to operate it, refer to the instruction manuals for the machine and the imprinter. In the case of checking the imprinter operation without connecting to a personal computer, use “Imprinter operation check mode” in the service mode.	

IV. RED LED MOUNTING PROCEDURE

No.	Procedure	Inspection and Remarks
1	Open the container and take out the parts packed inside. Check if anything is missing. ① LED unit (red): 2 units ② Label (red)	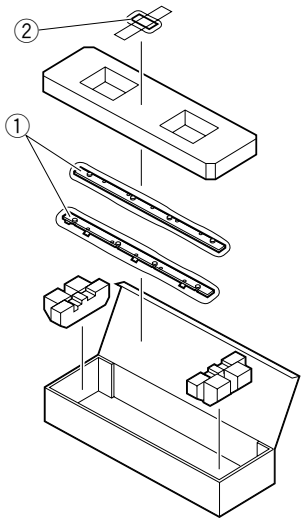
2	Replace the LED units in the upper reading unit and the lower reading unit. For details on its procedure, refer to Chapter 4, the Disassembly/Assembly section. The LED units in the upper reading unit and the lower reading unit are all the same.	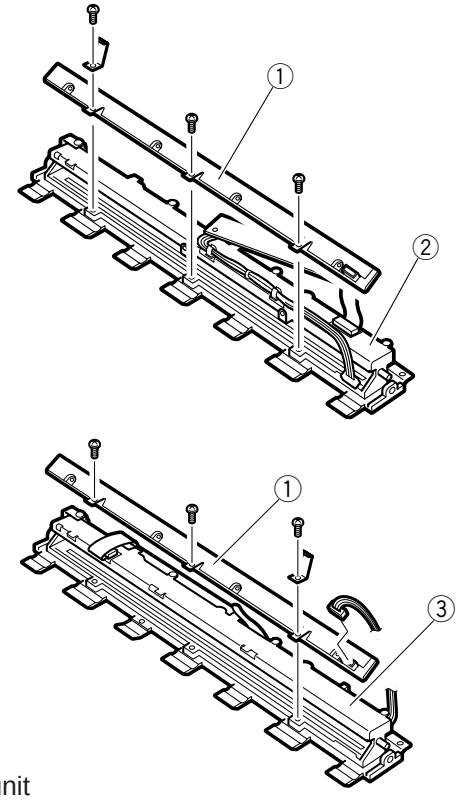 ① LED unit ② Upper reading unit ③ Lower reading unit

 COPYRIGHT © 1999 CANON ELECTRONICS INC. CANON DR-5020/5080C REV.0 JUNE 1999 PRINTED IN JAPAN (IMPRIME AU JAPON)

No.	Procedure	Inspection and Remarks
3	Open the upper unit and affix the label (red) on the left side plate.	
4	Enter the service mode and change the setting to 1 (red) in the LED selection setting for the binary mode of Address “05.” For details on its procedure, refer to Chapter 7, V. Service Mode.	
5	Open the upper unit and change the value of Address “05” to 1 in the setting label stuck on the right side plate.	* Setting label Address / Factory Default 05 / ~~0~~ ① 2 4 7 09 / 14 0B / 15 MA2-5608
6	Carry out the gain adjustment/shading compensation mode in Address “F8.”	
7	Check if the machine operates normally. For details on how to operate it, refer to the instruction manual.	

V. MEMORY 128MB MOUNTING PROCEDURE

No.	Procedure	Inspection and Remarks
1	Open the container and take out the parts and other materials packed inside. Check if anything is missing. ① Memory ② Warranty card (100V model only)	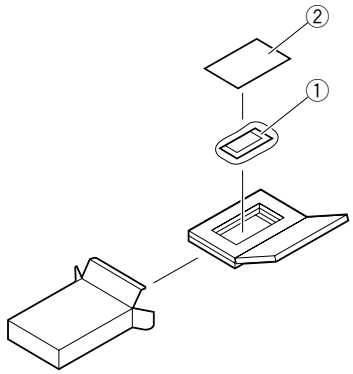
2	Remove the rear cover. For details on its procedure, refer to Chapter 4, the Disassembly/Assembly section.	
3	Replace the memory. • Removal Release the stoppers at the both sides so that the memory pops up slantwise. Pull out the memory slantwise. • Installation Insert the 128 MB memory slantwise and press it until the stoppers lock.	• Removal 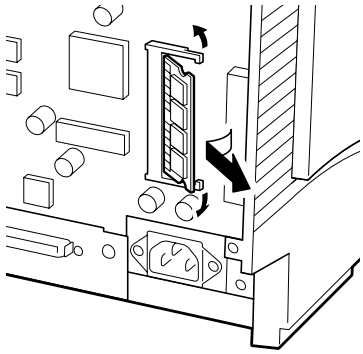 • Installation 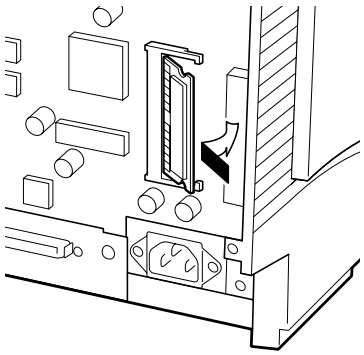
4	Enter the service mode and make sure in the SD-RAM display of Address “28” that the memory is changed to the designated capacity.	
5	Check if the machine operates normally. For details on how to operate it, refer to the instruction manual.	

 COPYRIGHT © 1999 CANON ELECTRONICS INC. CANON DR-5020/5080C REV.0 JUNE 1999 PRINTED IN JAPAN (IMPRIME AU JAPON)

CHAPTER 6

MAINTENANCE & SERVICING

I. BASIC PERIODIC SERVICING PROCEDURE 6-1
II. PARTS TO BE REPLACED PERIODICALLY 6-2
III. CONSUMABLE PARTS 6-3
IV. PERIODIC SERVICING LIST 6-4

COPYRIGHT © 1999 CANON ELECTRONICS INC. CANON DR-5020/5080C REV.0 JUNE 1999 PRINTED IN JAPAN (IMPRIME AU JAPON)

I. BASIC PERIODIC SERVICING PROCEDURE

Before you visit the user site for periodic servicing, check the Service Ledger, and take any parts that you expect need to be replaced.

No.	Procedure	Inspection	Remarks
1	Pay your respects to the supervisor.	Check current status	
2	Record a document and conduct a document search.	• Document feed • Results of document record & search • Abnormal noise	Confirm the counters into the service mode.
3	Replace parts (only when necessary).		
4	Clean the document feed assembly and optical assembly.		
5	Shading compensation (only when necessary)		For details, refer to the section on service mode in chapter 7.
6	Re-check the results, and record a document and conduct a document search again.		
7	Clean around the machine.		
8	Make any required entries into the Service Sheet, and report to the supervisor.		

Table 6-1

COPYRIGHT © 1999 CANON ELECTRONICS INC.

II. PARTS TO BE REPLACED PERIODICALLY

Parts must be replaced periodically to maintain the machine's functions to a constant standard. The following table shows parts that must be replaced periodically (parts that greatly influence machine operation when they are no longer functional but are not externally deformed or damaged).

Preferably these parts should be replaced when periodic servicing is carried out closest to the recommended replacement cycle.

As of May 10, 1999

No.	Parts Name		Parts No.	Q'ty	Replacement Cycle (number of sheets)	Remarks
1	Separation roller		MA2-5412	1	250,000	
2	Pickup roller		MA2-5520	1	500,000	
3	Feeding roller		MA2-5539	1	500,000	
4	Double feed sensor lever 2		MA2-5545	1	1,500,000	
5	Double feed sensor reference plate		MA2-5510	1	1,500,000	
6	Delivery sensor lever		MA2-5463	1	1,500,000	
7	LED unit	DR-5020	MG1-2976	2	(1,500,000)	lit: 500 hours
	LED unit	DR-5080C	MG1-2975	2	(1,500,000)	lit: 500 hours
	LED unit	Red LED (option)	(MG1-3036) M18-0551	(2) 1 set	(1,500,000)	lit: 500 hours
8	Separarion motor		RH7-1278	1	3,000,000	

Table 6-2

Note 1: The above figures are for reference only. So, they may vary according to conditions of use.

Note 2: The LED unit is replaced every 500 hours the LED is illuminated. Estimate the approximate number of sheets from the record obtained at the periodic servicing.

 COPYRIGHT © 1999 CANON ELECTRONICS INC. CANON DR-5020/5080C REV.0 JUNE 1999 PRINTED IN JAPAN (IMPRIME AU JAPON)

III. CONSUMABLE PARTS

This machine has not consumable parts.

The following table shows the IP head for the imprinter (option) that is set as a consumable (sales goods). This is replaced by user.

As of May 10, 1999

No.	Parts Name	Destination	Catalog No.	Remarks
1	IP head	World wides	M99-0041	Replace when the ink runout Expected life is 500,000 characters.

Table 6-3

Note: Used IP head must be collected and disposed of according to local bylaws.

IV. PERIODIC SERVICING LIST

Note: Use only the specified solvents and oils. Do not use other solvents and oils.

[△: Cleaning ●: Replacement ☆: Oiling □: Adjustment ◎: Inspection]

Unit Name	Location	Maintenance Cycle				Remarks
		Every 250,000 sheets	Every 500,000 sheets	Every 1.5 million Sheets	others	
Document feed	Separation roller	●				
	Pickup roller	△	●			
	Feeding roller	△	●			
	Registration rollers (upper, lower)	△				
	Reading rollers (upper, lower)	△				
	Double feed sensor lever 2			●		
	Double feed sensor reference plate			●		
	Delivery sensor lever			●		
Optical path	Reading glasses	△				
	LED units				●	LED lit 500 hours
	Reading units				□	LED lit 150 hours (expect 0.5 million sheets) Operate the Shading compensation again
Motor	Separation motor				●	3 million sheets

Table 6-4

Note 1: For the cleaning of each roller and reading glasses, wipe with a cloth moistened with water, and then wipe dry. Be sure to clean the rollers while turning them into the direction of document feed. If the rollers and reading glasses are very dirty, instruct the user to perform “Daily User Inspection” again.

COPYRIGHT © 1999 CANON ELECTRONICS INC.
CANON DR-5020/5080C REV.0 JUNE 1999 PRINTED IN JAPAN (IMPRIME AU JAPON)

CHAPTER 7

TROUBLESHOOTING

I. ERROR INDICATION AND DISPOSITION 7-1
II. IMAGE TROUBLESHOOTING 7-4
III. OPERATION TROUBLESHOOTING .. 7-7
IV. FEED TROUBLESHOOTING 7-15
V. SERVICE MODES 7-16
VI. AFTER REPLACING PARTS 7-35

COPYRIGHT © 1999 CANON ELECTRONICS INC. CANON DR-5020/5080C REV.0 JUNE 1999 PRINTED IN JAPAN (IMPRIME AU JAPON)

I. ERROR INDICATION AND DISPOSITION

1. Error codes

When various types of errors occur, this machine indicates the error code on the display of the operation panel. Error codes are shown in three alphanumeric digits. Table 7-1 shows a list of the error codes. The list includes errors that the user must take care of and those that are for checking. Errors such as document jams that the user can correct, are taken care of by the user. However, when an error taken care of by the user is not corrected, the service technician takes care of it. For details, refer to this chapter.

For error indications on the display connected to the personal computer, refer to the instruction manual or the instruction manual of the software being used.

Note 1: The error indication for endorser is not described in this manual. Refer to the technical information which will be issued separately.

Category	Code	Description	Disposition
Document jam	P00	After clearing double feed detection, document is inside machine. After correcting document jam, document is inside machine.	Process document jam (user)
	P01	Document does not come to front registration sensor.	Process document jam (user)
	P02	Document does not come out of front registration sensor. Document has the perforations for binding.	Process document jam (user)
	P03	Document is removed from front registration sensor.	Retry after opening and closing upper unit (user)
	P04	Document does not come to back registration sensor.	Process document jam (user)
	P06	Document come up to back registration sensor earlier. Document has the perforations for binding.	Process document jam (user)
	P08	Document does not come out of back registration sensor.	Process document jam (user)
	P10	Document does not come to delivery sensor.	Process document jam (user)
	P18	Skew feed was detected.	Process document jam (user)
	P20	Document does not come out of delivery sensor.	Process document jam (user)
	P80	Pickup failed and document board goes down.	Retry after opening and closing upper unit (user)
Double feed indication	d01	Double feed detection by paper thickness.	Clear indication and process document jam (user)
	d02	Double feed detection by paper length.	Clear indication and process document jam (user)
	d03	Both d01 and d02 detected.	Clear indication and process document jam (user)
Door open indication	C01	Upper unit is open.	Close upper unit completely (user)
	C02	Imprinter cover is open.	Close imprinter cover completely (user)
	C03	Both C01 and C02 detected.	Close both completely (user)

COPYRIGHT © 1999 CANON ELECTRONICS INC.

Category	Code	Description	Disposition
Error indication	E20	Main motor trouble	Check of connection and load, replacement of motor
	E21	Document board motor trouble	Check of connection and load, replacement of motor
	E22	Separation motor trouble	Check of connection and load, replacement of motor
	E23	Gap adjusting motor trouble	Check of connection and load, replacement of motor
	E24	Feeding motor trouble	Check of connection and load, replacement of motor
	E25	Pickup motor trouble	Check of connection and load, replacement of motor
	E29	Registration clutch trouble	Check of connection and load, replacement of clutch
	E30	Exhaust fan trouble	Check of connection and load, replacement of fan
	E40	Communication error between CPUs (SH2 - K4)	Check of connection, replacement of PCB assemblies (SH2, K4, power supply)
	E41	Communication error between CPUs (K4 - K0)	Check of connection, replacement of PCB assemblies (K4, K0, power supply)
	E80	Back-up RAM error	Check of connection, replacement of SH2 PCB assembly
	E81	SD-RAM read/write error	Check of connection, replacement of SD-RAM/SH2 PCB assembly
	E85	SD-RAM connection error	Check of connection, replacement of SD-RAM/SH2 PCB assembly
Warning indication	L01	Setting by key operation or function sheet cannot be handled by SD-RAM capacity.	Correct setting and retry (user)
	L02	Setting by key operation or function sheet cannot be handled by line memory capacity.	Correct setting and retry (user)
	U01	There is a count mismatch (counter < number of scanned sheets).	Check number of documents (user)
	U02	There is a count mismatch (counter > number of scanned sheets).	Check if documents have all been recorded (user)
	H01	Imprinter head has not been mounted.	Mount head (user)

 COPYRIGHT © 1999 CANON ELECTRONICS INC. CANON DR-5020/5080C REV.0 JUNE 1999 PRINTED IN JAPAN (IMPRIME AU JAPON)

2. Document jam processing

1) Remove the documents left on the document board and delivery tray.
   Take off the removable tray and auxiliary delivery plate, and close the auxiliary delivery tray.

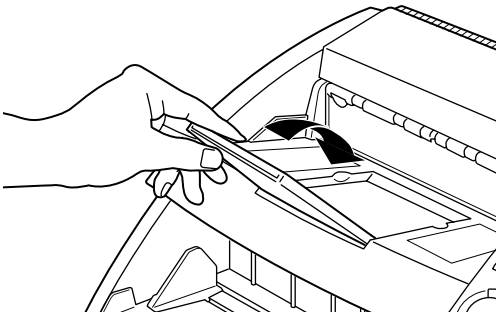

Fig. 7-1

2) Press the button, and slowly open the upper unit until it stops.

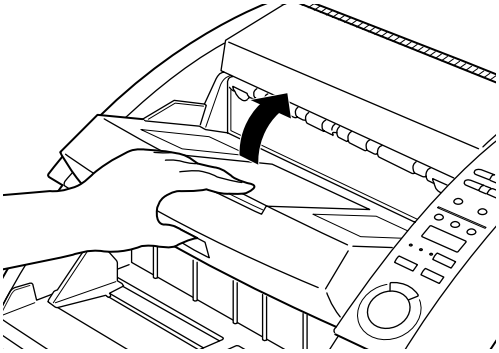

Fig. 7-2

3) Remove the documents remaining inside the machine paying attention not to break the documents.

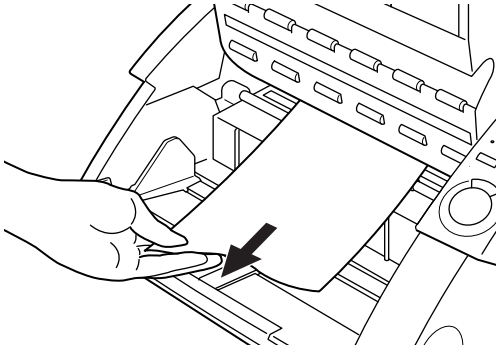

Fig. 7-3

4) Push the upper unit to the rear and then slowly close it. Finally, push it lightly from the top and close it completely.

Note 1: Do not forcibly push it down.

Note 2: Check the pages that have been recorded.

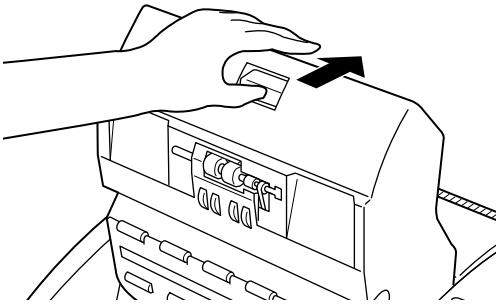

Fig. 7-4

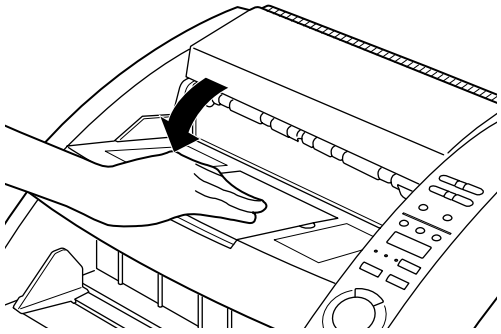

Fig. 7-5

II. IMAGE TROUBLE-SHOOTING

Note 1: There are times when image trouble is caused by the display device or the printer used by the user. In such a case, the trouble cannot be corrected with this machine.

Note 2: There are times when, depending on the type of the image and on the settings, document reproducibility becomes poor. Uneven color may occur particularly when a fine grain image is output in color mode. In such a case, the image may become better by changing the setting items.

1	Image not displayed (completely white, completely black, all grey, mottled)

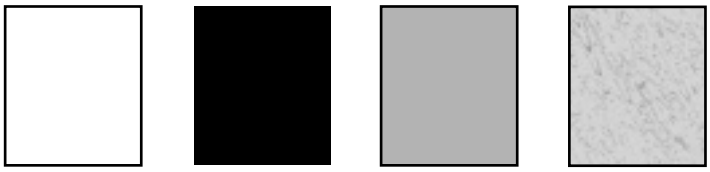

Cause/Faulty Location	Step	Check Item	Result	Action
“Brightness” setting	1	Is setting of “Brightness” appropriate?	NO	Change the setting. Also change “Contrast” if necessary.
Reading glass	2	Is reading glass clean?	NO	Clean. Also clean roller if necessary.
Reading unit connection	3	Are J113/J114 of SH2-MAIN and J1/J2/J3/J4/J5 of reading unit correctly connected?	NO	Connect properly.
Shading compensation	4	Is trouble solved when F8/F9 of service mode are carried out?	YES	End.
LED unit	5	Is trouble solved when LED unit is replaced?	YES	End.
Reading unit	6	Is trouble solved when reading unit is replaced?	YES	End.
SH2-MAIN	7	Is trouble solved when SH2-MAIN is replaced?	YES	End.

 COPYRIGHT © 1999 CANON ELECTRONICS INC. CANON DR-5020/5080C REV.0 JUNE 1999 PRINTED IN JAPAN (IMPRIME AU JAPON)

2 Uneven density, streak (horizontal scanning direction)

Cause/Faulty Location	Step	Check Item	Result	Action
Roller	1	Dirty or deformed?	NO	Clean, replace roller.
Gear, belt	2	Turning smoothly?	NO	Adjust assemblage, replace parts.
Main motor	3	Is trouble solved when main motor is replaced?	YES	End.
Reading unit	4	Is trouble solved when reading unit is replaced?	YES	End.
SH2-MAIN	5	Is trouble solved when SH2-MAIN is replaced?	YES	End.

3 Uneven density, streak (vertical scanning direction)

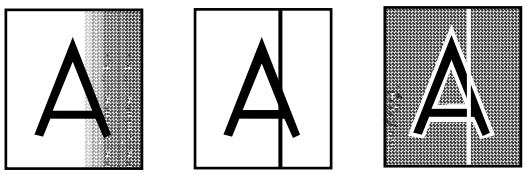

Cause/Faulty Location	Step	Check Item	Result	Action
Reading glass	1	Is reading glass clean?	NO	Clean. If necessary clean roller too.
Shading compensation	2	Is trouble solved when F8/F9 of service mode is carried out?	YES	End.
LED unit	3	Is trouble solved when LED unit is replaced?	YES	End.
Reading unit	4	Is trouble solved when reading unit is replaced?	YES	End.
SH2-MAIN	5	Is trouble solved when SH2-MAIN is replaced?	YES	End.

COPYRIGHT © 1999 CANON ELECTRONICS INC.

4 Part of image is not displayed

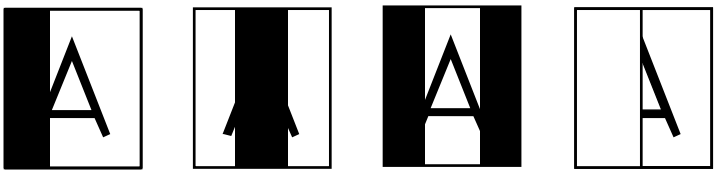

Cause/Faulty Location	Step	Check Item	Result	Action
Document width/document detection PCB assembly	1	Is image only displayed for minimum width of document guide?	YES	Replace document width/document detection PCB assembly.
Shading compensation	2	Is trouble solved when F8/F9 of service mode is carried out?	YES	End.
LED unit	3	Is trouble solved when LED unit is replaced?	YES	End.
Reading unit	4	Is trouble solved when reading unit is replaced?	YES	End.
SH2-MAIN	5	Is trouble solved when SH2-MAIN is replaced?	YES	End.

COPYRIGHT © 1999 CANON ELECTRONICS INC.
CANON DR-5020/5080C REV.0 JUNE 1999 PRINTED IN JAPAN (IMPRIME AU JAPON)

III. OPERATION TROUBLESHOOTING

1	Personal computer does not recognize the machine

Note 1: The cause of the trouble is related to SCSI I/F connection. Refer to the instruction manual for this machine or personal computer used.

2	Power does not come on

Note 1: When power switch is turned on but LEDs on operation panel do not light up, faulty power supply is suspect.

Note 2: Immediately after AC power supply is turned off the capacitor of the DC power supply PCB assembly is charged, so connect/disconnect connectors 10 seconds or more after the AC power supply is turned off.

Cause/Faulty Location	Step	Check Item	Result	Action
Connection of power cord	1	Is power cord connected?	NO	Connect properly.
AC power supply voltage	2	Is specified voltage being supplied to outlet?	NO	Explain to the customer that the trouble is not with this machine?
Connection of connector (operation panel related)	3	Are J123 of SH2-MAIN and CN1 of operation panel PCB assembly properly connected?	NO	Connect properly. If LED of operation panel still does not light, then replace the operation panel.
Connection of connector (DC power supply related)	4	Is LED105 of SH2-MAIN lit? (+24VDC)	NO	Check if J121 of SH2-MAIN is properly connected.
	5	Is LED1 of K4-SUB flashing? (+24VDC)	NO	Check if J503 of SH2-MAIN and J402 of K4-SUB are properly connected.
	–	When the above two LEDs are lit or flashing, the AC power supply and the DC power supply PCB assembly are in order.	–	
	6	Is LED1 of K0-SUB2 flashing? (+24VDC)	NO	Check if J502 of K0-SUB2 is properly connected.
	7	Are CN2 and CN3 of the DC power supply PCB assembly properly connected?	NO	Connect properly.
DC power supply PCB assembly	8	Is the trouble solved when the DC power supply PCB assembly is replaced?	YES	End.
SH2-MAIN	9	Are LED103 (+5VDC), LED104 (+3.3VDC), and LED106 (-5VDC) lit?	NO	Replace SH2-MAIN.

COPYRIGHT © 1999 CANON ELECTRONICS INC.

3 Main motor (M1) does not rotate

<table>
<tr><th>Cause/Faulty Location</th><th>Step</th><th>Check Item</th><th>Result</th><th>Action</th></tr>
<tr><td>DC power supply</td><td>1</td><td>Is power being supplied to the machine?</td><td>NO</td><td>Carry out the section on “Power does not come on.”</td></tr>
<tr><td>Connection of connector</td><td>2</td><td>Is J124 of SH2-MAIN properly connected?</td><td>NO</td><td>Connect properly.</td></tr>
<tr><td>Load of transmission system</td><td>3</td><td>Is transmission system, which is the load on the motor, in order?</td><td>NO</td><td>Eliminate the abnormal load.</td></tr>
<tr><td rowspan="2">SH2-MAIN
Main motor</td><td>4</td><td rowspan="2">Disconnect J124, and carry out “FF-02” of service mode. At that time, when the terminal voltage of SH2-MAIN is measured with a tester, does the voltage become the specified voltage?
Note: As the output is a pulse waveform, the tester will indicate the following voltages, but the actual voltages are different. Also, they are rough voltages.
<table>
<tr><th>Connector</th><th>Terminal</th><th>Voltage</th></tr>
<tr><td>J124</td><td>6 ⊕
1 ⊖</td><td>0V →
+12VDC</td></tr>
<tr><td></td><td>6 ⊕
2 ⊖</td><td>0V →
+12VDC</td></tr>
<tr><td></td><td>6 ⊕
4 ⊖</td><td>0V →
+12VDC</td></tr>
<tr><td></td><td>6 ⊕
5 ⊖</td><td>0V →
+12VDC</td></tr>
</table></td><td>YES</td><td rowspan="2">Check the wiring from SH2-MAIN to the motor, and if it is good, replace the motor.
Replace SH2-MAIN.</td></tr>
<tr><td>(4)</td><td>NO</td></tr>
</table>

COPYRIGHT © 1999 CANON ELECTRONICS INC.
CANON DR-5020/5080C REV.0 JUNE 1999 PRINTED IN JAPAN (IMPRIME AU JAPON)

4 Pickup motor (M2) does not rotate

<table>
<tr><th>Cause/Faulty Location</th><th>Step</th><th>Check Item</th><th>Result</th><th>Action</th></tr>
<tr><td>DC power supply</td><td>1</td><td>Is power being supplied to the machine?</td><td>NO</td><td>Carry out the section on “Power does not come on.”</td></tr>
<tr><td>Connection of connector</td><td>2</td><td>Is J404 of K4-SUB properly connected?</td><td>NO</td><td>Connect properly.</td></tr>
<tr><td>Load of transmission system</td><td>3</td><td>Is transmission system, which is the load on the motor, in order?</td><td>NO</td><td>Eliminate the abnormal load.</td></tr>
<tr><td rowspan="3">K4-SUB
Pickup motor</td><td>4</td><td rowspan="2">Disconnect J404, and carry out “FF-08” of service mode. At that time, when the terminal voltage of K4-SUB is measured with a tester, does the voltage become the specified voltage?
Note: As the output is a pulse waveform, the tester will indicate the following voltages, but the actual voltages are different. Also, they are rough voltages.
<table>
<tr><th>Connector</th><th>Terminal</th><th>Voltage</th></tr>
<tr><td>J404</td><td>1 ⊕
2 ⊖
3 ⊕
4 ⊖</td><td>0V ←→ +24VDC
0V ←→ +24VDC</td></tr>
</table></td><td>YES</td><td>Check the wiring from K4-SUB to the motor, and if it is good, replace the motor.</td></tr>
<tr><td></td><td>NO</td><td>Replace K4-SUB.</td></tr>
<tr><td>(4)</td><td colspan="2">When a tester can not be used, first replace the motor, and if the trouble is not solved, then replace K4-SUB.</td><td></td></tr>
</table>

5 Feeding motor (M3) does not rotate

<table>
<tr><th>Cause/Faulty Location</th><th>Step</th><th>Check Item</th><th>Result</th><th>Action</th></tr>
<tr><td>DC power supply</td><td>1</td><td>Is power being supplied to the machine?</td><td>NO</td><td>Carry out the section on “Power does not come on.”</td></tr>
<tr><td>Connection of connector</td><td>2</td><td>Is J405 of K4-SUB properly connected?</td><td>NO</td><td>Connect properly.</td></tr>
<tr><td>Load of transmission system</td><td>3</td><td>Is transmission system, which is the load on the motor, in order?</td><td>NO</td><td>Eliminate the abnormal load.</td></tr>
<tr><td rowspan="3">K4-SUB
Feeding motor</td><td>4</td><td rowspan="2">Disconnect J405, and carry out “FF-0E” of service mode. At that time, when the terminal voltage of K4-SUB is measured with a tester, does the voltage become the specified voltage?
Note: As the output is a pulse waveform, the tester will indicate the following voltages, but the actual voltages are different. Also, they are rough voltages.
<table>
<tr><th>Connector</th><th>Terminal</th><th>Voltage</th></tr>
<tr><td>J405</td><td>1 ⊕
2 ⊖
3 ⊕
4 ⊖</td><td>0V ←→
+22VDC
0V ←→
+22VDC</td></tr>
</table></td><td>YES</td><td>Check the wiring from K4-SUB to the motor, and if it is good, replace the motor.</td></tr>
<tr><td></td><td>NO</td><td>Replace K4-SUB.</td></tr>
<tr><td></td><td>(4)</td><td>When a tester can not be used, first replace the motor, and if the trouble is not solved, then replace K4-SUB.</td><td></td><td></td></tr>
</table>

 COPYRIGHT © 1999 CANON ELECTRONICS INC. CANON DR-5020/5080C REV.0 JUNE 1999 PRINTED IN JAPAN (IMPRIME AU JAPON)

6 Gap adjusting motor (M4) does not rotate

<table>
<tr><th>Cause/Faulty Location</th><th>Step</th><th>Check Item</th><th>Result</th><th>Actixon</th></tr>
<tr><td>DC power supply</td><td>1</td><td>Is power being supplied to the machine?</td><td>NO</td><td>Carry out the section on “Power does not come on.”</td></tr>
<tr><td>Connection of connector</td><td>2</td><td>Is J407 of K4-SUB properly connected?</td><td>NO</td><td>Connect properly.</td></tr>
<tr><td>Load of transmission system</td><td>3</td><td>Is transmission system, which is the load on the motor, in order?</td><td>NO</td><td>Eliminate the abnormal load.</td></tr>
<tr><td rowspan="3">K4-SUB
Gap adjusting motor</td><td>4</td><td rowspan="2">Disconnect J407, and carry out “FF-16” of service mode. At that time, when the terminal voltage of K4-SUB is measured with a tester, does the voltage become the specified voltage?
Note: As the output is a pulse waveform, the tester will indicate the following voltages, but the actual voltages are different. Also, they are rough voltages.
<table>
<tr><th>Connector</th><th>Terminal</th><th>Voltage</th></tr>
<tr><td>J407</td><td>1 ⊕
2 ⊖</td><td>+22V →
+23VDC</td></tr>
<tr><td></td><td>1 ⊕
3 ⊖</td><td>0V →
+9VDC</td></tr>
<tr><td></td><td>1 ⊕
4 ⊖</td><td>0V →
+9VDC</td></tr>
<tr><td></td><td>1 ⊕
5 ⊖</td><td>0V →
+9VDC</td></tr>
</table></td><td>YES</td><td>Check the wiring from K4-SUB to the motor, and if it is good, replace the motor.</td></tr>
<tr><td>(4)</td><td>NO</td><td>Replace K4-SUB.</td></tr>
<tr><td colspan="3">When a tester can not be used, first replace the motor, and if the trouble is not solved, then replace K4-SUB.</td><td></td><td></td></tr>
</table>

7 Separation motor (M5) does not rotate

<table>
<tr><th>Cause/Faulty Location</th><th>Step</th><th>Check Item</th><th>Result</th><th>Action</th></tr>
<tr><td>DC power supply</td><td>1</td><td>Is power being supplied to the machine?</td><td>NO</td><td>Carry out the section on “Power does not come on.”</td></tr>
<tr><td>Connection of connector</td><td>2</td><td>Is J506 of K0-SUB2 properly connected?</td><td>NO</td><td>Connect properly.</td></tr>
<tr><td>Load of transmission system</td><td>3</td><td>Is transmission system, which is the load on the motor, in order?</td><td>NO</td><td>Eliminate the abnormal load.</td></tr>
<tr><td rowspan="2">K0-SUB2
Separation motor</td><td>4</td><td rowspan="2">Disconnect J506, and carry out “FF-18” of service mode. At that time, when the terminal voltage of K0-SUB2 is measured with a tester, does the voltage become the specified voltage?
Note: As the output is a pulse waveform, the tester will indicate the following voltages, but the actual voltages are different. Also, they are rough voltages.
<table>
<tr><th>Connector</th><th>Terminal</th><th>Voltage</th></tr>
<tr><td>J506</td><td>1 ⊕
2 ⊖
3 ⊕
4 ⊖</td><td>0V ←→
+22VDC
0V ←→
+22VDC</td></tr>
</table></td><td>YES</td><td>Check the wiring from K0-SUB2 to the motor, and if it is good, replace the motor.</td></tr>
<tr><td>(4)</td><td>NO</td><td>Replace K0-SUB2.</td></tr>
<tr><td></td><td></td><td>When a tester can not be used, first replace the motor, and if the trouble is not solved, then replace K0-SUB2.</td><td></td><td></td></tr>
</table>

 COPYRIGHT © 1999 CANON ELECTRONICS INC. CANON DR-5020/5080C REV.0 JUNE 1999 PRINTED IN JAPAN (IMPRIME AU JAPON)

8 Document board motor (M6) does not rotate

Cause/Faulty Location	Step	Check Item	Result	Action
DC power supply	1	Is power being supplied to the machine?	NO	Carry out the section on "Power does not come on."
Connection of connector	2	Is J507 of K0-SUB2 properly connected?	NO	Connect properly.
Load of transmission system	3	Is transmission system, which is the load on the motor, in order?	NO	Eliminate the abnormal load.
K0-SUB2 Document board motor	4	Disconnect J507, and carry out "FF-1E" of service mode. At that time, when the terminal voltage of K0-SUB2 is measured with a tester, does the voltage become the specified voltage? **Note:** As the output is a pulse waveform, the tester will indicate the following voltages, but the actual voltages are different. Also, they are rough voltages. Connector: J507 Terminal: 1 ⊕ / 2 ⊖ — Voltage: 0V ←→ +22VDC Terminal: 3 ⊕ / 4 ⊖ — Voltage: 0V ←→ +22VDC	YES	Check the wiring from K0-SUB2 to the motor, and if it is good, replace the motor.
			NO	Replace K0-SUB2.
	(4)	When a tester can not be used, first replace the motor, and if the trouble is not solved, then replace K0-SUB2.		

9 Registration clutch (CL1) does not rotate

Cause/Faulty Location	Step	Check Item	Result	Action
DC power supply	1	Is power being supplied to the machine?	NO	Carry out the section on “Power does not come on.”
Connection of connector	2	Is J504 of K0-SUB2 properly connected?	NO	Connect properly.
Load of transmission system	3	Is transmission system, which is the load on the registration roller, in order?	NO	Eliminate the abnormal load.
K0-SUB2 Registration clutch	4	Disconnect J504, and carry out “FF-03” of service mode. At that time, when the terminal voltage of K0-SUB2 is measured with a tester, does the voltage become the specified voltage? **Note:** The following voltages are rough values. Connector: J504; Terminal: 1 ⊕, 4 ⊖; Voltage: +20V → +24VDC	YES	Check the wiring from K0-SUB2 to the clutch and if it is good, replace the clutch.
			NO	Replace K0-SUB2.
	(4)	When a tester can not be used, first replace the clutch, and if the trouble is not solved, then replace K0-SUB2.		

 COPYRIGHT © 1999 CANON ELECTRONICS INC. CANON DR-5020/5080C REV.0 JUNE 1999 PRINTED IN JAPAN (IMPRIME AU JAPON)

IV. FEED TROUBLE-SHOOTING

Note 1: This machine is equipped with manual paper thickness adjusting and pickup roller load switching functions. When feeding extremely thick, thin, or pliant documents, faulty feeding can be improved by the customer changing the feed condition settings. For details, refer to the instruction manual.

1	Jam, double feed, wrinkles occur

Cause/Faulty Location	Step	Check Item	Result	Action
Document	1	Does document conform to specifications (in thickness, dimensions, fold, curl, etc.)?	NO	Get the customer to use documents that conform to specifications.
Roller	2	Is roller clean?	NO	Clean. If necessary, clean the reading glass too.
Parts in feed path	3	Are the parts that the document contacts properly assembled (not floated, tilted)?	NO	Assemble properly.
	4	Is the surface in contact with the document smooth (not scratched, no burrs)?	NO	Replace the defective parts.
Drive transmission system	5	Is an abnormal noise emitted when feeding? Is gear broken or belt loose?	YES	Replace the defective parts. Rectify the tautness of the belt.

COPYRIGHT © 1999 CANON ELECTRONICS INC.

V. SERVICE MODES

A. List of Service Modes

Table 7-2 shows a list of Service modes. In addition to modes used by the service technician in the field, the list includes modes used by the factory and development group. Do not use modes other than those instructed.

Note: The service mode for endorser is not described in this manual. Refer to the technical information which will be issued separately.

The following is a large grouping of the modes.

Address 00 to 1F.... Items set by Service/Factory
Address 20 to 4F.... Items displayed by Service/Factory
Address 50 to 6F.... Spare
Address 70 to BF ... Items set by Development (not made public)
Address C0 to EF .. Items displayed by Development (not made public)
Address F0 to FF ... Items adjusted by Service/Factory

Address	Sub-address	Description	Purpose	Initial Value
00		Clearing-related	(Note: Do not use by mistake)	
	-C0	Clears total paper feed counter	Do not use in field.	
	-C1 -C2 -C3 -C4 -C5 -C6	Clears replacement part counter 1 Clears replacement part counter 2 Clears replacement part counter 3 Clears replacement part counter 4 Clears replacement part counter 5 Clears replacement part counter 6	Use after replacing each periodical replacement part. For details, refer to paragraph G.	
	-CA	Clears all counters	Do not use in field.	
	-CF	Clears back up RAM	Use when returning back up RAM data to initial values. Re-set when there are items to be changed from the initial values. For details, refer to paragraph D.	
01		Sets horizontal scanning face registration	Use when changing values registration-adjusted with address "FA." No need to change in the field. (Unit: 0.1 mm). At time of installation, settings are on factory shipment values.	000
02		Sets horizontal scanning back registration		000
03		Sets vertical scanning leading edge registration		010
04		Sets vertical scanning trailing edge registration		010
05		Sets LED selection when in binary mode 0: Yellow Green (YG), 1: Red (R), 2: Green (G), 4: Blue (B), 7: White = Red + Green + Blue (RGB)	Use when type of LED unit is changed. In the field, use when LED unit is changed to DR-5020 red LED.	0, 7
06		Sets feeding speed when on count only	Use when changing the feeding speed of count only. Normally there is no need to change this in the field. (Unit: dpi) Should be "200" when user is using the machine. Refer to address "F6."	200

Table 7-2 (cont.)

 COPYRIGHT © 1999 CANON ELECTRONICS INC. CANON DR-5020/5080C REV.0 JUNE 1999 PRINTED IN JAPAN (IMPRIME AU JAPON)

Address	Sub-address	Description	Purpose	Initial Value
07		Sets document guide correction value	Use when changing the value of the document width detection sensor. Use when increasing/decreasing recording width when setting automatic paper size detection with only the document guides. Normally there is no need to change this in the field. (Unit: 0.1 mm)	-080
08		Fine-adjusts binary AE	Use when changing binary AE slice level very slightly. Normally handled by changing user setting and does not need to be changed in the field.	000
09		Sets document board position when on manual feed	Use for changing upper stopping position of document board when feeding paper manually. Do this after changing document board parts, etc. At time of installation, setting is on factory shipment value. For details, refer to paragraph E.	001
0A		Sets paper thickness opening when on manual feed	Use for changing gap when feeding paper manually. Change only when extremely thick or thin document is used with manual feed and feed is otherwise not possible. Normally there is no need to change this in the field	020
0b		Sets light intensity of double feed sensor LED	Use when changing setting to match characteristic of double feed sensor. Use after changing double feed sensor. At time of installation, setting is on factory shipment value. For details, refer to paragraph F.	050
20		Displays total paper feed count	Displays various numerical values. Use when checking status of use and time for periodic replacement. As display is up to four digits, paper feed count is displayed by lower four digits and upper four digits. Values at time of shipment from factory are the same as the initial values. For details, refer to paragraphs G.	0000
21		Displays replacement part counter 1		0000
22		Displays replacement part counter 2		0000
23		Displays replacement part counter 3		0000
24		Displays replacement part counter 4		0000
25		Displays replacement part counter 5		0000
26		Displays replacement part counter 6		0000

Table 7-2 (cont.)

Address	Sub-address	Description	Purpose	Initial Value
27		Displays model name 5020 : DR-5020 5080 : DR-5080C	Use when checking whether machine is DR-5020 or DR-5080C.	
28		Displays SD-RAM capacity 000 : No SD-RAM (DR-5020) 064 : Equipped with 64MB (DR-5080C standard) 128 : Equipped with 128MB (DR-5080C option)	Use when checking what capacity of SD-RAM is mounted on machine.	
29		Displays version of SH2-MAIN	Use when checking the version of each PCB software.	
2A		Displays version of K4-SUB		
2b		Displays version of K0-SUB2		
30		Displays detection of front separation/ back separation/front registration/ back registration sensors	Use when checking the status of detection of each sensor. The detection of each sensor can be checked by using jointly with manual or count only mode. For details, refer to paragraphs H.	
31		Displays detection of document board lower limit/document board upper limit/pickup sensors		
32		Displays detection of delivery sensor		
33		Displays detection of gap adjusting sensor		
34		Displays data of document width detection sensor		
35		Displays analog value of double feed sensor		
36		Displays analog value of front registration sensor	The analog value being output by each sensor can be checked. Normally not used in the field.	
37		Displays analog value of back registration sensor		
38		Displays analog value of front separation sensor		
39		Displays analog value of back separation sensor		
3A		Displays analog value of document width detection sensor		

Table 7-2 (cont.)

 COPYRIGHT © 1999 CANON ELECTRONICS INC. CANON DR-5020/5080C REV.0 JUNE 1999 PRINTED IN JAPAN (IMPRIME AU JAPON)

Address	Sub-address	Description	Purpose	Initial Value
3b		Displays analog value of pickup motor	The analog value being output by each motor can be checked. Normally not used in the field. **Note:** "3d" is the analog indication of the output showing the position of the imprinter head.	
3C		Displays analog value of feeding motor		
3d		Displays analog value of imprinter		
3E		Displays analog value of separation motor		
3F		Displays analog value of document board motor		
40		Displays analog value of main motor		
44		Displays analog value of double feed detection (high sensitivity)	Value of double feed detected is displayed. Normally not used in the field.	
45		Displays analog value of double feed detection (low sensitivity)		
46		Displays length of double feed detection.		
70 | bF		Development setting items (not publicly disclosed)	Do not use in the field. Do not change settings.	
C0 | EF		Development indicating items (not publicly disclosed)	Do not use in the field.	
			Note: For details of "F0," "F2," and "F8" to "Fb," refer to paragraphs L to M.	
F0		Gap adjustment mode	Used when adjusting the attached position of the gap adjusting motor.	
F2		Double feed sensor adjustment mode	Used when adjusting the attached position of the double feed sensor.	
F6		Count only mode for Service/Factory	Used when checking the feeding operation. Feeding speed of count only can be changed separately from normal count only. Setting value is a vertical resolution (dpi).	
F8		Gain adjustment/shading compensation mode	Use when adjusting LED light intensity and writing in shading data.	
F9		Color LED light intensity adjustment mode	Use together with "F8" when making LED adjustments of DR-5080C.	
FA		Registration adjustment mode	Use when making registration adjustments.	

Table 7-2 (cont.)

Address	Sub-address	Description	Purpose	Initial Value
Fb		Imprinter operation check mode	Use when checking the operation of the imprinter.	
FC		Timer feed mode	Use for special operation and when changing that operation mode. Normally not used in the field.	
Fd		Count only image take-in mode		
FE		Count only image take-in/timer feed mode		
FF		Operation check-related	Use for checking each operation. “FF-26” can be used to check that bar code decoder is working when LED on bar code decoder lights up.	
	-01	All LEDs flashing on operation panel		
	-02	Main motor drive (400 dpi)		
	-03	Clutch ON/Main motor drive (400 dpi)		
	-04	Main motor drive (200 dpi)		
	-05	Clutch ON/Main motor drive (200 dpi)		
	-06	Main motor drive (100 dpi)		
	-07	Clutch ON/Main motor drive (100 dpi)		
	-08	Pickup motor forward drive (low torque)		
	-09	Pickup motor reverse drive (low torque)		
	-0A	Pickup motor forward drive (medium torque)		
	-0b	Pickup motor reverse drive (medium torque)		
	-0C	Pickup motor forward drive (high torque)		
	-0d	Pickup motor reverse drive (high torque)		
	-0E	Feeding motor forward drive (low torque)		
	-0F	Feeding motor reverse drive (low torque)		
	-10	Feeding motor forward drive (medium torque)		
	-11	Feeding motor reverse drive (medium torque)		
	-12	Feeding motor forward drive (high torque)		
	-13	Feeding motor reverse drive (high torque)		

Table 7-2 (cont.)

 COPYRIGHT © 1999 CANON ELECTRONICS INC. CANON DR-5020/5080C REV.0 JUNE 1999 PRINTED IN JAPAN (IMPRIME AU JAPON)

Address	Sub-address	Description	Purpose	Initial Value
	-14	Feeding motor forward drive (ultra high torque)		
	-15	Feeding motor reverse drive (ultra high torque)		
	-16	Gap adjusting motor forward drive		
	-17	Gap adjusting motor reverse drive		
	-18	Separation motor forward drive (low torque)		
	-19	Separation motor reverse drive (low torque)		
	-1A	Separation motor forward drive (medium torque)		
	-1b	Separation motor reverse drive (medium torque)		
	-1C	Separation motor forward drive (high torque)		
	-1d	Separation motor reverse drive (high torque)		
	-1E	Document board motor forward drive (low torque)		
	-1F	Document board motor reverse drive (low torque)		
	-20	Document board motor forward drive (medium torque)		
	-21	Document board motor reverse drive (medium torque)		
	-22	Document board motor forward drive (high torque)		
	-23	Document board motor reverse drive (high torque)		
	-24	Front LED all illuminated		
	-25	Back LED all illuminated		
	-26	LED for checking that bar code decoder is illuminated		

Table 7-2

B. User Modes

A list of user modes is show for reference in Table 7-3.

Method of operation is as follows.

1) User mode will be entered if AE key () is pressed for about five seconds in user operation state.
2) Address will change if density key (,) is pressed.
3) Setting will change if AE key is pressed.
4) User mode will be exit if stop key (C/) is pressed.
   For other details of user mode, refer to the instruction manual.

Address Setting	Details
U1-0 U1-1	Buzzer OFF Buzzer ON (initial value)
U2-0	Document width detection mode of document guide only (initial value)
U3-0 U3-1 U3-2	Skew feed detection OFF (initial value) Skew feed detection ON Skew feed detection ON except manual feed mode
U4-0 U4-1	SCSI synchronized transmission OFF SCSI synchronized transmission ON (initial value)
U5-0 U5-1	Bar code reading buzzer OFF Bar code reading buzzer ON (initial value)
U6-0 U6-1	Output START/STOP codes in Codabar in small letter (initial value) Output START/STOP codes in Codabar in capital letter
U7-0 U7-1 U7-2 U7-3	Number of times bar code is verified: None Number of times bar code is verified: Once (initial value) Number of times bar code is verified: Twice Number of times bar code is verified: Three times
U8-0 U8-1	Imprint/endorsement OFF when on count only mode (initial value) Imprint/endorsement ON when on count only mode
U9-0 U9-1	Check size endorsement (initial value) Standard size endorsement

Table 7-3

 COPYRIGHT © 1999 CANON ELECTRONICS INC. CANON DR-5020/5080C REV.0 JUNE 1999 PRINTED IN JAPAN (IMPRIME AU JAPON)

C. Operating Method

1. Entering Service Mode

1) Turn on the power to the main machine
2) Insert a pin of about 1 mm in diameter in the hole in the back and press the switch (SW103) of the main CPU PCB assembly (SH2-MAIN), while pressing the switch (SW103), press the Stop key (C/) on the operation panel.

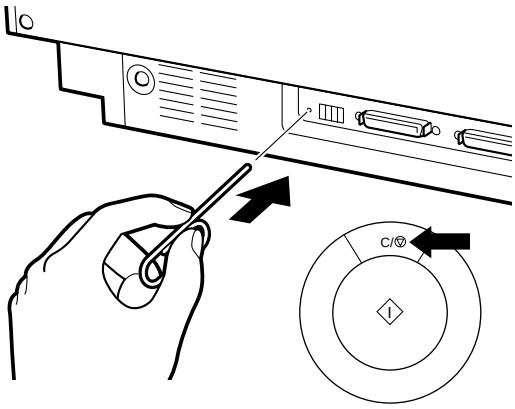

Fig. 7-6

3) Enter service mode. Display becomes “A-00” showing that address is “00.” Also, while in service mode, the dot in the lower right remains flashing.

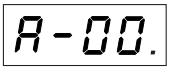

Fig. 7-7

2. Exiting Service Mode

1) Service mode will be exited by pressing the Stop key for about three seconds while the address is displayed. The address display will change to the usual number-of-sheets-fed display.

3. Basic Operation

1) The address can be changed by pressing the density key (,) while the address is displayed. Pressing the key increases and pressing the key decreases the address. However, the changes are an endless chain.
2) Pressing the AE key () while the address is displayed will display the data of that address. Ex.: “010,” etc.
3) Pressing the density key while the data is displayed will change the data.
4) Pressing the AE key while the data is displayed will fix that data.
5) Pressing the Stop key while the data is displayed will return the display to the address.
6) In case of automatic adjustment mode, pressing the AE key () while the address is displayed, will enable automatic adjustment to start. Also, when completed, the display will automatically return to the address. Ex.: “F8,” etc.

4. Basic Operation When There are Sub-addresses

When there are sub-addresses such as “FF-01” in the address, operate as follows.

1) Pressing the AE key () while the address is displayed will change the display to “0000.”
2) Next, pressing the density key, will change the sub-address.
3) Pressing the AE key while the sub-address is displayed, will activate the corresponding mode.
4) Pressing the Stop key while the sub-address is displayed will return the display to the address.

Notes of Caution:

1) When service mode is entered, the error code will not be displayed even when a document jam, etc. occurs because the address and settings will be displayed in the display panel. As it is conceivable that an error has occurred when service mode cannot be operated, take steps to eliminate the document jam. If the machine is not restored even then, exit service mode and check the error indication.

COPYRIGHT © 1999 CANON ELECTRONICS INC.

D. Clearing Backup RAM

1. Address-Sub

"00-CF"

2. Purpose

Use to return backup RAM data to the initial value.

1) When error code "E80" is displayed. Also includes after replacement of SH2-MAIN.
2) When it is necessary to return the setting to the initial value.

3. Operating Procedure.

Refer to the basic operation.

4. Notes of Caution

As all the data recorded in the backup RAM will return to the initial value, there will be items that will require re-setting.

a. Items returning to initial value.

1) Service mode
   - Various settings: From "01" to "0b"
   - Paper feed and other counters: From "20" to "26"
   - Double feed detected display: From "44" to "46"
   - Set time of timer feed mode: "FC"

Note 1: Data that do not return to the initial value are
- Model name, SD-RAM capacity, version displays: "27" to "2b"
- Various adjustment values: "F0" to "FA"

Note 2: Double feed detection-related: "44" to "46" will return to initial values when power is rest.

2) Scanner settings
   - Basic settings
   - Detailed settings (including function key setting)
3) User mode settings
4) Development set values, etc. (re-setting not required)

b. Items requiring re-setting

If the initial value is good, the re-setting is not necessory

1) Service mode
   - LED selection setting when on binary mode: "05"
   - Document board position setting when on manual feed: "09"
   - Double feed detection LED light quantity setting: "0b"
2) Scanner settings
   - Basic settings
   - Detailed settings (including function key setting)
3) User mode settings

 COPYRIGHT © 1999 CANON ELECTRONICS INC. CANON DR-5020/5080C REV.0 JUNE 1999 PRINTED IN JAPAN (IMPRIME AU JAPON)

E. Setting Document Board Position When on Manual Feed

1. Address

"09"

Note 1: At time of installation, settings are on factory shipment values. Refer to the "Setting label" attached on the right side plate of the upper unit.

Address	Factory Default
05	0 1 2 4 ⑦
09	14
0B	50

MA2-5608

2. Purpose

Use for changing the upper stopping position of the document board when on manual feed.

When the relative positions of the upper stopping position of document board and the pickup sensor (lever) slipout of position, upper stopping position of document board, the pickup sensor will sometimes not come ON when on manual feed even though a document is set on the board or the pickup sensor will come ON at the upper surface of the document board even though no document is set on the board. Carry out this setting when the pickup operation becomes faulty during manual feed.

1) When the document board is removed and re-assembled.
2) When the document board and the parts related to document board raising and lowering operations are replaced or re-assembled.
3) When the Document board upper limit sensor is replaced or re-assembled.
4) When the pickup sensor and the sensor lever are replaced or re-assembled.
5) When the backup RAM is cleared, and the SH2-MAIN is replaced.

Note 1: The set value is the applied pulse number of the motor from the time the document board upper limit sensor comes ON until the document board motor stops. Increasing the set value will prolong the time until the motor comes to a stop so the stopping position of the document board becomes higher.

3. Operating Procedure

1) Loosen the screws of the left and right document board stoppers, so that the document board stoppers move.

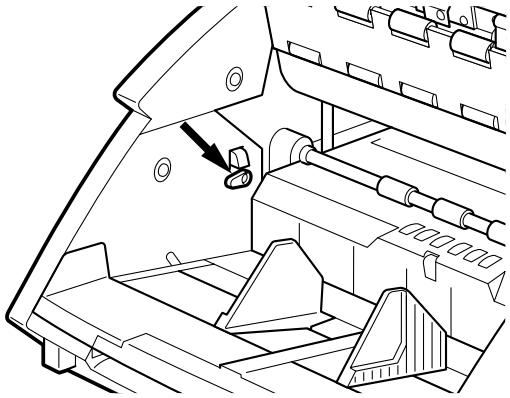

Fig. 7-8

2) Enter "09" of service mode. The present set value will be displayed.
3) Set and fix the setting at "005."
4) Press the "Count Only" button to go on count only mode.
5) Set the pickup start mode at "Manual." The document board will rise.
6) When the pickup roller does not turn:
   6-1) Raise the set value by 2 and fix it.
   6-2) After changing the pickup start mode and lowering he document board, again set to "Manual" and raise the document board.
   6-3) Repeat steps 6-1 and 6-2 until the pickup roller begins to turn.
   6-4) When the pickup roller begins to turn, the document board will lower due to the pickup error.
   6-5) Lower the set value by 4 and fix it. Continue the operation from step 8.
7) When the pickup roller turns at the set value "005":
   As faulty assembling on the sensor and other document board raising/lowering related parts is conceivable, check the state of assembly. If assembly is in order and the pickup roller begins to turn again at "005," fix the set value at "001."
8) Clear the pickup error by opening and closing the upper unit.

9) Open the upper unit, and place the weight of approx. 2.9N (300gf) on the far back center of the document board (where the pickup roller hits).
10) Fix the left and right document board stoppers in position so that their ends contact the upper face of the document board. Do not push the document board down.
11) Close the upper unit, and check that the thin paper (0.05 mm in thickness) is fed manually at this position.
The thin paper should not have curl, burr or pleat on its edge.
12) If the thin paper is not fed or the pickup roller turns when there is no thin paper, go back to step3 and resume the procedure.
13) Exit service mode.
14) If change the setting value, correct the number on the "setting label."

4. Notes of Caution

1) The criteria for fixing the set value is "005" to "015," but out of this range does not mean the setting is faulty.
2) When document jam such as pickup error occurs, the operating keys will not work.
In such a case, opening the upper unit, eliminating the document jam, and closing the upper unit will allow operation to proceed again.

F. Setting Light Intensity of Double Feed Sensor LED

1. Address

"0b"

Note 1: At the time of installation, the setting is on factory shipment values. Refer to the "setting label."

2. Purpose

Use to change the set value to match the characteristic of the double feed sensor.

1) Use when double feed sensor is replaced.
2) When backup RAM is cleared and SH2-MAIN is replaced.

3. Operating procedure

1) Read the number indicated on the cable assembly of the double feed sensor. Or read the number on the "setting label."

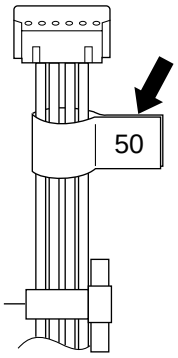

Fig. 7-9

2) Enter "0b" of service mode. The present set value will be displayed.
3) Change the setting value to the number read at step 1 and fix it.
4) Exit service mode.
5) If change the setting value, correct the number on the "setting label."

 COPYRIGHT © 1999 CANON ELECTRONICS INC. CANON DR-5020/5080C REV.0 JUNE 1999 PRINTED IN JAPAN (IMPRIME AU JAPON)

G. Displaying and Clearing of Counters

1. Adress-Sub

Display: From “20” to “26”; Clear: From “00-C1” to “00-C6”

Note 1: In the field, do not use “00-C0” clear of the total paper feed counter and “00-CA” clear of the all counters.

2. Purpose

Use to check the status of use and the time for periodical replacement.

3. Operating procedure

1) Refer to the basic operation and enter into each service mode.
2) Replacement part counter 1 display “21” shows the LED illuminated time (in Hours) and others show the number of sheets fed.
3) As the display for the number of sheets fed is four digitals, the number of sheets is shown divided into the lower four digits and the upper four digits. Switching between the lower four digits and the upper four digits is done by the density keys.

   Ex.: When number of sheets fed is 123,456 sheets,

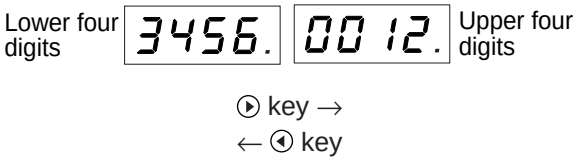

4) After checking the display, exit service mode.
5) When the LED unit or other replacement parts are replaced, enter the corresponding sub-address in service mode “00,” and clear. Assign the replacement part counters as follows.

Name of Counter	Display	Clear	Applicable part
Replacement part counter 1	[21]	[00-C1]	LED unit
Replacement part counter 2	[22]	[00-C2]	Part with replacement criteria of 250,000 sheets (separation roller)
Replacement part counter 3	[23]	[00-C3]	Part with replacement criteria of 500,000 sheets (pickup roller, etc.)
Replacement part counter 4	[24]	[00-C4]	Part with replacement criteria of 1.5 million sheets (Double feed sensor lever 2, etc.)
Replacement part counter 5	[25]	[00-C5]	Part with replacement criteria of 3 million sheets (separation motor)
Replacement part counter 6	[26]	[00-C6]	Spare

Note 1: LED unit replacement shall basically be replacement of the front and back at the same time.

Table 7-4

4. Notes of Caution:

1) After a set value is cleared, it cannot be returned to its previous setting, so be sure not make a mistake when clearing. Also, the count is cleared when the backup RAM is cleared and the SH2-MAIN is replaced. It would be wise to record the count in a separate service record at the time of checking.

H. Sensor Detection Display

1. Address

Table 7-5 shows the addresses and the corresponding sensor names.

Address	Sensor Name
[30]	Front separation/back separation/ front registration/back registration sensors
[31]	Document board lower limit/document board upper limit/pickup sensors
[32]	Delivery sensor
[33]	Gap adjustment sensor
[34]	Document width detection sensor
[35]	Double feed sensor

Table 7-5

2. Purpose

Use for checking the state of detection of the sensors. The sensors can be checked whether in order or not by using jointly with feeding by count only mode, or blocking the light by hand.

3. Operating Procedure

1) Data is displayed when the AE key is pressed in the corresponding address state. For other operating methods, refer to the paragraph on basic operation.
2) In the data displayed state, check that the data changes by covering the sensor unit with the hand and blocking the light by moving the sensor lever. Also, it is possible to check that the data changes by feeding paper in the count only mode.

Note 1: If the data displayed does not change, it is possible that the sensor is defective or it has been incorrectly installed, or there is a faulty connection, so carry out the necessary repairs.

 COPYRIGHT © 1999 CANON ELECTRONICS INC. CANON DR-5020/5080C REV.0 JUNE 1999 PRINTED IN JAPAN (IMPRIME AU JAPON)

4. Display

Table 7-6 shows the displays and the corresponding addresses.

Address	Display Position	Display Details
[30]	0000. Front separation Back separation Front registration Back registration	0: Sensor OFF 1: Sensor ON (light blocked)
[31]	0000. Document board lower limit Document board upper limit Pickup (Unused)	0: Sensor OFF 1: Sensor ON (light blocked) However, unused display is “0.”
[32]	0000. Delivery (Unused)	0: Sensor OFF 1: Sensor ON (light blocked) However, unused display is “0.”
[33]	0000. Gap adjustment (Unused)	0: Sensor OFF 1: Sensor ON (light blocked) However, unused display is “0.”
[34]	0000. 0126. Document guide position	Displays document guide position (L) in mm When widened to maximum: 000 L Document guide
[35]	007F. Analog output value	Displays analog output value of double feed sensor in two digits. Numerical values are hexadecimal numbers from “00” to “FF.” Adjust with service mode “F2.”

I. Gap Adjustment Mode

1. Address

"F0"

2. Purpose

Use when adjusting installed position of gap adjusting motor. Re-adjustment is necessary when the relative positions of the shutter on which the gap adjusting motor is attached and the gap adjusting sensor slip out of position.

1) When the gap adjusting motor and the gap adjusting sensor are replaced.
2) Even when only disassembling and re-assembling are involved check the value and, if necessary, re-adjust.

3. Operating Procedure

1) Remove the front delivery cover. Shield the IP door sensor from the light with thick paper or the like. Also, check that the mark for checking the position of the shutter and cam is correctly located. If it is not, correct by turning the shutter.

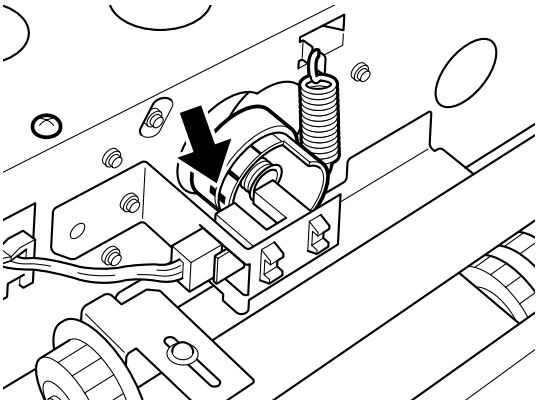

Fig. 7-10

2) Have address "F0" displayed and press the AE key. Standard value "00-0." will be displayed.

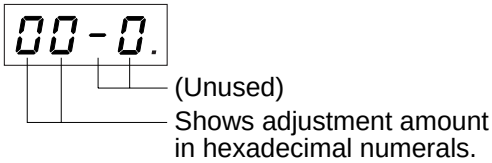

3) Set the pickup start mode at "Semi Auto".
4) Set test sheet: TKM-0267 (0.19 mm thick and free of curling, burrs, and folds) sideways on the document board and have it fed.
5) Read the indication.
6) When the adjustment amount is from "14" to "16", there is no need for adjustment. Continue from step 10.

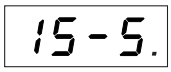

7) If the adjustment amount is not from "14" to "16", loosen the fixing three screws for the motor attachment plate, turn the adjusting screw, and change the position of the motor attachment plate. When the motor moves downwards, the gap increases.

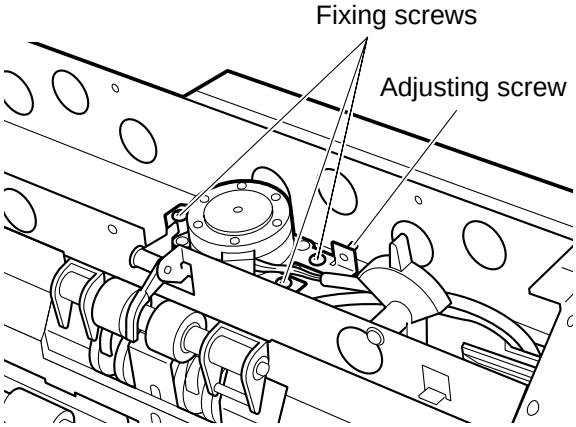

Fig. 7-11

8) Fix the motor attachment plate, try feeding the test sheet and read the indication.
9) Repeat the adjustment until the adjustment amount becomes from "14" to "16".
10) Feed the test sheet once more and check that the adjustment amount is from "14" to "16".
11) Exit service mode.
12) Attach the front delivery cover.

4. Notes of Caution.

1) The adjustment amount differs depending on the thickness of the paper that is fed. The adjustment range when t = 0.26 mm is 18 ± 1, and when t = 0.12 mm (TKM-0271) is 12 ± 1. However, variations occur when the paper becomes thinner so try to avoid using TKM-0271 as much as possible.

 COPYRIGHT © 1999 CANON ELECTRONICS INC. CANON DR-5020/5080C REV.0 JUNE 1999 PRINTED IN JAPAN (IMPRIME AU JAPON)

J. Double Feed Sensor Adjustment Mode

1. Address

"F2"

2. Purpose

Use when adjusting the attached position of the double feed sensor. Re-adjustment is necessary when the relative positions of the double feed sensor and the double feed sensor lever slip out of position.

1) When the double feed sensor and its attachment plate are replaced or disassembled/reassembled.
2) When the double feed sensor lever 2 and the double feed reference plate of the lower read unit are replaced.

3. Operating Procedure

1) Remove the upper delivery cover and put the upper unit in the closed state.
2) Have address "F2" displayed and press the AE key. The present double feed sensor output value will be displayed.

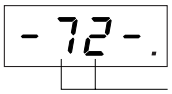

Shows output value in hexadecimal numerals.

3) When the display is from "60" to "8F," there is no need for adjustment. Continue from step 6.
4) Slightly loosen the fixing screw of the double feed sensor attachment plate.

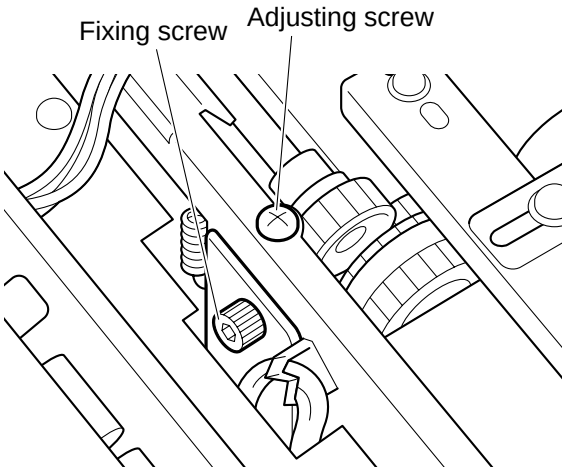

Fig. 7-12

5) After tightening the fixing screw, turn the adjusting screw to move the double feed sensor attachment plate up and down until the display becomes from "70" to "7F." When the adjusting screw is turned to the right, the attachment plate moves upwards and the number decreases. When the adjusting screw is turned to the left, the attachment plate moves downward and the numerical value increases.

Note 1: As the numerical value changes when the fixing screw is tightened, adjust with that change in mind.

Note 2: To decrease the amount of change of the numerical value, turn the adjusting screw while pushing the attachment plate downward.

6) Open and close the upper unit again. If the indication is from "60" to "8F" when the upper unit is closed, it is OK. If it is outside that range, re-adjust.
7) Exit service mode.
8) Attach the upper delivery cover.

4. Notes of Caution

1) The power is on when adjusting. As the fixing screw and adjusting screw are close to the pickup control PCB assembly, take care not to drop a tool on the PCB assembly.

K. Gain Adjustment/Shading Compensation Mode

1. Address

"F8"

2. Purpose

Use when adjusting the light intensity of the LED and when writing the shading data.

1) When the LED unit and reading unit are replaced.
2) When periodic maintenance is carried out: every 150 hours the LED is illuminated (equal to about 500,000 sheets), and when the LED unit is replaced: every 500 hours the LED is illuminated (estimate the approximate number of sheets from the record obtained at the time of the periodic maintenance).
3) When SH2-MAIN is replaced.

3. Data Processing Procedure

1) Check and adjust the LED light intensity. Obtain the light intensity adjustment data separately for the color of the LED, the output mode (color and black & white), and resolution (300 dpi or less and 400 dpi). There are 15 data for DR-5080C and three data for DR-5020. As the number of data of DR-5080C is more than that of DR-5020, the following steps will naturally take longer for DR-5080C than DR-5020.
2) Write in the LED light intensity data.
3) Obtain the black compensation data.
4) Obtain the basic shading data while feeding a standard white sheet (TKM-0299).
5) Write in the black compensation data and the basic shading data.
6) Obtain the shading data for each condition while feeding the standard white sheet.
7) Write in the shading data for each condition.

Note 1: The data is written into the flash memory (IC133).

4. Operating Procedure

1) Make sure to open the upper unit and clean the glass of the upper and lower reading unit, and rollers.
2) Widen the document guide to the maximum, and manually feed the standard white sheet (TKM-0299) between the registration rollers. Make sure to feed the sheet until its leading edge passes the reading unit.

Note 1: Make sure the sheet is not dirty, wrinkled, or folded.

Note 2: Make sure to feed the sheet straight in and not skewed.

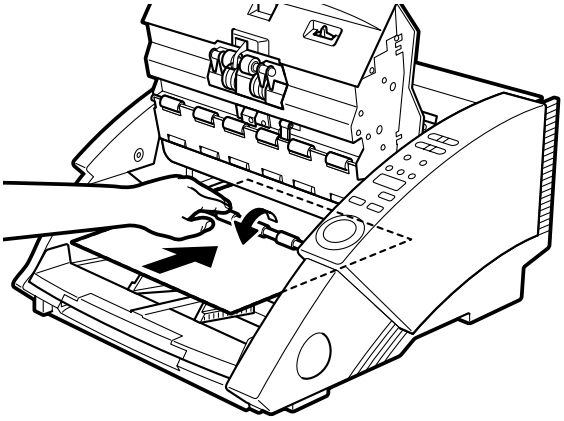

Fig. 7-13

3) Close the upper unit.
4) Enter service mode "F8" and press the AE key.
5) Processing will begin and "- F8 - ." will start flashing on the display unit.

6) After obtaining the black compensation data, feed will start automatically and the next processing will start.
7) When the feeding stops and the processing is finished, the display will change to an illuminated "A-F8."

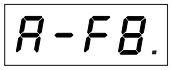

8) Remove the standard white sheet and exit service mode.

5. Notes of Caution

1) When "EEEE." is displayed at step 5, it denotes that adjustment cannot be made because of lack of light quantity or because of dirtiness. Carry out again after resetting the power of the main machine. A proper adjustment cannot be made just by pressing the clear key and clearing the error indication. Always reset the power of the main machine. The following gives the causes of the error and the countermeasures to take.

 COPYRIGHT © 1999 CANON ELECTRONICS INC. CANON DR-5020/5080C REV.0 JUNE 1999 PRINTED IN JAPAN (IMPRIME AU JAPON)

- When the standard white sheet is not set in the machine, set it.
- When the glass is dirty, clean it.
- When the standard white sheet is dirty, replace the sheet or remove the dirt.
- When the LED is not illuminated, check the connections.
- When the time the LED has been illuminated exceeds 500 hours, replace the LED unit.

2) The following shows the processing times required.
   - In the case of DR-5020, step 5 takes 20 seconds and step 6 takes 10 seconds, total 30 seconds.
   - In the case of DR-5080C, step 5 takes 2 min. 30 secs. and step 6 takes 30 seconds, total 3 minutes.
3) In the case of DR-5080C, carry out color LED adjustment mode “F9” when this mode is executed.
4) When the red LED units are used for DR-5020, operate this mode after set the data to 1 for the LED selection “05.”

L. Color LED Adjustment Mode

1. Address

“F9”

2. Purpose

Use when carrying out LED adjustment of DR-5080C, with “F8” together.

With “F8,” adjustment was carried out by using a special uniform white colored sheet. With just this, the LED light intensity of the red color becomes increases causing the red of the image data to become too strong. To correct this, adjustment to lower the light intensity of the red color of the LED is carried out with “F9” using standard white copy paper.

3. Operating Procedure

1) Make sure to open the upper unit and clean the glass of the upper and lower reading unit, and rollers.
2) Manually feed a standard white copy paper (A4/LTR size) between the registration rollers. Make sure to feed the copy paper until its leading edge passes the reading unit.

Note 1: Make sure the copy paper is not dirty, wrinkled, or folded.

Note 2: Make sure to feed the copy paper straight in and not skewed.

3) Close the upper unit.
4) Enter service mode “F9” and press the AE key.
5) Processing will begin. “- F9 - .” will start flashing on the display panel.

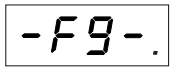

6) When the processing is finished, the display will change to an illuminated “A-F9.” It takes about five seconds.

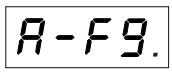

7) Remove the copy paper and exit service mode.

4. Notes of Caution

1) When “EEEE.” is displayed at step 5, it denotes that adjustment cannot be made because of lack of light intensity or because of dirtiness. Carry out again after resetting the power of the main machine. The conceivable causes of the error and countermeasures to take are the same as in the case of “F8.”
2) This mode is to match the light intensity of other LEDs to an LED whose light intensity is low. If adjustments are made many times, the overall light intensity is lowered and may cause an error to be indicated. In such a case, make sure to re-adjust from “F8.”

M. Registration Adjustment Mode

1. Address

“FA”

2. Purpose

Use when adjusting registration. Re-adjustment becomes necessary when the positions of the back registration sensor and the reading unit change. This adjustment must also be carried out when SH2-MAIN is replaced.

The adjustment is to write in the leading edge and trailing edge registration correction data and the slippage correction data of the left and right registration of the top and back surfaces.

3. Operating Procedure

1) Enter service mode and have address “FA” displayed.
2) Set a standard white copy paper (A4/LTR size) on the document board with vertical direction.

Note: Make sure the copy paper is not dirty, wrinkled or folded.

3) Pressing the AE key will automatically feed the copy paper. “-FA - .” will start flashing on the display panel.

-FA-.

4) When processing is finished, the display will return to “A-FA.”
5) Exit service mode.

4. Notes of Caution

1) When “EEEE.” is displayed at step 3, it denotes that proper data could not be obtained. Check if there is any fault in the copy paper, and try again after resetting the power.

N. Imprinter Operation Check Mode

1. Address

“Fb”

2. Purpose

Use when checking the operation of the imprinter without a personal computer. The imprinter is an optional item.

3. Operating Procedure

1) Adjust the left and right printing positions as necessary. For details, refer to the instruction manual.
2) Enter service mode “Fb” and press the AE key.
3) Set a suitable sheet of paper on the document board and feed it.
4) “CANON DR-5020/5080C W/IMPRINTER” will be printed.
5) Check the state of printing.
6) Exist service mode.

 COPYRIGHT © 1999 CANON ELECTRONICS INC. CANON DR-5020/5080C REV.0 JUNE 1999 PRINTED IN JAPAN (IMPRIME AU JAPON)

VI. AFTER REPLACING PARTS

Some of the parts used in this machine require adjustments and settings of the service modes after replaced or disassembled/reassembled.

Table 7-7 shows the concerned parts and service modes. For details on the service modes, refer to V. SERVICE MODES.

As a basic procedure, check document feed and recorded images after the replacement or disassembly/reassembly of the parts. If any error occurs, correct it referring to this chapter 7: TROUBLESHOOTING.

Parts \ Address	"00-CF" RAM clear	"05" LED selection	"09" Board position	"0b" DF LED light	"F0" Gap adjustment	"F2" DF sensor	"F8" Shading	"FA" Registration
Main CPU PCB ass'y	Replacing	Replacing	Replacing	Replacing			Replacing	Replacing
Reading unit, LED unit							Replacing	Replacing Disassembling
Document board ass'y, Up/Down related			Replacing Disassembling					
Pickup sensor, Pickup sensor lever			Replacing Disassembling					
Double feed sensor				Replacing		Replacing Disassembling		
DF sensor mount plate, DF sensor lever 2						Replacing Disassembling		
DF sensor reference plate						Replacing Disassembling		Replacing Disassembling
Gap adjusting motor, Gap reference sensor					Replacing Disassembling			
Registration back sensor PCB ass'y								Replacing Disassembling

Table 7-7

Note 1: In the case of DR-5080C, after adjustments are made in Address "F8," make adjustments in Address "F9" also.

Note 2: In the case that the upper unit is removed, check the adjusted value in Address "F2." Additionally, if Error code "C01" appears even after the upper unit is completely closed, make readjustment in Address "F2."

Note 3: Some corrective procedure will be required after the firmware in the Main CPU PCB Assembly is changed. For details, refer to the technical information issued separately.

COPYRIGHT © 1999 CANON ELECTRONICS INC.

APPENDIX

I. GENERAL CIRCUIT DIAGRAM ..... A-1 | II. LIST OF SPECIAL TOOLS A-3

COPYRIGHT © 1999 CANON ELECTRONICS INC. CANON DR-5020/5080C REV.0 JUNE 1999 PRINTED IN JAPAN (IMPRIME AU JAPON)

I. GENERAL CIRCUIT DIAGRAM

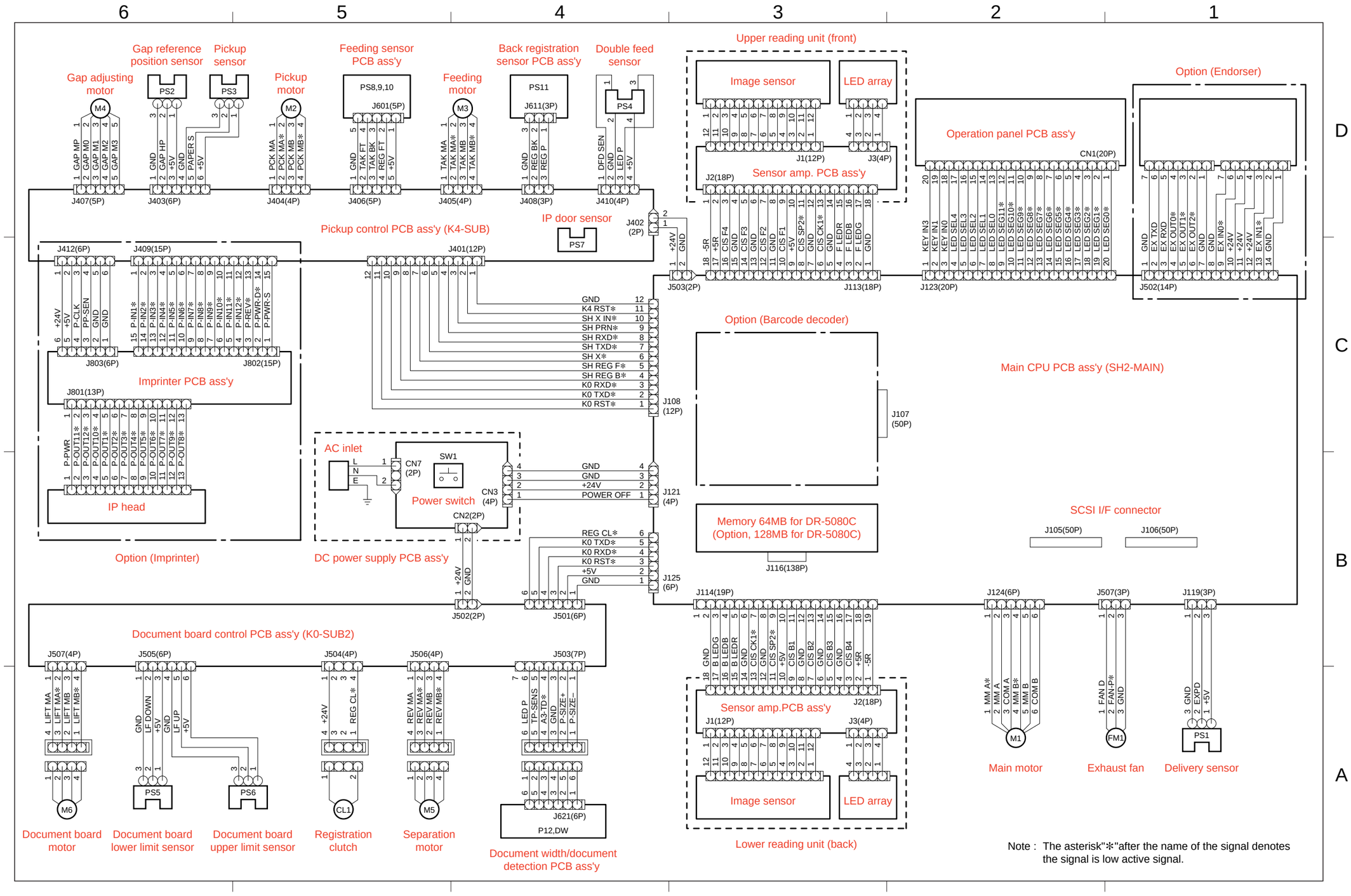

II. LIST OF SPECIAL TOOLS

The following lists the special tools that are required for servicing this machine in addition to the standard tool set.

No.	Tool name	Tool No.	Shape	Rank	Purpose/Remarks
1	Test sheet	TKM-0271	A4 copy size	A	• 10 sheets/set • One side printed • Feed/Image checking
2	Test sheet	TKM-0267	Special size (230 ∞ 100 mm)	B	• 10 sheet/set • Image checking for duplex document • Gap adjustment (t=0.19 mm)
3	Standard white sheet	TKM-0299	Special size (305 ∞ 350 mm)	B	• 10 sheet/set • Shading compensation

Note: Rank
A= Each service technician should carry one with him.
B= A group of about five service technicians should share one.
C= Each workshop should keep one.

COPYRIGHT © 1999 CANON ELECTRONICS INC.

Prepared by

Quality Assurance Center
Canon Electronics Inc.

Printed in Japan

FIRST EDITION (JUNE 1999) [63999]

1248 Shimokagemori, Chichibu-shi
Saitama 369-1892, Japan

Canon

The publication is printed on
70% reprocessed paper.

PRINTED IN JAPAN (IMPRIME AU JAPON) 0699AB0.80-1