Canon

TONER+
www.tonerplus.com.ua

M3010 Series

Service Manual

1 2 3 4 5 6 7 8

Application

This manual has been issued by Canon Inc. for qualified persons to learn technical theory, installation, maintenance, and repair of products. This manual covers all localities where the products are sold. For this reason, there may be information in this manual that does not apply to your locality.

Corrections

This manual may contain technical inaccuracies or typographical errors due to improvements or changes in products. When changes occur in applicable products or in the contents of this manual, Canon will release technical information as the need arises. In the event of major changes in the contents of this manual over a long or short period, Canon will issue a new edition of this manual.

The following paragraph does not apply to any countries where such provisions are inconsistent with local law.

Trademarks

The product names and company names used in this manual are the registered trademarks of the individual companies.

Copyright

This manual is copyrighted with all rights reserved. Under the copyright laws, this manual may not be copied, reproduced or translated into another language, in whole or in part, without the consent of Canon Inc.

© CANON INC. 2011

Caution

Use of this manual should be strictly supervised to avoid disclosure of confidential information.

Explanation of Symbols

The following symbols are used throughout this Service Manual.

Symbols	Explanation
	Check.
	Check visually.
	Check the noise.
	Disconnect the connector.
	Connect the connector.
	Remove the cable/wire from the cable guide or wire saddle.
	Set the cable/wire to the cable guide or wire saddle.
	Remove the screw.
	Tighten the screw.

Symbols	Explanation
	Remove the claw.
	Insert the claw.
	Use the bundled part.
	Push the part.
	Plug the power cable.
	Turn on the power.

The following rules apply throughout this Service Manual:

1. Each chapter contains sections explaining the purpose of specific functions and the relationship between electrical and mechanical systems with reference to the timing of operation.
   In the diagrams, represents the path of mechanical drive; where a signal name accompanies the symbol, the arrow ⟶ indicates the direction of the electric signal.
   The expression "turn on the power" means flipping on the power switch, closing the front door, and closing the delivery unit door, which results in supplying the machine with power.

2. In the digital circuits, '1' is used to indicate that the voltage level of a given signal is "High", while '0' is used to indicate "Low". (The voltage value, however, differs from circuit to circuit.) In addition, the asterisk (*) as in "DRMD*" indicates that the DRMD signal goes on when '0'.
   In practically all cases, the internal mechanisms of a microprocessor cannot be checked in the field. Therefore, the operations of the microprocessors used in the machines are not discussed: they are explained in terms of from sensors to the input of the DC controller PCB and from the output of the DC controller PCB to the loads.

The descriptions in this Service Manual are subject to change without notice for product improvement or other purposes, and major changes will be communicated in the form of Service Information bulletins.
All service persons are expected to have a good understanding of the contents of this Service Manual and all relevant Service Information bulletins and be able to identify and isolate faults in the machine.

Contents

0 Safety Precautions

CDRH Provisions ---- 0-2
Laser Safety ---- 0-2
About Laser Beams ---- 0-2
Handling Laser Scanner Unit ---- 0-2
Toner Safety ---- 0-3
About Toner ---- 0-3
Handling Adhered Toner ---- 0-3
Notes on Handling Lithium Battery ---- 0-3
Notes on Assembly/Disassembly ---- 0-3

1 Product Overview

Product Lineup ---- 1-2
Host Machine ---- 1-2
Options ---- 1-2
Product Features ---- 1-2
Product Features ---- 1-2
Specifications ---- 1-3
Product Specifications ---- 1-3
Parts Name ---- 1-4
External View ---- 1-4
Front side of the machine ---- 1-4
Rear side of the machine ---- 1-4
Cross Section View ---- 1-5
Control Panel ---- 1-5

2 Technical Overview

Basic Configuration ---- 2-2
Configuration function ---- 2-2
Basic Sequence ---- 2-2
Basic Sequence of Operation ---- 2-2
Print Sequence ---- 2-3
Power-On Sequence ---- 2-4
Controller System ---- 2-5
Main Controller ---- 2-5
Overview ---- 2-5
Engine Controller ---- 2-5
General description ---- 2-5
Service Works ---- 2-6
At parts replacement ---- 2-6
Maintenance ---- 2-6
Notes on service works ---- 2-6
Original Exposure System ---- 2-7
Overview ---- 2-7
Major Components ---- 2-7
Service Works ---- 2-8
At parts replacement ---- 2-8
Maintenance ---- 2-8
Notes on service works ---- 2-8
Laser Exposure System ---- 2-9
Overview ---- 2-9
Overview ---- 2-9
Controlling the Laser Activation Timing ---- 2-10
Laser ON/OFF Control ---- 2-10
Horizontal Sync Control ---- 2-10
Laser Control ---- 2-11
Auto Power Control (APC) ---- 2-11
Laser Scanner Motor Control ---- 2-11
Overview ---- 2-11
Scanner Motor Fault Detection ---- 2-12
Service Works ---- 2-12
At parts replacement ---- 2-12
Maintenance ---- 2-12
Notes on service works ---- 2-12

Image Formation System ---------- 2-13
Overview/Configuration ---------- 2-13
Overview ---------- 2-13
Print Process ---------- 2-13
Static Latent Image Formation Block ---------- 2-14
Development Block ---------- 2-14
Transfer Block ---------- 2-15
Fixing Block ---------- 2-15
Drum Cleaning Block ---------- 2-15
High-Voltage Control ---------- 2-16
Overview ---------- 2-16
Generating Primary Charging Bias ---------- 2-16
Generating Developing Bias ---------- 2-16
Generating Transfer Bias ---------- 2-16
Toner Cartridge ---------- 2-17
Toner Level Detection ---------- 2-17
Toner Cartridge Absence/Presence Detection ---------- 2-17
Service Works ---------- 2-18
At parts replacement ---------- 2-18
Maintenance ---------- 2-18
Notes on service works ---------- 2-18
Fixing System ---------- 2-19
Overview/Configuration ---------- 2-19
Overview ---------- 2-19
Main Parts of Fixing assembly ---------- 2-19
Various Control Mechanisms ---------- 2-20
Fixing Temperature Control ---------- 2-20
Protective Functions ---------- 2-20
Other Functions ---------- 2-22
Throughput Down Control ---------- 2-22
Service Works ---------- 2-23
At parts replacement ---------- 2-23
Maintenance ---------- 2-23
Notes on service works ---------- 2-23
Pickup Feed System ---------- 2-24
Overview ---------- 2-24
Overview ---------- 2-24
Detecting Jams ---------- 2-25
Jam Detection Outline ---------- 2-25
Delay Jam ---------- 2-25
Stationary Jam ---------- 2-27
Other Jams ---------- 2-27
Service Works ---------- 2-28
At parts replacement ---------- 2-28
Maintenance ---------- 2-28
Notes on service works ---------- 2-28
External And Controls System ---------- 2-29
Power Supply ---------- 2-29
Power Supply ---------- 2-29
Protective Functions ---------- 2-29
Service Works ---------- 2-30
At parts replacement ---------- 2-30
Maintenance ---------- 2-30
Notes on service works ---------- 2-30

3 Periodical Services

Periodically Replaced Parts ---------- 3-2
Periodically Replaced Parts ---------- 3-2
Consumables ---------- 3-2
Consumables ---------- 3-2
Periodical Service ---------- 3-3
Scheduled Servicing ---------- 3-3
Cleaning ---------- 3-3

4 Disassembly/Assembly

Outline ---------- 4-2
List Of Parts ---------- 4-3
External View ---------- 4-3
Front Side ---------- 4-3
Rear Side ---------- 4-3
List of Main Unit ---------- 4-4
Reader Unit ---------- 4-4
Printer Unit ---------- 4-4
Electrical Components ---------- 4-5
Reader Unit ---------- 4-5

Motor ---- 4-5
Solenoid ---- 4-6
Sensor ---- 4-6
Switch ---- 4-7
Heater/Thermistor/Thermoswitch/ ---- 4-7
PCB ---- 4-8
List of Connectors ---- 4-9
Reader Unit ---- 4-9
Printer Unit ---- 4-10
External Cover / Interior System ---- 4-12
Layout Drawing ---- 4-12
Front Side ---- 4-12
Rear Side ---- 4-12
Removing the Left Cover ---- 4-13
Removing the Right Cover ---- 4-14
Removing the Front Cover Unit ---- 4-15
Preparation ---- 4-15
Procedure ---- 4-15
Removing the Upper Cover ---- 4-15
Preparation ---- 4-15
Procedure ---- 4-15
Removing the Rear Cover ---- 4-17
Preparation ---- 4-17
Procedure ---- 4-17
Original Exposure System ---- 4-19
Layout Drawing ---- 4-19
Removing the Copyboard Cover. ---- 4-19
Removing the Reader Unit ---- 4-20
Preparation ---- 4-20
Procedure ---- 4-20
Removing the Copyboard Glass Unit ---- 4-21
Preparation ---- 4-21
Procedure ---- 4-21
Removing the Reader Motor Unit ---- 4-23
Preparation ---- 4-23
Procedure ---- 4-23
Removing the CIS Unit ---- 4-26
Preparation ---- 4-26
Procedure ---- 4-26
Controller System ---- 4-28
Layout Drawing ---- 4-28
Removing the Control Panel Unit ---- 4-29
Removing the Drive Belt ---- 4-29
Preparation ---- 4-29
Procedure ---- 4-29
Removing the Main Motor ---- 4-31
Preparation ---- 4-31
Procedure ---- 4-31
Removing the Main Controller PCB ---- 4-34
Preparation ---- 4-34
Procedure ---- 4-34
After Replacing the Main Controller PCB ---- 4-34
Removing the Engine Controller PCB ---- 4-35
Preparation ---- 4-35
Procedure ---- 4-35
Removing the Paper Leading Edge Sensor ---- 4-38
Preparation ---- 4-38
Procedure ---- 4-38
Removing the Fixing Delivery/Paper Width Sensor PCB ---- 4-40
Preparation ---- 4-40
Procedure ---- 4-40
Laser Exposure System ---- 4-42
Layout Drawing ---- 4-42
Removing the Laser Scanner Unit ---- 4-42
Preparation ---- 4-42
Procedure ---- 4-42
Image Formation System ---- 4-44
Layout Drawing ---- 4-44
Removing the Transfer Roller ---- 4-44
Fixing System ---- 4-46
Layout Drawing ---- 4-46
Removing the Fixing Assembly ---- 4-46
Preparation ---- 4-46
Procedure ---- 4-46

Pickup Feed System ---------- 4-51
Layout Drawing ---------- 4-51
Removing the Pickup Unit ---------- 4-51
Preparation ---------- 4-51
Procedure ---------- 4-51
Removing the Pickup Roller ---------- 4-54
Removing the Pickup Solenoid ---------- 4-55
Preparation ---------- 4-55
Procedure ---------- 4-55
Removing the Separation Pad ---------- 4-57

5 Adjustment

Mechanical Adjustment ---------- 5-2
Confirming Nip Width ---------- 5-2

6 Trouble Shooting

Test Print ---------- 6-2
Test Print Function ---------- 6-2
Trouble Shooting Items ---------- 6-3
Image Faults ---------- 6-3
Smudged/Streaked ---------- 6-3
Version Upgrade ---------- 6-4
Overview ---------- 6-4
Preparation ---------- 6-4
System Requirements ---------- 6-4
Preparation ---------- 6-5
Downloading System Software ---------- 6-5

7 Error Codes

Overview ---------- 7-2
Error Codes ---------- 7-3

8 Service Mode

Overview ---------- 8-2
Preparation ---------- 8-2
Service Mode Menu ---------- 8-2
Entering Service Mode ---------- 8-2
Exiting Service Mode ---------- 8-2
Screen Operation in Service Mode ---------- 8-3
COPIER ---------- 8-4
DISPLAY ---------- 8-4
ADJUST ---------- 8-5
FUNCTION ---------- 8-7
COUNTER ---------- 8-9
TYPE ---------- 8-10
TESTMODE ---------- 8-11
SCAN ---------- 8-11
COPY ---------- 8-12

Appendix

Service Tools ---------- II
Solvent/Oil List ---------- III
General Circuit Diagram ---------- IV
General Timing Chart ---------- V

Safety Precautions

- CDRH Provisions
- Laser Safety
- Toner Safety
- Notes on Handling Lithium Battery
- Notes on Assembly/ Disassembly

M3010 Series

TONER+
www.tonerplus.com.ua

CDRH Provisions

Food and Drug CDRH (Center for Devices and Radiological Health) under FDA (Food and Drug Administration) enforced provisions of the section for laser and laser products on August 2, 1976. These provisions are applicable to all laser products manufactured or assembled after August 1, 1976 and allow only products certified their compliance with the provisions to market in the US. Each product shall have affixed the applicable label as shown below to follow the labeling requirements prescribed in CDRH provisions.

Note that the wording included in labels is different depending on laser product classifications.

CANON INC.
30-2,SHIMOMARUKO,3-CHOME,OHTA-KU,TOKYO,
146.JAPAN

MANUFACTURED :

THIS PRODUCT CONFORMS WITH DHHS RADIATION PERFORMANCE STANDARD 21CFR CHAPTER1 SUBCHAPTER J.

F-0-1

Laser Safety

About Laser Beams

Laser radiation may be hazardous to human. The laser scanner unit mounted in this device is sealed in the protective housing and the external cover to prevent laser beams from leaking to the environment. As long as the device is operated under normal conditions, users are safely guarded from laser leaks.

Handling Laser Scanner Unit

Before providing service works for the laser scanner unit and its peripherals, ensure to turn off the power of the device.
Any cover with potential dangers of laser beam reflection has affixed the caution label at the position shown in the figure below.

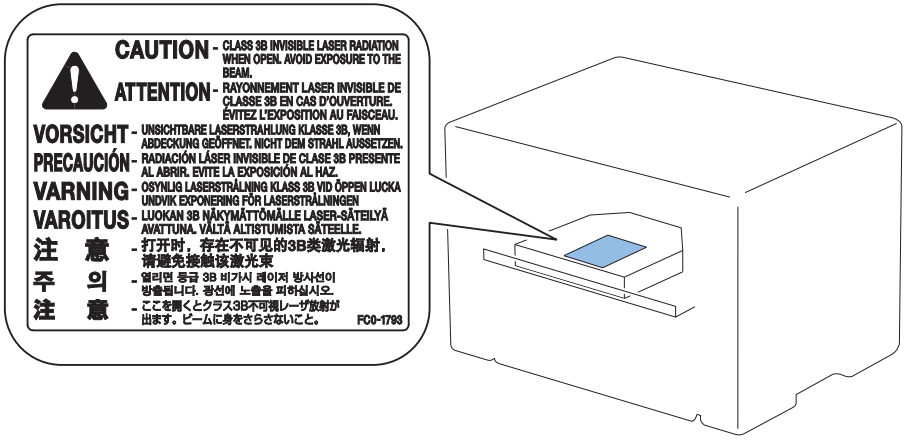

F-0-2

Toner Safety

About Toner

Toner is a non-toxic material composed of plastic, iron, small amount of pigment, etc.

⚠

Never throw toner in flames to avoid explosion.

Handling Adhered Toner

- Use dry tissue paper to wipe off toner adhered to skin or clothes and wash in water.
- Never use warm water for cleaning up toner to prevent toner particles from being able to soak into fibers permanently.
- Toner particles are reactive with vinyl polymers. Avoid contacting these materials.

Notes on Handling Lithium Battery

⚠

Replacing with wrong battery types may cause explosion.

Follow instructions to dispose used batteries properly.

Notes on Assembly/Disassembly

Follow the items below to assemble/disassemble the device.

1. Disconnect the power plug to avoid any potential dangers during assembling/disassembling works.
2. If not specially instructed, reverse the order of disassembly to reinstall.
3. Ensure to use the right screw type (length, diameter, etc.) at the right position when assembling.
4. To keep electric conduction, binding screws with washers are used to attach the grounding wire and the varistor. Ensure to use the right screw type when assembling.
5. Unless it is specially needed, do not operate the device with some parts removed.
6. Never remove the paint-locked screws when disassembling.

TONER
www.tonerplus.com.ua

1 Product Overview

- Product Lineup
- Product Features
- Specifications
- Parts Name

Product Lineup

Host Machine

Model name		MF3010
Configuration		3in1 single-sided platen
Design		
ADF		-
Engine	2-sided	-
	1-sided	Yes
LAN Port		-
FAX		-

T-1-1

Options

None

Product Features

Product Features

1. Compact/high-speed printer
   This machine is a high-speed B&W printer with a compact body design and the print speed of 19 ppm (LTR).

2. Reduced standby time and low energy consumption
   This machine uses the on-demand fixing method in which power is supplied to the heater only at printing.
   This realized the reduction of standby time and low energy consumption during standby.

3. Reduced operation noise and stabilized image quality
   This machine uses the belt drive method for the Main Motor's drive transmission.
   The operation noise is reduced and image quality is stabilized compared to the conventional gear drive method (see NOTE).

4. Improved user operability
   User operability is improved by concentrating the maintenance processes (jam removal and cartridge replacement) in a single location at the Upper Cover.

Note:
By changing the drive method from gear to belt, uneven cycle of the Photosensitive Drum is reduced. This makes it possible to realize stabilized image quality.

Specifications

Product Specifications

Copyboard	Fixed Copyboard
Machine installation method	Desktop
Light source	LED (RGB)
Image reading method	CIS (color)
Photosensitive medium	OPC Drum
Exposure method	Laser beam (semiconductor laser)
Charging method	Roller charging
Developing method	Toner projection
Transfer method	Roller transfer
Separation method	Curvature separation
Pickup method	Pickup Tray: Pad separation method
	Multi-purpose Tray: None
Delivery method	Face-down
Drum cleaning method	Blade cleaning
Fixing method	On-demand method
Toner supplying method	Toner Cartridge replacement
Toner level detection	None
Document type	Sheet
Maximum document size	216 mm x 297 mm
Magnification ratio	100 % magnification
	50 to 200 % (in increments of 10 %)
Resolution at reading	600 dpi × 400 dpi / 600 dpi × 600 dpi *
Print resolution	600 dpi × 400 dpi / 600 dpi × 600 dpi *
Warm-up time	10 sec. or less (when replacing the Toner Cartridge with a new one: 42 sec. or less)
First print time	Approx. 7.7 sec. or less (LTR, default setting)
First copy time	Approx. 12 sec. or less (LTR, default setting)
Print speed	19 ppm (LTR, initial setting) 12 ppm (when output adjustment mode is used)
Copy speed	19 ppm (LTR)
Paper size	Fixed size: A4, B5, A5, LGL, LTR, Statement, Executive, Officio, B-officio, M-officio, Government-Letter, Government-Legal, Foolscap, A-foolscap, Envelope COM10, Envelope C5, Envelope B5, Envelope DL
	Custom size: Width: 76.2 to 216 mm, Length: 127 to 356 mm
Paper types	Plain paper (60 to 89 g/m^2), Heavy paper (90 to 163 g/m^2), Rough paper (60 to 163 g/m^2), Transparency, Label, Envelope
Pickup Tray capacity	Approx. 150 sheets (plain paper: 60 to 80 g/m^2)
Delivery Tray capacity	Approx. 100 sheets (plain paper: 60 to 80 g/m^2)
Environment temperature range	10 to 30 degrees Centigrade
Environment humidity range	20 to 80 %
Duplex method	None
Host Interface	Standard: USB/Hi-speed USB, Options: None
Hard disk capacity	Standard: None, Options: None
Memory capacity	Standard: 64 MB, Options: None
Power supply	AC120 to 127V +/- 10 %, (50,60 Hz +/- 2 Hz) AC220 to 240V +/- 10 %, (50,60 Hz +/- 2 Hz)
Maximum power consumption	900 W or less (120 V), 960 W or less (230 V)
Power consumption	460 W or less (120 V), 450 W or less (230 V)
External dimensions (W x D xH)	372 × 276 × 254 mm
Weight	Approx. 8.2 kg (including Toner Cartridge)

T-1-2

*: Resolution switching

With this machine, 2 types of resolution can be switched by setting "Copy Type" on the printer driver.

Speed priority (at the time of shipment): 600 dpi × 400 dpi

Resolution priority: 600 dpi × 600 dpi

TONER
www.tonerplus.com.ua

Parts Name

External View

Front side of the machine

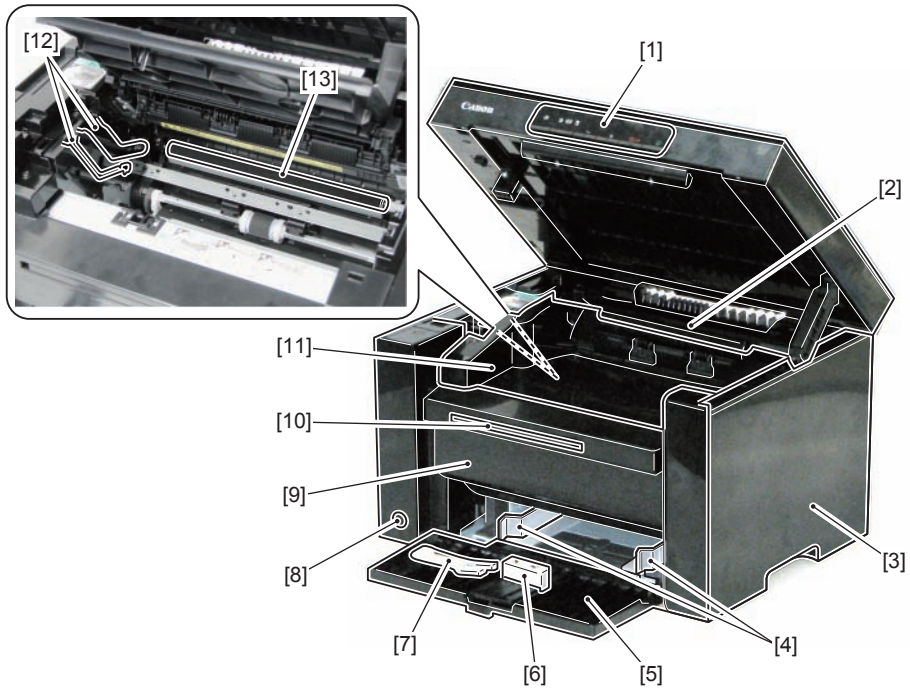

F-1-1

No.	Name
[1]	Control Panel Unit
[2]	Upper Cover
[3]	Right Cover
[4]	Pickup Tray Paper Guides
[5]	Pickup Tray
[6]	Pickup Tray Trailing Edge Paper Guides
[7]	Small Size Paper Guides

No.	Name
[8]	Power Switch
[9]	Front Cover Unit
[10]	Delivery Auxiliary Tray
[11]	Delivery Tray
[12]	Toner Cartridge Guide
[13]	Transfer Roller

Rear side of the machine

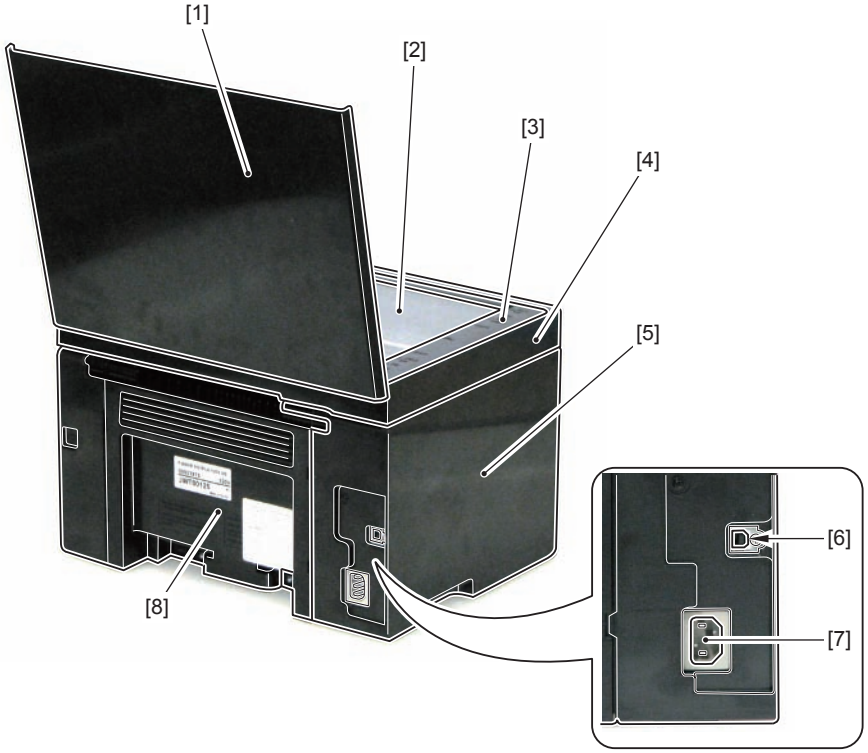

F-1-2

No.	Name
[1]	Copyboard Cover
[2]	Copyboard Glass
[3]	Copyboard Upper Cover
[4]	Copyboard Lower Cover

No.	Name
[5]	Left Cover
[6]	USB Device Port
[7]	Power Supply Cord Slot
[8]	Rear Cover

Cross Section View

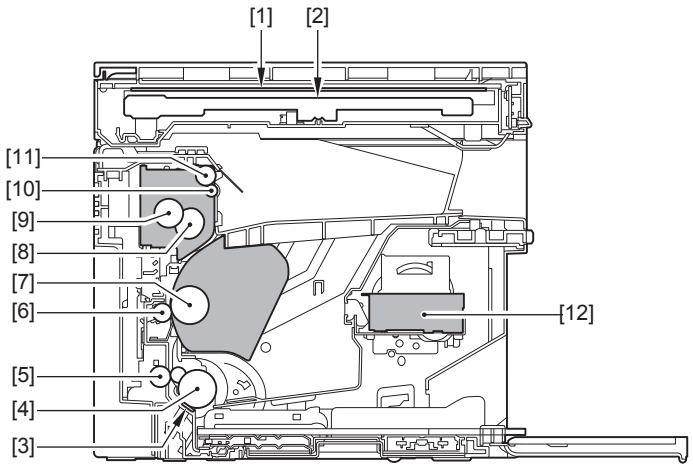

F-1-3

No.	Name	No.	Name
[1]	Copyboard Glass	[7]	Photosensitive Drum
[2]	CIS Unit	[8]	Fixing Film Unit
[3]	Separation Pad	[9]	Fixing Pressure Roller
[4]	Pickup Roller	[10]	Fixing Assembly
[5]	Feed Roller	[11]	Delivery Roller
[6]	Transfer Roller	[12]	Laser Scanner Unit

TONER
www.tonerplus.com.ua

Control Panel

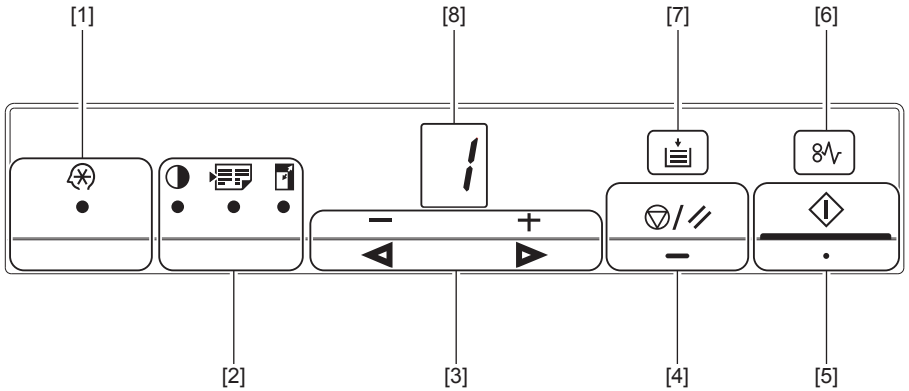

F-1-4

No.	Name	Function
[1]	Menu setting lamp (green)	Blinking: Menu is being set.
	Menu setting key	Menu setting mode is entered. Pressing this key while menu is being set returns to one layer above.
[2]	Density setting amp (green)	Blinking: Density is being set. Lit: When changing from the initial value
	Page aggregation setting lamp (green)	Blinking: Reduced layout/ID Card copy is being set. Lit: When changing from the initial value
	Enlargement/reduction setting lamp (green)	Blinking: Enlargement/reduction is being set. Lit: When changing from the initial value
	Copy setting key	Copy setting items are switched by each press of this key.
[3]	- (◀) key	The menu items are switched or the setting values are increased/decreased in the menu setting mode. Also, the setting values of copy setting items are increased/decreased.
	+ (▶) key	
[4]	Stop/reset key	The job is stopped. Pressing this key while menu is being set returns to one layer above.
[5]	Start/OK key	Copy operation is started. In the menu setting mode, the menu items are selected or the setting values are determined.
[6]	Jam occurrence lamp (orange)	Blinking: At occurrence of a jam Lit: At occurrence of a service error
[7]	Out of paper lamp (orange)	Blinking: When paper on the Pickup Tray runs out Lit: At occurrence of a service error
[8]	Indicator (green)	The setting values of copy setting items or the status of this product are displayed.

T-1-3

2

Technical Overview

- Basic Configuration
- Controller System
- Original Exposure System
- Laser Exposure System
- Image Formation System
- Fixing System
- Pickup Feed System
- External And Controls System

Basic Configuration

Configuration function

The machine may be broadly divided into the following 7 functional blocks: engine control system,original exposure system, laser exposure system, image formation system, pickup feed system, fixing system, and external and control system.

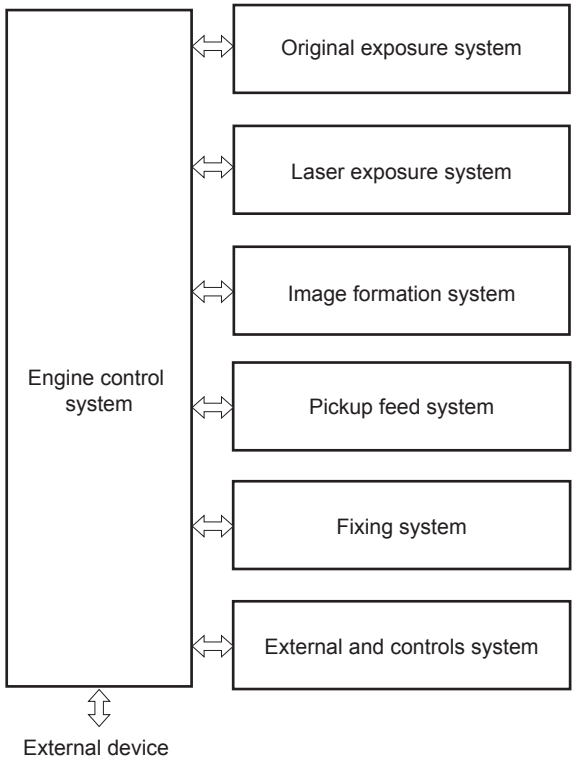

F-2-1

Basic Sequence

Basic Sequence of Operation

The engine controller controls the operation sequence. The following table provides an outline of machine operation occurring from when the power switch is turned on to when printing ends and Main Motor (M1) stop, indicating the purposes of intervals and engine operation.

Interval		Purpose	Remarks
WAIT (Wait)	From power-ON until initial drive for Main Motor (M1) is completed.	To clear potential from the drum surface and to clean the transfer roller. Also to bring the heater temperature up to the targeted temperature.	Detect whether the Toner cartridge is installed or not.
STBY (Standby)	From the end of the WAIT period or the LSTR period until the print command is sent from the main controller. Or, from the end of the LSTR period until power switch is turned OFF.	To keep the printer ready to print.	
INTR (initial rotation)	From the input of the print command from the main controller until the Pickup Solenoid (SL1) is turned ON.	To stabilize the photosensitive drum sensitivity in preparation for printing. Also to clean the transfer roller.	
PRINT (print)	From the end of the INTR period until the Paper Leading Edge Sensor (PS751) detects the trailing edge of paper.	To form image on the photosensitive drum based on the VIDEO (/VDO, VDO) signals input from the main controller, and to transfer the toner image onto paper.	
LSTR (last rotation)	From the end of PRINT period until the Main Motor (M1) stops.	To deliver the last paper completely out of the printer.	Return to the INTR period as soon as another print command is sent from the main controller.

T-2-1

Print Sequence

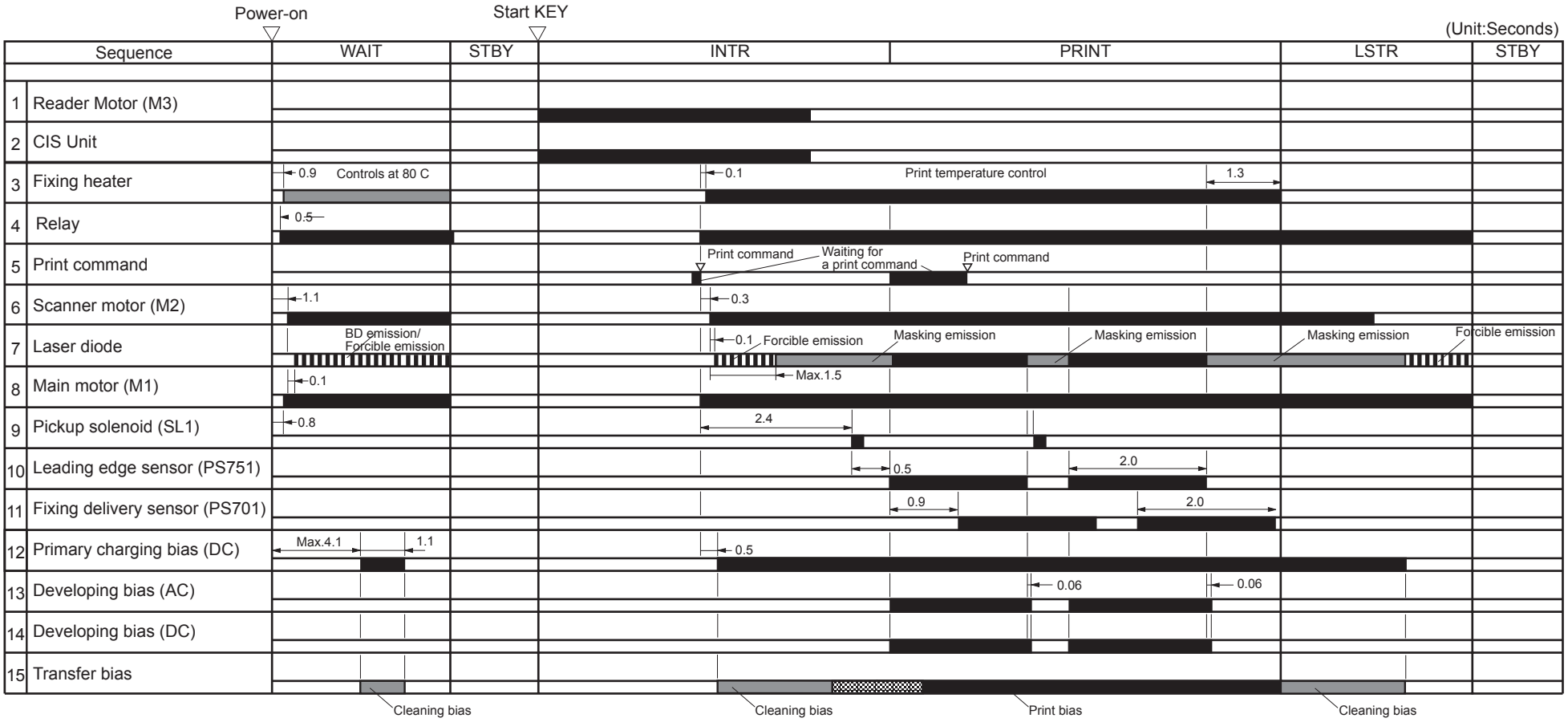

F-2-2

TONER
www.tonerplus.com.ua

Power-On Sequence

The sequences from the power-ON to the STBY period are described below.

1) Power-ON.
2) CPU initialization.
3) Video interface communication start.
4) Residual paper check.
   Detecting paper presence by each sensor signaling.
5) Initial drive for Main Motor (M1).
6) Initial drive for Fixing Heater (H1).
   Controlling fixing temperature targeting for 120 deg C.
7) Initial drive of the Scanner Motor (M2).
8) High-voltage control.
   Detect cartridge presence after primary charging AC bias is applied.
   Cleaning transfer roller.
9) Failure/Abnormality check.
   Detecting fixing unit failure and door open during above periods.

Controller System

Main Controller

Overview

The Main Controller receives print information from the Reader and external equipment (computer, etc.). Video data is created from the received print information, and is sent to the Engine Controller.
There are 2 types of print information from the external equipment: engine command data to exchange the status or unique information of a printer and dot data for printing.
In the case of receiving dot data, video data is created and is sent to the Engine Controller.
In the case of receiving engine command data, printer status is returned to the external equipment after communicating with the Engine Controller.

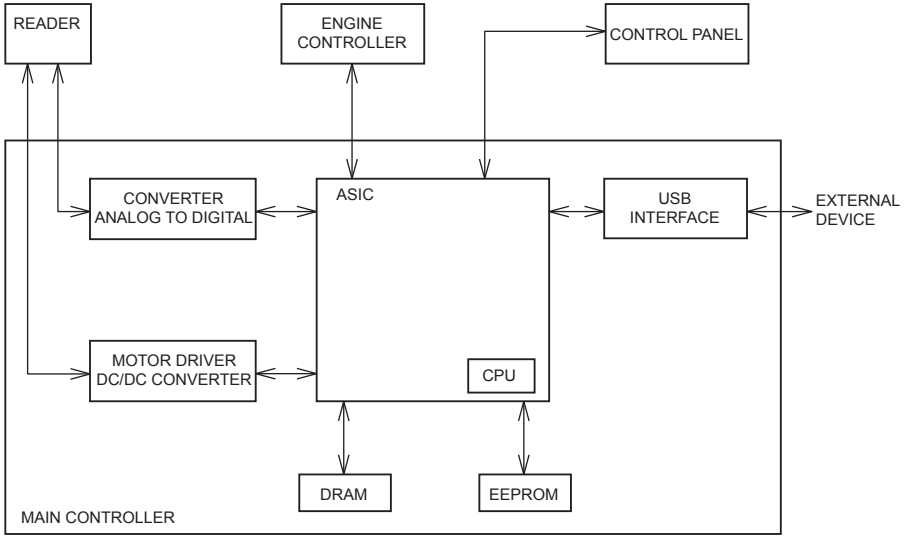

F-2-3

Engine Controller

General description

Engine controller is the circuit to control the operation sequence of the host machine and it is controlled by the CPU inside the engine controller.
When the Power Switch (SW1100) is turned ON and DC power is supplied through the low voltage power inside engine controller, CPU starts the printer operation control.
Then, CPU drives the loads such as laser diode, motors and solenoids etc. according to the image data that is input by the main controller when status becomes stand-by mode.
The following is the block diagram of this circuit.

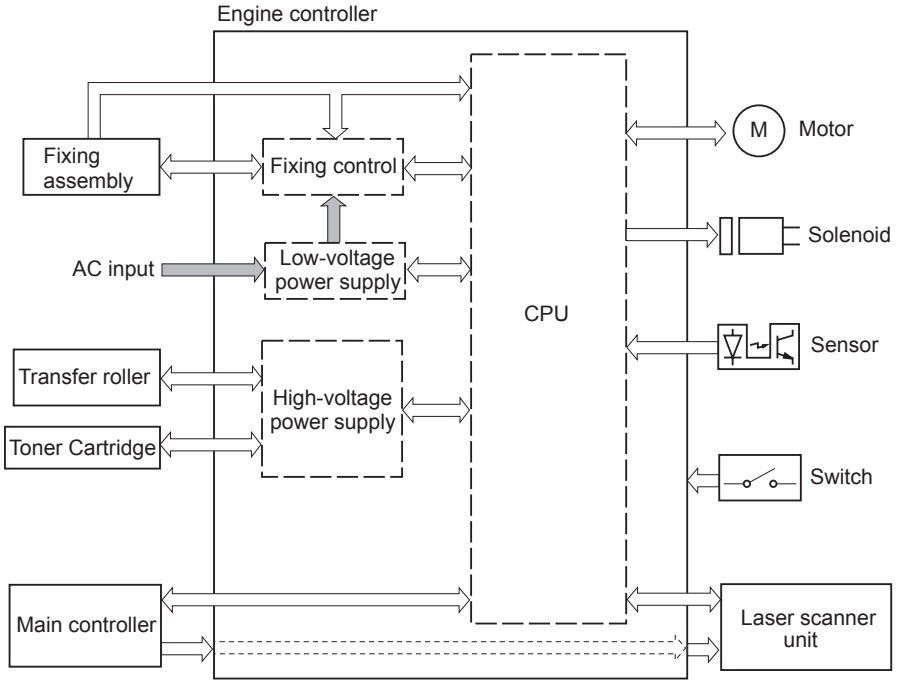

F-2-4

Service Works

At parts replacement

No work is required for this product at parts replacement.

Maintenance

No periodically replaced parts, durable parts or periodical service is set for this product.

Notes on service works

None.

Original Exposure System

Overview

item	function / method
document exposure	LED
document scan	Scan by the shift of the CIS Unit
scanning resolution	600 dpi x 400 dpi, 600 dpi x 600 dpi (Horizontal x Vertical)
number of gradations	256 gradations
magnification	50 % to 200 % (10 % increment) Horizontal: image processing by Main Controller PCB Vertical: change of carriage shift speed, image processing by Main Controller PCB
lens	CIS / Color
CIS Unit	number of lines: 1 line number of pixels: 5148 pixels as total pixels (5104 pixels as effective pixels) maximum document scanning width: 216 mm
CIS Unit drive control	drive control by Reader motor (M3)
document size detection	none

T-2-2

TONER
www.tonerplus.com.ua

Major Components

Followings are the major components for Document Exposure System.

- The CIS Unit to scan document
- The Reader motor, the drive pulley, the drive belt, to shift the CIS Unit

In image scanning control, the CIS Unit is shifted by rotating the Reader motor based on the drive signal from the Engine Controller PCB and scan the original on the copyboard glass.

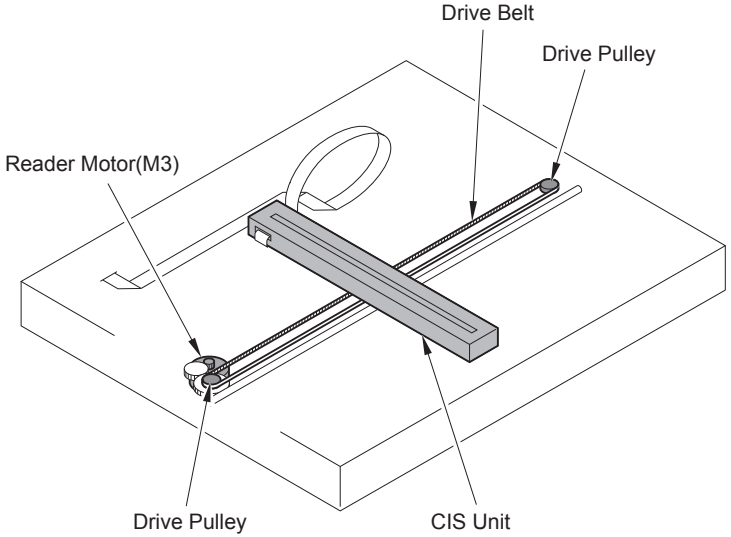

F-2-5

Service Works

At parts replacement

No work is required for this product at parts replacement.

Maintenance

No periodically replaced parts, durable parts or periodical service is set for this product.

Notes on service works

None.

Laser Exposure System

Overview

Overview

The laser exposure system forms static latent images on the photosensitive drum according to the VIDEO signals sent from the main controller, and is comprised of the laser driver and scanner motor, etc. These are controlled by the engine controller. The following is the outline.

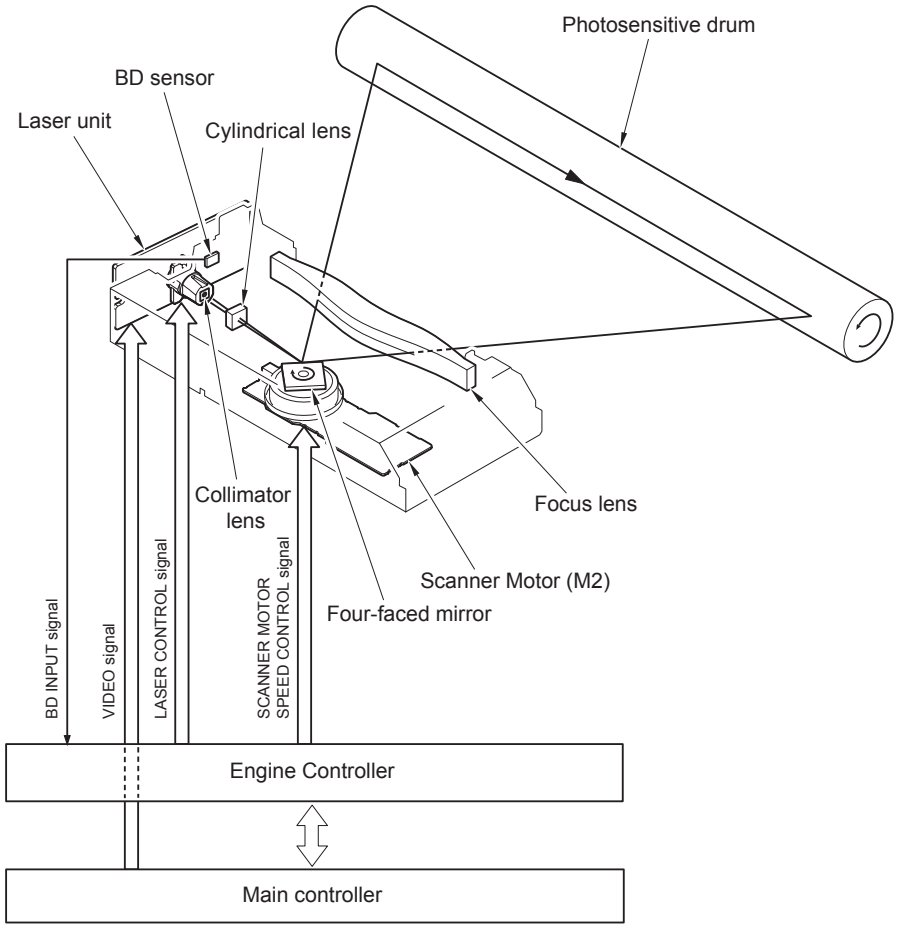

F-2-6

The operational sequence of the laser scanner unit is described below.

1) When the Main controller sends print instruction command, the Engine controller rotates the Four-faced mirror, causing the Scanner Motor (M2) to rotate.

2) When the Scanner Motor (M2) starts to rotate, the Engine controller emits the laser forcibly using the Laser control signal, causing the Engine controller to start rotation control for the Scanner Motor (M2).

3) The Engine controller controls to keep a constant speed of rotation of the Scanner Motor (M2) using the Scanner motor speed control signal.

4) After the rotation speed of the Scanner motor reaches its target, the Main controller sends VIDEO signals to the Laser driver PCB.

5) The Laser driver emits laser diode according to these signals.

6) The laser beam passes through the collimator lens and the cylindrical lens and enters the Four-faced mirror rotating at a constant speed.

7) The laser beam reflected by the Four-faced mirror is focused on the Photosensitive drum via the image-forming lens at the front of the Four-faced mirror.

8) When the Four-faced mirror rotates at a constant speed, the laser beam on the Photosensitive drum is scanned on the Photosensitive drum at a constant speed.

9) When the Photosensitive drum rotates at a constant speed and the laser beam is scanned on the Photosensitive drum at a constant speed, latent images are formed on the Photosensitive drum.

Controlling the Laser Activation Timing

Laser ON/OFF Control

In this control, the laser driver turns on/off the laser diode (LD) according to the laser control signal sent from the engine controller.
The following is the circuit diagram of the laser control.

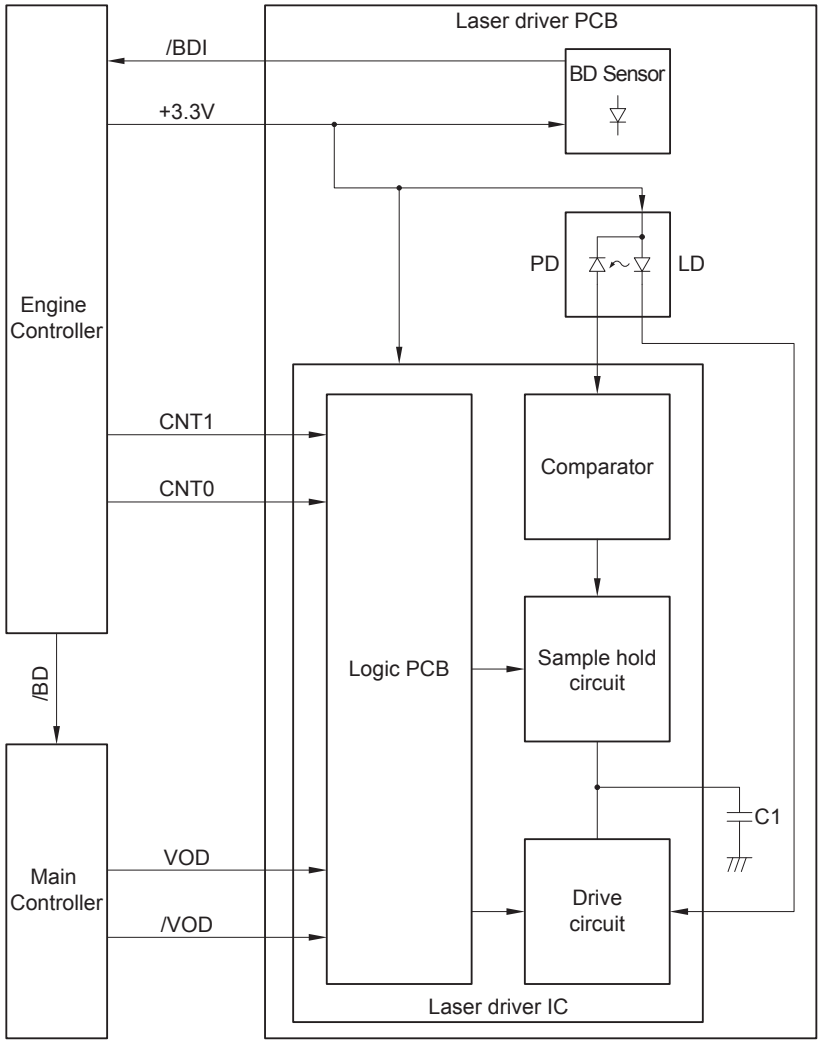

F-2-7

The engine controller sends the laser control signals (CNT0, CNT1) for changing the operation mode of the laser to the logic circuit in the laser driver IC, as well as the video signals (VDO, /VDO) for image formation.
The laser driver IC executes laser control according to the combination of the CNT0, CNT1 signals.
The following is the combination of the laser control signal (CNT0, CNT1).

Operation mode	CNT0	CNT1	Remarks
Discharge	L	L	The capacitor (C1) is discharged.
Data output	H	H	At normal print
APC	H	L	At using APC
Forced OFF	L	H	At using image mask

T-2-3

Horizontal Sync Control

This is the control to adjust the writing position in the image horizontal direction.
The following is the details of control procedure.

1) The engine controller controls the laser control signal during unblanking (*) to emit the laser diode (LD) forcibly.

2) The BD PCB exists on the scanning route of the laser beam, which is sent to the BD PCB.

3) The BD PCB detects this laser beam, creates BD input signal (/BDI) and sends it to the engine controller.

4) The engine controller creates horizontal sync signals (/BD) based on /BDI signal and sends the /BD signal to the main controller.

5) When /BD signal is input, the main controller outputs the video signal (VDO, /VDO) to the engine controller to adjust the writing position in image horizontal direction.

*: Unblanking period
The period during which the laser diode is emitted in non-image area.

TONER
www.tonerplus.com.ua

Laser Control

Auto Power Control (APC)

This is the control to emit a constant level of laser diode.
There are two types of APC; initial APC (note 1), and line space APC (note 2). The laser driver executes the same procedure for both controls. The following is the details of the control procedure.

1) When the laser control signal enters APC mode (CNT0=H, CNT1=L), the laser driver emits LD in APC mode.
2) The emission level of LD is detected with photo diode (PD), converted from current output to voltage, and compared with the standard voltage (voltage equivalent to the target laser level).
3) The laser driver controls the laser current to achieve the voltage of LD target level.
4) When the laser control signal enters LD forced OFF mode, the LD is forcibly turned off. The laser driver saves the adjusted laser intensity to the capacitor (C1).

NOTE:
1. Initial APC
APC that is executed during initial rotation. APC adjusts laser intensity and detects faults in the laser.
2. Line space APC
APC that is executed during printing. Laser intensity for one line is adjusted before writing one line.

Laser Scanner Motor Control

Overview

This is the control to rotate the Scanner Motor (M2) at a constant speed to emit the laser beam on the correct position on the photosensitive drum.
The following is the control circuit of the Scanner Motor (M2).

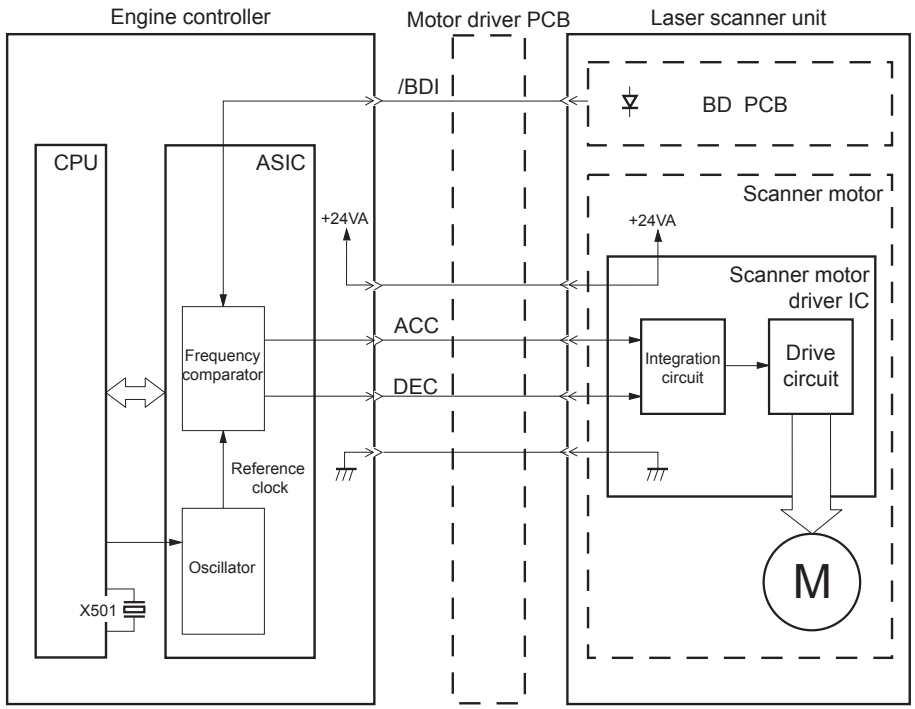

F-2-8

The engine controller creates standard clock based on oscillation frequency of the oscillator (X501); the cycles of the standard clock is compared with that of BD input signal (/BDI) with a frequency comparator and the rotations of the Scanner Motor (M2) is monitored.
The engine controller sends the scanner motor acceleration signal (ACC) and scanner motor deceleration signal (DEC) to the scanner motor driver according to the detected rotation speed to control the rotation speed.

Scanner Motor Fault Detection

This is the detection of faults in the laser scanner unit.
When the laser scanner unit falls into either of the following status, the engine controller judges it as a fault in the laser scanner unit system and notices the status of fault to the main controller.
The operations of the host machine are stopped.

1. Fault in BD input
   At startup of the scanner, /BDI signal cannot be detected within 0.1 sec from the completion of forced acceleration of the Scanner Motor (M2).
2. Fault in startup
   During activating the Scanner Motor (M2) at startup of the scanner, the motor rotation exceeds the specified range (98.3 to 102.1%).
3. Fault in control
   After startup of the scanner completes correctly, /BDI signal exceeds the specified value of cycle 10 consecutive times.

Service Works

At parts replacement

No work is required for this product at parts replacement.

Maintenance

No periodically replaced parts, durable parts or periodical service is set for this product.

Notes on service works

None.

Image Formation System

Overview/Configuration

Overview

The image formation system is the core of this equipment; it forms toner images on papers.
The image formation system is comprised of the following components.
The engine controller controls the laser scanner unit and high-voltage power supply circuit and forms images based on the video signals on papers.
The following are the details of print process for this equipment and the functions of image formation.

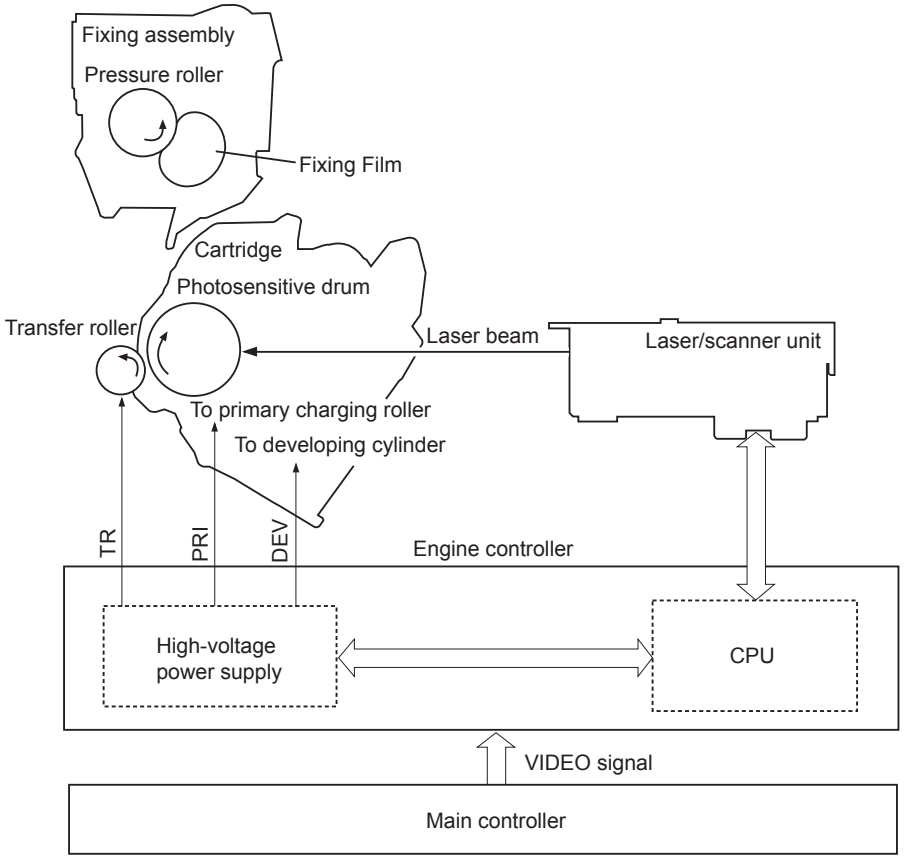

F-2-9

Print Process

This explains the basic process of the operations that a printer executes for image formation.
The print process of this equipment is divided largely into 5 blocks, 7 steps.
Toner images are formed on papers by executing the steps of each block in order.
The following are the blocks of print process and the steps.

1. Static latent image formation block
   Step 1: Primary charging
   Step 2: Laser beam exposure
2. Development block
   Step 3: Development
3. Transfer block
   Step 4: Transfer
   Step 5: Separation
4. Fixing block
   Step 6: Fixing
5. Drum cleaning block
   Step 7: Drum cleaning

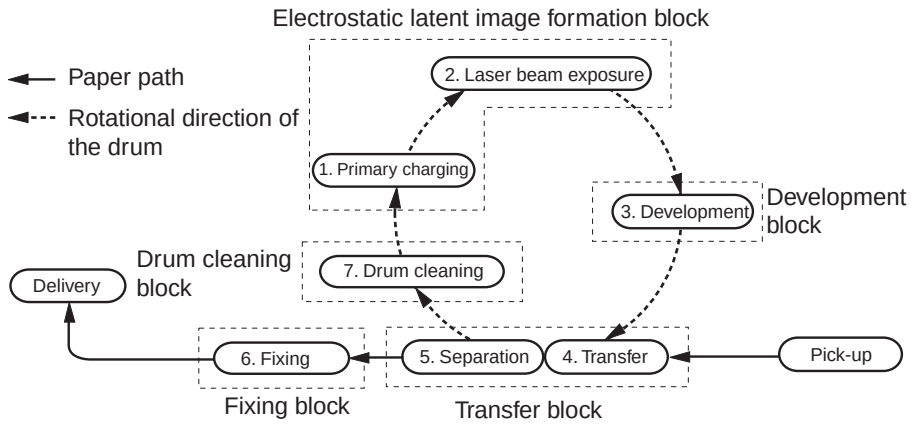

F-2-10

Static Latent Image Formation Block

This block is comprised of two steps and forms static latent images on the photosensitive drum.
When the final step of this block completes, negative charge remains at dark areas on the drum surface where laser beam has not been exposed, and negative charge is eliminated from bright areas on the drum surface with laser beam exposed. The images on the drum with negative charge are called static latent images because human eyes cannot detect them.

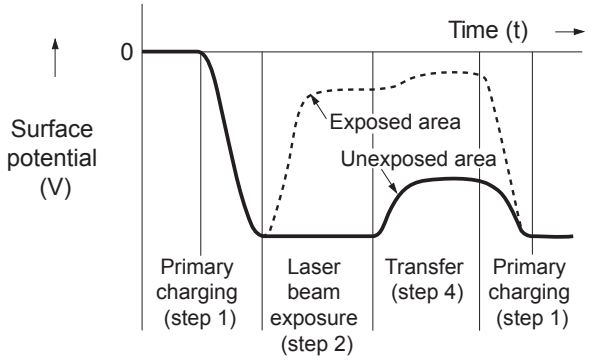

F-2-11

Step 1: Primary charging

For preparation of latent image formation, the surface of photosensitive drum is charged with even negative potential. In this primary charging, the charge is applied from the primary charging roller directly to the photosensitive drum.
DC bias is applied to the primary charging roller to maintain an even potential on the surface of the photosensitive drum.

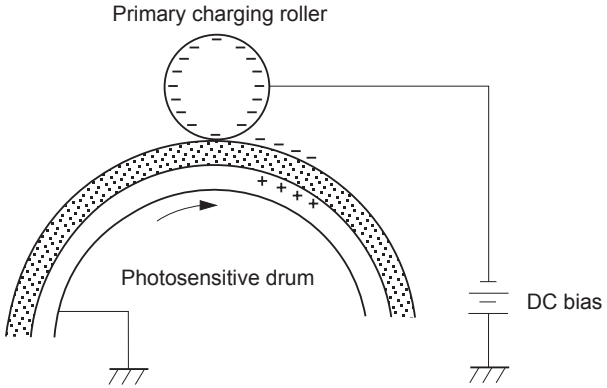

F-2-12

Step 2: Laser beam exposure

In this step, static latent images are formed on the photosensitive drum with laser beam.
When laser beams are scanned on the photosensitive drum negatively charged, bright areas lose their charges, eliminating negative potential on the surface of the photosensitive drum; on those portions, static latent images are formed.

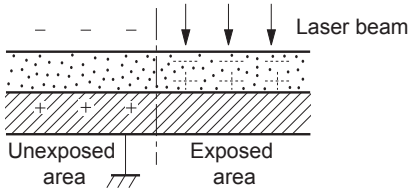

F-2-13

Development Block

This block is comprised of one step; it puts toners to the static latent images on the surface of the photosensitive drum and visualizes the images using toner projection development. The toner projection development makes the toner jump on the surface of the photosensitive drum and develops the images.
The toner (developer) used for this equipment is a one-component toner that comprises magnetic body and resin, etc.

Step 3: Development

Toner is affixed to static latent images on the surface of the photosensitive drum.
The toner is charged negatively by friction between the developing cylinder and the surface of the developing blade.
An area on the photosensitive drum exposed with laser beam has higher potential than the developing cylinder; the potential difference between the drum surface and the cylinder enables the toner to jump on the drum surface and makes them visible images.
AC bias superimposed with the development DC negative bias is applied to the developing cylinder.

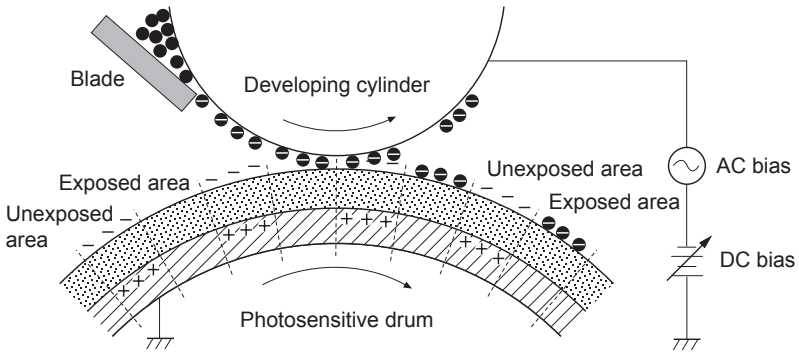

F-2-14

Transfer Block

This block is comprised of two steps; it transfers toner images on the surface of the photosensitive drum to papers.

Step 4: Transfer

In this step, toner images on the photosensitive drum are transferred to papers.
This equipment applies DC positive bias to the transfer roller facing the photosensitive drum and charges papers positively. This enables toner negatively charged on the surface of the photosensitive drum to be transferred to papers.

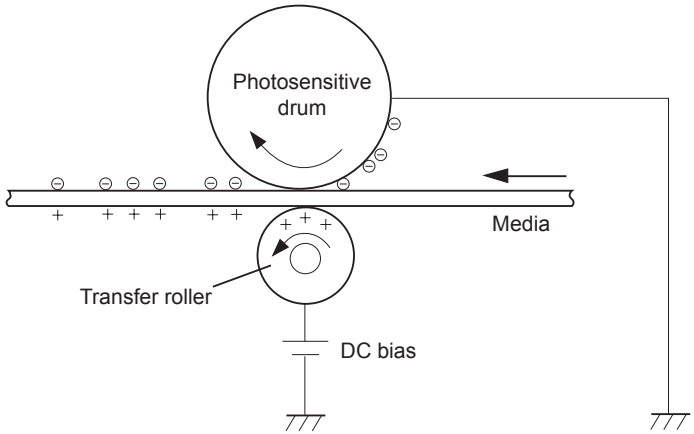

F-2-15

Step 5: Separation

In this step, DC negative bias is applied to the static eliminator according to the elasticity of papers to separate the papers from the photosensitive drum. The static eliminator is used to stabilize the paper feed system (prevention of toner stray that appears as polka-dots on print images in a low-temperature, low-humidity environment), and neutralizes the electric charge at the back of papers.

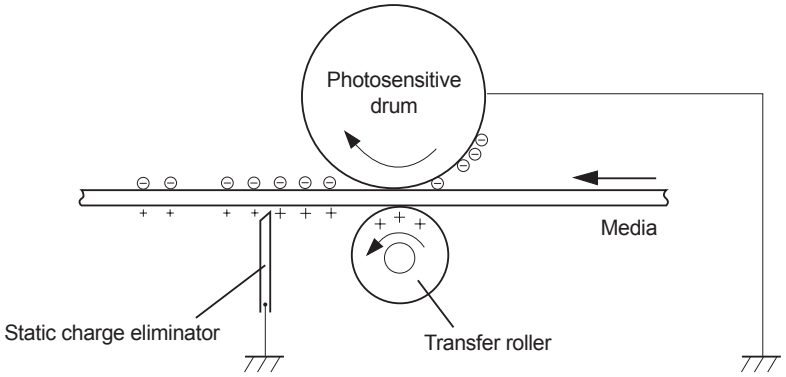

F-2-16

Fixing Block

This block applies pressure and heat to papers and the toner on them to fix toner images to the papers.

Step 6: Fixing

This step employs on-demand fixing that fixes toner images transferred to papers on the papers.

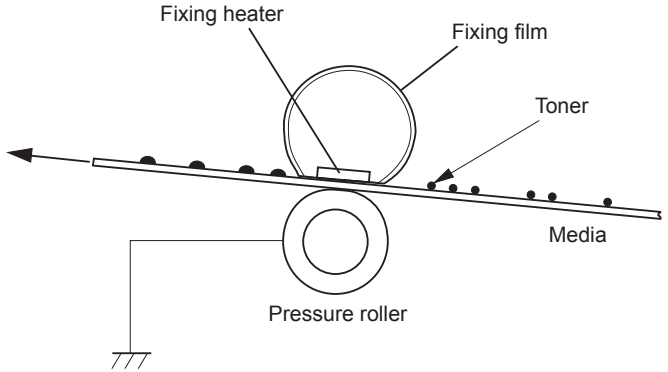

F-2-17

Drum Cleaning Block

The drum cleaning block removes the toner remained on the photosensitive drum.

Step 7: Drum cleaning

In this step, toner remained on the photosensitive drum is removed.
The cleaning blade scrapes the leftover toner on the surface of the photosensitive drum; the toner is collected into the cleaner container.
By implementing the above step, the surface of the photosensitive drum is cleaned.

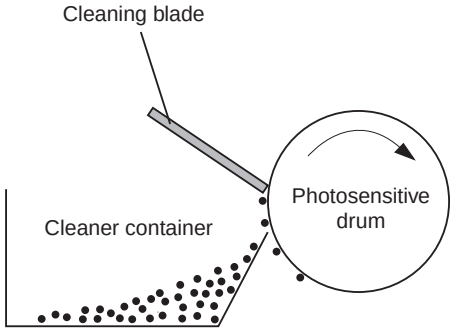

F-2-18

High-Voltage Control

Overview

This circuit is comprised of the circuits that apply biases to the primary charging roller, developing cylinder, transfer roller, and the fixing control circuit. The CPU of the engine controller controls the high-voltage power supply circuit to generate these biases. The fixing control circuit executes heater control of the fixing assembly according to the instruction by the CPU of the engine controller.
The following is the block diagram of this circuit.

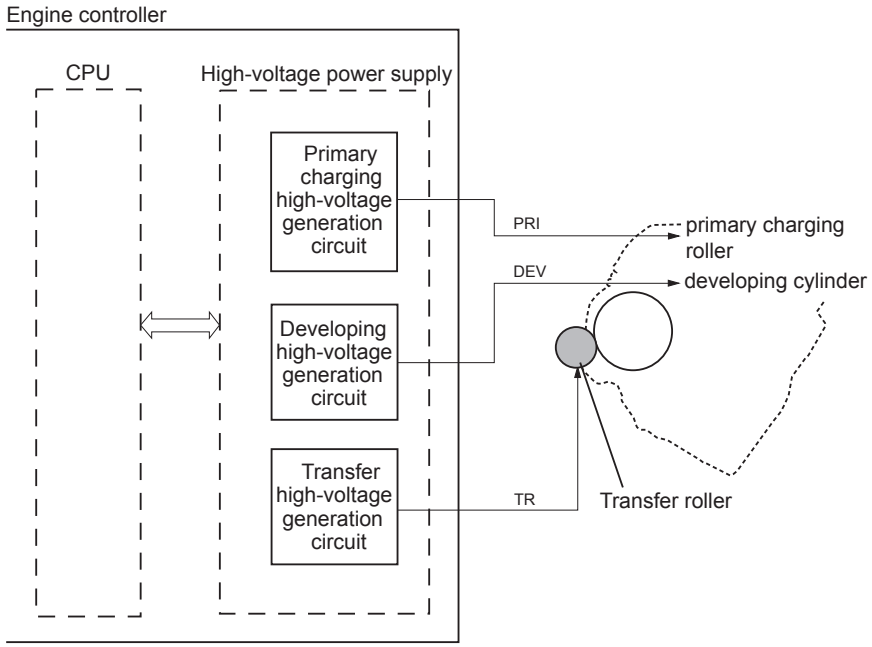

F-2-19

Generating Primary Charging Bias

The primary charging bias (PRI) is a DC negative bias that is output to apply an even negative potential to the surface of the photosensitive drum. The primary charging high-voltage generating circuit in the high-voltage power supply circuit generates this bias.
The high-voltage power supply circuit applies the generated primary charging bias to the primary charging roller at a specified timing.
The primary charging bias varies in conjunction with the developing bias according to the information of image density sent from the main controller.

Generating Developing Bias

The developing bias is a DC negative bias that is output to affix toner to the static latent images formed on the photosensitive drum. This bias is a development DC and AC superimposed bias and generated by the development high-voltage generating circuit in the high-voltage power supply circuit.
The high-voltage power supply circuit applies the generated developing bias to the developing cylinder at a specified timing.
The developing bias varies in conjunction with the primary charging bias according to the information of image density sent from the main controller.

Generating Transfer Bias

Transfer bias (TR) is a bias that is output to transfer toner to papers. There are two types of bias; DC positive bias and DC negative bias, and generated by the transfer high-voltage generating circuit in the high-voltage power supply circuit. The DC positive bias is output at the time of toner transfer, and the DC negative bias at the time of cleaning the photosensitive drum.
The high-voltage power supply circuit applies the generated transfer bias to the transfer roller according to each print sequence.
Each print sequence is described below.

- Cleaning bias:
  The bias to move (clean) the toner attached to the transfer roller to the photosensitive drum at the time of warming up or last rotation sequence.
  The transfer negative bias is applied to the transfer roller.

- Paper intervals bias:
  The bias to prevent the toner remained on the photosensitive drum from attaching to the transfer roller at paper intervals during continuous printing. A minor transfer positive bias is applied to the transfer roller.

- Print bias:
  The bias to transfer the toner on the surface of the photosensitive drum to papers at the time of print sequence. The transfer positive bias is applied to the transfer roller.

Toner Cartridge

Toner Level Detection

This equipment has no function of toner level detection.

Toner Cartridge Absence/Presence Detection

The engine controller detects the position of the Toner cartridge detection flag to judge the absence/presence of the Toner cartridge.
At the time of turning on the power or closing the upper cover, the engine controller judges the position of the Toner cartridge flag based on the output result of the Paper Leading Edge Sensor (PS751).
When the output result of the Paper Leading Edge Sensor (PS751) is L, it is judged that the Toner cartridge is absent; If being H, it is judged that the Toner cartridge is present.

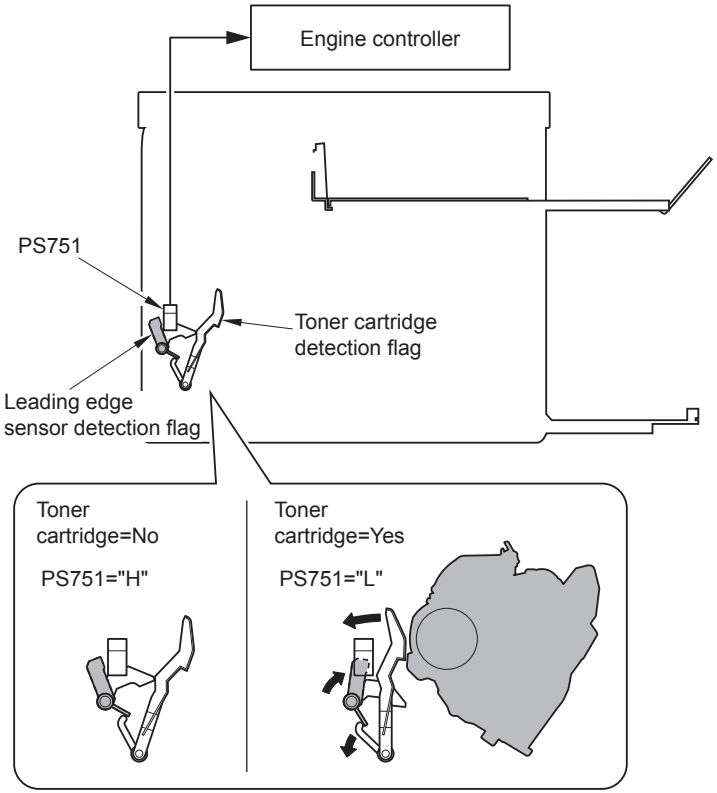

F-2-20

The Paper Leading Edge Sensor (PS751) performs both this detection and paper feed detection. Therefore, the engine controller cannot make a judgment of 'Toner cartridge absent' or 'jam occurrence' when jam occurs.
The engine controller judges this case as 'Toner cartridge absent' and notices it to the main controller.
If jam occurs when 'Toner cartridge absent' is detected, check if there is a fault in the Paper Leading Edge Sensor (PS751) and the detection flag.

TONER
www.tonerplus.com.ua

Service Works

At parts replacement

No work is required for this product at parts replacement.

Maintenance

No periodically replaced parts, durable parts or periodical service is set for this product.

Notes on service works

None.

Fixing System

Overview/Configuration

Overview

Fixing/delivery system consists of the fixing film unit, pressure roller and delivery roller etc. These rollers are driven by the Main Motor (M1).
The paper that toner is transferred to are heated by the Fixing Heater (H1) of the fixing film unit and pressured by the pressure roller.
The paper that toner is fused on is delivered from the fixing assembly, detected by the Fixing Delivery Sensor (PS701) and the Paper Width Sensor (PS702), and then delivered to the delivery tray by the delivery roller.

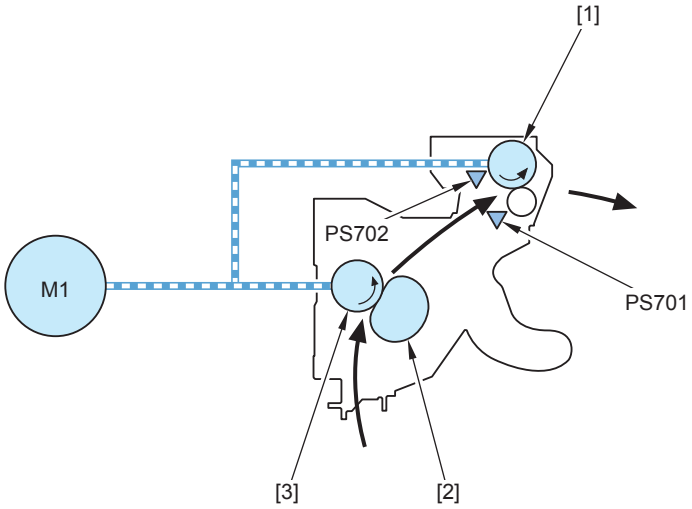

F-2-21

[1]	Delivery Roller
[2]	Fixing Film Unit
[3]	Fixing Pressure Roller
PS701	Fixing Delivery Sensor
PS702	Paper Width Sensor
M1	Main Motor

Main Parts of Fixing assembly

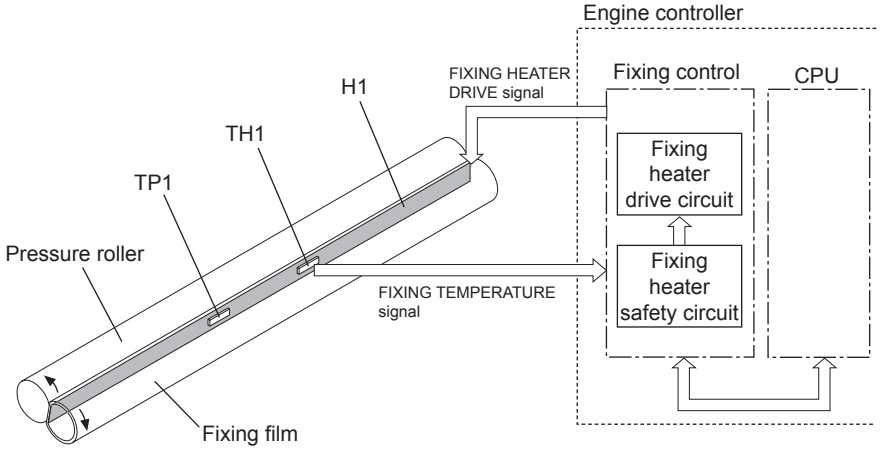

F-2-22

H1	: Fixing Heater	For heating the fixing film (ceramic heater)	1 pc.
TH1	: Thermistor	For controlling the fixing heater temperature (contact type thermistor)	1 pc.
TP1	: Temperature Fuse	For detecting the fixing heater overheat (non-contact type fuse) When the heater overheats, the fuse melts to cut the power supply to the heater.	1 pc.

T-2-4

TONER
www.tonerplus.com.ua

Various Control Mechanisms

Fixing Temperature Control

Heater Temperature Control

The heater temperature control is to keep the fixing heater in the fixing film unit to the specified temperature.
The engine controller monitors the Fixing Heater (H1) temperature detection signal (FSRTH) and outputs the fixing heater drive signal (FSRD) according to the detected temperature.
The fixing heater drive PCB controls the Fixing Heater (H1) according to this signal to keep the fixing heater temperature within the target values.

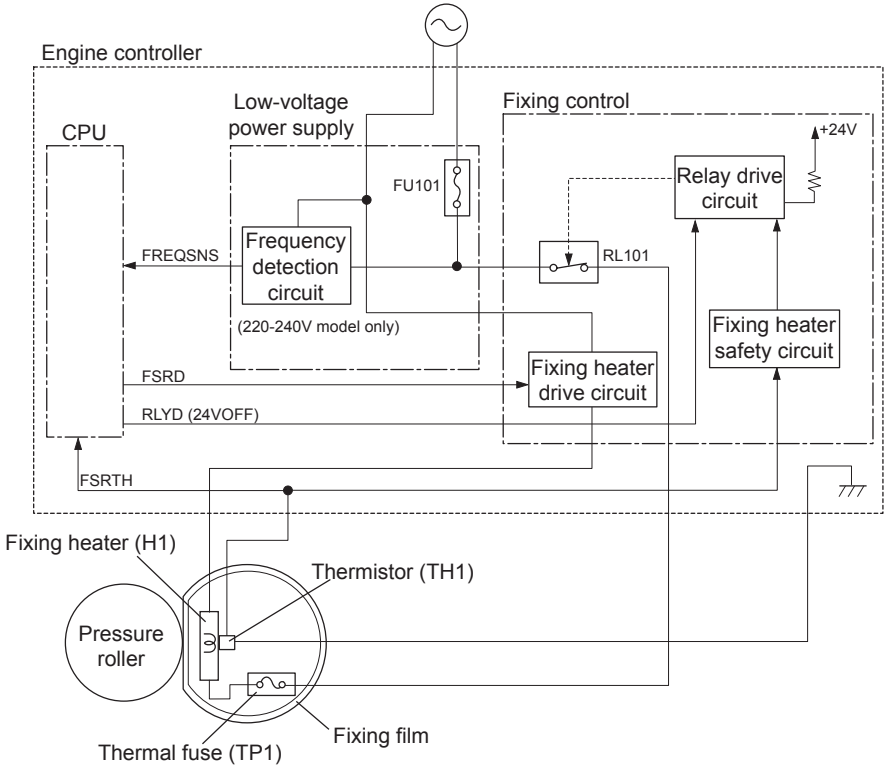

F-2-23

Fixing target temperature varies according to the fixing mode, and there are 8 types of the mode.
These modes are determined according to the paper type settings and resolution settings (see the caution) in a driver.
The following table shows the relationship between the fixing target temperature and the settings (paper type settings and resolution settings) in a driver.

Printer driver settings		Fixing target temperature
Paper type settings	Vertical scanning	
Plain paper	600 dpi	155 to 165 deg C
	400 dpi	170 to 190 deg C
Plain paper L	600 dpi	145 to 155 deg C
	400 dpi	160 to 180 deg C
Heavy paper	600 dpi	170 deg C
Heavy paper H	600 dpi	185 deg C
Transparency	600 dpi	150 to 160 deg C
	400 dpi	165 to 180 deg C
Postcard/postcard H	600 dpi	188 deg C
	400 dpi	188 deg C
Envelope	600 dpi	160 to 165 deg C
Labels	600 dpi	170 deg C

T-2-5

CAUTION: Resolution switching

The machine provides two types of resolution: 600 x 600 dpi and 600 x 400 dpi.
The selection is made by the "Copy Type" setting in the printer driver.
For speed priority (at the time of shipment), 600 x 400 dpi is selected, but changing to resolution priority selects 600 x 600 dpi.

Protective Functions

Protective Function of fixing assembly

Host machine carries the following 3 functions to prevent the Fixing Heater (H1) from overheating.

1) Protective function by CPU
CPU of engine controller monitors the Thermistor (TH1) temperature consistently.
When Thermistor (TH1) reaches approx 220 deg C, CPU determines that the Fixing Heater (H1) is overheating and stops the fixing heater drive signal (FSRD) output and also turns OFF relays to shut the power supply to Fixing Heater (H1).

2) Protection function by fixing heater safety circuit
Fixing Heater (H1) safety circuit monitors the Thermistor (TH1) temperature consistently. When Thermistor (TH1) reaches approx 235 deg C, it determines that the Fixing Heater (H1) is overheating and the fixing heater safety circuit turns OFF the relay drive circuit to shut the power supply to the Fixing Heater (H1).

3) Protection function by Temperature Fuse (TP1)
When the Fixing Heater (H1) temperature rises abnormally and Temperature Fuse (TP1) temperature reaches approx 226 deg C, Temperature Fuse (TP1) opens to shut the power supply to the Fixing Heater (H1).

Failure detection

With this machine, 10 types of failure detection are available.

1) Initial startup failure detection
When temperature of the Fixing Assembly does not exceed 50 deg C within 1.48 sec after the start of temperature control performed at initial rotation, it is judged as initial startup failure.

2) Initial Thermistor open detection
When temperature of the Fixing Assembly does not exceed 35 deg C within 1.48 sec after the start of temperature control at warm-up rotation temperature control or at cleaning mode, it is judged as Thermistor open failure.

3) Short circuit of Thermistor/abnormal high temperature detection
When temperature of the Fixing Assembly is 220 deg C or higher for 30 consecutive times by monitoring the temperature for every 5 msec, it is judged as Thermistor short circuit failure. In addition, this function also doubles as abnormal high temperature detection function of the Fixing Assembly.

4) Abnormal low temperature detection
After temperature of the Fixing Assembly exceeds 50 deg C at least once, monitor temperature of the Thermistor (TH1) for every 5 msec. It is judged as heater abnormal low temperature when the following condition is detected 240 consecutive times: the temperature is 100 deg C or lower while paper is at fixing nip, or it is 55 deg C or lower during paper interval temperature control or at cleaning mode.

5) Thermistor open detection
After temperature of the Fixing Assembly exceeds 50 deg C, monitor temperature of the Thermistor (TH1) for every 5 msec. When it is detected that the temperature is lower than 20 deg C for 6 consecutive times, it is judged as Thermistor open failure.

6) Startup failure detection
If temperature of the Fixing Assembly is 100 deg C or higher when the machine becomes in pickup enabled state after entering fixing low voltage inlet sequence, it is judged as startup failure.

7) Thermistor high temperature detection 2
Temperature of the Thermistor (TH1) is monitored every 200 msec during Fixing Assembly control. If the temperature is equal or higher than "detection temperature of Thermistor high temperature detection 2", increase the value of "high temperature detection counter" by 1 (+1). If not, decrease the value by 1 (-1). When the value of "high temperature detection counter" becomes +50, it is judged as a Thermistor high temperature failure. The default and minimum value of "high temperature detection counter" is 0.
The "detection temperature of the Thermistor high temperature detection 2" is set to 195 deg C when the target control temperature is 180 deg C or less. When the target control temperature is above 180 deg C, it is set to "target control temperature + approx. 15 deg C".

8) Thermistor low temperature detection 2)
Temperature of the Thermistor (TH1) is monitored for every 200 msec when paper is at fixing nip during the Fixing Assembly control. When the temperature is lower than 135 deg C (120 deg C), increase the value of low temperature detection counter by 1 (+1). When it is 135 deg C (120 deg C) or higher, decrease the value by 1 (-1). When the value of low temperature counter becomes +150, it is judged as Thermistor low temperature failure. The default and minimum value of low temperature detection counter is 0.

9) Frequency detection circuit error (230V models only)
When frequency measurement is not completed within 3255 msec after the completion of previous frequency measurement, it is judged as frequency detection circuit error.

10) Thermistor high temperature detection 3
Temperature of the Thermistor (TH1) is monitored every 5 msec, and if the temperature is equal or higher than "detection temperature of Thermistor high temperature detection 2 + approx. 15 deg C" more than 30 consecutive times, it is judged as a Thermistor high temperature failure.

TONER
www.tonerplus.com.ua

Processing after failure detection

If the Main Motor is in driving state when Fixing Assembly failure is detected, rotation of the motor is maintained for 300 msec after the machine moves in Fixing Assembly failure state. Then, drive systems (Main Motor system, Laser/Scanner system, high voltage system, and fixing system) are stopped immediately and the machine moves in failure state.
If the Main Motor is not in driving state, drive systems are stopped immediately and the machine moves in failure state.

Other Functions

Throughput Down Control

The machine reduces throughput by increasing the paper interval to prevent the temperature rise at the edge of the Fixing Heater (H1) during continuous printing of small size paper (up to 271 mm long and 189.6 mm wide), and of the Delivery Assembly during large volume continuous printing.

Lengthening the paper interval allows the Fixing Heater to cool enough to prevent the temperature rise of the Fixing Assembly roller edge and Delivery Assembly.

Throughput Down Sequence

If the temperature continues to rise after continuous printing of 20 sheets with "plain paper" or "plain paper L" fixing mode at 400 dpi resolution, throughput is reduced for the remainder of the job.
Productivity (throughput down): 18 ppm -> 10 ppm

Throughput Down at Initial Rotation

The time for initial rotation is extended according to the fixing mode. The time is also extended when smeared image control mode 2 or paper wrinkle/curl prevention mode is specified.

Special mode		Fixing mode	Extension time
-		Heavy paper 1	2 sec.
-		Heavy paper 2	2 sec.
-		Envelope 1	5 sec.
-		Postcard	25 sec.
Smeared image control mode 2	Setting: 1	-	15 sec.
	Setting: 2	-	30 sec.
	Setting: 3	-	60 sec.
Paper wrinkle/curl prevention mode	OFF	Plain paper L	5 sec.*1
	Paper wrinkle/curl prevention 1/2	Plain paper, Plain paper L	20 sec.

T-2-6

*1: At 30 deg C in temperature and 80% in humidity

NOTE:
- Smeared image control mode 2
  Set by User Mode > Special Mode c. Setting range is as follows.
  0: OFF, 1: Extend initial rotation by 15 sec., 2: Extend initial rotation by 30 sec., 3: Extend initial rotation by 60 sec.
- Paper wrinkle/curl prevention mode
  Set by User Mode > Special Mode d. Setting range is as follows.
  0: OFF, 1: Paper wrinkle/curl prevention 1, 2: Paper wrinkle/curl prevention 2

Throughput Down Between Sheets

Throughput down control is performed according to fixing mode, special mode, resolution, and actual fed paper size.

Fixing mode/Special mode/Resolution			Actual fed paper size				
		Length	271 mm or less	over 271 mm to 312 mm		over 312 mm	
		Width	-	189.6 mm or less	over 189.6 mm	189.6 mm or less	over 189.6 mm
Plain paper	Without paper wrinkle/curl prevention			3 ppm		1 ppm	
	Paper wrinkle/curl prevention 1	400 dpi	4 to 6 ppm	3 ppm	4 to 6 ppm	1 ppm	4 to 6 ppm
		600 dpi	4 to 11 ppm	3 ppm	4 to 11 ppm	1 ppm	4 to 11 ppm
	Paper wrinkle/curl prevention 2		2 ppm	3 ppm	2 ppm	1 ppm	2 ppm
Plain paper L	Without paper wrinkle/curl prevention			3 ppm		1 ppm	
	Paper wrinkle/curl prevention 1	400 dpi	4 to 6 ppm	3 ppm	4 to 6 ppm	1 ppm	4 to 6 ppm
		600 dpi	4 to 11 ppm	3 ppm	4 to 11 ppm	1 ppm	4 to 11 ppm
	Paper wrinkle/curl prevention 2		2 ppm	3 ppm	2 ppm	1 ppm	2 ppm
Heavy paper 1	Without paper wrinkle/curl prevention		11.6 ppm *1	3 ppm	11.6 ppm *1	1 ppm	11.6 ppm *1
	Paper wrinkle/curl prevention 1/2	600 dpi	10 ppm *2	3 ppm	10 ppm *2	1 ppm	10 ppm *2
Heavy paper 2			11.6 ppm	3 ppm	11.6 ppm	1 ppm	11.6 ppm
Transparency				3 ppm		1 ppm	
Envelope 1	Without paper wrinkle/curl prevention	400 dpi	4 to 6 ppm	3 ppm		1 ppm	
		600 dpi	4 to 11 ppm	3 ppm		1 ppm	
	Paper wrinkle/curl prevention 1/2	400 dpi	6 to 11 ppm	3 ppm		1 ppm	
		600 dpi	6 to 11 ppm	3 ppm		1 ppm	
Envelope 2			6 to 11 ppm	3 ppm		1 ppm	
Postcard			4 to 11 ppm	3 ppm		1 ppm	
16K		400 dpi		3 ppm		1 ppm	
		600 dpi		3 ppm		1 ppm	

T-2-7

*1: Only when the print operation mode is copy mode, and the ambient temperature is below 20 deg C.

*2: Only when the print operation mode is copy mode, and the ambient temperature is 20 deg C or higher.

Service Works

At parts replacement

No work is required for this product at parts replacement.

Maintenance

No periodically replaced parts, durable parts or periodical service is set for this product.

Notes on service works

None.

TONER
www.tonerplus.com.ua

Pickup Feed System

Overview

Overview

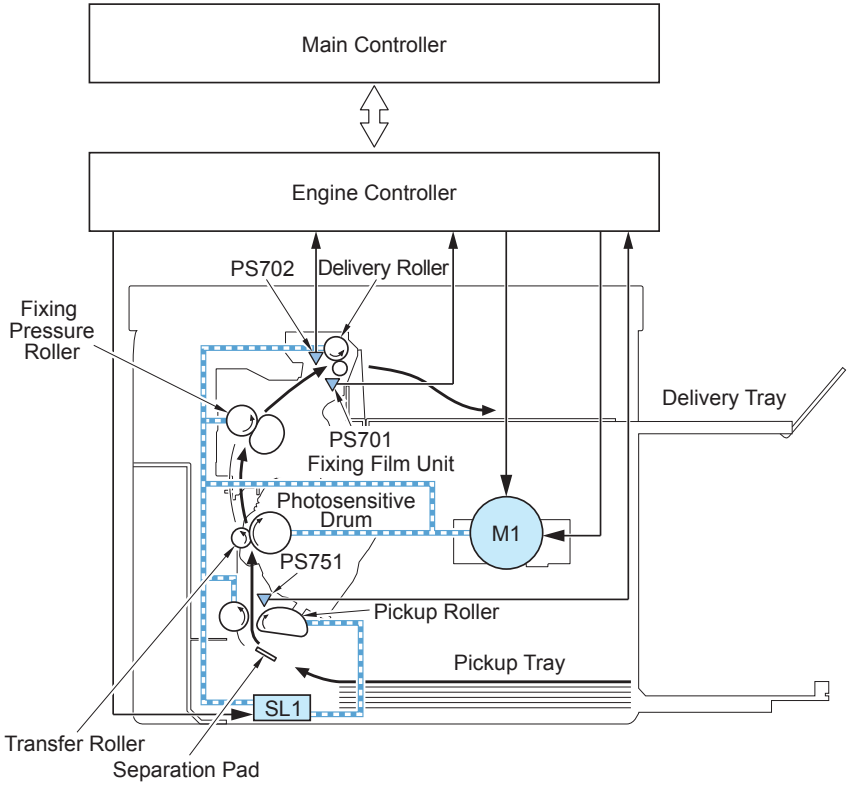

F-2-24

The pickup and feeding system executes pickup and feeding of papers and is composed of the Main Motor (M1), Pickup Solenoid (SL1), and rollers.
In this equipment, pickup from the pickup tray is available. There is only a face-down delivery. Papers set on the pickup tray are fed by the pickup roller. The papers are fed to the photosensitive drum, the transfer charging roller, the fixing sleeve unit, the pressure roller and then to delivery roller in this order; and then they are delivered to the delivery tray.
The feeding route of papers has three photointerrupters; the Paper Leading Edge Sensor (PS751), the Fixing Delivery Sensor (PS701), the Paper Width Sensor (PS702). They detect arrival and passing of papers.
If a paper does not reach or pass through each sensor within a specified time, the engine controller judges this status as jam and notices the jam occurrence to the main controller.

PS701: Fixing Delivery Sensor
PS702: Paper Width Sensor
PS751: Paper Leading Edge Sensor
M1: Main Motor
SL1: Pickup Solenoid

Detecting Jams

Jam Detection Outline

Overview

The following sensors are installed to detect absence/presence of papers and whether papers are correctly fed.

- Fixing Delivery Sensor (PS701)
- Paper Width Sensor (PS702)
- Paper Leading Edge Sensor (PS751)

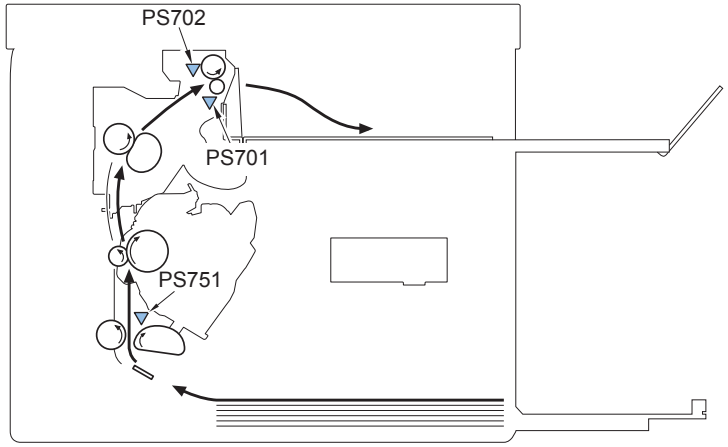

F-2-25

Whether jam occurs or not is judged according to whether a paper is absent/present on the sensor at the check timing that has been stored in the CPU of the engine controller.
When the engine controller judged that jam has occurred, print operation is stopped and jam occurrence is noticed to the main controller.

NOTE:
Jam detection timing may differ for 400 dpi and 600 dpi printing. In such a case, setting values applicable to 600 dpi printing are indicated in parentheses following those for 400 dpi printing.

Delay Jam

Delivery Delay Jam

There are 3 cases of delivery delay jam detection.

A. No preceding sheet

B. Preceding sheet exists 1 – short paper interval with the preceding sheet

C. Preceding sheet exists 2 – long paper interval with the preceding sheet

A. No preceding sheet

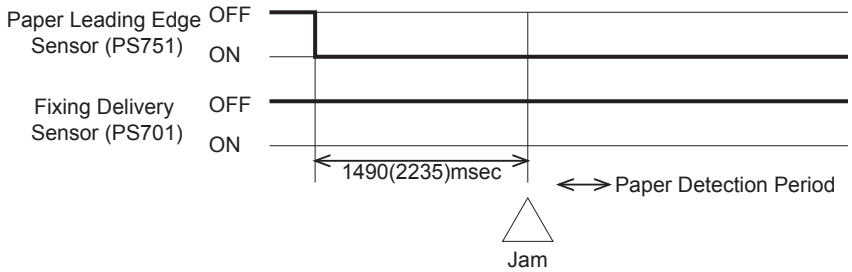

F-2-26

When the Fixing Delivery Sensor (PS701) cannot detect presence of paper within 1490 (2234) msec. after the Paper Leading Edge Sensor (PS751) detects the paper, it is judged as a delivery delay jam.

NOTE:
The above 1490 (2235) msec value accounts for the 126.26 mm distance from the Paper Leading Edge Sensor (PS751) to the Fixing Delivery Sensor (PS701), plus 40 mm margin. Since the distance from the fixing nip to the Fixing Delivery Sensor (PS701) is 22.9 mm, the length of wrapping from the leading edge is 62.9 mm. Since one lap of the fixing film is 18.2 pi (57.2) mm, the wrapping is longer than one lap. However, allowing for paper arch, sensor accuracy and heavy paper feeding capability, etc., the value cannot be further reduced.

TONER
www.tonerplus.com.ua

B. Preceding sheet exists 1

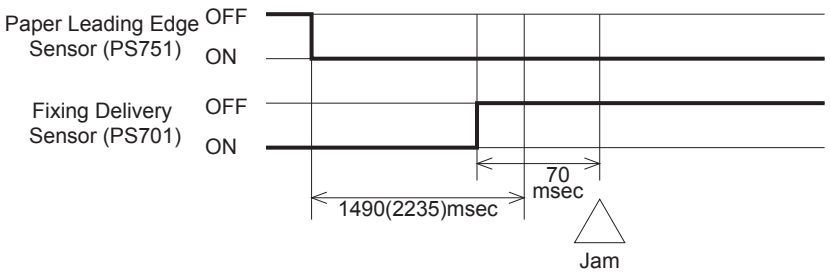

F-2-27

When the Paper Leading Edge Sensor (PS751) detects presence of paper while the Fixing Delivery Sensor (PS701) is detecting the preceding sheet, it is judged as a jam if 70 msec. elapses after the Fixing Delivery Sensor (PS701) detected absence of paper when 1490 (2235) msec. has passed after the Paper Leading Edge Sensor (PS751) detected presence of paper. When the Fixing Delivery Sensor (PS701) detects absence of paper again after 70 msec. has passed since it detected no paper first, it is judged as a delivery delay jam.

C. Preceding sheet exists 2

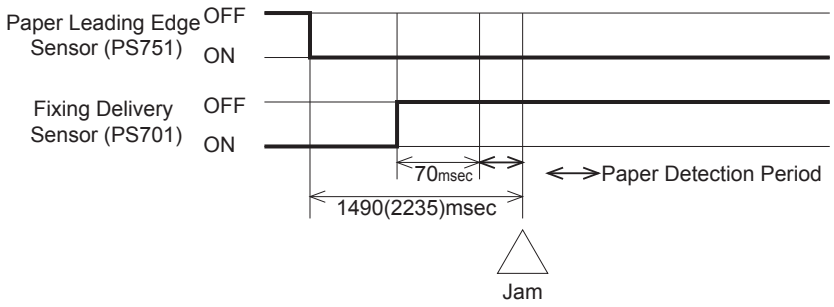

F-2-28

When the Paper Leading Edge Sensor (PS751) detects presence of paper while the Fixing Delivery Sensor (PS701) is detecting the preceding sheet, it is judged as a jam if 70 msec. has elapsed after the Fixing Delivery Sensor (PS701) detects absence of paper before 1490 (2235) msec. passes after the Paper Leading Edge Sensor (PS751) detected presence of paper.
When the Fixing Delivery Sensor (PS701) detects absence of paper after 1490 (2235) msec. has passed since the Paper Leading Edge Sensor (PS751) detected presence of paper, it is judged as a delivery delay jam.

Delivery Delay Jam during Auto Delivery

When the Paper Leading Edge Sensor (PS751) detects presence of paper and the Fixing Delivery Sensor (PS701) detects absence of paper at 1490 (2235) msec. after the start of auto delivery, it is judged as a delivery delay jam.

NOTE:
The start timing of auto delivery is the timing to stop the scanner.

Delivery Delay Jam during Cleaning

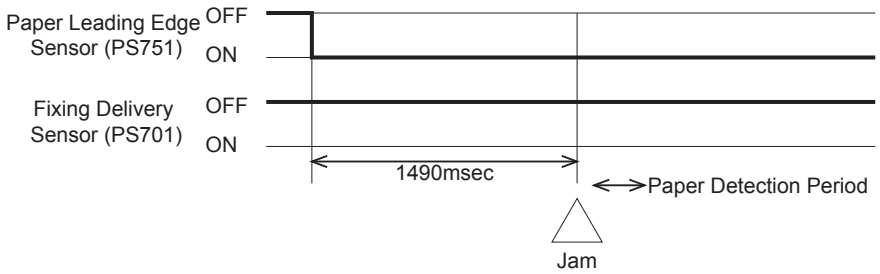

F-2-29

When the Fixing Delivery Sensor (PS701) cannot detect presence of paper within 1490 msec. after the Paper Leading Edge Sensor (PS751) detects the paper, it is judged as a delivery delay jam.

Stationary Jam

Pickup Stationary Jam

When the Paper Leading Edge Sensor (PS751) cannot detect the trailing edge of paper within 5325 (7990) msec. after it detects the leading edge, it is judged as a pickup stationary jam.

NOTE:
The above 5325 (7990) msec. is the paper feed time for the maximum paper size (594 mm).

Delivery Stationary Jam

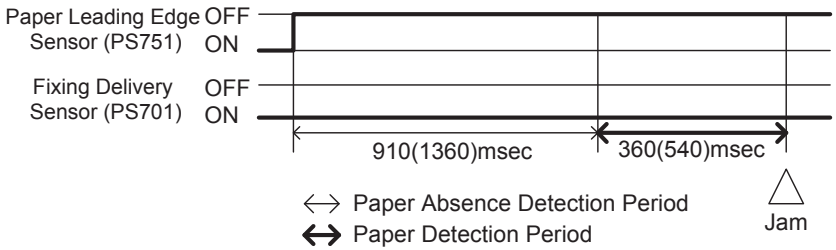

F-2-30

The Fixing Delivery Sensor (PS701) is monitored for 360 (540) msec. from 910 (1360) msec. after the Paper Leading Edge Sensor (PS751) detects absence of paper. If absence of paper cannot be detected even at once, it is judged as a delivery stationary jam.

NOTE:
The margin is set to 20 mm. Bounce of paper is taken into consideration for the setting.

Pickup Stationary Jam during Auto Delivery

When the Paper Leading Edge Sensor (PS751) detects presence of paper at 1490 (2235) msec. after the start of auto delivery, and the Paper Leading Edge Sensor (PS751) detects presence of paper after further feeding paper for 3835 (5555) msec., it is judged as a pickup stationary jam.

NOTE:
The above 3835 (5555) msec. paper feed period is the difference between the paper feed time for the maximum paper size: "5325 (7790) – 1490 (2235) msec.".

Delivery Stationary Jam during Auto Delivery

When the Paper Leading Edge Sensor (PS751) detects absence of paper at 1490 (2235) msec. after the start of auto delivery, and the Fixing Delivery Sensor (PS701) detects presence of paper after further feeding paper for 1265 (1900) msec., it is judged as a delivery stationary jam.
When the Paper Leading Edge Sensor (PS751) detects presence of paper at 1490 (2235) msec. after the start of auto delivery, and the Fixing Delivery Sensor (PS701) detects presence of paper after further feeding paper for 5100 (7655) msec., it is judged as a delivery stationary jam.

Delivery Stationary Jam during Cleaning

When the Fixing Delivery Sensor (PS701) cannot detect absence of paper within 3445 msec. following the Main Motor (M1) rotation startup after finishing the cleaning process, it is judged as a delivery stationary jam.

Other Jams

Fixing Wrap Jam

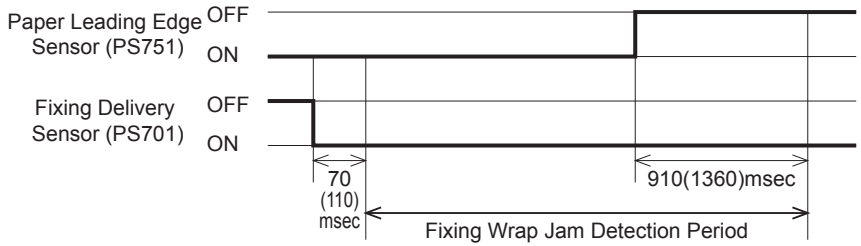

F-2-31

When the Fixing Delivery Sensor (PS701) detects absence of paper from 70 (110) msec. after it last detected presence of paper until 910 (1360) msec. after the Paper Leading Edge Sensor (PS751) last detected absence of paper, it is judged as a fixing wrap jam.

NOTE:
The leading-edge detection margin is 8 mm, and the trailing-edge detection margin is 20 mm.
The above 910 (1360) msec. accounts for 70 (110) msec. calculated from 8 mm and the time calculated from the "121.31 - 20" mm feeding distance of the trailing edge of paper from the Paper Leading Edge Sensor (PS751) to the Fixing Delivery Sensor (PS701).
The leading-edge detection margin is set to prevent incorrect detection of a wrapping jam during chattering at paper entry.
The trailing-edge detection margin is set longer than the leading-edge margin to allow for detection time uncertainty due to bounce of paper, etc.

Initial Paper Presence Jam when Printing

When the Fixing Delivery Sensor (PS701) or the Paper Width Sensor (PS702) detects presence of paper immediately before the Main Motor (M1) starts rotating, it is judged as a delivery stationary jam.

Door Open Jam

When printing is interrupted by door-open detection during printing, it is judged as a door open jam if there is paper at the Paper Leading Edge Sensor (PS751) or the Fixing Delivery Sensor (PS701). At this time, if the jam status already indicates a jam, the jam status is retained.

Initial Paper Presence Jam during Warm-up Rotation

When the Paper Leading Edge Sensor (PS751) detects absence of paper at the start of warm-up rotation and the Fixing Delivery Sensor (PS701) or the Paper Width Sensor (PS702) detects presence of paper, it is judged as an initial paper presence jam.

Paper Absence Detection during Cleaning

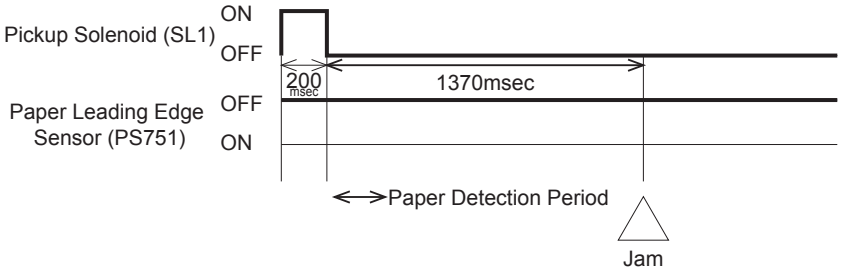

F-2-32

When the Paper Leading Edge Sensor (PS751) cannot detect presence of paper within 1370 msec. after 200 msec. from the start of paper pickup, it is judged as paper absence.

Service Works

At parts replacement

No work is required for this product at parts replacement.

Maintenance

No periodically replaced parts, durable parts or periodical service is set for this product.

Notes on service works

None.

External And Controls System

Power Supply

Power Supply

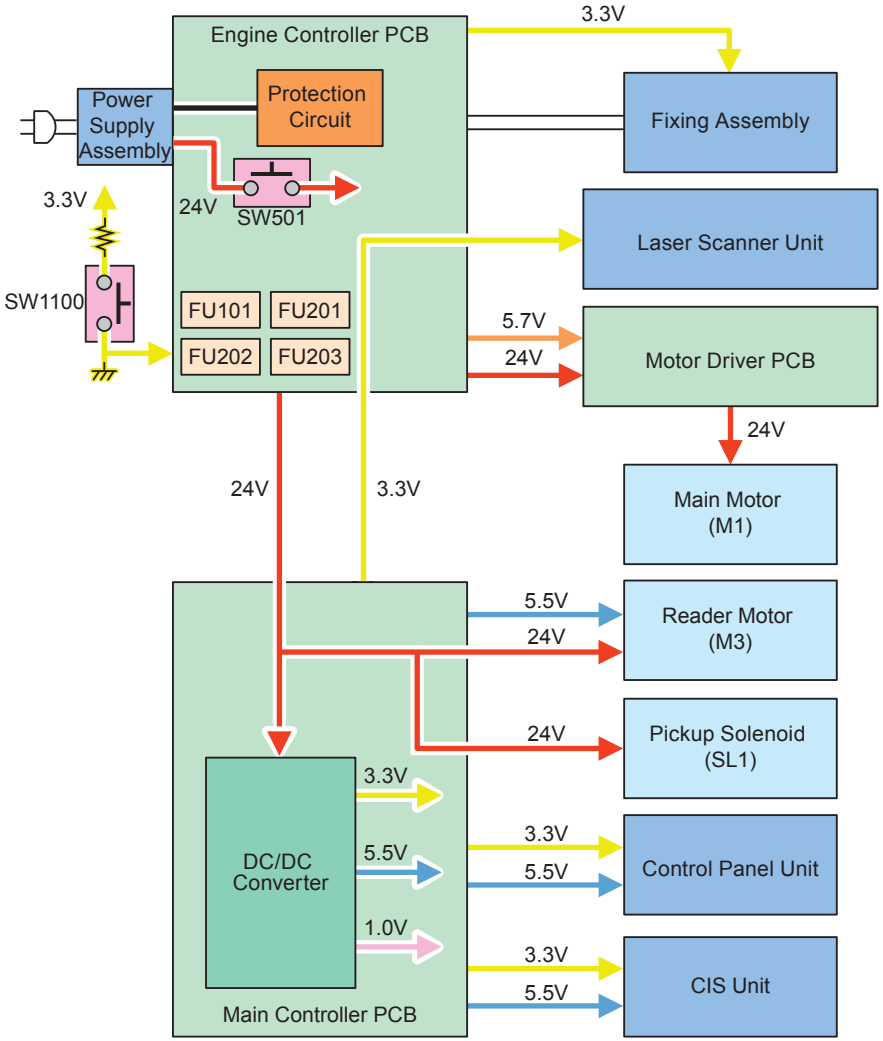

F-2-33

Protective Functions

Power protective function

Low voltage power circuit carries the overcurrent preventive function against and overvoltage preventive function that block the voltage output automatically to prevent the power circuit brokerage when the overcurrent or overvoltage occur due to load errors such as short circuit etc.

Thus, when the DC power cannot be output from the low voltage circuit, the protective function against overcurrent or overvoltage may be working. Turn OFF the Power Switch (SW1100) to fix load errors and turn ON the Power Switch (SW1100) again (see CAUTION).

Also the circuit carries the 4 fuses (FU101, FU201, FU202, FU203) as another preventive function. The fuses blow to block the power supply when overcurrent occurs in AC line.

> ⚠ CAUTION:
>
> When restoring the low voltage power after protective function is activated, leave it for 2 minutes or more from turning off the Power Switch (SW1100) or plugging out before turning ON.

Safety function

The host machine equips the function of stopping 24V in part of the high voltage power unit to avoid users and engineers from getting burned or electric shock.

When the cartridge door is opened, the Door Switch (SW501) is turned off and 24V supplied to the high voltage power unit is shut.

Engine controller CPU determines the door open when the Door Switch (SW501) is turned OFF.

TONER
www.tonerplus.com.ua

Service Works

At parts replacement

No work is required for this product at parts replacement.

Maintenance

No periodically replaced parts, durable parts or periodical service is set for this product.

Notes on service works

None.

3 Periodical Services

- Periodically Replaced Parts
- Consumables
- Periodical Service
- Cleaning

Periodically Replaced Parts

Periodically Replaced Parts

There is no periodically replaced part with this machine.

Consumables

Consumables

There is no consumable with this machine.

Periodical Service

Scheduled Servicing

There is no portion that requires schedule servicing in this equipment.

TONER
www.tonerplus.com.ua

Cleaning

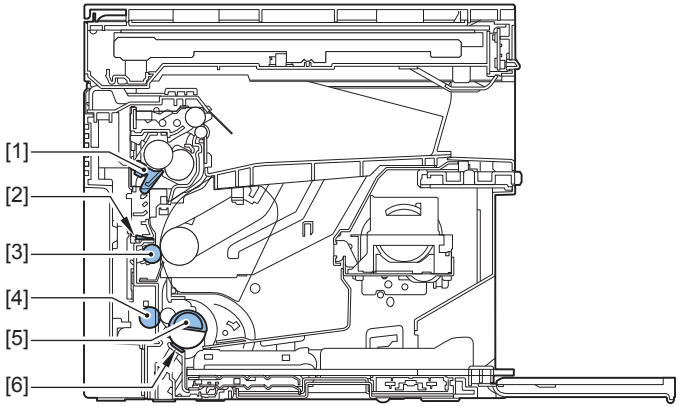

F-3-1

Cleaning parts		Procedure
[1]	Fixing inlet guide	Clean it with a dry lint-free paper.
[2]	Static eliminator	Clean it with a dry lint-free paper.
[3]	Transfer Roller	Basically, do not touch it with your hands or clean it. When cleaning is absolutely necessary, clean with a dry lint-free paper. Take care not to touch the roller and let solvents or oils be removed.
[4]	Feed Roller	Clean it with a dry lint-free paper.
[5]	Pickup Roller	Clean it with a dry lint-free paper.
[6]	Separation Pad	Clean it with a dry lint-free paper.

T-3-1

4 Disassembly/Assembly

- List Of Parts
- List of Connectors
- External Cover / Interior System
- Original Exposure System
- Controller System
- Laser Exposure System
- Image Formation System
- Fixing System
- Pickup Feed System

Outline

This chapter describes disassembling/assembling procedure of this equipment.
The service technician is to identify the cause of the failures according to "Chapter 6 Troubleshooting" and to replace the faulty parts by following the disassembling procedure. In addition, replace the consumable parts by following the same disassembling procedure.
Note the following precautions when working.

1. CAUTION: Be sure to disconnect the power plug before disassembling/assembling for safety.
2. When disassembling/assembling or transporting the machine, be sure to remove the cartridge beforehand as needed. However, when the cartridge is removed from the machine, be sure to put the Photosensitive Drum in a protective bag even in a short period of time to prevent the adverse effect of light.
3. When assembling, perform the disassembling procedure in reverse order unless otherwise specified.
4. When assembling, be sure to tighten the screws to their appropriate locations according to the screw types (length, diameter).
5. Do not run the machine with any parts removed as a general rule.
6. When handling the PCB, be sure to touch the metal part of the printer to ground yourself to prevent damaging the PCB by static electricity.
7. When replacing the part with the rating name plate, be sure to affix it to the new part.

List Of Parts

External View

Front Side

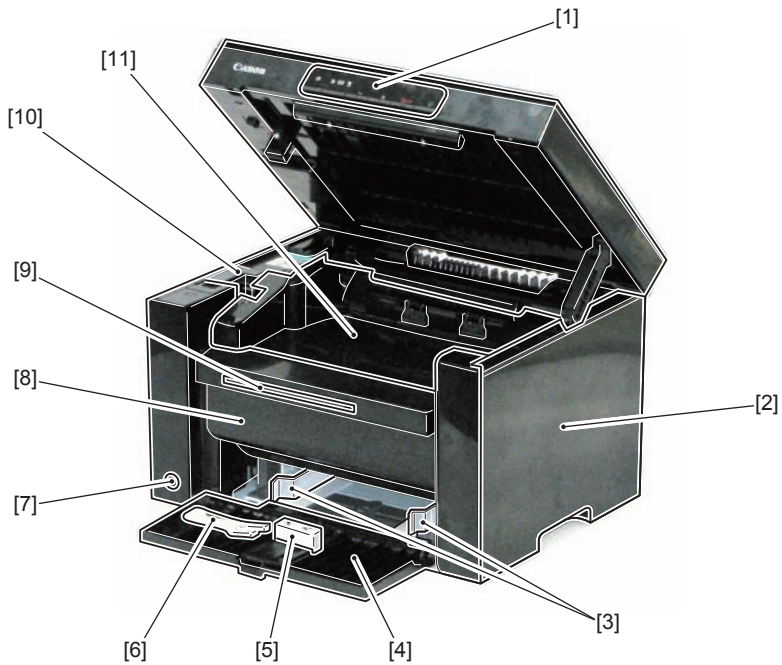

F-4-1

No.	Name	Reference
[1]	Control Panel Unit	(Refer to page 4-29)
[2]	Right Cover	(Refer to page 4-14)
[3]	Pickup Tray Paper Guides	-
[4]	Pickup Tray	-
[5]	Pickup Tray Trailing Edge Paper Guides	-
[6]	Small Size Paper Guides	-
[7]	Power Switch	-
[8]	Front Cover Unit	(Refer to page 4-15)
[9]	Delivery Auxiliary Tray	-
[10]	Upper Cover	(Refer to page 4-15)
[11]	Delivery Tray	-

T-4-1

Rear Side

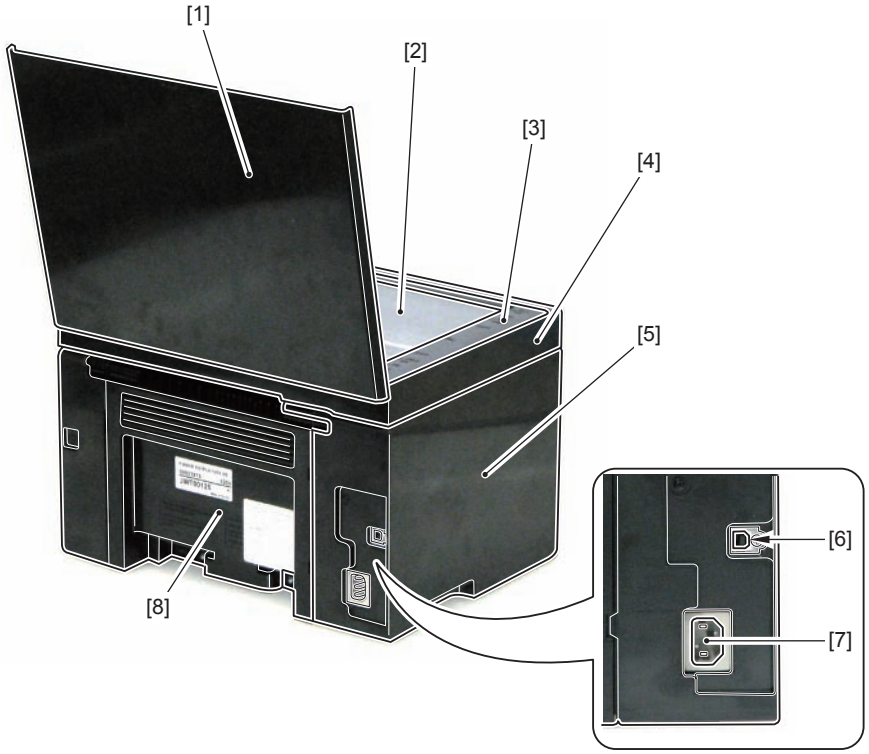

F-4-2

No.	Name	Reference
[1]	Copyboard Cover	(Refer to page 4-19)
[2]	Copyboard Glass	(Refer to page 4-21)
[3]	Copyboard Upper Cover	(Refer to page 4-21)
[4]	Copyboard Lower Cover	-
[5]	Left Cover	(Refer to page 4-13)
[6]	USB Device Port	-
[7]	Power Supply Cord Slot	-
[8]	Rear Cover	(Refer to page 4-17)

T-4-2

List of Main Unit

Reader Unit

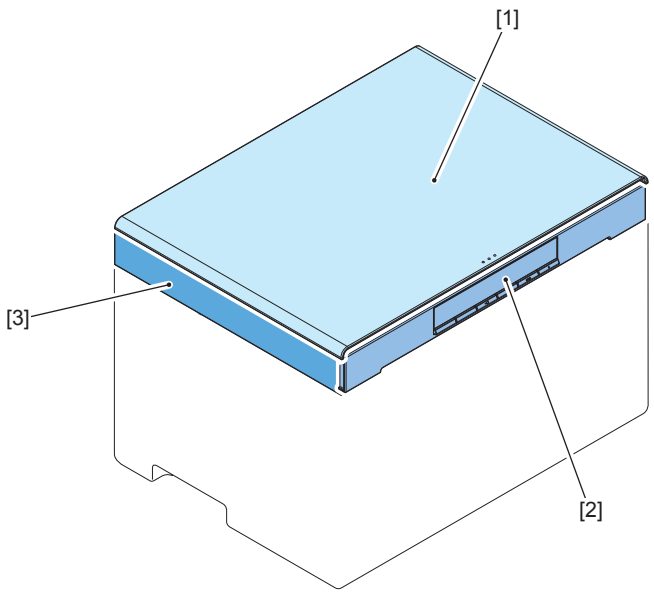

F-4-3

No.	Name	Reference
[1]	Copyboard Cover	(Refer to page 4-19)
[2]	Control Panel Unit	(Refer to page 4-29)
[3]	Reader Unit	(Refer to page 4-20)

T-4-3

Printer Unit

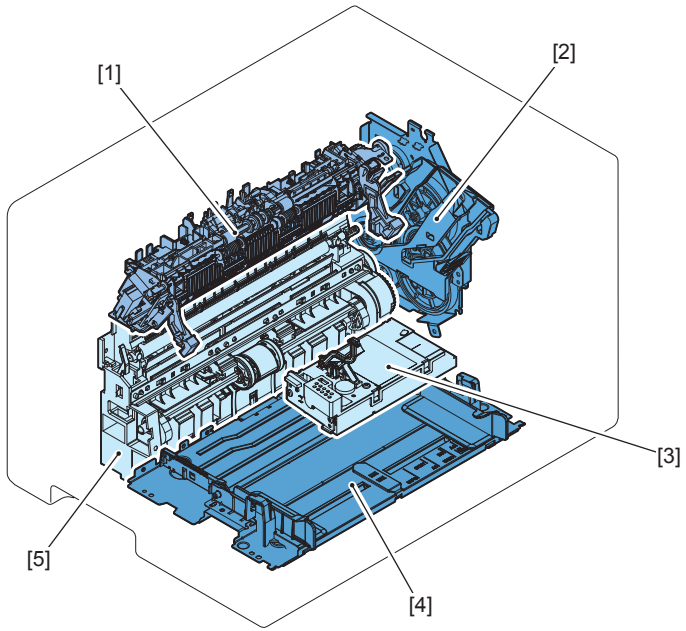

F-4-4

No.	Name	Reference
[1]	Fixing Assembly	(Refer to page 4-46)
[2]	Main Drive Unit	(Refer to page 4-29)
[3]	Laser Scanner Unit	(Refer to page 4-42)
[4]	Pickup Tray Unit	-
[5]	Pickup Unit	(Refer to page 4-51)

T-4-4

Electrical Components

Reader Unit

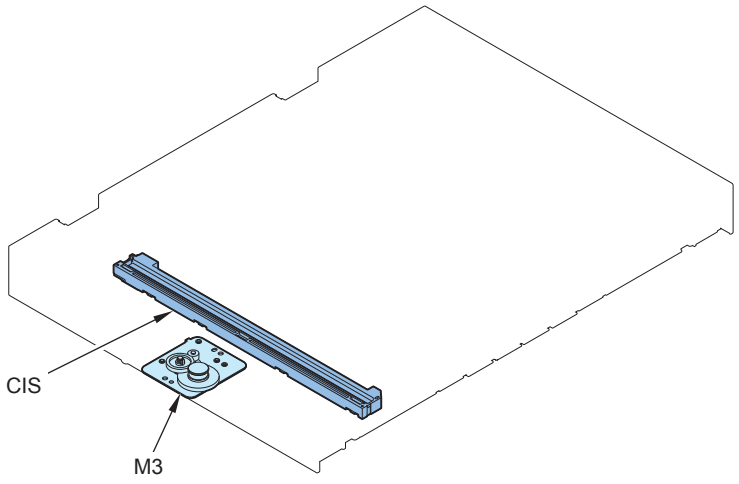

F-4-5

No.	Name	Main Unit	Reference	Adjastment during parts replacement
M3	Reader Motor	Reader Unit	(Refer to page 4-23)	-
CIS	CIS Unit	Reader Unit	(Refer to page 4-26)	-

T-4-5

Motor

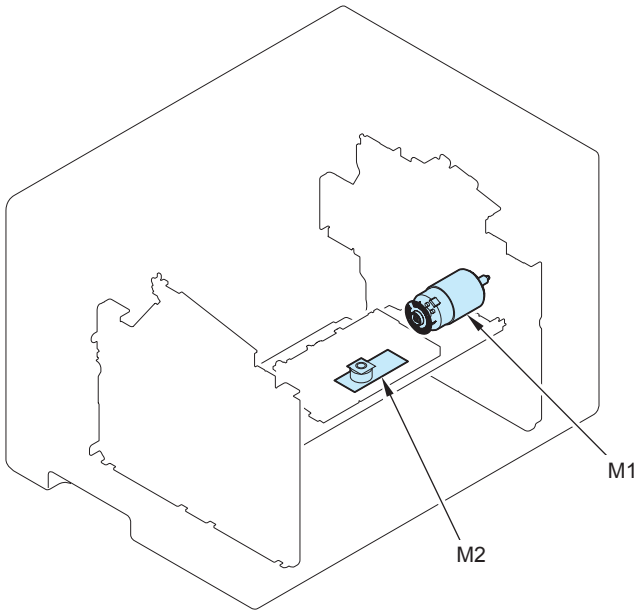

F-4-6

No.	Name	Main Unit	Reference	Adjastment during parts replacement
M1	Main Motor	Main Unit	(Refer to page 4-31)	-
M2	Scanner Motor	Laser Scanner Unit	(Refer to page 4-42)	-

T-4-6

Solenoid

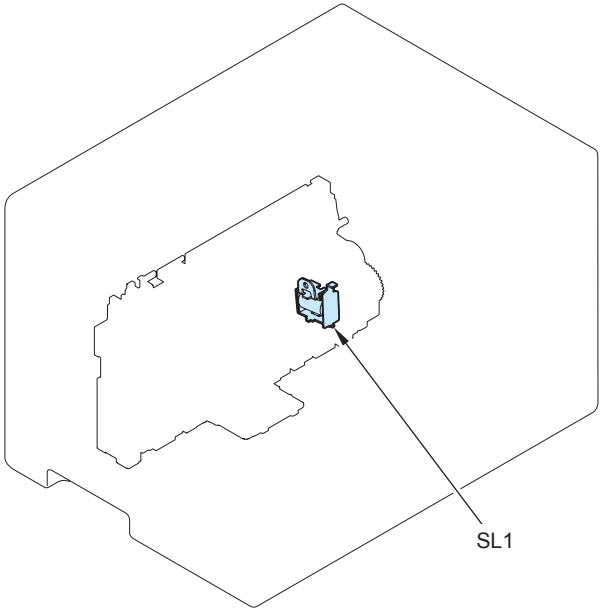

F-4-7

No.	Name	Main Unit	Reference	Adjastment during parts replacement
SL1	Pickup Solenoid	Pickup Unit	(Refer to page 4-55)	-

T-4-7

Sensor

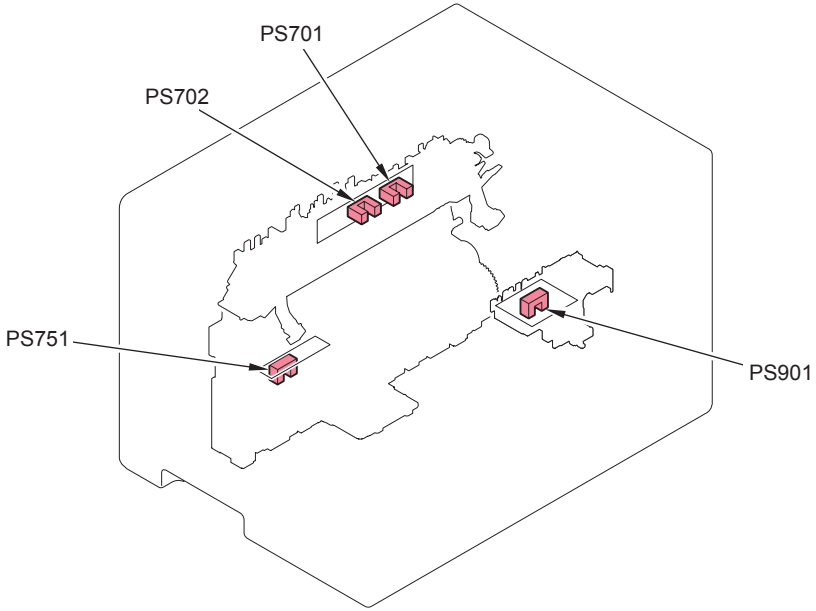

F-4-8

No.	Name	Main Unit	Reference	Adjastment during parts replacement
PS901	Motor Encoder Sensor	Main Unit	-	-
PS751	Paper Leading Edge Sensor	Pickup Unit	(Refer to page 4-38)	-
PS702	Paper Width Sensor	Fixing Assembly	(Refer to page 4-40)	-
PS701	Fixing Delivery Sensor	Fixing Assembly	(Refer to page 4-40)	-

T-4-8

Switch

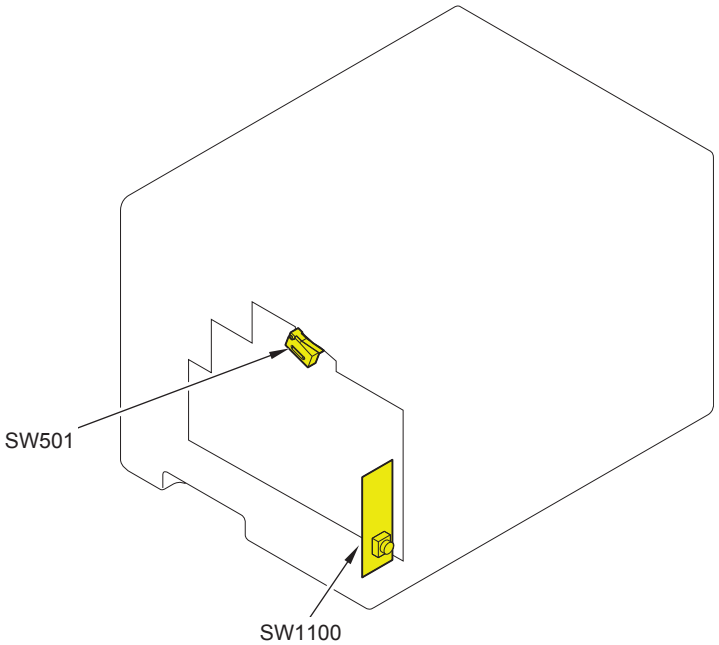

F-4-9

No.	Name	Main Unit	Reference	Adjastment during parts replacement
SW1100	Power Switch	Main Unit	-	-
SW501	Door Switch	Main Unit	-	-

T-4-9

Heater/Thermistor/Thermoswitch/

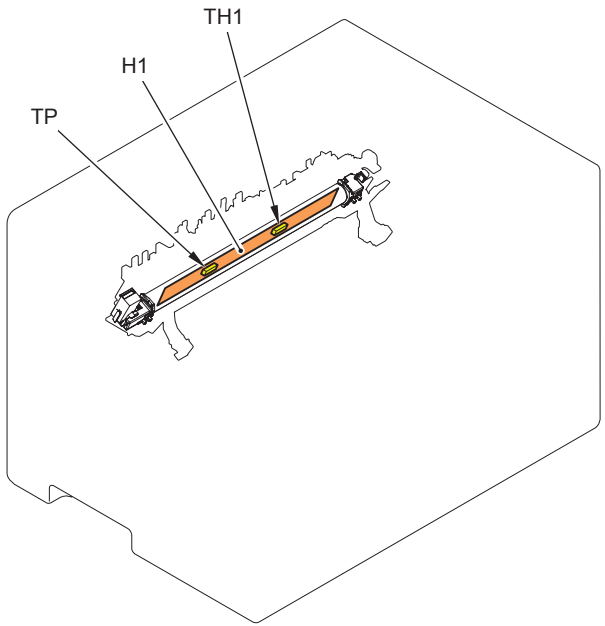

F-4-10

No.	Name	Main Unit	Reference	Adjastment during parts replacement
TP	Temperature fuse	Fixing Assembly	-	-
H1	Fixing Heater	Fixing Assembly	-	-
TH1	Thermistor	Fixing Assembly	-	-

T-4-10

TONER
www.tonerplus.com.ua

PCB

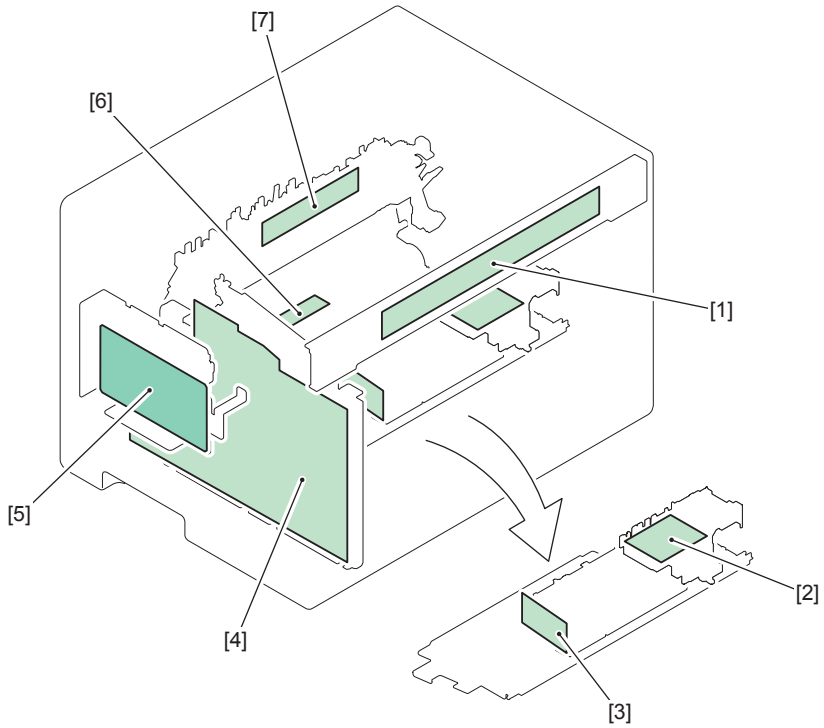

F-4-11

No.	Name	Main Unit	Reference	Adjastment during parts replacement
[1]	Control Panel PCB	Control Panel Unit	(Refer to page 4-29)	-
[2]	Motor Driver PCB	Main Unit	-	-
[3]	Laser Driver PCB	Laser Scanner Unit	-	-
[4]	Engine Controller PCB	Main Unit	(Refer to page 4-35)	-
[5]	Main Controller PCB	Main Unit	(Refer to page 4-34)	(Refer to page 8-11)
[6]	Paper Leading Edge Sensor PCB	Pickup Unit	(Refer to page 4-38)	-
[7]	Fixing Delivery/Paper Width Sensor PCB	Fixing Assembly	(Refer to page 4-40)	-

T-4-11

List of Connectors

Reader Unit

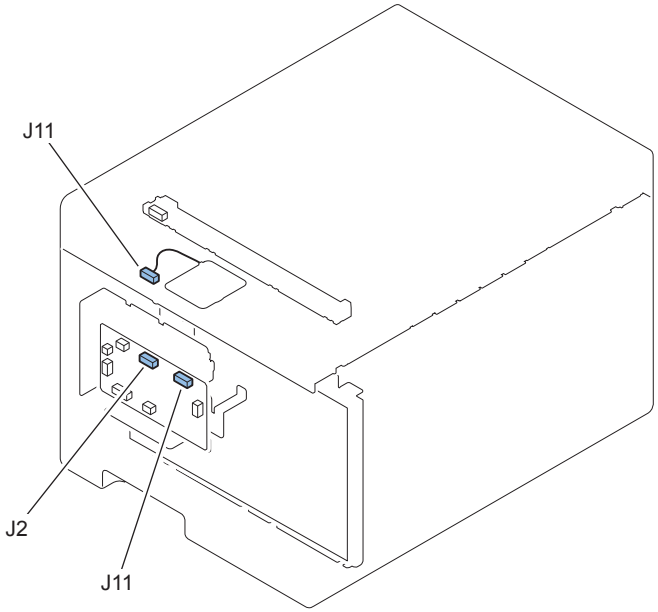

F-4-12

J No.	Symbol	Name	Relay Connector	J No.	Symbol	Name	REMARKS
J2	-	Main Controller PCB		-	CIS	CIS Unit	
J11	-	Main Controller PCB		J11	M3	Reader Motor	

T-4-12

Printer Unit

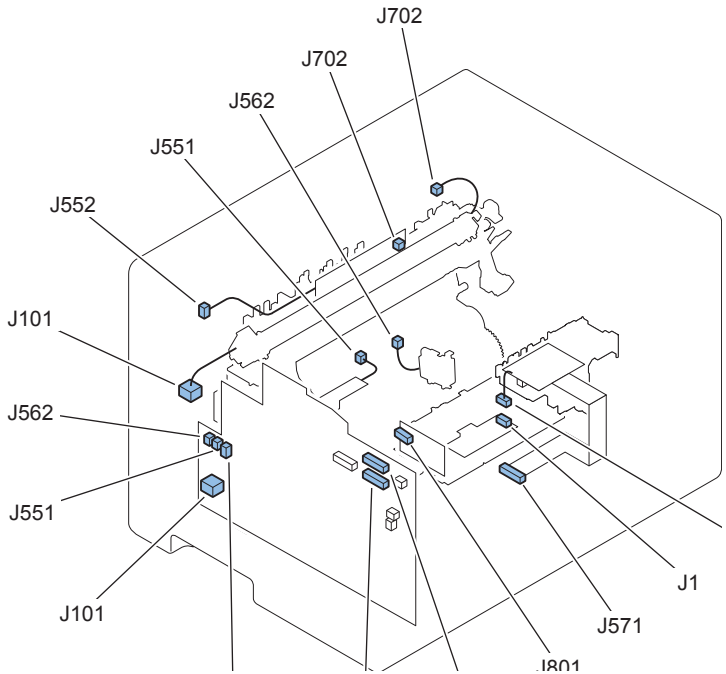

F-4-13

J No.	Symbol	Name	Relay Connector	J No.	Symbol	Name	REMARKS
J571	-	Engine Controller PCB		J571	-	Motor Driver PCB	
J1	-	Motor Driver PCB		J1	M2	Laser Scanner Motor	
J801	-	Laser Driver PCB		J542	-	Engine Controller PCB	
J101	-	Engine Controller PCB		J101	-	Fixing Film Unit	
J551	-	Engine Controller PCB		J551	PS751	Paper Leading Edge Sensor	
J552	-	Engine Controller PCB		J552	PS701, PS702	Fixing Delivery/Paper Width Sensor PCB	
J562	-	Engine Controller PCB		J562	SL1	Pickup Solenoid	
J702	PS701, PS702	Fixing Delivery/Paper Width Sensor PCB		J702	-	Fixing Film Unit	

T-4-13

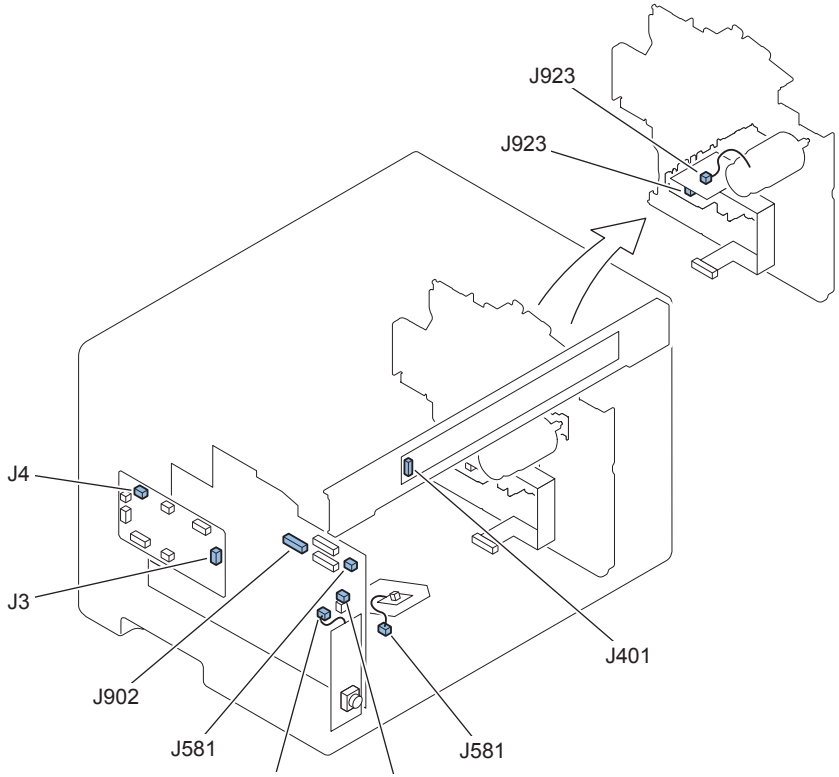

F-4-14

J No.	Symbol	Name	Relay Connector	J No.	Symbol	Name	REMARKS
J923	-	Motor Driver PCB		J923	M1	Main Motor	
J581	-	Engine Controller PCB		J581	TAG	Memory Tag	
J902	-	Engine Controller PCB		J3	-	Main Controller PCB	
J912	-	Engine Controller PCB		J912	SW1100	Power Switch	
J4	-	Main Controller PCB		J401	-	Control Panel PCB	

T-4-14

External Cover / Interior System

Layout Drawing

Front Side

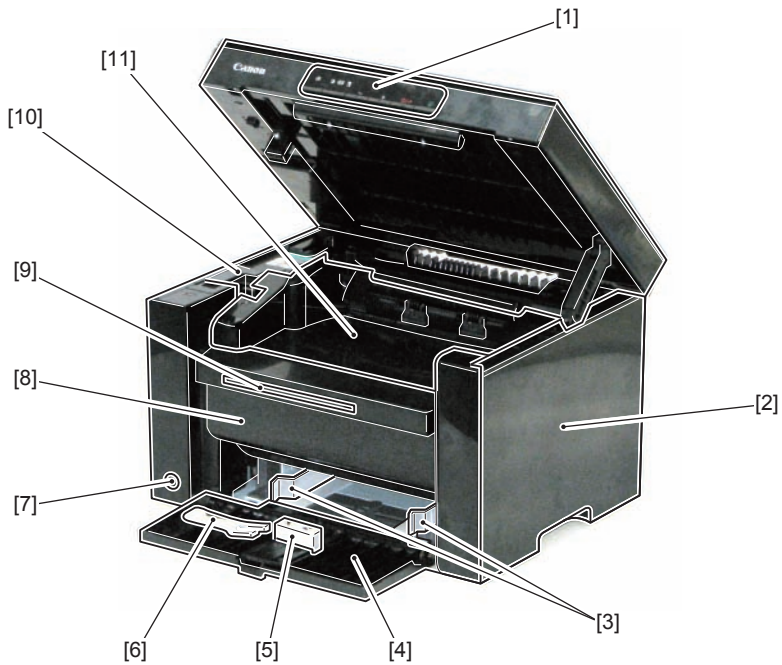

F-4-15

No.	Name	Reference
[1]	Control Panel Unit	(Refer to page 4-29)
[2]	Right Cover	(Refer to page 4-14)
[3]	Pickup Tray Paper Guides	-
[4]	Pickup Tray	-
[5]	Pickup Tray Trailing Edge Paper Guides	-
[6]	Small Size Paper Guides	-
[7]	Power Switch	-
[8]	Front Cover Unit	(Refer to page 4-15)
[9]	Delivery Auxiliary Tray	-
[10]	Upper Cover	(Refer to page 4-15)
[11]	Delivery Tray	-

T-4-15

Rear Side

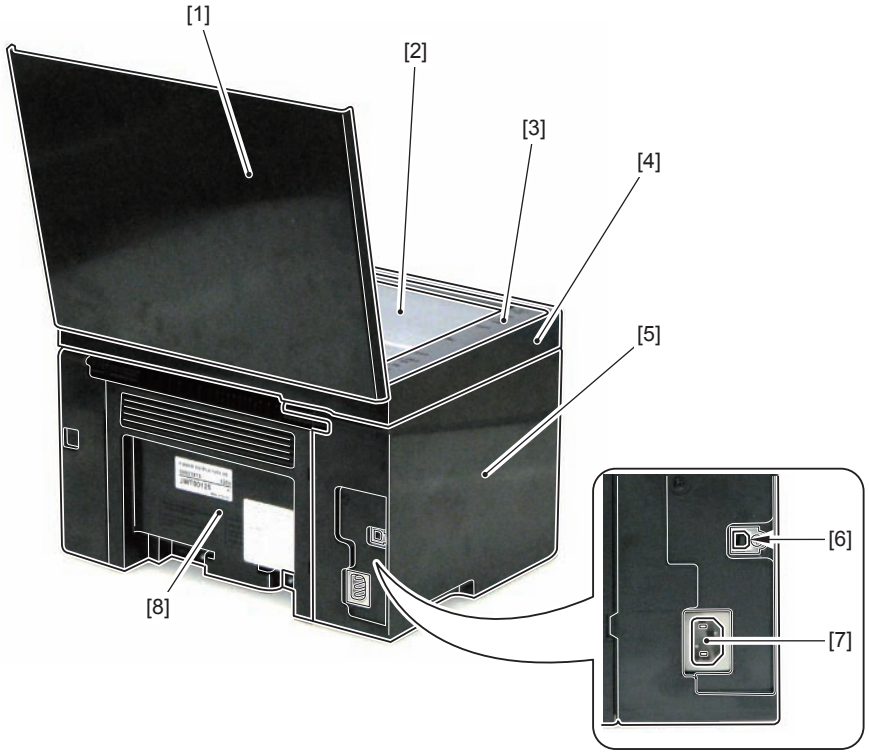

F-4-16

No.	Name	Reference
[1]	Copyboard Cover	(Refer to page 4-19)
[2]	Copyboard Glass	(Refer to page 4-21)
[3]	Copyboard Upper Cover	(Refer to page 4-21)
[4]	Copyboard Lower Cover	-
[5]	Left Cover	(Refer to page 4-13)
[6]	USB Device Port	-
[7]	Power Supply Cord Slot	-
[8]	Rear Cover	(Refer to page 4-17)

T-4-16

Removing the Left Cover

NOTE:
The following shows the 5 claws [1] and 2 hooks [2] of the Left Cover.

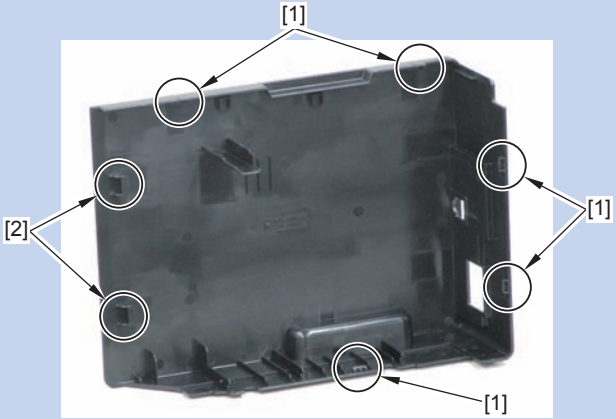

F-4-17

1) Remove the screw (black TP) [1].

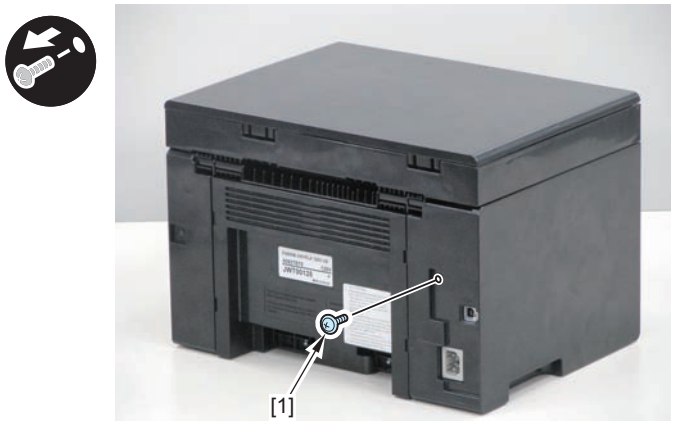

F-4-18

2) Release the 2 claws [1] at the rear side and the claw [2] at the lower side.

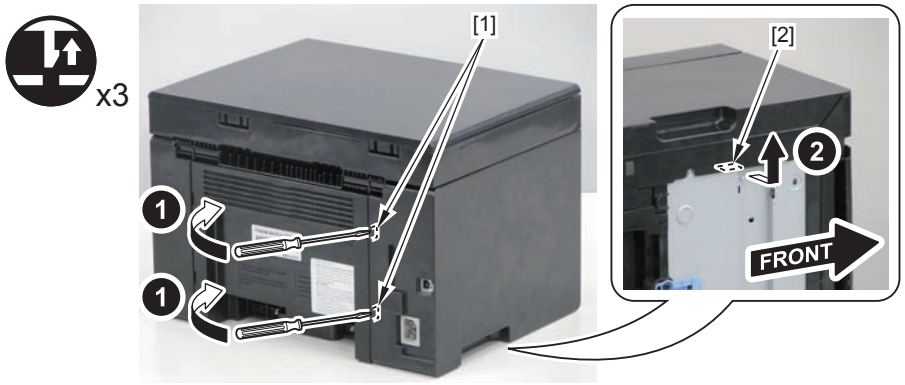

F-4-19

3) Open the Reader Unit, and release the 2 claws [1] at the upper side.
4) While releasing the 2 hooks [2], remove the Left Cover [3].

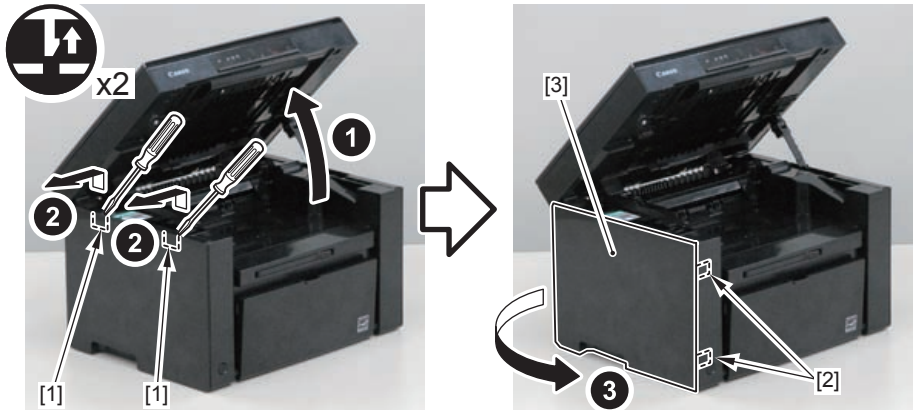

F-4-20

TONER
www.tonerplus.com.ua

Removing the Right Cover

NOTE:
The following shows the 5 claws [1] and 2 hooks [2] of the Right Cover.

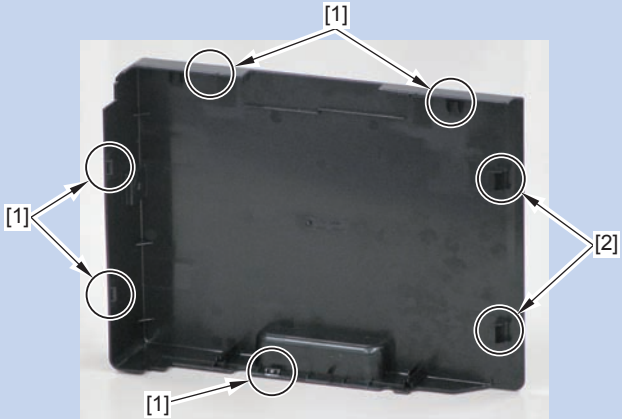

F-4-21

1) Remove the screw (black TP) [1].

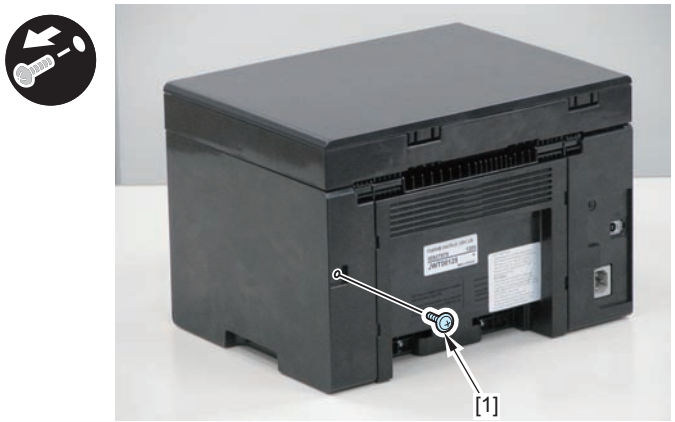

F-4-22

2) Release the 2 claws [1] at the rear side and the claw [2] at the lower side.

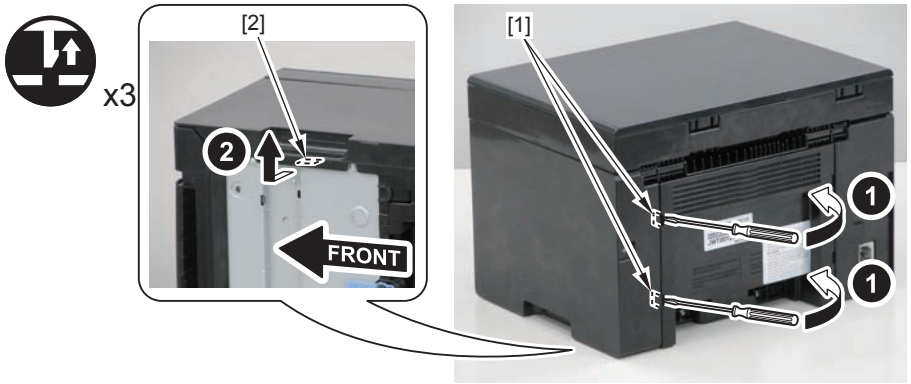

F-4-23

3) Open the Reader Unit, and release the 2 claws [1] at the upper side.
4) Remove the 2 hooks [2], and remove the Right Cover [3].

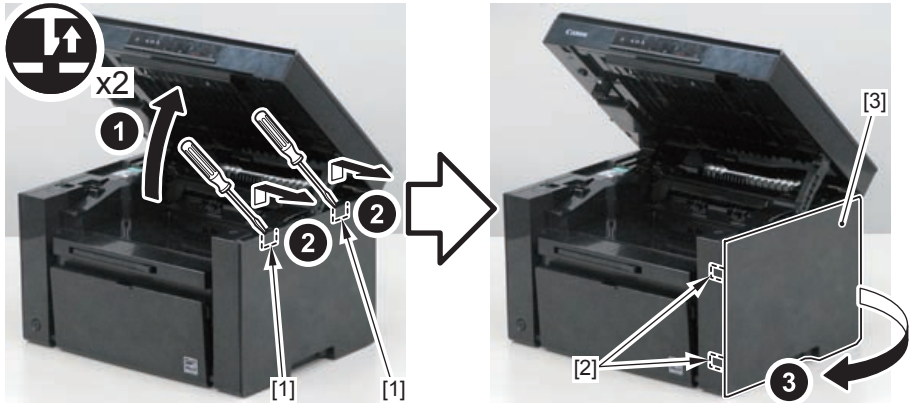

F-4-24

Removing the Front Cover Unit

Preparation

1) Remove the Left Cover.(Refer to page 4-13)
2) Remove the Right Cover.(Refer to page 4-14)

Procedure

1) Disconnect the connector [1].
2) Remove the 2 claws [2] at the lower side, and remove the Front Cover Unit [3].

- 6 Bosses [4]

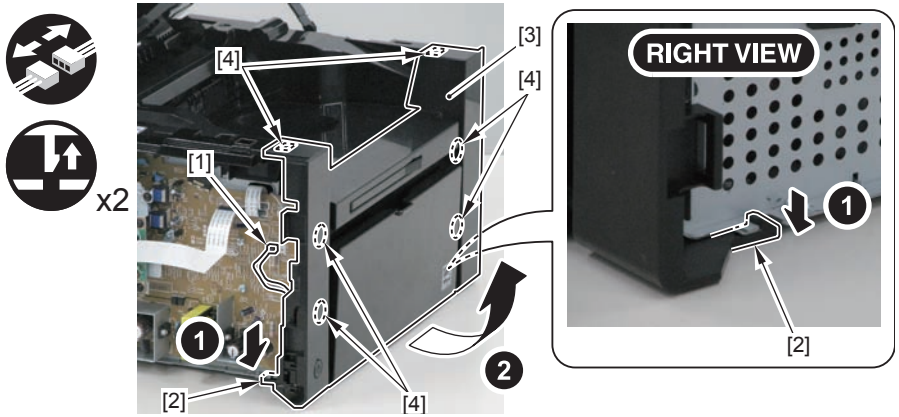

F-4-25

TONER
www.tonerplus.com.ua

Removing the Upper Cover

Preparation

1) Remove the Left Cover.(Refer to page 4-13)
2) Remove the Reader Unit.(Refer to page 4-20)
3) Remove the Right Cover.(Refer to page 4-14)
4) Remove the Front Cover Unit.(Refer to page 4-15)

Procedure

1) Open the Delivery Tray [1].
2) Remove the Cartridge Arm [2].
3) Remove the 2 Fixing Pressure Arms [3].

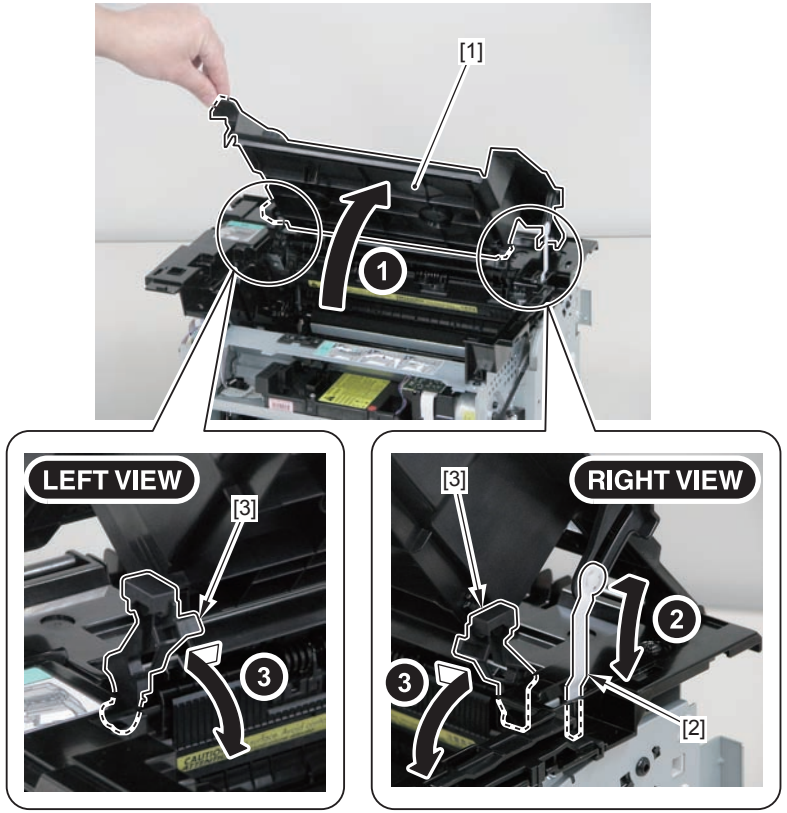

F-4-26

4) Remove the Delivery Tray [1].

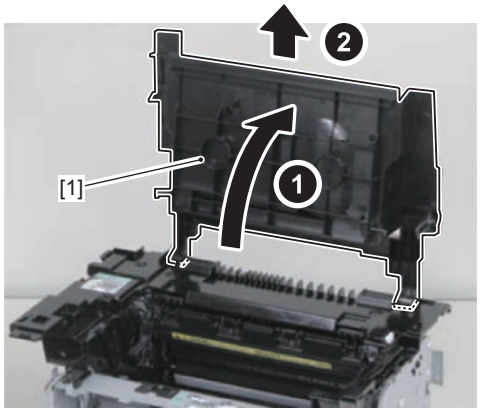

F-4-27

5) Remove the Arm Shaft Rail Holder [1] of the Reader Unit.

- 1 Hook [2]

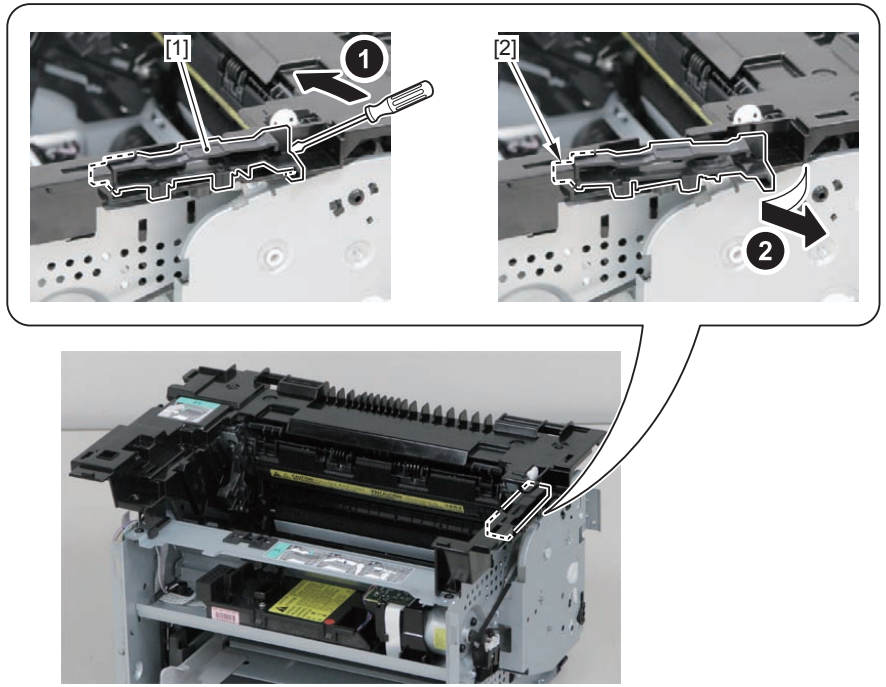

F-4-28

6) Remove the Upper Cover [1].

- 6 Screws (black TP) [2]

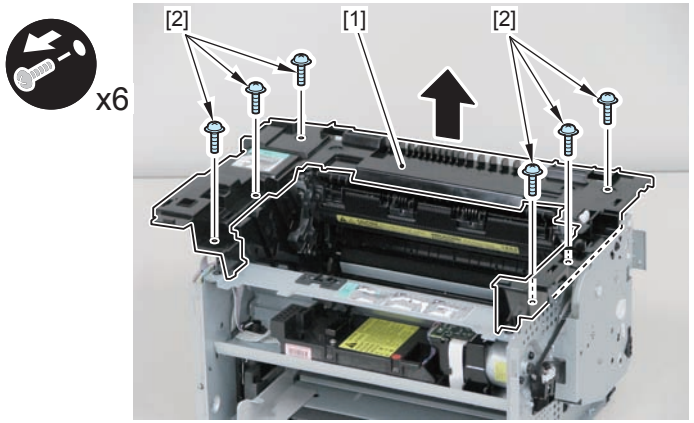

F-4-29

CAUTION:

Be sure to install the 2 Fixing Pressure Arms [2] and the Cartridge Arm [3] to the Delivery Tray [1] when assembling.

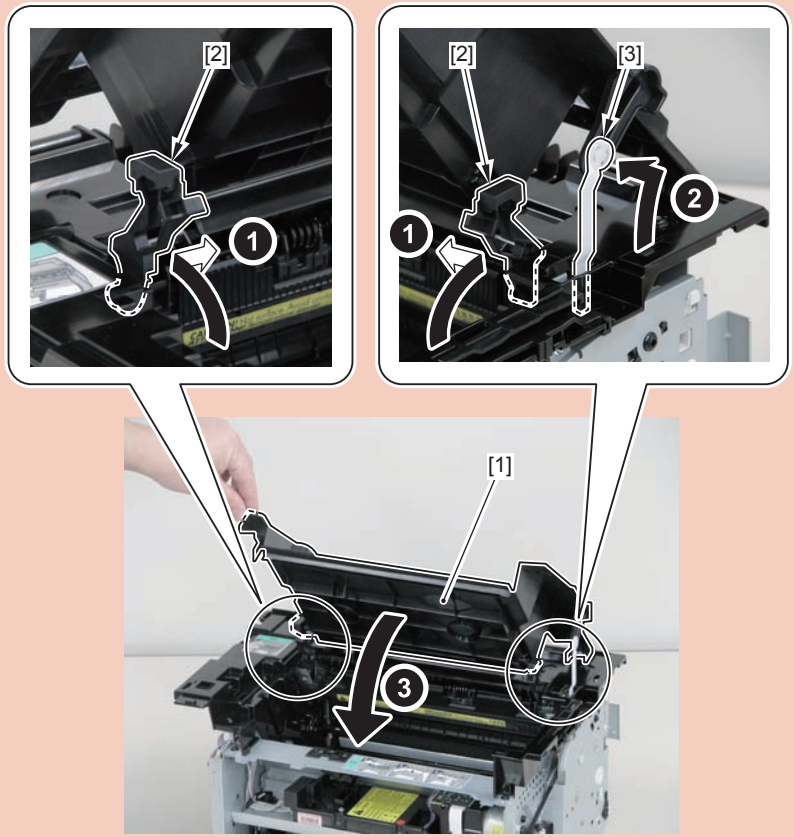

F-4-30

Removing the Rear Cover

Preparation

1) Remove the Left Cover.(Refer to page 4-13)
2) Remove the Right Cover.(Refer to page 4-14)

Procedure

1) Remove the 2 screws (black TP) [1].

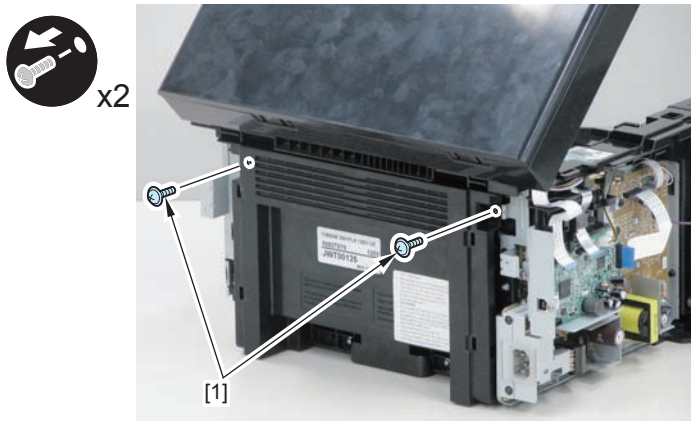

F-4-31

2) Remove the Rear Cover [1].

- 2 Claws [2]
- 2 Hooks [3]

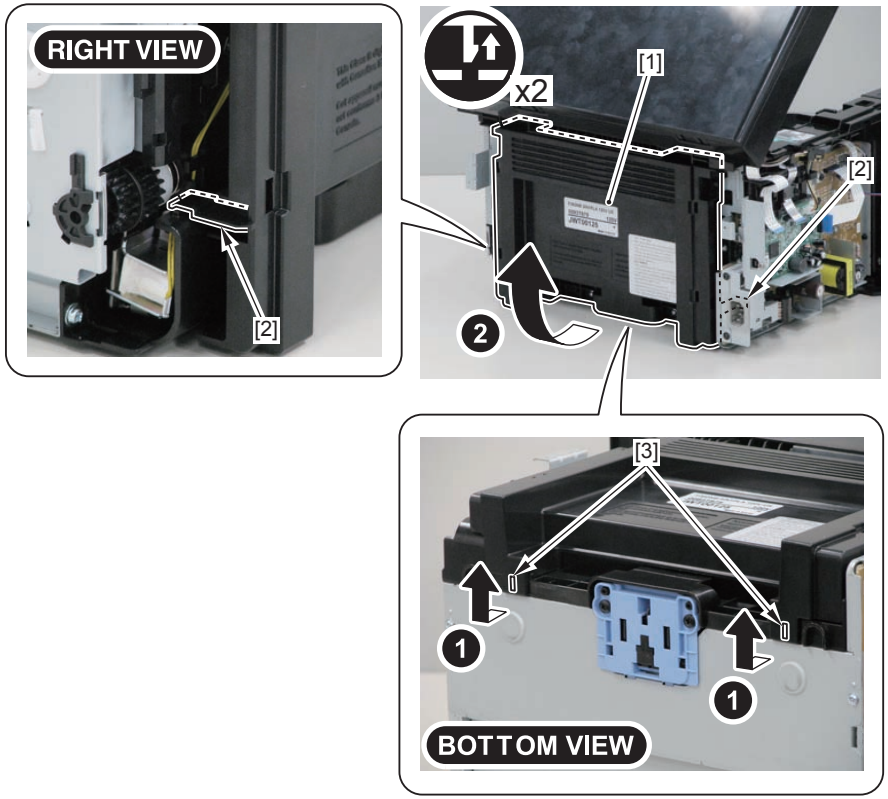

F-4-32

TONER
www.tonerplus.com.ua

Original Exposure System

Layout Drawing

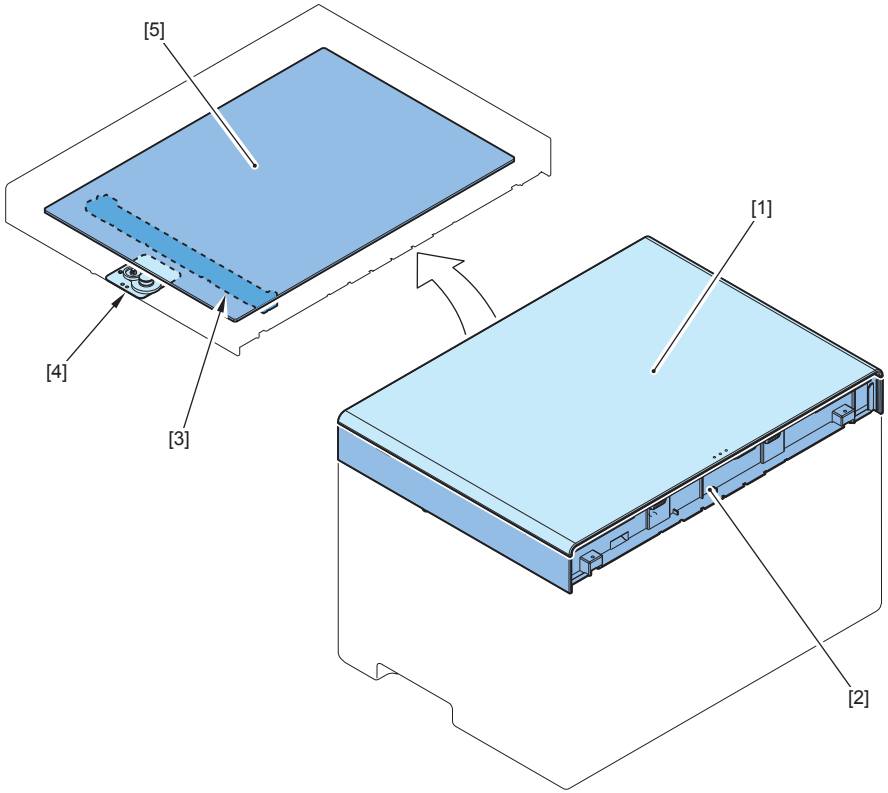

F-4-33

No.	Name	Main Unit	Reference	Adjastment during parts replacement	Remarks
[1]	Copyboard Cover	Reader Unit	(Refer to page 4-19)	-	-
[2]	Reader Unit	Main Unit	(Refer to page 4-20)	-	-
[3]	CIS Unit	Reader Unit	(Refer to page 4-26)	-	CIS
[4]	Reader Motor	Reader Unit	(Refer to page 4-23)	-	M3
[5]	Copyboard Glass	Reader Unit	(Refer to page 4-19)	-	-

T-4-17

Removing the Copyboard Cover.

1) Remove the Copyboard Cover [1].

- 4 Shafts [2]

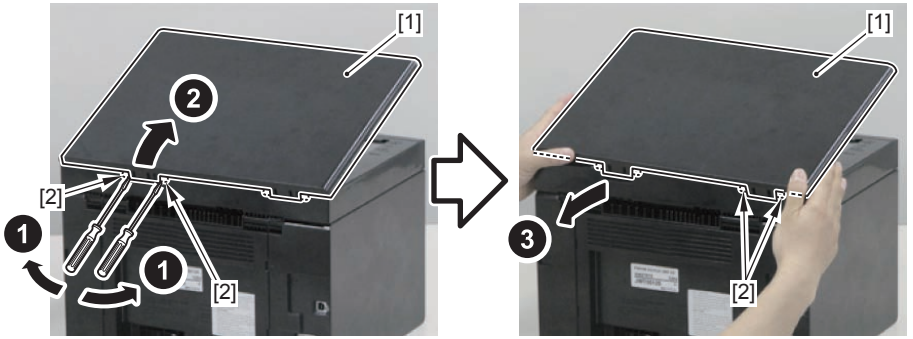

F-4-34

Removing the Reader Unit

Preparation

1) Remove the Left Cover.(Refer to page 4-13)

Procedure

1) Remove the Grounding Wire [1].
- 1 Screw (black TP) [2]

2) Disconnect the connector [3] and the 2 Flat Cables [4].
- 1 Ferrite Core [5]

3) Remove the removed Grounding Wire [1], harness [3], and 2 Flat Cables [4] from the Harness Guide [A].

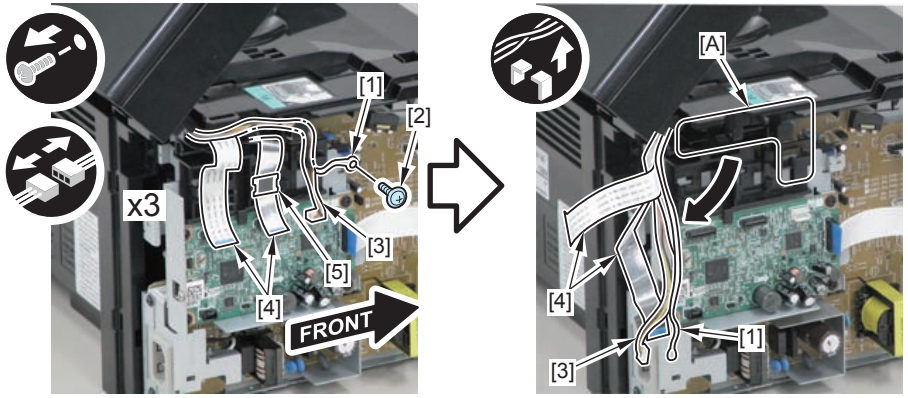

F-4-35

4) Remove the Arm Shaft [1] of the Reader Unit, and lift the arm [2] of the Reader Unit.

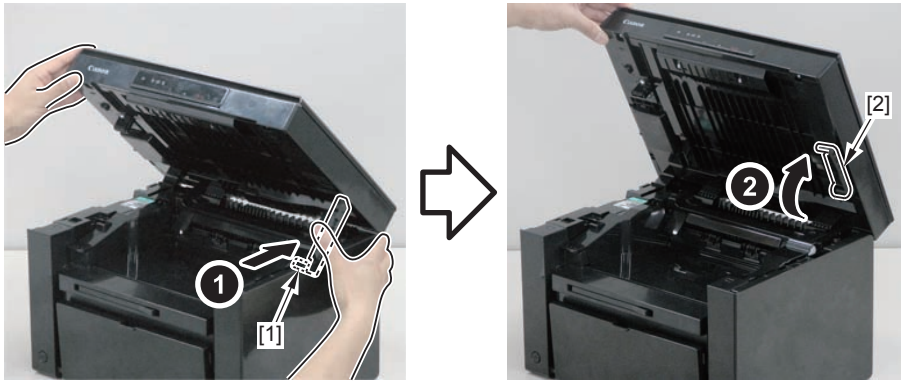

F-4-36

CAUTION:

When installing the arm of the Reader Unit, be sure to insert the Arm Shaft [1] of the Reader Unit into the Arm Shaft Rail Holder [A], and press it in the direction of the arrow.

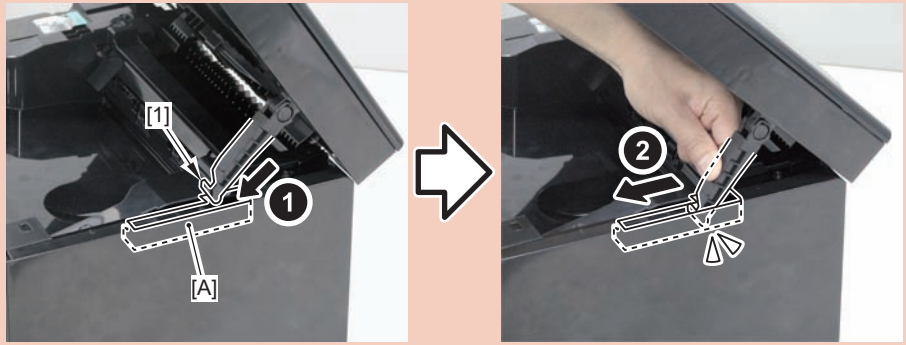

F-4-37

TONER
www.tonerplus.com.ua

5) Remove the Reader Unit [1].

- 2 Shafts [2]

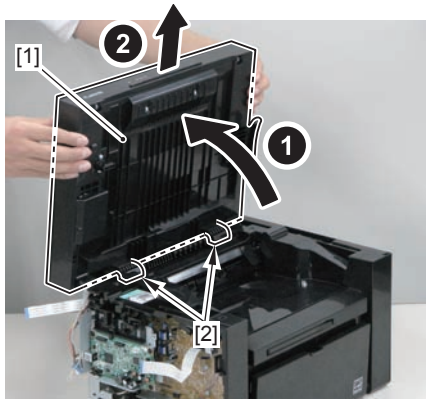

F-4-38

CAUTION:

- When disassembling/assembling the Reader Unit, be careful not to damage the Flat Cables and harnesses with [A] part.
- Be sure to put the Flat Cables and harnesses through the [A] part before installing the Copyboard Cover Unit and Reader Unit when assembling.

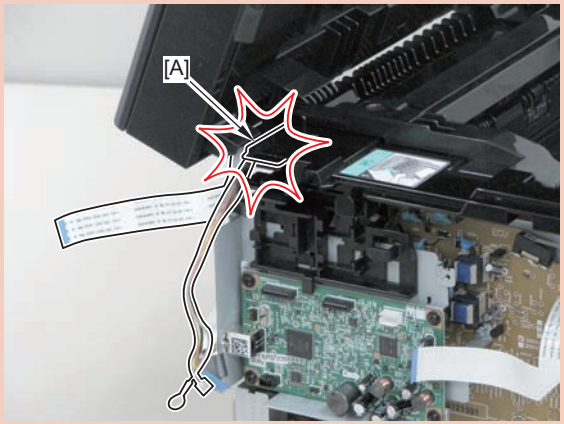

F-4-39

Removing the Copyboard Glass Unit

Preparation

1) Remove the Control Panel Unit.(Refer to page 4-29)

Procedure

CAUTION:

Be sure to place the removed Copyboard Glass Cover on a cloth, etc. to avoid damaging the bottom sheet.

When removing the Copyboard Glass, be careful not to touch the glass surface.

If the surface becomes dirty, clean it with lint free paper.

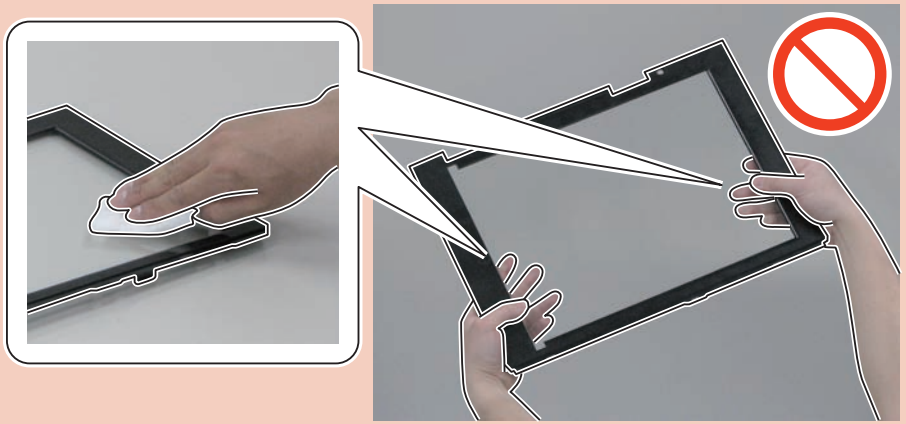

F-4-40

NOTE:
The following shows the 6 claws [3] of the Copyboard Glass Unit.

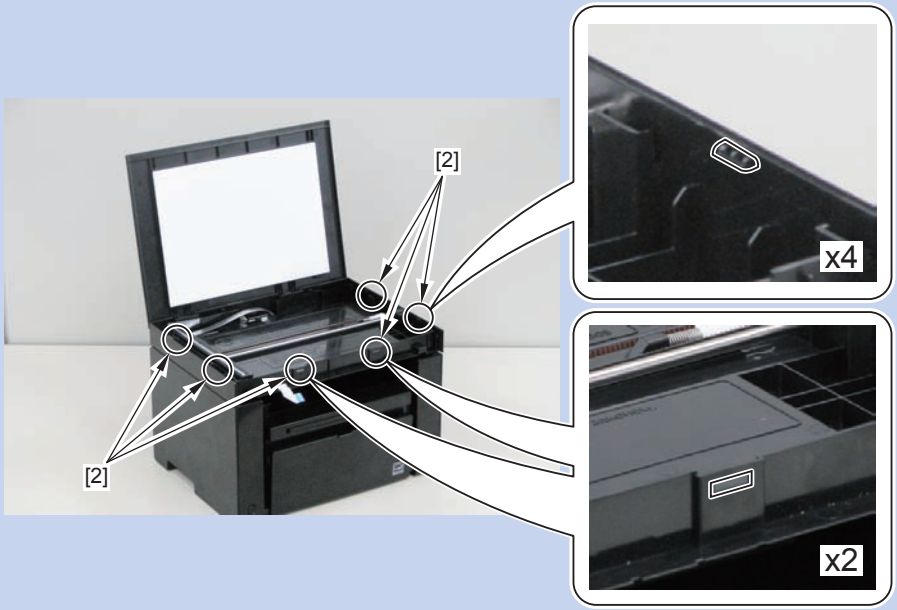

F-4-41

1) Open the Copyboard Cover [1], and remove the 2 screws [2].

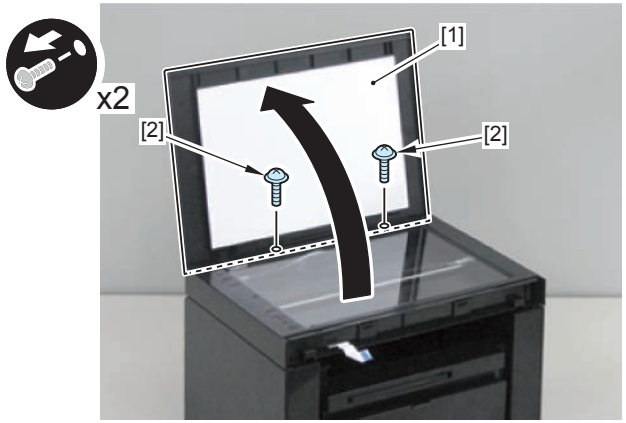

F-4-42

2) Remove the Copyboard Glass Unit [1].

- 6 Claws [2]

CAUTION:

- Be sure not to lose the 2 spacers [1] of the CIS Unit when disassembling/assembling.
- Be sure not to touch the document reading part [A] of the CIS Unit when disassembling/assembling.

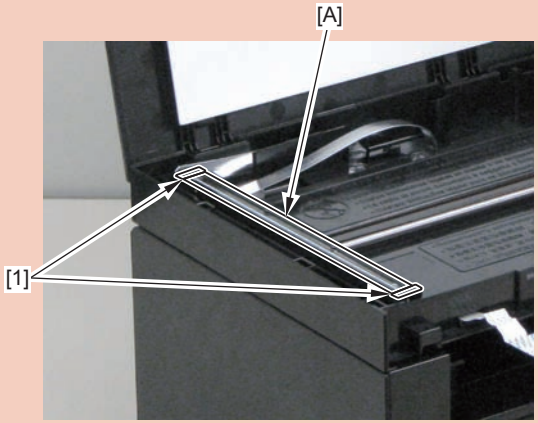

F-4-43

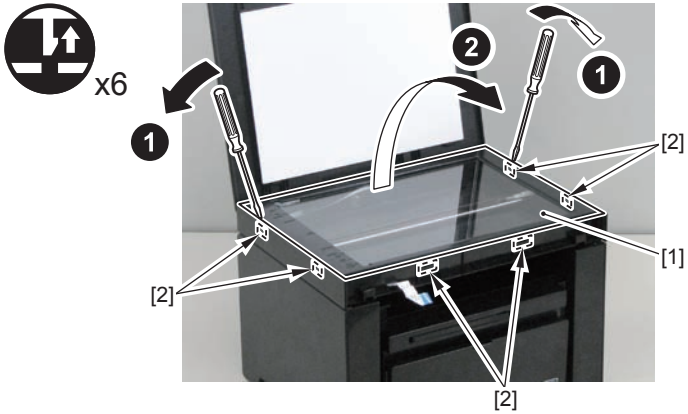

F-4-44

Removing the Reader Motor Unit

Preparation

1) Remove the Left Cover.(Refer to page 4-13)
2) Remove the Reader Unit.(Refer to page 4-20)
3) Remove the Cord Guide Cover [1] at the back side of the Reader Unit.
- 4 Claws [2]
- 1 Hook [3]

x4

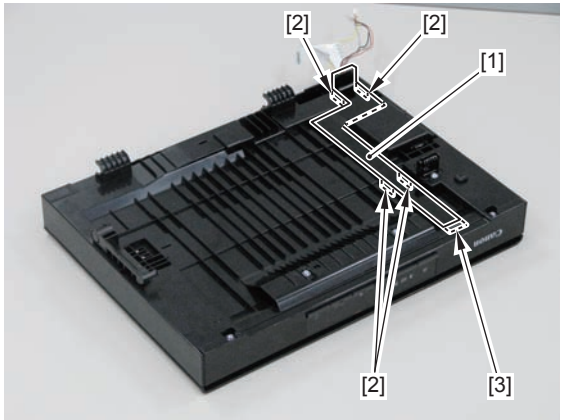

F-4-45

4) Remove the Control Panel Unit.(Refer to page 4-29)
5) Remove the Copyboard Glass Unit.(Refer to page 4-21)

Procedure

CAUTION:

- Be sure not to lose the 2 spacers [1] of the CIS Unit when disassembling/assembling.
- Be sure not to touch the document reading part [A] of the CIS Unit when disassembling/assembling.

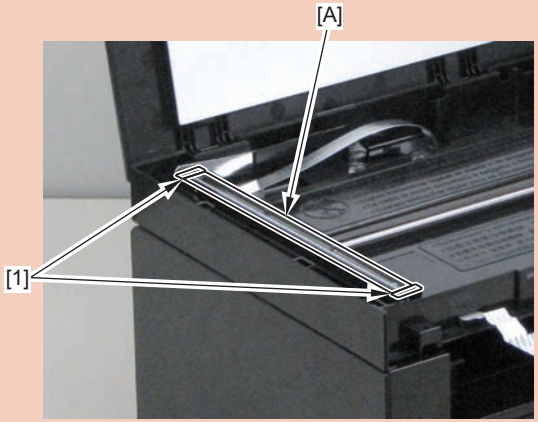

F-4-46

TONER
www.tonerplus.com.ua

CAUTION:

Grease is applied on the shaft [1] of the CIS Unit, so be careful not to let the belt [2] come in contact with the shaft.

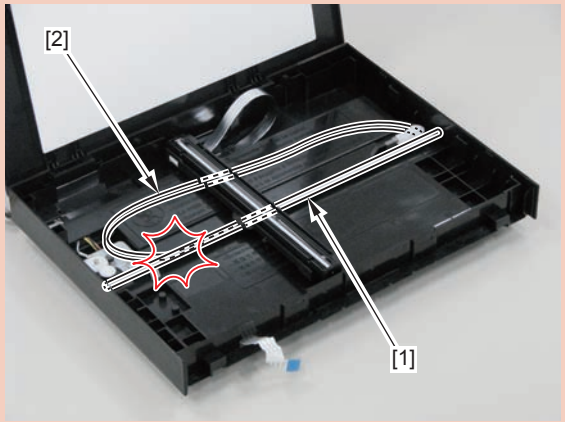

F-4-47

1) Move the CIS Unit [1].

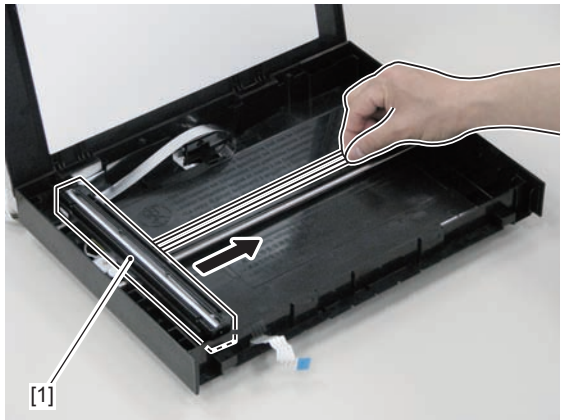

F-4-48

2) Move the gear [1] on the right side, and remove the belt [3] from the gear [2] on the left side.

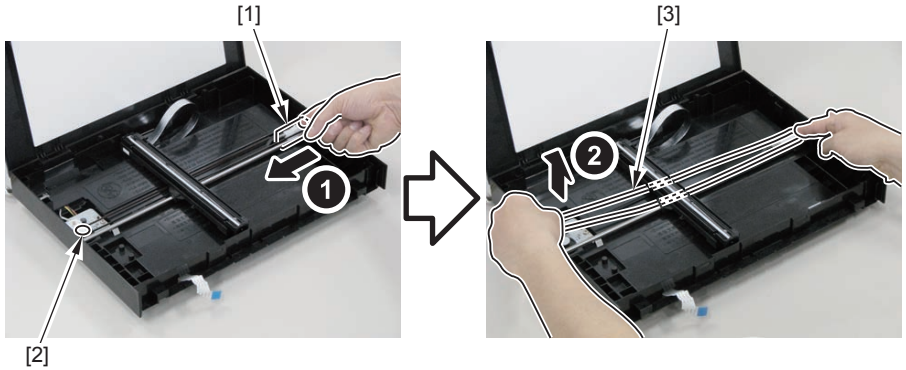

F-4-49

3) Free the harness [1] and the Grounding Wire [2] from the hole [A] of the Reader Unit and the Harness Guide [B].

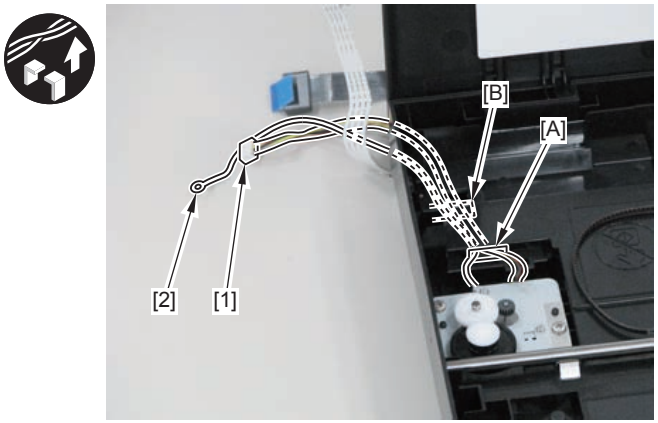

F-4-50

4) Remove the Reader Motor Unit [1].

- 2 Screws [2]
- 1 Grounding Plate [3]

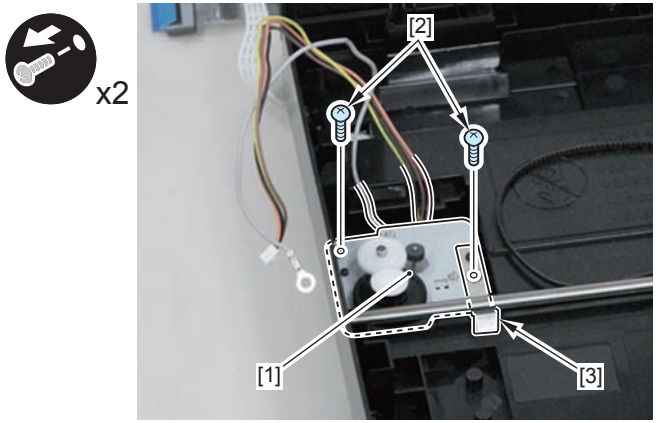

F-4-51

CAUTION:

When installing the Reader Motor Unit, be sure that the Grounding Plate [1] is in contact with the shaft [2] of the CIS Unit.

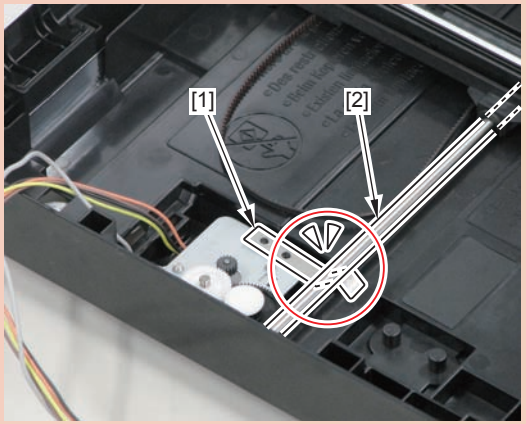

F-4-52

CAUTION:

If the CIS Unit comes off, be sure to align the tooth [1] on the belt with the tooth [2] on the bottom of the CIS Unit to install the unit.

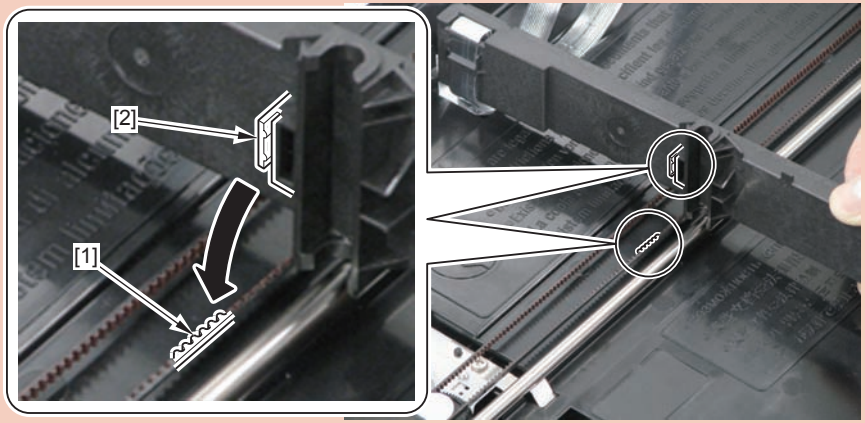

F-4-53

TONER
www.tonerplus.com.ua

Removing the CIS Unit

Preparation

1) Remove the Control Panel Unit.(Refer to page 4-29)
2) Remove the Copyboard Glass Unit.(Refer to page 4-21)

Procedure

CAUTION:

- Be sure not to lose the 2 spacers [1] of the CIS Unit when disassembling/assembling.
- Be sure not to touch the document reading part [A] of the CIS Unit when disassembling/assembling.

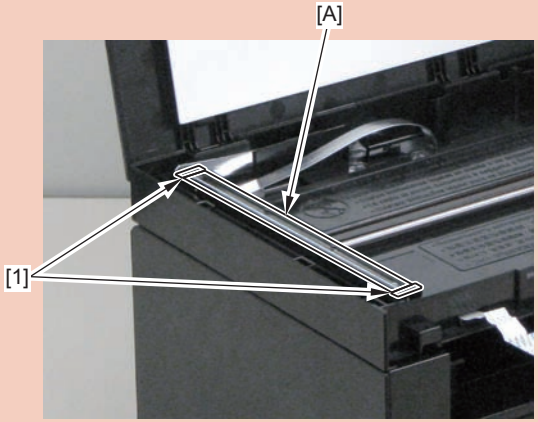

F-4-54

1) Move the CIS Unit [1].

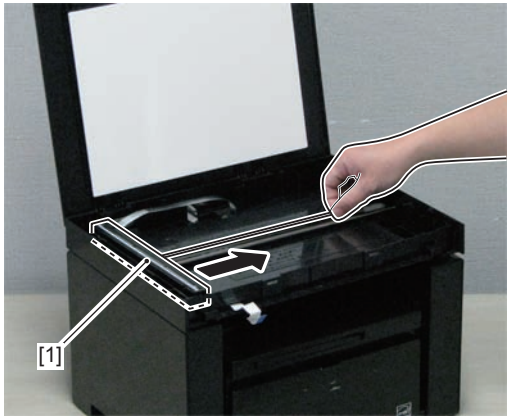

F-4-55

2) Move the Flat Cable [1] to the left side.
- 2 Guides [2]

3) Remove the 2 spacers [3] and the Flat Cable [1].

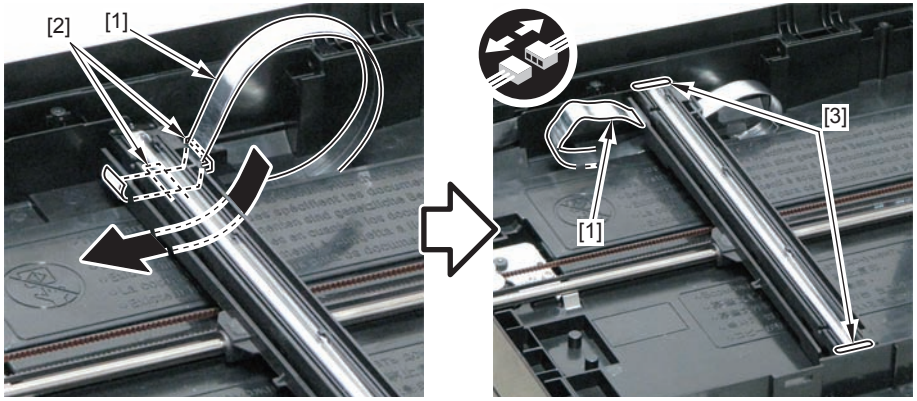

F-4-56

4) Remove the CIS Unit [3].

- 2 Shafts [2]

CAUTION:

When removing the CIS Unit [1], be sure not to lose the 2 springs [2].

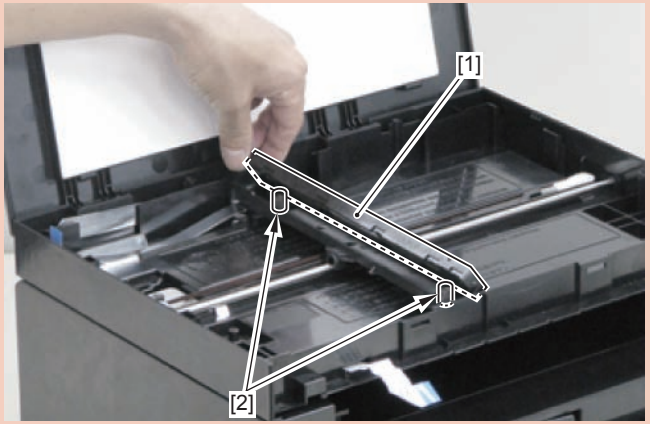

F-4-57

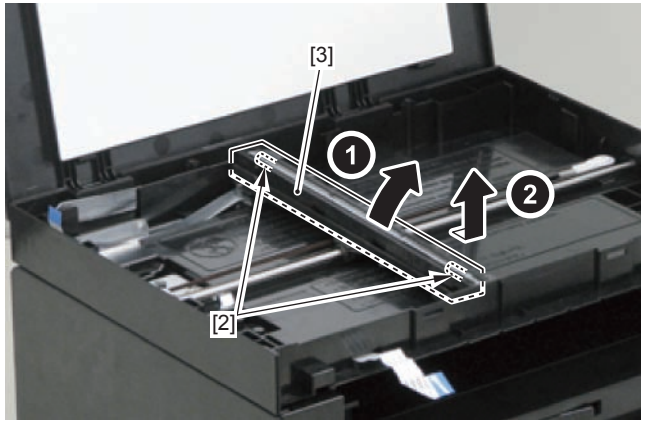

F-4-58

CAUTION:

- At installation, be sure to put the Flat Cable [1] through the hole [A] of the CIS Unit Base and connect the cable to the CIS Unit [2].
- Be sure to hook the Flat Cable [1] on the 2 guides [3].

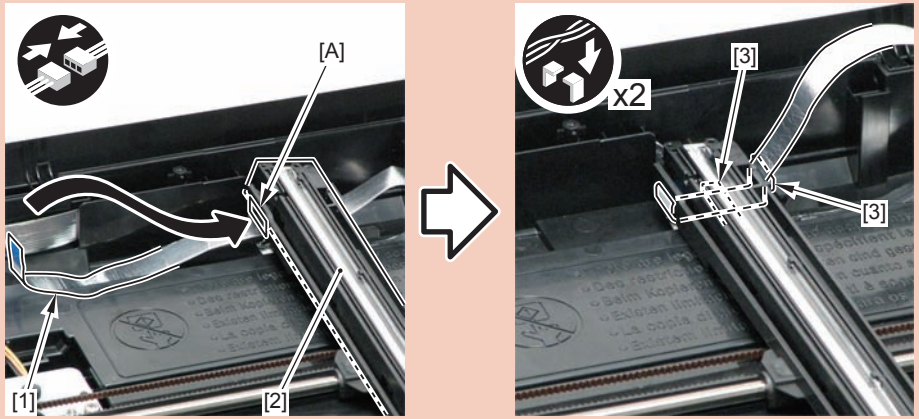

F-4-59

- If the CIS Unit comes off, be sure to align the tooth [1] on the belt with the tooth [2] on the bottom of the CIS Unit to install the unit.

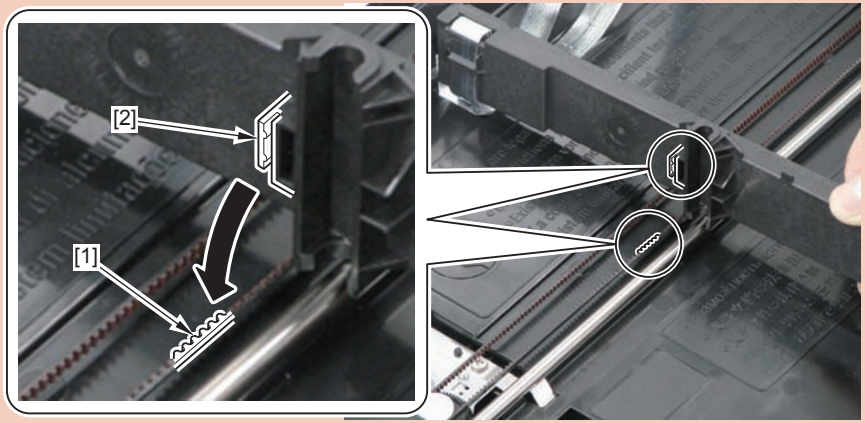

F-4-60

Controller System

Layout Drawing

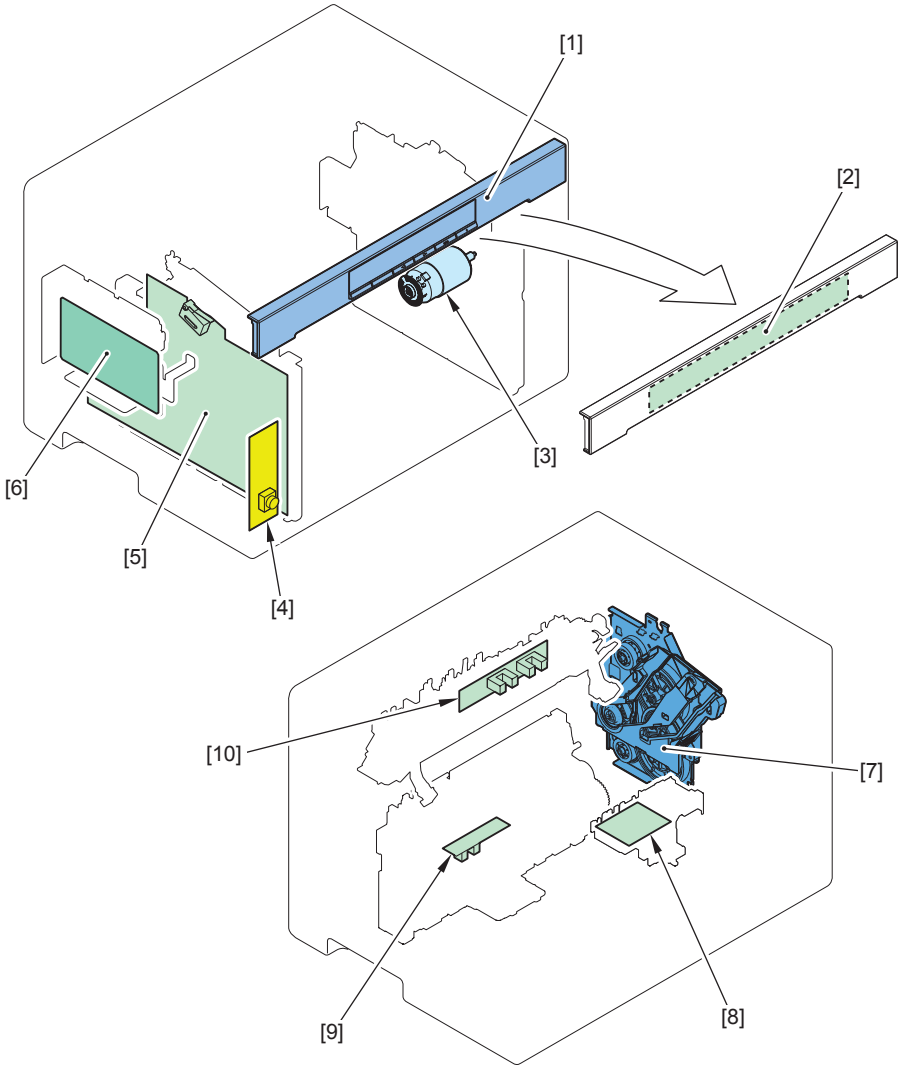

F-4-61

No.	Name	Main Unit	Reference	Adjastment during parts replacement	Remarks
[1]	Control Panel Unit	Main Unit	(Refer to page 4-29)	-	-
[2]	Control Panel PCB	Control Panel Unit	-	-	-
[3]	Main Motor	Main Unit	(Refer to page 4-31)	-	M1
[4]	Power Switch	Main Unit	-	-	SW1100
[5]	Engine Controller PCB	Main Unit	(Refer to page 4-35)	-	SW501
[6]	Main Controller PCB	Main Unit	(Refer to page 4-34)	(Refer to page 8-11)	-
[7]	Main Drive Unit	Main Unit	(Refer to page 4-29)	-	-
[8]	Motor Driver PCB	Main Unit	-	-	PS901
[9]	Paper Leading Edge Sensor PCB	Main Unit	(Refer to page 4-38)	-	PS751
[10]	Fixing Delivery/Paper Width Sensor PCB	Main Unit	(Refer to page 4-40)	-	PS701, PS702

T-4-18

Removing the Control Panel Unit

1) Open the Reader Unit [1], and remove the 2 screws [2].

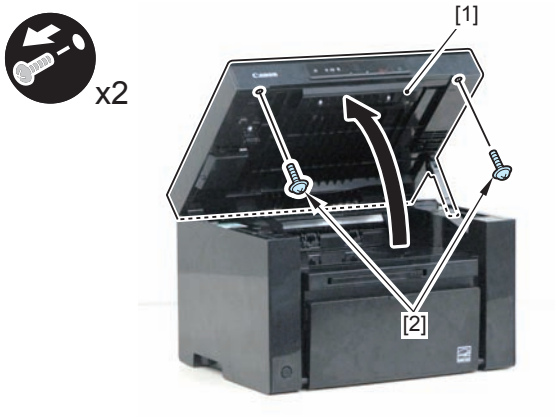

F-4-62

2) Remove the Control Panel Unit [1].
- 3 Claws [2]
- 1 Flat Cable [3]

3) Close the Reader Unit [4].

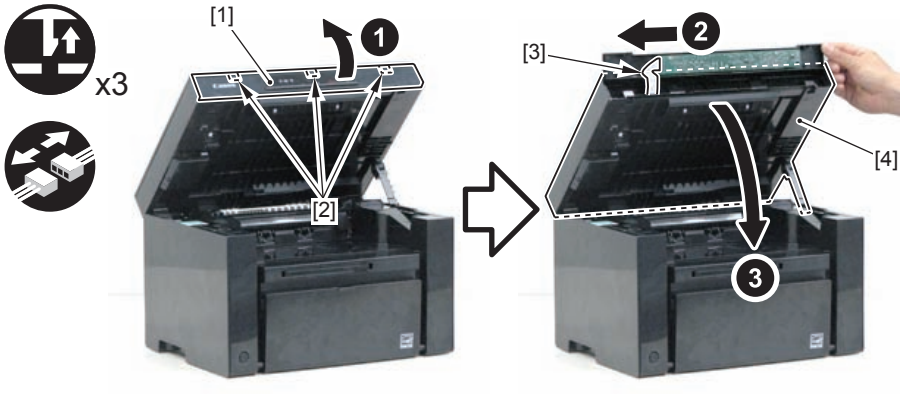

F-4-63

Removing the Drive Belt

Preparation

1) Remove the Right Cover.(Refer to page 4-14)

Procedure

1) Close the Reader Unit [1], and turn the machine so that it is placed with its left side down.

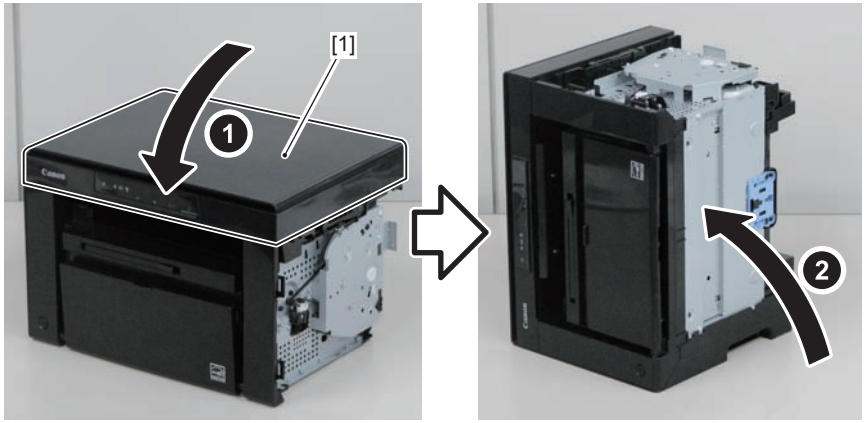

F-4-64

2) Remove the Tension Unit [1].
- 1 Screw [2]

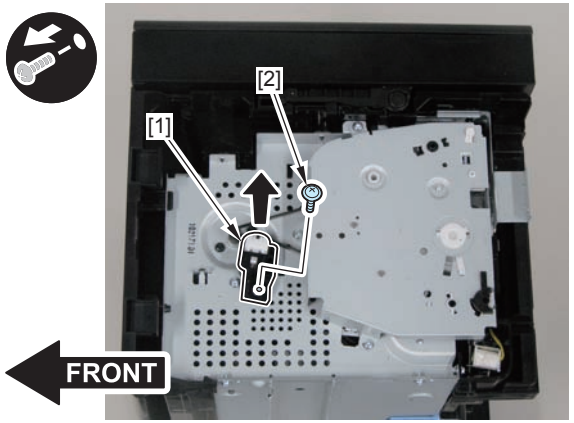

F-4-65

3) Remove the Drive Cover [1].

- 4 Screws [2]

CAUTION:

When removing the Drive Cover [1], be sure to slowly remove it directly upward so as not to shift the phase of the gears.

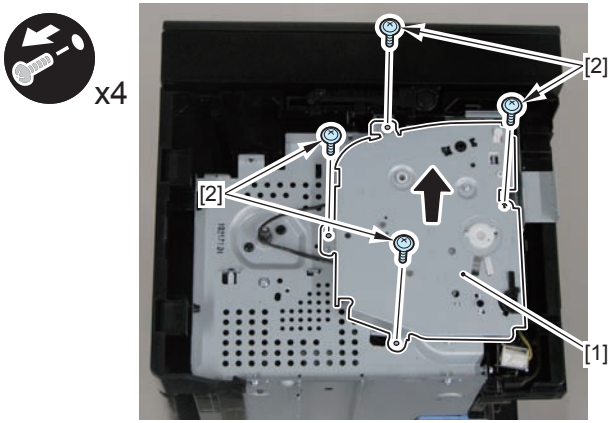

F-4-66

4) Remove the Fixing Transmission Gear [1] and the Cartridge Transmission Gear [2].

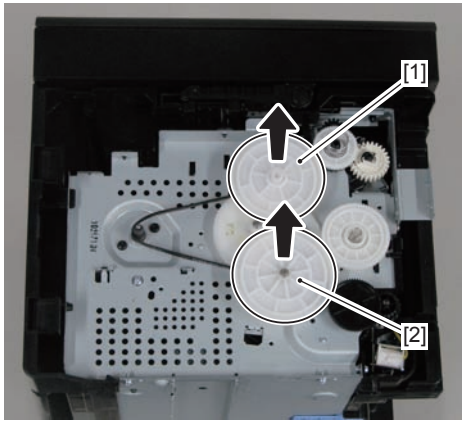

F-4-67

5) Remove the Drive Belt [1].

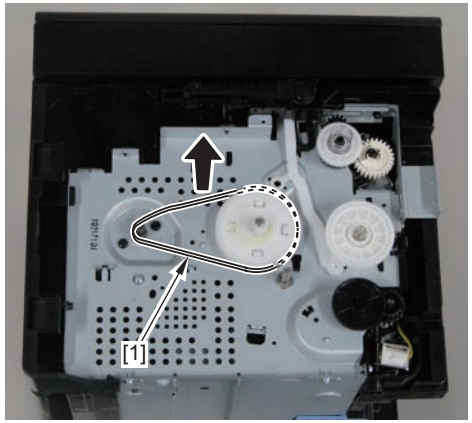

F-4-68

CAUTION:

When assembling the Drive Unit, be sure to follow the order below.

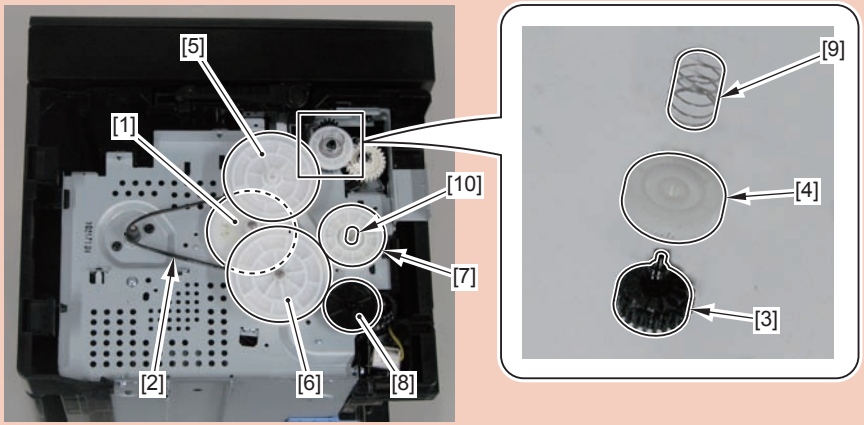

F-4-69

[1] Primary Deceleration Pulley
[2] Timing Belt
[3] Fixing Ratchet Gear 1
[4] Fixing Ratchet Gear 2
[5] Fixing Transmission Gear
[6] Cartridge Transmission Gear
[7] Coupling Gear
[8] Feed Deceleration Gear
[9] Compression Spring
[10] Compression Spring

CAUTION:

When installing the Drive Cover [2], be sure to align the 7 shafts with the shaft holes [1] to fit the cover in place.

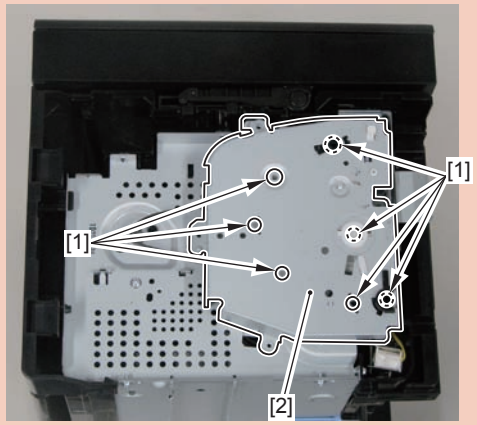

F-4-70

Removing the Main Motor

Preparation

1) Remove the Left Cover.(Refer to page 4-13)
2) Remove the Reader Unit.(Refer to page 4-20)
3) Remove the Right Cover.(Refer to page 4-14)
4) Remove the Front Cover Unit.(Refer to page 4-15)
5) Remove the Upper Cover.(Refer to page 4-15)

Procedure

1) Remove the Scanner Cover [1].
- 2 Screws (black TP) [2]

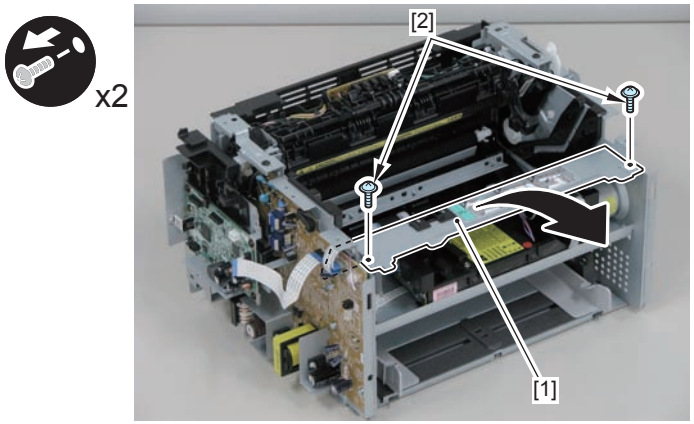

F-4-71

2) Remove the Motor Driver PCB [1].
- 2 Connectors [2]
- 2 Claws [3]

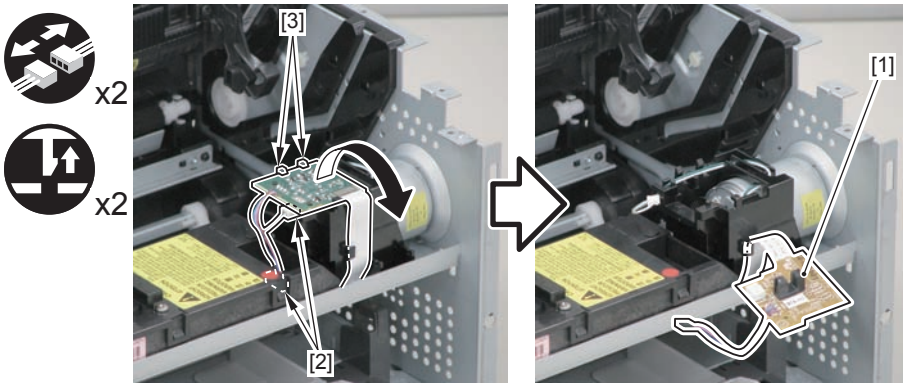

F-4-72

3) Free the Motor Harness [1] from the Harness Guide [A].
4) Remove the Motor Guide [2].
- 1 Screw [3]
- 1 Hook [4]

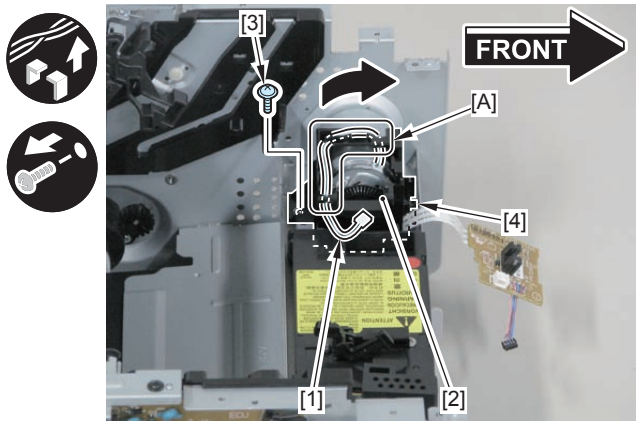

F-4-73

5) Remove the Tension Unit [1].
- 1 Screw [2]

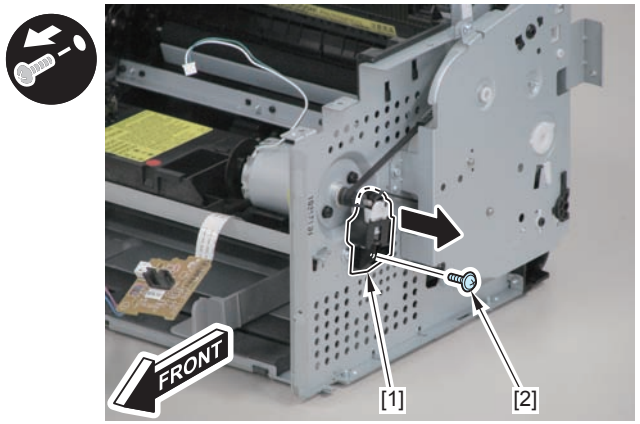

F-4-74

6) Remove the Main Motor [1].
- 2 Screws (with washer) [2]

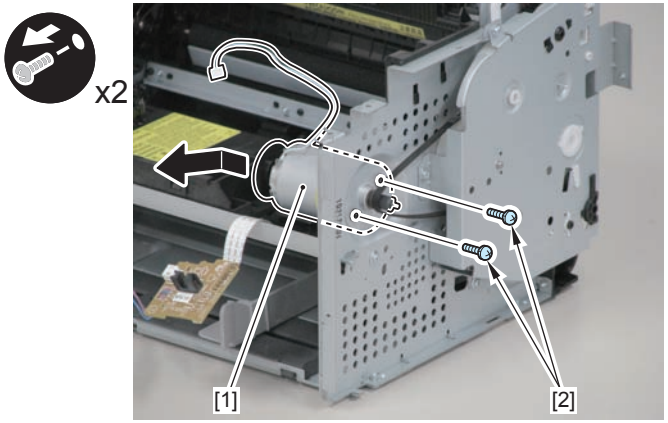

F-4-75

CAUTION:

When installing the Main Motor, be sure to install the harness [1] to the upper side of the motor.

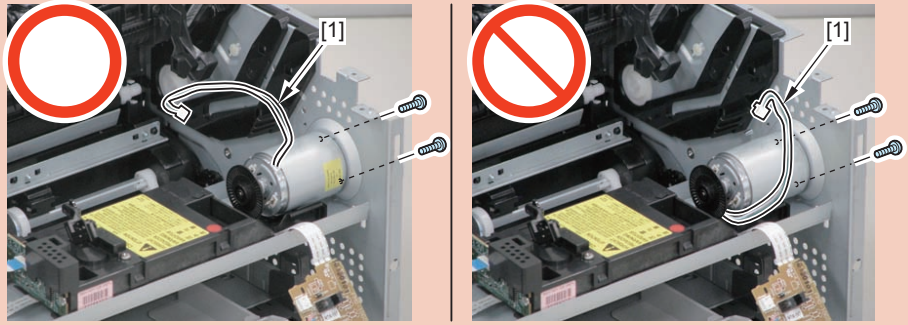

F-4-76

CAUTION:

- When installing the Scanner Cover, be sure to pass the Shutter Open/Close Lever [1] through the hole [A] in the Scanner Cover.

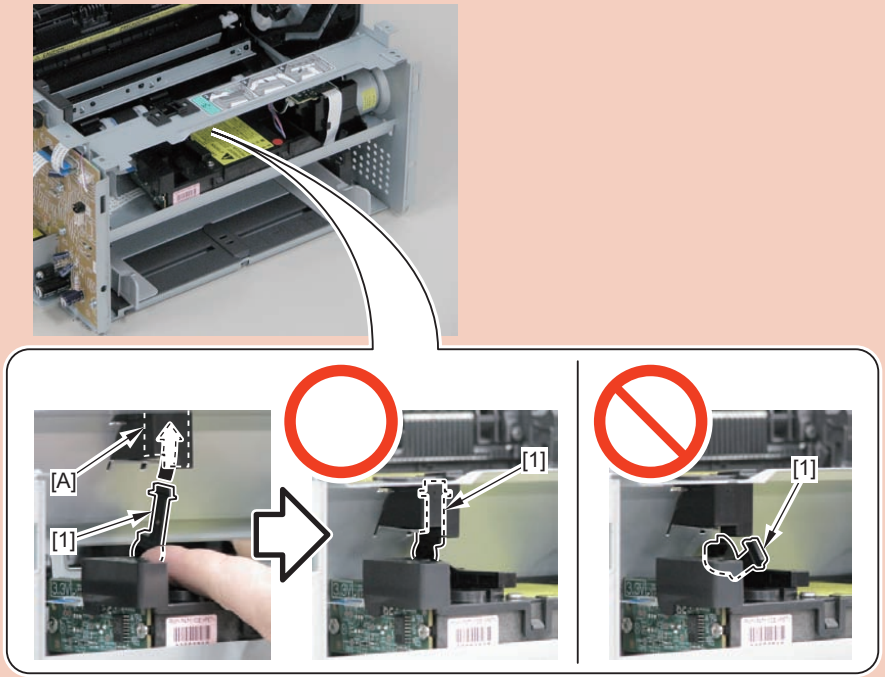

F-4-77

- Be sure that the Shutter Open/Close Lever [1] can move vertically.

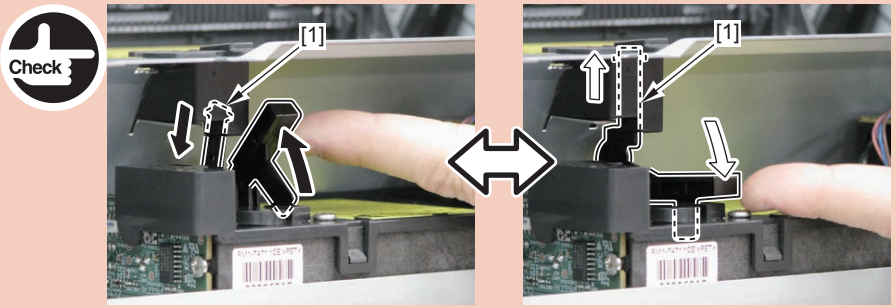

F-4-78

Removing the Main Controller PCB

Preparation

1) Remove the Left Cover.(Refer to page 4-13)

Procedure

1) Disconnect the 3 Flat Cables [1] and the connector [2].

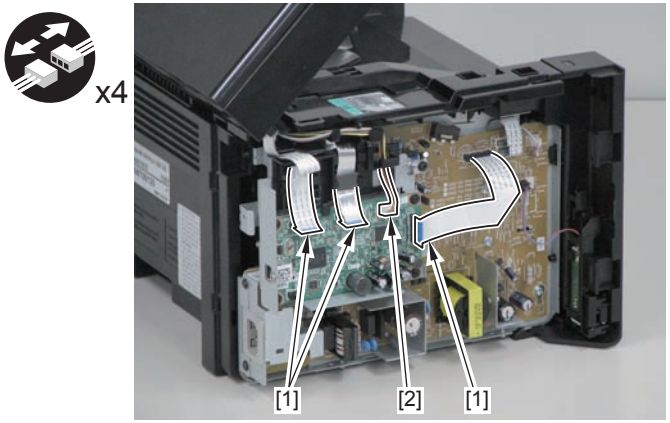

F-4-79

2) Remove the Main Controller PCB [1].

- 1 Screw (Binding) [2]
- 4 Screws (black TP) [3]

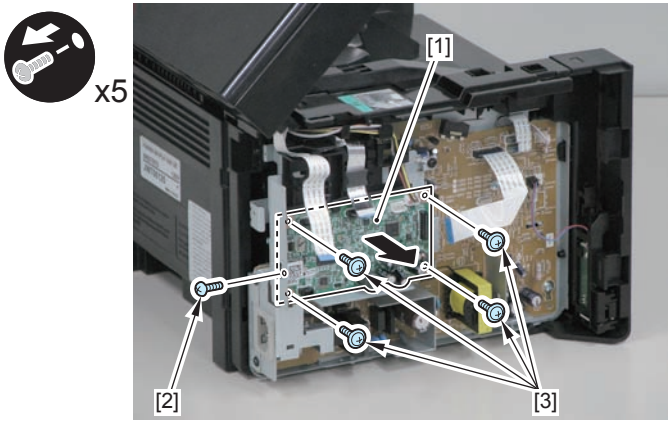

F-4-80

After Replacing the Main Controller PCB

After replacing the PCB, be sure to execute "Country Code" of the country selection mode (COPIER>TYPE) using the USB Service Mode Tool.
(For details, Refer to page 8-11.)

TONER
www.tonerplus.com.ua

Removing the Engine Controller PCB

Preparation

1) Remove the Left Cover.(Refer to page 4-13)
2) Remove the Right Cover.(Refer to page 4-14)
3) Remove the Rear Cover.(Refer to page 4-17)
4) Remove the Main Controller PCB.(Refer to page 4-34)

Procedure

1) Remove the Grounding Wire [1].
- 1 Screw (black TP) [2]

2) Remove the Ferrite Core [3], and remove the harness [4], the Grounding Wire [1] and the 2 Flat Cables [5] from the Harness Guide [A].

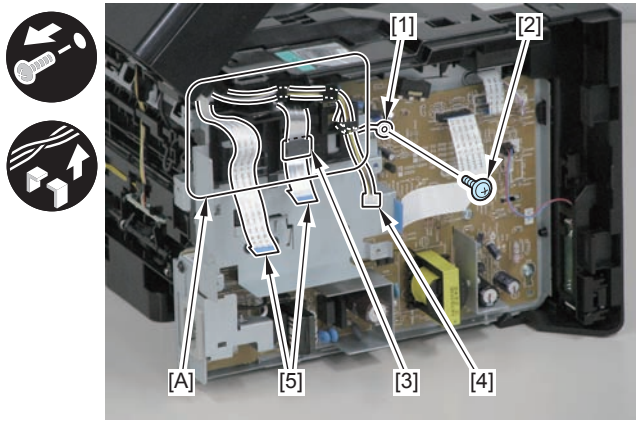

F-4-81

3) Remove the Main Controller PCB Installation Plate [1].
- 1 Screw (with washer) [2]
- 2 Screws (black TP) [3]
- 1 Hook [4]

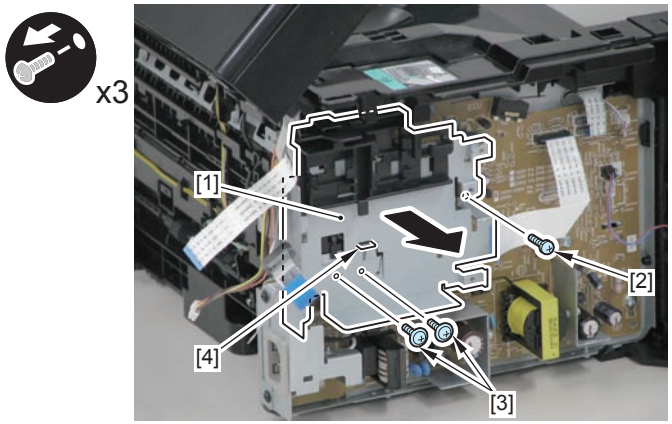

F-4-82

4) Remove the terminal [1], and free the harness [2] from the Harness Guide [A].
5) Remove the Harness Retaining Spring [3] from the 2 hooks [B].

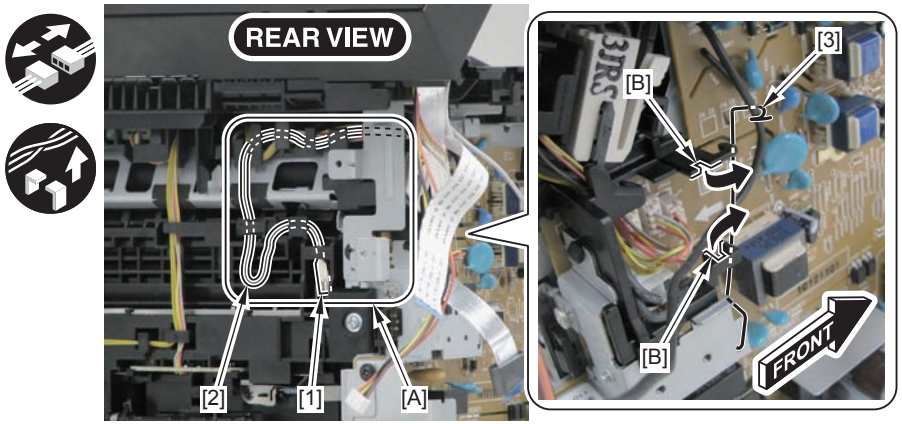

F-4-83

6) Disconnect the 3 Flat Cables [1] and 6 connectors [2], and free the harness from the guide [A].

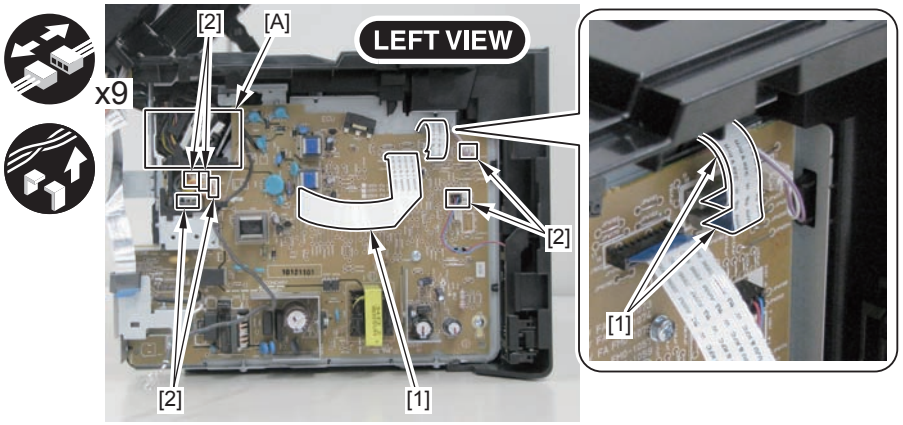

F-4-84

NOTE:
The following shows the routing of the removed Flat Cable [1].

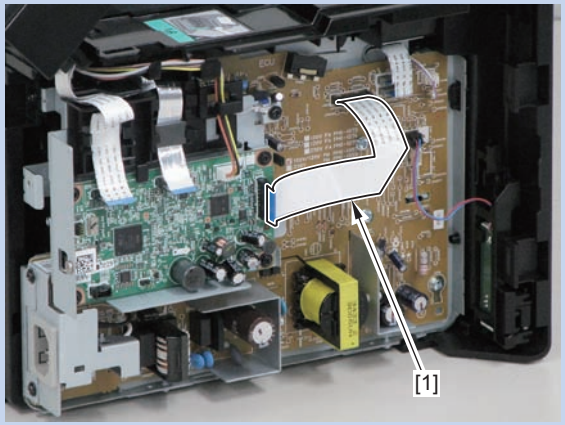

F-4-85

7) Remove the Engine Controller PCB [1].

- 4 Screws (with washer) [2]
- 1 Screw (with toothed lock washer) [3]
- 2 Screws (black TP) [4]
- 2 Hooks [5]

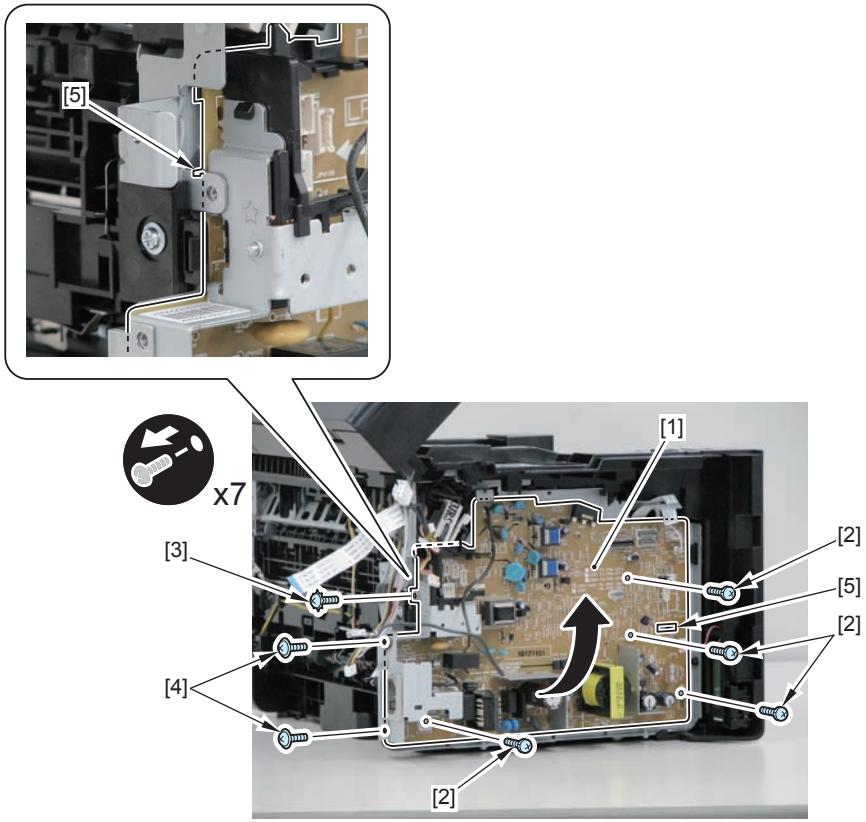

F-4-86

CAUTION:

When installing, be sure to install the Engine Controller PCB before installing the Switchboard [2] to the lower side of the Switch Flag [1].

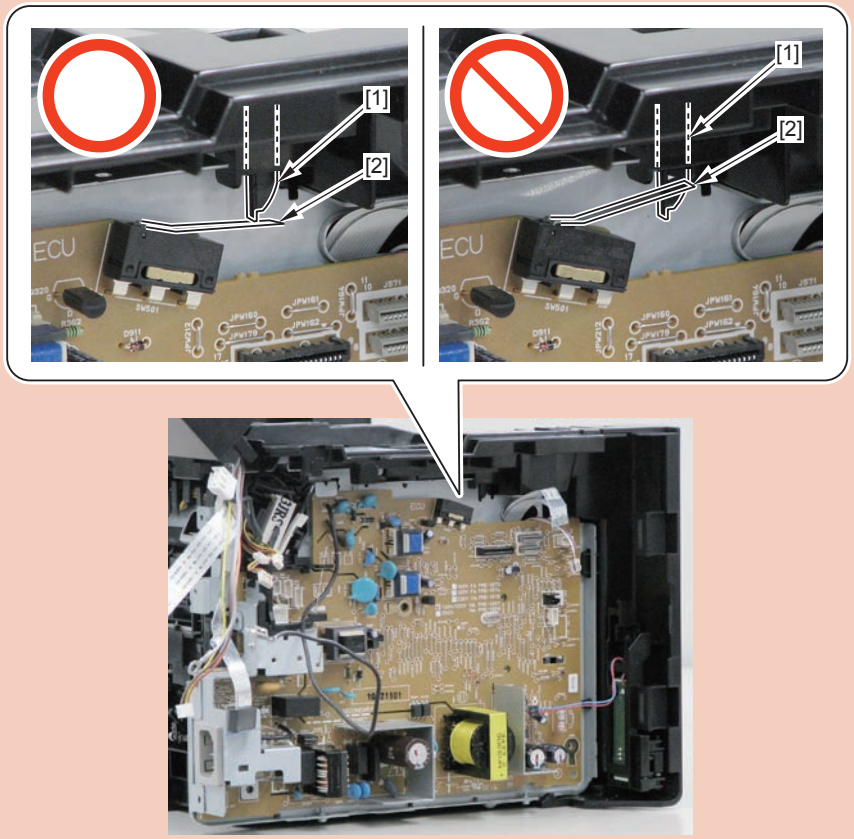

F-4-87

CAUTION:

Be sure that the Switchboard [1] moves upward and downward.

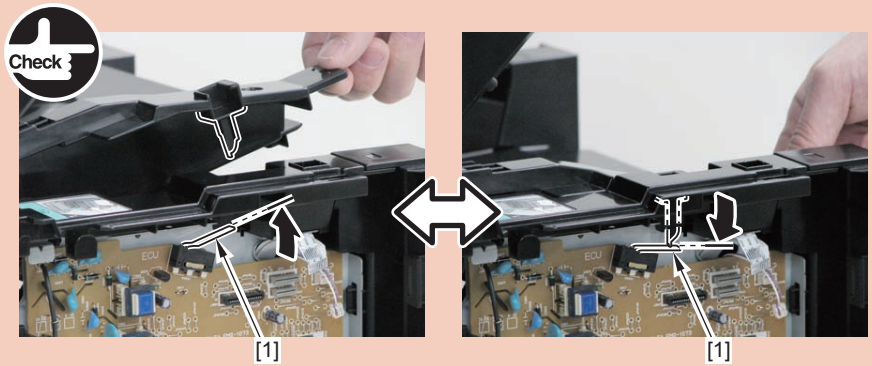

F-4-88

CAUTION:

When installing the terminal [1], be sure that the Contact Spring [2] is in contact with it.

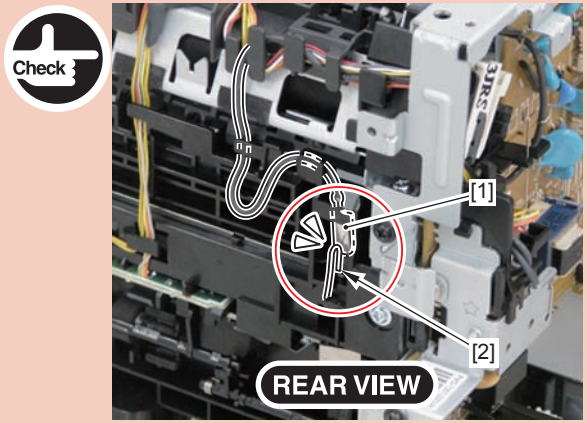

F-4-89

TONER
www.tonerplus.com.ua

Removing the Paper Leading Edge Sensor

Preparation

1) Remove the Left Cover.(Refer to page 4-13)
2) Remove the Reader Unit.(Refer to page 4-20)
3) Remove the Right Cover.(Refer to page 4-14)
4) Remove the Front Cover Unit.(Refer to page 4-15)
5) Remove the Upper Cover.(Refer to page 4-15)
6) Remove the Rear Cover.(Refer to page 4-17)
7) Remove the Main Controller PCB.(Refer to page 4-34)

Procedure

1) Remove the Main Controller PCB Installation Plate [1].
- 1 Screw (with washer) [2]
- 2 Screws (black TP) [3]
- 1 Hook [4]

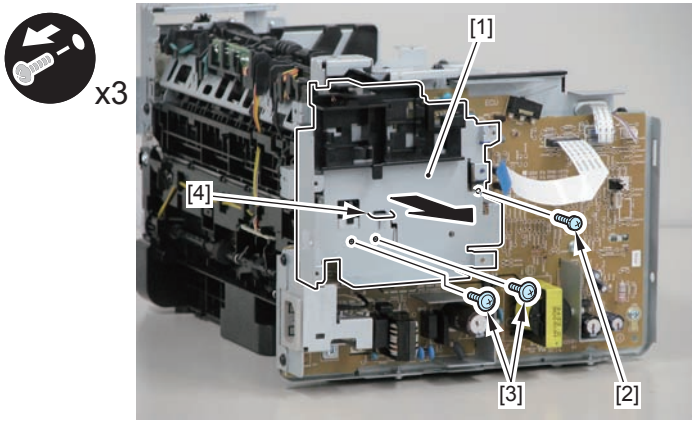

F-4-90

2) Remove the terminal [1], and free the harness [2] from the Harness Guide [A].
3) Remove the Harness Retaining Spring [3] from the 2 hooks [B].

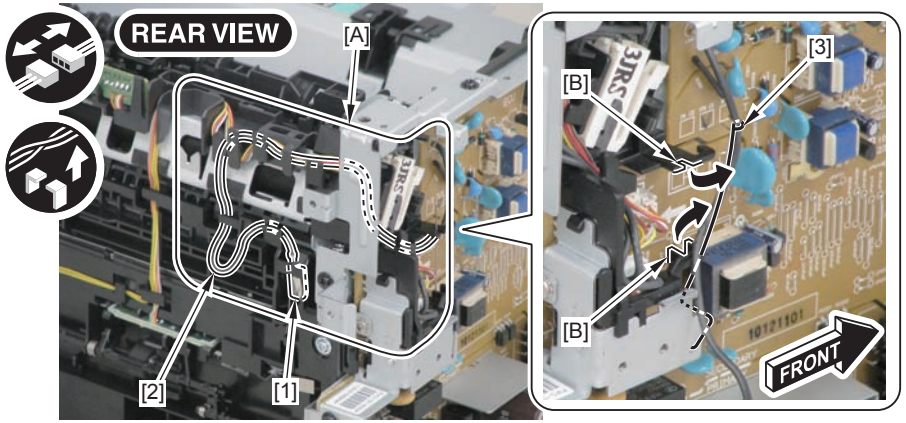

F-4-91

4) Disconnect the 4 connectors [1].

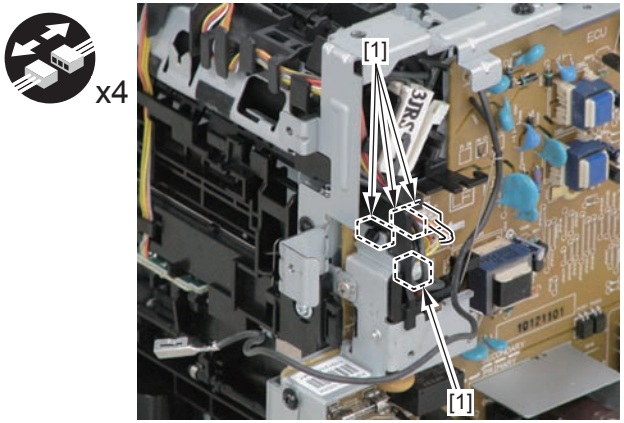

F-4-92

5) Free the harness [1] from the Harness Guide [A], and remove the Paper Leading Edge Sensor [2].

- 2 Claws [3]

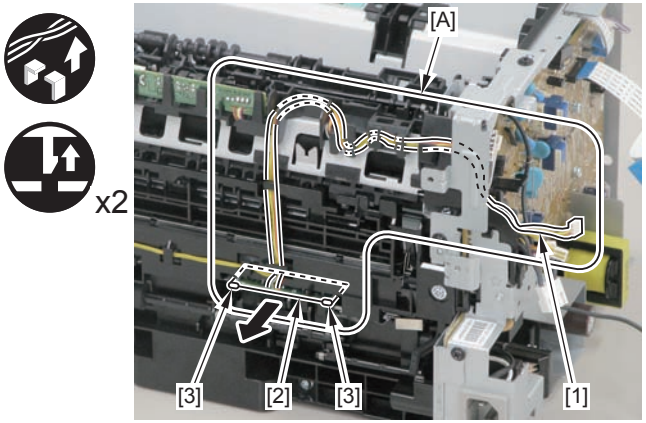

F-4-93

NOTE:
The picture below shows how to route the harness.

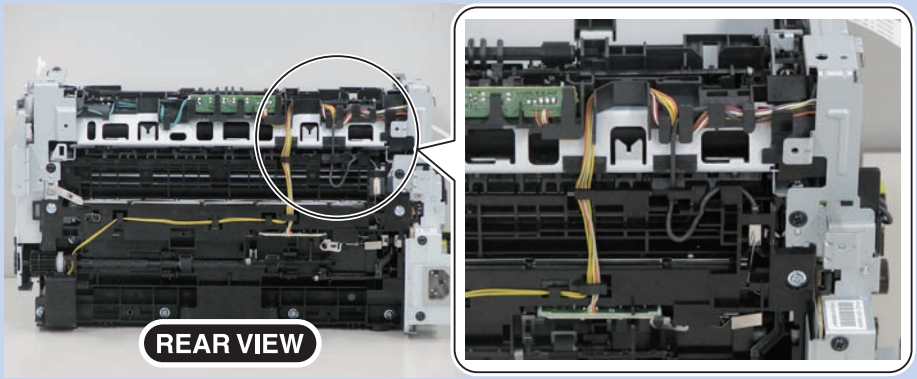

F-4-94

CAUTION:

When installing the terminal [1], be sure that the Contact Spring [2] is in contact with it.

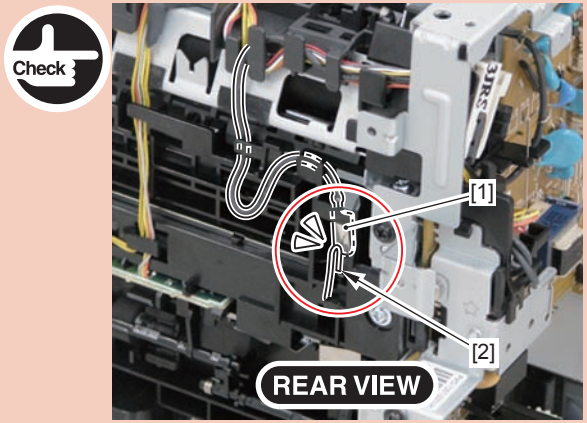

F-4-95

Removing the Fixing Delivery/Paper Width Sensor PCB

Preparation

1) Remove the Left Cover.(Refer to page 4-13)
2) Remove the Reader Unit.(Refer to page 4-20)
3) Remove the Right Cover.(Refer to page 4-14)
4) Remove the Front Cover Unit.(Refer to page 4-15)
5) Remove the Upper Cover.(Refer to page 4-15)
6) Remove the Rear Cover.(Refer to page 4-17)
7) Remove the Main Controller PCB.(Refer to page 4-34)

Procedure

1) Remove the Main Controller PCB Installation Plate [1].
- 1 Screw (with washer) [2]
- 2 Screws (black TP) [3]
- 1 Hook [4]

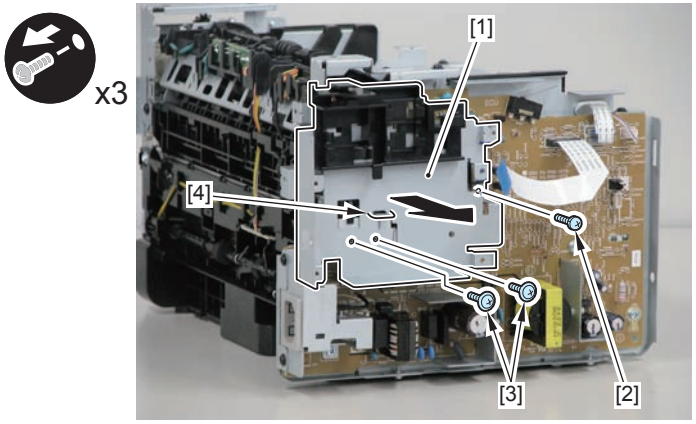

F-4-96

2) Remove the terminal [1], and free the harness [2] from the Harness Guide [A].
3) Remove the Harness Retaining Spring [3] from the 2 hooks [B].

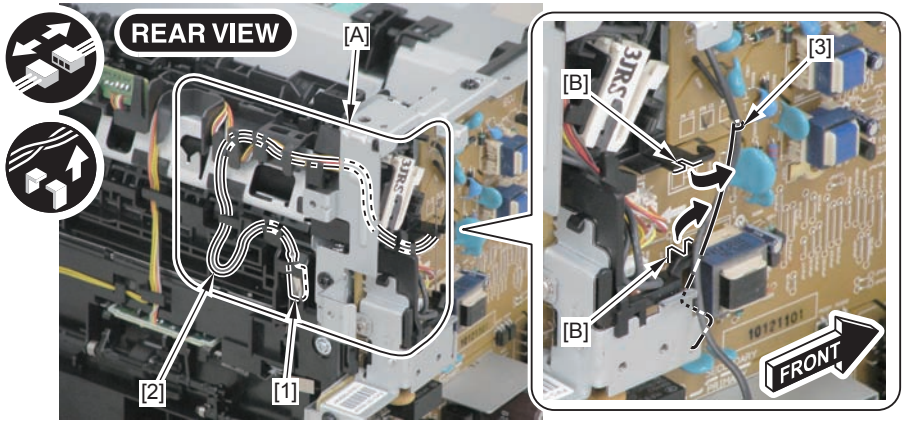

F-4-97

4) Disconnect the 4 connectors [1].

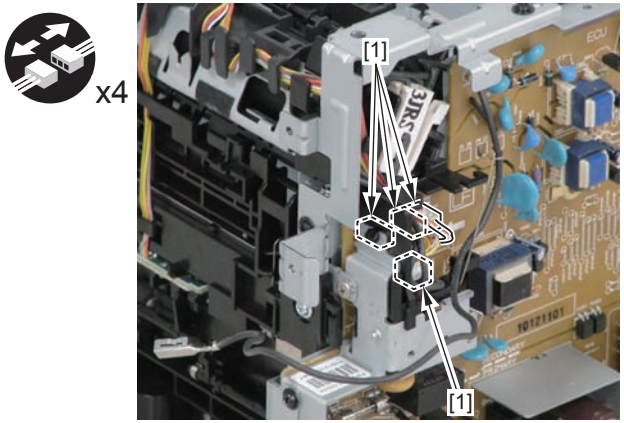

F-4-98

5) Free the harness [1] from the Harness Guide [A], and remove the Fixing Delivery/Paper Width Sensor PCB [2].

- 1 Connector [3]
- 2 Claws [4]

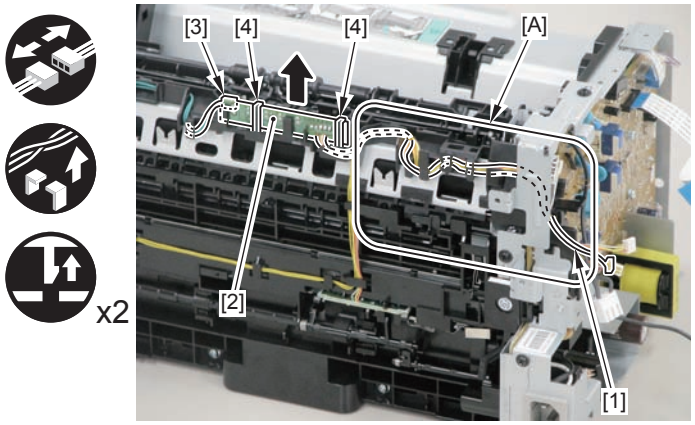

F-4-99

NOTE:
The picture below shows how to route the harness.

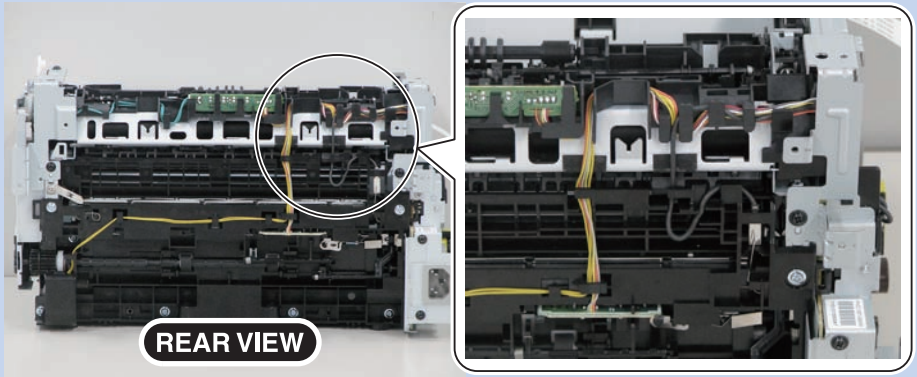

F-4-100

CAUTION:

When installing the terminal [1], be sure that the Contact Spring [2] is in contact with it.

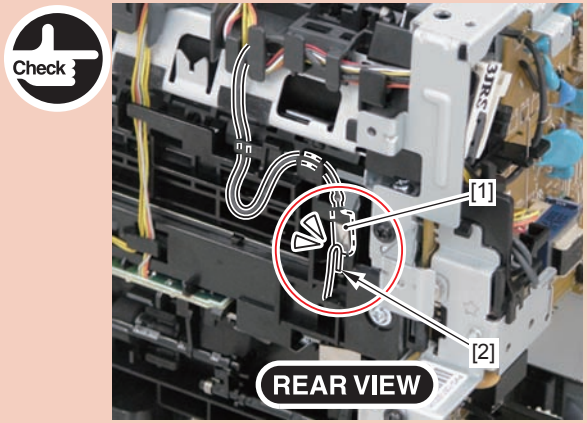

F-4-101

Laser Exposure System

Layout Drawing

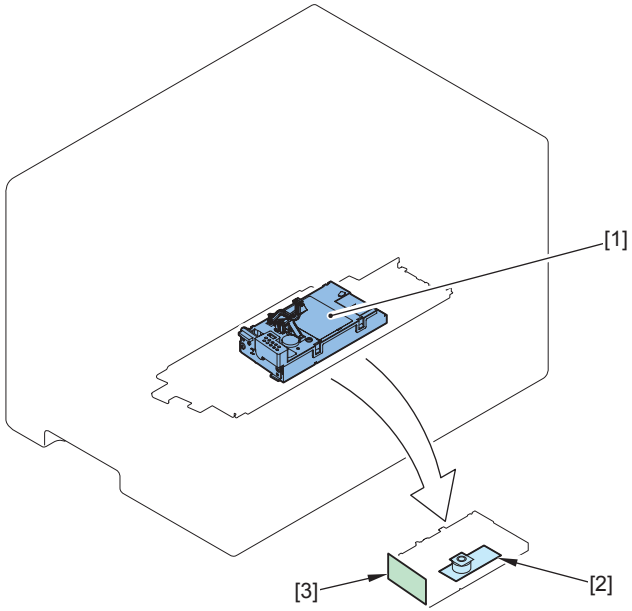

F-4-102

No.	Name	Main Unit	Reference	Adjastment during parts replacement	Remarks
[1]	Laser Scanner Unit	Main Unit	(Refer to page 4-42)	-	-
[2]	Laser Scanner Motor	Laser Scanner Unit	-	-	M2
[3]	Laser Driver PCB	Laser Scanner Unit	-	-	-

T-4-19

Removing the Laser Scanner Unit

Preparation

1) Remove the Left Cover.(Refer to page 4-13)
2) Remove the Reader Unit.(Refer to page 4-20)
3) Remove the Right Cover.(Refer to page 4-14)
4) Remove the Front Cover Unit.(Refer to page 4-15)
5) Remove the Upper Cover.(Refer to page 4-15)

Procedure

CAUTION:

Be sure not to disassemble the Laser Scanner Unit because adjustment is required.

1) Remove the Scanner Cover [1].
- 2 Screws (black TP) [2]

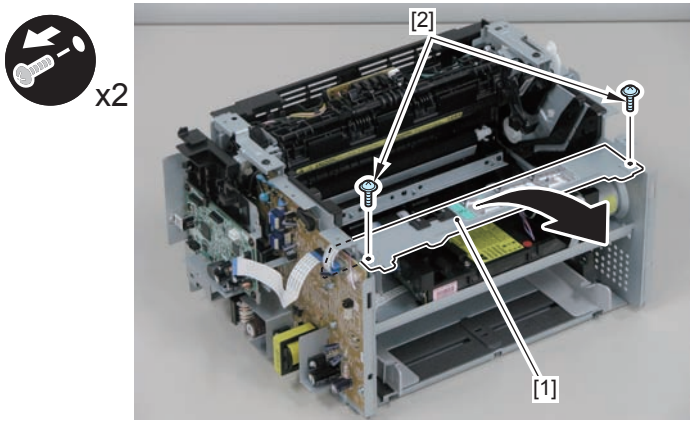

F-4-103

2) Remove the Laser Scanner Unit [1].

- 1 Flat Cable [2]
- 1 Connector [3]
- 4 Screws [4]

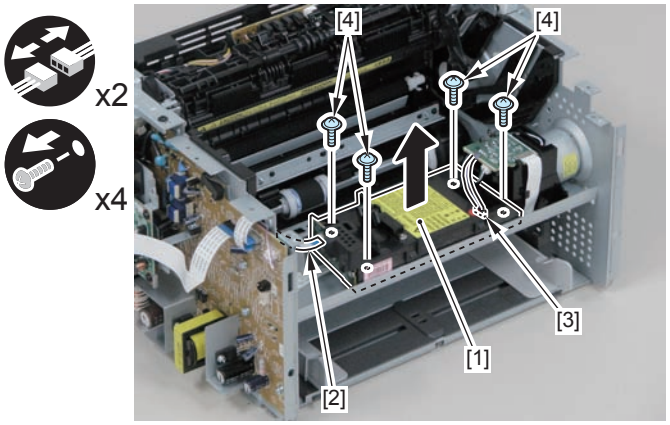

F-4-104

CAUTION:

- When installing the Scanner Cover, be sure to pass the Shutter Open/Close Lever [1] through the hole [A] in the Scanner Cover.

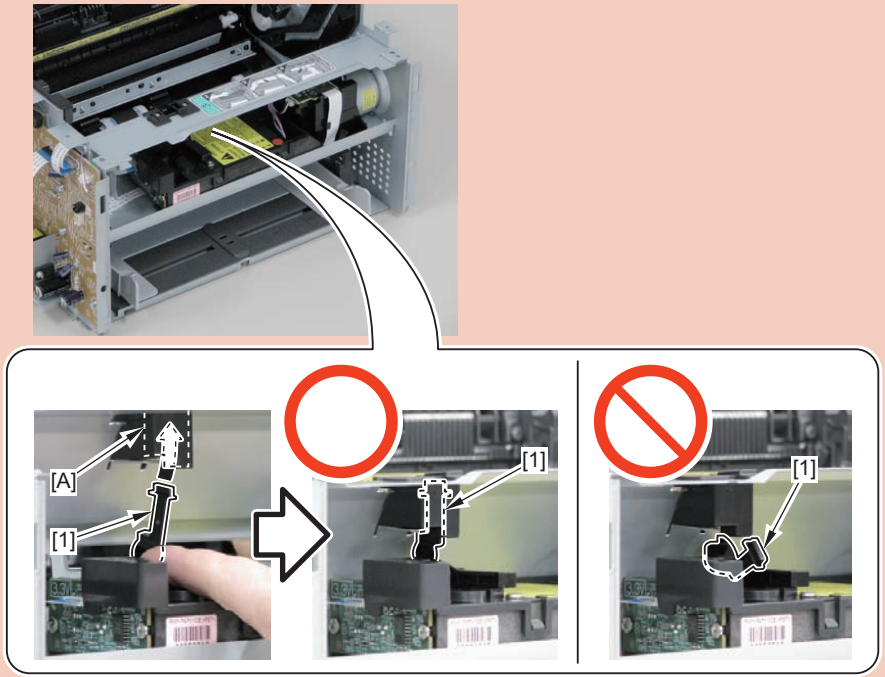

F-4-105

- Be sure that the Shutter Open/Close Lever [1] can move vertically.

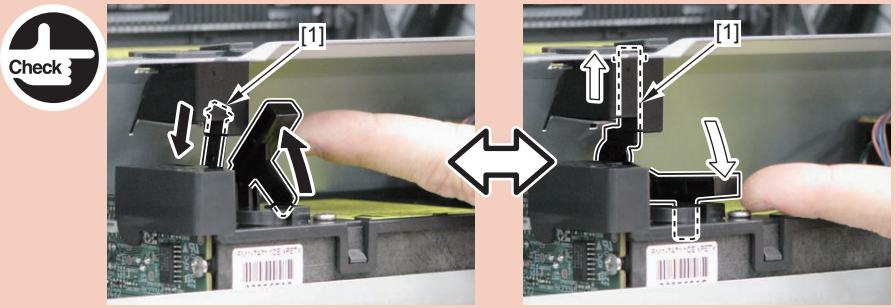

F-4-106

Image Formation System

Layout Drawing

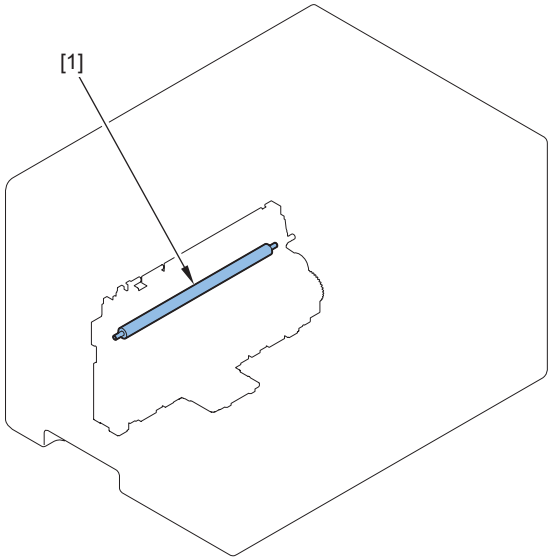

F-4-107

No.	Name	Main Unit	Reference	Adjastment during parts replacement	Remarks
[1]	Transfer Roller	Pickup Unit	(Refer to page 4-44)	-	-

T-4-20

TONER
www.tonerplus.com.ua

Removing the Transfer Roller

CAUTION:

Be sure not to touch the surface of the roller when disassembling/assembling.

1) Open the Reader Unit [1] and Delivery Tray [2].
2) Remove the bushing [3] of the Transfer Roller.
- 2 Claws [4]

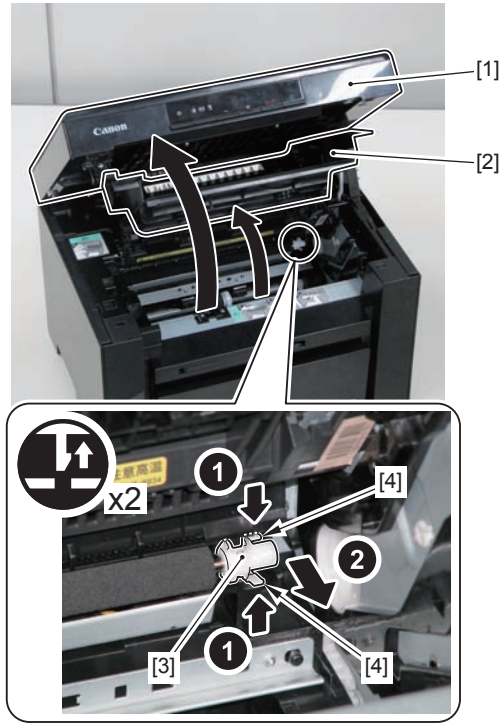

F-4-108

3) Hold the both ends of the shaft [1] of the Transfer Roller, and remove the Transfer Roller [2].

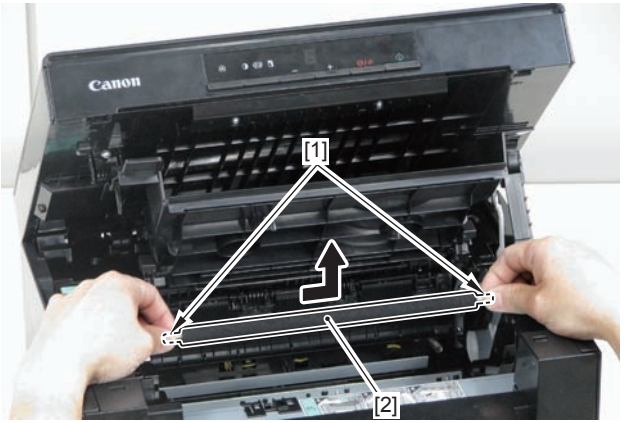

F-4-109

CAUTION:

Be sure that the bushing [1] is in the correct direction when installing it.

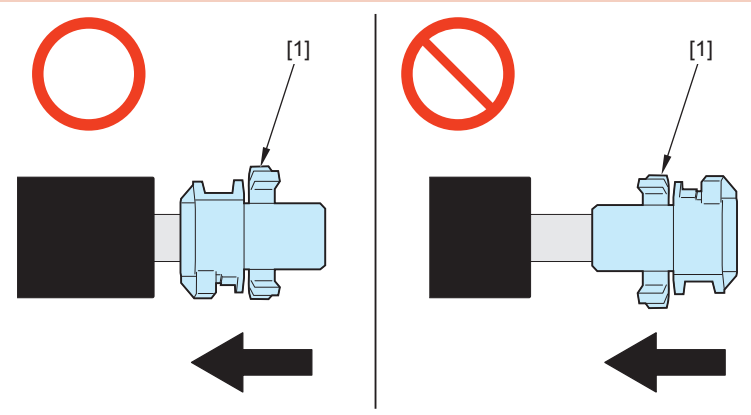

F-4-110

CAUTION:

Be sure to fit the boss [1] of the bushing to the screw [2] when installing.

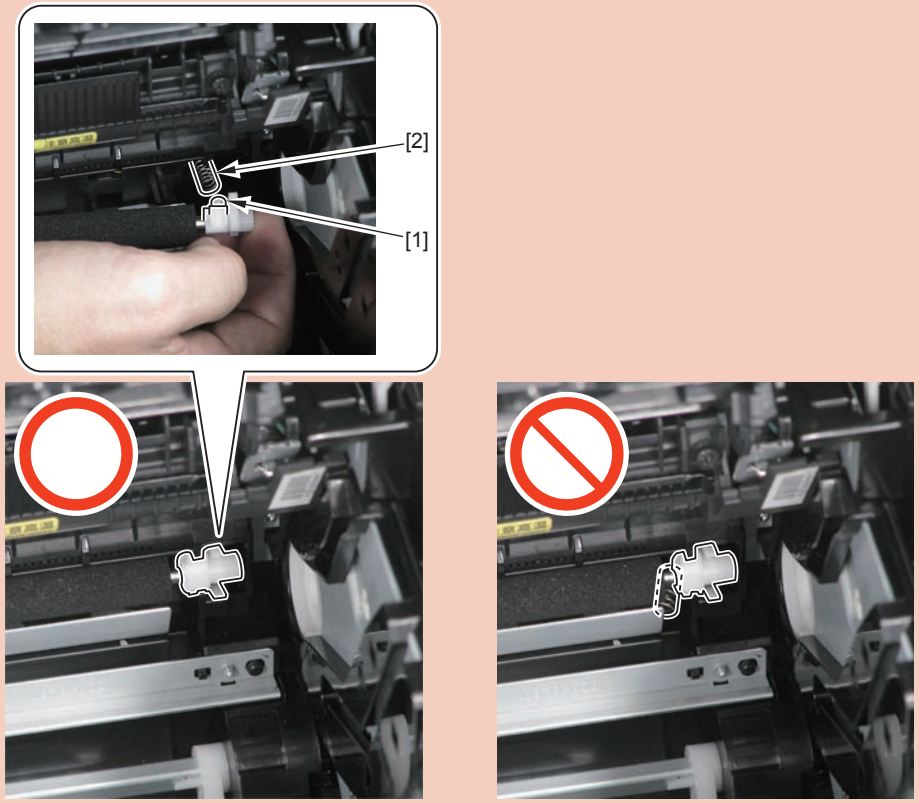

F-4-111

Fixing System

Layout Drawing

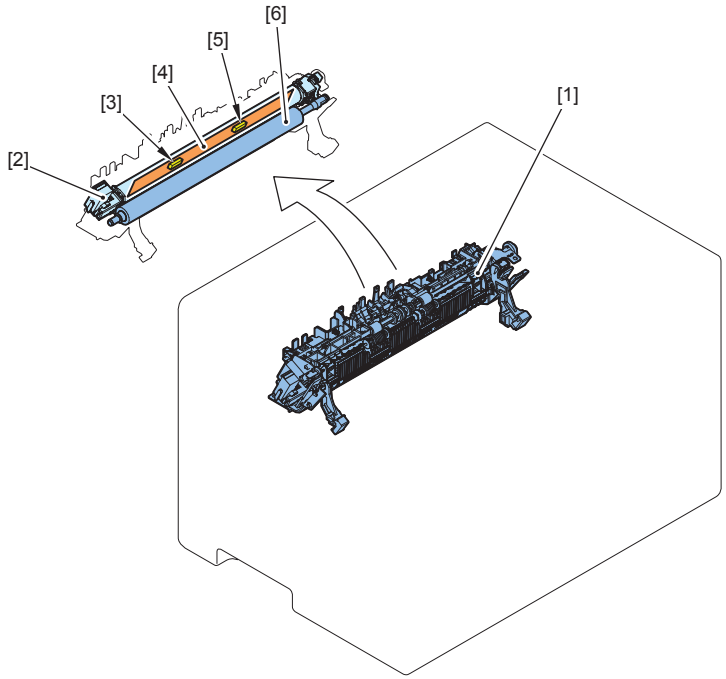

F-4-112

No.	Name	Main Unit	Reference	Adjastment during parts replacement	Remarks
[1]	Fixing Assembly	Main Unit	(Refer to page 4-46)	-	-
[2]	Fixing Film Unit	Fixing Assembly	-	-	-
[3]	Temperature fuse	Fixing Assembly	-	-	TP
[4]	Fixing Heater	Fixing Assembly	-	-	H1
[5]	Thermistor	Fixing Assembly	-	-	TH1
[6]	Fixing Pressure Roller	Fixing Assembly	-	-	-

T-4-21

Removing the Fixing Assembly

Preparation

1) Remove the Left Cover.(Refer to page 4-13)
2) Remove the Reader Unit.(Refer to page 4-20)
3) Remove the Right Cover.(Refer to page 4-14)
4) Remove the Front Cover Unit.(Refer to page 4-15)
5) Remove the Upper Cover.(Refer to page 4-15)
6) Remove the Rear Cover.(Refer to page 4-17)
7) Remove the Main Controller PCB.(Refer to page 4-34)

Procedure

CAUTION:

- Be sure to perform the operation after the Fixing Assembly is surely cooled because the assembly right after printing is hot.
- Do not disassemble the Fixing Assembly in the field because it needs adjustment.

1) Remove the Main Controller PCB Installation Plate [1].
- 1 Screw (with washer) [2]
- 2 Screws (black TP) [3]
- 1 Hook [4]

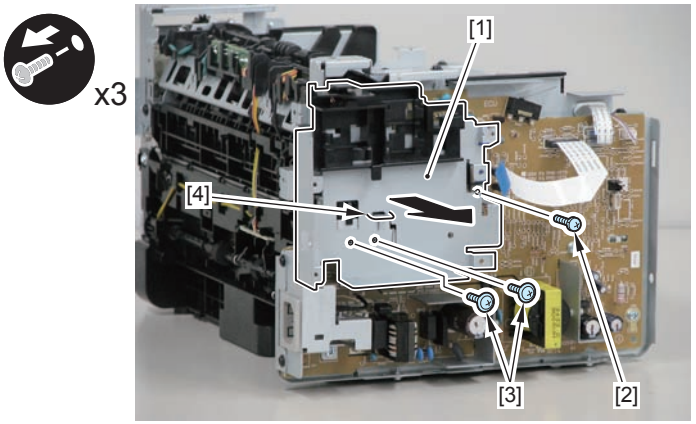

F-4-113

2) Remove the terminal [1], and free the harness [2] from the Harness Guide [A].
3) Remove the Harness Retaining Spring [3] from the 2 hooks [B].

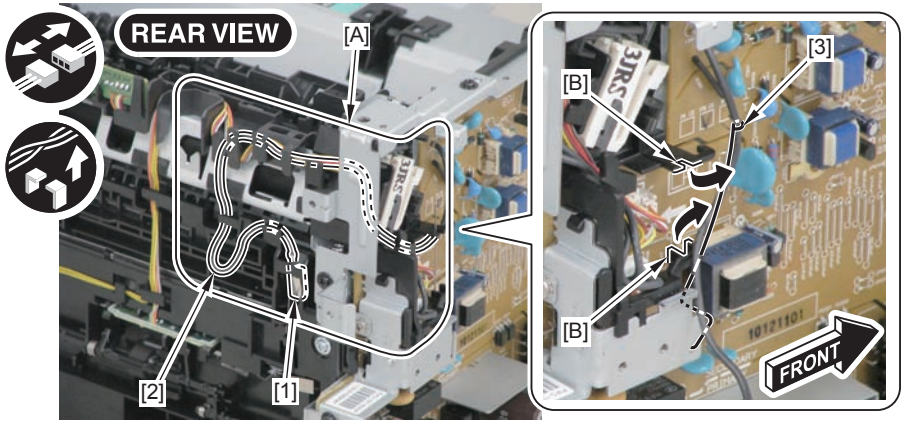

F-4-114

4) Disconnect the 4 connectors [1].

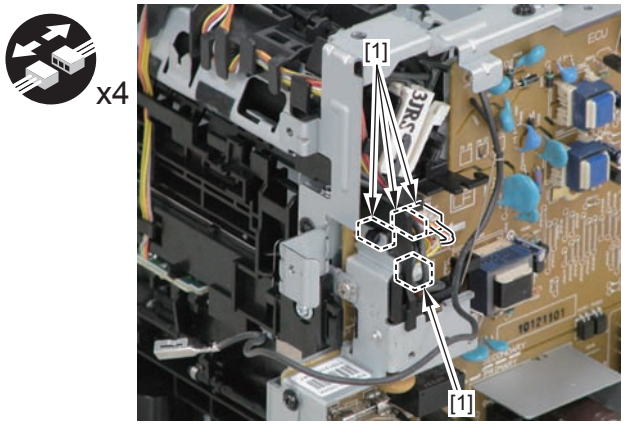

F-4-115

5) Free the Harness [1] from the Harness Guide [A].

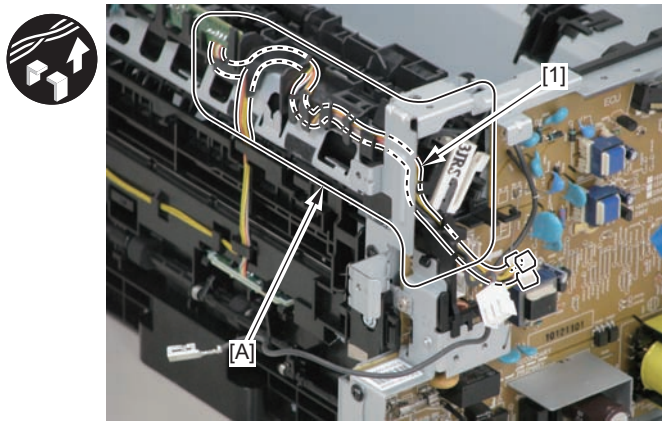

F-4-116

6) Remove the 2 Reinforcing Plates [1] (right and left).

- 4 Screves (black TP) [2]

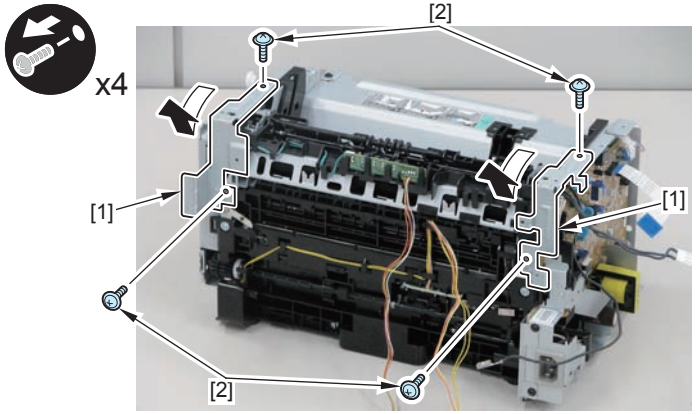

F-4-117

7) Free the Fixing Harness [1] from the Harness Holder [2].

8) Remove the Harness Holder [2].

- 1 Claw [3]
- 2 Bosses [4]

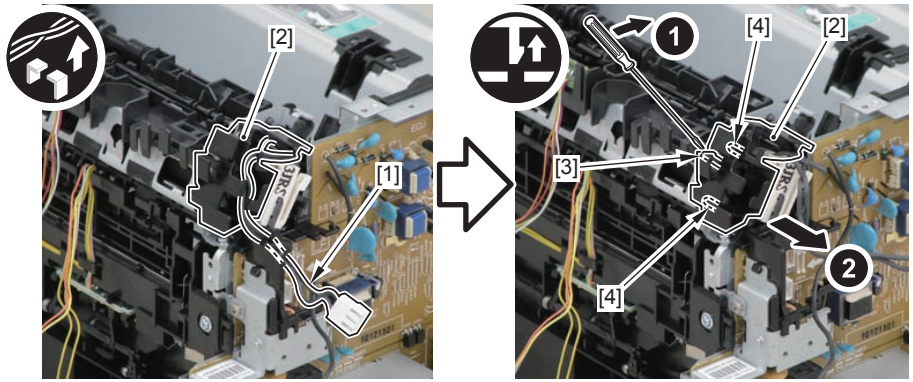

F-4-118

9) Remove the Fixing Assembly [1].

- 3 Screws [2]

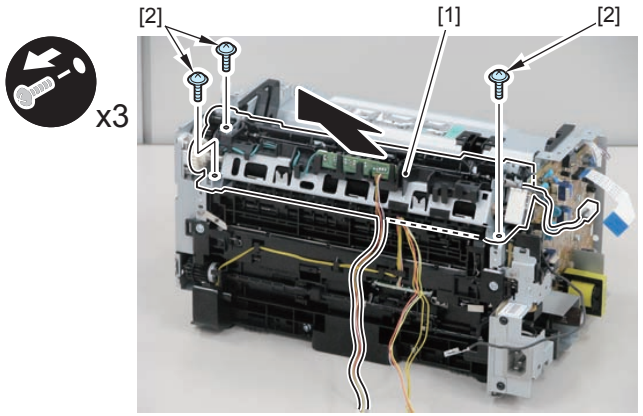

F-4-119

CAUTION:

When installing, be sure to hook the hook [2] on the Left Side Plate by aligning the cut-off [B] of the Left Side Plate [A] with the protrusion [1] of the Fixing Assembly.

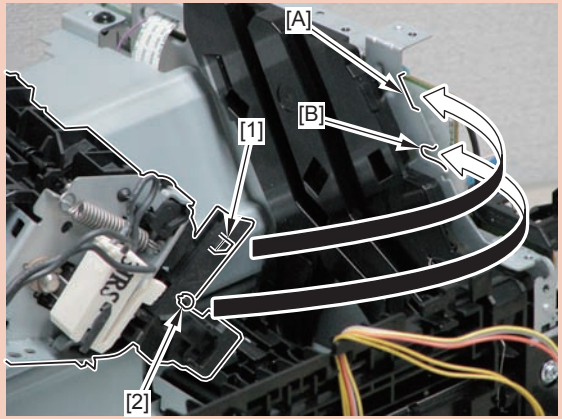

F-4-120

CAUTION:

- Be sure that the groove [1] of the hook is hooked to the edge of the Left Side Plate.
- Be sure to fit the 3 bosses [2] on the right and left.

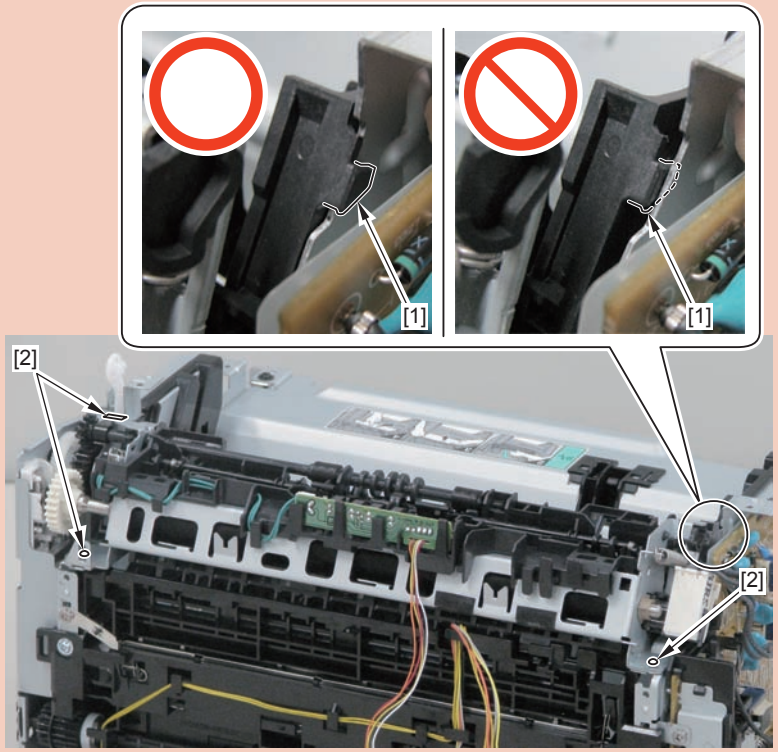

F-4-121

CAUTION:

When installing the Fixing Harness, wrap the Fixing Harness [2] around the protrusion [1] of the Harness Holder, pass it through the Harness Guide [A], and then connect the connector [3].

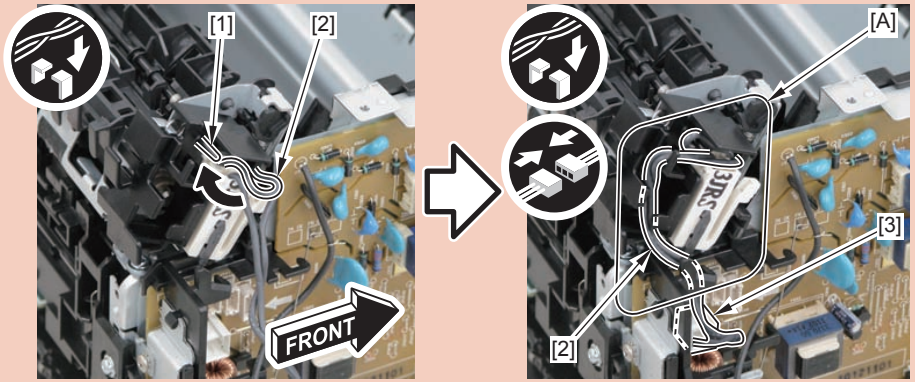

F-4-122

NOTE:
The picture below shows how to route the harness.

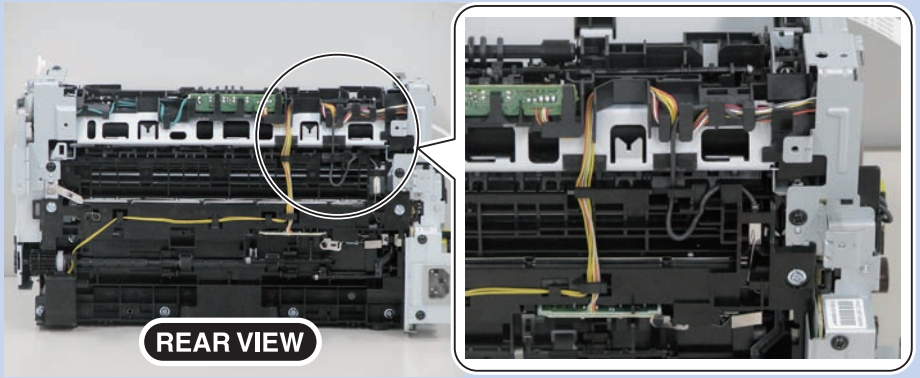

F-4-123

CAUTION:

When installing the terminal [1], be sure that the Contact Spring [2] is in contact with it.

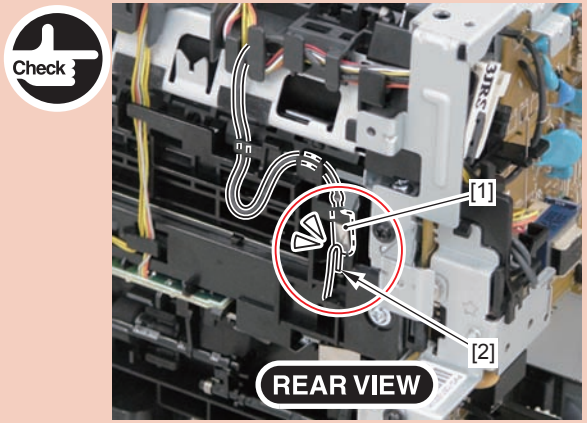

F-4-124

TONER
www.tonerplus.com.ua

Pickup Feed System

Layout Drawing

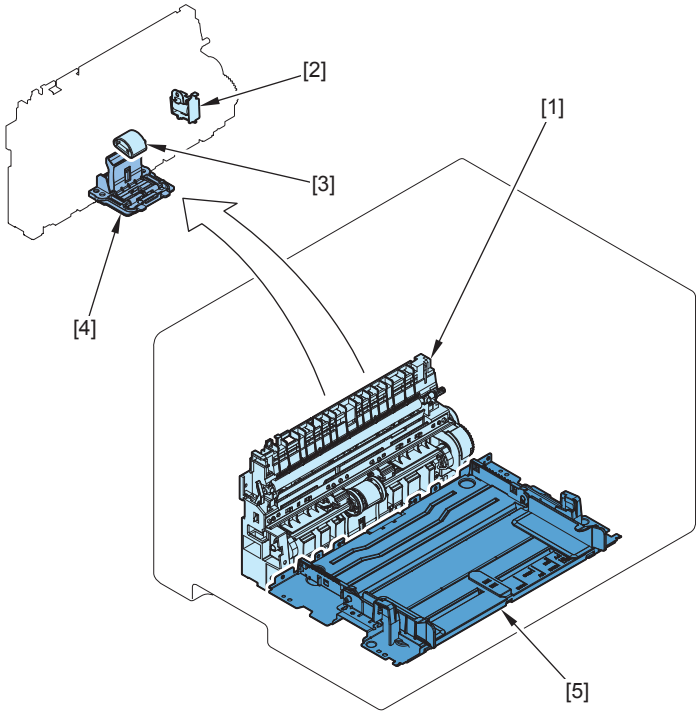

F-4-125

No.	Name	Main Unit	Reference	Adjastment during parts replacement	Remarks
[1]	Pickup Unit	Main Unit	(Refer to page 4-51)	-	-
[2]	Pickup Solenoid	Pickup Unit	(Refer to page 4-55)	-	SL1
[3]	Pickup Roller	Pickup Unit	(Refer to page 4-54)	-	-
[4]	Separation Pad	Pickup Unit	(Refer to page 4-57)	-	-
[5]	Pickup Tray Unit	Main Unit	-	-	-

T-4-22

Removing the Pickup Unit

Preparation

1) Removing the Separation Pad.(Refer to page 4-57)
2) Remove the Left Cover.(Refer to page 4-13)
3) Remove the Reader Unit.(Refer to page 4-20)
4) Remove the Right Cover.(Refer to page 4-14)
5) Remove the Front Cover Unit.(Refer to page 4-15)
6) Remove the Upper Cover.(Refer to page 4-15)
7) Remove the Rear Cover.(Refer to page 4-17)
8) Remove the Main Controller PCB.(Refer to page 4-34)

Procedure

1) Remove the Main Controller PCB Installation Plate [1].
- 1 Screw (with washer) [2]
- 2 Screws (black TP) [3]
- 1 Hook [4]

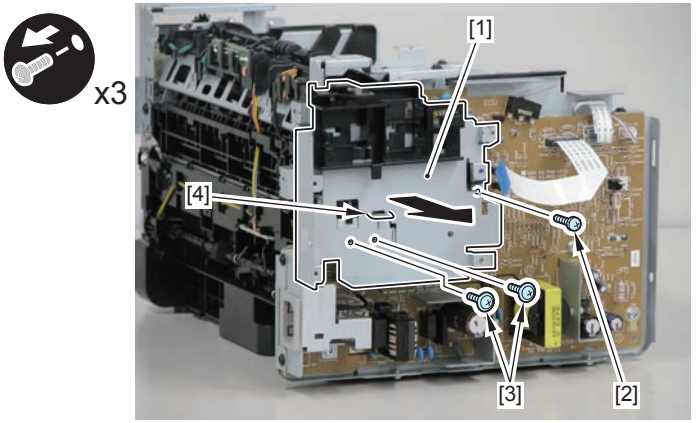

F-4-126

2) Remove the terminal [1], and free the harness [2] from the Harness Guide [A].
3) Remove the Harness Retaining Spring [3] from the 2 hooks [B].

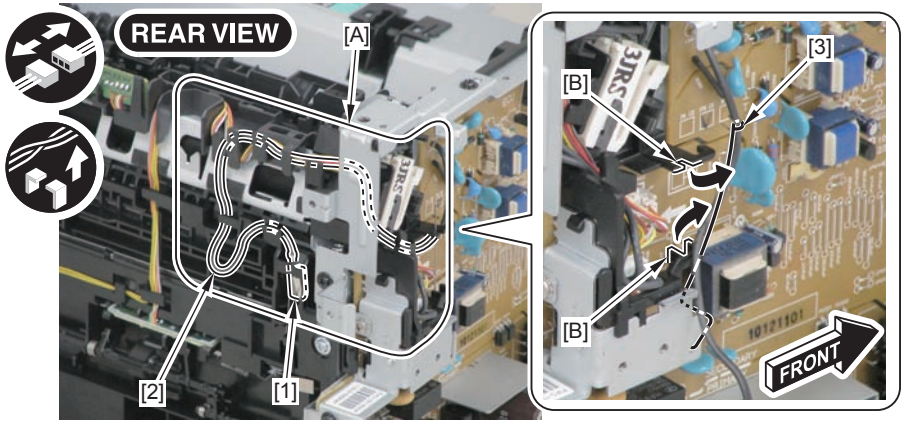

F-4-127

4) Disconnect the 4 connectors [1].

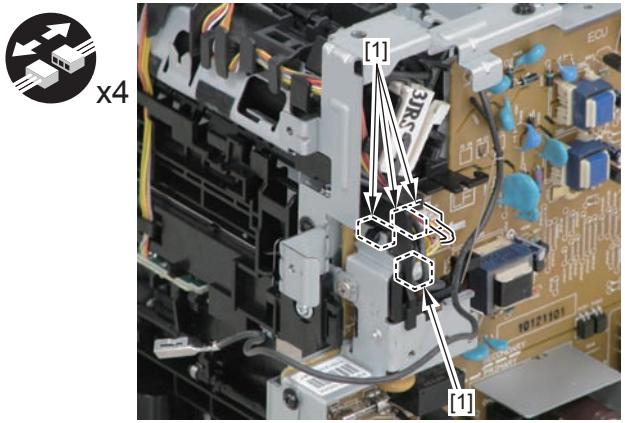

F-4-128

5) Free the Pickup Solenoid Harness [1] from the Harness Guide [A].

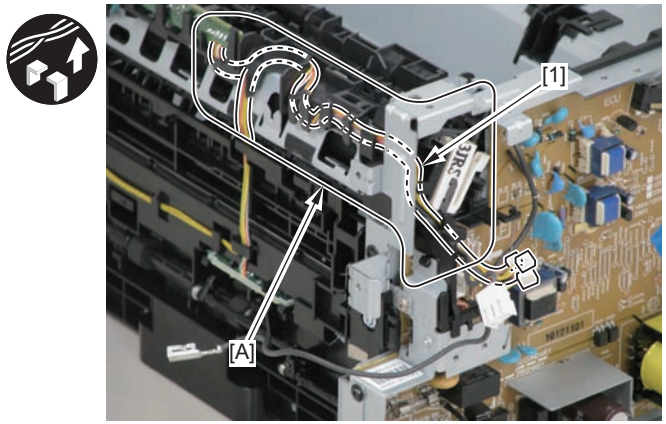

F-4-129

6) Remove the Shaft Retainer [1].
- 1 Boss [2]

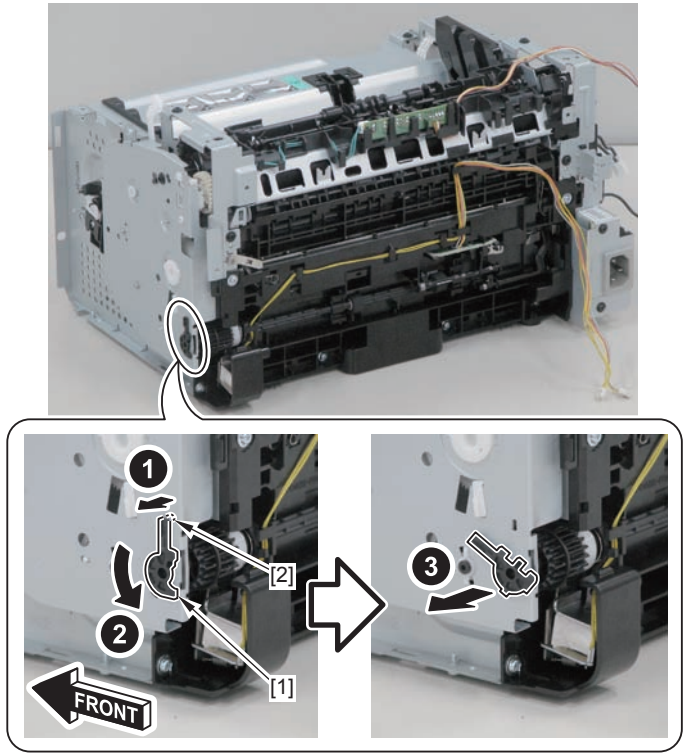

F-4-130

7) Turn the machine so that it is placed with its front side down.

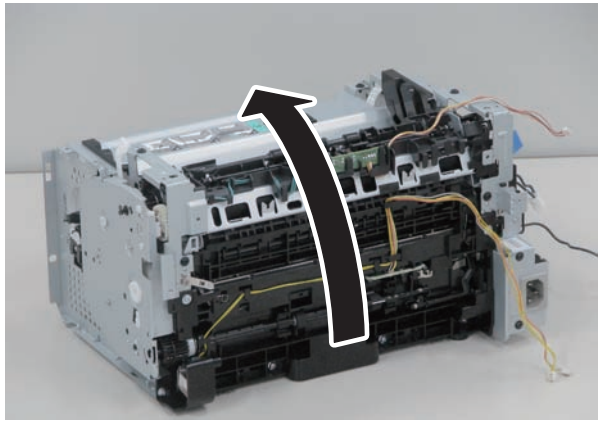

F-4-131

8) Remove the 6 screws (TP) [1] and the screw (with toothed lock washer) [2].

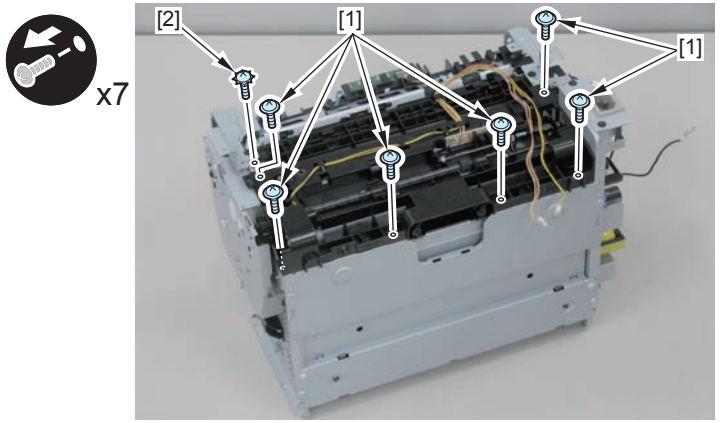

F-4-132

9) Remove the Pickup Unit [2] while holding the Pickup Tray [1].

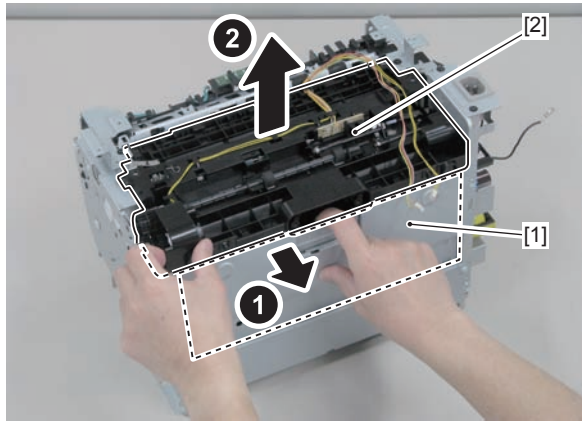

F-4-133

CAUTION:

- When installing the Pickup Unit [1], be sure that the Contact Spring [2] is in contact with the area [A]. Be sure to make the grounding contact point [3] come in contact with the [B] part.
- Be sure to install the Pickup Unit [1] while holding the Pickup Tray [4].

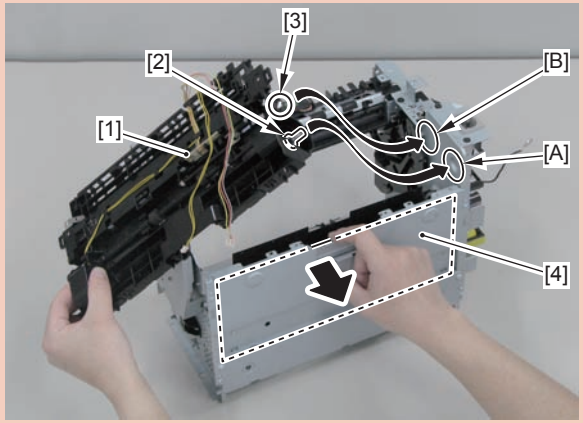

F-4-134

NOTE:
The picture below shows how to route the harness.

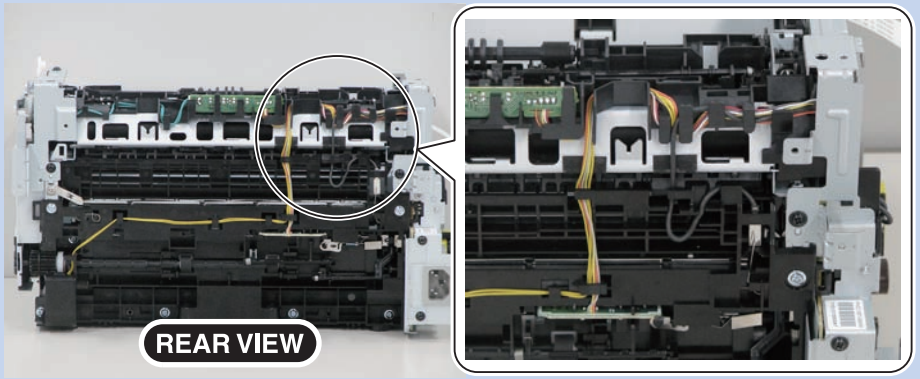

F-4-135

CAUTION:

When installing the terminal [1], be sure that the Contact Spring [2] is in contact with it.

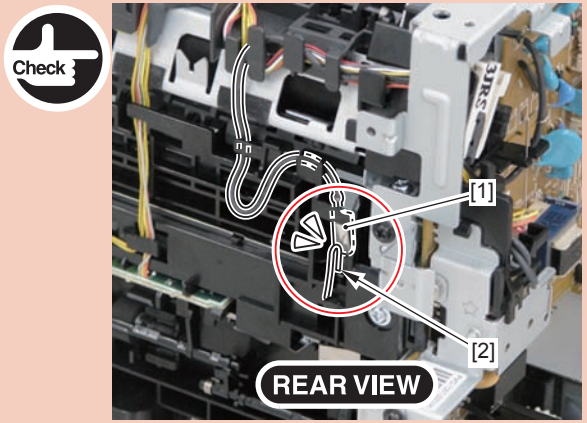

F-4-136

Removing the Pickup Roller

CAUTION:

- Be sure not to touch the surface of the Pickup Roller [1] when disassembling/assembling.
- When disassembling/assembling the Pickup Roller, be sure not to touch the Transfer Roller [2].

F-4-137

1) Open the Reader Unit [1] and Delivery Tray [2].
2) Remove the Pickup Roller [3].
- 2 Claws [4]

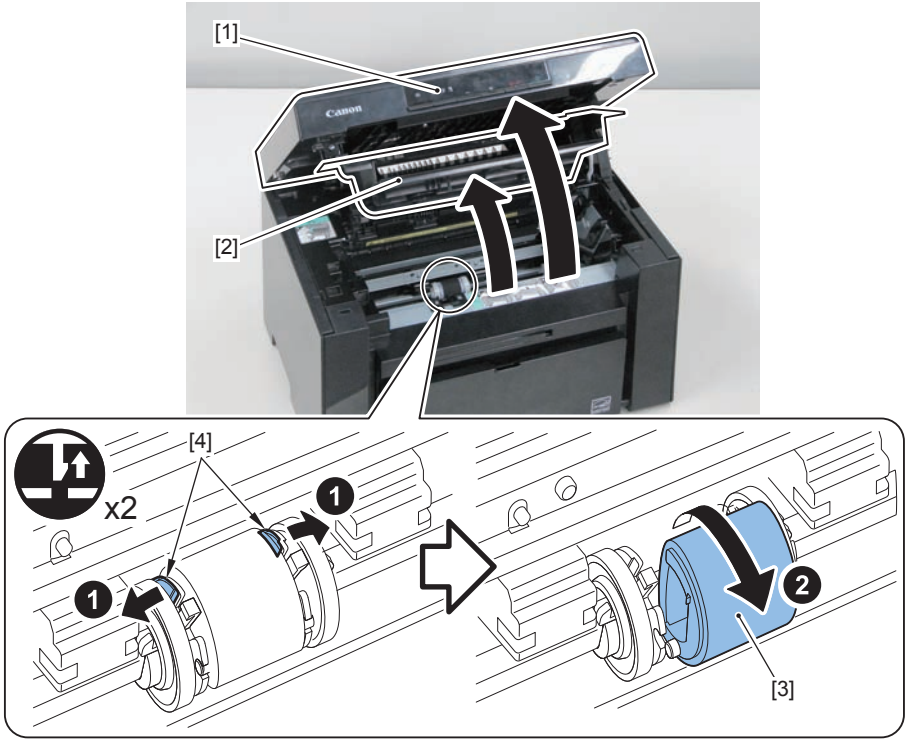

F-4-138

Removing the Pickup Solenoid

Preparation

1) Remove the Left Cover.(Refer to page 4-13)
2) Remove the Reader Unit.(Refer to page 4-20)
3) Remove the Right Cover.(Refer to page 4-14)
4) Remove the Front Cover Unit.(Refer to page 4-15)
5) Remove the Upper Cover.(Refer to page 4-15)
6) Remove the Rear Cover.(Refer to page 4-17)
7) Remove the Main Controller PCB.(Refer to page 4-34)

Procedure

1) Remove the Main Controller PCB Installation Plate [1].
- 1 Screw (with washer) [2]
- 2 Screws (black TP) [3]
- 1 Hook [4]

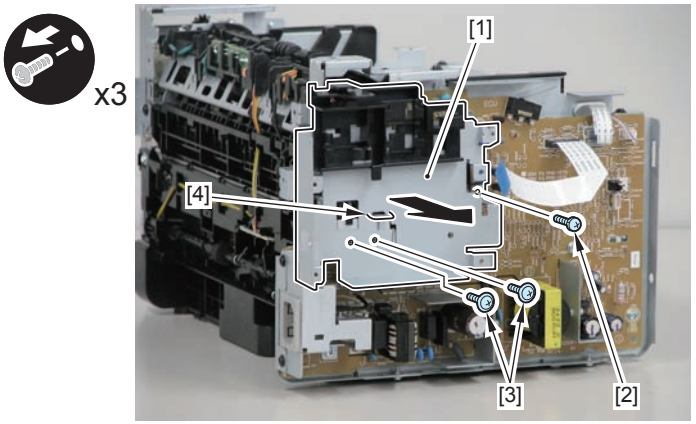

F-4-139

TONER
www.tonerplus.com.ua

2) Remove the terminal [1], and free the harness [2] from the Harness Guide [A].
3) Remove the Harness Retaining Spring [3] from the 2 hooks [B].

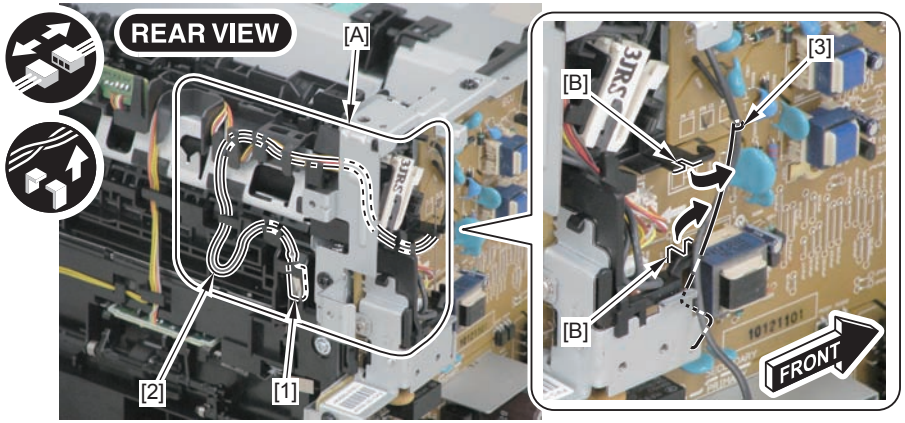

F-4-140

4) Disconnect the 4 connectors [1].

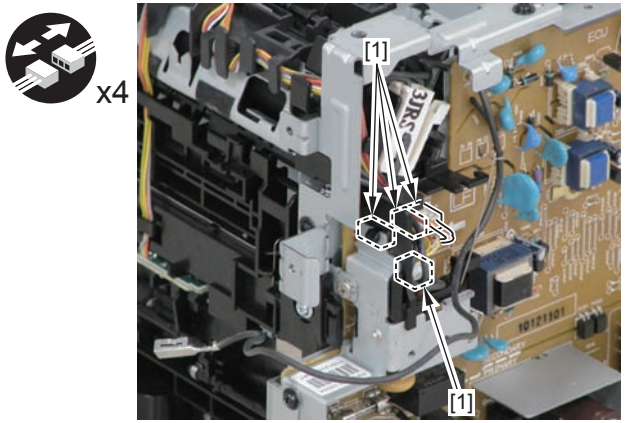

F-4-141

5) Free the Pickup Solenoid Harness [1] from the Harness Guide [A].

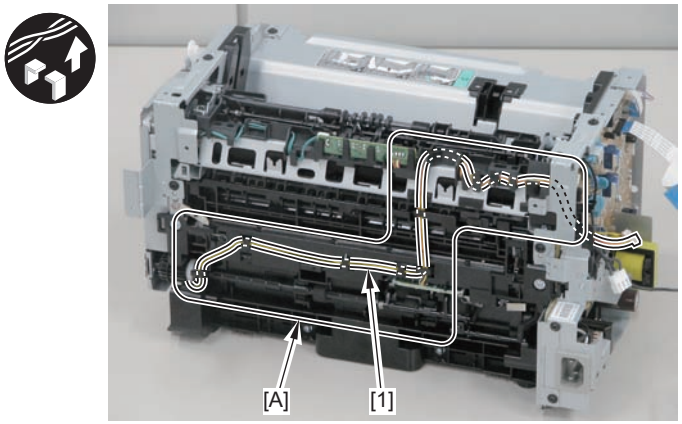

F-4-142

6) Remove the screw [1], move the Solenoid Arm [2], and then remove the Pickup Solenoid [3].

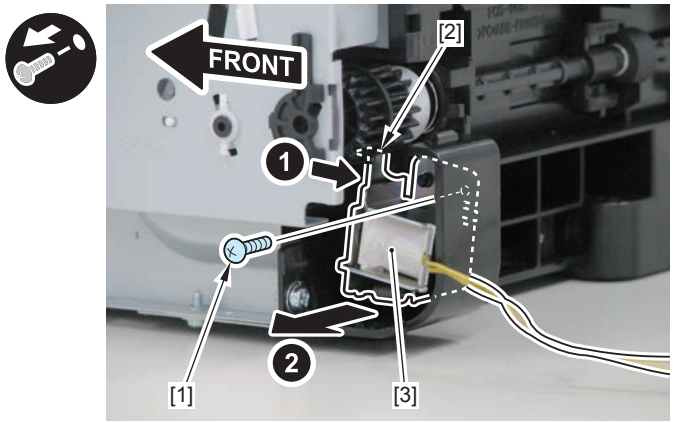

F-4-143

NOTE:
The picture below shows how to route the harness.

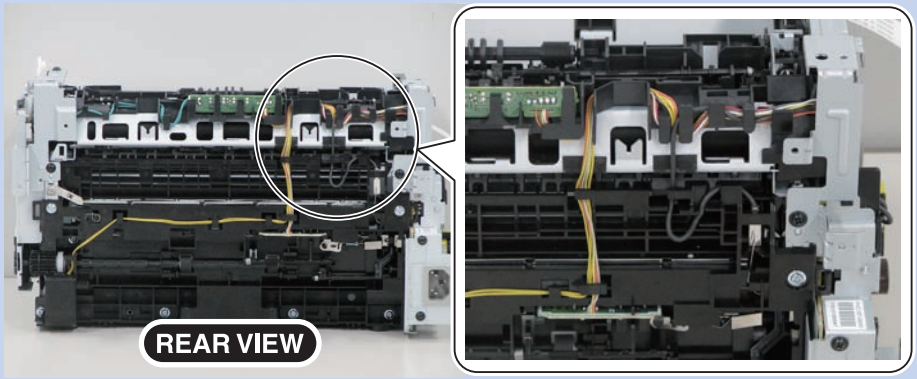

F-4-144

CAUTION:

When installing the terminal [1], be sure that the Contact Spring [2] is in contact with it.

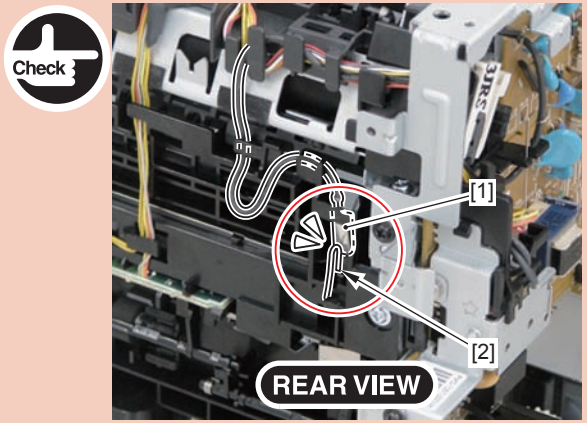

F-4-145

Removing the Separation Pad

CAUTION:

Be sure not to touch the surface of the pad when assembling/disassembling.

1) Change the direction of the machine.
2) Remove the Separation Pad [1].
- 2 Screws [2]
- 2 Hooks [3]

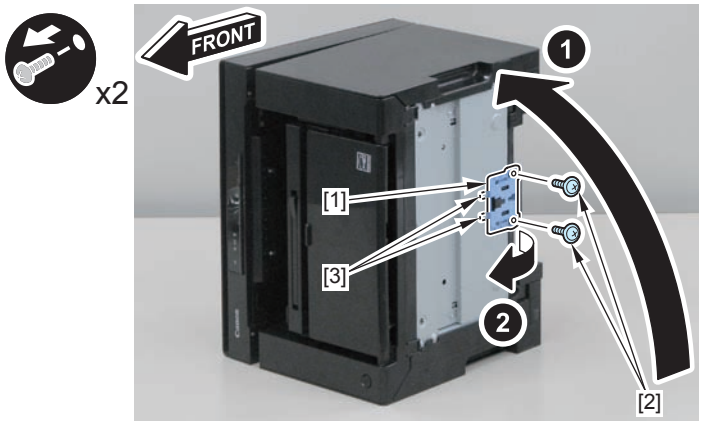

F-4-146

TONER
www.tonerplus.com.ua

5 Adjustment

Mechanical Adjustment

Mechanical Adjustment

Confirming Nip Width

Caution :

Be sure to follow the procedures below, otherwise the fixing film or the fixing sleeve may be damaged.

The nip width of the fixing unit is not adjustable in this printer, however, the incorrect nip width may cause the faulty fixing.
Follow the procedures below to check the nip width.

1) Prepare an all-black print of A4 size made by the same type of EP Toner cartridge for this printer before visiting the customer site.
2) Load the printed sheet facing DOWN on the pickup tray.
3) Print a test-page.
4) Turn off the printer when the leading edge of the paper appears in the face-down delivery slot.
   Wait for 60 seconds and open the cartridge door to remove the paper from the printer.
5) Measure the width of the glossy band across the paper and check if it is meeting the requirements below.
   Wasp/Horsethief/Blackrock
   - Center (a): 7.7±1.4mm
   - Right and left (b, c): 7.7±1.4mm

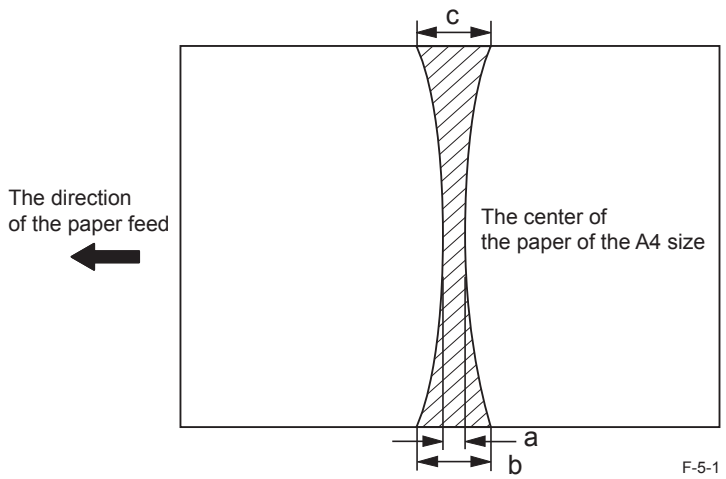

F-5-1

6 Trouble Shooting

- Test Print
- Trouble Shooting Items
- Version Upgrade

Test Print

Test Print Function

This equipment has a test print function to check if the printer engine normally operates.
Test patterns (horizontal lines) are output when executing this test print.

The following is the operation procedure;

1) Set A4/LTR papers on the pickup tray.
2) Continuously open and close the Delivery Tray [1] at least 5 times for odd number of times with the Power Switch ON.
3) A 1-sided engine test print is executed.

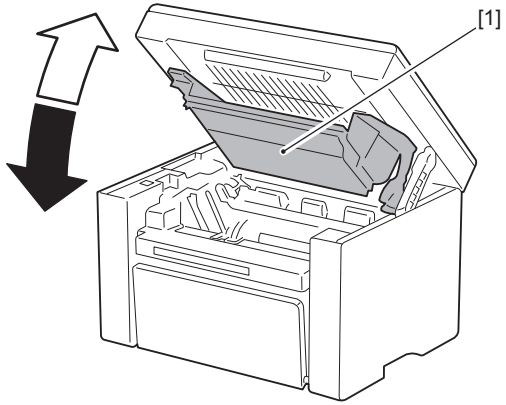

F-6-1

Trouble Shooting Items

Image Faults

Smudged/Streaked

Bleeding (smear) occurs immediately after the power is turned on for the first time for the day

Description

There is sometimes a case where the difference of temperature between air and inside of the machine causes moisture to occur on the toner immediately after the power is turned on for the first time for the day.

As a result, when the toner transferred on a sheet at the time of initial printing passes through the fixing assembly, moisture on the toner is vaporized into steam, causing breading (smear) to occur.

Field Remedy

Prevent bleeding using the following user mode items.

Setting items	Setting value	Description	Additional information
Menu> Special Mode b (b)	Not used,Mode 1 through 4 (Factory setting: Mode 2)	Make a setting to perform thinning of printed image data by processing of the controller. When the value set for the mode increases, the amount of thinning increases. (The image density decreases.)	Printing time does not increase because the method of image processing performed by the controller is changed. This mode is less effective than Mode c.
Menu> Special Mode c (c)	Not used,Mode 1 through 3 (Factory setting: Not used)	Extend the initial rotation period by processing of the engine. When the value set for the mode increases, the initial rotation period is extended.	The initial rotation period in engine operation is extended, and printing time increases. The initial rotation period for each mode is shown below. Mode 1: 15 sec, Mode 2: 30 sec, Mode 3: 60 sec

T-6-1

Image sample

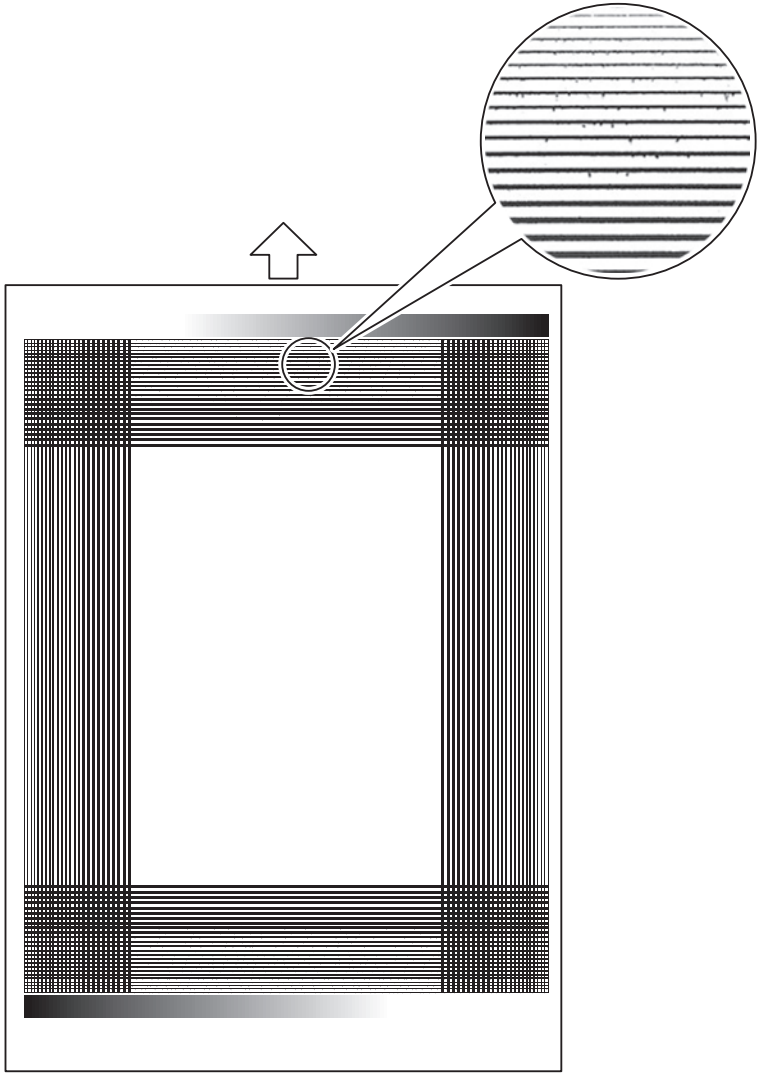

F-6-2

Version Upgrade

Overview

To upgrade versions, use the user support tool (hereinafter UST) and download firmware from a personal computer (hereinafter PC) to this product.

CAUTION:

The Engine Controller PCB cannot be upgraded using the UST. In order to upgrade the Engine Controller PCB, it is necessary to replace it with an Engine Controller PCB of a new version.

The Main Controller PCB can be upgraded using the UST.

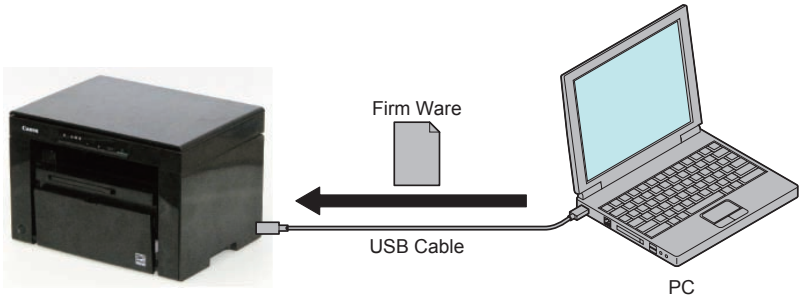

F-6-3

Firmware configuration

Firmware	Function	Stored in
BOOTROM	Start the main controller.	Main controller PCB
BOOTABLE	Control overall performance.	Main controller PCB
LANGUAGE	Manage languages used in panel / Remote UI and font data.	Main controller PCB
DEMO PRINT	Manage data for demo printing.	Main controller PCB

T-6-2

Some UST versions meet less numbers of firmware than those listed above.

Preparation

System Requirements

- OS (one of the following)
  - Microsoft Windows 2000 Server/Professional
  - Microsoft Windows XP Professional/Home Edition
  - Microsoft Windows Server 2003
  - Microsoft Windows Vista
  - Microsoft Windows 7
  - Microsoft Windows Server 2008
  - Mac OS X 10.3 or later
- PC
  - Compatible to the selected OS
  - Memory (RAM): 32MB or more free space
  - Hard Disk: 100MB or more free space
  - Display: 640x480 pixels or more in resolution, 256 tones or more
  - With USB ports
- UST file for this product*

  *: Download the corresponding file from the system CD or the service site (ask the service technician in charge for details)
- USB cable (USB1.1/2.0)

Preparation

1) Start the PC.
2) Install the printer driver on the PC.
3) Connect the device to the PC with the USB cable.
4) Turn on the device on standby.
5) After pressing the "⊛" key, hold down the "+" key until "F" appears on the display.

Note:
Press STOP key to cancel Download mode and return to the normal operation.

TONER
www.tonerplus.com.ua

Downloading System Software

1) Open UST.

USTUPD.exe

F-6-4

2) Take a note of the firmware version to upgrade and click [Next] button.

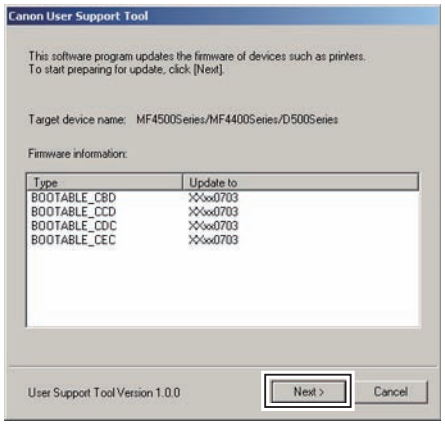

F-6-5

3) Click [Next] button.

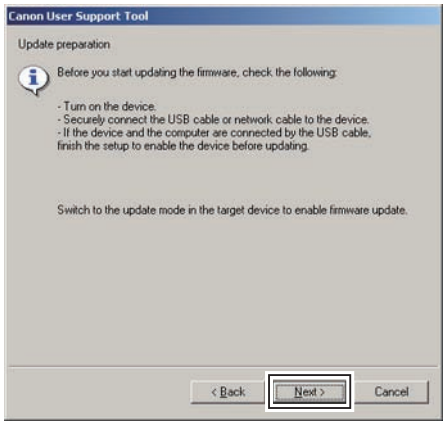

F-6-6

4) Select [USB Device] and click [Next] button.

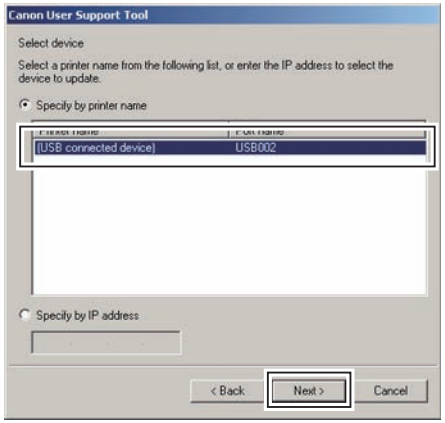

F-6-7

5) Click [Start] button.

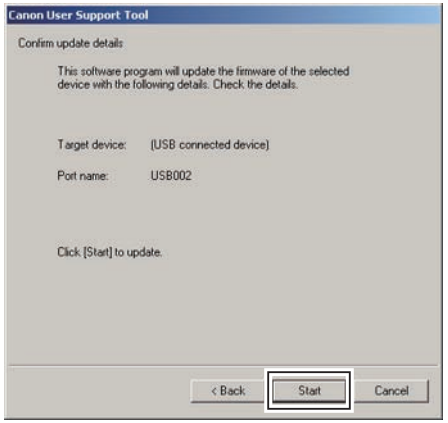

F-6-8

6) Click [Yes] button for the warning message to start download.

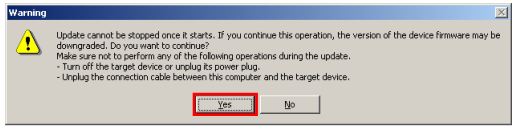

F-6-9

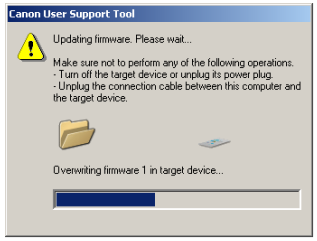

F-6-10

7) Click [OK] button when download is completed.

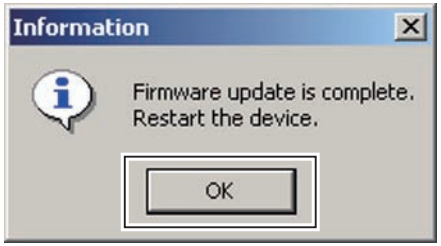

F-6-11

8) The machine initiates automatic restart.

7 Error Codes

■ Overview
■ Error Codes

Overview

This section describes codes shown in case any problem is occurred.

Since this product does not collect logs for jams and alarms, no jam / alarm code is shown.

Code type	Description	Reference
Error code	Shown for any problem occurred in the device.	List of error codes
Jam code	N/A	-
Alarm code	N/A	-

T-7-1

Error Codes

Code	Item	Description
E000	Detection description	Startup failure
	Remedy	(1) Check the connectors of the Fixing Assembly. (J101, J1011, J552 and J702) (2) Replace the Fixing Assembly. (3) Replace the Engine Controller PCB.
E001	Detection description	Abnormal high temperature
	Remedy	(1) Check the connectors of the Fixing Assembly. (J101, J1011, J552 and J702) (2) Replace the Fixing Assembly. (3) Replace the Engine Controller PCB.
E003	Detection description	Abnormal low temperature
	Remedy	(1) Check the connectors of the Fixing Assembly. (J101, J1011, J552 and J702) (2) Replace the Fixing Assembly. (3) Replace the Engine Controller PCB.
E004	Detection description	Fixing heater drive circuit error (200V models only)
	Remedy	(1) Check the connectors of the Fixing Assembly. (J101, J1011, J552 and J702) (2) Replace the Fixing Assembly. (3) Replace the Engine Controller PCB.
E100	Detection description	Scanner area failure
	Remedy	(1) Check the connectors of the Laser Scanner Unit. (J1, J542 and J801) (2) Replace the Laser Scanner Unit. (3) Replace the Engine Controller PCB.
E196	Detection description	ROM read/write error (error in storing setting values in user mode/service mode/factory mode)
	Remedy	When the same error repeatedly occurs although the power is turned OFF and then ON for several times, execute the following remedies. (1) Update the firmware of the Main Controller PCB. (2) Replace the Main Controller PCB.
E202	Detection description	CIS Unit home position detection error / homeward reading position error
	Remedy	When the same error repeatedly occurs although the power is turned OFF and then ON for several times, execute the following remedies. (1) Check the connection between the Main Controller PCB and the CIS Unit. (J2) (2) Replace CIS Unit. (3) Check the connection between the Main Controller PCB and the Reader Motor (M3). (J11) (4) Replace the Reader Motor (M3). (5) Replace the Main Controller PCB.
E225	Detection description	Insufficient lamp light intensity (The light intensity is at the reference level or below.)
	Remedy	When the same error repeatedly occurs although the power is turned OFF and then ON for several times, execute the following remedies. (1) Check the connection between the Main Controller PCB and the CIS Unit. (J2) (2) Replace CIS Unit. (3) Replace the Main Controller PCB.
E301	Detection description	Insufficient light intensity at shading
	Remedy	When the same error repeatedly occurs although the power is turned OFF and then ON for several times, execute the following remedies. (1) Check the connection between the Main Controller PCB and the CIS Unit. (J2) (2) Replace CIS Unit. (3) Replace the Main Controller PCB.
E744	Detection description	System error
	Remedy	When the same error repeatedly occurs although the power is turned OFF and then ON for several times, execute the following remedies. (1) Replace the Main Controller PCB. (2) Replace the Engine Controller PCB.

T-7-2

8 Service Mode

- Overview
- COPIER
- TESTMODE

Overview

Preparation

The various service mode settings of this machine can be performed from a personal computer (PC).
Because this operation requires the dedicated software named USB Service Mode Tool (USM), install it in advance. The software supports the following OSs.

- Microsoft Windows XP (32/64 bit)
- Microsoft Windows 7 (32/64 bit)
- Microsoft Windows Vista (32/64 bit)

Service Mode Menu

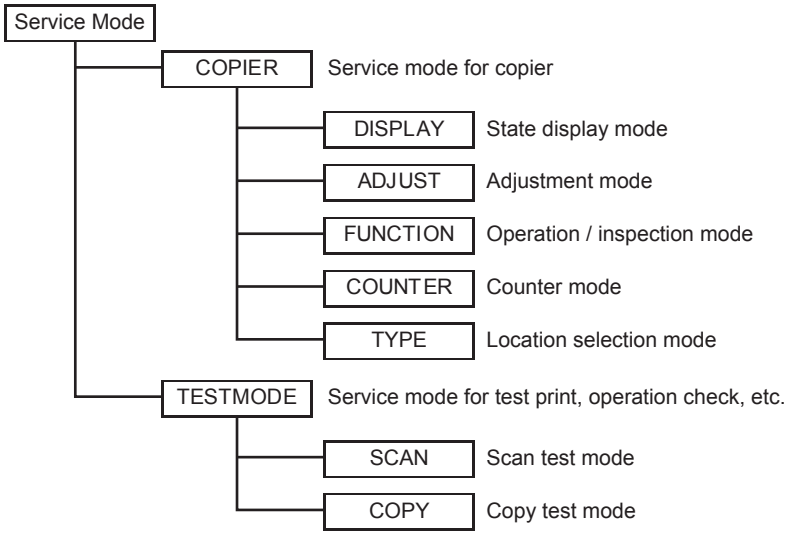

F-8-1

Entering Service Mode

Contact the sales company for the method to enter service mode.

Exiting Service Mode

Exit the service mode by turning OFF and then ON the power of the machine.

Screen Operation in Service Mode

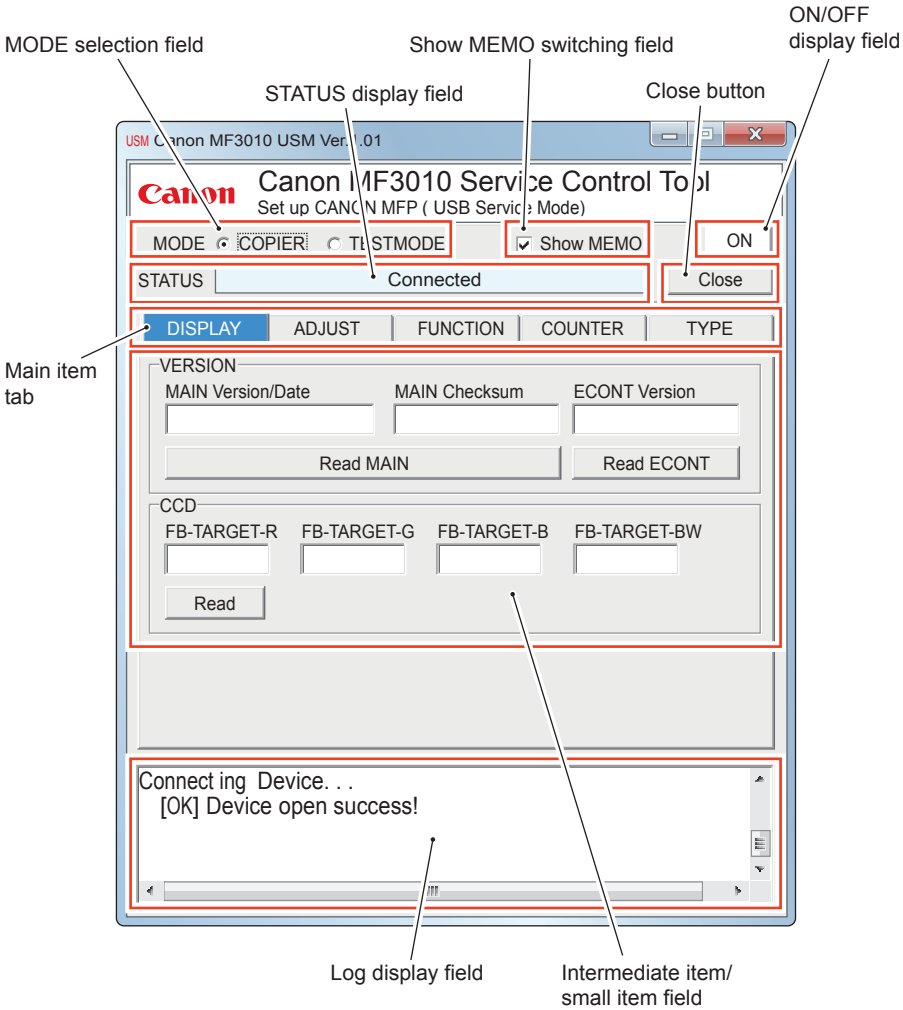

F-8-2

MODE selection field	Switch between COPIER and TESTMODE.
Show MEMO switching field	When the checkbox is selected, logs are displayed at the bottom of the screen. When the checkbox is deselected, logs are hidden. (The contents of the logs are not deleted.)
ON/OFF display field	ON: The PC is connected to the machine. OFF: The PC is not connected to the machine.
STATUS display field	Display the state of communication with the machine.
Close button	Exit USM.
Main item tab	Select the main item.
Intermediate item/small item field	Perform and check various settings.
Log display field	Tasks are recorded in logs as they are processed by USM. All logs can be deleted by double-clicking inside the log display area. When exiting USM, all logs are deleted.

T-8-1

COPIER

DISPLAY

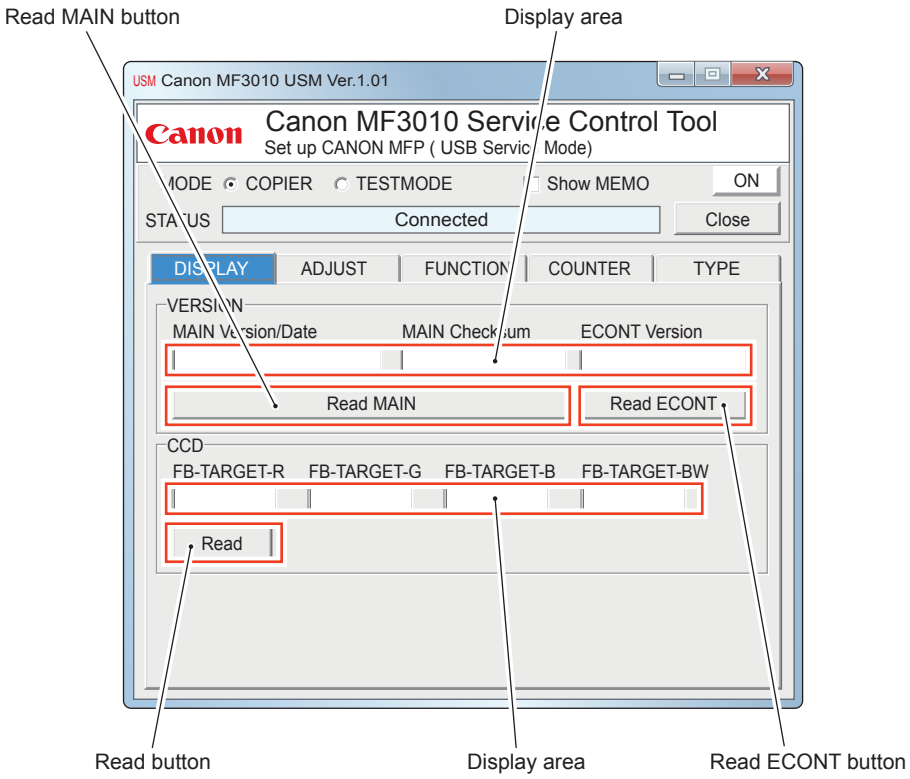

F-8-3

Read MAIN button	Update the values of MAIN Version/Date and MAIN Checksum.
Read ECONT button	Update the value of ECONT Version.
Read button	Update the values of FB-TARGET-R/G/B/BW.
Display area	Display each value.

T-8-2

COPIER>DISPLAY		
Intermediate item	Small Item	Description
VERSION	MAIN Version/Date	Display the version/date of Bootable (product program area)
	MAIN Checksum	Display the checksum of Bootable (product program area)
	ECONT Version	Display the ROM version of recording engine
CCD	FB-TARGET-R	Shading target value of RED at copyboard reading.
	FB-TARGET-G	Shading target value of GREEN at copyboard reading.
	FB-TARGET-B	Shading target value of BLUE at copyboard reading.
	FB-TARGET-BW	Shading target value of B&W at copyboard reading.

T-8-3

ADJUST

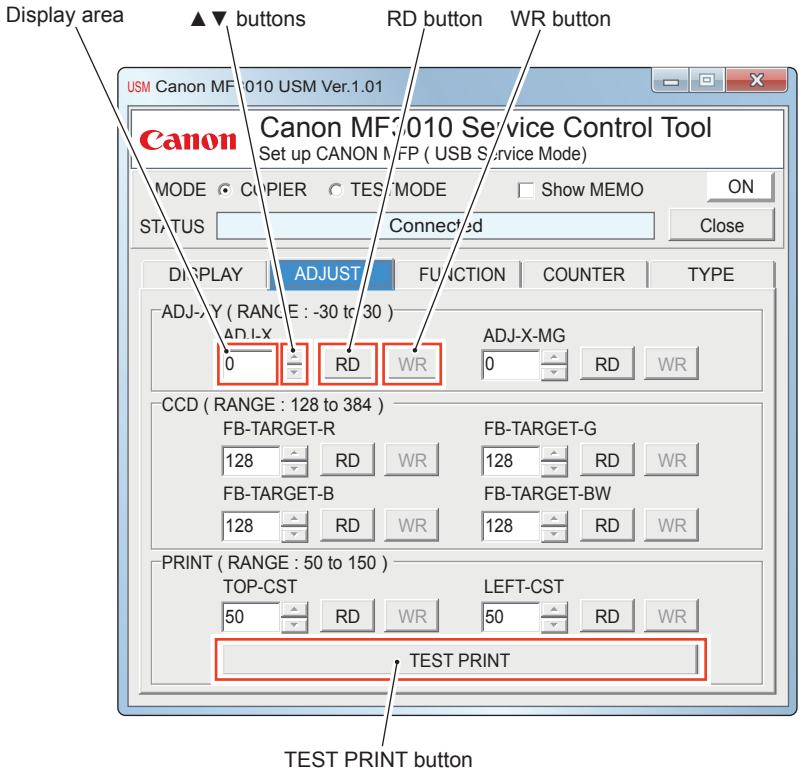

F-8-4

RD button	Obtain the current value of each setting.
WR button	Send the value of each display area to the machine. Operation becomes possible by pressing the corresponding RD button.
▲▼ buttons	Increase or decrease a value of each display area. Operation becomes possible by pressing the corresponding RD button.
Display area	Display each value. Apart from using the ▲▼ buttons, you can also enter a value directly from the keyboard.
TEST PRINT button	Perform the test print using values set in TOP-CST and LEFT-CST. Before performing the test print, be sure to load A4 or LTR paper.

T-8-4

NOTE:
- Even if a value of a display area is changed, the change is not reflected until pressing the WR button.
- By pressing the TEST PRINT button, the following screen appears and the machine is waiting for output.

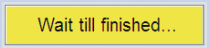

F-8-5

COPIER>ADJUST		
Intermediate item	Small Item	Description
ADJ-XY	ADJ-X	Adjustment value of image reading start position (vertical scanning direction) (X direction) [Use case] When the reading position of vertical scanning direction at fixed reading is incorrect [Adjustment] Reduce the setting value when non-image width is larger than the standard value. Increase the setting value when area outside the original is copied. As the setting value is incremented by 1, the image reading start position moves toward the trailing edge by 0.1 mm. Setting range: -30 to 30 [Value after RAM clearing: 0]
	ADJ-X-MG	Fine adjustment (unit: 0.1%) of magnification ratio in the vertical scanning direction at copyboard reading. +/- 3% [Use case] When image on copy output sheet is larger or smaller than its on the original [Adjustment] Make adjustment by comparing the original and the copy output sheet. Increase the value when the output sheet is small. Decrease the value when the output sheet is large. Setting range: -30 to 30 [Factory default settings/Value after RAM clearing: 0] [Caution] This adjustment is targeted to adjust the image position on copy output. This may affect the SCAN image.
CCD	FB-TARGET-R	Shading target value of RED at copyboard reading. Setting range: 128 to 384 [Factory default value: varies according to each machine] [Value after RAM clearing: 290]
	FB-TARGET-G	Shading target value of GREEN at copyboard reading. Setting range: 128 to 384 [Factory default value: varies according to each machine] [Value after RAM clearing: 284]
	FB-TARGET-B	Shading target value of BLUE at copyboard reading. Setting range: 128 to 384 [Factory default value: varies according to each machine] [Value after RAM clearing: 278]
	FB-TARGET-BW	Shading target value of B&W at copyboard reading. Setting range: 128 to 384 [Factory default value: varies according to each machine] [Value after RAM clearing: 301]

COPIER>ADJUST		
Intermediate item	Small Item	Description
PRINT	TOP-CST	Leading edge margin at cassette pickup Setting range: 50 to 150 [Factory default value/Value after RAM clearing: 100] [Amount of change per unit: 0.1 mm]
	LEFT-CST	Left margin at cassette pickup Setting range: 50 to 150 [Factory default value/Value after RAM clearing: 100] [Amount of change per unit: 0.1 mm]

T-8-5

FUNCTION

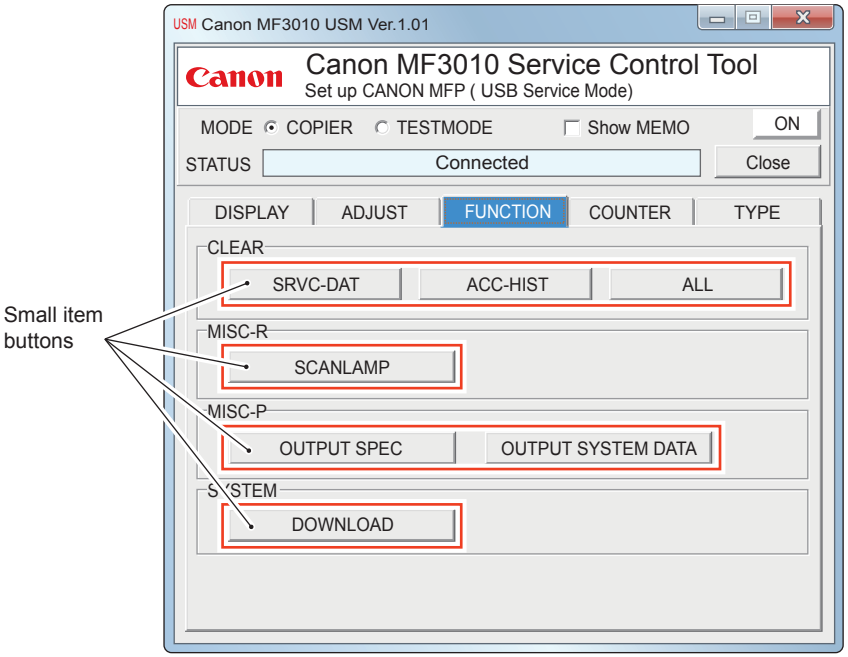

F-8-6

Small item buttons	Execute function of each small item. Before performing MISC-P > OUTPUT SPEC, OUTPUT SYSTEM DATA, be sure to load A4 or LTR paper.

T-8-6

NOTE:
By pressing the button of a small item below the intermediate item MISC-P, the following screen appears and this machine is waiting for output.

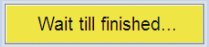

F-8-7

COPIER>FUNCTION		
Intermediate item	Small Item	Description
CLEAR	SRVC-DAT	Clear SERVICE DATA. User data is not cleared. Exercise caution as data is cleared as soon as you press the button.
	ACC-HIST	Not used
	ALL	The following items are cleared. USER DATA SERVICE DATA JOB ID Logs Clear date Also, USER DATA and SERVICE DATA are initialized to the default values of each location. Counter information is not cleared. Exercise caution as data is cleared as soon as you press the button.
MISC-R	SCANLAMP	Execute Scanning Lamp activation operation. Light up CIS LEDs in the following sequence: red -> green -> blue -> white.
MISC-P	OUTPUT SPEC	Output History Print in user mode.
	OUTPUT SYSTEM DATA	Output DISPLAY, ADJUST, and COUNTER in the COPIER of SSSW.
SYSTEM	DOWNLOAD	Switch to download mode.

T-8-7

OUTPUT SPEC output example

P.0001

```
*****************************************
***          HISTORY PRINT            ***
***          USER MODE                ***
*****************************************

-- FIRMWARE VERSION --
  *SCNT:  02.06
  *ECNT:  00.10

-- USB SERIAL NUMBER --
  *  0112G000000E

-- DESTINATION --
  *  USA
```

F-8-8

- FIRMWARE VERSION: Firmware version
  SCNT: Main Controller version
  ECNT: Engine Controller version
- USB SERIAL NUMBER: Serial number of a USB port of this machine
- DESTINATION: Location name that has been set up

OUTPUT SYSTEM DATA output example

P.0001

```
*****************************************
***          SYSTEM DATA LIST         ***
*****************************************

* COPIER
  [1] DISPLAY
      VERSION
        MAIN        :                 02.06
        ECONT       :                 00.10
      CCD
        FB-TARGET-R :                 290
        FB-TARGET-G :                 284
        FB-TARGET-B :                 278
        FB-TARGET-BW:                 301

  [2] ASJUST
      ADJ -XY
        ADJ -X      :                 0
        ADJ -X-MG   :                 0
      CCD
        FB-TARGET-R :                 290
        FB-TARGET-G :                 284
        FB-TARGET-B :                 278
        FB-TARGET-BW:                 301
      PRINT
        TOP-CST     :                 100
        LEFT-CST    :                 100

  [3] COUNTER
      TOTAL
        SERVICE1    :                 0
        TTL         :                 0
        COPY        :                 0
        RPT-PRT     :                 0
        PDL-PRT     :                 0
        SCAN        :                 14
      JAM
        TOTAL       :                 0
```

F-8-9

COUNTER

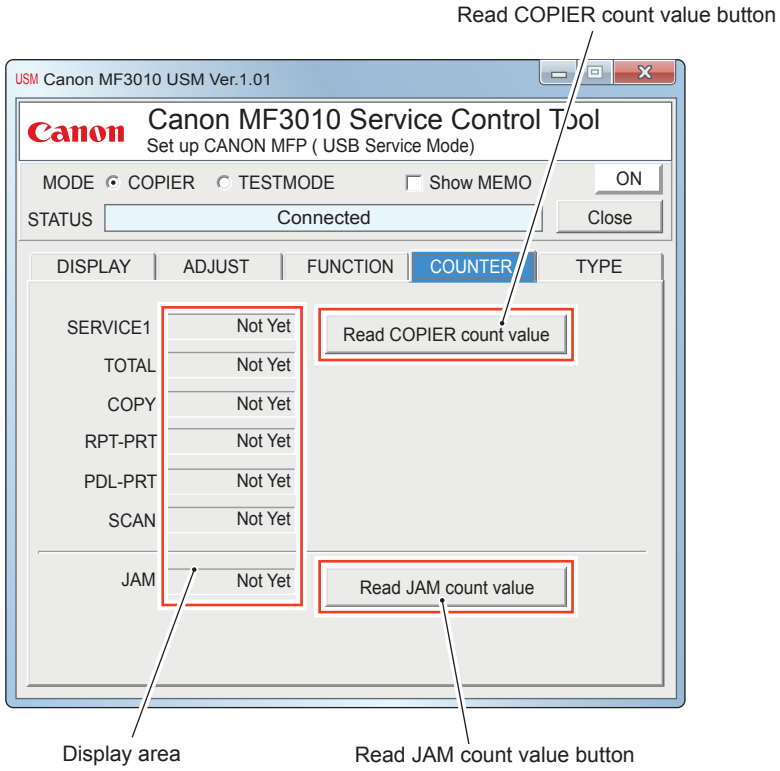

F-8-10

Read COPIER count value button	Obtain each counter's value.
Read JAM count value button	Obtain the JAM counter value.
Display area	Display each value.

T-8-8

COPIER>COUNTER>TOTAL		
Display/setting/adjustment range: 0 to 999. Returns to 0 when value exceeds 999.		
Intermediate item	Small Item	Description
TOTAL	SERVICE1	Service-purposed total counter 1 Counter is advanced when a paper is delivered outside the printer (regardless of large size or small size).
	TTL	Total counter (copy + printer + RPT-PRT)
	COPY	Total copy counter Counter is advanced when a paper is delivered outside the machine after execution of copy operation.
	RPT-PRT	Report print counter Counter is advanced at report printing, and when a paper is delivered outside the machine. Blank paper is also counted. Counter is advanced by 1 regardless of large or small size.
	PDL-PRT	PDL print counter Counter is advanced at PDL printing, and when a paper is delivered outside the machine. Blank paper is also counted. Counter is advanced by 1 regardless of large or small size.
	SCAN	Scan counter Count up the number of scan operations when the scan operation is complete. Counter is advanced by 1 regardless of large or small size.
JAM	TOTAL	Total jam counter

T-8-9

TYPE

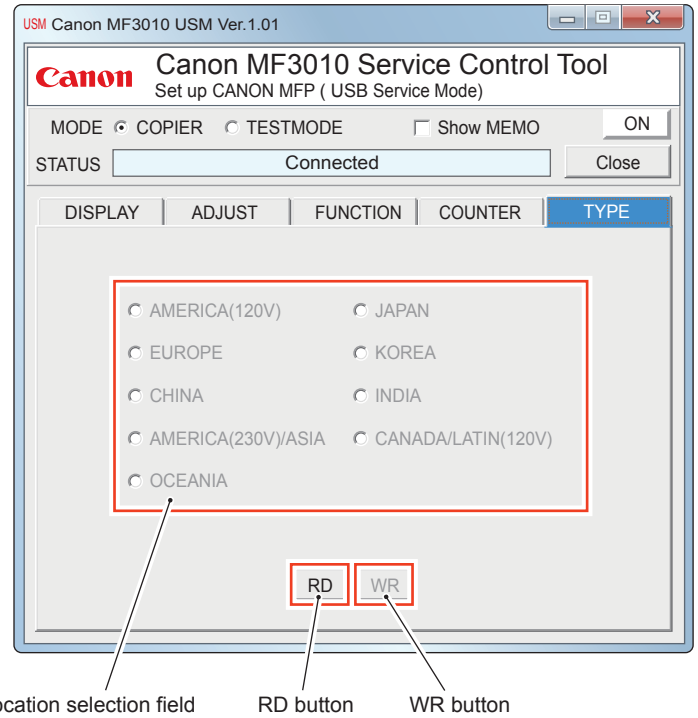

F-8-11

RD button	Obtain the location that has been set up.
WR button	Send the settings of the selected locations to the machine. Operation becomes possible by pressing the RD button.
Location selection field	Select location group. Operation becomes possible by pressing the RD button.

T-8-10

NOTE:
Even if a selected location is changed, the change is not reflected until pressing the WR button.

Caution: When Replacing the Main Controller PCB

1) Replace the Main Controller PCB.
2) Connect the PC to this machine and start USM.
3) Display COPIER > TYPE.
4) Press the RD button, select a location, and then press the WR button.
5) Press the RD button again, and check that the correct location has been set up.

COPIER>TYPE
Description
Set the location group (report language type, basic paper size). When replacing the Main Controller PCB, this item must be set. [Selection items] AMERICA(120V), CANADA/LATIN(120V), JAPAN, EUROPE, AMERICA(230V)/ASIA, OCEANIA, INDIA, KOREA, CHINA

T-8-11

TESTMODE

SCAN

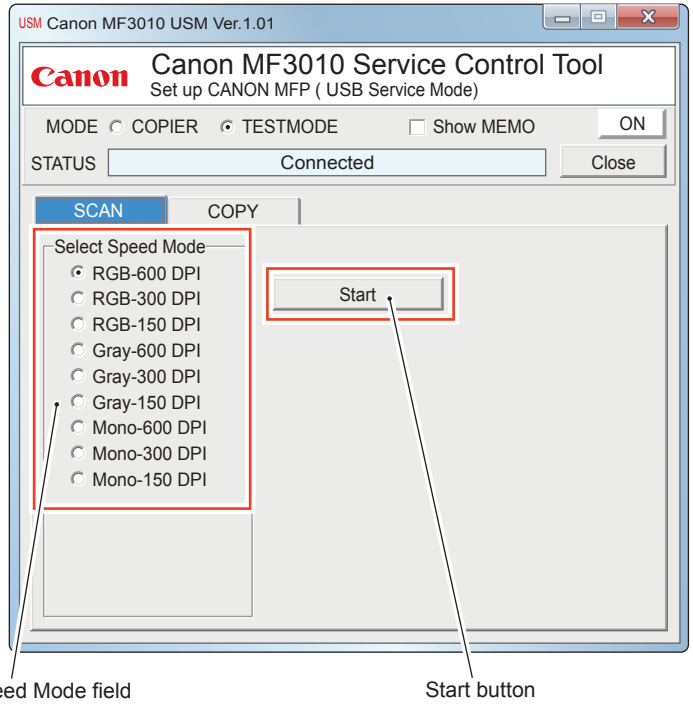

F-8-12

Select Speed Mode field	Select a speed mode for testing.
Start button	Start test.

T-8-12

Test in progress screen

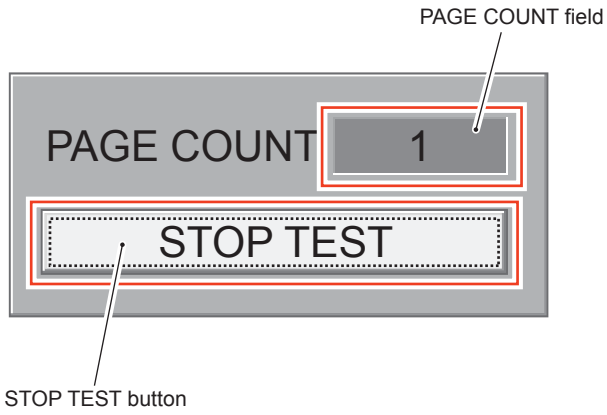

F-8-13

PAGE COUNT field	Display the number of reading operation.
STOP TEST button	Stop the test. The test is repeated until the STOP TEST button is pressed. The test continues until the job that was executed when the STOP TEST button was pressed ends.

T-8-13

NOTE:
By pressing the STOP TEST button, the following screen appears and the machine is waiting for completion of the test.

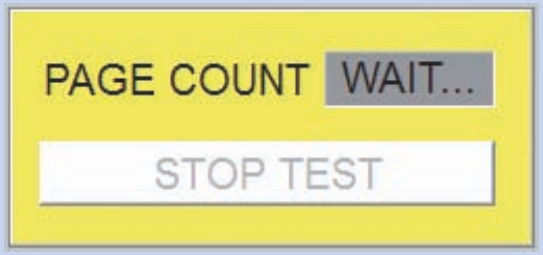

F-8-14

TESTMODE>SCAN
Description
Reading speed test Perform the driving test of the Read Motor (M3) using the specified speed mode. [Selection items] RGB-600 DPI, RGB-300 DPI, RGB-150 DPI, Gray-600 DPI, Gray-300 DPI, Gray-150 DPI, Mono-600 DPI, Mono-300 DPI, Mono-150 DPI

T-8-14

COPY

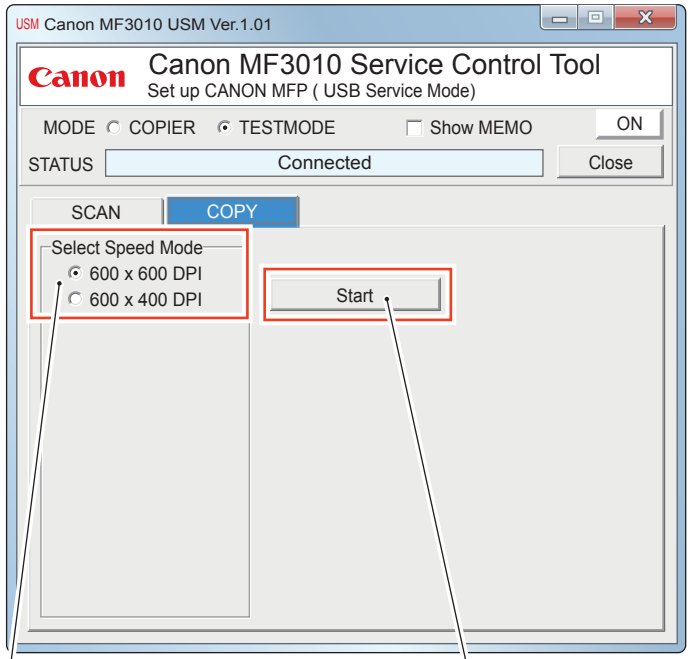

F-8-15

Select Speed Mode field	Select a speed mode for testing.
Start button	Start test. Before starting the test, be sure to load A4 or LTR paper.

T-8-15

Test in progress screen

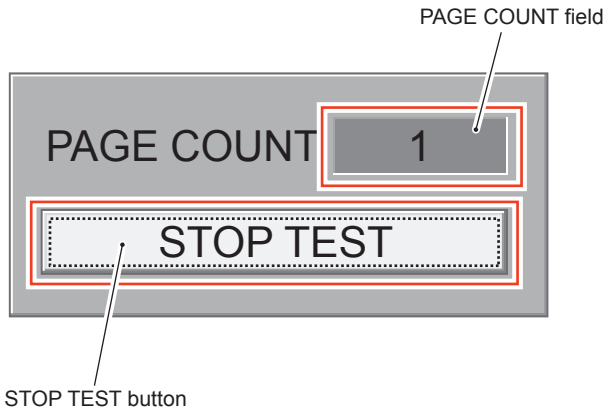

F-8-16

PAGE COUNT field	Display the number of copy operation.
STOP TEST button	Stop the test. The test is repeated until the STOP TEST button is pressed. The test continues until the job that was executed when the STOP TEST button was pressed ends.

T-8-16

NOTE:
By pressing the STOP TEST button, the following screen appears and the machine is waiting for completion of the test.

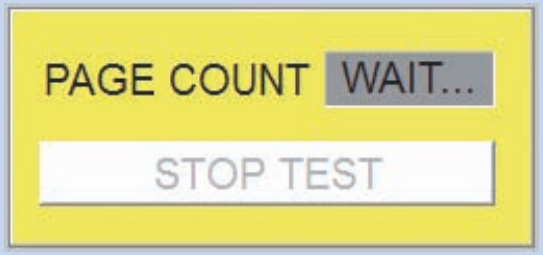

F-8-17

TESTMODE>COPY
Description
Copy operation test Perform the driving test of Feed Motor (M1) using the specified speed. [Selection items] 600 x 600 DPI, 600 x 400 DPI

T-8-17

Appendix

- Service Tools
- Solvent/Oil List
- General Circuit Diagram
- General Timing Chart

Service Tools

The followings are the required tools to perform the service operation.

No.	Tool name	Tool number	Usage/remarks
1	Tool case	TKN-0001	
2	Jumper wire	TKN-0069	With clip
3	Gap gauge	CK-0057	0.02 to 0.03mm
4	Spring scale	CK-0058	To check cassette spring pressure
5	Philips screwdriver	CK-0101	M4, M5 Length: 363mm
6	Philips screwdriver	CK-0104	M3, M4 Length: 155mm
7	Philips screwdriver	CK-0105	M4, M5 Length: 191mm
8	Philips screwdriver	CK-0106	M4, M5 Length: 85mm
9	Flat-blade screwdriver	CK-0111	
10	Precision slot head screwdriver	CK-0114	6 pieces set
11	Hex-key wrench set	CK-0151	5 pieces set
12	Smooth file	CK-0161	
13	Hex screwdriver	CK-0170	M4, Length: 107mm
14	Nipper	CK-0201	
15	Long-nose pliers	CK-0202	
16	Pliers	CK-0203	
17	Stop-ring pliers	CK-0205	For shaft ring
18	Crimping tool	CK-0218	
19	Tweezers	CK-0302	
20	Scale	CK-0303	150mm For measurement
21	Plastic hummer	CK-0314	
22	Brush	CK-0315	
23	Penlight	CK-0327	
24	Plastic bottle	CK-0328	
25	Lint-free paper	CK-0336	500SH/PKG
26	Oiler	CK-0349	30cm3
27	Plastic bottle	CK-0351	30cm3
28	Digital multi-meter	FY9-2032	

T-9-1

Solvent/Oil List

Name	Usage	Remarks
Ethyl alcohol	Cleaning e.g.) Metal parts Grease Toner contamination	• Local procurement • Keep fire away
Lubricant	• Apply it on gears etc. • Apply it on shafts and shaft supports etc.	• tool number: HY9-0007 (Dow Corning made Molykote EM-50L)

T-9-2

General Circuit Diagram

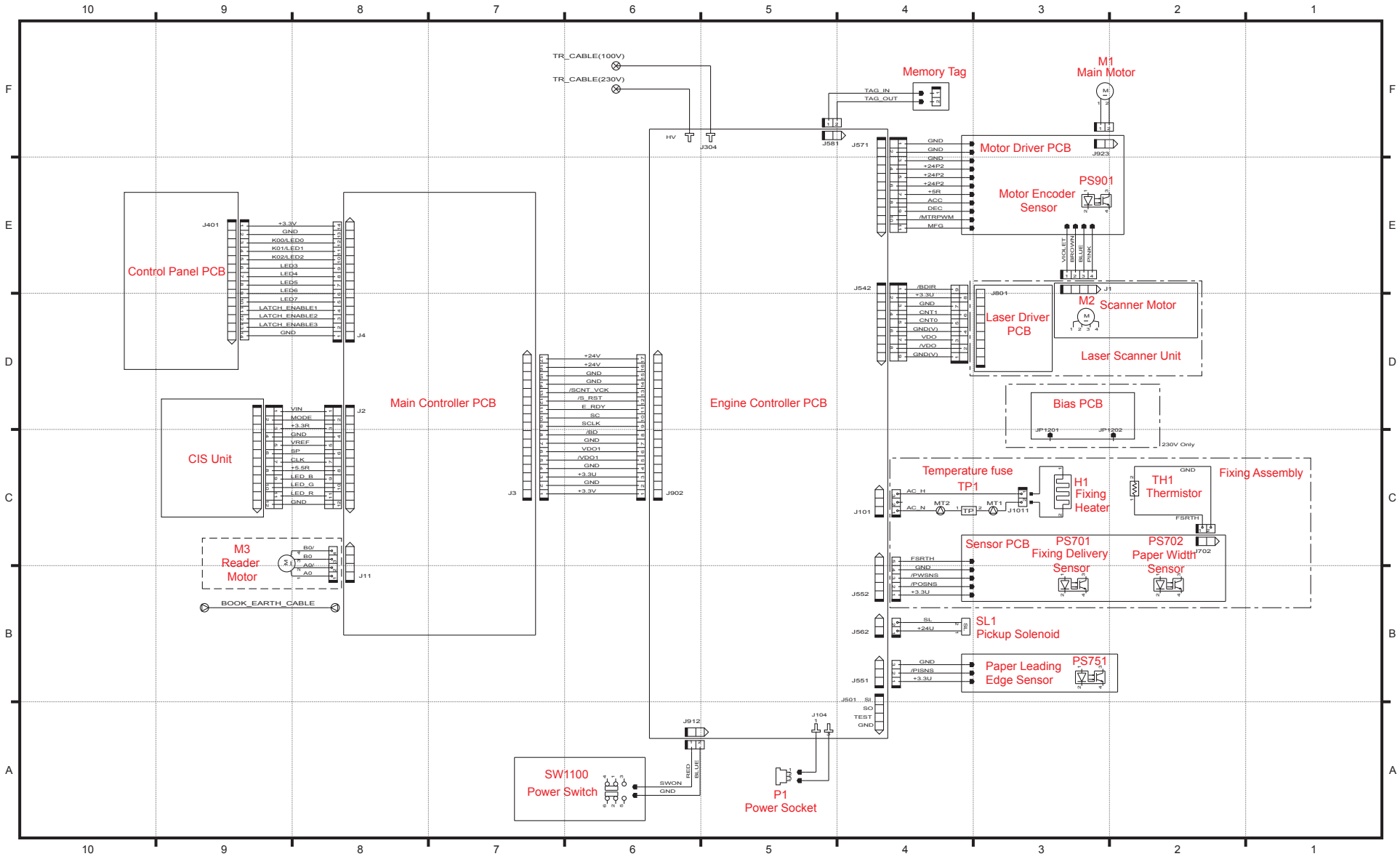

F-9-1

General Timing Chart

Print on A4 plain paper (2 pages) (Unit: second)

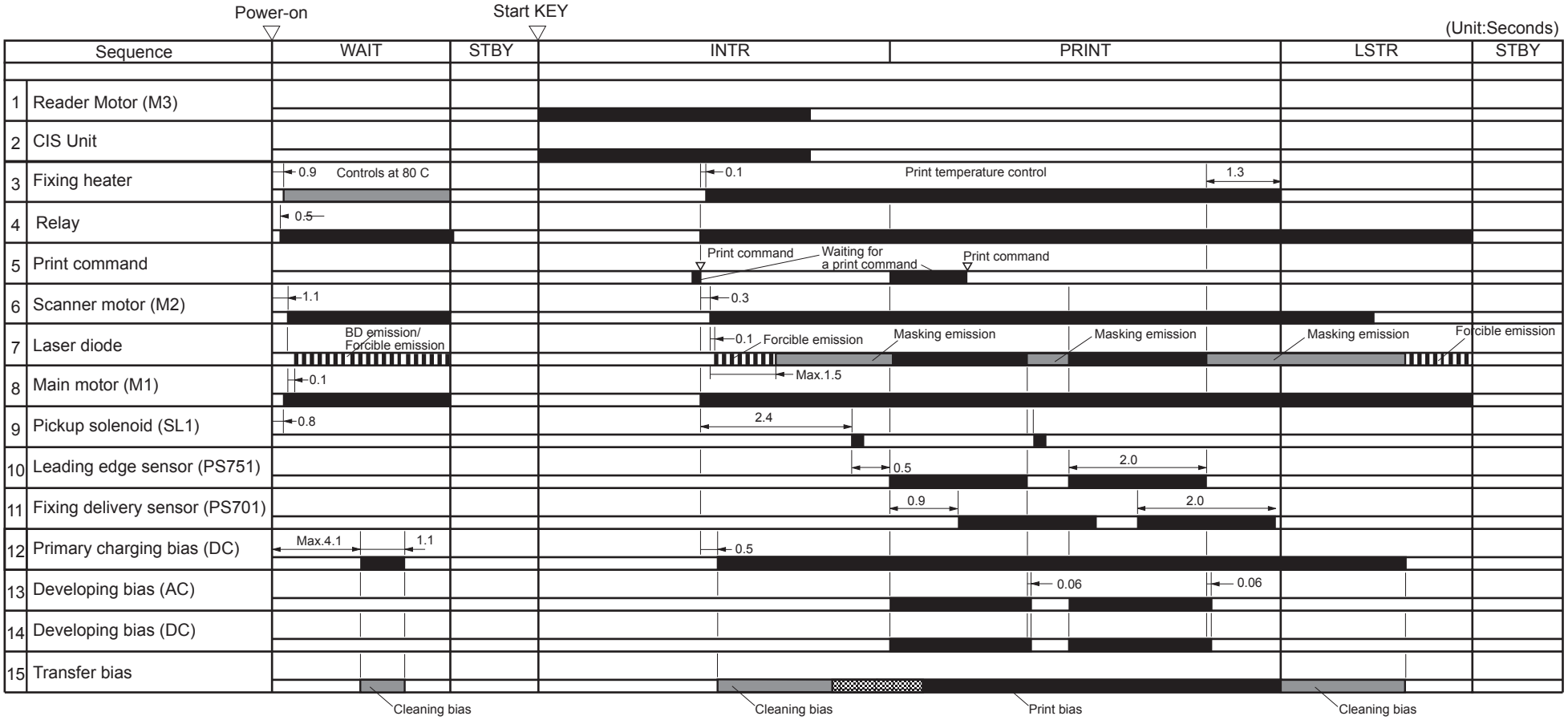

F-9-2