Portable Manual

MF6500 Series

www.tonerplus.com.ua

Canon

Feb 22 2006

Application

This manual has been issued by Canon Inc. for qualified persons to learn technical theory, installation, maintenance, and repair of products. This manual covers all localities where the products are sold. For this reason, there may be information in this manual that does not apply to your locality.

Corrections

This manual may contain technical inaccuracies or typographical errors due to improvements or changes in products. When changes occur in applicable products or in the contents of this manual, Canon will release technical information as the need arises. In the event of major changes in the contents of this manual over a long or short period, Canon will issue a new edition of this manual.

The following paragraph does not apply to any countries where such provisions are inconsistent with local law.

Trademarks

The product names and company names used in this manual are the registered trademarks of the individual companies.

Copyright

This manual is copyrighted with all rights reserved. Under the copyright laws, this manual may not be copied, reproduced or translated into another language, in whole or in part, without the written consent of Canon Inc.

COPYRIGHT © 2001 CANON INC.

Printed in Japan

Caution

Use of this manual should be strictly supervised to avoid disclosure of confidential information.

Symbols Used

This documentation uses the following symbols to indicate special information:

Symbol	Description
	Indicates an item of a non-specific nature, possibly classified as Note, Caution, or Warning.
	Indicates an item requiring care to avoid electric shocks.
	Indicates an item requiring care to avoid combustion (fire).
	Indicates an item prohibiting disassembly to avoid electric shocks or problems.
	Indicates an item requiring disconnection of the power plug from the electric outlet.
Memo	Indicates an item intended to provide notes assisting the understanding of the topic in question.
REF.	Indicates an item of reference assisting the understanding of the topic in question.
	Provides a description of a service mode.
Error	Provides a description of the nature of an error indication.

The following rules apply throughout this Service Manual:

1. Each chapter contains sections explaining the purpose of specific functions and the relationship between electrical and mechanical systems with reference to the timing of operation.
   In the diagrams, represents the path of mechanical drive; where a signal name accompanies the symbol , the arrow ⟶ indicates the direction of the electric signal.
   The expression "turn on the power" means flipping on the power switch, closing the front door, and closing the delivery unit door, which results in supplying the machine with power.
2. In the digital circuits, '1'is used to indicate that the voltage level of a given signal is "High", while '0' is used to indicate "Low".(The voltage value, however, differs from circuit to circuit.) In addition, the asterisk (*) as in "DRMD*" indicates that the DRMD signal goes on when '0'.
   In practically all cases, the internal mechanisms of a microprocessor cannot be checked in the field. Therefore, the operations of the microprocessors used in the machines are not discussed: they are explained in terms of from sensors to the input of the DC controller PCB and from the output of the DC controller PCB to the loads.

The descriptions in this Service Manual are subject to change without notice for product improvement or other purposes, and major changes will be communicated in the form of Service Information bulletins.
All service persons are expected to have a good understanding of the contents of this Service Manual and all relevant Service Information bulletins and be able to identify and isolate faults in the machine."

TONER
www.tonerplus.com.ua

Contents

Chapter 1 Maintenance and Inspection

1.1 Periodically Replaced Parts 1
1.1.1 Periodically Replaced Parts 1
1.2 Durables and Consumables 1
1.2.1 Durables 1
1.3 Scheduled Servicing Basic Procedure 1
1.3.1 Periodeical Service Items 1

Chapter 2 Standards and Adjustments

2.1 Scanning System 3
2.1.1 Procedure after Replacing the CS 3
2.2 Fixing System 3
2.2.1 ï¾çsê´ÇÃíðêÆ 3
2.3 Electrical Adjustment 3
2.3.1 Procedure after Replacing the Image Processor PCB 3
2.3.2 Actions to Take before All Clearing (Backing up the User Data) 3
2.4 ADF 4
2.4.1 Outline 4
2.4.1.1 Outline 4
2.4.1.2 Preparing a Test Sheet for Adjustment 4
2.4.2 Adjusting the Mechanical System 4
2.4.2.1 Adjusting the Perpendicularity 4
2.4.3 Adjusting the Mechanical System 4
2.4.3.1 Adjusting the Magnification 4
2.4.3.2 Adjusting the Horizontal Registration 5
2.4.3.3 Leading edge registration adjustment 5

Chapter 3 Error Code

3.1 Jam Code 7
3.1.1 Jam Codes (Main body) 7
3.1.2 Jam Codes (ADF) 7

Chapter 4 User Mode Items

4.1 User Mode Items 9
4.1.1 COMMON SETTINGS 9
4.1.2 COPY SETTINGS 9
4.1.3 FAX SETTINGS 10
4.1.4 ADDRESS BOOK SET. 10
4.1.5 PRINTER SETTINGS 11
4.1.6 TIMER SETTINGS 11

4.1.7ADJUST./CLEANING 11
4.1.8REPORT SETTINGS 12
4.1.9SYSTEM SETTINGS 12

Chapter 5 Service Mode

5.1 Service Soft Switch Settings (SSSW) 15
5.1.1 SSSW-SW01 15
5.1.1.1 List of Functions 15
5.1.1.2 Detailed Discussions of Bit 0 15
5.1.2 SSSW-SW03 15
5.1.2.1 List of Functions 15
5.1.2.2 Detailed Discussions of Bit 7 15
5.1.3 SSSW-SW04 15
5.1.3.1 List of Functions 15
5.1.3.2 Detailed Discussions of Bit 2 15
5.1.3.3 Detailed Discussions of Bit 3 16
5.1.3.4 Detailed Discussions of Bit 4 16
5.1.3.5 Detailed Discussions of Bit 6 16
5.1.3.6 Detailed Discussions of Bit 7 16
5.1.4 SSSW-SW05 16
5.1.4.1 List of Functions 16
5.1.4.2 Detailed Discussions of Bit 1 16
5.1.4.3 Detailed Discussions of Bit 2 16
5.1.5 SSSW-SW12 16
5.1.5.1 List of Functions 16
5.1.6 SSSW-SW13 17
5.1.6.1 List of Functions 17
5.1.6.2 Detailed Discussions of Bit 2 17
5.1.7 SSSW-SW14 17
5.1.7.1 List of Functions 17
5.1.7.2 Detailed Discussions of Bit 2 18
5.1.7.3 Detailed Discussions of Bit 4 18
5.1.8 SSSW-SW28 18
5.1.8.1 List of Functions 18
5.1.8.2 Detailed Discussions of Bit 0 18
5.1.8.3 Detailed Discussions of Bit 1 18
5.1.8.4 Detailed Discussions of Bit 2 18
5.1.8.5 Detailed Discussions of Bit 3 18
5.1.8.6 Detailed Discussions of Bit 4 18
5.1.8.7 Detailed Discussions of Bit 5 18
5.1.9 SSSW-SW30 18
5.1.9.1 List of Functions 18
5.1.9.2 Detailed Discussions of Bit 5 19
5.2 Menu Switch Settings (MENU) 19
5.2.1Menu Switch Composition 19
5.2.2<No.005 NL equalizer> 19
5.2.3<No.006 telephone line monitor> 19
5.2.4<No.007 ATT transmission level> 19

5.2.5<No.008 V.34 modulation speed upper limit> 19
5.2.6<No.009 V.34 data speed upper limit> 19
5.2.7<No.010 Frequency of the pseudo CI signal> 19
5.3 Numeric Parameter Settings (NUMERIC Param.) 20
5.3.1<No.010 Frequency of the pseudo CI signal> 20
5.3.2<002: RTN transmission condition (1)><003: RTN transmission condition (2)><004: RTN transmission condition (3)> 20
5.3.3<005: NCC pause length (pre-ID code)> 20
5.3.4<006: NCC pause length (post-ID code)> 20
5.3.5<010: line connection identification length> 20
5.3.6<011: T.30 T1 timer (for reception)> 21
5.3.7<013: T.30 EOL timer> 21
5.3.8<016: time length to first response at time of fax/tel switchover> 21
5.3.9<017: pseudo RBT signal pattern ON time length><018: pseudo RBT signal pattern OFF time length (short)><019: pseudo RBT signal pattern OFF time length (long)> 21
5.3.10<020: pseudo CI signal pattern ON time length><021: pseudo CI signal pattern OFF time length (short)><022: pseudo CI signal pattern OFF time length (long)> 21
5.3.11<023: CNG detention level for fax/tel switchover> 21
5.3.12<024: pseudo RBT transmission level at time of fax/tel switchover> 21
5.3.13<025: Answering machine connection function signal detection time> 21
5.3.14<027: V.21 low-speed flag preamble identification length> 21
5.4 Scanner Function Settings (SCANNER) 21
5.4.1Numeric Parameter Functional configuration 21
5.4.2<024:CIS scan position during ADF scanning> 22
5.4.3<026:Distance from the standby position of CIS to the shading start point> 22
5.4.4<031Vertical scan start position adjustment> 22
5.4.5<032Horizontal scan start position adjustment> 22
5.4.6<033Vertical scan magnification correction> 22
5.4.7<034Horizontal scan magnification correction> 22
5.4.8<035: - 036:Reader motor speed change> 22
5.4.9<041: Vertical scan start position adjustment (when scanning on a document fed from ADF)> 22
5.4.10<042: Horizontal scan start position adjustment (when scanning on a document fed from ADF)> 23
5.4.11<043: Horizontal scan end position correction ((copy:scanning on ADF)> 23
5.4.12<044: Horizontal scan end position correction (superfine:scanning on ADF)> 23
5.4.13<045: Horizontal scan end position correction (fine:scanning on ADF)> 23
5.4.14<046: Horizontal scan end position correction (standard:scanning on ADF)> 23
5.4.15<047: Vertical scan magnification correction (when scanning on a document fed from ADF)> 23
5.4.16<048: Horizontal scan magnification correction (when scanning on a document fed from ADF)> 23
5.4.17<054: Pickup motor speed correction (when the ADF is used) > 23
5.4.18<193: ADF special standard-sized paper: LGL misidentification-ready> 23
5.4.19<194: ADF special standard-sized paper: LTR misidentification-ready> 23
5.4.20<195: ADF special standard-sized paper: LTR_R misidentification-ready> 23
5.5 Printer Function Settings (PRINTER) 24
5.5.1 Service Soft Switch Settings (SSSW) 24
5.5.1.1 SSSW-SW05 24
5.5.1.2 SSSW-SW14 24
5.5.1.3 SSSW-SW15 25

5.5.2 Numeric Parameter Settings (NUMERIC Param.) 25
5.5.2.1 Numeric Parameter Functional configuration 25
5.5.2.2 <031: Top registration adjustment (manual feed tray)> 26
5.5.2.3 <032: Top registration adjustment (cassette)> 26
5.5.2.4 <033: Top registration adjustment (duplex unit)> 26
5.5.2.5 <034: Left-end registration adjustment (manual feed tray)> 26
5.5.2.6 <035: Left-end registration adjustment (cassette 1)> 26
5.5.2.7 <036: Left-end registration adjustment (cassette 2)> 26
5.5.2.8 <039: Left-end registration adjustment (duplex unit)> 26
5.5.2.9 <040: Target fixing temperature adjustment (manual feed tray)> 26
5.5.2.10 <041: Target fixing temperature adjustment (cassette 1)> 26
5.5.2.11 <042: Target fixing temperature adjustment (cassette 2)> 26
5.5.2.12 <053: Margin adjustment at the leading edge of the copy> 26
5.5.2.13 <054: Margin adjustment at the trailing edge of the copy> 26
5.5.2.14 <055: Margin adjustment at the right edge of the copy> 26
5.5.2.15 <056: Margin adjustment at the left edge of the copy> 26
5.6 Counter Indication (COUNTER) 27
5.6.1 Counters 27
5.6.2 Clearing Counters 27
5.7 Report Output (REPORT) 28
5.7.1 Report Output 28
5.7.2 System Data List 28
5.7.3 System Dump List 28
5.7.4 Counter List 30
5.7.5 Error Log List 30
5.7.6 Spec List 32
5.7.7 Service Label 33
5.8 Data Initialization Mode (CLEAR) 34
5.8.1 Clear 34
5.9 Test Mode (TEST) 34
5.9.1 Overview 34
5.9.1.1 Outline 34
5.9.1.2 Test Mode Menu List 34
5.9.2 DRAM Test 36
5.9.2.1 D-RAM Test<(1) D-RAM TEST> 36
5.9.3 Scan Test 37
5.9.3.1 Scan Test ((2) SCAN TEST) 37
5.9.4 Print Test 37
5.9.4.1 Print Test ((3) PRINT TEST) 37
5.9.5 Modem Test 37
5.9.5.1 MODEM Test ((4) MODEM TEST) 37
5.9.6 Faculty Test 39
5.9.6.1 FUNCTION TEST <(6) FUNCTION TEST> 39
5.9.7 Cleaning Mode 43
5.9.7.1 Roller cleaning mode ((0) ROLLER CLEAN) 43

Chapter 6 System Construction

6.1 Construction 45

6.1.1Functional Construction 45
6.1.2Functional Block Diagram 46
6.1.3Image Processor PCB 46
6.1.4DC Controller PCB 47
6.1.5Analog Processor PCB 48
6.1.6Power Supply PCB 48
6.1.7Relay PCB 48
6.1.8Control Panel PCB 48
6.1.9Network PCB Åiif equipped with network functionsÅj 48
6.1.10NCU PCB (if equipped with fax functions) 48
6.1.11Modular Jack PCB (if equipped with fax functions) 48
6.2 System Construction 48
6.2.1System Construction 48
6.3 Product Specifications 50
6.3.1Product Specifications 50
6.3.2ADF Specifications 51
6.4 Function List 51
6.4.1Printing Speed 51
6.4.2Types of Paper 52

Chapter 7 Upgrading

7.1 Upgrading 55
7.1.1Overview of Upgrade 55

Chapter 1 Maintenance and Inspection

1.1 Periodically Replaced Parts

1.1.1 Periodically Replaced Parts

LaserBase MF6530 / / LaserBase MF6540PL / LaserBase MF6550 / KaserBase MF6560PL / / LaserBase MF6580PL

The machine does not have parts that require periodical replacement.

1.2 Durables and Consumables

1.2.1 Durables

LaserBase MF6530 / / LaserBase MF6540PL / LaserBase MF6550 / KaserBase MF6560PL / / LaserBase MF6580PL

The machine does not have durables.

1.3 Scheduled Servicing Basic Procedure

1.3.1 Periodeical Service Items

LaserBase MF6530 / / LaserBase MF6540PL / LaserBase MF6550 / KaserBase MF6560PL / / LaserBase MF6580PL

The machine does not have periodecal service items.

Chapter 2 Standards and Adjustments

2.1 Scanning System

2.1.1 Procedure after Replacing the CS

LaserBase MF6530 / / LaserBase MF6540PL / LaserBase MF6550 / KaserBase MF6560PL / / LaserBase MF6580PL

After replacing the contact sensor (CS), go through the following steps to perform inter-channel output correction:
1) Enter the service mode.
Sequentially press the Additional functions key, 2 key, 8 key, and Additional functions key on the operation panel.
2) Press the arrow key on the touch panel to display "TEST MODE".
3) Press [OK].
4) Press the [2] key to display "SCAN TEST".
5) Press the [1] key to display "SHADING".
6) Press [OK].
After completion of the above procedure, the contact sensor output is compensated and parameters are set automatically.
After completion of automatic adjustment, "OK" is displayed.

2.2 Fixing System

2.2.1 ï¾çsê´ÇÃíðêÆ

LaserBase MF6530 / / LaserBase MF6540PL / LaserBase MF6550 / KaserBase MF6560PL / / LaserBase MF6580PL

2.3 Electrical Adjustment

2.3.1 Procedure after Replacing the Image Processor PCB

LaserBase MF6530 / / LaserBase MF6540PL / LaserBase MF6550 / KaserBase MF6560PL / / LaserBase MF6580PL

If you have replaced the image processor PCB with a new one, perform the following operations:
- Using the service support tool, download the latest firmware (System/Boot/PCL*1) and language files.
*1: if equiped with PCL functions.
- Input the all value printed on the service label affixed to the rear cover.
Make the following adjustments:
- Correction of output between CIS channels
1) Enter the service mode.
Sequentially press the Additional functions key, 2 key, 8 key, and Additional functions key on the operation panel.
2) Press the arrow key on the touch panel to display "TEST MODE".
3) Press [OK].
4) Press the [2] key to display "SCAN TEST".
5) Press the [1] key to display "SHADING".
6) Press [OK].
After completion of the above procedure, the contact sensor output is compensated and parameters are set automatically.
After completion of automatic adjustment, "OK" is displayed.
- Read position adjustment (Stream reading: Only when the ADF is installed)
1) Enter the service mode.
Sequentially press the Additional functions key, 2 key, 8 key, and Additional functions key on the operation panel.
2) Press the arrow key on the touch panel to display "TEST MODE".
3) Press [OK].
4) Press the [2] key to display "SCAN TEST".
5) Press the [3] key to display "SHEET POS ADJ".
6) Press [OK].
The optical system starts scanning. Several seconds later, automatic adjustment of the reading position finishes and "OK" appears.

If automatic adjustment fails, "NG" appears. Perform the following procedure:
Clean the platen guide of the DADF and the document glass of the host machine, and then retry auto adjustment.

2.3.2 Actions to Take before All Clearing (Backing up the User Data)

LaserBase MF6530 / / LaserBase MF6540PL / LaserBase MF6550 / KaserBase MF6560PL / / LaserBase MF6580PL

- Performing the all-clear operation in the service mode (#CLEAR > ALL) erases/initializes the user data such as address data and user mode settings.
  Be sure to back up the user data with the data export function before starting the all-clear operation, and then load the user data with tbe data import function.
- To export and import user data, a PC and a USB cable are required. Have them on hand.

a. Exporting user data
1) Output a user data list in the following user mode.
> Report Setting > Plint List > User Data List
2) Press the following keys to enter the service mode.
> 2 key > 8 key >
3) Select "#SYSTEM" using ◀ or ▶, and then press the OK.
4) Select "#SYSTEM SW" using ◀ or ▶, and then press the OK.
5) Press the following keys to display "SW003."
> 0 key > 3 key
Message: #SYSTEM SW003 00001000
6) Position the cursor at Bit-6 (second from left) using ◀ or ▶, and then press the 1 key.
Message: #SYSTEM SW003 01001000
7) Press the OK key. Check that "SW003" changes to "SW004".
Message: #SYSTEM SW004 00000000
8) Press the Reset key to exit the service mode.
9) Turn off the main power switch, and then turn it on again.
10) Start the PC and connect it to this machine with a USB cable.
11) Open My Computer on the PC to check that the "Removable Disk" icon is displayed. If the "Removable Disk" icon is not displayed, repeat the above procedure starting with step 1.
12) Double-click the "Removable Disk" icon, and then copy the user data (address_book.abk and user_data.dat) onto the Desktop.
13) Close the window on the Desktop.
14) Turn off the main power switch of this machine.
15) Disconnect the USB cable from this machine.

b. Importing user data
1) Press the flowing keys to enter the service mode.
> 2 key > 8 key >
2) Select "#SYSTEM" using ◀ or ▶, and then press the OK.
4) Select "#SYSTEM SW" using ◀ or ▶, and then press the OK.
5) Press the following keys to display "SW003".
> 0 key > 3 key
Message: #SYSTEM SW003 00001000
5) Check that Bit-6 (second from left) is set to set to "1". If Bit-6 is not set to "1", position the cursor at this bit using ◀ or ▶ and then press the 1 key.
Message: #SYSTEM SW003 01001000
6) Press the OK key. Check that "SW003" changes to "SW004".
Message: #SYSTEM SW004 00000000
7) Press the Reset key to exit the service mode.
8) Turn off the main power switch, and then turn it on again.
9) Open My Computer on the PC to check that the "Removal Disk" icon is displayed.
11) Write the user data (address_book.abk and user_data.dat) copied onto the Desktop as described in "a. Exporting user data" over the removable disk.
12) Disconnect the USB cable from the machine.
13) Turn off the main power switch of the machine.
14) Perform steps 1) to 4) again to reset Bit-6 of "SW003" to "0".
15) Press the OK key. When "SW003" changes to "SW004", press the Reset key to exit the service mode.
16) Check the user data list output as described in "a. Exporting user data" to make sure that the user data has been loaded into the machine properly.

TONER
www.tonerplus.com.ua

2.4 ADF

2.4.1 Outline

2.4.1.1 Outline

LaserBase MF6530 / / LaserBase MF6540PL / LaserBase MF6550 / KaserBase MF6560PL / / LaserBase MF6580PL

This machine has the following adjustment items. Make the necessary adjustments after replacing each part.

T-2-1

No.	Adjustment type	Replaced parts
[1]	Perpendicularity adjustment	Hinge
[2]	Magnification adjustment	Motor/roller
[3]	Side registration adjustment	-
[4]	Leading edge registration adjustment	-

2.4.1.2 Preparing a Test Sheet for Adjustment

LaserBase MF6530 / / LaserBase MF6540PL / LaserBase MF6550 / KaserBase MF6560PL / / LaserBase MF6580PL

Preparing a Test Sheet: On a sheet of A4 or LTR paper, draw straight lines as indicated:

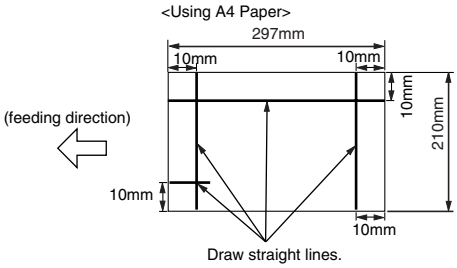

F-2-1

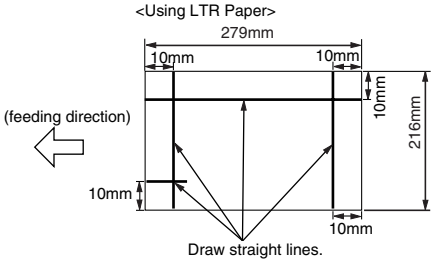

F-2-2

2.4.2 Adjusting the Mechanical System

2.4.2.1 Adjusting the Perpendicularity

LaserBase MF6530 / / LaserBase MF6540PL / LaserBase MF6550 / KaserBase MF6560PL / / LaserBase MF6580PL

1) reate a test chart, load it in the DADF, and make a copy of it.
2) Compare the lines at the end of the test chart with those on the copy for perpendicularity. Measure dimensions A and B at the end of the copy and adjust the amount of skew (the range shown in the table) to within the spec.

T-2-2

	Dimension (using A4)	Dimension (using LTR)
A-B	0 +/- 1.5 mm	0 +/- 1.5 mm

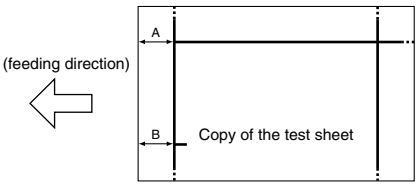

F-2-3

3) Loosen the two screws [1] securing the right hinge and slide the hinge according to the sale markings so that the perpendicularity is within spec.

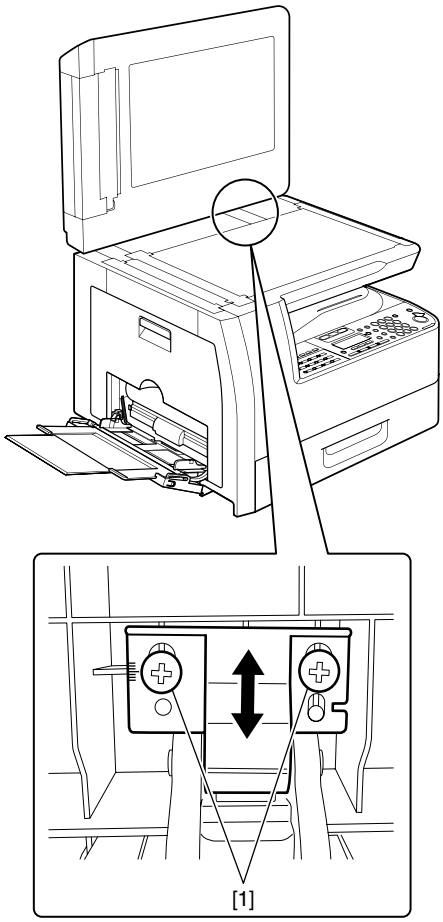

F-2-4

4) Tighten the screws you loosened in step 3.

2.4.3 Adjusting the Mechanical System

2.4.3.1 Adjusting the Magnification

LaserBase MF6530 / / LaserBase MF6540PL / LaserBase MF6550 / KaserBase MF6560PL / / LaserBase MF6580PL

1) Create a test chart, load it in the DADF, and make a copy of it. This copy is called copy A.
2) Compare the longitudinal image length on the test chart with that on copy A. If required, make an adjustment in the service mode.
(A4-size paper: 277 +/-1mm LTR paper: 59 +/-1mm)
Image on copy A is shorter. -> Increase the value (or reduce the stream reading speed).
Image on copy A is longer. -> Decrease the value (or increase the stream reading speed).
3) Enter the service mode.
Sequentially press the User Mode key, 2 key, 8 key, and User Mode key on the operation panel of the host machine.
4) Using the arrow keys on the operation panel, display "#SCAN".
5) Press the OK key.
6) Using the arrow keys on the operation panel, display "#SCAN NUMERIC".
7) Press the OK key.
8) Using the arrow keys, select "48".

9) Using the numeric keys, change the value to determine the optimum value. Next, press the OK key. (Default: 32)

Do not change the adjustment value excessively.

2.4.3.2 Adjusting the Horizontal Registration

LaserBase MF6530 / / LaserBase MF6540PL / LaserBase MF6550 / KaserBase MF6560PL / / LaserBase MF6580PL

1) Load the test chart in the DADF and make a copy of it.
2) Compare the horizontal registration of the chart with that of the copy. If required, make an adjustment.
The specified horizontal registration is 10mm +/-2mm.

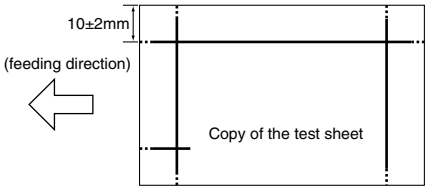

F-2-5

1) Load the test chart in the DADF and make a copy of it.
2) Compare the horizontal registration of the chart with that of the copy. If required, make an adjustment.
The specified horizontal registration is 10mm +/-2mm.
3) Enter the service mode.
Sequentially press the User Mode key, 2 key, 8 key, and User Mode key on the operation panel of the host machine.
4) Using the arrow keys on the operation panel, display "#SCAN".
5) Press the OK key.
6) Using the arrow keys on the operation panel, display "#SCAN NUMERIC".
7) Press the OK key.
8) Using the arrow keys, select "41".
9) Using the numeric keys, change the value to determine the optimum value. Next, press the OK key. (Default: 0)

If the registration cannot be set to the specified value using software, use the following procedure:
1) Open the ADF pickup tray.
2) Loosen the two screws [1] and move the slide guide forward or backward according to the scale calibrated in mm so that the registration is within spec.

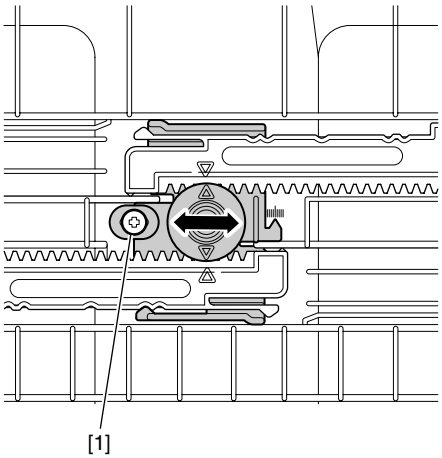

F-2-6

MEMO:
Making copies with the slide guide shifted 1 mm upward will increase the right registration (on the upper side of paper) by 1 mm.

2.4.3.3 Leading edge registration adjustment

LaserBase MF6530 / / LaserBase MF6540PL / LaserBase MF6550 / KaserBase MF6560PL / / LaserBase MF6580PL

1) Load the test chart in the DADF and make a copy of it.
2) Compare the end registration of the test chart with that on the copy. If required, make an adjustment.
The specified end registration is 10mm +/-2mm.

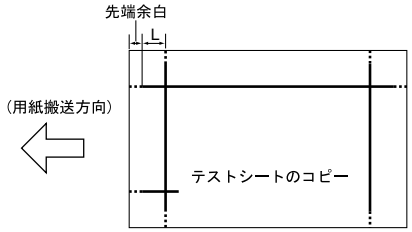

F-2-7

The image is shifted to the left. -> Decrease the value.
The image is shifted to the right. -> Increase the value.
Unit of adjustment 1 = 0.1 mm
3) Enter the service mode.
Sequentially press the User Mode key, 2 key, 8 key, and User Mode key on the operation panel of the host machine.
4) Using the arrow keys on the operation panel, display "#SCAN".
5) Press the OK key.
6) Using the arrow keys on the operation panel, display "#SCAN NUMERIC".
7) Press the OK key.
8) Using the arrow keys, select "42".
9) Using the numeric keys, change the value to determine the optimum value. Next, press the OK key. (Default: 219)

If the registration cannot be set to the specified value using software, make adjustments again starting with the perpendicular adjustment.

Chapter 3 Error Code

3.1 Jam Code

3.1.1 Jam Codes (Main body)

LaserBase MF6530 / / LaserBase MF6540PL / LaserBase MF6550 / KaserBase MF6560PL / / LaserBase MF6580PL

T-3-1

Code	Name	Sensor No.	Description
0104	Delay jam in paper pickup section	SR11	The registration sensor cannot detect the leading edge of paper from the moment paper pickup starts to the moment the jam detection time is reached.
0208	Stationary jam in paper pickup section	SR11	The registration sensor cannot detect the no paper status specified time before the leading edge of the picked up paper reaches this sensor.
010c	Delay jam in deliver section	SR5	- The delivery sensor cannot detect presence of paper within the specified time after turning on of the registration clutch. - The delivery sensor detected absence of paper within the specified time after the sensor had detected presence of paper within the specified time after turning on of the registration clutch.
0210	Stationary jam in delivery section	SR5	- The delivery sensor cannot detect absence of paper within the specified time after turning off of the registration clutch. - The delivery sensor cannot detect absence of paper within the specified time after the sensor detected the leading edge of paper.
0214	Stationary jam in machine	SR5, SR9	Paper was detected in the paper transport path during initial rotation, during automatic delivery, at the end of cleaning, or at reception of an emergency stop command.
1118	Door open jam	SW2, SR5, SR9, SR11	The door was opened when there was printing paper in the transport path.

3.1.2 Jam Codes (ADF)

LaserBase MF6530 / / LaserBase MF6540PL / LaserBase MF6550 / KaserBase MF6560PL / / LaserBase MF6580PL

T-3-2

Code	Name	Sensor No.	Description
0000	Unknown jam	-	Other errors
0007	Initial stationary	SR2002, SR2003, SR2004	Paper is detected in the transport path before the DADF starts initial operation.
0008	Document edge sensor delay	SR2002	The document edge sensor does not detect paper when the paper has been fed by the predetermined distance since reception of a pickup request.
0009	Document edge sensor stationary	SR2002	The trailing edge of paper is not detected when the paper has been fed by the predetermined distance since detection of it by the document edge sensor.
000a	Paper absence (Pull out the document.)	SR2001	The Document set sensor has been held off since start of pickup.
0010	Pickup NG	SR2003	The registration sensor has been held off since paper pickup started.

Chapter 4 User Mode Items

4.1 User Mode Items

4.1.1 COMMON SETTINGS

LaserBase MF6530 / / LaserBase MF6540PL / LaserBase MF6550 / KaserBase MF6560PL / / LaserBase MF6580PL

MEMO:
User modes of the USA model (Copy + Print + Scan + Fax + ADF + Network + PCL) are described. Menus and defaults may vary depending on the destination. For details, refer to the User's Guide.

Additional Functions	Available Settings
1. DEFAULT SETTINGS	COPY, FAX(*), SCAN
2. AUTO CLEAR SET.	INITIAL FUNCTION(*), SELECTED FUNCTION
3. AUDIBLE TONES	ENTRY TONE: ON (volume 1(*) to 3), OFF
	ERROR TONE: ON (volume 1(*) to 3), OFF
	TX JOB DONE TONE: ERROR ONLY (volume 1(*) to 3), OFF, ON (volume 1(*) to 3)
	RX JOB DONE TONE: ERROR ONLY (volume 1(*) to 3), OFF, ON (volume 1(*) to 3)
	SCAN DONE TONE: ERROR ONLY (volume 1(*) to 3), OFF, ON (volume 1(*) to 3)
	PRINT DONE TONE: ERROR ONLY (volume 1(*) to 3), OFF, ON (volume 1(*) to 3)
4. TONER SAVER MODE	OFF(*), ON
5. PRINTER DENSITY	1 to 9 (5(*))
6. AUTO DRAWER SELCT	COPY: CASSETTE 1 (ON(*), OFF), CASSETTE 2 (ON(*), OFF), MP TRAY (OFF(*), ON)
	PRINTER: CASSETTE 1 (ON(*), OFF), CASSETTE 2 (ON(*), OFF)
	FAX: CASSETTE 1 (ON(*), OFF), CASSETTE 2 (ON(*), OFF), MP TRAY (OFF(*), ON)
	OTHER: CASSETTE 1 (ON(*), OFF), CASSETTE 2 (ON(*), OFF), MP TRAY (OFF(*), ON)
7. SELECT PAPER TYPE	CASSETTE 1, CASSETTE 2
8. REG. PAPER TYPE	CASSETTE 1: PLAIN PAPER(*), COLOR, RECYCLED, HEAVY PAPER 1, BOND, HOLE PUNCH PAPER
	CASSETTE 2: PLAIN PAPER(*), COLOR, RECYCLED, HEAVY PAPER 1, BOND, HOLE PUNCH PAPER
9. ENERGY IN SLEEP	LOW(*), HIGH
10. MP TRAY STD SET	OFF(*), ON: PAPER SIZE (LTR, SMTR, EXECUTIV, OFICIO, BRAZIL-OFICIO, MEXICO-OFICIO, FOLIO, G-LTR, FLSP, COM10, MONARCH, DL, ISO-C5, ISO-B5, FREESIZE, A4, B5, A5R, LGL), SELECT PAPER TYPE (PLAIN PAPER, COLOR, RECYCLED, HEAVY PAPER 1, HEAVY PAPER 2, HEAVY PAPER 3, BOND, HOLE PUNCH PAPER, TRANSPARENCY, LABELS, ENVELOPE)
11. PAPER FEED SWITCH	MP TRAY (SPEED PRIORITY(*), PRINT SIDE), CASSETTE 1 (SPEED PRIORITY(*), PRINT SIDE), CASSETTE 2 (SPEED PRIORITY(*), PRINT SIDE)
12. DISPLAY LANGUAGE	ENGLISH(*), FRENCH, SPANISH, PORTUGUESE
13. ADF DIRTY ERROR	DISPLAY(*), DO NOT DISPLAY
14. INIT. COMMON SET.	OFF(*), ON

*: indicates factory settings.

4.1.2 COPY SETTINGS

LaserBase MF6530 / / LaserBase MF6540PL / LaserBase MF6550 / KaserBase MF6560PL / / LaserBase MF6580PL

Additional Functions	Available Settings
1. IMAGE DIR PRIORTY	OFF(*), ON

Additional Functions	Available Settings
2. STANDARD SETTINGS	IMAGE QUALITY: TEXT/PHOTO(*), TEXT, PHOTO
	DENSITY: AUTO(*), MANUAL (-LT - DK+: 9 steps, 5)
	ZOOM RATIO: PRESET RATIO (DIRECT 100%(*), 115% B5->A4, 121% LGL->11x17, 122% A5->B5,129% STMT->LTR,141% A5->A4, 200% MAX., 50% MIN., 64%, 70% A4->A5, 73% 11X17->LGL, 78% LGL->LTR, 81% B5->A5, 86% A4->B5), MANUAL
	COPIES: 1(*) to 99
	AUTO COLLATE: OFF(*), COLLATE
	TWO-SIDED: OFF(*), 1 > 2-SIDED, 2 > 2-SIDED, 2 > 1-SIDED
	FRAME ERASE: OFF(*), ORG. FRAME ERASE, BOOK FRAME ERASE, BINDING HOLE
	PAPER SELECT: AUTO(*), CASSETTE 1, CASSETTE 2
3. SHARPNESS	1 to 9 (5(*))
4. PAPER SIZE GROUP	A, AB, INCHES(*)
5. MM/INCH ENTRY	mm, INCHES(*)
6. INIT. COPY SET.	OFF(*), ON

*: indicates factory settings.

4.1.3 FAX SETTINGS

LaserBase MF6530 / / LaserBase MF6540PL / LaserBase MF6550 / KaserBase MF6560PL / / LaserBase MF6580PL

Additional Functions	Available Settings
1.RX MODE	FAXONLY, FAXTEL, ANSMODE, DRPD, MANUAL
2. USER SETTINGS	UNIT TELEPHONE #
	UNIT NAME
	TX TERMINAL ID: PRINTING POSITION: OUTSIDE IMAGE(*), INSIDE IMAGE, TELEPHONE # MARK: FAX(*), TEL
	SCANNING DENSITY: -LT - DK+ 9 steps (5(*))
	TEL LINE TYPE: TOUCH TONE(*), ROTARY PULSE
	VOLUME CONTROL: MONITOR VOL. CTRL (0 - 3 (1(*))), CALLING VOLUME (0 - 3 (1(*)))
	OFFHOOK ALARM: ON, OFF(*)
	STANDARD SETTINGS: DENSITY (STANDARD(*), DK, LT), IMAGE QUALITY (STANDARD(*), FINE, PHOTO, SUPER FINE, ULTRA FINE), DIRECT TX (OFF(*), ON)
	INIT. FAX STD SET: OFF(*), ON
3. TX SETTINGS	ECM TX: ON(*), OFF
	PAUSE TIME: 1 to 15 (4(*)) SEC.
	AUTO REDIAL: ON (REDIAL TIMES, REDIAL INTERVAL, TX ERROR REDIAL)(*), OFF
	TIME OUT: ON(*), OFF
	DIALING LINE CHCK: ON(*), OFF
4. RX SETTINGS	ECM RX: ON(*), OFF
	FAX/TEL OPT. SET: RING START TIME (0-30 (6*)), F/T RING TIME: (15-300 (15*)), F/T SWITCH ACTION: RECEIVE(*), DISCONNECT
	DRPD:SELECT FAX: DOUBLE RING(*), SHORT-SHORT-LONG, OTHER RING TYPR, NORMAL RING
	INCOMING RING: OFF(*), ON (RING COUNT (1-99TIMES)
	REMOTE RX: ON (REMOTE RX ID (0-9,#)), OFF(*)
	MANUAL/AUTO: OFF(*), ON (F/T RING TIME (1-99SEC)
5. PRINTER SETTINGS	SELECT CASSETTE: SWITCH A (ON(*), OFF), SWITCH B (ON(*), OFF), SWITCH C (ON(*), OFF), SWITCH D (ON(*), OFF)
	RECEIVE REDUCTION: ON (RECEIVE REDUCTION, REDUCE DIRECTION)(*), OFF
	TWO-SIDED PRINT: OFF(*), ON
	CONT. PRINTING: RX TO MEMORY(*), KEEP PRINTING

*: indicates factory settings.

4.1.4 ADDRESS BOOK SET.

LaserBase MF6530 / / LaserBase MF6540PL / LaserBase MF6550 / KaserBase MF6560PL / / LaserBase MF6580PL

Additional Functions	Available Settings
1. 1-TOUCH SPD DIAL	Up to 23 destinations can be registered: TEL NUMBER ENTRY, NAME, OPTIONAL SETTING
2. CODED SPD DIAL	Up to 100 destinations can be registered: TEL NUMBER ENTRY, NAME, OPTIONAL SETTING
3. GROUP DIAL	Up to 122 destinations can be registered: TEL NUMBER ENTRY, NAME

*: indicates factory settings.

TONER
www.tonerplus.com.ua

4.1.5 PRINTER SETTINGS

LaserBase MF6530 / / LaserBase MF6540PL / LaserBase MF6550 / KaserBase MF6560PL / / LaserBase MF6580PL

Additional Functions	Available Settings
1. DEFAULT PAPERSIZE	LTR(*), STMT, EXECUTIV, ISO-B5, COM10, MONARCH, DL, A4, B5, A5, LGL
2. DEFAULT PAPERTYPE	PLAIN PAPER(*), COLOR, RECYCLED, HEAVY PAPER 1, HEAVY PAPER 2, HEAVY PAPER 3, 3 HOLE PUNCH PAPER, BOND, TRANSPARENCY, LABELS, ENVELOPE
3. COPIES	1(*) to 999
4. 2-SIDED PRINTING	OFF(*), ON
5. PRINT QUALITY	IMAGE REFINEMENT: ON(*), OFF
	DENSITY: 1 to 9 (5(*))
	TONER SAVER: OFF(*), ON
6. PAGE LAYOUT	BINDING: LONG EDGE(*), SHORT EDGE
	MARGIN: mm (-50.0 mm to +50.0 mm; 0.0 mm(*)), INCHES (-01.90 INCHES to 01.90 INCHES; 00.00 INCHES(*))
7. ERROR TIME OUT	ON (5(*) to 300 SEC), OFF
8. COLLATE	OFF(*), COLLATE
9. INIT. PRINTER SET	OFF(*), ON
10. PCL SETTINGS**	ORIENTATION: PORTRAIT(*), LANDSCAPE
	FONT NUMBER: 0(*) to 120
	POINT SIZE: 4.00 to 999.75 point (12.00 point(*))
	PITCH: 0.44 to 99.99 cpi (10.00 cpi(*))
	FORM LINES: 5 to 128 lines (64 lines(*))
	SYMBOL SET: PC8(*), PC850, PC852, PC8DN, PC8TK, PC1004, PIFONT, PSMATH, PSTEXT, ROMAN8, VNINTL, VNMATH, VNUS, WIN30, WINBALT, WINL1, WINL2, WINL5, DESKTOP, ISO4, ISO6, ISO11, ISO15, ISO17, ISO21, ISO60, ISO69, ISOL1, ISOL2, ISOL5, ISOL6, LEGAL, MATH8, MCTEXT, MSPUBL, PC775
	CUSTOM PAPER: OFF(*), ON (UNIT OF MEASURE, X DIMENSION, Y DIMENSION)
	APPEND CR TO LF: NO(*), YES
	ENLARGE A4: OFF(*), ON
11. RESET PRINTER	OFF(*), ON

*: indicates factory settings.

4.1.6 TIMER SETTINGS

LaserBase MF6530 / / LaserBase MF6540PL / LaserBase MF6550 / KaserBase MF6560PL / / LaserBase MF6580PL

Additional Functions	Available Settings
1. DATE&TIME SETTING	Default setting
2. DATE TYPE SELECT	DD/MM YYYY, YYYY MM/DD, MM/DD/ YYYY(*)
3. AUTO SLEEP TIME	ON (3 - 30 (3(*)) MIN. in one-minute increments), OFF
4. AUTO CLEAR TIME	ON (1 - 9 (2(*)) MIN. in one-minute increments), OFF
5. DAYLIGHT SV. TIME	ON: START DATE/TIME (MONTH, WEEK, DAY), END DATE/TIME (MONTH, WEEK, DAY), OFF(*)

*: indicates factory settings.

4.1.7 ADJUST./CLEANING

LaserBase MF6530 / / LaserBase MF6540PL / LaserBase MF6550 / KaserBase MF6560PL / / LaserBase MF6580PL

Additional Functions	Available Settings
1. TRANS. ROLR CLEAN	Press [OK] to start cleaning.
2. FIX. UNIT CLEANING	START CLEANING, CLEAN PAPER PRT
3. FEEDER CLEANING	Set 5 sheets in the optional feeder and press [OK].
4. SPECIAL MODE M	MID(*), LOW, HIGH
5. SPECIAL MODE N	Not functional in this model
6. SPECIAL MODE O	Not functional in this model
7. SPECIAL MODE P	OFF(*), ON
8. FIX. UNIT OFFSET	OFF(*), SPEED PRIORITY
9. CONT PRINT MODE	OFF(*), ON
10. BACK EDGE MODE	OFF(*), ON
11.LARGE PAPER MODE	OFF(*), ON
12. AUTO ADF DRTY ADJ	OFF(*), ON
13. MAINTENANCE CODE	Not functional in this model

*: indicates factory settings.

4.1.8 REPORT SETTINGS

LaserBase MF6530 / / LaserBase MF6540PL / LaserBase MF6550 / KaserBase MF6560PL / / LaserBase MF6580PL

Additional Functions	Available Settings
1. SETTINGS	TX REPORT: PRINT ERROR ONLY(*), OUTPUT YES, OUTPUT NO
	RX REPORT: OUTPUT NO(*), PRINT ERROR ONLY, OUTPUT YES
	ACTIVITY REPORT: AUTO PRINT, OFF(ON(*)), TX/RX SEPARATE (OFF(*), ON)
2. LIST PRINT	ACTIVITY REPORT
	SPEED DIAL LIST: 1-TOUCH LIST, CODED DIAL LIST, GROUP DIAL LIST
	ADD BOOK DETAILS: 1-TOUCH LIST, CODED DIAL LIST
	USER DATA LIST

*: indicates factory settings.

4.1.9 SYSTEM SETTINGS

LaserBase MF6530 / / LaserBase MF6540PL / LaserBase MF6550 / KaserBase MF6560PL / / LaserBase MF6580PL

Additional Functions	Available Settings
1. DEVICE INFO	DEVICE NAME, LOCATION
2. NETWORK SETTINGS	TCP/IP SETTINGS: IP ADDRESS AUTO. (OFF(*), ON(*); DHCP, BOOTP, RARP), IP ADDRESS, SUBNET MASK, GATEWAY ADDRESS, USE LPD (ON(*); PORT NO., OFF), RAW SETTINGS (ON(*); PORT NO., USE BIDIRECTIONAL, OFF), USE HTTP (ON(*); PORT NO., OFF), SET IP ADD RANGE (OFF(*), ON), RX MAC ADD SET. (OFF(*), ON)
	SNMP SETTINGS: USE SNMP (ON(*): PORT NO., OFF), COMMUNITY NAME 1, COMMUNITY NAME 2, SNMP WRITABLE 1 (ON(*), OFF), SNMP WRITABLE 2 (ON, OFF(*))
	DEDICATED PORT: ON(*), OFF
	ETHERNET DRIVER: AUTO DETECT (AUTO(*), MANUAL), DUPLEX (HALF DUPLEX(*), FULL DUPLEX), ETHERNET TYPE (10 BASE-T(*), 100 BASE-TX)
	VIEW IP ADDRESS: IP ADDRESS, SUBNET MASK, GATEWAY ADDRESS
	STARTUP TIME SET.: 0(*) to 300 SEC.
3. COMMUNICATIONS	TX START SPEED: 2400 to 33600(*) bps
	RX START SPEED: 2400 to 33600(*) bps
	MEMORY LOCK SETTI: OFF(*), ON (PASSWORD, REPORT PRINT, MEMORY RX TIME)
4. REMOTE UI	ON(*), OFF
5. ACCESS TO DEST.	RESTRICT NEW ADD. : OFF(*), ON
	FAX DRIVER TX: OFF, ON(*)
6. CHECKING THE LOG	ON, OFF(*)
7. USE DEVICE USB	OFF, ON(*)

*: indicates factory settings.

Chapter 5 Service Mode

5.1 Service Soft Switch Settings (SSSW)

5.1.1 SSSW-SW01

5.1.1.1 List of Functions

LaserBase MF6530 / / LaserBase MF6540PL / LaserBase MF6550 / KaserBase MF6560PL / / LaserBase MF6580PL

T-5-1

Bit	Function	1	0
0	service error code	output	not output
1	not used	-	-
2	not used	-	-
3	not used	-	-
4	not used	-	-
5	not used	-	-
6	not used	-	-
7	not used	-	-

5.1.1.2 Detailed Discussions of Bit 0

LaserBase MF6530 / / LaserBase MF6540PL / LaserBase MF6550 / KaserBase MF6560PL / / LaserBase MF6580PL

Selects whether or not service error codes are output.
When output is selected, service error codes is report.

5.1.2 SSSW-SW03

5.1.2.1 List of Functions

LaserBase MF6530 / / LaserBase MF6540PL / LaserBase MF6550 / KaserBase MF6560PL / / LaserBase MF6580PL

T-5-2

Bit	Function	1	0
0	not used	-	-
1	not used	-	-
2	not used	-	-
3	not used	-	-
4	not used	-	-
5	not used	-	-
6	not used	-	-
7	tonal signal before CED signal transmission	transmit	do not transmit

5.1.2.2 Detailed Discussions of Bit 7

LaserBase MF6530 / / LaserBase MF6540PL / LaserBase MF6550 / KaserBase MF6560PL / / LaserBase MF6580PL

Use it to enable/disable transmission of a 1080-Hz tonal signal before transmission of the CED signal.
Select 'transmit' if errors occur frequently because of an echo when reception is from overseas.

Memo:
Any of the following error code may be indicated because of an echo at time of reception
##0005, ##0101, ##0106, ##0107, ##0114, ##0200, ##0201, ##0790

5.1.3 SSSW-SW04

5.1.3.1 List of Functions

LaserBase MF6530 / / LaserBase MF6540PL / LaserBase MF6550 / KaserBase MF6560PL / / LaserBase MF6580PL

T-5-3

Bit	Function	1	0
0	not used	-	-
1	not used	-	-
2	the number of final flag sequences of protocol signals	2	1
3	Reception mode after CFR signal transmission	high speed	high speed/low speed
4	the length of the period of ignoring low speed signals after CFR output	1500 ms	700 ms
5	not used	-	-
6	CNG signal for manual transmission	Not transmitted	Transmitted
7	CED signal for manual reception	Not transmitted	Transmitted

5.1.3.2 Detailed Discussions of Bit 2

LaserBase MF6530 / / LaserBase MF6540PL / LaserBase MF6550 / KaserBase MF6560PL / / LaserBase MF6580PL

Use it to select the number of last flag sequences for a protocol signal (transmission speed at 300 bps). Select '2' if the other party fails to receive the protocol signal properly.

Memo:
Any of the following error codes may be indicated at time of transmission
##0100, ##0280, ##0281, ##0750, ##0753, ##0754, ##0755, ##0758, ##0759, ##0760, ##0763 ##0764, ##0765, ##0768, ##0769,##0770, ##0773, ##0775, ##0778, ##0780, ##0783, ##0785, ##0788

5.1.3.3 Detailed Discussions of Bit 3

LaserBase MF6530 / / LaserBase MF6540PL / LaserBase MF6550 / KaserBase MF6560PL / / LaserBase MF6580PL

Use it to select an appropriate reception mode after transmission of the CFR signal.
If errors occur frequently at time of reception because of the condition of the line, select 'high speed' for reception mode and, at the same time, selects 'do not receive' for 'ECM reception.'

Memo:
Any of the following error codes may be indicated at time of reception because of line condition
##0107, ##0114, ##0201
Be sure to change bit 4 before changing this bit; if errors still occur, change this bit.
When 'high speed' is selected, only high-speed signals (images) will be received after transmission of the CFR signal.

5.1.3.4 Detailed Discussions of Bit 4

LaserBase MF6530 / / LaserBase MF6540PL / LaserBase MF6550 / KaserBase MF6560PL / / LaserBase MF6580PL

Use it to select the time length during which low-speed signals are ignored after transmission of the CFR signal.
If the condition of the line is not good and, therefore, the reception of image signals is difficult, select '1500 ms.'

5.1.3.5 Detailed Discussions of Bit 6

LaserBase MF6530 / / LaserBase MF6540PL / LaserBase MF6550 / KaserBase MF6560PL / / LaserBase MF6580PL

Selects whether or not to transmit CNG signal during manual transmission.
In manual transmitting to a fax with the FAX/TEL switching mode, if there are frequent errors due to failure to switch to fax mode, select "Transmitted" for the CNG signal.

5.1.3.6 Detailed Discussions of Bit 7

LaserBase MF6530 / / LaserBase MF6540PL / LaserBase MF6550 / KaserBase MF6560PL / / LaserBase MF6580PL

Selects whether or not to transmit CED signals during manual reception. If the other fax does not transmit even when you start manual reception, select "Transmitted" for the CED signal.

5.1.4 SSSW-SW05

5.1.4.1 List of Functions

LaserBase MF6530 / / LaserBase MF6540PL / LaserBase MF6550 / KaserBase MF6560PL / / LaserBase MF6580PL

T-5-4

Bit	Function	1	0
0	not used	-	-
1	Conversion from mm to inch (text mode)	convert	do not convert
2	Conversion from mm to inch (text/photo mode)	convert	do not convert
3	not used	-	-
4	not used	-	-
5	not used	-	-
6	not used	-	-
7	not used	-	-

5.1.4.2 Detailed Discussions of Bit 1

LaserBase MF6530 / / LaserBase MF6540PL / LaserBase MF6550 / KaserBase MF6560PL / / LaserBase MF6580PL

Use it to enable/disable millimeter/inch conversion in sub scanning direction for images read in text mode.
Scanning direction in conversion follows the Bit 2 setting of SW14.

5.1.4.3 Detailed Discussions of Bit 2

LaserBase MF6530 / / LaserBase MF6540PL / LaserBase MF6550 / KaserBase MF6560PL / / LaserBase MF6580PL

Use it to enable/disable millimeter/inch conversion in sub scanning direction for images read in text/photo mode while bit 1 is set to '1'.
Scanning direction in conversion follows the Bit 2 setting of SW14.

5.1.5 SSSW-SW12

5.1.5.1 List of Functions

LaserBase MF6530 / / LaserBase MF6540PL / LaserBase MF6550 / KaserBase MF6560PL / / LaserBase MF6580PL

T-5-5

Bit	Function	1	0
0	Time-out period for one page upon transmission	1	0
1	Time-out period for one page upon transmission	1	0

Bit	Function	1	0
2	not used	-	-
3	not used	-	-
4	Time-out period for one page upon reception	1	0
5	Time-out period for one page upon reception	1	0
6	not used	-	-
7	Respective page timer settings for transmission and for reception	enable	do not enable

The machine will stop the ongoing communication if the transmission/reception of a single original page takes 32 min or more. To use the timer for a purpose other than this function, refer to the tables that follow, and select an appropriate time length.
When 'do not enable' is selected using bit 7, the time-out length for a single page for all modes will depend on the setting of bit 0 and bit 1.

T-5-6

Time-Out Length for Transmission/Reception	Bit7	Bit6	Bit5	Bit4	Bit3	Bit2	Bit1	Bit0
8 min	0	*	*	*	*	*	0	0
16 min	0	*	*	*	*	*	0	1
32 min	0	*	*	*	*	*	1	0
64 min	0	*	*	*	*	*	1	1

T-5-7

Time-Out Length for Transmission (in text mode)	Bit7	Bit6	Bit5	Bit4	Bit3	Bit2	Bit1	Bit0
8 min	1	*	*	*	*	*	0	0
16 min	1	*	*	*	*	*	0	1
32 min	1	*	*	*	*	*	1	0
64 min	1	*	*	*	*	*	1	1

T-5-8

Time-Out Length for Reception	Bit7	Bit6	Bit5	Bit4	Bit3	Bit2	Bit1	Bit0
8 min	1	*	0	0	*	*	*	*
16 min	1	*	0	1	*	*	*	*
32 min	1	*	1	0	*	*	*	*
64 min	1	*	1	1	*	*	*	*

5.1.6 SSSW-SW13

5.1.6.1 List of Functions

LaserBase MF6530 / / LaserBase MF6540PL / LaserBase MF6550 / KaserBase MF6560PL / / LaserBase MF6580PL

T-5-9

Bit	Function	1	0
0	not used	-	-
1	not used	-	-
2	Convert "inch" into "mm" when transmitting the received image data	convert	do not convert
3	not used	-	-
4	not used	-	-
5	not used	-	-
6	not used	-	-
7	not used	-	-

5.1.6.2 Detailed Discussions of Bit 2

LaserBase MF6530 / / LaserBase MF6540PL / LaserBase MF6550 / KaserBase MF6560PL / / LaserBase MF6580PL

It converts "inch" into "mm" when transmitting the received image data.
Scanning direction in conversion follows the Bit 2 setting of SW14.

5.1.7 SSSW-SW14

5.1.7.1 List of Functions

LaserBase MF6530 / / LaserBase MF6540PL / LaserBase MF6550 / KaserBase MF6560PL / / LaserBase MF6580PL

T-5-10

Bit	Function	1	0
0	not used	-	-
1	not used	-	-
2	direction of scanning for inch/mm conversion	both main and sub scanning directions	sub scanning direction only
3	not used	-	-
4	inch-configuration resolution declaration	declare	do not declare
5	not used	-	-

Bit	Function	1	0
6	not used	-	-
7	not used	-	-

5.1.7.2 Detailed Discussions of Bit 2

LaserBase MF6530 / / LaserBase MF6540PL / LaserBase MF6550 / KaserBase MF6560PL / / LaserBase MF6580PL

Use it to specify whether to convert or not convert an inch-configuration resolution into a millimeter-configuration resolution for image read in G3 transmission: either in sub scanning direction only or in both main and sub scanning directions. The setting is valid only when bit 1 of SW05 of #SSSW is set to '1'.

5.1.7.3 Detailed Discussions of Bit 4

LaserBase MF6530 / / LaserBase MF6540PL / LaserBase MF6550 / KaserBase MF6560PL / / LaserBase MF6580PL

Use it to specify whether to declare or not declare an inch-configuration resolution to the other machine for G3 communication: if 'declare' is selected, the machine will indicate that it reads and records at an inch-configuration resolution using the DIS, DCS, or DTC signal.

5.1.8 SSSW-SW28

5.1.8.1 List of Functions

LaserBase MF6530 / / LaserBase MF6540PL / LaserBase MF6550 / KaserBase MF6560PL / / LaserBase MF6580PL

T-5-11

Bit	Function	1	0
0	Caller V.8 protocol	NO	YES
1	Called party V.8 protocol	NO	YES
2	Caller V.8 protocol late start	NO	YES
3	Called party V.8 protocol late start	NO	YES
4	V.34 reception fallback	Prohibited	Not prohibited
5	V.34 transmission fallback	Prohibited	Not prohibited
6	not used	-	-
7	not used	-	-

5.1.8.2 Detailed Discussions of Bit 0

LaserBase MF6530 / / LaserBase MF6540PL / LaserBase MF6550 / KaserBase MF6560PL / / LaserBase MF6580PL

Select whether to use the V.8 protocol when calling. If NO is selected, the V.8 protocol is inhibited at calling and the V.21 protocol is used.

5.1.8.3 Detailed Discussions of Bit 1

LaserBase MF6530 / / LaserBase MF6540PL / LaserBase MF6550 / KaserBase MF6560PL / / LaserBase MF6580PL

Select whether to use the V.8 protocol when called. If NO is selected, the V8 protocol is inhibited when called and the V.21 protocol is used.

5.1.8.4 Detailed Discussions of Bit 2

LaserBase MF6530 / / LaserBase MF6540PL / LaserBase MF6550 / KaserBase MF6560PL / / LaserBase MF6580PL

If ANSam signal is not received during transmission, select whether to use the V.8 protocol when the other fax machine declares the V.8 protocol in DIS signal. If NO is selected, the CI signal is not transmitted and the V.8 protocol is not used even if the DIS that specifies the V.8 protocol is received.
The V.8 late start is not executed during manual transmission regardless of this setting.

5.1.8.5 Detailed Discussions of Bit 3

LaserBase MF6530 / / LaserBase MF6540PL / LaserBase MF6550 / KaserBase MF6560PL / / LaserBase MF6580PL

Select whether to declare the V.8 protocol in DIS signal for reception. If NO is selected, the V.8 protocol cannot be used because it is not declared in DIS signal.
The V.8 late start is not executed during manual reception regardless of this setting.

5.1.8.6 Detailed Discussions of Bit 4

LaserBase MF6530 / / LaserBase MF6540PL / LaserBase MF6550 / KaserBase MF6560PL / / LaserBase MF6580PL

Select whether the receiver falls back during V.34 reception. If 'Prohibit' is selected, the receiver does not fall back.

5.1.8.7 Detailed Discussions of Bit 5

LaserBase MF6530 / / LaserBase MF6540PL / LaserBase MF6550 / KaserBase MF6560PL / / LaserBase MF6580PL

Select whether the transmitter falls beck during V.34 transmission. If 'Prohibit' is selected, teh transmitter does not fall back.

5.1.9 SSSW-SW30

5.1.9.1 List of Functions

LaserBase MF6530 / / LaserBase MF6540PL / LaserBase MF6550 / KaserBase MF6560PL / / LaserBase MF6580PL

T-5-12

Bit	Function	1	0
0	Not used	-	-
1	Not used	-	-
2	Not used	-	-
3	Not used	-	-

Bit	Function	1	0
4	Not used	-	-
5	New dial tone detection method	Detect with the new method.	Detect with the existing method.
6	Not used	-	-
7	Not used	-	-

5.1.9.2 Detailed Discussions of Bit 5

LaserBase MF6530 / / LaserBase MF6540PL / LaserBase MF6550 / KaserBase MF6560PL / / LaserBase MF6580PL

When "Detect with the new method" is selected, tone is detected for 3.5 seconds before call origination in order to discriminate between dial tone and voice. If dial tone is detected and the time since line seizure is 3.5 seconds or longer, call origination takes place immediately. If the time since line seizure is less than 3.5 seconds, call origination takes place after waiting for 1 second. (If the time since line seizure reaches 3.5 seconds during the 1-second waiting period, call origination takes place immediately. By default, "Detect with a new method" is assigned for this SW.

5.2 Menu Switch Settings (MENU)

5.2.1 Menu Switch Composition

LaserBase MF6530 / / LaserBase MF6540PL / LaserBase MF6550 / KaserBase MF6560PL / / LaserBase MF6580PL

T-5-13

No.	Function	Range of settings
005	NL equalizer	1: ON, 0: OFF
006	telephone line monitor	0:DIAL, 1:SERVICEMAN1, 2:SERVICEMAN2, 3:OFF
007	transmission level (ATT)	from 0 to 15 (ex: 15= -15 dBm)
008	V.34 modulation speed upper limit	0:3429, 1:3200, 2:3000, 3:2800, 4:2743, 5:2400
009	V34 data speed upper limit	0:33.6 kbps, 1:31.2 kbps, 2:28.8 kbps, 3:26.4 kbps, 4:24.0 kbps, 5:21.6 kbps, 6:19.2 kbps, 7:16.8 kbps, 8:14.4 kbps, 9:12.0 kbps, 10:9.6 kbps, 11:7.2 kbps, 12:4.8 kbps, 13:2.4 kbps
010	Frequency of pseudoring signal	0:50 Hz, 1:25 Hz, 2:17 Hz

5.2.2 <No.005 NL equalizer>

LaserBase MF6530 / / LaserBase MF6540PL / LaserBase MF6550 / KaserBase MF6560PL / / LaserBase MF6580PL

Use it to enable-disable the NL equalizer.
If errors occur often during communication because of the condition of the line, enable (ON) the NL equalizer.

Any of the following error codes may be indicated at time of transmission because of the line condition:
##100, ##101, ##102, ##104, ##201, ##281, ##282, ##283, ##750, ##755, ##765, ##774, ##779, ##784, ##789
Any of the following error codes may be indicated at time of transmission because of the line condition:
##103, ##107, ##114, ##201, ##790, ##793

5.2.3 <No.006 telephone line monitor>

LaserBase MF6530 / / LaserBase MF6540PL / LaserBase MF6550 / KaserBase MF6560PL / / LaserBase MF6580PL

Use it to s the telephone line monitor function:
DIAL: generate the monitor sound of the telephone line using the speaker from the start of transmission to DIS.
SERVICEMAN [1]: generate the monitor sound of the telephone line using the speaker from the start of communication to the end of it.
SERVICEMAN [2]: generate the monitor sound of the telephone line2 (Option).
OFF: do not generate the monitor sound of the telephone line using the speaker.

5.2.4 <No.007 ATT transmission level>

LaserBase MF6530 / / LaserBase MF6540PL / LaserBase MF6550 / KaserBase MF6560PL / / LaserBase MF6580PL

Use it to set the transmission level (ATT).
Raise the transmission level if errors occur frequently at time of communication because of the condition of the line. (It means close to 8)

Any of the following error codes may be indicated at time of transmission because of the line condition:
##100, ##101, ##102, ##104, ##201, ##280, ##281, ##282, ##283, ##284, ##750, ##752, ##754, ##755, ##757, ##759, ##760, ##762, ##764, ##765, ##767, ##769, ##770, ##772, ##774, ##775, ##777, ##779, ##780, ##782, ##784, ##785, ##787, ##789
Any of the following error codes may be indicated at time of reception because of the line condition:
##103, ##106, ##107, ##201, ##793

5.2.5 <No.008 V.34 modulation speed upper limit>

LaserBase MF6530 / / LaserBase MF6540PL / LaserBase MF6550 / KaserBase MF6560PL / / LaserBase MF6580PL

Use it to set an upper limit to the modulation speed (baud rate) for the V.34 primary channel.

5.2.6 <No.009 V.34 data speed upper limit>

LaserBase MF6530 / / LaserBase MF6540PL / LaserBase MF6550 / KaserBase MF6560PL / / LaserBase MF6580PL

Use it to set an upper limit to the data transmission speed for the V.34 primary channel between 2.4K and 33.6K bps in increments of 2400 bps. (0: 2.4K to 13: 33.6K bps).

5.2.7 <No.010 Frequency of the pseudo CI signal>

LaserBase MF6530 / / LaserBase MF6540PL / LaserBase MF6550 / KaserBase MF6560PL / / LaserBase MF6580PL

You may select a frequency for the pseudo CI signal.
Some types of external telephones do not ring when the fax/tel switch-over function is ON. To sound the ring, change the pseudo CI signal.

5.3 Numeric Parameter Settings (NUMERIC Param.)

5.3.1 <No.010 Frequency of the pseudo CI signal>

LaserBase MF6530 / / LaserBase MF6540PL / LaserBase MF6550 / KaserBase MF6560PL / / LaserBase MF6580PL

T-5-14

No.	Item	Range of settings
002	RTN transmission condition(1)	1% to 99%
003	RTN transmission condition (2)	2 to 99 item
004	RTN transmission condition (3)	1 to 99 lines
005	NCC pause time length (pre-ID code)	1 to 60 sec
006	NCC pause time length (post-ID code)	1 to 60 sec
010	line condition identification time length	0 to 9999 (10 msec)
011	T.30T1 timer (for reception)	0 to 9999 (10 msec)
013	T.30 EOL timer	500 to 3000 (10 msec)
015	hooking detection time length	0 to 999
016	time length to first response at time of fax/tel switchover	0 to 9
017	pseudo RBT signal pattern ON time length	0 to 999
018	pseudo RBT signal pattern OFF time length (short)	0 to 999
019	pseudo RBT signal pattern OFF time length (long)	0 to 999
020	pseudo CI signal pattern ON time length	0 to 999
021	pseudo CI signal pattern OFF time length (short)	0 to 999
022	pseudo CI signal pattern OFF time length (long)	0 to 999
023	CNG detection level at time of fax/tel switchover	0 to 7
024	pseudo RBT transmission level at time of fax/tel switchover	10 to 20 0 to 20 (120/230V)
025	Answering machine connection function signal detection time	0 to 999
027	preamble detection time length for V21 low-speed flag	20 (x 10ms)

5.3.2 <002: RTN transmission condition (1)><003: RTN transmission condition (2)><004: RTN transmission condition (3)>

LaserBase MF6530 / / LaserBase MF6540PL / LaserBase MF6550 / KaserBase MF6560PL / / LaserBase MF6580PL

Use it to set RTN signal transmission conditions. Raise these parameters for more lenient conditions if errors occur frequently at time of reception because of transmission of the RTN signal.

Memo:
Any of the following error codes may be indicated at time of reception because of RTN signal transmission
##0104, ##0107, ##0114, ##0201

RTN signal transmission condition (1) affects the ratio of error lines to the total number of lines per single page of received images.
RTN signal transmission condition (2) affects the standard value (*2) of burst errors (*1).
RTN signal condition (3) affects the number of errors not reaching the standard value of burst errors.

*1: transmission error occurring cover several lines.
*2: for instance, if '15' is set, a single burst error will represent an error occurring continuously cover 15 lines.

If any of these lines is detected while an image signal is being received, the RTN signal will be transmitted after receiving the protocol signal of the transmitting party. Higher parameters restrict the transmission of the RTN signal.

5.3.3 <005: NCC pause length (pre-ID code)>

LaserBase MF6530 / / LaserBase MF6540PL / LaserBase MF6550 / KaserBase MF6560PL / / LaserBase MF6580PL

Use it to set the length of the pause automatically entered between access code and ID code when the NCC (New Common Carrier) line is used for dialing.

5.3.4 <006: NCC pause length (post-ID code)>

LaserBase MF6530 / / LaserBase MF6540PL / LaserBase MF6550 / KaserBase MF6560PL / / LaserBase MF6580PL

Use it to set the length of the pause automatically entered between ID code and telephone number of the other party when the NCC (New Common Carrier) line is used for dialing.

5.3.5 <010: line connection identification length>

LaserBase MF6530 / / LaserBase MF6540PL / LaserBase MF6550 / KaserBase MF6560PL / / LaserBase MF6580PL

Use it to set the time for identifying the line connection. Raise this parameter if errors occur frequently at time of communication because of the condition of the line.

Memo:
Any of the following error codes may be indicated because of the condition of the line
##0005, ##0018
The line condition identification time is between when the dial signal is transmitted and when the line condition is cut for the transmitting party, while it is between when the DIS signal is transmitted and when the line is cut for the receiving party.

5.3.6 <011: T.30 T1 timer (for reception)>

LaserBase MF6530 / / LaserBase MF6540PL / LaserBase MF6550 / KaserBase MF6560PL / / LaserBase MF6580PL

Set the T1 timer for the receiver (wait time after DIS transmission starts until a significant signal is received).

5.3.7 <013: T.30 EOL timer>

LaserBase MF6530 / / LaserBase MF6540PL / LaserBase MF6550 / KaserBase MF6560PL / / LaserBase MF6580PL

Set it so that the 1-line transmission time is longer for reception to prevent reception errors caused by a long data length per line (e.g., computer FAX).

5.3.8 <016: time length to first response at time of fax/tel switchover>

LaserBase MF6530 / / LaserBase MF6540PL / LaserBase MF6550 / KaserBase MF6560PL / / LaserBase MF6580PL

Allows setting of the time from seizing the line till pseudo RBT is sent, when the Fax/ Tel switching function is operating.

5.3.9 <017: pseudo RBT signal pattern ON time length><018: pseudo RBT signal pattern OFF time length (short)><019: pseudo RBT signal pattern OFF time length (long)>

LaserBase MF6530 / / LaserBase MF6540PL / LaserBase MF6550 / KaserBase MF6560PL / / LaserBase MF6580PL

Use it to set the pattern of the pseudo RBT signal transmitted at time of a fax/tel switchover.

5.3.10 <020: pseudo CI signal pattern ON time length><021: pseudo CI signal pattern OFF time length (short)><022: pseudo CI signal pattern OFF time length (long)>

LaserBase MF6530 / / LaserBase MF6540PL / LaserBase MF6550 / KaserBase MF6560PL / / LaserBase MF6580PL

Use it to set the pseudo CI signal pattern transmitted at time of a fax/tel switchover.

5.3.11 <023: CNG detention level for fax/tel switchover>

LaserBase MF6530 / / LaserBase MF6540PL / LaserBase MF6550 / KaserBase MF6560PL / / LaserBase MF6580PL

Use it to set the CNG detention level for a fax/tel switchover.

5.3.12 <024: pseudo RBT transmission level at time of fax/tel switchover>

LaserBase MF6530 / / LaserBase MF6540PL / LaserBase MF6550 / KaserBase MF6560PL / / LaserBase MF6580PL

Use it to set the pseudo transmission level for a fax/tel switchover.

5.3.13 <025: Answering machine connection function signal detection time>

LaserBase MF6530 / / LaserBase MF6540PL / LaserBase MF6550 / KaserBase MF6560PL / / LaserBase MF6580PL

Sets the signal detection time for the answering machine connection function operation. When the answering machine connection function is operating, if the function does not operate normally because the fax does not detect CNG signal sent from the line, raise this parameter to increase the signal detection time.

5.3.14 <027: V.21 low-speed flag preamble identification length>

LaserBase MF6530 / / LaserBase MF6540PL / LaserBase MF6550 / KaserBase MF6560PL / / LaserBase MF6580PL

Use it to detect the time of detection after which command analysis is started after detecting V.21 low-speed command preambles continuously for a specific period of time.

5.4 Scanner Function Settings (SCANNER)

5.4.1 Numeric Parameter Functional configuration

LaserBase MF6530 / / LaserBase MF6540PL / LaserBase MF6550 / KaserBase MF6560PL / / LaserBase MF6580PL

No.	Function	Default	Setting range	Unit
001: - 023:	Not used			
024:	CIS scan position during ADF scanning.	385	300-450	one unit=0.1mm
025:	Not used			
026:	Distance from the standby position of CIS to the shading start point.	22	6-48	one unit=0.1mm
027: - 030:	Not used			
031:	Vertical scan start position adjustment	35	0-70	one unit=0.1mm
032:	Horizontal scan start position adjustment	115	50-150	one unit=0.1mm
033:	Vertical scan magnification correction	32	0-32	one unit=0.1%
034:	Horizontal scan magnification correction	32	0-32	one unit=0.1%
035: - 036:	Reader motor speed adjustment	555		
037: - 040:	Not used			
041:	Vertical scan start position adjustment (scanning on ADF)	35	0-70	one unit=0.1mm
042:	Horizontal scan start position adjustment (scanning on ADF)	219	170-270	one unit=0.1mm
043:	Horizontal scan end position correction (copy:scanning on ADF)	75	0-200	one unit=0.1mm

No.	Function	Default	Setting range	Unit
044:	Horizontal scan end position correction (superfine:scanning on ADF)	75	0-200	one unit=0.1mm
045:	Horizontal scan end position correction (fine:scanning on ADF)	75	0-200	one unit=0.1mm
046:	Horizontal scan end position correction (standard:scanning on ADF)	75	0-200	one unit=0.1mm
047:	Vertical scan magnification correction (scanning on ADF)	32	0-32	one unit=0.1%
048:	Horizontal scan magnification correction (scanning on ADF)	32	0-32	one unit=0.1%
049: - 053:	Not used			
054:	Pickup motor speed correction (when the ADF is used)	32	0-32	one unit=0.1%
055: - 192:	Not used			
193:	ADF special paper, standardized size: LGL misidentification-ready	0	0 : LEGAL 1 : FOOLSCAP 2 : M_OFFICIO 3 : A_FOOLSCAP 4 : FOLIO 5 : G_LEGAL 6 : A_OFFICIO 7 : B_OFFICIO	
194:	ADF special paper, standardized size: LTR misidentification-ready	0	0 : LTR 1 : G_LTR 2 : A_LTR	
195:	ADF special paper, standardized size: LTR_R misidentification-ready	0	0 : LTR_R 1 : FOOLSCAP 2 : OFFICIO 3 : E_OFFICIO 4 : G_LTR_R 5 : A_LTR_R	
196: - 350:	Not used			

⚠If any operation error occurs after changing the setting value, change the setting value to the original one.

5.4.2 <024:CIS scan position during ADF scanning>

LaserBase MF6530 / / LaserBase MF6540PL / LaserBase MF6550 / KaserBase MF6560PL / / LaserBase MF6580PL

This value is used when automatic scan position adjustment (TESTMODE>"2"SCAN TEST>"3"SHEET POS ADJ) fails.

5.4.3 <026:Distance from the standby position of CIS to the shading start point>

LaserBase MF6530 / / LaserBase MF6540PL / LaserBase MF6550 / KaserBase MF6560PL / / LaserBase MF6580PL

White shading can be adjusted finely.

⚠Normally, do not change the setting value. If any operation error occurs after changing the setting value, change the setting value to the original one.

5.4.4 <031Vertical scan start position adjustment>

LaserBase MF6530 / / LaserBase MF6540PL / LaserBase MF6550 / KaserBase MF6560PL / / LaserBase MF6580PL

Adjust the position at which vertical scanning of a book starts. The larger the adjustment value, the narrower the left-side margin of the image becomes.

5.4.5 <032Horizontal scan start position adjustment>

LaserBase MF6530 / / LaserBase MF6540PL / LaserBase MF6550 / KaserBase MF6560PL / / LaserBase MF6580PL

Adjust the position at which horizontal scanning of a book starts. The larger the adjustment value, the narrower the top margin in the image becomes.

5.4.6 <033Vertical scan magnification correction>

LaserBase MF6530 / / LaserBase MF6540PL / LaserBase MF6550 / KaserBase MF6560PL / / LaserBase MF6580PL

Correct the magnification of vertical scanning of a book. The larger the adjustment value, the more the image stretches in the vertical scanning direction.

5.4.7 <034Horizontal scan magnification correction>

LaserBase MF6530 / / LaserBase MF6540PL / LaserBase MF6550 / KaserBase MF6560PL / / LaserBase MF6580PL

Correct the magnification of horizontal scanning of a book. The larger the adjustment value, the more the image stretches in the horizontal scanning direction.

5.4.8 <035: - 036:Reader motor speed change>

LaserBase MF6530 / / LaserBase MF6540PL / LaserBase MF6550 / KaserBase MF6560PL / / LaserBase MF6580PL

Though no market adjustment work needs to be carried out, enter factory defaults at image processor PCB replacement.

5.4.9 <041: Vertical scan start position adjustment (when scanning on a document fed from ADF)>

LaserBase MF6530 / / LaserBase MF6540PL / LaserBase MF6550 / KaserBase MF6560PL / / LaserBase MF6580PL

Adjust the position at which vertical scanning of a document fed from the ADF starts. The larger the adjustment value, the narrower the left-side margin of the image becomes.

5.4.10 <042: Horizontal scan start position adjustment (when scanning on a document fed from ADF)>

LaserBase MF6530 / / LaserBase MF6540PL / LaserBase MF6550 / KaserBase MF6560PL / / LaserBase MF6580PL

Adjust the position at which horizontal scanning of a document fed from the ADF starts. The larger the adjustment value, the narrower the top margin of the image becomes.

5.4.11 <043: Horizontal scan end position correction ((copy:scanning on ADF)>

LaserBase MF6530 / / LaserBase MF6540PL / LaserBase MF6550 / KaserBase MF6560PL / / LaserBase MF6580PL

Adjust the position at which horizontal scanning of a document being copied ends (when scanning on a document fed from ADF). The larger the adjustment value, the narrower the bottom margin of the image becomes.

5.4.12 <044: Horizontal scan end position correction (superfine:scanning on ADF)>

LaserBase MF6530 / / LaserBase MF6540PL / LaserBase MF6550 / KaserBase MF6560PL / / LaserBase MF6580PL

Adjust the position at which horizontal scanning of a FAX document scanned in superfine mode ends. The larger the adjustment value, the narrower the bottom margin of the image becomes.

5.4.13 <045: Horizontal scan end position correction (fine:scanning on ADF)>

LaserBase MF6530 / / LaserBase MF6540PL / LaserBase MF6550 / KaserBase MF6560PL / / LaserBase MF6580PL

Adjust the position at which horizontal scanning of a FAX document scanned in fine mode ends. The larger the adjustment value, the narrower the bottom margin of the image becomes.

5.4.14 <046: Horizontal scan end position correction (standard:scanning on ADF)>

LaserBase MF6530 / / LaserBase MF6540PL / LaserBase MF6550 / KaserBase MF6560PL / / LaserBase MF6580PL

Adjust the position at which horizontal scanning of a FAX document set to the standard scan resolution ends. The larger the adjustment value, the narrower the bottom margin of the image becomes.

5.4.15 <047: Vertical scan magnification correction (when scanning on a document fed from ADF)>

LaserBase MF6530 / / LaserBase MF6540PL / LaserBase MF6550 / KaserBase MF6560PL / / LaserBase MF6580PL

Correct the magnification of vertical scanning of a document fed from the ADF. The larger the adjustment value, the more the image stretches in the vertical scanning direction.

5.4.16 <048: Horizontal scan magnification correction (when scanning on a document fed from ADF)>

LaserBase MF6530 / / LaserBase MF6540PL / LaserBase MF6550 / KaserBase MF6560PL / / LaserBase MF6580PL

Correct the magnification of horizontal scanning of a document fed from the ADF. The smaller the adjustment value, the more the image ruduces in the horizontal scanning direction.
This menu is used to adjust the ADF feed motor speed. If you changed the adjustment value in this mode, the adjustment value selected for SCAN NUMERIC>54 must also be incremented/decremented by the same amount.

⚠Do not change the adjustment value extremely.

5.4.17 <054: Pickup motor speed correction (when the ADF is used) >

LaserBase MF6530 / / LaserBase MF6540PL / LaserBase MF6550 / KaserBase MF6560PL / / LaserBase MF6580PL

This menu is used to adjust the ADF pickup motor speed. If you have adjusted the ADF feed motor speed by selecting SCAN NUMERIC>48, the ADF pickup motor speed must also be incremented/decremented by the same amount.

⚠Do not change the adjustment value extremely.

5.4.18 <193: ADF special standard-sized paper: LGL misidentification-ready>

LaserBase MF6530 / / LaserBase MF6540PL / LaserBase MF6550 / KaserBase MF6560PL / / LaserBase MF6580PL

Set to use special standard-sized paper that is not otherwise identifiable to the ADF (because it is misidentified as "LEGAL").
0: LEGAL
1: FOOLSCAP
2: M_OFFICIO
3: A_FOOLSCAP
4: FOLIO
5: G_LEGAL
6: A_OFFICIO
7: B_OFFICIO

5.4.19 <194: ADF special standard-sized paper: LTR misidentification-ready>

LaserBase MF6530 / / LaserBase MF6540PL / LaserBase MF6550 / KaserBase MF6560PL / / LaserBase MF6580PL

Set to use special standard-sized paper that is not otherwise identifiable to the ADF (because it is misidentified as "LTR").
0: LTR
1: G_LTR
2: A_LTR

5.4.20 <195: ADF special standard-sized paper: LTR_R misidentification-ready>

LaserBase MF6530 / / LaserBase MF6540PL / LaserBase MF6550 / KaserBase MF6560PL / / LaserBase MF6580PL

Set to use special standard-sized paper that is not otherwise identifiable to the ADF (because it is misidentified as "LTRR").
0: LTR_R
1: FOOLSCAP
2: OFFICIO
3: E_OFFICIO
4: G_LTR_R
5: A_LTR_R

5.5 Printer Function Settings (PRINTER)

5.5.1 Service Soft Switch Settings (SSSW)

5.5.1.1 SSSW-SW05

5.5.1.1.1 List of Functions

0011-4190

LaserBase MF6530 / / LaserBase MF6540PL / LaserBase MF6550 / KaserBase MF6560PL / / LaserBase MF6580PL

T-5-15

Bit	Function	1	0
0	not used	-	-
1	not used	-	-
2	not used	-	-
3	not used	-	-
4	not used	-	-
5	not used	-	-
6	not used	-	-
7	priority on recording in sub scanning direction	place	do not place

5.5.1.1.2 Detailed Discussions of Bit 7

0011-4191

LaserBase MF6530 / / LaserBase MF6540PL / LaserBase MF6550 / KaserBase MF6560PL / / LaserBase MF6580PL

Use it to enable/disable placement of priority on recording in sub scanning direction.

T-5-16

place:	if B4 recording paper and A4 recording paper are set and an A4 extra-long image (*) is received, printing will be on the B4 recording paper.
do not place:	if B5 horizontal recording paper and A4 recording paper are set and a B4 image is received, printing will be by division and on B5 horizontal recording paper.

*: Image B4 or shorter and that cannot be printed by division and on A4 recording paper.

5.5.1.2 SSSW-SW14

5.5.1.2.1 List of Functions

0011-4192

LaserBase MF6530 / / LaserBase MF6540PL / LaserBase MF6550 / KaserBase MF6560PL / / LaserBase MF6580PL

T-5-17

Bit	Function	1	0
0	Transfer bias pressure reduction mode	Enable	Disable
1	Not used	-	-
2	Black belt addition mode	Enable	Disable
3	Not used	-	-
4	Flicker reduction mode	Enable	Disable
5	Silent mode	Enable	Disable
6	Terminal temperature rise Not used	-	-
7	Pre-rotation extension mode	Enable	Disable

5.5.1.2.2 Detailed Discussions of Bit 0

0011-4193

LaserBase MF6530 / / LaserBase MF6540PL / LaserBase MF6550 / KaserBase MF6560PL / / LaserBase MF6580PL

Select whether to enable or disable transfer bias pressure reduction mode.
Select "Enable" to avoid image defects (black spots) produced by transfer bias leaks occurring in a low-pressure region, such as one at a high altitude. This setting regulates the transfer bias to keep it from exceeding a predetermined level during printing.

5.5.1.2.3 Detailed Discussions of Bit 2

0011-4194

LaserBase MF6530 / / LaserBase MF6540PL / LaserBase MF6550 / KaserBase MF6560PL / / LaserBase MF6580PL

Select whether to enable or disable black belt addition mode. If the user uses paper that causes fixed toner on paper to be fused and adhered to drum, selecting "Yes" will clean the drum by forming a black band on the drum surface during the reverse rotation which is performed after printing on 50 sheets.

5.5.1.2.4 Detailed Discussions of Bit 4

0011-4195

LaserBase MF6530 / / LaserBase MF6540PL / LaserBase MF6550 / KaserBase MF6560PL / / LaserBase MF6580PL

Select whether to enable or disable flicker reduction mode. Select "Enable" and enter a count to modify fusing temperature control to cancel fluorescent flicking during printing.

Implementation of this mode would degrade the throughput.

5.5.1.2.5 Detailed Discussions of Bit 5

0012-7581

LaserBase MF6530 / / LaserBase MF6540PL / LaserBase MF6550 / KaserBase MF6560PL / / LaserBase MF6580PL

Select whether to enable or disable silent mode. Select "Enable" to modify the registration loop amount and thus reduce noises or squeaks the registration rollers produce after picking paper from the individual paper inlets.

5.5.1.2.6 Detailed Discussions of Bit 7

0012-7584

LaserBase MF6530 / / LaserBase MF6540PL / LaserBase MF6550 / KaserBase MF6560PL / / LaserBase MF6580PL

You can specify whether the pre-rotation is to be extended.
If white streaks appear in the image in the H/H environment, selecting "Set" extends the pre-rotation by five turns. During the extended period, the charge Vpp is increased to prevent white streaks from occurring.

5.5.1.3 SSSW-SW15

5.5.1.3.1 List of Function

0011-7100

LaserBase MF6530 / / LaserBase MF6540PL / LaserBase MF6550 / KaserBase MF6560PL / / LaserBase MF6580PL

T-5-18

Bit	Function	1	0
0	Not used	-	-
1	Not used	-	-
2	Not used	-	-
3	IFAX Permission of split recording of text data	Enable	Disable
4	Not used	-	-
5	Not used	-	-
6	Not used	-	-
7	Not used	-	-

5.5.1.3.2 Detailed Discussions of Bit 2

0011-7102

LaserBase MF6530 / / LaserBase MF6540PL / LaserBase MF6550 / KaserBase MF6560PL / / LaserBase MF6580PL

You can specify whether split recording is to be enabled when text data such as a header and body text is recorded. Selecting "Set" may split text data when a small paper size such as A5 is selected. In this case, a page may be split in the middle of a character string.

5.5.2 Numeric Parameter Settings (NUMERIC Param.)

5.5.2.1 Numeric Parameter Functional configuration

LaserBase MF6530 / / LaserBase MF6540PL / LaserBase MF6550 / KaserBase MF6560PL / / LaserBase MF6580PL

No.	Function	Default	Setting range
01: - 30:	Not used		
31:	Top registration adjustment (manual feed tray)	50	0 to 100, one unit = 0.1 mm
32:	Top registration adjustment (cassette)	50	0 to 100, one unit = 0.1 mm
33:	Top registration adjustment (duplex unit)	50	0 to 100, one unit = 0.1 mm
34:	Left-end registration adjustment (manual feed tray)	100	0 to 200, one unit = 0.1 mm
35:	Left-end registration adjustment (cassette)	100	0 to 200, one unit = 0.1 mm
36:	Left-end registration adjustment (option cassette)	100	0 to 200, one unit = 0.1 mm
37: - 38:	Not used		
39:	Left-end registration adjustment (duplex unit)	100	0 to 200, one unit = 0.1 mm
40:	Target fixing temperature adjustment (multi)	6	0 to 4, one unit = 5 deg C
41:	Target fixing temperature adjustment (cassette)	6	0 to 4, one unit = 5 deg C
42:	Target fixing temperature adjustment (option cassette)	6	0 to 4, one unit = 5 deg C
43: - 50:	Not used		
51:	Two-sided curl reform mode	3	0 to 6
52:	Not used		
53:	Adjustment of margin at leading edge of copy	0	0 to 9999, one unit = 5 deg C
54:	Adjustment of margin at trailing edge of copy	50	0 to 9999, one unit = 5 deg C
55:	Adjustment of margin at right edge of copy	0	0 to 9999, one unit = 5 deg C
56:	Adjustment of margin at left edge of copy	0	0 to 9999, one unit = 5 deg C

5.5.2.2 <031: Top registration adjustment (manual feed tray)>

LaserBase MF6530 / / LaserBase MF6540PL / LaserBase MF6550 / KaserBase MF6560PL / / LaserBase MF6580PL

Adjust the top registration margin of paper picked from a manual feed tray. The larger the adjustment value, the wider the top margin of the image becomes.

5.5.2.3 <032: Top registration adjustment (cassette)>

LaserBase MF6530 / / LaserBase MF6540PL / LaserBase MF6550 / KaserBase MF6560PL / / LaserBase MF6580PL

Adjust the top registration margin of paper picked from cassettes. The larger the adjustment value, the wider the top margin of the image becomes.

5.5.2.4 <033: Top registration adjustment (duplex unit)>

LaserBase MF6530 / / LaserBase MF6540PL / LaserBase MF6550 / KaserBase MF6560PL / / LaserBase MF6580PL

Adjust the top registration margin of paper picked from a duplex unit. The larger the adjustment value, the wider the top margin of the image becomes.

5.5.2.5 <034: Left-end registration adjustment (manual feed tray)>

LaserBase MF6530 / / LaserBase MF6540PL / LaserBase MF6550 / KaserBase MF6560PL / / LaserBase MF6580PL

Adjust the left-end registration margin of paper picked from a manual feed tray. The larger the adjustment value, the wider the left-end margin of the image becomes.

5.5.2.6 <035: Left-end registration adjustment (cassette 1)>

LaserBase MF6530 / / LaserBase MF6540PL / LaserBase MF6550 / KaserBase MF6560PL / / LaserBase MF6580PL

Adjust the left-end registration margin of paper picked from cassette 1. The larger the adjustment value, the wider the left-end margin of the image becomes.

5.5.2.7 <036: Left-end registration adjustment (cassette 2)>

LaserBase MF6530 / / LaserBase MF6540PL / LaserBase MF6550 / KaserBase MF6560PL / / LaserBase MF6580PL

Adjust the left-end registration margin of paper picked from cassette 2. The larger the adjustment value, the wider the left-end margin of the image becomes.

5.5.2.8 <039: Left-end registration adjustment (duplex unit)>

LaserBase MF6530 / / LaserBase MF6540PL / LaserBase MF6550 / KaserBase MF6560PL / / LaserBase MF6580PL

Adjust the left-end registration margin of paper picked from a duplex unit. The larger the adjustment value, the wider the left-end margin of the image becomes.

5.5.2.9 <040: Target fixing temperature adjustment (manual feed tray)>

LaserBase MF6530 / / LaserBase MF6540PL / LaserBase MF6550 / KaserBase MF6560PL / / LaserBase MF6580PL

Lower the fixing temperature from the target temperature setting to reduce the chances of fixing offsets and curled or stuck delivered sheets occurring with paper picked from a manual feed tray.

5.5.2.10 <041: Target fixing temperature adjustment (cassette 1)>

LaserBase MF6530 / / LaserBase MF6540PL / LaserBase MF6550 / KaserBase MF6560PL / / LaserBase MF6580PL

Lower the fixing temperature from the target temperature setting to reduce the chances of fixing offsets and curled or stuck delivered sheets occurring with paper picked from cassette 1.

5.5.2.11 <042: Target fixing temperature adjustment (cassette 2)>

LaserBase MF6530 / / LaserBase MF6540PL / LaserBase MF6550 / KaserBase MF6560PL / / LaserBase MF6580PL

Lower the fixing temperature from the target temperature setting to reduce the chances of fixing offsets and curled or stuck delivered sheets occurring with paper picked from cassette 2.

5.5.2.12 <053: Margin adjustment at the leading edge of the copy>

LaserBase MF6530 / / LaserBase MF6540PL / LaserBase MF6550 / KaserBase MF6560PL / / LaserBase MF6580PL

Adjust the margin at the leading edge of the copy. Increasing the value makes the margin at the leading edge larger.

5.5.2.13 <054: Margin adjustment at the trailing edge of the copy>

LaserBase MF6530 / / LaserBase MF6540PL / LaserBase MF6550 / KaserBase MF6560PL / / LaserBase MF6580PL

Adjust the margin at the trailing edge of the copy. Increasing the value makes the margin at the trailing edge larger.

5.5.2.14 <055: Margin adjustment at the right edge of the copy>

LaserBase MF6530 / / LaserBase MF6540PL / LaserBase MF6550 / KaserBase MF6560PL / / LaserBase MF6580PL

Adjust the margin at the right edge of the copy. Increasing the value makes the margin at the right edge larger.

5.5.2.15 <056: Margin adjustment at the left edge of the copy>

LaserBase MF6530 / / LaserBase MF6540PL / LaserBase MF6550 / KaserBase MF6560PL / / LaserBase MF6580PL

Adjust the margin at the left edge of the copy. Increasing the value makes the margin at the left edge larger.

5.6 Counter Indication (COUNTER)

5.6.1 Counters

LaserBase MF6530 / / LaserBase MF6540PL / LaserBase MF6550 / KaserBase MF6560PL / / LaserBase MF6580PL

This copier is furnished with a maintenance/supplies counter set (DRBL-1), which can be used to gain rough measures of when to replace supplies. The counter set increments by one on counting each sheet of small-sized paper (up to A4/LTR) and by two on counting each sheet of large-sized paper (larger than A4/LTR).

T-5-19

Maintenance counter list		
Item	**Counter**	**Explanation**
TOTAL (Total counter)	SERVICE1	Service total counter 1
	SERVICE2	Service total counter 2
	TTL	Total counter
	COPY	Total copy counter
	PDL-PRT	PDL print counter
	FAX-PRT	Fax print counter
	REP-PRT	Report print counter
	2-SIDE	Double-sided copy/print counter
	SCAN	Scan counter
PICK-UP (Paper pickup counter)	C1	Cassette 1 jam counter
	C2	Cassette 2 jam counter
	C3	Cassette 3 jam counter
	C4	Cassette 4 jam counter
	MF	Manual feed tray pickup total counter
	2-SIDE	Double-sided paper pickup total counter
FEEDER (Feeder related counters)	FEED	Feeder pickup total counter
	DFOP-CNT	ADF open/close hinge counter
JAM (Jam counters)	TTL	Unit total jam count
	FEEDER	Feeder total jam count
	SORTER	Finisher total jam count
	2-SIDE	Duplex unit jam counter
	MF	Manual feed tray jam counter
	C1	Cassette 1 jam counter
	C2	Cassette 2 jam counter
	C3	Cassette 3 jam counter
	C4	Cassette 4 jam counter
MISC (Other required counter)	WST-TNR	Waste toner counter

T-5-20

Parts counter list			
Item	**Counter**	**Explanation**	**Service life**
DRBL-1 (Unit supplies)	FX-UNIT	Fixing unit paper pass count	150,000
	TR-ROLL	Transfer charger roller high-voltage ON count	150,000
	DV-UNT-C	Developing unit rotation count	150,000
	M-PU-RL	Manual feed tray pickup roller paper pass count	150,000
	M-SP-PD	Manual feed tray separation pad paper pass count	150,000

5.6.2 Clearing Counters

LaserBase MF6530 / / LaserBase MF6540PL / LaserBase MF6550 / KaserBase MF6560PL / / LaserBase MF6580PL

- Maintenance/parts counter all clear
Execute service mode > CLEAR > COUNTER to clear all maintenance/parts counters.

- Counter clear on parts replacement
Press the numeric keypad key 0 after displaying the counter for a part just replaced, and the counter will be cleared individually.

5.7 Report Output (REPORT)

5.7.1 Report Output

LaserBase MF6530 / / LaserBase MF6540PL / LaserBase MF6550 / KaserBase MF6560PL / / LaserBase MF6580PL

The table below lists the kinds of reports that are supported.

Item	Explanation
SERVICE DATA LIST	Service mode service soft switch output (SSSW, MENU, NUMERIC Param., SPECIAL, NCU, SCAN, PRINT, SYSTEM, ROM, start date)
SYSTEM DATA LIST	Service mode service soft switch output (SSSW, MENU, NUMERIC Param., SPECIAL, NCU, SCAN, PRINT, SYSTEM, ROM, start date) System dump list output
SYSTEM DUMP LIST	Transmission count, reception count, record chart count, error count and other outputs
COUNTER REPORT	Counter output
ERROR LOG LIST	Jam and error history output
SPEC LIST	Type setting, print speed, memory size, ROM indication, adjustment data and other outputs
SERVICE LABEL	Output of an entry format for the service label affixed to the rear cover as shipped

5.7.2 System Data List

LaserBase MF6530 / / LaserBase MF6540PL / LaserBase MF6550 / KaserBase MF6560PL / / LaserBase MF6580PL

Use it to check the settings associated with the service soft switch and service parameters.

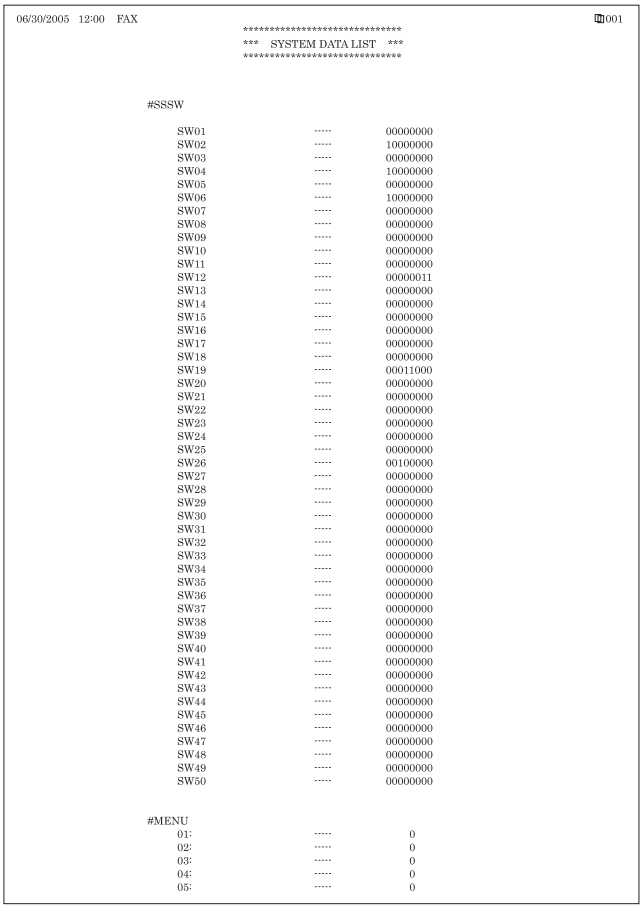

06/30/2005 12:00 FAX 001

```
*******************************
***   SYSTEM DATA LIST   ***
*******************************

#SSSW
    SW01    -----    00000000
    SW02    -----    10000000
    SW03    -----    00000000
    SW04    -----    10000000
    SW05    -----    00000000
    SW06    -----    10000000
    SW07    -----    00000000
    SW08    -----    00000000
    SW09    -----    00000000
    SW10    -----    00000000
    SW11    -----    00000000
    SW12    -----    00000011
    SW13    -----    00000000
    SW14    -----    00000000
    SW15    -----    00000000
    SW16    -----    00000000
    SW17    -----    00000000
    SW18    -----    00000000
    SW19    -----    00011000
    SW20    -----    00000000
    SW21    -----    00000000
    SW22    -----    00000000
    SW23    -----    00000000
    SW24    -----    00000000
    SW25    -----    00000000
    SW26    -----    00100000
    SW27    -----    00000000
    SW28    -----    00000000
    SW29    -----    00000000
    SW30    -----    00000000
    SW31    -----    00000000
    SW32    -----    00000000
    SW33    -----    00000000
    SW34    -----    00000000
    SW35    -----    00000000
    SW36    -----    00000000
    SW37    -----    00000000
    SW38    -----    00000000
    SW39    -----    00000000
    SW40    -----    00000000
    SW41    -----    00000000
    SW42    -----    00000000
    SW43    -----    00000000
    SW44    -----    00000000
    SW45    -----    00000000
    SW46    -----    00000000
    SW47    -----    00000000
    SW48    -----    00000000
    SW49    -----    00000000
    SW50    -----    00000000

#MENU
    01:     -----    0
    02:     -----    0
    03:     -----    0
    04:     -----    0
    05:     -----    0
```

F-5-1

5.7.3 System Dump List

LaserBase MF6530 / / LaserBase MF6540PL / LaserBase MF6550 / KaserBase MF6560PL / / LaserBase MF6580PL

- System Dump List
Use it to check the history of communications, both successful and error.

```
06/30 2005  19:18                                                    ⎚ 001

     CLEAR DATE                    06/18 2005
[1]
     TX     =    7
[3]  A4     =    0    B4     =    0    A3     =    0
[2]  RX     =    0
     A4     =    7    B4     =    0    A3     =    0    LTR    =    0    LGL    =    0
[3]  33600  =    0    31200  =    0    28800  =    0    26400  =    0    24000  =    0
     21600  =    0    19200  =    0    16800  =    0    14400  =    0    12000  =    0
[4]  9600   =    0    7200   =    0    4800   =    0    2400   =    0
     14400  =    0    12000  =    0    TC9600 =    0    TC7200 =    0
     14400  =    0    12000  =    0
     9600   =    7    7200   =    0    4800   =    0    2400   =    0
[5]  STD    =    2    FINE   =    5    SUPER  =    0    ULTRA  =    0
[6]  MH     =    0    MR     =    0    MMR    =    7    JBIG   =    0    JPEG   =    0
[7]  G3     =    0    ECM    =    7

     PRINT    TTL     =   63  /  63
[8]           C-S-TTL =    0  /   0
              K-S-TTL =   51  /  51
     READ     SCAN    =   43  /  43

     #000          0       0       0       0       0       0       0       0
[9]                0       0       0       0       0       0       0       0
                   0       0       0       0       0       0       0       0
                                   0       0       0       0       0       0
                                           0       0       0       0       0
                                                   0       0       0       0
                                                           0       0
```

F-5-2

*1: TX, number of total pages transmission.
*2: Total number of pages transmitted/received according to original size.
*3: RX, number of total pages reception.
*4: Total number of pages transmitted and received for each modem speed
*5: Total number of pages transmitted/received in connection with different modem speeds (Standard, Fine, Super Fine, Ultra Fine).
*6: Total number of pages transmitted and received for each coding method
*7: Total number of pages transmitted and received in each mode
*8: Total number of pages printed/scanned
*9: Total number of occurrences for error code

T-5-21

Indication sample					
##280	1	7	3	0	0
	##280 number of errors	##281 number of errors	##282 number of errors		

It provides error information on the 3 most recent communications.

```
                    2003 09/02 TUE 12:00   FAX                                                    001

*1 ———————— #1 LATEST                    #000

*2 ———————— START  TIME          09/02 10:00
*3 ———————— OTHER  PARTY         12345678
*4 ———————— MAKER  CODE          10001000
*5 ———————— MACHINE  CODE        0100001  00000000
            RCV  V.8  FRAME      E0  81  85  D4  90  7E  00  00
            SYMBOL  RATE         3429  baud
            DATA  RATE           28800  bps  [V. 34]
            TX  LVL  REDUCTION    0
            ERR  ABCODE          00
            ERR  SECTXB          00
            ERR  SECRXB          00

*6 ———————— Rx : ( bit  1 )      00000100  01110111  01011111  00100011  00000001  10101001  00000001 ( bit  56 )
                 ( bit  57 )     00000001  00000001  00000100  00000000  00000000                      ( bit  96 )
*7 ———————— Tx : ( bit  1 )      00000000  01000010  00011111  00100001  00000001  00000001  00000001 ( bit  56 )
                 ( bit  57 )     00000001  00000001  00000100  00000000  00000000                      ( bit  96 )

*8 ———————— Rx :  NSF  CSI  DIS                CFR                  MCF                  MCF
*8 ———————— Tx :                NSS  TSI  DCS      PIX-288  PPS-NUL       PIX-288  PPS-NUL       PIX-288  PPS-NUL
            Rx :  MCF                    MCF                  MCF
            Tx :       PIX-288  PPS-NUL       PIX-288  PPS-EOP       DCN

            #2                           #000

                  START  TIME          09/02 09:30
                  OTHER  PARTY         12345678
                  MAKER  CODE          10001000
                  MACHINE  CODE        0100001  00000000
                  RCV  V.8  FRAME      E0  81  85  D4  90  7E  00  00
                  SYMBOL  RATE         3429  baud
                  DATA  RATE           28800  bps  [V. 34]
                  TX  LVL  REDUCTION    0
                  ERR  ABCODE          00
                  ERR  SECTXB          00
                  ERR  SECRXB          00

                  Rx : ( bit  1 )      00000100  01110111  01011111  00100011  00000001  10101001  00000001 ( bit  56 )
                       ( bit  57 )     00000001  00000001  00000100  00000000  00000000                      ( bit  96 )
                  Tx : ( bit  1 )      00000000  01000010  00011111  00100001  00000001  00000001  00000001 ( bit  56 )
                       ( bit  57 )     00000001  00000001  00000100  00000000  00000000                      ( bit  96 )

            Rx :  NSF  CSI  DIS                CFR                  MCF                  MCF
            Tx :                NSS  TSI  DCS      PIX-288  PPS-NUL       PIX-288  PPS-NUL       PIX-288  PPS-NUL
            Rx :  MCF                    MCF                  MCF
            Tx :       PIX-288  PPS-NUL       PIX-288  PPS-EOP       DCN

            #3  OLDEST                   #000

                  START  TIME          09/02 09:00
                  OTHER  PARTY         12345678
                  MAKER  CODE          10001000
                  MACHINE  CODE        0100001  00000000
                  RCV  V.8  FRAME      E0  81  85  D4  90  7E  00  00
                  SYMBOL  RATE         3429  baud
                  DATA  RATE           28800  bps  [V. 34]
                  TX  LVL  REDUCTION    0
                  ERR  ABCODE          00
                  ERR  SECTXB          00
                  ERR  SECRXB          00
```

F-5-3

*1: service error code.
*2: START TIME, date and time (in 24-hr notation).
*3: OTHER PARTY, telephone number sent by the other party.
*4: MAKER CODE, manufacturer code.
*5: MACHINE CODE, model code.
*6: bit 1 through bit 96 of DIS, DCS, or DTC that has been received.
*7: bit 1 through bit 96 of DIS, DCS, or DTC that has been transmitted.
*8: RX, procedural signal received; TX, procedural signal transmitted.

5.7.4 Counter List

LaserBase MF6530 / / LaserBase MF6540PL / LaserBase MF6550 / KaserBase MF6560PL / / LaserBase MF6580PL

Explanation: Maintenance/supplies counter output.
(For more detailed information about the maintenance/supplies counter output, execute service mode > Display counter information > Counters.)

5.7.5 Error Log List

LaserBase MF6530 / / LaserBase MF6540PL / LaserBase MF6550 / KaserBase MF6560PL / / LaserBase MF6580PL

TONER
www.tonerplus.com.ua

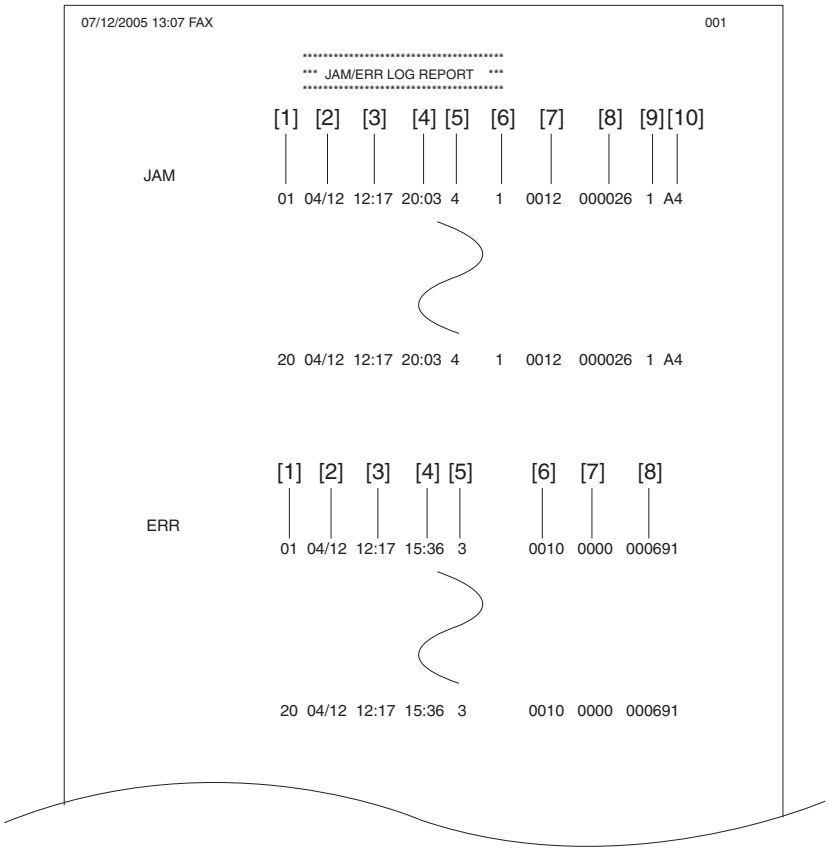

F-5-4

Jam history description (JAM)			
	Item	**Explanation**	
[1]	Number	The larger the number of a jam, the more recently it has occurred.	
[2]	Jam date	Date of jam occurrence	
[3]	Jam time		
[4]	Jam recovery time		
[5]	Location	3: Host machine, 4: ADF, 5: Finisher	
[6]	Occurrence category	0: Host machine, 1: ADF, 2: Finisher	
[7]	Jam code	Code	Jam cause
	Host machine	0104	Pickup assembly delay jam
		0208	Pickup assembly stationary jam
		010c	Delivery assembly jam
		0210	Delivery stationary jam
		0214	Host machine retention paper jam
		1118	Door open jam
	ADF	0000	Unknown jam
		0007	Initial stationary
		0008	Read sensor delay jam
		0009	Read sensor stationary jam
		000a	Paper absence (Pull out the document.)
		0010	Pickup NG
[8]	Total counter display		
[9]	Pickup stage position	0: Manual feed tray, 1: Cassette 1, 2: Cassette 2	
[10]	Paper size		

Error history description (ERR)		
	Item	**Explanation**
[1]	Number	The larger the number of an error, the more recently it has occurred.
[2]	Error date	Date of error occurrence
[3]	Error time	
[4]	Error recovery time	
[5]	Location	3: Main unit
[6]	Error code	Error code (4-digit code; for a definition of the code, see the "Error Code" Chapter.)
[7]	Detail code	Detail code of the error code (4-digit code; for a definition of the code, see the "Error Code" Chapter.)

Error history description (ERR)		
	Item	**Explanation**
[8]	Total counter display	

5.7.6 Spec List

LaserBase MF6530 / / LaserBase MF6540PL / LaserBase MF6550 / KaserBase MF6560PL / / LaserBase MF6580PL

```
07/12/2005 13:07 FAX                                                    001
[1]
[2]                    ****************************
[3]                    *** SPEC REPORT    ***
                       ****************************
                 TYPE                          _____   U. S. A
                 LBP SPEED                     _____   22cpm
                 TOTAL MEMORY                  _____   128MB
                 MAIN                          _____   WLaa-03-13
[4]              OPTION                        _____   WLaa-03-13
                 BOOT                          _____   WLaa-03-13
                 ECONT                         _____   0509
                 OPT-CAS 1                     _____   0000
                 OPT-CAS 2                     _____   0000
                 OPT-CAS 3                     _____   0000
                 OPT-DUP                       _____   0000
                 OPT-FIN                       _____   0000
                 ACTIBAT FUNCTION
[5]                BDL-IMAGE (1200)            _____   BDL
                   FAX                         _____   ON
                   NETWORK                     _____   ON
                   PCL                         _____   ON
                   PC-SCAN                     _____   ON
                   BW-SEND                     _____   OFF
                   CL-SEND                     _____   OFF
                   PAF                         _____   OFF
                   BDL-IMAGE (600)             _____   ON
                 SOFT-ID PRM
                   TYPE                        _____   0 : NONE
                   OPTION/ENABLE SW
[6]                BIT 00: BDL-IMAGE (1200)    _____   ON   / OFF
                   BIT 01: FAX                 _____   ON   / OFF
                   BIT 02: NETWORK             _____   ON   / OFF
                   BIT 03: PCL                 _____   ON   / OFF
                   BIT 04: PC-SCAN             _____   OFF  / OFF
                   BIT 05: BW-SEND             _____   OFF  / OFF
                   BIT 06: CL-SEND             _____   OFF  / OFF
                   BIT 07: PAF                 _____   OFF  / OFF
                   BIT 08: BDSS                _____   ON   / OFF
                   BIT 09: BDL-IMAGE (600)     _____   ON   / OFF
                   BIT 10: COUNTER             _____   ON   / OFF
                   BODY No.                    _____   BFDxxxxx
                   ENGINE CODE                 _____   20000016
                   SIZE TYPE                   _____   0 : NONE
[7]              TOTAL
                   TTL                         _____   000688
                   COPY                        _____   000685
                   FAX-PRT                     _____   000000
                   PDL-PRT                     _____   000000
                   RPT-PRT                     _____   000000
                 READ ADJ PRM
                   026:                        _____   0022
                   031:                        _____   0000
                   032:                        _____   0115
                   033:                        _____   0032
                   034:                        _____   0032
                   041:                        _____   0000
                   042:                        _____   0219
                   043:                        _____   0045
[8]                044:                        _____   0045
                   045:                        _____   0045
                   046:                        _____   0045
                   047:                        _____   0032
                   048:                        _____   0032
                   054:                        _____   0032
                   213:                        _____   0000
                   214:                        _____   0000
                   215:                        _____   0000
                 WRITE ADJ PRM
                   031:                        _____   0050
                   032:                        _____   0050
                   033:                        _____   0050
                   034:                        _____   0100
                   035:                        _____   0100
                   036:                        _____   0100
                   037:                        _____   0100
[9]                038:[                       _____   0100
[10]               039:                        _____   0100
                 OPTYION ROM                   _____   16MB
[11]             USB MEMORY                    _____   OFF
                 DELIVERY FULL SENSOR 1        _____   ON
[12]             DELIVERY FULL SENSOR 2        _____   OFF
[13]             USB SERIAL No.                _____   0051J9AE904
                 MAC ADDRESS                   _____   00 00 85 51 60 1C
[14]             BACKUP BATTERY                _____   OFF
```

F-5-5

[1] Type setting
[2] Print speed
[3] Memory size
[4] ROM version (MAIN/BOOT/ECONT/option cassette/duplex unit/finisher)
[5] Activation function ON/OFF
[6] Soft ID information
[7] Total counter (TOTAL/COPY/FAX/PDL/REPORT record counts)
[8] Adjustment data (factory scan/record adjustment values)
[9] Option ROM availability
[10] USB memory availability
[11] No. 1/No. 2 paper full sensor sensor availability
[12] USB serial number
[13] MAC address

[14] Backup battery availability

5.7.7 Service Label

LaserBase MF6530 / / LaserBase MF6540PL / LaserBase MF6550 / KaserBase MF6560PL / / LaserBase MF6580PL

Enter the value given in the service label affixed to the rear cover when it has been replaced with a new one.

#PRINT>#PRINT NUMERIC					#SCAN>#SCAN NUMERIC				
	FACTORY	1	2	3		FACTORY	1	2	3
031	50				026				
032	50				031				
033	50				032				
034	100				033				
035	100				034				
036	100				041				
037	100				042				
038	100				043				
039	100				044				
					045				
					046				
					047				
#SCAN>#SCAN NUMERIC					048				
					054				
					213				
					214				
body No:BFDxxxxx					215				

F-5-6

5.8 Data Initialization Mode (CLEAR)

5.8.1 Clear

LaserBase MF6530 / / LaserBase MF6540PL / LaserBase MF6550 / KaserBase MF6560PL / / LaserBase MF6580PL

Group	Item	Explanation
TEL & USER DATA		Clears all user-registered and -set areas of telephone registration data and user data. (Telephone registration refers to the registration of codes on one-touch dialing, abbreviated dialing, and group dialing.)
SERVICE DATA		Clears the system dump list, except for counters and clear dates.
COUNTER		Clears the maintenance counter, parts counter and mode-specific counters. Initializes the counter (numerator) in the system dump list.
TYPE		Initializes user data and service data to suit specified destination settings.
SOFT-CNT		Not used
HST	ACTIVITY	Initializes the activity report
	ACCOUNT	Clears print histories.
	JAM	Clears the jam history.
	ERR	Clear the error (error code) history.
	ALARM	Clears the alarm history.
CARD		Not used
ERR	E355	Not used
	E719	Not used
PWD		Clears the system administrator's password.
FILE SYSTEM		Not used
FORMAT*1	USB MEMORY	Format the USB memory. (This mode is used when the USB memory error is damaged and E744 occurs.)
	LICENSE DRIVE	Not used
ALL		Clears user and service data (except for some scan parameters and print parameters), and the counter setting/registration data in the system dump list, except for the print count.

5.9 Test Mode (TEST)

5.9.1 Overview

5.9.1.1 Outline

LaserBase MF6530 / / LaserBase MF6540PL / LaserBase MF6550 / KaserBase MF6560PL / / LaserBase MF6580PL

Test mode must be executed by keeping track the flow of menu items appearing on the LCD. Menu items in test mode are organized into seven blocks as described below. Numerals enclosed in parentheses denote a numeric keypad key to be pressed each.

1. D-RAM test ((1) D-RAM)
Checks to see if data can be correctly written to and read from D-RAM.

2. Scan test ((2) SCAN TEST)
Used to adjust contact sensor output and the position at which a document fed from the ADF is scanned.

3. Print test ((3) PRINT TEST)
Used to generate service test patterns.

4. Modem test ((4) MODEM TEST)
Performs relay actuation, modem DTMF and tonal signal transmission/reception tests.

5. Aging test ((5) AGING TEST)
Not used.

6. Function test ((6) FUNCTION TEST)
Used to verify the operations of microswitches, sensors, speakers and ADF functions.

7. Roller cleaning mode ((0) ROLLER CLEAN)
Used to clean the delivery roller or ADF pickup roller by idling them.

5.9.1.2 Test Mode Menu List

LaserBase MF6530 / / LaserBase MF6540PL / LaserBase MF6550 / KaserBase MF6560PL / / LaserBase MF6580PL

Test mode menu list
To invoke test mode, follow these steps:

1) Enter service mode.
Press the operation panel user mode key, 2 key, 8 key and user mode key in this order.
2) Press the operation panel arrow keys to show "TEST MODE."
3) Press the OK key.
To exit test mode, press the user mode key to return to standby mode.

T-5-22

Numerals enclosed in parentheses denote a numeric keypad key to be pressed each.					
Group	**Subgroup**	**Item 1**	**Item 2**	**Item 3**	**Explanation**
TEST MODE [1] - [9], [#]					
(1) DRAM [1] - [2]					D-RAM data check
	(1) D-RAM TEST				Write/read check
	(2) D-RAM TEST				Read check
(2) SCAN TEST [1] - [8]					
	(1) SHADING				Automatic gain adjustment
	(3) SHEET POS ADJ				CS position adjustment
	(4) TRASH DETECT				Dust detection
	(5), (6), (9), (*)				Not used
(3) PRINT TEST [1] - [9]					
	(1)				Not used
	(2)				All-black output
	(3)				Not used
	(4)				Back belt output
	(5), (6), (7), (8), (9), (*)				Not used
(4) MODEM TEST [1] - [9]					
	(1) RELAY TEST [1] - [2]				
		(1) RELAY TEST 1			NCU relay (and switch) ON/OFF test
		(2) RELAY TEST 2			230 V common NCU test
	(2) FREQ TEST [0] - [6]				Frequency test
		(0) FREQ TEST 462Hz			
		(1) FREQ TEST 1100Hz			
		(2) FREQ TEST 1300Hz			
		(3) FREQ TEST 1500Hz			
		(4) FREQ TSST 1650Hz			
		(5) FREQ TEST 1850Hz			
		(6) FREQ TEST 2100Hz			
	(4) G3 SIGNAL TX TEST [0] - [8]				G3 signal transmission test
		(0) G3 SIGNAL TX TEST 300bps			
		(1) G3 SIGNAL TX TEST 2400bps			
		(2) G3 SIGNAL TX TEST 4800bps			
		(3) G3 SIGNAL TX TEST 7200bps			
		(4) G3 SIGNAL TX TEST 9600bps			
		(5) G3 SIGNAL TX TEST TC7200bps			
		(6) G3 SIGNAL TX TEST TC9600bps			
		(7) G3 SIGNAL TX TEST 12000bps			
		(8) G3 SIGNAL TX TEST 14400bps			
	(5) DTMF TEST [0] - [9], * , #				DTMF transmission test
		(0) G3 SIGNAL TX TEST 300bps			
		(1) G3 SIGNAL TX TEST 2400bps			
		(2) G3 SIGNAL TX TEST 4800bps			
		(3) G3 SIGNAL TX TEST 7200bps			
		(4) G3 SIGNAL TX TEST 9600bps			
		(5) G3 SIGNAL TX TEST TC7200bps			
		(6) G3 SIGNAL TX TEST TC9600bps			
		(7) G3 SIGNAL TX TEST 12000bps			
		(8) G3 SIGNAL TX TEST 14400bps			
		(9) G3 SIGNAL TX TEST TC9600bps			
		(*) G3 SIGNAL TX TEST 12000bps			
		(#) G3 SIGNAL TX TEST 14400bps			
	(6) MODEM TEST				Tonal sign reception test
	(8) G3 V.34 Tx TEST				V34 G3 signal transmission test
	(9)				Not used
(5) AGING TEST					Not used
(6) FUNCTION TEST [1] - [9]					

Numerals enclosed in parentheses denote a numeric keypad key to be pressed each.					
Group	**Subgroup**	**Item 1**	**Item 2**	**Item 3**	**Explanation**
	(1) FUNCTION TEST G3 4800bps				G3 4800 bps signal transmission test
	(3) 6-3 SENSOR [1] - [8]				Sensor checks
		(1) SENSOR CHECK 0:NORMAL 1:LATCH			
			(0) SENSOR NORMAL [0] - [2]		
				(0) CAS 0 REG 0 DEL 0 MULTI 0	
				(1) TONER 0 FULL 0 2ND-DEL 0000	
				(2) OP1 0000 OP2 0000 OP3 0000 PATH 0000	
			(1) SENSOR LATCH [0] - [2]		
				(0) CAS 0 REG 0 DEL 0 MULTI 0	
				(1) TONER 0 FULL 0 2ND-DEL 0000	
				(2) OP1 0000 OP2 0000 OP3 0000 PATH 0000	
		(2) SWITCH CHECK [0] - [1]			
			(0) CAS 0000 LOCK 0000		
			(1) OP1 0000 OP2 0000 OP3 0000		
		(3) DS ON DES of HPS ON BCVS of			
		(4) REF xxx ANT xxx |ANT-REF| xxx			
		(5) BSCT on BDAC[A3] BDSS3-0 [of of of of]			
		(6) NCR Sts: NCR xxxxx DPT MGN OK RDY 0101			
		(7) LAST of EXIT of REG of CVR of			
		(8) WIND1 of WIND2 of WIND3 of WIND4 of			
	(4) ADF FEED TEST				ADF delivery operation test
	(5) BOOK FEED TEST				Book copy operation test
	(6) 6-6 SPEAKER FREQ:[1] VOL:[2]				Speaker volume and buzzer frequency test
	(7) Operation Panel				Operation panel key, LCD and LED test
	(8) FUNCTION TEST LAMP TEST ALL				Lamp test
	(9) LINE TEST [1] - [3]				Line signal reception test
(0) ROLLER CLEAN 0:PRT 1:ADF					Printer and ADF roller cleaning
	(0) PRT ROL CLEAN Press start key				
	(1) ADF ROL CLEAN Press start key				

5.9.2 DRAM Test

5.9.2.1 D-RAM Test<(1) D-RAM TEST>

LaserBase MF6530 / / LaserBase MF6540PL / LaserBase MF6550 / KaserBase MF6560PL / / LaserBase MF6580PL

D-RAM Test((1) D-RAM)
Press the numeric keypad key 1 on the test mode menu to select the D-DRAM test.
Press numeric keypad keys 1 and 2 during the D-DRAM test to carry out the individual tests described below.

Numeric keypad key 1
Checks to see if data can be correctly written to and read from all areas of D-RAM (SDRAM). If an error occurs making this check, the test is aborted, with an error appearing on the touch panel (LCD).

Numeric keypad key 2
Checks to see if data can be correctly read from all areas of D-RAM (SDRAM). If an error occurs making this check, the test is aborted, with an error appearing on the touch panel (LCD).

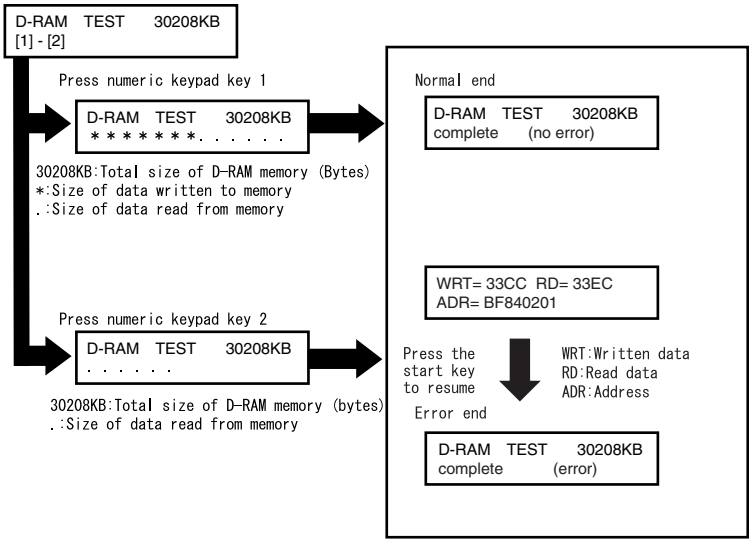

F-5-7

5.9.3 Scan Test

5.9.3.1 Scan Test ((2) SCAN TEST)

LaserBase MF6530 / / LaserBase MF6540PL / LaserBase MF6550 / KaserBase MF6560PL / / LaserBase MF6580PL

Scan test ((2) SCAN TEST)

Press the numeric keypad key 2 on the test mode menu to select the CCD test.
Press numeric keypad keys 1, 3 and 4 during the CCD test to carry out the individual tests described below.

Numeric keypad key 1
Corrects the LED output of the contact sensor and sets its parameters automatically. (AGC adjustment)

Numeric keypad key 3
Adjusts the document scan position (only on models with the ADF feature installed). Adjusts the position of the contact sensor for scanning documents fed from the ADF automatically.

Numeric keypad key 4
Detects trash at reader scan positions A/B/C.
Pos A: Reference read position
Pos B: About 0.5 mm inside of the roller from the reference position
Pos C: About 1.0 mm inside of the roller from the reference position

5.9.4 Print Test

5.9.4.1 Print Test ((3) PRINT TEST)

LaserBase MF6530 / / LaserBase MF6540PL / LaserBase MF6550 / KaserBase MF6560PL / / LaserBase MF6580PL

Print test ((3) PRINT TEST)
Press the numeric keypad key 3 on the test mode menu to select the print test.
Press numeric keypad keys 2 and 4 during the print test to generate test patterns as described below. Two kinds of service test patterns are available. Other test patterns are reserved for factory/development purposes.

Numeric keypad key 2
(2) BLACK: All-black output
Numeric keypad key 4
(4) ENDURANCE: Black belt output

To cancel test printing, press the stop key.

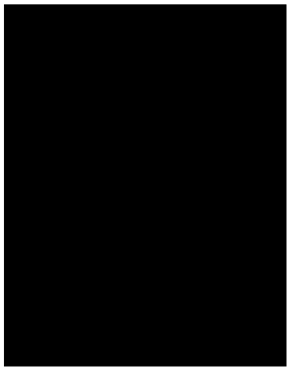

Use it to make sure that the print pattern does not have white lines or uneven image.

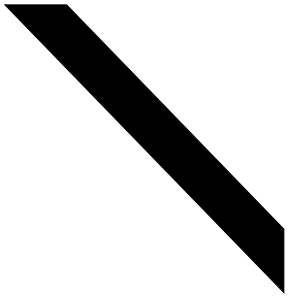

Use it to make sure that the print pattern does not have contraction/ elongation of an image or dirt/black line.s

F-5-8

5.9.5 Modem Test

5.9.5.1 MODEM Test ((4) MODEM TEST)

LaserBase MF6530 / / LaserBase MF6540PL / LaserBase MF6550 / KaserBase MF6560PL / / LaserBase MF6580PL

MODEM test((4) MODEM TEST)
These tests test modem and NCU transmission and reception. The modem tests check whether signals are sent correctly from the modem by comparing the sound of the signals from the speaker with the sounds from a normal modem.
End this test by pressing the Stop key.

Keypad	Type	Description
1	Relay test	Use it to turn on/off a selected relay to execute a switch-over test
2	Frequency test	The modem sends tonal signals from the modular jack and the speaker.
4	G3 signal transmission test	The modem sends G3 signals from the modular jack and the speaker.
5	DTMF signal reception test	Use it to generate the DTMF signal coming from the modem using the telephone line terminal and the speaker.
6	Tonal signal reception test	Use it to monitor a specific frequency and the DTMF signal received from the telephone line terminal by causing them to be indicated on the LCD (i.e., the presence/absence as detected). The reception signal is generated by the speaker.
8	V.34 G3 signal transmission test	The modem sends V.34 G3 signals from the modular jack and the speaker.

Relay Test

Press '1'or '2' on the keypad on the Modem test menu to select relay test mode. Use the keypad to operate the various relays of the NCU. '2' on the keypad is used for 230V machine.
Numeric keypad key 1
The input key and relay are shown below:

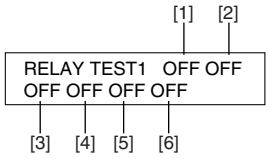

	[1]	[2]	[3]	[4]	[5]	[6]
Relay	CML	P	S	H	D	R
Keypad	0	1	2	3	4	5

F-5-9

Numeric keypad key 2
The input key and relay are shown below:

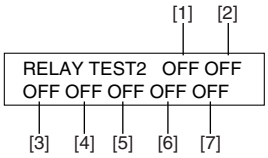

	[1]	[2]	[3]	[4]	[5]	[6]	[7]
Relay	CITS2	C1	NORG	DCSEL	DCLIM	IPSEL1	IPSEL2
Keypad	0 1	2	3	4	5	6	

F-5-10

The touch panel (LCD) is turned on or off in relation to the transmission of the relay operation signal as is operated on the keypad; for this reason, you cannot use the touch panel (LCD) to check a fault on a single relay.

Frequency Test
A press on '2' on the keypad from the MODEM test menu selects the frequency test.
In this test, signals of the following frequencies from the modem are transmitted using the telephone line terminal and the speaker. To select a different frequency, use the keypad.

Keypad	Frequency
1	462Hz
2	1100Hz
3	1300Hz
4	1500Hz
5	1650Hz
6	1850Hz
7	2100Hz

MEMO:
The frequency and the output level of individual frequencies are in keeping with the output level set in service mode.

G3 Signal Transmission Test
A press on '4' on the keypad from the MODEM test menu selects the G3 signal transmission test. In this test, the following G3 signals from the modem are transmitted using the telephone line terminal and the speaker. To select a different transmission speed, use the keypad.

Keypad	Transmission speed
0	300bps
1	2400bps
2	4800bps
3	7200bps
4	9600bps
5	TC7200bps
6	TC9600bps
7	12000bps
8	14400bps

MEMO:
The output level of individual signals is in keeping with the setting made in service mode.

DTMF Signal Transmission Test
A press on '5' on the MODEM test menu selects the DTMF signal transmission test. In the test, the following DTMF signals from the modem are transmitted using the telephone line terminal and the speaker. The number pressed on the keypad selects a specific DTMF signal.

MEMO:
The output level of individual signals is in keeping with the setting made in service mode.

Tonal/DTMF Signal Reception Test

A press on '6' on the keypad from the MODEM test menu selects the tonal signal/DTMF signal reception 0 test. In this signal, the tonal signal/DTMF signal received from the telephone line terminal can be checked to find out if it was detected by the modem.

Tonal signal reception test

```
MODEM TEST
OFF OFF OFF
```

```
OFF OFF OFF
  │   │   └─ changes from '0' to '1' in response to detection of a signal of 462 ± 25 Hz.
  │   └─────── changes from '0' to '1' in response to detection of a signal of 1100 ± 30 Hz.
  └───────────── changes from '0' to '1' in response to detection of a signal of 2100 ± 25 Hz.
```

DTMF signal reception test

```
MODEM TEST
OFF OFF OFF   5
```

The received DTMF signals are indicated starting from the right using the 2nd character of the display.

F-5-11

V.34 G3 Signal Transmission Test
A press on '8' on the keypad from the MODEM test menu selectes the V.34 G3 signal transmission test. The V.34 G3 signals below are sent from the modem using the modular jack and the speaker by pressing the start key. The Baud rate can be changed with the keypad, and the Speed can be changed with the left/right arrow key.

Keypad	Baud rate
0	3429baud
1	3200baud
2	3000baud
3	2800baud
4	2743baud
5	2400baud

Left/right arrow key	Transmission speed
	2400bps
	4800bps
	7200bps
	9600bps
<	12000bps
	14400bps
	16800bps
	19200bps
	21600bps
>	24000bps
	26400bps
	28800bps
	31200bps
	33600bps

5.9.6 Faculty Test

5.9.6.1 FUNCTION TEST <(6) FUNCTION TEST>

LaserBase MF6530 / / LaserBase MF6540PL / LaserBase MF6550 / KaserBase MF6560PL / / LaserBase MF6580PL

Function test ((6) FUNCTION TEST)
Press the numeric keypad key 6 on the test mode menu to select the function test.
Press numeric keypad keys 1 and 3 to 9 during the function test to enter the menus listed below.

T-5-23

Keypad	Item	Explanation
1	G3 signal transmission test	Transmits 4800-bps G3 signals to a telephone line and speaker.
2	Not used	
3	Sensor test	Sensor actuation test
4	ADF test	ADF operation test
5	Book test	Host machine operation test
6	Speaker test	Speaker operation test
7	Operation panel test	LCD, LED and control key operation test
8	Lamp test	Contact sensor illumination test
9	Line signal reception test	NCU board signal sensor and frequency counter operation test

G3 signal transmission test (6-1: G3 480 bps Tx)
Press numeric keypad key 1 on the FUNCTION TEST menu to select the G3 signal transmission test. This test transmits 4800-bps G3 signals from the telephone line connection terminal and speaker.

Sensor test (6-3: SENSOR)

This mode is used to verify the status of the unit sensors from LCD indications. Press numeric keypad key 3 on the FUNCTION TEST menu to select the sensor test. LCD indications change as the associated sensors turn on and off.

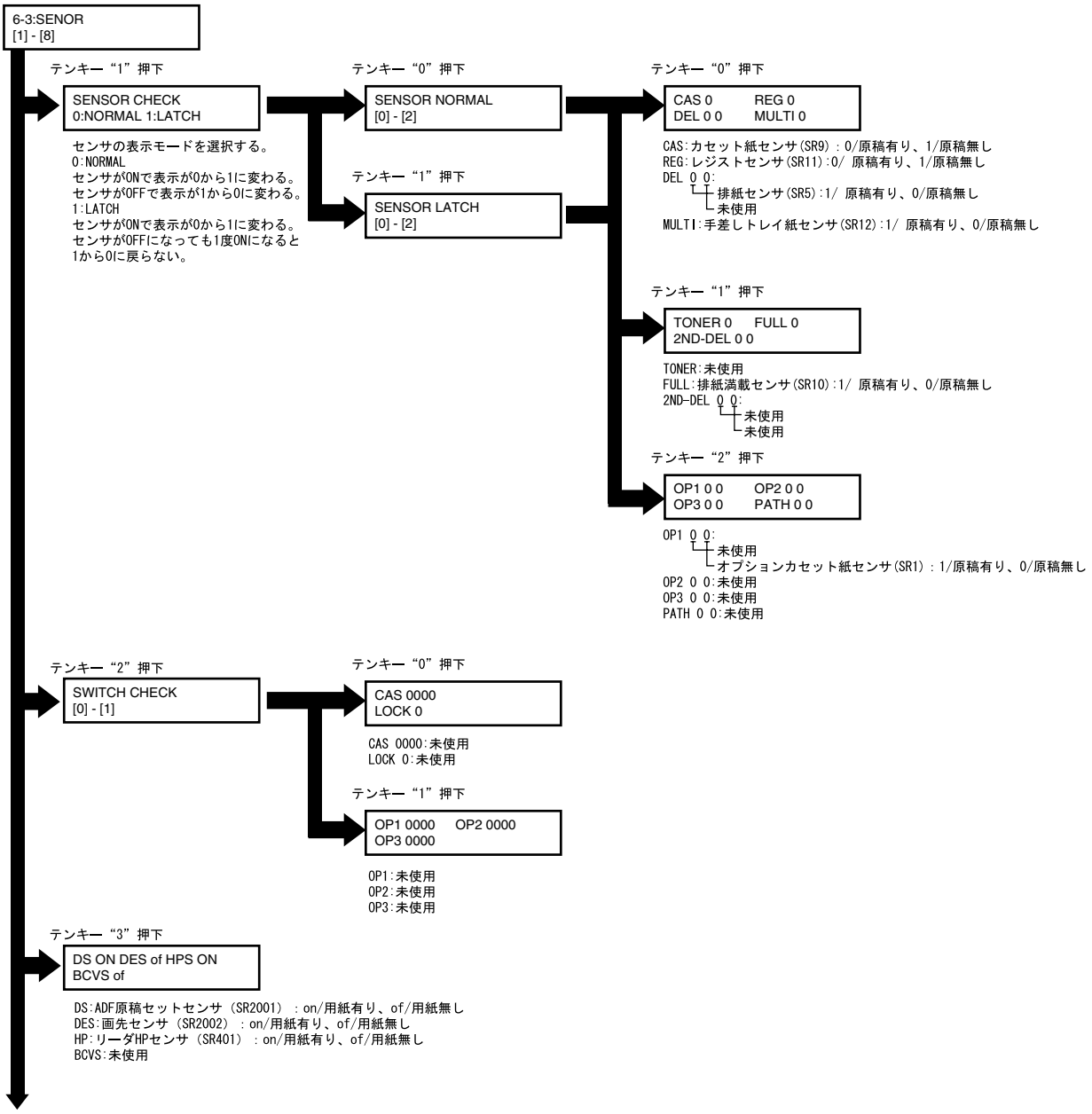

F-5-12

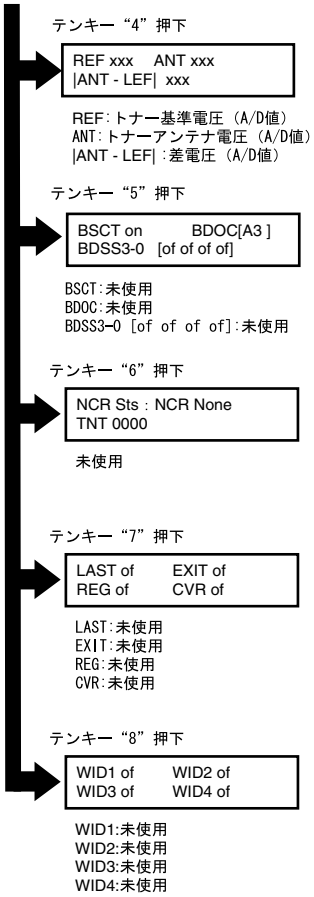

F-5-13

ADF feed test (ADF FEED TEST)
ADF operation verification mode. Press numeric keypad key 4 on the FUNCTION TEST menu to select the ADF feed test. Place a document on the document platen and press the start key to transfer the document at the speed matched to the scan resolution setting. In this test, enter a transfer speed between 500 and 2000 (mm/s) from the numeric keypad and verify the transfer speed. Select between the ON and OFF states with the left and right cursor keys to select between single-sided document feed (OFF) and double-sided document feed (ON).

Book feed test (6-5: BOOK FEED TEST)
Performs a book feed operation with a specified magnification and in a specified size.

Speaker test (6-6: SPEAKER)
Speaker operation verification mode. Press numeric keypad key 6 on the FUNCTION TEST menu to select the speaker test. In this test, the speaker generates tonal signals at 100 Hz intervals, from 200 Hz to 5 kHz, in varying sound volumes. Signal output from the speaker is thus verified.

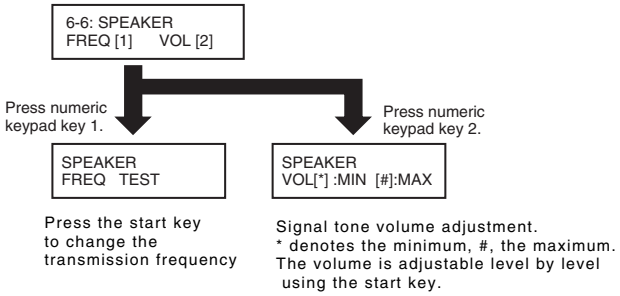

F-5-14

Operation panel test (6-7: OPERATION PANEL)
Operation panel operation verification mode. Press numeric keypad key 7 on the FUNCTION TEST menu to select the OPERATION PANEL test menu. Functions that can be verified from this menu are listed below.

- LCD test
Start the OPERATION PANEL test by pressing the start key. The LCD test is carried out first, displaying all-H characters. Press the start key once again to produce a total black display.
- LED lamp test
Press the start key after the LCD test to select the LCD lamp test, turning on all lamps on the operation panel.
- Operation key test
Press the start key after the LCD lamp test to select operation key test (1). The test succeeds if the characters appearing in the LCD are erased when the corresponding keys are pressed.
When the entire character display is erased, operation key test (2) launches (only on models with the FAX feature installed). As in (1), the test succeeds if the characters appearing in the LCD are erased when the corresponding keys are pressed.
Operation key test (1) correspondence diagram

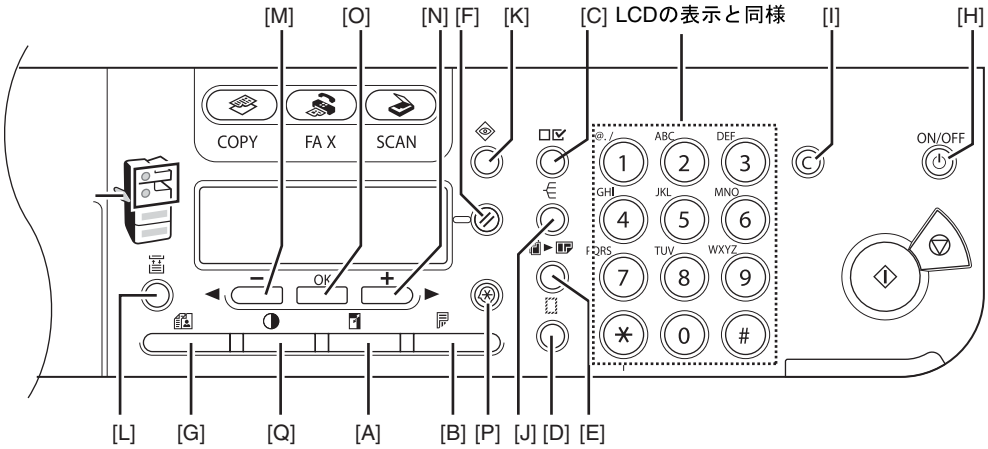

F-5-15

Operation key test (2) correspondence diagram

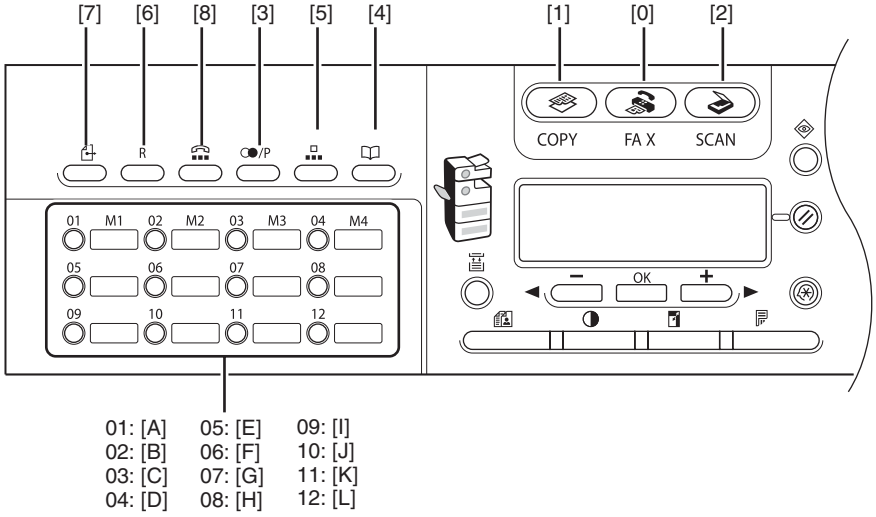

F-5-16

The flow of operation panel testing is shown below.

TONER
www.tonerplus.com.ua

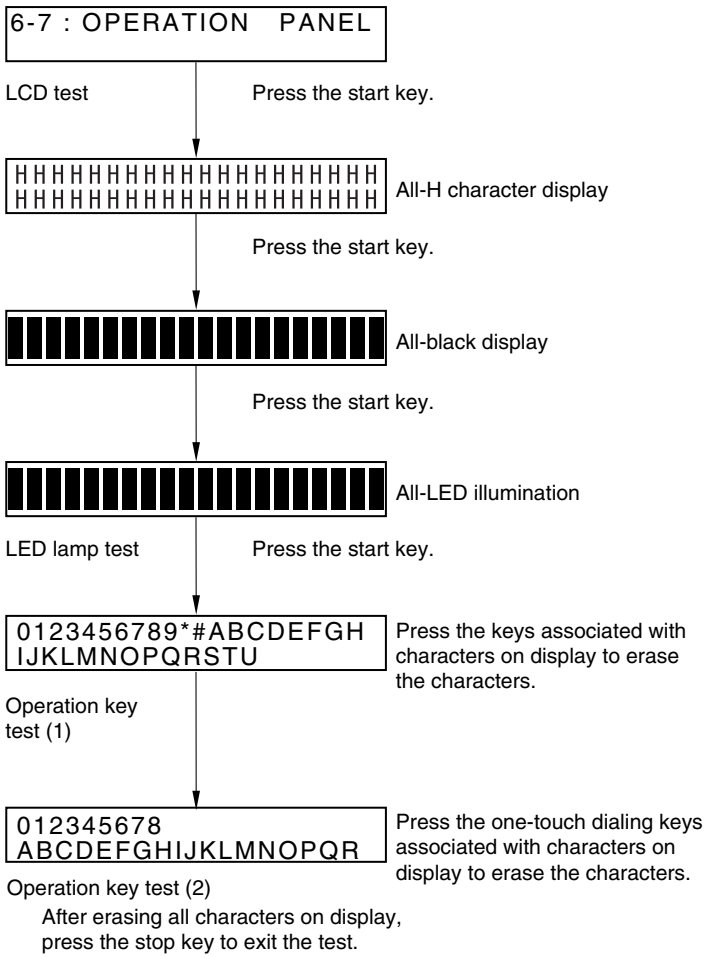

F-5-17

Line signal reception test (9: LINE DETECT)
Press numeric keypad key 9 on the FACULTY menu to select the line signal reception test. In this test, verify the successful operations of the NCU signal sensor and the frequency counter. Menu 1 detects the CI state, while menu 3 detects the CNG signal.

Test menu 1
Press numeric keypad key 1 on the LINE DETECT menu to select test menu 1. When CI is detected on the telephone line connection terminal, the LCD display changes from OFF to ON, indicating the received frequency. The LCD also displays the on-hook or off-hook state of an external telephone set as detected. The LCD displays, from left to right, CI, CI frequency, hook port and FC with indications of 1:ON and 0:OFF.

Test menu 2
Press numeric keypad key 2 on the LINE DETECT menu to select test menu 2. When the CNG signal is detected on the telephone line connection terminal, the LCD display changes from OFF to ON, indicating the received frequency. The LCD displays the status of CML, CNG and FED detection, from left to right, with ON/OFF indications. Numeric keypad key 2 turns on the CML relay to detect CNG.

Test menu 3
Press numeric keypad key 3 on the LINE DETECT menu to select test menu 3. When the CNG signal is detected on the telephone line connection terminal, the LCD display changes from OFF to ON, indicating the received frequency. The LCD displays the status of CML, CNG and FED detection, from left to right, with ON/OFF indications. Numeric keypad key 3 turns off the CML relay to detect CNG.

Lamp test (6-8: LINE DETECT)
Press numeric keypad key 8 on the FACULTY menu to select the scan lamp illumination mode. The test checks to see if the scan lamp is on or not.
Numeric keypad key 1 selects LAMP TEST ALL. Press the start key to turn on all scan lamps. LAMP TEST AGC is not used.

5.9.7 Cleaning Mode

5.9.7.1 Roller cleaning mode ((0) ROLLER CLEAN)

LaserBase MF6530 / / LaserBase MF6540PL / LaserBase MF6550 / KaserBase MF6560PL / / LaserBase MF6580PL

Roller cleaning mode ((0) ROLLER CLEAN)
Press numeric keypad key 0 in test mode to select roller cleaning mode. Press numeric keypad keys 1 and 2 during this test to enter the following menus:
Numeric keypad key 1
Press the start key clean the ADF pickup/feed rollers by idling.

Press the stop key to exit this mode.

Numeric keypad key 2
Press the start key clean the unit transfer rollers by idling.
Press the stop key to exit this mode.

Chapter 6 System Construction

6.1 Construction

6.1.1 Functional Construction

LaserBase MF6530 / / LaserBase MF6540PL / LaserBase MF6550 / KaserBase MF6560PL / / LaserBase MF6580PL

The machine may be divided into the following 7 functional blocks.

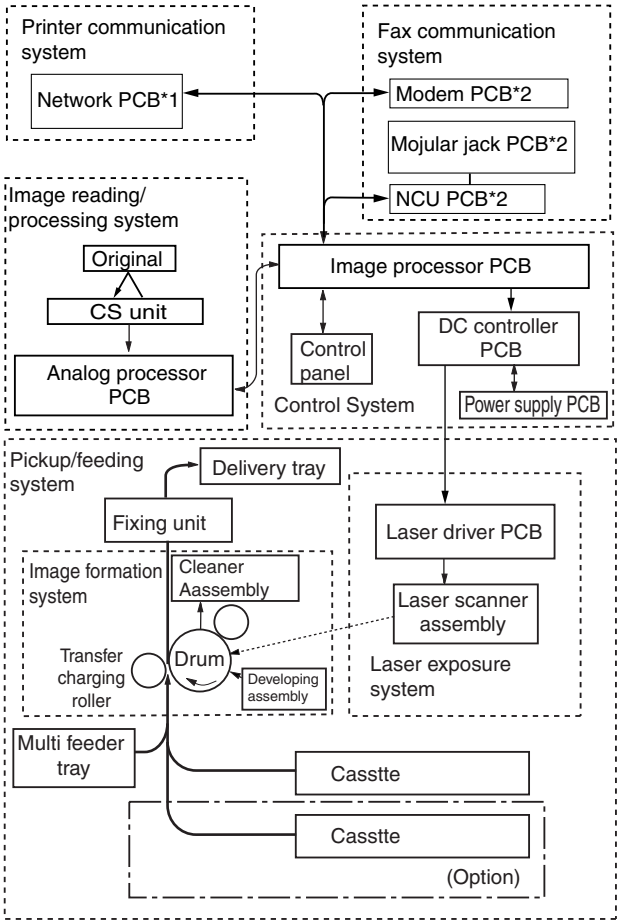

*1 : If equipped with printer functions.
*2 : If equipped with fax functions.

F-6-1

6.1.2 Functional Block Diagram

LaserBase MF6530 / / LaserBase MF6540PL / LaserBase MF6550 / KaserBase MF6560PL / / LaserBase MF6580PL

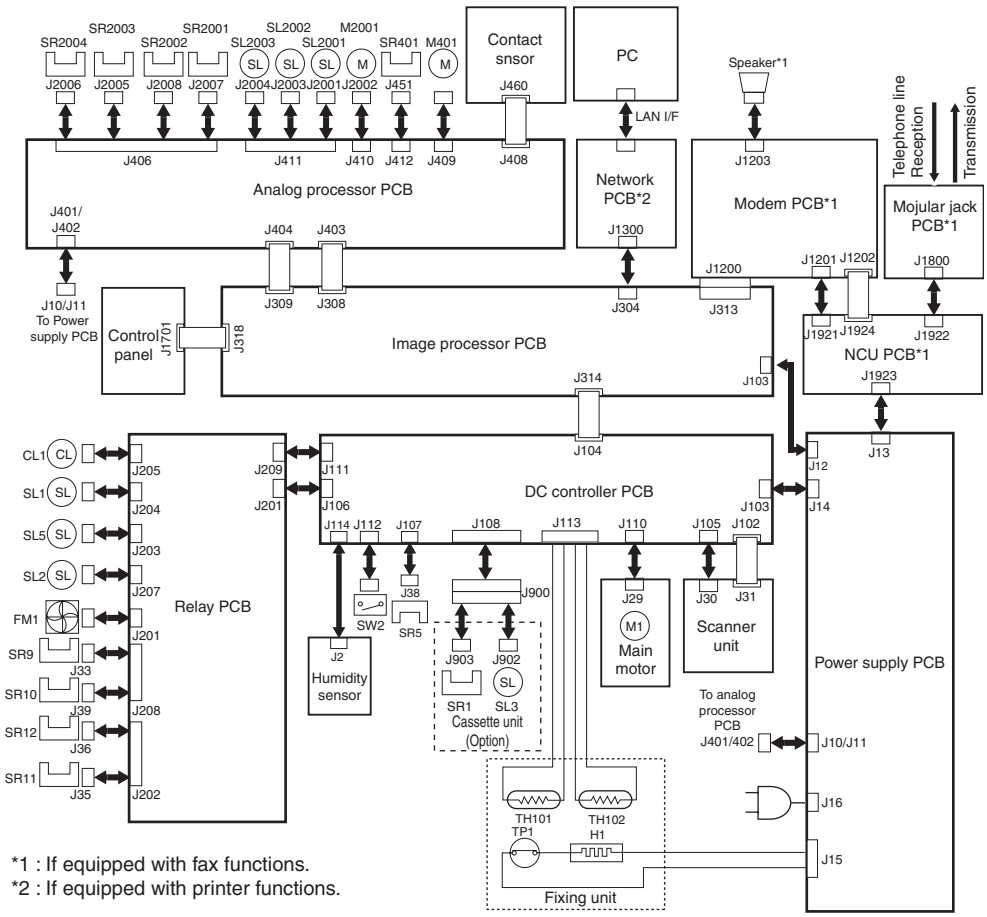

F-6-2

6.1.3 Image Processor PCB

LaserBase MF6530 / / LaserBase MF6540PL / LaserBase MF6550 / KaserBase MF6560PL / / LaserBase MF6580PL

1.function
The image processor PCB has the following functions.

Drive Control Block
The drive control mechanism acts on the reader motor and the ADF motor by the work of the ASIC and motor drive IC.

Control Panel Control Block
The control panel control block receives the state of control keys while sending/receiving data in serial communication with the control IC of the control panel PCB. Also, it sends LED and LCD signals to the control panel PCB.

Image Processing Control Block
- It subjects the digital image data from the analog processor PCB to enlargement/reduction processing, shading correction, smoothing, and other image processing, thereby converting it to 600x600-dpi image signals (VD0, VD01*, VDO2, VDO2*).
- It converts the analog image data from fax communication into 600x600-dpi image signals (VD0, VD01*, VDO2, VDO2*).
- It uses a horizontal sync signal (BD0*) as a trigger to send image signals (VD0, VD01*, VDO2, VDO2*) to the laser unit.
- The image data from the contact sensor is re-arranged, and the intensity of the contact sensor LED is controlled.

Smoothing
The 300 x 300-dpi image data from the PC is converted into image data equivalent of 1200 x 600 dpi; or, 600 x 600-dpi image data is converted into data equivalent of 2400 x 600-dpi.

Sensor Detection
It detects the state of each sensor of the reader unit and the ADF.

ESS Control
It controls the ESS function used to reduce the power consumption while the machine isin standby state.

Memory Storage
Image data is stored in SDRAM, and is retained for about 1 hr even after the power is removed by the work of the super capacitor mounted on the modem PCB. The system software and various data (e.g., user data, service data) are held by flash ROM.

Speaker Control (if equipped with fax functions.)
It turns on/off or control the volume of the error sound, key sound, and line monitor sound generated by the speaker.

MEMOÅF
The volume of the line monitor or the sound of the key sound or the error sound is adjusted in user mode.

---

2. Construction
The image processor comes in different ROM types/sizes and RAM sizes according to models.

The firmware stored in the flash ROM may be either SYSTEM or BOOT.
Using the service support tool, the following 3 types of firmware may be upgraded: SYSTEM and BOOT stored in the flash ROM and the firmware stored ion PCL ROM.

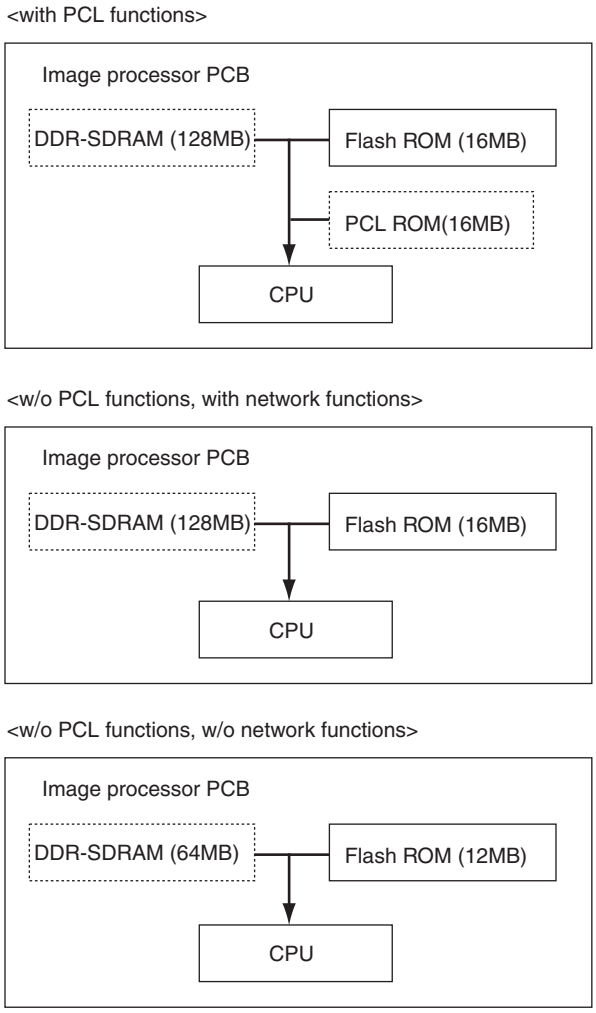

F-6-3

6.1.4 DC Controller PCB

LaserBase MF6530 / / LaserBase MF6540PL / LaserBase MF6550 / KaserBase MF6560PL / / LaserBase MF6580PL

Fixing Heater Control Block
The fixing heater control block monitors the temperature reading of the thermistor to ensure that the temperature of the heater reaches a specific level. If an error is detected in the temperature of the heater, it stops the power to the heater.

High-Voltage Control Block
The high-voltage control block controls the high voltage for the primary charging roller, developing cylinder of the cartridge, transfer charging roller, and fixing film.

Drive Control Block
The drive control block controls the main motor, pickup solenoid, and fan.

Sensor Detection
It detects the state of the sensors in the pickup assemblies and the printer block, thereby monitoring the drive assembly.

Image Processor PCB Interface block
The image processor PCB interface block sends the horizontal sync signal (BD0*) to the image processor PCB. It also returns a state signal in response to a command signal (serial) from the image processor PCB, thereby communicating the state of the printer block to the image processor PCB.

Laser Control Block
The laser control block controls the drive of the laser diode of the laser scanner unit according to the image signals (VD01, VD01*, VD02, VD02*) from the image processor PCB. Also, it controls the intensity of the laser diode (auto power control) for each line of print data.

Horizontal Sync Signal Control
When the laser beam reaches the horizontal print start position, the laser beam detection signal (BDI*) from the laser scanner unit is detected, and the horizontal sync signal (BD0*) is sent to the image processor PCB. Also, the horizontal sync signal (BD*) is monitored for frequency of output.

Scanner Motor Control
The scanner motor is controlled so that the horizontal resolution of the print image is 600 dpi. Also, the laser beam detection signal (BDI*) from the laser scanner unit is detected to monitor the rotation of the scanner motor.

Cartridge Detection Mechanism
In wait state, the CPU on the DC controller PCB measures the voltage level of the cartridge detection signal (CRGSNS) a specific number of times to check the presence/absence of the cartridge when an AC bias is applied to the primary charging roller.

Toner Level Detection Mechanism
While the machine is in wait state, the toner level detection signal (ADDTNR; based on the comparison of the developing bias output and the antenna output inside the cartridge) occurring when the developing AC bias is detected during normal rotation to monitor the
toner level inside the cartridge.

6.1.5 Analog Processor PCB

LaserBase MF6530 / / LaserBase MF6540PL / LaserBase MF6550 / KaserBase MF6560PL / / LaserBase MF6580PL

The analog image data read by the contact sensor is converted into digital image data and sent to the ASIC of the image processor PCB.

6.1.6 Power Supply PCB

LaserBase MF6530 / / LaserBase MF6540PL / LaserBase MF6550 / KaserBase MF6560PL / / LaserBase MF6580PL

Switching Regulator
The following is generated using power from the power outlet for loads: +24DC, +5 VDC, +5VRDC, +3.3VSDC, +3.3VRDC.

6.1.7 Relay PCB

LaserBase MF6530 / / LaserBase MF6540PL / LaserBase MF6550 / KaserBase MF6560PL / / LaserBase MF6580PL

The signals from the sensors/solenoids/clutches are sent to the DC controller PCB through the relay PCB.

6.1.8 Control Panel PCB

LaserBase MF6530 / / LaserBase MF6540PL / LaserBase MF6550 / KaserBase MF6560PL / / LaserBase MF6580PL

Key Detection and LCD/LED Drive
The keys are monitored, and the LCD and LEDs are driven.

LCD Function
The LCD consisting of 2 lines of 20 characters is controlled according to the display signals from the image processor PCB.

Serial Communication Control
The state of the control keys is monitored based on serial communications with the image processor PCB. LCD and LED drive data are received.

6.1.9 Network PCB Åiif equipped with network functionsÅj

LaserBase MF6530 / / LaserBase MF6540PL / LaserBase MF6550 / KaserBase MF6560PL / / LaserBase MF6580PL

The communications with the PC are controlled. The image data from the PC is converted into print data for the machine, and is sent to the image processor PCB.

6.1.10 NCU PCB (if equipped with fax functions)

LaserBase MF6530 / / LaserBase MF6540PL / LaserBase MF6550 / KaserBase MF6560PL / / LaserBase MF6580PL

2-Line/4-Line Conversion Circuit
Signals from a 2-line telephone line are converted into 4-line signals (transmission signals and reception signals). Also, the transmission signals from the image processor PCB are prevented from entering the reception circuit.

Dial Pulse Generation Circuit
The dial pulse generation circuit generates dial pulses by turning on and off the relay inside it according to the control signals from the image processor PCB. It then sends the dial signals to the telephone line by way of the modular jack PCB.

Off-Hook Detection Circuit
An off-hook state is detected with reference to the direct current flowing into the circuit, occurring when the telephone connected to the telephone terminal of the modular jack PCB is off the hook.

Line Voltage Conversion Circuit
The primary side of the NCU PCB is controlled using a line voltage of +48 VDC. In light of this, the DC component is cut by the capacitor, and only the audio signals are converted into voltages suited to the modem level.

6.1.11 Modular Jack PCB (if equipped with fax functions)

LaserBase MF6530 / / LaserBase MF6540PL / LaserBase MF6550 / KaserBase MF6560PL / / LaserBase MF6580PL

The signals from the 2 modular jacks (for telephone line and telephone connection) are communicated to the line voltage conversion circuit of the NCU PCB, and the signals from the fax are communicated to the telephone line.

6.2 System Construction

6.2.1 System Construction

LaserBase MF6530 / / LaserBase MF6540PL / LaserBase MF6550 / KaserBase MF6560PL / / LaserBase MF6580PL

TONER
www.tonerplus.com.ua

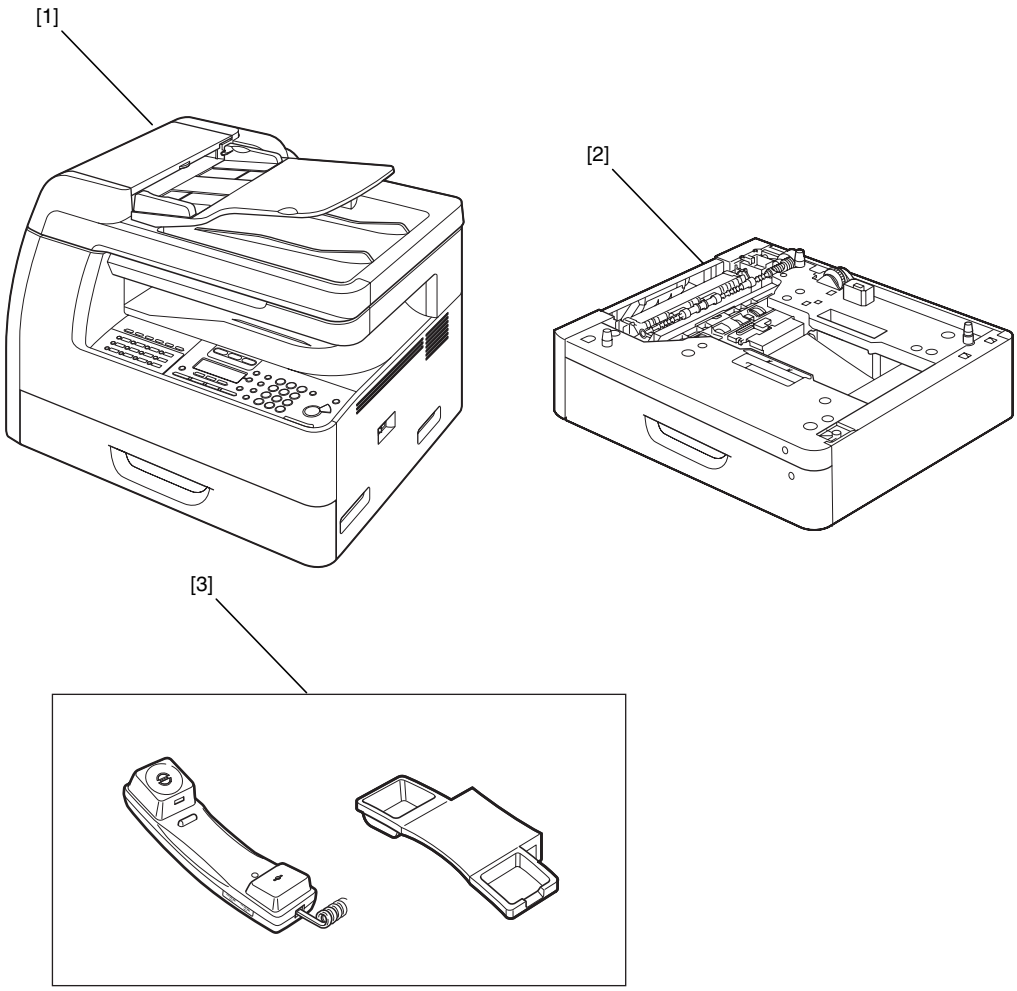

F-6-4

[1] Host machine
[2] Cassette Unit-M1
[3] Hand Set CT-25 *1
*1 The handset comes standard with the imageCLASS MF6550 for China. It is optionally available for the Laser Base MF6550 for Europe and Laser Base MF6580PL. It is not available optionally for other models.

6.3 Product Specifications

6.3.1 Product Specifications

LaserBase MF6530 / / LaserBase MF6540PL / LaserBase MF6550 / KaserBase MF6560PL / / LaserBase MF6580PL

Copyboard	stream reading, fixed reading
Body	desktop
Light source type	LED
Lens type	CS (Contact sensor)
Photosensitive medium	OPC drum (24-mm dia.)
Reproduction method	indirect electrostatic
Exposure method	by laser light
Charging method	by roller contact
Development method	1-component toner projection
Transfer method	by transfer roller
Separation method	by curvature + static eliminator
Pickup method	Cassette: 1 cassette Multifeeder: 1 feeder
Cassette pickup method	claw + retard
Multifeeder pickup method	dual processing
Drum cleaning method	by cleaning blade
Fixing method	SURF (on-demand)
Toner supply type	by toner cartridge
Toner type	magnetic negative toner
Auto Clear	yes
Original type	Sheet, book, 3-D object (2 kg max.)
Maximum original size	LGL (356 X 216mm)
Reproduction ratio	A series: 2R2E (1:1.000, 1:0.500, 1:0.70, 1:0.41, 1:2.000) INCH series: 3R2E (1:1.000, 1:0.500, 1:0.64, 1:0.78, 1:1.29, 1:2.000) AB series: 4R4E (1:1.000, 1:0.500, 1:0.70, 1:0.81, 1:0.86, 1:1.15, 1:1.41, 1:2.000) 50% to 200% (1% increments)*1 *1 except for MF6531
Warm-up time	13.5 sec or less (w/o PCL ROM: ROM 12MB, 16MB model) 16.0 sec or less (with PCL ROM: ROM 32MB model)
First print time	Book: 7.7sec or less (A4), 7.6 sec or less (LTR) ADF: 12 sec or less (A4/LTR)
Cassette paper size	A4 or LGL/LTR
Multifeeder paper size	Width: 76.2 to 216 mm Length: 127 to 356 mm Weight: 56 to 128 g/m2
Cassette paper type	Plain paper (60 to 90 g/m2), recycled paper (60 to g/m2), colored paper (60 to 90 g/m2)
Multifeeder tray paper type	Plain paper (60 to 90 g/m2), recycled paper (60 to g/m2), colored paper (60 to 90 g/m2), transparency, label, postcard, thick paper (90 to 128 g/m2), envelope (COM10, Monarch, DL, ISOB5, ISO-C5)
Duplex paper type	Plain paper, colored paper, recycled paper
Cassette capacity	500 sheets (80 g/m2)
Multifeeder tray capacity	100 sheets (plain paper: 80g/m2) 80 sheets (heavy paper: 91 to 105g/m2) 50 sheets (heavy paper: 106 to 128g/m2) 40 sheets (label) 10 sheets (envelope, OHP) 50 sheets (post card)
Delivery tray stack	100 sheets (plain paper: 80g/m2) 80 sheets (heavy paper: 91 to 105g/m2) 50 sheets (heavy paper: 106 to 128g/m2) 40 sheets (label) 10 sheets (envelope, OHP) 50 sheets (post card)
Continuous reproduction	1 to 99 sheets
Non-image width (leading edge)	3.0 -/+2.5 mm
Non-image width (left/right)	2.5 -/+2.0 mm
Image mode	Yes (text, text/photo, photo)
Auto power off	yes

Energy save mode	yes (manually ON/OFF; auto OFF after specific time, auto ON after fax reception/print data reception)
Operating environment (temperature range)	15 to 30 deg C
Operating environment (humidity range)	10 to 80%
Operating environment (atmospheric pressure)	0.6 to 1.0 atm
Noise	Copying (A4/22cpm model):66.7 dB or less (fast mode) (LTR/23cpm model):67.05 dB or less (fast mode: reference)
Power supply rating	120V (50/60Hz), 230V (50/60Hz)
Power consumption (maximum)	120V: Approx. 780 kW (max.) 230V: Approx. 860 kW (max.)
Power consumption	Standby: TBD W (approx.; reference only) Operation: TBD W (approx.; reference only) Energy save stanby: 2 W or less (approx; reference only)
Ozone	0.02mg or less
Dimensions	520 mm (W) X 457mm (D) X 453mm (H): standard model 520 mm (W) X 457mm (D) X 581mm (H): with optional cassette unit
Weight	Approx. 10.8 lb(23.7kg) (including toner cartridge)
Option	Cassette unit, Hand set

6.3.2 ADF Specifications

LaserBase MF6530 / / LaserBase MF6540PL / LaserBase MF6550 / KaserBase MF6560PL / / LaserBase MF6580PL

Original orientation	Face-down
Original position	Center reference
Original processing mode	- Single-sided document processing - Double-sided document processing
Original reading	Stream reading
Stack	small size *1: 50 sheets or less large size*2: 25 sheets or less *1: small size (A4R, B5R, A5R, B6, LTRR, SMTR) *2: large size (LGL)
Mixed original sizes	Same types of paper can be mixed.
Original AE detection	no
Original size recognition	no
Stamp	no
Operating environment	Same as that of host machine.

6.4 Function List

6.4.1 Printing Speed

LaserBase MF6530 / / LaserBase MF6540PL / LaserBase MF6550 / KaserBase MF6560PL / / LaserBase MF6580PL

T-6-1

Type		Single-sided		Two-sided	
		Cassette feed	Manual feed	Cassette feed	Manual feed
Plain paper	A4R	22	22	TBD	TBD
	B5R	-	13	-	TBD
	A5R	-	13	-	TBD
	LGL	18	18	TBD	TBD
	LTRR	23	23	TBD	TBD
	STMTR	-	13	-	TBD

Type		Single-sided		Two-sided	
		Cassette feed	Manual feed	Cassette feed	Manual feed
Heavy paper 1/2/3	A4R	-	14	-	TBD
	B5R	-	6	-	TBD
	A5R	-	-	-	-
	LGL	14	14	TBD	TBD
	LTRR	-	13	-	TBD
	STMTR	-	6	-	TBD
Bond paper	A4R	-	6	-	-
	B5R	-	6	-	-
	A5R	-	-	-	-
	LGL	-	10	-	-
	LTRR	-	10	-	-
	STMTR	-	6	-	-
OHP	A4R	-	6	-	-
	LTRR	-	6	-	-
Envelope	Monarch	-	6	-	-
	COM10	-	6	-	-
	ISO-B5	-	6	-	-
	ISO-C5	-	6	-	-
	DL	-	6	-	-

Supplement:
- The above copy speed does not change if magnification is changed.
- The above copy speed does not change irrespective of whether paper is supplied from the cassette, the manual feed tray, or from the cassette feeding module.
- The copy speed may become down when the copies make continuously one minutes or more with the narrow width paper. The slowdown is reduced with the following user mode. User Mode: Additional Functions > Adjust/Cleaning > Spesial Mode P > ON

6.4.2 Types of Paper

LaserBase MF6530 / / LaserBase MF6540PL / LaserBase MF6550 / KaserBase MF6560PL / / LaserBase MF6580PL

T-6-2

Type		Paper size	Source		Duplex print
			Manual Feed Tray	Cassette	
Plain paper, eco paper, recycled paper (64-90g/m2)		A4R, B5R, A5R, LGL, LTRR, STMTR, EXER, 16KR*1, OFICIO, B-OFICIO, M-OFICIO, FOLIO, GLTRR, GLGL, FLSP	yes	yes	yes
Special paper	Heavy paper (90-128g/m2)	Width:: 76.2mm-216mm Length: 127mm-356mm	yes	no	no
	OHP	A4R, LTRR	yes	no	no
	Postcard	Postcard A6R modified	yes	no	no
	4-plane postcard	A4 modified	yes	no	no
	Label paper	A4R, LTRR	yes	no	no
	3-hole paper	LTRR	yes	yes	yes
	Transparency	A4R	no	yes	no
	Envelope	Com10, Monarch, DL, ISO-C5, ISO-B5	yes	no	no
*1: only for China					

Chapter 7 Upgrading

7.1 Upgrading

7.1.1 Overview of Upgrade

LaserBase MF6530 / / LaserBase MF6540PL / LaserBase MF6550 / KaserBase MF6560PL / / LaserBase MF6580PL

This machine and options can be upgraded by downloading system software programs from the personal computer (hereafter called as the PC) in which a service support tool (hereafter called SST) has been loaded.
System software programs and upgrade tools are listed in the following table:

T-7-1

Type	System software type	Upgrade tool	Remarks
		SST	
Main unit	System (main controller)	Yes	Main controller also controls the reader.
	Boot (boot program)	Yes	
	PCL	Yes	16MB ROM PCB

Download the system software for PCL board following the same procedure described in "Downloading the System".

TONER
www.tonerplus.com.ua

Feb 22 2006