Service Manual

MF9100 Series

Canon

Aug 22 2008

Application

This manual has been issued by Canon Inc. for qualified persons to learn technical theory, installation, maintenance, and repair of products. This manual covers all localities where the products are sold. For this reason, there may be information in this manual that does not apply to your locality.

Corrections

This manual may contain technical inaccuracies or typographical errors due to improvements or changes in products. When changes occur in applicable products or in the contents of this manual, Canon will release technical information as the need arises. In the event of major changes in the contents of this manual over a long or short period, Canon will issue a new edition of this manual.

The following paragraph does not apply to any countries where such provisions are inconsistent with local law.

Trademarks

The product names and company names used in this manual are the registered trademarks of the individual companies.

Copyright

Caution

Use of this manual should be strictly supervised to avoid disclosure of confidential information.

Symbols Used

This documentation uses the following symbols to indicate special information:

Symbol	Description
	Indicates an item of a non-specific nature, possibly classified as Note, Caution, or Warning.
	Indicates an item requiring care to avoid electric shocks.
	Indicates an item requiring care to avoid combustion (fire).
	Indicates an item prohibiting disassembly to avoid electric shocks or problems.
	Indicates an item requiring disconnection of the power plug from the electric outlet.
Memo	Indicates an item intended to provide notes assisting the understanding of the topic in question.
REF.	Indicates an item of reference assisting the understanding of the topic in question.
	Provides a description of a service mode.
Error	Provides a description of the nature of an error indication.

The following rules apply throughout this Service Manual:

1. Each chapter contains sections explaining the purpose of specific functions and the relationship between electrical and mechanical systems with reference to the timing of operation.
   In the diagrams, represents the path of mechanical drive; where a signal name accompanies the symbol , the arrow ⟶ indicates the direction of the electric signal.
   The expression "turn on the power" means flipping on the power switch, closing the front door, and closing the delivery unit door, which results in supplying the machine with power.
2. In the digital circuits, '1'is used to indicate that the voltage level of a given signal is "High", while '0' is used to indicate "Low".(The voltage value, however, differs from circuit to circuit.) In addition, the asterisk (*) as in "DRMD*" indicates that the DRMD signal goes on when '0'.
   In practically all cases, the internal mechanisms of a microprocessor cannot be checked in the field. Therefore, the operations of the microprocessors used in the machines are not discussed: they are explained in terms of from sensors to the input of the DC controller PCB and from the output of the DC controller PCB to the loads.

The descriptions in this Service Manual are subject to change without notice for product improvement or other purposes, and major changes will be communicated in the form of Service Information bulletins.
All service persons are expected to have a good understanding of the contents of this Service Manual and all relevant Service Information bulletins and be able to identify and isolate faults in the machine."

Contents

Chapter 7 Image Formation

Chapter 8 Pickup and Feed System

Chapter 9 Fixing System

Chapter 10 Engine Control System

Chapter 11 External and Controls

Chapter 1 Introduction

Contents

1.1 System Construction

1.1.1 System Configuration of Pickup/Delivery Options

i-SENSYS MF9170 / i-SENSYS MF9130 / i-SENSYS MF8450

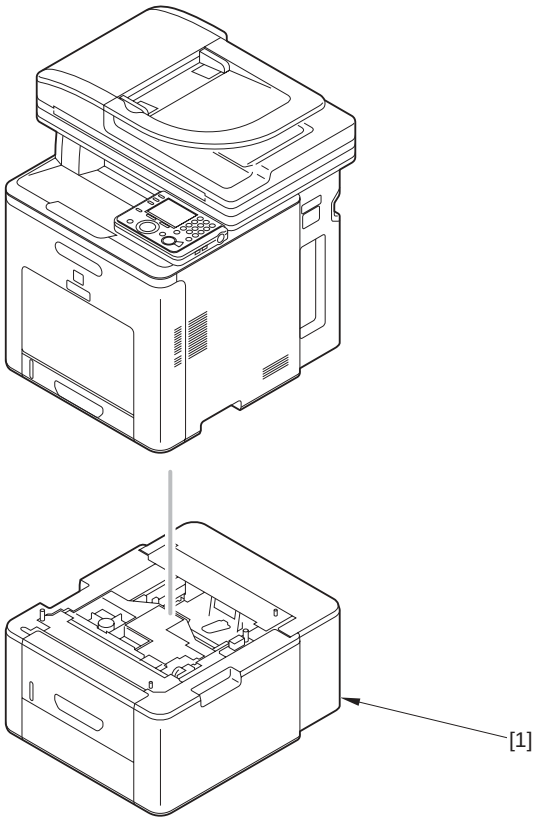

F-1-1

[1] Cassette Feeding Unit-AB1/ AC1 *

*: The following are the host machines that correspond to Cassette Feeding Unit-AB1/AC1.
North America: US, Canada, Latin America
Asia: Singapore, Hong Kong, China, Korea

T-1-1

	Japan	North America	Europe	Australia	Asia
Cassette Feeding Unit-AB1				MF9170c MF8450C	MF8450C
Cassette Feeding Unit-AC1	MF8450	MF9170c MF9150c MF8450c	MF9170 MF9130 MF8450		

1.1.2 System Configuration of Print/Send Options

i-SENSYS MF9170 / i-SENSYS MF9130 / i-SENSYS MF8450

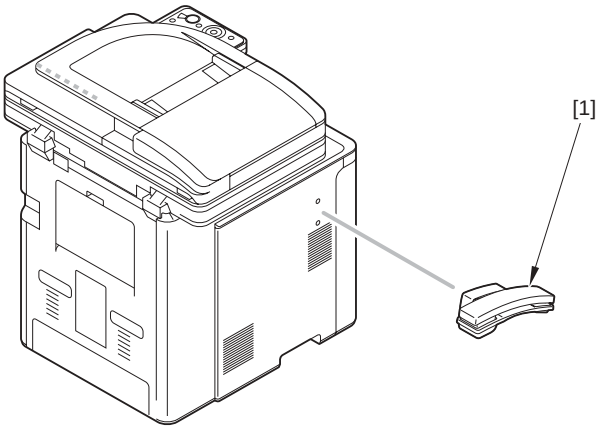

F-1-2

[1] HANDSET-J1 *

* For MF9170 (Europe) / MF8450 (Europe) / MF8450C (Singapore) only

Super G3FAX Board AB1 is required to attach Handset J1. (There is a model including Super G3FAX Board AB1 as standard equipment.)

1.2 Product Specifications

1.2.1 Names of Parts

1.2.1.1 External View

i-SENSYS MF9170 / i-SENSYS MF9130 / i-SENSYS MF8450

<Front>

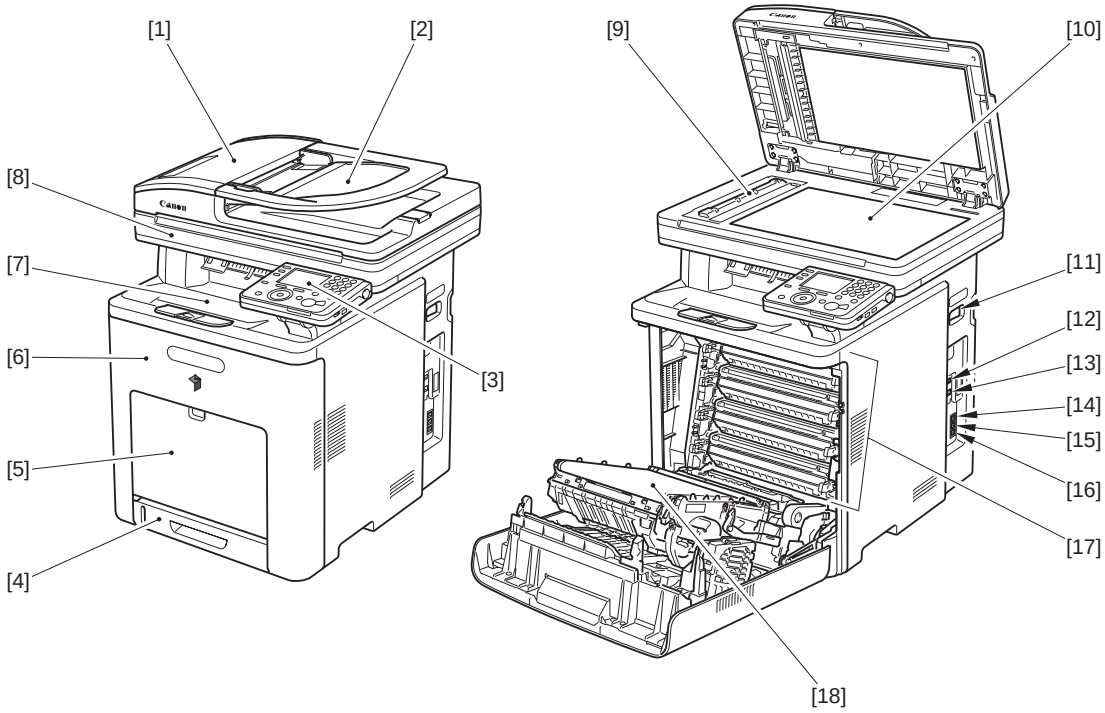

F-1-3

[1]	Feeder	[2]	Original Supply Tray
[3]	Control Panel	[4]	Cassette 1
[5]	Manual feed tray	[6]	Front Cover
[7]	Delivery tray	[8]	Reader Unit

[9]	Scanning Area	[10]	Platen Glass
[11]	Main Power Switch	[12]	USB Port
[13]	Ethernet Port	[14]	Handset Jack *
[15]	External Device Jack *	[16]	Telephone Line Jack *
[17]	Toner Cartridges	[18]	ETB Unit

*: None for I-SENSYS MF9130.

<Rear>

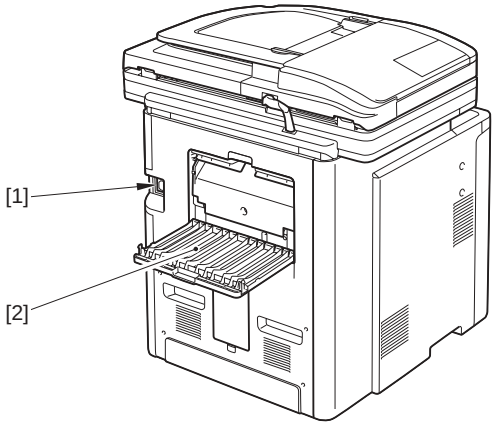

F-1-4

[1]	Power Socket	[2]	Jam removal cover

1.2.1.2 Cross Section

i-SENSYS MF9170 / i-SENSYS MF9130 / i-SENSYS MF8450

<ADF / Reader>

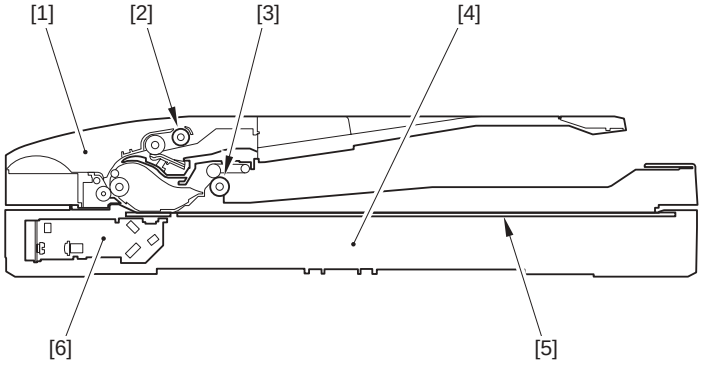

F-1-5

[1]	ADF unit	[2]	ADF pickup roller
[3]	ADF delivery roller	[4]	Reader unit
[5]	Platen glass	[6]	CCD unit

<Main Body>

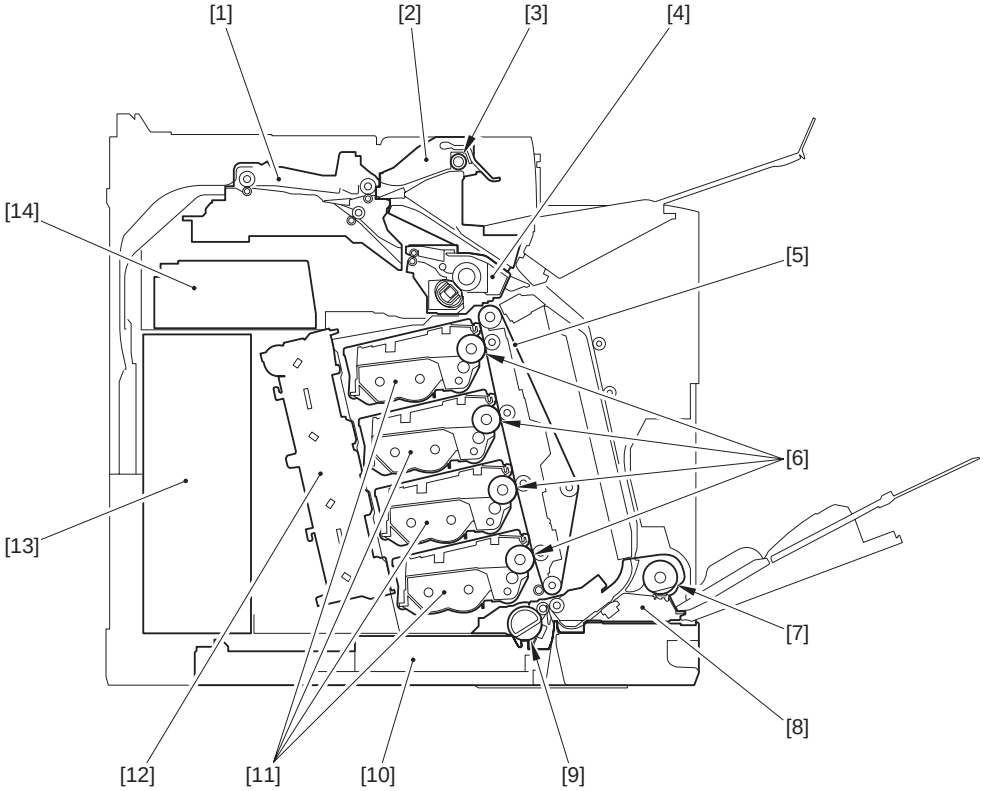

F-1-6

[1]	Reverse unit	[2]	Delivery unit
[3]	Delivery roller	[4]	Fixing unit
[5]	ETB unit	[6]	Photosensitive drum
[7]	Manual pickup roller	[8]	Pickup / feed unit
[9]	Cassette pickup roller	[10]	Cassette 1
[11]	Toner Cartridges	[12]	Laser scanner unit
[13]	Controller box	[14]	Low-voltage power supply PCB

1.2.2 Using the Machine

1.2.2.1 Turning on the Power Switch

i-SENSYS MF9170 / i-SENSYS MF9130 / i-SENSYS MF8450

The machine is equipped with the "main power switch" and "control panel power switch".

- Main power switch: Used to turns OFF/ON the machine.
- Control panel power switch: Used to enter the power save mode/low power mode/sleep mode.

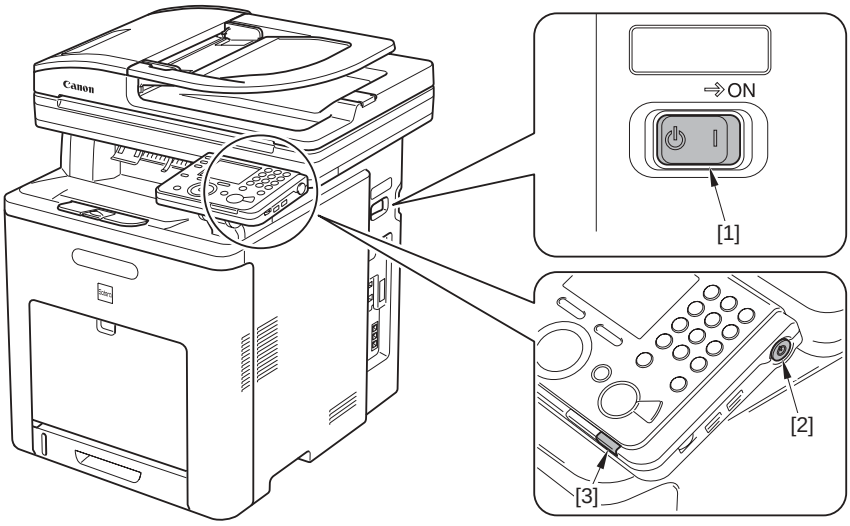

F-1-7

[1] Main power switch
[2] Control panel power switch
[3] Main power lamp

MEMO:
Since the machine is not equipped with HDD, the main power can be turned OFF during a period when the progress bar is displayed.

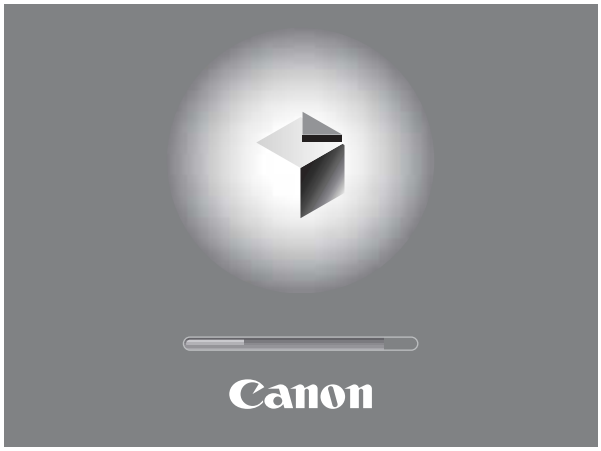

1.2.2.2 Control Panel

i-SENSYS MF9170 / i-SENSYS MF9130

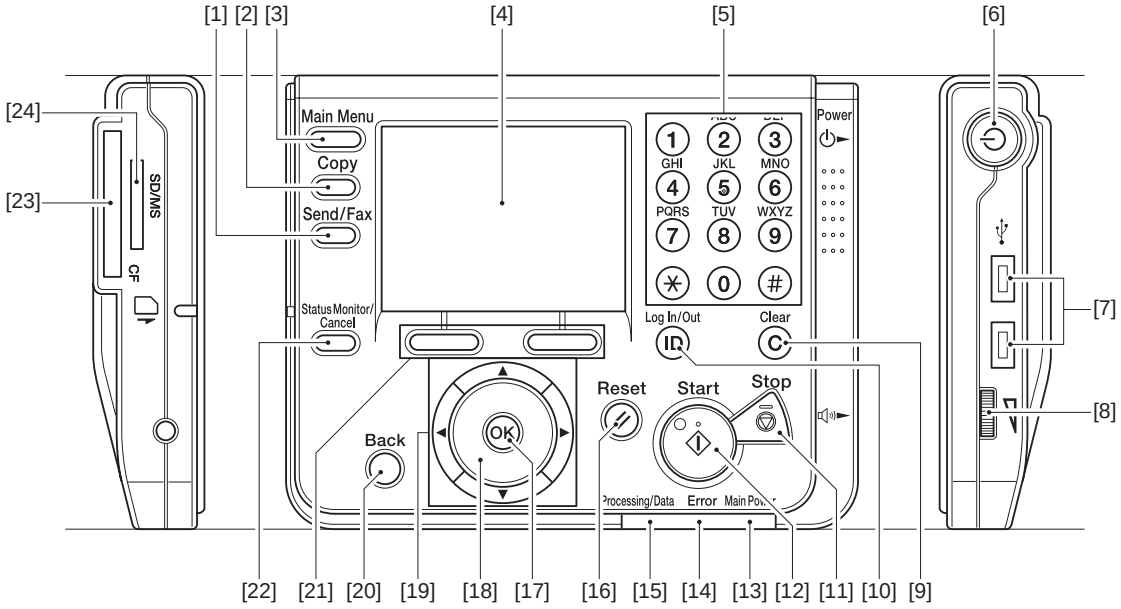

F-1-8

[1]	Custom key 2	[2]	Custom key 1
[3]	Main Menu key	[4]	Display
[5]	Numeric keys	[6]	Power switch (sub power supply)
[7]	USB slot	[8]	Volume control dial
[9]	Clear key	[10]	Log in/out key
[11]	Stop key	[12]	Start key
[13]	Main Power indicator	[14]	Error indicator
[15]	Processing/Data indicator	[16]	Reset key
[17]	OK key	[18]	Scroll wheel
[19]	▲, ▼, ◀, ▶ keys	[20]	Back key
[21]	Any key	[22]	Status monitor/Cancel key
[23]	CF card slot	[24]	SD/MS card slot

1.2.2.3 Control Panel

i-SENSYS MF8450

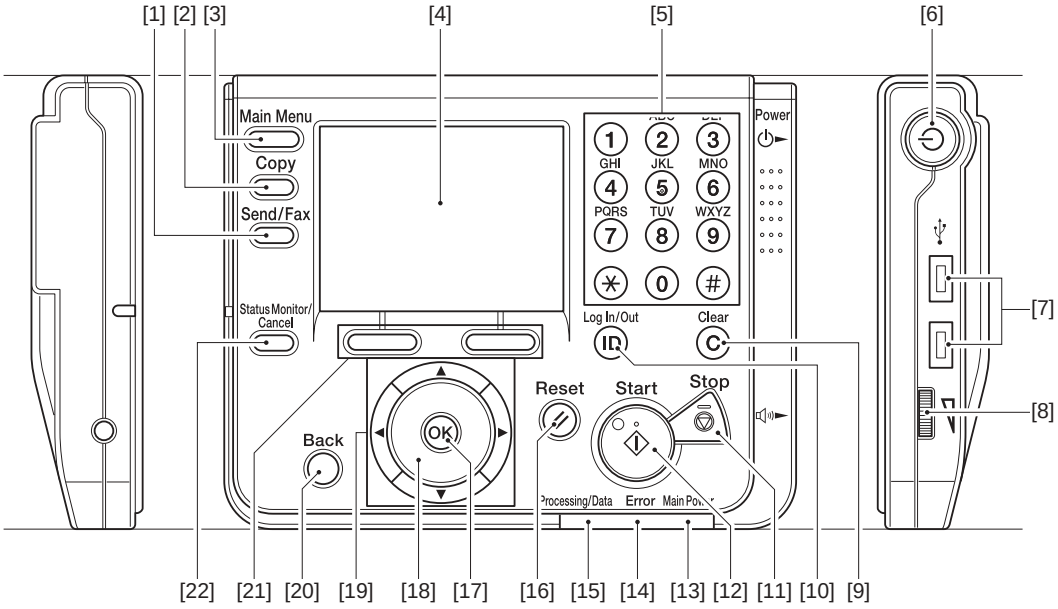

F-1-9

[1]	Custom key 2	[2]	Custom key 1
[3]	Main Menu key	[4]	Display
[5]	Numeric keys	[6]	Power switch (sub power supply)
[7]	USB slot	[8]	Volume control dial
[9]	Clear key	[10]	Log in/out key
[11]	Stop key	[12]	Start key
[13]	Main Power indicator	[14]	Error indicator
[15]	Processing/Data indicator	[16]	Reset key
[17]	OK key	[18]	Scroll wheel
[19]	▲, ▼, ◄, ► keys	[20]	Back key
[21]	Any key	[22]	Status monitor/Cancel key

1.2.3 User Mode Items

1.2.3.1 Overview

i-SENSYS MF9170 / i-SENSYS MF9130 / i-SENSYS MF8450

The following are the user mode setting items.

MEMO:
- Drawer 2 is an option cassette.
- Some setting items are displayed by pressing the left/right Any key. Perform operations by referring to the functions of the left/right Any key displayed at the bottom of the screen.

- Depending on the country of purchase, some settings may not be available.
- The menus described in this section are based on the model Color imageRUNNER C1022i.
- Depending on the model of your machine, some settings may not be available.

1.2.3.2 Volume Settings

i-SENSYS MF9170 / i-SENSYS MF9130 / i-SENSYS MF8450

*: default settings
*3: Only when the Super G3 FAX Board is attached.

T-1-2

Volume Settings			
Item			**Settings**
Monitor Volume Settings *3			Volume Key Setting Priority *, Screen Settings Priority
	Send Tone		ON*/OFF
		Volume	1*-3
Audible Tones			
	Incoming Ring *3		ON*/OFF
		Volume	1*-3
	Entry Tone		ON*/OFF
		Volume	1*-3
	Warning Tone		ON*/OFF
		Volume	1*-3
	TX Done Tone		ON*/OFF
		Volume	1*-3
	Receive Tone *3		ON*/OFF
		Volume	1*-3
	Print Done Tone		ON*/OFF
		Volume	1*-3
	Scan Done Tone		ON*/OFF
		Volume	1*-3

1.2.3.3 Printer Settings

i-SENSYS MF9170 / i-SENSYS MF9130 / i-SENSYS MF8450

*: default settings
*2: Only when the PCL Printer Kit is attached.
*3: Only when the Barcode Printing Kit is attached.

T-1-3

Printer Settings			
Item			**Settings**
Number of Copies			1 to 999 Copies 1*
2-Sided			1-Sided *, 2-Sided
Paper Feed			
	Default Paper Size		LTR, LGL, STMT, EXEC, FLSC, OFI, B-OFI, M-OFI, G-LTR, G-LGL, COM10, Monarch, DL, ISO-c5, ISO-B5, A4, A5, B5 (*: A4(For all excluding USA, Canada), LTR(Only for USA, Canada))
	Default Paper Type		Plain *, Plain H, Recycled Paper, Color, Heavy 1, Heavy 2, Transparencies, Labels, Rough, Envelope
Printing Quality			
	Gradation level		High Gradation 1 *, High Gradation 2
	Toner Density		
		Cyan (C)	-8 (Lighter) to +8 (Darker) (0*)
		Magenta (M)	-8 (Lighter) to +8 (Darker) (0*)
		Yellow (Y)	-8 (Lighter) to +8 (Darker) (0*)
		Black (Bk)	-8 (Lighter) to +8 (Darker) (0*)
	Save Toner		OFF*/ON
	Line Control		Resolution Priority *, Gradation Priority
Layout			
	Margin Direction		Long Edge *, Short Edge
	Unit of Measure		Milimeter, Inch (*: Milimeter(For all excluding USA, Canada), Inch(Only for USA, Canada))
	Margin		mm: -50.0 to +50.0 mm Width 0.5 mm (0.0) in: -1.97 to +1.97 inch Width 0.01 inch (0.00)
Auto Error Skip			OFF*/ON
Collate			OFF*/ON
Timeout			OFF/Timeout (5 to 300 Seconds) 15*
Color Mode			Auto Switch *, Color, Black and White
Gradation Settings			
	Gradation		OFF*/Smooth 1/Smooth 2
	Graphics		OFF/ON*
	Image		OFF/ON*
Compressed Image Output			Output *, Display Error Message
Initialize Printer Settings			Initialize settings? (No, Yes)

T-1-4

Printer Settings		
Item		**Settings**
PCL Settings*2		
	Paper Save	OFF* / ON
	Orientation	Portrait *, Landscape
	Font Number	(0 to 91) 0*
	Character Size	4.00 to 999.75 point Width 0.25 point (12*) point (4.00 to 999.75) 12.00* Width 0.25point
	No. of Characters	0.44 to 99.99 cpi Width 0.01 cpi (10*)
	Rows	5 to 128 Lines (*: 60(U.S.A, Canada), 64(Others))
	Character Code	DESKTOP / ISO4 / ISO6 / ISO11 / ISO15 / ISO17 / ISO21 / ISO60 / ISO69 / ISOL1 / ISOL2 / ISOL5 / ISOL6 / ISOL9 / Legal / MATH8 / MCTEXT / MSPUBL / PC775 / PC8 * / PC850 / PC852 / PC858 / PC8DN / PC8TK / PC1004 / PIFONT / PSMATH / PSTEXT / ROMAN8 / Roman 9 / VNINTL / VNMATH / VNUS / WIN30 / WINBALTWINL1 / WINL2 / WINL5
	User Paper Size Settings	OFF* / ON
	Unit	Milimeter, Inch (*: Milimeter(For all excluding USA, Canada), Inch(Only for USA, Canada))
	Width	76.2 to 215.9 mm Width 0.1 mm 3.00 to 8.50 inch Width 0.01 inch
	Height	127.0 to 355.6 mm Width 0.1 mm 5.00 to 14.00 inch Width 0.01 inch
	Append CR to LF	Yes / No*
	A4 Print Area Enlargement	OFF* / ON
	Halftones	OFF* / ON
		Text	Resolution *, Gradation
		Graphics	Resolution, Gradation *
		Image	Resolution, Gradation *
	RGB Source Profile	
		Text	sRGB* / Gamma 1.5 / Gamma 1.8 / Gamma 2.4
		Graphics	sRGB* / Gamma 1.5 / Gamma 1.8 / Gamma 2.4
		Image	sRGB* / Gamma 1.5 / Gamma 1.8 / Gamma 2.4
	Output Profile	
		Text	Normal* / Photo
		Graphics	Normal* / Photo
		Image	Normal / Photo*
	Matching Method	
		Text	Perceptual, Saturation *, Colorimetric
		Graphics	Perceptual *, Saturation, Colorimetric
		Image	Perceptual *, Saturation, Colorimetric
	Gray Compensation	
		Text	OFF / ON*
		Graphics	OFF / ON*
		Image	OFF / ON*
	CMS (Matching) Selection	Printer *, Host
	CMS (Matching) Gamma	
		Text	Gamma / CMS*
		Graphics	Gamma / CMS*
		Image	Gamma / CMS*
	Gamma Correction	
		Text	1.0 / 1.4* / 1.8 / 2.2
		Graphics	1.0 / 1.4* / 1.8 / 2.2
		Image	1.0 / 1.4* / 1.8 / 2.2
	Advanced Smoothing	
		Advanced Smoothing	OFF / Smooth 1* / Smooth 2
		Graphics	OFF* / ON
		Text	OFF / ON*
	BarDIMM *3	Invalid *, Valid
	FreeScape	OFF ~ " # $ / \ ? { } |

1.2.3.4 Timer Settings

i-SENSYS MF9170 / i-SENSYS MF9130 / i-SENSYS MF8450

***: For all excluding Japan, Asia
The following are the items for timer settings.
1. Month
2. Week (1st/2nd/3rd/4th/End)
3. Day of week
4. Time(00 - 23): No setting by minutes

Default: No setting

T-1-5

Timer Settings			
Item			**Settings**
Date/Time Settings			
	Current Time Settings		YYYY MM / DD --:--
	Time Zone Settings		1. GMT-12:00 2. GMT-11:00 3. GMT-10:00 4. GMT-9:00 5. GMT-8:00 6. GMT-7:00 7. GMT-6:00 8. GMT-5:00: Default for North America (EST) 9. GMT-4:00 10. GMT-3:30 11. GMT-3:00 12. GMT-2:00 13. GMT-1:00 14. GMT: Default for Europe/general 15. GMT+1:00 16. GMT+2:00 17. GMT+3:00 18. GMT+3:30 19. GMT+4:00 20. GMT+4:30 21. GMT+5:00 22. GMT+5:30 23. GMT+6:00 24. GMT+7:00 25. GMT+8:00 26. GMT+9:00: Default for Japan 27. GMT+9:30 28. GMT+10:00 29. GMT+11:00 30. GMT+12:00
Daylight Saving Time Set. ***			OFF*/ON
	Start date		
		Month	
		Week	
		Day of week	
		Time	
	End date		
		Month	
		Week	
		Day of week	
		Time	
Auto Sleep Time			ON/OFF
	Shift time		3 to 240 Minutes 15*
Auto Clear Time			0 = Off, 1 to 9 Minutes (by minutes) 2*

1.2.3.5 Report Settings

i-SENSYS MF9170 / i-SENSYS MF9130 / i-SENSYS MF8450

*: default settings
*4: Only when the appropriate optional equipment is attached.

Settings

T-1-6

Report Settings > Settings	
Item	**Settings**
TX Report	OFF/ON/Only When Error Occurs *
Display Send Original	OFF/ON*
Color Send Original Display *4	OFF/ON*
Activity Report	
Auto Print	OFF/ON*
Send/ Receive Separate *4	OFF*/ON
RX Report *4	OFF*/ON/Only When Error Occurs

Print List

T-1-7

Report Settings > Print List	
Item	**Settings**
Address Book List *4	
Address Book	Do you want to print the address book list? No/Yes
One-touch	Do you want to print the address book list? No/Yes
User’s Data List	Is it OK to print the user's data list? No/Yes

1.2.4 Maintenance by the User

1.2.4.1 Cleaning

i-SENSYS MF9170 / i-SENSYS MF9130 / i-SENSYS MF8450

If the original is not copied clearly, clean the machine. For high-quality printouts, we recommend cleaning the machine once or twice a month.

- Do not use alcohol, benzene, paint thinner, or other solvents for cleaning. Doing so may result in damage to the plastic parts.
- Do not use tissue paper, paper towels, or similar materials for cleaning; they can stick to the components or generate static charges.
- Disconnect the power cord from the power outlet regularly, and clean the area around the base of the power plug's metal pins and the power outlet with a dry cloth to ensure that all dust and grime is removed. If the power cord is connected for a long period of time in a damp, dusty, or smoky location, dust can build up around the power plug and become damp. This may cause a short circuit and result in a fire.

MEMO:
- You cannot send or receive documents when the main power switch is turned off or the power cord is disconnected.

- If the main power switch is turned ON, all jobs waiting in the print queue will be erased.

- Documents received into memory and documents stored for delayed send will be retained for approximately 60 minutes after the power cord has been disconnected.

Exterior
Clean the exterior of the machine.
1) Turn OFF the main power switch and disconnect the power cord.
2) Wipe the machine's exterior with a clean, soft, lint-free cloth dampened with water or diluted dishwashing detergent solution.
3) Wait for the machine to dry, then reconnect the power cord and turn ON the main power switch.

Interior
Clean the machine's print area periodically to prevent toner powder and paper dust from accumulating inside.
Cleaning the Fixing Unit
If black streaks appear on printed output, the fixing unit may be dirty. Also, you should use the Fixing Unit Cleaning procedure every time the toner cartridge is replaced. Print the cleaning pattern on LTR paper for cleaning the fixing unit.

MEMO:
- As cleaning paper, LTR or A4 paper must be loaded in the paper drawer or the stack bypass tray.
- Cleaning the fixing unit takes approximately 60 seconds.

1) Press (Main Menu).
2) Press the right Any key to select <Additional Func>.

F-1-10

3) Use [▲], [▼], or (Scroll Wheel) to select <Adjustment/Cleaning>, then press [OK].

F-1-11

4) Use [▲], [▼], or (Scroll Wheel) to select <Fixing Unit Cleaning>, then press [OK].

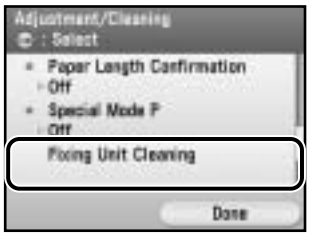

F-1-12

5) Confirm that <Start Cleaning> is displayed, then press [OK].
Printing starts.

F-1-13

The display returns to the Adjustment/Cleaning screen.

MEMO:
- Discard the cleaning sheet after use.
- The cleaning process cannot be canceled. Please wait until it is completed.

6) Press (Main Menu) to return to the Main Menu screen.

Scanning Area
Keep the scanning area clean to avoid dirty copies or faxes to be sent.

Cleaning the Platen Glass
Clean the platen glass and the underside of the feeder by following the procedure below.

When cleaning the machine, first turn OFF the main power switch, and disconnect the power cord. Failure to observe these steps may result in a fire or electrical shock.

1) Open the feeder.

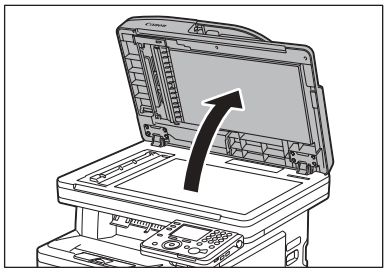

F-1-14

2) Clean the platen glass and the underside of the feeder with a cloth dampened with water. Then, wipe the area with a soft, dry cloth.

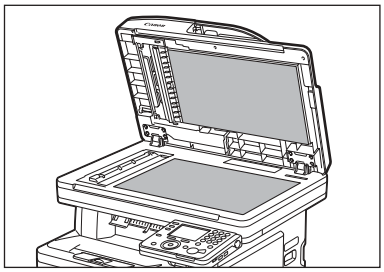

F-1-15

MEMO:
Do not dampen the cloth too much, as this may tear the document or damage the machine.

3) Close the feeder.

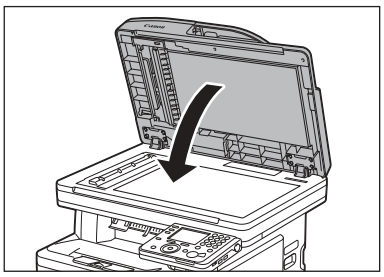

F-1-16

Cleaning the Feeder Automatically
If your originals have black streaks or appear dirty after scanning them through the feeder, clean the rollers of the feeder.

MEMO:
- Use LTR or A4 paper as cleaning paper.
- It takes approximately 30 seconds to clean the feeder.

1) Press (Main Menu).
2) Press the right Any key to select <Additional Func>.

F-1-17

3) Use [▲], [▼], or (Scroll Wheel) to select <Adjustment/Cleaning>, then press [OK].

F-1-18

4) Use [▲], [▼], or (Scroll Wheel) to select <Feeder Cleaning>, then press [OK].

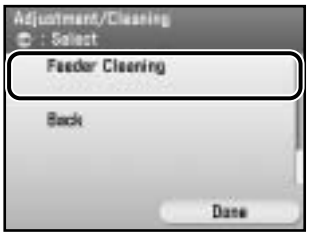

F-1-19

5) Place 10 sheets of blank paper into the feeder.

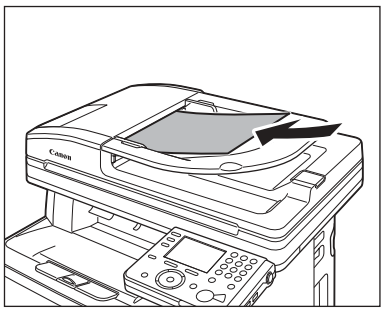

F-1-20

6) Confirm that <Start> is displayed, then press [OK].

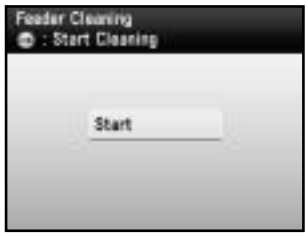

F-1-21

The display returns to the Adjustment/Cleaning screen.

MEMO:
- Discard the cleaning sheet after use.
- The cleaning process cannot be canceled. Please wait until it is completed.

7) Press (Main Menu) to return to the Main Menu screen.

1.2.5 Safety

1.2.5.1 Points to note at disassembly/assembly

i-SENSYS MF9170 / i-SENSYS MF9130 / i-SENSYS MF8450

Make sure to follow the instruction below at disassembly/assembly.
1. At disassembly/assembly, be sure to unplug the power plug for safety reason.
2. At assembly, execute the operation in the reverse order of disassembly procedure.
3. Take care not to make a mistake in the type of screws (length/diameter) and their usage locations in assembly.
4. To check the electrical continuity, a screw with washer is used for the grounding wire and the varistor etc. Make sure to use this screw when attaching them.
5. Do not operate the machine without any part.
6. At disassembly, do not remove the screw with bond lock.

1.2.5.2 CDRH Regulations

i-SENSYS MF9170 / i-SENSYS MF9130 / i-SENSYS MF8450

The Center for Devices and Radiological Health of the US Food and Drum Administration put into force regulations concerning laser products on August 2, 1976. These regulations apply to laser products manufactured on and after August 1, 1976, and the sale of laser products not certified under the regulations is banned within the Untied States. The label shown here indicates compliance with the CDRH regulations, and its attachment is required on all laser products that are sold in the United States.

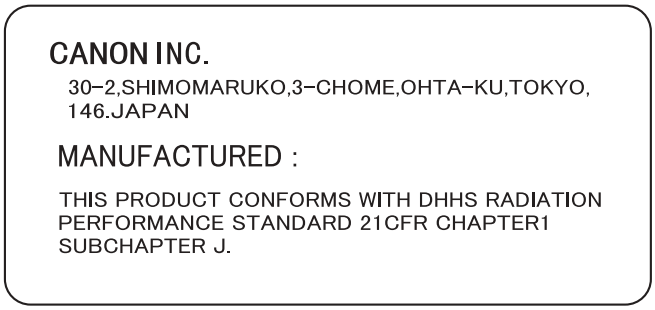

F-1-22

A different description may be used for a different product.

1.2.5.3 Safety of the Laser Light

i-SENSYS MF9170 / i-SENSYS MF9130 / i-SENSYS MF8450

Laser light can prove to be hazardous to the human body. The machine's laser unit is fully enclosed in a protective housing and external covers so that its light will not escape outside as long as the machine is used normally.

1.2.5.4 Handling the Laser Unit

i-SENSYS MF9170 / i-SENSYS MF9130 / i-SENSYS MF8450

The laser/scanner unit emits invisible laser beam. DO NOT disassemble the unit as the laser beam can possibly damage your eyes. The unit cannot be adjusted in the field. The following label is attached to the plate behind the unit:

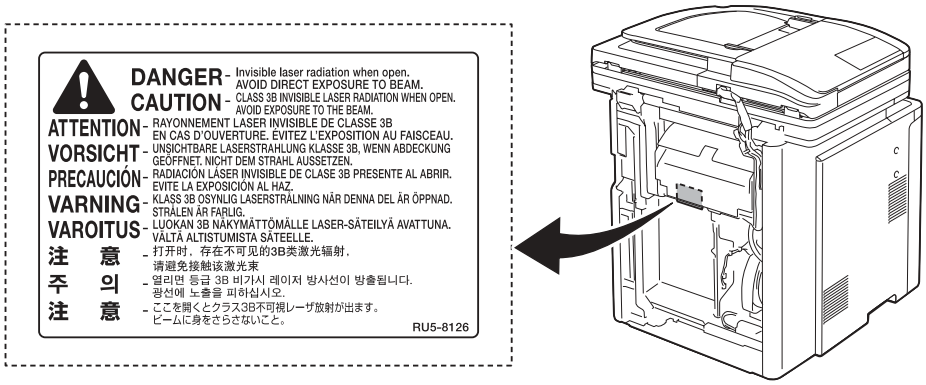

F-1-23

1.2.5.5 Safety of Toner

i-SENSYS MF9170 / i-SENSYS MF9130 / i-SENSYS MF8450

About Toner
The machine's toner is a non-toxic material made of plastic, iron, and small amounts of dye.

> ⚠
> Do not throw toner into fire. It may cause explosion.

Toner on Clothing or Skin
1. If your clothing or skin has come into contact with toner, wipe it off with tissue; then, wash it off with water.
2. Be sure to use water at room temperature for cleaning toner on clothing; Using warm water may cause the toner to jell and fuse permanently with the fibers of the cloth.
3. Do not bring toner into contact with plastic material. It tends to react easily.

Storage of copy/print output
Do not use transparent polyvinyl case.
If printed side contact with the surface of case, toner melts and the paper may be adhered with a case.

1.2.5.6 Notes when handling a battery

i-SENSYS MF9170 / i-SENSYS MF9130 / i-SENSYS MF8450

> ⚠
> RISK OF EXPLOSION IF BATTERY IS REPLACED BY AN INCORRECT TYPE.
> DISPOSE OF USED BATTERIES ACCORDING TO THE INSTRUCTIONS.

The following warnings are given to comply with Safety Principles (EN60950).

> ⚠
> Wenn mit dem falschen Typ ausgewechselt, besteht Explosionsgefahr.
> Gebrauchte Batterien gemäß der Anleitung beseitigen.

1.2.6 Product Specifications

1.2.6.1 Main Body Specifications

i-SENSYS MF9170 / i-SENSYS MF9130

Copyboard	Fixed copyboard
Body	Desktop
Light source type	Cold-cathode tube
Lens type	Fixed focal length lens
Photosensitive medium	OPC drum (24 mm dia)
Image reading method	CCD
Exposure method	2-polygon 4-laser (2-beam/laser)
Charging method	Roller charging
Development method	Contact development
Attraction method	Roller attraction
Transfer method	Direct transfer (ETB: Electrostatic Transportation Belt)
Separation method	Curvature separation
Cassette pickup method	Duplo (Center line)
Multifeeder pickup method	Duplo (Center line)
Drum cleaning method	Cleaning blade
Transfer cleaning method	Electrostatic cleaning
Fixing method	On-demand fixing
Delivery method	Face down
Toner level detection function	Provided
Toner type	Nonmagnetic 1-component toner
Toner supply type	All-in-one cartridge
Toner save mode	Provided
Original type	Sheet, book, 3-D object (Up to 2kg)
Maximum original size	A4/ LTR/ LGL
Original size detection function	Not provided
Reproduction ratio	50% to 200% (incremented by 1%), 50%, 70%, 81%, 86%, 100%, 115%, 122%, 141%, 200%
Warm-up time	Less than approx. 60 sec (Temperature: 20 degC, Humidity: 65%, from when the machine is turned on to when the standby screen is displayed)
Print area	At printing Paper other than envelope: Inside of the circumference of 5 mm Envelope: Inside of the circumference of 10 mm At copying Inside of the lead edge of 5 mm, both sides of 3 mm, and trailing edge of 5 mm At the time of printing a received message Inside of the lead edge of 5 mm, both sides of 3 mm, and trailing edge of 6 mm
Maximum non-image width (main scanning direction)	Less than +/- 0.5% (At stream reading: Not specified)
Maximum non-image width (sub scanning direction)	Less than +/- 0.5% (At stream reading: Less than +/- 1.0%)
Image margin (leading edge)	0 +/- 1.5 mm
Image margin (left/right)	Left edge: 0 +/- 1.5 mm (The right side is not detected.)
Non-image width (leading edge)	Less than 5.0 +/- 2.0 mm (When ADF is used (incl. stream reading): Less than 5.0 +/- 2.0 mm)
Non-image width (left/right)	Left edge: Less than 3.0 +/- 2.0 mm (When ADF is used (incl. stream reading): Less than 3.0 +/- 2.0 mm)
Gradation	256 gradation
Reading resolution	600 x 600 dpi
Reading speed	Fixed reading: Not specified Stream reading: Single-sided: 20.8ipm/LTR (600dpi), 19.7ipm/A4 (600dpi) Double-sided: Approx. 7ipm
Copying resolution	600 x 600dpi (ADF, copyboard)
Printing resolution	600 x 600 dpi
First copy time	(See "Print Speed") Fixed reading: Less than 12.5 sec (A4/LTR) Stream reading: Less than 18.5 sec (A4/LTR)
First print time	Less than 12.5 sec
Print speed	(See "Print Speed")
Print speed (A4)	21 cpm
Print speed(LTR)	22 cpm
Paper type	(See "Paper Type")

Cassette paper size	A4, B5, A5
Multifeeder paper size	A4, B5, A5, User-defined size
Cassette paper type	Plain paper, Recycled paper, Colored paper, Thick paper, Rough paper
Multifeeder tray paper type	Plain paper, Recycled paper, Colored paper, Thick paper, Transparency, Label, Rough paper, Postcard, Double postal card, Envelope
Cassette capacity	Paper cassette: 250 sheets Cassette Feeding Unit-AB1/ AC1 (optional): 500 sheets (80g/m2)
Multifeeder tray capacity	100 sheets
Auto 2-sided printing	Provided
Duplex method	Automatic double-sided printing
Delivery tray stack	250 sheets (64 to 80g/m2)
Continuous reproduction	1 to 99 sheets
Memory	Main Unit RAM: 384MB/512MB
Hard disk	No (without options)
Sleep mode	Provided
Operating environment (temperature range)	10 to 30 degC
Operating environment (humidity range)	Humidity equivalent to 10 to 80%
Noise	At standby: - Less than 43dB (Sound power level) At copying: - B&W: 66.35dB - Color: 67.3dB
Power supply rating	Rated input voltage: 100 to 127V (100V model)/220 to 240V (200V model) Rated input frequency: 50/60Hz
Power consumption (maximum)	Less than 929W (Main unit only) Less than 949W (When Cassette Unit AB1/AC1 (optional) is installed)
Power consumption	At standby: Less than 28W At sleep mode: Less than 1W (100V model), Less than 1.2W (200V model)
Ozone	At initial use: Less than 0.01ppm, After service life: Less than 0.035ppm B&W: 1.5mg/hr Color: 3.0mg/hr
Dimensions	Dimension: 546 mm x 527 mm x 627 mm (Main unit only) 546 mm x 527 mm x 930 mm (When Cassette Feeding Unit-AB1/ AC1 (optional) is installed) Installation space (Back cover and feeder released, Cassette pulled out): 546 mm x 1140 mm x 792 mm 546 mm x 1140 mm x 1095 mm (When Cassette Feeding Unit-AB1/ AC1 (optional) is installed)
Weight	Approx. 44kg (incl. toner cartridge)
Option	See "System Configuration".

1.2.6.2 Main Body Specifications

i-SENSYS MF8450

Copyboard	Fixed copyboard
Body	Desktop
Light source type	Cold-cathode tube
Lens type	Fixed focal length lens
Photosensitive medium	OPC drum (24 mm dia)
Image reading method	CCD
Exposure method	2-polygon 4-laser (2-beam/laser)
Charging method	Roller charging
Development method	Contact development
Attraction method	Roller attraction
Transfer method	Direct transfer (ETB: Electrostatic Transportation Belt)
Separation method	Curvature separation
Cassette pickup method	Duplo (Center line)
Multifeeder pickup method	Duplo (Center line)
Drum cleaning method	Cleaning blade
Transfer cleaning method	Electrostatic cleaning
Fixing method	On-demand fixing
Delivery method	Face down
Toner level detection function	Provided
Toner type	Nonmagnetic 1-component toner

Toner supply type	All-in-one cartridge
Toner save mode	Provided
Original type	Sheet, book, 3-D object (Up to 2kg)
Maximum original size	A4/ LTR/ LGL
Original size detection function	Not provided
Reproduction ratio	50% to 200% (incremented by 1%), 50%, 70%, 81%, 86%, 100%, 115%, 122%, 141%, 200%
Warm-up time	Less than approx. 60 sec (Temperature: 20 degC, Humidity: 65%, from when the machine is turned on to when the standby screen is displayed)
Print area	At printing Paper other than envelope: Inside of the circumference of 5 mm Envelope: Inside of the circumference of 10 mm At copying Inside of the lead edge of 5 mm, both sides of 3 mm, and trailing edge of 5 mm At the time of printing a received message Inside of the lead edge of 5 mm, both sides of 3 mm, and trailing edge of 6 mm
Maximum non-image width (main scanning direction)	Less than +/- 0.5% (At stream reading: Not specified)
Maximum non-image width (sub scanning direction)	Less than +/- 0.5% (At stream reading: Less than +/- 1.0%)
Image margin (leading edge)	0 +/- 1.5 mm
Image margin (left/right)	Left edge: 0 +/- 1.5 mm (The right side is not detected.)
Non-image width (leading edge)	Less than 5.0 +/- 2.0 mm (When ADF is used (incl. stream reading): Less than 5.0 +/- 2.0 mm)
Non-image width (left/right)	Left edge: Less than 3.0 +/- 2.0 mm (When ADF is used (incl. stream reading): Less than 3.0 +/- 2.0 mm)
Gradation	256 gradation
Reading resolution	600 x 600 dpi
Reading speed	Fixed reading: Not specified Stream reading: Single-sided: 20.8ipm/LTR (600dpi), 19.7ipm/A4 (600dpi) Double-sided: Approx. 7ipm
Copying resolution	600 x 600dpi (ADF, copyboard)
Printing resolution	600 x 600 dpi
First copy time	(See "Print Speed") Fixed reading: Less than 15.7 sec (A4/LTR) Stream reading: Less than 21.7 sec (A4/LTR)
First print time	Less than 15.7 sec
Print speed	(See "Print Speed")
Print speed (A4)	16.8 cpm
Print speed(LTR)	17.6 cpm
Paper type	(See "Paper Type")
Cassette paper size	A4, B5, A5
Multifeeder paper size	A4, B5, A5, User-defined size
Cassette paper type	Plain paper, Recycled paper, Colored paper, Thick paper, Rough paper
Multifeeder tray paper type	Plain paper, Recycled paper, Colored paper, Thick paper, Transparency, Label, Rough paper, Postcard, Double postal card, Envelope
Cassette capacity	Paper cassette: 250 sheets Cassette Feeding Unit-AB1/ AC1 (optional): 500 sheets (80g/m2)
Multifeeder tray capacity	100 sheets
Auto 2-sided printing	Provided
Duplex method	Automatic double-sided printing
Delivery tray stack	250 sheets (64 to 80g/m2)
Continuous reproduction	1 to 99 sheets
Memory	Main Unit RAM: 384 MB
Hard disk	No (without options)
Sleep mode	Provided
Operating environment (temperature range)	10 to 30 degC
Operating environment (humidity range)	Humidity equivalent to 10 to 80%
Noise	At standby: - Less than 43dB (Sound power level) At copying: - B&W: 64.95 dB - Color: 66.1 dB
Power supply rating	Rated input voltage: 100 to 127V (100V model)/220 to 240V (200V model) Rated input frequency: 50/60Hz

Power consumption (maximum)	Less than 929W (Main unit only) Less than 949W (When Cassette Unit AB1/AC1 (optional) is installed)
Power consumption	At standby: Less than 28W At sleep mode: Less than 1W (100V model), Less than 1.2W (200V model)
Ozone	At initial use: Less than 0.01ppm, After service life: Less than 0.035ppm B&W: 1.5mg/hr Color: 3.0mg/hr
Dimensions	Dimension: 546 mm x 527 mm x 627 mm (Main unit only) 546 mm x 527 mm x 930 mm (When Cassette Feeding Unit-AB1/ AC1 (optional) is installed) Installation space (Back cover and feeder released, Cassette pulled out): 546 mm x 1140 mm x 792 mm 546 mm x 1140 mm x 1095 mm (When Cassette Feeding Unit-AB1/ AC1 (optional) is installed)
Weight	Approx. 44kg (incl. toner cartridge)
Option	See "System Configuration".

1.2.6.3 ADF Specifications

i-SENSYS MF9170 / i-SENSYS MF9130 / i-SENSYS MF8450

Paper size	AB type: A4R, B5R, A5R, A5, B6 (B6: Horizontal feeding only) Inch type: LGL, LTRR, STMTR, STMT (Length: 128 mm to 355.6 mm, Width: 139.7 mm to 215.9 mm)
Duplex paper size	A4R/B5R/A5R/A5/B6/LTRR/LGL/STMTR (B6: Horizontal feeding only)
Original type	Sheet document
Original orientation	Face-up
Original position	Center line
Original processing mode	Single-sided/Double-sided
Original reading	Stream reading
Stack	[J/J] A4/LTR: 50 sheets, LGL: 30 sheets [LL/HH] A4/LTR: 30 sheets, LGL: 15 sheets
Mixed original sizes	Enabled
Original AE detection	Provided

1.2.6.4 FAX Specifications

i-SENSYS MF9170 / i-SENSYS MF9130 / i-SENSYS MF8450

Applicable lines	Public Switched Telephone Network (PSTN) * PSTN currently supports the modem speed of up to 28.8Kbps. It, however, differs depending on the telephone line condition. Number of lines connected: 1
Transmission method	G3
Modulation method	Image modulation: V.34/V.17/V.29/V.27ter Transmission procedure: V.21
Transmission speed	Transmission speed: Approx. 3 sec per page ECM-JBIG, Transmitted from memory at 33.6Kbps * Based on the JBIG standard mode with ITU-T standard chart No. 1 Modem speed: 33,600bps, Automatic fallback
Coding	Compression method: JBIG, MMR, MR, MH
Error correction	ECM
Scanning line density	Reading: 8x 3.85/7.7/15.4 16x15.4 Recording: 600 x 600dpi
Scanning density adjustment	9 levels, manual adjustment
Half tone	256 gradation
Printing resolution	Resolution conversion: Provided <200 x 100dpi>: 8 pixels/mm x 3.85 lines/mm <200 x 200dpi>: 8 pixels/mm x 7.7 lines/mm <200 x 400dpi>: 8 pixels/mm x 15.4 lines/mm <400 x 400dpi>: 16 pixels/mm x 15.4 lines/mm
Reduction for reception	Automatic reduction of an image received: 75 to 100% (incremented by 1%)
FAX/TEL switching	Provided
Remote reception	Provided
Memory reception	Send/Receive memory: More than 1000 pages (Total number of sent/received pages) *Based on the JBIG standard mode with ITU-T standard chart No. 1 Memory reception: Provided
Redial	Automatic redialing: Provided
Memory backup	Number of memories which can be accumulated: 1236 sheets Memory backup time: 1 hour
Time	Within 60 sec per month (Zone A) Within 90 sec per month (Zone B)
Others	Dialing method - Address book (300 destinations) Group dialing (299 destinations) (incl. One-touch button (200 destinations)) - Regular dialing (by numeric keys) - Automatic redialing, manual redialing (specified from the calling record) - Broadcast transmission (301 destinations) Output of reports - Communication management report (Automatically printed for every 40 calls) - Transmission result report / Reception result report Reception method - Automatic reception - Remote reception by a telephone set (Initial setting ID: 25)

1.2.7 Function List

1.2.7.1 Print Speed

i-SENSYS MF9170 / i-SENSYS MF9130

First copy time
The following standard is defined with "35 seconds" after printing 90 sheets of A4-size plain paper in the mode of "1 vs. multiple copies" *1 at copyboard reading.
(Unit: second)

T-1-8

Size		Mode/Pickup position	
		Single-sided printing	
		Cassette/Optional cassette	Manual feed tray
Plain paper	A4R	12.5	12.5
	LGL	16.3	16.3
	LTRR	12.5	12.5
Thick paper	A4R	-	15.7
	LGL	-	-
	LTRR	-	15.7

Print speed
(Unit: #Sheets/minute)

T-1-9

Size		Mode/Pickup position							
		1 vs. multiple copies *1 (Fixed reading)				1 vs. 1 copy *1 (Stream reading)			
		Single-sided		Double-sided		Single-sided		Double-sided	
		Cassette/ Optional cassette	Manual feed tray	Cassette/ Optional cassette	Manual feed tray	Cassette/ Optional cassette	Manual feed tray	Cassette/ Optional cassette	Manual feed tray
Plain paper	A4R	20.9	20.9	10	10	19.7	19.7	7	7
	LGL	17.9	17.9	5	5	17.9	17.9	5	5
	LTRR	22.0	22.0	11	11	20.8	20.8	7	7
Thick paper	A4R	16.8	16.8	8.4	8.4	16.8	16.8	7	7
	LGL	14.3	14.3	4	4	14.3	14.3	4	4
	LTRR	17.6	17.6	8.8	8.8	17.6	17.6	7	7
Transparency *2		-	3.6 to 1.8	-	-	-	3.6 to 1.8	-	-
Postcard *2		-	10.1 to 2.5	-	-	-	10.1 to 2.5	-	-
Envelopes		-	3.2	-	-	-	3.2	-	-

*1: 1 vs. multiple copies: For example, make 10 copies of one sheet of document.
1 vs. 1 copy: For example, make one copy of one sheet of document.

*2: At the continuous print, printing speed may decelerate depending on the conditions.

The print speed indicated above may vary depending on the product environment, paper type, and paper size, etc.

1.2.7.2 Print Speed

i-SENSYS MF8450

First copy time
The following standard is defined with "25 seconds" after printing 75 sheets of A4-size plain paper in the mode of "1 vs. multiple copies" *1 at copyboard reading.
(Unit: second)

T-1-10

Size		Mode/Pickup position	
		Single-sided printing	
		Cassette/Optional cassette	Manual feed tray
Plain paper	A4R	15.7	15.7
	LGL	20.3	20.3
	LTRR	15.7	15.7
Thick paper	A4R	-	15.7
	LGL	-	-
	LTRR	-	15.7

Print speed
(Unit: #Sheets/minute)

T-1-11

Size		Mode/Pickup position							
		1 vs. multiple copies *1 (Fixed reading)				1 vs. 1 copy *1 (Stream reading)			
		Single-sided		Double-sided		Single-sided		Double-sided	
		Cassette/ Optional cassette	Manual feed tray	Cassette/ Optional cassette	Manual feed tray	Cassette/ Optional cassette	Manual feed tray	Cassette/ Optional cassette	Manual feed tray
Plain paper / Thick paper	A4R	16.8	16.8	8.4	8.4	16.8	16.8	7	7
	LGL	14.3	14.3	4	4	14.3	14.3	4	4
	LTRR	17.6	17.6	8.4	8.4	17.6	17.6	7	7
Transparency *2		-	3.6 to 1.8	-	-	-	3.6 to 1.8	-	-
Postcard *2		-	10.1 to 2.5	-	-	-	10.1 to 2.5	-	-
Envelopes		-	3.2	-	-	-	3.2	-	-

*1: 1 vs. multiple copies: For example, make 10 copies of one sheet of document.
1 vs. 1 copy: For example, make one copy of one sheet of document.

*2: At the continuous print, printing speed may decelerate depending on the conditions.

The print speed indicated above may vary depending on the product environment, paper type, and paper size, etc.

1.2.7.3 Paper Type

i-SENSYS MF9170 / i-SENSYS MF9130 / i-SENSYS MF8450

Paper Type
Supported paper types are shown below:
A: available
—: not available

T-1-12

Type	Weight	Cassette/ Optional cassette	Manual feed tray
Plain	From 19 to 24 lb (70 to 90 g/m2)	A	A
Plain H	From 20 to 28 lb (75 to 105 g/m2)	A	A
Color	From 19 to 24 lb (70 to 90 g/m2)	A	A
Recycled	From 19 to 24 lb (70 to 90 g/m2)	A	A
Heavy 1	From 28 to 32 lb (106 to 120 g/m2)	A	A
Heavy 2	From 32 to 47 lb (121 to 176 g/m2)	-	A
Bond	20 lb (75 g/m2)	A	A
Transparency *	-	-	A
Labels	-	-	A
Envelopes	-	-	A
Rough	-	A	A

*: Use only LTR transparencies made especially for this machine.

Paper Size
Supported paper sizes are shown below.

T-1-13

	Cassette/Optional cassette	Manual feed tray
Size (W x L)	Legal, Letter, Officio, M-Officio, B-Offficio, Executive, Foolscap, A4, B5, A5	3" x 5" to Legal (8 1/2" x 14") (76.2 x 127 to 215.9 mm x 355.6 mm) (Always set vertically.)

MEMO:
The default paper size is LTR. If you use a diff erent paper size, you must change the paper size settings.

Chapter 2 Basic Operation

Contents

2.1 Construction

2.1.1 Functional Configuration

i-SENSYS MF9170 / i-SENSYS MF9130 / i-SENSYS MF8450

This machine's functions are divided into 8 blocks.

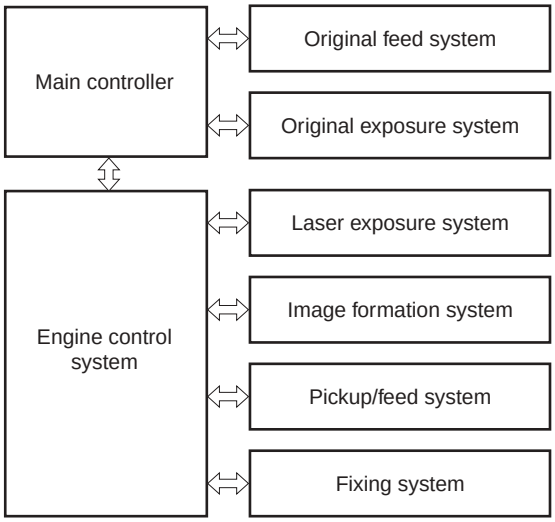

F-2-1

2.1.2 Connecting the Main PCBs

i-SENSYS MF9170 / i-SENSYS MF9130 / i-SENSYS MF8450

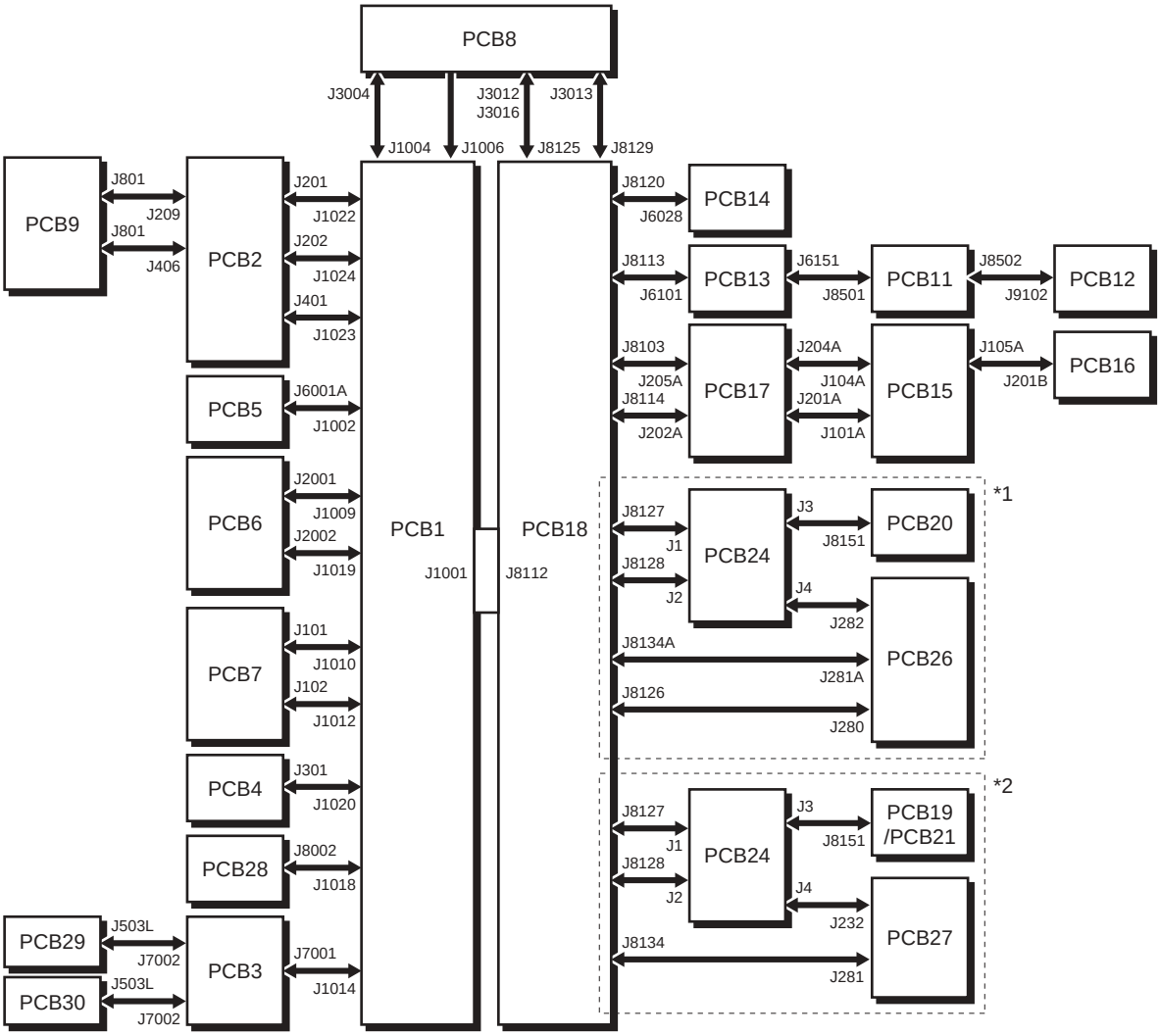

F-2-2

PCB1:	DC controller PCB	PCB2:	Driver PCB
PCB3:	Pickup relay PCB	PCB4:	Memory controller PCB
PCB5:	Fixing relay PCB	PCB6:	High-voltage power PCB
PCB7:	Laser driver PCB	PCB8:	Low-voltage power PCB
PCB9:	Reverse driver PCB	PCB11:	CCD PCB
PCB12:	Inverter PCB	PCB13:	CCD relay PCB
PCB14:	ADF relay PCB	PCB15:	Control panel main PCB
PCB16:	Control panel jog PCB	PCB17:	Control panel relay PCB
PCB18:	Main controller PCB	PCB19:	Modular PCB
PCB20:	Modular PCB	PCB21:	Modular PCB
PCB24:	NCU PCB	PCB26:	Pseudo CI PCB
PCB27:	Off hook PCB	PCB28:	Environment sensor
PCB29:	Color displacement/density sensor (right)	PCB30:	Color displacement/density sensor (left)

*1 For Japan
*2 For outside Japan (PCB19: 120 V, PCB21: 230 V)

2.2 Basic Sequence

2.2.1 Basic Sequence of Operation

i-SENSYS MF9170 / i-SENSYS MF9130 / i-SENSYS MF8450

The operational sequence of a printer is controlled by the microcomputer (CPU) on the DC controller.
The purposes of each period, from power-ON until the inverter motor stops after the completion of printing, are listed below.

T-2-1

Operation	Interval	Description	Remarks
WAIT (Wait)	From either power switch is turned ON or front cover is closed until each drum phase adjustment is completed.	To clear drum surface potential, to adjust each drum phase, and to clean the ETB.	The machine detects the toner level, cartridge presence, new cartridge, and environmental status during the period. It also executes the calibration (color displacement correction and image stability control) as required.
STBY (Stand-by)	From end of WAIT or LSTR period until either the print command is input from the main controller or power switch is turned OFF.	To keep the machine ready to print.	The machine goes into sleep mode when a sleep command is sent from the main controller. It executes the color displacement correction and the image stability control when each command is sent.
INTR (Initial rotation)	From the print command is input by the main controller until paper is picked up.	To stabilize the photosensitive drum sensitivity in preparation for printing.	
PRINT (Print)	From /TOP signal is sent to the main controller after INTR period until the fixing delivery sensor detects trailing edge of paper.	To form image on the photosensitive drum based on the video signals sent from the main controller and to transfer the toner image onto paper.	The printer executes the image stabilization control in every specified number of prints or specified time elapsed after the power is turned ON.
LSTR (Last rotation)	From the end of PRINT period until the inverter motor stops.	To deliver the last paper out of the machine.	The machine returns to the INTR period as soon as another print command is sent from the main controller.

2.2.2 Power-On Sequence

i-SENSYS MF9170 / i-SENSYS MF9130 / i-SENSYS MF8450

Power-on sequence is to reset the machine's status and to check that there is no JAM or failure.
The sequences from power-ON until the stand-by status are as below.

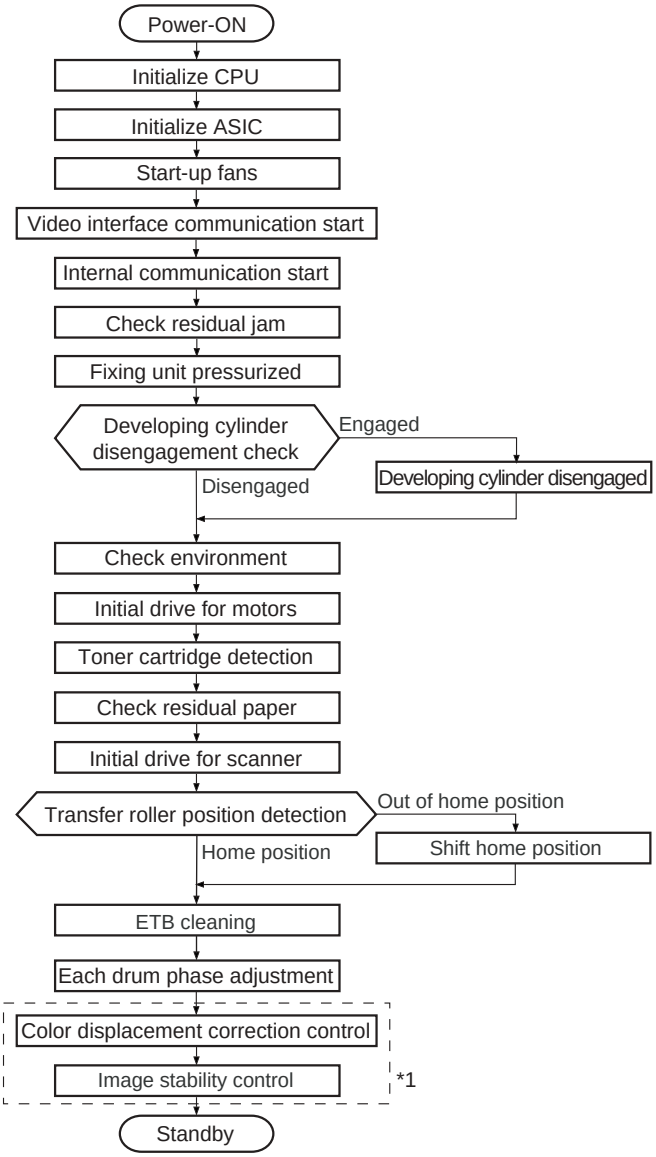

F-2-3

*1 Items surrounding with dotted line are functioning only when needed.

Chapter 3 Main Controller

Contents

3.1 Overview/Configuration

3.1.1 Configurations/functions

i-SENSYS MF9170 / i-SENSYS MF9130 / i-SENSYS MF8450

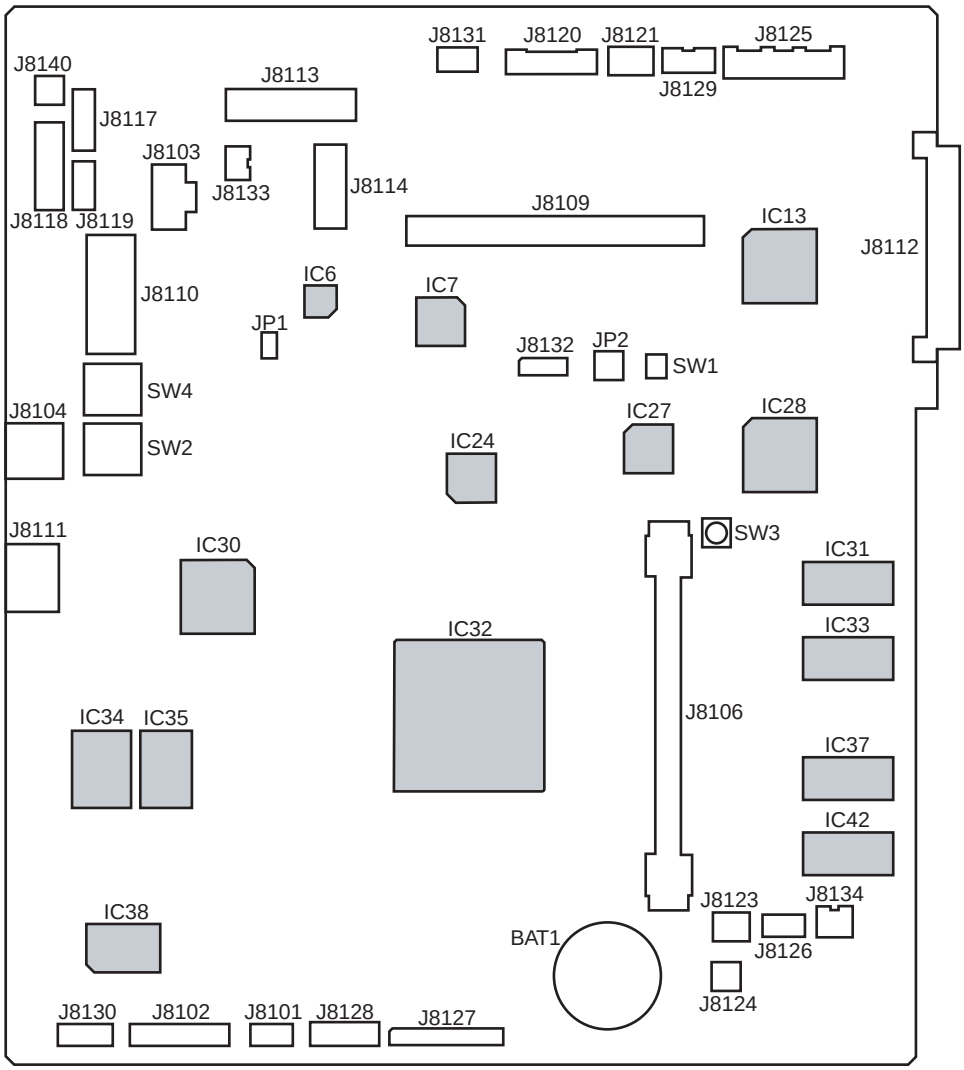

F-3-1

T-3-1

IC	Function
IC6	Control panel screen transfer
IC7, IC27	Read image process
IC13, IC28	Record image process
IC24	Universal port
IC30	Ethernet controller
IC31, IC33, IC37, IC42	DDR SDRAM (main memory)
IC32	Main CPU, main image process
IC34	BOOT ROM
IC35	Main program ROM
IC38	FAX modem

T-3-2

Jack No.	Function	Connect to
J8101	Serial interface for debug	-
J8102	Not implemented	-
J8103	USB on a control panel, Connect to a media card reader	Control panel relay PCB
J8104	USB device connector	USB device
J8106	RAM DIMM connector	RAM DIMM for expansion
J8109	SRAM connector for debug	-
J8110	On-board SD card interface	SD card
J8111	LAN connector	LAN
J8112	Video signal, engine command	DC controller PCB
J8113	CCD read image signal, lamp power/control signal	CCD relay PCB
J8114	Control panel screen image signal, key signal	Control panel relay PCB
J8117	CCVI interface	CC-VI
J8118	Serial interface	Coin vendor (100V, 230V) Serial I/F PCB (120V)
J8119	Card reader interface	Card reader-E1
J8120	Motor for ADF, solenoid, sensor signal	ADF relay PCB
J8121	Reader motor control signal	Reader motor (M12)
J8123	Not implemented	-
J8124	Secondary battery for memory backup	Secondary battery
J8125	Power source	Low-voltage power PCB
J8126	Pseudo CI signal	Pseudo CI PCB
J8127	NCU control signal (digital)	NCU PCB
J8128	NCU control signal (analog)	NCU PCB
J8129	Power control signal	Low-voltage power PCB
J8130	Not implemented	-
J8131	CCD unit HP signal	Reader HP sensor (SR717)
J8132	For debug	-
J8133	Front cover open/close detection signal	Front cover sensor (SR720)
J8134	Power for pseudo CI	Pseudo CI PCB/off hook PCB
J8140	Power for serial I/F	Serial I/F PCB

3.2 Parts Replacement Procedure

3.2.1 Main Controller PCB

3.2.1.1 Before Removing the Main Controller PCB

i-SENSYS MF9170 / i-SENSYS MF9130 / i-SENSYS MF8450

1) Remove the ETB unit.(page 7-28)Reference [Removing the ETB Unit]
2) Remove the rear cover unit.(page 11-6)Reference [Removing the Rear Cover Unit]
3) Remove the left cover.(page 11-8)Reference [Removing the Left Cover]
4) Remove the right cover.(page 11-7)Reference [Removing the Right Cover]
5) Remove the Electrical Components Cover.(page 11-11)Reference [Removing the Electrical Components Cover]
6) Remove the Controller Box.(page 11-11)Reference [Removing the Controller Box]

3.2.1.2 Removing the Main Controller PCB

i-SENSYS MF9170 / i-SENSYS MF9130 / i-SENSYS MF8450

1) Remove the face cover [1].
   - 1 screw [2]

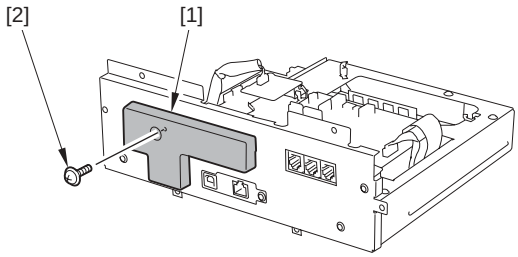

F-3-2

2) Remove the NCU frame [1].
   - 1 flat cable [2] (only of the machine with FAX)
   - 1 connectors [3] (only of the machine with FAX)
   - 1 connectors [4]
   - 6 screws [5]

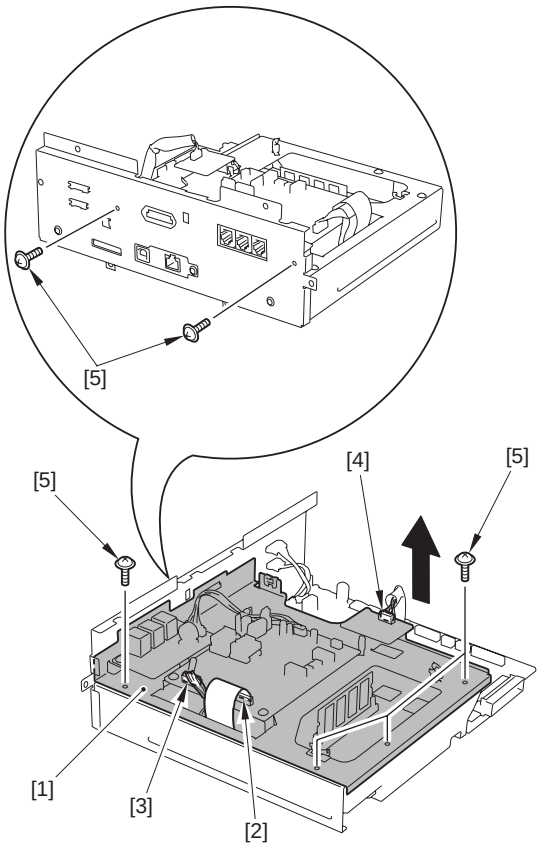

F-3-3

3) Remove the Main controller PCB [1].
   - 2 connectors [2]
   - 10 screws [3]

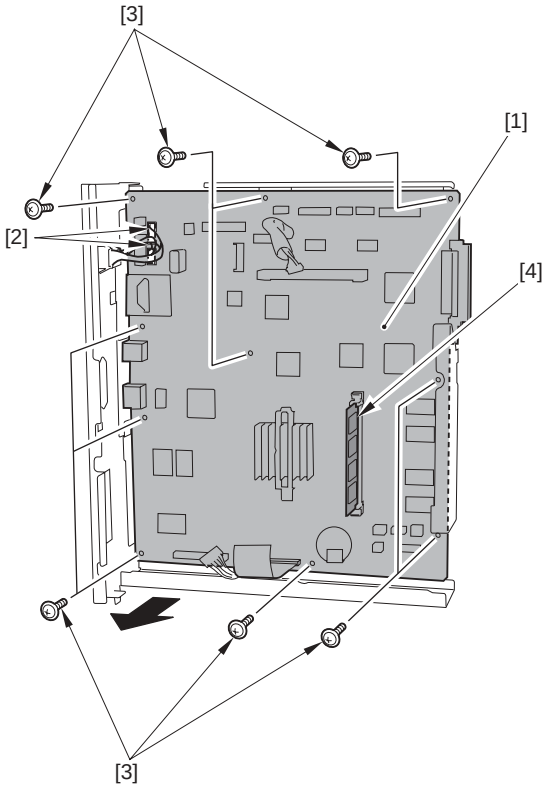

F-3-4
T-3-3

Points to Note When Replacing the Main Controller
- If the RAM [4] is installed in the main controller PCB, remove it.
- If a RAM is not installed in the new main controller, install the removed RAM [4].

Chapter 4 Original Exposure System

Contents

4.1 Basic Construction

4.1.1 Overview

i-SENSYS MF9170 / i-SENSYS MF9130 / i-SENSYS MF8450

T-4-1

Item	Function/Method
Lamp	Cold-cathode tube
Document scan	Book mode: Scanning by movement of the CCD unit ADF: Scanning in stream reading mode with CCD unit fixed
Reading resolution	600 dpi x 600 dpi
Gradation	256 gradation
Productivity (ADF)	Single-sided: 20.8 ipm (LTR), 19.7 ipm (A4) Double-sided: Approx. 7 ipm (A4/LTR)
Detection of the carriage position	Reader HP sensor (SR717)
Magnification change (Zoom)	50 to 200 % (Sub scanning direction only. Image processing by the main controller PCB)
Lens	Fixed focus lens
CCD	Number of lines: ? Pixels: ? Maximum document reading width: ?
CCD unit drive control	Drive control by the reader motor (M12)
Document lamp	Lighting control by the inverter circuit
Document size detection	Not provided

4.1.2 Major Components

i-SENSYS MF9170 / i-SENSYS MF9130 / i-SENSYS MF8450

ÅöÉCÉâÉXÉgÅi031-FNC-EXPO-0002ÅjèCêŠíÜÅö

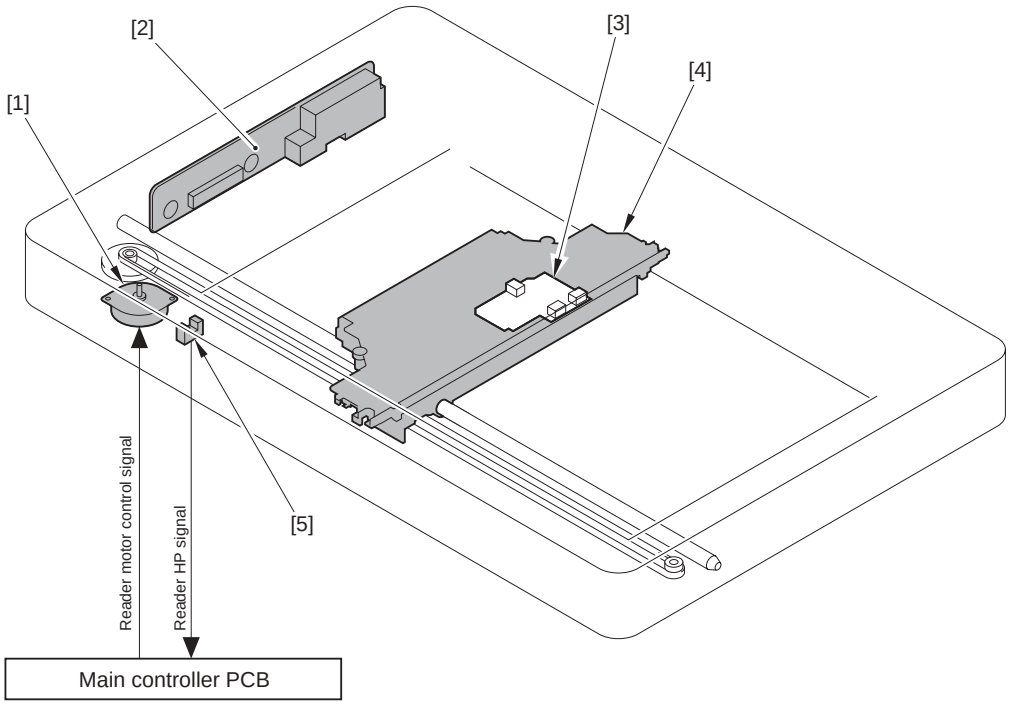

F-4-1

[1]	Reader motor (M12)	[2]	CCD PCB (PCB11)
[3]	Inverter PCB (PCB12)	[4]	CCD unit
[5]	Reader HP sensor (SR717)		

Reading on the copyboard
The document loaded on the copyboard is read by the CCD unit, which moves in the horizontal direction.
The CCD unit is driven by the reader motor (M12).
The CCD unit home position is detected by the reader HP sensor (SR717).

Constitution of the CCD unit

The light illuminated from the 2 document lamps (LAMP1, 2) is reflected to the original and reaches to the CCD via the 4 mirrors and the lenses.

ÅöÉCÈâÉXÉgÅi031-FNC-EXPO-0019ÅjçÎê¨íÜÅö

[1]	CCD PCB (PCB11)	[2]	Inverter PCB (PCB12)
[3]	Document lamps (LAMP1, 2)	[4]	CCD unit
[5]	Mirrors	[6]	Lenses
[7]	Light path	[8]	CCD

4.2 Basic Sequence

4.2.1 Basic Sequence of Operation at Power-on

i-SENSYS MF9170 / i-SENSYS MF9130 / i-SENSYS MF8450

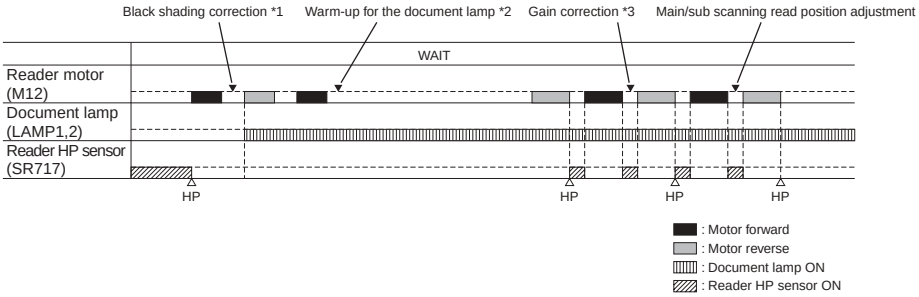

F-4-2

*1: Black shading correction: Correction is made so that the image density digital value on the dark output level (black) becomes 0.
*2: Warm-up for the document lamp: Warm-up is continued until the temperature of the scanning lamp becomes stable.
*3: Gain correction: The gain ratio of the analog video signal output from CCD is adjusted to be a constant value.

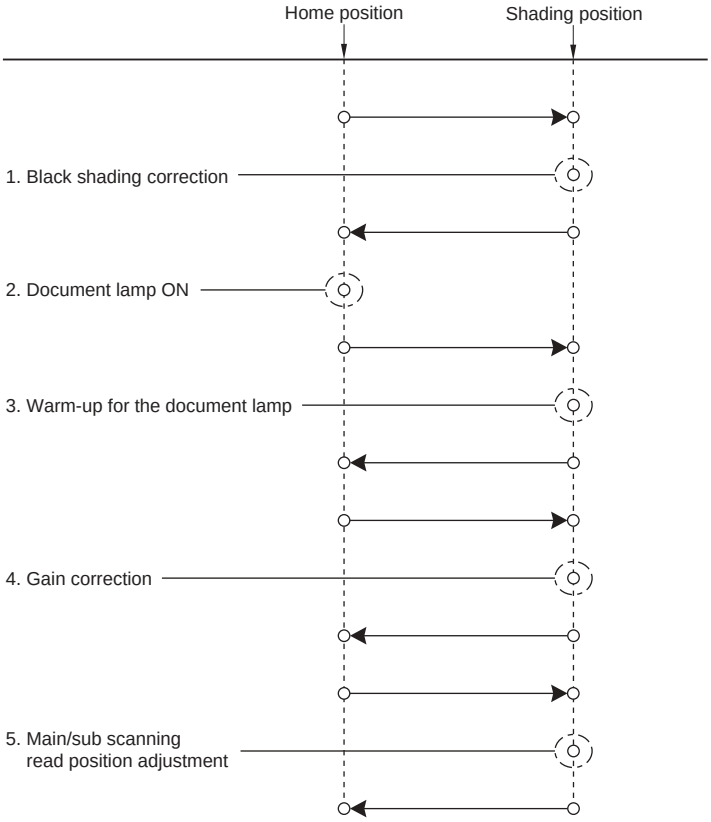

F-4-3

4.2.2 Basic Sequence of Operation in Response to a Press on the Start Key (book)

i-SENSYS MF9170 / i-SENSYS MF9130 / i-SENSYS MF8450

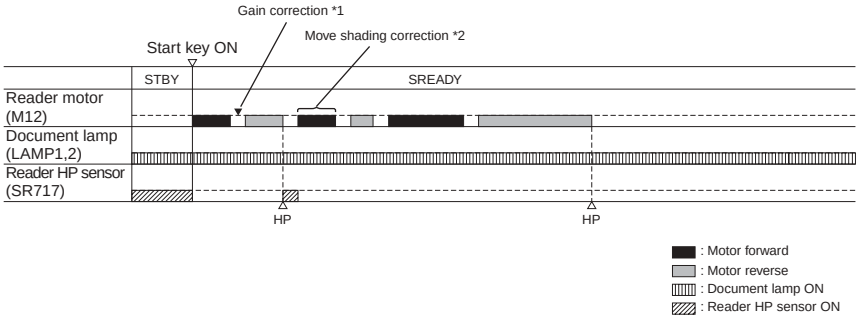

F-4-4

*1 Gain correction: The gain ratio of the analog video signal output from CCD is adjusted to be a fixed value.
*2 Move shading correction: Even when the document density is constant, the CCD output level does not become constant due to the following reasons.
- Variation in pixels for CCD
- Difference of the transmitted light intensity between the center and the surrounding of the lens
- Difference of the light intensity between the center and the surrounding of the document lamp
- Deterioration of the document lamp

Shading correction is performed to correct unevenness of the CCD output level.

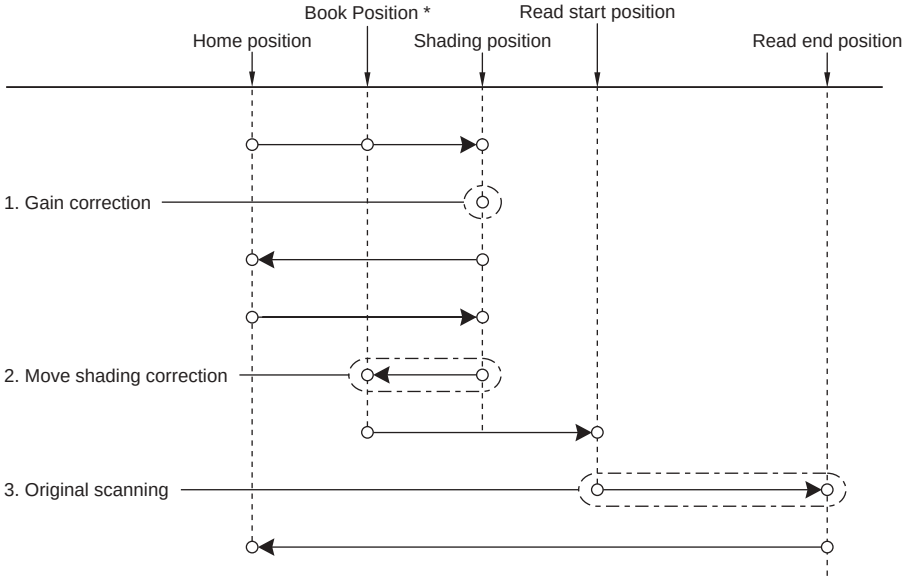

F-4-5

* Book Position: the position at which the motor is accelerated to prepare for reading.

4.3 Various Control

4.3.1 Lamp Control

4.3.1.1 Overview

i-SENSYS MF9170 / i-SENSYS MF9130 / i-SENSYS MF8450

Advance lamp activation control
It takes 9 to 25 sec (which varies depending on the surrounding temperature) from when the cold-cathode tube lamp, which is used as a document lamp, is activated to when the light intensity reaches the target intensity.
If the document lamp is deactivated immediately after the scan job is completed, it takes time until the light intensity becomes stable next time when the lamp is activated, causing productivity to decrease.
The machine deactivates the document lamp when five minutes elapse after the scan job is completed.
If the next job is started within five minutes after the scan job is completed, reading can be performed immediately because the document lamp has been activated.
Even in the condition where the document lamp has been deactivated, if the next job is started within five minutes (within 10 minutes after the previous job is completed), the temperature of the document lamp tube is relatively high, and the time required until reading is enabled can be reduced.

Even after five minutes elapse, the document lamp is activated in advance when any of the following operations is performed. The machine reduces the wait time by activating the document lamp before the scan job is started.
- Pressing a button on the control panel
- Inserting a USB memory into the USB slot
- Inserting a memory card into the card slot
- Opening/closing the front cover or reverse assembly cover
- Opening/closing the cassette
- Setting paper in the empty cassette
- Setting paper in the empty manual feed tray
- Setting paper in the empty ADF pickup tray

Overdrive control
When starting activation of the document lamp, the machine applies a voltage higher than the one applied at reading. The machine reduces the time required until the light intensity of the document lamp reaches the target intensity (overdrive time) as much as possible by controlling the voltage.
The overdrive time varies depending on the tube temperature at the time when activation of the lamp is started. The tube temperature is affected by the previous activation time, time that elapsed after deactivation, and temperature detected by the environment sensor (PCB28).
The wait time until the activation of the document lamp is completed is calculated by totaling the overdrive time and wait time until the light intensity becomes stable.
ÅöÉCÉâÉXÉgÅi031-FNC-EXPO-0018ÅjçÏê¨íÜÅö

4.3.2 Enlargement/Reduction

4.3.2.1 Overview

i-SENSYS MF9170 / i-SENSYS MF9130 / i-SENSYS MF8450

The machine does not perform optical magnification change. It always reads a document at 100 % (original size).
However, the main controller has a function to perform digital magnification change at 50 to 200 %, and the magnification can be set in increments/decrements of 1 %.

4.3.3 Detecting the Size of Originals

4.3.3.1 Overview

i-SENSYS MF9170 / i-SENSYS MF9130 / i-SENSYS MF8450

The machine does not perform document size detection. (The machine is not equipped with the document size sensor.)
The machine performs reading in the size specified on the control panel when reading the document.

4.3.4 Dirt Sensor Control

4.3.4.1 Overview

i-SENSYS MF9170 / i-SENSYS MF9130 / i-SENSYS MF8450

The machine performs dust detection control when stream reading is performed on the ADF.
When dust is adhered to the scanning glass surface, the correction is made to remove the dust from the scanned image.
Dust detection control is executed for all documents for which stream reading is performed regardless of the mode.

Dust detection
When the CCD scans the area of 2.5 mm from the lead edge of the document and there are more than 32 pixels with the width of less than 0.254 mm (6 pixels) and the density from 16/255 to 188/255 in the area of 0.5 to 2.5 mm (equivalent to 48 pixels) from the lead edge of the document, the machine determines that "dust is adhered to the scanning glass surface".
The 32 pixels recognized as the dust do not have to be placed successively.

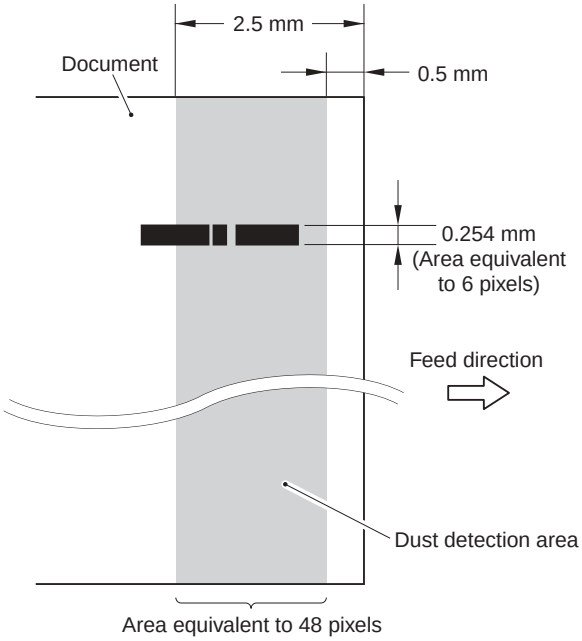

F-4-6

However, since the dust detection control system is designed to perform detection for A4-size document, it is only applied in the area of 103 mm at both sides (= 206 mm) based on the center line. For a document of which width is larger than A4-size, there is an area at both edges where dust detection control is not performed.

Dust correction
When dust is detected, the correction of removing the dust is automatically performed based on the scanned data.
However, when a document does not have a margin or it has an image on the margin, the machine determines that dust is adhered to the scanning glass surface, which may cause incorrect correction to be performed. In such a case, disabling of the correction can be set in the user mode.

Adjustment/Cleaning > Automatic correction of feeder dust
ON: Perform automatic correction (initial setting)
OFF: Do not perform automatic correction.

4.3.4.2 Stream Reading Position Shift

i-SENSYS MF9170 / i-SENSYS MF9130 / i-SENSYS MF8450

When dust is detected at the final document in the job, the stream reading position is shifted to prevent dust lines from being printed in the subsequent job.
There are three stream reading positions, and the position is shifted sequentially every time dust is detected when the job is completed ([A] --> [B] --> [C]).
When dust is detected at the 3rd detection, the stream reading position returns to the original position ([C] --> [A]).

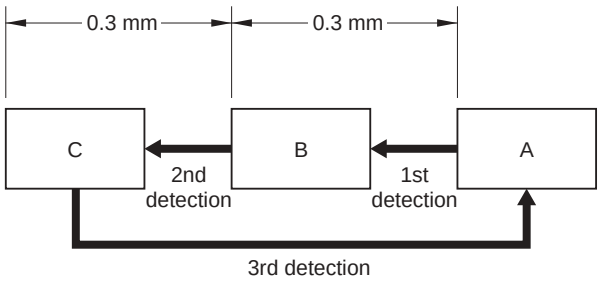

F-4-7

When dust is detected in three jobs consecutively, the alarm message "The scanning assembly is dirty" is displayed in a pop-up window on the control panel.
The alarm message disappears when pressing the [OK] button displayed in the pop-up window.
When the subsequent job is started or the power is turned OFF/ON, information such as the number of times dust was detected or scanning positions is reset.
Disabling of display of the alarm message can be set in the user mode.

Common specification settings > Display of the error for feeder dust
ON: Display the alarm message. (Initial setting)
OFF: Do not display the alarm message (It is possible to set the dust detection function only.)

4.4 Parts Replacement Procedure

4.4.1 ADF Unit + Reader Unit

4.4.1.1 Before Removing the ADF Unit + Reader Unit

i-SENSYS MF9170 / i-SENSYS MF9130 / i-SENSYS MF8450

1) Remove the rear cover unit.(page 11-6)Reference [Removing the Rear Cover Unit]

4.4.1.2 Removing the ADF Unit + Reader Unit

i-SENSYS MF9170 / i-SENSYS MF9130 / i-SENSYS MF8450

1) Open the ADF upper cover [1].

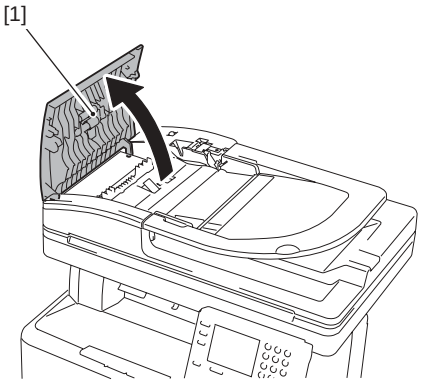

F-4-8

2) While pushing the claw [1], remove the ADF upper front cover [2].

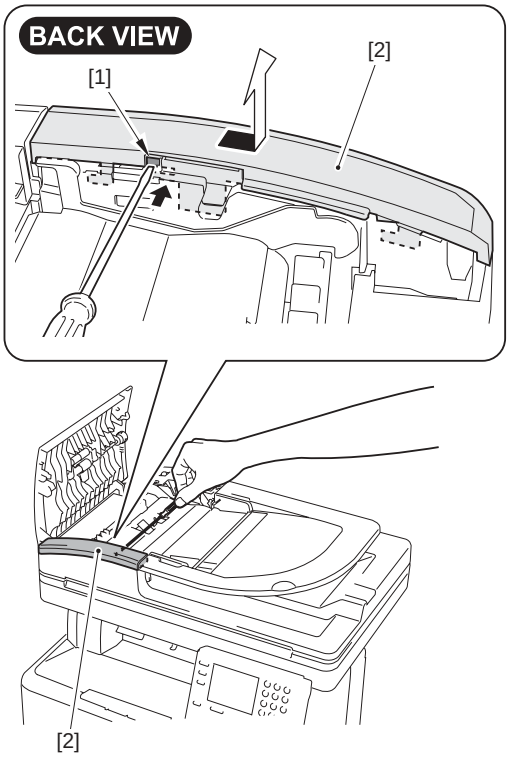

F-4-9

3) Open the ADF tray [1] to the position indicated in the figure below. Using a flat-blade screwdriver, press the hook [2] in the direction of the arrow [A] and release the claw [3] to remove the ADF tray in the direction of the arrow [B].

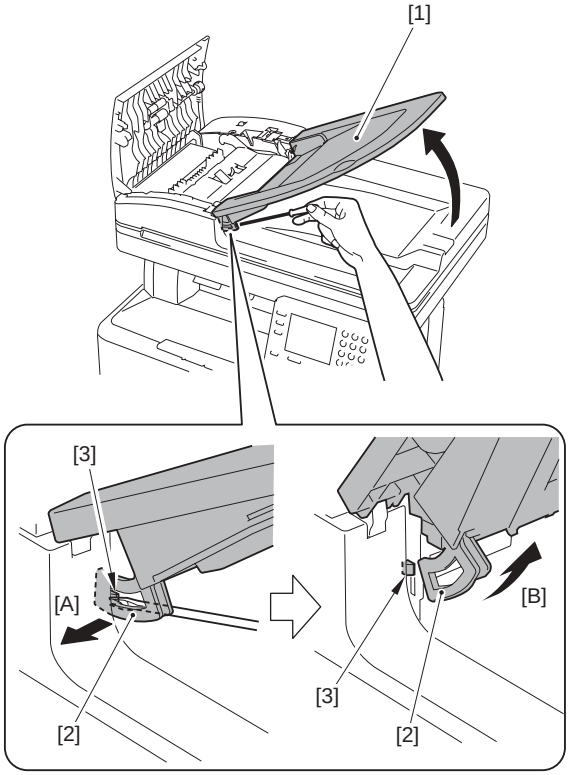

F-4-10

4) Open the ADF tray [1] to the position indicated in the figure below to remove it upward.

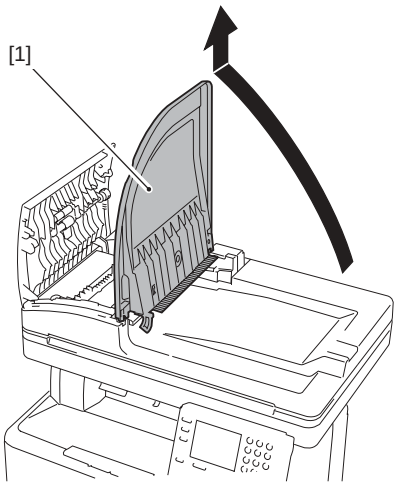

F-4-11

5) Remove the ADF upper rear cover [1].
- 1 screw [2]
- 1 boss [3]

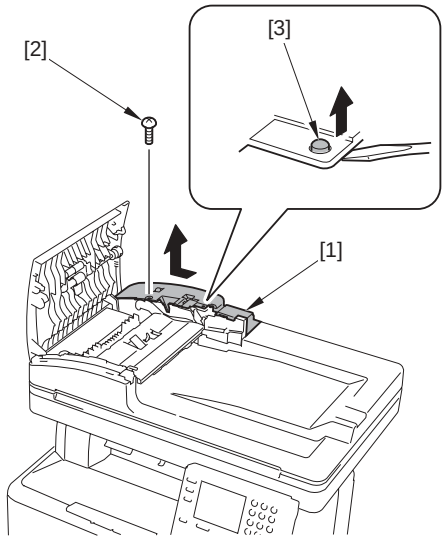

F-4-12

6) Close the ADF upper cover [1].

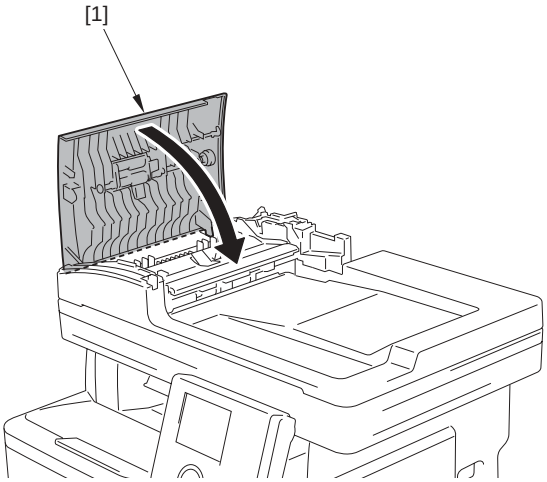

F-4-13

7) Remove the ADF unit communication cable [1].
- 1 screw [2]
- 1 connector [3]
- 1 wire saddle [4]

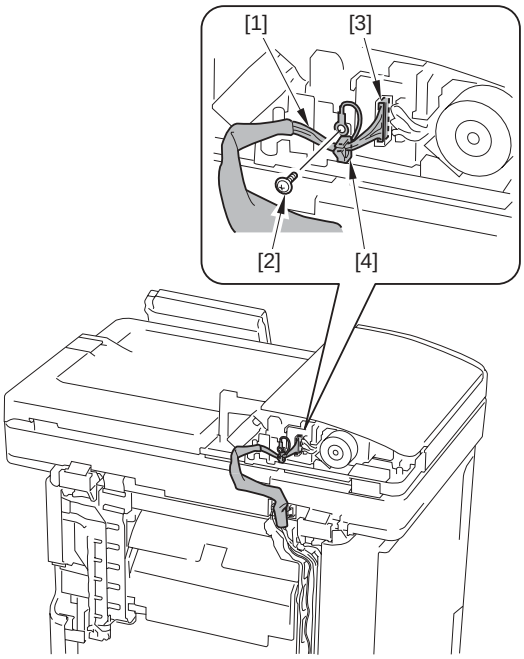

F-4-14

8) Disconnect the 2 connectors [1]. Open the connector holder [2] to disconnect the flat cable [3].

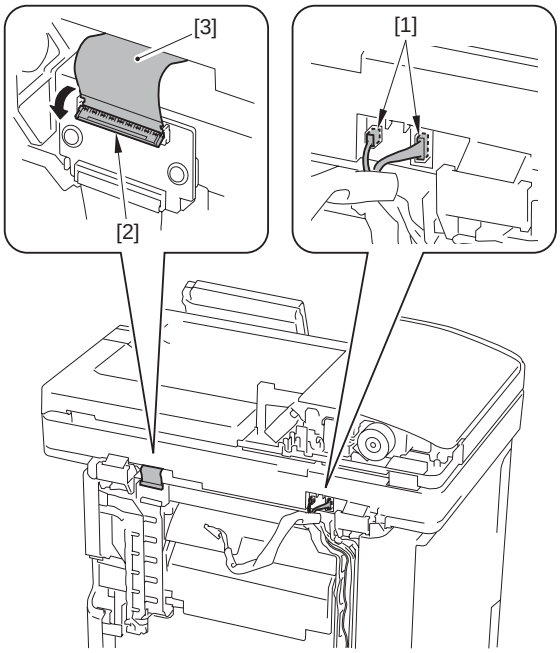

F-4-15

9) Open the ADF unit + reader unit [1].

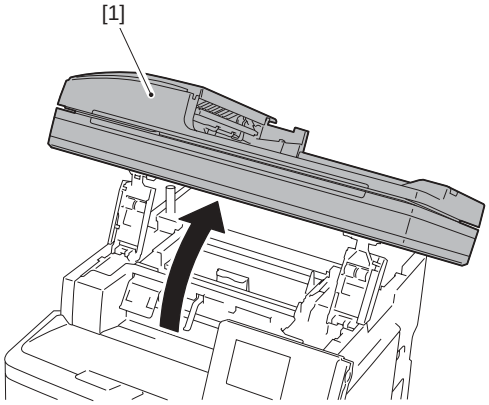

F-4-16

Points to note at work
Be sure not to close the ADF unit + reader unit hastily. If closing the ADF unit + reader unit hastily, the impact can cause damage.
Also be careful not to get your hands caught between the ADF unit + reader unit and the host machine.

10) Remove the 2 hinge stoppers [1].
- 2 screws (binding) [2]

Points to Note When Removing the Hinge Stopper
When removing both the left and right hinge stoppers, the ADF + the reader unit close under their own weight, in which your hand may be caught. Be sure to perform the operation while holding them with one hand.

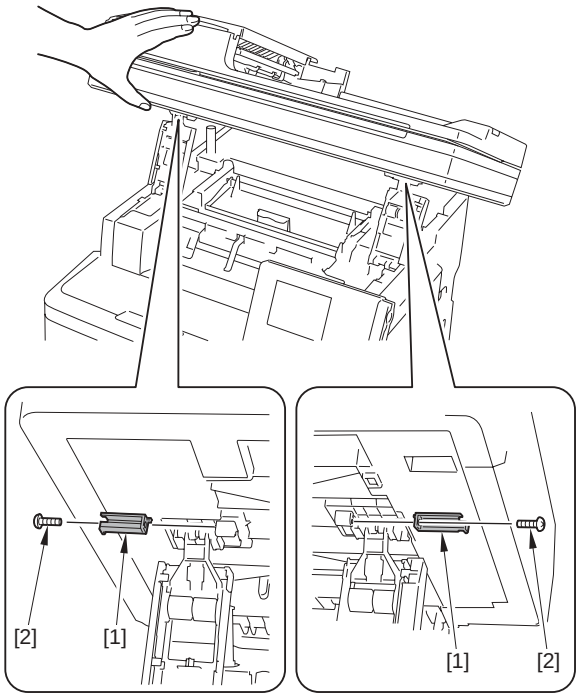

F-4-17

11) Bring the 2 hinges [1] down.

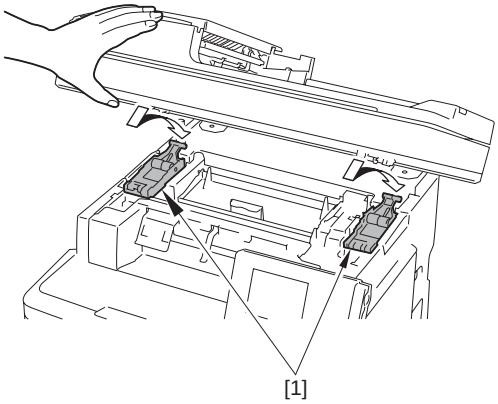

F-4-18

12) Open the ADF unit + reader unit [1] to the position indicated in the figure below to remove it upward.

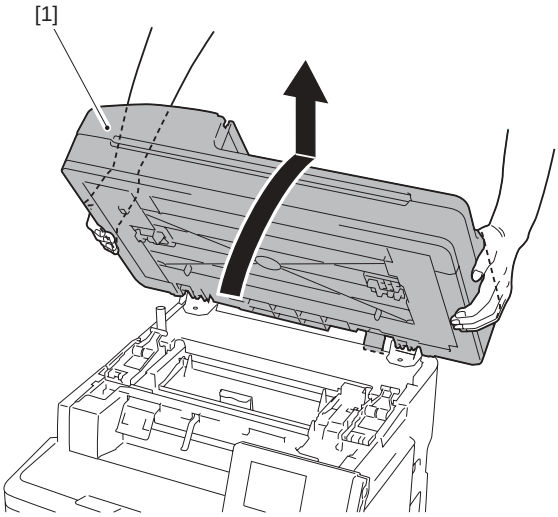

F-4-19

4.4.2 Reader Unit

4.4.2.1 Before Removing the Reader Unit

i-SENSYS MF9170 / i-SENSYS MF9130 / i-SENSYS MF8450

1) Remove the ADF unit + reader unit.(page 4-7)Reference [Removing the ADF Unit + Reader Unit]

4.4.2.2 Removing the Reader Unit

i-SENSYS MF9170 / i-SENSYS MF9130 / i-SENSYS MF8450

1) Open the ADF unit [1].

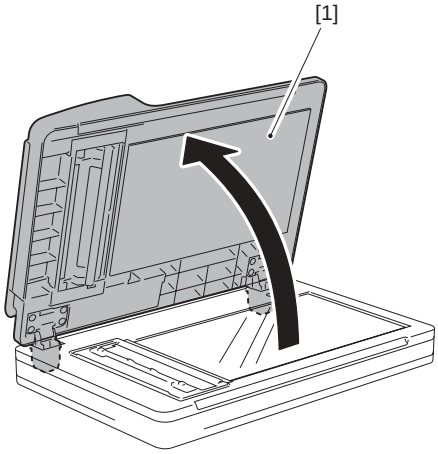

F-4-20

2) Remove the ADF unit [2] from the Reader Unit [1].

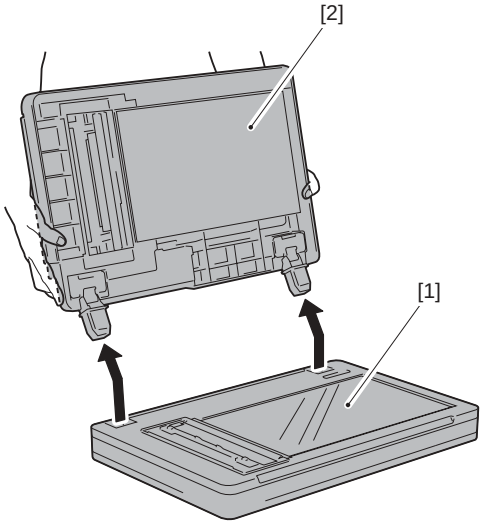

F-4-21

MEMO:
The CCD unit in the reader unit cannot be replaced in the field. If the CCD unit is broken, replace the reader unit.

Chapter 5 Original Feeding System

Contents

5.1 Basic Construction

5.1.1 Overview

i-SENSYS MF9170 / i-SENSYS MF9130 / i-SENSYS MF8450

ÅöÉCÉâÉXÉgÅi031-FNC-EXPO-0001ÅjèCêŠíÜÅö

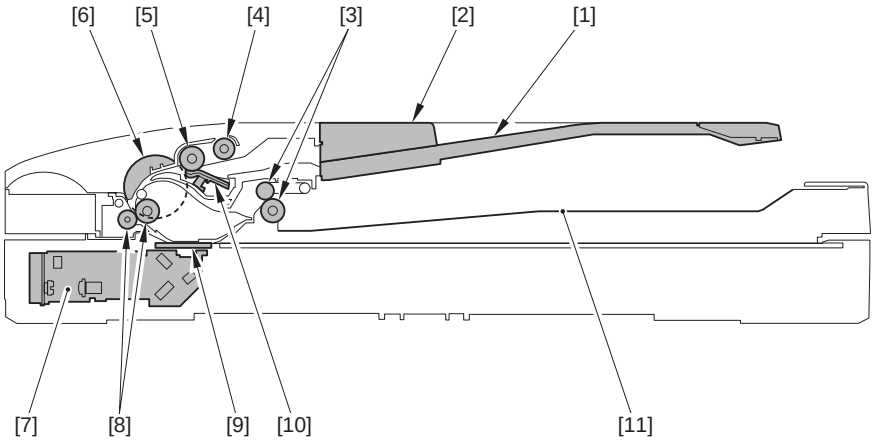

F-5-1

[1]	Document tray	[2]	Slide guide	[3]	ADF delivery roller
[4]	ADF pickup roller	[5]	ADF separation roller	[6]	ADF pickup motor (M13)
[7]	CCD unit	[8]	ADF feed roller	[9]	Reading glass surface
[10]	ADF separation pad	[11]	ADF pickup solenoid (SL5016)	[12]	ADF delivery tray

Reading at ADF

1) When an original is placed on the document tray, the ADF pickup solenoid works and the ADF pickup roller descends to the surface of the original.
2) A document set on the document ray is transported to the ADF separation roller by the ADF pickup roller while being pressed by the slide guide so that it does not skew.
3) Only one sheet of document is separated by the ADF separation roller and the ADF separation pad.
4) The document is transported to the reading glass surface by the ADF feed roller.
5) While being transported by the ADF feed roller, the document is read by the CCD unit.
6) The document is delivered on the ADF delivery tray by the ADF delivery roller.

All the ADF rollers are driven by the ADF pickup motor (M13).
ÅöÉCÉâÉXÉgÅi031-FNC-EXPO-0021ÅjçÏê¨íÚÅö

A 2-sided original with its first side read is delivered to the reading position again with the reversal path.
ÅöÉCÉâÉXÉgÅi031-FNC-EXPO-0020ÅjçÏê¨íÚÅö

5.2 Basic Operation

5.2.1 Operation Mode

i-SENSYS MF9170 / i-SENSYS MF9130 / i-SENSYS MF8450

Single-sided continuous pickup
The following shows the operation sequence when two sheets of single-sided documents are set on the document tray.
1) The ADF paper sensor (SR718) detects the document loaded on the document tray, and sends a signal indicating "paper exists" to the main controller.
2) The ADF pickup solenoid (SL5016) is turned ON.
The ADF pickup roller moves down until it reaches the document.
3) The ADF pickup motor (M13) rotates forward, and the ADF pickup roller feeds the document.
In this condition, one sheet of the upper-side document is picked up by the ADF separation roller and ADF separation pad.

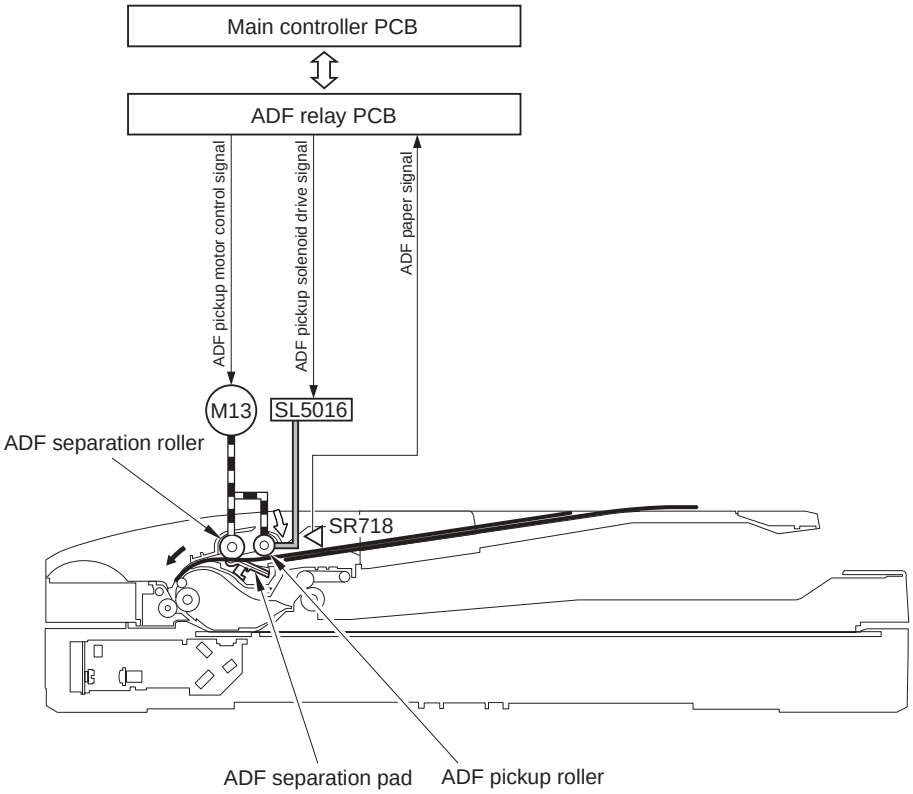

F-5-2

4) When the lead edge of the document reaches the ADF feed roller, the feed speed becomes approximately 1.2 times (which is the same as the reading speed).
If no 'stop' request is sent from the main controller when the lead edge of the document reaches in front of the reading position, reading operation starts.

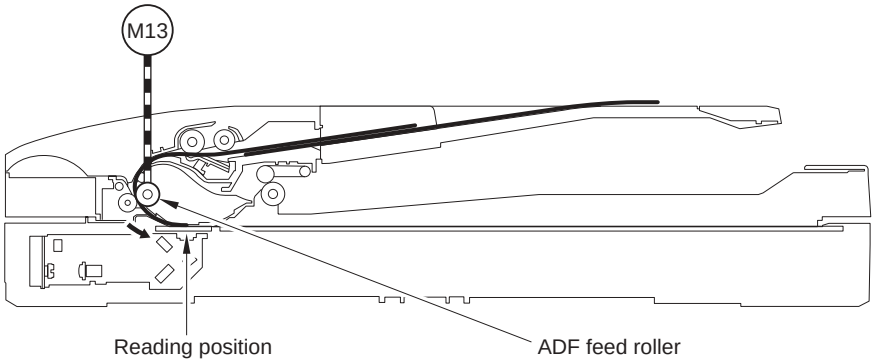

F-5-3

5) When reading is completed, the document is delivered to the ADF delivery tray by the ADF delivery roller.
When a specified period of time elapses after the trailing edge of the first page passes through the ADF separation roller, the second page is picked up by the ADF pickup roller.
Because the ADF feed roller rotates faster than the ADF separation roller, a specified interval is secured between the first and second pages.

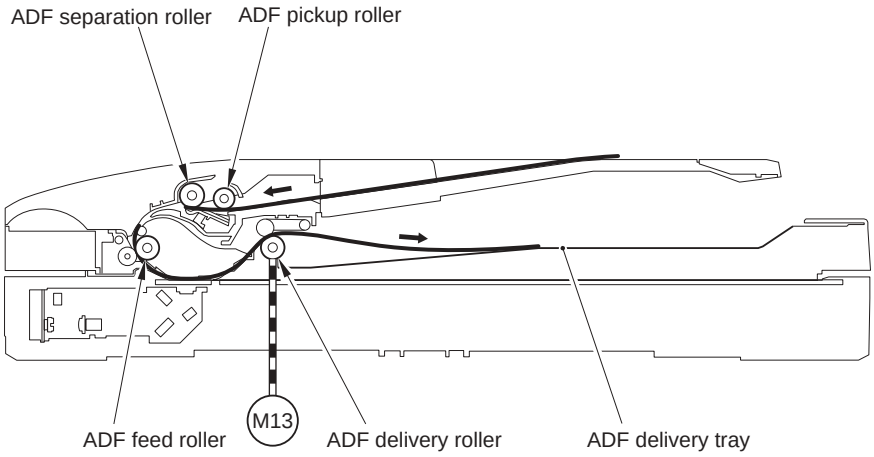

F-5-4

6) When the trailing edge of the second page passes through the ADF paper trailing edge sensor (SR719), the ADF paper sensor detects presence/absence of the paper.
When no document is detected, the document is considered to be the last page.

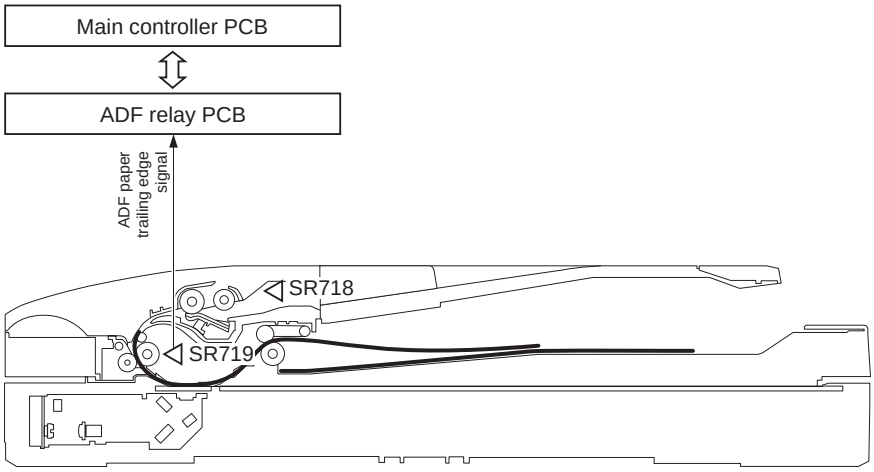

F-5-5

7) When a specified period of time (time until the trailing edge of the document passes through the ADF delivery roller) elapses after the trailing edge of the document passes through the ADF paper trailing edge sensor, the ADF pickup motor stops.
When the ADF pickup solenoid is turned OFF after the ADF pickup motor stops, the ADF pickup roller moves up to a specified position.

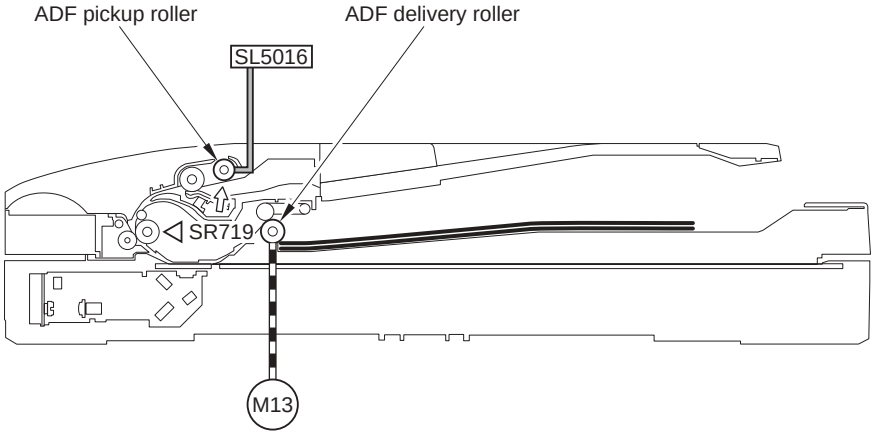

F-5-6

Double-sided document reading

The procedure of reading a double-sided document is the same as that of reading a single-sided document until the step where the lead edge of the document reaches the ADF paper trailing edge sensor. The following shows the operational sequence afterwards.

1) When the ADF paper trailing edge sensor detects the lead edge of the document, the ADF pickup motor stops and the ADF pickup solenoid is turned OFF.
   When the ADF pickup solenoid is turned OFF, the ADF pickup roller moves up to stop feeding of the second and later pages.
   As soon as receiving a drive signal from the main controller, the ADF pickup motor restarts feeding.

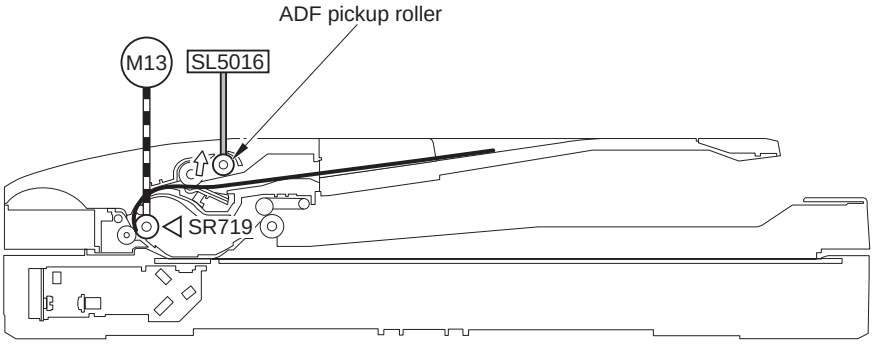

F-5-7

2) When the trailing edge of the document is transported until it is caught between the ADF delivery rollers, the ADF pickup motor stops.

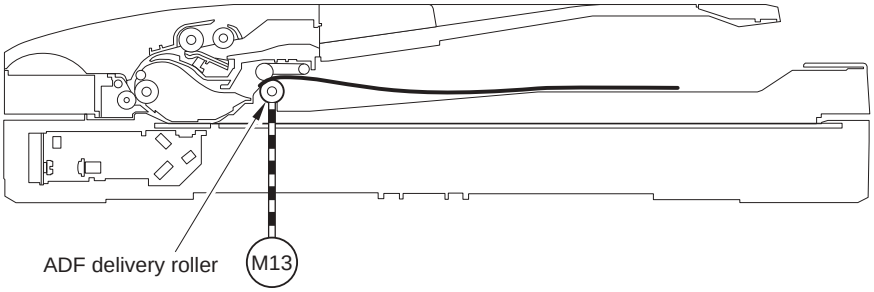

F-5-8

3) The ADF pickup motor rotates in reverse. The document is fed through the reverse path.
   When the ADF paper trailing edge sensor detects the lead edge of the document, the ADF pickup motor stops.
   As soon as receiving a drive signal from the main controller, the ADF pickup motor rotates forward. In this condition, the ADF delivery rollers are disengaged so that the document is not pulled.

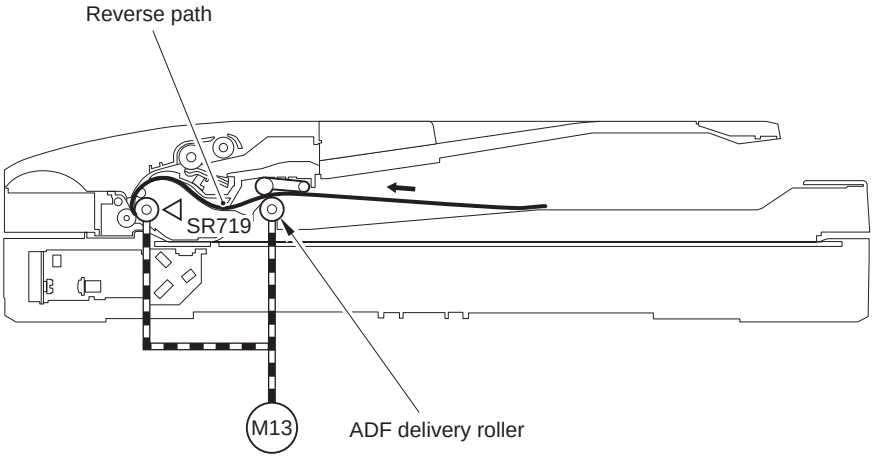

F-5-9

4) When the trailing edge of the document passes through the ADF delivery roller, the ADF delivery rollers are engaged.
5) When a specified period of time (time until the trailing edge of the document passes through the ADF delivery roller) elapses after the trailing edge of the document passes through the ADF paper trailing edge sensor, the ADF pickup motor stops.
In the case of double-sided document reading, the ADF pickup roller has already moved up to a specified position.

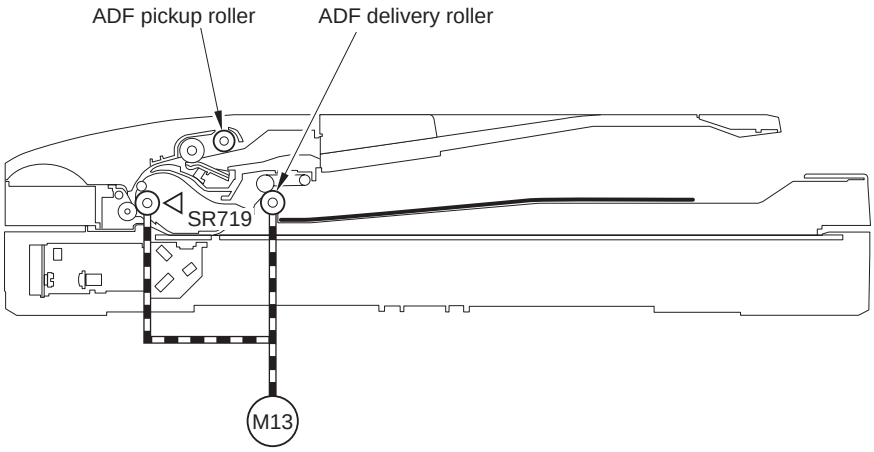

F-5-10

5.2.2 Document Size Detection

i-SENSYS MF9170 / i-SENSYS MF9130 / i-SENSYS MF8450

The machine does not perform document size detection. (The machine is not equipped with the document size sensor.)
The machine performs reading in the size specified on the control panel when reading the document.

5.3 Detection Jams

5.3.1 Overview

i-SENSYS MF9170 / i-SENSYS MF9130 / i-SENSYS MF8450

Jam detection
The ADF determines that a jam has occurred when the document feed time shown below exceeds a specified time.

T-5-1

Jam code	Jam type	Jam condition	Single-sided reading	Double-sided reading
0x03	Delay 1	From when the ADF pickup motor starts rotating forward to when the lead edge of the document reaches the ADF paper trailing edge sensor	Yes	Yes
0x02	Stationary 1	From when the lead edge of the document reaches the ADF paper trailing edge sensor to when the trailing edge passes through the sensor	Yes	-
0x01	Delay 2	From when the trailing edge of the first page passes through the ADF paper trailing edge sensor to when the lead edge of the second page reaches the sensor	Yes	-
0x02	Stationary 2	From when feeding restarts after the document stops right before reading is performed to when the trailing edge of the document passes through the ADF paper trailing edge sensor	Yes	-
0x02	Stationary 3	From when the ADF pickup motor starts rotating forward after the ADF pickup roller moves up to when the trailing edge of the document passes through the ADF paper trailing edge sensor	Yes	Yes
0x04	Delay 3	From when the ADF pickup motor starts rotating forward at the time of reading the second page to when the lead edge of the document reaches the ADF paper trailing edge sensor	-	Yes
0x05	Stationary 4	From when the ADF pickup motor starts rotating forward at the time of reading the second page to when the trailing edge of the document passes through the ADF paper trailing edge sensor	-	Yes

Jam removal
To remove a jam, open the ADF upper cover, remove a jammed sheet, and then set a document on the document tray.
However, a jam is not removed when the ADF paper trailing edge sensor detects the presence of paper (when residual paper exists).

5.4 ADF/DADF

5.4.1 ADF/DADF

5.4.1.1 Removing the ADF unit

i-SENSYS MF9170 / i-SENSYS MF9130 / i-SENSYS MF8450

1) Open the ADF upper cover [1].

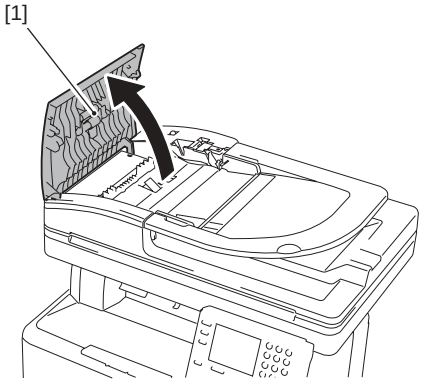

F-5-11

2) While pushing the claw [1], remove the ADF upper front cover [2].

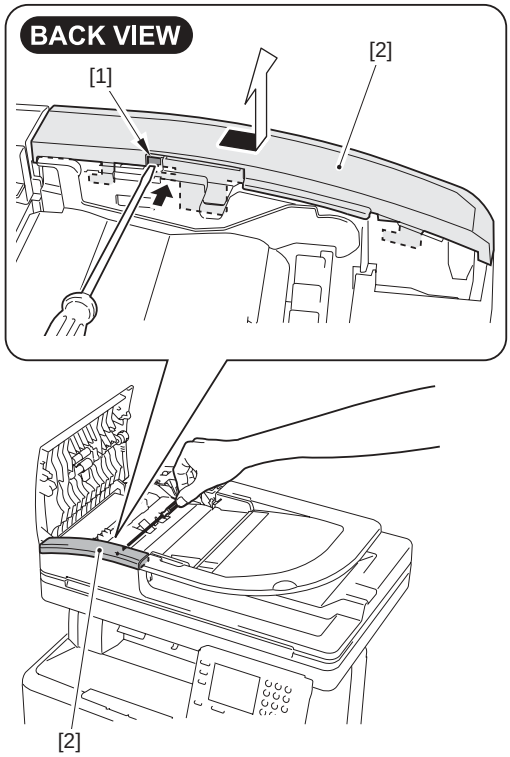

F-5-12

3) Open the ADF tray [1] to the position indicated in the figure below. Using a flat-blade screwdriver, press the hook [2] in the direction of the arrow [A] and release the claw [3] to remove the ADF tray in the direction of the arrow [B].

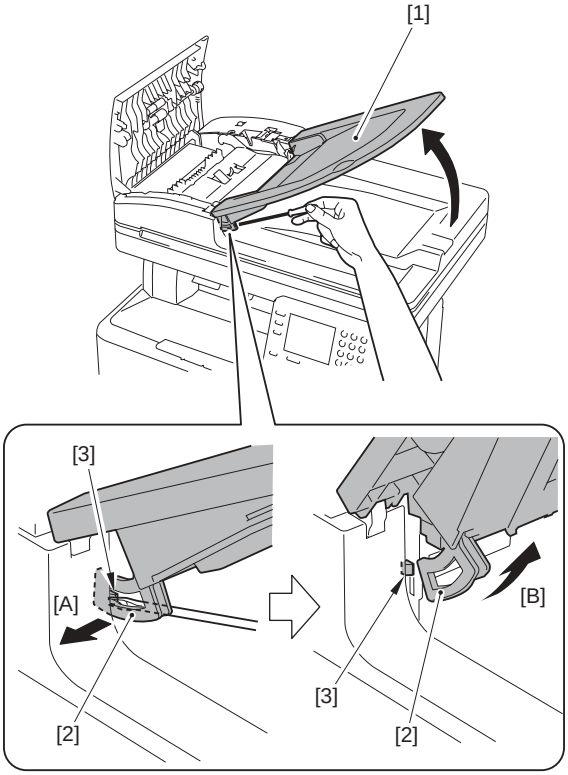

F-5-13

4) Open the ADF tray [1] to the position indicated in the figure below to remove it upward.

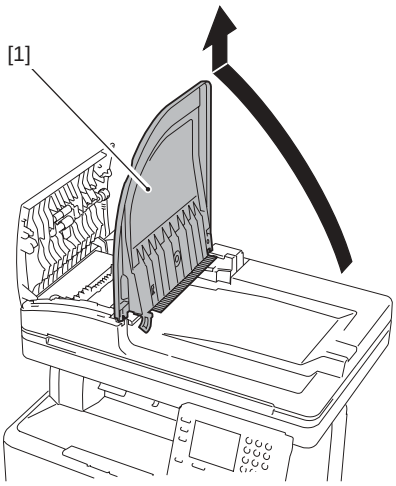

F-5-14

5) Remove the ADF upper rear cover [1].
- 1 screw [2]
- 1 boss [3]

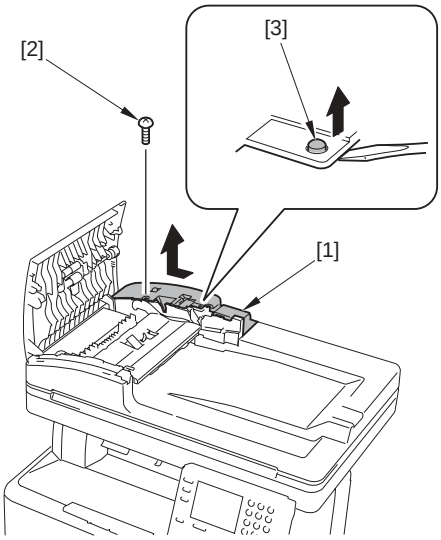

F-5-15

6) Close the ADF upper cover [1].

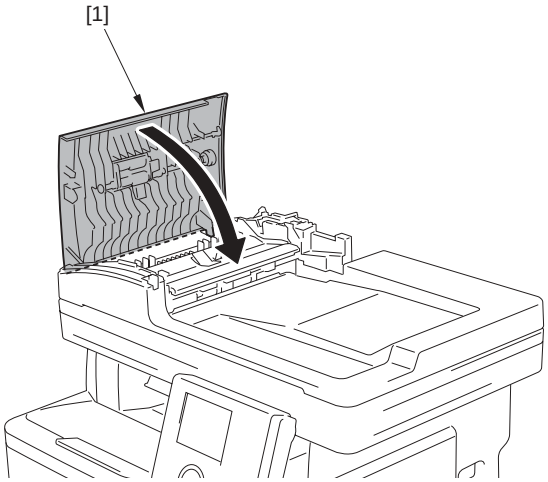

F-5-16

7) Remove the ADF unit communication cable [1].
- 1 screw [2]
- 1 connector [3]
- 1 wire saddle [4]

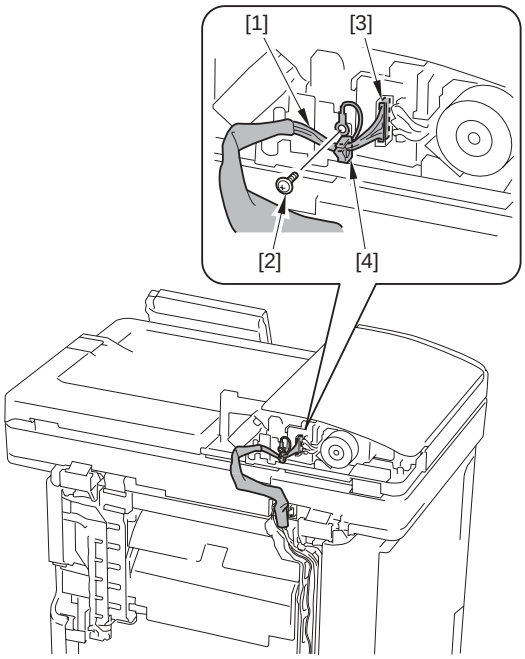

F-5-17

8) Open the ADF unit [1].

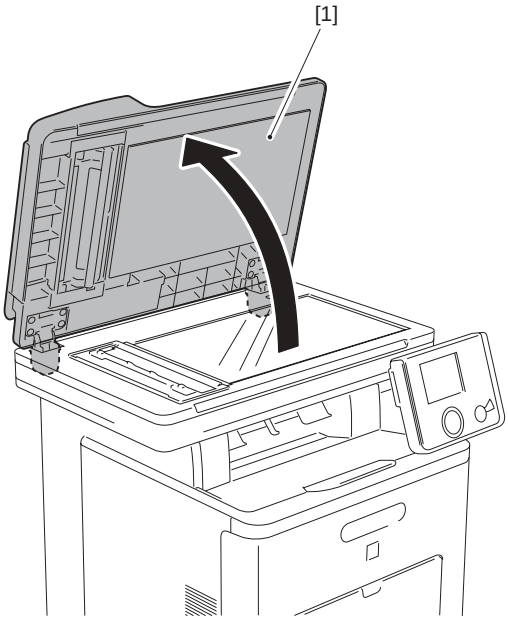

F-5-18

9) Remove the ADF unit [1].

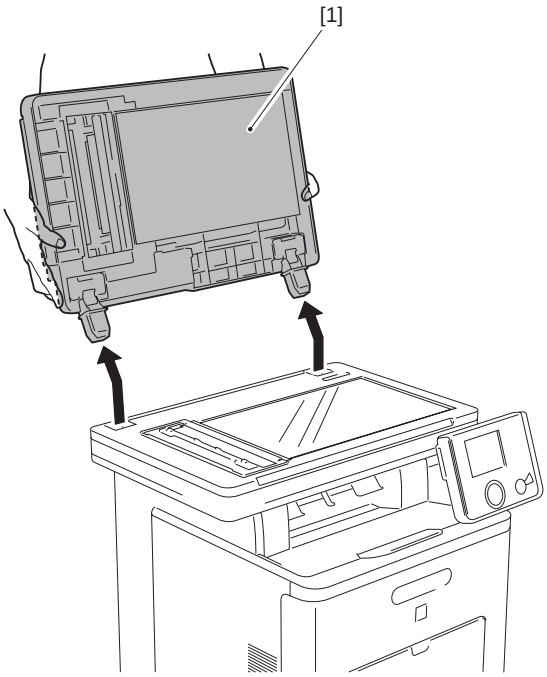

F-5-19

5.4.2 Pickup Feed Unit

5.4.2.1 Removing the ADF Pickup Feed Unit

i-SENSYS MF9170 / i-SENSYS MF9130 / i-SENSYS MF8450

1) Open the ADF upper cover [1].

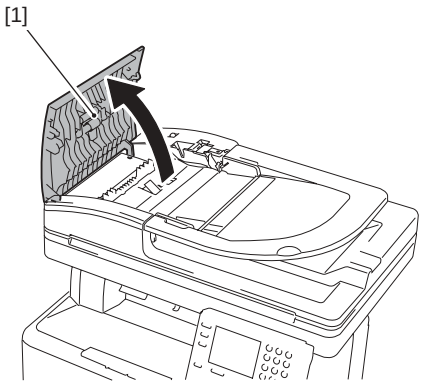

F-5-20

2) While pushing the claw [1], remove the ADF upper front cover [2].

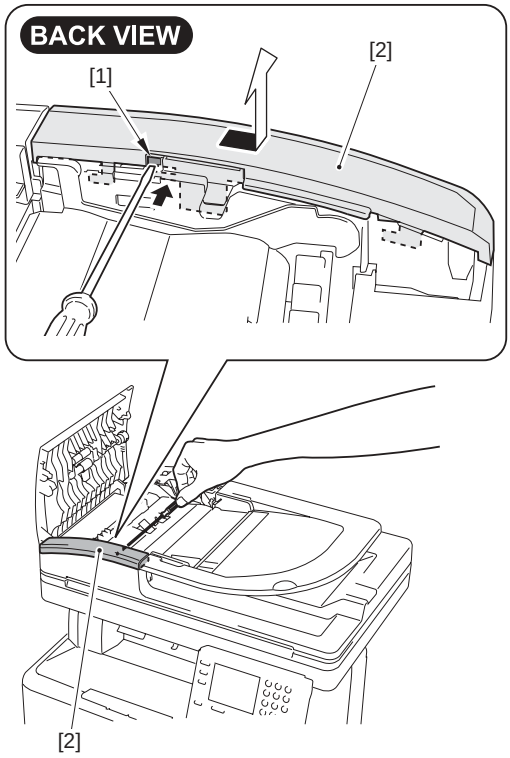

F-5-21

3) Open the ADF tray [1] to the position indicated in the figure below. Using a flat-blade screwdriver, press the hook [2] in the direction of the arrow [A] and release the claw [3] to remove the ADF tray in the direction of the arrow [B].

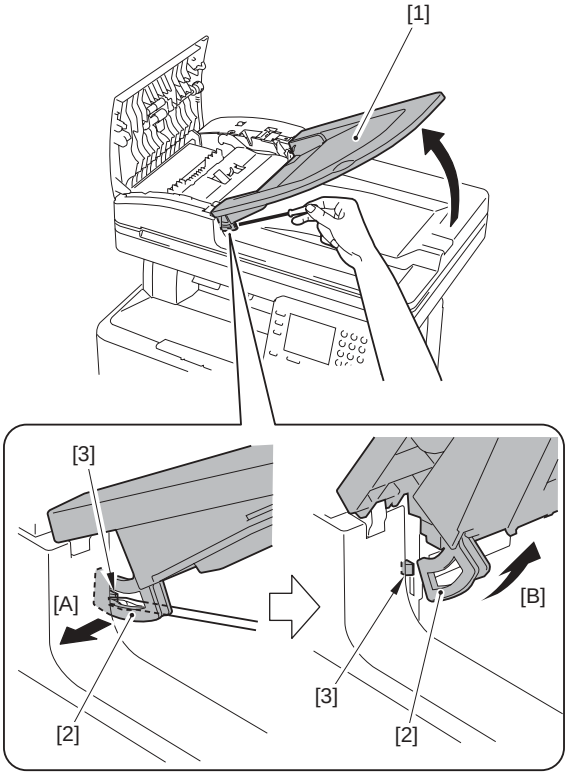

F-5-22

4) Open the ADF tray [1] to the position indicated in the figure below to remove it upward.

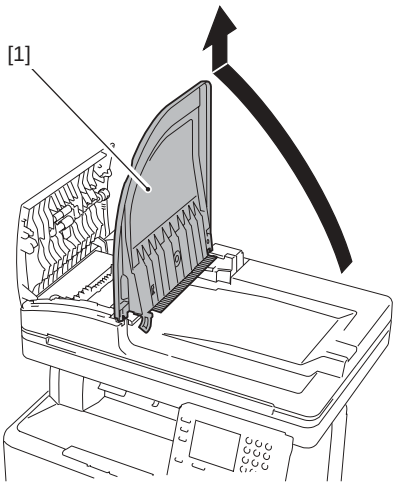

F-5-23

5) Remove the ADF upper rear cover [1].
- 1 screw [2]
- 1 boss [3]

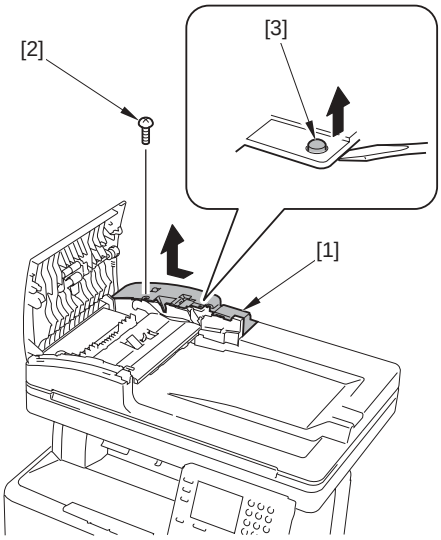

F-5-24

6) Close the ADF upper cover [1].

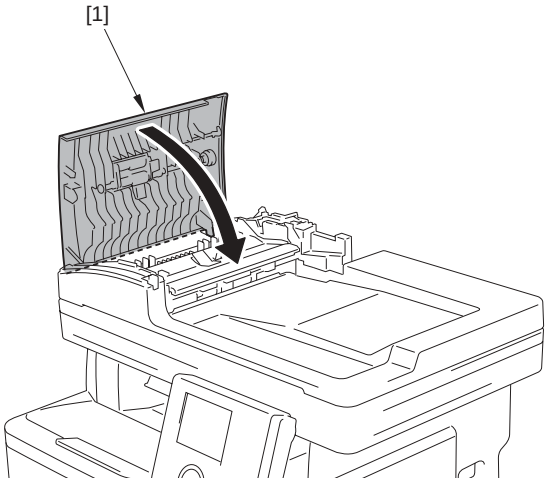

F-5-25

7) Remove the ADF unit communication cable [1].
- 1 screw [2]
- 1 connector [3]
- 1 wire saddle [4]

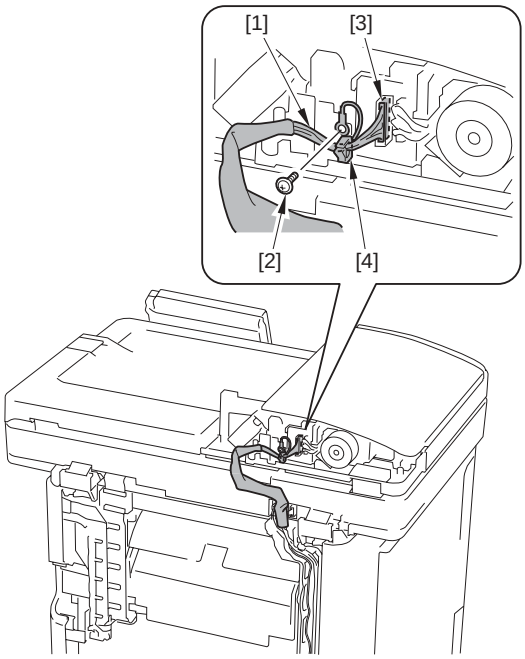

F-5-26

8) Remove the ADF pickup feed unit [1].

- 4 screws [2]

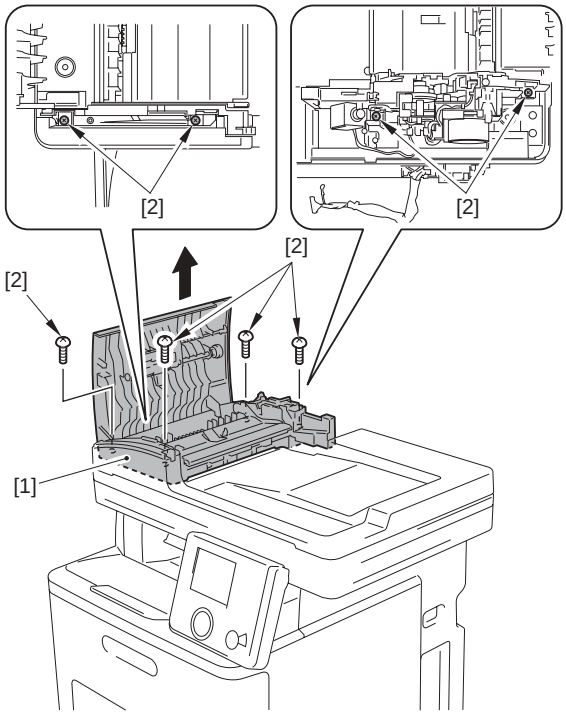

F-5-27

5.4.3 Pick-up Roller

5.4.3.1 Removing the ADF Pickup Roller

i-SENSYS MF9170 / i-SENSYS MF9130 / i-SENSYS MF8450

1) Open the ADF upper cover [1].

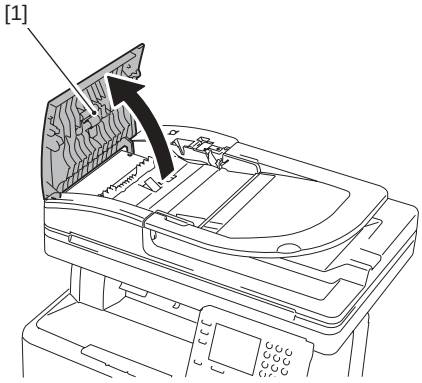

F-5-28

2) Remove the ADF pickup roller unit [1].

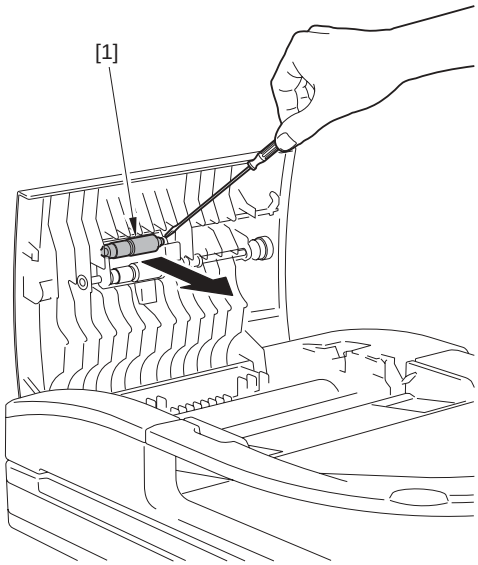

F-5-29

3) Remove the ADF pickup roller [2] from the ADF pickup roller shaft [1].

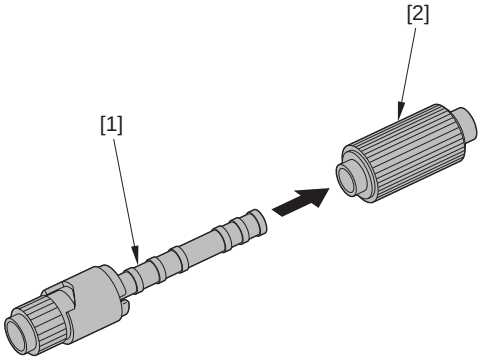

F-5-30

5.4.4 Separation Roller

5.4.4.1 Removing the ADF Separation Roller

i-SENSYS MF9170 / i-SENSYS MF9130 / i-SENSYS MF8450

1) Open the ADF upper cover [1].

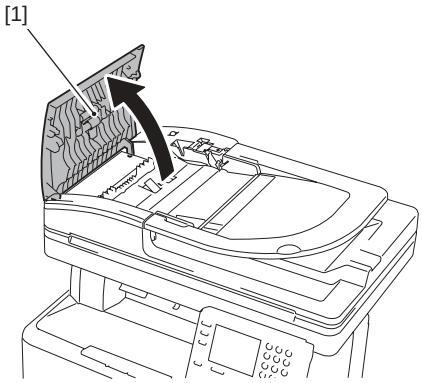

F-5-31

2) While pressing the shaft retainer [1], release the 2 shafts [2] and remove the ADF upper cover [3].

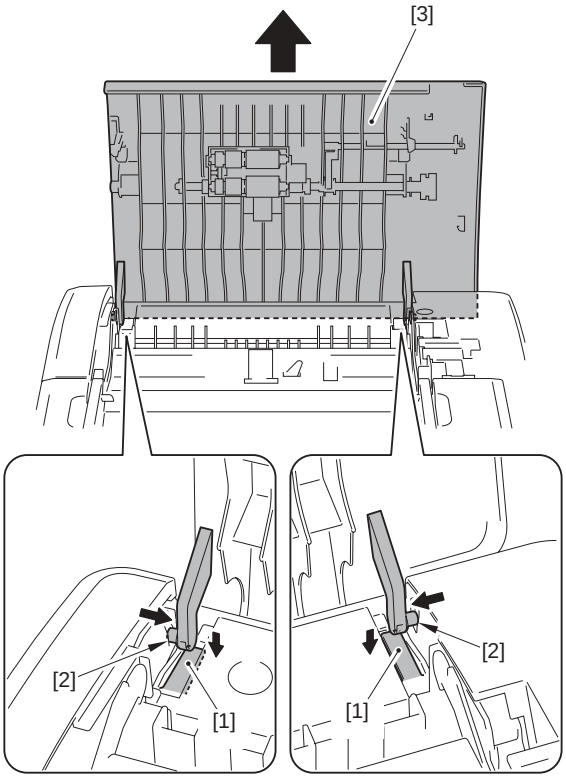

F-5-32

3) Release the claw [1] to remove the gear [2].

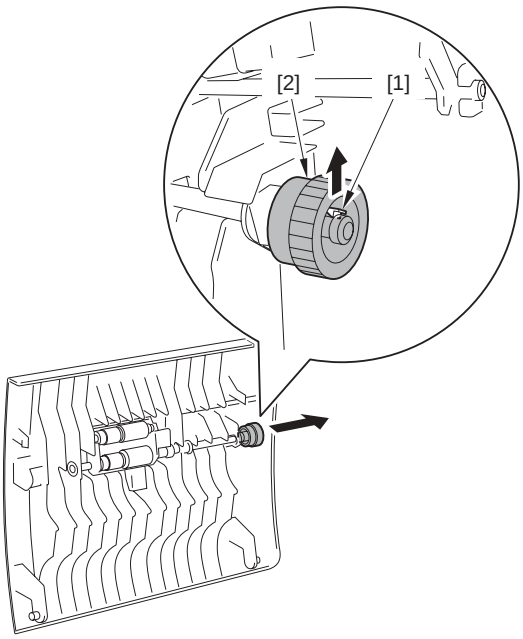

F-5-33

4) Remove the 4 grip-rings [1], the bushing [2] and the bushing [3].

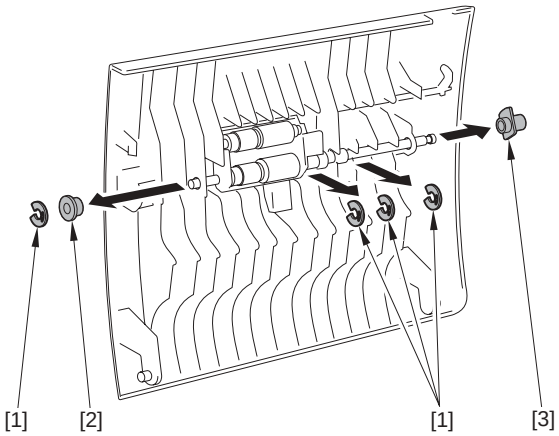

F-5-34

5) Move the ADF separation roller unit [1] in the direction of the arrow [A] to remove it from the ADF upper cover in the direction of the arrow [B].

> ⚠
> Do not loose the spring [2] when removing the ADF separation roller unit [1].

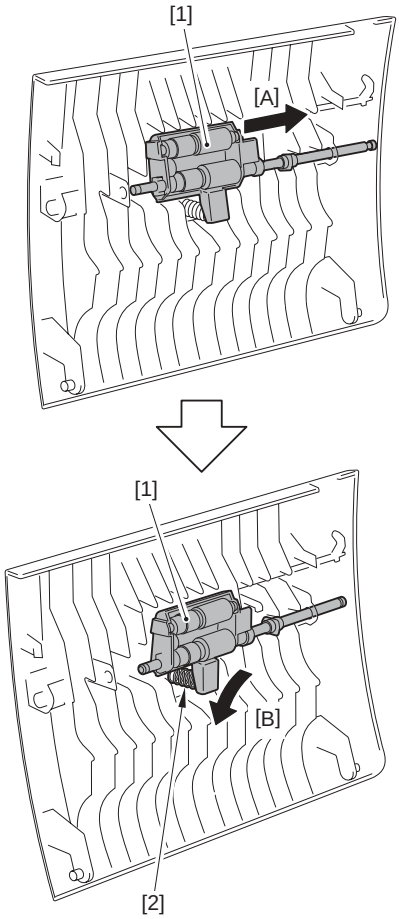

F-5-35

6) Remove the parallel pin [1] and the bushing [2].

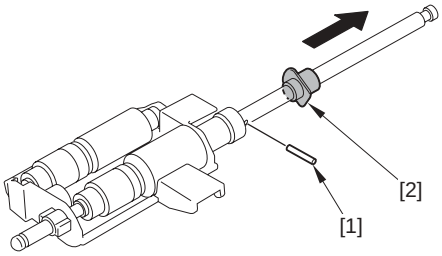

F-5-36

7) Fit the groove [1] of the ADF separation roller cover with the projection [2] of the ADF separation roller shaft to remove the ADF separation roller shaft [3].

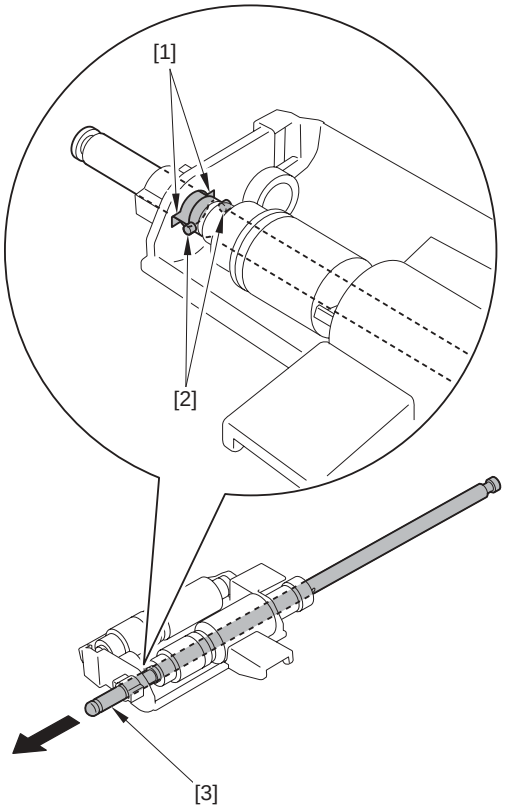

F-5-37

8) Remove the ADF separation roller [1].

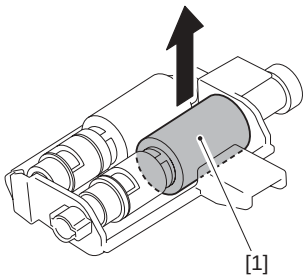

F-5-38

5.4.5 Pick-up Motor

5.4.5.1 Before Removing the ADF Pickup Motor

i-SENSYS MF9170 / i-SENSYS MF9130 / i-SENSYS MF8450

1) Remove the ADF pickup feed unit.(page 5-8)Reference [Removing the ADF Pickup Feed Unit]

5.4.5.2 Removing the ADF Pickup Motor

i-SENSYS MF9170 / i-SENSYS MF9130 / i-SENSYS MF8450

1) Disconnect the 3 connectors [1] and free the harness [3] from the harness guide [2].

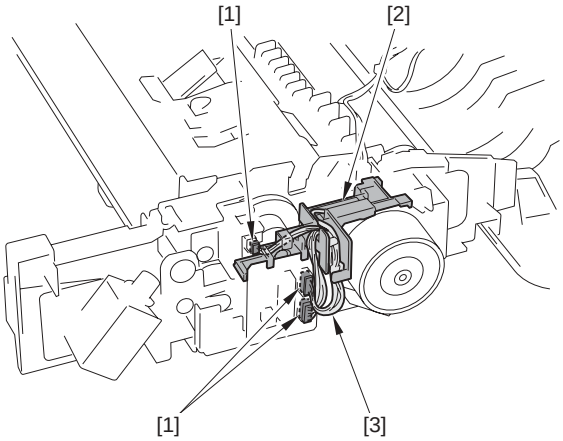

F-5-39

2) Remove the claw [1] to remove the harness guide [2].

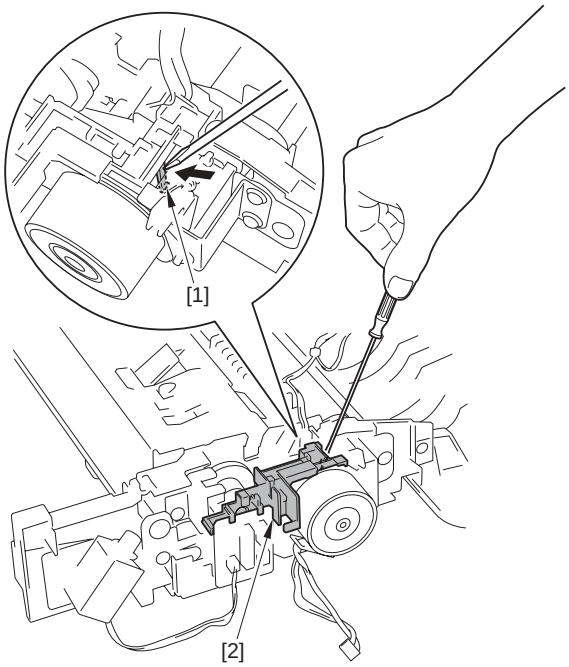

F-5-40

3) Remove the ADF pickup motor unit [1].
-3 screws [2]

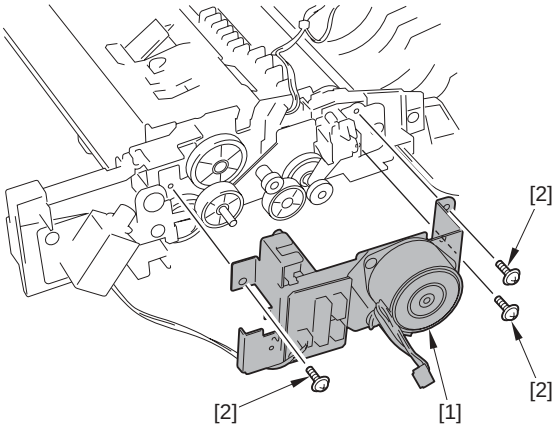

F-5-41

4) Turn over the ADF pickup motor unit.
5) Remove the ADF pickup motor [1].
- 2 screws [2]

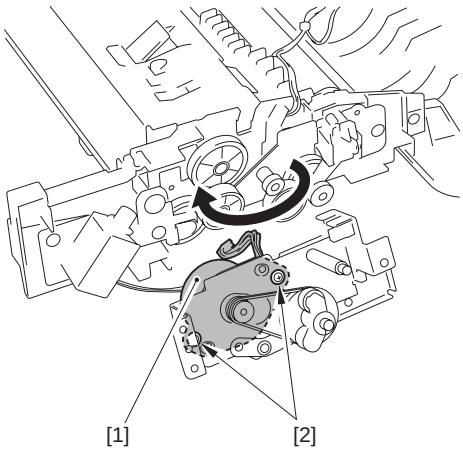

F-5-42

6) Remove the fixing plate [2] from the ADF pickup motor [1].
- 2 screws [3]

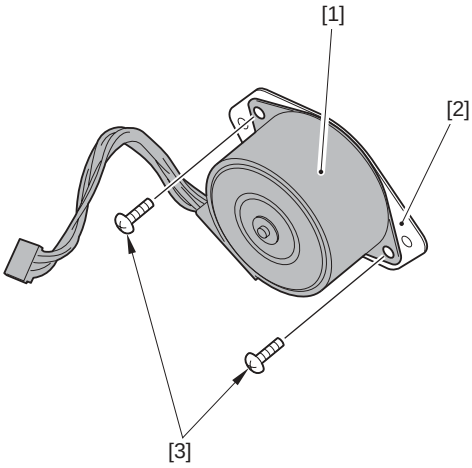

F-5-43

5.4.6 Pick-up Solenoid

5.4.6.1 Before Removing the ADF Pickup Solenoid

i-SENSYS MF9170 / i-SENSYS MF9130 / i-SENSYS MF8450

1) Remove the ADF pickup feed unit.(page 5-8)Reference [Removing the ADF Pickup Feed Unit]

5.4.6.2 Removing the ADF Pickup Solenoid

i-SENSYS MF9170 / i-SENSYS MF9130 / i-SENSYS MF8450

1) Remove the grip-ring [1] and disconnect the connector [2].

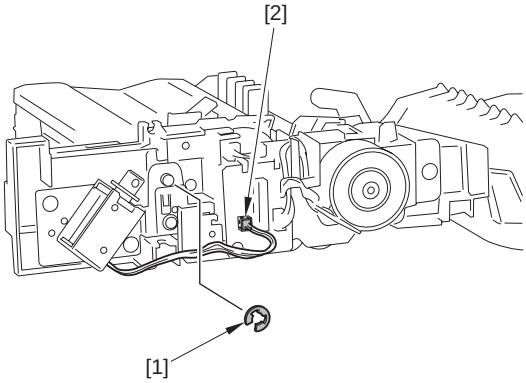

F-5-44

2) Remove the ADF pickup solenoid unit [1].
-2 screws [2]

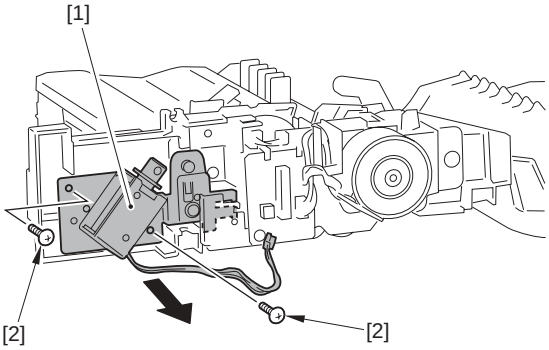

F-5-45

3) Remove the ADF pickup solenoid [2] from the ADF pickup solenoid unit [1].
-2 screws [3]

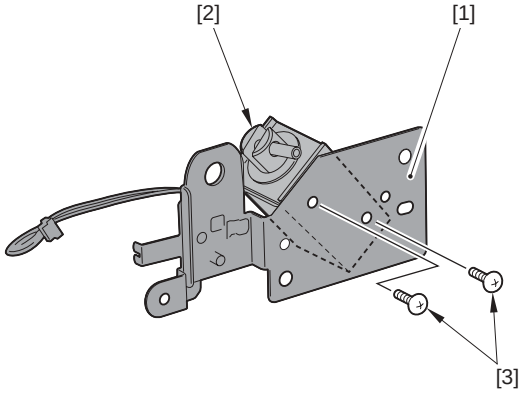

F-5-46

5.4.7 Separation Pad

5.4.7.1 Removing the ADF Separation Pad

i-SENSYS MF9170 / i-SENSYS MF9130 / i-SENSYS MF8450

1) Open the ADF upper cover [1].

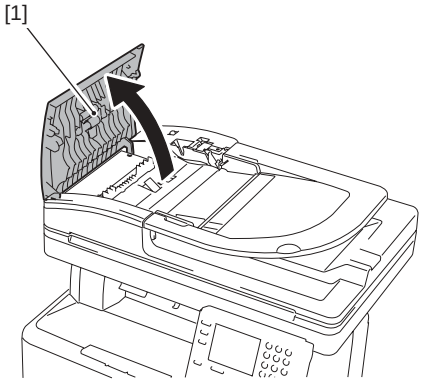

F-5-47

2) Open the inner guide [1].

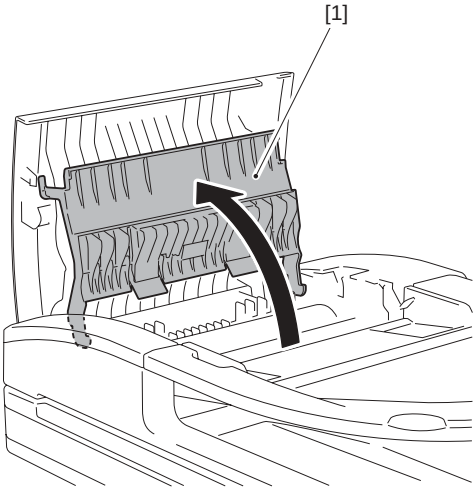

F-5-48

3) Remove the 2 screws [1].
4) Push the 2 claws [2] in the direction of the arrow [A] to remove the ADF separation claw cover [3].

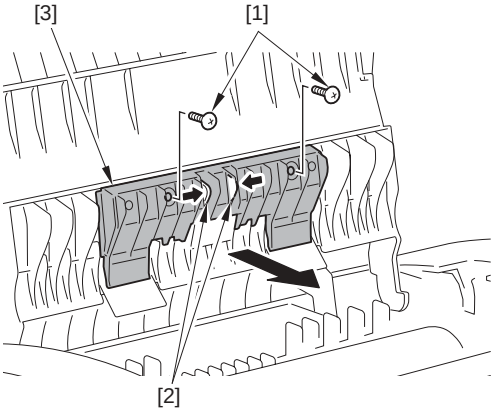

F-5-49

5) Close the inner guide [1].

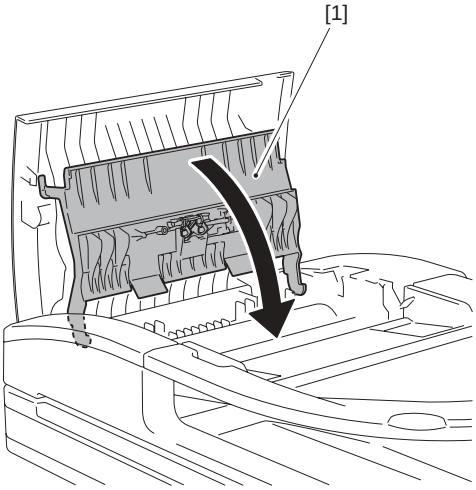

F-5-50

6) Remove the spring [1].

> ⚠
> Be careful not to lose the removed spring [1].

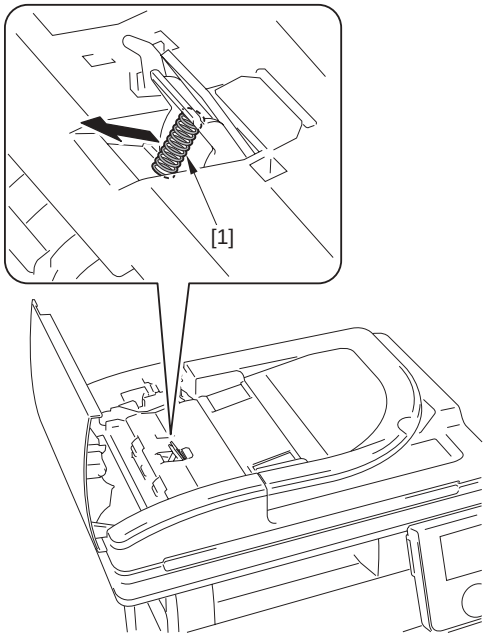

F-5-51

7) Open the inner guide [1].

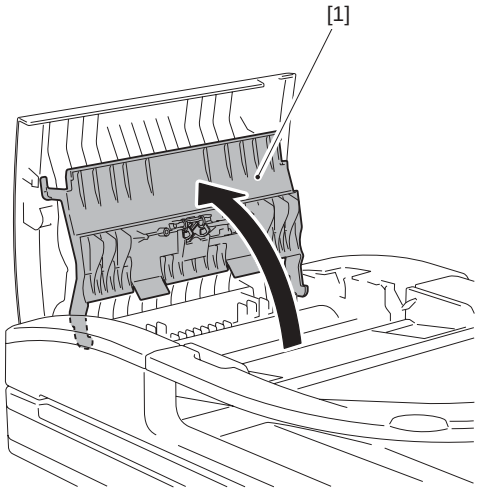

F-5-52

8) Remove the ADF separation pad unit [1].

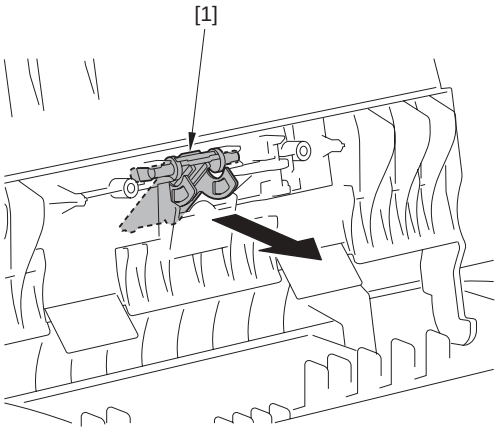

F-5-53

9) Remove the separation pad fixing pin [1] and the sheet [2], and then remove the ADF separation pad [3].

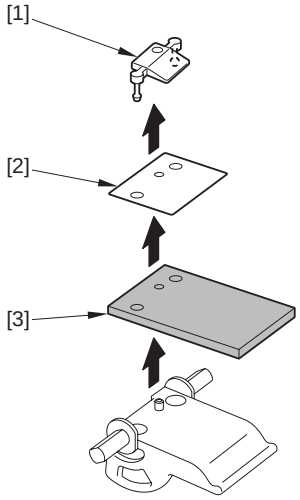

F-5-54

Chapter 6 Laser Exposure

Contents

6.1 Overview/Configuration

6.1.1 Overview

i-SENSYS MF9170 / i-SENSYS MF9130 / i-SENSYS MF8450

The laser exposure system forms latent images on the photosensitive drum according to the video signals with the control by the DC controller.

The laser exposure system consists of the laser scanner unit.
The 2 laser driver PCBs, the 2 scanner motors, and the 2 polygon mirrors are installed on the laser scanner unit.
There are two (two colors of) laser diodes for one laser driver PCB. The laser beams of two colors emitted from the laser diode are reflected by one polygon mirror.

In this machine, the process speed varies according to the print mode. The rotational speed of the scanner motor and the laser light intensity are switched according to the process speed.

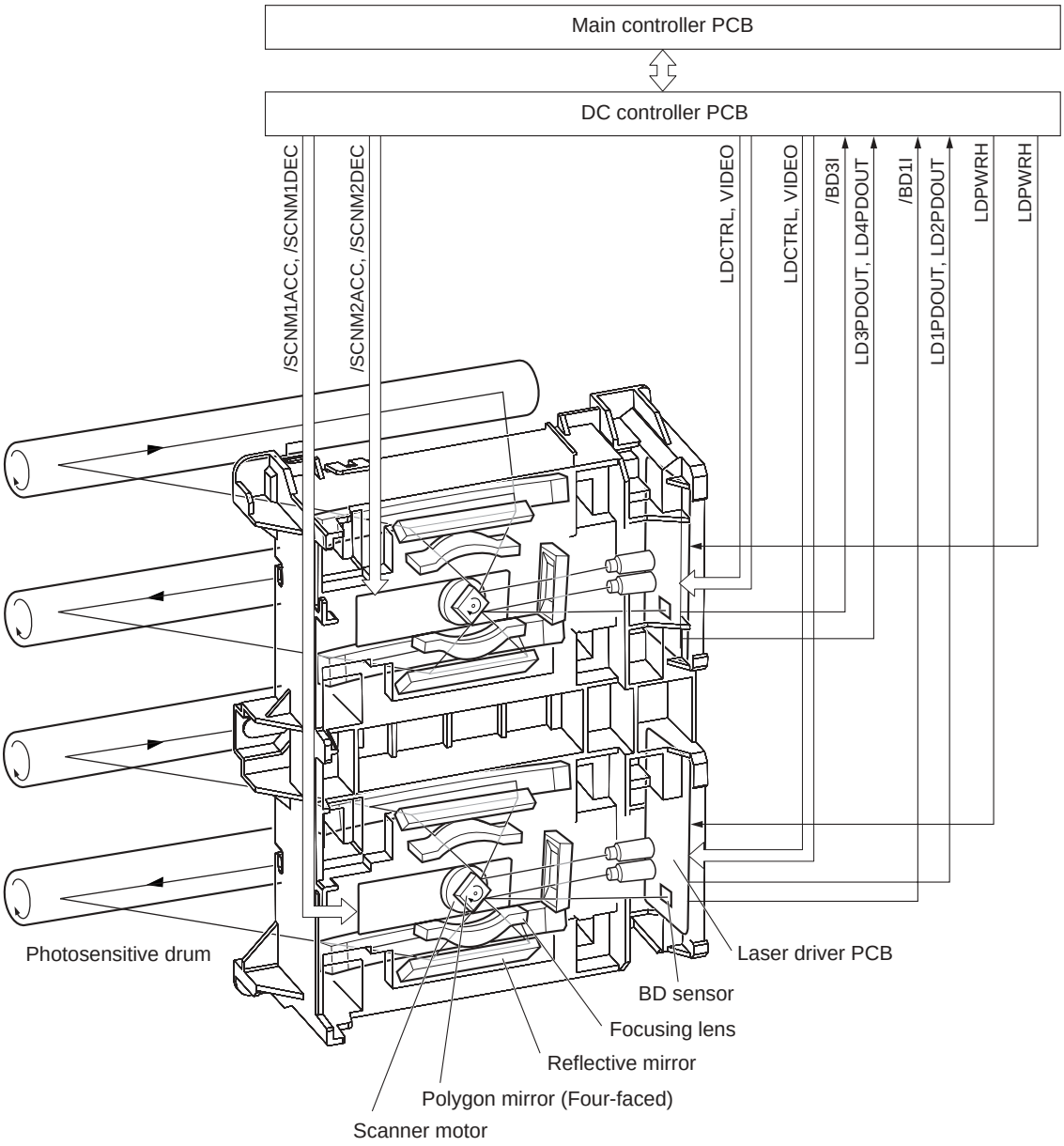

F-6-1

The following is the operational sequence at printing.

1) Upon reception of a print command from the main controller, the DC controller rotates the 2 scanner motors.
   The 2 polygon mirrors rotate in conjunction with the scanner motors.
2) The DC controller allows the laser diode on the laser driver PCB to emit light.
   The light of the laser diode (laser beam) is reflected by the polygon mirror and received by the BD sensor on the laser driver PCB.
3) The laser driver PCB outputs the /BD input signals (/BD1I, /BD3I) to the DC controller PCB.
4) The DC controller monitors the rotational speed of the scanner motor with the /BDI signals input timing to control the scanner motor to rotate at constant speed.
   When the scanner motor rotates at constant speed, the DC controller outputs the video signals sent from the main controller to the laser driver PCB.
5) In the laser driver PCB, the laser diode is emitted depending on the video signals and the laser beam is radiated.
6) The laser beams are reflected by the polygon mirror rotating at the constant speed, and reach the photosensitive drum via the focusing lens and the reflection mirror.
   The focusing lens corrects the route of the laser beam to maintain the constant scanning speed on the photosensitive drum.
7) When the photosensitive drum rotates at constant speed and the laser beams scan vertically to its rotation, a latent image is formed on the drum.

MEMO:

- Only one /BDI signal is generated per scanner motor.
  The /BDI signals of the scanner motor for M/C is generated based on the M laser reflected light, and the /BDI signals of the scanner motor for Y/Bk is generated based on the Y laser reflected light.
  The DC controller generates the /BDI signals for four colors according to these /BDI signals and send them to the main controller.
- The machine scans two lines with one polygon mirror. Therefore the scanning direction depends on the color. (The direction for M/Y is right-end write start scanning direction and that for C/Bk is left-end write start scanning direction relative to the print side of paper.)

6.2 Controlling the Laser

6.2.1 Overview

i-SENSYS MF9170 / i-SENSYS MF9130 / i-SENSYS MF8450

The laser control is to allow the laser driver to turn the laser diode ON/OFF according to the laser control signals sent from the DC controller.
There are two laser driver PCBs: one is for M/C and the other is for Y/Bk. The configurations of both PCBs are identical.

In the case of the laser driver for M/C

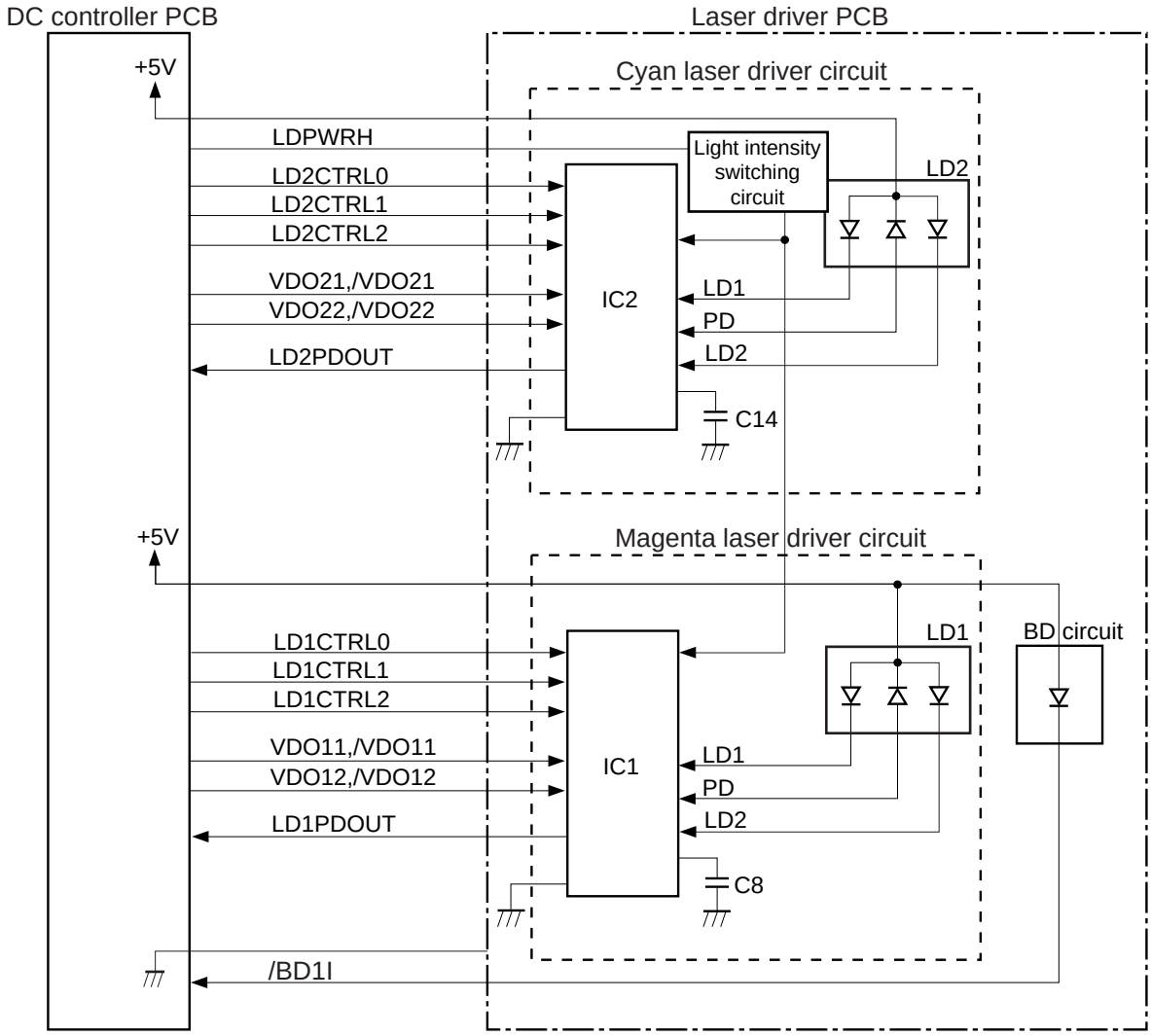

F-6-2

The DC controller sends the following signals to each laser driver IC (IC1, IC2).
- video signals (VDO, /VDO) for the image formation
- laser control signals (CTRL 0 to 2) for switching the operational mode of the laser driver circuit
- laser light intensity switch signal (LDPWRH) for switching the laser light intensity

The laser driver IC controls the laser according to the combination of the laser control signals.

6.2.2 Laser Light Emission Control

i-SENSYS MF9170 / i-SENSYS MF9130 / i-SENSYS MF8450

In this machine, the laser diode ON/OFF is controlled according to the laser light emission mode.
The laser light emission mode is determined based on the combination of the laser control signals (LD_CTL 0 to 2) that is output by the DC controller.
The laser driver IC receives the laser control signals from the DC controller and emits the laser diode according to the laser light emission mode.

6.2.3 Laser Light Intensity Control

i-SENSYS MF9170 / i-SENSYS MF9130 / i-SENSYS MF8450

In this machine, the laser light intensity is switched according to the rotational speed of the scanner motor.
The laser light intensity switch signal (LDPWRH) that is output by the DC controller controls switching the laser light intensity.
The laser driver IC receives the laser light intensity switch signal from the DC controller and switches the laser light intensity.

MEMO:
The process speed varies according to the paper type. (See 'Feed Speed Control' in Pickup and Feed System.)
When changing the process speed, the rotational speed of the scanner motor needs to be changed. If not switching the laser light intensity, a fault in image density may occur.

6.2.4 Image Masking Control

i-SENSYS MF9170 / i-SENSYS MF9130 / i-SENSYS MF8450

In the DC controller, the image masking control is performed to regulate laser beam emission in non-image area that BD detection is not performed on.
The DC controller puts the laser driver circuit into LD forced OFF mode while the laser beam scans the non-image area that BD detection is not performed on. This is called the image masking status, and the laser diode does not emit light even if the video signals are sent because it is forcedly OFF in LD forced Off mode.
The timing to start the image masking control depends on the paper size information that DC controller receives from the main controller. (There is no cassette paper size detection function in this equipment.)

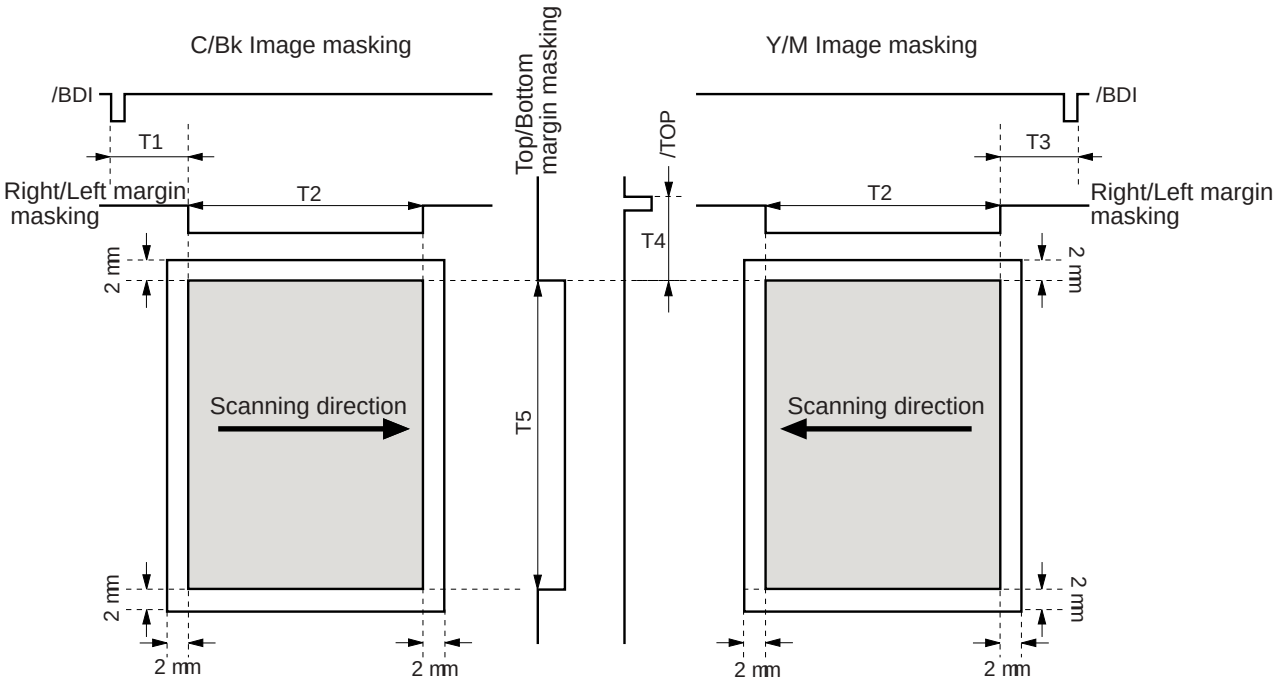

F-6-3

- The colored area indicates the area where an image can be scanned by the laser beam.
- The times T1, T2, T3, T4 and T5 depend on the paper size.
- The T1 time depends on the color.
- If the main controller does not specify the paper size with a paper size command at manual feed pickup operation, the printer cannot detect the paper width. In such a case, the T1 to T3 are automatically set for letter size but T5 is set according to the paper length detected by the manual feed paper sensor (SR707).

6.2.5 Failure Detection

i-SENSYS MF9170 / i-SENSYS MF9130 / i-SENSYS MF8450

In the DC controller, the failure in the laser diode is detected.
The laser driver IC converts the laser current of the laser diodes into voltage value (laser current output signal: PDOUT) during the initial APC period and sends it to the DC controller.
If the voltage value equivalent to the laser current output signal is below the specified value, the DC controller presumes the laser diode failure, stops the printer engine, and displays "E100 (optical unit failure)" on the control panel.

6.3 Controlling the Laser Scanner Motor

6.3.1 Overview

i-SENSYS MF9170 / i-SENSYS MF9130 / i-SENSYS MF8450

In the DC controller, the scanner motor control is performed to emit the laser beam at the correct position on the photosensitive drum.
The scanner motor control is to rotate the scanner motor at its specified speed and phase.
- Speed control
  The scanner motor is rotated at a specified speed.
- Phase control
  The phase difference of the 2 polygon mirrors is adjusted while the scanner motor is rotating at a low speed to eliminate line displacement attributed to the rotation and prevent color displacement in the sub scanning direction.

There are two scanner motors: one is for M/C and the other is for Y/Bk. The configurations of both motors are identical.

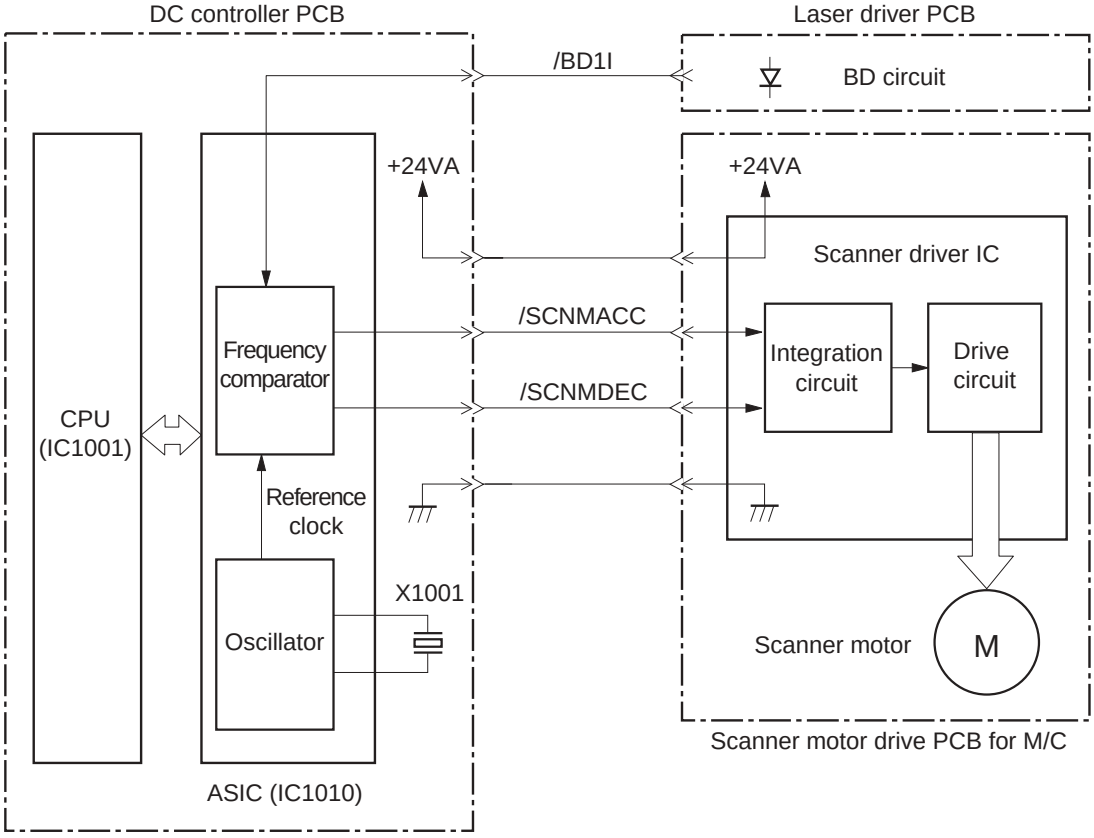

F-6-4

The DC controller PCB generates the reference clock based on the oscillation frequency of the oscillator (X1001).
It compares the intervals between the reference clock and the BD input signal (/BD1I) sent from the laser driver PCB with the frequency comparator, and monitors the rotational counter of the scanner motor.
It controls the rotational speed of the scanner motor by sending the scanner motor acceleration signal (/SCNMACC) or the scanner motor deceleration signal (/SCNMDEC) to the scanner motor driver based on the detected rotational speed.

6.3.2 Failure Detection

i-SENSYS MF9170 / i-SENSYS MF9130 / i-SENSYS MF8450

In the DC controller, the fault in the scanner motor is detected.
The CPU (IC1001) monitors the frequency comparator in the ASIC (IC1010) and determines whether the scanner motor rotates at its specified rotational speed or not.
When the CPU encounters the following conditions, it determines the scanner motor failure, stops the printer engine, and displays 'E100 (optical unit failure)" on the control panel.
- Abnormal scanner motor
  The scanner motor does not enter scanner ready mode within 5 seconds of scanner motor start-up.
- BD error
  - The /BDI signal cannot be detected within 1.5 seconds of once the scanner motor reached at its specified rotational speed.
  - The interval of the /BDI signal goes out of the tolerance for 0.5 second continuously after the scanner motor once reached at its specified rotational speed.

6.4 Parts Replacement Procedure

6.4.1 Laser/Scanner Unit

6.4.1.1 Before Removing the Laser Scanner Unit

i-SENSYS MF9170 / i-SENSYS MF9130 / i-SENSYS MF8450

1) Remove the ETB unit.(page 7-28)Reference [Removing the ETB Unit]
2) Remove the rear cover unit.(page 11-6)Reference [Removing the Rear Cover Unit]

3) Remove the left cover.(page 11-8)Reference [Removing the Left Cover]
4) Remove the right cover.(page 11-7)Reference [Removing the Right Cover]
5) Remove the Electrical Components Cover.(page 11-11)Reference [Removing the Electrical Components Cover]
6) Remove the Controller Box.(page 11-11)Reference [Removing the Controller Box]
7) Remove the Off Hook PCB. (only of the machine with FAX)
8) Remove the DC Controller PCB.(page 11-21)Reference [Removing the DC Controller PCB]
9) Remove the Laser Scanner Cover.(page 11-11)Reference [Removing the Laser Scanner Cover]

6.4.1.2 Removing the Laser Scanner Unit

i-SENSYS MF9170 / i-SENSYS MF9130 / i-SENSYS MF8450

1) Free the cable from the wire saddle [1].

F-6-5

2) Remove the laser scanner unit [1].
- 2 flat cables [2]
- 5 screws [3]

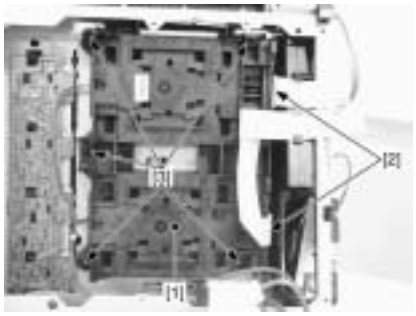

F-6-6

3) Disconnect the 2 connectors [1]

F-6-7

- Do not disassemble the laser scanner unit in the field.
Disassembling it may cause a functional fault.
- When holding the laser scanner unit, be careful not to touch the laser PCB [1] and the lens [2].

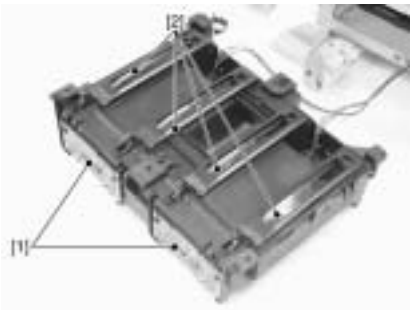

Chapter 7 Image Formation

Contents

7.1 Overview/Configuration

7.1.1 Overview

i-SENSYS MF9170 / i-SENSYS MF9130 / i-SENSYS MF8450

The image formation system forms a toner image on paper, which is controlled by the DC controller. It consists of four toner cartridges and the ETB unit, etc.

The DC controller controls the laser scanner unit, and forms an electrostatic latent image on the photosensitive drum based on the video signal received from the main controller. At the same time, it controls the high-voltage power PCB, makes toner adhere to the electrostatic latent image, and then transfers it on paper.

A memory tag, which saves cartridge data, is built in the toner cartridge for each color. The DC controller detects the use condition of the toner cartridge by reading/writing the memory tag.

F-7-1

7.1.2 Print Process

i-SENSYS MF9170 / i-SENSYS MF9130 / i-SENSYS MF8450

The print process is performed in 10 steps with five blocks.
A toner image is formed on paper when the steps in each block are executed in sequence.

1. Electrostatic latent image formation block
To form an electrostatic latent image on the photosensitive drum
Step 1: Pre-exposure
Step 2: Primary charging
Step 3: Laser beam exposure

2. Development block
To make the electrostatic latent image visible on the photosensitive drum surface with the contact development method
Step 4: Development

3. Transfer block
To transfer toner on the photosensitive drum to paper
Step 5: Attraction
Step 6: Transfer
Step 7: Drum separation
Step 8: ETB separation

4. Fixing block
To fix toner on paper
Step 9: Fixing

5. Cleaning block
To remove the residual toner on the photosensitive drum
Step 10: Drum cleaning

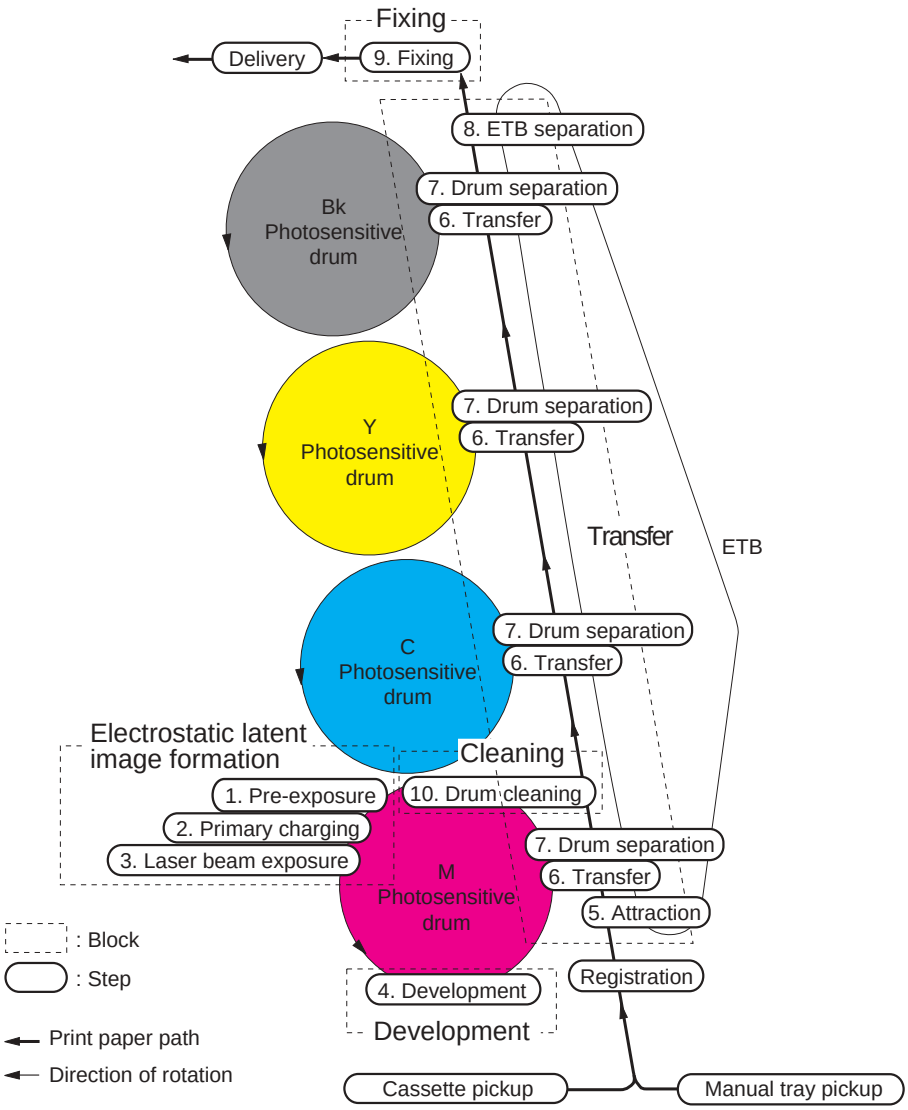

F-7-2

7.1.3 Electrostatic Latent Image Formation Block

i-SENSYS MF9170 / i-SENSYS MF9130 / i-SENSYS MF8450

In this block, an electrostatic latent image is formed on the photosensitive drum by following three steps.

When a laser beam scans the photosensitive drum charged with a negative potential, an image with negative charge is formed on the photosensitive drum. This image is called "an electrostatic latent image" because it is invisible to human eyes.

Step 1: Pre-exposure
As a preparation for the primary charging, the LED light of the pre-exposure LED is exposed on the photosensitive drum surface. This eliminates the residual charge on the drum surface in order to avoid image density unevenness.

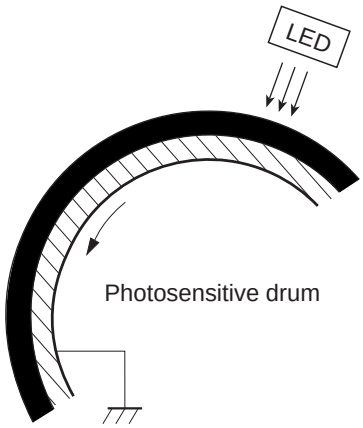

F-7-3

Step 2: Primary charging
As a preparation for the latent image formation, the surface of the photosensitive drum is changed with a uniform negative potential.
The machine charges the photosensitive drum with negative charge directly from the primary charging roller, which is interlocked with the drum.
The primary charging roller is made of a conductive rubber, and a negative DC bias is applied to the roller.

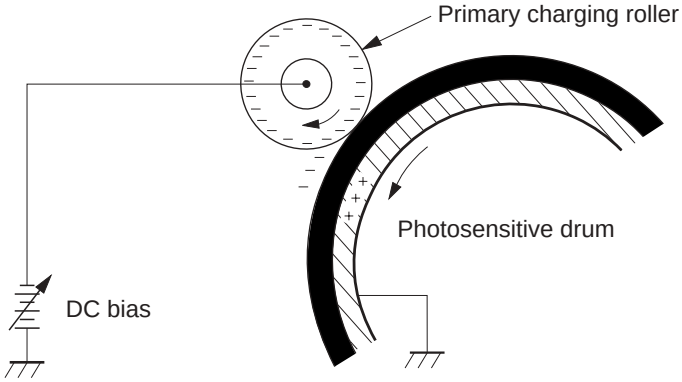

F-7-4

Step 3: Laser beam exposure
The latent image is formed on the photosensitive drum by a laser beam.
When a laser beam is exposed on the photosensitive drum, the potential on the exposed area (light area) is neutralized and the negative potential is removed from the drum surface. This area forms electrostatic latent images. A negative potential remains in the area where a laser beam was not exposed (dark area).

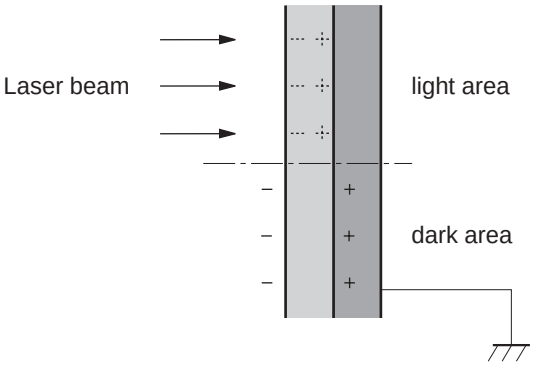

F-7-5

7.1.4 Development Block

i-SENSYS MF9170 / i-SENSYS MF9130 / i-SENSYS MF8450

In this block, toner is adhered to the electrostatic latent image on the photosensitive drum to make it visible by the contact development method.
In the contact development method, the developing cylinder is closely engaged with the photosensitive drum. Development is performed when toner is transferred from the developing cylinder to the photosensitive drum.
The toner (developer) used in the machine is a non-magnetic single-component toner, composed of resins, etc.

Step 4: Development
On the surface of the developing cylinder, toner is leveled by the developing blade to make an even layer of toner.
In this condition, the toner is charged negative due to the friction between the developing blade and the rotating developing cylinder, and the surface of the developing cylinder is charged negative.
Since the potential on the developing cylinder surface is lower than the light area on the photosensitive drum, the toner is separated from the developing cylinder at the area where the photosensitive drum is engaged with the developing cylinder, and is adhered to the light area of the photosensitive drum. This makes the electrostatic latent image on the photosensitive drum visible.
Since the potential in the dark area on the photosensitive drum is lower than the potential on the developing cylinder surface, the toner is not separated from the developing cylinder.

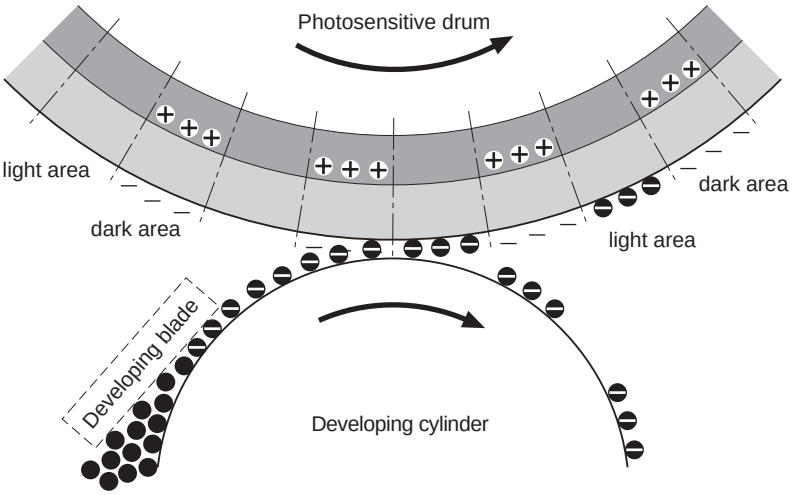

F-7-6

7.1.5 Transfer Block

i-SENSYS MF9170 / i-SENSYS MF9130 / i-SENSYS MF8450

In this block, the toner on the photosensitive drum is transferred to paper, following four steps.

Step 5: Attraction
Paper is adhered to the ETB.
Since the machine transports paper upward, the paper is attracted to the ETB by electrostatic force so that it is not displaced from the feed path.
The fed paper is charged positive by the attraction roller, and is transported while being adhered to the ETB.
A positive DC bias is applied to the attraction roller.

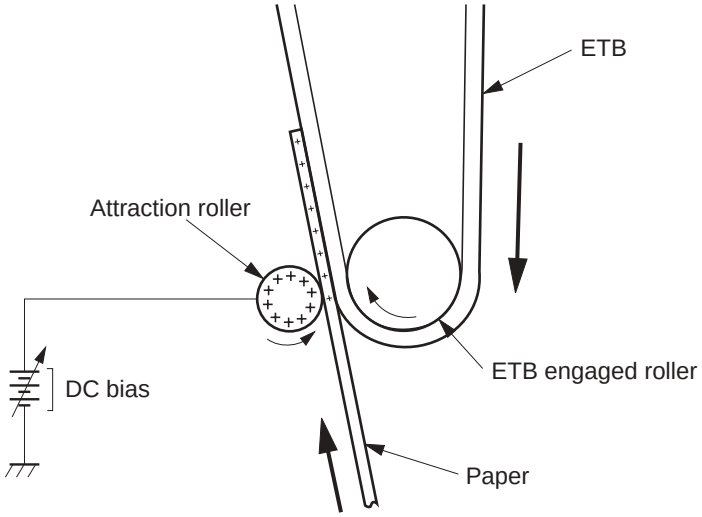

F-7-7

Step 6: Transfer
The toner on the photosensitive drum is transferred to paper.
The transfer roller is located at the opposite side of the photosensitive drum across the ETB. A positive DC bias is applied to the transfer roller.
Since the ETB is charged positive by the transfer roller, the negative-charged toner on the photosensitive drum is transferred to the paper.
This process is executed in the order of M, C, Y, and Bk.

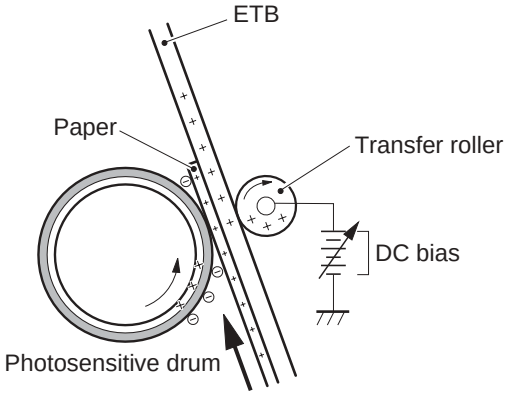

F-7-8

Step 7: Drum separation
The paper is separated from the photosensitive drum by its own elastic force (curvature separation).
There is also a static charge eliminator at the downstream of the transfer roller. It decreases the static charge on the ETB to stabilize paper feed operation.

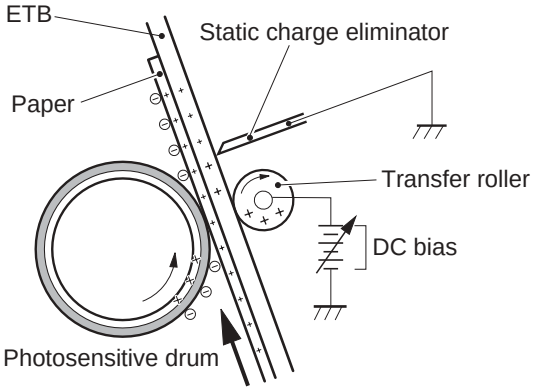

F-7-9

Step 8: ETB separation
The paper is separated from the ETB by the elasticity of paper and the curvature of the ETB feed roller.

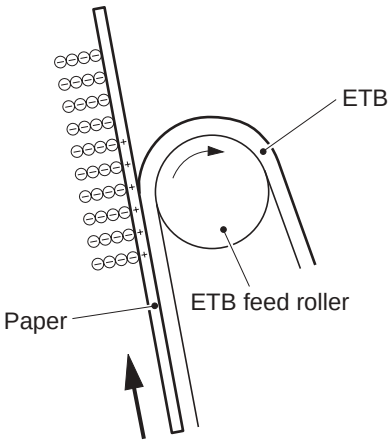

F-7-10

7.1.6 Fixing Block

i-SENSYS MF9170 / i-SENSYS MF9130 / i-SENSYS MF8450

In this block, a toner image is fixed on paper.
The toner image transferred to the paper can be smeared easily by hands since it is only attracted to the paper by a static electricity.
When pressure and heat are applied to the paper and toner image, the toner image melts with mixed colors and becomes a permanent printed image (on-demand fixing).

Step 9: Fixing
When the paper with toner is transported between the fixing sleeve and the pressure roller, the toner is melted by heat and fixed to the paper by pressure.
For the fixing heater, the machine uses a ceramic heater with lower heat, which warms up quickly. The feature of this heater is that the wait time is short and thus energy saving is realized.

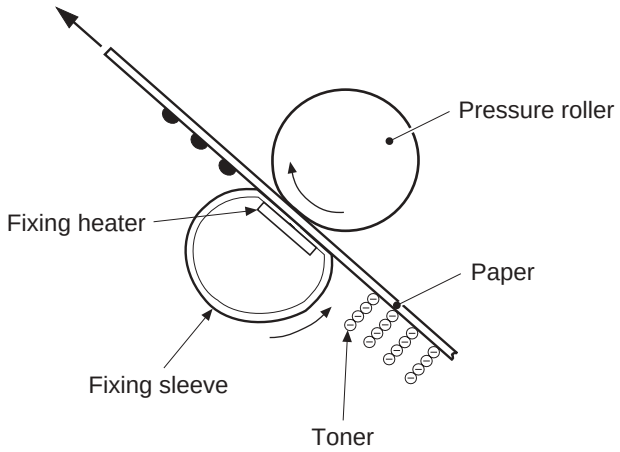

F-7-11

7.1.7 Cleaning Block

i-SENSYS MF9170 / i-SENSYS MF9130 / i-SENSYS MF8450

In this block, the residual toner on the photosensitive drum is removed.
When transfer is performed, a part of the toner image on the photosensitive drum is not sometimes transferred and remains on the drum. This remaining toner is called residual toner.
Removing the residual toner keeps a clear image in the subsequent print operation.

Step 10: Drum cleaning
The residual toner on the photosensitive drum is scraped by the cleaner blade, and then collected into the waste toner container.

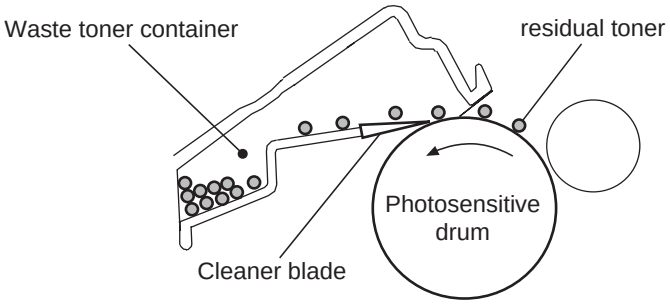

F-7-12

7.2 Image Stabilization Control

7.2.1 Overview

i-SENSYS MF9170 / i-SENSYS MF9130 / i-SENSYS MF8450

The quality of a printed image is affected by changes in environmental condition where the machine is installed or changes in the characteristics of the photosensitive drum and toner.
The machine performs the following controls according to necessity to stabilize print operation.

- Environmental change corrective control
  To correct values of primary charging biases and developing biases based on the result of detection performed by the environment sensor

- Image gradation corrective control
  To correct the gradation data in the main controller PCB based on the result of detection performed by the color displacement/density sensor

- Color displacement corrective control
  To correct the timing of sending a video signal based on the result of detection performed by the color displacement/density sensor.

7.2.2 Environmental Change Corrective Control

i-SENSYS MF9170 / i-SENSYS MF9130 / i-SENSYS MF8450

This control corrects values of primary charging biases and developing biases to obtain an optimum image under the detected environmental condition.

Explanation of operation
The environment sensor sends detected temperature and humidity to the DC controller as a temperature signal and a humidity signal.
The DC controller detects the printer's installation environment based on these two signals.
The DC controller requests the main controller to send a command to execute environment related corrective control at the following timing.
- After power-on
- When the front cover is closed after the replacement of the toner cartridge
- When a specified period of time elapses after the execution of this control
- When a specified number of prints are completed after the execution of the previous job or after the replacement of the toner cartridge
- When a specified level of environmental change (temperature/humidity) has been made after the execution of this control
- When the DC controller received the execution command from the main controller

The DC controller executes the following measures to prevent an image failure after the execution of this control.
- Change the primary charging bias value.
- Change the developing bias.
- Request the main controller to execute image gradation collective control.

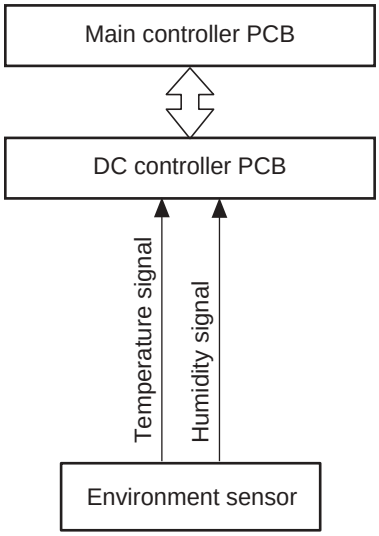

F-7-13

Error Codes:	
E066	Environment sensor error alert If the temperature detected by the environment sensor is out of the specified range, the host machine is stopped and an error code will be displayed.

7.2.3 Image Gradation Corrective Control

i-SENSYS MF9170 / i-SENSYS MF9130 / i-SENSYS MF8450

This control corrects the gradation data based on the halftone density in order to obtain ideal image gradation.
The DC controller executes this control following the command sent from the main controller.

Explanation of operation

1) When receiving a command of executing density measurement from the main controller, the DC controller forms a pattern image for image gradation correction for each color on the ETB.
   The pattern image for image gradation correction is formed with the specified density for each color (low at the left side and high at the right side), using the optimum developing bias determined by the environment related corrective control.
2) The DC controller sends a color displacement/density LED drive signal and flashes the light emitter (LED) of the color displacement/density sensor.
   The color displacement/density sensor is a reflection type sensor located on the upper side of the ETB. It consists of the light emitter (LED) and light receiver (PD).
3) The light emitted from the light emitter is reflected at the pattern image for image gradation correction and received at the light receiver of the color displacement/density sensor.
   The intensity of the reflected light varies depending on the toner density.
4) The color displacement/density sensor converts the received light into a voltage, and sends it to the DC controller as a density detection signal (analog value).
5) The DC controller converts the received density detection signal into density data, and sends it to the main controller.
6) The main controller performs gradation correction based on the received density data in order to obtain an ideal halftone image.

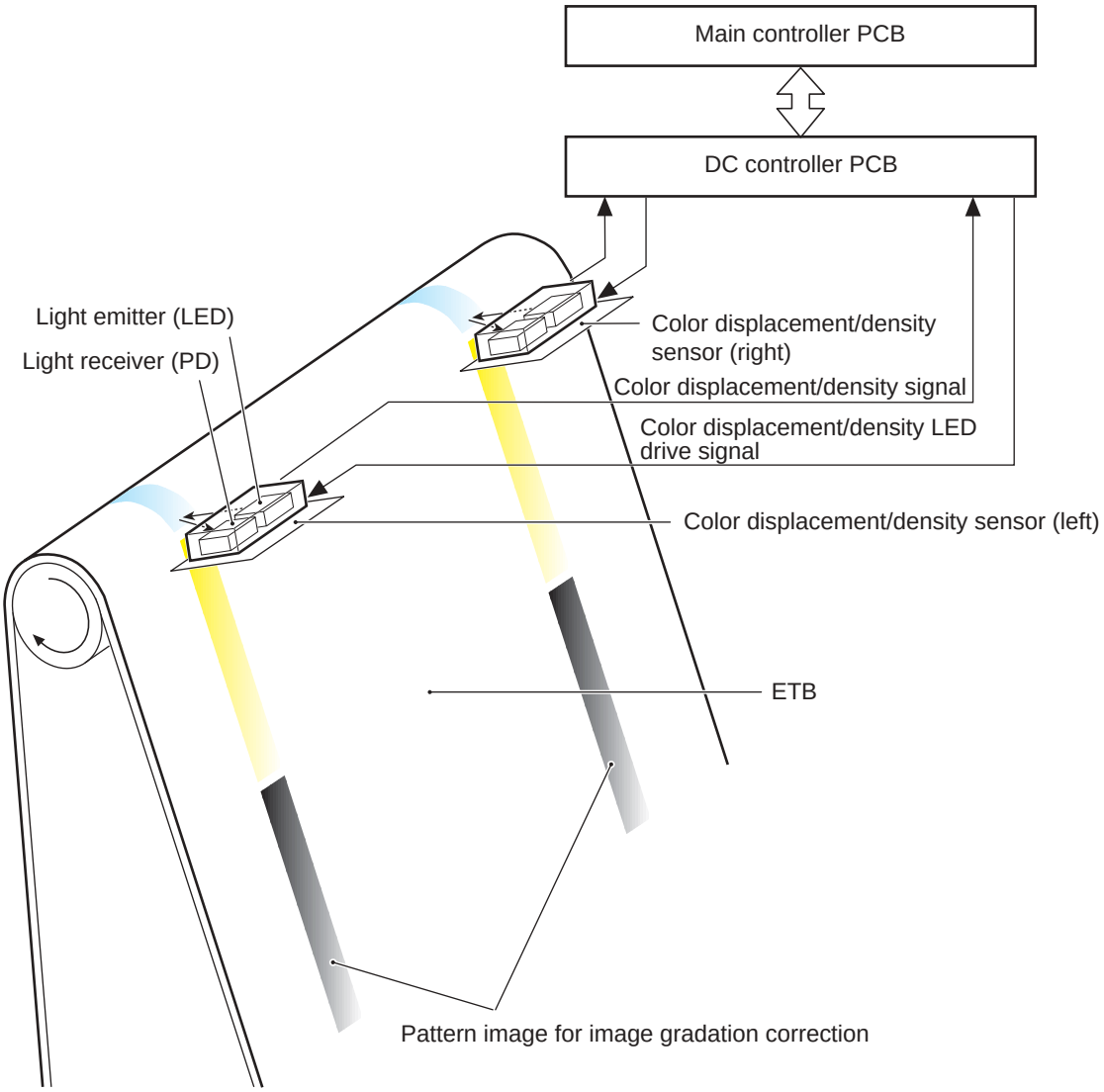

F-7-14

Error Codes:	
E020	Warning: color displacement/density sensor abnormality When light could not be received by the light receiver, the machine sets an initial value for the image density correction value and displays the error code on the control panel.

A pattern image for image gradation correction
Image gradation correction pattern is formed on the position away from ETB center to right and left in the following order.

ETB 1st round
1) Pattern image for adjustment of LED light intensity
Y, C, M pattern is printed on the left side only.
This pattern is to adjust the light intensity of the LED for the color displacement/image density sensor (left).
2) Pattern for timing reference
Bk pattern is printed on the same position at right and left.
This pattern is to measure the timing of step 3), 4) and 5).
3) ETB base
The machine measures the ETB base condition of the same position with the halftone patch that is measured at the 2nd round of ETB.
This is to measure the density of halftone patch accurately. The timing is determined with using the pattern printed at step 2).

ETB 2nd round
4) Pattern for density condition
Halftone patch of Bk, Y, C, M is printed on the left side only.
Measures the density condition of each color. The timing is determined with using the pattern printed at step 2).
5) Pattern for turn-on density detection
Halftone patch of Bk, Y, C, M is printed on the right side only.
This is to detect the turn-on density of each color (the printable minimum density). The timing is determined with using the pattern printed at step 2).

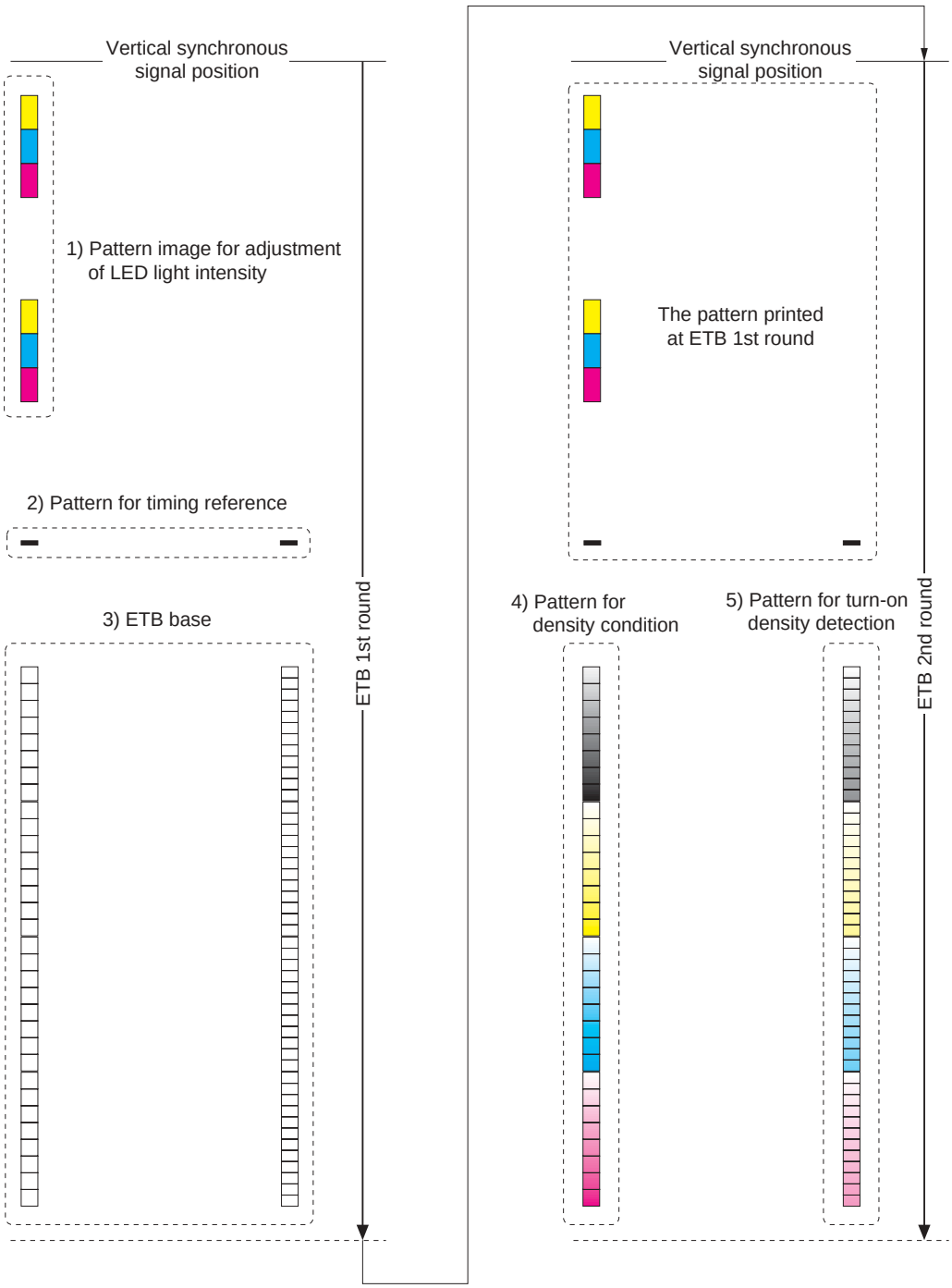

F-7-15

7.2.4 Color Displacement Corrective Control

i-SENSYS MF9170 / i-SENSYS MF9130 / i-SENSYS MF8450

This control corrects color displacement which occurs due to individual difference of the laser scanner unit and toner cartridge.
Since this machine uses a different toner cartridge for each color, a difference may occur in the position or the size of an image depending on the color.
The machine performs correction by calculating the degree of color displacement based on the position of the pattern image for color displacement correction formed on the ETB and controlling a video signal for each color.

The DC controller executes this control according to the command sent from the main controller.
Corrective control is performed for the following three points.
- Main scanning start position
- Main scanning magnification *
- Sub scanning start position

* This is an image size ratio in the main scanning direction. Since there is individual difference in the toner cartridge for each color, the position of the photosensitive drum and the laser optical path length vary depending on the color. Since the range of an image in the scanning direction also varies depending on the color, color displacement occurs at the edge of an image.

The color displacement corrective control is executed at the following timing.
- At power-on after the replacement of the toner cartridge
- When the front cover is closed after the replacement of the toner cartridge
- When a specified number of prints are completed
- When the execution command is received from the main controller

Explanation of operation

1) The DC controller forms a pair of pattern images for color displacement correction (one is on the left side and the other is on the right side) with four colors on the ETB.
2) The DC controller sends a color displacement/density LED drive signal so that the light emitter (LED) of the color displacement/density sensor emits light.
   The color displacement/density sensor is a reflection type sensor located on the upper side of the ETB. It consists of the light emitter (LED) and light receiver (PD).
3) The light emitted from the emitter is reflected at the ETB and received by the light receiver of the color displacement/density sensor.
   The intensity of this reflected light varies depending on whether toner exists or not.
4) The color displacement/density sensor converts the received light into a voltage, and sends it to the DC controller as a color displacement detection signal.
5) The DC controller determines the position of the pattern image based on the timing when the color displacement detection signal changes, and calculates the degree of color displacement for each color based on the position.
6) The degree of color displacement calculated for each color is sent to the main controller.
7) The main controller controls a video signal for each color based on the degree of color displacement of each color received, and makes adjustments of the main scanning start position, main scanning magnification, and sub scanning start position.

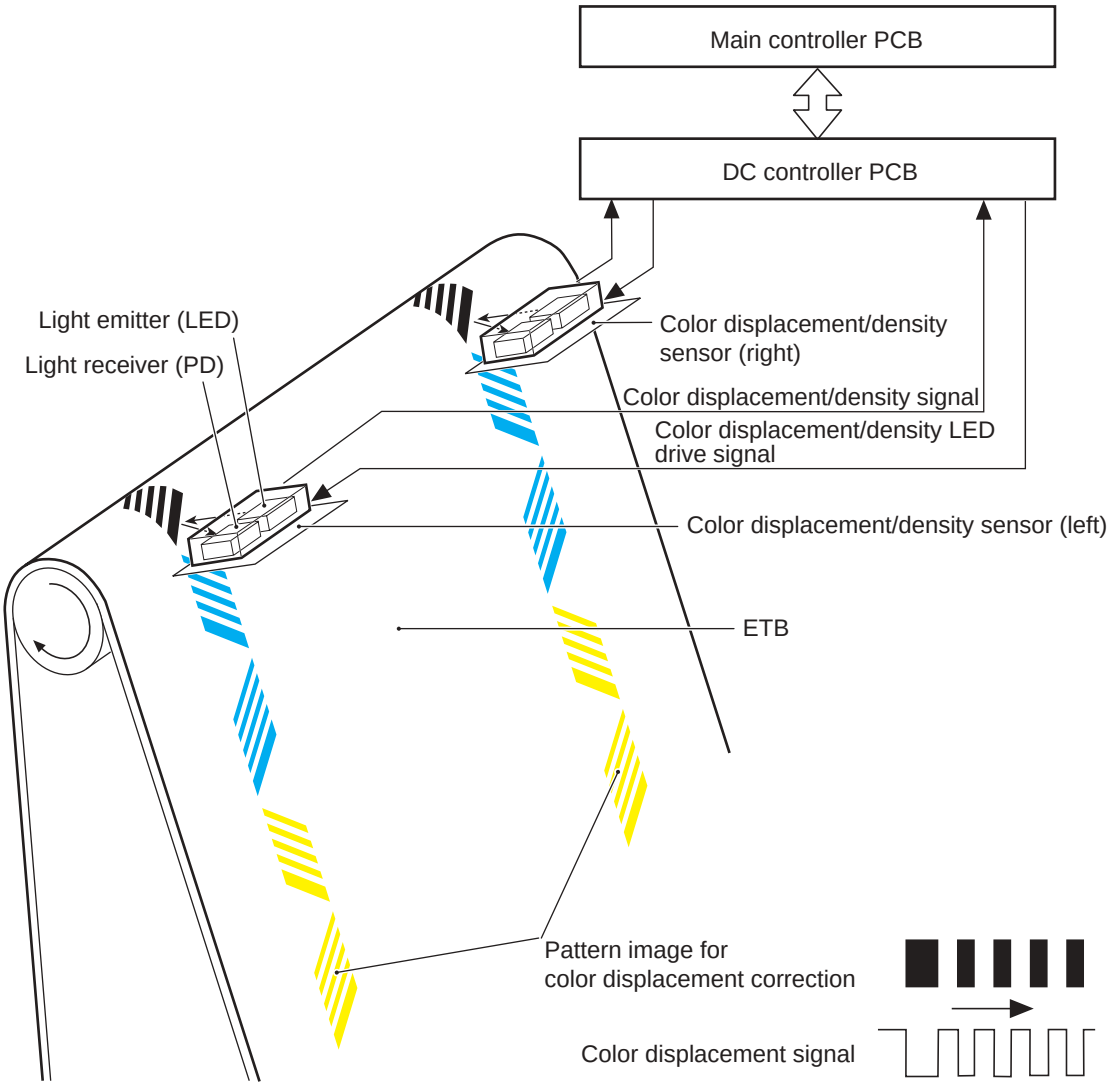

F-7-16

Error Codes:	
E020	Warning: color displacement/density sensor abnormality When light could not be received by the light receiver, the machine sets an initial value for the color displacement corrective value, and displays the error code on the control panel.

Pattern image for color displacement correction

The pattern images are formed on both sides of the ETB certain distance away from the center in the following order.

1) Pattern image for adjustment of LED light intensity
   Printed in order of yellow (Y), cyan (C), black (Bk), and magenta (M).
2) Pattern image with slant bars for main-scanning difference measurement
   Printed in order of yellow (Y), cyan (C), black (Bk), and magenta (M).
3) Pattern image with horizontal bars for sub-scanning difference measurement
   Printed in black (Bk) only on the left side, and in order of yellow (Y), cyan (C), and magenta (M) on the right side.
   This is for the comparison of each color registration based on the black position.

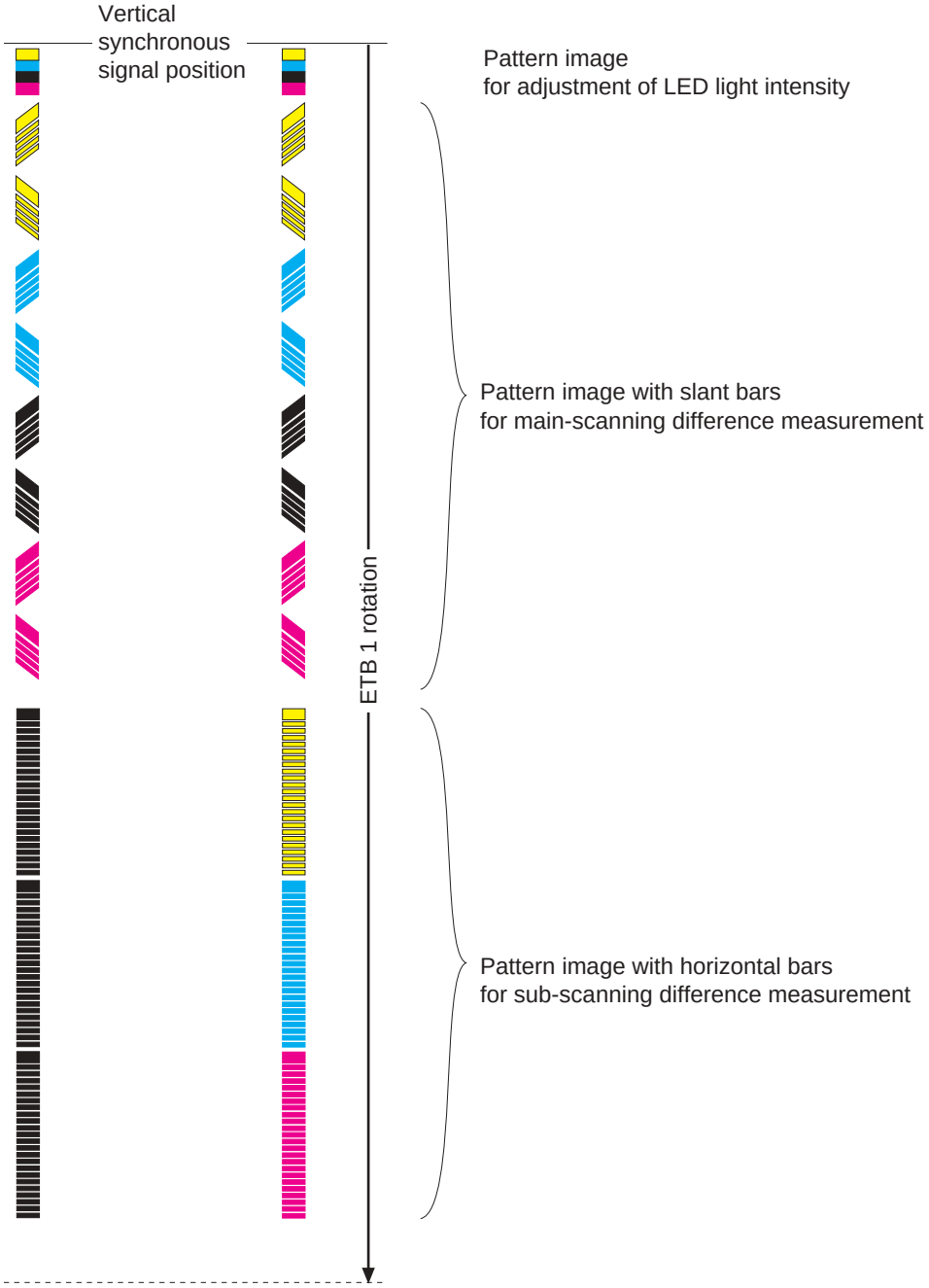

F-7-17

7.2.5 Auto Gradation Correction Control

i-SENSYS MF9170 / i-SENSYS MF9130 / i-SENSYS MF8450

Overview
Auto gradation correction control is to stabilize the gradation density features of image.
To execute, select [Adjustment/Cleaning > Auto Gradation Correction] in additional function mode.
It has the following 3 correction controls.

T-7-1

Item	Description	Number of test pattern sheet	Type of test pattern
Full Correction (PASCAL)	This correction outputs a test pattern and the reader scans its gradation density to adjust the gradation.	2	1st sheet: T-MIC 2nd sheet: high/low screen rulings
Quick Correction	This correction adjusts the gradation by means of D-half control instead of outputting a test pattern.	-	-
Copy Image Correction	This correction outputs a test pattern and the reader scans its gradation to mainly adjust the gradation of copy image.	1	T-MIC

Operation flow
Following flow shows the operation of correction control when any of full correction, quick correction or copy image correction is selected from the auto gradation correction.

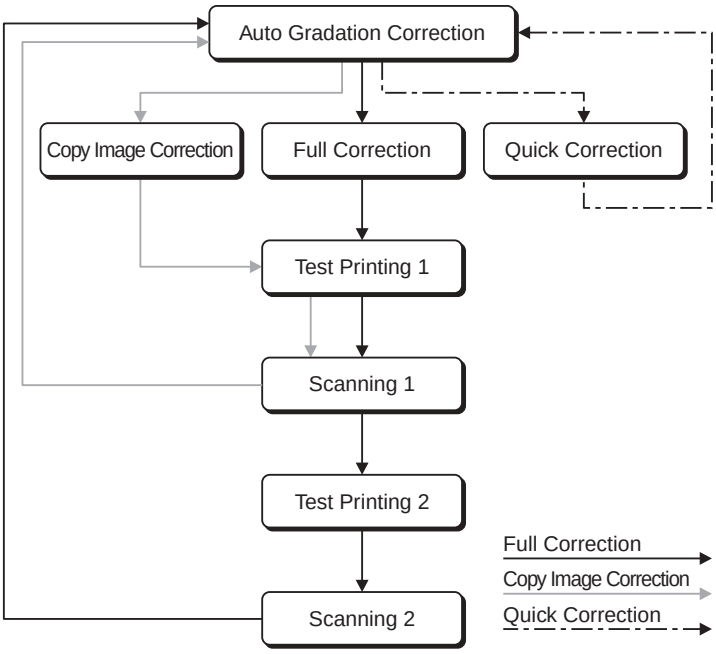

F-7-18

7.3 Toner Cartridge

7.3.1 Overview

i-SENSYS MF9170 / i-SENSYS MF9130 / i-SENSYS MF8450

The toner cartridge enables to form a toner image on the photosensitive drum.
It consists of the photosensitive drum, primary charging roller, and developing cylinder, etc.
There are four kinds of print cartridges: Magenta, Cyan, Yellow, and Black, having nearly identical structure.

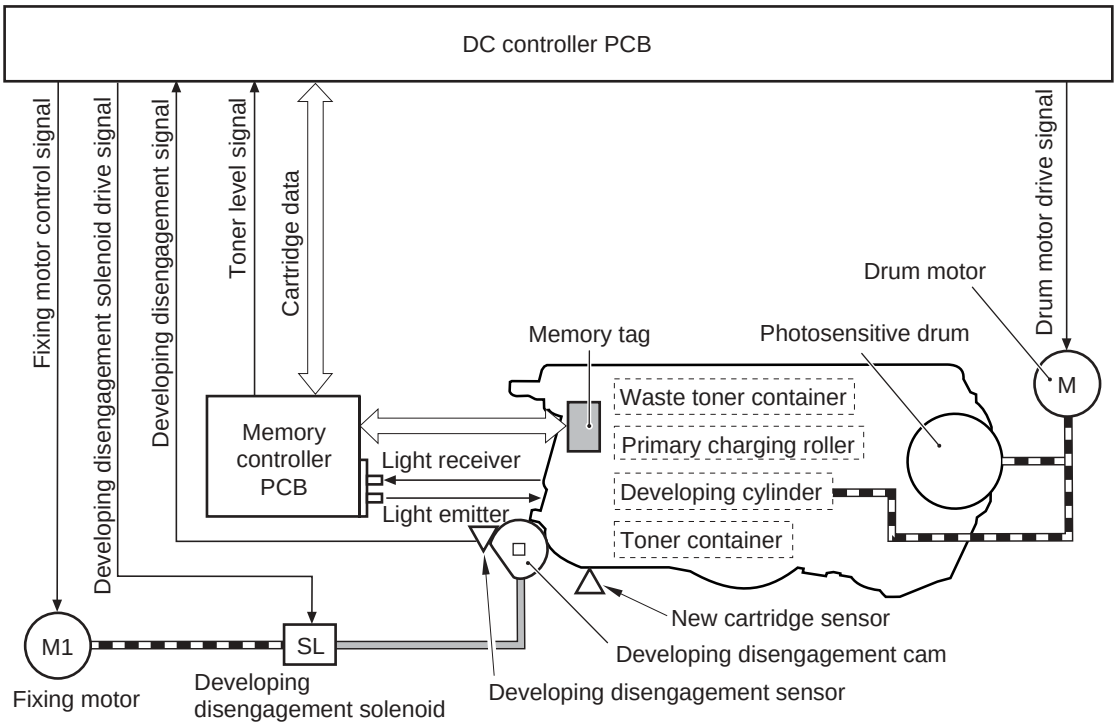

F-7-19

The toner cartridge executes the following four controls.
- Memory tag control
- Toner cartridge detection
- New toner cartridge detection
- Developing cylinder engagement/disengagement control

7.3.2 Toner Level Detection

i-SENSYS MF9170 / i-SENSYS MF9130 / i-SENSYS MF8450

The machine uses a transparent toner level detection method.
With this method, light goes through the toner cartridge while the toner is stirred driven by the drum motor.
The DC controller detects the toner level by monitoring how long it takes for the light to go through the cartridge.

Explanation of operation
The DC controller illuminates the LED on the memory controller PCB.
The light emitted from the LED enters into the toner cartridge via the light-receiving light guide.
Since the stirred toner blocks the light, how long it takes for the light to go through the cartridge differs depending on the toner volume.
The light that went through the toner cartridge goes out from the light-sending light guide and is received at the memory controller PCB.
The toner level is detected based on the length of the time it took for the main controller to receive the light. The higher the toner level is, the shorter time is taken to receive light. On the other hand, the lower the toner level is, the longer time is taken.
When the light-receiving time becomes longer than the specified value, the DC controller judges that the toner level is low and displays "Toner level is low" in the control panel.

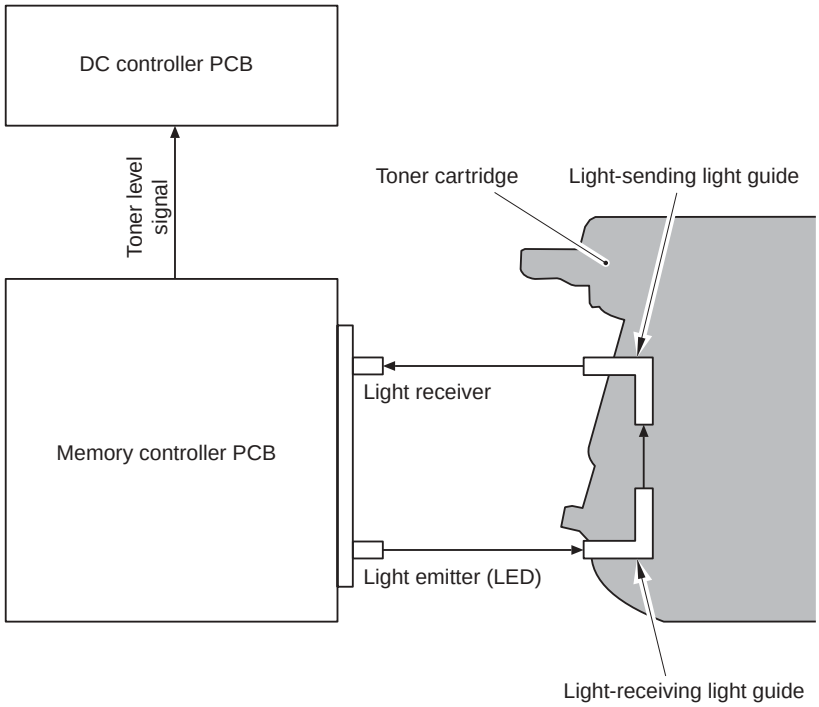

F-7-20

7.3.3 Memory Tag Control

i-SENSYS MF9170 / i-SENSYS MF9130 / i-SENSYS MF8450

The DC controller detects the use condition of the toner cartridge by reading/writing data saved in the memory tag.
When the machine is placed in the following condition, the DC controller determines that it is a communication error of the memory tag and notifies the main controller of "Warning: cartridge memory abnormality".
- Access abnormality: When reading/writing failed
- Data abnormality: When a fault was found in the data which was read/written

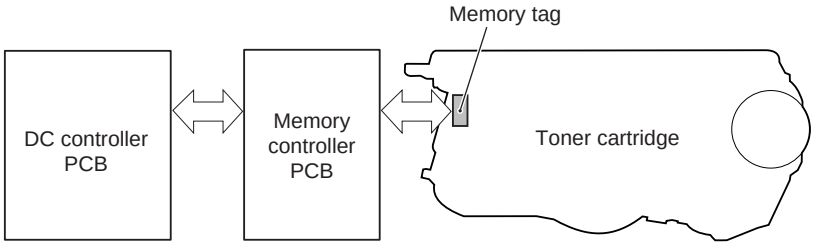

F-7-21

7.3.4 Toner Cartridge Detection

i-SENSYS MF9170 / i-SENSYS MF9130 / i-SENSYS MF8450

The time required until the rotating drum motor stops varies depending on the presence/absence of the toner cartridge. When the toner cartridge is present, the load applied to the drum motor increases, which shortens the stop time.
The DC controller detects the presence/absence of the toner cartridge based on the stop time of the drum motors (M6 to 9) after the initial drive of the drum motors when the power is turned ON or the front cover is closed.
When it is determined that the toner cartridge is absent, the DC controller stops the machine's operation and displays "No toner cartridge" on the control panel.

7.3.5 New Toner Cartridge Detection

i-SENSYS MF9170 / i-SENSYS MF9130 / i-SENSYS MF8450

It is detected whether the protection material has been removed from the new cartridge.
At the time of shipment, a toner cartridge with a protection material has been inserted into the machine. This protection material needs to be removed when the machine is installed.
When the power is turned ON without removing the protection material, the new cartridge sensor plug is pressed by the protection material, so a new cartridge sensor (PS303) detects the presence of the protection material. In this condition, the machine determines that the protection material is not removed from the toner cartridge, stops the operation, and then displays a message prompting an operator to remove the protection material.
ÅöÉCÉâÉXÉgÅi031-FNC-IMAG-0026ÅjçÏê¨ïÜÅö

7.3.6 Developing Cylinder Engagement/disengagement Control

i-SENSYS MF9170 / i-SENSYS MF9130 / i-SENSYS MF8450

In the machine, the developing cylinder is engaged with the photosensitive drum only at the time of development to prolong the life of the drum.

Explanation of operation
The toner cartridge consists of the upper part where the photosensitive drum is attached and the lower part where the developing cylinder is attached (developing assembly).
When the developing disengagement solenoid (Bk: SL5015, YMC: SL5014) is turned OFF, the developing disengagement cam moves up the rear side of the developing assembly, so the developing cylinder is disengaged from the photosensitive drum with the principle of leverage.
When the DC controller turns ON the developing disengagement solenoid, the drive of the fixing motor (M1) is sent to the developing disengagement cam, causing the cam to rotate. When the radius of the developing disengagement cam becomes shorter than the distance between the cam and the developing assembly, the developing cylinder is engaged with the photosensitive drum by the power of a spring.
The engagement/disengagement condition is detected by the developing disengagement sensor (Bk: PS301, YMC: PS302) based on the direction of the developing disengagement cam.
ÅöÉCÉâÉXÉgÅi031-FNC-IMAG-0019ÅjèCêŠíÜÅö

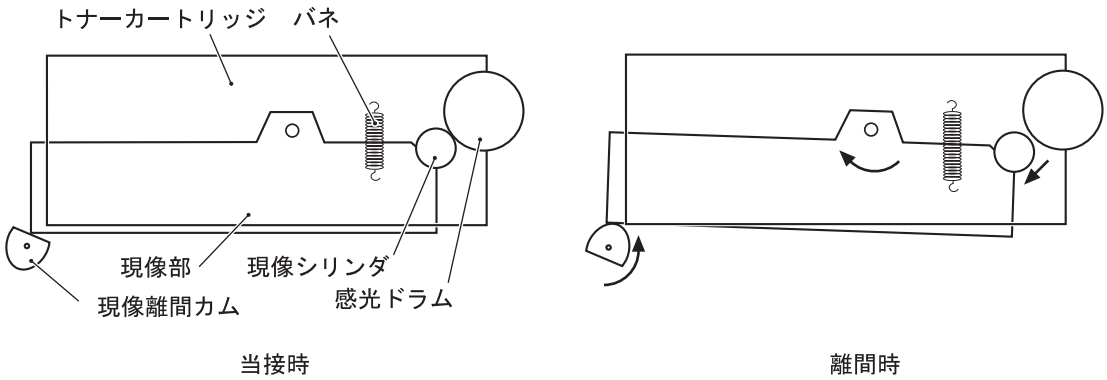

F-7-22

After the power is turned on and print operation stops, the developing cylinders for all four colors are disengaged from the photosensitive drum.
When monochrome printing is performed, only the monochrome (Bk) developing cylinder is engaged with the drum. When color printing is performed, the developing cylinders for all colors are engaged with the drum.

MEMO:
The monochrome (Bk) developing cylinder and the color (Y, M, C) developing cylinders are engaged/disengaged individually. When monochrome printing is performed, only the monochrome developing cylinder is engaged with the drum in order to prolong the life of the color photosensitive drum.

Error Codes:

E015	Developing disengagement abnormality When the machine is placed in the following condition, it stops operation and displays the error code on the control panel. - The direction of the developing disengagement cam does not change from the home position after a specified period of time when the developing cylinder is disengaged from the drum. - The direction of the developing disengagement cam does not return to the home position after a specified period of time when the developing cylinder is engaged with the drum.

7.4 Transfer Unit

7.4.1 ETB Unit

i-SENSYS MF9170 / i-SENSYS MF9130 / i-SENSYS MF8450

The ETB unit transfers toner into paper while feeding the paper.
The ETB unit consists of the ETB, ETB tension roller, ETB feed roller, ETB slave roller, attraction roller, and transfer roller.
The ETB motor (M5) rotates the ETB feed roller, and this drive rotates the ETB. All of other rollers are driven by the ETB.
At the time of printing, the fed paper is attracted to the ETB by the attraction roller, and transported according to the rotation of the ETB. During transportation, toner is transferred by the photosensitive drum and transfer roller of each color. After the toner is transferred, the paper is separated from the ETB by the ETB feed roller.
Especially at the time of color printing, high accuracy is requested for paper feeding by the ETB because one image is formed with four color toners overlapped.
The ETB is also used for image stabilization control. When image gradation corrective control or color displacement corrective control is executed, the pattern image for color displacement or image gradation correction is written on the ETB.

The ETB unit executes the following three major controls.
- Automatic bias control
- ETB cleaning
- Transfer roller engagement/disengagement control

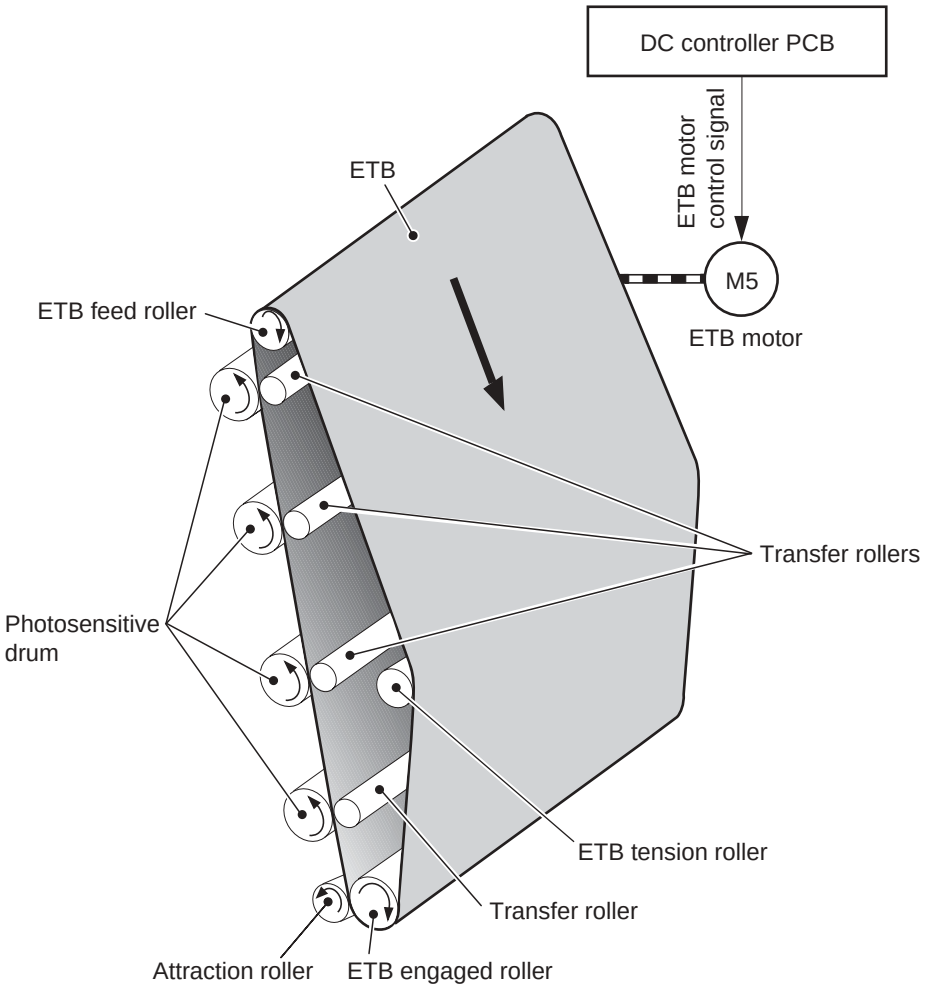

F-7-23

7.4.2 Automatic Bias Control

i-SENSYS MF9170 / i-SENSYS MF9130 / i-SENSYS MF8450

Depending on the individual difference or deterioration condition of the transfer roller, attraction roller, and ETB, differences and changes occur in the resistance value of each unit. In this condition, a transfer failure may occur when an expected level of bias is not applied to each roller.
This control is executed to apply the optimum level of bias to each roller based on the measured voltage of each roller.

The DC controller sends a constant current to the transfer roller (Bk) and attraction roller when starting print operation and measures the voltage at that point. Based on the measured voltage, it extracts the optimum transfer and attraction biases.
In the subsequent print operation, the optimum transfer and attraction biases are applied to stabilize the image quality.

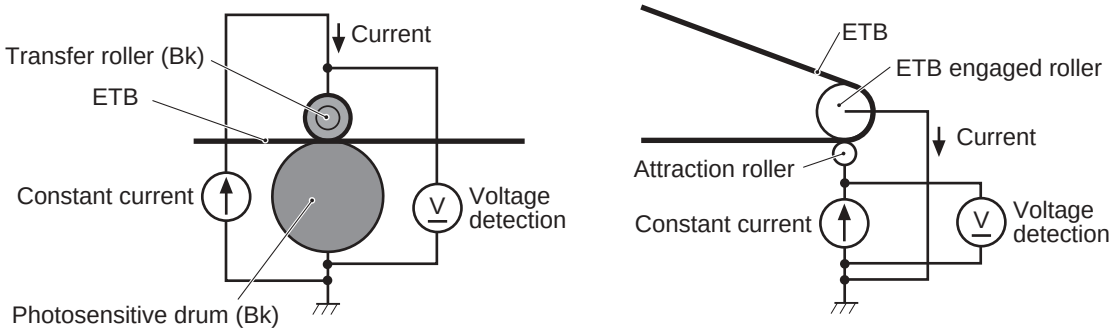

a. Transfer roller voltage detection

b. Attraction roller voltage detection

F-7-24

7.4.3 ETB Cleaning

i-SENSYS MF9170 / i-SENSYS MF9130 / i-SENSYS MF8450

The ETB is used not only to transfer the toner on the photosensitive drum to the paper but also to write a pattern image for correction for image stabilization control. If the toner which is not transferred to the paper remains on the ETB, it causes stain on the back of paper.
In this control, the ETB surface is cleaned by placing the residual toner on the ETB back to the photosensitive drum electrostatically.

The ETB cleaning is executed by the DC controller at the following timing.
- At power-on
- Before and after the execution of color displacement corrective control
- Before and after the execution of image gradation corrective control
- When the front cover is closed
- After printing is performed when the universal-size paper is specified

Negative charged toner and positive charged toner remain on the ETB.
When ETB cleaning starts, the DC controller sets the potential of the photosensitive drums for magenta (M) and yellow (Y) to 0, using the bias of the primary charging roller. The photosensitive drums for cyan (C) and black (Bk) are changed negative.
For the transfer roller for each color, a positive or negative DC bias is applied as shown in the figure below.
Since potential difference occurs between each photosensitive drum and ETB, the residual toner is reverse-transferred to the photosensitive drum. The negative charged toner is adhered to the photosensitive drums for magenta (M) and yellow (Y), and the positive charged toner is adhered to the photosensitive drums for cyan (C) and black (Bk).
The toner adhered to the photosensitive drum is scraped by the cleaner blade and collected into the cleaner container.

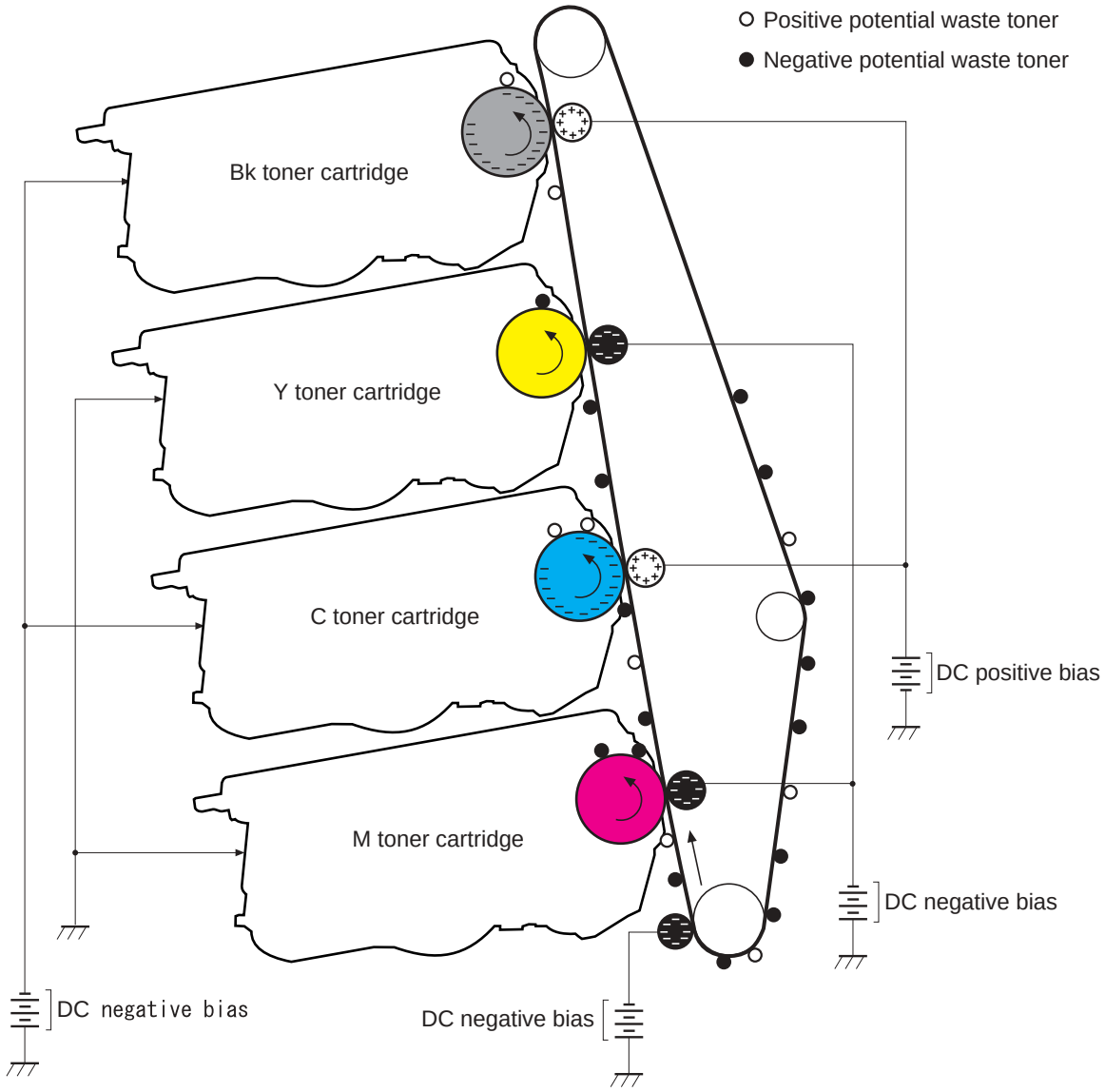

F-7-25

7.4.4 Transfer Roller Engagement/disengagement Control

i-SENSYS MF9170 / i-SENSYS MF9130 / i-SENSYS MF8450

Overview
This control is executed at the following timing.
- At power off/on
- At start-up/completion of print operation
- At the time of switching the print mode (Bk mode, color mode)

When the DC controller turns ON the ETB disengagement solenoid (SL5011), the drive of the ETB motor (M5) is sent to the transfer roller disengagement slider via the transfer roller disengagement cam. The transfer roller is engaged with/disengaged from the ETB by working with the transfer roller disengagement slider.

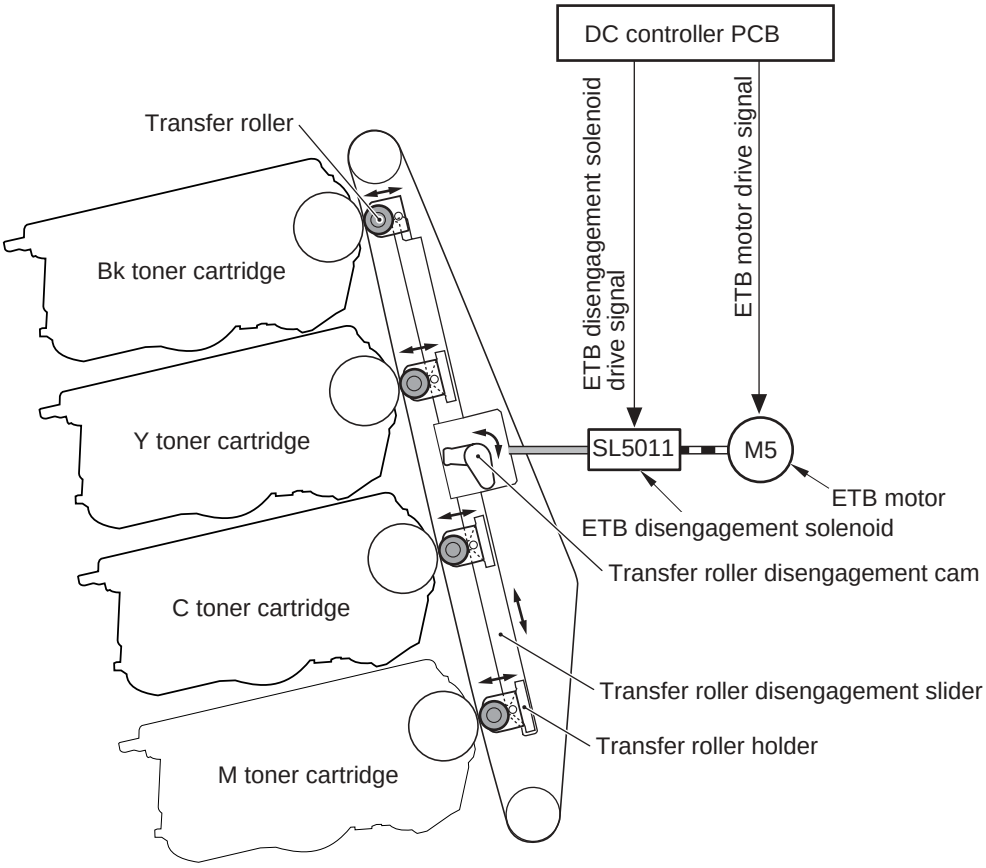

F-7-26

The transfer roller is placed into the following three engagement/disengagement conditions.
- All colors' transfer rollers are engaged: At the time of color printing, and monochrome printing of the specified thick paper
- Only black transfer roller is engaged: At the time of monochrome printing
- All colors' transfer rollers are disengaged: At the time other than printing

Explanation of operation

The transfer roller for each color is attached to the transfer roller holder.
When the pin on the transfer roller holder is hooked to the slope of the transfer roller disengagement slider, the transfer roller holder follows the operation of the transfer roller disengagement slider.
When the transfer roller disengagement slider moves up and down, the pin moves along the slope, and the transfer roller is engaged with or disengaged from the transfer roller.

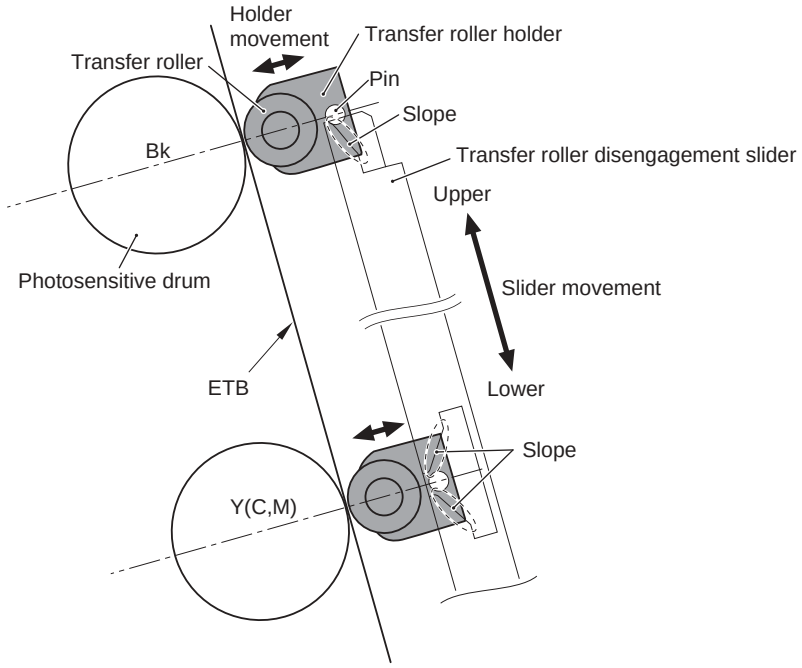

F-7-27

(a) Standard position (All colors' transfer rollers are engaged)

When the transfer roller disengagement slider is placed at the standard position, all the transfer roller holders are placed at the lowest position of the slope, so the all colors' transfer rollers are engaged with the ETB.

At the time of color printing or monochrome printing of the specified thick paper, all the transfer rollers are engaged with the ETB, so the transfer roller disengagement slider is considered to be at the standard position.

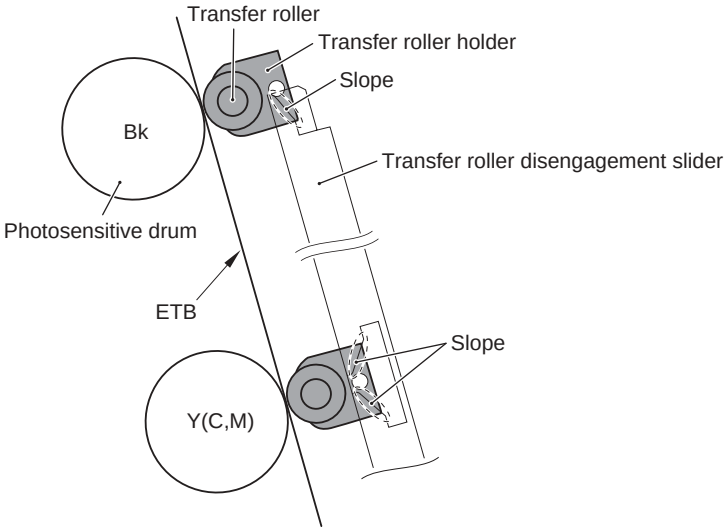

F-7-28

(b) Downward position (Only black transfer roller is engaged)

When the transfer roller disengagement slider is placed at the downward position, the yellow (Y) transfer roller holder moves to the highest position along the slope 1, so the transfer roller is disengaged from the ETB. The same applies to cyan (C) and magenta (M).

The black (Bk) transfer holder stays at the lowest position because the transfer roller disengagement slider has no slope. As a result, the transfer roller is engaged with the ETB.

At monochrome printing, only the black (Bk) transfer roller is engaged with the ETB, so the transfer roller disengagement slider is placed at the downward position.

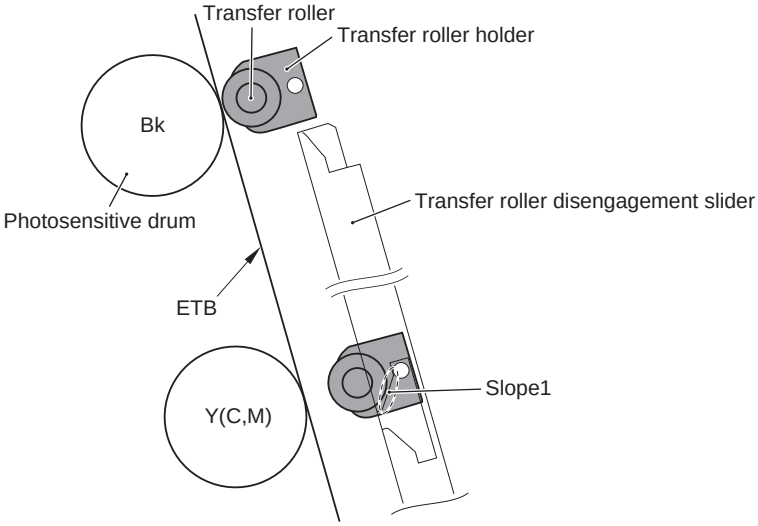

F-7-29

(c) Upward position (All colors' transfer rollers are disengaged)
When the transfer roller disengagement slider is placed at the upward position, the transfer roller holder moves to the highest position along the slope 2, so the all colors' transfer rollers are disengaged from the ETB.

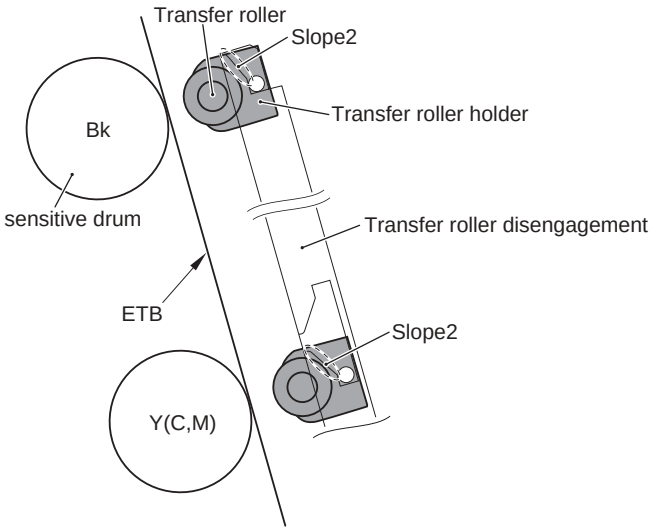

F-7-30

Detection of the condition
The engagement/disengagement condition of the transfer roller is detected when the power is turned ON or when the front cover is closed.
The DC controller measures the voltage of the transfer rollers for magenta (M) and black (Bk), and detects the engagement/disengagement condition of the transfer rollers based on the measurement result.
If the change of engagement/disengagement could not be confirmed when the engagement/disengagement condition of the transfer rollers was detected again after the transfer roller disengagement slider was moved, the DC controller measures the voltage of the transfer rollers again (retry control).

Error Codes:

E078 Transfer disengagement mechanism abnormality
When the engagement/disengagement condition could not be detected correctly after retry control was executed, the machine stops operation and displays the error code on the control panel.

7.5 Parts Replacement Procedure

7.5.1 Drum Motor

7.5.1.1 Before Removing the Drum Motor

i-SENSYS MF9170 / i-SENSYS MF9130 / i-SENSYS MF8450

1) Remove the ETB unit. (page 7-28)Reference[Removing the ETB Unit]
2) Remove the rear cover unit. (page 11-6)Reference[Removing the Rear Cover Unit]
3) Remove the right cover. (page 11-7)Reference[Removing the Right Cover]

7.5.1.2 Removing the Drum Motor

i-SENSYS MF9170 / i-SENSYS MF9130 / i-SENSYS MF8450

1) Disconnect the connector [1].

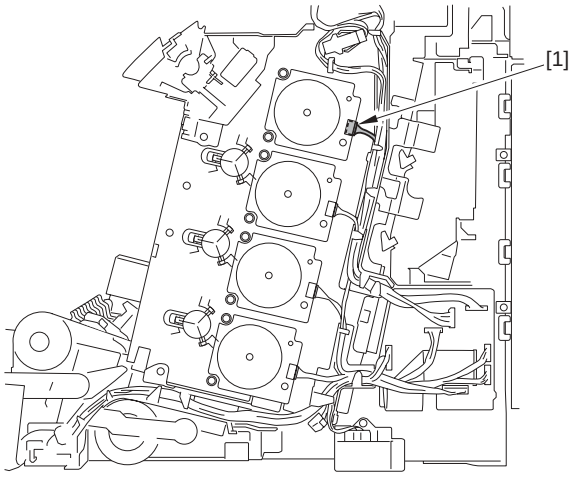

F-7-31

2) Remove the durm motor (Bk) [1].
- 3 screws [2]

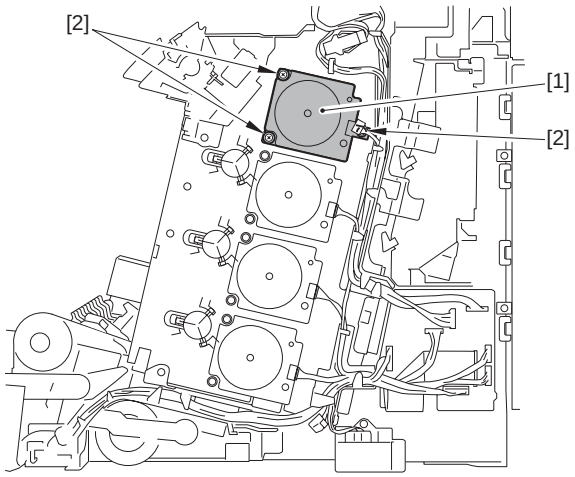

F-7-32

MEMO:
When removing the drum motors of other colors, remove the following parts in the same way as the drum motor (Bk).
- 3 connectors [1]
- 9 screws [2]

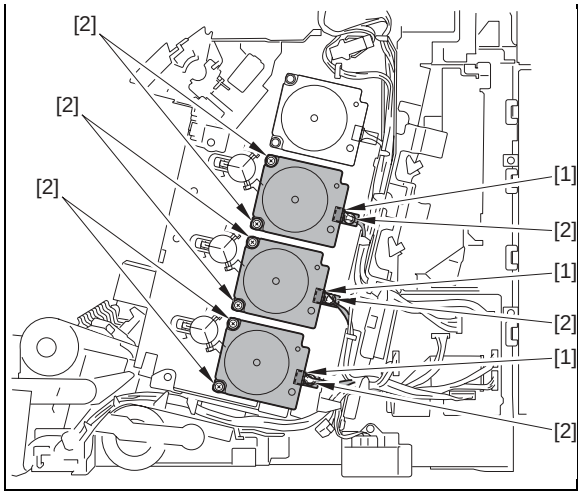

7.5.2 Main Drive Unit

7.5.2.1 Before Removing the Main Drive Unit

i-SENSYS MF9170 / i-SENSYS MF9130 / i-SENSYS MF8450

1) Remove the ETB unit. (page 7-28)Reference[Removing the ETB Unit]
2) Remove the toner cartridge.
3) Remove the rear cover unit. (page 11-6)Reference[Removing the Rear Cover Unit]
4) Remove the right cover. (page 11-7)Reference[Removing the Right Cover]
5) Remove the drum motor. (page 7-22)Reference[Removing the Drum Motor]

7.5.2.2 Removing the Main Drive Unit

i-SENSYS MF9170 / i-SENSYS MF9130 / i-SENSYS MF8450

1) Disconnect the 4 connectors [1] and free the harness [3] from the 2 guides [2].

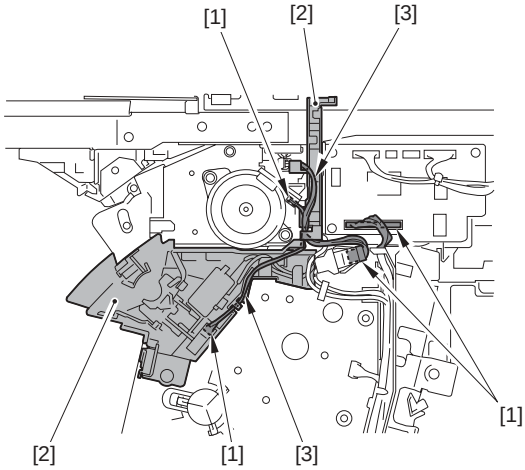

F-7-33

2) Remove the duplex feed motor [1].
- 2 screws [2]

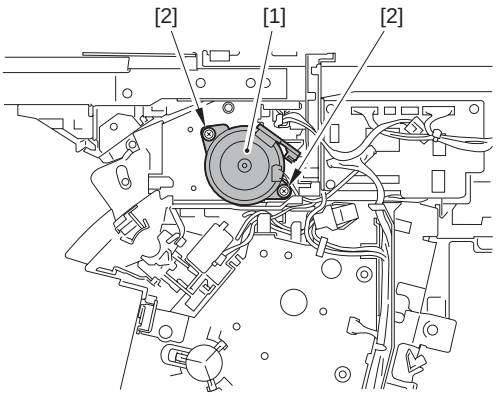

F-7-34

3) Free the harness [2] from the wire saddle [1].

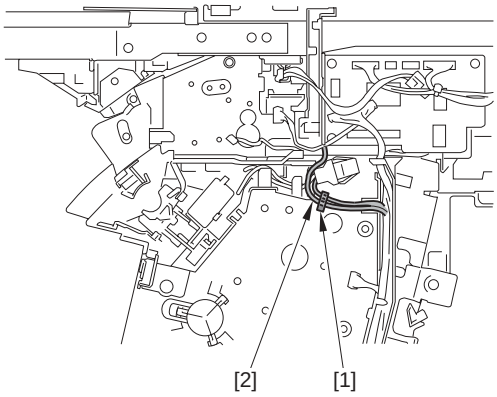

F-7-35

4) Remove the screw [1], remove the hook [2] in the direction of the arrow [A], and remove the interlock switch unit [3] in the direction of the arrow [B].

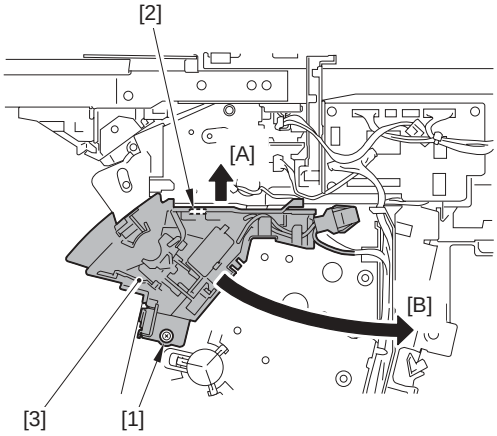

F-7-36

5) Slide the cable guide [1] to remove.
- 1 claw [2]

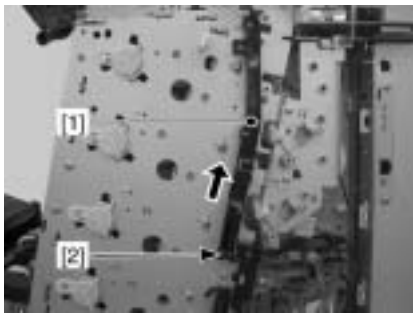

F-7-37

6) Slide the guide [1] to remove.
- 1 claw [2]

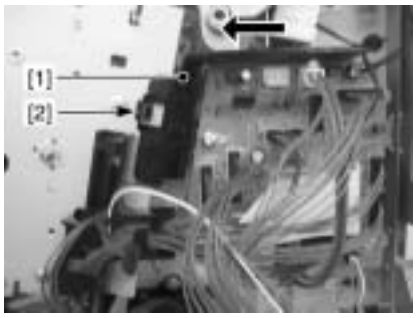

F-7-38

7) Free the cable from the cable guide [1].

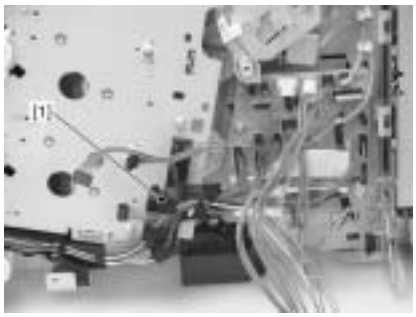

F-7-39

8) Remove the cable guide [1].
- 1 claw [2]

F-7-40

9) Remove the rod [1] from the shaft [2].

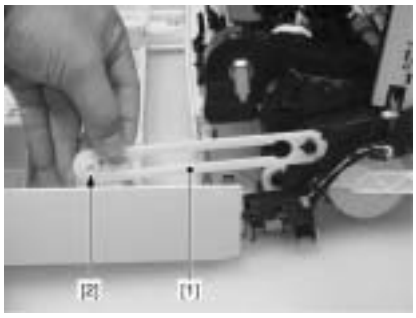

F-7-41

10) Fit the link [1] with the cutoff of the shaft [2] to remove the link.

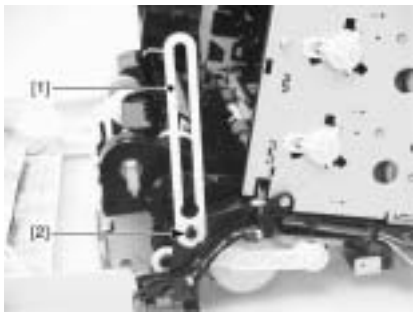

F-7-42

11) Free the cable from the cable guide [1].

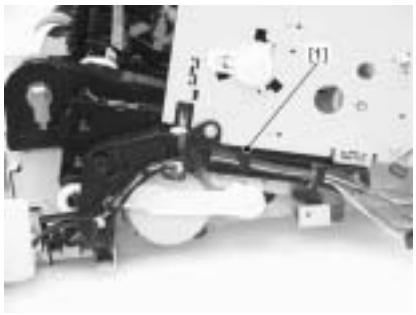

F-7-43

12) Remove the cable guide [1].
- 1 screw [2]
- 2 claws [3]

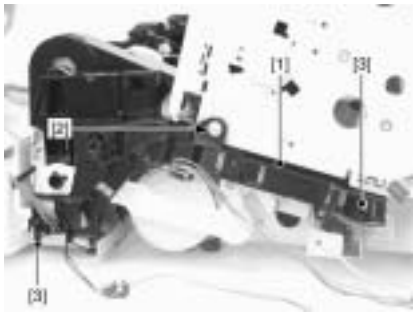

F-7-44

13) Remove the plate [1].
- 3 screws [2]

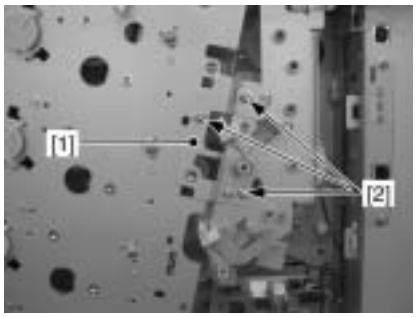

F-7-45

14) Remove the main drive unit [1].
- 1 connector [2]
- 4 screws [3]

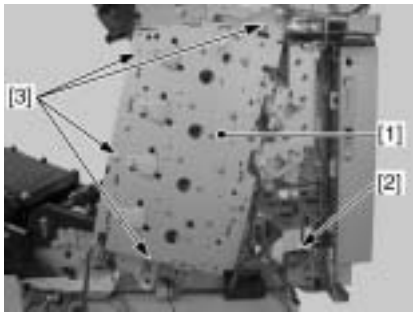

F-7-46

> ⚠
> Do not disassemble the main drive unit in the field.
> Disassembling it may cause a functional fault.

7.5.2.3 Point to Note When Installing the Main Drive Unit

i-SENSYS MF9170 / i-SENSYS MF9130 / i-SENSYS MF8450

1. Alignment of the gears in the main drive unit

When installing the main drive unit, the corresponding gears of the host machine [A] need to be interlocked in order starting from the top of the 5 gears.

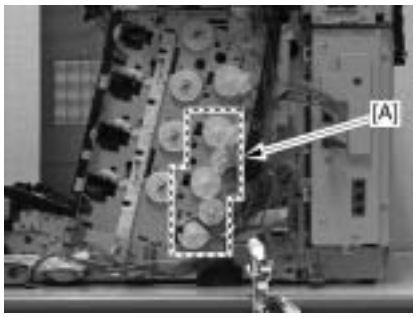

F-7-47

Following shows the procedure:

1) Align the gear [5]'s elongate hole [2] with the triangle [1].
2) Interlock the teeth of the gears [5] and [6] so that the holes [3] of the gears will lie right next to each other.

3) Interlock the teeth of the gears [6] and [7] so that the holes [4] of the gears will lie right next to each other.

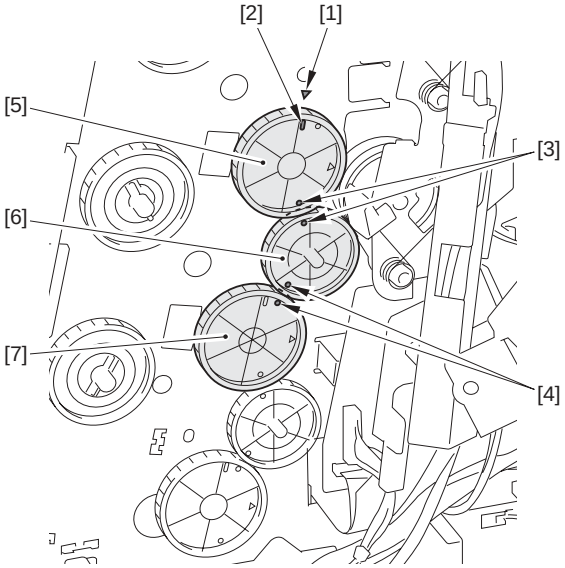

F-7-48

4) Interlock the teeth of the gears [3] and [4] so that the holes [1] of the gears will lie right next to each other.
5) Interlock the teeth of the gears [4] and [5] so that the holes [2] of the gears will lie right next to each other.

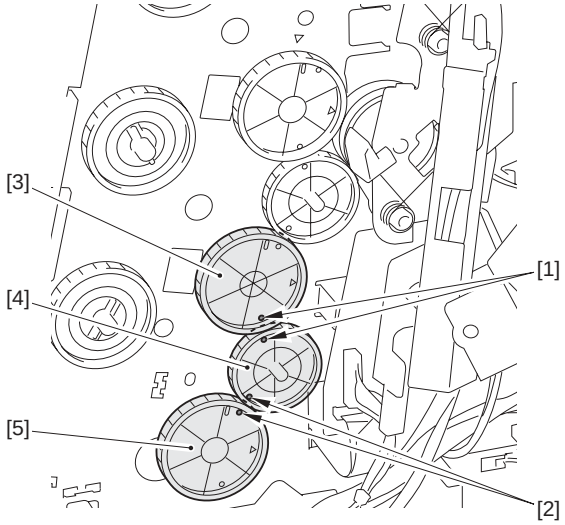

F-7-49

> ⚠ When interlocking the gears [A], the teeth of the gears must be aligned completely.

2. Alignment of the main drive unit as Service Parts

When removing the shipping lock that is attached with the main drive unit as a Service Parts, or when removing the main drive unit for servicing, the main drive unit must be aligned before installing to the host machine.

1) Shift the 4 levers [1] of the main drive unit [2] upward.

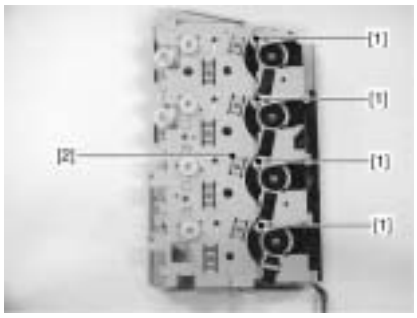

F-7-50

2) Turn the gear [1] and align the holes [2] and the circles [3] each in 2 locations.

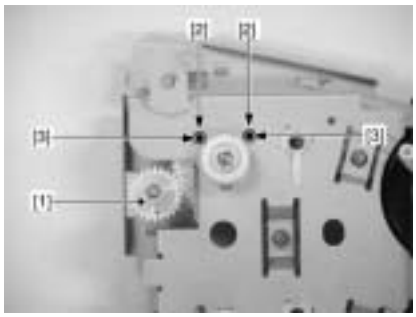

F-7-51

3) Turn the gear [1] and align the holes [2] and the circles [3] each in 2 locations.

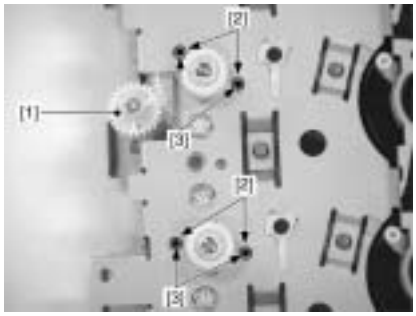

F-7-52

4) Lift the drawer connector [1] and move the shutter arm [2] to upper.

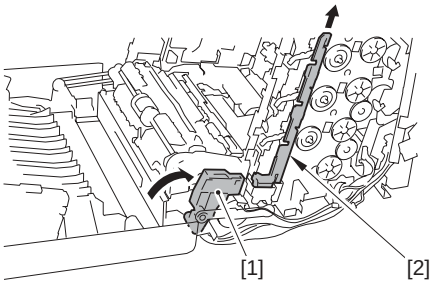

F-7-53

5) Align the 3 positioning parts [1] and install the main drive unit [2] with parallel to the side of the host machine.
- 4 screws [3]

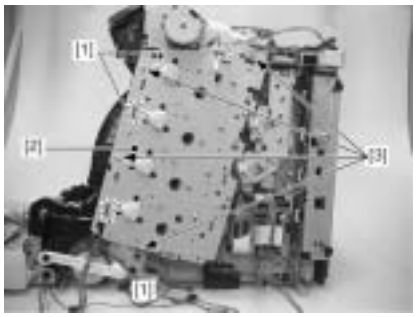

F-7-54

> ⚠ Since 5 interlocked gears [A] on the host machine are easy to disengage, be careful not to displace the alignment of gears when installing the main drive unit to the host machine.

6) Confirm that the gear positions are properly aligned by checking from the 2 windows [1].

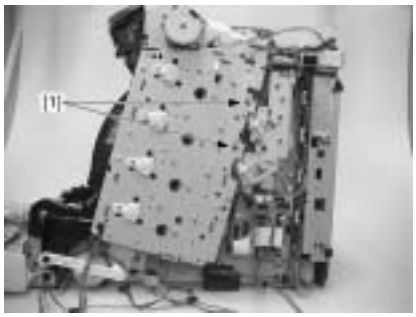

F-7-55

Alignment is adjusted properly if the elongate holes of the gears [1] and [2] and the plate [3] are aligned in a straight line as shown in the figure below.

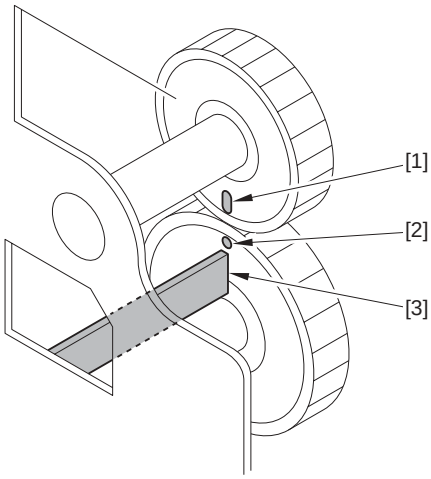

F-7-56

7) Install the plate [1].
- 3 screws [2]

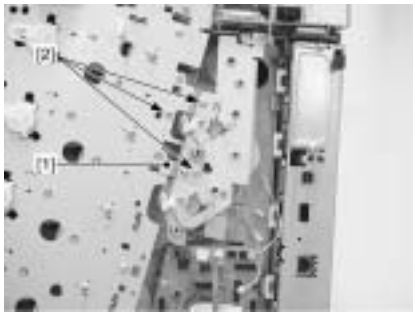

F-7-57

Move the drawer connector [1] at the right side to check that the couplings [2] and the lock [3] of the toner cartridge for the four colors; BK, Y, C, and M work with each other.

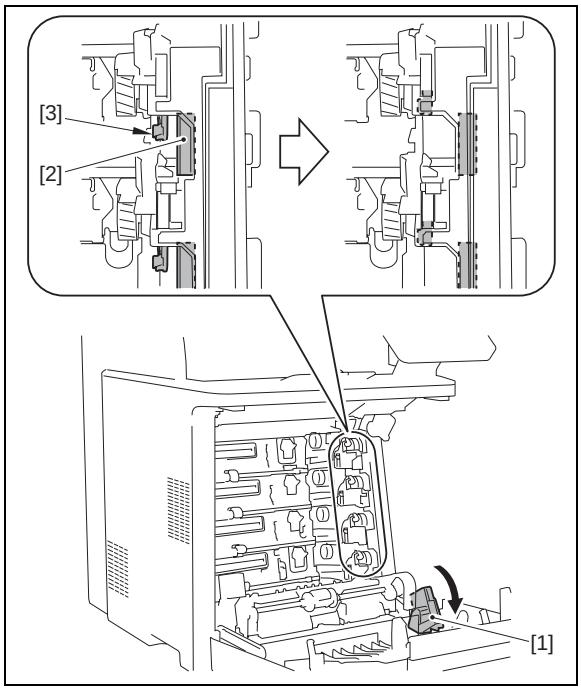

7.5.3 Developing Estrangement Solenoid

7.5.3.1 Before Removing the Developing Disengage Solenoid

i-SENSYS MF9170 / i-SENSYS MF9130 / i-SENSYS MF8450

1) Remove the ETB unit.(page 7-28)Reference [Removing the ETB Unit]
2) Remove the rear cover unit.(page 11-6)Reference [Removing the Rear Cover Unit]
3) Remove the right cover.(page 11-7)Reference [Removing the Right Cover]

7.5.3.2 Removing the Developing Disengage Solenoid

i-SENSYS MF9170 / i-SENSYS MF9130 / i-SENSYS MF8450

1) Remove the claw [2] to move the cable guide [1] toward the left.

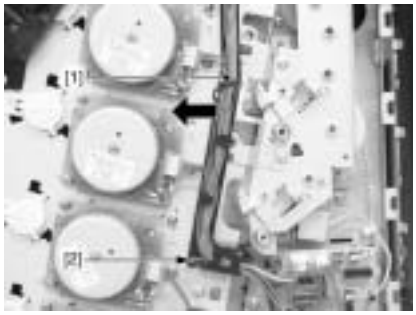

F-7-58

2) Remove the plate [1].
- 3 screws [2]

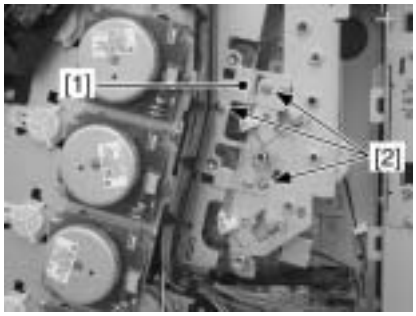

F-7-59

3) Disconnect the 2 connectors [1] and free the harness [4] from the harness guide [2] and the wire saddle [3].

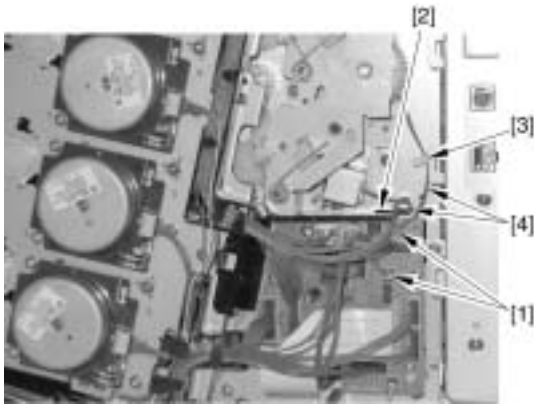

F-7-60

4) Remove the developing disengage drive unit [1].
- 3 screws [2]

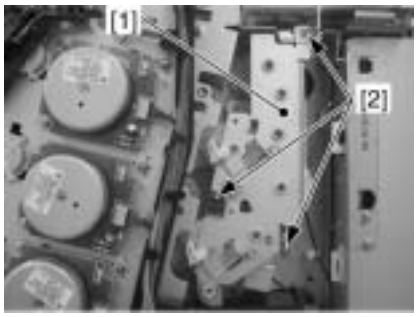

F-7-61

5) Remove the plate [1].
- 3 screws [2]

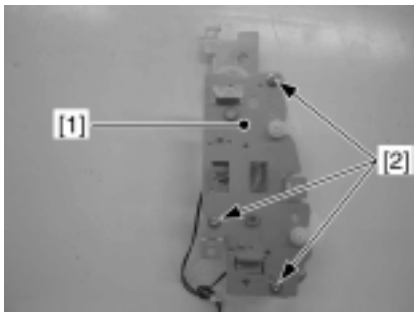

F-7-62

6) Remove the 2 developing disengage solenoids [1].
- 2 screws [2]

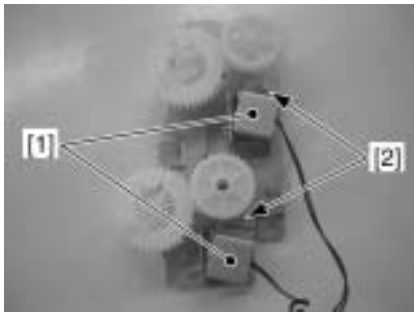

F-7-63

7.5.3.3 Points to Note When Installing the Developing Disengage Solenoid

i-SENSYS MF9170 / i-SENSYS MF9130 / i-SENSYS MF8450

Alignment of Developing Disengage Drive Unit

1. Alignment in assembling the developing disengage drive unit
   Turn the gear [2] of the developing disengage drive unit [1] in the direction of the arrow, and align the solenoid claw [3] with the cutoff [5] in the gear (home position).

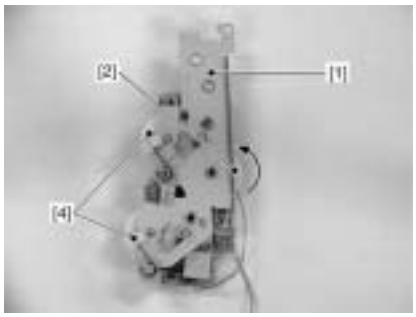

F-7-64

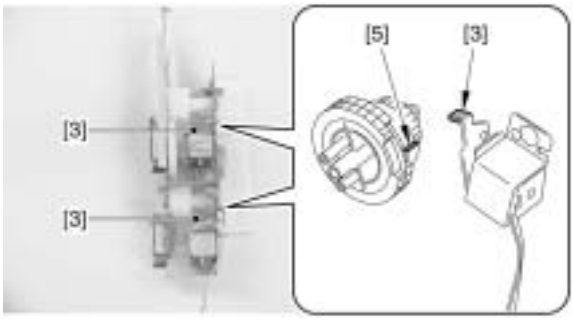

F-7-65

   When the developing disengage drive unit is properly set to its home position, the gear [4] does not rotate if turning the gear [2], and there will be no sense of resistance when rotating the gear [2].

2. Alignment in installing the developing disengage drive unit
   When installing the developing disengage drive unit while the main drive unit is removed, the corresponding gears of the host machine need to be aligned (interlocked).
   Tighten the 2 screws [1] to the developing disengage drive unit [3] and tighten the screw [2] halfway to confirm the alignment of the gear [4] and the gear [5].

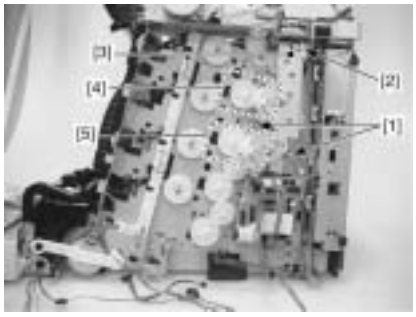

F-7-66

   Confirming the alignment of the gear [4]
   There is a small-toothed gear [3] in the developing disengage drive unit [1]. Make sure that the small-toothed gear is aligned with the elongate hole [2] (home position). Also, as shown in the figure [4], make sure that the triangle and the elongate hole of the gear lie right next to each other.

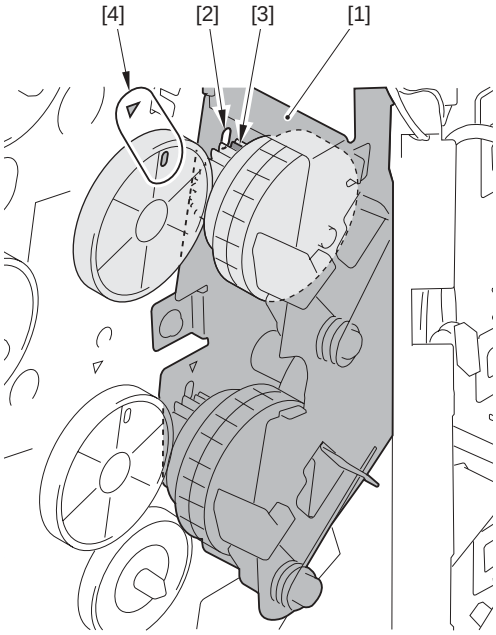

F-7-67

Confirming the alignment of the gear [5]
There is a small-toothed gear [3] in the developing disengage drive unit [1]. Make sure that the small-toothed gear is aligned with the elongate hole [2] (home position). Also, as shown in the figure [4], make sure that the triangle and the elongate hole of the gear lie right next to each other.

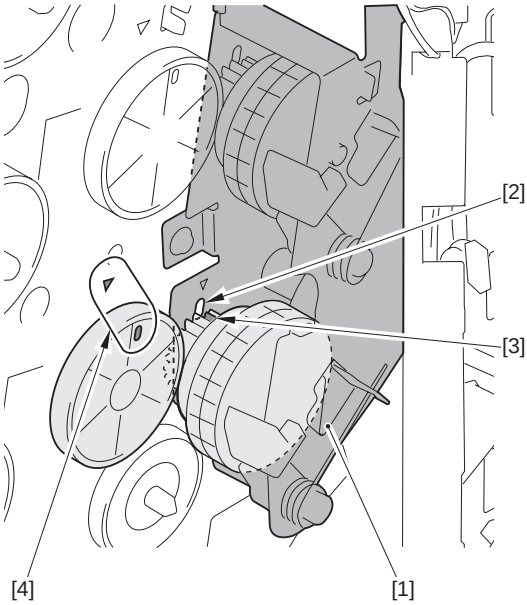

F-7-68

7.5.4 ETB Unit

7.5.4.1 Removing the ETB Unit

i-SENSYS MF9170 / i-SENSYS MF9130 / i-SENSYS MF8450

1) Open the front cover [1].

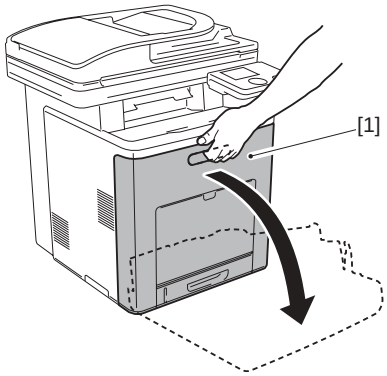

F-7-69

2) While pushing the ETB lock lever [1] (2 points at left and right), remove the ETB unit [2].

> **Points to Note At Handling**
> Be careful not to touch the surface of the ETB belt or damage it.
> Dirts or small cuts on the belt may cause image faults.

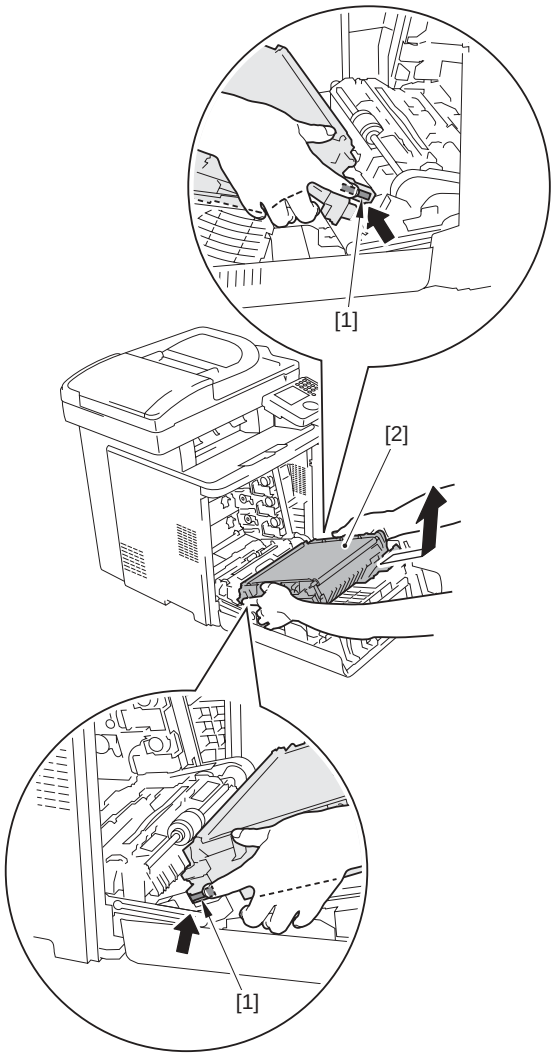

F-7-70

When closing the front cover with the ETB unit removed and then and opening it, the drawer connector [1] faces upward. The drawer connector facing upward may cause the following symptoms; and therefore, be sure to put down the 2 drawer connectors [1] if necessary.

- When the toner cartridge is not removed
The shutter of the toner cartridge is opened, resulting in deteriorated sensitivity of the photosensitive drum.
- When the toner cartridge is removed
The coupling [2] and lock mechanism [3] of the toner cartridge works together and the toner cartridge cannot be installed.

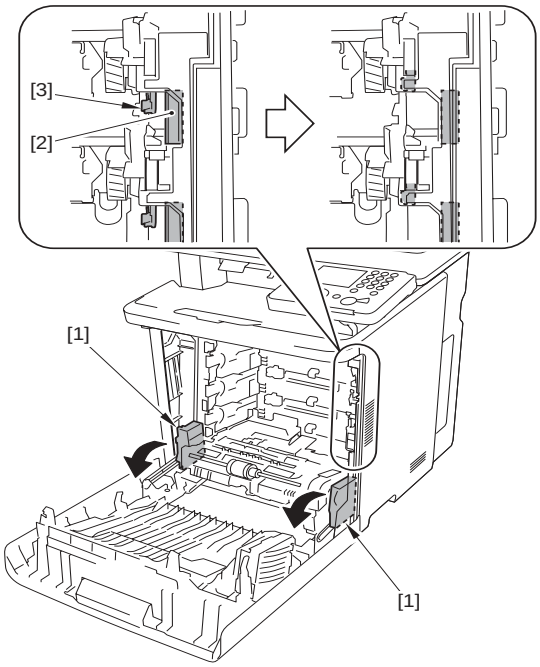

7.5.5 ETB Motor

7.5.5.1 Before Removing the ETB Motor

i-SENSYS MF9170 / i-SENSYS MF9130 / i-SENSYS MF8450

1) Remove the ETB unit.(page 7-28)Reference [Removing the ETB Unit]

7.5.5.2 Removing the ETB Motor

i-SENSYS MF9170 / i-SENSYS MF9130 / i-SENSYS MF8450

1) Remove the duplex delivery assembly [1].
- 2 screws [2]

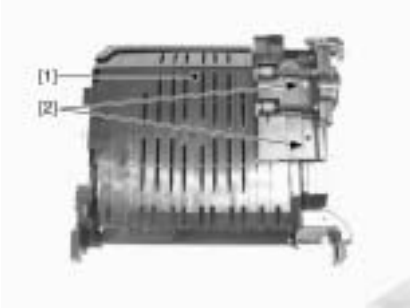

F-7-71

2) Remove the ETB right cover [1]
-3 screws [2]
-5 claws [3]

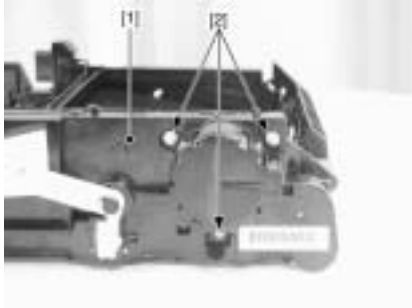

F-7-72

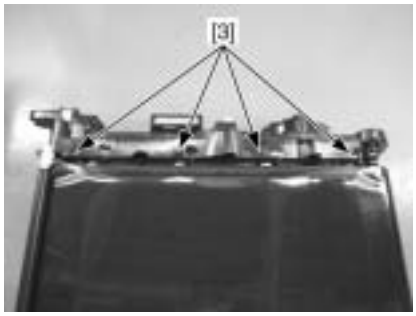

F-7-73

F-7-74

3) Remove the ETB motor [1].
- 1 connector [2]

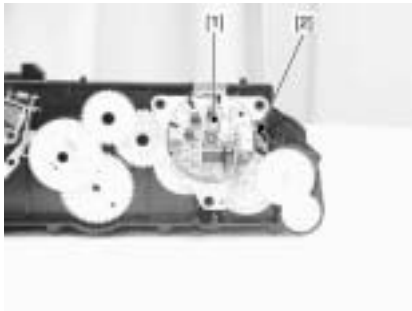

F-7-75

7.5.6 ETB Estrangement Solenoid

7.5.6.1 Before Removing the ETB Disengage Solenoid

i-SENSYS MF9170 / i-SENSYS MF9130 / i-SENSYS MF8450

1) Remove the ETB unit.(page 7-28)Reference [Removing the ETB Unit]

7.5.6.2 Removing the ETB Disengage Solenoid

i-SENSYS MF9170 / i-SENSYS MF9130 / i-SENSYS MF8450

1) Remove the duplex delivery assembly [1].
- 2 screws [2]

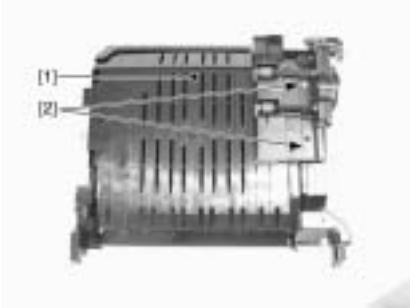

F-7-76

2) Remove the ETB right cover [1].
- 3 screws [2]
- 5 claws [3]

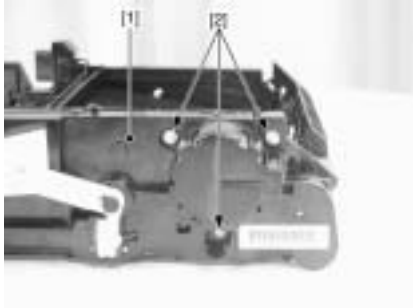

F-7-77

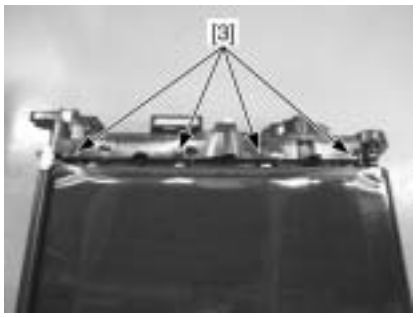

F-7-78

F-7-79

3) Remove the ETB disengage solenoid [1].
- 1 connector [2]
- 1 screw [3]

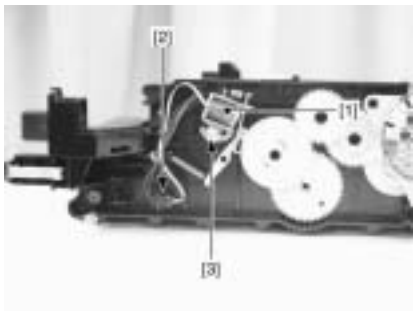

F-7-80

7.5.7 Color Displacement/Image Density Sensor

7.5.7.1 Before Removing the Color Displacement/Density Sensor

i-SENSYS MF9170 / i-SENSYS MF9130 / i-SENSYS MF8450

1) Remove the ETB unit.(page 7-28)Reference [Removing the ETB Unit]

7.5.7.2 Removing the Color Displacement/Density Sensor

i-SENSYS MF9170 / i-SENSYS MF9130 / i-SENSYS MF8450

1) Remove the duplex delivery assembly [1].
- 2 screws [2]

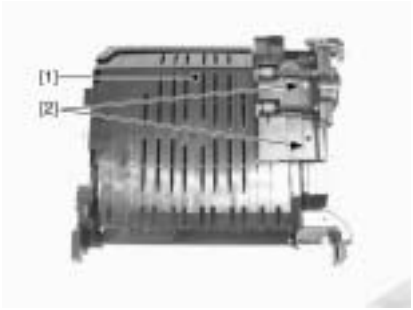

F-7-81

2) Remove the cover [1] and the stay [2].
- 1 screw [3]

F-7-82

3) Remove the color displacement/density sensor [1].
- 1 claw [2]

F-7-83

Chapter 8 Pickup and Feed System

Contents

8.1 Overview/Configuration

8.1.1 Overview

i-SENSYS MF9170 / i-SENSYS MF9130 / i-SENSYS MF8450

The pickup/feed system picks up and feeds paper.
The machine has two pickup inlets; a cassette and a manual feed tray, and the paper is delivered to the delivery tray.

The pickup/feed system consists of the motor, solenoid, and feed roller, etc.
The reverse unit and duplexing feed assembly are controlled by the reverse driver PCB. Other motors, solenoids, and feed rollers are controlled by the DC controller.

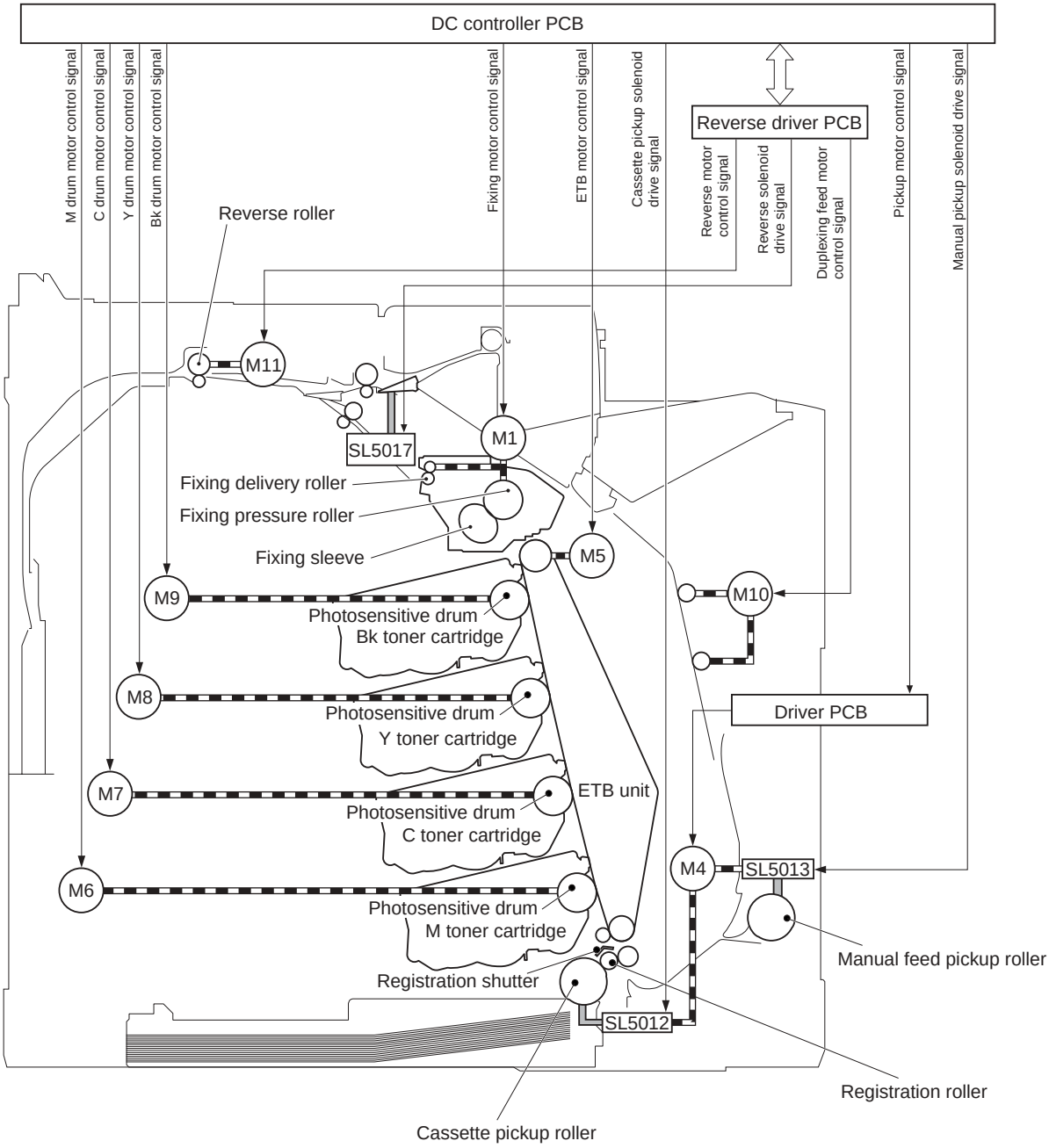

F-8-1

M1:	Fixing motor	M4:	Pickup motor
M5:	ETB motor	M6-9:	Drum motors (magenta, cyan, yellow, black)
M10:	Duplexing feed motor	M11:	Reverse motor
SL5012:	Cassette pickup solenoid	SL5013:	Manual pickup solenoid
SL5017:	Reverse solenoid		

The cassette detection switch (SW2) detects the presence/absence of the cassette.
The manual feed paper sensor (SR707) and the cassette paper sensor (SR709) detect the presence/absence of the paper in the manual feed tray and the cassette.
The reverse sensor (SR706), pre-registration sensor (SR708), registration sensor (SR710), paper loop sensor (SR6001), and fixing delivery sensor (SR6005) detect the arrival and passage of the paper on the feed path.
The delivery paper full-level sensor (SR713) and delivery sensor (SR715) detect the condition of the delivery outlet.
The machine also has the paper displacement sensor (SR714).
When reverse operation is performed to feed paper for printing of the second page during duplexing printing, the machine controls the reverse solenoid (SL5017) and uses the registration sensor (SR710).

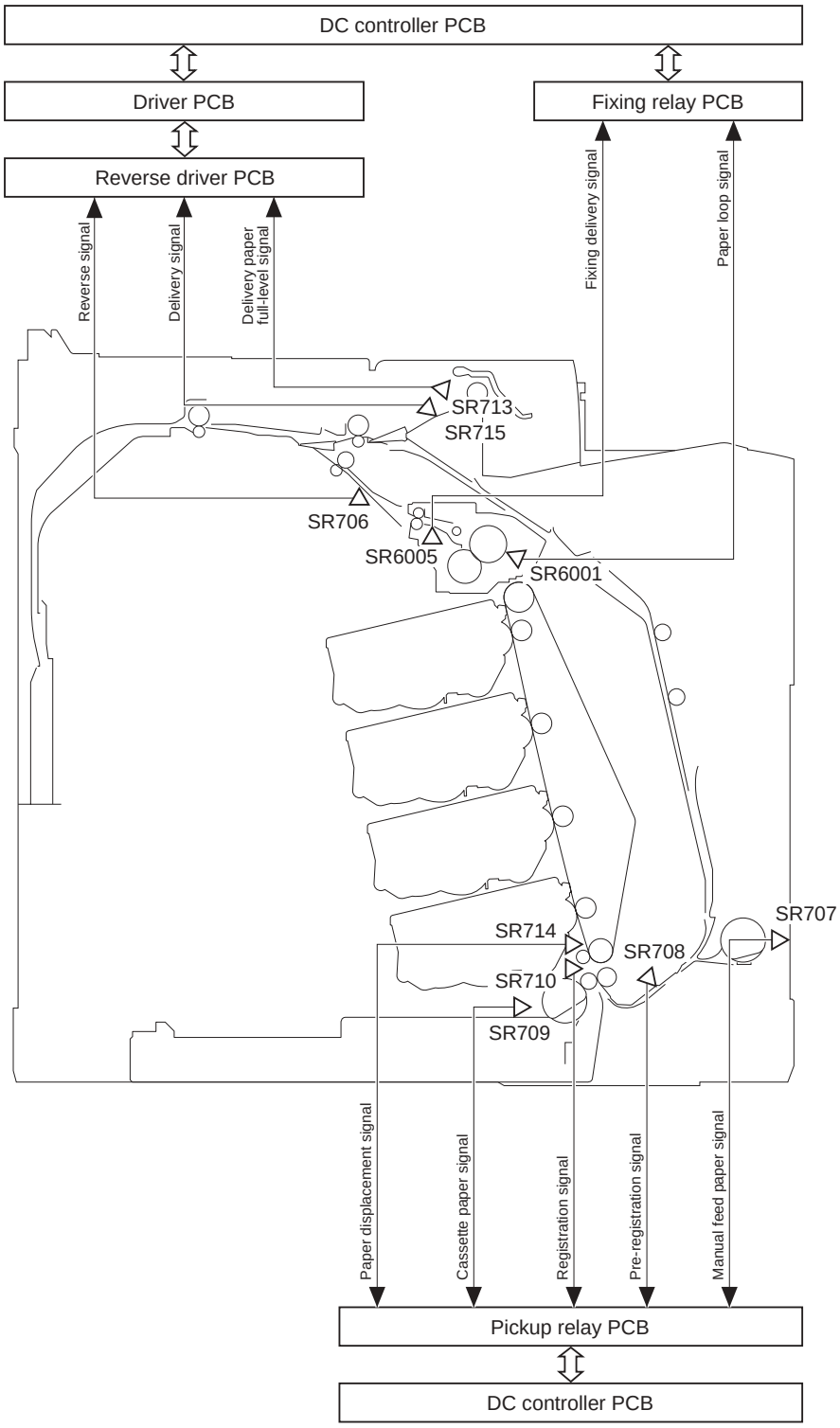

F-8-2

SR706:	Reverse sensor	SR707:	Manual feed paper sensor
SR708:	Pre-registration sensor	SR709:	Cassette paper sensor
SR710:	Registration sensor	SR713:	Delivery paper full-level sensor
SR714:	Paper displacement sensor	SR715:	Delivery sensor
SR6001:	Paper loop sensor	SR6005:	Fixing delivery sensor

8.1.2 Interval Speed Increase Control

i-SENSYS MF9170 / i-SENSYS MF9130 / i-SENSYS MF8450

To increase printing speed, the machine increases the speed in an interval which does not affect image formation.
The DC controller increases the process speed four times faster when the paper is fed to the reverse assembly. It also increases the process speed of duplex printing four times faster at the duplex feed assembly.

T-8-1

Timing	Single-sided printing	Duplex printing
Timing of increasing the speed	After the trailing edge of the paper passes through the fixing delivery roller	After the trailing edge of the paper passes through the fixing delivery roller
Timing of decreasing the speed	After the trailing edge of the paper passes through the holding roller 2	When the leading edge of the paper reaches the pre-registration sensor

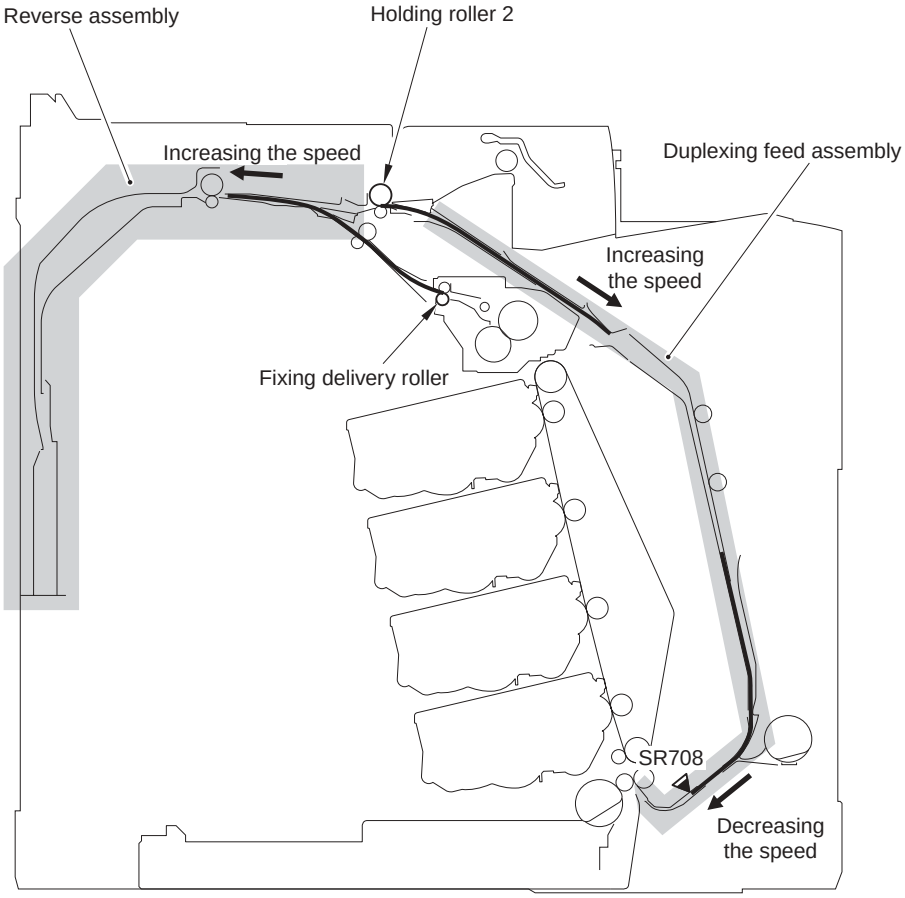

F-8-3

SR708: pre-registration sensor

8.2 Other Control

8.2.1 Cassette Pickup Mechanism

i-SENSYS MF9170 / i-SENSYS MF9130 / i-SENSYS MF8450

The cassette pickup is a mechanism to pick up and feed the paper loaded in the cassette into the machine one by one.
The pickup condition is detected by the following sensors or switch.
- Cassette detection switch (SW2): Detects the presence/absence of the cassette.
- Cassette paper sensor (SR709): Detects the presence/absence of the paper in the cassette.
- Registration sensor (SR710): Detects the lead edge of the fed paper.
- Paper displacement sensor (SR714): Detects the paper displacement.

Cassette pickup operation
1) The main controller sends a print command to the DC controller.
2) The DC controller drives the pickup motor (M4).
3) The DC controller turns ON the cassette pickup solenoid (SL5012).
When the drive is sent from the pickup motor, the cassette pickup roller rotates.
In this condition, double-fed paper is removed by using the mechanism of oblique surface separation and the separation pad, and the paper is fed one by one.
4) The paper is transported to the ETB unit after the skew is corrected by the registration roller and registration shutter.

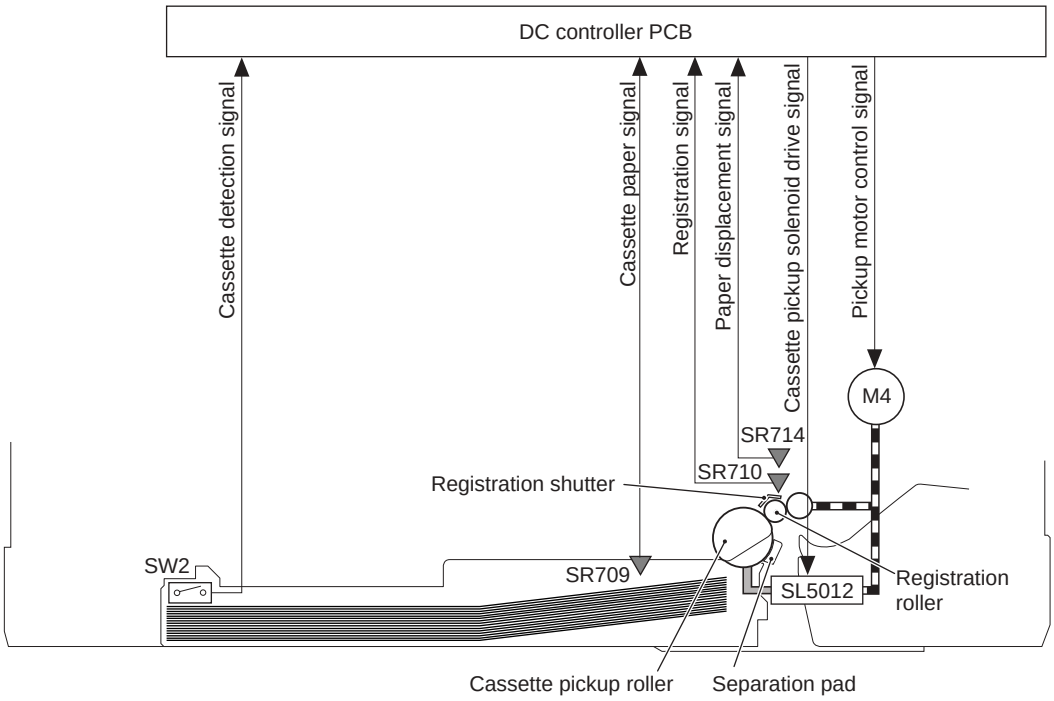

F-8-4

8.2.2 Manual Feed Pickup Mechanism

i-SENSYS MF9170 / i-SENSYS MF9130 / i-SENSYS MF8450

The manual feed pickup is a mechanism to pick up and feed the paper loaded on the manual feed tray into the machine one by one.
The pickup condition is detected by the following sensors or switch.
- Cassette detection switch (SW2): Detects the presence/absence of the cassette.
- Manual feed paper sensor (SR707): Detects the presence/absence of the paper on the manual feed tray.
- Registration sensor (SR710): Detects the lead edge of the fed paper.
- Paper displacement sensor (SR714): Detects the paper displacement.

> **MEMO:**
> Since a cassette is included in the feed path for manual feed pickup, it is necessary to attach the cassette when manual feed pickup is performed.

Up to 100 sheets of paper (75 g/m2) can be fed from the manual feed pickup inlet.

Manual feed pickup operation
1) The main controller sends a print command to the DC controller.
2) The DC controller drives the pickup motor (M4).
3) The DC controller turns ON the manual feed pickup solenoid (SL5013).
When the drive is sent from the pickup motor, the manual feed pickup roller rotates.
In this condition, double-fed paper is removed by the separation pad, and the paper is fed one by one.
4) The paper is transported to the ETB unit after the skew is corrected by the registration roller and registration shutter.

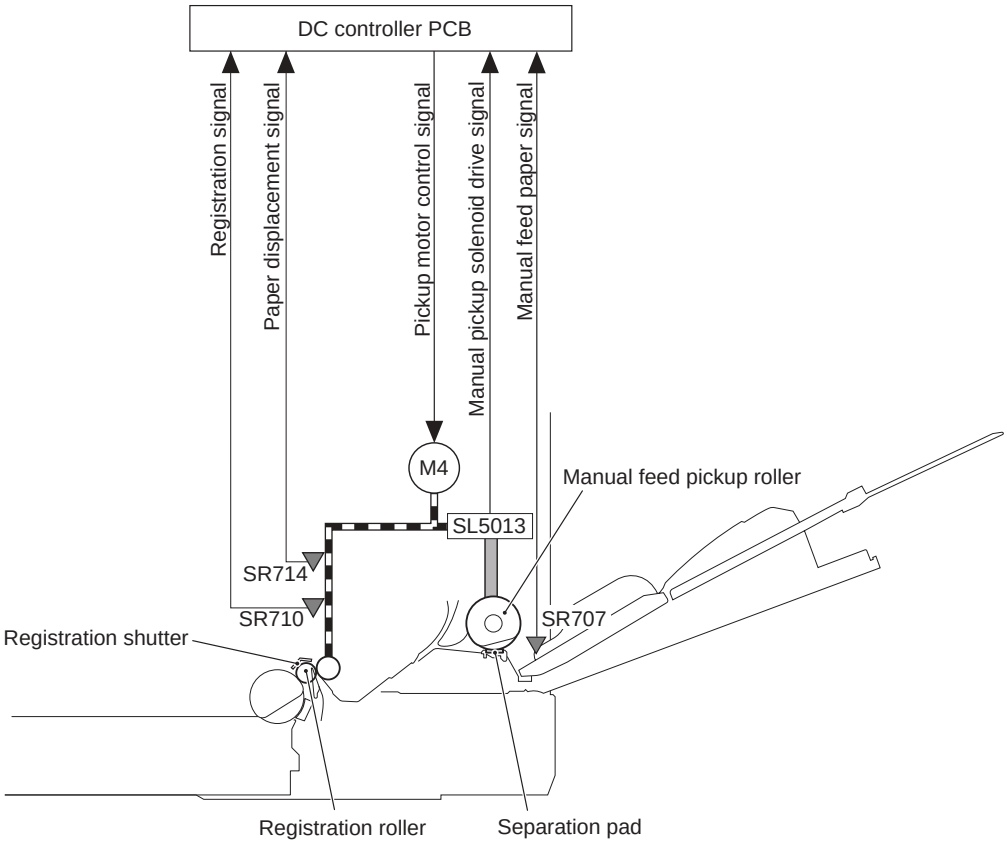

F-8-5

8.2.3 Skew Correction

i-SENSYS MF9170 / i-SENSYS MF9130 / i-SENSYS MF8450

Before the paper fed from the cassette or manual feed tray is transported to the ETB unit, a skew is corrected.
1) The fed paper comes into contact with the registration shutter at the registration roller assembly.
   The lead edge of the paper comes into contact with the registration shutter so that the right and left edges of the paper are aligned.
2) The paper is warped because the paper path is obstructed by the registration shutter.
   Since the registration shutter is pressed by springs, the registration shutter does not move only with the power of the sheet trying to move ahead.
   When the paper is warped, the stiffness of the paper is applied in addition to the power of trying to move ahead, which increases the power of lifting up the registration shutter.
3) When the power exceeding a specified level is applied to the paper, the registration shutter is lifted up.
   In this condition, the paper is transported while keeping the right and left edges being aligned, and the skew is corrected.

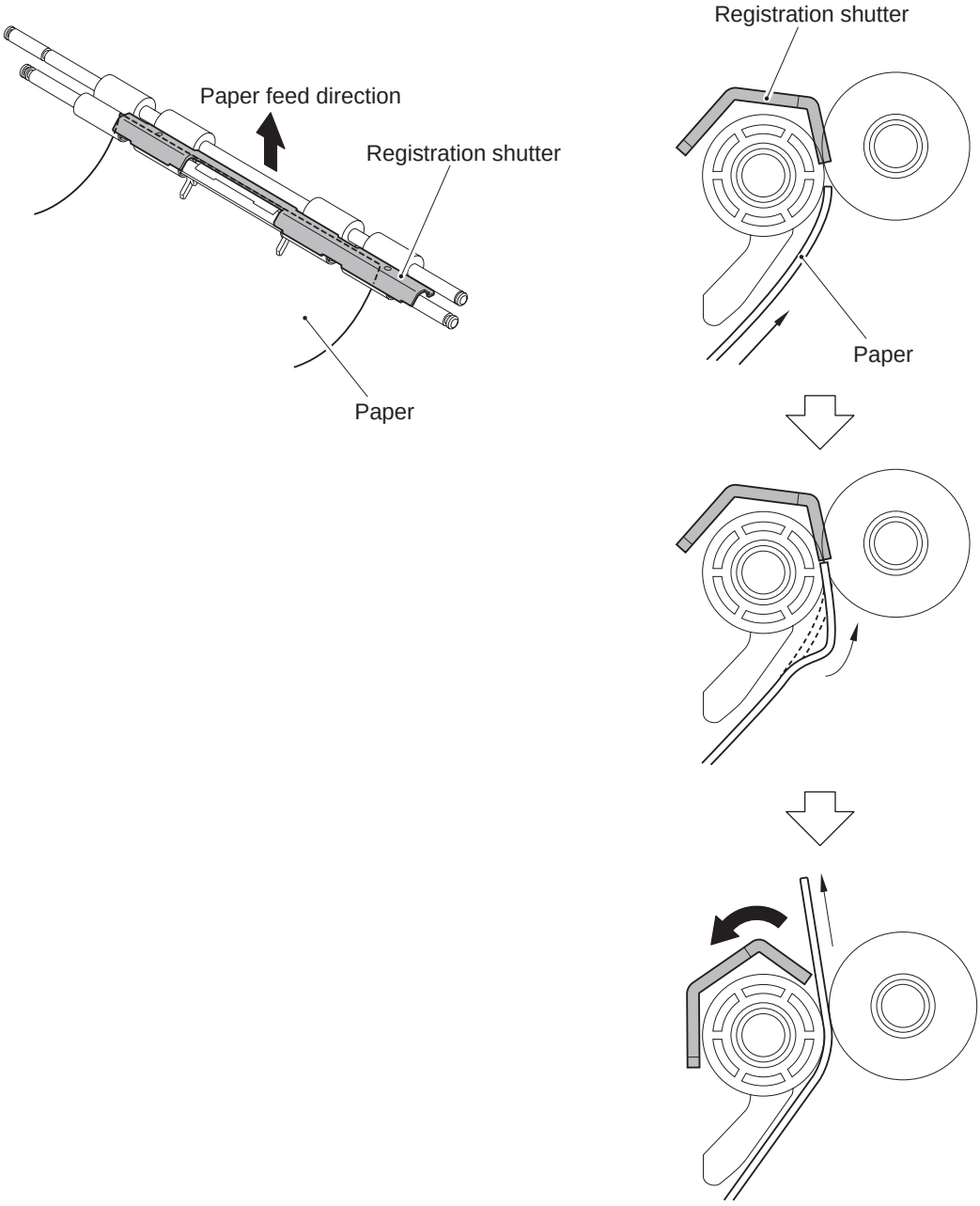

F-8-6

8.2.4 Throughput-down Control

i-SENSYS MF9170 / i-SENSYS MF9130 / i-SENSYS MF8450

The machine prevents an abnormal temperature increase at the edge of the fixing sleeve by increasing an interval between sheets while keeping the paper feeding speed as needed.

Control of the fixing assembly is performed to keep the temperature of the fixing heater higher than the target temperature while the paper is transported so that the target fixing temperature is maintained (print temperature control).
When the paper is displaced to one side, the paper does not pass a certain area at the edge of the fixing sleeve. In this area, no heat is transported to the paper, causing temperature increase every time the paper passes the area.
Even when the temperature of the fixing heater is set lower than the target temperature between sheets (control of temperature between sheets), the effect of temperature increase is reinforced when continuous printing is performed, and therefore an abnormal temperature increase occurs at the edge of the fixing sleeve.
To prevent an abnormal temperature increase, the machine increases an interval between sheets when the paper is fed displaced to one side, and promotes a temperature decrease between sheets.

The machine uses the paper displacement sensor (SR714) located at the right side of the registration shutter in order to detect the paper displacement.
The sensor detects whether the paper width is smaller than the specified paper width or whether the paper is displaced to the left side of the feed path.

Whether the paper width is smaller than the specified paper width or whether the paper is displaced to the right side of the feed path can be detected by the fixing sub thermistor (TH2) because an abnormal temperature increase occurs at the left edge of the fixing sleeve.

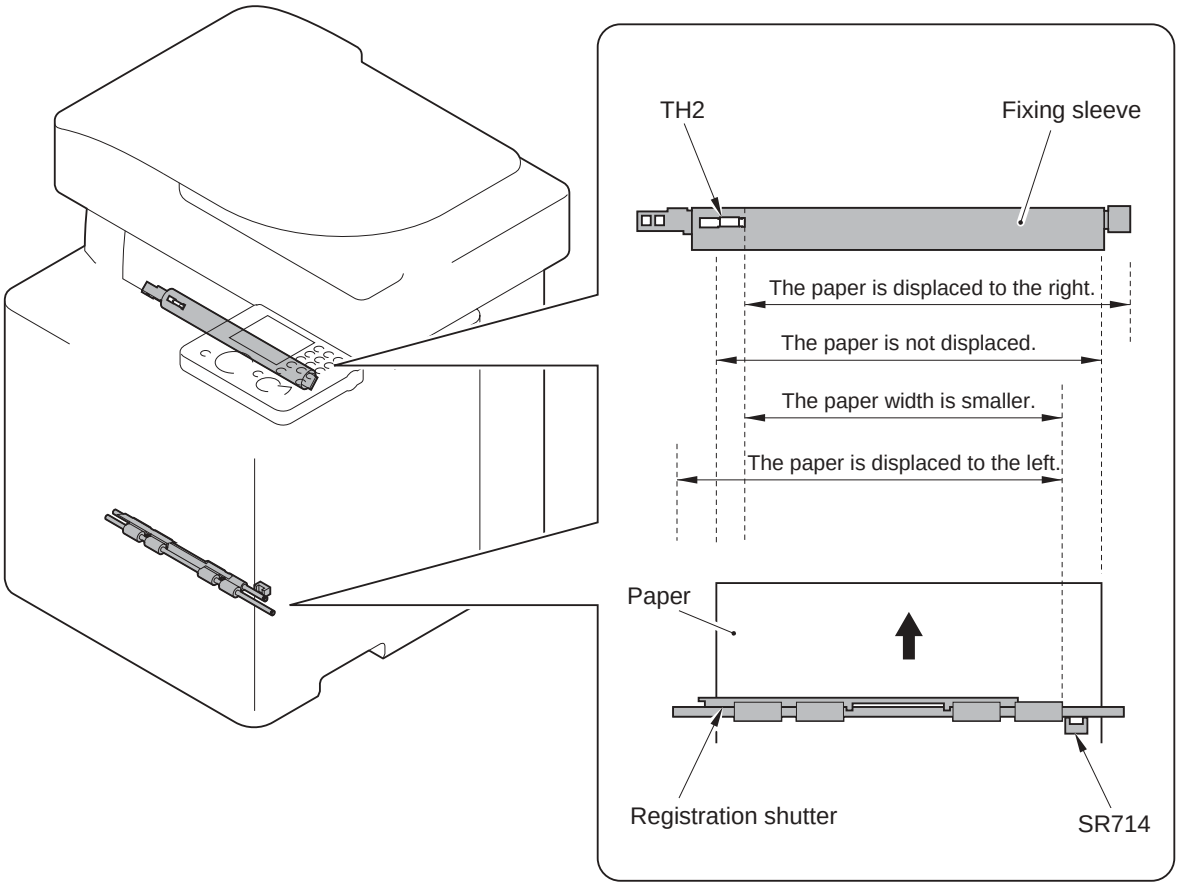

F-8-7

Different throughput-down controls are executed depending on the result of detection performed by the paper displacement sensor and fixing sub thermistor.

T-8-2

Paper displacement	The paper is displaced to the left side	The paper width is smaller *1	The paper is not displaced	The paper is displaced to the right side
Paper displacement detection sensor (SR714)	No paper detection is performed		Paper detection is performed	
Fixing sub thermistor (TH2)	Lower than the specified temperature	Higher than the specified temperature	Lower than the specified temperature	Higher than the specified temperature
Throughput-down control	Instantly executed (the lowest value)	Executed step by step	No throughput-down control performed	No throughput-down control performed *2

*1: For the universal-size paper or the paper of which width is smaller than A4-size, an interval between sheets is changed step by step according to the temperature detected by the fixing sub thermistor.
*2: Although throughput-down control is not performed, a restriction is applied to the power supplied to the fixing heater.

8.2.5 Feeding Speed Control

i-SENSYS MF9170 / i-SENSYS MF9130 / i-SENSYS MF8450

The machine switches the paper feeding speed depending on the type of paper fed in order to prevent a fixing failure.
The DC controller switches the paper feeding speed over 3 settings (1/1 speed, 4/5 speed, 1/2 speed) depending on the paper type specified by the main controller.

T-8-3

Paper type	Thickness	Paper type	Paper feeding speed
Plain paper	60 to 105 g/m2	Plain paper	1/1
Thick paper	105 to 120 g/m2	Thick paper 1	4/5
Thick paper	120 to 176 g/m2	Thick paper 2	4/5
Thick paper, Postcard	176 to 190 g/m2	Postcard	1/2
Label	-	Label	4/5
Envelope	-	Envelope	4/5
Transparency	-	Transparency	1/2

8.2.6 Warp Control

i-SENSYS MF9170 / i-SENSYS MF9130 / i-SENSYS MF8450

To prevent an image failure, it is necessary to keep the paper warped at an appropriate level between the fixing assembly and the ETB.
When the paper transport speed of the pressure roller is slower than that of the ETB, the paper warp increases, and an image defect or paper crease occurs. Conversely, the speed is faster than that of the ETB, the paper is pulled by the pressure roller, and a color displacement occurs in the sub-scanning direction.

The machine controls the rotational speed of the fixing motor (M1), which drives the pressure roller, to keep an appropriate level of paper warp.
When the paper is warped, the paper loop flag is pressed up, and the paper loop sensor (SR6001) is turned ON. In this case, the DC controller increases the rotational speed of the fixing motor.
When the paper loop sensor is turned OFF, the DC controller determines that the level of paper warp is small and decreases the rotational speed of the fixing motor.

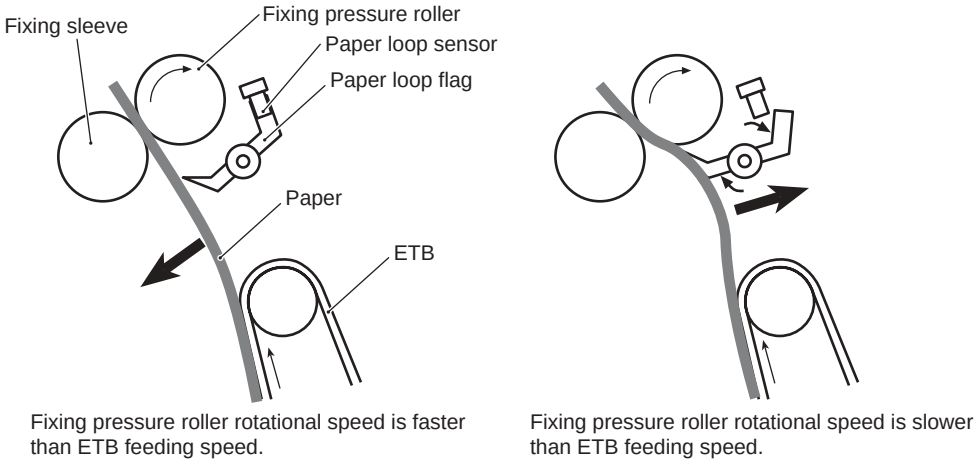

F-8-8

MEMO:
If there are appropriate distance between the transfer unit and the fixing assembly in the product, this control is not necessary to make paper warped.
However, since the machine performs vertical feeding and it is necessary to minimize its height, no distance can be secured between the transfer unit and the fixing assembly. Therefore, it is necessary to perform warp control.

8.2.7 Delivery

i-SENSYS MF9170 / i-SENSYS MF9130 / i-SENSYS MF8450

Delivery is a mechanism to deliver the paper transported from the fixing assembly to the delivery tray.
The following sensors detect the paper condition.
- Fixing delivery sensor (SR6005): Detect the paper delivered from the fixing unit.
- Reverse sensor (SR706): Detect the paper transported to the reverse assembly.
- Delivery sensor (SR715): Detect the paper transported to the delivery tray.
- Delivery paper full-level sensor (SR713): Detect the stack volume of paper delivered to the delivery tray.

Delivery operation
1) The fixed paper is delivered from the fixing unit.
2) When a certain period of time elapses after the fixing delivery sensor (SR6005) detects the lead edge of the paper, the reverse motor (M11) rotates forward.
The paper moves to the reverse assembly while pressing up the self-weight flapper.

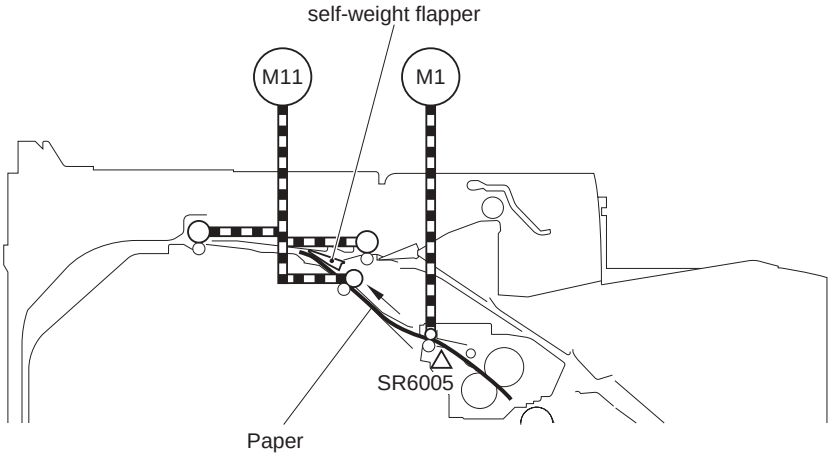

F-8-9

3) When a certain period of time elapses after the reverse sensor (SR706) detects the lead edge of the paper, the reverse motor (M11) stops.
This certain period of time varies depending on the paper length.
The paper which passed through the reverse roller before the reverse motor stopped is temporarily stored at the back of the machine.
4) The reverse motor rotates in reverse.
When the reverse motor rotates in reverse, the paper is transported to the opposite direction.

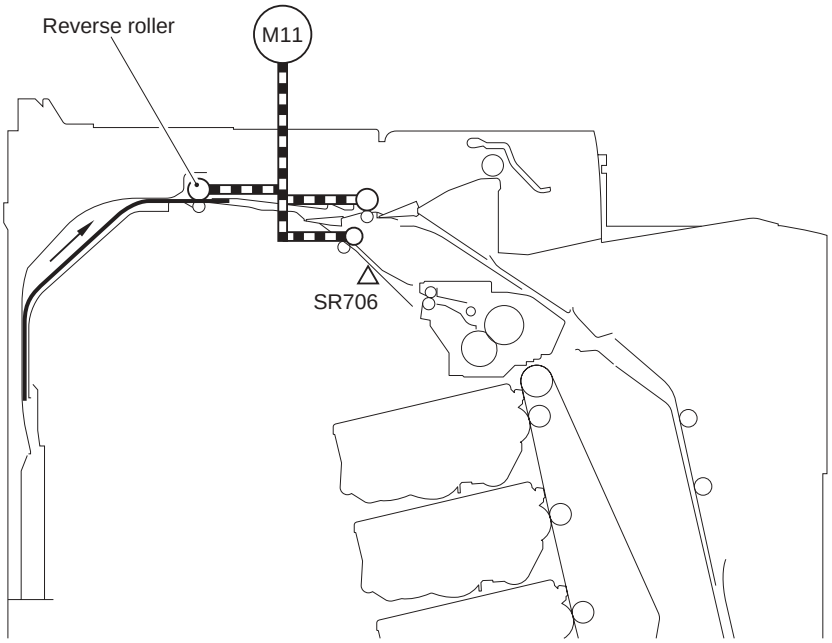

F-8-10

5) The paper is transported to the delivery tray by the delivery roller.
Since the duplexing/delivery flapper is turned down at this point, the feed path toward the duplexing feed assembly is closed.
Whether or not the paper has been delivered to the delivery tray is detected by the delivery sensor (SR715).
When the paper in the delivery tray reaches the full level, the delivery paper full-level flag comes into contact with the paper, and the full level is detected by the delivery paper full-level sensor (SR713).

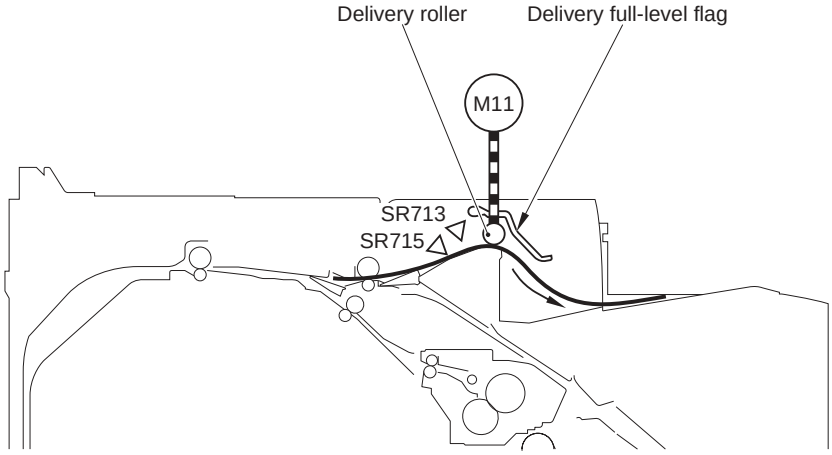

F-8-11

8.3 Detection Jams

8.3.1 Jam Detection Outline

8.3.1.1 Overview

i-SENSYS MF9170 / i-SENSYS MF9130 / i-SENSYS MF8450

The machine is provided with several paper sensors at specified positions on the feed path to detect whether the paper exists or whether the paper is transported normally or not.
When the machine determines that a jam has occurred based on the result of detection performed by each sensor, it stops print operation and displays an error message indicating that a jam occurred on the control panel at the same time.

T-8-4

JAM code	JAM type	JAM condition
0104	Pickup delay JAM	If the registration sensor (SR710) cannot detect the leading edge of the paper after 3 times retry within the specified time from turning on of cassette pickup solenoid (SL5012) or manual pickup solenoid (SL5013).
0208	Pickup stationary JAM	If the registration sensor (SR710) cannot detect the trailing edge of paper within approx. 3.2 sec after it detects the leading edge of paper.
010c	Delivery delay JAM	If the fixing delivery sensor (SR6005) cannot detect the leading edge of paper within approx. 3.0 sec after the registration sensor (SR710) detects the leading edge of paper.
0210	Delivery stationary JAM	If the fixing delivery sensor (SR6005) continues to detect the paper after the theoretical time plus time for feeding paper by 45 mm (approx. 3.1 sec) elapsed after the registration sensor (SR710) detects the leading edge of paper.
0214	Residual JAM	If any of the registration sensor (SR710), paper loop sensor (SR6001), fixing delivery sensor (SR6005) or reverse sensor (SR706) detects the paper during initial sequence.
1118	Door open JAM	If the front cover sensor (SR720) detects that the front door is open during the paper feeding.
0221	Reverse assembly stationary JAM	?
0228	Duplexing pickup stationary JAM	?

8.3.2 Delay Jams

8.3.2.1 Pickup Delay JAM

i-SENSYS MF9170 / i-SENSYS MF9130 / i-SENSYS MF8450

The machine performs the retry control, which executes the pickup operation up to three times, in order to retrieve the pickup delay jam caused by the pickup failure.
The machine determines that the pickup delay jam has occurred when the registration sensor (SR710) cannot detect the lead edge of the paper within a specified period of time after the cassette pickup solenoid (SL5012) or manual feed pickup solenoid (SL5013) is turned ON for the third pickup operation.

T-8-5

	Cassette	Manual feed tray
Time	Approx. 1.3 sec	Approx. 2.2 sec

8.3.2.2 Delivery Delay JAM

i-SENSYS MF9170 / i-SENSYS MF9130 / i-SENSYS MF8450

The machine determines that the delivery delay jam has occurred when the fixing delivery sensor (SR6005) cannot detect the lead edge of the paper even when approximately 3.0 seconds elapsed after the registration sensor (SR710) detected the lead edge of the paper.

8.3.2.3 Duplexing Pickup Delay JAM

i-SENSYS MF9170 / i-SENSYS MF9130 / i-SENSYS MF8450

The machine determines that the duplexing pickup delay jam has occurred when the lead edge of the paper does not reach the registration sensor (SR710) within approximately 2.0 seconds after the duplexing feed motor (M10) started feeding the paper placed in standby at the duplexing re-pickup position.

8.3.2.4 Duplexing Reverse Unit Delay JAM

i-SENSYS MF9170 / i-SENSYS MF9130 / i-SENSYS MF8450

The machine determines that the duplexing reverse unit delay jam has occurred when the reverse sensor (SR706) does not detect the absence of paper in the period from the start of duplexing reverse to the detection of the duplexing pickup delay jam.

8.3.3 Stationary Jams

8.3.3.1 Pickup Stationary JAM

i-SENSYS MF9170 / i-SENSYS MF9130 / i-SENSYS MF8450

The machine determines that the pickup stationary jam has occurred when the registration sensor (SR710) cannot detect the trailing edge of the paper even when approximately 3.2 seconds elapsed after it detected the lead edge of the paper.

8.3.3.2 Delivery Stationary JAM

i-SENSYS MF9170 / i-SENSYS MF9130 / i-SENSYS MF8450

The machine detects the delivery stationary jam after determining that the wrapping jam did not occur.
The machine determines that the delivery stationary jam has occurred when the fixing delivery sensor (SR6005) detects the presence of paper even when the time equivalent to theoretical time plus 45 mm (approximately 3.1 seconds) after the registration sensor (SR710) detects the trailing edge of the paper.

8.3.4 Other Jams

8.3.4.1 Wrapping JAM

i-SENSYS MF9170 / i-SENSYS MF9130 / i-SENSYS MF8450

The machine detects the wrapping jam after determining that the delivery delay jam did not occur.
The machine determines that the wrapping jam has occurred when the fixing delivery sensor (SR6005) detects the absence of paper before the time equivalent to the paper length detected by the registration sensor (SR710) minus 50 mm (approximately 1.9 seconds) elapses after the sensor detects the lead edge of the paper.

8.3.4.2 Residual JAM

i-SENSYS MF9170 / i-SENSYS MF9130 / i-SENSYS MF8450

The machine determines that the residual jam has occurred when any of the registration sensor (SR710), paper loop sensor (SR6001), fixing delivery sensor (SR6005), or reverse sensor (SR706) detects the paper at the initial sequence.

8.3.4.3 Door Open JAM

i-SENSYS MF9170 / i-SENSYS MF9130 / i-SENSYS MF8450

The machine determines that the door open jam has occurred when the front cover sensor (SR720) detects that the front cover is opened during paper feeding.

8.3.4.4 Automatic Delivery Function

i-SENSYS MF9170 / i-SENSYS MF9130 / i-SENSYS MF8450

When the registration sensor (SR710) detects the presence of paper after detecting the absence of paper at the initial sequence after the power was turned on or the front cover was closed, the machine drives the motors and solenoids in the feeding system and delivers the residual paper automatically.

8.4 Duplex Feeding

8.4.1 Overview

i-SENSYS MF9170 / i-SENSYS MF9130 / i-SENSYS MF8450

The paper fed from the fixing assembly to the reverse unit is sent to the reverse assembly.
When delivery is performed, the paper is transported to the delivery tray. When duplexing printing is performed, the paper is sent to the duplexing feed assembly where transfer and fixing are performed for the second side.
The duplexing feed assembly corrects paper skew and the position to start writing an image in the main scanning direction for the second side.

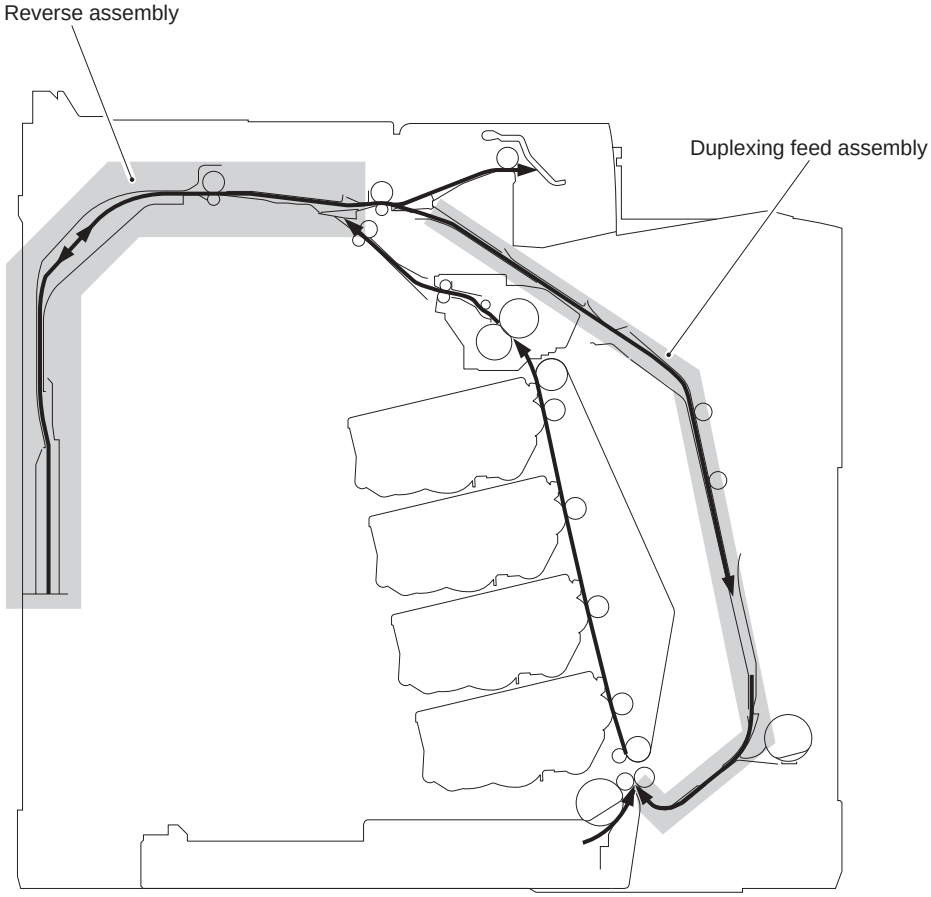

F-8-12

The reverse driver PCB controls the operational sequence of the reverse assembly and duplexing feed assembly using an 8-bit CPU (IC801).
The reverse driver PCB performs serial communication with the DC controller. It drives each load according to the signal sent from the DC controller.

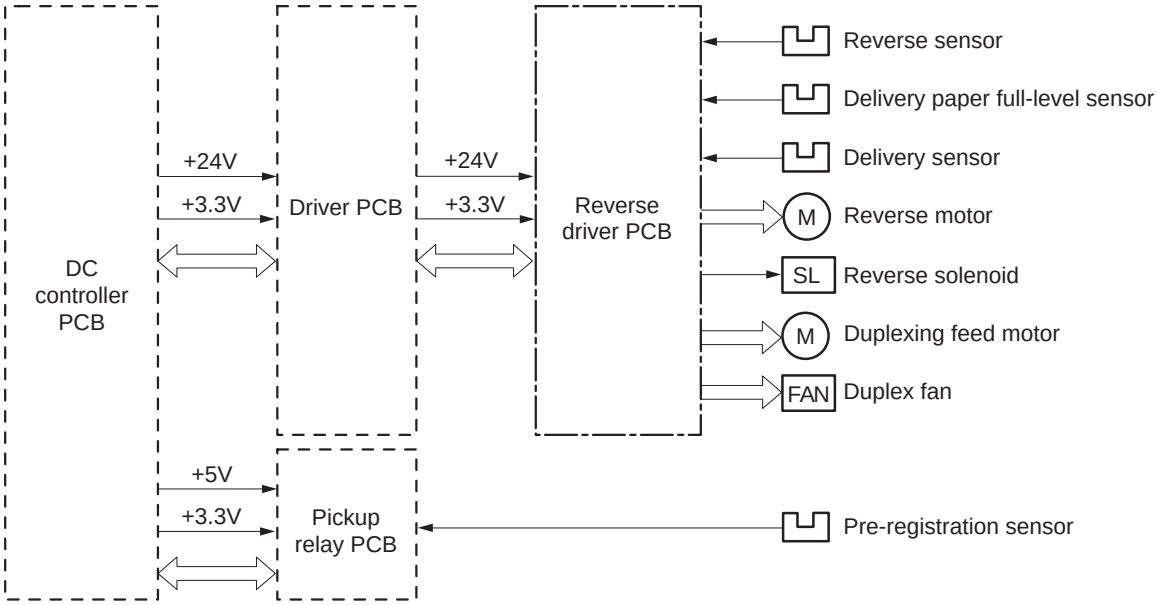

F-8-13

8.4.2 Duplexing Feed Control

i-SENSYS MF9170 / i-SENSYS MF9130 / i-SENSYS MF8450

In duplexing printing, the machine reverses the paper printed on the first side and again transports it to the pickup position to print the second side.
Paper reverse is driven by the reverse motor (M11) and reverse solenoid (SL5017).
The duplexing feed assembly feeds the paper by rotating two skew rollers by the duplexing feed motor (M10).
When the registration sensor (SR710) detects the lead edge of the paper, it sends a signal to the DC controller. The reverse driver PCB detects whether the paper has been transported to the pickup position or not by monitoring the signal.

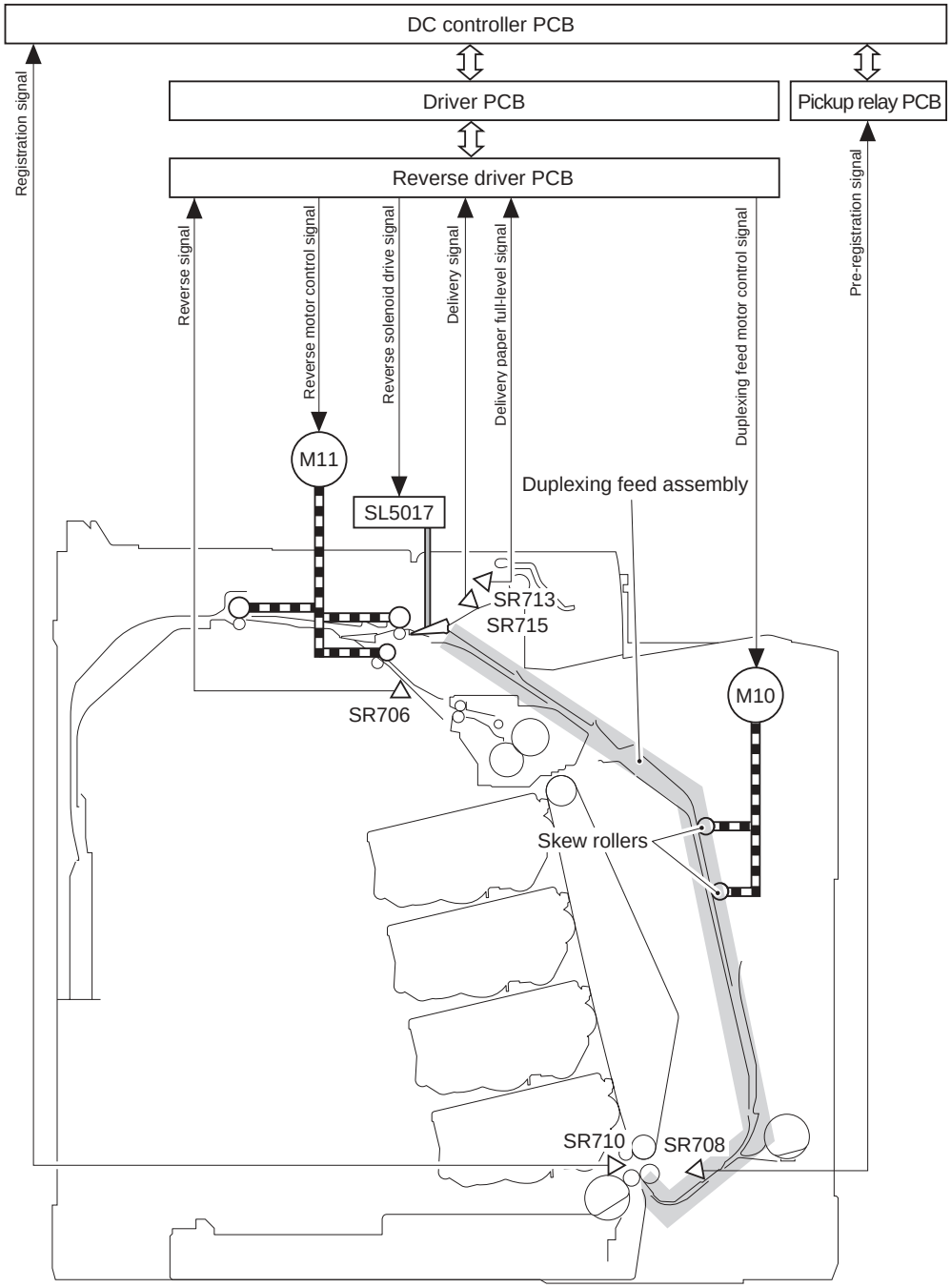

F-8-14

M10:	Duplexing feed motor	SR708:	Pre-registration sensor
M11:	Reverse motor	SR710:	Registration sensor
SL5017:	Reverse solenoid	SR713:	Delivery paper full-level sensor
SR706:	Reverse sensor	SR715:	Delivery sensor

Duplexing feed sequence

1) The feed roller driven by the fixing motor (M1) delivers the paper in which fixing was performed on the first side from the fixing unit.
2) When a specified period of time elapses after the fixing delivery sensor (SR6005) detects the lead edge of the paper, the reverse motor (M11) rotates forward.
   The paper moves to the reverse assembly while pressing up the self-weight flapper.

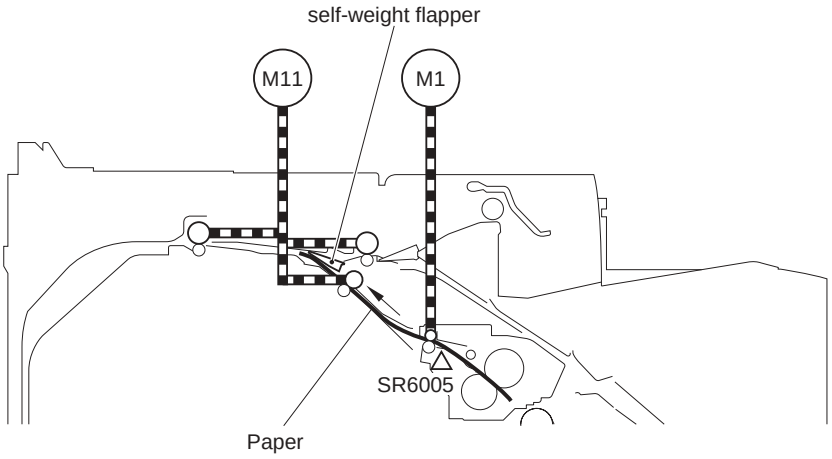

F-8-15

3) When a specified period of time elapses after the reverse sensor (SR706) detects the lead edge of the paper, the reverse motor (M11) stops.
   This specified period of time varies depending on the paper length.
   The paper which passed through the reverse roller before the reverse motor stops is temporarily stored at the back of the machine.
4) The reverse motor rotates in reverse.
   When the reverse motor rotates in reverse, the paper is transported to the opposite direction.

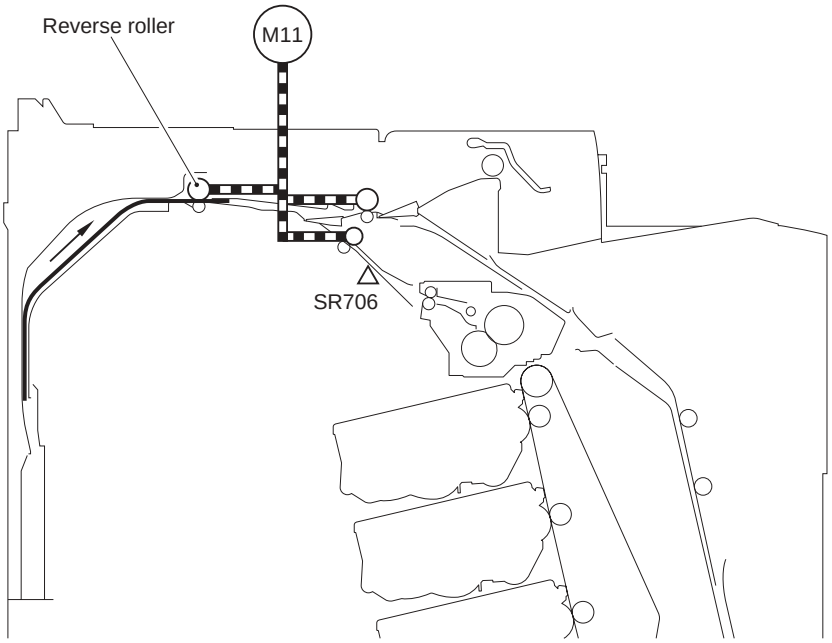

F-8-16

5) When a specified period of time elapses after the reverse motor rotates in reverse, the reverse solenoid (SL5017) is turned ON and the duplexing feed motor (M10) is driven.
When the duplexing/delivery flapper moves up, the feed path toward the duplexing feed assembly is secured. The paper is transported through the duplexing feed assembly.

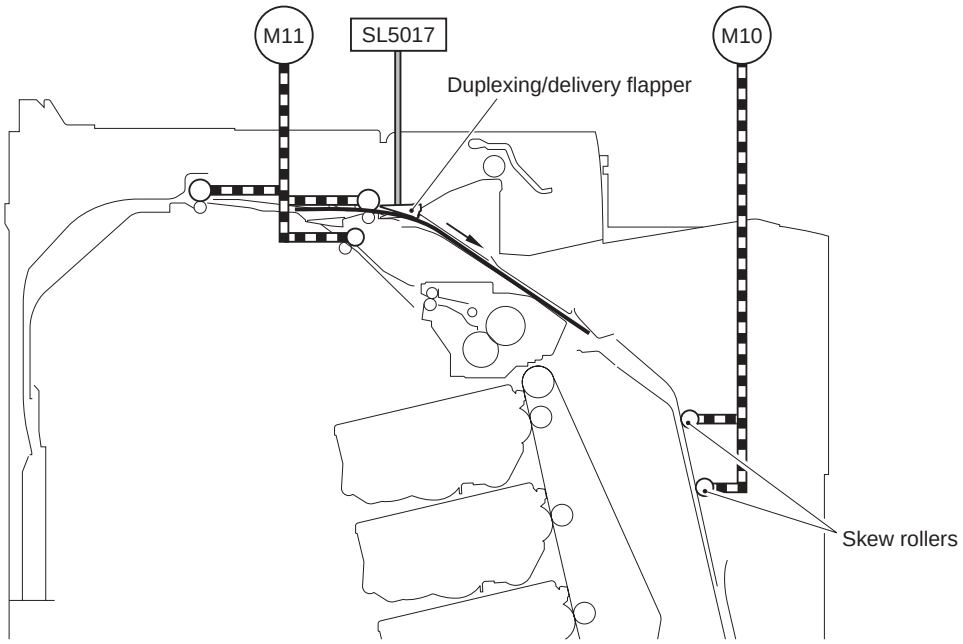

F-8-17

6) The paper is transported while being pressed to the left edge guide when it is transported by the skew roller of the duplexing feed assembly.
During this operation, the paper skew and horizontal registration of the second side is corrected.

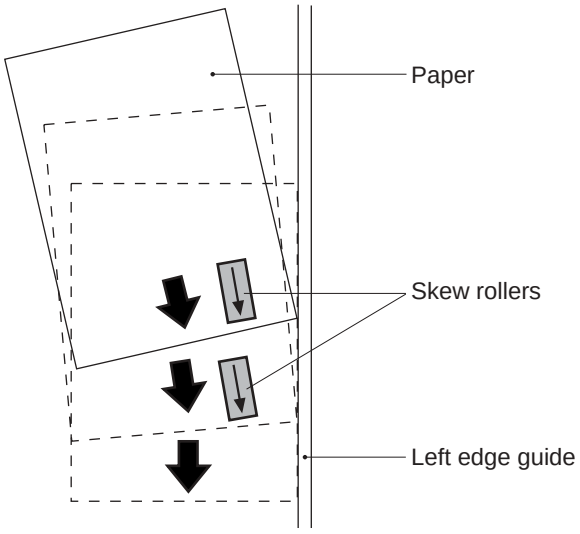

F-8-18

7) When a specified period of time elapses after the pre-registration sensor (SR708) detects the lead edge of the paper, the duplexing feed motor stops.
This specified period of time varies depending on the paper length.
The paper stops at the re-pickup position.
8) The main controller sends the print command for the second side to the DC controller.
9) The DC controller drives the pickup motor (M4) at the timing when duplexing re-pickup can be performed.
The paper skew is corrected by the registration shutter, and the paper is transported to the ETB unit.
10) After the above-mentioned procedures, the machine delivers the paper to the delivery tray, following the procedure of delivery operation.
In this condition, the duplexing/delivery flapper is turned down, so the feed path toward the duplexing feed assembly is closed.

8.4.3 Duplexing Pickup Operation

i-SENSYS MF9170 / i-SENSYS MF9130 / i-SENSYS MF8450

The machine performs three types of duplexing printing operation depending on the paper size and printing mode.
- Single sheet mode: Duplexing print operation of a sheet at one by one
- Dual sheet mode: Duplexing print operation of two sheets at once
- Alternating complex mode: Duplexing print operation in the condition where three sheets remain in the machine

T-8-6

Paper size	Duplexing print operation
A4/LTR	Single sheet mode Dual sheet mode Alternating complex mode
Legal	Single sheet mode

Each duplexing print operation can be specified by the main controller. However, duplexing print operation cannot be specified for the cases other than the printable paper size (A4, LTR, and legal) and the specified print mode (Plain paper, Thick paper 1, Gloss paper 1) for duplexing printing.

8.5 Parts Replacement Procedure

8.5.1 Pickup Feed Unit

8.5.1.1 Before Removing the Pickup Feed Unit

i-SENSYS MF9170 / i-SENSYS MF9130 / i-SENSYS MF8450

1) Remove the ETB unit.(page 7-28)Reference [Removing the ETB Unit]
2) Remove the rear cover unit.(page 11-6)Reference [Removing the Rear Cover Unit]
3) Remove the left cover.(page 11-8)Reference [Removing the Left Cover]
4) Remove the right cover.(page 11-7)Reference [Removing the Right Cover]
5) Remove the Front Cover Unit.(page 11-4)Reference [Removing the Front Cover Unit]

8.5.1.2 Removing the Pickup Feed Unit

i-SENSYS MF9170 / i-SENSYS MF9130 / i-SENSYS MF8450

1) Remove the cover [1].
   - 1 screw [2]

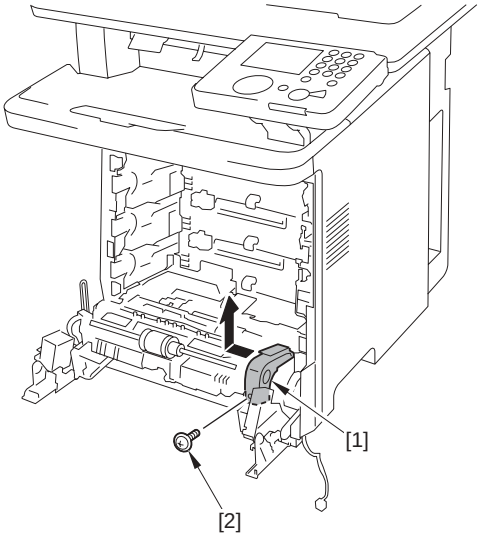

F-8-19

2) Remove the 2 plates [1]
   - 2 screws [2]

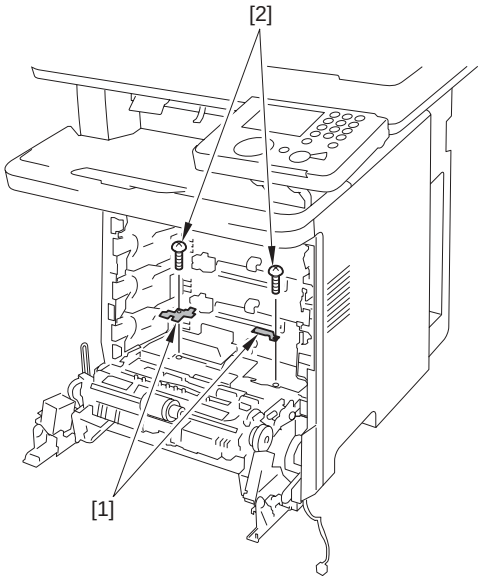

F-8-20

3) Remove the PCB cover [1]
   - 2 claws [2]

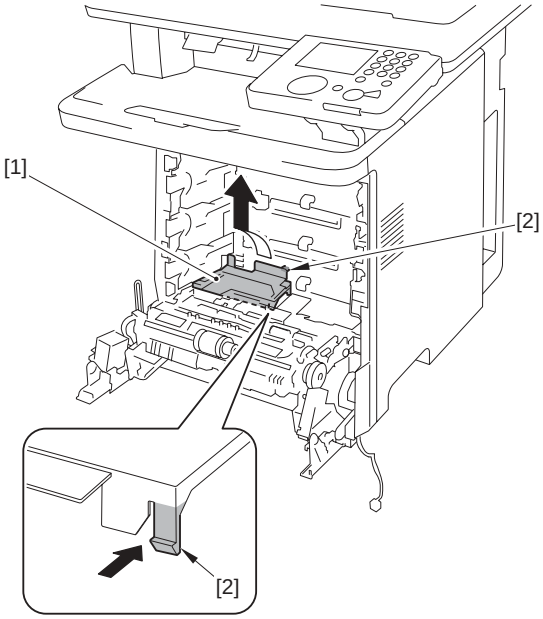

F-8-21

4) Remove the relay connector [2] and the harness [3] from the harness guide [1].

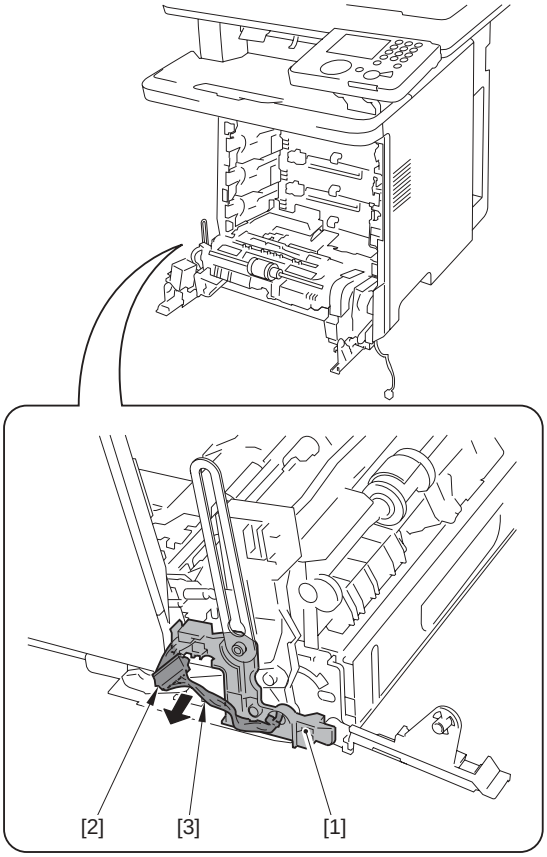

F-8-22

5) Disconnect the 4 connectors [1].
6) Disconnect the connector [2] and free the harness [3] from the guide [4].

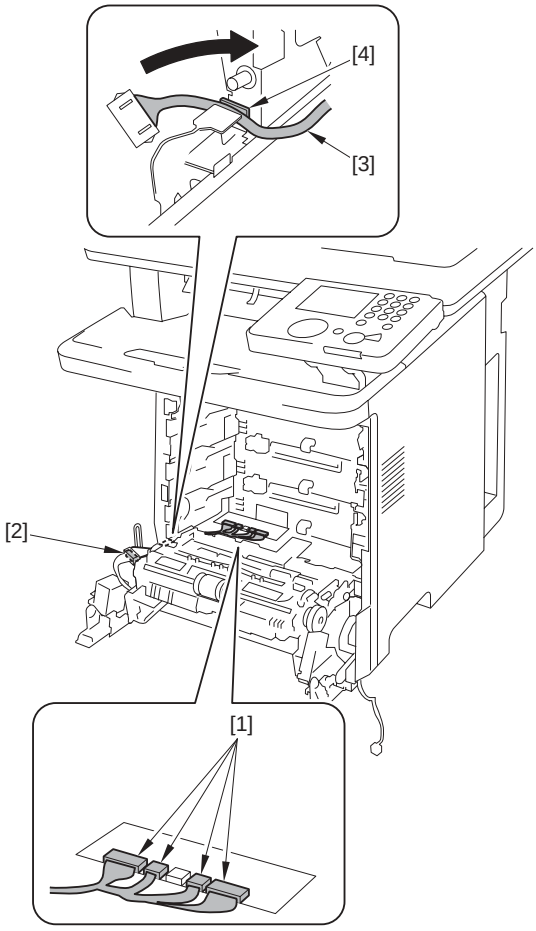

F-8-23

7) Remove the pickup feed unit [1].
   - 4 screws [2]

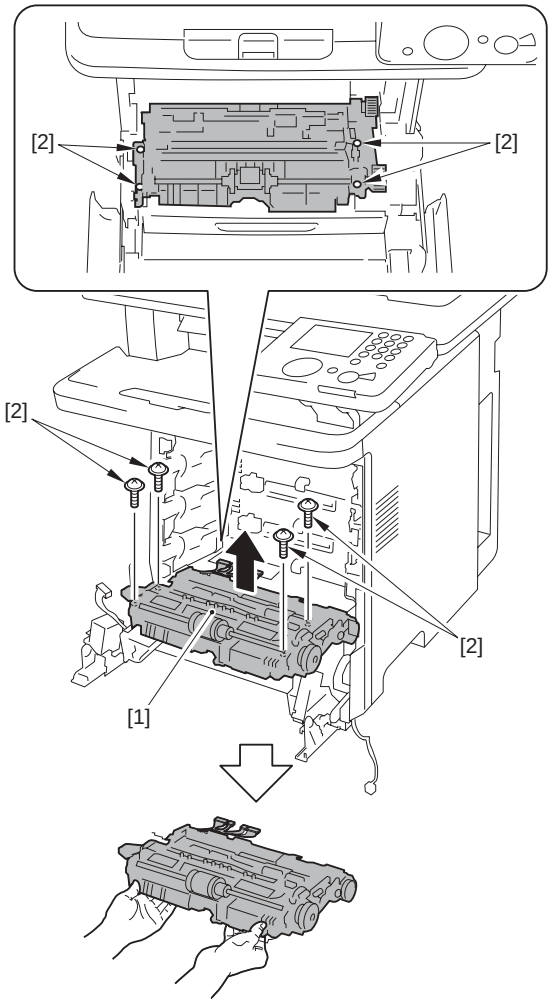

F-8-24

8.5.2 Cassette Pickup Roller

8.5.2.1 Before Removing the Cassette Pickup Roller

i-SENSYS MF9170 / i-SENSYS MF9130 / i-SENSYS MF8450

1) Remove the ETB unit.(page 7-28)Reference [Removing the ETB Unit]

8.5.2.2 Removing the Cassette Pickup Roller

i-SENSYS MF9170 / i-SENSYS MF9130 / i-SENSYS MF8450

1) Open the cover [1].

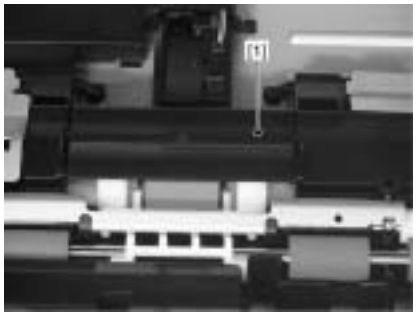

F-8-25

2) Remove the cassette pickup roller [1].
   - 2 claws [2]

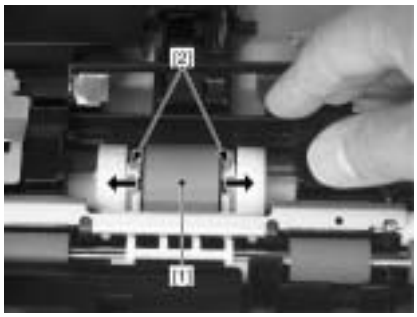

F-8-26

8.5.3 Pickup Motor

8.5.3.1 Before Removing the Pickup Motor

i-SENSYS MF9170 / i-SENSYS MF9130 / i-SENSYS MF8450

1) Remove the ETB unit.(page 7-28)Reference [Removing the ETB Unit]
2) Remove the rear cover unit.(page 11-6)Reference [Removing the Rear Cover Unit]
3) Remove the right cover.(page 11-7)Reference [Removing the Right Cover]

8.5.3.2 Removing the Pickup Motor

i-SENSYS MF9170 / i-SENSYS MF9130 / i-SENSYS MF8450

1) Open the front cover [1].

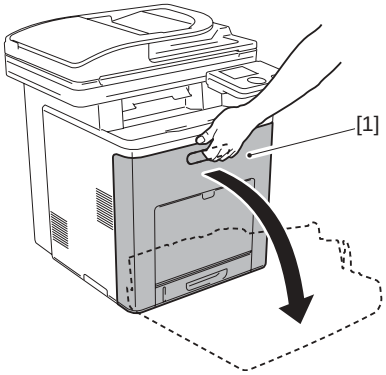

F-8-27

2) Remove the link [1] from the shaft [2].

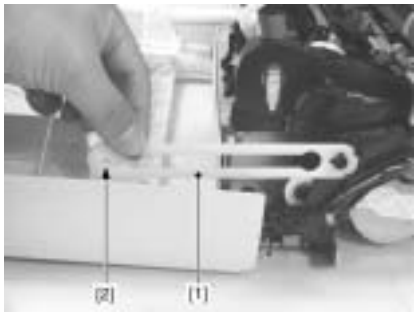

F-8-28

3) Fit the link [1] with the cutoff of the shaft [2] to remove the link.

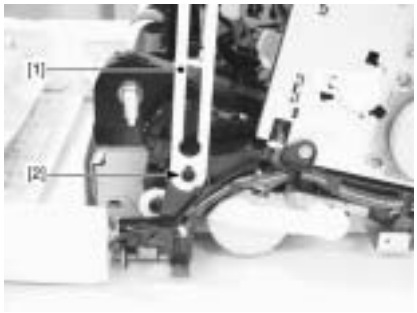

F-8-29

4) Free the cable from the cable guide [1].

F-8-30

5) Disconnect the 3 connectors [1].

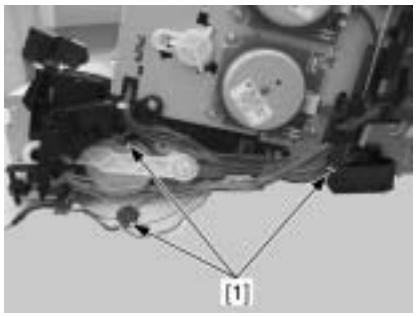

F-8-31

6) Remove the cable guide [1].
- 1 screw [2]
- 2 claws [3]

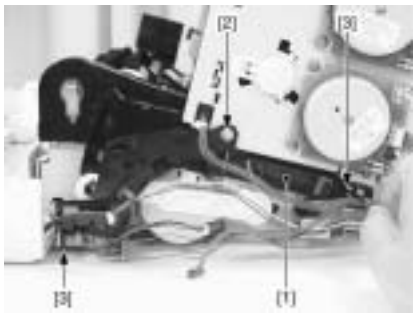

F-8-32

7) Remove the rod [1].
- 1 claw [2]

F-8-33

8) Fit the rod [1] with the cutoff of the shaft [2] to remove the rod.

F-8-34

9) Remove the pickup motor [1].
- 2 screws [2]

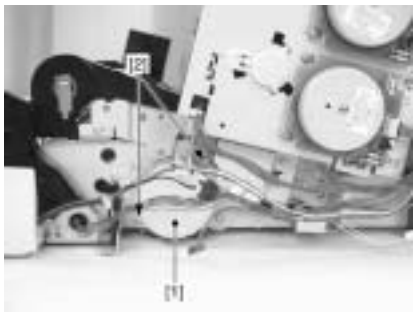

F-8-35

8.5.4 Cassette Pickup Solenoid

8.5.4.1 Before Removing the Cassette Pickup Solenoid

i-SENSYS MF9170 / i-SENSYS MF9130 / i-SENSYS MF8450

1) Remove the ETB unit.(page 7-28)Reference [Removing the ETB Unit]
2) Remove the fixing assembly.(page 9-5)Reference [Removing the Fixing Assembly]
3) Remove the rear cover unit.(page 11-6)Reference [Removing the Rear Cover Unit]
4) Remove the ADF Unit + Reader Unit.(page 4-7)Reference [Removing the ADF Unit + Reader Unit]
5) Remove the left cover.(page 11-8)Reference [Removing the Left Cover]
6) Remove the right cover.(page 11-7)Reference [Removing the Right Cover]
7) Remove the Control Panel Unit.(page 11-20)Reference [Removing the Control Panel Unit]
8) Remove the Front Upper Cover 1.(page 11-5)Reference [Removing Front Upper Cover 1]
9) Remove the Front Cover Unit.(page 11-4)Reference [Removing the Front Cover Unit]
10) Remove the Pickup Feed Unit.(page 8-17)Reference [Removing the Pickup Feed Unit]

8.5.4.2 Removing the Cassette Pickup Solenoid

i-SENSYS MF9170 / i-SENSYS MF9130 / i-SENSYS MF8450

1) Remove the right arm cover [1].
- 4 claws [2]

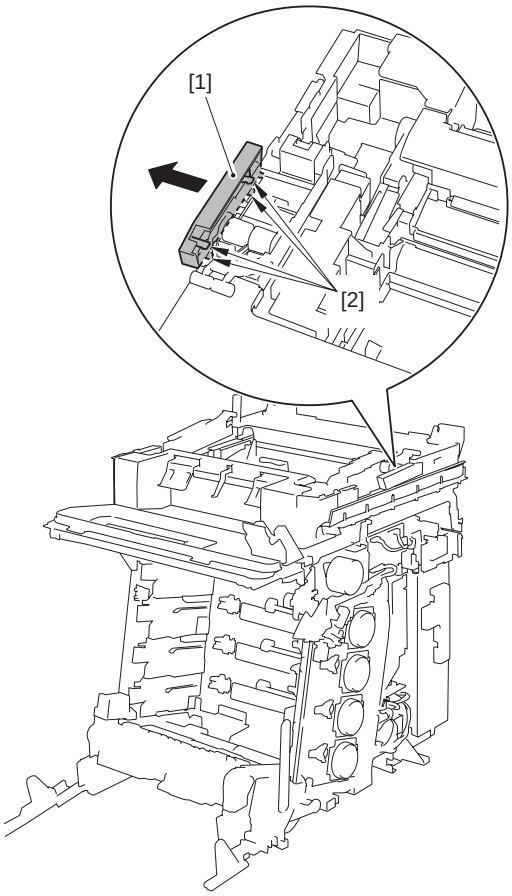

F-8-36

2) Remove the cassette guide [1].
- 1 claw [2]

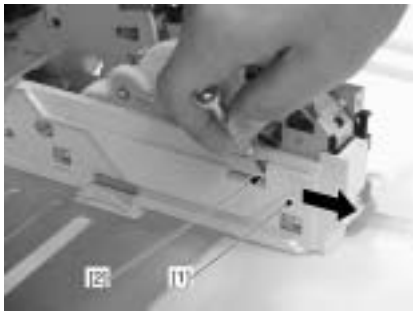

F-8-37

3) Remove the right hinge [1].
- 1 screw [2]

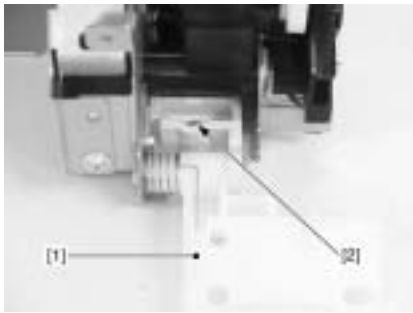

F-8-38

4) Fit the link [1] with the cutoff of the shaft [2] to remove the link.

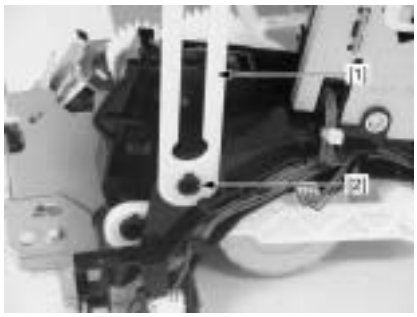

F-8-39

5) Free the cable from the cable guide [1].

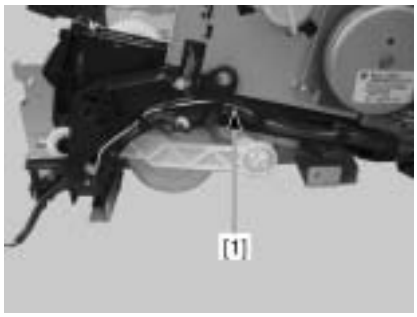

F-8-40

6) Disconnect the 3 connectors [1].

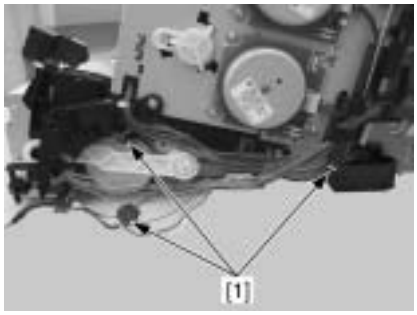

F-8-41

7) Remove the cable guide [1].
- 1 screw [2]
- 2 claws [3]

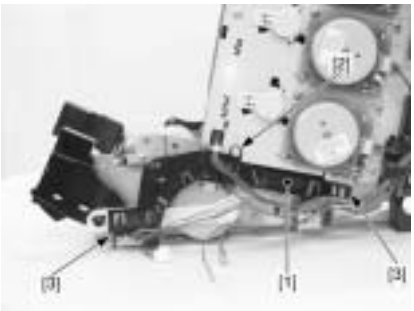

F-8-42

8) Remove the rod [1].
- 1 claw [2]

F-8-43

9) Fit the rod [1] with the cutoff of the shaft [2] to remove the rod.

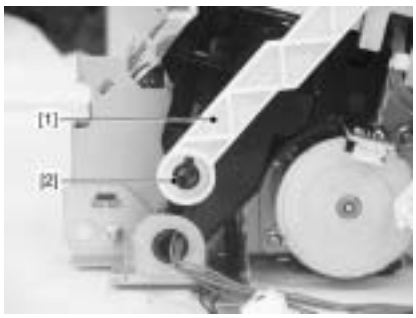

F-8-44

10) Remove the holder [1].
- 2 screws [2]

F-8-45

11) Remove the plate [1].
- 1 screw [2]

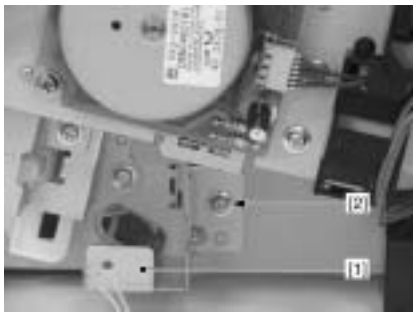

F-8-46

12) Remove the 4 screws [1]

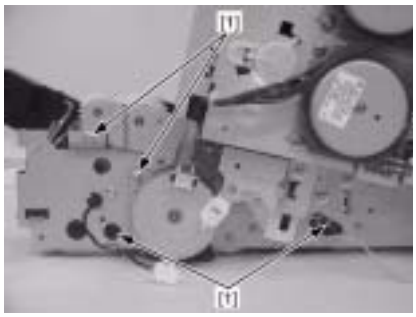

F-8-47

13) Put the right side of the host machine downward to slide the bottom plate [1] for about 30mm from the pickup drive unit [2].

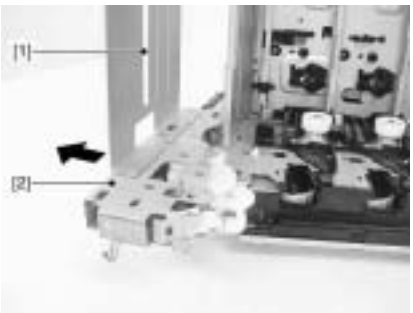

F-8-48

14) Remove the pickup drive unit [1].
- 2 screws [2]

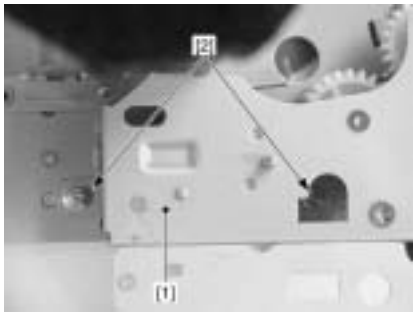

F-8-49

15) Remove the cassette pickup solenoid [1].
- 1 screw [2]

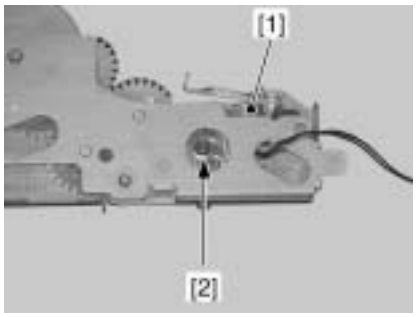

F-8-50

8.5.5 Cassette Separation Pad

8.5.5.1 Removing the Cassette Separation Pad

i-SENSYS MF9170 / i-SENSYS MF9130 / i-SENSYS MF8450

1) Remove the cassette.
2) Remove the cassette separation pad [1].
- 2 screws [2]

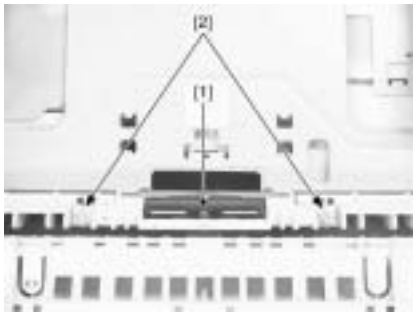

F-8-51

8.5.6 Manual Pickup Roller

8.5.6.1 Before Removing the Manual Feed Pickup Roller

i-SENSYS MF9170 / i-SENSYS MF9130 / i-SENSYS MF8450

1) Remove the ETB unit.(page 7-28)Reference [Removing the ETB Unit]

8.5.6.2 Removing the Manual Feed Pickup Roller

i-SENSYS MF9170 / i-SENSYS MF9130 / i-SENSYS MF8450

1) Remove the manual feed pickup roller [1].
- 2 claws [2]

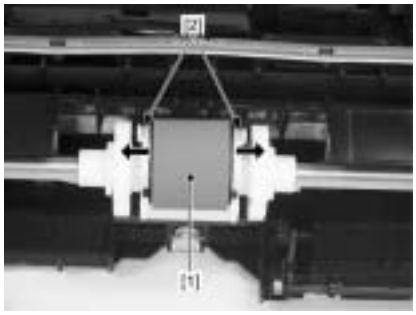

F-8-52

8.5.7 Manual Pickup Solenoid

8.5.7.1 Before Removing the Manual Feed Pickup Solenoid

i-SENSYS MF9170 / i-SENSYS MF9130 / i-SENSYS MF8450

1) Remove the ETB unit.(page 7-28)Reference [Removing the ETB Unit]
2) Remove the fixing assembly.(page 9-5)Reference [Removing the Fixing Assembly]
3) Remove the rear cover unit.(page 11-6)Reference [Removing the Rear Cover Unit]
4) Remove the ADF Unit + Reader Unit.(page 4-7)Reference [Removing the ADF Unit + Reader Unit]
5) Remove the left cover.(page 11-8)Reference [Removing the Left Cover]
6) Remove the right cover.(page 11-7)Reference [Removing the Right Cover]
7) Remove the Control Panel Unit.(page 11-20)Reference [Removing the Control Panel Unit]
8) Remove the Front Upper Cover 1.(page 11-5)Reference [Removing Front Upper Cover 1]
9) Remove the Front Cover Unit.(page 11-4)Reference [Removing the Front Cover Unit]
10) Remove the Pickup Feed Unit.(page 8-17)Reference [Removing the Pickup Feed Unit]

8.5.7.2 Removing the Manual Feed Pickup Solenoid

i-SENSYS MF9170 / i-SENSYS MF9130 / i-SENSYS MF8450

1) Remove the right arm cover [1].
- 4 claws [2]

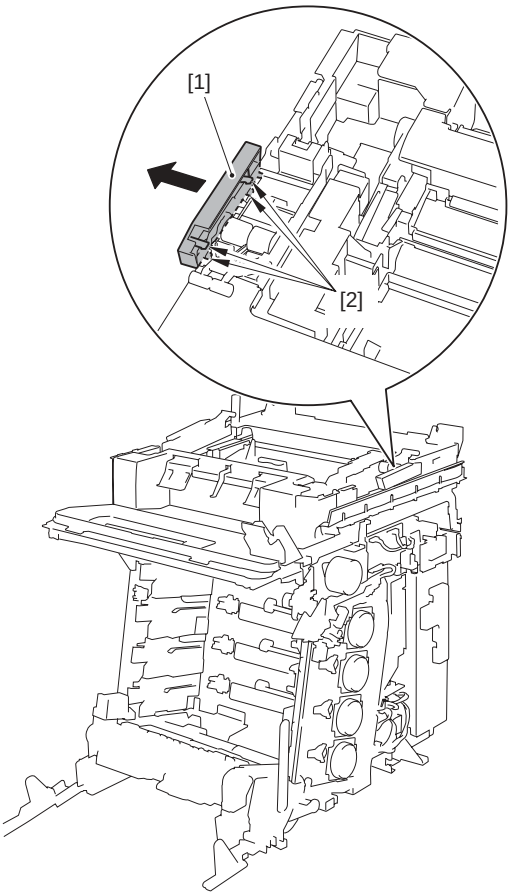

F-8-53

2) Remove the cassette guide [1].
- 1 claw [2]

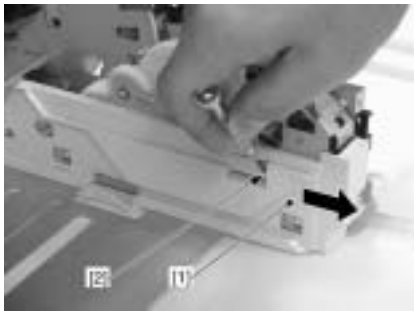

F-8-54

3) Remove the right hinge [1].
- 1 screw [2]

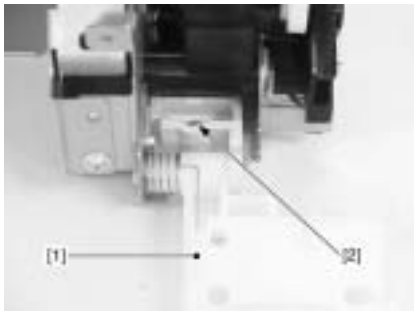

F-8-55

4) Fit the link [1] with the cutoff of the shaft [2] to remove the link.

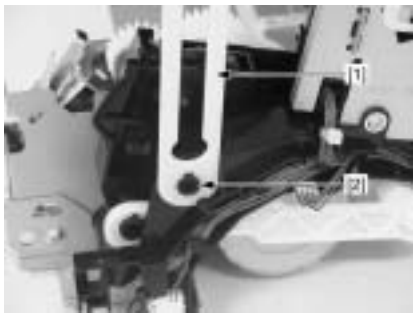

F-8-56

5) Free the cable from the cable guide [1].

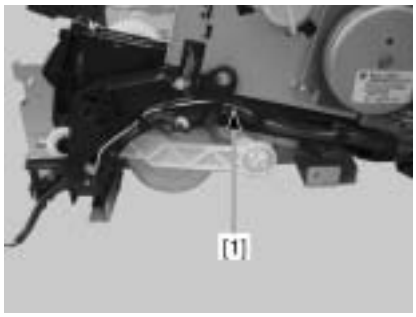

F-8-57

6) Disconnect the 3 connectors [1].

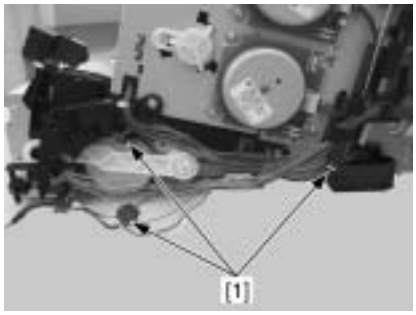

F-8-58

7) Remove the cable guide [1].
- 1 screw [2]
- 2 claws [3]

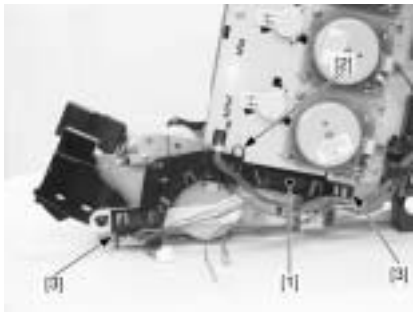

F-8-59

8) Remove the rod [1].
- 1 claw [2]

F-8-60

9) Fit the rod [1] with the cutoff of the shaft [2] to remove the rod.

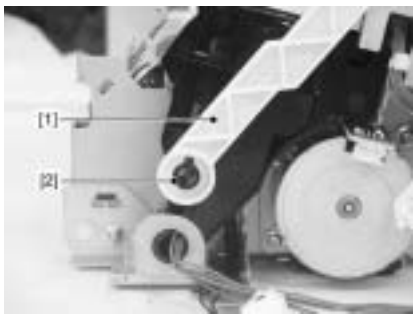

F-8-61

10) Remove the holder [1].
- 2 screws [2]

F-8-62

11) Remove the plate [1].
- 1 screw [2]

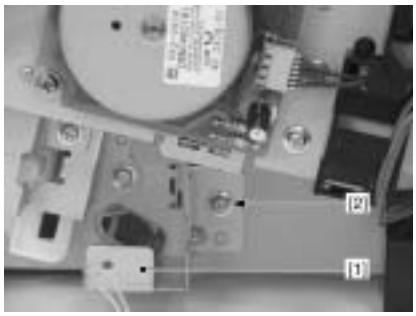

F-8-63

12) Remove the 4 screws [1]

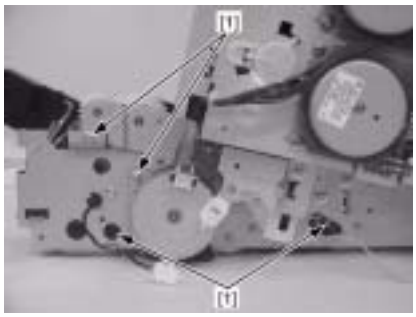

F-8-64

13) Put the right side of the host machine downward to slide the bottom plate [1] for about 30mm from the pickup drive unit [2].

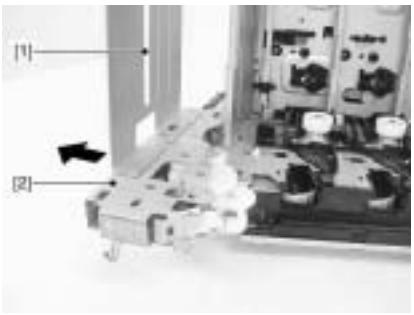

F-8-65

14) Remove the pickup drive unit [1].
- 2 screws [2]

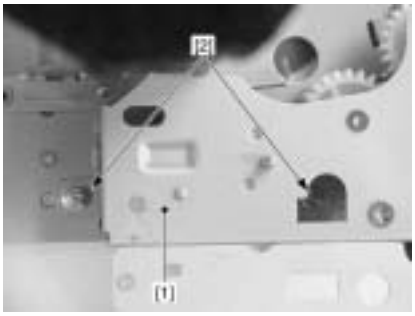

F-8-66

15) Remove the plate [1].
- 4 screws [2]

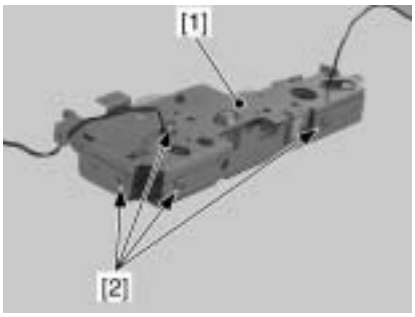

F-8-67

16) Remove the manual feed pickup solenoid [1].
- 1 screw [2]

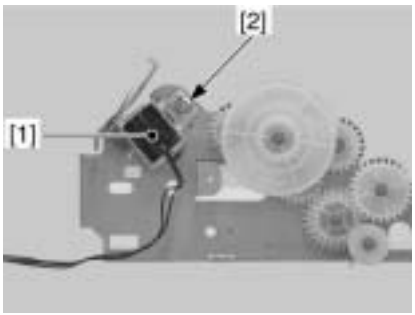

F-8-68

8.5.8 Manual Separation Roller

8.5.8.1 Before Removing the Manual Feed Separation Pad

i-SENSYS MF9170 / i-SENSYS MF9130 / i-SENSYS MF8450

1) Remove the ETB unit.(page 7-28)Reference [Removing the ETB Unit]

8.5.8.2 Removing the Manual Feed Separation Pad

i-SENSYS MF9170 / i-SENSYS MF9130 / i-SENSYS MF8450

1) Remove the cassette.
2) Remove the manual feed separation pad [1].
- 1 screw [2]

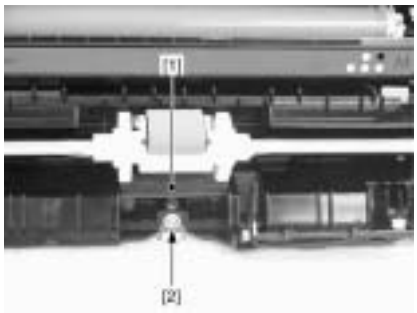

F-8-69

8.5.9 Duplexing Feed Motor

8.5.9.1 Before Removing the Duplex Feed Motor

i-SENSYS MF9170 / i-SENSYS MF9130 / i-SENSYS MF8450

1) Remove the ETB unit.(page 7-28)Reference [Removing the ETB Unit]
2) Remove the rear cover unit.(page 11-6)Reference [Removing the Rear Cover Unit]
3) Remove the ADF Unit + Reader Unit.(page 4-7)Reference [Removing the ADF Unit + Reader Unit]
4) Remove the right cover.(page 11-7)Reference [Removing the Right Cover]

8.5.9.2 Removing the Duplex Feed Motor

i-SENSYS MF9170 / i-SENSYS MF9130 / i-SENSYS MF8450

1) Remove the duplex feed motor [1].
   - 1 connector [2]
   - 2 screws [3]

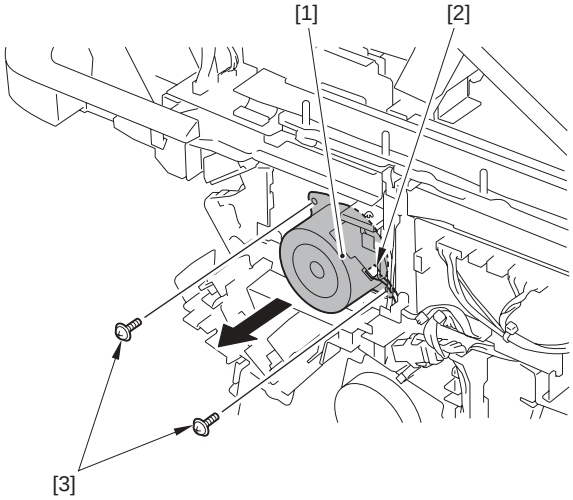

F-8-70

8.5.10 Reverse Unit

8.5.10.1 Before Removing the Reversal Unit

i-SENSYS MF9170 / i-SENSYS MF9130 / i-SENSYS MF8450

1) Remove the ETB unit.(page 7-28)Reference [Removing the ETB Unit]
2) Remove the fixing assembly.(page 9-5)Reference [Removing the Fixing Assembly]
3) Remove the rear cover unit.(page 11-6)Reference [Removing the Rear Cover Unit]
4) Remove the ADF Unit + Reader Unit.(page 4-7)Reference [Removing the ADF Unit + Reader Unit]
5) Remove the left cover.(page 11-8)Reference [Removing the Left Cover]
6) Remove the right cover.(page 11-7)Reference [Removing the Right Cover]
7) Remove the Upper Frame Unit.(page 11-13)Reference [Removing the Upper Frame Unit]

8.5.10.2 Removing the Reversal Unit

i-SENSYS MF9170 / i-SENSYS MF9130 / i-SENSYS MF8450

1) Remove the reversal guide [1].
   - 1 screw [2]
   - 2 claws [3]

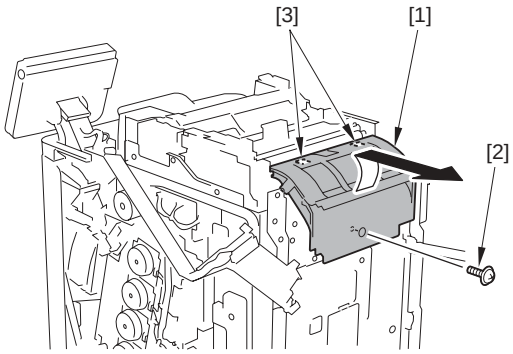

F-8-71

Points to Note At Installation
Check to see that the claw of the reversal guide [1] is installed into the groove of the host machine. If not, install it correctly.

- When the claw is not installed into the groove:
The surface [3] of the reversal roller can be seen from between the reversal guide [1] and the cover of the reversal unit [2].
- When the claw is installed into the groove:
The surface [3] of the roller is behind the reversal guide [1] and cannot be seen.

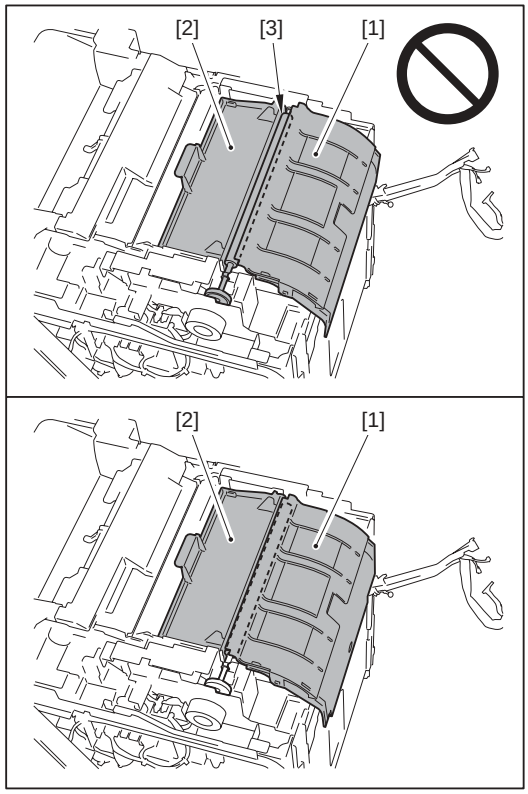

2) Turn the lever [1] in the direction of the arrow to remove the gear unit [2].

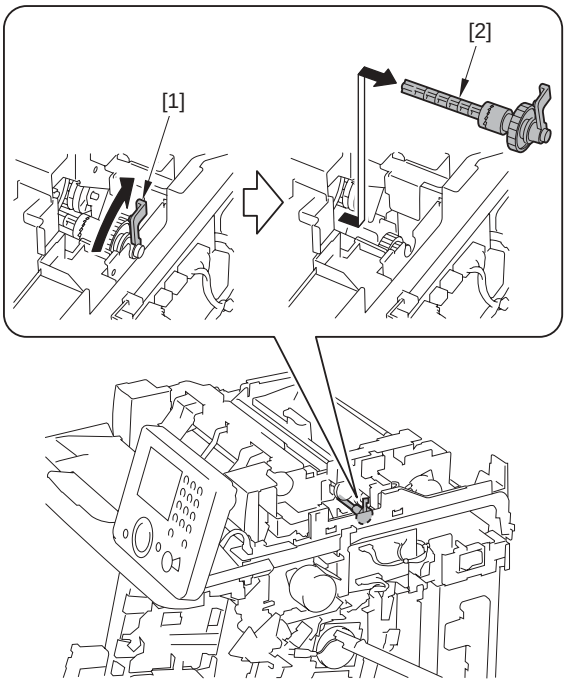

F-8-72

3) Remove the reversal unit [1].
- 3 connectors [2]
- 2 connectors (binding) [3]
- 2 screws [4]

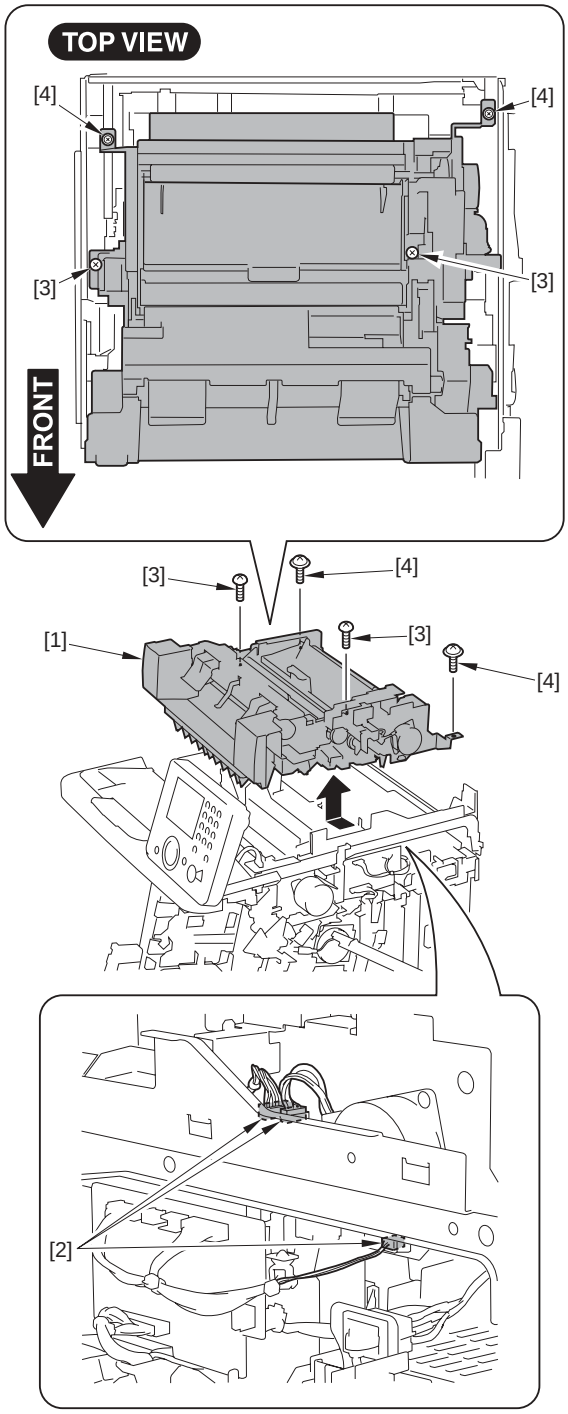

F-8-73

Points to Note at Installation
Fit the lever [1] and the gear unit [2] in the coupling [3] and hold them with your fingers, and then hold the reversal unit [4].
Install the reversal unit [4] by fitting the gear unit [5] with the plate groove [6] in the direction of the arrow.

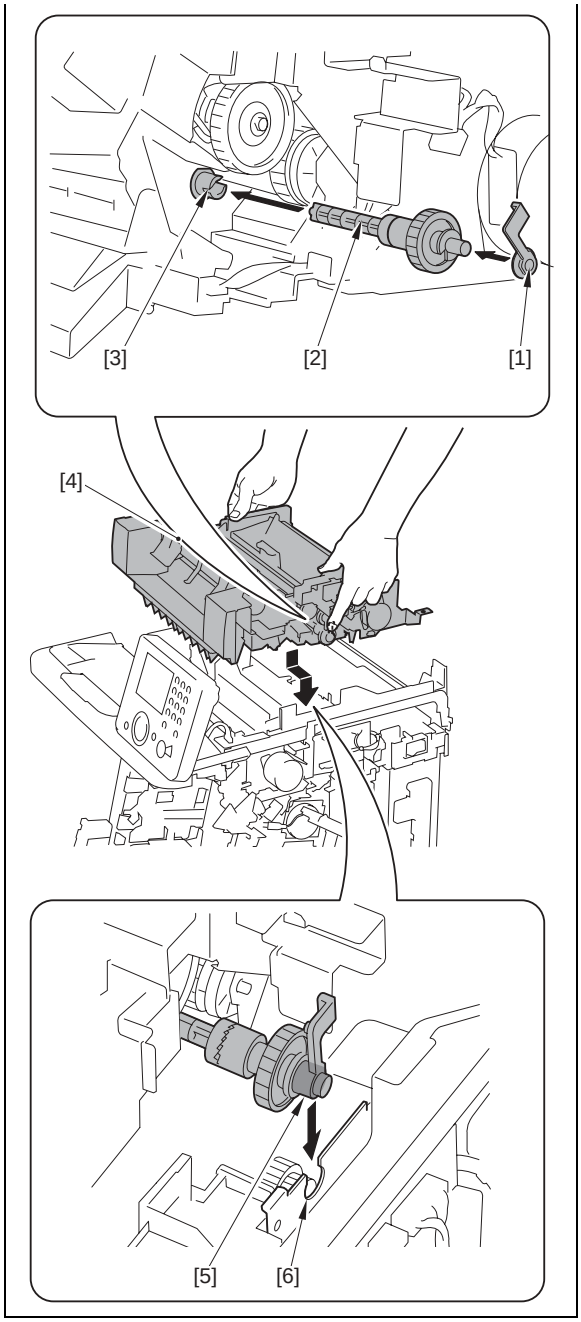

8.5.11 Reverse Motor

8.5.11.1 Before Removing the Reversal Motor

i-SENSYS MF9170 / i-SENSYS MF9130 / i-SENSYS MF8450

1) Remove the ETB unit.(page 7-28)Reference [Removing the ETB Unit]
2) Remove the fixing assembly.(page 9-5)Reference [Removing the Fixing Assembly]
3) Remove the rear cover unit.(page 11-6)Reference [Removing the Rear Cover Unit]
4) Remove the ADF Unit + Reader Unit.(page 4-7)Reference [Removing the ADF Unit + Reader Unit]
5) Remove the left cover.(page 11-8)Reference [Removing the Left Cover]
6) Remove the right cover.(page 11-7)Reference [Removing the Right Cover]
7) Remove the Upper Frame Unit.(page 11-13)Reference [Removing the Upper Frame Unit]
8) Remove the Reversal Unit.(page 8-25)Reference [Removing the Reversal Unit]

8.5.11.2 Removing the Reversal Motor

i-SENSYS MF9170 / i-SENSYS MF9130 / i-SENSYS MF8450

1) Remove the belt [2] from the motor gear [1].

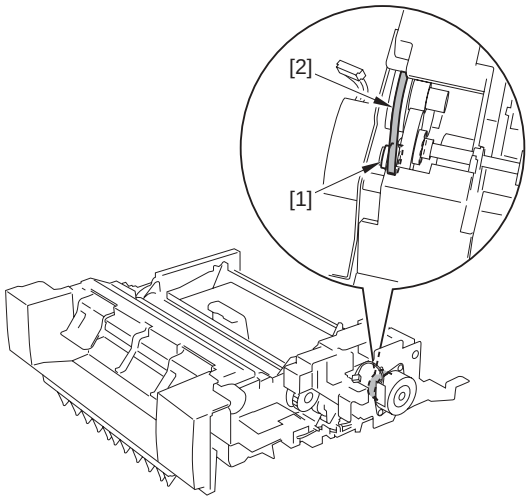

F-8-74

2) Remove the reversal motor [1].
   - 2 screws [2]

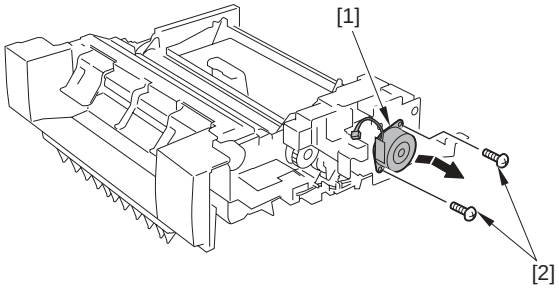

F-8-75

8.5.12 Reverse Solenoid

8.5.12.1 Before Removing the Reversal Solenoid

i-SENSYS MF9170 / i-SENSYS MF9130 / i-SENSYS MF8450

1) Remove the ETB unit.(page 7-28)Reference [Removing the ETB Unit]
2) Remove the fixing assembly.(page 9-5)Reference [Removing the Fixing Assembly]
3) Remove the rear cover unit.(page 11-6)Reference [Removing the Rear Cover Unit]
4) Remove the ADF Unit + Reader Unit.(page 4-7)Reference [Removing the ADF Unit + Reader Unit]
5) Remove the left cover.(page 11-8)Reference [Removing the Left Cover]
6) Remove the right cover.(page 11-7)Reference [Removing the Right Cover]
7) Remove the Upper Frame Unit.(page 11-13)Reference [Removing the Upper Frame Unit]
8) Remove the Reversal Unit.(page 8-25)Reference [Removing the Reversal Unit]

8.5.12.2 Removing the Reversal Solenoid

i-SENSYS MF9170 / i-SENSYS MF9130 / i-SENSYS MF8450

1) Remove the screw [1] to move the harness guide [2] in the direction of the arrow.

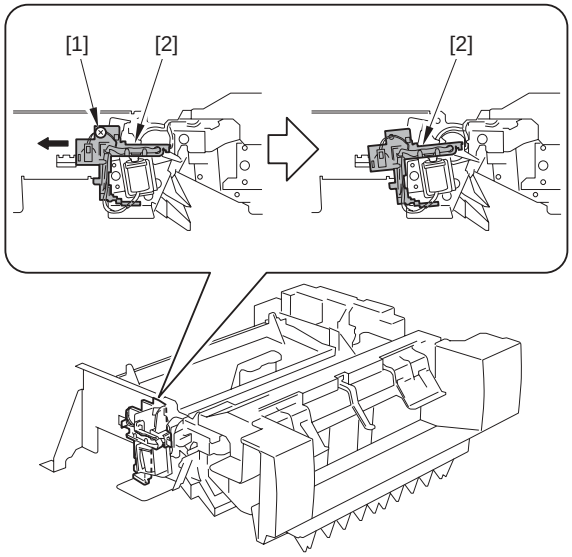

F-8-76

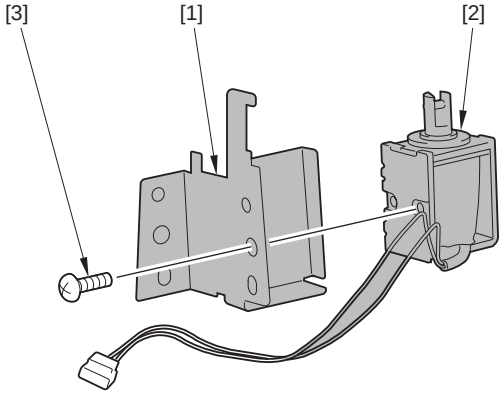

F-8-78

2) Disconnect the connector [1] and free the harness [2] from the guide [3].
3) Remove the reversal solenoid unit [4].
- 1 screw [5]
- 1 solenoid pin [6]
- 1 solenoid arm [7]

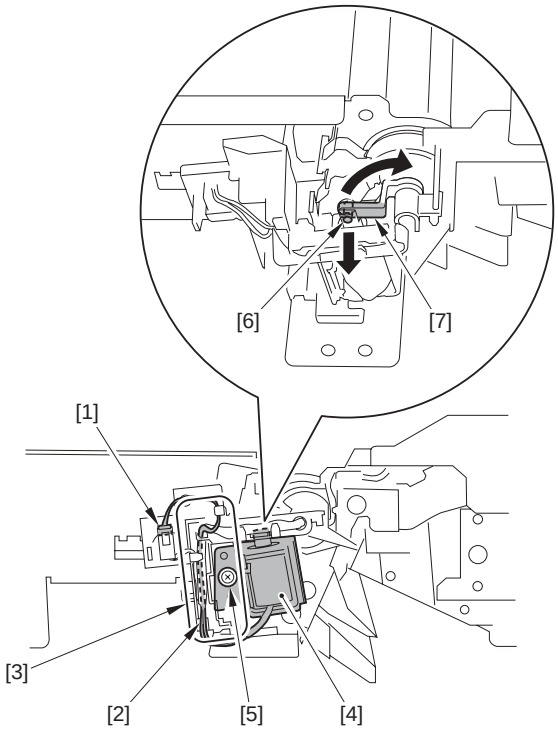

F-8-77

4) Remove the reversal solenoid [2] from the fixing plate [1].
- 1 screw [3]

Chapter 9 Fixing System

Contents

9.1 Overview/Configuration

9.1.1 Overview

i-SENSYS MF9170 / i-SENSYS MF9130 / i-SENSYS MF8450

The ceramic heater fixing method is adopted on the fixing assembly of this machine.
Temperature control of the fixing assembly is performed by the fixing control circuit and the fixing heater safety circuit according to the commands from CPU (IC1001) on DC controller PCB.

Fixing heater (H1)
A ceramic heater for heating the fixing sleeve. The heater has one piece of U-shaped heating element that practically works as 2 heaters.

Thermistors (TH1, TH2)
Thermistors for detecting the fixing temperature. The following 2 types are used.
- Fixing main thermistor (TH1): contact type thermistor for detecting the fixing sleeve temperature that is located at the center inside the fixing sleeve.
- Fixing sub thermistor (TH2): contact type thermistor for detecting the fixing heater temperature that is located at the left edge of the fixing heater.

Fixing thermal switch (TP1A)
Non-contact type thermal switch for preventing the fixing heater from overheating that is located at the center of the fixing heater. When the fixing heater overheats, the contact point opens and power to the fixing heater is cut.

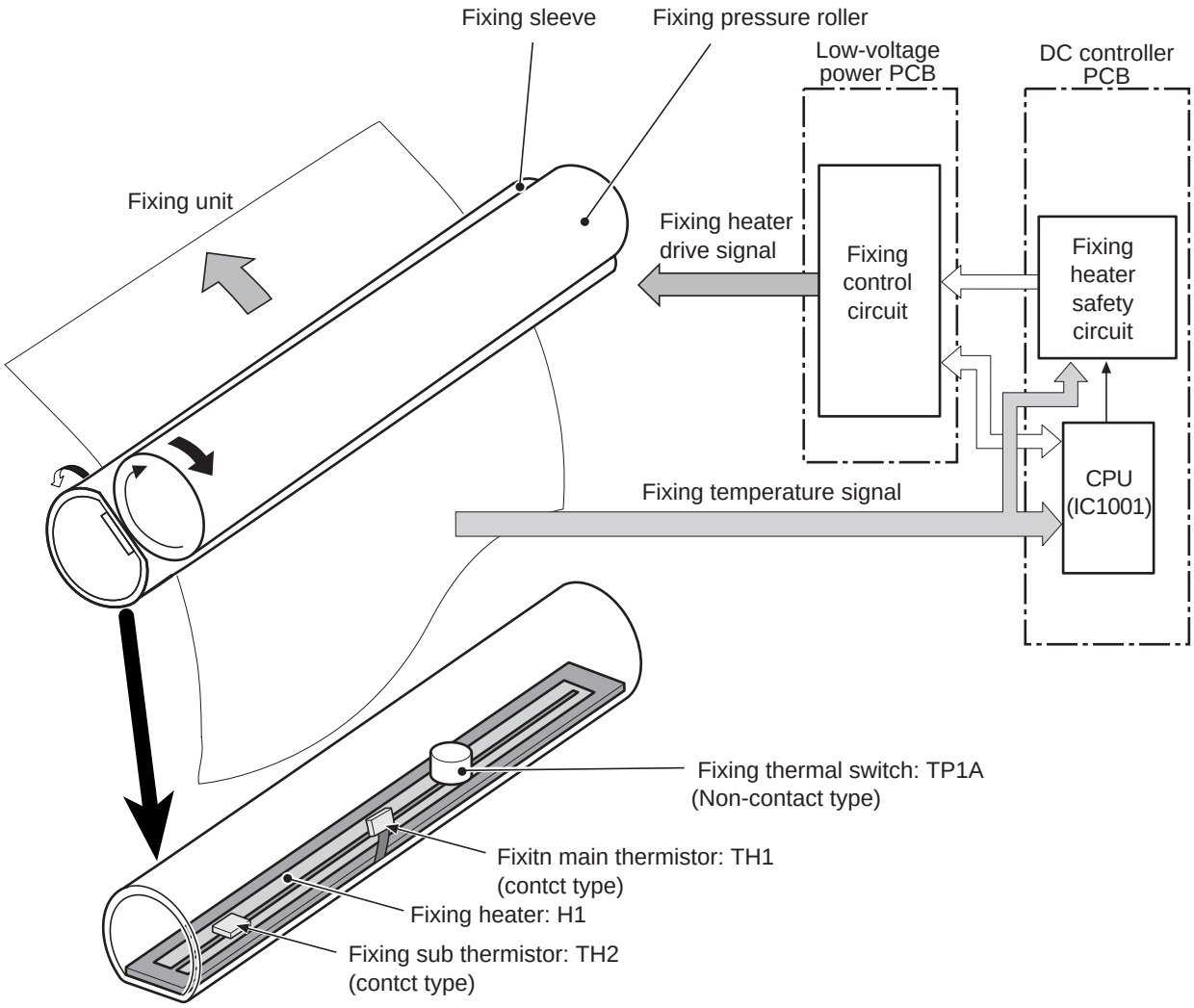

F-9-1

9.2 Various Control Mechanisms

9.2.1 Controlling the Temperature of the Fixing Unit

9.2.1.1 Fixing Temperature Control

i-SENSYS MF9170 / i-SENSYS MF9130 / i-SENSYS MF8450

The fixing temperature control is to detect the surface temperature of the fixing sleeve and the fixing heater, and to maintain the fixing heater temperature at targeted value according to the detected results.

The fixing sleeve temperature is monitored by the fixing main thermistor (TH1) and the fixing heater temperature is monitored by the fixing sub thermistor (TH2). Results are output to the DC controller as the fixing temperature detection signal (MAINTH, SUBTH).
CPU (IC1001) on the DC controller PCB monitors the voltage of the fixing temperature detection signals and outputs the fixing heater drive signal (FSRD) to the fixing control circuit based on the voltage value.
The fixing control circuit controls the fixing temperature based on the fixing heater drive signal so that the heater can be maintained at the targeted temperature.

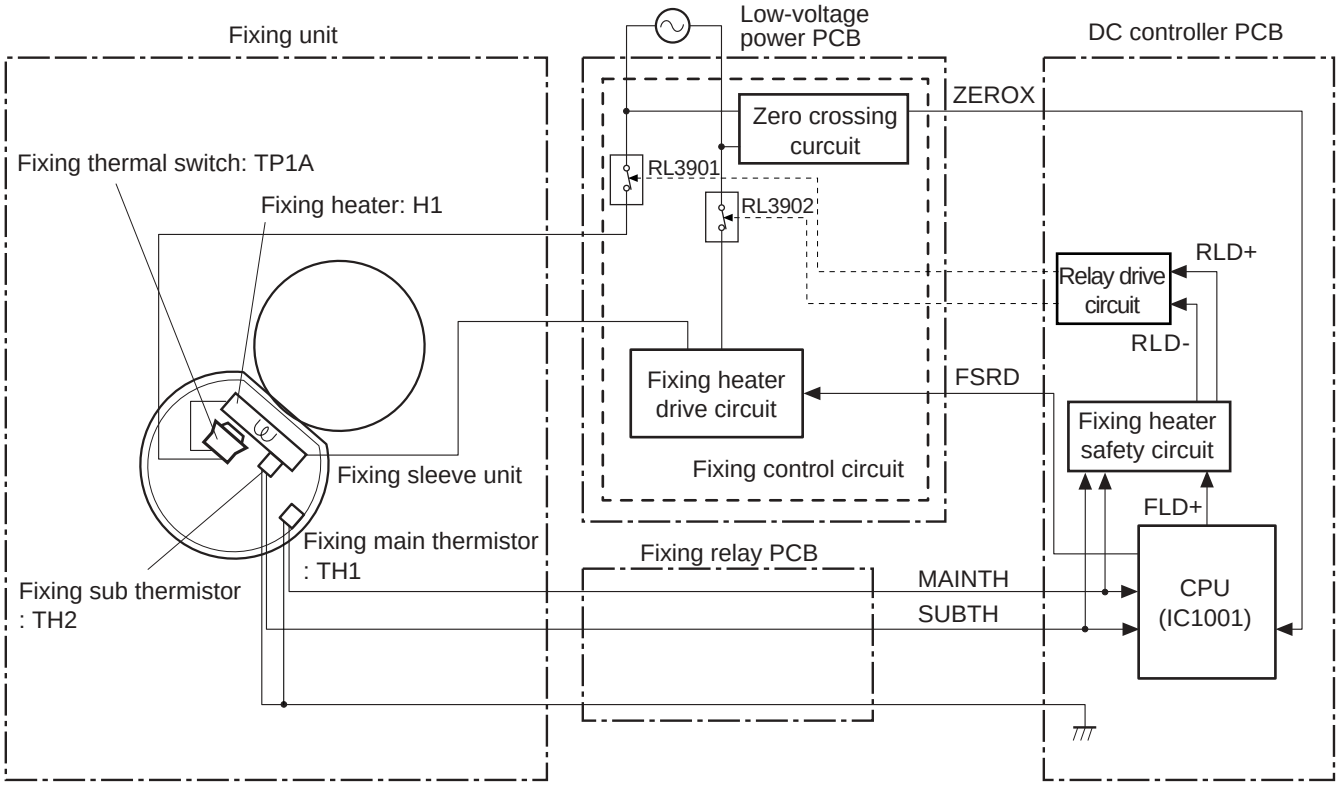

F-9-2

The fixing temperature controls are divided into the following 5 types.

Initial rotation temperature control
CPU firstly turns ON the fixing heater for a specified period at power-ON and then, drives the fixing motor.
In a low temperature status such as at initial operation, the fixing sleeve may get damaged when the paper is fed because the grease inside the fixing sleeve is not yet smooth enough.
This control is to melt the grease inside the fixing sleeve by heating the fixing heater before the fixing motor drives and to lubricate the sleeve in order to prevent the fixing sleeve from being damaged.
Fixing sub thermistor (TH2) is used to detect the temperature.

Stand-by temperature control
CPU controls the fixing heater temperature at 115 deg C to 120 deg C.
This control is to shorten the print operation time from the STBY period to print completion by keeping the fixing temperature at the specified value in stand-by mode.
This control can be canceled according to the command to the CPU from the main controller.

Start-up temperature control
CPU heats the fixing heater to the start-up temperature in order to warm the fixing assembly up to the required temperature for fixing.
The start-up temperature varies depending on the elapsed time since previous print completion, paper types, and environments.
Fixing sub thermistor (TH2) is used to detect the temperature.

Print temperature control
CPU maintains the temperature of the fixing sleeve at its targeted temperature during print operation.
CPU gradually switches the target temperature in one printing process depending on the number of print. The targeted temperature varies depending on the paper types.
The fixing main thermistor (TH1) is used to detect the temperature.

Between-sheets temperature control
At the continuous printing in low-speed mode, the pressure roller may be overheating between sheets.
CPU reduces the temperature of hexing heater below the normal fixing temperature between sheets. The targeted temperature varies according to the between-sheets intervals and the paper types.
The fixing main thermistor (TH1) is used to detect the temperature.

9.2.1.2 Throughput Down Control

i-SENSYS MF9170 / i-SENSYS MF9130 / i-SENSYS MF8450

This control is to prevent an overheating at both ends of the fixing sleeve by keeping the required speed for paper feeding and, in addition, extending the pickup interval.

At continuous printing with the paper width narrower than A4 size (210 mm), the end of fixing sleeve may overheat.
If no paper is detected by the paper displacement sensor (SR714) on the registration roller at paper feed and, in addition, a detected temperature by the fixing sub thermistor (TH2) exceeds the specified temperature, it is considered that either universal size paper or narrower width paper than A4 size is fed.

In this case, DC controller performs the throughput down control step-by-step according to the detected temperature by the fixing sub thermistor.
When the detected temperature is 250 deg C or higher, the controller extends the pickup interval by keeping the paper feed speed to lower the throughput. The sheet interval gets longer, the fixing sleeve temperature becomes lower.
Firstly, 1st additional interval is added to the default pickup interval followed by paper feed.
If after 1st additional interval, the sub-thermistor again detects temperature of 250 deg C or higher and there is no change in the paper interval after five sheets, 2nd additional interval is added. The 3rd and 4th intervals are added similarly.

T-9-1

Fixing sub thermistor temperature	Additional intervals (sec)			
	1st	2nd	3rd	4th
250 deg C	+2	+6	+10	+14
260 deg C	+6	+10	+14	+18
270 deg C	+10	+14	+18	+22

When the fixing sub thermistor detects the temperature below 90 deg C for 2.5 sec or more after the throughput down control, throughput down control is canceled.

9.2.2 Fixing Pressurizing/Release Control

9.2.2.1 Fixing Sleeve Pressuring/releasing Control

i-SENSYS MF9170 / i-SENSYS MF9130 / i-SENSYS MF8450

This machine controls the pressure between the fixing sleeve and the fixing pressure roller as needed to prevent the fixing failure and the breakdown of fixing assembly (see MEMO).

Pressuring/releasing of the fixing sleeve is performed by the fixing motor (M1). When the pressure spring pushes the pressure arm, the pressure is applied on the fixing film. When the fixing motor rotates reversely, the fixing pressure release cam pushes the pressure arm and the pressure on the fixing film is reduced.
The pressuring/releasing status of fixing sleeve has following 3 conditions depending on the position of the fixing pressure releasing cam.

- Pressurized condition (home position)
  Fixing film is pushed by the pressure roller.
  This condition is called at power-ON, the front cover closed and the cancel of sleep condition.

- Released condition
  The fixing film is disengaged with the pressure roller.
  This condition is called at power-OFF, JAM occurrence and the entry of sleep mode.

- Slightly pressurized condition
  The fixing film is pushed slightly by the pressure roller.
  This condition is called at printing envelope.

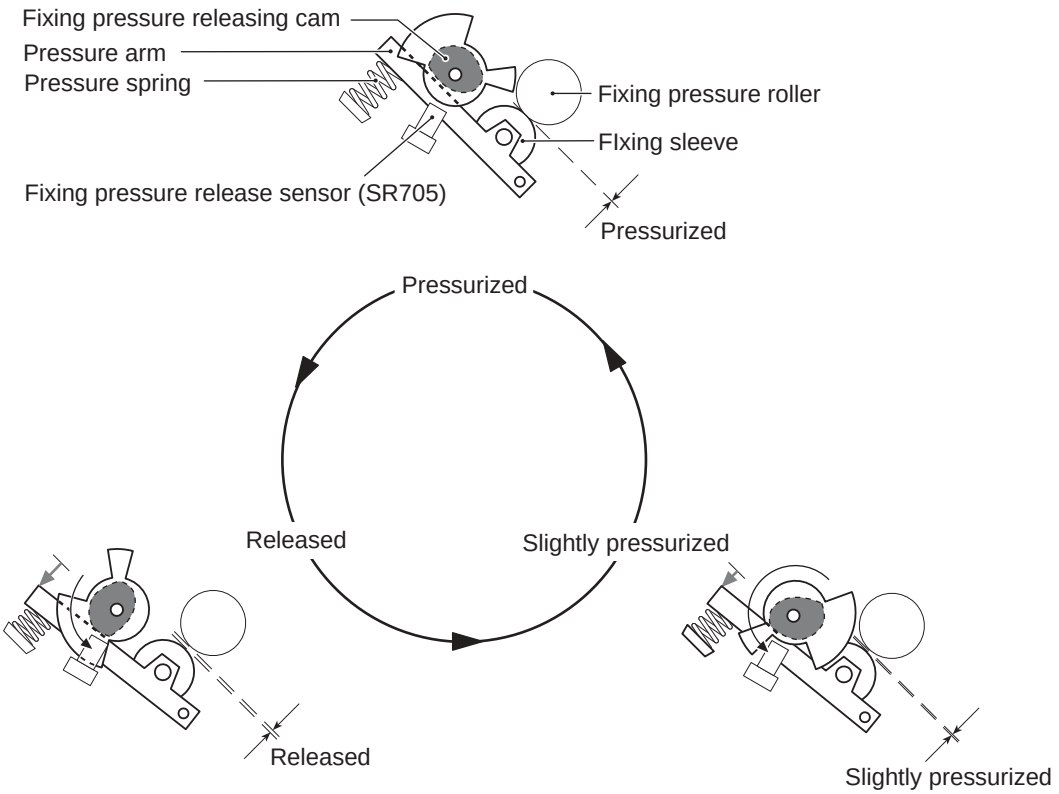

F-9-3

The pressuring/releasing status of the fixing sleeve is identified by ON/OFF status of the fixing pressure release sensor (SR705) and the rotation period of the fixing motor (M1).

MEMO:
If pulling out jam paper with fixing sleeve pressured, the fixing sleeve may get damaged. In addition, if the pressurized condition continues for a long time, a mark may remain on the nip of the fixing sleeve.
To prevent those, there is a mechanism for releasing the fixing sleeve pressure.

Error Codes:

E840	Error in pressure release mechanism When the pressure control is commanded, if the pressurized condition (home position) cannot be detected after 2.5 sec, the machine stops and an error code is displayed on a control panel. Error in no fixing assembly When the pressure control is commanded, if the pressure release sensor (SR705) is not turned ON after 2.5 sec, the machine stops and a message indicating the absence of the fixing assembly is displayed.

9.3 Protection Function

9.3.1 Overview

i-SENSYS MF9170 / i-SENSYS MF9130 / i-SENSYS MF8450

This machine has the 3 types of protective functions for fixing assembly.
If an overheating is detected at the fixing assembly, those protective functions stop the power to the fixing heater.

Protective function by CPU
If the voltage of the fixing main thermistor temperature detection signal (MAINTH) is approx. 1.26 V or lower (equivalent to 240 deg C or higher), or the voltage of the fixing sub thermistor temperature detection signal (SUBTH) is approx. 0.48 V or lower (equivalent to 280 deg C or higher), the CPU determines the fixing assembly failure and performs the following processing.
1) CPU stops output the fixing heater drive signal (FSRD) and turns the heater OFF.
2) CPU stops output the fixing sub thermistor relay signal (RLD+).
3) The relay drive circuit releases the relays (RL3901 and RL3902) to stop power to the fixing heater.

Protective function by fixing heater safety circuit
If the voltage of the fixing main thermistor temperature detection signal (MAINTH) is 1.15 V or lower (equivalent to 250 deg C or higher), or the voltage of the fixing sub thermistor temperature detection signal (SUBTH) is approx. 0.44 V or lower (equivalent to 290 deg C or higher), the fixing heater safety circuit determines the fixing assembly failure and performs the following processing.
1) The circuit stops output the main thermistor relay drive (RLD-).
2) The circuit stops output the sub thermistor relay drive signal (RLD+).
3) The relay drive circuit releases the relays (RL3901 and RL3902) to stop the power to the fixing heater.

Protective function by thermal switch
When the fixing heater overheats and the detected temperature of the fixing thermal switch (TP1A) exceeds approx. 250 deg C, the fixing thermal switch breaks contact of the line and the power supply to the fixing heater is immediately cut off.

> ⚠
> The actual temperature of the fixing heater is about 40 degrees higher than the detected temperature by the fixing thermal switch, as there are some space between the thermal switch and the fixing heater.

9.3.2 Failure Detection

i-SENSYS MF9170 / i-SENSYS MF9130 / i-SENSYS MF8450

If any of the following conditions is true, CPU determines the fixing assembly failure. In this case, it stops the machine and displays an error code on a control panel.

Start-up failure (Warm-up failure)
If any of the followings is detected, CPU determines the start-up failure.
- If the detected temperature of the fixing sub thermistor does not reach 130 deg C within 40 seconds from energization to the fixing heater during wait period.
- If the fixing assembly does not enter ready within 40 seconds from energization to the fixing heater at print operation start.

Abnormal low temperature of fixing main thermistor
If any of the followings is detected, CPU determines the abnormal low temperature of the fixing main thermistor.
- If the detected temperature of the fixing main thermistor is kept below 40°C for 4 seconds continuously from energization of fixing heater until residual paper detection is completed during wait period.
- If the detected temperature of the fixing main thermistor is kept below 70 degC for 4 seconds continuously from energization of fixing heater until paper reaches the fixing assembly at the start of print operation.
- If the detected temperature of the fixing main thermistor is kept below 130 deg C for 0.5 second continuously from paper reaches the fixing unit until heater is turned OFF during print period.

Abnormal high temperature of fixing main thermistor
The CPU determines the abnormal high temperature of fixing main thermistor, if the detected temperature of the fixing main thermistor is kept 240 deg C or higher for 0.1 second.

Abnormal low temperature of sub thermistor
If any of the followings is detected, CPU determines the abnormal low temperature of the fixing sub thermistor.
- If the detected temperature of the fixing sub thermistor is kept below 60 deg C for 4 seconds continuously from energization of the fixing heater until residual paper detection is completed during wait period.
- If the detected temperature of the sub thermistor is kept below 90 deg C for 2.5 seconds continuously from energization of the fixing heater until paper reaches the fixing assembly at the start of print operation.
- If the detected temperature of the fixing sub thermistor is kept below 120 deg C for 0.5 second continuously, from paper reaches the fixing assembly until heater is turned OFF during print period.
- If the detected temperature of fixing sub thermistor is kept below 50 deg C for 5 seconds continuously during stand-by temperature control.

Abnormal high temperature of fixing sub thermistor
The CPU determines the abnormal high temperature of fixing sub thermistor, if the detected temperature of the fixing sub thermistor is kept 280 deg C or higher continuously for 0.5 second.

Drive circuit error
CPU determines the drive circuit error, if the zero crossing signal (ZEROX) is kept on being out of frequency range 40 Hz to 70 Hz for 5 seconds.

9.4 Parts Replacement Procedure

9.4.1 Fixing Unit

9.4.1.1 Removing the Fixing Assembly

i-SENSYS MF9170 / i-SENSYS MF9130 / i-SENSYS MF8450

Points to Note At Operation
When removing the fixing assembly, perform the operation after the fixing assembly is surely cooled. The fixing assembly just after printing may cause burn injury.

1) Open the ADF Unit + Reader Unit [1].
2) Open the fixing cover [2].
3) Raise the control panel unit[3] forward.

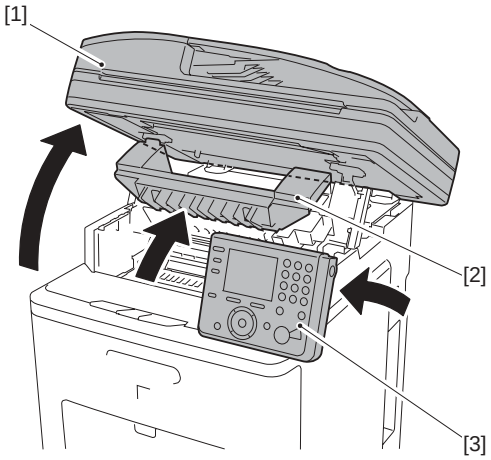

F-9-4

4) While pressing the fixing assembly lever [1] (2 points at left and right), remove the fixing assembly [2].

Points to Note When holding the fixing assembly
Be sure to hold the fixing assembly with three fingers or more when lifting the fixing assembly to prevent it from falling.

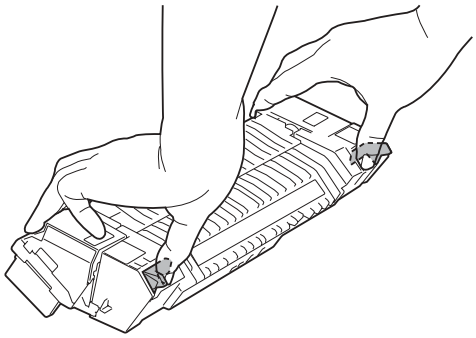

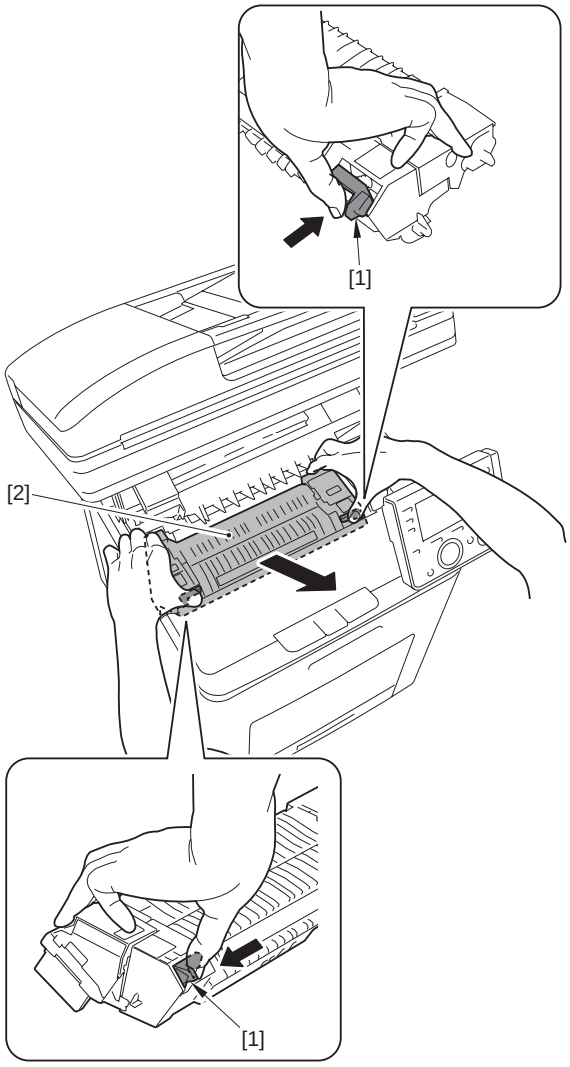

F-9-5

9.4.2 Fixing Sleeve Unit

9.4.2.1 Before Removing the Fixing Sleeve Unit

i-SENSYS MF9170 / i-SENSYS MF9130 / i-SENSYS MF8450

1) Remove the fixing assembly.(page 9-5)Reference [Removing the Fixing Assembly]

9.4.2.2 Removing the Fixing Sleeve Unit

i-SENSYS MF9170 / i-SENSYS MF9130 / i-SENSYS MF8450

1) Turn the gear [1] in the direction of the arrow to the position [2].

F-9-6

F-9-7

2) Remove the screw [1].

F-9-8

3) Remove the claw [1] and the claw [2] in the order, and remove the cover [3].

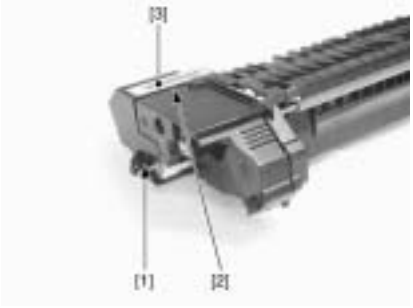

F-9-9

4) Remove the cover [1].
- 2 screws [2]
- 1 claw [3]

F-9-10

5) Remove the guide [1].
- 2 claws [2]

F-9-11

F-9-12

When removing the guide, be sure to set a protection sheet [1] around the fixing sleeve to prevent damage/scar.

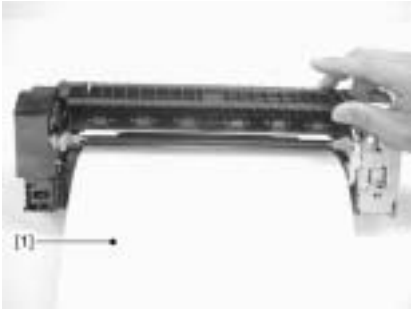

6) Remove the cover [1].
- 1 claw [2]

F-9-13

7) Remove the screw [1].

F-9-14

8) Remove the connector assembly [1].
- 1 claw [2]

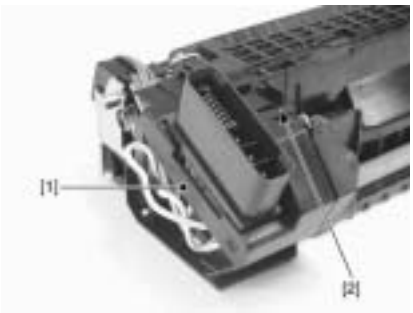

F-9-15

9) Remove the screw [1].

F-9-16

10) Remove the screw [1].

F-9-17

11) Remove the screw [1].

F-9-18

12) Slide the side plate [1] to remove the unit [2].

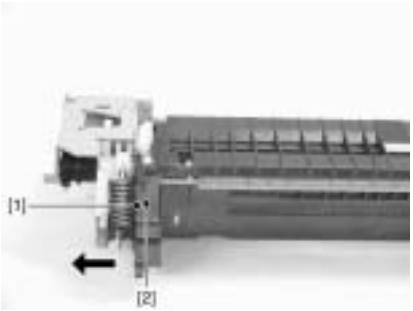

F-9-19

13) Remove the plate [1].
- 1 screw [2]

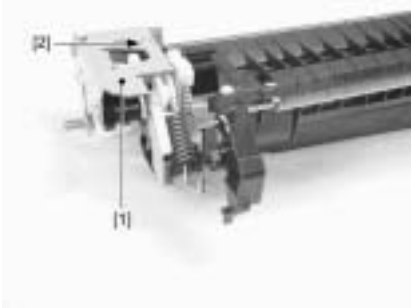

F-9-20

14) Remove the 2 parts of [1] from the side plate to remove the unit [2].
- 2 claws [3]

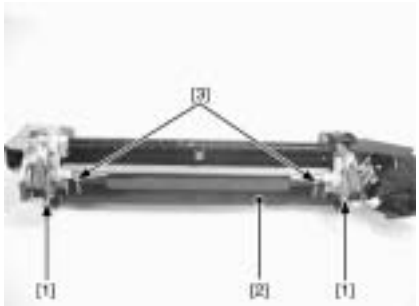

F-9-21

15) Remove the spring holder [1] to remove the spring [2].

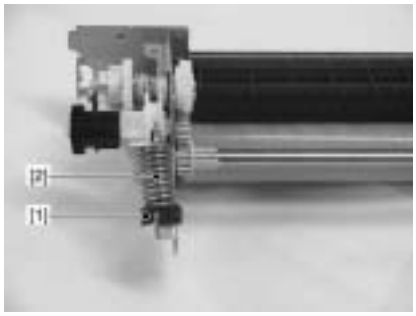

F-9-22

16) Remove the plate [1].

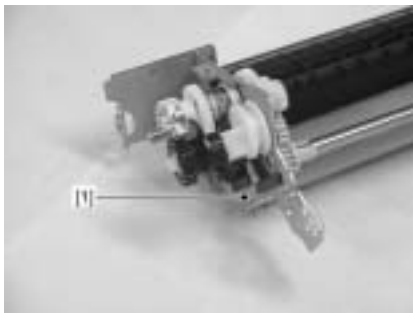

F-9-23

17) Remove the spring holder [1] to remove the spring [2].

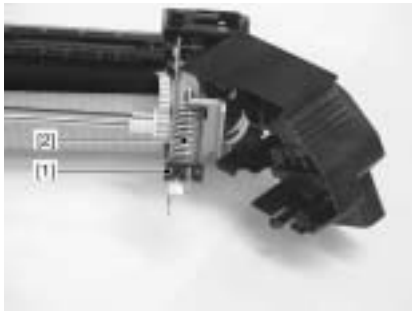

F-9-24

18) Remove the plate [1].

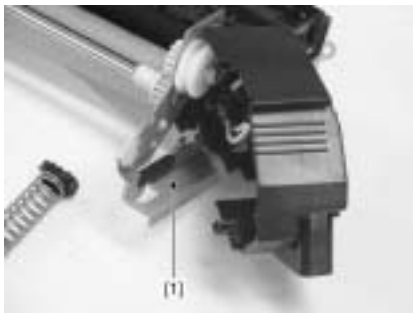

F-9-25

19) Disconnect the connector [1].

F-9-26

20) Remove the sensor unit [1].
- 1 screw [2]

F-9-27

21) Remove the fixing sleeve unit [1].

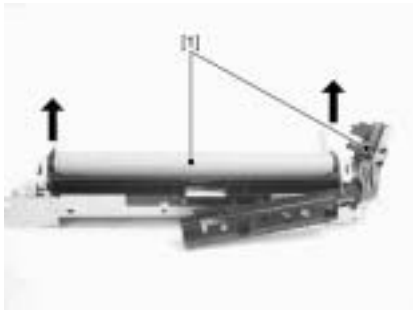

F-9-28

22) Remove the cover [1].
- 2 claws [2]

F-9-29

23) Remove the PCB [1].

- 1 claw [2]
- 3 connectors [3]

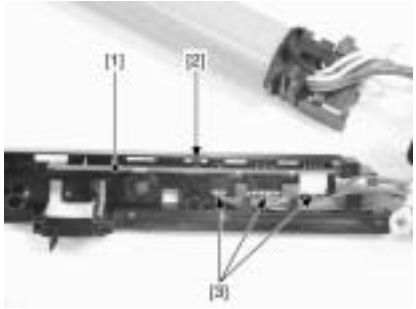

F-9-30

- Do not disassemble the fixing sleeve unit in the field.
Disassembling it may cause a functional fault.

9.4.3 Fixing Drive Unit

9.4.3.1 Before Removing the Fixing Drive Unit

i-SENSYS MF9170 / i-SENSYS MF9130 / i-SENSYS MF8450

1) Remove the ETB unit.(page 7-28)Reference [Removing the ETB Unit]
2) Remove the fixing assembly.(page 9-5)Reference [Removing the Fixing Assembly]
3) Remove the rear cover unit.(page 11-6)Reference [Removing the Rear Cover Unit]
4) Remove the ADF Unit + Reader Unit.(page 4-7)Reference [Removing the ADF Unit + Reader Unit]
5) Remove the left cover.(page 11-8)Reference [Removing the Left Cover]
6) Remove the right cover.(page 11-7)Reference [Removing the Right Cover]
7) Remove the Upper Frame Unit.(page 11-13)Reference [Removing the Upper Frame Unit]
8) Remove the Reversal Unit.(page 8-25)Reference [Removing the Reversal Unit]

9.4.3.2 Removing the Fixing Drive Unit

i-SENSYS MF9170 / i-SENSYS MF9130 / i-SENSYS MF8450

1) Open the cable holder [1] to remove the flat cable [2].
2) Disconnect the USB connector [3].

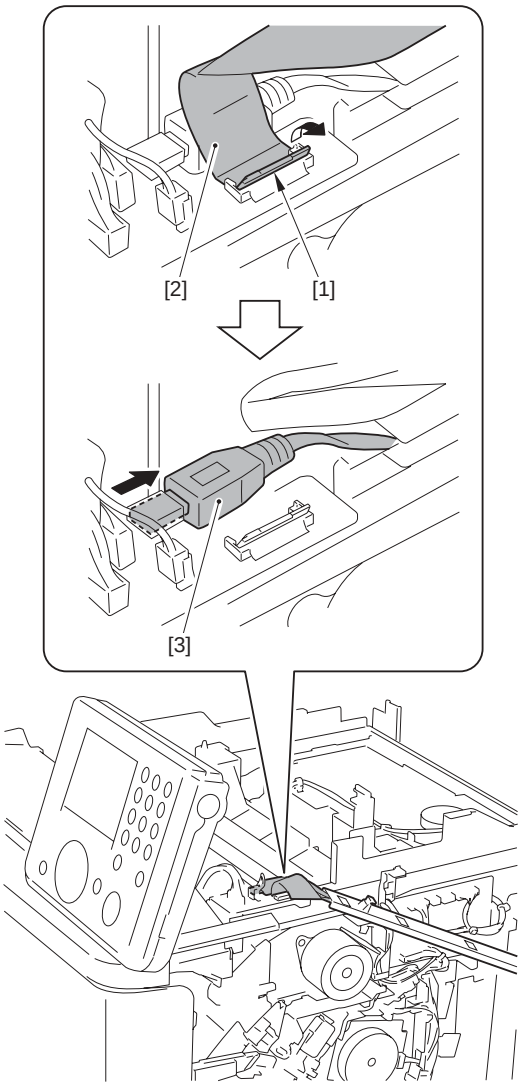

F-9-31

3) Remove the cover [1].
   - 1 screw [2]

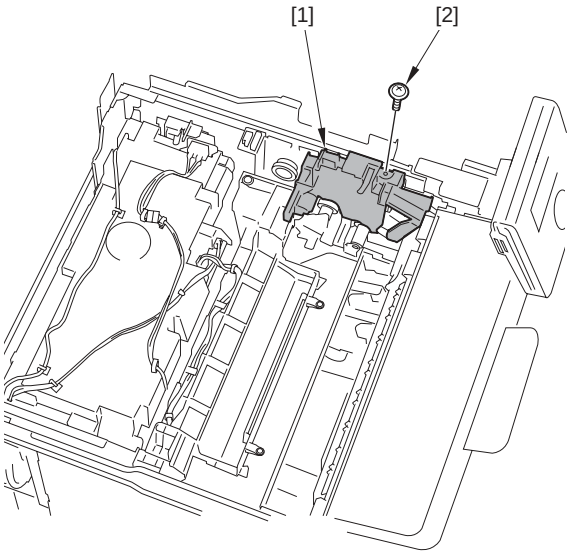

F-9-32

4) Disconnect the connector [1] and remove the 2 harness bands [2] and the harness [3] from the harness guide cover [4].

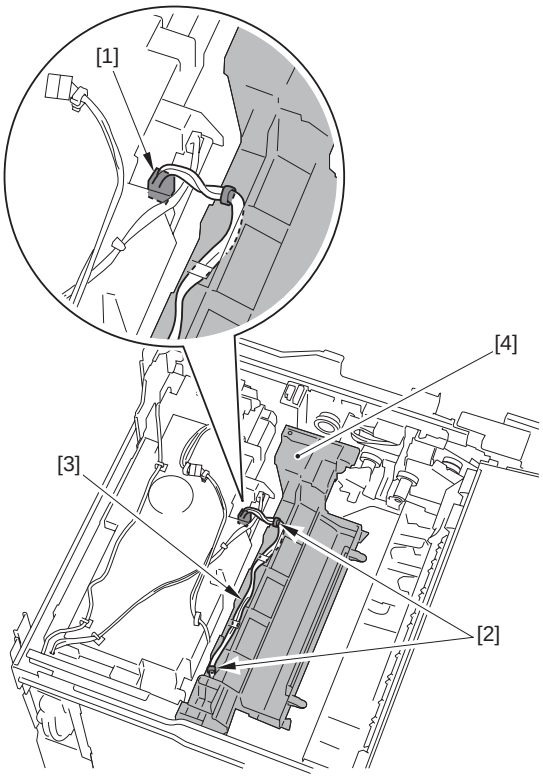

F-9-33

5) Remove the 4 screws [1] and the screw (binding) [2] to remove the harness guide cover [3].

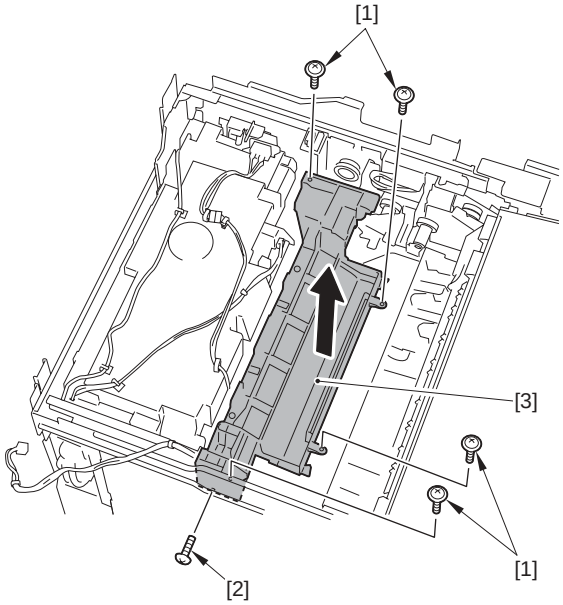

F-9-34

6) Disconnect the connector [1] and free the harness [2] from the harness guide [3].
7) Remove the screw [4] to remove the switch unit [5].

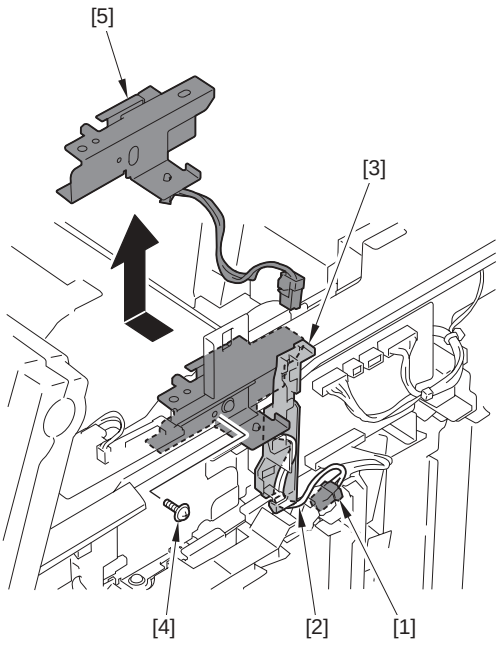

F-9-35

8) Remove the harness guide [1].
   - 1 claw [2]
9) Remove the screw [3], move the interlock switch unit [4] in the direction of the arrow and release the hook [5] to remove the interlock switch unit [4].

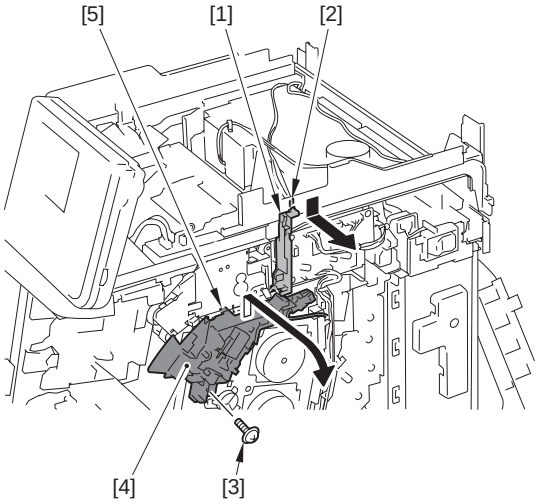

F-9-36

10) Push the lever [1], and remove the screw [3] while lowering the projection [2].
11) Remove the 2 screws [4], move the duplex feed drive unit [5] in the direction of the arrow and release the 2 projections [6] to remove the duplex feed drive unit [5].

Point to Note at Work
The screw [3] is located at approx. 20mm rear side. Do not drop the screw [3] when removing/tightening.

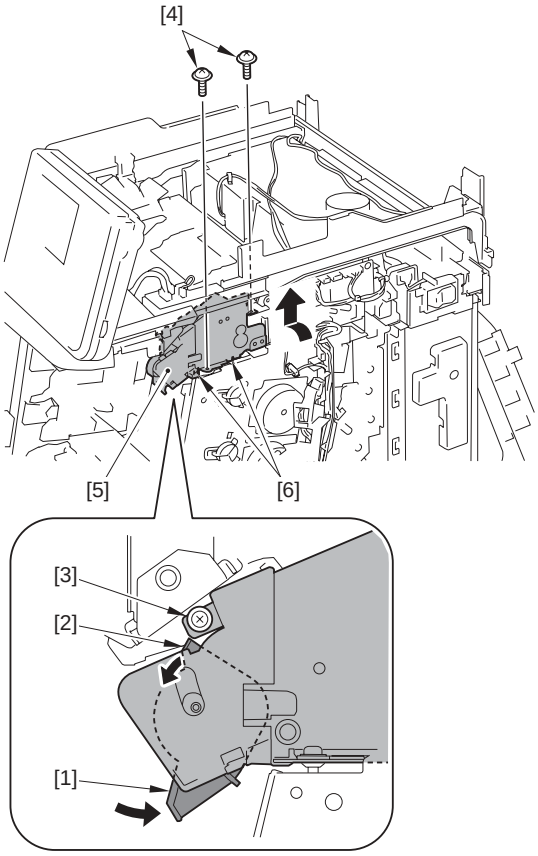

F-9-37

12) Disconnect the 2 connectors [1] and free the harness [2] from the harness guide [3] and the wire saddle [4].

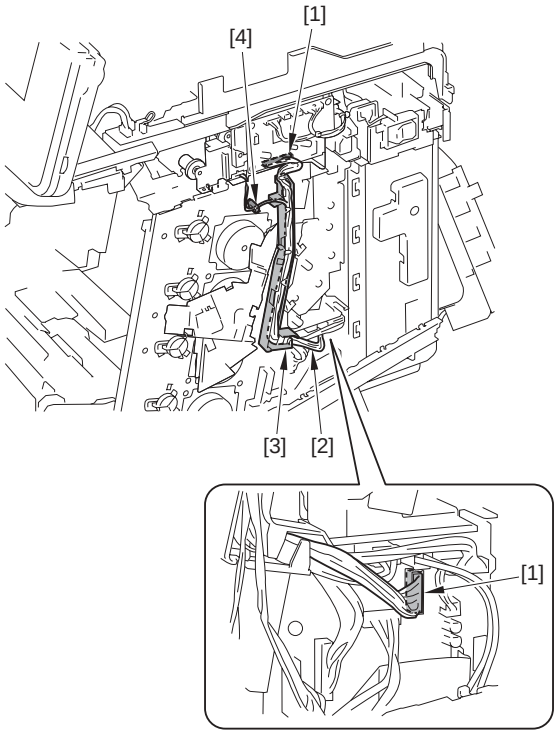

F-9-38

13) Remove the 3 screws [1], move the fixing drive unit [2] in the direction of the arrow and release the projection [3] to remove the fixing drive unit [2].

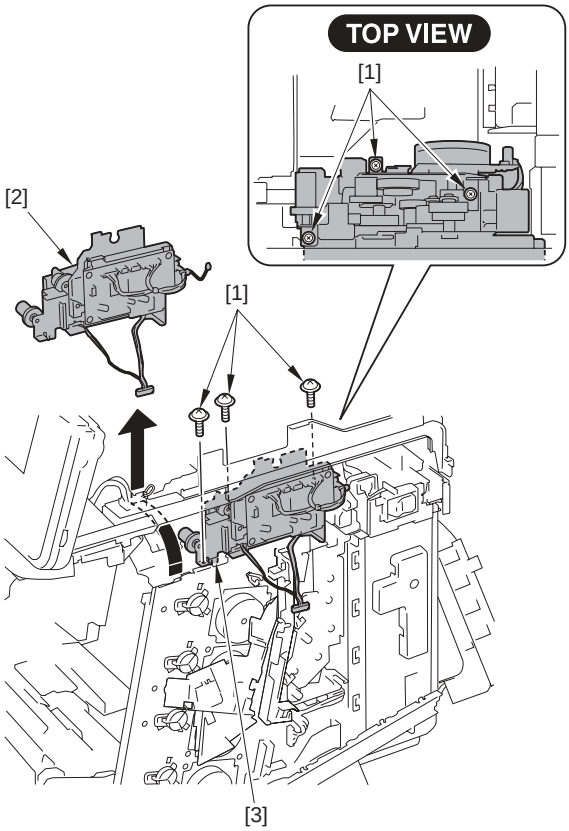

F-9-39

9.4.4 Fixing Motor

9.4.4.1 Before Removing the Fixing Motor

i-SENSYS MF9170 / i-SENSYS MF9130 / i-SENSYS MF8450

MEMO:
26 parts (e.g.: external cover, unit) need to be removed when removing the fixing motor. Be sure to have enough space equivalent to 1,900mm x 1,100mm for storing parts.

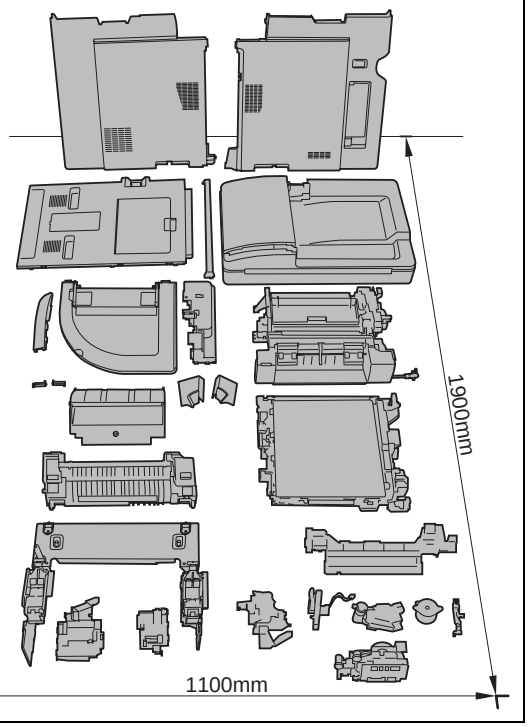

1) Remove the ETB unit.(page 7-28)Reference [Removing the ETB Unit]
2) Remove the fixing assembly.(page 9-5)Reference [Removing the Fixing Assembly]

3) Remove the rear cover unit.(page 11-6)Reference [Removing the Rear Cover Unit]
4) Remove the ADF Unit + Reader Unit.(page 4-7)Reference [Removing the ADF Unit + Reader Unit]
5) Remove the left cover.(page 11-8)Reference [Removing the Left Cover]
6) Remove the right cover.(page 11-7)Reference [Removing the Right Cover]
7) Remove the Upper Frame Unit.(page 11-13)Reference [Removing the Upper Frame Unit]
8) Remove the Reversal Unit.(page 8-25)Reference [Removing the Reversal Unit]
9) Remove the Fixing Drive Unit.(page 9-13)Reference [Removing the Fixing Drive Unit]

9.4.4.2 Removing the Fixing Motor

i-SENSYS MF9170 / i-SENSYS MF9130 / i-SENSYS MF8450

1) Disconnect the 3 connectors [1].

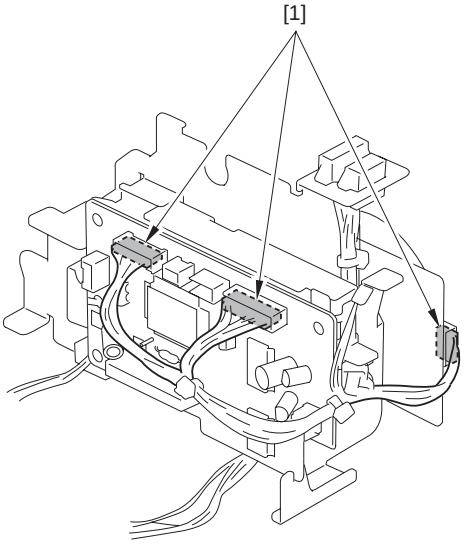

F-9-40

2) Remove the fixing driver PCB [1].
- 3 screws [2]

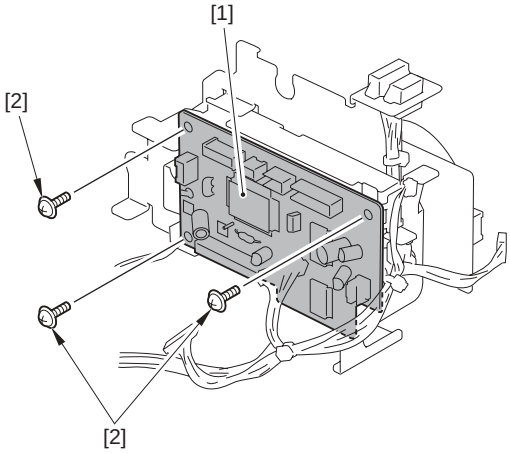

F-9-41

3) Free the harness [1] from the harness guide [2].
4) Remove the screw [3] to pull out the sensor and the attaching plate [4].

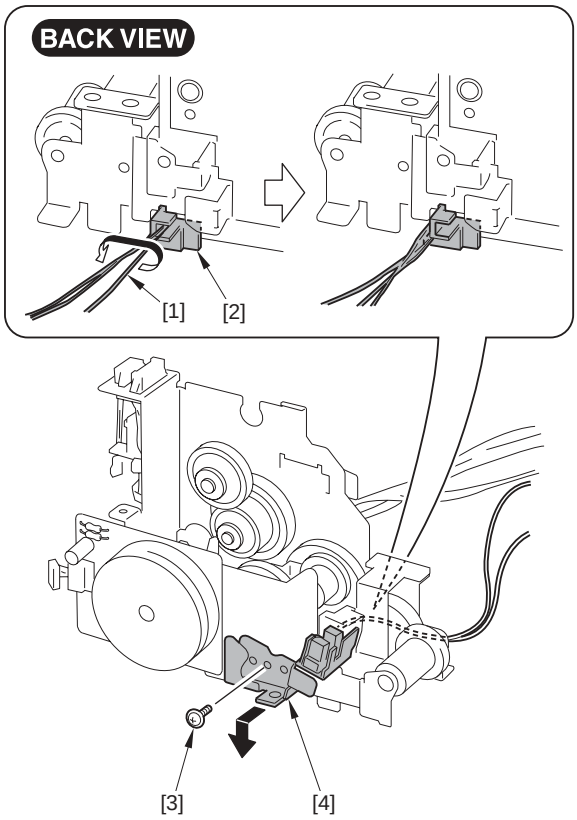

F-9-42

5) Disconnect the connector [1].

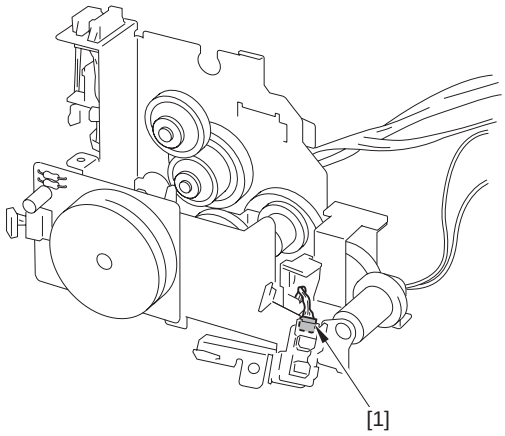

F-9-43

6) Move the harness guide [1] in the direction of the arrow [A] to remove the hook [2] in the direction of the arrow [B].
7) Remove the harness guide [1].

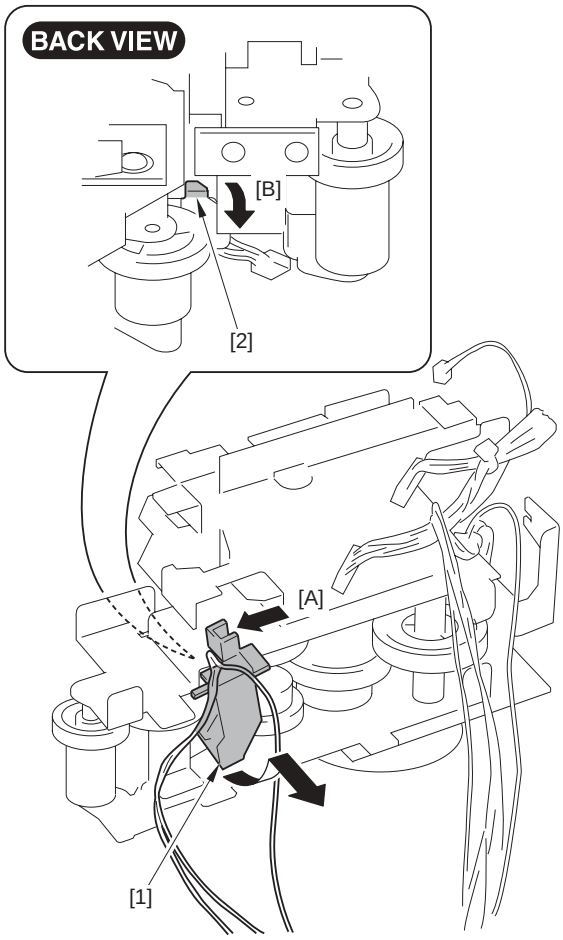

F-9-44

8) Remove the plate [1].
- 2 screws [2]

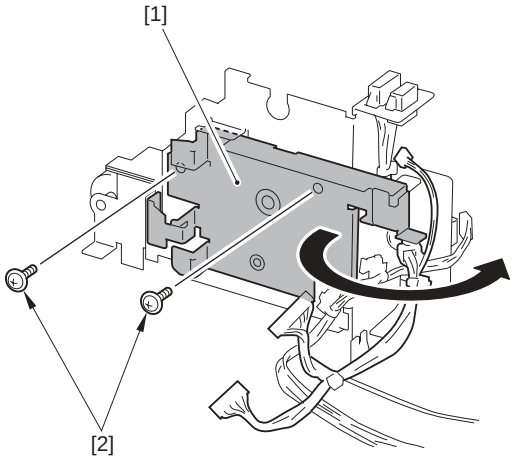

F-9-45

9) Remove the fixing drive unit support plate [1].
- 1 screw (black) [2]

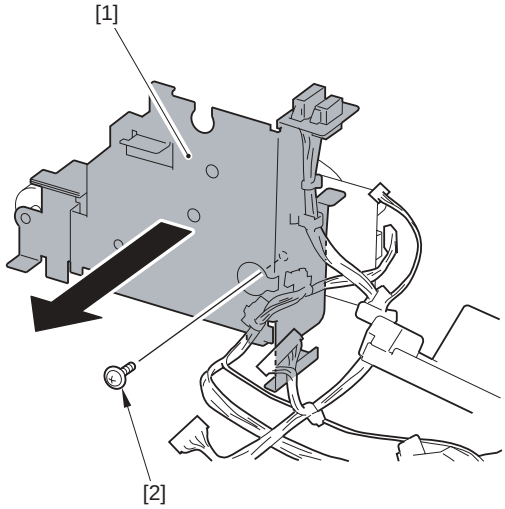

F-9-46

10) Remove the 3 gears [1]

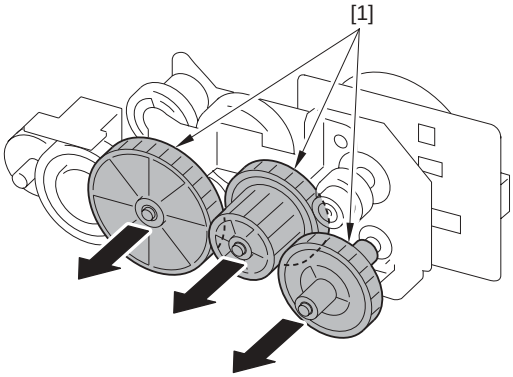

F-9-47

11) Remove the fixing motor [1].
- 1 screw (black) [2]
- 1 screw [3]

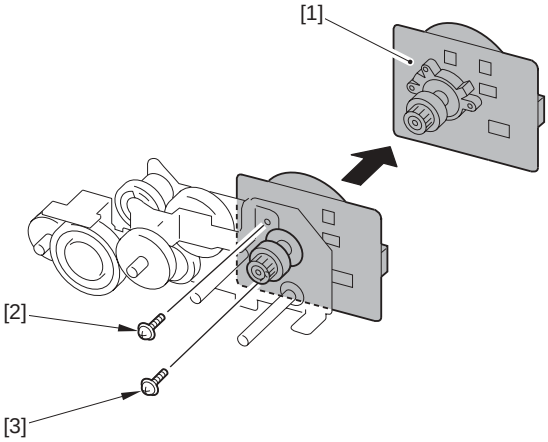

F-9-48

Chapter 10 Engine Control System

Contents

10.1 Construction

10.1.1 Overview

i-SENSYS MF9170 / i-SENSYS MF9130 / i-SENSYS MF8450

The engine control system consists of the DC controller PCB and the low-voltage power PCB.
It controls laser exposure system, image formation system, fixing system, pickup/feed system, and external/auxiliary control system.

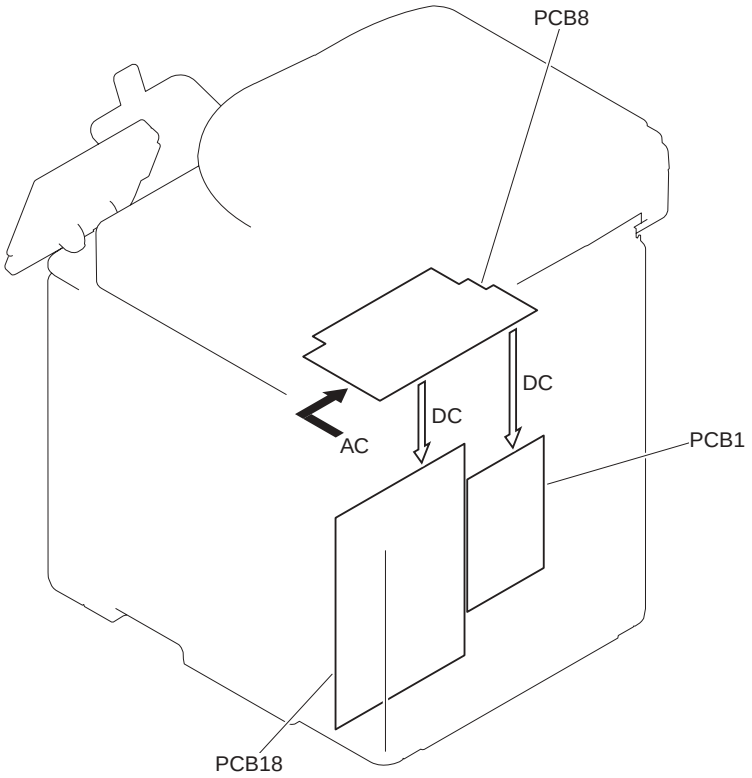

F-10-1

PCB1: DC controller PCB

PCB8: Low-voltage power PCB

PCB18: Main controller PCB

10.2 DC Controller (DCNT)

10.2.1 Overview

i-SENSYS MF9170 / i-SENSYS MF9130 / i-SENSYS MF8450

The CPU in the DC controller PCB controls the operational sequence of the machine.
1) When the power switch of the machine is turned ON, DC power is supplied from the low-voltage power PCB to the DC controller PCB.
2) The CPU in the DC controller PCB starts to control the printer operation.
3) The DC controller receives a print command and image data from the main controller.
4) When the machine is placed in standby, the CPU sends signals to drive each load, such as laser diode, motors, and solenoids, etc.

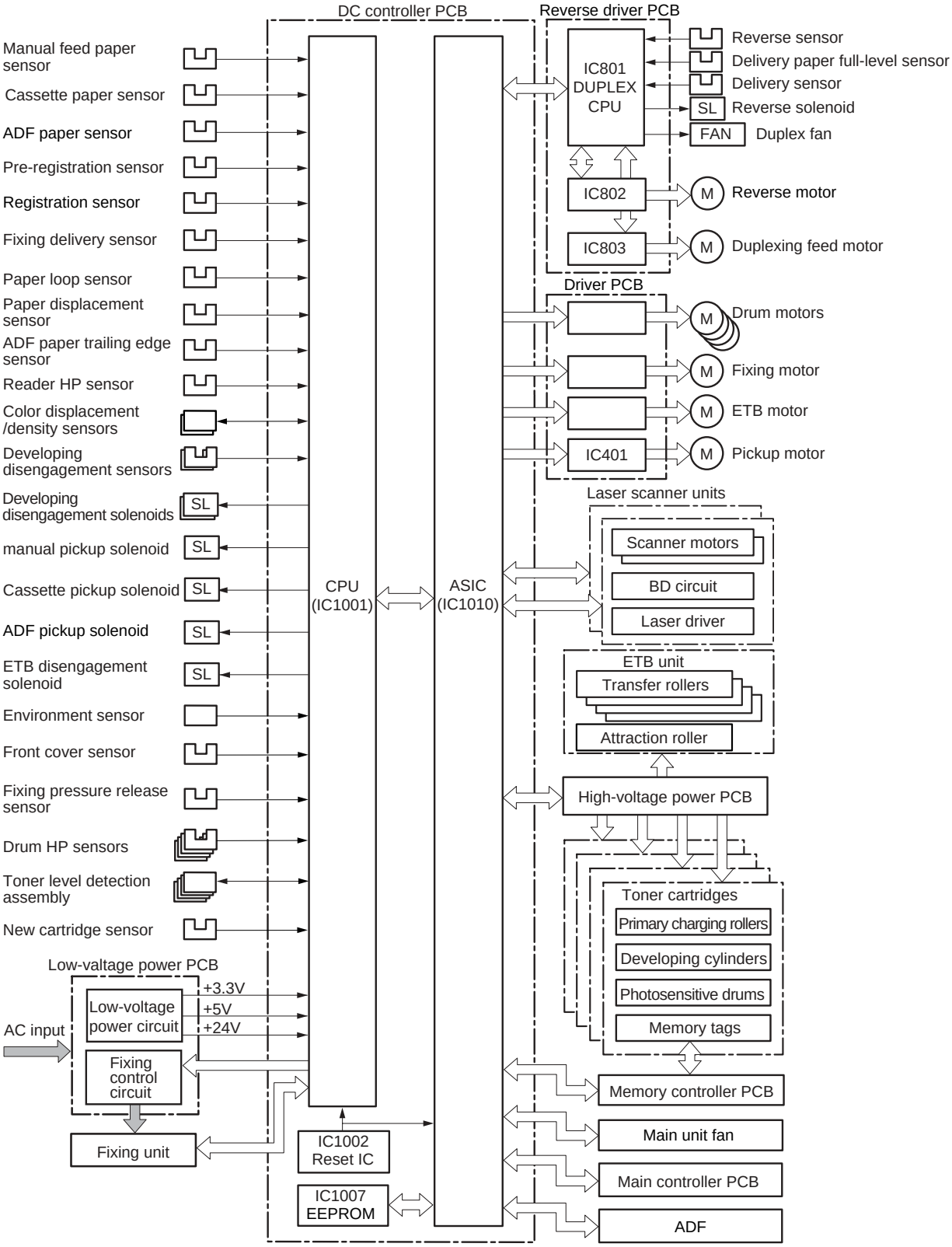

F-10-2

10.2.2 Operation of Each Block

i-SENSYS MF9170 / i-SENSYS MF9130 / i-SENSYS MF8450

CPU (IC1001)
The CPU is a 16-bit single-chip processor with built-in ROM and RAM.
It controls the following printer operation according to the control program stored in the ROM.
- Sequence control of the printer engine
- Control of the ASIC
- Control of the fixing assembly
- Control of solenoid
- Control of sensors/switches
- Control of the fixing control circuit (relay drive)

ASIC (IC1010)
The ASIC (Application Specific IC) is an IC used in an interface such as an IC, memory, and external equipment.
It controls the following printer operation according to the command from the CPU.
- Control of the laser scanner unit
- Communication with the main controller
- Control of the high-voltage power PCB
- Control of motors
- Control of fans
- Write/Read EEPROM
- Control of the memory controller PCB

Motor Driver IC (IC401, IC802, IC803)
The motor driver IC controls each motor according to the command from the CPU or ASIC.

Reset IC (IC1007)
The reset IC monitors +3.3 V voltage, and resets the CPU and ASIC when the power is turned ON.

EEPROM (IC1007)
The EEPROM stores various backup data.

10.2.3 Fan/Motor Control

i-SENSYS MF9170 / i-SENSYS MF9130 / i-SENSYS MF8450

The machine uses nine motors in total for paper feeding and image formation.

T-10-1

Name		Purpose	Type	Fault detection
Motor	Fixing motor (M1)	To drive the pressure roller and delivery roller To drive engagement/disengagement of the developing roller To drive engagement/disengagement of the pressure roller	DC motor	Provided
	Pickup motor (M4)	To drive the pickup roller of the machine	Stepping motor	Not provided
	ETB motor (M5)	To drive the ETB, To drive engagement/disengagement of the transfer roller	DC motor	Provided
	M drum motor (M6)	To drive the developing roller, photosensitive drum, and stirring plate	DC motor	Provided
	C drum motor (M7)			
	Y drum motor (M8)			
	Bk drum motor (M9)			
	Duplex feed motor (M10)	To drive the duplex feed roller	Stepping motor	Not provided
	Reverse motor (M11)	To drive the reverse roller	Stepping motor	Not provided
Fan	Main unit fan (FM1)	To exhaust heat from the inside of the machine	DC motor	Provided
	Duplex fan (FM2)	To exhaust heat from the reverse unit	DC motor	Provided

10.2.4 Drum motor failure detection

i-SENSYS MF9170 / i-SENSYS MF9130 / i-SENSYS MF8450

The DC controller determines that a failure occurred in the drum motors (M6 to 9) in any of the following cases. The machine stops operation and displays "E012 (Drum motor error)" on the control panel.
- Drum motor start-up failure
  The interval of the drum motor speed signal is not settled at the specified interval even when 2.5 seconds elapse after start-up of the drum motor.
- Drum motor rotation failure
  After the drum motor speed signal is settled at the specified interval, it becomes out of the specified interval for more than 2 seconds continuously.

10.2.5 ETB motor failure detection

i-SENSYS MF9170 / i-SENSYS MF9130 / i-SENSYS MF8450

The DC controller determines that a failure occurred in the ETB motor (M5) in any of the following cases. The machine stops operation and displays "E012 (ETB motor failure)" on the control panel.
- ETB motor start-up failure
  The interval of the ETB motor speed signal is not settled at the specified interval even when 3.5 seconds elapse after start-up of the ETB motor.
- ETB motor rotation failure
  After the ETB motor speed signal is settled at the specified interval, it becomes out of the specified interval for more than 2 seconds continuously.

10.2.6 Fixing motor failure detection

i-SENSYS MF9170 / i-SENSYS MF9130 / i-SENSYS MF8450

The DC controller determines that a failure occurred in the fixing motor (M1) in any of the following cases. The machine stops operation and displays "E014 (Fixing motor failure)" on the control panel.
- Fixing motor start-up failure
  The interval of the fixing motor speed signal is not settled at the specified interval even when 2.5 seconds elapse after start-up of the fixing motor.
- Fixing motor rotation failure
  After the fixing motor speed signal is settled at the specified interval, it becomes out of the specified interval for more than 2 seconds continuously.

10.2.7 Main Unit Fan Failure Detection

i-SENSYS MF9170 / i-SENSYS MF9130 / i-SENSYS MF8450

The DC controller determines that a failure occurred in the main unit fan (FM1) when receiving the main unit fan lock signal for more than 10 times consecutively. The machine stops operation and displays "E804 (Main unit fan failure)" on the control panel.

10.2.8 Duplex Fan Failure Detection

i-SENSYS MF9170 / i-SENSYS MF9130 / i-SENSYS MF8450

The DC controller determines that a failure occurred in the duplex fan (FM2) when receiving the duplex fan lock signal for more than 10 times consecutively. The machine stops operation and displays "E805 (Duplex fan failure)" on the control panel.

10.3 Power Supply

10.3.1 Power Supply

10.3.1.1 Low-voltage Power Unit

i-SENSYS MF9170 / i-SENSYS MF9130 / i-SENSYS MF8450

The low-voltage power PCB is to convert AC into DC covering the DC loads.

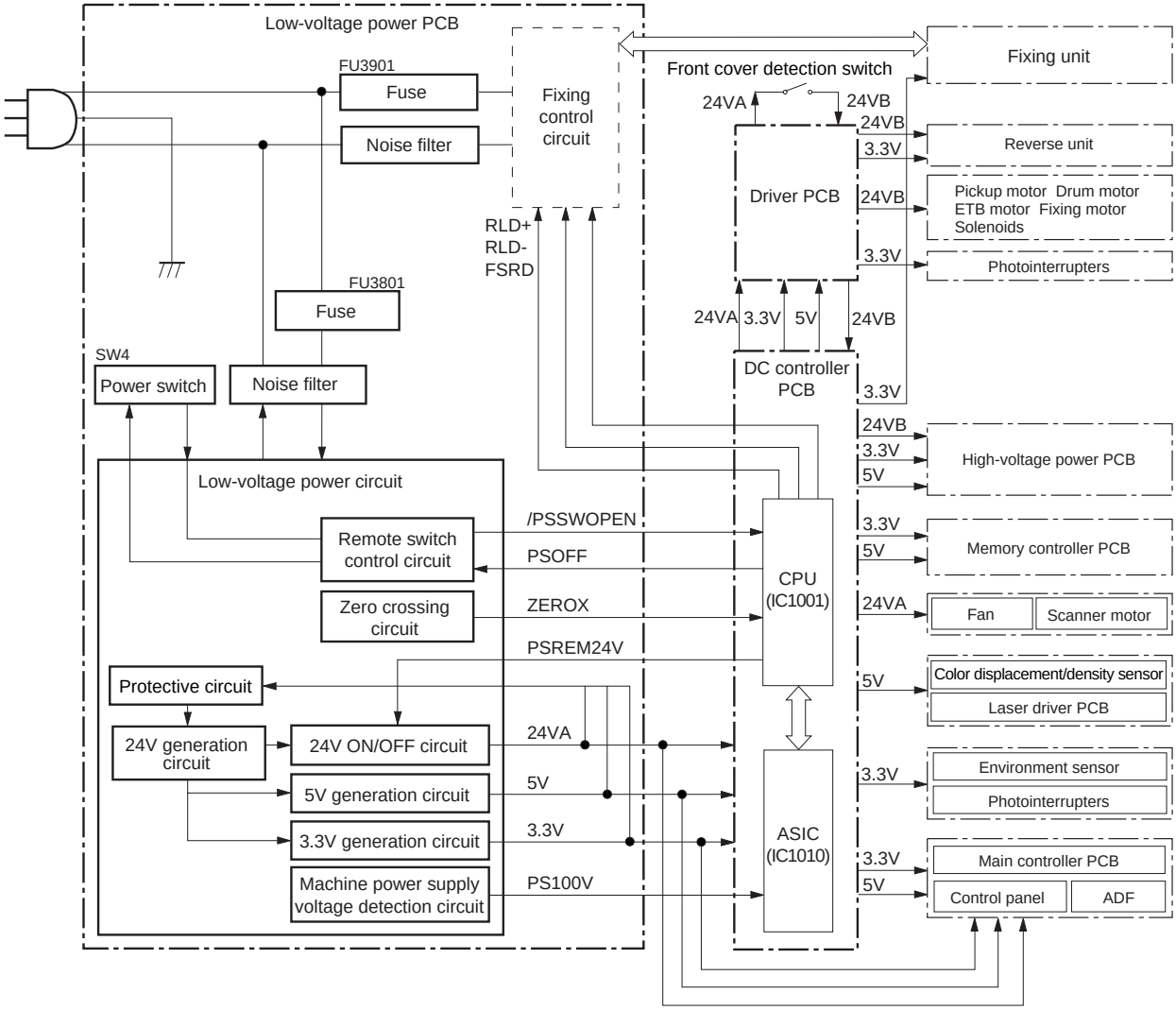

F-10-3

The low-voltage power PCB is partially activated as soon as plugged in the electrical outlet. When turning ON the power switch (SW4), whole low-voltage power supply works.
The AC power is then converted into +24V, +5V and +3.3V covering each of machine DC loads. The following are the main loads for each power.

+24V: Main controller PCB, high-voltage power PCB, Motors, solenoids, fans, reverse unit, and ADF
+5V: Main controller PCB, driver PCB, laser driver PCB, high-voltage power PCB, memory controller PCB, color displacement/density sensor, and control panel
+3.3V: DC controller PCB, main controller PCB, driver PCB, high-voltage power PCB, memory controller PCB, sensor (photo interrupter), environment sensor, fixing unit, control panel, reverse unit, and ADF

10.3.2 Protection Function

10.3.2.1 Protective Function

i-SENSYS MF9170 / i-SENSYS MF9130 / i-SENSYS MF8450

The low-voltage power circuit has protective function against overcurrent and overvoltage. Once there flows an excessive current accidentally to the load side for some trouble such as a short-circuit problem, or overvoltage occurs, it automatically cuts off the output voltage to prevent failures in the low-voltage power circuit. In case that no DC voltage is supplied from the low-voltage power circuit, turn off the power switch (SW4) anyway. Do not turn on the power again as far as the root cause is not found at the load side since the protective function may still work.
There are two fuses, FU3801 and FU3901, in the circuit for other protective function. The fuses blow and cut off the AC power, once AC overcurrent flows into the AC line.

To recover the low-voltage power circuit in case of functioning the protection, turn the power OFF (by switching off or unplugging) and leave the printer off for 15 seconds or longer, then turn the printer ON again.

10.3.2.2 Safety

i-SENSYS MF9170 / i-SENSYS MF9130 / i-SENSYS MF8450

For the safety reason for the users and the service technicians, the +24V DC line is intentionally divided into two ways, +24VA and +24VB.
The +24VA is supplied from the DC controller PCB all the time, whereas the power supply of the +24VB stops when the front cover detection switch (SW1) is cut off.
The high-voltage power PCB and motors are supplied with the +24VB. They stop when the front cover or upper cover is opened. This is to protect the users and the service technicians from an electric shock or injury to their hands.
The +24VB also functions as the front cover detection signal. The CPU determines the cover open when the +24VB supply stops.

10.3.3 Energy-Saving Function

10.3.3.1 Sleep Function

i-SENSYS MF9170 / i-SENSYS MF9130 / i-SENSYS MF8450

This function is to save the power consumption of the machine and is controlled by the DC controller.
1) The DC controller receives a sleep command from the main controller.
2) The DC controller outputs the power save mode signal (PSREM24V) to the low-voltage power PCB.
3) The low-voltage power PCB stops 24VA power supply from the 24V generation circuit.

The machine returns to the WAIT period, once the DC controller receives the command releasing the power save mode from the main controller.

Chapter 11 External and Controls

Contents

11.1 Control Panel

11.1.1 Overview

i-SENSYS MF9170 / i-SENSYS MF9130 / i-SENSYS MF8450

Control panel on the host machine consists of the following PCBs and LCD.
Following is the main function of the control panel.

- LCD display
- Turning ON the control panel LED
- Entry with hard keys, wheel and volume
- Interface control for the USB memory, CF card and SD/MS card

ÅöÉCÉâÉXÉgÅi031-FNC-EXTR-0003ÅjçÏê¨íÜÅö

CPU on the main controller PCB transmits the data (display information) to the control panel main PCB according to the programs.
The data is transmitted to color LCD via control panel main PCB.

11.2 Counter

11.2.1 Overview

i-SENSYS MF9170 / i-SENSYS MF9130 / i-SENSYS MF8450

The machine is equipped with counters that indicate the counts of output according to types of printers.
These counters are indicated in response to a press on the Check key on the control panel, and they operate as follows (as set at time of shipment from the factory):

T-11-1

Model	Counter 1	Counter 2	Counter 3	Counter 4	Counter 5	Counter 6
100V *1	total 1	total (black-and-white 1)	copy (full color + mono color;1)	total A (full color + mono color;1)	*	*
	101	**108**	**232**	**149**	**000**	**000**
100V *1	total 2	copy (full color + mono color; 2)	total A (full color + mono color; 2)	copy (black-and-white 2)	total A (black-and-white 2)	*
	102	**231**	**148**	**222**	**133**	**000**
100V *1	total 1	total (full color/small)	total (black-and-white/small)	scan (total 1)	*	*
	101	**121**	**113**	**501**	**000**	**000**
120V *2	total 1	total (black-and-white 1)	copy (full color/small)	print (full color/small)	*	*
	101	**108**	**224**	**316**	**000**	**000**
230V *3	total 1	total (black-and-white 1)	copy+print (full color/sumall)	total 1 (duplex)	*	*
	101	**108**	**402**	**114**	**000**	**000**
230V *4	total (black-and-white/small)	total (full color/small)	scan (total 1)	print (total 1)	*	*
	113	**121**	**501**	**301**	**000**	**000**
230V *4	total 1	*	*	*	*	*
	101	**000**	**000**	**000**	**000**	**000**
230V *5	total 1	total (black-and-white 1)	copy (full color/small)	print (full color/small)	*	*
	101	**108**	**224**	**316**	**000**	**000**

Guide to Notations
large: large-size paper (longer than 364 mm in feed direction; count increased by 1).
small: small-size paper (364 mm in feed length or shorter).
total: all (C+P; count increased by 1).
duplex: duplexing (in auto duplexing; count increased by 1).

- 3-digit number in the counter column indicates the setting value in the following service mode.
  COPIER> OPTION> USER> COUNTER1 to 8
- From counter 2 to 8 can be changed in service mode COPIER> OPTION> USER> COUNTER1 to 8

*1: F15-1114/1115
*2: F15-1134/1135
*3: F15-1155/1164/1165/1185
*4: F15-1194
*5: F15-1144/1145

*: by default, not indicated; may be changed in service mode.

11.2.2 Timing of Increasing the Count

i-SENSYS MF9170 / i-SENSYS MF9130 / i-SENSYS MF8450

The machine increases the count depending on the selected mode (single-sided, double-sided).

1. Single-Sided Print, 2nd Side of a Double-Sided Print
In the case of a single-sided print or the 2nd side of a double-sided print, the machine increase the count when the trailing edge of paper is discharged outside the machine, as indicated by the output of the delivery sensor (SR715).

2. 1st Side of a Double-Sided Print
The machine increases the count when the pre-registration sensor (SR708) goes on, assuming that the printing on the 1st side is over.

11.3 Power Supply

11.3.1 Power Supply

11.3.1.1 Low-voltage Power Unit

i-SENSYS MF9170 / i-SENSYS MF9130 / i-SENSYS MF8450

The low-voltage power PCB is to convert AC into DC covering the DC loads.

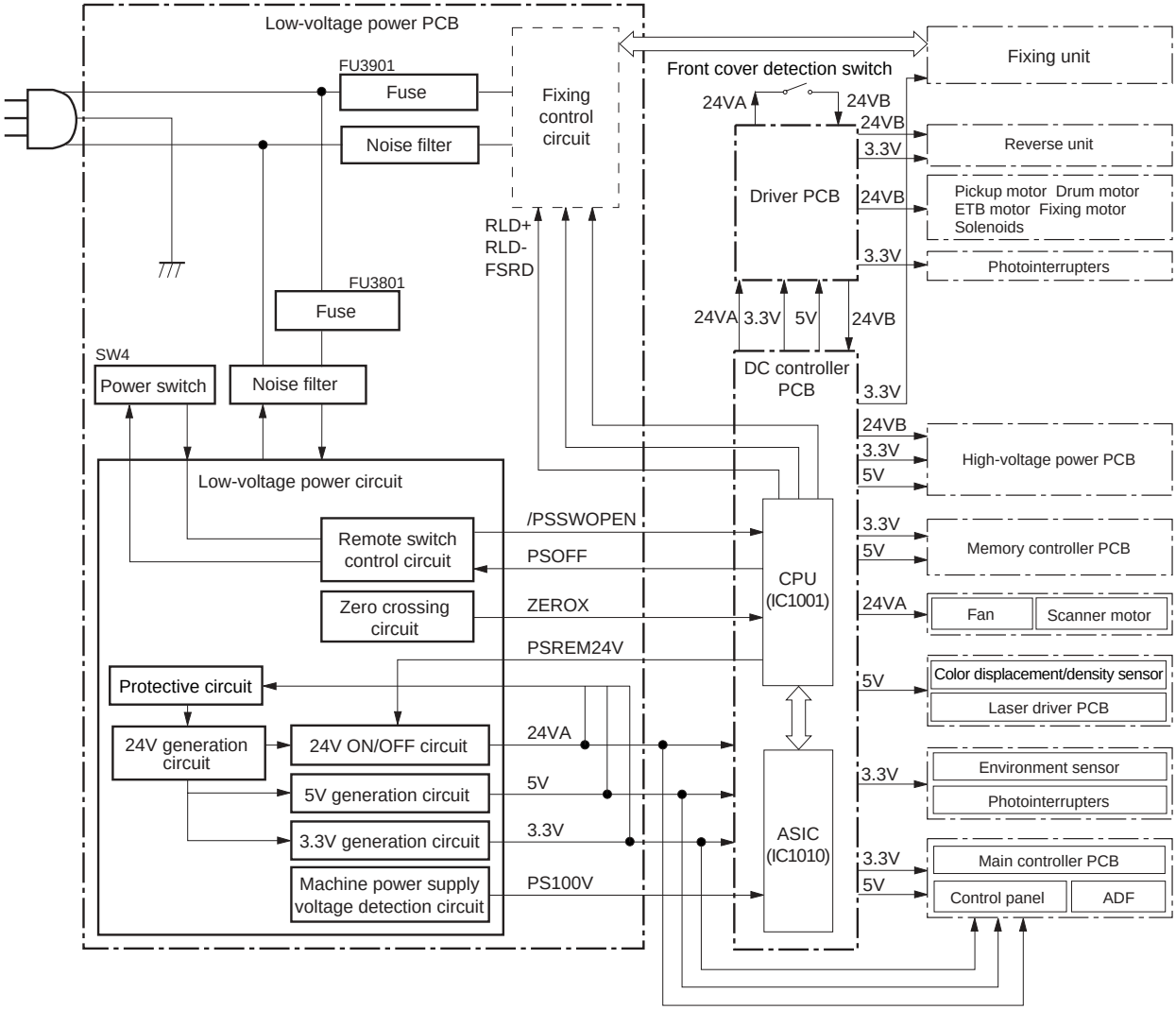

F-11-1

The low-voltage power PCB is partially activated as soon as plugged in the electrical outlet. When turning ON the power switch (SW4), whole low-voltage power supply works.
The AC power is then converted into +24V, +5V and +3.3V covering each of machine DC loads. The following are the main loads for each power.

+24V: Main controller PCB, high-voltage power PCB, Motors, solenoids, fans, reverse unit, and ADF
+5V: Main controller PCB, driver PCB, laser driver PCB, high-voltage power PCB, memory controller PCB, color displacement/density sensor, and control panel
+3.3V: DC controller PCB, main controller PCB, driver PCB, high-voltage power PCB, memory controller PCB, sensor (photo interrupter), environment sensor, fixing unit, control panel, reverse unit, and ADF

11.3.2 Protection Function

11.3.2.1 Protective Function

i-SENSYS MF9170 / i-SENSYS MF9130 / i-SENSYS MF8450

The low-voltage power circuit has protective function against overcurrent and overvoltage. Once there flows an excessive current accidentally to the load side for some trouble such as a short-circuit problem, or overvoltage occurs, it automatically cuts off the output voltage to prevent failures in the low-voltage power circuit.
In case that no DC voltage is supplied from the low-voltage power circuit, turn off the power switch (SW4) anyway. Do not turn on the power again as far as the root cause is not found at the load side since the protective function may still work.
There are two fuses, FU3801 and FU3901, in the circuit for other protective function. The fuses blow and cut off the AC power, once AC overcurrent flows into the AC line.

To recover the low-voltage power circuit in case of functioning the protection, turn the power OFF (by switching off or unplugging) and leave the printer off for 15 seconds or longer, then turn the printer ON again.

11.3.2.2 Safety

i-SENSYS MF9170 / i-SENSYS MF9130 / i-SENSYS MF8450

For the safety reason for the users and the service technicians, the +24V DC line is intentionally divided into two ways, +24VA and +24VB.
The +24VA is supplied from the DC controller PCB all the time, whereas the power supply of the +24VB stops when the front cover detection switch (SW1) is cut off.
The high-voltage power PCB and motors are supplied with the +24VB. They stop when the front cover or upper cover is opened. This is to protect the users and the service technicians from an electric shock or injury to their hands.
The +24VB also functions as the front cover detection signal. The CPU determines the cover open when the +24VB supply stops.

11.3.3 Energy-Saving Function

11.3.3.1 Sleep Function

i-SENSYS MF9170 / i-SENSYS MF9130 / i-SENSYS MF8450

This function is to save the power consumption of the machine and is controlled by the DC controller.
1) The DC controller receives a sleep command from the main controller.
2) The DC controller outputs the power save mode signal (PSREM24V) to the low-voltage power PCB.
3) The low-voltage power PCB stops 24VA power supply from the 24V generation circuit.

The machine returns to the WAIT period, once the DC controller receives the command releasing the power save mode from the main controller.

11.4 Parts Replacement Procedure

11.4.1 Front Cover

11.4.1.1 Before Removing the Front Cover Unit

i-SENSYS MF9170 / i-SENSYS MF9130 / i-SENSYS MF8450

1) Remove the ETB unit.(page 7-28)Reference [Removing the ETB Unit]
2) Remove the rear cover unit.(page 11-6)Reference [Removing the Rear Cover Unit]
3) Remove the left cover.(page 11-8)Reference [Removing the Left Cover]
4) Remove the right cover.(page 11-7)Reference [Removing the Right Cover]

11.4.1.2 Removing the Front Cover Unit

i-SENSYS MF9170 / i-SENSYS MF9130 / i-SENSYS MF8450

1) Turn the 2 drawer connectors [1] up.

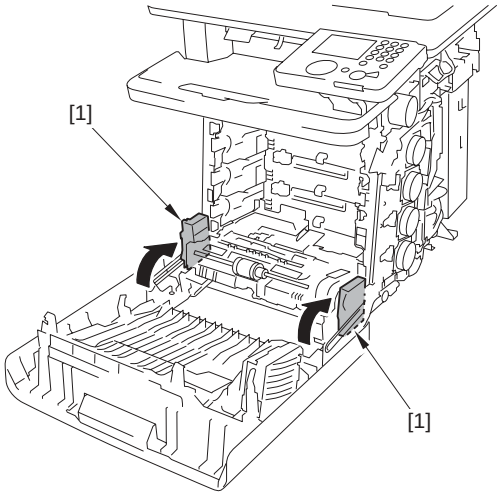

F-11-2

2) Remove the cable cover [1].
- 1 screw [2]
- 1 claw [3]

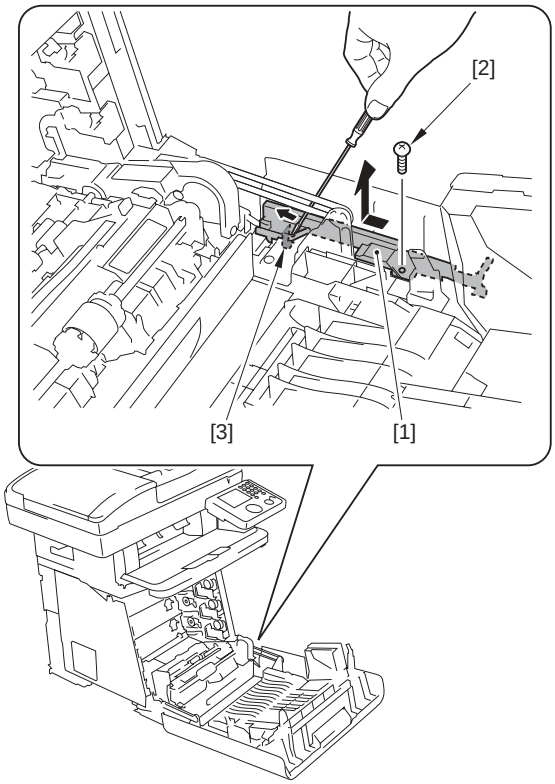

F-11-3

3) Remove the relay connector [1] and the harness [2] from the guide [3].

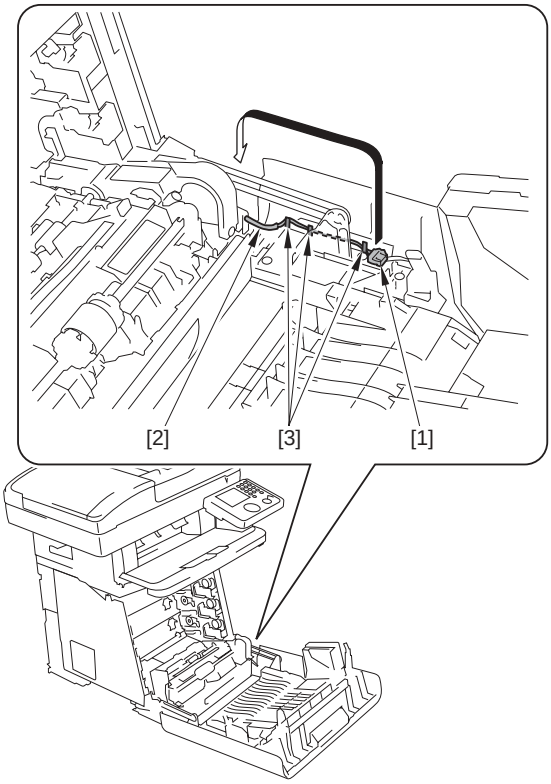

F-11-4

4) While lifting the front cover unit [1], remove the 2 links [2] from the 2 shafts [3] and raise it in the direction of the arrow.

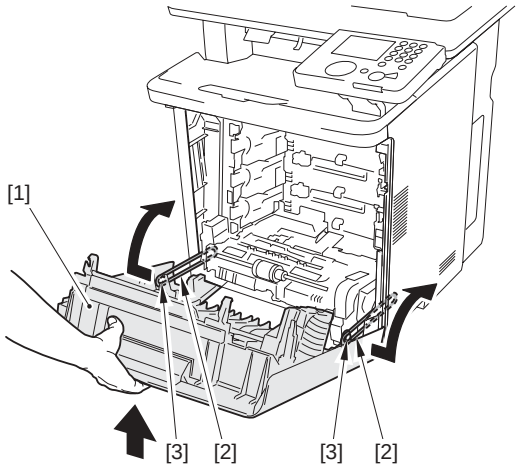

F-11-5

5) Turn the 2 hinges [1] up in the direction of the arrow.
- 4 screws (binding) [2]

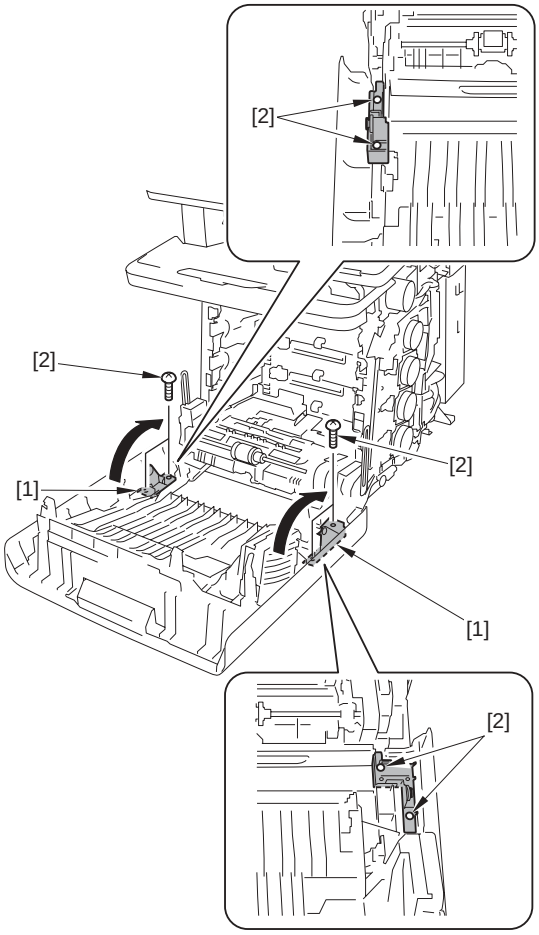

F-11-6

6) Remove the front cover unit [1].

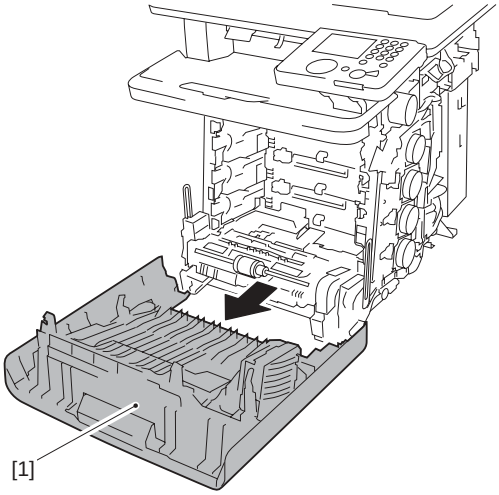

F-11-7

11.4.2 Front Upper Cover 1

11.4.2.1 Before Removing Front upper Cover 1

i-SENSYS MF9170 / i-SENSYS MF9130 / i-SENSYS MF8450

1) Remove the ETB unit.(page 7-28)Reference [Removing the ETB Unit]
2) Remove the rear cover unit.(page 11-6)Reference [Removing the Rear Cover Unit]
3) Remove the left cover.(page 11-8)Reference [Removing the Left Cover]
4) Remove the right cover.(page 11-7)Reference [Removing the Right Cover]
5) Remove the control panel unit.(page 11-20)Reference [Removing the Control Panel Unit]

11.4.2.2 Removing Front Upper Cover 1

i-SENSYS MF9170 / i-SENSYS MF9130 / i-SENSYS MF8450

1) Pull the delivery tray [1] out.
2) Move the delivery tray [1] in the direction of the arrow, and release the 2 projections [2] from the 2 claws [3] of the delivery tray cover to remove the delivery tray.

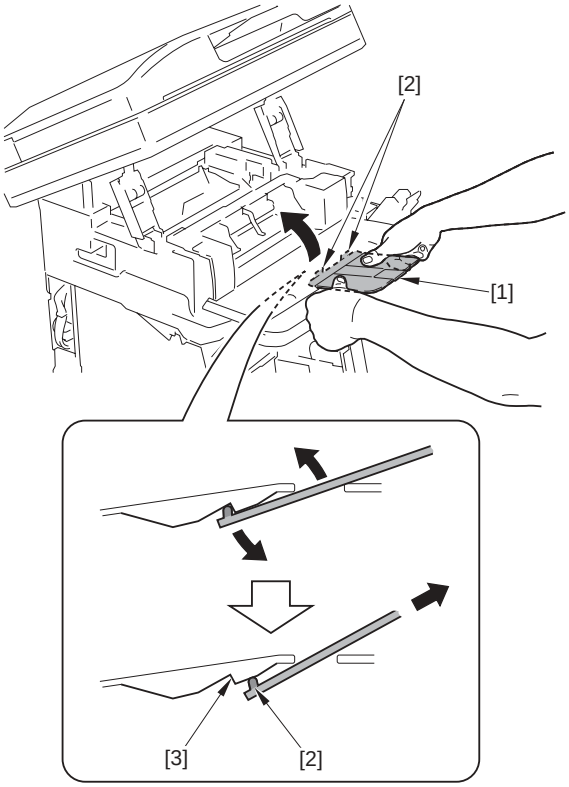

F-11-8

3) Remove the 2 claws [2] and the 2 bosses [3] at both sides of front upper cover 2 [1] in the direction of the arrow [A].
4) Move front upper cover 2 [1] in the direction of the arrow [B] and release the 4 claws [4] to remove front upper cover 2.

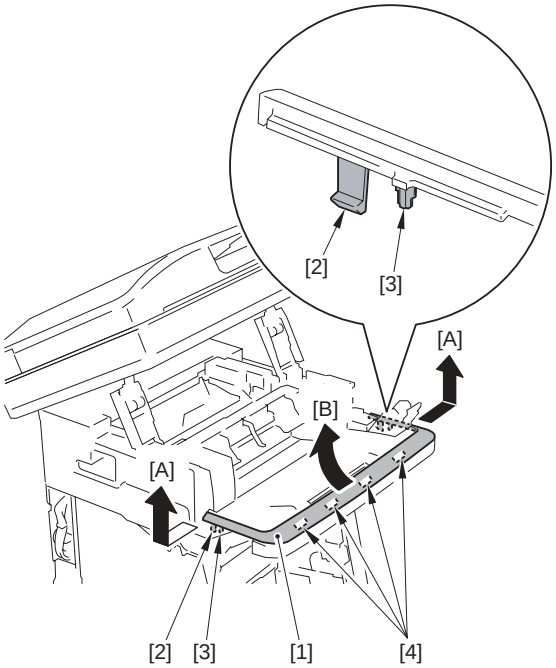

F-11-9

5) Remove front upper cover 1 [1].
- 3 screws [2]
- 2 claws [3]
- 2 bosses [4]

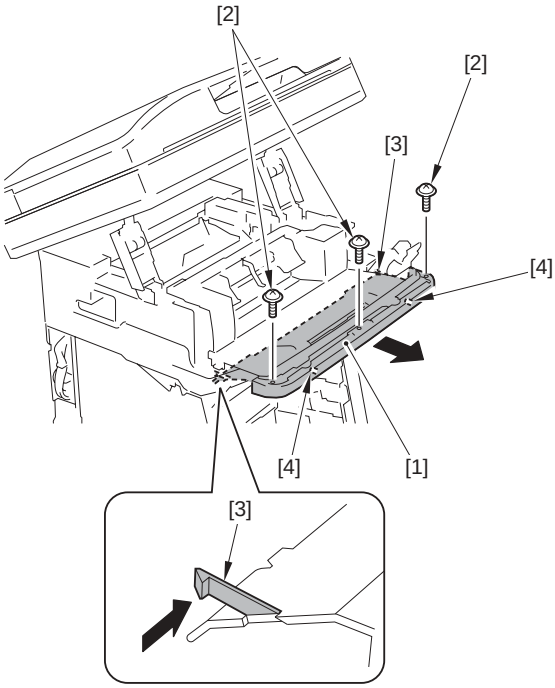

F-11-10

11.4.3 Rear Cover

11.4.3.1 Removing the Rear Cover Unit

i-SENSYS MF9170 / i-SENSYS MF9130 / i-SENSYS MF8450

1) Remove the reader hinge cover [1].
- 4 claws [2]

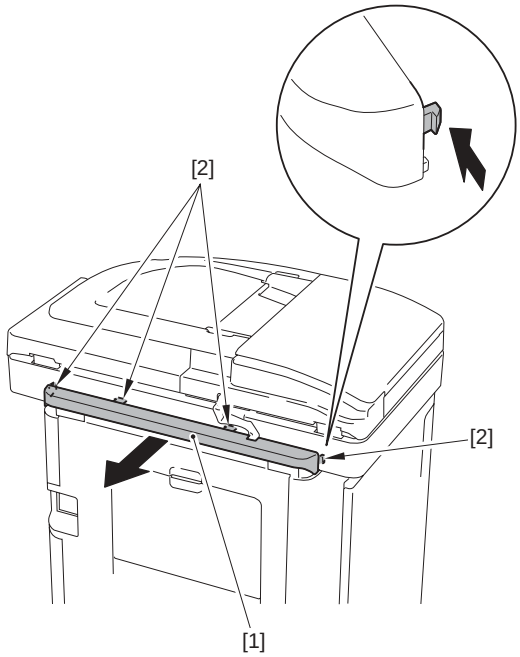

F-11-11

2) Remove the rear cover unit [1].
- 2 screws [2]
- 9 claws [3]

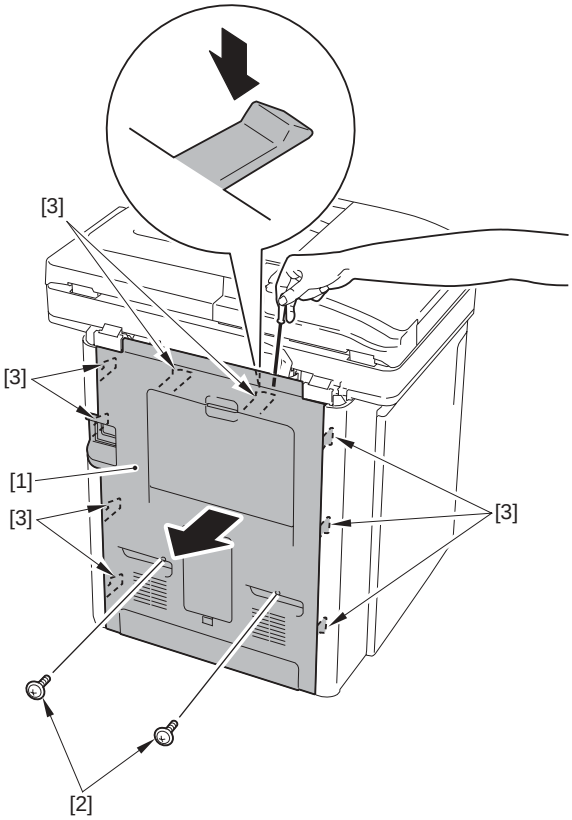

F-11-12

11.4.4 Right Cover

11.4.4.1 Before Removing the Right Cover

i-SENSYS MF9170 / i-SENSYS MF9130 / i-SENSYS MF8450

1) Remove the ETB unit.(page 7-28)Reference [Removing the ETB Unit]
2) Remove the rear cover unit.(page 11-6)Reference [Removing the Rear Cover Unit]

11.4.4.2 Removing the Right Cover

i-SENSYS MF9170 / i-SENSYS MF9130 / i-SENSYS MF8450

1) Remove the panel stand left cover [1] and the panel stand right cover [2].
   - 1 claw [3]

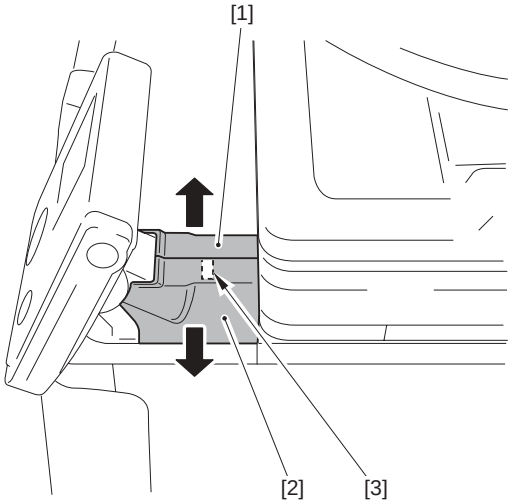

F-11-13

2) Open the front cover [1].

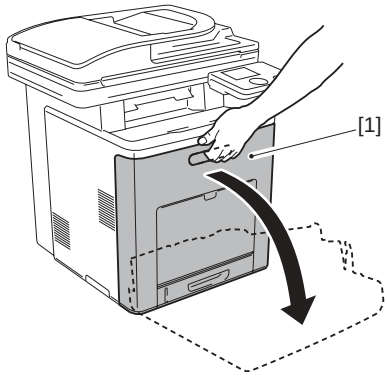

F-11-14

3) Open the ADF unit + reader unit [1].

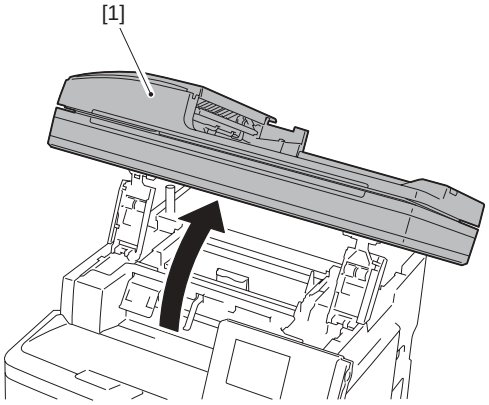

F-11-15

> **Points to note at work**
> Be sure not to close the ADF unit + reader unit hastily. If closing the ADF unit + reader unit hastily, the impact can cause damage.
> Also be careful not to get your hands caught between the ADF unit + reader unit and the host machine.

4) Remove the 3 screws [1].

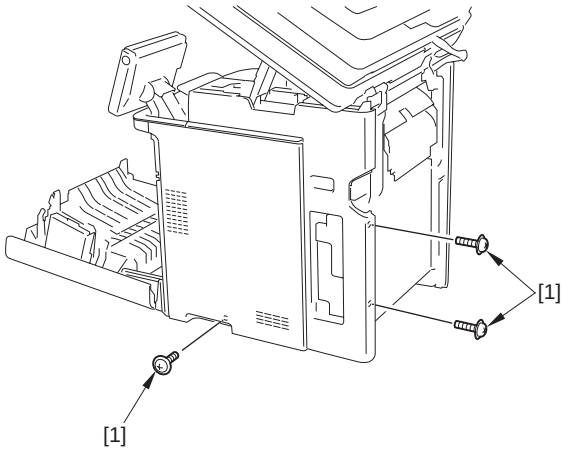

F-11-16

5) Remove the 4 claws [1] and the 2 hooks [2], and then move the right cover [3] in the direction of the arrow.

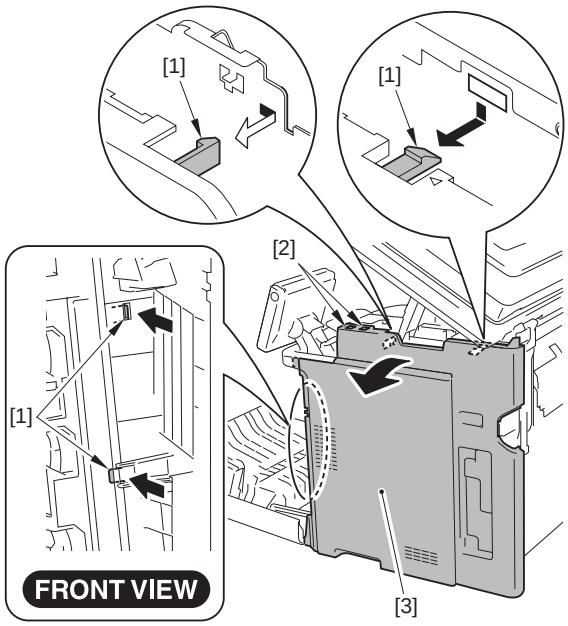

F-11-17

6) Bend the right cover [1] and remove the protrusion [2] in the direction of the arrow [A].

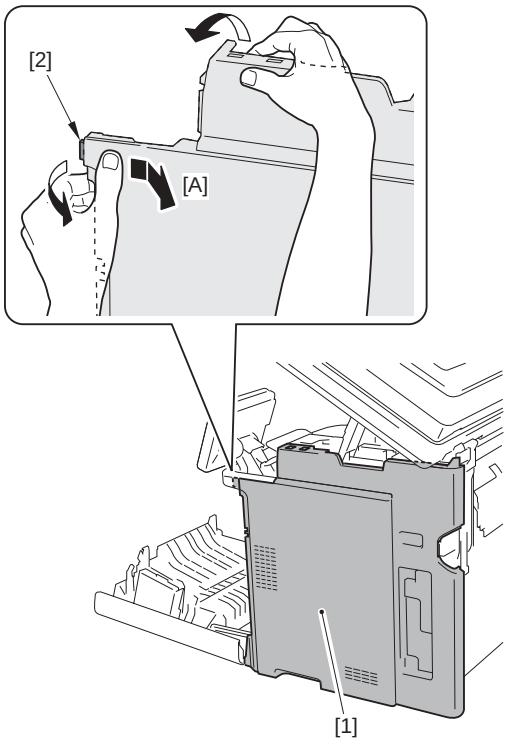

F-11-18

7) Move the right cover [1] in the direction of the arrow and release the 2 claws [2] to remove.

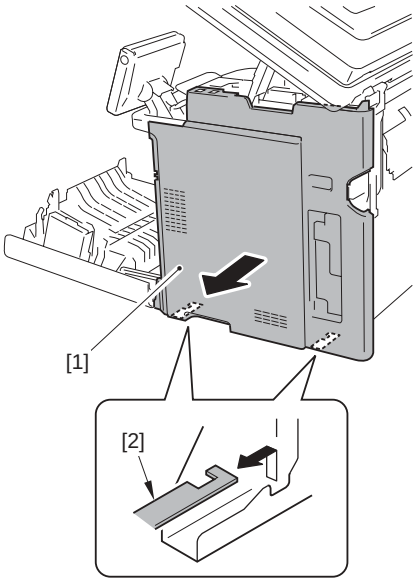

F-11-19

11.4.5 Left Cover

11.4.5.1 Before Removing the Left Cover

i-SENSYS MF9170 / i-SENSYS MF9130 / i-SENSYS MF8450

1) Remove the ETB unit.(page 7-28)Reference [Removing the ETB Unit]
2) Remove the rear cover unit.(page 11-6)Reference [Removing the Rear Cover Unit]

11.4.5.2 Removing the Left Cover

i-SENSYS MF9170 / i-SENSYS MF9130 / i-SENSYS MF8450

1) Open the front cover [1].

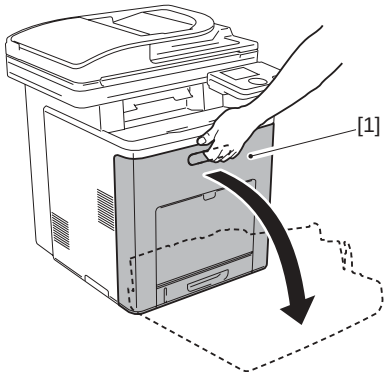

F-11-20

2) Open the ADF unit + reader unit [1].

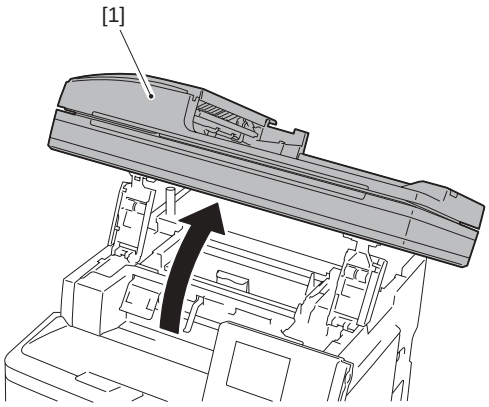

F-11-21

Points to note at work
Be sure not to close the ADF unit + reader unit hastily. If closing the ADF unit + reader unit hastily, the impact can cause damage.
Also be careful not to get your hands caught between the ADF unit + reader unit and the host machine.

3) Remove the 3 screws [1].

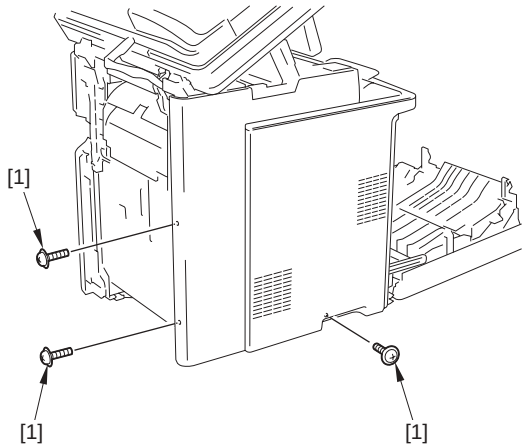

F-11-22

4) Remove the 2 hooks [2] of the left cover [1] in the direction of the arrow [A].
5) Remove the 6 claws [3] and the 2 hooks [4] and move the left cover [1] in the direction of the arrow [B].

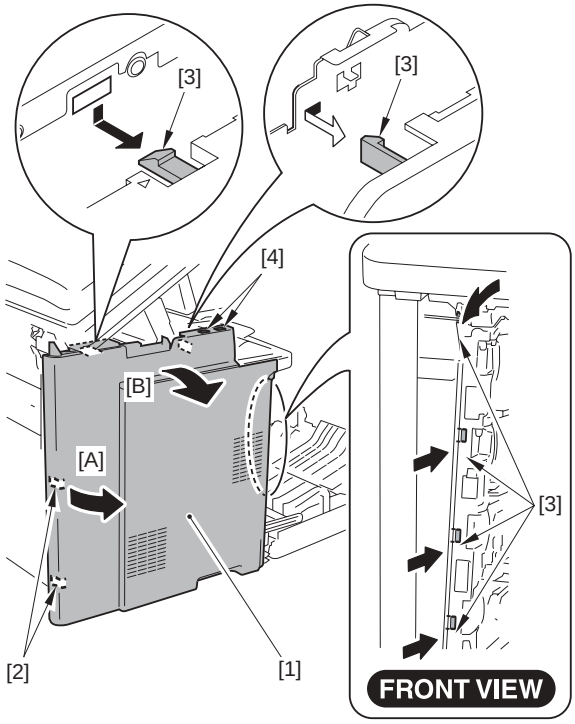

F-11-23

6) Move the left cover [1] in the direction of the arrow, and release the projection [2], the projection [3] and the claw [4] to remove.

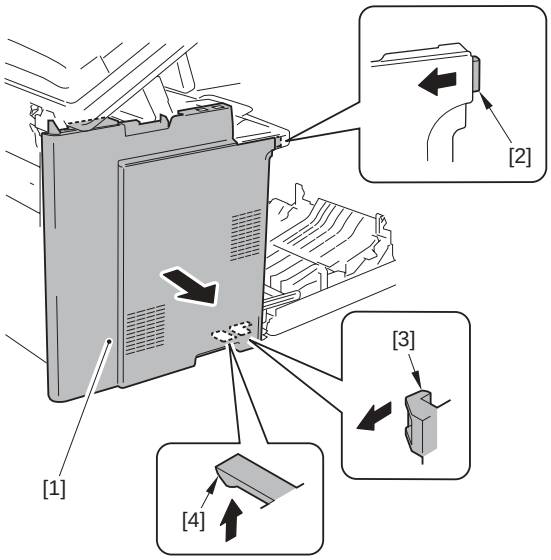

F-11-24

Point to Note at Installation
Be sure to install the left cover by fitting the boss [1] and the projection [2] of the left cover with the harness guide hole [3] and the groove [4] of the host machine.

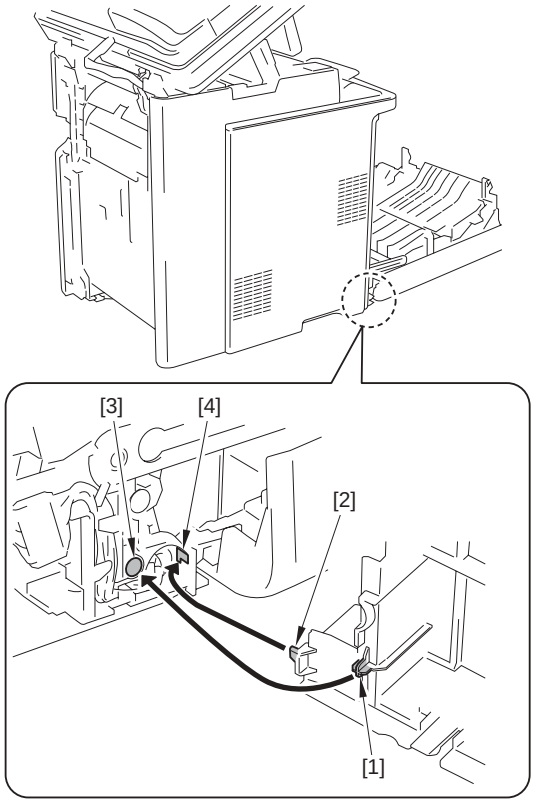

11.4.6 Delivery Tray Cover

11.4.6.1 Before Removing the Delivery Tray Cover

i-SENSYS MF9170 / i-SENSYS MF9130 / i-SENSYS MF8450

1) Remove the ETB unit.(page 7-28)Reference [Removing the ETB Unit]
2) Remove the fixing assembly.(page 9-5)Reference [Removing the Fixing Assembly]
3) Remove the rear cover unit.(page 11-6)Reference [Removing the Rear Cover Unit]
4) Remove the left cover.(page 11-8)Reference [Removing the Left Cover]
5) Remove the right cover.(page 11-7)Reference [Removing the Right Cover]

11.4.6.2 Removing the Delivery Tray Cover

i-SENSYS MF9170 / i-SENSYS MF9130 / i-SENSYS MF8450

1) Pull the delivery tray [1] out.
2) Move the delivery tray [1] in the direction of the arrow and release the 2 projections [2] from the 2 claws [3] of the delivery tray cover to remove.

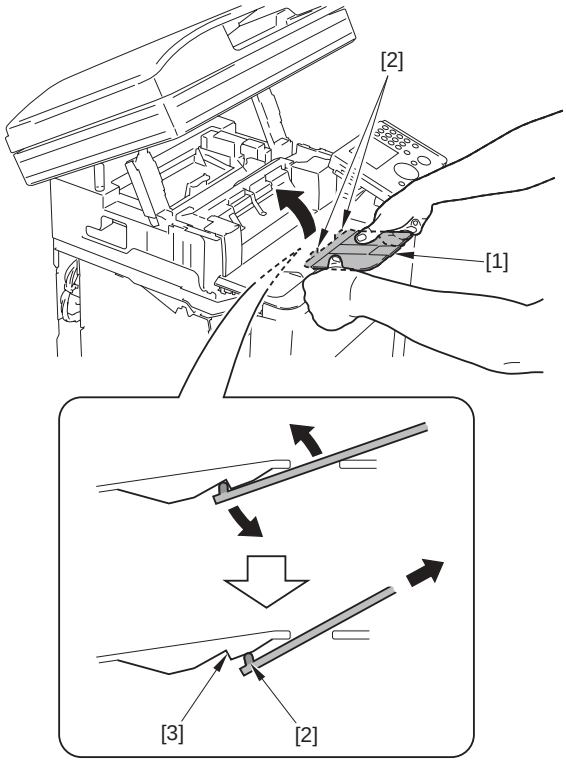

F-11-25

3) Remove the 2 claws [2] and the 2 bosses [3] at both sides of front upper cover 2 to remove them in the direction of the arrow [A].
4) Move front upper cover 2 [1] in the direction of the arrow [B] and release the 4 claws [4] to remove.

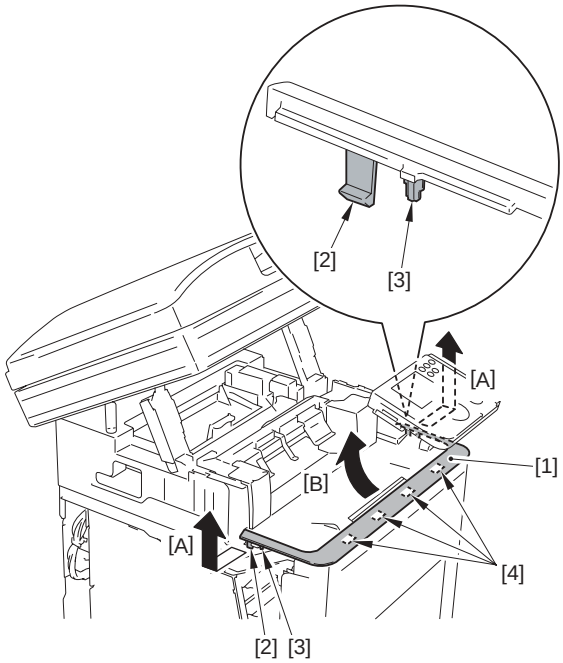

F-11-26

5) Open the delivery cover [1].

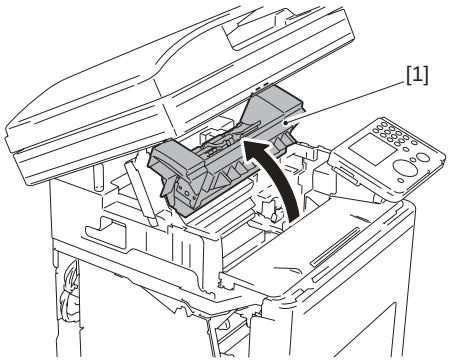

F-11-27

6) Remove the left upper front inner cover [1].

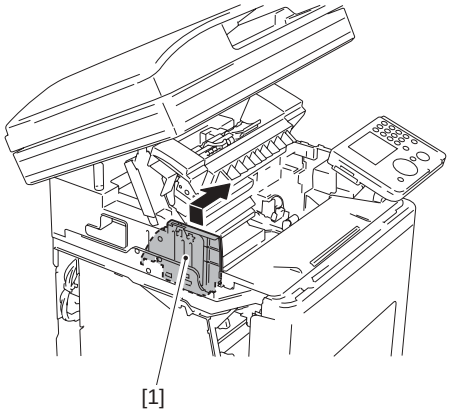

F-11-28

7) Remove the 2 screws [1].
8) Move the delivery tray cover [2] in the order of arrow directions [A] and then [B], and release the 2 claws [3] to remove.

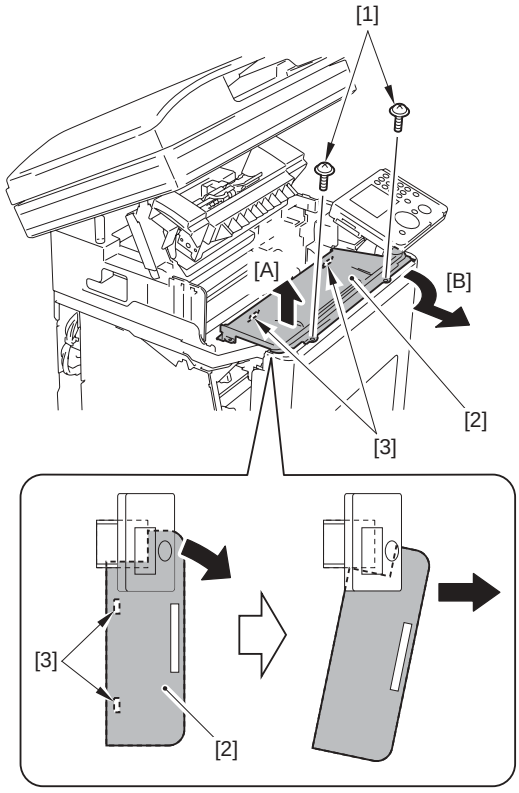

F-11-29

11.4.7 Power Station Cover

11.4.7.1 Before Removing the Electrical Components Cover

i-SENSYS MF9170 / i-SENSYS MF9130 / i-SENSYS MF8450

1) Remove the ETB unit.(page 7-28)Reference [Removing the ETB Unit]
2) Remove the rear cover unit.(page 11-6)Reference [Removing the Rear Cover Unit]
3) Remove the left cover.(page 11-8)Reference [Removing the Left Cover]

11.4.7.2 Removing the Electrical Components Cover

i-SENSYS MF9170 / i-SENSYS MF9130 / i-SENSYS MF8450

1) Remove the Electrical Components Cover [1].
   - 12 screws [2]
   - 1 terminal [3]

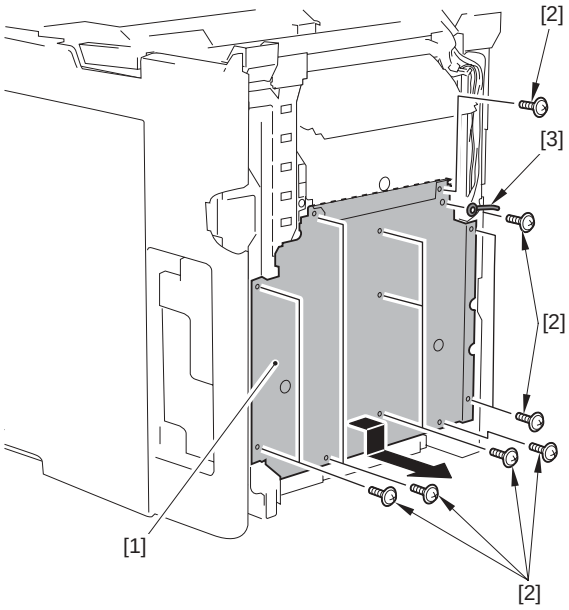

F-11-30

11.4.8 Controller Box

11.4.8.1 Before Removing the Controller Box

i-SENSYS MF9170 / i-SENSYS MF9130 / i-SENSYS MF8450

1) Remove the ETB unit.(page 7-28)Reference [Removing the ETB Unit]
2) Remove the rear cover unit.(page 11-6)Reference [Removing the Rear Cover Unit]
3) Remove the left cover.(page 11-8)Reference [Removing the Left Cover]
4) Remove the right cover.(page 11-7)Reference [Removing the Right Cover]
5) Remove the Electrical Components Cover.(page 11-11)Reference [Removing the Electrical Components Cover]

11.4.8.2 Removing the Controller Box

i-SENSYS MF9170 / i-SENSYS MF9130 / i-SENSYS MF8450

1) Remove the following parts.
   - 2 flat cables [1]
   - 2 clamps [2]
   - edge saddle [3]
   - 10 connectors [4]
   - 2 clamps [5] (only of the machine with FAX)
   - connector [6] (only of the machine with FAX)

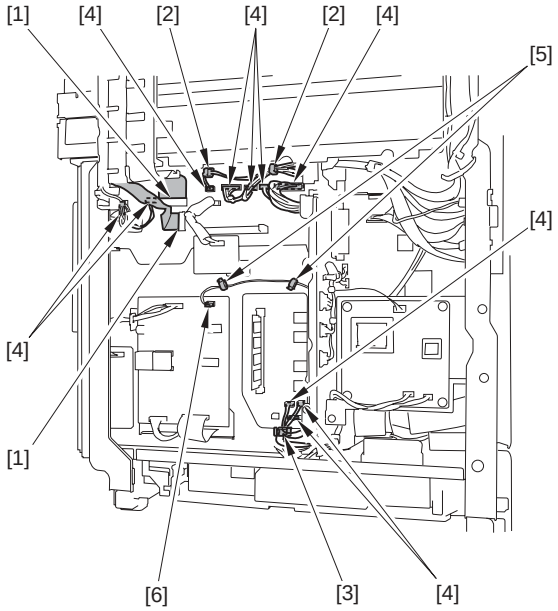

F-11-31

2) Remove the controller box [1].
   - 6 screws [2]

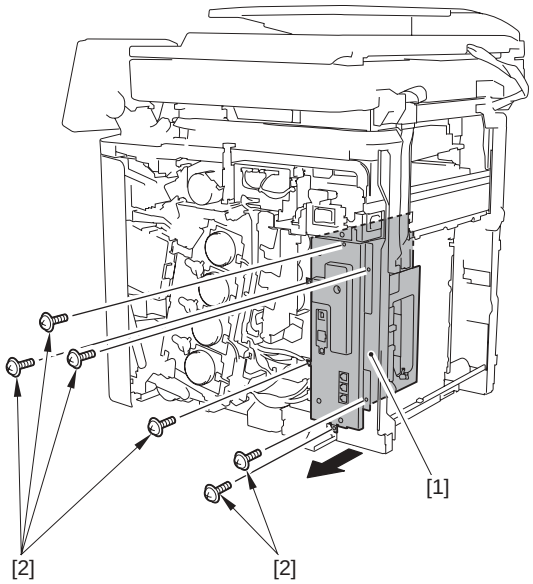

F-11-32

11.4.9 Laser Scanner Cover

11.4.9.1 Before Removing the Laser Scanner Cover

i-SENSYS MF9170 / i-SENSYS MF9130 / i-SENSYS MF8450

1) Remove the ETB unit.(page 7-28)Reference [Removing the ETB Unit]
2) Remove the rear cover unit.(page 11-6)Reference [Removing the Rear Cover Unit]
3) Remove the left cover.(page 11-8)Reference [Removing the Left Cover]
4) Remove the right cover.(page 11-7)Reference [Removing the Right Cover]
5) Remove the Electrical Components Cover.(page 11-11)Reference [Removing the Electrical Components Cover]
6) Remove the Controller Box.(page 11-11)Reference [Removing the Controller Box]
7) Remove the Off Hook PCB. (only of the machine with FAX)
8) Remove the DC Controller PCB.(page 11-21)Reference [Removing the DC Controller PCB]

11.4.9.2 Removing the Laser Scanner Cover

i-SENSYS MF9170 / i-SENSYS MF9130 / i-SENSYS MF8450

1) Remove the harness guide [1].
   - 1 cable clip [2]
   - 1 cable holder [3]

- 1 flat cable [4]
- 4 screws [5]

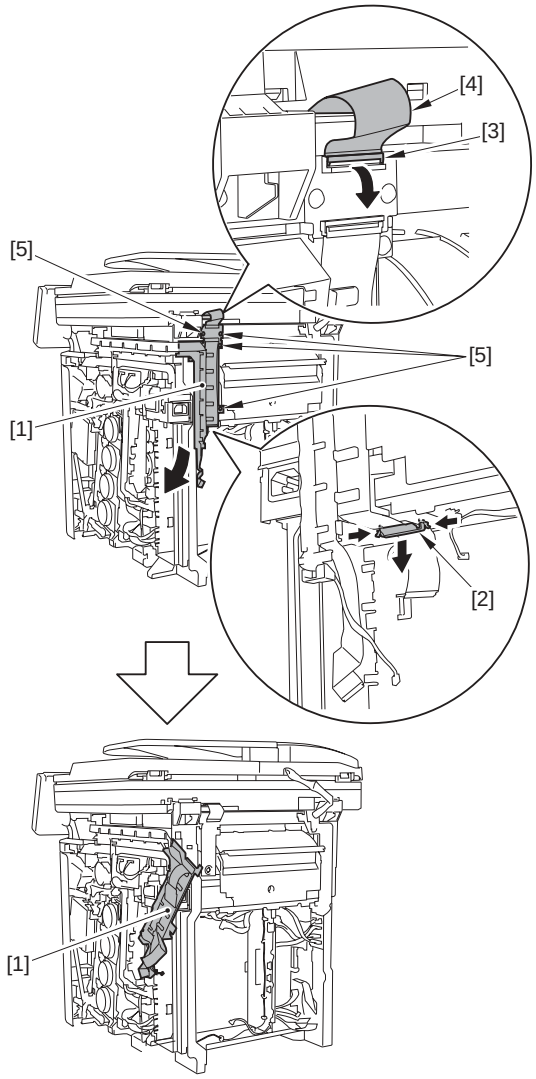

F-11-33

2) Remove the right frame reinforcement plate [1].
   - 8 screws [2]

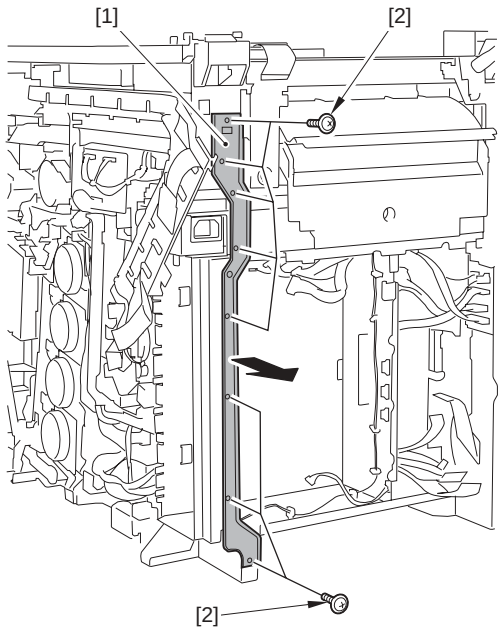

F-11-34

3) Open the 4 wire saddles [1] and free the 5 harnesses [3] from the 2 harness guide mouths [2].

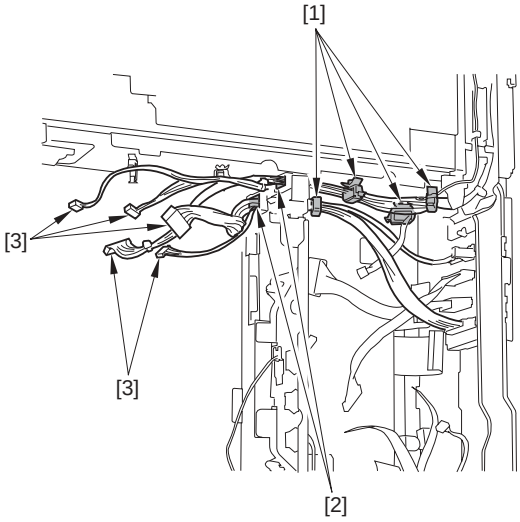

F-11-35

4) Remove the harness guide [1].
   - 1 screw [2]

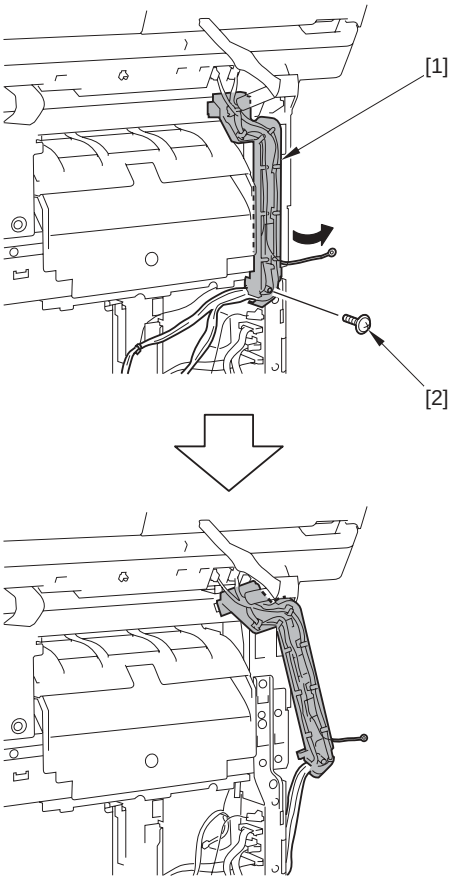

F-11-36

5) Remove the left frame reinforcement plate [1].
   - 6 screws [2]

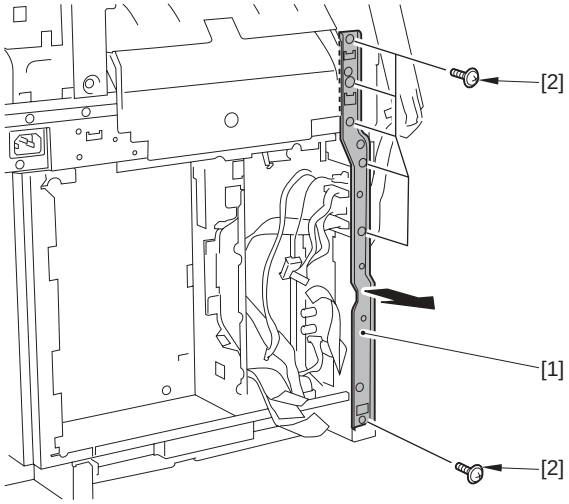

F-11-37

6) Remove the 8 screws [2] from the laser scanner cover [1].

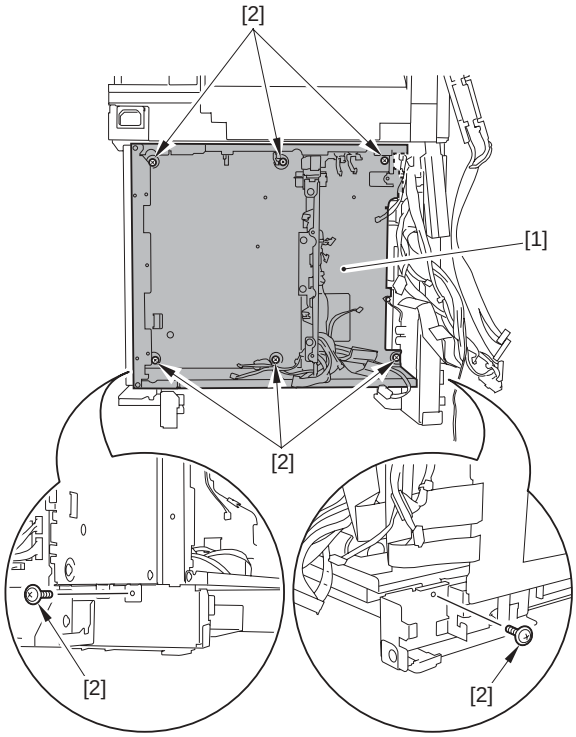

F-11-38

7) Remove the laser scanner cover [1].
   - 2 hooks [2]

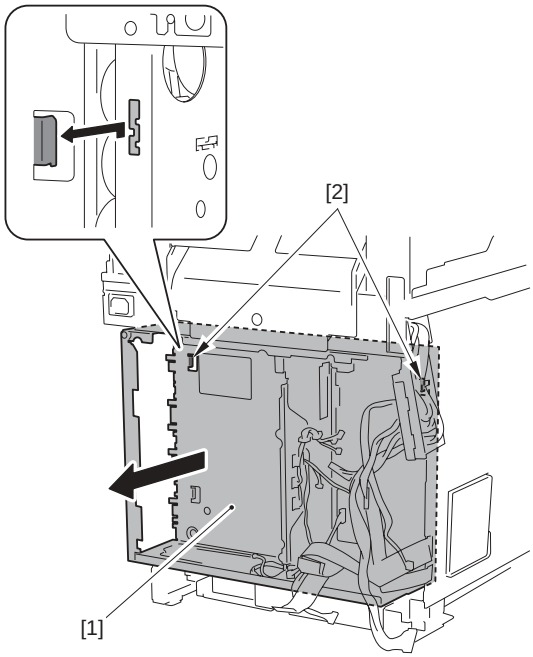

F-11-39

Point to Note at Installation

When installing the laser scanner cover, be sure to put the 4 flat cables [2] and the 3 harnesses [3] through the hole [1] of the laser scanner cover in advance.

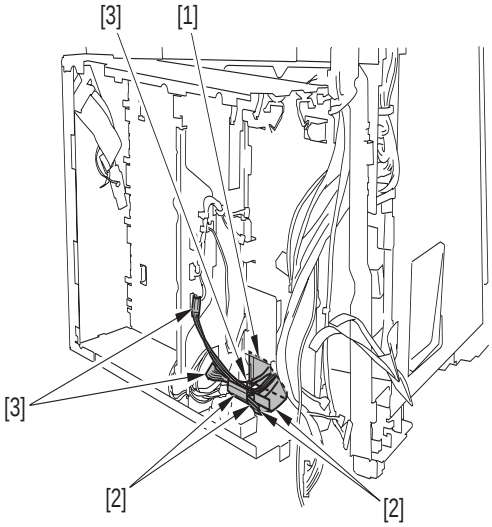

11.4.10 Upper Frame Unit

11.4.10.1 Before Removing the Upper Frame Unit

i-SENSYS MF9170 / i-SENSYS MF9130 / i-SENSYS MF8450

1) Remove the ETB unit.(page 7-28)Reference [Removing the ETB Unit]
2) Remove the fixing assembly.(page 9-5)Reference [Removing the Fixing Assembly]
3) Remove the rear cover unit.(page 11-6)Reference [Removing the Rear Cover Unit]
4) Remove the ADF Unit + Reader Unit.(page 4-7)Reference [Removing the ADF Unit + Reader Unit]
5) Remove the left cover.(page 11-8)Reference [Removing the Left Cover]
6) Remove the right cover.(page 11-7)Reference [Removing the Right Cover]

11.4.10.2 Removing the Upper Frame Unit

i-SENSYS MF9170 / i-SENSYS MF9130 / i-SENSYS MF8450

1) Remove the harness guide [1].
   - 4 screws [2]

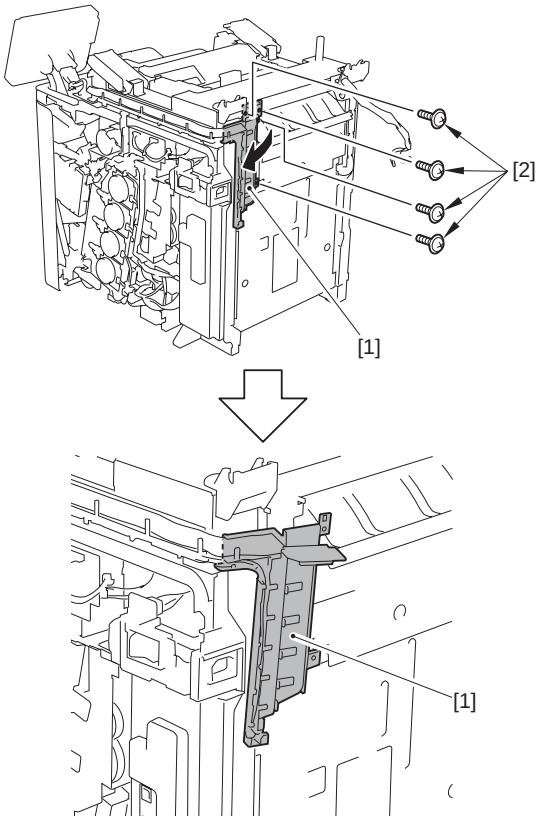

F-11-40

2) Remove the screw [2] on the backside of the flat cable [1].

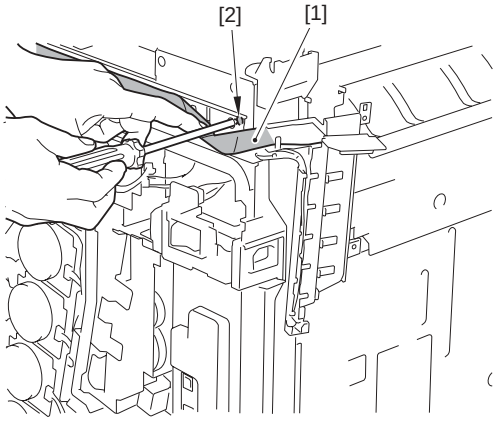

F-11-41

3) Remove the harness guide [1].

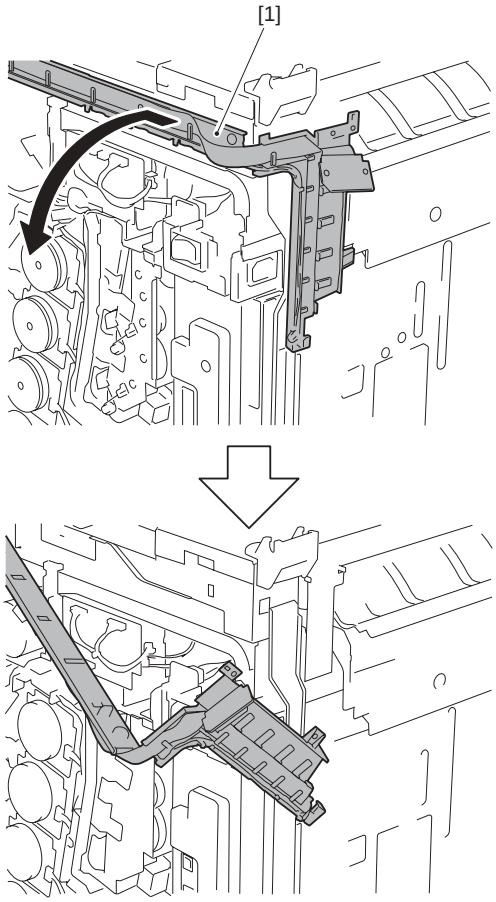

F-11-42

4) Remove the harness guide [1].
- 1 screw [2]

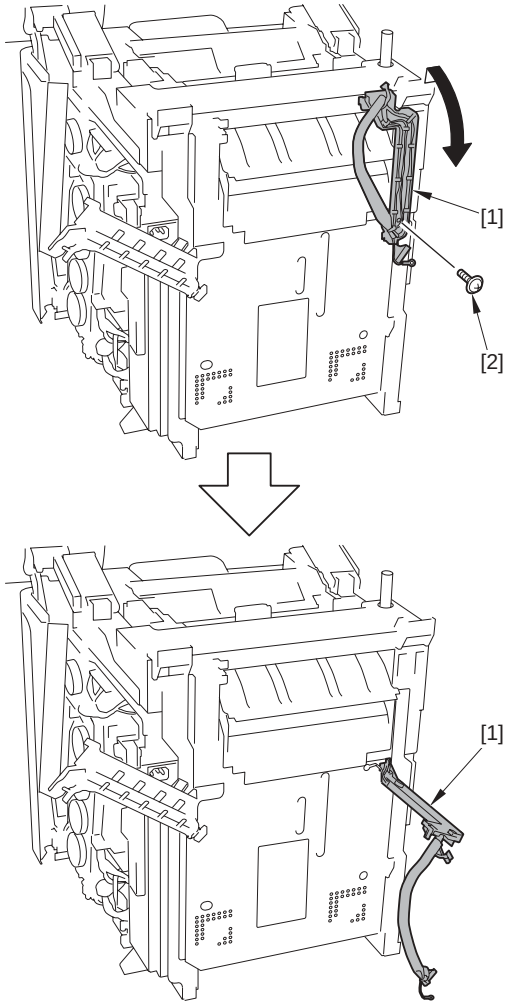

F-11-43

5) Remove the 6 screws [1] (on the left side of the upper frame unit).

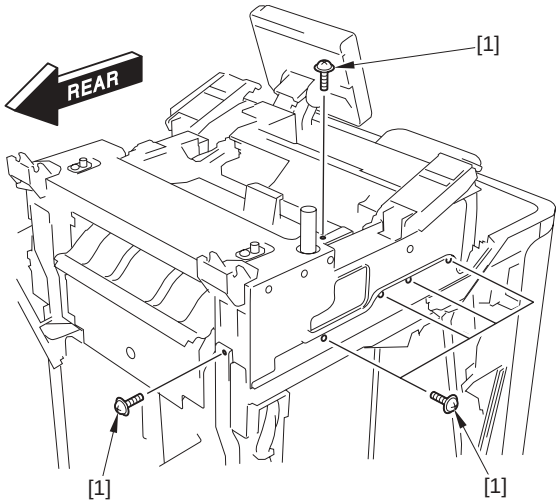

F-11-44

6) Remove the 6 screws [1] (on the right side of the upper frame unit).

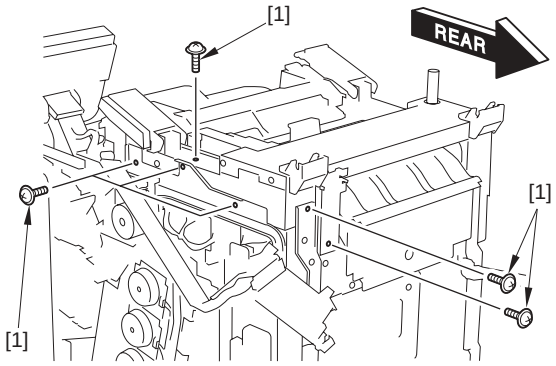

F-11-45

7) Move the 2 reader fixing arms [1] to the rear side.

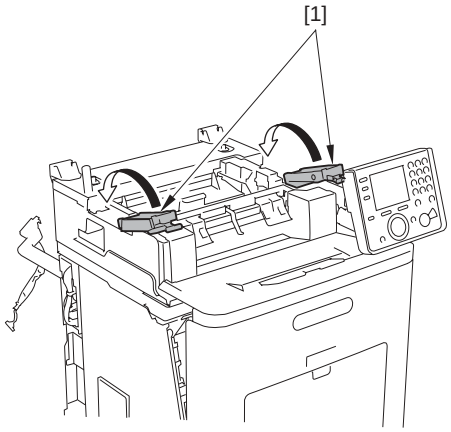

F-11-46

8) Open the fixing delivery cover [1] to remove the left upper front inner cover [2] and the right upper front inner cover [3].

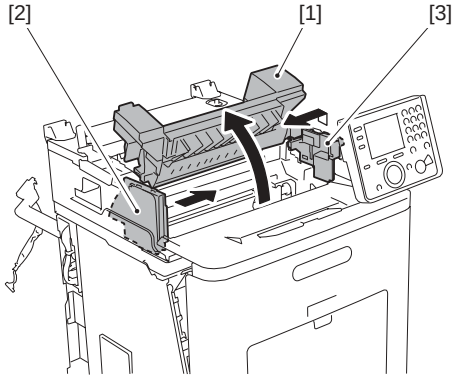

F-11-47

9) Close the fixing delivery cover [1].

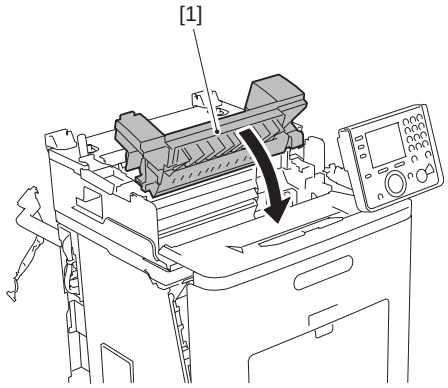

F-11-48

10) Remove the upper frame unit [1].

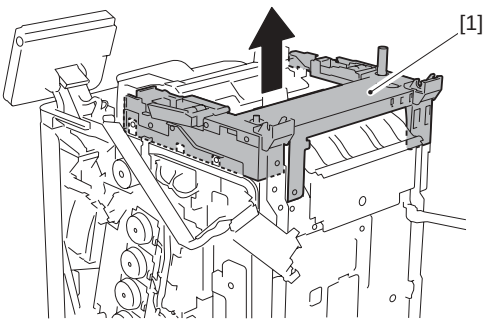

F-11-49

11.4.11 Main Drive Unit

11.4.11.1 Before Removing the Main Drive Assembly

i-SENSYS MF9170 / i-SENSYS MF9130 / i-SENSYS MF8450

1) Remove the ETB unit.(page 7-28)Reference [Removing the ETB Unit]
2) Remove the rear cover unit.(page 11-6)Reference [Removing the Rear Cover Unit]
3) Remove the right cover.(page 11-7)Reference [Removing the Right Cover]
4) Remove the Toner Cartridge Motor.

11.4.11.2 Removing the Main Drive Assembly

i-SENSYS MF9170 / i-SENSYS MF9130 / i-SENSYS MF8450

1) Disconnect the 4 connectors [1] and free the harness [3] from the 2 guides [2].

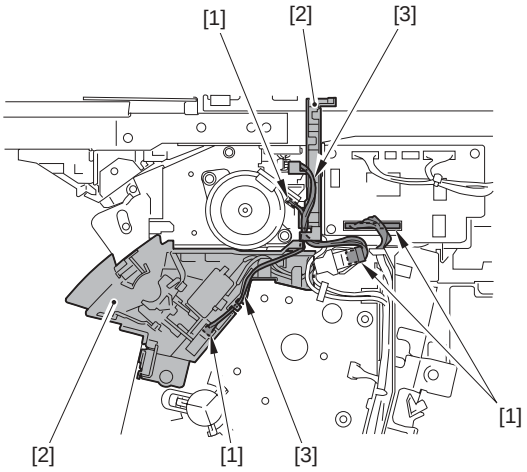

F-11-50

2) Remove the duplex feed motor [1].
   - 2 screws [2]

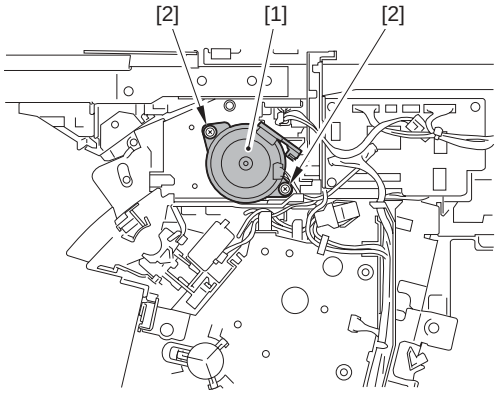

F-11-51

3) Free the harness [2] from the wire saddle [1].

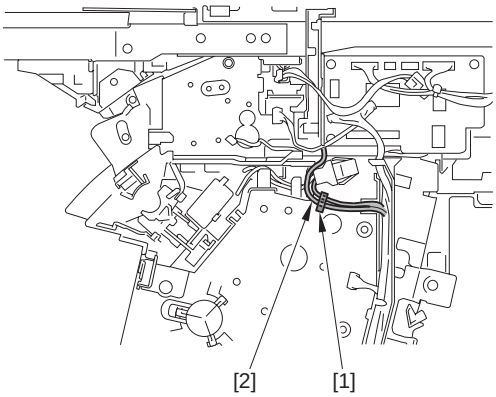

F-11-52

4) Remove the screw [1], remove the hook [2] in the direction of the arrow [A], and remove the interlock switch unit [3] in the direction of the arrow [B].

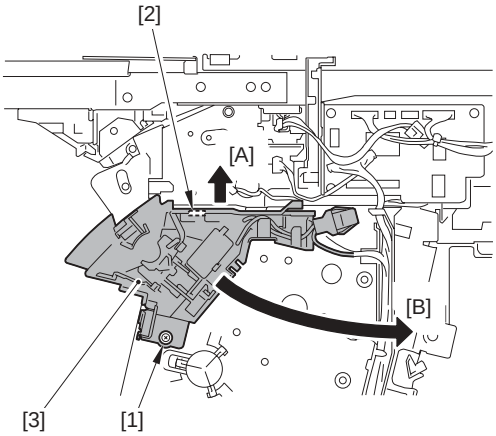

F-11-53

5) Slide the cable guide [1] to remove.
   - 1 claw [2]

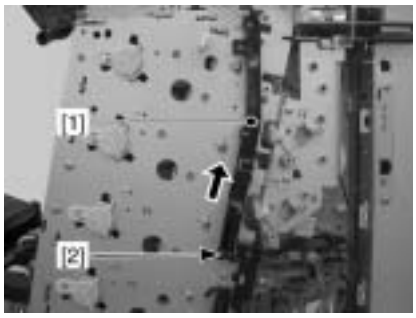

F-11-54

6) Slide the guide [1] to remove.
   - 1 claw [2]

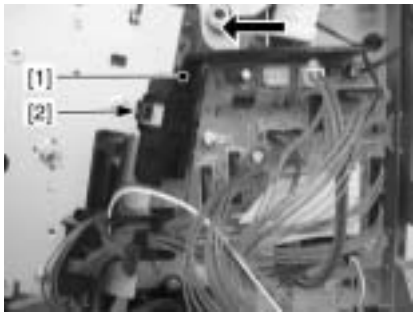

F-11-55

7) Free the cable from the cable guide [1].

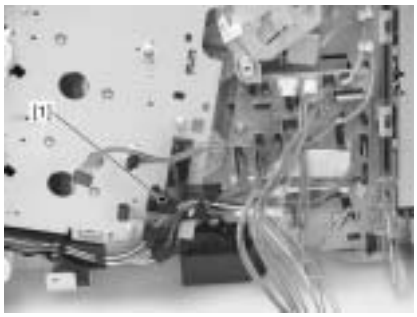

F-11-56

8) Remove the cable guide [1].
- 1 claw [2]

F-11-57

9) Remove the rod [1] from the shaft [2].

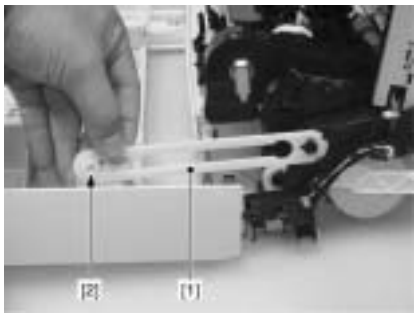

F-11-58

10) Fit the link [1] with the cutoff of the shaft [2] to remove the link.

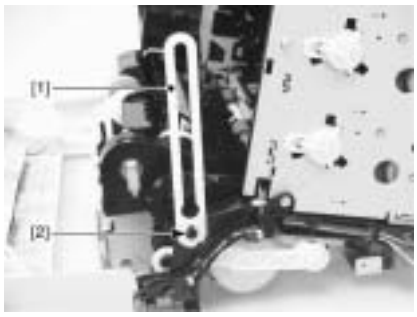

F-11-59

11) Free the cable from the cable guide [1].

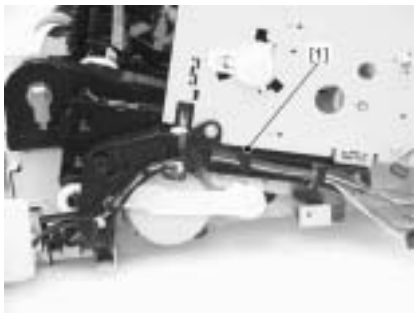

F-11-60

12) Remove the cable guide [1].
- 1 screw [2]
- 2 claws [3]

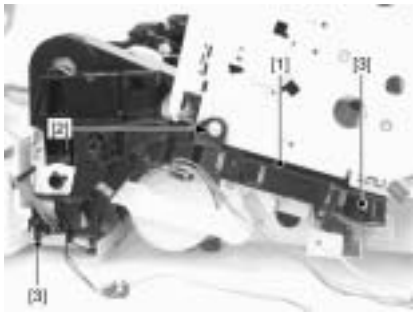

F-11-61

13) Remove the plate [1].
- 3 screws [2]

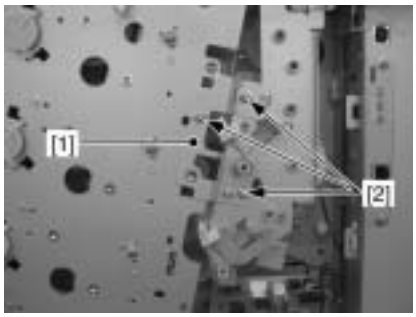

F-11-62

14) Remove the main drive unit [1].
- 1 connector [2]
- 4 screws [3]

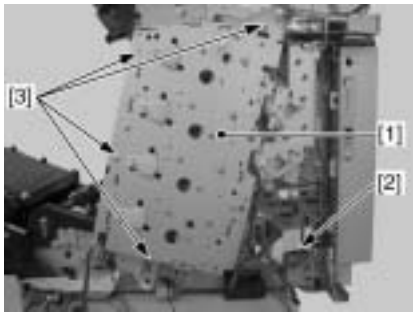

F-11-63

> ⚠
> Do not disassemble the main drive unit in the field.
> Disassembling it may cause a functional fault.

11.4.11.3 Point to Note When Installing the Main Drive Unit

i-SENSYS MF9170 / i-SENSYS MF9130 / i-SENSYS MF8450

1. Alignment of the gears in the main drive unit

When installing the main drive unit, the corresponding gears of the host machine need to be interlocked:
When removing the developing disengage drive unit: alignment of gears [A], [B] and [C] of the host machine.
When removing the main drive unit only: alignment of gears [B] and [C] of the host machine.

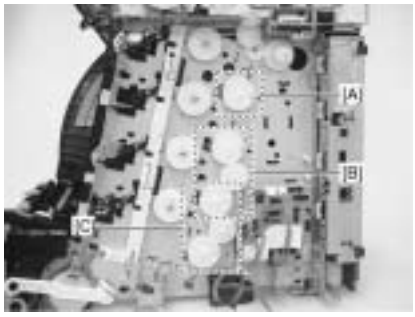

F-11-64

Following shows the procedure:

1-1. Confirming the alignment of the gear [A] of the host machine

1) Align the gear's elongate hole [2] with the triangle [1].

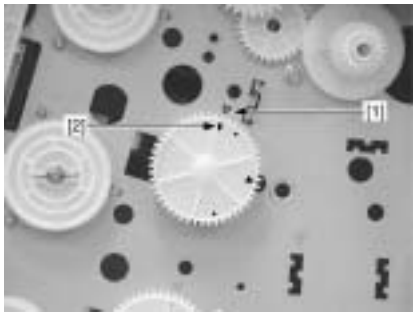

F-11-65

1-2. Confirming the alignment of the gear [B] of the host machine.

1) Align the gear [5]'s elongate hole [2] with the triangle [1].

2) Interlock the teeth of the gears [5] and [6] so that the holes [3] of the gears will lie right next to each other.

3) Interlock the teeth of the gears [6] and [7] so that the holes [4] of the gears will lie right next to each other.

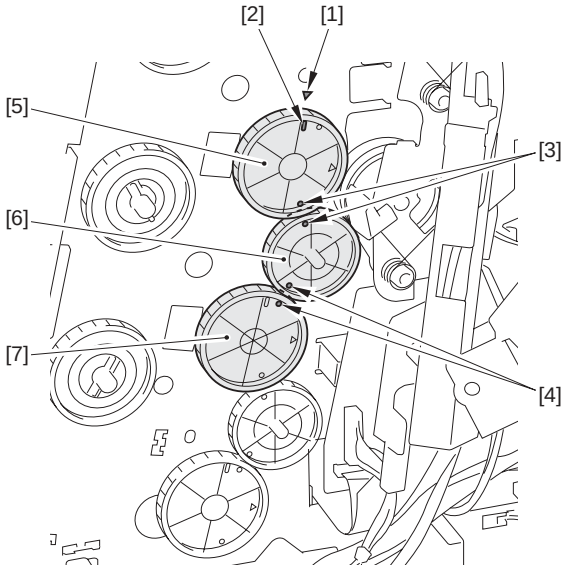

F-11-66

1-3. Confirming the alignment of the gear [C] of the host machine

1) Interlock the teeth of the gears [3] and [4] so that the holes [1] of the gears will lie right next to each other.

2) Interlock the teeth of the gears [4] and [5] so that the holes [2] of the gears will lie right next to each other.

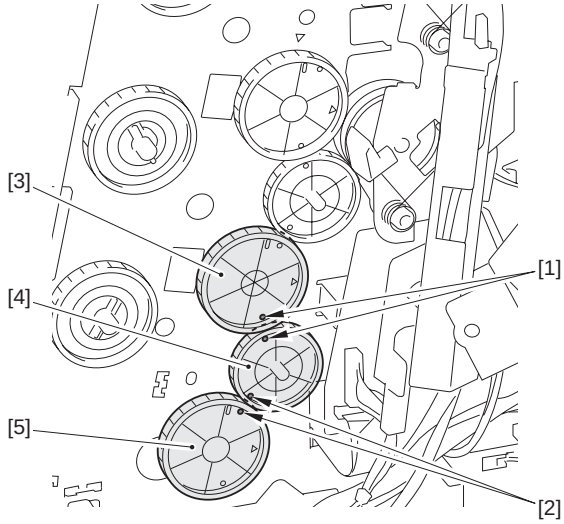

F-11-67

In the alignment procedure from 1-1 to 1-3, the teeth of the gears must be aligned completely.

2. Alignment of developing disengage drive unit

2-1. Alignment in assembling the developing disengage drive unit

Turn the gear [2] of the developing disengage drive unit [1] in the direction of the arrow, and align the solenoid claw [3] with the cutoff [5] in the gear (home position).

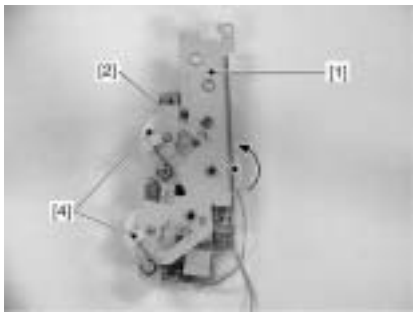

F-11-68

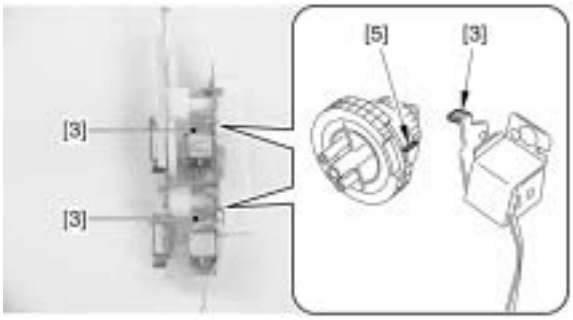

F-11-69

When the developing disengage drive unit is properly set to its home position, the gear [4] does not rotate if turning the gear [2], and there will be no sense of resistance when rotating the gear [2].

2-2. Alignment in installing the developing disengage drive unit

When installing the developing disengage drive unit with the main drive unit removed, the corresponding gears of the host machine need to be aligned (interlocked).

Tighten the 2 screws [1] to the developing disengage drive unit [3] and tighten the screw [2] halfway to confirm the alignment of the gear [4] and the gear [5].

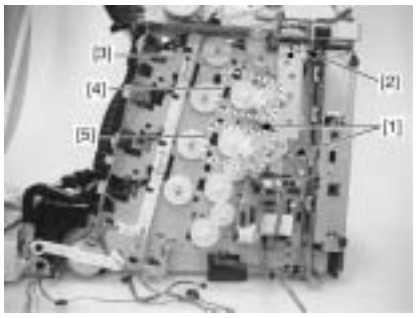

F-11-70

Confirming the alignment of the gear [4]

There is a small-toothed gear [3] in the developing disengage drive unit [1]. Make sure that the small-toothed gear is aligned with the elongate hole [2] (home position). Also, as shown in the figure [4], make sure that the triangle and the elongate hold of the gear lie right next to each other.

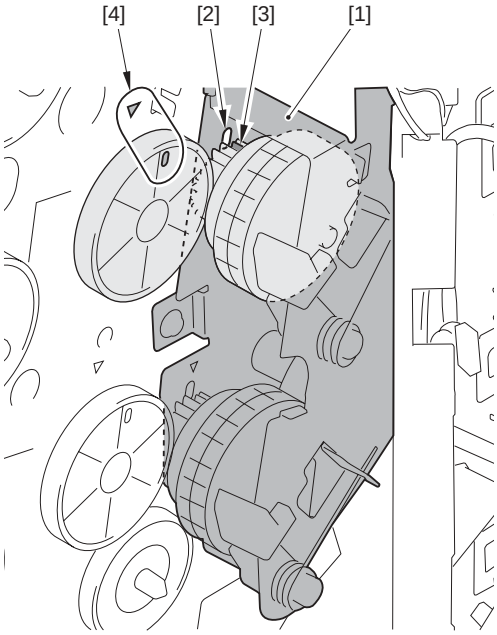

F-11-71

Confirming the alignment of the gear [5]
There is a small-toothed gear [3] in the developing disengage drive unit [1]. Make sure that the small-toothed gear is aligned with the elongate hole [2] (home position). Also, as shown in the figure [4], make sure that the triangle and the elongate hold of the gear lie right next to each other.

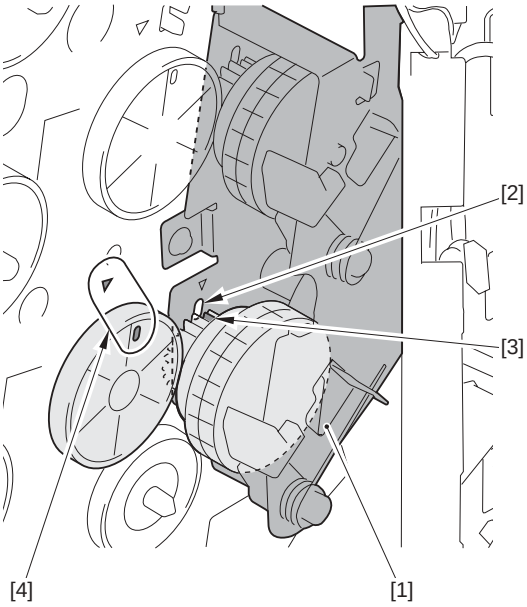

F-11-72

3. Alignment of the main drive unit as Service Parts

When removing the shipping lock that is attached with the main drive unit as a Service Parts, or when removing the main drive unit for servicing, the main drive unit must be aligned before installing to the host machine.

1) Shift the 4 levers [1] of the main drive unit [2] upward.

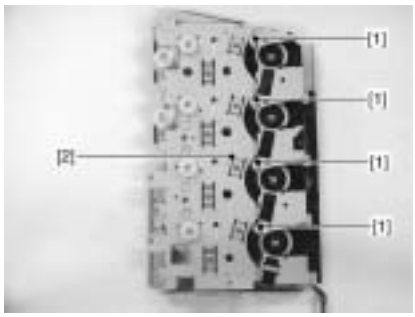

F-11-73

2) Turn the gear [1] and align the holes [2] and the circles [3] each in 2 locations.

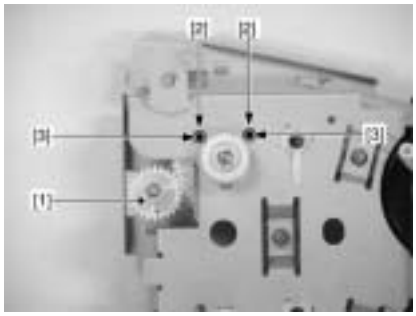

F-11-74

3) Turn the gear [1] and align the holes [2] and the circles [3] each in 2 locations.

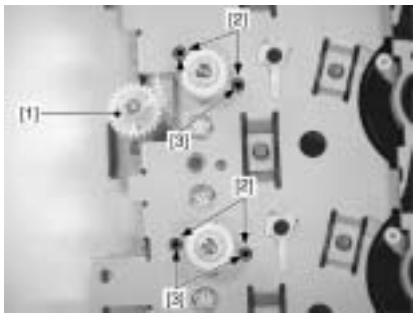

F-11-75

4) Make sure that the alignment of the host machine side is properly adjusted.
5) Move the ETB lock [1] in the direction of the arrow.

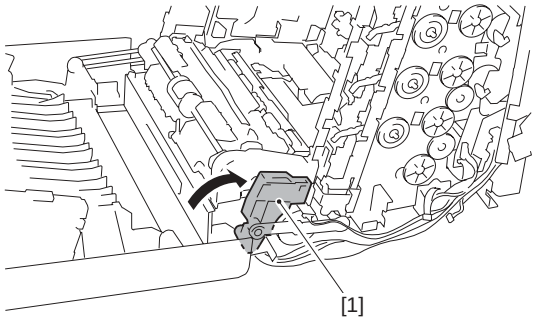

F-11-76

6) Insert the main drive unit [1] straight so that 3 positioning parts [3] are properly fitted.
- 4 screws [2]

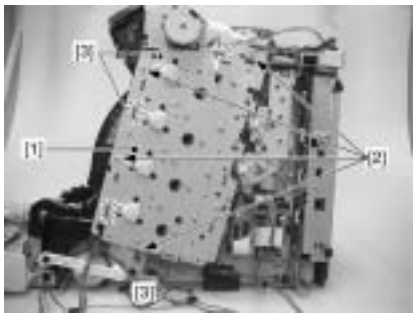

F-11-77

7) Confirm that the gear positions are properly aligned by checking from the 2 windows [1].

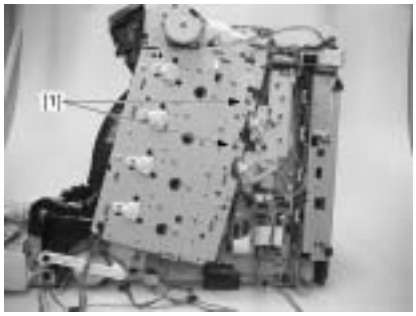

F-11-78

Alignment is adjusted properly if the elongate holes of the gears [1] and [2] and the plate are aligned in a straight line as shown in the figure below.

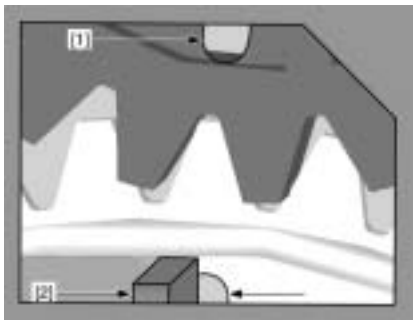

F-11-79

8) Install the plate [1].
   - 3 screws [2]
9) Fully tighten the screw [3] that has been halfway tightened.

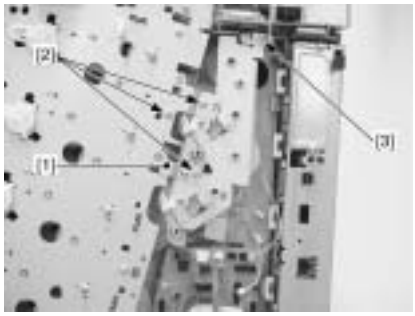

F-11-80

> ⚠
> Move the ETB drawer connector [1] at the right side to check that the couplings [2] and the lock [3] of the toner cartridge for the four colors; BK, Y, C, and M work with each other.

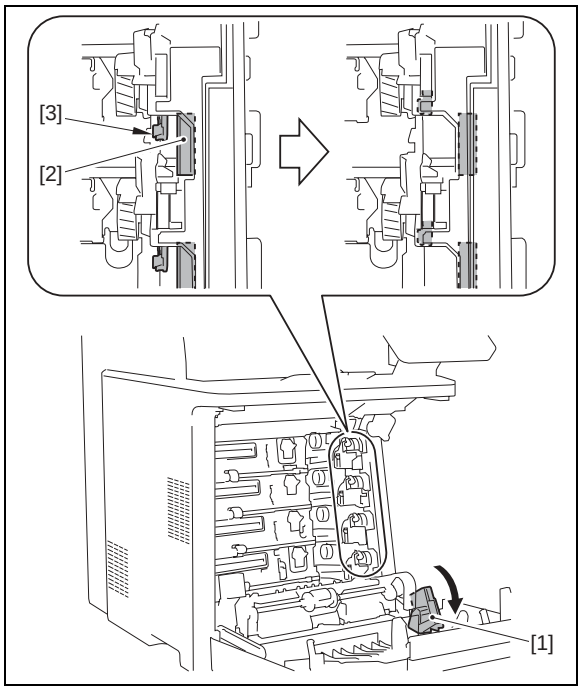

11.4.12 Operation Panel Unit

11.4.12.1 Removing the Control Panel Unit

i-SENSYS MF9170 / i-SENSYS MF9130 / i-SENSYS MF8450

1) Remove the panel stand left cover [1] and the panel stand right cover [2].
   - 1 claw [3]

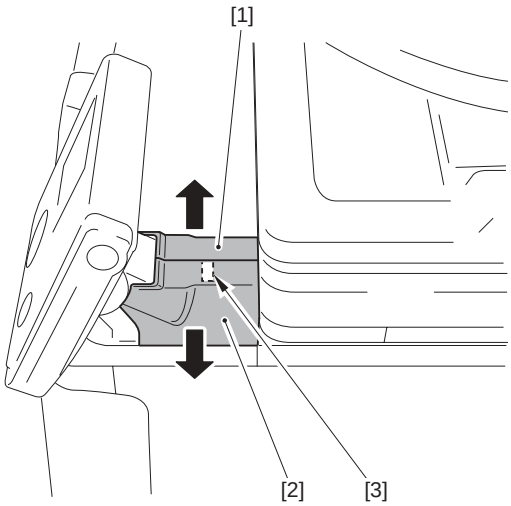

F-11-81

2) Remove the control panel unit [1].
   - 2 connectors [2]
   - 1 clamp [3]
   - 2 screws [4]

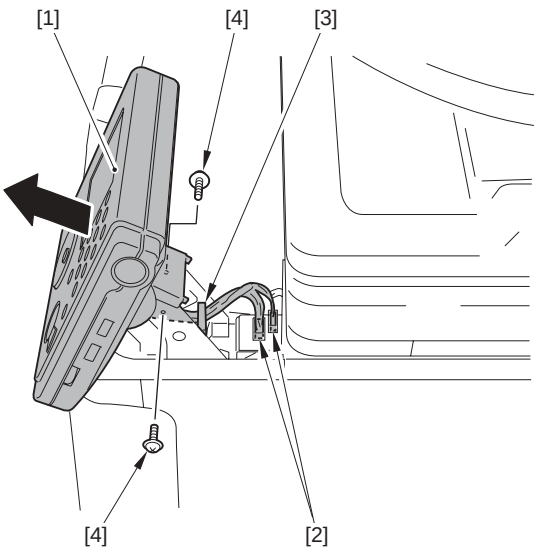

F-11-82

Point to Note at Installation
Be sure to fit the 2 bosses [1] of the control panel unit into the 2 grooves [2] of the stand to install.

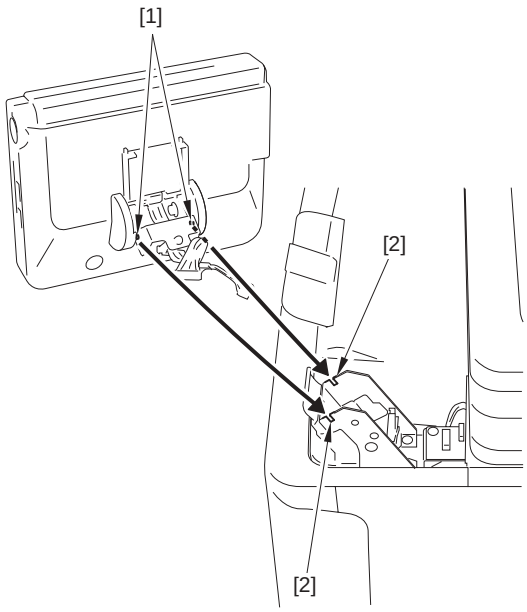

11.4.13 NCU Board

11.4.13.1 Before Removing the NCU PCB

i-SENSYS MF9170 / i-SENSYS MF9130 / i-SENSYS MF8450

1) Remove the ETB unit.(page 7-28)Reference [Removing the ETB Unit]
2) Remove the rear cover unit.(page 11-6)Reference [Removing the Rear Cover Unit]
3) Remove the left cover.(page 11-8)Reference [Removing the Left Cover]
4) Remove the Electrical Components Cover.(page 11-11)Reference [Removing the Electrical Components Cover]

11.4.13.2 Removing the NCU PCB

i-SENSYS MF9170 / i-SENSYS MF9130 / i-SENSYS MF8450

1) Remove the NCU PCB.
   - 1 flat cable [2]
   - 3 connectors [3]
   - 2 screws [4]

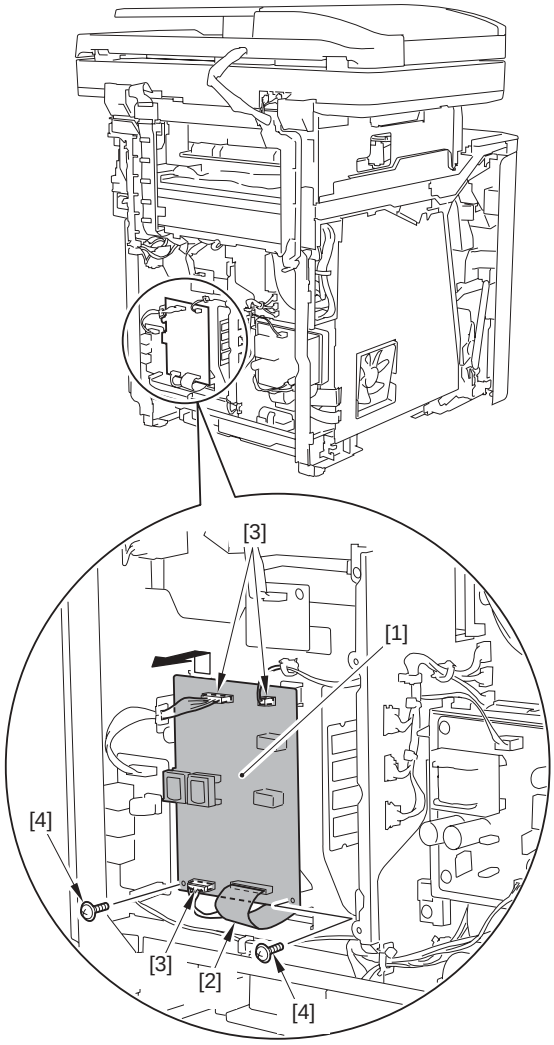

F-11-83

11.4.14 DC Controller PCB

11.4.14.1 Before Removing the DC Controller PCB

i-SENSYS MF9170 / i-SENSYS MF9130 / i-SENSYS MF8450

1) Remove the ETB unit.(page 7-28)Reference [Removing the ETB Unit]
2) Remove the rear cover unit.(page 11-6)Reference [Removing the Rear Cover Unit]
3) Remove the left cover.(page 11-8)Reference [Removing the Left Cover]
4) Remove the right cover.(page 11-7)Reference [Removing the Right Cover]
5) Remove the Electrical Components Cover.(page 11-11)Reference [Removing the Electrical Components Cover]
6) Remove the Controller Box.(page 11-11)Reference [Removing the Controller Box]
7) Remove the Off Hook PCB. (only of the machine with FAX)

11.4.14.2 Removing the DC Controller PCB

i-SENSYS MF9170 / i-SENSYS MF9130 / i-SENSYS MF8450

1) Disconnect the 8 flat cable connectors [1] and the 10 connectors [2].

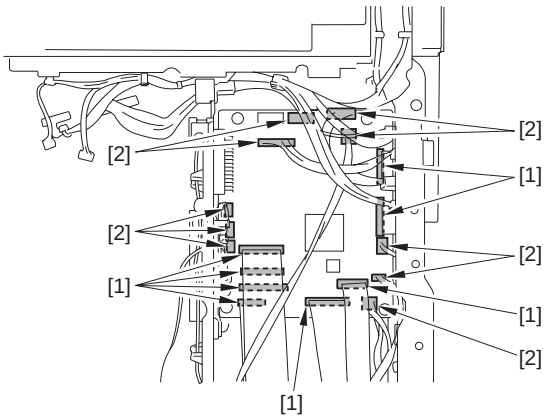

F-11-84

2) Remove the DC controller PCB [1].
- 4 screws [2]

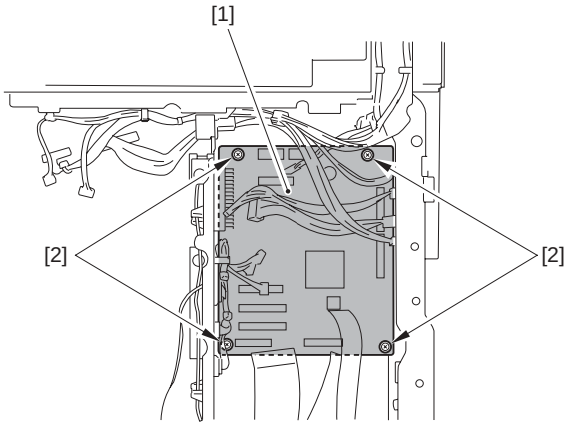

F-11-85

11.4.15 Memory Controller PCB

11.4.15.1 Before Removing the Memory Controller PCB

i-SENSYS MF9170 / i-SENSYS MF9130 / i-SENSYS MF8450

1) Remove the ETB unit.(page 7-28)Reference [Removing the ETB Unit]
2) Remove the rear cover unit.(page 11-6)Reference [Removing the Rear Cover Unit]
3) Remove the left cover.(page 11-8)Reference [Removing the Left Cover]
4) Remove the right cover.(page 11-7)Reference [Removing the Right Cover]
5) Remove the Electrical Components Cover.(page 11-11)Reference [Removing the Electrical Components Cover]
6) Remove the Controller Box.(page 11-11)Reference [Removing the Controller Box]
7) Remove the Off Hook PCB. (only of the machine with FAX)
8) Remove the DC Controller PCB.(page 11-21)Reference [Removing the DC Controller PCB]
9) Remove the Laser Scanner Cover.(page 11-11)Reference [Removing the Laser Scanner Cover]

11.4.15.2 Removing the Memory Controller PCB

i-SENSYS MF9170 / i-SENSYS MF9130 / i-SENSYS MF8450

1) Remove the memory controller PCB [1].
- 4 connectors [2]
- 3 screws [3]

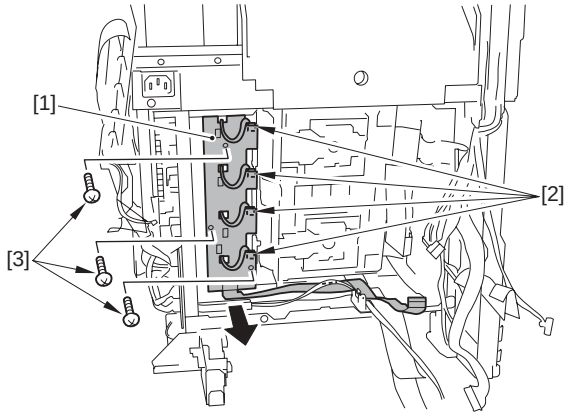

F-11-86

11.4.16 Duplexing Driver PCB

11.4.16.1 Before Removing the Duplex Driver PCB

i-SENSYS MF9170 / i-SENSYS MF9130 / i-SENSYS MF8450

1) Remove the ETB unit.(page 7-28)Reference [Removing the ETB Unit]
2) Remove the rear cover unit.(page 11-6)Reference [Removing the Rear Cover Unit]
3) Remove the right cover.(page 11-7)Reference [Removing the Right Cover]

11.4.16.2 Removing the Duplex Driver PCB

i-SENSYS MF9170 / i-SENSYS MF9130 / i-SENSYS MF8450

1) Remove the duplex driver PCB [1].
- 3 connectors [2]
- 3 screws [3]

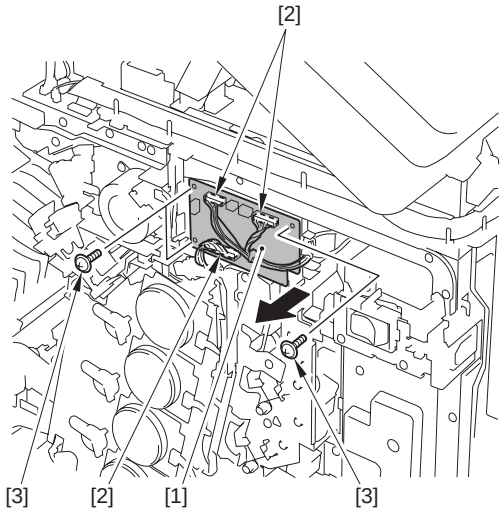

F-11-87

11.4.17 Low-voltage Power Supply PCB

11.4.17.1 Before Removing the Low-Voltage Power Supply PCB

i-SENSYS MF9170 / i-SENSYS MF9130 / i-SENSYS MF8450

MEMO:
19 parts (e.g.: external cover, unit) need to be removed when removing the low voltage power supply PCB. Be sure to have enough space equivalent to 1,700mm x 1,100mm for storing parts.

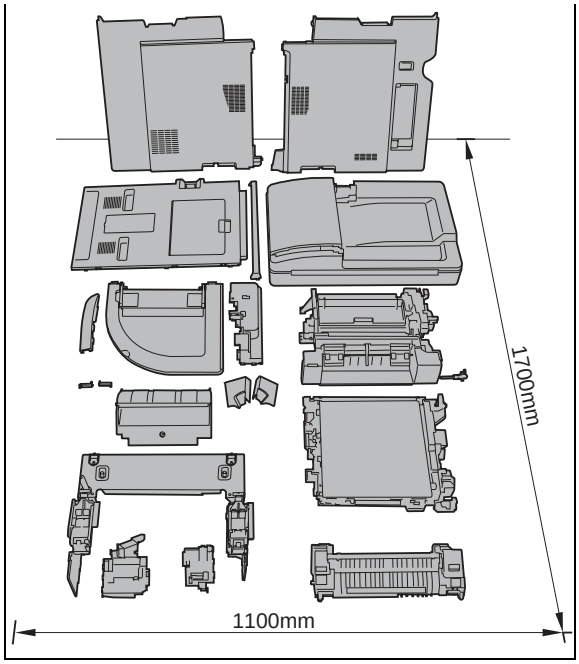

1) Remove the ETB unit.(page 7-28)Reference [Removing the ETB Unit]
2) Remove the fixing assembly.(page 9-5)Reference [Removing the Fixing Assembly]
3) Remove the rear cover unit.(page 11-6)Reference [Removing the Rear Cover Unit]
4) Remove the ADF Unit + Reader Unit.(page 4-7)Reference [Removing the ADF Unit + Reader Unit]
5) Remove the left cover.(page 11-8)Reference [Removing the Left Cover]
6) Remove the right cover.(page 11-7)Reference [Removing the Right Cover]
7) Remove the Upper Frame Unit.(page 11-13)Reference [Removing the Upper Frame Unit]
8) Remove the Reversal Unit.(page 8-25)Reference [Removing the Reversal Unit]

11.4.17.2 Removing the Low Voltage Power Supply PCB

i-SENSYS MF9170 / i-SENSYS MF9130 / i-SENSYS MF8450

1) Remove the switch button unit [1].
- 2 screws [2]

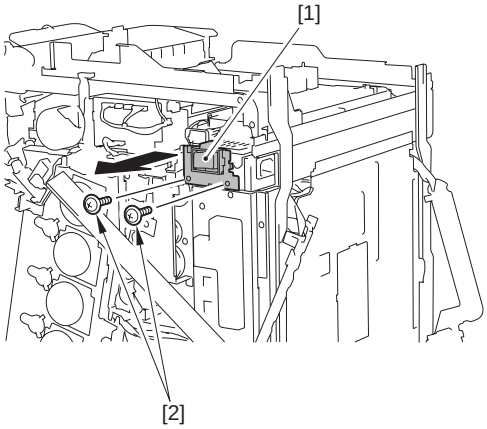

F-11-88

2) Disconnect the connector [1] and remove the 4 screws (TP) [2] and the screw (with washer) [3].

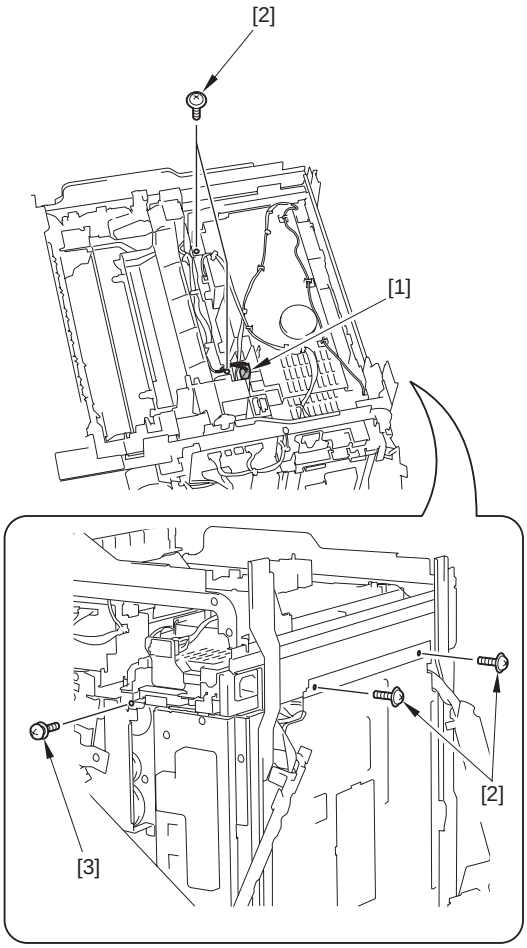

F-11-89

3) Remove the wire saddle [1] and disconnect the 5 connectors [2].

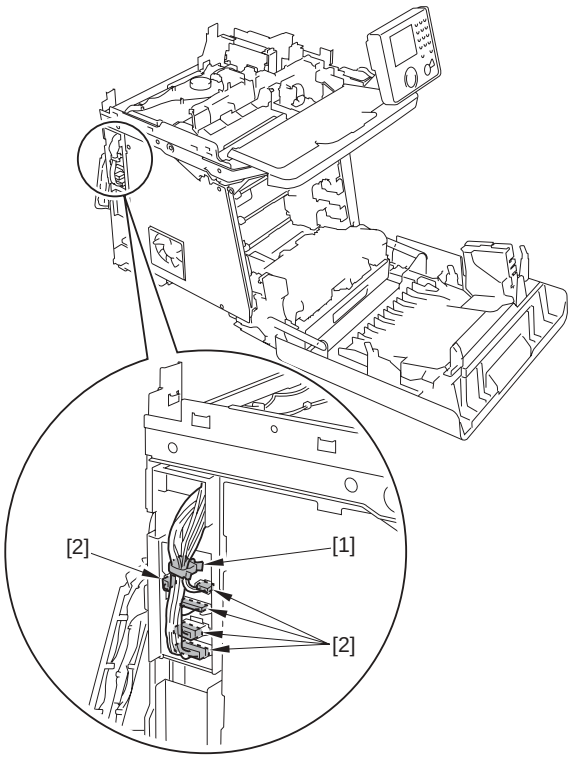

F-11-90

4) Move the low voltage power supply PCB [1] in the direction of the arrow, and free the 5 harnesses [3] from the harness guide hole [2].

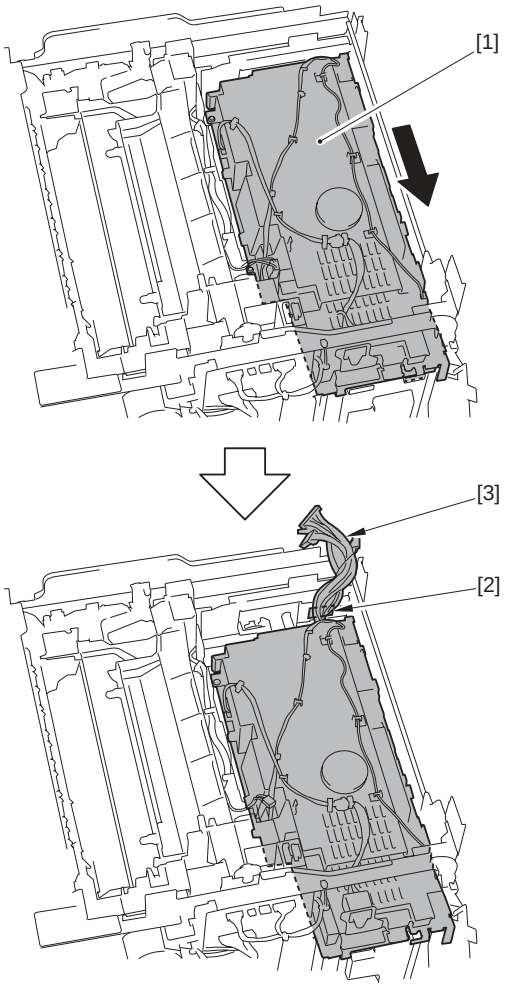

F-11-91

5) Remove the low voltage power supply PCB [1].

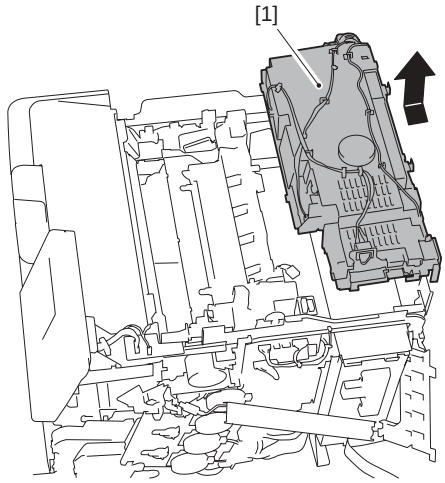

F-11-92

11.4.18 High-voltage Power Supply PCB

11.4.18.1 Before Removing the High Voltage Power Supply PCB

i-SENSYS MF9170 / i-SENSYS MF9130 / i-SENSYS MF8450

1) Remove the ETB unit.(page 7-28)Reference [Removing the ETB Unit]
2) Remove the rear cover unit.(page 11-6)Reference [Removing the Rear Cover Unit]
3) Remove the left cover.(page 11-8)Reference [Removing the Left Cover]
4) Remove the Electrical Components Cover.(page 11-11)Reference [Removing the Electrical Components Cover]
5) Remove the Off Hook PCB. (only of the machine with FAX)

11.4.18.2 Removing the High Voltage Power Supply PCB

i-SENSYS MF9170 / i-SENSYS MF9130 / i-SENSYS MF8450

1) Disconnect the 2 flat cables [1].

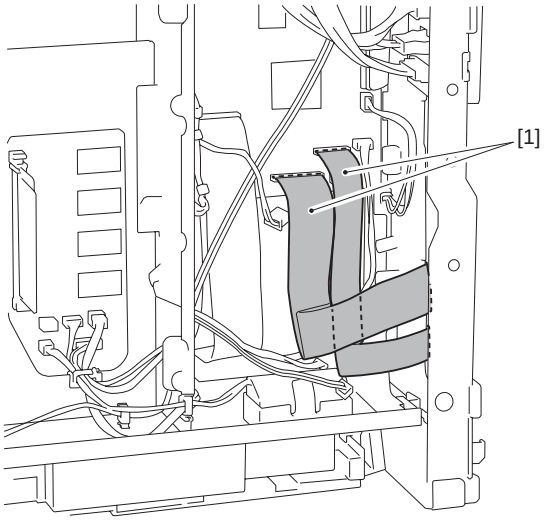

F-11-93

2) Remove the high voltage power supply PCB [1].
   - 2 screws (binding) [2]
   - 2 screws (double SEMS) [3]
   - 7 claws [4]

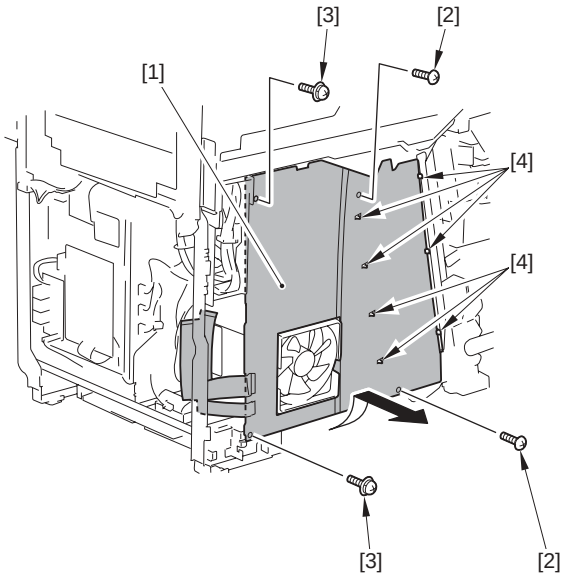

F-11-94

11.4.19 Cooling Fan

11.4.19.1 Before Removing the Cooling Fan

i-SENSYS MF9170 / i-SENSYS MF9130 / i-SENSYS MF8450

1) Remove the ETB unit.(page 7-28)Reference [Removing the ETB Unit]
2) Remove the rear cover unit.(page 11-6)Reference [Removing the Rear Cover Unit]
3) Remove the left cover.(page 11-8)Reference [Removing the Left Cover]
4) Remove the Electrical Components Cover.(page 11-11)Reference [Removing the Electrical Components Cover]
5) Remove the Off Hook PCB. (only of the machine with FAX)
6) Removing the High Voltage Power Supply PCB.(page 11-24)Reference [Removing the High Voltage Power Supply PCB]

11.4.19.2 Removing the Cooling Fan

i-SENSYS MF9170 / i-SENSYS MF9130 / i-SENSYS MF8450

1) Disconnect the connector [1].

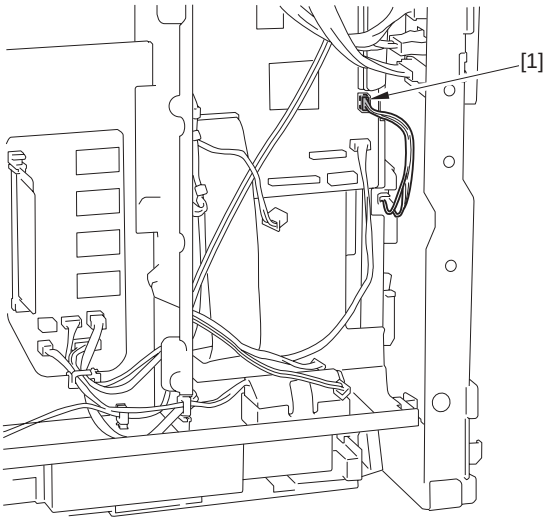

F-11-95

2) Remove the cooling fan unit [1].
- 1 screw [2]

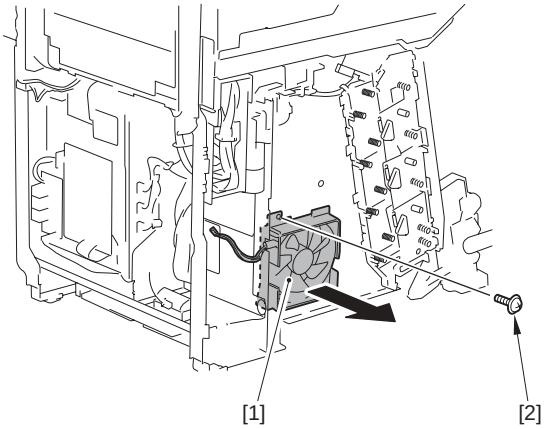

F-11-96

3) Remove the grounding spring [1].

F-11-97

4) Remove the heat exhaust fan [1].
- 6 claws [2]

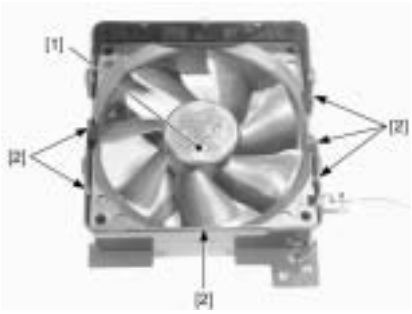

F-11-98

11.4.20 Duplex Fan

11.4.20.1 Before Removing the Duplex Fan

i-SENSYS MF9170 / i-SENSYS MF9130 / i-SENSYS MF8450

1) Remove the ETB unit.(page 7-28)Reference [Removing the ETB Unit]

11.4.20.2 Removing the Duplex Fan

i-SENSYS MF9170 / i-SENSYS MF9130 / i-SENSYS MF8450

1) Remove the cable cover [1].
- 1 screw [2]
- 1 claw [3]

F-11-99

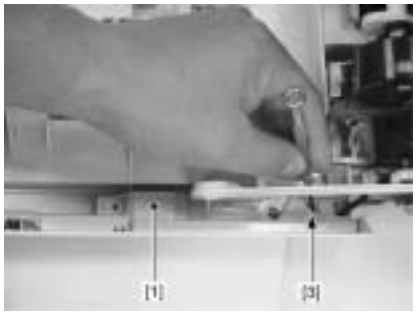

F-11-100

2) Remove the duplex fan unit [1].
- 1 connector [2]
- 2 screws [3]

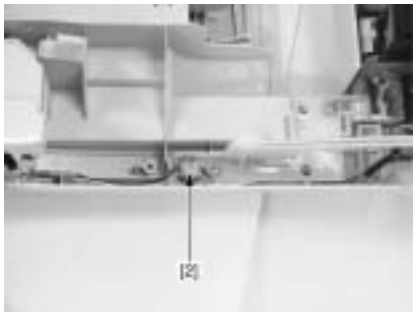

F-11-101

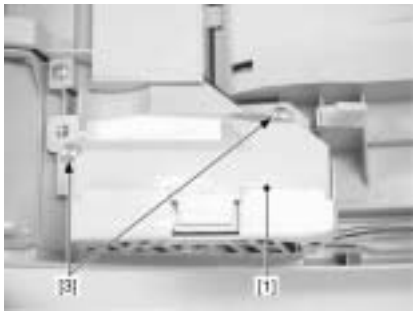

F-11-102

3) Remove the fan cover [1] to remove the duplex fan.
- 3 claws [2]

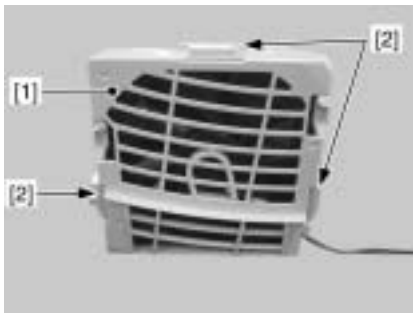

F-11-103

Chapter 12 Maintenance and Inspection

Contents

12.1 Periodically Replaced Parts

12.1.1 Periodically Replaced Parts

i-SENSYS MF9170 / i-SENSYS MF9130 / i-SENSYS MF8450

This machine does not have parts that require periodical replacement.

12.2 Consumables

12.2.1 Expected Service Life of Consumable Parts

i-SENSYS MF9170 / i-SENSYS MF9130 / i-SENSYS MF8450

Some parts of the machine are likely to require replacement once or more because of wear or damage. Replace them when they are found to be faulty by referring to the following table:

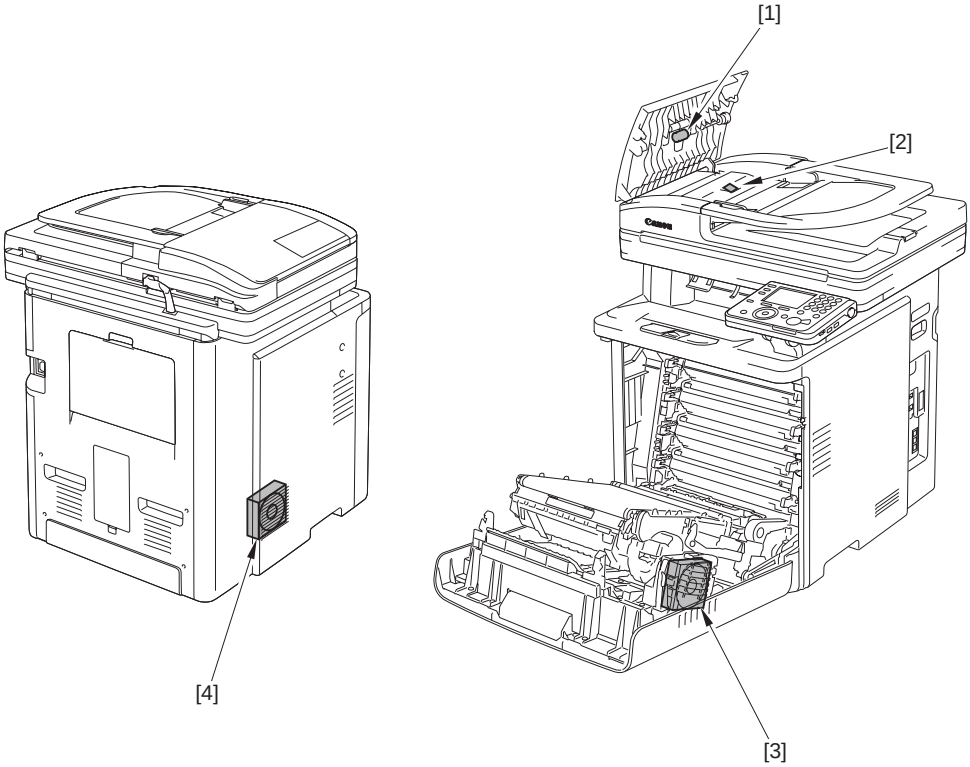

F-12-1

T-12-1

No	Parts name	Parts No.	Q'ty	Estimated life
[1]	ADF separation roller	FL2-6637	1	50,000 sheets
[2]	ADF separation pad	FC7-6297	1	50,000 sheets
[3]	Duplex fan	RK2-0954	1	25,000 hours
[4]	Main body fan	RK2-0954	1	25,000 hours

*: The estimated life in the case of continuous power distribution at 24 hours/day for 25,000 hours is nearly equivalent to 3 years.
(It is nearly equivalent to 5 years in the case of power distribution at 14 hours/day.)

12.3 Periodical Service

12.3.1 Periodic Service

i-SENSYS MF9170 / i-SENSYS MF9130 / i-SENSYS MF8450

This machine does not have parts that require periodic servicing.

Chapter 13 Measurement and Adjustments

Contents

13.1 Scanning System

13.1.1 Procedure after Replacing the Copyboard Glass

i-SENSYS MF9170 / i-SENSYS MF9130 / i-SENSYS MF8450

After replacing the copyboard glass, enter the correction values (X, Y, Z) of the standard white plate which are indicated on the back of the new copyboard glass in the service mode.

Correction value (X): Service mode> COPIER> ADJUST> CCD> WPLT-X

Correction value (Y): Service mode> COPIER> ADJUST> CCD> WPLT-Y

Correction value (Z): Service mode> COPIER> ADJUST> CCD> WPLT-Z

Also, rewrite the values in the service book.

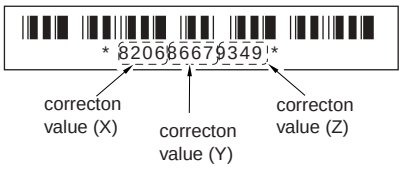

F-13-1

13.2 Fixing System

13.2.1 Checking the Nip Width (fixing pressure roller)

i-SENSYS MF9170 / i-SENSYS MF9130 / i-SENSYS MF8450

> ⚠
> When removing a paper, be sure to turn on the power supply and remove it after checking that jam has occurred in the machine.
> Take notice that removing a paper with no jam occurred in the machine may cause a broken fixing film.

An incorrect nip width may cause the faulty fixing.
Check the nip width by following the procedure below if poor fixing image defect occurs.

1) Make an all solid black print of A4 or Letter size using an toner cartridge same as for this machine, and take the print to the customer's site.
2) Place the solid black print, with the printed side facing DOWN, in the cassette of the printer.
3) Press the test print switch.
4) Open the upper cover as soon as the leading edge of the paper appears in the delivery slot. Leave it for ten seconds.
5) Turn OFF the machine and take fixing unit from the machine. Then take the paper out from the fixing unit.
6) Measure the width of the glossy band across the paper and check that it meets the requirements as shown in Figure.
   - Center (a): 8 +/- 1.0 mm
   - Difference between right/left and center (a-b, a-c): 0 to 1 mm
   - Difference between right and left (|b-c|): 1.5 mm or less

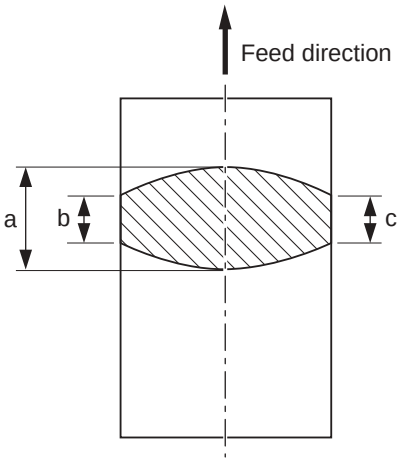

F-13-2

Replace the fixing unit if the nip width is out of specification, since the nip width of the fixing unit is not adjustable in this machine.

13.3 Electrical Components

13.3.1 Procedure after Replacing the DC controller PCB

i-SENSYS MF9170 / i-SENSYS MF9130 / i-SENSYS MF8450

In the case that the DC controller PCB has been replaced, execute the following procedure.

1) Execute the service mode> COPIER> FUNCTION> VIFFNC> RSTR-DCN to restore the backup data stored in EEPROM of the main controller PCB.
2) Execute Additional Functions> Report Settings> Print List> User's Data List to print the user's data list.
3) Execute Additional Functions> Adjustment/Cleaning> Auto Gradation Correction> Full Correction.

13.3.2 Procedure after Replacing the Main Controller PCB

i-SENSYS MF9170 / i-SENSYS MF9130 / i-SENSYS MF8450

If you have replaced the main controller PCB with a new one, perform the following operations:

- Using the service support tool, download the latest firmware (System/Boot) and language files.
- Delete the languages not used at the destination (Service mode> CLEAR> FILE SYSTEM).
- Input the all value printed on the service label affixed to the rear cover.

Make the following adjustments:

a. Correction of output between CIS channels

1) Enter the service mode.
   Sequentially press the Additional functions key, 2 key, 8 key, and Additional functions key on the operation panel.
2) Press the arrow key on the control panel to display "TEST MODE".
3) Press [OK].
4) Press the [2] key to display "SCAN TEST".
5) Press the [1] key to display "SHADING".
6) Press [OK].
   After completion of the above procedure, the CCD output is compensated and parameters are set automatically.
   After completion of automatic adjustment, "OK" is displayed.

b. Read position adjustment

1) Enter the service mode.
   Sequentially press the Additional functions key, 2 key, 8 key, and Additional functions key on the operation panel.
2) Press the arrow key on the control panel to display "TEST MODE".
3) Press [OK].
4) Press the [2] key to display "SCAN TEST".
5) Press the [3] key to display "SHEET POS ADJ".
6) Press [OK].
   The optical system starts scanning. Several seconds later, automatic adjustment of the reading position finishes and "OK" appears.

> ⚠
> If automatic adjustment fails, "NG" appears. Perform the following procedure:
> Clean the white board of the ADF and the document glass of the reader, and then retry auto adjustment.

13.3.3 Actions to Take before All Clearing (Backing up the User Data)

i-SENSYS MF9170 / i-SENSYS MF9130 / i-SENSYS MF8450

- Performing the all-clear operation in the service mode (CLEAR> ALL) erases/initializes the user data such as address data and user mode settings.
  Be sure to back up the user data with the data export function before starting the all-clear operation, and then load the user data with tbe data import function.
- To export and import user data, a PC and a USB cable are required. Have them on hand.

a. Exporting user data

1) Output a user data list in the following user mode.
   Additional Functions> Report Setting > Plint List > User Data List
2) Press the following keys to enter the service mode.
   Main Menu> 2, 8 key> Main Menu
3) Select COPIER> FUNCTION> PARAM> SYS-SW> SW03, and then press the OK.
   Message: SW03 00001000
4) Position the cursor at Bit-6 (second from left) using ◀ or ▶, and then press the 1 key.
   Message: SW03 01001000
5) Press the OK key. Check that "SW003" changes to "SW004".
   Message: SW04 00000000
6) Press the Reset key to exit the service mode.
7) Turn off the main power switch, and then turn it on again.
8) Start the PC and connect it to this machine with a USB cable.
9) Open My Computer on the PC to check that the "Removable Disk" icon is displayed.
   If the "Removable Disk" icon is not displayed, repeat the above procedure starting with step 1.
10) Double-click the "Removable Disk" icon, and then copy the user data (address_book.abk and user_data.dat) onto the Desktop.
11) Close the window on the Desktop.
12) Turn off the main power switch of this machine.
13) Disconnect the USB cable from this machine.

b. Importing user data

1) Press the following keys to enter the service mode.
   Main Menu> 2, 8 key> Main Menu
2) Select COPIER> FUNCTION> PARAM> SYS-SW> SW03, and then press the OK.
   Message: SW03 00001000
3) Check that Bit-6 (second from left) is set to set to "1".
   If Bit-6 is not set to "1", position the cursor at this bit using ◀ or ▶, and then press the 1 key.
   Message: SW03 01001000
4) Press the OK key. Check that "SW003" changes to "SW004".
   Message: SW04 00000000
5) Press the Reset key to exit the service mode.
6) Turn off the main power switch, and then turn it on again.
7) Open My Computer on the PC to check that the "Removable Disk" icon is displayed.
8) Write the user data (address_book.abk and user_data.dat) copied onto the Desktop as described in "a. Exporting user data" over the removable disk.
9) Disconnect the USB cable from the machine.
10) Turn off the main power switch, and then turn it on again.
11) Perform steps 1) to 4) again to reset Bit-6 of "SW003" to "0".
12) Press the OK key. When "SW003" changes to "SW004", press the Reset key to exit the service mode.
13) Check the user data list output as described in "a. Exporting user data" to make sure that the user data has been loaded into the machine properly.

Chapter 14 Correcting Faulty Images

Contents

14.1 Initial Checkup

14.1.1 Initial Check

i-SENSYS MF9170 / i-SENSYS MF9130 / i-SENSYS MF8450

Check the following items before you diagnose malfunction. If any failure is found, a service engineer is to clear the problem and to give the instruction to a user.

Installation environment
- The power voltage is -/+10 % of the rated voltage.
- The machine is securely installed on a level surface.
- The room temperature is kept between 10 and 30 deg C, and the relative humidity, between 10 and 80 %.
- Avoid sites generating ammonia gas, high temperature or high humidity (near water faucet, kettle, or humidifier), cold places, open flames, dusty area and sites the wind blows in from the air-conditioning duct.
- Avoid sites exposed to direct sunlight. If unavoidable, advise the customer to hang curtains.
- A well-ventilated place.
- Make sure that the power cord is inserted to the machine and the outlet securely.

Paper checks
- The recommended paper for the printer is used.
- Paper is not damp.
- Paper is not dirty.

Paper sets
- The amount of paper in the pick-up source is within specifications.
- Paper is correctly set on the selected pick-up source.
- The size guides are aligned with paper.

Cartridge sets
Make sure the toner cartridges in each color are set in the machine properly.

Fixing unit sets
Make sure the fixing unit is set in the machine properly.

External cover sets
Make sure the front cover is closed securely.

Condensation
During winter, if the machine is brought from a cold place such as a warehouse into a warm room, condensation will appear inside the machine, causing various problems.
Ex.)
a. Condensation in the optical system (polygon mirror, reflective mirror, lens, etc.) will result in a light print image.
b. As the photosensitive drum is cold, the resistance of the photoconductive layer is high; this will lead to incorrect contrast.

If condensation appears, either wipe the parts with dry cloth, or leave the printer on for 10 to 20 minutes.
If the toner cartridges are opened soon after being moved from a cold room to a warm room, condensation may appear inside the cartridge and may cause various problems.
Be sure to instruct the user that it is necessary to leave the printer for one to two hours at a room temperature to allow it to acclimatize to the temperature.

14.2 Outline of Electrical Components

14.2.1 Clutch/Solenoid

14.2.1.1 Solenoids

i-SENSYS MF9170 / i-SENSYS MF9130 / i-SENSYS MF8450

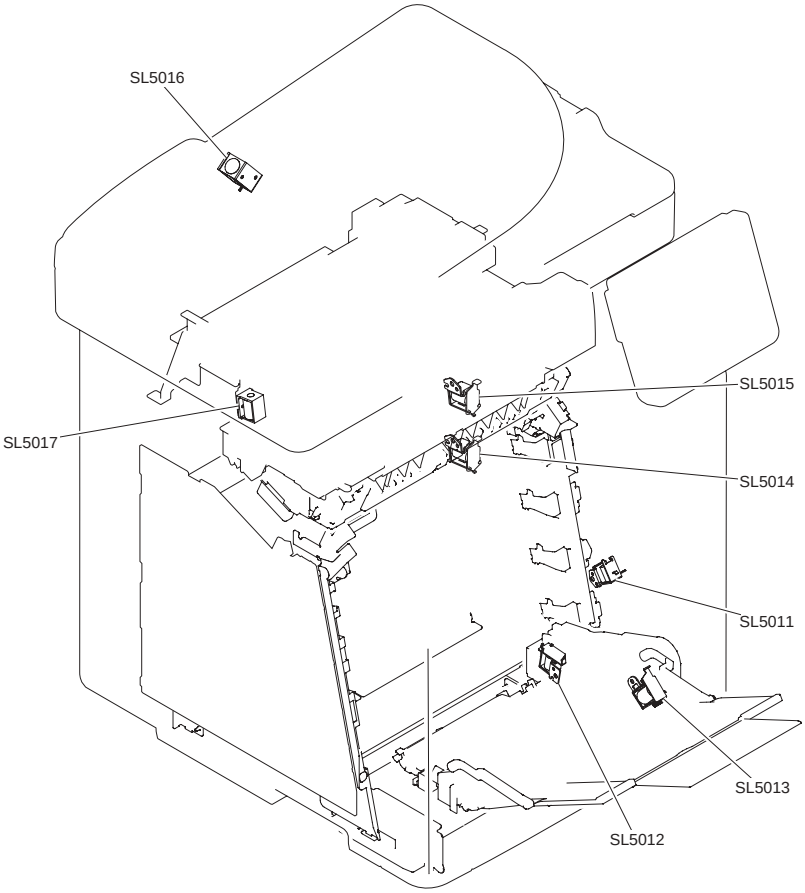

F-14-1

T-14-1

Notation	Name
SL5011	ETB disengagement solenoid
SL5012	cassette pickup solenoid
SL5013	manual pickup solenoid
SL5014	YMC developing disengagement solenoid
SL5015	Bk developing disengagement solenoid
SL5016	ADF pickup solenoid
SL5017	reverse solenoid

14.2.2 Motor/Fan

14.2.2.1 Motors

i-SENSYS MF9170 / i-SENSYS MF9130 / i-SENSYS MF8450

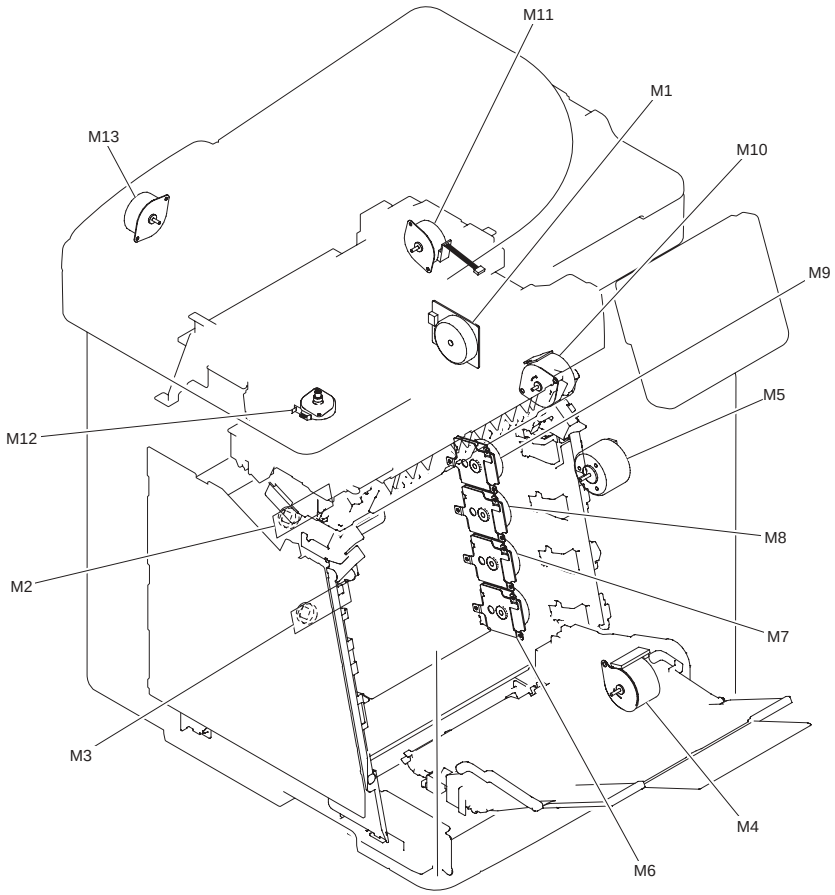

F-14-2

T-14-2

Notation	Name
M1	fixing motor
M2	scanner motor 1
M3	scanner motor 2
M4	pickup motor
M5	ETB motor
M6	M drum motor
M7	C drum motor
M8	Y drum motor
M9	Bk drum motor
M10	duplexing feed motor
M11	reverse motor
M12	reader motor
M13	ADF pickup motor

14.2.2.2 Fans

i-SENSYS MF9170 / i-SENSYS MF9130 / i-SENSYS MF8450

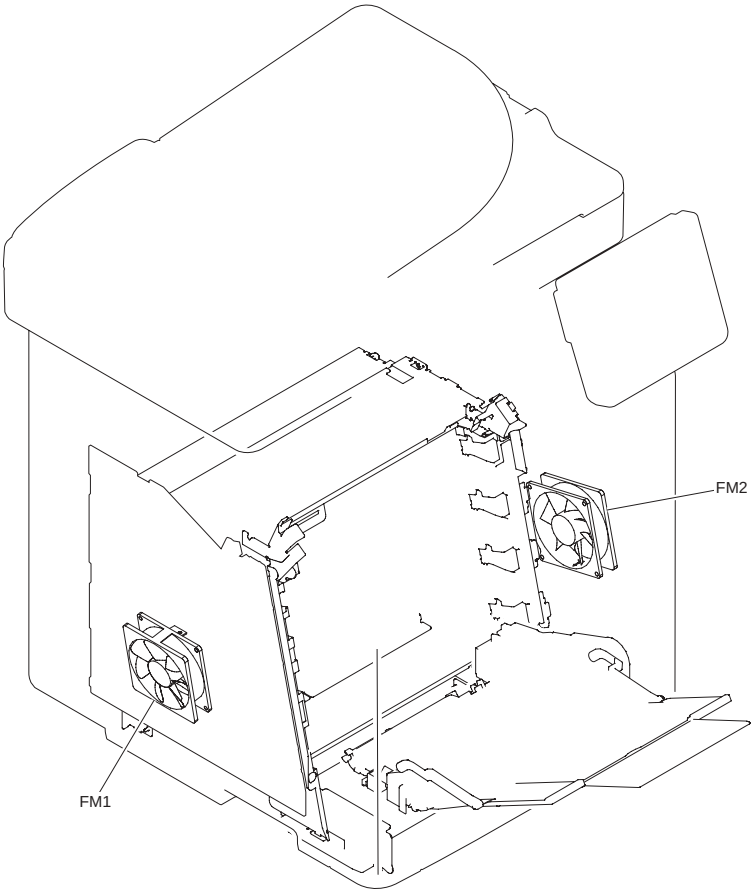

F-14-3

T-14-3

Notation	Name
FM1	main unit fan
FM2	duplex fan

14.2.3 Sensor

14.2.3.1 Sensors

i-SENSYS MF9170 / i-SENSYS MF9130 / i-SENSYS MF8450

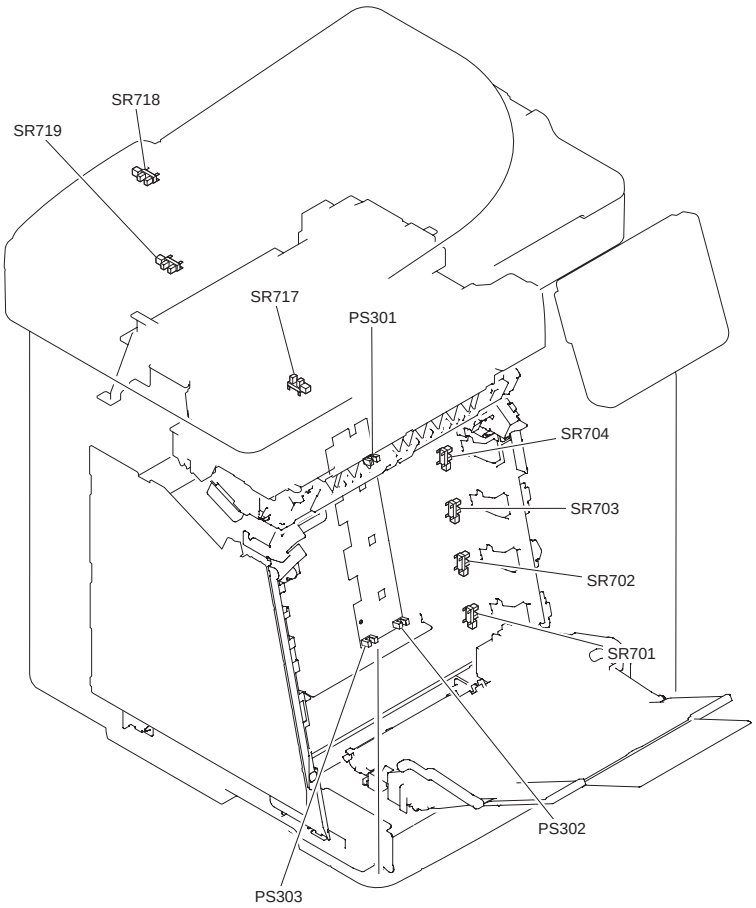

F-14-4

T-14-4

Notation	Name
PS301	YMC developing disengagement sensor
PS302	Bk developing disengagement sensor
PS303	new cartridge sensor
SR701	M drum HP sensor
SR702	C drum HP sensor
SR703	Y drum HP sensor
SR704	Bk drum HP sensor
SR717	reader HP sensor
SR718	ADF paper sensor
SR719	ADF paper trailing edge sensor

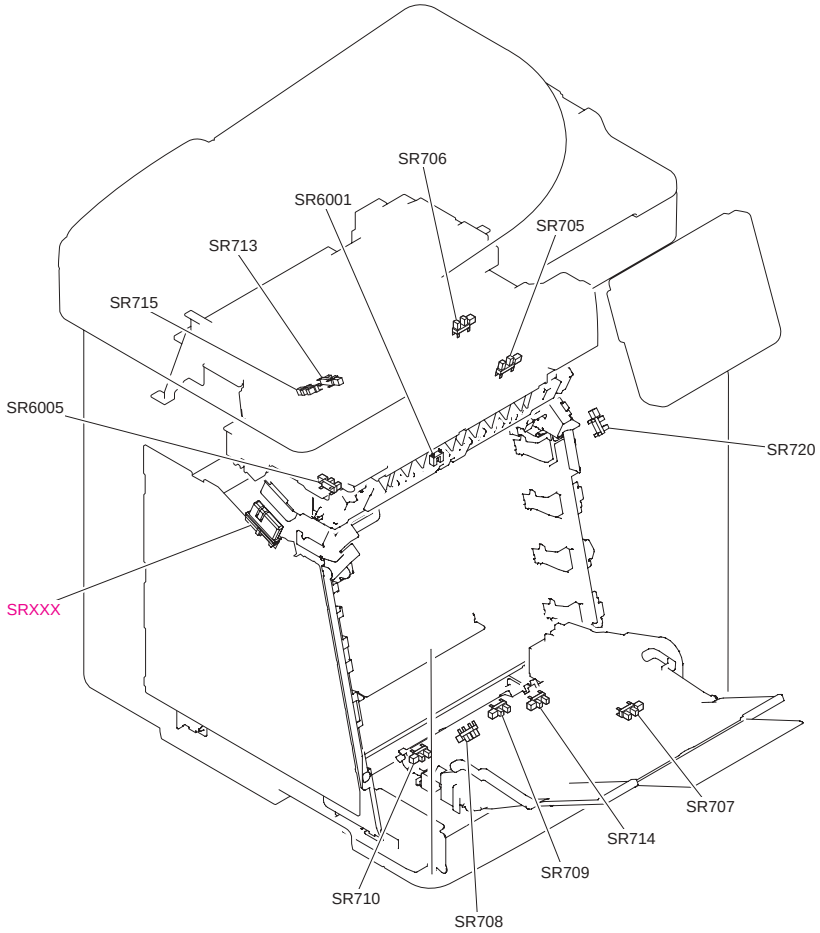

F-14-5

T-14-5

Notation	Name
SR705	fixing pressure release sensor
SR706	reverse sensor
SR707	manual feed paper sensor
SR708	pre-registration sensor
SR709	cassette paper sensor
SR710	registration sensor
SR713	delivery paper full-level sensor
SR714	paper displacement sensor
SR715	delivery sensor
SR720	front cover sensor
SR6001	paper loop sensor
SR6005	fixing delivery sensor

14.2.4 Switch

14.2.4.1 Switches, Speaker, and Thermistors

i-SENSYS MF9170 / i-SENSYS MF9130 / i-SENSYS MF8450

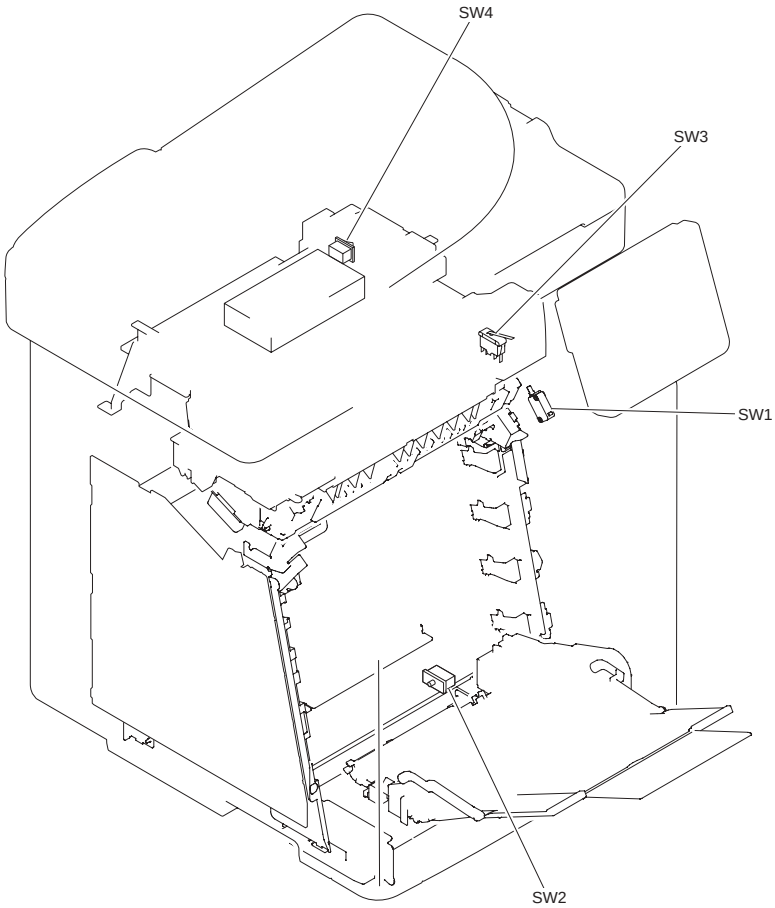

F-14-6

T-14-6

Notation	Name
SW1	front cover detection switch
SW2	cassette detection switch
SW3	delivery cover detection switch
SW4	power switch

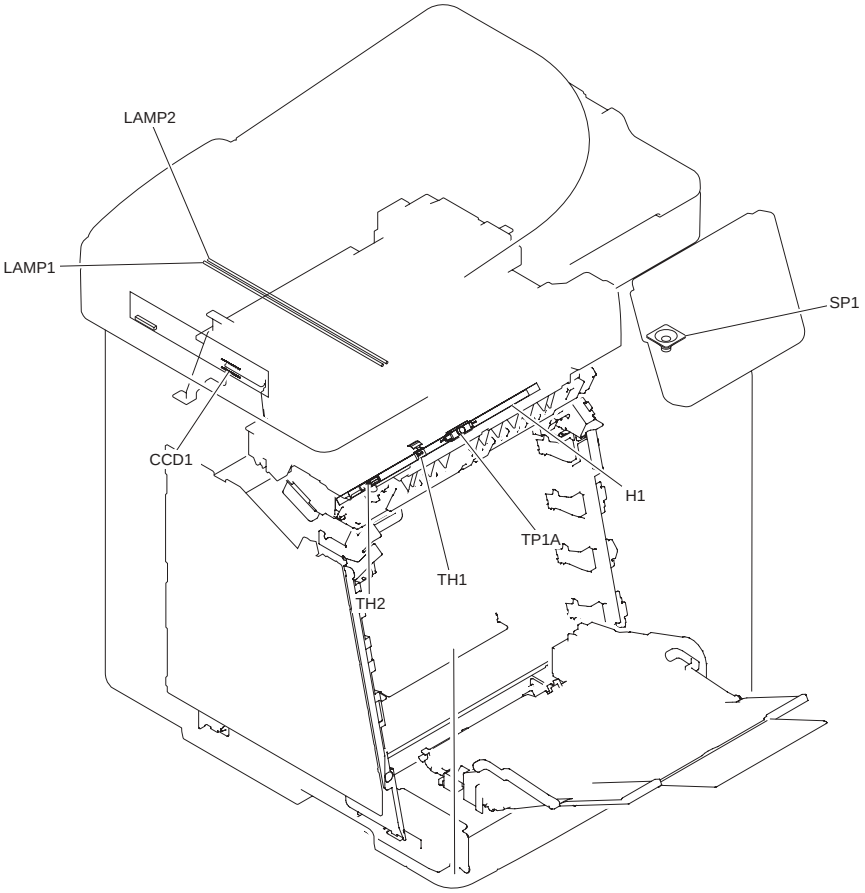

F-14-7

T-14-7

Notation	Name
CCD1	CCD
H1	fixing heater
LAMP1	document lamp
LAMP2	document lamp
SP1	speaker
TH1	fixing main thermistor
TH2	fixing sub thermistor
TP1A	fixing thermal switch

14.2.5 PCBs

14.2.5.1 PCBs

i-SENSYS MF9170 / i-SENSYS MF9130 / i-SENSYS MF8450

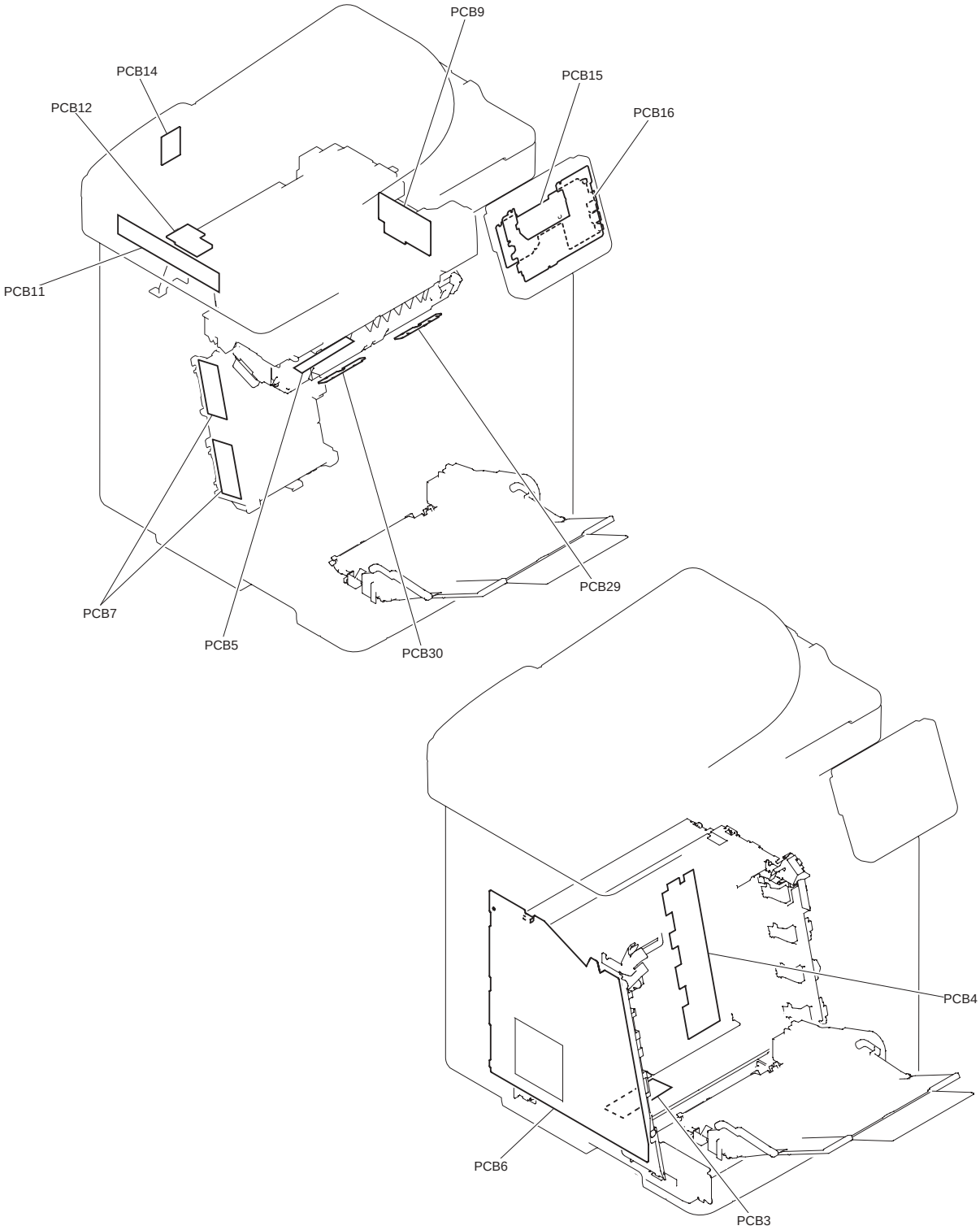

F-14-8

T-14-8

Notation	Name	Notation	Name	Notation	Name
PCB3	pickup relay PCB	PCB4	memory controller PCB	PCB5	fixing relay PCB
PCB6	high-voltage power PCB	PCB7	laser driver PCB	PCB9	reverse driver PCB
PCB11	CCD PCB	PCB12	inverter PCB	PCB14	ADF relay PCB
PCB15	control panel main PCB	PCB16	control panel jog PCB		
PCB29	color displacement/density sensor (right)	PCB30	color displacement/density sensor (left)		

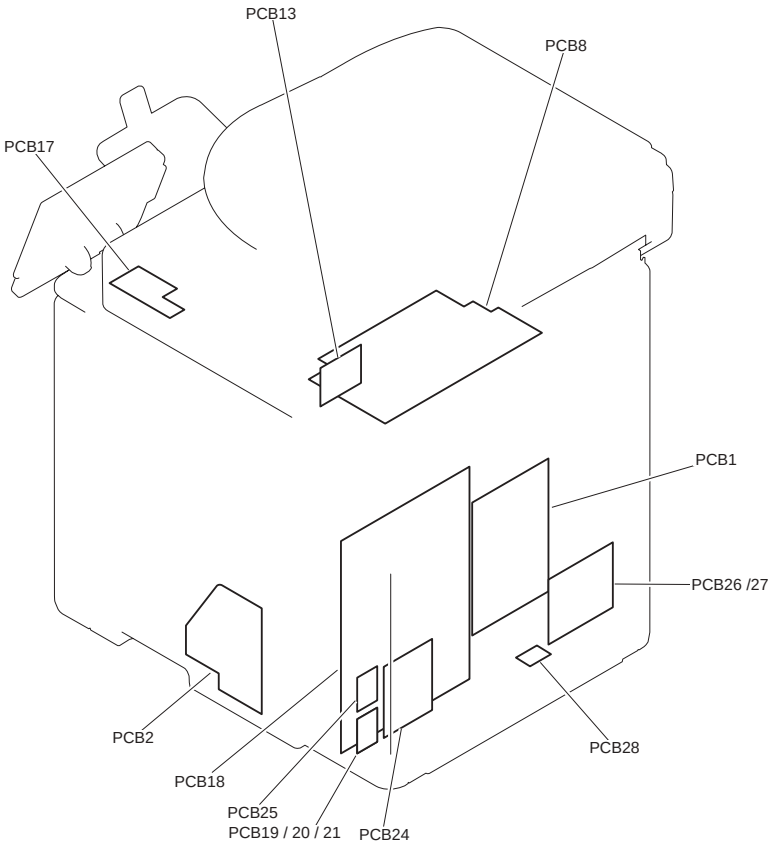

F-14-9

T-14-9

Notation	Name
PCB1	DC controller PCB
PCB2	driver PCB
PCB8	low-voltage power PCB
PCB13	CCD relay PCB
PCB17	control panel relay PCB
PCB18	main controller PCB
PCB19	modular PCB
PCB20	modular PCB
PCB21	modular PCB
PCB24	NCU PCB
PCB25	serial I/F PCB
PCB26	pseudo CI PCB (for Japan)
PCB27	off hook PCB (for outside Japan)
PCB28	environment sensor

14.2.6 Location of Convectors

14.2.6.1 Location of Connectors

i-SENSYS MF9170 / i-SENSYS MF9130 / i-SENSYS MF8450

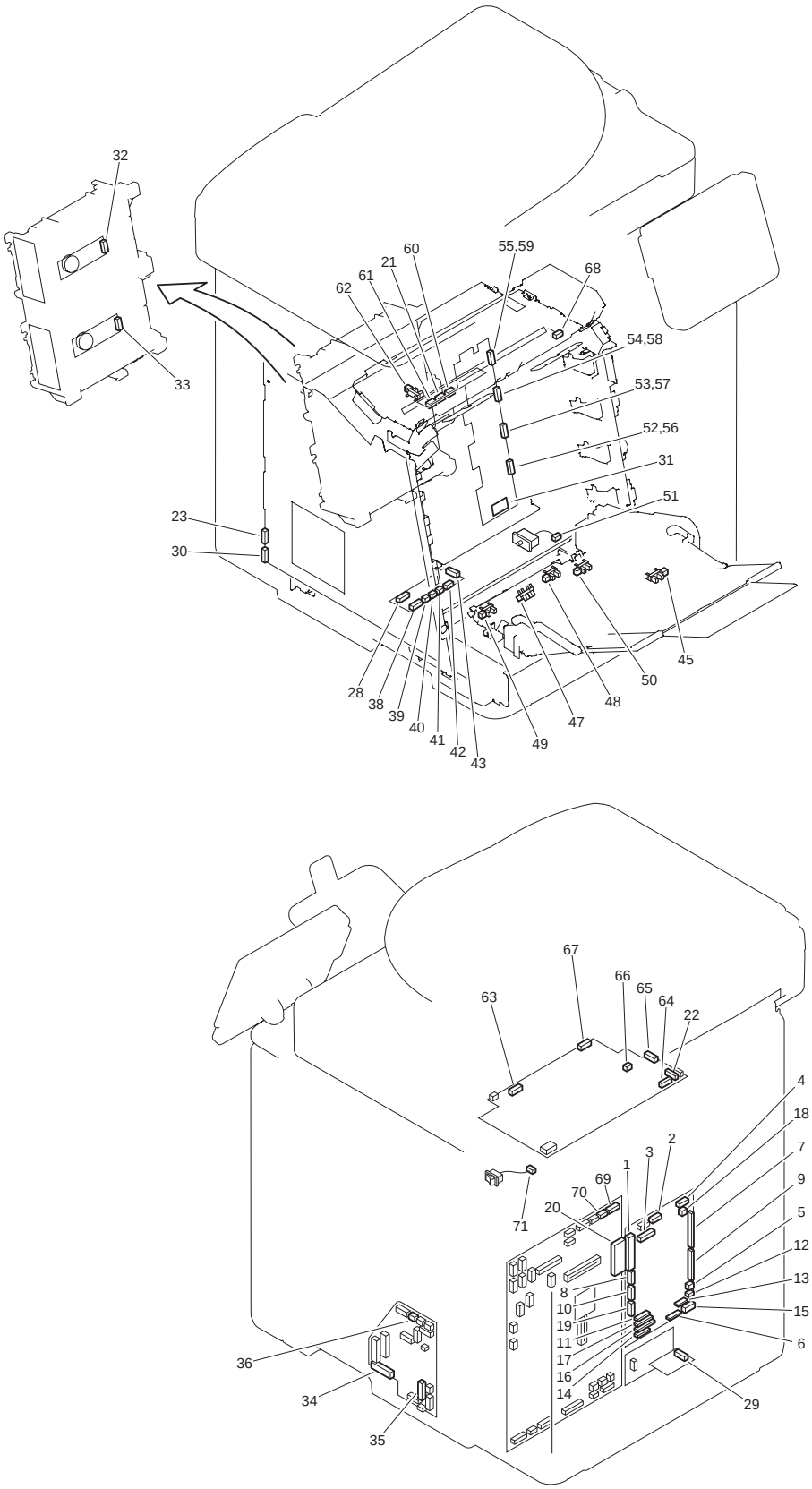

F-14-10

T-14-10

No.	Notation	J No.	Electric parts name	Relay connector		No.	J No.	Notation	Electric parts name	Remarks
1	PCB1	J1001	DC controller PCB			20	J8112	PCB18	main controller PCB	
2	PCB1	J1002	DC controller PCB	J6007		21	J6001	PCB6	fixing relay PCB	
3	PCB1	J1004	DC controller PCB	J5027		22	J3004	PCB8	low-voltage power PCB	
4	PCB1	J1006	DC controller PCB	J5026		4	-	PCB8	low-voltage power PCB	
5	PCB1	J1008	DC controller PCB			5	J1008	FM1	main unit fan	
6	PCB1	J1009	DC controller PCB			23	J2001	PCB6	high-voltage power PCB	
7	PCB1	J1010	DC controller PCB			24	J101	PCB7	laser driver PCB	
8	PCB1	J1011	DC controller PCB	J5028		25	-		ëäéËêÊïsñæ	
9	PCB1	J1012	DC controller PCB			26	J102	PCB7	laser driver PCB	
10	PCB1	J1013	DC controller PCB	J5029		27	-		ëäéËêÊïsñæ	
11	PCB1	J1014	DC controller PCB			28	J7001	PCB3	pickup relay PCB	
12	PCB1	J1018	DC controller PCB			29	J8002	PCB28	environment sensor	
13	PCB1	J1019	DC controller PCB			30	J2002	PCB6	high-voltage power PCB	
14	PCB1	J1020	DC controller PCB			31	J301	PCB4	memory controller PCB	
15	PCB1	J1021	DC controller PCB			32	J5001A	M2	scanner motor 1	
15	PCB1	J1021	DC controller PCB			33	J5001B	M3	scanner motor 2	
16	PCB1	J1022	DC controller PCB			34	J201	PCB2	driver PCB	
17	PCB1	J1023	DC controller PCB			35	J401	PCB2	driver PCB	
18	PCB1	J1024	DC controller PCB			36	J202	PCB2	driver PCB	
19	PCB1	J1025	DC controller PCB	J5030		37	-		ëäéËêÊïsñæ	
38	PCB3	J7002	pickup relay PCB	J504	J503	38	-	PCB29	color displacement/density sensor (right)	
38	PCB3	J7002	pickup relay PCB	J504	J503	38	-	PCB30	color displacement/density sensor (left)	
39	PCB3	J7003	pickup relay PCB			44	-	LED1	éÊïtÇØàþíuïsñæ	
39	PCB3	J7003	pickup relay PCB			45	J707	SR707	manual feed paper sensor	
40	PCB3	J7004	pickup relay PCB			46	J601	SW1	front cover detection switch	
41	PCB3	J7005	pickup relay PCB			47	J708	SR708	pre-registration sensor	
42	PCB3	J7006	pickup relay PCB			48	J709	SR709	cassette paper sensor	
42	PCB3	J7006	pickup relay PCB			49	J710	SR710	registration sensor	
42	PCB3	J7006	pickup relay PCB			50	J714	SR714	paper displacement sensor	
43	PCB3	J7007	pickup relay PCB			51	J604	SW2	cassette detection switch	
52	PCB4	J302	memory controller PCB			56	J310	-	TAGÉtÉçÅ[ÉeÉBÉìÉOÉRÉlÉNÉ^	
53	PCB4	J303	memory controller PCB			57	J311	-	TAGÉtÉçÅ[ÉeÉBÉìÉOÉRÉlÉNÉ^	
54	PCB4	J304	memory controller PCB			58	J312	-	TAGÉtÉçÅ[ÉeÉBÉìÉOÉRÉlÉNÉ^	
55	PCB4	J305	memory controller PCB			59	J313	-	TAGÉtÉçÅ[ÉeÉBÉìÉOÉRÉlÉNÉ^	
60	PCB5	J6002	fixing relay PCB			62	J6005	SR6005	fixing delivery sensor	
61	PCB5	J6003	fixing relay PCB			61	-	TH1	fixing main thermistor	
61	PCB5	J6003	fixing relay PCB			61	-	TH2	fixing sub thermistor	
63	PCB8	J3003	low-voltage power PCB	J6007		68	J6009	H1	fixing heater	
64	PCB8	J3012	low-voltage power PCB	J5025		69	J8125	PCB18	main controller PCB	
65	PCB8	J3013	low-voltage power PCB	J5024		70	J8129	PCB18	main controller PCB	
66	PCB8	J3016	low-voltage power PCB	J5025		69	J8125	PCB18	main controller PCB	
67	PCB8	J3020	low-voltage power PCB			71	J3020	SW4	power switch	

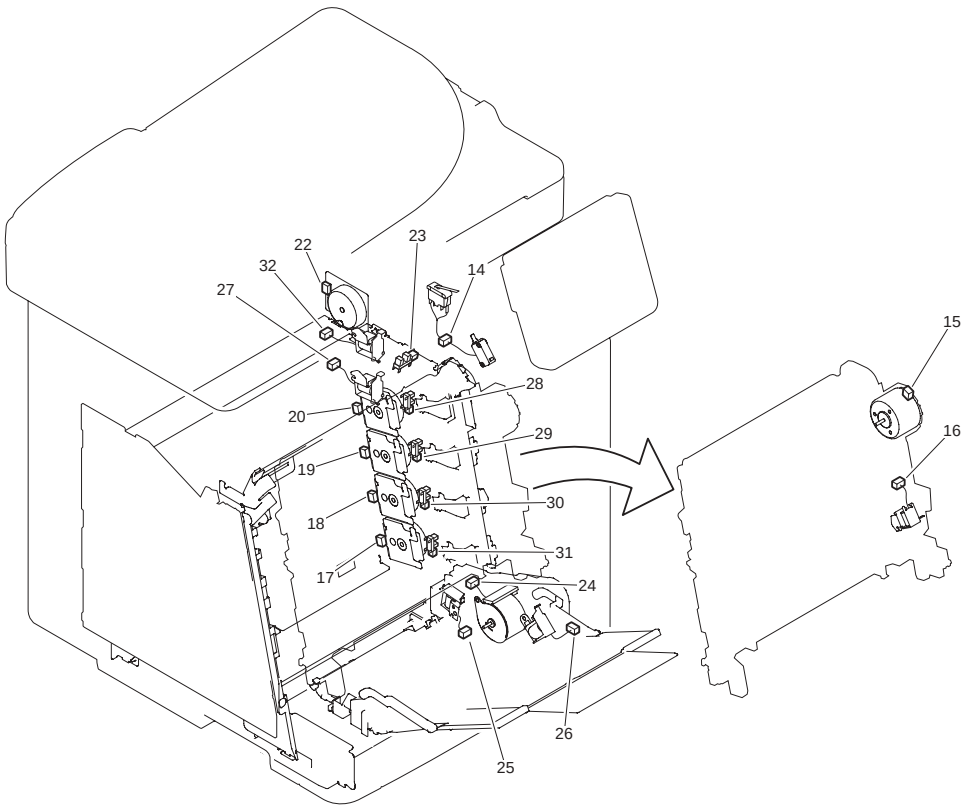
22
23
32
14
27
15
28
20
29
16
19
30
18
31
17
24
26
25

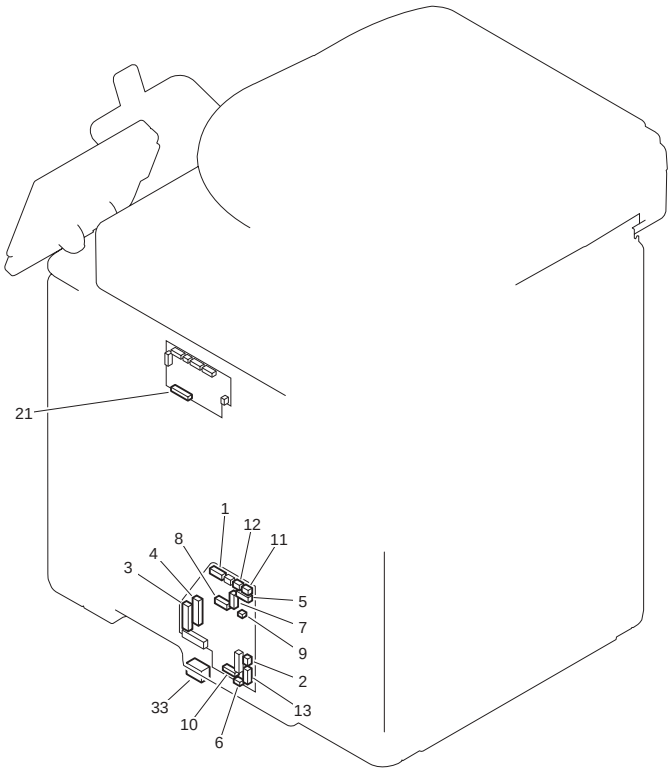
21
1
12
8
11
4
3
5
7
9
2
33
13
10
6

F-14-11

T-14-11

No.	Notation	J No.	Electric parts name	Relay connector	No.	J No.	Notation	Electric parts name	Remarks
1	PCB2	J203	driver PCB		14	J5023	SW1	front cover detection switch	
1	PCB2	J203	driver PCB		14	J5023	SW3	delivery cover detection switch	
2	PCB2	J206	driver PCB	J5010	15	J5002	M5	ETB motor	
2	PCB2	J206	driver PCB	J5010	16	J5011	SL5011	ETB disengagement solenoid	
3	PCB2	J207	driver PCB		17	J5003	M6	M drum motor	
3	PCB2	J207	driver PCB		18	J5004	M7	C drum motor	
4	PCB2	J208	driver PCB		19	J5005	M8	Y drum motor	
4	PCB2	J208	driver PCB		20	J5006	M9	Bk drum motor	
5	PCB2	J209	driver PCB		21	J850	PCB9	reverse driver PCB	
6	PCB2	J210	driver PCB		6	-	SW2	cassette detection switch	
7	PCB2	J213	driver PCB		22	J5008	M1	fixing motor	
7	PCB2	J213	driver PCB		23	J705	SR705	fixing pressure release sensor	
8	PCB2	J402	driver PCB		24	J5007	M4	pickup motor	
8	PCB2	J402	driver PCB		25	J5012	SL5012	cassette pickup solenoid	
8	PCB2	J402	driver PCB		26	J5013	SL5013	manual pickup solenoid	
9	PCB2	J403	driver PCB		27	J403	SL5014	YMC developing disengagement solenoid	
10	PCB2	J404	driver PCB		28	J701	SR704	Bk drum HP sensor	
10	PCB2	J404	driver PCB		29	J702	SR703	Y drum HP sensor	
10	PCB2	J404	driver PCB		30	J703	SR702	C drum HP sensor	
10	PCB2	J404	driver PCB		31	J704	SR701	M drum HP sensor	
11	PCB2	J405	driver PCB		32	J405	SL5015	Bk developing disengagement solenoid	
12	PCB2	J406	driver PCB		21	J850	PCB9	reverse driver PCB	
13	PCB2	J410	driver PCB	J4010	33	J4010		paper feeder	

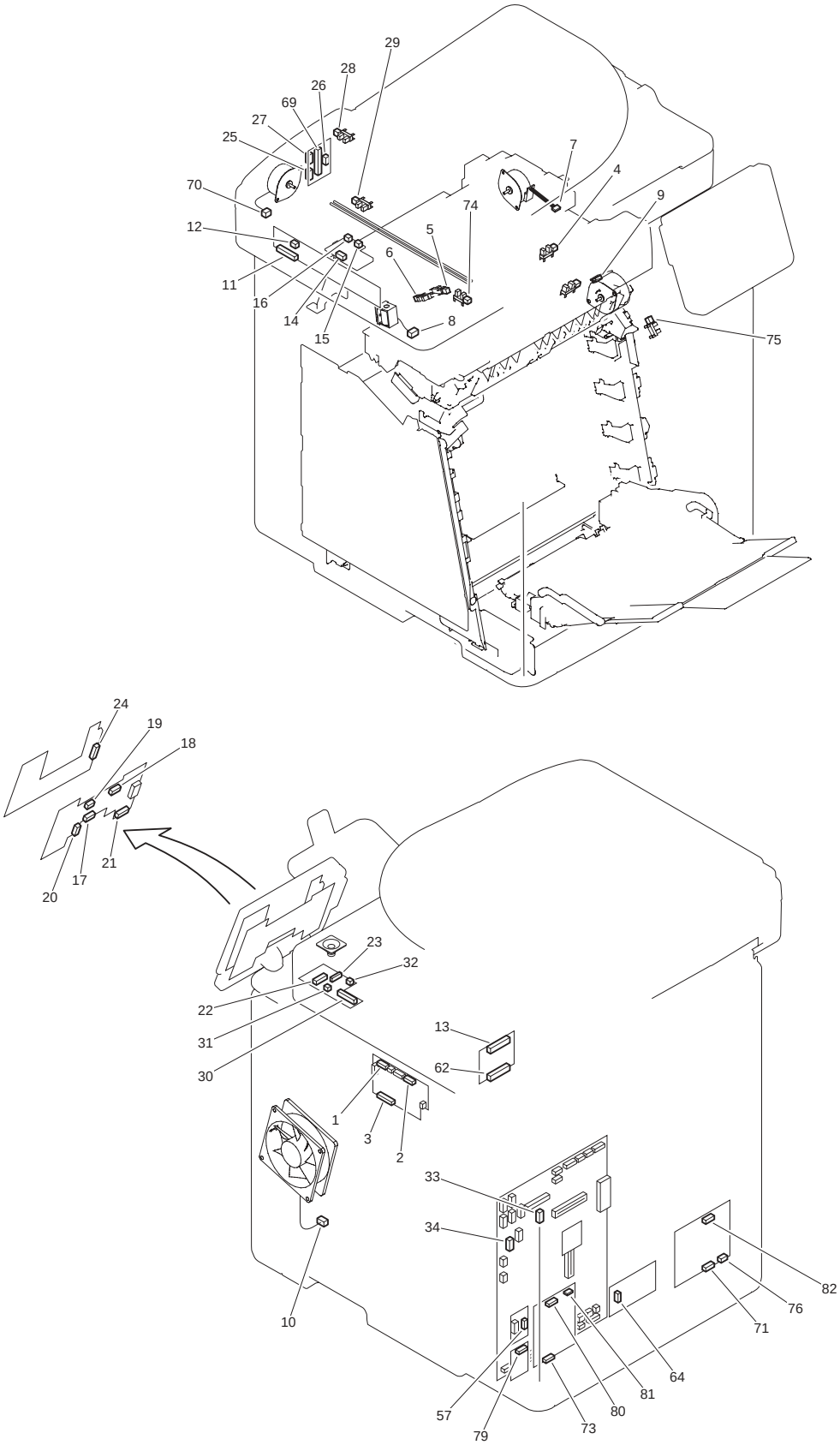
29
28
26
69
27
25
70
12
11
16
14
15
8
5
6
74
7
4
9
75
24
19
18
21
17
20
23
32
22
31
30
13
62
1
3
2
33
34
10
82
76
71
64
81
80
73
57
79

F-14-12

T-14-12

No.	Notation	J No.	Electric parts name	Relay connectro	No.	J No.	Notation	Electric parts name	Remarks
1	PCB9	J802	reverse driver PCB	J5016	4	J706	SR706	reverse sensor	
1	PCB9	J802	reverse driver PCB	J5016	5	J711	SR713	delivery paper full-level sensor	
1	PCB9	J802	reverse driver PCB	J5016	6	J712	SR715	delivery sensor	
2	PCB9	J805	reverse driver PCB		7	J5018	M11	reverse motor	
2	PCB9	J805	reverse driver PCB	J5017	8	J5019	SL5017	reverse solenoid	
3	PCB9	J850	reverse driver PCB		9	J820	M10	duplexing feed motor	
3	PCB9	J850	reverse driver PCB		10	J823	FM2	duplex fan	
11	PCB11	J8501	CCD PCB		13	J6151	PCB13	CCD relay PCB	
12	PCB11	J8502	CCD PCB		14	J9102	PCB12	inverter PCB	
15	PCB12	J9103	inverter PCB		15	-	LAMP1	document lamp	
16	PCB12	J9104	inverter PCB		16	-	LAMP2	document lamp	
17	PCB15	J101	control panel main PCB		22	J201A	PCB17	control panel relay PCB	
18	PCB15	J102	control panel main PCB		18	-	-	control panel LCD	
19	PCB15	J103	control panel main PCB		19	-	-	control panel LCD	
20	PCB15	J104	control panel main PCB		23	J204	PCB17	control panel relay PCB	
21	PCB15	J105	control panel main PCB		24	J201B	PCB16	control panel jog PCB	
25	PCB14	J6032	ADF relay PCB		25	-	M13	ADF pickup motor	
26	PCB14	J6033	ADF relay PCB		26	-	SL5016	ADF pickup solenoid	
27	PCB14	J6034	ADF relay PCB		28	J718	SR718	ADF paper sensor	
27	PCB14	J6034	ADF relay PCB		29	J719	SR719	ADF paper trailing edge sensor	
30	PCB17	J202	control panel relay PCB		33	J8114	PCB18	main controller PCB	
31	PCB17	J203	control panel relay PCB		31	J203	SP1	speaker	
32	PCB17	J205	control panel relay PCB		34	J8103	PCB18	main controller PCB	
35	PCB18	J8101	main controller PCB		57	J6010	PCB25	serial I/F PCB	
36	PCB18	J8102	main controller PCB		58	J6011		ICEíŬåpäÓî¬	
37	PCB18	J8103	main controller PCB		32	J205	PCB17	control panel relay PCB	
38	PCB18	J8104	main controller PCB		59	J6013		USB	
39	PCB18	J8110	main controller PCB		60	J6014		SD-CARD	
40	PCB18	J8111	main controller PCB		61	J6015		LAN	
41	PCB18	J8113	main controller PCB		62	J6101	PCB13	CCD relay PCB	
42	PCB18	J8114	main controller PCB		30	J202	PCB17	control panel relay PCB	
43	PCB18	J8115	main controller PCB		63	J6019		FRAMäÓî¬	
44	PCB18	J8116	main controller PCB		64	J6020	PCB23	É\ÉtÉgIDäÓî¬	
45	PCB18	J8117	main controller PCB	J6021	65	J6035		CC-ŽO	
46	PCB18	J8118	main controller PCB		66	J6014		ÅuSD-CARDÅvÇýÉ_ÉuÇÉ	100/230V
46	PCB18	J8118	main controller PCB		67	J6022		RSïœä²É{Å[Éh	120V
47	PCB18	J8119	main controller PCB	J6023	68	J6036		ÉVÉäÉAÉãÉJÅ[ÉhÉäÅ[É_	
48	PCB18	J8120	main controller PCB		69	J6028	PCB14	ADF relay PCB	
49	PCB18	J8121	main controller PCB		70	J5015	M12	reader motor	
50	PCB18	J8126	main controller PCB		71	J280	PCB26	pseudo CI PCB	100V
51	PCB18	J8127	main controller PCB		72	J1	PCB24	NCU PCB	
52	PCB18	J8128	main controller PCB		73	J2	PCB24	NCU PCB	
53	PCB18	J8131	main controller PCB	J5014	74	J715	SR717	reader HP sensor	
54	PCB18	J8133	main controller PCB		75	J720	SR720	front cover sensor	
55	PCB18	J8134	main controller PCB		76	J281	PCB26	pseudo CI PCB	100V
55	PCB18	J8134	main controller PCB		77	J281	PCB27	off hook PCB	120/230V
56	PCB18	J8140	main controller PCB		78	J6022		RSïœä²É{Å[Éh	120V
79	PCB19	J8151	modular PCB (120V)		80	J3	PCB24	NCU PCB	
79	PCB20	J8151	modular PCB (100V)		80	J3	PCB24	NCU PCB	
79	PCB21	J8151	modular PCB (230V)		80	J3	PCB24	NCU PCB	
81	PCB24	J4	NCU PCB		82	J282	PCB26	pseudo CI PCB	100V
81	PCB24	J4	NCU PCB		83	J232	PCB27	off hook PCB	120/230V

Chapter 15 Error Code

Contents

15.1 Error Code Table

15.1.1 Error Code Table

i-SENSYS MF9170 / i-SENSYS MF9130 / i-SENSYS MF8450

T-15-1

Error Code	Detail Code	Error Name/Explanation of Error
E000	0000	Fixing temperature abnormal rise
E001	0000	Fixing unit temperature rise detection (by main thermistor)
	0001	Fixing unit temperature rise detection (by sub thermistor)
E003	0000	Fixing unit temperature insufficient rise (by main thermistor)
	0001	Fixing unit temperature insufficient rise (by sub thermistor)
E004	0000	Error in fixing power supply drive circuit
E012	0000	ETB motor fails to run.
	0001	ETB motor runs but then stops running.
	0002	Drum Y motor fails to run.
	0003	Drum Y motor runs but then stops running.
	0004	Drum M motor fails to run.
	0005	Drum M motor runs but then stops running.
	0006	Drum C motor fails to run.
	0007	Drum C motor runs but then stops running.
	0008	Drum Bk motor fails to run.
	0009	Drum Bk motor runs but then stops running.
E014	0000	Fixing motor fails to run.
	0001	Fixing motor runs but then stops running.
E015	0000	Failure in developing disengagement
E020	0000	Error in density sensor
E024	0000	Y toner level sensor failure
	0001	M toner level sensor failure
	0002	C toner level sensor failure
	0003	Bk toner level sensor failure
E066	0000	Error in environment sensor
E078	0000	Error in primary transfer estrangement unit
E100	0000	Y scanner assembly fault
	0001	M scanner assembly fault
	0002	C scanner assembly fault
	0003	Bk scanner assembly fault
	0004	Primary pseudo BD fault
	0005	Secondary pseudo BD fault
E194	0000	Error in CPR sensor
E196	0001	Error in DCON ROM
E197	0000	Engine Communication Error
E198	0000	DC controller memory malfunction
E202	0000	Reader HP sensor fault
E225	0000	Error in light intensity of the lamp
E248	0000	EEPROM access error
E351	0000	Main controller PCB fault
E719	0000	Erroneous communication with card reader (serial communication)
	0002	Erroneous communication with coin vendor (serial communication)
E744	0001	Language file version error
	0002	Language file size error
	0003	Language file version error
	0004	Language file read error
E804	0000	Error in main unit fan
E805	0005	Error in duplex fan
E840	0000	Error in pressure release mechanism

15.2 Error Code Details

15.2.1 Error Code Details

i-SENSYS MF9170 / i-SENSYS MF9130 / i-SENSYS MF8450

T-15-2

Code		Description	Action
E000		Error in start-up of fixing assembly	
	0000	Description When 1 sec passed after energization of the heater, the detected temperature of the main thermistor is not 5 deg C or more (0 deg C at power on). Cause Disconnection of main thermistor, disconnection of fixing heater, error in DC controller PCB.	- Check of the connector of the low-voltage power supply PCB - Replacement of fixing film unit - Replacement of DC controller PCB
E001		Error in overheating of fixing assembly	
	0000	Description The status where the detected temperature of the main thermistor is 225 deg C (approx. 0.84V equivalent) or more is detected for 0.5 continuous sec or more. Cause Error in main thermistor, error in DC controller PCB.	- Check of the connector of the low-voltage power supply PCB - Replacement of fixing film unit - Replacement of DC controller PCB
	0001	Description The status where the detected temperature of the sub thermistor is 245 deg C (approx. 2.12V equivalent) or more is detected for 0.5 continuous sec or more. Cause Error in sub thermistor, error in DC controller PCB.	
E003		Error in abnormally low temperature of fixing assembly	
	0000	Description The status where the detected temperature of the main thermistor is 100 deg C (approx. 2.60V equivalent) or less is detected for 0.5 continuous sec or more. Cause Error in low-voltage power supply PCB, disconnection of main thermistor, error in DC controller PCB.	- Replacement of low-voltage power supply PCB - Replacement of fixing film unit - Replacement of DC controller PCB
	0001	Description The status where the detected temperature of the sub thermistor is less than 100 deg C (approx. 0.38V equivalent) is detected 0.5 continuous sec or more after energization of the heater. Cause Error in sub thermistor, error in DC controller PCB.	- Check of the connector of the low-voltage power supply PCB - Replacement of fixing film unit - Replacement of DC controller PCB
E004		Error in fixing power supply drive circuit	
	0000	Description Cannot detect the zero cross signal for the specified period or more. Cause Error in fixing control circuit block.	- Replacement of low-voltage power supply PCB

T-15-3

Code		Description	Action
E012		Error in activation of motor	
	0000	Description When 3.5 sec passed after activation of ETB motor, the cycle of ETB motor speed detection signal does not become its specified value. Cause Error in ETB motor, error in DC controller PCB.	- Replacement of ETB motor - Replacement of DC controller PCB
	0001	Description After ETB motor speed detection signal became the specified value of the cycle, it exceeds the specified cycle for 2 continuous sec or more. Cause Error in ETB motor, error in DC controller PCB.	
	0002	Description When 2.5 sec passed after activation of the yellow drum motor, the cycle of drum motor speed detection signal does not become its specified value. Cause Error in drum motor, error in DC controller PCB.	- Replacement of drum motor - Replacement of DC controller PCB
	0003	Description After the yellow drum motor speed detection signal became the specified value of the cycle, it exceeds the specified cycle for 2 continuous sec or more. Cause Error in drum motor, error in DC controller PCB.	
	0004	Description When 2.5 sec passed after activation of the magenta drum motor, the cycle of drum motor speed detection signal does not become its specified value. Cause Error in drum motor, error in DC controller PCB.	
	0005	Description After the magenta drum motor speed detection signal became the specified value of the cycle, it exceeds the specified cycle for 2 continuous sec or more. Cause Error in drum motor, error in DC controller PCB.	
	0006	Description When 2.5 sec passed after activation of the cyan drum motor, the cycle of the drum motor speed detection signal does not become its specified value. Cause Error in drum motor, error in DC controller PCB.	
	0007	Description After the cyan drum motor speed detection signal became the specified value of the cycle, it exceeds the specified cycle for 2 continuous sec or more. Cause Error in drum motor, error in DC controller PCB.	
	0008	Description When 2.5 sec passed after activation of the black drum motor, the cycle of the drum motor speed detection signal does not become its specified value. Cause Error in drum motor, error in DC controller PCB.	
	0009	Description After the black drum motor speed detection signal became the specified value of the cycle, it exceeds the specified cycle for 2 continuous sec or more. Cause Error in drum motor, error in DC controller PCB.	
E014		Error in activation of fixing motor	
	0000	Description When 2.5 sec passed after activation of fixing motor, the cycle of the fixing motor speed detection signal does not become its specified value. Cause Error in fixing motor, error in DC controller PCB.	- Replacement of fixing motor - Replacement of DC controller PCB
	0001	Description After the fixing motor speed detection signal became the specified value of the cycle, it exceeds the specified cycle for 2 continuous sec or more. Cause Error in fixing motor, error in DC controller PCB.	
E015		Failure in developing disengagement	
	0000	Description Developing cylinder disengagement mechanism does not function correctly. Cause Developing disengagement mechanism fault, developing disengagement solenoid fault, developing disengagement sensor fault, DC controller PCB fault.	Check the developing disengagement mechanism. Replace developing disengagement solenoid. Replace developing disengagement sensor. Replace DC controller PCB.
E020		Error in density sensor	

Code		Description	Action
	0000	Description Cannot receive enough light when detecting image density. Cause Dirt on density sensor, error in density sensor, error in DC controller PCB, error in toner cartridge.	- Replacement of ETB unit - Error in high-voltage joint (Check high-voltage joint for each color, and each joint to high-voltage PCB) - Replacement of DC controller - Replacement of toner cartridge

T-15-4

Code		Description	Action
E024		Toner level sensor failure	
	0000	Description Failure output from the toner level sensor (Yellow). Cause Memory controller PCB assembly fault, DC controller PCB assembly fault, toner cartridge fault.	- Replace toner cartridge - Replace memory controller PCB assembly - Replace DC controller PCB assembly
	0001	Description Failure output from the toner level sensor (Magenta). Cause Memory controller PCB assembly fault, DC controller PCB assembly fault, toner cartridge fault.	
	0002	Description Failure output from the toner level sensor (Cyan). Cause Memory controller PCB assembly fault, DC controller PCB assembly fault, toner cartridge fault.	
	0003	Description Failure output from the toner level sensor (Black). Cause Memory controller PCB assembly fault, DC controller PCB assembly fault, toner cartridge fault.	
E066		Error in environment sensor	
	0000	Description Failure in environment sensor. Cause Environment sensor fault, DC controller PCB assembly fault.	- Replace environment sensor - Replace DC controller PCB assembly
E078		Error in primary transfer estrangement unit	
	0000	Description Primary transfer estrangement unit does not function properly. Cause Terminal assembly fault, transfer roller estrangement solenoid fault, EBT unit fault, high-voltage power PCB assembly fault.	- Replace ETB estrangement solenoid - Replace ETB unit - Terminal assembly fault (check on every contact between the terminals of each color and the high voltage PCB assembly)
E100		Error in scanner motor, laser unit, BD	
	0000	Description Yellow scanner assembly malfunction. Cause Laser scanner unit fault, DC controller PCB assembly fault.	- Replace laser scanner unit - Replace DC controller PCB assembly
	0001	Description Magenta scanner assembly malfunction. Cause Laser scanner unit fault, DC controller PCB assembly fault.	
	0002	Description Cyan scanner assembly malfunction. Cause Laser scanner unit fault, DC controller PCB assembly fault.	
	0003	Description Black scanner assembly malfunction. Cause Laser scanner unit fault, DC controller PCB assembly fault.	
	0004	Description Failure output of a magenta BD signal Cause laser scanner unit fault, DC controller PCB fault.	Replace laser scanner unit. Replace DC controller PCB.
	0005	Description Failure output of a magenta BD signal Cause laser scanner unit fault, DC controller PCB fault.	Replace laser scanner unit. Replace DC controller PCB.
E194		Error in CPR sensor	
	0000	Description Cannot detect color displacement detection pattern, detected results fall outside the acceptable range. Cause Dirty color displacement detection sensor, color displacement detection sensor fault, DC controller PCB assembly fault, toner cartridge fault.	- Replace ETB unit - Terminal assembly fault (check on every contact between the terminals of each color and the high voltage PCB assembly) - Replace DC controller PCB assembly - Replace toner cartridge
E196		Error in DCON ROM	
	0001	Updating the ROM on the DC controller PCB assembly has been failed.	- Replace DC controller PCB assembly
E197		Engine Communication Error	
	0000	Internal communication error	- Replace DC controller PCB assembly - Replace video controller PCB assembly

Code		Description	Action
E198		DC controller memory malfunction	
	0000	Description DC controller memory malfunction. Cause DC controller PCB assembly fault.	- Replace DC controller PCB assembly

T-15-5

Code		Description	Action
E202		Reader HP sensor fault	
	0001	Reader HP outward fault The CCD unit moves backward, but does not move to the home position.	- Replace reader HP sensor. - Replace reader motor sensor. - Replace reader unit.
	0002	Reader HP homeward fault The CCD unit moves forward, but does not move to the home position.	- Replace reader HP sensor. - Replace reader motor sensor. - Replace reader unit.
E225		Error in light intensity of the lamp	
	0000	Decrease of light intensity of the lamp.	Replace reader unit.
E248		EEPROM access error	
	0001	Error at EEPROM power-on EEPROM data cannot be read at power-on.	Replace reader unit.
	0002	Error in EEPROM writing EEPROM writing cannot be performed.	Replace reader unit.
	0003	Error in EEPROM reading after writing EEPROM reading cannot be performed after writing is performed.	Replace reader unit.
	0004	Error in EEPROM register writing EEPROM register writing cannot be performed.	Replace reader unit.
E351		Main controller PCB fault	
	0000	Description Internal error of the main controller PCB Cause Main controller PCB fault.	Replace main controller PCB.
E719		Communication error of options	
	0000	Erroneous communication with card reader (serial communication) - Disconnection from the card reader has been detected since communication started after confirmation of normal connection to the card reader (after power-on). - A serial communication error has occurred. (The serial communication error cannot be recovered.)	- Check the connectors of the card reader and image processor PCB. - Replace the card reader for normal connection. - Replace the image processor PCB.
	0002	Erroneous communication with coin vendor (serial communication) - Disconnection from the coin vendor has been detected since communication started after confirmation of normal connection to the coin vendor (after power-on). - A serial communication error has occurred. (The serial communication error cannot be recovered.)	- Check the connection between the image processor PCB and serial PCB. - Check the connectors of the serial PCB and coin vendor for normal connection. - Replace the serial PCB. - Check the coin vendor. - Replace the image processor PCB.
E744		Language file/boot ROM/USB memory error	
	0001	Language file version error The language file version does not match Bootable.	Download a language file of the correct version.
	0002	Language file size error The language file is longer than the permitted size.	Download a language file of the correct version.
	0003	Language file version error The language file version does not match Bootable.	Download a language file of the correct version.
	0004	Language file read error Reading of language file is invalid.	Download a language file of the correct version.
E804		Error in power supply fan	
	0000	Description The fan lock detection signal is input for about 10 sec or longer continuously. Cause Power supply fault, DC controller PCB fault.	- Replace the power supply fan - Replace the DC controller PCB
E805		Error in duplexing fan/CPU fan	
	0005	Description The duplexing fan lock detection signal is input for about 10 sec or longer continuously. Cause Duplexing fan fault, DC controller PCB fault.	- Replace the duplexing fan - Replace the DC controller PCB
E840		Error in pressure release mechanism	
	0000	Description Although passing 2.5 sec from the start of HP control, HP (pressure condition) cannot be controlled. Cause Fixing drive assembly fault, fixing pressure release cam fault.	- Replace the fixing drive assembly - Replace the fixing pressure release cam

15.3 Jam Code

15.3.1 Jam Code (main body)

i-SENSYS MF9170 / i-SENSYS MF9130 / i-SENSYS MF8450

T-15-6

Code	Name	Sensor No.	Description
0104	Delay jam in paper pickup section	SR710	The registration sensor cannot detect the leading edge of paper from the moment paper pickup starts to the moment the jam detection time is reached.
0208	Stationary jam in paper pickup section	SR710	The registration sensor cannot detect the no paper status specified time before the leading edge of the picked up paper reaches this sensor.
010c	Delay jam in deliver section	SR710, SR6005	- The fixing delivery sensor cannot detect presence of paper within the specified time after turning on of the registration clutch. - The fixing delivery sensor detected absence of paper within the specified time after the sensor had detected presence of paper within the specified time after turning on of the registration clutch. - The No.1 delivery sensor cannot detect presence of paper within the specified time after turning on of the fixing delivery sensor.
0210	Stationary jam in delivery section	SR710, SR6005	- The fixing delivery sensor cannot detect absence of paper within the specified time after turning off of the registration clutch. - The fixing delivery sensor cannot detect absence of paper within the specified time after the sensor detected the leading edge of paper. - The No.1 delivery sensor cannot detect absence of paper within the specified time after the sensor detected the leading edge of paper.
0214	Stationary jam in machine	SR706, SR710, SR6001, SR6005	Paper was detected in the paper transport path during initial rotation, during automatic delivery, at the end of cleaning, or at reception of an emergency stop command.
1118	Door open jam	SR720	The door was opened when there was printing paper in the transport path.
0221	Reverse section JAM	SR706, SR715	This jam is applied when the double-fed paper drops on the back of the host machine. The machine determines the reverse section jam if the paper length that is detected by the reverse sensor (SR706) is 50mm or more longer than the paper length that is detected by the delivery sensor (SR715).
0228	Reverse re-pickup section jam	SR710	The machine determines the reverse re-pickup jam if the registration sensor (SR710) cannot detect the presence of paper within the specified time (t) after the duplexing pickup starts. Specified time (t) differs depending on the feeding speed. 1/1 speed: approx. 2.0 sec 4/5 speed: approx. 2.5 sec 1/2 speed: approx 4.0 sec

15.3.2 Jam Code (ADF)

i-SENSYS MF9170 / i-SENSYS MF9130 / i-SENSYS MF8450

T-15-7

Code	Name	Sensor No.	Description
0001	ADF paper trailing edge sensor (SR719) not reaching (delay jam)	SR719	The leading edge of paper does not reach the ADF paper trailing edge sensor (SR719) within 1.8 sec after the trailing edge of precedent page passes through the ADF paper trailing edge sensor (SR719) in 1-sided multiple jobs. The leading edge of paper does not reach the ADF paper trailing edge sensor (SR719) within 1.2 sec after reverse operation starts in 2-sided job.
0002	ADF paper trailing edge sensor (SR719) stray (stray jam)	SR719	The trailing edge of paper does not passes through the ADF paper trailing edge sensor (SR719) within 3.4 sec after the leading edge of paper reaches the ADF paper trailing edge sensor (SR719) in 1-sided job. The trailing edge of paper does not passes through the ADF paper trailing edge sensor (SR719) within 3.5 sec after the leading edge of paper reaches the ADF paper trailing edge sensor (SR719) in 2-sided job.
0094	Initial stationary (in-body residual jam)	SR719	The ADF paper trailing edge sensor (SR719) detects paper at power-ON.
0095	Pickup NG	SR718	The paper is removed from the ADF original tray within 0.1 sec after the start key is pressed.

15.4 Alarm Code

15.4.1 Alarm Code (ADF)

i-SENSYS MF9170 / i-SENSYS MF9130 / i-SENSYS MF8450

T-15-8

Code	Name	Sensor No.	Description
0003H	Separation NG alarm	SR719	The leading edge of paper does not reach the ADF paper trailing edge sensor (SR719) within 3.2 sec after the ADF pickup motor starts positive rotation.

Chapter 16 Service Mode

Contents

16.1 Outline

16.1.1 Service Mode Configuration

i-SENSYS MF9170 / i-SENSYS MF9130 / i-SENSYS MF8450

The service mode screen transition is shown below.

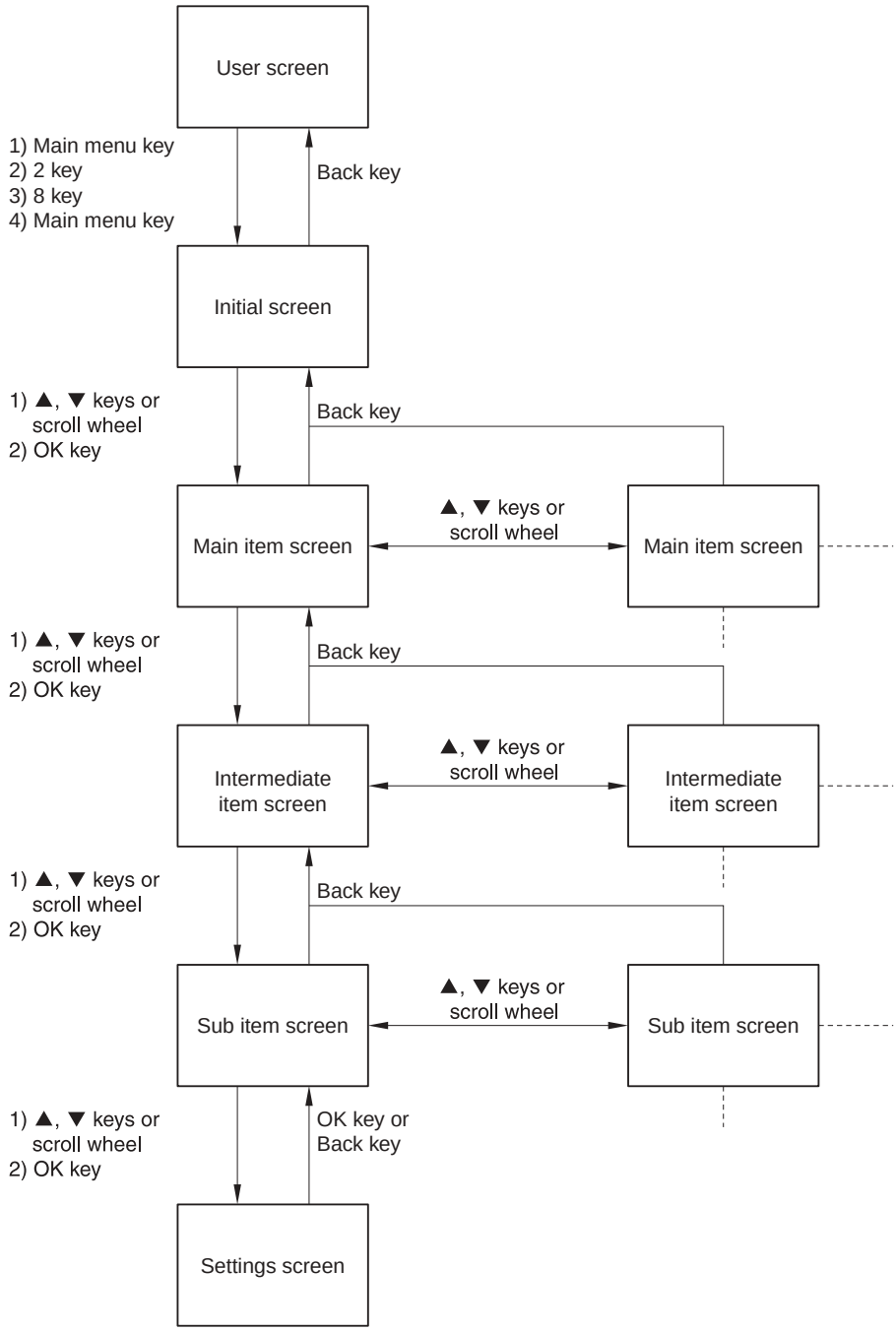

F-16-1

The machine's service mode is categorized in to the following modes.

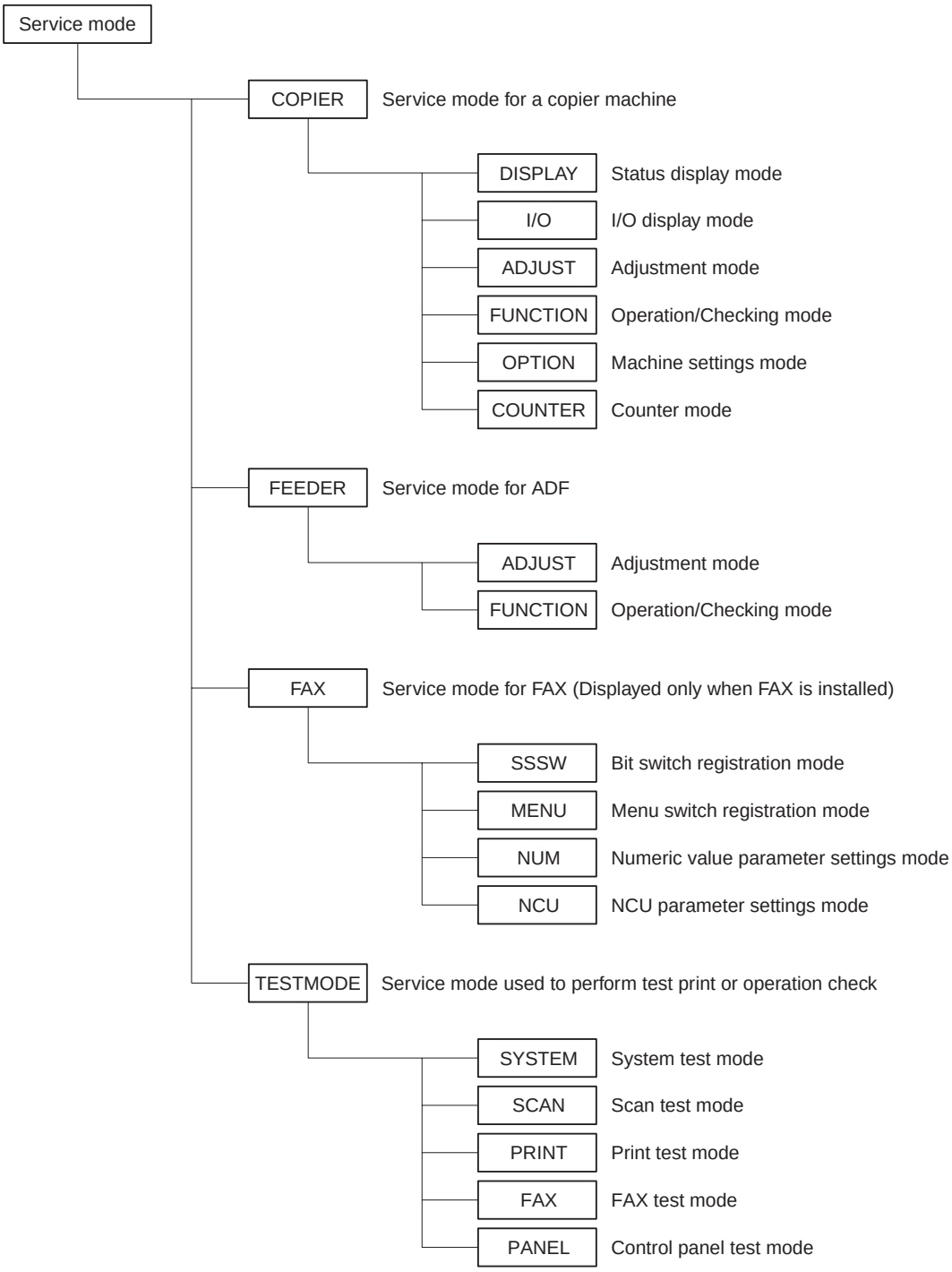

F-16-2

16.1.2 Entering/Selecting Service Mode

i-SENSYS MF9170 / i-SENSYS MF9130 / i-SENSYS MF8450

> ⚠
> When making a copier machine execute an operation using the service mode, be sure to remove the cable from the external controller or the network cable before entering the service mode. Especially, when a print job is entered from an outside machine during the execution of FUNCTION mode (operation/checking mode), a malfunction may occur and cause damage to the copier machine.

1) Press the main menu key on the control panel unit.
2) Press the "2" key.
3) Press the "8" key.
4) Press the main menu key on the control panel unit.

After the above-mentioned procedure is executed, the initial screen (shown in the figure below) is displayed.

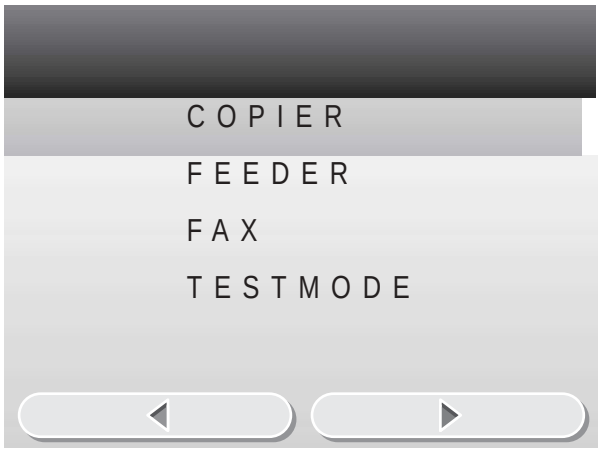

F-16-3

16.1.3 Exiting Service Mode

i-SENSYS MF9170 / i-SENSYS MF9130 / i-SENSYS MF8450

Every time the Return key is pressed in a screen other than the initial screen, the screen goes back to the previous one.
When the Return key is pressed in the initial screen, the screen goes back to the main menu screen.

> ⚠
> When using the service mode (ADJUST, FUNCTION, OPTION), be sure to turn the main power switch OFF/ON after exiting the service mode.

16.1.4 Service Mode Backup

i-SENSYS MF9170 / i-SENSYS MF9130 / i-SENSYS MF8450

> **MEMO:**
> Since no service label is available for the machine, back up the service mode setting values by printing a service report.

When a PCB is replaced or RAM clearing is performed, the ADJUST or OPTION value which has been adjusted returns to a default value. Therefore, when Service Mode values have been changed for adjustment in the field, be sure to print a service report and save it.

16.1.5 Service Mode Screen Operation

i-SENSYS MF9170 / i-SENSYS MF9130 / i-SENSYS MF8450

Initial/Main/Intermediate screen

To select the item:	▲/▼ key or scroll wheel
To display the items on the lower layer:	OK key
To display the items on the upper layer:	Back key

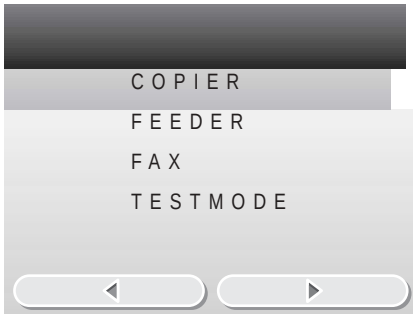

Sub screen 1

To select the item:	▲/▼ key or scroll wheel
To display the each setting screen:	OK key
To display the intermediate screen:	Back key
Setting value:	[1]
Setting range:	[2]

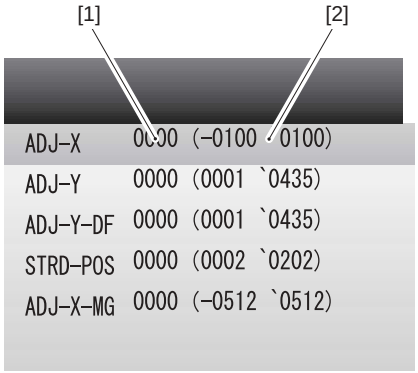

ON/OFF selection screen

To select the setting:	▲/▼ key or scroll wheel
To change the setting:	OK key
Not change the setting:	Back key

Numeric value entry screen 1

To enter the setting value:	Numeric keys
To increase the setting value by 1:	► key or scroll wheel (clockwise)
To decrease the setting value by 1:	◄ key or scroll wheel (counterclockwise)
To enter the negative setting value:	Right any key (if displayed), ◄ key or scroll wheel (counterclockwise) (continue to operate until the value smaller than 0 is displayed)
To change the setting:	OK key
Not change the setting:	Back key

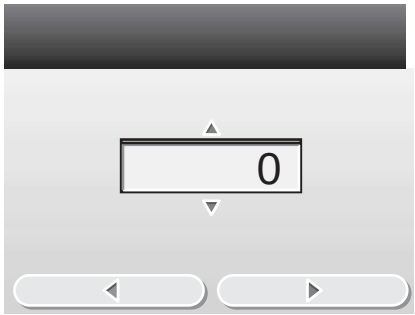

Switch selection screen

To select the switch:	▲/▼ key or scroll wheel
To display the entry screen of switch setting value:	OK key
To display the small screen:	Back key

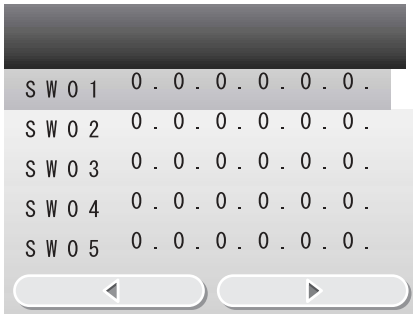

Entry screen of switch setting value

To select the setting item:	◄/► key
To switch the setting value:	Right any key (0 or 1 can be selected)
To change the setting:	OK key
Not change the setting:	Back key

Small screen 2

To select the item:	▲/▼ key or scroll wheel
To display the each setting screen:	OK key
To display the previous screen:	Back key
Setting value:	[1]

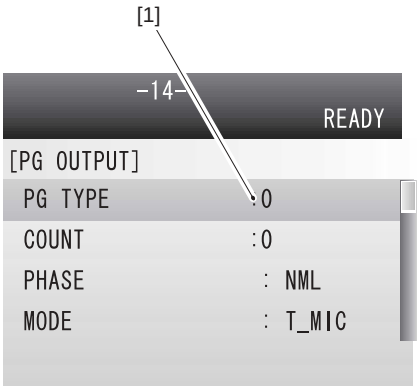

Item selection screen

To select the setting:	▲/▼ key or scroll wheel
To change the setting:	OK key
Not change the setting:	Back key

Numeric value entry screen 2

To enter the setting value:	Numeric keys
To change the setting:	OK key
Not change the setting:	Back key

16.2 COPIER

16.2.1 DISPLAY

16.2.1.1 DISPLAY List

i-SENSYS MF9170 / i-SENSYS MF9130 / i-SENSYS MF8450

<VERSION>

T-16-1

COPIER > DISPLAY > VERSION	
Sub item	**Description**
MAIN	Display of the version/checksum/date of Bootable (product program area)
BOOT	Display of the version/checksum/date of BootROM (boot program area)
OPROM	Not used
ECONT	Display of the ROM version of the recording engine

<ERR>
Error code display screen
Display error codes and detailed codes for system errors.
128 errors maximum

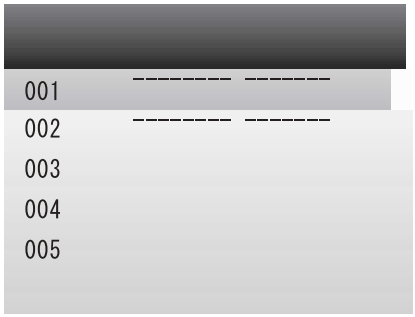

F-16-4

<CCD>

T-16-2

COPIER > DISPLAY > CCD	
Sub item	**Description**
TARGET-B	BLUE color shading target value
TARGET-G	GREEN color shading target value
TARGET-R	RED color shading target value
GAIN-OB	CCD odd-bit BLUE color gain level adjustment value
GAIN-OG	CCD odd-bit GREEN color gain level adjustment value
GAIN-OR	CCD odd-bit RED color gain level adjustment value
GAIN-EB	CCD odd-bit BLUE color offset level adjustment value
GAIN-EG	CCD odd-bit GREEN color offset level adjustment value
GAIN-ER	CCD odd-bit RED color offset level adjustment value

16.2.2 I/O

16.2.2.1 R-CON

i-SENSYS MF9170 / i-SENSYS MF9130 / i-SENSYS MF8450

T-16-3

Address	BIT	Description
P001	**-**	Not used
P002	**0**	Display of the sensor status (DES)
	1	Display of the sensor status (DS)
	2	Display of the sensor status (HPS)

16.2.3 ADJUST

16.2.3.1 ADJUST List

i-SENSYS MF9170 / i-SENSYS MF9130 / i-SENSYS MF8450

<ADJ-XY>

T-16-4

COPIER > ADJUST > ADJ-XY	
Sub item	**Description**
ADJ-X	Adjustment of the optical image leading edge position (image reading start position in the sub-scanning direction) [When used] Incorrect copyboard reading position in the sub scanning direction. [Adjustment method] - When the no-image width is larger than the standard value, decrease the setting value. - When the area outside of the document field is printed, increase the setting value. - When the setting value is increased by 1, the image reading start position moves toward the trailing edge by 0.1mm. Setting range: -100 to 100 [Factory setting value: Differs depending on the machine.] [Value after RAM clearing: 0]
ADJ-Y	Adjustment of the CCD reading start cell position (image reading start position in the main-scanning direction) [When used] Incorrect copyboard reading position in the main scanning direction. [Adjustment method] - When the no-image width is larger than the standard value, decrease the setting value. - When the area outside of the document field is printed, increase the setting value. - When the setting value is increased by 1, the image reading start position moves toward the front side by 0.1mm. Setting range: 1 to 435 [Factory setting value: Differs depending on the machine.] [Value after RAM clearing: 169]
ADJ-Y-DF	Adjustment of the DF stream reading main-scanning position [When used] Incorrect DF stream reading position in the main scanning direction [Adjustment method] - When the setting value is increased by 1, the image reading start position moves toward the front side by 0.1mm. Setting range: 1 to 435 [Factory setting value: Differs depending on the machine.] [Value after RAM clearing: 338]
STRD-POS	Adjustment of the DF stream reading CCD reading position [When used] Incorrect DF stream reading position in the sub scanning direction. [Adjustment method] - When the setting value is increased by 1, the image reading start position moves toward the leading edge by 0.1mm. Setting range: -100 to 100 [Factory setting value: Differs depending on the machine. (It differs depending on whether the machine is a reader or an ADF.)] [Value after RAM clearing: 0]
ADJ-X-MG	Fine adjustment of the copyboard reading sub-scanning magnification [When used] The image printed in the copy output sheet is larger or smaller than the document image. [Adjustment method] Compare the document and copy output sheet, and make an adjustment. - When the image printed in the output sheet is smaller than the document image, increase the value. - When the image printed in the output sheet is larger than the document image, decrease the value. Setting range: -512 to 512 [Factory setting value/Value after RAM clearing: 0] [Caution: This adjustment is made to adjust the image position, and it may affect the SEND image.]

<CCD>

T-16-5

COPIER > ADJUST > CCD	
Sub item	**Description**
W-PLT-X	Entry of white level data for standard white plate Enter a correction value (X) for standard white plate on the backside of the copyboard glass using the service mode after replacement of the copyboard glass or after execution of RAM clearing for the reader unit. Setting range: 4096 to 9999 [Factory setting value/Value after RAM clearing: 8232]
W-PLT-Y	Entry of white level data for standard white plate Enter a correction value (Y) for standard white plate on the backside of the copyboard glass using the service mode after replacement of the copyboard glass or after execution of RAM clearing for the reader unit. Setting range: 4096 to 9999 [Factory setting value/Value after RAM clearing: 8693]
W-PLT-Z	Entry of white level data for standard white plate Enter a correction value (Z) for standard white plate on the backside of the copyboard glass using the service mode after replacement of the copyboard glass or after execution of RAM clearing for the reader unit. Setting range: 4096 to 9999 [Factory setting value/Value after RAM clearing: 9370]
DFTAR-R	Entry of the shading target value when DF is used (RED color) (Normal document reading position) Make the following adjustment using this item. [When used] An image failure occurred after execution of ADF white level adjustment (COPIER>FUNCTION>CCD>DF-WLVL1/DF-WLVL2) (caused by a dirt on the chart, etc.). Setting range: 0 to 99999 [Factory setting value: Differs depending on the machine] [Value after RAM clearing: 0]
DFTAR-G	Entry of the shading target value when DF is used (GREEN color) (Normal document reading position) Make the following adjustment using this item. [When used] An image failure occurred after execution of ADF white level adjustment (COPIER>FUNCTION>CCD>DF-WLVL1/DF-WLVL2) (caused by a dirt on the chart, etc.). Setting range: 0 to 99999 [Factory setting value: Differs depending on the machine] [Value after RAM clearing: 0]

COPIER > ADJUST > CCD	
Sub item	**Description**
DFTAR-B	Entry of the shading target value when DF is used (BLUE color) (Normal document reading position) Make the following adjustment using this item. [When used] An image failure occurred after execution of ADF white level adjustment (COPIER>FUNCTION>CCD>DF-WLVL1/DF-WLVL2) (caused by a dirt on the chart, etc.). Setting range: 0 to 99999 [Factory setting value: Differs depending on the machine] [Value after RAM clearing: 0]

<PASCAL>

T-16-6

COPIER > ADJUST > PASCAL	
Sub item	**Description**
OFST-P-Y	Adjustment of the test print reading density Perform an offset adjustment for the test print reading signal when PASCAL control is performed at the time of automatic gradation correction (full correction). Setting range: -32 to 32
OFST-P-M	Adjustment of the test print reading density Perform an offset adjustment for the test print reading signal when PASCAL control is performed at the time of automatic gradation correction (full correction). Setting range: -32 to 32
OFST-P-C	Adjustment of the test print reading density Perform an offset adjustment for the test print reading signal when PASCAL control is performed at the time of automatic gradation correction (full correction). Setting range: -32 to 32
OFST-P-K	Adjustment of the test print reading density Perform an offset adjustment for the test print reading signal when PASCAL control is performed at the time of automatic gradation correction (full correction). Setting range: -32 to 32

<MISC>

T-16-7

COPIER > ADJUST > MISC	
Sub item	**Description**
SEG-ADJ	Adjustment of the separation level of text and photo in the text/photo/map mode Setting range: -4 to 4 [Factory setting value/Value after RAM clearing: 0]
ACS-EN	Adjustment of copyboard ACS-EN ACS- judgment area [When used] The user does not need color adjustment of the upper edge or corners of the BOOK document. (At copyboard reading) Setting range: -2 to 2 Increase the setting value to enlarge the judgment area. [Factory setting value/Value after RAM clearing: 1]
ACS-EN2	Adjustment of DF ACS-EN ACS- judgment area [When used] The user does not need color adjustment of the upper edge or corners of the BOOK document. (At DF stream reading) Setting range: -2 to 2 Increase the setting value to enlarge the judgment area. [Factory setting value/Value after RAM clearing: 1]

<VIFADJ>

T-16-8

COPIER > ADJUST > VIFADJ	
Sub item	**Description**
CRG-BS-Y	Charging bias setting value (Y) [When used] Low/high image density or fogging occurs but the problem cannot be solved by changing the density setting and performing special printing process. [Adjustment method] - When fogging occurs, it may be eliminated by increasing the setting value. - Increase the setting value to slightly lower the image density. - Decrease the setting value to slightly increase the image density. Setting range: -10 to 10 (Unit: 20V) [Factory setting value/Value after RAM clearing: 0]
CRG-BS-M	Charging bias setting value (M) [When used] Low/high image density or fogging occurs but the problem cannot be solved by changing the density setting and performing special printing process. [Adjustment method] - When fogging occurs, it may be eliminated by increasing the setting value. - Increase the setting value to slightly lower the image density. - Decrease the setting value to slightly increase the image density. Setting range: -10 to 10 (Unit: 20V) [Factory setting value/Value after RAM clearing: 0]

COPIER > ADJUST > VIFADJ	
Sub item	**Description**
CRG-BS-C	Charging bias setting value (C) [When used] Low/high image density or fogging occurs but the problem cannot be solved by changing the density setting and performing special printing process. [Adjustment method] - When fogging occurs, it may be eliminated by increasing the setting value. - Increase the setting value to slightly lower the image density. - Decrease the setting value to slightly increase the image density. Setting range: -10 to 10 (Unit: 20V) [Factory setting value/Value after RAM clearing: 0]
CRG-BS-K	Charging bias setting value (Bk) [When used] Low/high image density or fogging occurs but the problem cannot be solved by changing the density setting and performing special printing process. [Adjustment method] - When fogging occurs, it may be eliminated by increasing the setting value. - Increase the setting value to slightly lower the image density. - Decrease the setting value to slightly increase the image density. Setting range: -10 to 10 (Unit: 20V) [Factory setting value/Value after RAM clearing: 0]
DEV-BS-Y	Developing bias setting value (Y) [When used] Low/high image density or fogging occurs but the problem cannot be eliminated by changing the density setting and performing special printing process. [Adjustment method] - Increase the setting value to increase the image density. - Decrease the setting value to decrease the image density. - When fogging occurs, it may be eliminated by decreasing the setting value. Setting range: -10 to 10 (Unit: 20V) [Factory setting value/Value after RAM clearing: 0]
DEV-BS-M	Developing bias setting value (M) [When used] Low/high image density or fogging occurs but the problem cannot be eliminated by changing the density setting and performing special printing process. [Adjustment method] - Increase the setting value to increase the image density. - Decrease the setting value to decrease the image density. - When fogging occurs, it may be eliminated by decreasing the setting value. Setting range: -10 to 10 (Unit: 20V) [Factory setting value/Value after RAM clearing: 0]
DEV-BS-C	Developing bias setting value (C) [When used] Low/high image density or fogging occurs but the problem cannot be eliminated by changing the density setting and performing special printing process. [Adjustment method] - Increase the setting value to increase the image density. - Decrease the setting value to decrease the image density. - When fogging occurs, it may be eliminated by decreasing the setting value. Setting range: -10 to 10 (Unit: 20V) [Factory setting value/Value after RAM clearing: 0]
DEV-BS-K	Developing bias setting value (Bk) [When used] Low/high image density or fogging occurs but the problem cannot be eliminated by changing the density setting and performing special printing process. [Adjustment method] - Increase the setting value to increase the image density. - Decrease the setting value to decrease the image density. - When fogging occurs, it may be eliminated by decreasing the setting value. Setting range: -10 to 10 (Unit: 20V) [Factory setting value/Value after RAM clearing: 0]
FRT-TS-Y	Transfer bias front side setting value (Y) [When used] An image failure occurs depending on the type or condition of the paper AND the problem cannot be eliminated by performing special printing process. [Adjustment method] - The problem may be eliminated by changing the setting value. - Increase the setting value. (Effective for toner scatter/dotted image) - Decrease the setting value. (Effective for white dots/white flower patches/image with high granularity in halftone mode) Setting range: -30 to 40 (Unit: 50V) - It is preferable to enter values in the condition of "M <= C <= Y <= K". [Factory setting value/Value after RAM clearing: 0]
FRT-TS-M	Transfer bias front side setting value (M) [When used] An image failure occurs depending on the type or condition of the paper AND the problem cannot be eliminated by performing special printing process. [Adjustment method] - The problem may be eliminated by changing the setting value. - Increase the setting value. (Effective for toner scatter/dotted image) - Decrease the setting value. (Effective for white dots/white flower patches/image with high granularity in halftone mode) Setting range: -30 to 40 (Unit: 50V) - It is preferable to enter values in the condition of "M <= C <= Y <= K". [Factory setting value/Value after RAM clearing: 0]

COPIER > ADJUST > VIFADJ	
Sub item	**Description**
FRT-TS-C	Transfer bias front side setting value (C) [When used] An image failure occurs depending on the type or condition of the paper AND the problem cannot be eliminated by performing special printing process. [Adjustment method] - The problem may be eliminated by changing the setting value. - Increase the setting value. (Effective for toner scatter/dotted image) - Decrease the setting value. (Effective for white dots/white flower patches/image with high granularity in halftone mode) Setting range: -30 to 40 (Unit: 50V) - It is preferable to enter values in the condition of "M <= C <= Y <= K". [Factory setting value/Value after RAM clearing: 0]
FRT-TS-K	Transfer bias front side setting value (Bk) [When used] An image failure occurs depending on the type or condition of the paper AND the problem cannot be eliminated by performing special printing process. [Adjustment method] - The problem may be eliminated by changing the setting value. - Increase the setting value. (Effective for toner scatter/dotted image) - Decrease the setting value. (Effective for white dots/white flower patches/image with high granularity in halftone mode) Setting range: -30 to 40 (Unit: 50V) - It is preferable to enter values in the condition of "M <= C <= Y <= K". [Factory setting value/Value after RAM clearing: 0]
BCK-TR-Y	Transfer bias backside setting value (Y) [When used] An image failure occurs depending on the type or condition of the paper AND the problem cannot be eliminated by performing special printing process. [Adjustment method] - The problem may be eliminated by changing the setting value. - Increase the setting value. (Effective for toner scatter/dotted image) - Decrease the setting value. (Effective for white dots/white flower patches/image with high granularity in halftone mode) Setting range: -30 to 40 (Unit: 50V) - It is preferable to enter values in the condition of "M <= C <= Y <= K". [Factory setting value/Value after RAM clearing: 0]
BCK-TR-M	Transfer bias backside setting value (M) [When used] An image failure occurs depending on the type or condition of the paper AND the problem cannot be eliminated by performing special printing process. [Adjustment method] - The problem may be eliminated by changing the setting value. - Increase the setting value. (Effective for toner scatter/dotted image) - Decrease the setting value. (Effective for white dots/white flower patches/image with high granularity in halftone mode) Setting range: -30 to 40 (Unit: 50V) - It is preferable to enter values in the condition of "M <= C <= Y <= K". [Factory setting value/Value after RAM clearing: 0]
BCK-TR-C	Transfer bias backside setting value (C) [When used] An image failure occurs depending on the type or condition of the paper AND the problem cannot be eliminated by performing special printing process. [Adjustment method] - The problem may be eliminated by changing the setting value. - Increase the setting value. (Effective for toner scatter/dotted image) - Decrease the setting value. (Effective for white dots/white flower patches/image with high granularity in halftone mode) Setting range: -30 to 40 (Unit: 50V) - It is preferable to enter values in the condition of "M <= C <= Y <= K". [Factory setting value/Value after RAM clearing: 0]
BCK-TR-K	Transfer bias backside setting value (Bk) [When used] An image failure occurs depending on the type or condition of the paper AND the problem cannot be eliminated by performing special printing process. [Adjustment method] - The problem may be eliminated by changing the setting value. - Increase the setting value. (Effective for toner scatter/dotted image) - Decrease the setting value. (Effective for white dots/white flower patches/image with high granularity in halftone mode) Setting range: -30 to 40 (Unit: 50V) - It is preferable to enter values in the condition of "M <= C <= Y <= K". [Factory setting value/Value after RAM clearing: 0]
PGR-YMCK	Setting value of transfer bias between sheets (Y, M, C, Bk) [When used] The density of the entire area of 70 to 80mm from the leading edge of the sheet is low/high, or there are an infinite number of white or black spots in an image when the entire print is halftone, etc. [Adjustment method] - The problem may be eliminated by changing the setting value. - Increase the setting value. (Effective for thin density in the area 70 to 80mm from the leading edge) - Decrease the setting value. (Effective for high density in the area 70 to 80mm from the leading edge) Setting range: -20 to 50 (Unit: 50V) [Factory setting value/Value after RAM clearing: 0]
FRT-ATH	Attraction bias front side setting value [When used] An image failure occurs depending on the type or condition of the paper AND the problem cannot be eliminated by performing special printing process. [Adjustment method] - The problem may be eliminated by changing the setting value. Setting range: -20 to 20 (Unit: 100V) [Factory setting value/Value after RAM clearing: 0]

COPIER > ADJUST > VIFADJ	
Sub item	**Description**
BCK-ATH	Attraction bias backside setting value [When used] An image failure occurs depending on the type or condition of the paper AND the problem cannot be eliminated by performing special printing process. [Adjustment method] - The problem may be eliminated by changing the setting value. Setting range: -20 to 20 (Unit: 100V) [Factory setting value/Value after RAM clearing: 0]
FRFS-TMP	Fixing temperature front side setting value [When used] The problem cannot be eliminated by performing special printing process and the image is not firmly fixed to the sheet, or a residual image remains in the image. [Caution] The fixing heater temperature is changed via this mode, and therefore, attentions should be paid when using this mode. [Adjustment method] - When an image is not firmly fixed to the sheet, the problem may be eliminated by increasing the setting value. - When a residual image remains in an image, the problem may be eliminated by decreasing the setting value. Setting range: -4 to 4 (Unit: Approx. 5 degree C) [Factory setting value/Value after RAM clearing: 0]
BKFS-TMP	Fixing temperature backside setting value [When used] The problem cannot be eliminated by performing special printing process and the image is not firmly fixed to the sheet, or a residual image remains in the image. [Caution] The fixing heater temperature is changed via this mode, and therefore, attentions should be paid when using this mode. [Adjustment method] - When an image is not firmly fixed to the sheet, the problem may be eliminated by increasing the setting value. - When a residual image remains in an image, the problem may be eliminated by decreasing the setting value. Setting range: -4 to 4 (Unit: Approx. 5 degree C) [Factory setting value/Value after RAM clearing: 0]

16.2.4 FUNCTION

16.2.4.1 FUNCTION List

i-SENSYS MF9170 / i-SENSYS MF9130 / i-SENSYS MF8450

<INSTALL>

T-16-9

COPIER > FUNCTION > INSTALL	
Sub item	**Description**
CARD	Not used
E-RDS	Enabling/disabling of the e-RDS function Setting value: 0: Disabled, 1: Enabled [Factory setting value/Value after RAM clearing: 0]
RGW-PORT	Setting of the port number of the sales company's server used for E-RDS Refer to the port number in the user mode. Setting range: 1 to 65535 [Factory setting value/Value after RAM clearing: 443]
COM-TEST	Confirmation of the connection with the sales company's server used for E-RDS Try to connect the sales company's server. Make a judgment of whether connection has been made or not, and display the result by OK or NG.
COM-LOG	Display of a communication error log Display the detailed result of communication test with the sales company's server used for E-RDS. When an error occurs in communication with the sales company's server, error information is displayed. <Log contents> Number: No. 1 is assigned to the latest one. Error code: 8-digit hexadecimal number Date: Date when the error occurred Time: Time when the error occurred Detailed error information: 128 characters maximum 5 logs maximum
RGW-ADR	Setting of the URL of the sales company's server used for E-RDS Set the URL of the sales company's server. Setting value: URL (incl. NULL, SJIS is not supported) (128 characters maximum)
CNT-DATE	Setting of the date and time to start sending counter information to the server Set the date and time to start sending counter information to the server using the E-RDS third-party extended function. Refer to the date and time setting in the user mode. (12 digits: YYYYMMDDHHMM) YYYY: Year, MM: Month, DD: Day, HH: Hour, MM: Minute) Setting range: 2000/1/1 00:00 to 2037/12/31 23.59 [Factory setting value/Value after RAM clearing: 000000000000]
CNT-INTV	Setting of the interval for sending counter information to the server Set the interval of sending counter information to the server using the E-RDS third-party extended function. Setting range: 1 to 168 (Unit: 1 week) [Factory setting value/Value after RAM clearing: 24]

COPIER > FUNCTION > INSTALL	
Sub item	**Description**
STRD-POS	Automatic detection of the DF stream reading CCD reading position Execute this item after performing any of the replacement of the ADF unit, replacement of the reader unit, or RAM clearing for the scanner. [Operation] Å@The reading position is adjusted while the scanner continues to move by 0.1 mm. [Time] Å@When the lamp lights up: Adjustment time: 10 sec When the lamp does not light up: Lamp adjustment time of 10 to 30 sec + Adjustment time of 10 sec [Displays] 0: Operating / 1: OK / 2: NG

<ATTRACT>
Not used
<DPC>
Not used
<CST>
Not used
<CLEANING>
Not used
<FIXING>
Not used
<PANEL>

T-16-10

COPIER > FUNCTION > PANEL	
Sub item	**Description**
LCD-CHK	Not used
LED-CHK	Not used
LED-OFF	Not used
KEY-CHK	Not used

<PART-CHK>
Not used
<CLEAR>

T-16-11

COPIER > FUNCTION > CLEAR		
Sub item		**Description**
R-CON		Not used
TEL-USER		Clearing of user data and data registered in the address book SSSW is not cleared.
SRVC-DAT		Clearing of SERVICE DATA User data is not cleared.
COUNTER		Clearing of the maintenance/parts counter and mode counter to 0 Clear the counter (numerator) on the system dump list to 0.
TYPE		Initialization of USER DATA and SERVICE DATA for the specified destination setting Japan: JAPAN USA: U.S.A. Europe: EUROPE 1(area) / U.K. / SWEDEN / SWISS / AUSTRIA / DENMARK / NORWAY / HOLLAND / BERUGIUM / FINLAND / ITALY / SPAIN / PORTUGAL / IRELAND / HUNGARY / SAF / GERMANY / FRANCE / CZECH / SLOVENIA / PORLAND / GREECE/ LUXEMBOURG / RUSSIA / EUROPE 2(area) Australia: AUSTRALIA / N.Z. China: CHINA Korea: KOREA Taiwan: TAIWAN Asia: SINGAPORE / HONG KONG / MALAYSIA / ASIA(area) Note) STANDARD / CANADA are not in use.
HIST	**ACT-HIST**	Clearing of the communication management history
	ACC-HIST	Clearing of the print history
	JAM-HIST	Clearing of the jam history
	ERR-HIST	Clearing of the error (E code) history
	ALARM	Not used
	ENV-HIST	Not used
CARD		Clearing of the connection information of a new card reader equipment Clear data related to card IDs (department). Operation method 1) Set the department management in user registration to OFF. 2) Execute this item. 3) Execute COPIER>FUNCTION>CLEAR>ERR>E719. 4) Turn off the main power switch. 5) Remove the control card equipment. 6) Turn on the main power switch.
ERR	**E355-CLR**	Clearing of E355
	E719-CLR	Clearing of E719 Clear the connection information of the control card equipment and coin robo.
PWD-CLR		Clearing of the password of a system administrator
FILE-SYS		Initialization of the file system for the main and optional ROMs (File decompression)

COPIER > FUNCTION > CLEAR		
Sub item		**Description**
FORMAT	**FMT-USB**	Not used
	FMT-LDRV	Not used
	FMT-SD	Not used
	512	Not used
	1024	Not used
	2048	Not used
CA-KEY		Initialization of the CA certificate installed (Only displayed after the activation of e-RDS function)
ERDS-DAT		Initialization of e-RDS parameters (Only displayed after the activation of e-RDS function) - ERDS SWITCH - RGW-ADDRESS - RGW-PORT - CNT-DATE - CNT-INTV - COM-LOG
DEPT-USR		Setting the ID management by department and user management to OFF
SYS-INFO		Clearing of the system administration password
ALL		Clearing of the following items - USER DATA - SERVICE DATA - JOB ID - Histories - Clearing date MEMO: USER DATA/SERVICE DATA are initialized for the default destination setting.
EAM-DAT		Not used
ELA-DAT		Not used

<MISC-R>

T-16-12

COPIER > FUNCTION > MISC-R	
Sub item	**Description**
SCANLAMP	Turning on the scanning lamp

<MISC-P>

T-16-13

COPIER > FUNCTION > MISC-P		
Sub item		**Description**
MISC-SW		Not used
MISC-NUM		Not used
OUTPUT	**SRVC-DAT**	Output of the system data list/system dump list
	SYS-DAT	Output of the system data list Mainly output the report of each service software switch and parameter used for FAX function.
	SYS-DMP	Output of the system dump list Output the service data such as the number of communication, number of received sheets, number of sent sheets, number of recording sheets, and number of errors, etc.
	CNTR	Output of the counter report Display the counter indicating how often the function of reading, recording, communication, and copy operation is performed.
	ERR-LOG	Output of error logs
	SPEC	Output of the spec report Print the current equipment condition.
	ERDS-COM	Output of e-RDS communication error logs
	SRVC-LBL	Not used

<SENS-ADJ>
Not used
<SYSTEM>

T-16-14

COPIER > FUNCTION > SYSTEM	
Sub item	**Description**
DOWNLOAD	Switching to the download mode

<HV-TR>
Not used
<CCD>

T-16-15

COPIER > FUNCTION > CCD	
Sub item	**Description**
DF-WLVL1	Not used
DF-WLVL2	Not used

<PARAM>

T-16-16

COPIER > FUNCTION > PARAM	
Sub item	**Description**
SYS-SW	Registration of system parameters (See the table shown below.)

T-16-17

PARAM > SYS-SW			
SW	**Bit**	**Function**	**Remarks**
05	7	Switching of whether or not to prohibit exporting of PWD in the address book (0: Do not prohibit exporting, 1: Prohibit exporting)	Initial value: 1

T-16-18

COPIER > FUNCTION > PARAM		
Sub item		**Description**
SYS-NUM		001 to 100
FAX-SW		Not used
FAX-NUM		Not used
NET-SW		SW01 to SW50
NETNUM		001 to 050
NET-CERT	**VERSION**	CA certificate version
	SRLNUM	Serial number
	SIGALG	Signature algorithm
	ISSUER	Issuer
	VLD_FROM	Commencement date of the expiration period
	VLD_TO	Finishing date of the expiration period
	SUBJECT	Subject of issuance
	PUB_KEY	Public key algorithm and size
	THMB_PRT	Digest (Thumb imprint)
CDC-SW		Not used
CDC-NUM		Not used
EXC-NAVI		Switch for whether or not to start up the installation navigation When setting this switch to 1 after the installation navigation is completed, the installation navigation does not start up at the time of next activation. Setting value: 0: Start up the navigation. 1: Do not start up the navigation. [Factory setting value/Value after RAM clearing: 0]
DSP-PPRSE		Setting of whether or not to display the paper setting screen when ACS setting is set to ON at the time of copy operation Setting value: 0: Do not display the screen. 1: Display the screen. [Factory setting value/Value after RAM clearing: 0]
SET-PPRSZ		Setting of the ACS document size when DSP-PPRSEL is set to ON When the document size is unknown, a screen prompting an operator to enter the document size is displayed. When the sizes other than UNKNOWN are specified, ACS judgment processing is performed based on the specified document size. Setting range: 0 to 20 Setting value: 0: UNKNOWN, 2: A4, 3: A5, 7: B5, 12: LGL, 13: LTR, 60: STMT [Factory setting value/Value after RAM clearing: 0]
DSP-TNROW		Setting of whether or not to display "Toner Low" Setting value: 0: Do not display the screen. 1: Display the screen. [Factory setting value/Value after RAM clearing: 1 (0 for iR C1022/iR C1022i (for US) only)]
SCAN-SW		Not used
SCAN-NUM		Not used
APS-LTLG		Switching of whether or not to display "Automatic (LTR/LGL)" (For future expansion) Setting value: 0: Do not display the item, 1: Display the item [Factory setting value/Value after RAM clearing: 0: MF9330C/ MF9340C/ MF9370C/ iR C1021/ iR C1021i/ iR C1022/ iR C1022i/ iR C2110F/ iR C2110N 1: Other models]
DSP-SCWD		Switching of whether or not to enable ScanToMedia (For future expansion) Setting value: 0: Enable the function, 1: Disable the function [Factory setting value/Value after RAM clearing: 0]
DSP-MDPR		Switching of whether or not to enable MediaPrint (For future expansion) Setting value: 0: Enable the function, 1: Disable the function [Factory setting value/Value after RAM clearing: 0]
DSP-ACS		Switching of whether or not to display [ACS Function Adjustment] when selecting [Additional Func.] > [Adjustment/Cleaning] > [ACS Function Adjustment]. Setting value: 0: Do not display the item, 1: Display the item [Factory setting value/Value after RAM clearing: 0: IR C1022i / IR C1021I / iRC 1021i / IRC 1022 / iRC 1021 for North America, Europe, and Australia 1: Other models]

<PRINTER>

T-16-19

COPIER > FUNCTION > PRINTER	
Sub item	**Description**
SYS-SW	Not used
SYS-NUM	Not used

<VIFFNC>

T-16-20

COPIER > FUNCTION > VIFFNC	
Sub item	**Description**
RSTR-DCN	Restoration of the backup information of DC controller NVRAM retained in the controller's NVRAM to the DC controller NVRAM Perform the following procedure after replacement of the DC controller PCB. 1) Using this item, restore the backup data of the DC controller retained in the NVRAM of the main controller PCB to the NVRAM of the DC controller PCB. 2) Print the user data list by selecting "Initial setting/registration > Report output > List print > User data list". 3) Execute full correction by selecting "Initial setting/registration > Adjustment > Cleaning > Automatic gradation correction > Full correction".
CLR-DCN	Clear of the backup information of DC controller NVRAM retained in the controller's NVRAM to the DC controller NVRAM
SEL-TALC	Setting of TALC paper ETB cleaning is performed 10 times at initial rotation.
INV-ATVC	Setting to enable ATVC Ignore ATVC and use a default value for the output value of each bias.
IMP-BNDG	Setting for banding improvement Perform idling with engagement of the developing assembly and disengagement of ETB.
AANY-0 / AANY-1	Setting of any-any mode 0 / any-any mode 1 Combination of any-any mode 0 / any-any mode 1 AANY-0=0/AANY-1=0: Perform constant-speed cleaning after a job only when the paper size does not match. AANY-0=1/AANY-1=0: Perform high-speed cleaning after all jobs. AANY-0=0/AANY-1=1: Perform constant-speed cleaning after all jobs. AANY-0=1/AANY-1=1: Perform high-speed cleaning after a job only when the paper size does not match.

<SPLMAN>

T-16-21

COPIER > FUNCTION > SPLMAN	
Sub item	**Description**
SPL27767	Setting of high-resistance paper Decrease the final output value of transfer bias by 250V. (Only when high-humidity OHT/high-humidity gloss film is not specified) Setting value: 0: OFF, 1: ON [Factory setting value/Value after RAM clearing: 0]
SPL27267	Setting of 4mil OHT Decrease the final output value of transfer bias by 500V. (Only when high-humidity OHT/high-humidity gloss film/high-resistance paper is not specified) Setting value: 0: OFF, 1: ON [Factory setting value/Value after RAM clearing: 0]
SPL23866	Setting of calcium carbonate paper Apply the maximum attraction bias wherever possible regardless of the environment. Since there is no result of detection of attraction paper resistance, set a transfer bias from the environment. Setting value: 0: OFF, 1: ON [Factory setting value/Value after RAM clearing: 0]
SPL25407	Setting of thin paper/rough paper Change the process speed to 4/5 speed. Use the temperature control table for thin paper/rough paper. (Thin paper only) Do not change the process speed, but change the temperature control table. (Plain paper, Thick paper 2 only) Setting value: 0: OFF, 1: ON [Factory setting value/Value after RAM clearing: 0]
SPL47267	Setting of high-humidity OHT Decrease the final output value of transfer bias by 100V. (OHT only) Setting value: 0: OFF, 1: ON [Factory setting value/Value after RAM clearing: 0]
SPL47667	Setting of prevention of re-transfer Decrease the transfer bias for the 3rd/4th station depending on the environment. (Only when high-humidity OHT/high-humidity gloss film/high-resistance paper/4mil OHT is not specified) Setting value: 0: OFF, 1: ON [Factory setting value/Value after RAM clearing: 0]
SPL34691	Setting for improvement of color misregistration Rotate the fixing motor in +0.5% speed up to the 10th page. Secure the wait time of 10 seconds when the 1st page is picked up at the time of initial rotation, mode switching, or toner ejection. Setting value: 0: OFF, 1: ON [Factory setting value/Value after RAM clearing: 0]
SPL14682	Setting for prevention of fogging 2 Turn off the pre-exposure operation. Do not add a transfer bias as measures to prevent a bird's foot print on the trailing edge. Setting value: 0: OFF, 1: ON [Factory setting value/Value after RAM clearing: 0]
SPL25200	Setting for improvement of OHT transparency Set the controlled temperature at 180 degC, and perform idling of the fixing machine for 45 seconds before initial rotation. Setting value: 0: OFF, 1: ON [Factory setting value/Value after RAM clearing: 0]

COPIER > FUNCTION > SPLMAN	
Sub item	**Description**
SPL53649	Setting of engagement for monochrome mode Perform full engagement of the ETB. Setting value: 0: OFF, 1: ON [Factory setting value/Value after RAM clearing: 0]
SPL35607	Setting of measures for hot offset Decrease the controlled temperature by 10 degC without exception. Setting value: 0: OFF, 1: ON [Factory setting value/Value after RAM clearing: 0]
SPL14660	Setting of the monochrome printer mode Perform the monochrome print in ETB Bk engagement mode. Setting value: 0: OFF, 1: ON [Factory setting value/Value after RAM clearing: 0]
SPL65676	Switching of the margin at the lead edge (in the direction of increasing the margin) Increase the margin at the lead edge of the paper. The standard margin is set if the setting conflicts with that of the decreased margin at the lead edge. Setting value: 0: OFF, 1: ON [Factory setting value/Value after RAM clearing: 0]
SPL65677	Switching of the margin at the lead edge (in the direction of decreasing the margin) Decrease the margin at the lead edge of the paper. The standard margin is set if the setting conflicts with that of the increased margin at the lead edge. Setting value: 0: OFF, 1: ON [Factory setting value/Value after RAM clearing: 0]
SPL68676	Switching of the margin at the right/left side (in the direction of increasing the margin) Increase the margin at the right and left side of the paper. The standard margin is set if the setting conflicts with that of the decreased margin at the right/left side. Setting value: 0: OFF, 1: ON [Factory setting value/Value after RAM clearing: 0]
SPL68677	Switching of the margin at the right/left side (in the direction of decreasing the margin) Decrease the margin at the right and left side of the paper. The standard margin is set if the setting conflicts with that of the increased margin at the right/left side. Setting value: 0: OFF, 1: ON [Factory setting value/Value after RAM clearing: 0]
SPL25607	Switching of the print mode setting Switch the print mode for "plain paper" from "Normal" to "Light" as measures for hot offset at overseas countries. Setting value: 0: OFF, 1: ON [Factory setting value/Value after RAM clearing: 0]

16.2.5 OPTION

16.2.5.1 OPTION List

i-SENSYS MF9170 / i-SENSYS MF9130 / i-SENSYS MF8450

<BODY>

T-16-22

COPIER > OPTION > BODY	
Sub item	**Description**
TMC-SLCT	Switching of the coefficient used for error diffusion correction Setting value: 0: Small granularity for CMYK 1: Small granularity for CMY, Large granularity + large stability for K 2: Large granularity + large stability for CMYK [Factory setting value/Value after RAM clearing: 0]
DFDST-L1	Adjustment of the level of dust detection when DF is used (Correction of an interval between sheets) When the value is increased, the dust detection level is increased. (This makes it easier to detect the dust causing low-density lines.) Setting range: 1 to 9999
DFDST-L2	Adjustment of the level of dust detection when DF is used (Detection after a job) When the value is increased, the dust detection level is increased. (This makes it easier to detect the dust causing low-density lines.) Setting range: 1 to 9999
TMIC-BK	Switching of the method of correcting the end of TMIC_BK_PASCAL_LUT (high-density area) Setting value: 0: Correction of the end of BK_LUT for PDL is set to OFF. Correction of the end of Bk_LUT for copy operation is set to OFF. 1: Correction of the end of BK_LUT for PDL is set to ON. Correction of the end of Bk_LUT for copy operation is set to ON. [Factory setting value/Value after RAM clearing: 1]
AST-SEL	AST-SEL for the change of the advanced smoothing range (AST level SELect) Setting range: 0 to 3 [Factory setting value/Value after RAM clearing: 2]
TMIC-CMY	Switching of the method of correcting the end of TMIC_PASCAL_LUT (high-density area) 0: Correction of the end of LUT for PDL is set to OFF. Correction of the end of LUT for copy operation is set to OFF. 1: Correction of the end of LUT for PDL is set to ON. Correction of the end of LUT for copy operation is set to ON. [Factory setting value/Value after RAM clearing: 1]
IFXEML-Z	Control of the additional function of the attribute flag when printing a message received by email Setting value: 0: For PDL_Text mode (CardDirect_Gray Correction ODM + Background On) 1: For PDL_Photo mode (CardDirect_Normal ODM + Background Off) 2: For Scan_Photo mode (CardDirect_Normal ODM + Background On) [Factory setting value/Value after RAM clearing: 0] * The Text mode is set as default because it is considered that many of the email messages contain documents mixed with text. ODM for CardDirect is used regardless of PDL or Scan because there is a restriction in terms of input/output color space.

<USER>

T-16-23

COPIER > OPTION > USER	
Sub item	**Description**
COUNTER1	Selection of the counter type for Counter 1 [Factory setting value/Value after RAM clearing: 101 (The settings cannot be changed; display only. (Reference: External and Controls > Counters)]
COUNTER2	Selection of the counter type for Counter 2 Setting range: 0 to 999 [Factory setting value/Value after RAM clearing: (Reference: External and Controls > Counters)]
COUNTER3	Selection of the counter type for Counter 3 Setting range: 0 to 999 [Factory setting value/Value after RAM clearing: (Reference: External and Controls > Counters)]
COUNTER4	Selection of the counter type for Counter 4 Setting range: 0 to 999 [Factory setting value/Value after RAM clearing: (Reference: External and Controls > Counters)]
COUNTER5	Selection of the counter type for Counter 5 Setting range: 0 to 999 [Factory setting value/Value after RAM clearing: (Reference: External and Controls > Counters)]
COUNTER6	Selection of the counter type for Counter 6 Setting range: 0 to 999 [Factory setting value/Value after RAM clearing: (Reference: External and Controls > Counters)]
TNRB-SW	Switching of whether or not to display the toner bottle counter Setting value: 0: Do not display the toner bottle counter. 1: Display the toner bottle counter. [Factory setting value/Value after RAM clearing: 0]
CNT-SW	Switching of the type of counter display Setting range: 0 to 4 [Factory setting value/Value after RAM clearing: 0]
SCALL-SW	Turning ON/OFF call button function Setting value: 0: Call button function OFF 1: Call button function ON [Factory setting value/Value after RAM clearing: 0]
SCALLCMP	Actions when repair of call button function is completed Used when actions for a repair request are completed.

Software counter specifications
100 to 199: Total
200 to 299: Copy (When more numbers are needed, add the number from 001.)
300 to 399: Print
400 to 499: Copy and print
500 to 599: Scan
600 to 699: Box, Media/Pic/Mobile phone print
700 to 799: Reception print
800 to 899: Report print
900 to 999: Sending/Box/Remote/Media

<Explanation of the symbols in the table>
- yes: Valid counter for this machine

- Large size: Paper larger than B4-size
- Small size: B4-size or smaller paper
- Numbers 1, 2 indicated under "Counter Details": Number of counts for large size paper
- Total A: Total number of counts for operation other than "local copy + remote copy"
- Total B: Total number of counts for operation other than "local copy + remote copy + Box print"
- Copy: Local copy + remote copy + Box print
- Copy A: Local copy + remote copy + Box print
- Print: PDL print + report print + Box print
- Print A: PDL print + report print
- Scan: B&W scan + color scan

Numbers from 191 to 194 are not available for the settings of Counter 2 to 6.

T-16-24

Compatibility	No.	Counter description
yes	101	Total 1
yes	102	Total 2
	103	Total (large)
yes	104	Total (small)
yes	105	Total (full-color 1)
yes	106	Total (full-color 2)
yes	108	Total (black and white 1)
yes	109	Total (black and white 2)
	110	Total (monocolor/large)
	111	Total (monocolor/small)
	112	Total (black and white/large)
yes	113	Total (black and white/small)
yes	114	Total 1 (two-sided)
yes	115	Total 2 (two-sided)

Compatibility	No.	Counter description
	116	Large (two-sided)
yes	117	Small (two-sided)
	118	Total (monocolor 1)
	119	Total (monocolor 2)
	120	Total (full-color/large)
yes	121	Total (full-color/small)
	122	Total (full-color + monocolor/large)
yes	123	Total (full-color + monocolor/small)
yes	124	Total (full-color + monocolor 2)
yes	125	Total (full-color + monocolor 1)
yes	126	Total A1
yes	127	Total A2
	128	Total A (large)
yes	129	Total A (small)
yes	130	Total A (full color 1)
yes	131	Total A (full color 2)
yes	132	Total A (black and white 1)
yes	133	Total A (black and white 2)
	134	Total A (mono color /large)
	135	Total A (mono color /small)
	136	Total A (black and white /large)
yes	137	Total A (black and white /small)
yes	138	Total A 1(double sided)
yes	139	Total A 2(double sided)
	140	large A (double sided)
yes	141	small A (double sided)
	142	Total A (mono color 1)
	143	Total A (mono color 2)
	144	Total A (full color /large)
yes	145	Total A (full color /small)
	146	Total A (full color +mono color /large)
yes	147	Total A (full color +mono color /small)
yes	148	Total A (full color +mono color 2)
yes	149	Total A (full color +mono color 1)
yes	150	Total B1
yes	151	Total B2
	152	Total B (large)
yes	153	Total B (small)
yes	154	Total B (full color 1)
yes	155	Total B (full color 2)
yes	156	Total B (black and white 1)
yes	157	Total B (black and white 2)
	158	Total B (mono color /large)
	159	Total B (mono color /small)
	160	Total B (black and white /large)
yes	161	Total B (black and white /small)
yes	162	Total B1 (double sided)
yes	163	Total B2 (double sided)
	164	large B (double sided)
yes	165	small B (double sided)
	166	Total B (mono color 1)
	167	Total B (mono color 2)
	168	Total B (full color /large)
yes	169	Total B (full color /small)
	170	Total B (full color +mono color /large)
yes	171	Total B (full color +mono color /small)
yes	172	Total B (full color +mono color 2)
yes	173	Total B (full color +mono color 1)
yes	191	Toner replacement / yellow
yes	192	Toner replacement / magenta
yes	193	Toner replacement / cyan
yes	194	Toner replacement / black
	195	Toner replacement / expansion 1
	196	Toner replacement / expansion 2
yes	201	Copies (total 1)
yes	202	Copies (total 2)

Compatibility	No.	Counter description
	203	Copies (large)
yes	204	Copies (small)
yes	205	Copies A (total 1)
yes	206	Copies A (total 2)
	207	Copies A (large)
yes	208	Copies A (small)
yes	209	Local copies (total 1)
yes	210	Local copies (total 2)
	211	Local copies (large)
yes	212	Local copies (small)
	213	Remote copies (total 1)
	214	Remote copies (total 2)
	215	Remote copies (large)
	216	Remote copies (small)
yes	217	Copies (full-color 1)
yes	218	Copies (full-color 2)
	219	Copies (monocolor 1)
	220	Copies (monocolor 2)
yes	221	Copies (black and white 1)
yes	222	Copies (black and white 2)
	223	Copies (full-color/large)
yes	224	Copies (full-color/small)
	225	Copies (monocolor/large)
	226	Copies (monocolor/small)
	227	Copies (black and white/large)
yes	228	Copies (black and white/small)
	229	Copies (full-color + monocolor/large)
yes	230	Copies (full-color + monocolor/small)
yes	231	Copies (full-color + monocolor/2)
yes	232	Copies (full-color + monocolor/1)
	233	Copies (full-color/large/two-sided)
yes	234	Copies (full-color/small/two-sided)
	235	Copies (monocolor/large/two-sided)
	236	Copies (monocolor/small/two-sided)
	237	Copies (black and white/large/two-sided)
yes	238	Copies (black and white/small/two-sided)
yes	245	Copies A (full-color 1)
yes	246	Copies A (full-color 2)
	247	Copies A (monocolor 1)
	248	Copies A (monocolor 2)
yes	249	Copies A (black and white 1)
yes	250	Copies A (black and white 2)
	251	Copies A (full-color/large)
yes	252	Copies A (full-color/small)
	253	Copies A (monocolor/large)
	254	Copies A (monocolor/small)
	255	Copies A (black and white/large)
yes	256	Copies A (black and white/small)
	257	Copies A (full-color + mono-color/large)
yes	258	Copies A (full-color + mono-color/small)
yes	259	Copies A (full-color + mono-color 2)
yes	260	Copies A (full-color + mono-color 1)
	261	Copies A (full-color/large/two-sided)
yes	262	Copies A (full-color/small/two-sided)
	263	Copies A (monocolor/large/two-sided)
	264	Copies A (monocolor/small/two-sided)
	265	Copies A (black and white/large/two-sided)
yes	266	Copies A (black and white/small/two-sided)
	273	Local copies (full-color 1)
	274	Local copies (full-color 2)
	275	Local copies (monocolor 1)
	276	Local copies (monocolor 2)
yes	277	Local copies (black and white 1)
yes	278	Local copies (black and white 2)
	279	Local copies (full-color/large)
yes	280	Local copies (full-color/small)

Compatibility	No.	Counter description
	281	Local copies (monocolor/large)
	282	Local copies (monocolor/small)
	283	Local copies (black and white/large)
yes	284	Local copies (black and white/small)
	285	Local copies (full-color + mono-color/large)
yes	286	Local copies (full-color + mono-color/large)
yes	287	Local copies (full-color + mono-color 2)
yes	288	Local copies (full-color + mono-color 1)
	289	Local copies (full-color/large/two-sided)
yes	290	Local copies (full-color/small/two-sided)
	291	Local copies (monocolor/large/two-sided)
	292	Local copies (monocolor/small/two-sided)
	293	Local copies (black and white/large/two-sided)
yes	294	Local copies (black and white/small/two-sided)
	002	Remote copies (full-color 1)
	003	Remote copies (full-color 2)
	004	Remote copies (monocolor 1)
	005	Remote copies (monocolor 2)
	006	Remote copies (black and white 1)
	007	Remote copies (black and white 2)
	008	Remote copies (full-color/large)
	009	Remote copies (full-color/small)
	010	Remote copies (monocolor/large)
	011	Remote copies (monocolor/small)
	012	Remote copies (black and white/large)
	013	Remote copies (black and white/small)
	014	Remote copies (full-color + monocolor/large)
	015	Remote copies (full-color + monocolor/small)
	016	Remote copies (full-color + monocolor 2)
	017	Remote copies (full-color + monocolor 1)
	018	Remote copies (full-color/large/two-sided)
	019	Remote copies (full-color/small/two-sided)
	020	Remote copies (monocolor/large/two-sided)
	021	Remote copies (monocolor/small/two-sided)
	022	Remote copies (black and white/large/two-sided)
	023	Remote copies (black and white/small/two-sided)
yes	301	Prints (total 1)
yes	302	Prints (total 2)
	303	Prints (large)
yes	304	Prints (small)
yes	305	Prints A (total 1)
yes	306	Prints A (total 2)
	307	Prints A (large)
yes	308	Prints A (small)
yes	309	Prints (full-color 1)
yes	310	Prints (full-color 2)
	311	Prints (monocolor 1)
	312	Prints (monocolor 2)
yes	313	Prints (black and white 1)
yes	314	Prints (black and white 2)
	315	Prints (full-color/large)
yes	316	Prints (full-color/small)
	317	Prints (monocolor/large)
	318	Prints (monocolor/small)
	319	Prints (black and white/large)
yes	320	Prints (black and white/small)
	321	Prints (full-color + monocolor/large)
yes	322	Prints (full-color + monocolor/small)
yes	323	Prints (full-color + monocolor/2)
yes	324	Prints (full-color + monocolor/1)
	325	Prints (full-color/large/two-sided)
yes	326	Prints (full-color/small/two-sided)
	327	Prints (monocolor/large/two-sided)
	328	Prints (monocolor/small/two-sided)
	329	Prints (black and white/large/two-sided)
yes	330	Prints (black and white/small/two-sided)

Compatibility	No.	Counter description
yes	331	PDL prints (total 1)
yes	332	PDL prints (total 2)
	333	PDL prints (large)
yes	334	PDL prints (small)
yes	335	PDL prints (full-color 1)
yes	336	PDL prints (full-color 2)
yes	339	PDL prints (black and white 1)
yes	340	PDL prints (black and white 2)
	341	PDL prints (full-color/large)
yes	342	PDL prints (full-color/small)
	345	PDL prints (black and white/large)
yes	346	PDL prints (black and white/small)
	351	PDL prints (full-color/large/two-sided)
yes	352	PDL prints (full-color/small/two-sided)
	355	PDL prints (black and white/large/two-sided)
yes	356	PDL prints (black and white/small/two-sided)
	401	Copies + prints (full-color/large)
yes	402	Copies + prints (full-color/small)
	403	Copies + prints (black and white/large)
yes	404	Copies + prints (black and white/small)
yes	405	Copies + prints (black and white 2)
yes	406	Copies + prints (black and white 1)
	407	Copies + prints (full-color + monocolor/large)
yes	408	Copies + prints (full-color + monocolor/small)
yes	409	Copies + prints (full-color + monocolor/2)
yes	410	Copies + prints (full-color + monocolor/1)
	411	Copies + prints (large)
yes	412	Copies + prints (small)
yes	413	Copies + prints (2)
yes	414	Copies + prints (1)
	415	Copies + prints (monocolor/large)
	416	Copies + prints (monocolor/small)
	417	Copies + prints (full-color/large/two-sided)
yes	418	Copies + prints (full-color/small/two-sided)
	419	Copies + prints (monocolor/large/two-sided)
	420	Copies + prints (monocolor/small/two-sided)
	421	Copies + prints (black and white/large/two-sided)
yes	422	Copies + prints (black and white/small/two-sided)
yes	501	Scans (total 1)
	502	Scans (total 2)
	503	Scans (large)
	504	Scans (small)
yes	505	Black and white scans (total 1)
yes	506	Black and white scans (total 2)
	507	Black and white scans (large)
yes	508	Black and white scans (small)
yes	509	Color scans (total 1)
yes	510	Color scans (total 2)
	511	Color scans (large)
yes	512	Color scans (small)
	601	Box prints (total 1)
	602	Box prints (total 2)
	603	Box prints (large)
	604	Box prints (small)
	605	Box prints (full-color 1)
	606	Box prints (full-color 2)
	607	Box prints (monocolor 1)
	608	Box prints (monocolor 2)
	609	Box prints (black and white 1)
	610	Box prints (black and white 2)
	611	Box prints (full-color/large)
	612	Box prints (full-color/small)
	613	Box prints (monocolor/large)
	614	Box prints (monocolor/small)
	615	Box prints (black and white/large)
	616	Box prints (black and white/small)

Compatibility	No.	Counter description
	617	Box prints (full-color + monocolor/large)
	618	Box prints (full-color + monocolor/small)
	619	Box prints (full-color + monocolor 2)
	620	Box prints (full-color + monocolor 1)
	621	Box prints (full-color/large/two-sided)
	622	Box prints (full-color/small/two-sided)
	623	Box prints (monocolor/large/two-sided)
	624	Box prints (monocolor/small/two-sided)
	625	Box prints (black and white/large/two-sided)
	626	Box prints (black and white/small/two-sided)
yes	631	Media prints (total 1)
yes	632	Media prints (total 2)
	633	Media prints (large)
yes	634	Media prints (small)
yes	635	Media prints (full-color 1)
yes	636	Media prints (full-color 2)
	637	Media prints (monocolor 1)
	638	Media prints (monocolor 2)
yes	639	Media prints (black and white 1)
yes	640	Media prints (black and white 2)
	641	Media prints (full-color/large)
yes	642	Media prints (full-color/small)
	643	Media prints (monocolor/large)
	644	Media prints (monocolor/small)
	645	Media prints (black and white/large)
yes	646	Media prints (black and white/small)
	647	Media prints (full-color + monocolor/large)
yes	648	Media prints (full-color + monocolor/small)
yes	649	Media prints (full-color + monocolor 2)
yes	650	Media prints (full-color + monocolor 1)
	651	Media prints (full-color/large/two-sided)
	652	Media prints (full-color/small/two-sided)
	653	Media prints (monocolor/large/two-sided)
	654	Media prints (monocolor/small/two-sided)
	655	Media prints (black and white/large/two-sided)
	656	Media prints (black and white/small/two-sided)
	661	PictBridge (total 1)
	662	PictBridge (total 2)
	663	PictBridge (large)
	664	PictBridge (small)
	665	PictBridge (full-color 1)
	666	PictBridge (full-color 2)
	667	PictBridge (monocolor 1)
	668	PictBridge (monocolor 2)
	669	PictBridge (black and white 1)
	670	PictBridge (black and white 2)
	671	PictBridge (full-color/large)
	672	PictBridge (full-color/small)
	673	PictBridge (monocolor/large)
	674	PictBridge (monocolor/small)
	675	PictBridge (black and white/large)
	676	PictBridge (black and white/small)
	677	PictBridge (full-color + monocolor/large)
	678	PictBridge (full-color + monocolor/small)
	679	PictBridge (full-color + monocolor 2)
	680	PictBridge (full-color + monocolor 1)
	681	PictBridge (full-color/large/two-sided)
	682	PictBridge (full-color/small/two-sided)
	683	PictBridge (monocolor/large/two-sided)
	684	PictBridge (monocolor/small/two-sided)
	685	PictBridge (black and white/large/two-sided)
	686	PictBridge (black and white/small/two-sided)
yes	701	Received prints (total 1)
yes	702	Received prints (total 2)
	703	Received prints (large)
yes	704	Received prints (small)

Compatibility	No.	Counter description
yes	705	Received prints (full-color 1)
yes	706	Received prints (full-color 2)
	707	Received prints (gray scale 1)
	708	Received prints (gray scale 2)
yes	709	Received prints (black and white 1)
yes	710	Received prints (black and white 2)
	711	Received prints (full-color/large)
yes	712	Received prints (full-color/small)
	713	Received prints (gray scale/large)
	714	Received prints (gray scale/small)
	715	Received prints (black and white/large)
yes	716	Received prints (black and white/small)
	717	Received prints (full-color + gray scale/large)
yes	718	Received prints (full-color + gray scale/small)
yes	719	Received prints (full-color + gray scale 2)
yes	720	Received prints (full-color + gray scale 1)
	721	Received prints (full-color/large/two-sided)
yes	722	Received prints (full-color/small/two-sided)
	723	Received prints (gray scale/large/two-sided)
	724	Received prints (gray scale/small/two-sided)
	725	Received prints (black and white/large/two-sided)
yes	726	Received prints (black and white/small/two-sided)
yes	801	Report prints (total 1)
yes	802	Report prints (total 2)
	803	Report prints (large)
yes	804	Report prints (small)
yes	805	Report prints (full-color 1)
yes	806	Report prints (full-color 2)
	807	Report prints (gray scale 1)
	808	Report prints (gray scale 2)
yes	809	Report prints (black and white 1)
yes	810	Report prints (black and white 2)
	811	Report prints (full-color/large)
yes	812	Report prints (full-color/small)
	813	Report prints (gray scale/large)
	814	Report prints (gray scale/small)
	815	Report prints (black and white/large)
yes	816	Report prints (black and white/small)
	817	Report prints (full-color + gray scale/large)
yes	818	Report prints (full-color + gray scale/small)
yes	819	Report prints (full-color + gray scale 2)
yes	820	Report prints (full-color + gray scale 1)
	821	Report prints (full-color/large/two-sided)
yes	822	Report prints (full-color/small/two-sided)
	823	Report prints (gray scale/large/two-sided)
	824	Report prints (gray scale/small/two-sided)
	825	Report prints (black and white/large/two-sided)
yes	826	Report prints (black and white/small/two-sided)
	901	Copy scan total 1 (color)
	902	Copy scan total 1 (black and white)
	903	Copy scan total 2 (color)
	904	Copy scan total 2 (black and white)
	905	Copy scan total 3 (color)
	906	Copy scan total 3 (black and white)
	907	Copy scan total 4 (color)
	908	Copy scan total 4 (black and white)
	909	Local copy scans (color)
	910	Local copy scans (black and white)
	911	Remote copy scans (color)
	912	Remote copy scans (black and white)
	913	Sent scan total 1 (color)
	914	Sent scan total 1 (black and white)
yes	915	Sent scan total 2 (color)
yes	916	Sent scan total 2 (black and white)
yes	917	Sent scan total 3 (color)
yes	918	Sent scan total 3 (black and white)

Compatibility	No.	Counter description
	919	Sent scan total 4 (color)
	920	Sent scan total 4 (black and white)
yes	921	Sent scan total 5 (color)
yes	922	Sent scan total 5 (black and white)
yes	929	Sent scan total 6 (color)
yes	930	Sent scan total 6 (black and white)
	931	Sent scan total 7 (color)
	932	Sent scan total 7 (black and white)
	933	Sent scan total 8 (color)
	934	Sent scan total 8 (black and white)
	935	Universal sent scan total (color)
	936	Universal sent scan total (black and white)
	937	Box scans (color)
	938	Box scans (black and white)
yes	939	Remote scans (color)
yes	940	Remote scans (black and white)
	941	Sent scans/faxes (color)
	942	Sent scans/faxes (black and white)
	943	Sent scans/I faxes (color)
	944	Sent scans/I faxes (black and white)
yes	945	Sent scans/e-mails (color)
yes	946	Sent scans/e-mails (black and white)
	947	Sent scans/FTP (color)
	948	Sent scans/FTP (black and white)
	949	Sent scans/SMB (color)
	950	Sent scans/SMB (black and white)
	951	Sent scans/IPX (color)
	952	Sent scans/IPX (black and white)
	953	Sent scans/databases (color)
	954	Sent scans/databases (black and white)
	955	Sent scans/local prints (color)
	956	Sent scans/local prints (black and white)
	957	Sent scans/box (color)
	958	Sent scans/box (black and white)
yes	959	Media scans (color)
yes	960	Media scans (black and white)

<CST>

T-16-25

COPIER > OPTION > CST	
Sub item	**Description**
CST-U1	Not used
CST-U2	Not used
CST-U3	Not used

<ACC>

T-16-26

COPIER > OPTION > ACC	
Sub item	**Description**
CARD	Setting for installation of the new card reader Enter a card number. Setting range: 0 to 99999 [Factory setting value/Value after RAM clearing: 0] When a card number is entered, the following settings are made. - Initialize the information registered for department management. - Register the following number of cards based on the card number entered. MF9130/MF9150c/MF9170/MF9170C/MF9330C/MF9340C/MF9340C/MF9370C/iR C1021/iR C1021i/iR c1022/iR C1022i/iR C2110F/iR C2110N: 1000 cards MF8450/MF8450C: 100 cards However, the number of usable IDs is 99999 maximum. - When 0 is specified for the card number, the department ID is registered from 1.
CC-SPSW	Setting of whether or not to support the control card I/F (CC-V) Setting value: 0: Do not support the control card I/F. 1: Support the control card I/F. [Factory setting value/Value after RAM clearing: 0]

COPIER > OPTION > ACC	
Sub item	**Description**
COIN	ON/OFF setting for the coin vendor display - Change the message on the control panel prompting an operator to set a control card to the one prompting him/her to insert a coin. Setting value: 0: Default message; "Set a control card." 1: Message for a coin vendor; "Insert a coin." [Factory setting value/Value after RAM clearing: 0]
CONTROL	Control of PDL printer output Setting value: 0: Perform printing without a card. 1: Perform printing when a card is inserted. [Factory setting value/Value after RAM clearing: 0]

<LCNS-OF>

T-16-27

COPIER > OPTION > LCNS-OF	
Disabling no transfer of license - ST-xxxx, Display of the installation status	
Sub item	**Description**
ST-SEND	Display of the installation status of the Send function when disabling no transfer Setting value: 0: ON, 1: OFF [Factory setting value/Value after RAM clearing: 0]
ST-BRDIM	Display of the installation status of BarDIMM when disabling no transfer Setting value: 0: ON, 1: OFF [Factory setting value/Value after RAM clearing: 0]
ST-ERDS	Display of the installation status of the 3rd party extended function for ERDS when disabling no transfer Setting value: 0: ON, 1: OFF [Factory setting value/Value after RAM clearing: 0]
ST-PCL	Display of the installation status of PCL when disabling non transfer Setting value: 0: ON, 1: OFF [Factory setting value/Value after RAM clearing: 0]

<LCNS-TR>

T-16-28

COPIER > OPTION > LCNS-TR	
Disabling license transfer - ST-xxxx, Display of the installation status	
Sub item	**Description**
ST-SEND	Display of the installation status of the Send function when disabling license transfer Setting value: 0: ON, 1: OFF [Factory setting value/Value after RAM clearing: 0]
TR-SEND	Display of the 24-digit license key
ST-BRDIM	Display of the installation status of BarDIMM when disabling license transfer Setting value: 0: ON, 1: OFF [Factory setting value/Value after RAM clearing: 0]
TR-BRDIM	Display of the 24-digit license key
ST-ERDS	Display of the installation status of the 3rd party extended function for ERDS when disabling license transfer Setting value: 0: ON, 1: OFF [Factory setting value/Value after RAM clearing: 0]
TR-ERDS	Display of the 24-digit license key
ST-PCL	Display of the installation status of PCL when disabling license transfer Setting value: 0: ON, 1: OFF [Factory setting value/Value after RAM clearing: 0]
TR-PCL	Display of the 24-digit license key

16.2.6 COUNTER

16.2.6.1 COUNTER List

i-SENSYS MF9170 / i-SENSYS MF9130 / i-SENSYS MF8450

<TOTAL>

T-16-29

COPIER > COUNTER > TOTAL	
Display/setting/adjustment range: 00000000 to 99999999 When 99999999 is exceeded, the value returns to 00000000.	
Sub item	**Description**
SERVICE1	Total counter for service: 1 Count up the counter value when the paper is delivered to outside of the printer. (Perform count-up regardless of large or small size.)
SERVICE2	Total counter for service: 2 Count up the counter value when the paper is delivered to outside of the printer. (Count up the value by 2 for large size, and 1 for small size.)
TTL	Total counter (copy + printer + FAX + composite function)
COPY	Total copy counter Count up the counter value when copy operation is executed and the paper is delivered to outside of the printer.
PDL-PRT	PDL print counter Count up the counter value when the paper is delivered to outside or stacked in double-sided mode according to the charging counter at the time of PDL printing. Do not perform count-up when a blank sheet is delivered or stacked. Count up the value by 1 for large and small sizes.

COPIER > COUNTER > TOTAL	
Display/setting/adjustment range: 00000000 to 99999999 **When 99999999 is exceeded, the value returns to 00000000.**	
Sub item	**Description**
FAX-PRT	FAX reception print counter Count up the counter value when the paper is delivered to outside or stacked in double-sided mode according to the charging counter at the time of FAX reception. Do not perform count-up when a blank sheet is delivered or stacked. Count up the value by 1 for large and small sizes. The counter value can be cleared.
RPT-PRT	Report print counter Count up the counter value when the paper is delivered to outside or stacked in double-sided mode according to the charging counter at the time of report printing. Do not perform count-up when a blank sheet is delivered or stacked. Count up the value by 1 for large and small sizes. The counter value can be cleared.
2-SIDE	Double-sided copy/print counter Count up the number of times double-sided copying/printing is performed when the paper is delivered to outside or stacked in double-sided mode according to the charging counter. Do not perform count-up when a blank sheet is delivered or stacked. Count up the value by 1 for large and small sizes. The counter value can be cleared.
SCAN	Scanning counter Count up the number of times scanning is performed when reading is completed according to the charging counter. Count up the value by 1 for large and small sizes. The counter value can be cleared.

<PICK-UP>

T-16-30

COPIER > COUNTER > PICK-UP	
Display/setting/adjustment range: 00000000 to 99999999 **When 99999999 is exceeded, the value returns to 00000000.**	
Sub item	**Description**
C1	Cassette 1 pickup total counter Display the number of sheets picked up from Cassette 1.
C2	Not used
C3	Not used
C4	Not used
MF	Manual feed total counter Display the number of sheets picked up from the manual feed pickup unit.
2-SIDE	Double-sided pickup total counter Display the number of sheets picked up in double-sided mode.

<FEEDER>

T-16-31

COPIER > COUNTER > FEEDER	
Display/setting/adjustment range: 00000000 to 99999999 **When 99999999 is exceeded, the value returns to 00000000.**	
Sub item	**Description**
FEED	Total counter for documents picked up by ADF
DFOP-CNT	Display of the counter for the number of times the ADF hinge is opened/closed Count the number of times the ADF is opened/closed.

<JAM>

T-16-32

COPIER > COUNTER > JAM	
Display/setting/adjustment range: 00000000 to 99999999 **When 99999999 is exceeded, the value returns to 00000000.**	
Sub item	**Description**
TOTAL	Total jam counter
FEEDER	Feeder total jam counter
SORTER	Not used
2-SIDE	Duplexing unit jam counter
MF	Multi-feeder jam counter
C1	Cassette 1 jam counter
C2	Not used
C3	Not used
C4	Not used

<MISC>

T-16-33

COPIER > COUNTER > MISC	
Sub item	**Description**
WST-TNR	Not used

<DRBL-2>

T-16-34

COPIER > COUNTER > DRBL-2	
Display/setting/adjustment range: 00000000 to 99999999 When 99999999 is exceeded, the value returns to 00000000. Use this item as a guide to know the timing of replacement of consumable parts. Be sure to clear the value after the replacement of parts.	
Sub item	**Description**
DF-SP-PD	Number of times the paper goes through the ADF separation pad Display range: 0 to 999999 (Limit: 50000) [Factory setting value/Value after RAM clearing: 0]
DF-SP-RL	Number of times the paper goes through the ADF pickup roller Display range: 0 to 999999 (Limit: 50000) [Factory setting value/Value after RAM clearing: 0]

16.3 FEEDER

16.3.1 ADJUST

16.3.1.1 ADJUST List

i-SENSYS MF9170 / i-SENSYS MF9130 / i-SENSYS MF8450

<ADJUST>

T-16-35

FEEDER > ADJUST	
Sub item	**Description**
DOCST	Adjustment of the position to stop the document when it is picked up from ADF (picked up from the document tray) Setting range: -100 to 100 For reference: When the value is increased, the margin at the lead edge is decreased.
LA-SPEED	Adjustment of the document feeding speed at DF stream reading Setting range: -512 to 512

16.3.2 FUNCTION

16.3.2.1 FUNCTION List

i-SENSYS MF9170 / i-SENSYS MF9130 / i-SENSYS MF8450

<FUNCTION>

T-16-36

FEEDER > FUNCTION	
Sub item	**Description**
FEED-CHK	Checking of paper transport at a single ADF Setting value: 0: Single-sided, 1: Double-sided
SL-ON	Start of solenoid operation
MTR-ON	Start of motor operation
FEED-ON	Checking of paper transport at a single ADF

16.4 FAX

16.4.1 SSSW

16.4.1.1 SSSW List

i-SENSYS MF9170 / i-SENSYS MF9130 / i-SENSYS MF8450

T-16-37

SSSW No.	Bit No.	Function
01		(Error, Copy function-related)
	0	Error code output for service engineer
02		(Network connecting condition setting-related)
	4	Forbid communication control that supports V34 CCRTN OFF IP network
	7	Connect as F-network 2-type terminal
03		(Echo-related)
	0	TCF EQM check
	1	Transmit echo protection tone to V.29
	7	Output 1080Hz before CED

SSSW No.	Bit No.	Function
04		(Communication trouble-related)
	1	Check frequency of CI signal
	2	V.21 end flag
	3	Forbid duplex waiting of T.30 node
	4	T.30 node F echo timer
	5	Check frequency of CI signal at PBX settings
	6	Do not deliver CNG at manual transmission
	7	Do not deliver CED at manual reception
05		(Standard function, DIS signal setting-related)
	1	mm/inch convert (text mode)
	2	mm/inch convert (text photo/photo mode)
	3	Forbid bit delivery after bit 33 of DIS
	4	Cut paper declaration
06		(Scanning condition settings)
	4	Scanning width 0: A4, 1: LTR
12		(Page timer settings-related) Time by 2-bit combination (0, 0): 8 min, (0, 1): 16 min, (1, 0): 32 min, (1, 1): 64min When bit 7 is 0: - 1page timeout time is specified with bit 1 and bit 0 regardless of any mode communication. When bit 7 is 1: - The timeout time for general transmission is specified with bit 1 and bit 0, for HT transmission with bit 3 and bit 2, for reception with bit 5 and bit 4
	0	1 page timeout time (transmission)
	1	
	2	1 page timeout time (HT transmission)
	3	
	4	1 page timeout time (reception)
	5	
	7	1 page timeout time
13		
	2	Convert mm/inch when sending received image
14		
	2	Whether executing inch to mm conversion in both main and sub scanning directions, or in sub scanning direction only
	4	Perform inch-type resolution declaration
15		
	2	Accept receiving ND line: Host machine line
	6	Detect continuous signal at F/T switching
18		
	0	Detect carrier disconnection between DCS and TCF
	1	Waiting time for carrier disconnection between DCS and TCF
	2	Forbid communication control for IP network
22		
	0	Forbid delivering NSX
	3	Forbid manual polling operation
25		(Report display function settings-related)
	0	Prioritize received phone number to dialed number
	2	When receiving blank CSI, regard the CSI as not-received
	3	Message language selection user SW
28		
	0	Forbid V8 procedure at calling side
	1	Forbid V8 procedure at receiving side
	2	Forbid V8 late start at calling side
	3	Forbid V8 late start at receiving side
	4	Forbid fallback start from V.34 receiving side
	5	Forbid fallback start from V.34 sending side
30		
	5	New dial tone detection method
32		
	5	0: NCU2004, 1: NCU2002
33		
	0	(Record) whether to count B4 size as large size or not
	2	(Scan) whether to count B4 size as large size or not
	5	Display toner replacement counter
35		
	0	e-RDS function (0: OFF/1: ON)

16.4.2 MENU

16.4.2.1 MENU List

i-SENSYS MF9170 / i-SENSYS MF9130 / i-SENSYS MF8450

T-16-38

Registration mode of menu switch		
Number	**Parameter**	**Description of the selection**
05	ON/OFF of NL equalizer	0: OFF, 1: ON
06	Telephone line monitor	0: DIAL, 1: SERVICEMAN1, 2: SERVICEMAN2, 3: OFF
07	Delivery level (ATT)	0-15
08	Upper limit of V.34 modulating speed	0: 3429BAUD, 1: 3200BAUD, 2: 3000BAUD, 3: 2800BAUD, 4: 2743BAUD, 5: 2400BAUD
09	Upper limit of V. 34 data speed	(Unit: kbps) 0: 33.6, 1: 31.2, 2: 28.8, 3: 26.4, 4: 24.0, 5: 21.6, 6: 19.2, 7: 16.8, 8: 14.4, 9: 12.0, 10: 9.6, 11: 7.2, 12: 4.8, 13: 2.4
10	Frequency of pseudo CI signal	0: 50 Hz, 1: 25 Hz, 2: 17 Hz

16.4.3 NUM

16.4.3.1 NUM List

i-SENSYS MF9170 / i-SENSYS MF9130 / i-SENSYS MF8450

T-16-39

Numeric parameter setting mode		
Number	**Parameter**	**Available setting range**
02	RTN delivery condition X	1 to 99%
03	RTN delivery condition n	2 to 99 times
04	RTN delivery condition m	1 to 99 lines
05	NCC pause time (before ID code)	1 to 60 s
06	NCC pause time (after ID code)	1 to 60 s
10	T.30 T0 timer	Generally 55s Åi75âÒíþï°å§åàíËÅj
11	T.30 T1 timer (for receiving)	0 to 9999 (France = 3500, Others = 3000)
12	Maximum number of receiving lines	0 to 65535 (lines) Unlimited for 0
13	T.30 EOL timer	500 to 3000 (Default: 55s) 75âÒíþï°å§åàíËÅj
15	Threshold for hooking and on-hook	0 to 999
16	Time to temporarily response at FAX/TEL switching	0 to 9
17	Pseudo RBT cadence ON time	0 to 999
18	Pseudo RBT cadence OFF time (short)	0 to 999
19	Pseudo RBT cadence OFF time (long)	0 to 999
20	Pseudo ring tone cadence ON time	0 to 999
21	Pseudo CI cadence OFF time (short)	0 to 999
22	Pseudo CI cadence OFF time (long)	0 to 999
23	CNG detection level at FAX/TEL switching	0 to 7
24	Pseudo RBT delivery level at FAX/TEL switching	10 to 20 (100V), 0 to 20 (120/ 230V)
25	CNG monitoring time when answer phone is used	0 to 999
26	Level to detect no-sound when answer phone is used	0 to 7
27	Preamble detection time of V21 low-speed flag	20 (* 10ms)
51	Threshold value of hook detection	10 to
53	Set the number of DTMF ringing times at FAX remote reception	10 to (Default: 25)
54	Set the transmission time of BusyTone when the handset is used	
55	Cycle to obtain data of environment log	0 to 480 min (Default: 60min) (No data is obtained with 0)
56	Select counter type to be displayed at counter 1	101
57	Select counter type to be displayed at counter 2	0 to 999
58	Select counter type to be displayed at counter 3	0 to 999
59	Select counter type to be displayed at counter 4	0 to 999
60	Select counter type to be displayed at counter 5	0 to 999
61	Select counter type to be displayed at counter 6	0 to 999
74	Port number of e-RDS RGW	
75	Transmission interval of e-RDS for 3rd party	

16.4.4 NCU

16.4.4.1 NCU List

i-SENSYS MF9170 / i-SENSYS MF9130 / i-SENSYS MF8450

<TONE/ PULSE>

Operating Method
(1) Setting tone parameter
With "#NCU" displayed, press set key -> Press "#TONE/PULSE" set key
-> Pressing "#TONE" set key makes the setting mode for tone parameter.

(2) Setting pulse parameter
With "#NCU" displayed, press set key -> Press "#TONE/PULSE" set key.
-> Pressing "#PULSE" set key makes the setting mode for pulse parameter.

T-16-40

Item			Function	Setting Range
TONE		01	Tone signal delivery time (PSTN)	10 to 9999 (ms)
		02	Minimum pause time (PSTN)	10 to 9999 (ms)
PULSE	PULSE FORM		Pulse digit format	0 -> DP (N) 1 -> DP (N + 1) 2 -> DP (10 - N)
		01	Pulse dial speed (10 pps)	5 to 300 (x 0.1 pps)
		03	Pulse dial make ratio	10 to 90 (%)
		04	Minimum pause time	10 to 9999 (ms)

<DIAL TONE>
(1) Bit switch

T-16-41

Bit No.	Function	1	0
0	Frequency sensing method	Modem	Tonal counter
1			
2	Signal frequency	Changes	No change
3			
4	Screening intermittent signal	From ON	From both
5			
6	Signal method	Continuous	Intermittent
7	Signal sensing	Yes	No

(2) Numeric parameter

T-16-42

Parameter No.	Function	Setting Range
01	T0 timer	0 to 9999 (x 10 ms)
02	T1 timer	0 to 9999 (x 10 ms)
03	T2 timer	0 to 9999 (x 10 ms)
04	T3 timer	0 to 9999 (x 10 ms)
05	T4 timer	0 to 9999 (x 10 ms)
06	Signal sensing table	0 to 16
07	Signal sensing level	0 to 7
08	Number of signal frequencies	0 to 9999 (pce)

<2nd DIAL TONE>
(1) Bit switch

T-16-43

Bit No.	Function	1	0
0	Frequency sensing method	Modem	Tonal counter
1			
2	Signal frequency	Changes	No change
3			
4	Screening intermittent signal	From ON	From both
5			
6	Signal method	Continuous	Intermittent
7	Signal sensing	Yes	No

(2) Numeric parameter

T-16-44

Parameter No.	Function	Setting Range
01	T0 timer	0 to 9999 (x 10 ms)
02	T1 timer	0 to 9999 (x 10 ms)
03	T2 timer	0 to 9999 (x 10 ms)
04	T3 timer	0 to 9999 (x 10 ms)
05	T4 timer	0 to 9999 (x 10 ms)
06	Signal sensing table	0 to 16
07	Signal sensing level	0 to 7
08	Number of signal frequencies	0 to 9999 (pce)

<BUSY TONE 0>
(1) Bit switch

T-16-45

Bit No.	Function	1	0
0			
1			
2	Signal frequency	Changes	No change
3			
4	Screening intermittent signal	From ON	From both
5			
6	Signal method	Continuous	Intermittent
7	Signal sensing	Yes	No

(2) Numeric parameter

T-16-46

Parameter No.	Function	Setting Range
01		
02	T1 timer	0 to 9999 (x 10 ms)
03	T2 timer	0 to 9999 (x 10 ms)
04	T3 timer	0 to 9999 (x 10 ms)
05	T4 timer	0 to 9999 (x 10 ms)
06	Signal sensing table	0 to 16
07	Signal sensing level	0 to 7
08	Number of signal frequencies	0 to 9999 (pce)

<BUSY TONE 1>
(1) Bit switch

T-16-47

Bit No.	Function	1	0
0			
1			
2	Signal frequency	Changes	No change
3	RBT signal detection	Yes	No
4	Screening intermittent signal	From On	From Both
5	RBT signal checking cycle	1 cycle	1/2 cycle
6	Signal format	Continuous	Intermittent
7	Signal sensing	Yes	No

(2) Numeric parameter

T-16-48

Parameter No.	Function	Setting Range
01		
02	T1 timer	0 to 9999 (x 10 ms)
03	T2 timer	0 to 9999 (x 10 ms)
04	T3 timer	0 to 9999 (x 10 ms)
05	T4 timer	0 to 9999 (x 10 ms)
06	Signal sensing table	0 to 16
07	Signal sensing level	0 to 7
08	Number of signal frequencies	0 to 9999 (pce)

<REORDER TONE>
(1) Bit switch

T-16-49

Bit No.	Function	1	0
0			
1	Signal sensing method	FED	FR3
2	Signal frequency	Changes	No change
3			
4	Screening intermittent signal	From ON	From both
5			
6	Signal format	Continuous	Intermittent
7	Signal sensing	Yes	No

(2) Numeric parameter

T-16-50

Parameter No.	Function	Setting Range
01		
02	T1 timer	0 to 9999 (x 10 ms)
03	T2 timer	0 to 9999 (x 10 ms)
04	T3 timer	0 to 9999 (x 10 ms)
05	T4 timer	0 to 9999 (x 10 ms)
06	Signal sensing table	0 to 16
07	Signal sensing level	0 to 7
08	Number of signal frequencies	0 to 9999 (pce)

<AUTO RX>
(1) Numeric parameter

T-16-51

Parameter No.	Function	Setting Range
01	CI ON time	0 to 9999 (x 10 ms)
02	CI LONG ON time	0 to 9999 (x 10 ms)
03	CI OFF time	0 to 9999 (x 10 ms)
04	CI LONG OFF time	0 to 9999 (x 10 ms)
05	CI MAX OFF time	0 to 9999 (x 10 ms)
06	CI WAIT time	0 to 9999 (x 10 ms)
07	CI frequency	0 to 9999 (cycle)
08	Lower limit of CI frequency	0 to 9999 (Hz)
09	Upper limit of CI frequency	0 to 9999 (Hz)

<CNG DETECT>
(1) Numeric parameter

T-16-52

Parameter No.	Setting description		Setting range
01	At F/T switching	CNG MIN ON time	0 to 9999 (x 10 ms)
02		CNG MAX ON time	0 to 9999 (x 10 ms)
06		Hit ratio	0 to 9999 (%)
07	When answer phone is directly connected	CNG MIN ON time	0 to 9999 (x 10 ms)
08		CNG MAX ON time	0 to 9999 (x 10 ms)
09		instantaneous interruption tolerable time	0 to 9999 (x 10 ms)
11		Number of detection	0 to 9999 (times)
12		Hit ratio	0 to 9999 (%)

<SPECIAL N>

T-16-53

Number	Setting Description	Setting Range
04	CTC/EOR delivery timing	1 to 9 (times)
05	High speed flag delivery time in ECM mode	20 to 500 (x 10 ms)
06	Continuous delivery of 1 before image signal delivery	20 to 200 (x 10 ms)
07	Time from S relay ON to P relay OFF	0 to 9999 (x 10 ms)
08	Time that ring back tone parameter is ON	0 to 9999 (x 10 ms)
09	Time that ring back tone parameter is OFF	0 to 9999 (x 10 ms)
11	Lower limit in setting range for redial interval	2 to 99 (min)
12	DTMF delivery level (H1-3, PSTN)	0 to -16 (dBm)
13	DTMF delivery level (L1-4, PSTN)	0 to -16 (dBm)
14	ECM T5 timer	60 to 480 (sec)
15	ECM CD timer	0 to 9999 (ms)
16	CED detection level	0 to 9
17	Upper limit for F/T calling time	0 to 9999 (sec)
19	Number of trail edge margin (lines) at image's trail edge	0 to 9999 (lines)
20	Time to capture F/T line	0 to 9999 (sec) Special SW17 bit 4
24	Delivery time for V34 control cannel flag	0 to 100 (x 10 ms)
25	Delivery time for V34 primary channel flag	20 to 500 (x 10 ms)
26	V34 fallback speed	1 to 4 (x 2.4 kbps)
27	Number of PPR to start V34 fallback	1 to 9 (times)
30	T2 timer	6 to 30 (sec)
40	Setting T2 timer value for V34 communication	
41	Synchronization interval for RETRY to use for synchronization of V8 procedure signal ‘PC -> CC’ at the time of receiving FAX	

Number	Setting Description	Setting Range
44	Number of times of RETRY to use for synchronization of V8 procedure signal 'PC -> CC' at the time of receiving FAX	
45	Waiting time with î¦åƒëODTåüímã@î\ OFF	
46	Time to identify DialTone signal	
47	Time of not being disconnected in the case that DialTone signal is disconnected	
65	Number of maximum lines of A4 paper at the time of sending ÉJÉbÉgéÜ	
66	Number of maximum lines of B4 paper at the time of sending ÉJÉbÉgéÜ	

<RKEY>
(1) Numeric parameter

T-16-54

Parameter No.	Function	Setting Range
01	Flash connection time	0 to 9999 (x 10 ms)
02	Grounding time	0 to 9999 (x 10 ms)

<PBX DIAL TONE>
(1) Bit switch

T-16-55

Bit No.	Function	1	0
0	Frequency sensing method	Modem	Tonal counter
1			
2	Signal frequency	Changes	No change
3			
4	Screening intermittent signal	From ON	From both
5			
6	Signal format	Continuous	Intermittent
7	Signal sensing	Yes	No

(2) Numeric parameter

T-16-56

Parameter No.	Function	Setting Range
01	T0 timer	0 to 9999 (x 10 ms)
02	T1 timer	0 to 9999 (x 10 ms)
03	T2 timer	0 to 9999 (x 10 ms)
04	T3 timer	0 to 9999 (x 10 ms)
05	T4 timer	0 to 9999 (x 10 ms)
06	Signal sensing table	0 to 16
07	Signal sensing level	0 to 9
08	Number of signal frequencies	0 to 9999 (pce)

<PBX BUSY TONE>
(1) Bit switch

T-16-57

Bit No.	Function	1	0
0			
1			
2	Signal frequency	Changes	No change
3			
4	Screening intermittent signal	From ON	From both
5			
6	Signal format	Continuous	Intermittent
7	Signal sensing	Yes	No

(2) Numeric parameter

T-16-58

Parameter No.	Function	Setting Range
01		
02	T1 timer	0 to 9999 (x 10 ms)
03	T2 timer	0 to 9999 (x 10 ms)
04	T3 timer	0 to 9999 (x 10 ms)
05	T4 timer	0 to 9999 (x 10 ms)
06	Signal sensing table	0 to 16
07	Signal sensing level	0 to 9
08	Number of signal frequencies	0 to 9999 (pce)

16.5 TESTMODE

16.5.1 SYSTEM

16.5.1.1 SYSTEM List

i-SENSYS MF9170 / i-SENSYS MF9130 / i-SENSYS MF8450

<DRAM>

T-16-59

TESTMODE > SYSTEM > DRAM	
Check DRAM	
Sub item	**Description**
TEST1	Check writing/reading of data in DRAM area (excluding system work area)
TEST2	Check data reading (high speed)

<ACC>

T-16-60

TESTMODE > SYSTEM > ACC	
Check ID control card reader	
Sub item	**Description**
NCR-CRD	Display: presence/absence of NCR device or the card
CRD-KIND	Card type (the first 3-digit characters)
CRD-STYL	Card format (the second 3-digit characters)
READ-STS	Read status (the third 3/2-digit characters)
NCR-STS	Device status (the fourth character)
NCR-VER	Version of NCR device (4-digit numeric figures)

<SPEAKER>

T-16-61

TESTMODE > SYSTEM > SPEAKER	
Check SPEAKER	
Sub item	**Description**
ON	When "ON" is selected, increase the volume step by step from the minimum up to maximum whenever OK key is pressed. When reaching the maximum volume, it goes back to the minimum volume through silent state.
MIN	When "MIN" is selected, set off the minimum volume with OK key.
MAX	When "MAX" is selected, set off the maximum volume with OK key.
VOL	Set off the volume according to the hardware volume.

16.5.2 SCAN

16.5.2.1 SCAN List

i-SENSYS MF9170 / i-SENSYS MF9130 / i-SENSYS MF8450

<ADJUST>

T-16-62

TESTMODE > SCAN > ADJUST		
Sub item		**Description**
WLVL-ADJ		Correct white level in copyboard scanning and stream scanning to determine shading target.
	READ	Start copyboard scanning operation to read white level of the document (original).
	F-READ	Start stream scanning operation to read white level at stream scanning.
	DT-DF1-RGB	Display DT-DF1-RGB
	DT-DF2-RGB	Display DT-DF2-RGB
ADF-ADJ		Execute adjustment of ADF
	DF-STRM	Enter adjustment value in main (horizontal) scanning direction
	DF-SPEED	Enter adjustment value for paper feeding speed
	DF-OFFST	Enter adjustment value for stop position of document in DF
	DF-POSAD	Not used

<SENSOR>

T-16-63

TESTMODE > SCAN > ADJUST	
Checking Sensor	
Sub item	**Description**
HP-SENS	Home position sensor 1: HP, 0: anything other than HP

TESTMODE > SCAN > ADJUST	
Checking Sensor	
Sub item	**Description**
TP-SENS	Sensor for paper in tray 1: presence of paper, 0: no paper
REG-SENS	Pre-registration sensor 1: presence of paper, 0: no paper
ESS-SENS	Front door sensor 1: ON, 0: OFF

<ADFTEST>

T-16-64

TESTMODE > SCAN > ADFTEST	
ADF Feeding Test **Execute feeding operation according to the scanning feeding speed (specified in SPEED, 2-SIDE, COUNT)**	
Sub item	**Description**
SPEED	Specify ADF feeding speed
2-SIDE	Select ON/OFF for duplex mode
COUNT	Counter for the number of document (originals): Yes
START	Start feeding

<BOOKFEED>

T-16-65

TESTMODE > SCAN > BOOKFEED	
Testing Book Feed Operation	
Sub item	**Description**
PAGE	Display the number of pages that had been book-fed
START	Start book feeding

16.5.3 PRINT

16.5.3.1 PRINT List

i-SENSYS MF9170 / i-SENSYS MF9130 / i-SENSYS MF8450

<PRINT>

T-16-66

TESTMODE > PRINT	
Printing PG pattern	
Sub item	**Description**
PG-TYPE	Enter PG number
COUNT	Enter the number to be output
PHASE	Select 1-sided/2-sided
MODE	Not used
THRU	Selection is available for gamma correction (ON/OFF)
DENS-M	Not used
DENS-C	Not used
DENS-Y	Not used
DENS-K	Not used
COLOR-M	Selection for each color is available The selected color (ON) is to be output. Setting value: 1: ON, 0: OFF
COLOR-C	Selection for each color is available The selected color (ON) is to be output. Setting value: 1: ON, 0: OFF
COLOR-Y	Selection for each color is available The selected color (ON) is to be output. Setting value: 1: ON, 0: OFF
COLOR-K	Selection for each color is available The selected color (ON) is to be output. Setting value: 1: ON, 0: OFF
SIZE	Display paper size
PAPER	Display presence/absence of paper
MATERIAL	Display paper type
F-UP-DWN	Not used
FEED	Selection for the pickup position
START	Start PG pattern print Execute output that has been selected above by pressing it.

16.5.4 FAX

16.5.4.1 FAX List

i-SENSYS MF9170 / i-SENSYS MF9130 / i-SENSYS MF8450

<MODEM>

T-16-67

TESTMODE > FAX > MODEM	
Sub item	**Description**
RELAY-1	Test ON/OFF state of NCU's each relay and port SW
RELAY-2	Test ON/OFF state of NCU's each relay and port SW
FREQ	Close DC circuit to deliver the selected frequency using the modem's tone delivery function.
G3TX	Close DC circuit to deliver the selected signal pattern with the selected frequency using the modem's G3 signal delivery function.
DTMFTX	Close DC circuit to deliver DTMF signal using the modem's DTMF delivery function.
V34G3TX	Close DC circuit to deliver the selected frequency using the modem's G3 signal delivery function (V. 34)

<FACULTY>

T-16-68

TESTMODE > FAX > FACULTY	
Sub item	**Description**
G34800TX	Close DC circuit to deliver the frequency of 4800bps using the modem's G3 signal delivery function.
DETECT1	Ring detection Check Ci, Fc and hook state (ON, OFF) from l-line.
DETECT2	CNG detection test 1 Check CNG signal and FED Make CML relay at ON state to detect CNG
DETECT3	CNG detection test 2 Check CNG signal and FED Make CML relay at OFF state to detect CNG

16.5.5 PANEL

16.5.5.1 PANEL List

i-SENSYS MF9170 / i-SENSYS MF9130 / i-SENSYS MF8450

<PANEL>

T-16-69

TESTMODE > PANEL	
Checking LCD, LED, Key	
Sub item	**Description**
KEY-CHK	Check Key
LED-CHK	Check LED
LCD-CHK	Check LCD
FLCK-CHK	Check flicker

Chapter 17 Upgrading

Contents

17.1 Outline

17.1.1 Overview of Upgrade

i-SENSYS MF9170 / i-SENSYS MF9130 / i-SENSYS MF8450

To upgrade this machine, download the firmware from PC to the machine with using the user support tool (hereinafter called UST).
ÅöÈCÉâÉXÉgÅi031-MNT-UPGD-0001ÅjçÎê¨íÜÅö

17.2 Making Preparations

17.2.1 Required System Environment

i-SENSYS MF9170 / i-SENSYS MF9130 / i-SENSYS MF8450

- OS (any of the following)
  - Microsoft Windows 2000 Server/Professional
  - Microsoft Windows XP Professional/Home Edition *
  - Microsoft Windows Server 2003 *
  - Microsoft Windows Vista *

  *: 32-bit processor version only

- PC
  - PC that supports the foregoing OS
  - Memory (RAM): 32 MB or more
  - Hard disk; 100 MB or more
  - Display: resolution 640x480 pixel or better, 256 color or more
  - PC that has USB port
- System CD of this machine
- USB cable (USB1.1/2.0)

17.2.2 Before Upgrade

i-SENSYS MF9170 / i-SENSYS MF9130 / i-SENSYS MF8450

Remove all the connected cables (except for a power cord) before upgrade.
Communication during upgrade operation may trigger errors.

1) Start PC.
2) Connect the machine and a PC with a USB cable.
3) Set a system CD of this machine to the PC.
4) Turn ON the machine and enter the download mode in service mode.
   COPIER> FUNCTION> SYSTEM> DOWNLOAD
   [USB DOWNLOAD AVAILABLE] is displayed on the control panel.

ÅöÈCÉâÉXÉgÅi031-MNT-UPGD-0002ÅjçÎê¨íÜÅö

MEMO:
Click "Cancel" when [XXXXXXXXXX] is displayed on PC screen.

17.3 Downloading System Software

17.3.1 Downloading the System Software

17.3.1.1 Downloading Procedure

i-SENSYS MF9170 / i-SENSYS MF9130 / i-SENSYS MF8450

1) Open the UST (mf4270-nvXXX-c1-ust.exe).
2) Note the firmware version that the current one will be updated to and click "Next".
ÅöÉCÉâÉXÉgÅi031-MNT-UPGD-0003ÅjçÏê¨íÜÅö
3) Click "Next".
ÅöÉCÉâÉXÉgÅi031-MNT-UPGD-0004ÅjçÏê¨íÜÅö
4) Select a USB connected device and click "Next".
ÅöÉCÉâÉXÉgÅi031-MNT-UPGD-0005ÅjçÏê¨íÜÅö
5) Click "Start".
ÅöÉCÉâÉXÉgÅi031-MNT-UPGD-0006ÅjçÏê¨íÜÅö
6) Click "Yes".
ÅöÉCÉâÉXÉgÅi031-MNT-UPGD-0007ÅjçÏê¨íÜÅö
Download will be started.
ÅöÉCÉâÉXÉgÅi031-MNT-UPGD-0008ÅjçÏê¨íÜÅö
7) When download is complete, click "OK".
ÅöÉCÉâÉXÉgÅi031-MNT-UPGD-0009ÅjçÏê¨íÜÅö
The machine restarts automatically.
8) Check that the firmware version is the same as the one checked in step 2) in service mode.
COPIER> DISPLAY> VERSION

Chapter 18 Service Tools

Contents

18.1 Service Tools

18.1.1 Special Tools

i-SENSYS MF9170 / i-SENSYS MF9130 / i-SENSYS MF8450

In addition to the standard tools set, the following special tools are required when servicing the machine:

T-18-1

Tool name	Tool No.	Ctgr	Appearance	Remarks
Digital multimeter	FY9-2002	A	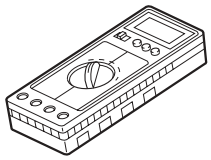	Use for electrical checks; for adjustment of laser power in combination with the laser power checker.
Cover switch	TKN-0093	A	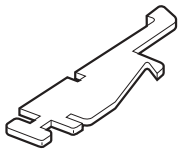	
Tester extension pin	FY9-3038	A	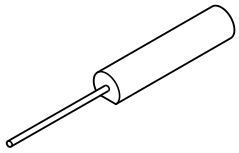	Used as a probe extension when making electrical checks.
Tester extension pin (L-shaped)	FY9-3039	A	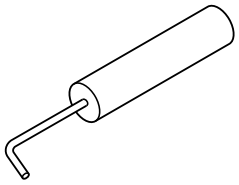	Used as a probe extension when making electrical checks.
CA1 test Sheet	FY9-9030	A	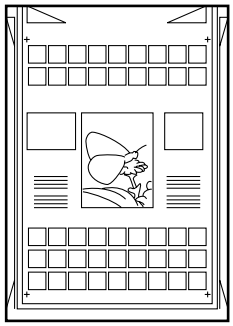	Used for adjusting/checking images.
D-10 test sheet	FY9-9129	B	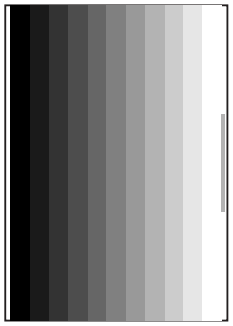	Used for adjusting images.
Loupe	CK-0056	B	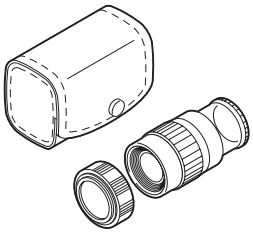	Used for checking images.

Ctgr:
A: Must be kept by each service engineer.
B: Must be kept by each group of about five engineers.
C: Must be kept by each warkshop.

18.1.2 Standard Tools

i-SENSYS MF9170 / i-SENSYS MF9130 / i-SENSYS MF8450

The table below lists the standard tools required for servicing the machine.

T-18-2

No.	Tool name	Tool No.	Remark
1	Tool case	TKN-0001	
2	Jumper wire	TKN-0069	With a clip
3	Clearance gauge	CK-0057	0.02 to 0.03 mm
4	Compression spring scale	CK-0058	0 to 600 g for checking the cassette spring pressure
5	Phillips screwdriver	CK-0101	M4, M5 Length : 363 mm
6	Phillips screwdriver	CK-0104	M3, M4 Length: 155 mm
7	Phillips screwdriver	CK-0105	M4, M5 Length: 191 mm
8	Phillips screwdriver	CK-0106	M4, M5 Length: 85 mm
9	Flat-blade screwdriver	CK-0111	
10	Precision flat-blade screwdriver set	CK-0114	6-piece set
11	Allen wrench set	CK-0151	5-piece set
12	File, fine	CK-0161	
13	Allen (hex) screwdriver	CK-0170	M4 Length: 107 mm
14	Diagonal cutting pliers	CK-0201	
15	Needle-nose pliers	CK-0202	
16	Pliers	CK-0203	
17	Retaining ring pliers	CK-0205	Applied to the axis ring
18	Crimper	CK-0218	
19	Tweezers	CK-0302	
20	Ruler	CK-0303	Employed to measure 150 mm
21	Mallet, plastic head	CK-0314	
22	Brush	CK-0315	
23	Penlight	CK-0327	
24	Plastic bottle	CK-0328	100 cc
25	Lint-free paper	CK-0336	500 SH/PKG
26	Oiler	CK-0349	30 cc
27	Plastic jar	CK-0351	30 cc
28	Digital multi-measure	FY9-2032	

18.1.3 Solvent/Oil List

i-SENSYS MF9170 / i-SENSYS MF9130 / i-SENSYS MF8450

T-18-3

No.	Name	Uses	Remarks
1	Ethyl alcohol	Cleaning - Plastic - Rubber - External parts - Oil and toner stains	- Procure locally - Flammable: keep away from flame
2	Grease	Apply to gears, shafts, bushings, and other sliding parts.	MOLYKOTE(R) EM-50LS GREASE Dow Corning Asia Ltd. (Tool no. HY9-0007)
3			MOLYKOTE(R) PD-910 LUBRICANT Dow Corning Asia Ltd. (Tool no. CK-8011)
4			DRYSURF 1340B HARVES Co., Ltd.
5		Apply to fixing unit	MOLYKOTE(R) HP-300 GREASE Dow Corning Asia Ltd. (Tool no. CK-8012)
6	Electroconductive grease	Apply to sliding parts where electroconduncion deeds	MOLYKOTE(R) 41 GREASE Dow Corning Asia Ltd. (Tool no. CK-8007)
7	Thermoconductive grease	apply	FC4476CV

Do not use alcohol to wipe external covers. Use a moist cloth (well wrung) to clean them.

Aug 22 2008

Canon