NP-1015/1215S

SERVICE HANDBOOK

REVISION 0

TONER
www.tonerplus.com.ua

Canon

OCT. 1988

FY8-2345-000

COPYRIGHT © 1988 CANON INC.

CANON NP-1015/1215S REV.0 OCT. 1988 PRINTED IN JAPAN (IMPRIMÉ AU JAPON)

Reading the Troubleshooting Tables

The troubleshooting tables used in this chapter are modifications of the general servicing flowchart.
The example below shows how to read the tables.

Example: AC power is not being supplied

Cause	Step	Check	Result	Action
Power cord	1	Is the power cord plugged in?	NO	Plug the copier in.
Doors	2	Are the front door and copy delivery door closed properly?	NO	Make sure the doors are closed properly. (Table omitted past this point)

- To find possible causes of trouble, refer to the "Cause" column in the table.
  For example, for "AC power is not supplied", shown above, the possible causes include the following: power cord, power cord, and door switches.
- To find the repair or check procedure for a certain type of problem, go through the table step by step.
  Depending on the answer to the "Check" question, perform the action described in the "Action" column, or continue to the next step.

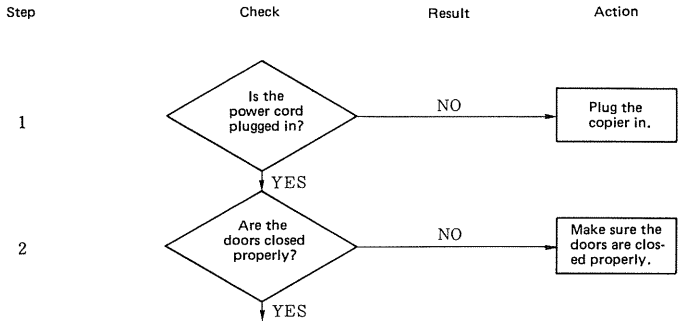

(Table omitted past this point)

- Included among the voltage checks to be performed using a meter is "Measure the voltage between J109-1(+) and J109-2(–) on the DC controller PCB". Here, the (+) and (–) signs after the connector number indicate the polarity of the meter leads that are to be connected to the connectors.
  Example: J109-1(+) Positive lead
  J109-2(–) Negative lead

TONER
www.tonerplus.com.ua

CONTENTS

CHAPTER 1 MAINTENANCE, CHECKING

A. PERIODIC SERVICING SCHEDULE 1-1
B. PARTS TO BE REPLACED PERIODICALLY 1-2
C. EXPECTED SERVICE LIVES OF PARTS AND CONSUMABLES 1-3
D. BASIC IMAGE ADJUSTMENT PROCEDURE 1-5
E. PERIODIC MAINTENANCE CHECKPOINTS 1-6

CHAPTER 2 MEASUREMENT AND ADJUSTMENT

I. MECHANICAL 2-1
1. Image leading edge non-reproduced area 2-1
2. Leading edge registration 2-1
3. Side to side registration .. 2-1
4. Installing the scanning drive cable 2-2
5. Adjusting the tension of the scanner drive cable ... 2-2
6. Adjusting the position of the Mirrors (length of optical path between mirror 1 and 2) 2-3
7. Adjusting the tension of the belt 2-4
8. Installation position of the transfer guide 2-4
9. Installation position of the scanner drive unit 2-4
10. Installing the corona wires in the primary and transfer corona assemblies 2-4
11. Adjusting the height of the corona wires 2-5
12. Installation position of side seals (black developing assembly) 2-5
13. Adjusting the fixing assembly roller pressure (adjusting the nip width) .. 2-5
14. Cassette spring strength .. 2-6
II. ELECTRICAL 2-7
1. List of PCBs/VRs/LEDs/check pins 2-7
2. AE Adjustments 2-8
3. Checking Photointerrupters 2-9

CHAPTER 3 COPY QUALITY, TROUBLESHOOTING

I. INITIAL CHECK 3-1
II. SAMPLES OF IMAGE FAULTS 3-2
III. TROUBLESHOOTING OF IMAGE FAULTS 3-3
1. Light image (halftone areas only) 3-3
2. Light image (even in dark areas) 3-4
3. Light image (very light overall) 3-4
4. Uneven density (front side dark) 3-5
5. Uneven density (front side light) 3-5
6. Fogging (overall) 3-6
7. Fogging in the paper feed direction 3-6
8. Dark lines (broad lines in the paper feed direction) .. 3-6
9. Dark lines (thin lines in paper feed direction) 3-7
10. White strips (in paper feed direction) 3-8
11. Narrow white lines (in the paper feed direction) 3-8
12. White strips (in cross ways direction) 3-9
13. Toner marks on back of copy paper 3-10
14. Faulty fixing 3-10
15. Faulty leading edge registration 3-11

16. Faulty leading edge registration 3-11
17. Faulty leading edge registration 3-11
18. Blurred image 3-12
19. Broad dark lines in the cross feed direction 3-12
20. Unsharp (unfocused) image 3-13
21. Blank image 3-13
22. Black image 3-13

CHAPTER 4 TROUBLESHOOTING OF MALFUNCTIONS

I. TROUBLESHOOTING OF EACH MALFUNCTIONS 4-1
1. "E0" "00" indication 4-1
2. "E0" "01" indication 4-1
3. "E0" "30" indication 4-1
4. "E2" "02" indication 4-2
5. "E2" "21" indication 4-2
6. "E4" "00" indication 4-3
7. "E5" "00" indication 4-4
8. AC power is not supplied 4-5
9. DC power is not supplied 4-6
10. Drum does not rotate 4-7
11. Paper is not picked up from cassette 4-7
12. Paper is not picked up from manual feed 4-8
13. Registration rollers do not rotate 4-8
14. Scanner does not move ... 4-9
15. Preconditioning exposure lamp does not light 4-11
16. Scanning lamp does not light 4-11
17. Fixing roller heater does not operate 4-12
18. Counter does not operate 4-12
19. indicator does not go ON 4-13
20. indicator does not go OFF 4-13
21. indicator does not go ON 4-13
22. indicator goes ON when paper feeding is normal 4-14
23. indicator does not go ON when there is no toner during black copying 4-14
24. indicator does not go OFF when there is toner during black copying 4-14
25. indicator does not go ON 4-15
26. indicator does not go OFF 4-16

CHAPTER 5 PAPER TRANSPORT TROUBLESHOOTING

I. PAPER JAMS 5-1
1. Jamming in the paper pick-up area 5-2
2. Jamming in the separation and feeder assembly area 5-3
3. Jamming in the fixing and paper delivery assembly area 5-4
4. Jamming around the drum cleaning unit area 5-4
II. INCORRECT PAPER FEED OPERATION 5-5
1. Sheets stuck together 5-5
2. Wrinkles 5-5

CHAPTER 6 LOCATION AND FUNCTION OF ELECTRICAL PARTS

A. SENSORS AND LAMPS 6-1
B. CLUTCHES, SOLENOIDS, MOTORS AND HEATERS 6-2
C. SWITCHES, CIRCUIT BREAKERS COUNTERS, ETC 6-3
D. CONNECTORS 6-4
E. PRINTED CIRCUIT BOARDS .. 6-5

CHAPTER 7 SELF-DIAGNOSIS

A. SELF-DIAGNOSIS 7-1

APPENDIX

I. GENERAL TIMING CHART A-1
II. LIST OF SIGNALS/ COMMANDS A-3
III. GENERAL CIRCUIT DIAGRAM A-5
IV. WIRING DIAGRAM A-6
V. DC CONTROLLER PCB A-7
VI. AC DRIVER A-12
VII. DC POWER SUPPLY PCB A-13
VIII. PRECONDITIONING EXPOSURE LAMP A-14
IX. AE SENSOR A-15
X. HVT A-16
XI. SPECIFICATIONS A-17
XII. LIST OF SPECIAL TOOLS A-20
XIII. LIST OF SOLVENTS AND MATERIALS A-21

CHAPTER 1 MAINTENANCE, CHECKING

A. PERIODIC SERVICING SCHEDULE

Note:
Do not use solvents or oils other than those specified.

△: Clean ●: Replace ×: Lubricate □: Adjust ◎: Check

Unit	Description	Periodic servicing				Remarks
		Every 10,000 copies	Every 20,000 copies	Every 50,000 copies	Every 100,000 copies	
Externals	Copyboard glass	△				Clean with alcohol.
	Ozone filter					Replace every year.
Scanner drive unit	Scanner rails		×			Clean with alcohol then apply high-viscosity lubricating oil
Feeder	Transfer guide	△				Damp cloth
	Feeder belt	△				
	Feeder frame	△				
Optical path	Scanning lamp reflector		△			Clean with a blower brush. If very dirty, clean with alcohol. Clean mirrors 5 and 6 with mirror cleaning tool.
	Scanning lamp side reflector		△			
	Mirrors 1 to 6		△			
	Lens		△			
	Dustproofing glass		△			
Corona units	Primary corona wire	△				Dry wipe using lint-free paper, then clean using alcohol.
	Transfer corona wire	△		●		
	Static charge eliminator	△		●		Damp cloth
Developing unit	Developing rollers (front and rear)		△		●	Clean with alcohol.
	Side seals (front and rear)				●	
Fixing unit	Upper fixing roller		△			Remove dirt using cleaning oil (TKN-0464).
	Lower fixing roller		△			
	Paper guide plate	△				Clean with MEK.
	Separation claws (upper and lower)	△				

TONER
www.tonerplus.com.ua

B. PARTS TO BE REPLACED PERIODICALLY

TONER
www.tonerplus.com.ua

To maintain the copier at its peak performance, the parts listed in the following chart must be replaced periodically. Although the deterioration of a part may not be visible, it can seriously hamper the performance of the copier if not replaced on schedule.

Parts should be replaced during the regular service visit that is closest to the end of the service life of the part.

No.	Description	Part No.	Quantity	Replacement	Remarks
1	Ozone filter	FA5-1748-000	1	–	1 year
2	Static charge eliminator	FF1-9438-000	1	50,000	
3	Transfer corona wire	FY3-0030-000	1	50,000	100V
		FY3-0040-000	1	50,000	115/220/240V
4	Side seal, upper (short) (developing unit)	FA5-1790-000	2	100,000	
	Side seal, lower (long) (developing unnit)	FA5-1769-000	2	100,000	
5	Front developing cylinder spacer roller	FA5-1766-000	1	100,000	
6	Rear developing cylinder spacer roller	FA5-1767-000	1	100,000	

Note:
The above values are estimates and are subject to change depending on experience.

C. EXPECTED SERVICE LIVES OF PARTS AND CONSUMABLES

The values shown in the table below indicate the expected average life (number of copies) of parts which may require replacement at least once during the warranty period due to deterioration or damage but which can be simply replaced to restore the performance of the copier.

No.	Description	Part No.	Quantity	Service life (number of copies)	Remarks
1	Oil-applying roller (fixing unit)	FA5-1952-000	1	20,000	
2	Scanner drive cable	FA5-2073-000	1	100,000	
3	Scanning lamp (scanner)	FH7-3113-000	1	100,000	100/115V
		FH7-3114-000	1	100,000	220/240V
4	Paper pick-up roller (pick-up unit)	FF2-0017-000	6	100,000	
5	Side scraper (developing unit)	FA5-1768-000	2	100,000	
6	Upper fixing roller bearing (fixing unit)	FS1-1240-000	2	100,000	
7	Preconditioning exposure lamp	FGI-7416-000	1	200,000	
8	Upper fixing roller (fixing unit)	FA5-1916-000	1	200,000	
9	Lower fixing roller (fixing unit)	FA5-1917-000	1	200,000	
10	Upper separation claw (fixing unit)	FB1-0301-000	5	200,000	
11	Lower separation claw (fixing unit)	FA2-9037-000	5	200,000	

Note:
The above values are estimates and are subject to change depending on experience.

D. BASIC IMAGE ADJUSTMENT PROCEDURE

Image adjustment should be performed using the following settings.

1. Manual (non AE) exposure
2. Density cursor setting: 5

Adjust the image by the following procedure when the photosensitive drum has been replaced.

Make this adjustment with the upper front panel and front door installed.

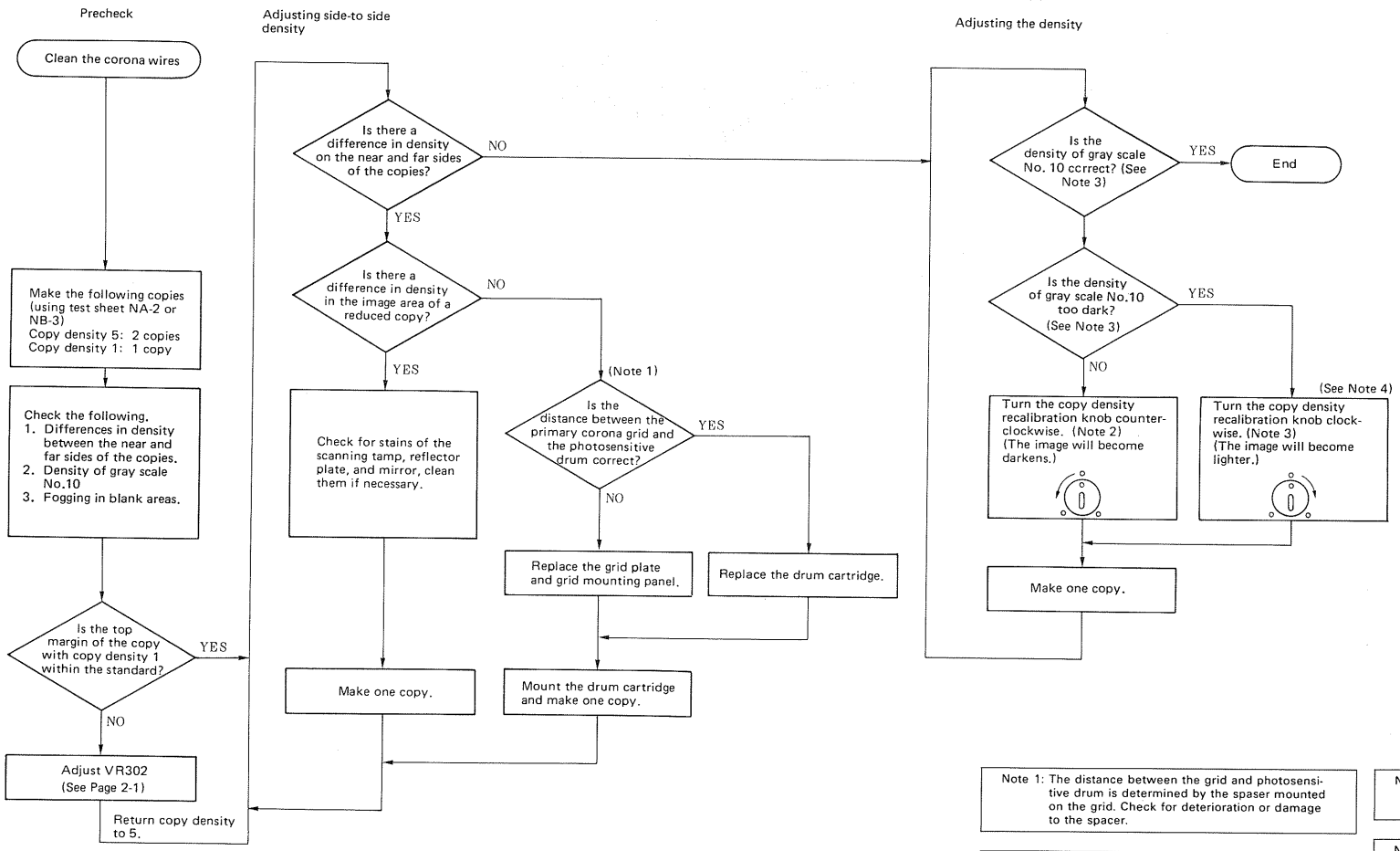

Note 1: The distance between the grid and photosensitive drum is determined by the spaser mounted on the grid. Check for deterioration or damage to the spacer.

Note 2: This charges the developing bias, but not the intensity of the scanning lamp.

Note 3: No. 10 on the gray scale of a copy should have the density of No. 8 on the gray scale of the test sheet.

Note 4: Turning the copy density recalibration knob clockwise too far past the proper position will result in fogging in blank areas.

Figure 1-1

E. PERIODIC MAINTENANCE CHECKPOINTS

Copyboard/Scanner

Location	Tool/Cleaner	Action/ Remarks
Copyboard glass	Alcohol	Cleaning
Reflectors	Blower brush	Cleaning
Mirrors 1, 2 and 3	Blower brush or alcohol and lint-free paper	Clean with a blower brush. If dirt cannot be removed with a blower brush, clean with alcohol.

Optical path

Location	Tool/Cleaner	Action/ Remarks
Lens	Blower brush or alcohol and lint-free paper	Clean with a blower brush. If dirt cannot be removed with a blower brush, clean with alcohol.
Dust-proofing glass		
Mirrors 4, 5 and 6		

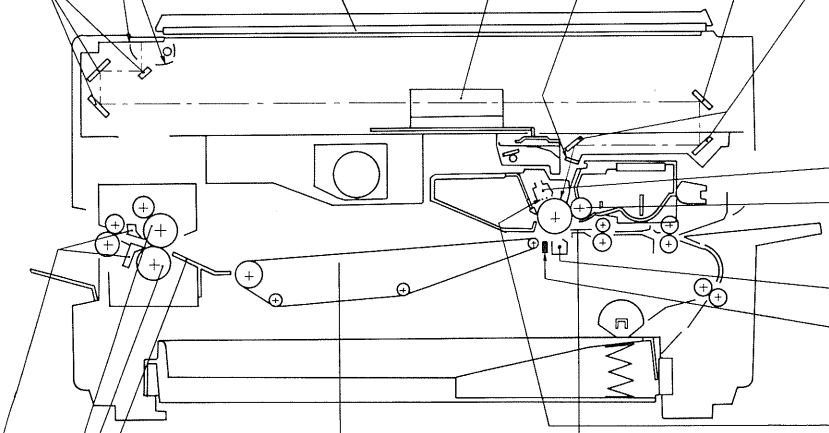

Corona units

Location	Tool/Cleaner	Action/ Remarks
Developing cylinder	MEK	Cleaning
Primary corona unit	Alcohol lint-free paper	Wipe with dry cloth then clean with lint-free paper moistened with alcohol.
Transfer corona unit		
Static charge eliminator	Blower brush	
Primary corona grid	Blower brush	

Fixing unit and paper pick-up unit

Location	Tool/Cleaner	Action/ Remarks
Separation claws	MEK	Cleaning
Upper fixing roller, lower fixing roller	Cleaning oil (TKN-0464)	Cleaning
Paper guide plate	MEK	Cleaning

Separation and transfer units

Location	Tool/Cleaner	Action/ Remarks
Transfer guide	Damp cloth	Cleaning
Feeder belt; Feeder unit		

Figure 1-2

CHAPTER 2 MEASUREMENT AND ADJUSTMENT

I. MECHANICAL

1. Image leading edge non-reproduced area

There is a white strip on the bottom of the copyboard glass in the position shown in the figure below. If bias is being applied to the grid of the primary corona while the scanner is passing the white strip, the leading edge of the copy will be reproduced blank. If this blank area is too wide or too narrow, adjust the time at which the grid bias goes ON using VR302 (on the DC controller PCB).

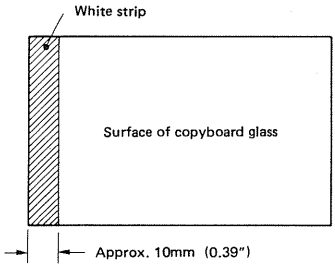

Figure 2-1

The standard image leading edge non-reproduced area on a DIRECT copy of a test sheet is 2.0± 1.0mm. (0.08"±0.04")

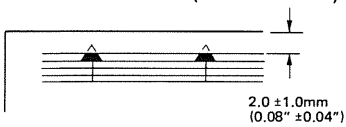

Figure 2-2

VR302: Adjusts the leading edge non-reproduced area.
Makes the non-reproduced area narrower.

2. Leading edge registration

Adjust VR301 (on the DC controller PCB) so that the position of the image of the test sheet (DIRECT) is as shown in Figure 2-3.

Note:
Adjust the image leading edge non-reproduced area before making this adjustment.

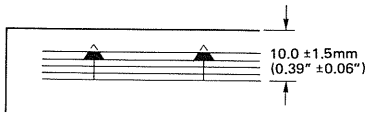

Figure 2-3

VR301: Used for adjusting the leading edge registration.
The copy paper advances with respect to the image. (The leading edge non-reproduced area becomes wider.)

3. Side to side registration

The standard near side registration on a DIRECT copy of a test sheet is 10.0±2mm. (0.39"±0.08")

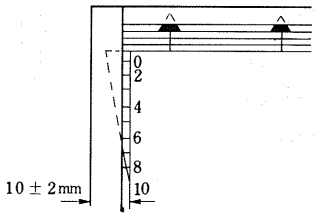

Figure 2-4

Loosen the Allen screws and then slide the magnet catch mount for the cassette (attached beneath the base plate) to determine side to side registration.

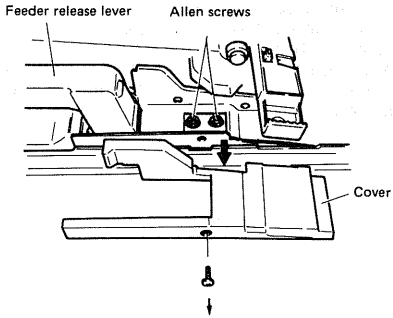

Figure 2-5

4. Installing the scanning drive cable

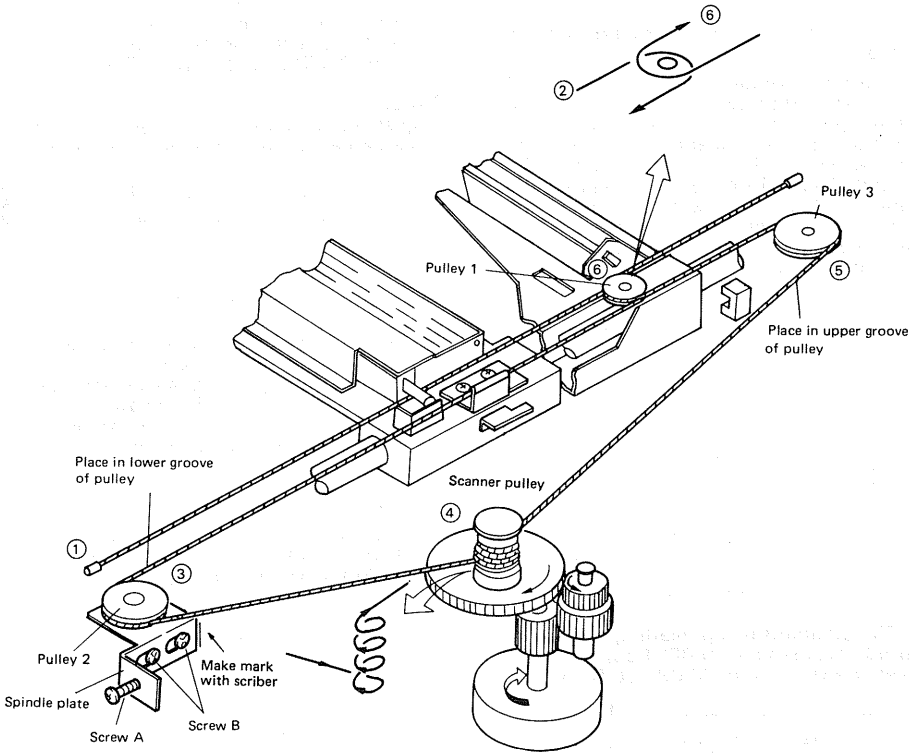

Figure 2-6

5. Adjusting the tension of the Scanner Drive Cable

Move mirror 1 mount to the HOME position (start position). As shown Figure 2-7, pull at point (A) (approximate center) of the free cable with a spring balance so that the wires touch each other. If the reading on the spring balance is not about kg, turn screw A of Figure 2-6 to achieve this reading.

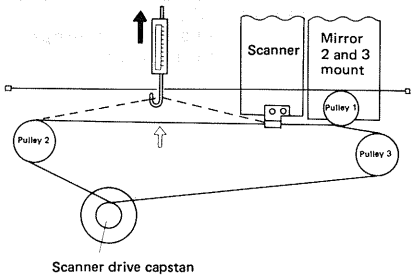

Figure 2-7 Top view

6. Adjusting the position of the Mirrors (length of optical path between mirrors 1 and 2)

Adjust the tension of the scanner drive cable before making this adjustment.

Adjust the position of the scanner (mirror 1) by altering the tension of the scanner drive cable. (Loosen the cap screws.)

For reference:

1. The cable will stretch after a large number of copies has been made, making readjustment necessary.
2. An incorrect distance between mirror 1 and mirror 2 will cause an incorrect side-to-side reproduction ratio and poor focus, resulting in poor sharpness and fuzziness in the copy image.

1) Mark lines 10mm from each edge of a piece of copy paper (B4 Ledger), as shown in Figure 2-8.

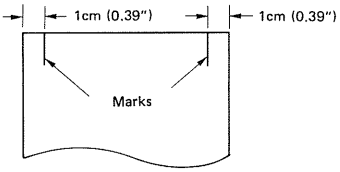

Figure 2-8

2) Make a copy of the paper with the lines marked on it. (A)
3) Place a blank sheet of paper on the copyboard and feed the marked sheet of paper into the copier. (Use manual feed.) (B)

■ Passing the sheet through the copier indicates the amount of shrinkage due to heat.

4) Align the lines on the left side of the copy sheet (A) and the sheet passed through the copier (B). If the lines on the right are not in line, adjust the position of the scanner so that they are dimensions x and y equal).

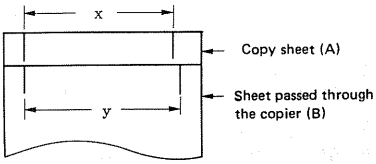

Figure 2-9

$x = y$ Correct
$x > y$ Move the scanner in direction a.
$x < y$ Move the scanner in direction b.

For reference:
If the distance between the mirrors is short, the image will be enlarged. If the distance is long, the image will be reduced.

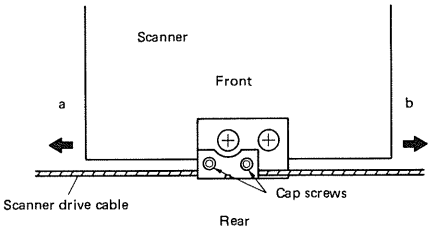

Figure 2-10 Top view

7. Adjusting the tension of the belt

The main motor drives the drum via a timing belt.

Adjust the tension of the belt by selecting the mounting hole of the main motor so that when the center of the timing belt is pushed down with a force of 500g, the distance between the two runs of the belt is between 20 (0.79") and 25mm. (0.98")

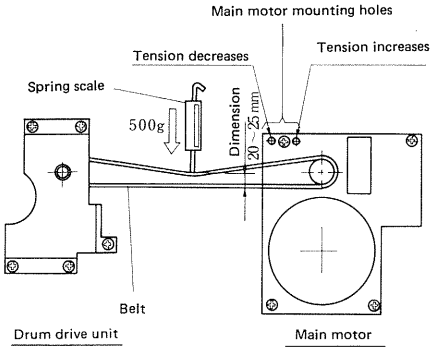

Figure 2-11

8. Installation position of the transfer guide

When installing the transfer guide, ensure that the clearance between the transfer unit roller and the photosensitive drum is about 1.8±0.2mm, as shown in Figure 2-12.

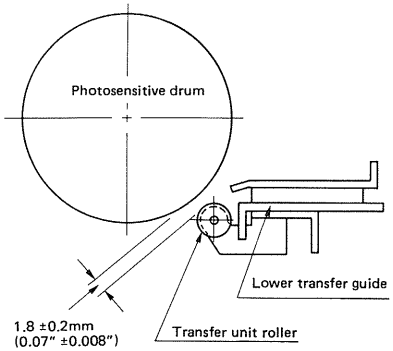

Figure 2-12

9. Installation position of the scanner drive unit

Loosen the four screws of the scanner drive unit, then while pushing the scanner drive unit against the rear plate (direction of arrow (1)) move it in the direction of the manual feed tray (direction of arrow (2)). In this condition, tighten the screws.

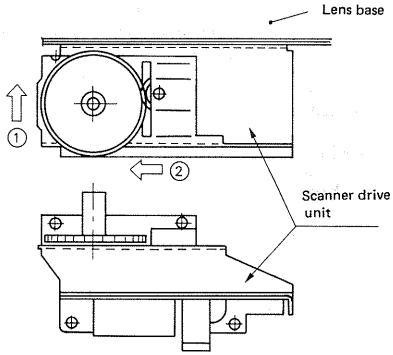

Figure 2-13

10. Installing the corona wires in the primary and transfer corona assemblies

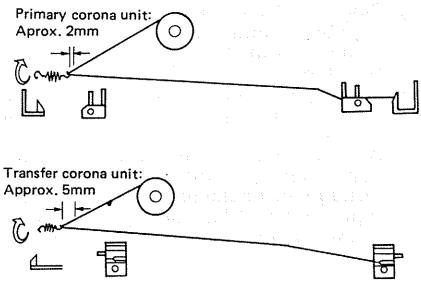

Figure 2-14

- The corona wire must not be bent or twisted, and the gold plating must not be peeling off.
- The corona wire must not be slack. (The length of the corona wire tension spring should be about 12mm.)
- The corona wire must be in the V groove of the height adjusting piece.

11. Adjusting the height of the corona wires

Corona unit	Standard position	Allowable range
Primary corona unit	Approx. 10.5mm (0.40")	±2mm (±0.08")
Transfer corona unit	Approx. 10mm (0.39")	±2mm (±0.08")

Figure 2-15

Note:
The height (position) of the corona wire of the primary and transfer corona units can be adjusted by turning the screw at the back of the corona wire.
Turning the screw once causes the height of the corona wire to change by about 0.7mm.

12. Installation position of side seals (black developing assembly)

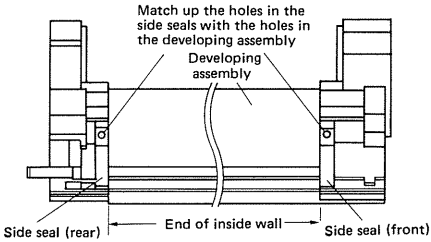

Figure 2-16

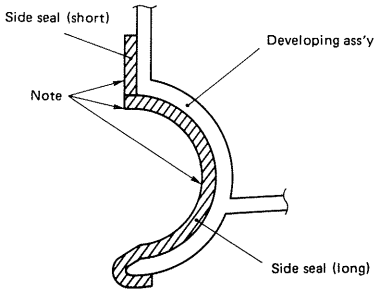

Figure 2-17

- Replace both the front and rear side seals at the same time.
- Install the side seals so that they are flush with the inside walls of the developing assembly.

13. Adjusting the fixing assembly roller pressure (adjusting the nip width)

The nip width should conform to the dimension shown in Table 2-1. Adjust the nip width with the bolt when it is out of standard.

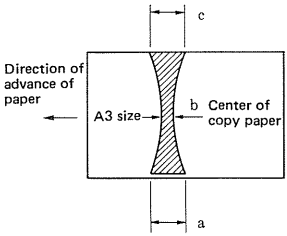

Note:
A and C are the dimensions of the 10mm position at both edges of the copy paper.

Figure 2-18

Dimension	Measure after the upper and lower rollers have been adequately heated.
b	4.0±0.5mm (0.16"±0.02")
|a – c|	0.5mm (0.02") or less

Table 2-1

- Measuring the nip width
  If the rollers are cool, leave the copier ON with the WAIT indicators lit for 15 minutes, then make 20 copies, and then measure the nip width.

Measuring procedure
1) Open the copyboard cover and make a B4 size solid black copy.
2) Turn OFF the power switch when the leading edge of the copy paper reaches the copy tray.
3) Wait for 15 seconds, then open the front door and the copier and the fixing assembly cover, and remove the copy paper from the fixing assembly.
4) Measure the width of the toner portion which has a glossy surface, as shown in Figure 2-18.

14. Cassette spring strength

If the strength of the springs in the cassette that raise the paper-lifting plate is not correct, improper paper pick-up or other problem will result.

If such a problem occurs, check the spring strength with a compression spring scale.

Press the scale at point A shown in figure 2-19 to push the plate down 3mm and read the scale. If the indication is outside the range shown in Table 2-2, replace both springs. (The springs cannot be adjusted.)

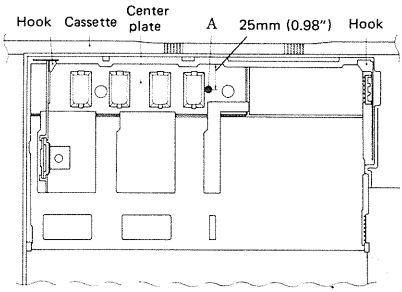

Figure 2-19

Cassette size	Indication on spring scale
A3 and LGR cassettes	390±30g
A4R and LTR-R cassette	350±20g
STMT	330±40g

Table 2-2

II. ELECTRICAL

1. LIST of PCBs/VRs/LEDs/CHECK PINs

Variable resistors, LEDs and check pins which are used for adjustments in the field are listed below.

VRs and check pins not listed here are used only for factory adjustments which require special tools and measuring instruments, as well as great care and precision. Do not attempt to adjust such parts.

Notes:

1. Leakage current may flow through some LEDs and cuase them to glow dimly even though they are supposed to be OFF.
2. VRs which can be adjusted in the field ..... ●

   VRs which should not be adjusted in the field ..... ⊘

DC Controller PCB

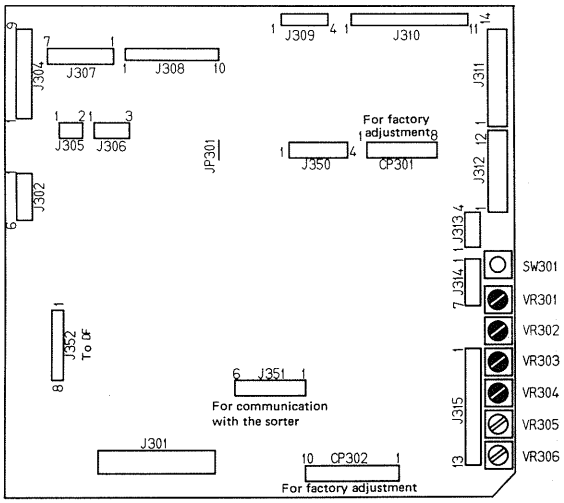

Figure 2-20

VR No.	Purpose	
VR303	Adjusting leading edge registration	
VR302	Adjusting leading edge blank width	
VR303	Adjusting AE reference point	For details of the method of adjustment, see the sub-section "AE adjustment".
VR304	Adjusting AE skew	

Table 2-3

SW No.	Purpose
SW301	Press to enter or leave the SERVICE mode

Table 2-4

- When non-AE mode is selected in a standard mode, cut off the jumper wire JP301.
- When removing the connector J350 in case the DC controller is replaced and so on, be sure to connect the connector J350 at the time of installation.

2. AE Adjustments

■ AE adjustments must be carried out in the following cases.

(1) After replacing the AE sensor or DC controller PCB.

(2) After installing a DF/ADF in the field, perform adjustment up to step 6) (because this necessitates replacing the left copyboard glass retainer).

1) Remove the potentiometer cover at the back of the left cover.

2) Switch the copier ON.

* Wait until the COPY START key glows green.

3) Place test sheet NB-3 or NB-2 on the copyboard, and close the copyboard cover.

4) Press switch SW301 on the DC controller PCB.

* "[0" will appear on the COPY NUMBER indicator on the control panel.

* If "[0" does not appear, input "0" using the number keypad on the control panel.

5) Press the SORT/GROUP key on the control panel.

* The scanner will advance to the AE measuring position, and the scanning lamp will go ON. (Note)

6) Adjust VR303 on the DC controller PCB so that "22" appears on the COPY NUMBER indicator.

7) Press the SORT/GROUP key.

* The scanning lamp will go OFF, and the scanner will return to the HOME position.

8) Remove the test sheet, place a sheet of newspaper (with a large amount of text) on the copyboard, then close the copyboard cover.

9) Press the SORT/GROUP key.

* The copier will operate in the same way as described in step 5).

10) Make a note of the number displayed on the COPY NUMBER indicator.

11) Press the SORT/GROUP key.

* Input "1" using the number keypad.

* "[1" will appear on the COPY NUMBER indicator.

13) Press the SORT/GROUP key.

14) Adjust VR304 on the DC controller PCB so that the value displayed on the COPY NUMBER indicator is the same as that which appeared in step 10).

15) Press the SORT/GROUP key.

16) Press switch SW301 on the DC controller PCB.

Note:
The scanning lamp will go ON for approximately eight seconds. To turn it ON once again, press the SORT/GROUP key, and after operation has stopped press the SORT/GROUP key once again.

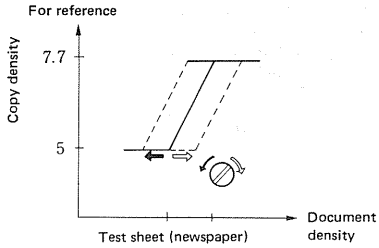

Figure 2-21

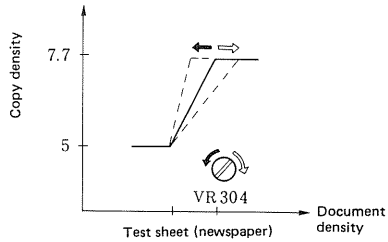

Figure 2-22

3. Checking photointerrupters

No.	Q1	Q2	Q3
Purpose	Cassette paper sensor (CPEP)	Pick-up unit paper sensor (PDPI)	Scanner HOME position sensor (SCHP)
(+) lead (−) lead	J310-7 J310-8	J308-8 J3-8-7	J314-1 J314-2
Checking procedure: Operation is normal if the meter needle swings to the right	Remove the cassette with the copier in STANDBY, move the arm up and down manually. • Arm raised: voltage approx. 5V • Arm lowered: voltage approx. 0V	With the copier in STANDBY, raise and lower the arm manually. • Arm raised: voltage approx. 5V • Arm lowered: voltage approx. 0V	With the copier in STANDBY, move the scanner by hand. • Scanner in HOME position: voltage approx. 5V • Scanner not in HOME position: voltage approx. 0V
No.	Q5		
Purpose	Delivery unit paper sensor (PDP2)		
(+) lead (−) lead	J315-7 J315-6		
Check: Operation is normal if the meter needle swings to the right	Remove the lower left panel with the copier in STANDBY, raise and lower the arm manually. • Arm raised: voltage approx. 5V • Arm lowered: voltage approx. 0V		

CHAPTER 3 COPY QUALITY, TROUBLESHOOTING

I. INITIAL CHECK

1. Check the Installation Environment
   a. The line voltage should be within 10% of the voltage on the rating plate.
   b. The copier should not be installed in a hot or humid location (such as near a water faucet or humidifier), a cold area, near an open flame, or in a dusty location.
   c. Do not install the copier in a location where ammonia gas is generated. (diazo copiers, etc.)
   d. Do not install the copier in direct sunlight. If such a location is unavoidable, install curtains or other means to block out sunlight.
   e. Install the copier in a well-ventilated location.
   f. Install the copier where it can be set level.
2. Check the Original
   Determine if the trouble is due to the original or a malfunction of the copier.
   a. The copy density cursor should normally be set to 4.5±1.5.
   b. Check if the original has a background color, such as yellow, which causes poor contrast.
   c. Check the density of the original.

Examples:
Originals which are diazo copies or transparent originals ... Copies are likely to be mistakenly judged as being fogged.
Pencil originals ... Copies are likely to be mistakenly judged as having a light image.

3. Check the Copyboard Cover or the Copyboard Glass
   If the cover or glass is dirty, clean it with a mild detergent or with alcohol. If there is damage, replace the damaged part.
4. Check Corona Units
   a. Check for dirt on the corona units or abnormalities (such as scratches) on the corona wires.
   b. Clean the corona wires and shield plates of each corona unit. (Replace the wires if the dirt cannot be removed.)
   c. Ensure that each corona unit is installed correctly.
   d. Make sure that the corona wire tension springs are not rusted.
5. Check the Transfer Feed Guides
   If the transfer guides or feed guides are dirty, clean them with a damp cloth.
6. Check the Fixing unit
7. Check the Static Charge Eliminator
8. Check the Copy Paper
   a. Is copy paper recommended by Canon being used?
   d. Has the copy paper absorbed moisture?
   Open a new package of copy paper and make copies, then compare the copies.
9. Others
   When a copier is brought into a warr room from a warehouse or other cold are in winter particularly when it is being ir stalled condensation may form inside th copier and cause various problems.
   Examples of problems:
   a. The copy image may become light du to condensation in the scanner (lens mirrors, etc.)
   b. The drum may be cold (the electrica resistivity of the OPC will be high causing the contrast to be low.
   c. Current leakage from the coronas ma occur.
   d. Paper may jam or fail to be fed satisfac torily due to condensation on the pick up and delivery guide plates.
   e. The friction of the lower manual fee paper pick-up roller may be reducec resulting in unsatisfactory paper pick up.
   If condensation occurs in the copie switch the copier ON and leave it to stan for 10 to 20 minutes.
   If a cartridge in its original sealed wrap ping is taken from a cold place to a warn place and then immediately unwrappec condensation may form on it, resulting i image problems. To prevent this, instruc the customer to leave the cartridge seale in the room for a sufficient period to allov it to reach the temperature of the roor (between one and two hours) before ur wrapping it.

> When defects such as uneven density (differences in the density on the near and far sides of the copy), lightness or fogging occur, first make the adjustments outlined in "Basic Image Adjustment Procedures".

II. SAMPLES OF IMAGE FAULTS

Note: These sample copies were made in the DIRECT mode using the NB-3 test sheet. The image problems were created intentionally. This, plus the fact that the copies were reduced to 19% of their original size for printing, may make them appear somewhat different from actual image faults.

1. Light image (halftone areas only)

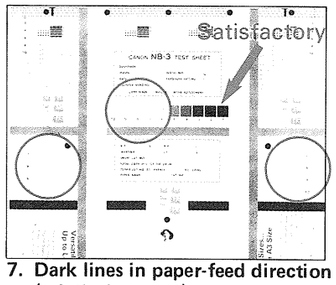

2. Light image (even in dark areas)

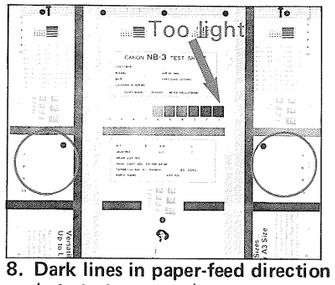

3. Light image (very light overall)

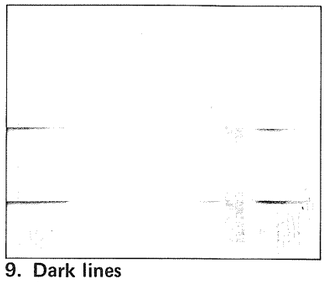

4. Uneven density (front side dark)

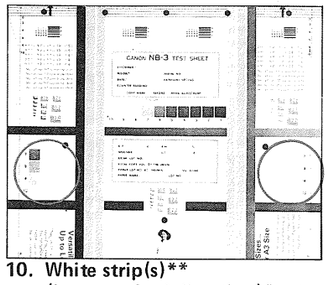

5. Uneven density (front side light)

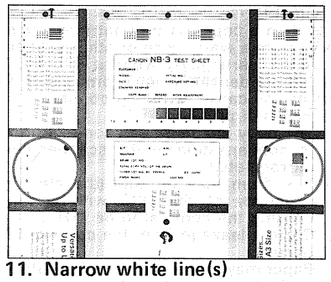

6. Fogging (overall)

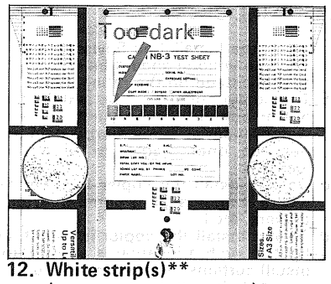

7. Dark lines in paper-feed direction (relatively board)

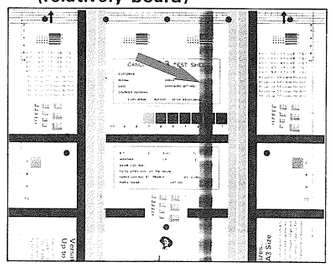

8. Dark lines in paper-feed direction (relatively narrow)

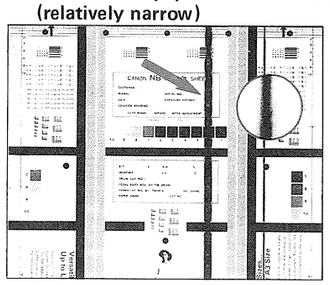

9. Dark lines (thin lines in paper-feed direction)

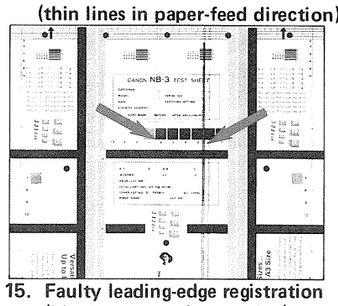

10. White strip(s)** (in paper-feed direction)*

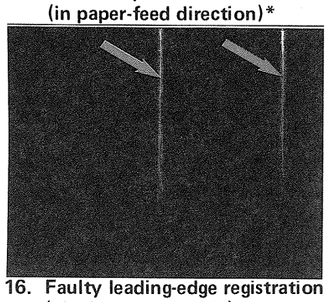

11. Narrow white line(s) (in paper-feed direction)*

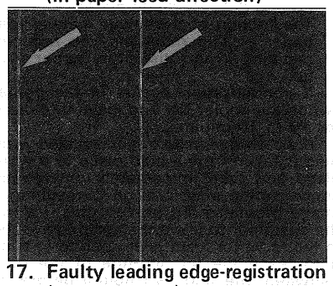

12. White strip(s)** (in cross-feed direction)*

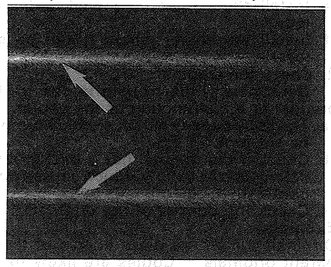

13. Solied reverse side

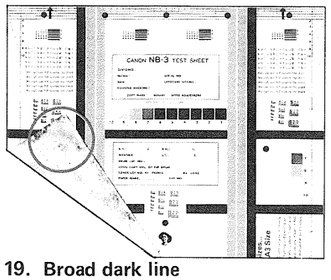

14. Faulty fixing

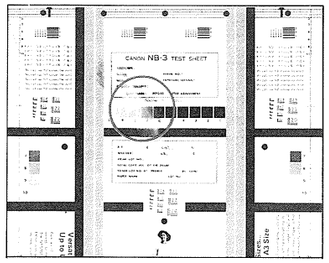

15. Faulty leading-edge registration (blank area much too wide)

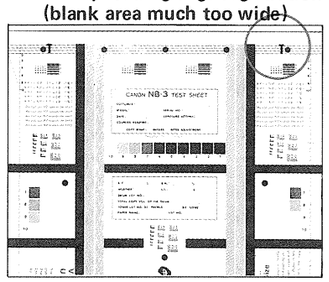

16. Faulty leading-edge registration (blank area too wide)

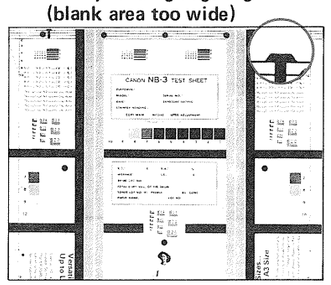

17. Faulty leading edge-registration (no blank area)

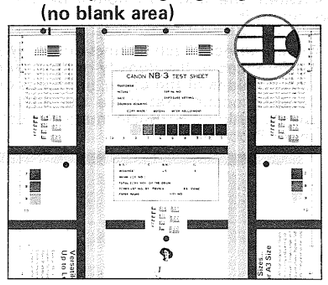

18. Blurred image

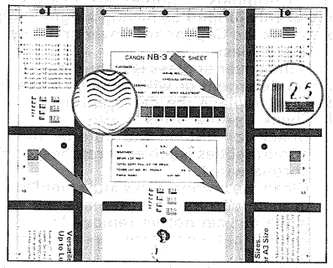

19. Broad dark line (in cross-feed direction)

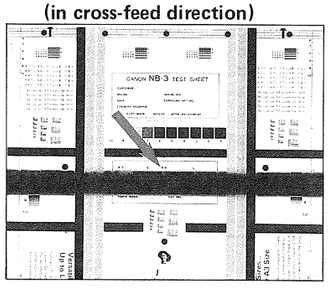

20. Unsharp (unfocussed) image

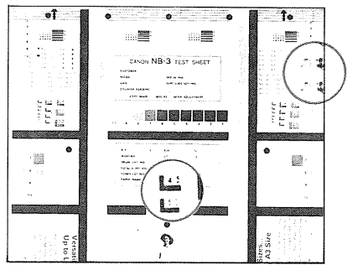

21. Blank copy

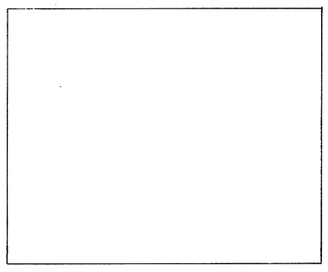

22. Black copy

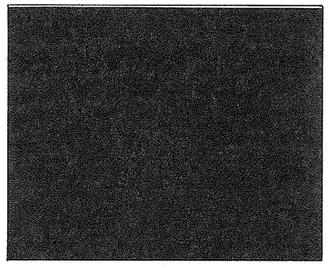

* Illustration made with copyboard lifted; fault also appears on ordinary copies.

** Width of strip(s) may vary.

III TROUBLESHOOTING OF IMAGE FAULTS

1. Light image (halftone areas only)

Cause/Problem area	Procedure	Check	Result	Action
	1	Does the image quality improve after the basic adjustment procedure is followed?	YES	End
AE adjustment	2	Is the image lighter is when a copy is made using AE?	YES	Perform AE adjustment
Black developing unit	3	Is the image lighter when a copy is made using a black developing unit?	YES	Check that J14-1 and J14-4 of the black developing unit are connected by a jumper wire. If they are not, connect them.
Lens, dust-proofing glass	4	Is the image quality improved after the lens, dust proofing glass, and mirror are cleaned?	YES	END
Photosensitive drum			NO	Replace the Drum cartridge

2. Light image (even in dark areas)

3. Light image (every light overall)

Cause/Problem area		Procedure	Check	Result	Action
		1	Does the image quality improve after the basic adjustment procedure is followed?	YES	End
		2	Switch the copier OFF during copying and open the front door. Does the toner image on the surface of the photosensitive drum (prior to transfer) appear normal?	NO	Perform step 6 and subsequent steps.
Faulty transfer	Transfer corona unit	3	Are the corona and grid wires of the transfer corona unit installed correctly, and is the corona wire height normal?	NO	1. Install the corona wires correctly. 2. Adjust the height of the corona wires. 3. Clean the corona wires 4. Install the corona unit securely.
Faulty transfer	Copy paper	4	Does the image become darker when fresh copy paper is used?	YES	1. The paper may have absorbed moisture, so instruct the user about the correct method of storing paper. 2. Explain to the user that if paper not recommended by Canon is being used, the image quality may be slightly poorer.
Faulty transfer	• Lower transfer unit guide plate • Varistor	5	Is the resistance between the metal part of the lower transfer guide and the feeder 0Ω.	YES	1. Check if the transfer unit guide plate is touching the spring of the feeder wait. 2. Replace the varistor.
Faulty transfer	• High-voltage transformer • DC controller PCB			NO	Check the high-voltage transformer and the DC controller PCB.
Developing defect	Developing unit pressure applying mechanism	6	Is the developing roller of the developing unit pressing against the photosensitive drum?	NO	Check the pressure applying mechanism of the developing unit.
Developing defect	Amount of toner in developing unit	7	Is the surface of the developing cylinder coated uniformly with toner?	NO	1. If the problem is in the black developing unit, see sub-section "TONER OUT indicator does not go ON". 2. If the problem is in the CT unit, replace the CT unit.
Developing defect	Developing bias			YES	Check if the developing bias is being supplied to the developing cylinder.

4. Uneven density (front side dark)

5. Uneven density (front side light)

Cause/Problem area	Procedure	Check	Result	Action
Primary corona wire height	1	Does the image quality improve after the basic adjustment procedure is followed?	YES	End
Developing unit	2	Is the spacer roller of the developing unit pressing against the photosensitive drum?	NO	Check the pressure applying mechanism of the developing unit.
Dirt on the scanner	3	Does the image improve after the scanning lamp, reflectors, side reflectors, lens and dust-proofing glass are cleaned?	YES	End
Pre-conditioning exposure lamp unit	4	Do the pre-conditioning exposure lamps go ON during copying?	NO	1. Replace the pre-conditioning exposure lamp unit. 2. Replace the DC controller PCB.
Developing unit	5	Is the surface of the developing cylinder coated uniformly with toner?	NO	1. Check the edge of the blade of the developing unit. 2. If the problem is in the black developing unit, wipe the surface of the developing cylinder with a dry cloth. 3. If the problem is in the CT unit, try putting the CT unit in the storage box and shaking it vigorously. If the image does not improve , replace the CT unit
Corona unit and copy paper			YES	1. Clean all the corona wires once more, then recheck the position of each corona wire. 2. Try changing the copy paper.

6. Fogging (overall)

Cause/Problem area	Procedure	Check	Result	Action
	1	Does the image quality improve after the basic adjustment procedure is followed?	YES	End
Dirt on the scanner	2	Does the image improve after the scanning lamp, reflectors, mirrors, lens and dust-proofing glass are cleaned?	YES	End
Pre-conditioning exposure lamps	3	Do the pre-conditioning exposure lamps go ON during copying?	NO	1. Replace the pre-conditioning exposure lamp unit. 2. Replace the DC controller PCB.
DC controller PCB	4	Set the meter to the 30VDC range and measure the voltage between J307-6(+) and J307-7(–) of the DC controller PCB. Is the voltage V or less during copying and approx. V at other times?	NO	Replace the DC controller PCB.
High-voltage transformer	5	Is the voltage between J307-5(+) and J307-7(–) of the DC controller PCB approx. V during copying and approx. V at other times?	YES	1. Replace the high-voltage transformer. 2. Replace the Drum cartridge.
DC controller PCB			NO	Replace the DC controller PCB.

7. Fogging in the paper feed direction

8. Dark lines (broad lines in the paper feed direction)

Cause/Problem area	Procedure	Check	Result	Action
Primary corona unit	1	Does the image quality improve after the primary corona wires, grid wires, and corona frame are cleaned?	YES	End
Scanner	2	Does the image quality improve the scanning lamp, reflectors, lens, mirrors, and dust-proofing glass are cleaned?	YES	End
Pre-conditioning exposure lamps	3	Are the pre-conditioning exposure lamps brigher after they are cleaned?	YES	End
Feed roller	4	Is the width of the black line about 10mm?	YES	Clean the feed roller below the developing unit.

9. Dark lines (thin lines in paper feed direction)

Cause/Problem area	Procedure	Check	Result	Action
	1	Press the COPY START key and switch the copier OFF to stop the paper on the feeder. Are there black lines on the copy image before the paper passes through the fixing unit?	NO	Check from step 3.
Photosensitive drum	2	Are there any scratches or black lines around the circumference of the photosensitive drum? (In the case of black lines on the drum surface, do the black lines on copies disappear when the lines are gently wiped off the drum surface with a piece of flannel?)	YES	Replace the drum cartridge. (If there are scratches, find out what is causing them before replacing the drum cartridge.)
Developing system; Exposure system			NO	Check the developing system and exposure system.
Fixing unit	3	Are there any scratches or black lines around the circumference of the upper fixing roller?	YES	1. Replace the upper fixing roller. 2. Check and clean the separation claws and fixing blade.
			NO	Check for dirt at the inlet of the fixing unit.

10. White strips (in paper feed direction)

11. Narrow white lines (in paper feed direction)

Cause/Problem area	Procedure	Check	Result	Action
Fixing unit	1	Press the COPY START key with the copyboard cover open, then switch the copier OFF to stop the copy paper on the feeder. Are there any white strips or narrow white lines on the copy image before the paper passes through the fixing unit?	NO	1. Clean the upper and lower inlet guides of the fixing unit. 2. Check the upper fixing roller. 3. Check and clean the separation claws and fixing blade.
Primary corona unit	2	Does the image improve after the corona wires, grid plate and frame of the primary corona unit are cleaned?	YES	Wipe the corona wires with dry lint-free paper, then clean them with alcohol. If the dirt will not come off, replace the corona wires.
Developing unit	3	Is the surface of the developing cylinder coated uniformly with toner?	NO	1. If the trouble is in the black developing unit, check the edge of the blade. If there is no toner in the developing unit, see the sub-section "TONER OUT indicator does not go ON". 2. If the trouble is in the CT Unit, try putting the CT unit in the storage box and shaking it vigorously. If the image does not improve, replace the CT unit.
Copy paper	4	Does the image improve when fresh copy paper is used?	YES	The paper may be absorbing moisture, so instruct the user about the correct method of storing paper.
Photosensitive drum	5	Are there any scratches around the circumference of the photosensitive drum?	YES	Replace the Drum cartridge. (Find out the cause of the scratches on the drum.)
Light from outside			NO	Check if outside light is striking the photosensitive drum.
Transfer corona unit	6	Does the image improve after the corona wires and frame of the transfer corona unit are cleaned	YES	End
	7	Does the image improve after the static charge eliminator is cleaned	YES	End

12. White strips (in cross ways direction)

Cause/Problem area	Procedure	Check	Result	Action
Developing unit	1	Do the white strips occur at intervals of approx. 63mm? (Scratches on developing cylinder)	YES	1. Clean the developing cylinder spacer rollers. 2. Clean the surface of the developing cylinder. 3. If there are scratches on the surface of the developing cylinder, replace the cylinder or the CT unit.
Photosensitive drum	2	Do the white strips occur at intervals of approx. 94mm? (Scratches on the photosensitive drum)	YES	1. Clean the drum. 2. If the drum is scratched, replace it.
Copy paper	3	Does the image become darker when fresh copy paper is used?	YES	The paper may be absorbing moisture, so instruct the user about the correct method of storing paper.
Scanner rail; Scanner cable	4	Do the white strips occur on the same part of each copy?	YES	1. Check the scanner rail for foreign matter adhering to it. 2. Adjust the tension of the scanner drive cable.
Dirt on the corona wires			NO	Clean each corona unit (wires and frame).

13. Toner marks on back of copy paper

Cause/Problem area	Procedure	Check	Result	Action
	1	Press the COPY START key, and switch the copier OFF while the copy paper is ON the feeder. Are there any toner marks on the back of the copy paper?	NO	Check from step 4.
Developing unit	2	Do the toner marks occur at intervals of approx. 50mm?	YES	1. Clean the registration rollers and transfer unit guide. 2. Check if toner is leaking from the developing unit.
	3	Do the toner marks occurs at intervals of approx. 16mm?	YES	1. Clean the manual feed pick-up roller. 2. Check if toner is leaking from the developing unit.
Drum cleaning unit			NO	1. Clean the feeder. 2. Check if toner is leaking from the drum cleaning unit.
Fixing unit	4	Are the upper and lower fixing rollers dirty?	YES	1. Clean the upper and lower fixing rollers. 2. Check if the oiling roller is soiled with toner. If the roller is very dirty, replace it
			NO	Clean the copy delivery rollers, separation claws, and fixing unit paper guide.

14. Faulty fixing

Cause/Problem area	Procedure	Check	Result	Action
Upper and lower developing rollers	1	Is faulty fixing occurring in the feed direction of the paper?	YES	Check for scratches on the upper and lower fixing rollers.
Fixing roller heater (H1)	2	Does the heater (H1) go ON immediately after the copier is switched ON?	NO	See sub-section "Fixing roller heater does not operate".
Lower fixing roller pressure	3	Is the nip width within the standard?	NO	Adjust the pressure.
Copy paper			YES	Check if the recommended paper is being used. If the results are satisfactory when the recommended paper is used, instruct the user to use it.

15.

16. Faulty leading edge registration

17.

Cause/Problem area	Procedure	Check	Result	Action
Original	1	Is the original set correctly?	NO	Set the original correctly.
Copy paper	2	Is copy paper recommended by Canon being used?	NO	Check if the recommended paper is being used. If the results are then satisfactory, recommend that the customer use it.
Pick-up roller	3	Is the pick-up roller soiled by paper dust, etc.?	YES	1. Clean the pick-up roller. 2. Check the total number of sheets picked up by the pick-up roller. If it has reached 100,000, replace the roller.
Registration adjustment	4	Does the copy improve when registration is adjusted? (leading edge blank area)	YES	End
Registration rollers; Registration roller clutch	5	Set the meter to the 30VDC range and measure the voltage between J310-4 (+) and J310-3 (−) of the DC controller PCB. Is the voltage 24V or less during copying and approx. 0V at other times?	YES	1. Check the registration rollers for deformation and wear. 2. Check the wiring from the DC controller PCB to the registration roller clutch. If it is normal, replace the registration roller clutch.
DC controller PCB			NO	Replace the DC controller PCB.

18. Blurred image

Cause/Problem area	Procedure	Check	Result	Action
Scanner drive cable	1	Does the cable overlap as it winds around the drive capstan while the scanner is moving? Is the tension of the cable alternately too slack then too tight?	YES	1. Re-tension the cable. 2. Replace the drive cable if it is twisted or frayed.
Scanner system rail	2	Does the scanner move smoothly when it is pushed gently by hand?	NO	Clean the scanner rails with alcohol, then apply a small quantity of low-viscosity lubricating oil.
Scanner drive system	3	Is the gear of the scanner drive system missing?	YES	Replace the gear.
Photosensitive drum	4	Does the blurring occur at intervals of approx. 95mm?	YES	1. Check the drum drive gear. 2. Check the ends of the drum (where the spacer rollers contact it) for scratches or projections.
Developing gear	5	Does the blurring occur at intervals of approx. 63mm?	YES	Check the developing unit.
Drum drive system			NO	Check the drum drive unit.

19. Broad dark lines in cross feed direction

Cause/Problem area	Procedure	Check	Result	Action
	1	Are the dark lines always in the same position when DIRECT copies are made?	YES	Check from step 4.
Scanning lamp regulator	2	Does the scanning lamp flicker when the scanner is moving forward?	YES	Check the scanning lamp and lamp regulator.
Black developing unit and CT unit	3	Is there any difference in the broad dark lines on a black copy compared with on a color copy?	YES	Check the toner coating on the developing cylinder of the developing unit in which the trouble occurs.

20. Unsharp (unfocussed) image

Cause/Problem area	Procedure	Check	Result	Action
Original	1	Is the original lying flat on the glass?	NO	1. Check if the copyboard copy is warped. 2. Explain to the user how to place the original on the copyboard.
Copyboard glass	2	Is any oil or other substance adhering to the copyboard glass?	YES	Clean the copyboard glass.
Mirror position	3	Is the horizontal reproduction ratio within the standard for a DIRECT copy?	NO	Adjust the distance between the No. 1 mirror mount and the mirror 2 mount.
Dirt on the scanner			YES	Clean the scanning lamp, reflectors, mirrors, lens, and dust-proofing glass.

21. Blank image

Cause/Problem area	Procedure	Check	Result	Action
Drum unit	1	Is the drum unit inserted?	NO	Insert the drum unit.
Developing unit	2	Is the developing unit inserted?	NO	Insert the developing unit.
Drum drive unit	3	Does the photosensitive drum rotate during copying?	NO	1. Check if the photosensitive drum rotates smoothly. 2. Check the drum drive unit.
DC controller PCB	4	Set the meter to the 30VDC range and measure the voltage between J307-1(+) (grid ON) and J307-1(−) of the DC controller PCB. Is the voltage 5V when the scanner is advancing and 0V at other times?	NO	Replace the DC controller PCB.
High-voltage transformer			YES	Replace the high-voltage transformer.

22. Black image

Cause/Problem area	Procedure	Check	Result	Action
	1	Does the scanning lamp go ON during copying?	NO	Check according to "Scanning lamp does not go ON".

CHAPTER 4 TROUBLESHOOTING OF MALFUNCTIONS

I. TROUBLESHOOTING OF EACH MALFUNCTIONS

1. "E0" "00" indication

In NP-1015/1215S, indication is on a two-digit basis, i.e., "E000" is indicated by alternating "E0" and "00".

Cause/Problem area	Procedure	Check	Result	Action
	1	Cancel the E000 indication. Open the front cover and delivery unit door, then insert a door switch actuator into the door switch, and wedge paper into the delivery sensor. Does the fixing roller heater go ON immediately after power is switched ON? (check visually)	NO	Refer to the sub-section "Fixing unit heater does not operate".
Thermistor (TH)	2	Switch the copier OFF, then open the delivery unit door, and left the fixing roller cool sufficiently. Set the meter to the 12VDC range. Connect the (+) lead to J315-3 (TH1) and the (−) lead to J315-4 on the DC controller PCB. Close delivery door and switch the copier ON. Does the voltage gradually fall from 5V?	NO	Check the position of the thermistor (TH) and the wiring to the DC controller PCB. If it is normal, the thermistor is open circuit. Replace it.
			YES	Replace the DC controller.

2. "E0" "01" indication

Cause/Problem area	Procedure	Check	Result	Action
Thermistor (TH)	1	Set the meter to the 12VDC range, then connect the (+) lead to J315-3 (TH1) and the (−) lead to J315-4 of the DC controller PCB. Switch the power ON. Is the voltage 2V or less?	YES	The thermistor (TH) is short-circuit. Replace it.
DC controller PCB			NO	Replace the DC controller.

3. "E0" "30" indication

Cause/Problem area	Procedure	Check	Result	Action
	1	Does the total counter operate normally?	NO	See sub-section "Counter does not operate".
DC controller PCB			YES	Replace the DC controller PCB.

4

4. "E2" "02" indication

Cause/Problem area	Procedure	Check	Result	Action
	1	Set the power switch OFF, remove the copyboard glass, and move the scanner fully to the right manually. Switch the power ON. Does the scanner reverse?	NO	See sub-section "Scanner does not advance or reverse".
	2	Set the power switch OFF and move the scanner fully to the left manually. Switch the power ON. Does the scanner advance very slightly after the lens moves?	NO	See sub-section "Scanner does not advance or reverse"
Scanner HOME position sensor (Q3)	3	Is the scanner home position sensor (Q3) normal? (See page 2-10)	NO	Check the wiring from the DC controller PCB to Q3. If it is normal, replace the DC controller PCB.
DC controller PCB			YES	Replace the DC controller PCB.

5. "E2" "21" indication

Cause/Problem area	Procedure	Check	Result	Action
DC power supply PCB	1	Does the problem disappear when the DC power supply PCB is replaced?	YES	End
DC controller PCB			NO	Replace the DC controller PCB

6. "E4" "00" indication

Cause/Problem area	Procedure	Check	Result	Action
	1	Does the problem disappear when the power is switched OFF, then ON again?	YES	End. (Check the wiring between the DC controller and the DF controller.)
Circuit breaker (CB2)	2	Does the problem disappear when circuit breaker CB2 on the DF controller PCB is pressed?	YES	End. (Be sure to determine why CB2 went OFF.)
	3	Set the meter to the 12VDC range, then connect the (+) lead to J10-3 and the (−) lead to J10-2 of the DF controller PCB. Is the voltage approx. 5V?	YES	Check from step 6.
3-terminal (5V) power supply	4	Set the meter to the 30VDC range, then connect the (+) secure to J9-1 and the (−) lead to J9-2 of the DF controller PCB. Is the voltage approx. 24V?	YES	Check the continuity through circuit breaker CB2. If it is normal, replace the 3-terminal (5V) power supply.
DF power supply	5	Set the meter to the 30VDC range, then connect the (+) lead to J70-2 and the (−) lead to J70-4. Is the voltage approx. 24V?	NO	Replace the DF power supply.
Wiring			YES	Check the wiring from the DF power supply to the DF controller.
DC controller; DF controller	6	Does the problem disappear when the DC controller PCB or DF controller PCB is replaced?	YES	End
			NO	Replace the cable between the DC controller PCB and the DF controller PCB.

7. "E5" "00" indication

Cause/Problem area	Procedure	Check	Result	Action
Wiring	1	Does the problem disappear when the power is switch OFF and the ON again?	YES	End. (Check the wiring between the DC controller PCB and the sorter controller PCB.)
Circuit breaker (CB1)	2	Does the problem disappear when circuit breaker CB1 on the sorter controller PCB is reset?	YES	End. (Be sure to determined the reason why CB1 tripped.)
	3	Set the meter to the 30VDC range, then connect the (+) lead to J2-1 and the (−) lead to J2-3 of the sorter PCB. Is the voltage approx. 24V?	YES	Check from step 6
Fuse	4	Is the fuse on the sorter power supply PCB normal?	NO	Replace the fuse
Sorter power supply PCB	5	Set the meter to an AC range high enough for measuring line voltage. Connect the (+) lead to J106-1 and the (−) lead to J106-2. Is the prescribed voltage supplied?	YES	Replace the sorter power supply PCB.
Cable between the sorter power supply PCB and the AC driver			NO	Check the wiring between the sorter power supply PCB and the AC drive PCB.
Communications cable	6	Set the meter to the ×10kΩ range. Is there continuity between the sorter controller PCB and the DC controller PCB?	YES	Check if the cable between the sorter controller PCB and the DC controller PCB is connecnnted correctly. If it is normal, replace the sorter controller PCB.
			NO	Replace the cable.
DC controller PCB; Sorter controller PCB	7	Does the problem disappear when the DC controller PCB or the sorter controller PCB is replaced?	YES	End.

8. AC power is not supplied

Cause/Problem area	Procedure	Check	Result	Action
Power plug	1	Is the power cord plugged in to the outlet?	NO	Plug it in.
Door switches	2	Are the front door copy delivery unit closed completely?	NO	Close the door.
Line power	3	Is line voltage being supplied to the power outlet?	NO	Explain to the user that the problem is not in the copier.
	4	Is line voltage present between J1-1 and J1-2? (J1 is located near the power cord mount.)	YES	Check from step 6.
Circuit breaker (CB1).	5	Check the continuity between the terminals of the circuit breaker. Is the resistance 0Ω?	NO	Press the button on the circuit breaker, then check continuity again. If the resistance is still not 0Ω, replace the circuit breaker (CB1).
Power cord, line filter (LF1)			YES	Check the power cord and line filter (LF1).
Door switch (MS1)	6	Check the continuity between the terminals of the door switch (MS1). Is the resistance 0Ω when the actuator is pressedd, and infinite when the actuator is released?	NO	Replace MS1
Power switch (SW1)	7	Check the continuity between the terminals of the power switch (SW1). Is the resistance 0Ω when the switch is "ON" and infinite when "OFF"?	NO	SW1
Wiring			YES	Check the AC power line wiring and connectors.

9. DC power is not supplied

<table>
<tr><th>Cause/Problem area</th><th>Procedure</th><th>Check</th><th>Result</th><th>Action</th></tr>
<tr><td>Overcurrent protection circuit</td><td>1</td><td>Does the problem disappear when the copier is switched OFF and the ON again?</td><td>YES</td><td>End. (Be sure to find out why the protection circuit operated.)</td></tr>
<tr><td>AC power supply</td><td>2</td><td>Is AC line voltage present between terminals J108-1 and J108-2?</td><td>NO</td><td>See sub-section "AC power is not being supplied".</td></tr>
<tr><td>Transformer (T1)</td><td>3</td><td>Are the following AC voltages present between the following terminals on the DC power supply PCB?
<table>
<tr><th>Connector No.</th><th>AC line voltage</th></tr>
<tr><td>Between J201-1 and J201-2</td><td>Approx. 27VAC</td></tr>
<tr><td>Between J201-3 and J201-4</td><td>Approx. 37VAC</td></tr>
<tr><td>Between J201-5 and J201-6</td><td>Approx. 11VAC</td></tr>
</table></td><td>NO</td><td>Replace the transformer.</td></tr>
<tr><td>Fuse (FU201, 202, 203)</td><td>4</td><td>Has a fuse (FU201, 202, and 203) on the DC power supply PCB blown?</td><td>YES</td><td>Remove the cause of the fuse blowing, then replace the fuse.</td></tr>
<tr><td>DC power supply</td><td>5</td><td>Are the following output voltages present at the various connectors on the DC power supply PCB shown below?
<table>
<tr><th>Range to which meter is set</th><th>Position to which (+) lead is connected</th><th>Position to which (−) lead is connected</th><th>Meter indication</th></tr>
<tr><td>50VDC</td><td>J202-1</td><td>J202-3</td><td>24V</td></tr>
<tr><td>50VDC</td><td>J202-4</td><td>J202-5</td><td>30V</td></tr>
<tr><td>10VDC</td><td>J203-1</td><td>J203-2</td><td>5V</td></tr>
</table></td><td>NO</td><td>Replace the DC power supply PCB.</td></tr>
<tr><td>DC controller PCB</td><td></td><td></td><td>YES</td><td>Replace the DC controller PCB.</td></tr>
</table>

10. Drum does not rotate

Cause/Problem area	Procedure	Check	Result	Action
Cartridge	1	Does the drum rotate when it is properly installed?	YES	End
Torque limiter	2	Is copy paper or other foreign matter jammed between the drum and the cleaning unit?	YES	Remove the foreign matter.
Drive belt	3	Is the drive belt installed correctly?	NO	Install the belt correctly.
Drum drive unit			YES	Remove and check the drum drive unit. Repair or replace the unit.

11. Paper is not picked up from cassette

Cause/Problem area	Procedure	Check	Result	Action
	1	Does the indicator remain ON?	YES	See sub-section " indicator does not go OFF"
Drive belt	2	Is the drive belt installed correctly?	NO	Install the belt correctly.
	3	Is the leading edge of the copy paper reaching the registration rollers?	YES	See sub-section "Registration rollers do not rotate"
Pick-up roller	4	Open the manual feed tray and press the lever of the manual feed tray position sensor (MSSW2) by hand. Do the paper pick-up rollers rotate when the COPY START key is pressed? (visual check)	YES	Check thepick-up rollers
Spring clutch	5	Does the pick-up roller clutch solenoid (SL1) operate when the COPY START key is pressed?	YES	Check the position of the solenoid. If it is normal, Check the spring clutch and control ring. Replace any necessary parts.
Paper pick-up roller clutch solenoid (SL1)	6	Switch the copier OFF and disconnect connector J310 on the DC controller PCB. Set the meter to the 1kΩ range, measure the resistance between J310-5 and J310-6 (attached to solenoid wiring). Is the resistance approx. 150Ω?	NO	Check the wiring from the solenoid (SL1) to the DC controller PCB. If it is normal, replace SL1.
DC controller PCB			YES	Replace the DC controller PCB.

12. Paper is not picked up from manual feed

Cause/Problem area	Procedure	Check	Result	Action
Sensor arm	1	Is the arm of the pick-up unit paper sensor broken? Does it move smoothly?	NO	Replace the arm.
Pick-up unit paper sensor (Q2)	2	Is the pick-up unit paper sensor (Q2) functioning normally?	NO	Replace Q2.
Drive belt	3	Is the drive belt installed correctly?	NO	Re-fit the belt.
	4	Is the leading edge of the copy paper reaching the registration rollers?	YES	See sub-section "Registration rollers do not turn".
Gears	5	Are all drive gears from the main motor (M1) to the pre-registration rollers normal?	NO	Re-install or replace the gears.
DC controller PCB			YES	Replace the DC controller PCB.

13. Registration rollers do not rotate

Cause/Problem area	Procedure	Check	Result	Action
Belts and gears	1	Are the belts and gears from the main motor (M1) to the registration roller clutch (CL1) normal?	NO	Re-install or replace any faulty or gear.
Registration roller clutch (CL1)	2	Disconnect J310 on the DC controller PCB. Set the meter to the 1kΩ range. Connect the leads to J310-3 and J310-4 of part of J310 connected to the wiring. Is the registance approx. 110Ω?	NO	Check the wiring from J310 to CL1. If it is normal, replace CL1.
DC controller PCB	3	Connect J310 to the DC controller PCB. Set the meter to the 30VDC range. Connect the (+) lead to J310-3 and the (–) lead to J310-4. Press the COPY START key. Does the voltage change from 0V to about 24V?	NO	Replace the DC controller PCB.
			YES	Do the registration rollers or drive gears interfere with other parts? Remove parts from the vicinity.

14. Scanner does not move

Cause/Problem area	Procedure	Check	Result	Action
Drive cable	1	Is the scanner drive cable installed correctly?	NO	Install the cable correctly.
Foreign object in the path of the scanner	2	Switch the copier OFF, hold the back of the scanner and move it back and forth. Does it move smoothly?	NO	Check for dirt or foreign matter on the scanner rails or some object that is touching the scanner. If necessary, clean, lubricate or repair.
Gears	3	Is the scanner drive capstan engaged with the interruption gear? (See Figure 4-1.)	NO	Check if the spring that lifts the interruption gear, the interruption gear, or the scanner drive capstan is damaged. Adjust or replace any parts necessary.
Scanner drive motor (M2)	4	Switch the power OFF and disconnect connector J302 on the DC controller PCB. Set the meter to the 100Ω range and measure the resistance between the connectors shown below. Is the resistance Ω? J302-1 (COMB) – J302-2 (B) J302-1 (COMB) – J302-3 (B) J302-4 (COMA) – J302-5 (A) J302-4 (COMA) – J302-6 (A)	NO	Check the wiring from J302 to the scanner motor. If it is normal, replace the motor.
DC power supply PCB	5	Set the meter to the 50VDC range. Connect the (+) lead to J301-2 and the (–) lead to J301-1 of the DC controller PCB. Is the voltage approx. 30V?	NO	Check the wiring from the DC controller PCB to the DC power supply PCB. If it is normal, see "DC power not being supplied."
DC controller PCB	6	Does the problem disappear when the DC controller PCB is replaced?	YES	End.

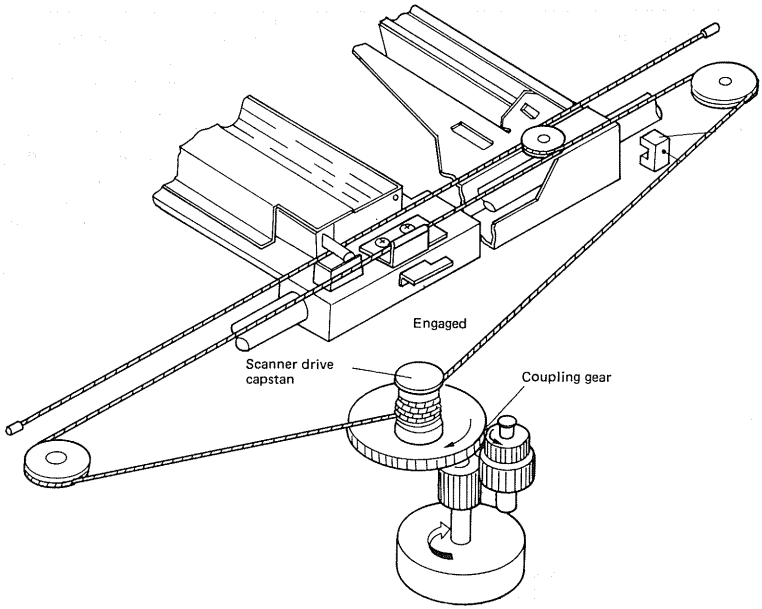

Figure 4-1

TONER
www.tonerplus.com.ua

15. Preconditioning exposure lamps does not light.

Cause/Problem area	Procedure	Check	Result	Action
Pre-conditioning exposure lamp PCB	1	Disconnect J310 from the DC controller PCB. Set the meter to the 1Ω range. Connect the leads to J310-1 and J310-2 of the part of J310 connected to the wiring. Is the resistance approx. 13Ω?	NO	Replace the pre-conditioning exposure lampboard
DC controller PCB			YES	Replace the DC controller PCB.

16. Scanning lamp does not light

Cause/Problem area	Procedure	Check	Result	Action
Lamp	1	Is the lamp installed correctly?	NO	Re-install the lamp.
Thermal fuse (FU1)	2	Check the continuity of the thermal fuse (FU1). (Connect the leads to both ends of the fuse.) Is there continuity?	NO	Replace the thermal fuse (FU1) **Note:** There may be trouble with the lamp not lighting normally, the fuse being installed in the wrong position, or the cooling fan not operating, so be sure to check operation after replacing the fuse.
Broken lamp filament	3	Set the meter to the 1kΩ range. Leads connect the leads to the lamp terminals. Does the needle move?	NO	Replace the lamp.
DC controller PCB	4	Set the meter to the 50VDC range. Connect the (+) lead to J304-7 and the (–) lead to J304-8, then press the COPY START key. Does the voltage change from about 0V to about 20V when the lamp goes ON?	NO	Replace the DC controller PCB.
Lamp regulator	5	Does the lamp go ON when the lamp regulator is replaced?	YES	End.
Wiring			NO	Check the AC wiring from the power switch to the lamp regular and lamp, and check the DC wiring from the DC controller to the lamp regulator.

17. Fixing roller heater does not operate

Cause/Problem area	Procedure	Check	Result	Action
	1	Open the delivery unit and disconnect connector J4 (2P). Set the meter to the 1kΩ range. Connect the leads to J4-1 and J4-2. Does the needle move?	YES	Check from step.
Thermoswitch	2	Remove the fixing unit. Connect the leads to both ends of thermoswitch TS1. Does the needle move?	NO	Replace the thermoswitch (TS1). **Note:** There may be trouble with the heater going on, a faulty SSR, or the thermoswitch installed improperly, so be sure to check after replacing the thermoswitch. Also be sure to check for damage to the fixing rollers or to the separation claws.
Heater (H1)	3	Connect the leads to the heater terminals. Does the needle move?	NO	Check the installation of the heater. If it is normal, replace the heater.
AC line			YES	Check the AC wiring inside the fixing unit.
DC controller PCB	4	Set the meter to the 30VDC range. Connect the (+) lead to J304-3 and the (–) lead to J304-8. Switch the power ON. Is the voltage approx. 0V?	NO	Replace the DC controller PCB.
AC driver, triac			YES	Replace the AC driver or triac.

18. Counter does not operate

Cause/Problem area	Procedure	Check	Result	Action
Counter	1	Switch the power OFF. Disconnect J315 on the DC controller PCB. Set the meter to the 1kΩ range and connect the leads to J315-1 and J315-2 of the part of J315 connected to the wiring. Does the needle move?	NO	Check the wiring between the DC controller PCB and the counter. If it is normal, replace the counter.
Counter	2	Connect J315 to the DC controller PCB and set the switch ON. Set the meter to the 30VDC range and connect the (+) lead to J315-1 and the (–) lead to J315-2. Press the COPY START key. Does the voltage change from approx. 0V to approx. 24V?	YES	Replace
DC controller PCB			NO	Replace the DC controller PCB.

19. indicator does not go ON

Cause/Problem area	Procedure	Check	Result	Action
Cassette size sensor PCB	1	Does the indicator remain OFF when the cassette is removed?	YES	Check the wiring from the DC controller PCB to the cassette size sensor PCB. If it is normal, replace the cassette size sensor PCB.
Cassette paper sensor (Q1)	2	Is the cassette paper sensor (Q1) performing normally? (See page 2-10)	NO	Check the wiring from the DC controller PCB to Q1. If it is normal, replace Q1
Control panel	3	Does the trouble disappear if the control panel is replaced?	YES	End.
DC controller PCB			NO	Replace the DC controller PCB.

20. indicator does not go OFF

Cause/Problem area	Procedure	Check	Result	Action
Cassette	1	Is the cassette pushed fully into the holder?	NO	Push the cassette in fully.
Cassette paper sensor (Q1)	2	Is the cassette sensor (Q1) functioning normally? (See page 2-10)	NO	Check the wiring from the DC controller PCB to Q1. If it is normal, replace Q1.
DC controller PCB			YES	Replace the DC controller PCB.

21. indicator does not go ON

Cause/Problem area	Procedure	Check	Result	Action
	1	Does the copying operation stop when a jam occurs?	YES	Continue from step 3.
Jam sensor	2	Are the following sensors functioning normally? (See page 2-10) ● Pick-up unit paper sensor (Q2) ● Delivery unit paper sensor (Q5)	NO	Replace the sensor.
DC controller PCB			YES	Replace the DC controller PCB.
Control panel	3	Does the trouble disappear when the control panel is replaced?	YES	End.
DC controller PCB			NO	Replace the DC controller PCB.

22. indicator goes ON when paper feeding is normal.

Cause/Problem area	Procedure	Check	Result	Action
Jam sensor	1	Are the following sensors functioning normally? (See page 2-10) ● Pick-up unit paper sensor (Q2) ● Delivery unit paper sensor (Q5)	NO	Replace the sensor.
DC controller PCB			YES	Replace the DC controller PCB.

23. indicator does not go ON when there is no toner (black developing unit)

Cause/Problem area	Procedure	Check	Result	Action
J connection	1	Is connector J501 of the pin inside the upper front cover connected?	NO	Connect J501 securely.
Black toner sensor (Q6)	2	Set the meter to the 12VDC range. Connect the (+) lead to J310-9 (TEP) and the (–) lead to J310-11 (GND) on the DC controller PCB. Is the voltage approx. 0V?	NO	Check the wiring from the DC controller PCB to Q6, and check the movement of the stirring rod inside the black developing unit. If these are normal, replace Q6.
Control panel	3	Does the problem disappear when the control panel is replaced?	YES	End.
DC controller PCB			NO	Replace the DC controller PCB.

24. indicator does not go OFF when there is toner during black copying

Cause/Problem area	Procedure	Check	Result	Action
DC controller PCB	1	Does the indicator come back ON when the power switch is set OFF, then ON again?	YES	Replace the DC controller PCB.
DC controller PCB	2	Set the power switch OFF, then disconnect the 3-pin connector inside the upper front cover. Set the power switch ON and press the COPY START key. Wait at least 5 seconds after the main motor stops, then press the COPY START key again. When the main motor stops, does the indicator go ON?	YES	Replace the DC controller PCB.
Stirring rod gear	3	Does the stirring rod inside the black developing unit operate normally?	NO	Check the stirring rod gear.
Toner sensor			Yes	Replace the toner sensor.

25. [illegible] indicator does not go ON

Cause/Problem area	Procedure	Check	Result	Action
	1	Was the J20 jumper cable cut when the Control Card was installed?	NO	Cut the jumper wire.
Wiring	2	Set the power switch OFF, then disconnect J309 on the DC controller PCB. Set the meter to the "Ω × 1" range. Connect the leads to J309-1 and J309-4 on the part of J309 connected to the wiring. Does the meter indicate infinityΩ?	NO	Check the wiring between the Control Card and the DC controller PCB.
Control panel	3	Does the problem disappear when the control panel is replaced?	YES	End.
DC controller			NO	Replace the DC controller PCB.
Card sensor PCB	4	Does the problem disappear when the card sensor PCB in the Control Card unit is replaced?	YES	End. ● There may ba a problem with the relay on the card sensor PCB.
Controller PCB			NO	Replace the controller PCB of the Control Card unit.

26. indicator goes not go OFF

Cause/Problem area	Procedure	Check	Result	Action
Control Card III unit power supply	1	Is anything displayed on the Control Card display?	NO	Either 24VDC or GND is not connected to the Control Card unit.
Operation	2	Is a department card being used?	NO	Explain to the user that the indicator will not go OFF unless a card other than a department card is inserted.
	3	Take the card out completely, then insert it once again. Does "–EE–" appear on the Control Card display?	NO	Continue with step 5.
Card	4	Is there dirt on the card or is it broken, etc.?	YES	Use another card. Explain the user of the cards to the user.
Card sensor PCB			NO	Replace the Control Card controller PCB.
Controller PCB	5	Does the display in step 3 flash?	NO	Replace the Control Card controller PCB.
	6	Borrow the upper limit setting card from the user and check the departmental upper limit flashing in step 5. Has the number of copies reached the upper limit?	YES	Is Control Card normal? ● Use another card or change the upper limit.
Controller PCB			NO	Replace the Control Card unit controller PCB.
Wiring	7	Set the power switch OFF. Disconnect J309 from the DC controller. Set the meter to the Ω × 1 range and connect the leads to J309-1 and J309-4. Does the meter indicate 0Ω?	NO	Check the wiring between the Control Card and the DC controller PCB.
DC controller PCB			YES	Replace the DC controller PCB.

TONER
www.tonerplus.com.ua

CHAPTER 5 PAPER TRANSPORT TROUBLESHOOTING

I. PAPER JAMS

The main areas in this copier where jams could occur are as follows.
(1) Paper pick-up area
(2) Separation and feeder area
(3) Fixing and delivery unit area
(4) Drum cleaner area

Troubleshooting of paper jamming is described here for each of the above areas.

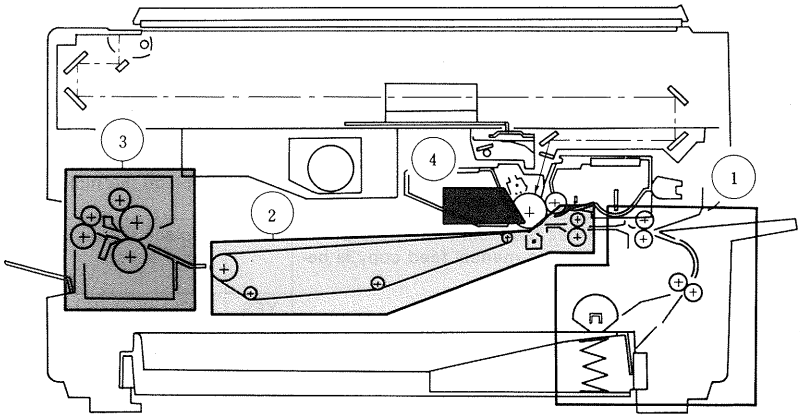

Figure 5-1

5

1. Jamming in the paper pick-up area

Cause/Problem area	Procedure	Check	Result	Action
Cassette	1	Is the cassette pushed fully into the copier?	NO	Push the cassette in fully.
	2	Does the problem disappear when a different cassette is used?	YES	1. Check the paper hold-down tabs. 2. Check the strength of the paper-lifting springs.
Copy paper	3	Is the copy paper curled or creased?	YES	1. Change the copy paper. 2. Instruct the user about the correct method of storing paper.
	4	Does the problem disappear when paper recommended by Canon is used?	YES	Request the user to use the recommended paper.
DC controller PCB, pick-up roller clutch	5	Does the pick-up roller rotate during the copying cycle?	NO	See sub-section "Paper is not picked up".
Pick-up roller	6	Are the pick-up roller shoes deformed or worn?	YES	Replace the pick-up rollers.
Pick-up unit paper sensor (Q2)	7	Does the main motor rotate when a manual feed copy is being made?	NO	Replace the pick-up unit paper sensor.
Feed roller and paper guide plate			YES	1. Check each feed roller for wear and deformation. 2. Check the paper guide plate for burrs or deformation.

2. Jamming in the separation and feeder assembly area

Cause/Problem area	Procedure	Check	Result	Action
	1	Does the leading edge of the copy paper pass through the registration rollers?	YES	Continue with step 5.
Registration roller clutch (CL1)	2	Does the registration roller clutch operate correctly?	NO	Check the registration roller clutch.
Registration roller	3	Are the registration rollers worn, deformed, or dirty?	YES	If they are dirty, clean them with alcohol. If they are deformed, replace them.
	4	Are the retaining springs at the ends of the registration rollers installed correctly?	NO	Install the springs correctly.
			YES	Check the transfer guide for foreign matter and deformation
Paper guide wire	5	Is the paper guide wire of the transfer corona unit installed correctly?	NO	Install the wire correctly.
Feeder belt	6	Does the feeder belt move properly?	NO	Check the feeder belt, rollers, and pulleys.
Feeder fan			YES	Check if the feeder fan is operating.

3. Jamming in the fixing and paper delivery assembly area

Cause/Problem area		Procedure	Check	Result	Action
Delivery unit separation claws		1	Are the separation claws worn or deformed?	YES	1. Replace the separation claws. 2. If the separation claws are dirty, clean them with MEK.
Fixing unit	Upper and lower fixing rollers	2	Is the upper or lower fixing roller deformed or scratched?	YES	Replace the upper and lower fixing rollers (both at the same time).
Fixing unit	Paper guide plate	3	Is toner, etc., adhering to the paper guide?	YES	Clean the paper guide plate with MEK.
Fixing unit		4	Is the height of the paper guide plate correct?	NO	Adjust the height of the paper guide plate.
Fixing unit	Nip width	5	Is the roller pressure (nip width) within the standard?	NO	Adjsut the nip width.
Delivery unit	Delivery unit paper sensor arm	6	Does the delivery unit sensor arm move smoothly?	NO	Adjust the arm so that it moves smoothly.
Delivery unit	Delivery unit paper sensor (Q5)	7	Is the delivery unit paper sensor correctly (See papge 2-10)	NO	Replace the sensor
Delivery unit	Delivery roller drive unit	8	Do the delivery rollers rotate smoothly?	NO	Check the delivery roller drive unit.
Leading edge blank area				YES	Check if there is a leading edge blank area (1.5±1.0 mm) on the leading edge of the copy paper.

4. Jamming around the drum cleaning unit area

Cause/Problem area	Procedure	Check	Result	Action
Copy paper	1	Does jamming occur when thin paper is used?	YES	Explain to the user that thin paper is likely to jam.
	2	Did a jam occur when a 2-sided or overlay copy was being made?	YES	Explain to the user to remove curling from the copy paper before using it.
Static charge eliminator, high-voltage transformer			NO	Check if voltage is being supplied to the static charge eliminator.

II. INCORRECT PAPER FEED OPERATION

1. Sheets stuck together

Cause/Problem area	Procedure	Check	Result	Action
Cassette	1	Is the copy paper positioned correctly under the hold-down tabs?	NO	Set the copy paper correctly
	2	Push the copy paper down in the cassette and release it. Does it rise smoothly?	NO	1. Check the width of the copy paper. 2. Check the position of the side panels of the cassette. 3. Measure the strength of the paper-lifting springs. If they are weak, replace them.
Copy paper	3	Is paper recommended by Canon being used?	NO	Suggest that the user use paper recommended by Canon
Hold-down tabs			YES	Check if the hold-down tabs are deformed.

2. Wrinkles

Cause/Problem area		Procedure	Check	Result	Action
Pick-up unit		1	Switch the power OFF while the copy paper is passing along the feeder. Are there any wrinkles in the copy paper at this point? Is the paper skewed?	YES	1. Check the pick-up unit. 2. Check the registration rollers.
Copy paper		2	Does the trouble disappear when new copy paper is used?	YES	The paper may be absorbing moisture. Instruct the user in the correct paper storage method.
		3	Is paper recommended by Canon being used?	NO	Suggest that the user use paper recommended by Canon.
Fixing unit	Paper guide	4	Is any foreign matter such as toner adhering to the paper guide?	YES	Clean the paper guide with MEK.
		5	Is the height of the paper guide correct?	NO	Adjust the height of the paper guide.
	Roller pressure	6	Is the roller pressure (nip width) within the standard?	NO	Adjust the nip width.
	Upper and lower fixing rollers			YES	Replace the upper and lower fixing rollers (both at the same time).

CHAPTER 6 LOCATION AND FUNCTION OF ELECTRICAL PARTS

A. SENSORS AND LAMPS

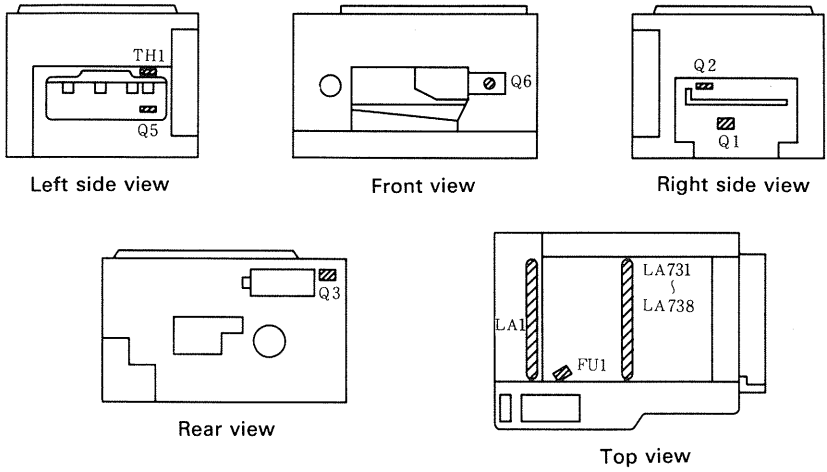

Figure 6-1

Symbol	Name	Code	Function
	Black toner sensor	Q6	Senses the toner in the black developing unit
	Photointerrupter	Q1	Paper sensor
		Q2	Pick-up unit paper sensor
		Q3	Scanner HOME position sensor
		Q5	Delivery unit paper sensor
	Thermistor	TH1	Upper fixing roller temperature sensor
	Thermal fuse	FU1	Scanning lamp over temperature protector
	Tungsten-halogen lamp	LA1	Scanning lamp
		LA731	Pre-conditioning exposure lamps
		LA732	Pre-conditioning exposure lamps
		LA733	Pre-conditioning exposure lamps
		LA734	Pre-conditioning exposure lamps
		LA735	Pre-conditioning exposure lamps
		LA736	Pre-conditioning exposure lamps
		LA737	Pre-conditioning exposure lamps
		LA738	Pre-conditioning exposure lamps

B. CLUTCHES, SOLENOIDS, MOTORS AND HEATERS

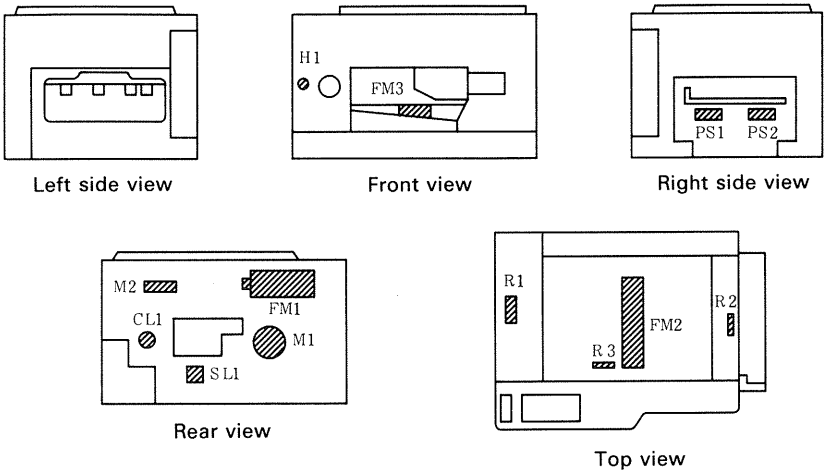

Figure 6-2

Symbol	Name	Code	Function
CL	Clutch	CL1	Registration roller clutch
SL	Solenoid	SL1	Pick-up roller clutch solenoid
M	Motor	M1	Main motor
		M2	Scanner motor
	Fan unit	FM1	Scanner cooling fan
		FM2	Exhaust fan
		FM3	Feeder suction fan
	Heater	H1	Fixing heater
		PS1	Drum heater (100V copier only)
		PS2	Drum heater (100V copier only)
		R1	Prevention of condensation in the copier (100V copier only)
		R2	Prevention of condensation in the copier (100V copier only)
		R3	Prevention of condensation in the copier (100V copier only)

C. SWITCHES, CIRCUIT BREAKERS, COUNTERS, ETC.

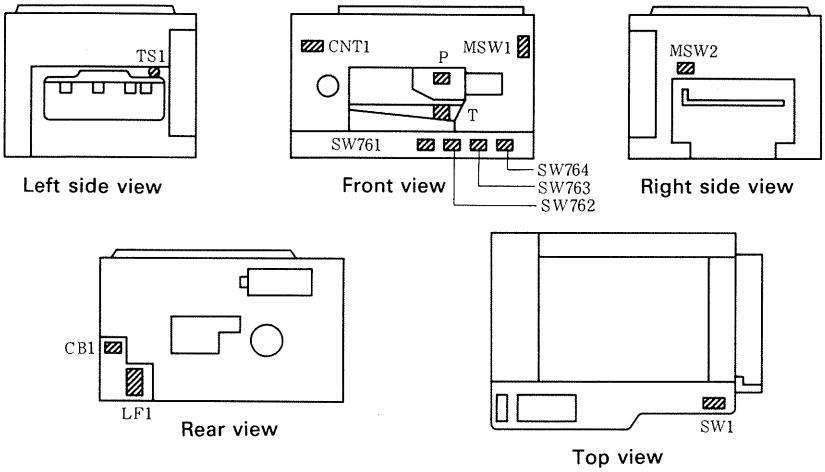

Figure 6-3

Symbol	Name	Code	Function
	Switch	MSW1	Front door switch
		MSW2	Manual feed tray switch
		SW1	Power switch
	Push switch	SW761	Cassette size sensor
		SW762	Cassette size sensor
		SW763	Cassette size sensor
		SW764	Cassette size sensor
	Thermoswitch	TS1	Fixing unit over-temperature protector
CB	Circuit breaker	CB1	AC power line protection
CNT	Counter	CNT1	Total counter
LF	Line filter	LF1	Removing electrical noise (spihes, etc.)
	Corona units	P	Primary corona unit
		T	Transfer corona unit

D. CONNECTORS

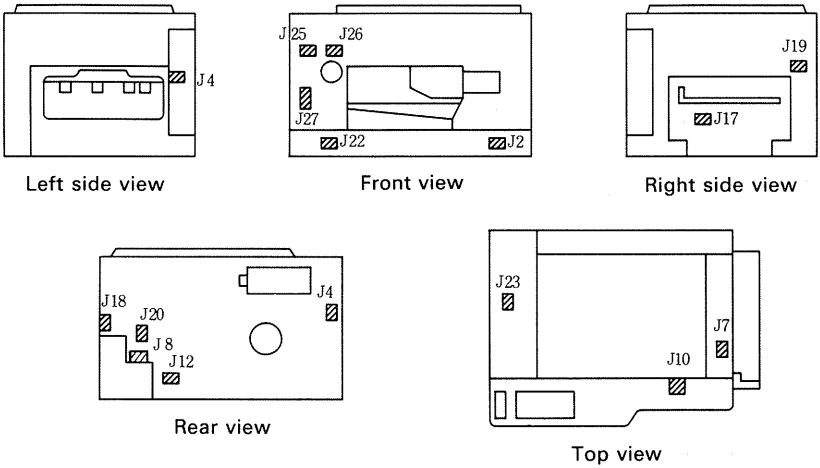

Figure 6-4

Symbol	Name	Connection	Code	Name of pins	Connection
J2	2	Drum heater (100V copier only)	J731	2	Pre-conditioning exposure lamp board
J3	2	Condensation prevention heater (100V copier only)			
J4	2	Fixing roller heater			
J7	2	Condensation prevention heater (100V copier only)			
J10	2	Condensation prevention heater (100V copier only)			
J12	2	Registration roller clutch			
J17	3	Cassette paper sensor (Q1)			
J18	5	Manual feed tray position sensor			
J19	3	Pick-up unit paper sensor (Q2)			
J20	4	Control card unit (option)			
J22	2	Feeder suction fan			
J23	3	Scanner HOME position sensor (Q3)			
J25	2	Thermistor			
J26	3	Delivery unit sensor wiring			
J27	3	Delivery unit paper sensor (Q5)			

TONER
www.tonerplus.com.ua

E. PRINTED CIRCUIT BOARDS

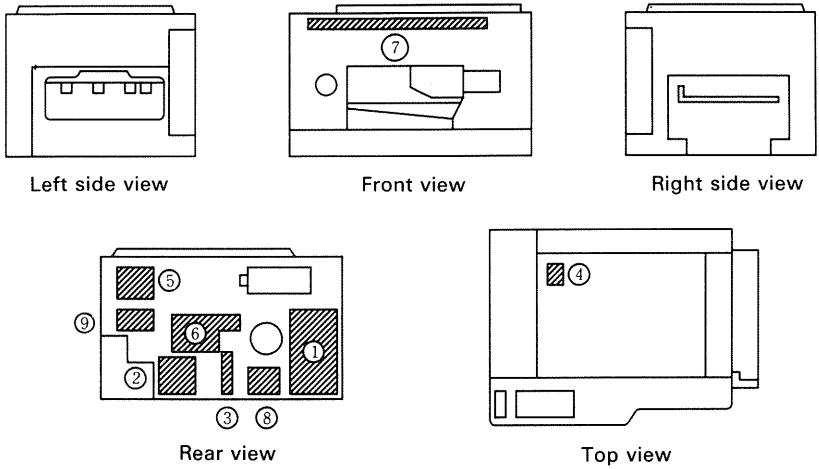

Figure 6-5

Symbol	Name	Function
①	DC controller PCB	Controlling operations
②	AC driver PCB	Powering the main motor and fixing roller heater
③	DC power supply PCB (for copier)	Supplying DC power to the copier
④	AE sensor PCB	
⑤	Lamp regulator PCB	Controlling scanning lamp voltage
⑥	High-voltage transformer	Supplying high voltage for primary and transfer units and developing bias
⑦	Control panel PCB	
⑧	DC power supply PCB (for sorter)	Supplying power to the sorter
⑨	DC power supply PCB (for DF)	Supplying power to the DF

CHAPTER 7 SELF-DIAGNOSIS

SELF-DIAGNOSIS

The DC controller PCB has a microprocessor that diagnoses the functions of the copier (particularly the sensors) at appropriate intervals. If this microprocessor detects an abnormality, it will display the type of the abnormality on the COPY NUMBER indicator on the control panel. The table below shows the various fault codes, their meaning, and the corresponding detection timing. Example of E000 code indication: E0 ⟺ 00 light alternately

Code displayed	Main cause	Fault criteria
E000	Thermistor (TH1), heater (H1), AC driver PCB, DC controller PCB, operation of thermoswitch	● If the temperature of the fixing rollers after 30 seconds is virtually the same as when the copier is turned ON. (This indication does not appear if warm-up is completed within 30 seconds.) ● If the temperature of the fixing roller drops below 100°C for 2 seconds or longer after warm-up is completed.
E001	Defective thermistor (TH1), AC drive PCB, or DC controller PCB	If the temperature remains 300°C or higher for 2 seconds or longer
E030	Counter, DC controller PCB	If the break signal is emitted continuously for 2 seconds or more when the counter is not being driven
E202	Scanner HOME position sensor (Q3), scanner motor (M2), motor controller PCB, or DC controller PCB	1. If the scanner is not at the HOME position (SCHP = 0) when the power is switched ON or the COPY START key is pressed If the scanner does not return to the HOME position (SCHP remains 0) within 8 seconds after it starts to reverse 2. If the scanner is in the HOME position (SCHP = 1) when the power is switched ON or the COPY START key is pressed ● If the scanner does not leave the HOME position (SCHP remains 1) within 1 second after it starts to advance ● If the scanner does not return to the HOME position (SCHP remains 0) within 1 second after it leaves the HOME position (SCHP = 0) 3. If the scanner does not return to the HOME position (SCHP remains 0) within 5 seconds after it advances and passes the leading edge of the original (SCHP = 1), the DC controller PCB outputs a REVERSE sigal once again. If it still does not return to the home position within 2 seconds (SCHP remains 0), this indication will be displayed.
E221	Lamp regulator or DC controller PCB	If ZXDP remains 0 continuously for 2 seconds
E400	DF controller PCB, DF power supply, or DC controller PCB	If DF remains 0 for 2 seconds or longer
E500	Sorter controller PCB or DC controller PCB	● If the copier communicates with the sorter for at least 2 seconds ● If the SORTER STANDBY signal does not return with 5 seconds after the BCR signal is outputted.

7

For reference:
In the event that the self-diagnostic function detects an abnormality, the copier can be reset by turning it OFF and the ON again. If E000 is displayed, however, the copier cannot be reset. This is to prevent the fixing roller from overheating which could occur if the user were able to easily reset the copier, particularly in the event of a thermistor burnout. The method of clearing an E000 condition is as follows:

1) Remove the variable resistor cover.
2) Switch the power ON.
3) Press switch SW301 of the DC controller PCB.
4) Switch the power OFF and the ON again.

Note:
A capacitor on the DC controller PCB provides retains the E000 indication when the power is turned OFF; E000 will be cleared after a period of between 5 and 10 minutes (period of self-discharge of the capacitor).

II. LIST OF SIGNALS/COMMANDS

SIGNALS/COMMANDS	
ACBON	AC BIAS ON command
AE	AE SENSOR OUTPUT signal (analog)
AE-BIAS	AE SENSOR BIAS signal (analog)
CCNTD	CONTROL COUNTER DRIVE command
CCNNT	CONTROL CARD CONNECT signal
CDP	COLOR CARTRIDGE DETECTION signal
CPEP	CASSETTE PAPER EMPTY signal
CSIN	CASSETTE IN signal
CSZ0	CASSETTE SIZE signal 0
CSZ1	CASSETTE SIZE signal 1
CSZ2	CASSETTE SIZE signal 2
DCBC	DC BIAS CONTROL command
DCOFF	DC 24V OFF command
FM1D	FAN MOTOR 1 DRIVE command
FM2D	FAN MOTOR 2 DRIVE command
FM3D	FAN MOTOR 3 DRIVE command
GRBC	GRID BIAS CONTROL signal
GRDON	GRID ON signal
HTRD	HEATER DRIVE command
HVTON	HVTON command
LAON	LAMP ON command
LIC	LIGHT INTENSITY CONTROL command
PDP1	PAPER DETECTION signal 1 (Q2)
PDP2	PAPER DETECTION signal 2 (Q5)
PEXP	PRE-CONDITIONING EXPOSURE LAMP LINT command
PUSD	PICK-UP ROLLER CLUTCH SOLENOID DRIVE command
RGCD	REGISTRATION ROLLER CLUTCH SOLENOID DRIVE command
SCHP	SCANNER HOME POSITION signal
TCNTD	TOTAL COUNTER DRIVE command
TEP	TONER EMPTY signal
TH1	FIXING ROLLER SURFACE TEMPERATURE signal (analog)
ZXDP	ZERO CROSS DETECTION signal

ABBREVIATIONS	
AER	AE ROTATION
INTR	INITIAL ROTATION
LSTR	LAST ROTATION
SCFW	SCANNER FORWARD
SCRV	SCANNER REVERSE
STBY	STANDBY
WMUP	WARM UP
WMUPR	WARM UP ROTATION

TONER
www.tonerplus.com.ua

XI. SPECIFICATIONS

Type	
Copier	Desktop
Copyboard	Fixed
Light source	Tungsten-halogen lamp (300 W)
Lens	Lens
Photosensitive material	OPC
Method	
Copying	Indirect electrostatic method
Charging	Corona
Exposure	Slit (moving light source)
Copy density adjustment	Automatic or manual
Developing	Dry
Paper pick-up	
Automatic	Dedicated cassette
Manual	Manual feed
Transfer	Corona
Separation	Tangential Curvature separation
Cleaning	Blade
Fixing	Heated roller (900W)
Type of original	Sheets, books, 3-dimensional objects (up to 2 kg)
Maximum document size	A3 (11" × 17")
Function	
Reproduction ratio	1:1 (±0.5%)
WAIT time	90 seconds (20°C)
First copy	10 seconds (A4)
Continuous copying	99 copies
Copy size	Max: A3; (11" × 17") Min: A6 (Post Card)
Kind of copy paper	Ordinary paper 64 to 80g/m², tracing paper (SM1,
Cassette feed	*GNT-80), colored paper
Manual feed	Ordinary paper 64 to 128g/m², tracing paper (SM1, *GNT-80), colored paper, OHP film, postcards, labels
Two-sided copies	Ordinary paper 64 to 80g/m²
Manual feed	Ordinary paper 64 to 128g/m², postcards, colored paper
Overlay copies	Ordinary paper 64 to 80g/m²
Manual feed	Ordinary paper 64 to 128g/m², postcards, colored paper
Cassette specifications Claw	Provided
General	Depth 27mm (1.0") (equivalent to approx. 250 sheets of 80g/m² paper)
Universal	Not provided
Tray capacity	Approx. 100 sheets (A4 size, 80g/m²)

Function

Non-image width (1st side)	
Leading edge	2.0±1.0mm (0.08"±0.03") max
Left and right	2.5±1.5mm (0.1"±0.03") max
AUTO CLEAR	Possible (standard 2 minutes)
AUTO SHUT-OFF	None
Options	DF/ADF, CT unit, Sorter, Control card unit
Operating environment	
Temperature range	7.5 ~ 32.5°C
Humidity range	10 ~ 85%
Atmospheric pressure range	0.6 to 1 atmospheres
Power source	Copier No.
115V 60Hz	CPE xxxxx CPF xxxxx CRD xxxxx
220V 50Hz	DPE xxxxx DPF xxxxx DRD xxxxx
240V 50Hz	EPE xxxxx EPF xxxxx EPG xxxxx
240V 50Hz	FPE xxxxx FPF xxxxx FRD xxxxx
220V 50Hz	KPE xxxxx KPF xxxxx KPG xxxxx
Power consumption	
Max	1.5kw max
During STANDBY	
During continuous copying	
Noise	
During copying	55dB max (at 1m from copier)
During STANDBY	40dB max (at 1m from copier)
Ozone (average for 8 hours)	0.1ppm max
Dimensions	
Width	610mm (24")
Depth	574mm (22")
Height	344mm (13")
Weight	47kg
Storing consumables	
Copy paper	Store copy paper in its wrapping and protect it from humidity
Toner	Store toner at a temperature and humidity of no more than 40° and 85%, and away from direct sunlight
Developing unit	Store the developing in a storage box or in the pedestal of the copier at a temperature and humidity of no more than 30°C and 85%, and away from direct sunlight

Reproduction ratio	Size	Cassette	Number of copies per minute
DIRECT	A3 (297 × 420 mm) (11″ × 16″)	A3	9
	A4 (210 × 297 mm) (8.3″ × 11.7″)	A4	15
	B4 (257 × 364 mm) (10.1″ × 14.3″)	B4	10
	B5 (182 × 257 mm) (7.2″ × 10.1″)	B5	15
	LTR (216 × 279 mm) (8.5″ × 11″)	LTR	15
	STMT (139.5 × 216 mm) (5.4″ × 8.5″)	STMT	16
	LGL (216 × 356 mm) (8.5″ × 14″)	LGL	10
	11″ × 17″ (297 × 432 mm) (11″ × 17″)	11″ × 17	9

The above specifications are subject to change with improvement or redesign of the copier.

XII. LIST OF SPECIAL TOOLS

Special tools which are required for servicing this copier (in addition to the standard tool set) are listed below.

No.	Tool name	Tool No.	Shape	Code	Application/remarks
1	Door switch actuator	TKN-0093	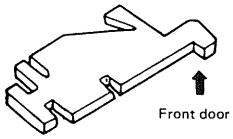	A	
2	Spring scale (compression)	CK-0054		B	● Measuring strength of cassette springs ● Adjust scanner drive cable tension
3	Extension blades for pliers	CK-0426	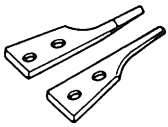	B	For removing grip rings: 4 – 9 mm
4	Cleaning oil	TKN-0464		A	

Note: Rank
A: Each service technician should carry one with him.
B: A group of five service technicians should share one.
C: Each workshop should keep one.

XIII. LIST OF SOLVENTS AND MATERIALS

No.	Material name	Use	Chemical formula, mixture ratio, etc.	Source	Remarks
1.	Ethyl alcohol (Ethanol) Isopropyl alcohol (Isopropanol)	Cleaning: copyboard, glass, mirror, etc.	C_2H_5OH $(CHZ_3)_2$ CHOH	Locally	Flammable. Use in a well-ventilated area. Avoid breathing concentrated vapor.
2.	MEK	Removing toner or oil stains	$CH_3 \cdot CO \cdot C_2H_5$ Methylethyl ketone	Locally	Flammable. Use in a well-ventilated area and avoid breathing concentrated vapor. Avoid contact with eyes of skin. Do not use of cleaning the drum, plastic molded parts, or corona wires.
3.	Heat-resistant grease	Lubricating the drive mechanisms, e.g., copyboard driving gear, fixing drive gear, fixing ass'y, etc.		CANON	Tool No.: CK-0427 (500g can) (Equivalent grease can be used, but should be able to with-stand 200°C for extended periods of time.)
4.	Lubricating oil (low viscosity)	Lubrication points: Scanner rail, etc.	ISO VG 68 oil ESSO Febis K68 MOBIL Vactraoil No. 2 SHELL Tonna oil T68	Locally	Equivalent oil can be used. Tool No.: CK-0451 (100cc)
5.	Lubricating oil (low viscosity)	Lubrication point: One-way clutch in pick-up control unit	ISO VG 220 oil ESSO Febis K220 MOBIL Vactraoil No. 4	Locally	Equivalent oil can be used. Tool No.: CK-0524 (100cc)
6.	Detergent	Cleaning covers and panels of the machine	Mild detergent solution	Locally	Dish-washing detergent is acceptable.
7.	Trichloroethlene	Cleaning oil-stained parts during over-haul	CH_3CC1_3	Locally	Use in well-ventilated area. Avoid breathing vapor. Avoid contact with eyes, or excess contact with skin.