Service Manual

iR C5180/4580/3880 Series

Canon

Feb 8 2007

Application

This manual has been issued by Canon Inc. for qualified persons to learn technical theory, installation, maintenance, and repair of products. This manual covers all localities where the products are sold. For this reason, there may be information in this manual that does not apply to your locality.

Corrections

This manual may contain technical inaccuracies or typographical errors due to improvements or changes in products. When changes occur in applicable products or in the contents of this manual, Canon will release technical information as the need arises. In the event of major changes in the contents of this manual over a long or short period, Canon will issue a new edition of this manual.

The following paragraph does not apply to any countries where such provisions are inconsistent with local law.

Trademarks

The product names and company names used in this manual are the registered trademarks of the individual companies.

Copyright

This manual is copyrighted with all rights reserved. Under the copyright laws, this manual may not be copied, reproduced or translated into another language, in whole or in part, without the written consent of Canon Inc.

COPYRIGHT © 2001 CANON INC.

Printed in Japan

Caution

Use of this manual should be strictly supervised to avoid disclosure of confidential information.

Symbols Used

This documentation uses the following symbols to indicate special information:

Symbol	Description
	Indicates an item of a non-specific nature, possibly classified as Note, Caution, or Warning.
	Indicates an item requiring care to avoid electric shocks.
	Indicates an item requiring care to avoid combustion (fire).
	Indicates an item prohibiting disassembly to avoid electric shocks or problems.
	Indicates an item requiring disconnection of the power plug from the electric outlet.
Memo	Indicates an item intended to provide notes assisting the understanding of the topic in question.
REF.	Indicates an item of reference assisting the understanding of the topic in question.
	Provides a description of a service mode.
Error	Provides a description of the nature of an error indication.

The following rules apply throughout this Service Manual:

1. Each chapter contains sections explaining the purpose of specific functions and the relationship between electrical and mechanical systems with reference to the timing of operation.
   In the diagrams, represents the path of mechanical drive; where a signal name accompanies the symbol , the arrow ⟶ indicates the direction of the electric signal.
   The expression "turn on the power" means flipping on the power switch, closing the front door, and closing the delivery unit door, which results in supplying the machine with power.
2. In the digital circuits, '1'is used to indicate that the voltage level of a given signal is "High", while '0' is used to indicate "Low".(The voltage value, however, differs from circuit to circuit.) In addition, the asterisk (*) as in "DRMD*" indicates that the DRMD signal goes on when '0'.
   In practically all cases, the internal mechanisms of a microprocessor cannot be checked in the field. Therefore, the operations of the microprocessors used in the machines are not discussed: they are explained in terms of from sensors to the input of the DC controller PCB and from the output of the DC controller PCB to the loads.

The descriptions in this Service Manual are subject to change without notice for product improvement or other purposes, and major changes will be communicated in the form of Service Information bulletins.
All service persons are expected to have a good understanding of the contents of this Service Manual and all relevant Service Information bulletins and be able to identify and isolate faults in the machine."

Contents

Chapter 1 Introduction

1.1 System Construction 1- 1
1.1.1 System Configuration with Pickup/Delivery Accessories [EUR] 1- 1
1.1.2 System Configuration with Pickup/Delivery Accessories [EUR] 1- 2
1.1.3 System Configuration with Printing/Transmission Accessories [EUR] 1- 3
1.1.4 System Configuration with Printing/Transmission Accessories [EUR] 1- 4
1.1.5 Functions of Printing/Transmission Accessories 1- 5
1.1.6 Overview of Printing/Transmitting Accessories 1- 5
1.2 Product Specifications 1- 6
1.2.1 Names of Parts 1- 6
1.2.1.1 External View 1- 6
1.2.1.2 Cross Section 1- 7
1.2.2 Using the Machine 1- 8
1.2.2.1 Turning On the Power Switch 1- 8
1.2.2.2 Points to Note About Turing Off the Main Power Switch 1- 9
1.2.2.3 Control Panel 1- 10
1.2.3 User Mode Items 1- 11
1.2.3.1 Common Settings 1- 11
1.2.3.2 Timer Settings 1- 12
1.2.3.3 Adjustments and Cleaning 1- 12
1.2.3.4 Report Settings 1- 13
1.2.3.5 System Settings 1- 13
1.2.3.6 Copy Settings 1- 15
1.2.3.7 Communications Settings 1- 16
1.2.3.8 Mail Box Settings 1- 17
1.2.3.9 Printer Settings 1- 17
1.2.3.10 Address Book Settings 1- 19
1.2.4 User Maintenance 1- 19
1.2.4.1 Cleaning 1- 19
1.2.4.2 Inspection 1- 20
1.2.5 Safety 1- 22
1.2.5.1 CDRH Regulations 1- 22
1.2.5.2 Laser safety 1- 22
1.2.5.3 Handling the Laser Assembly 1- 22
1.2.5.4 Safety of Toner 1- 23
1.2.5.5 Notes when handling a lithium battery 1- 23
1.2.5.6 Notes at Replacing/Disposing the Fixing Unit 1- 23
1.2.5.7 Notes before it works serving 1- 23
1.2.6 Product Specifications 1- 24
1.2.6.1 Type and Functions 1- 24
1.2.7 Function List 1- 24
1.2.7.1 Print Speed 1- 24
1.2.7.2 Print Size 1- 27
1.2.7.3 Others 1- 27
1.2.7.4 Reader Unit Specifications 1- 28

Chapter 2 Installation

2.1 Making Pre-Checks 2- 1
2.1.1 Points to Note 2- 1
2.1.2 Spatial Requirements 2- 2
2.1.3 Order of Installing Accessories 2- 4
2.1.4 Checking the Contents 2- 4

2.1.5 Checking the Contents 2- 6
2.1.6 Checking the Contents (Color Image Reader-E1 / F1) 2- 8
2.2 Unpacking and Installation 2- 8
2.2.1 Installing the Printer Kit 2- 8
2.2.2 Points to Note About Relocating the machine 2- 9
2.2.3 Mounting the Reader Unit (Color Image Reader E1/F1) 2- 9
2.2.4 Mounting the Transfer Cleaning Unit 2- 13
2.2.5 Fitting the Toner Container in Place 2- 14
2.2.6 Fitting the Drum Unit in Place 2- 14
2.2.7 Fitting the Secondary Transfer Outside Roller Unit in Place 2- 16
2.2.8 Cassette Setup 2- 17
2.2.9 Other Work 2- 17
2.2.10 Other Work 2- 18
2.2.11 Dealing with power code mount 2- 18
2.2.12 Connecting the Power Cord 2- 20
2.2.13 Adjustment of Fixing Assembly 2- 20
2.2.14 Checking the Image Margin 2- 20
2.2.15 Adjustment of Left Margin of Image 2- 20
2.2.16 Adjustment of the Margin along Leading Edge of Image 2- 21
2.2.17 Adjustment of the Image Area (non-image width) 2- 22
2.2.18 Setting the Auto Gradation Adjustment 2- 22
2.3 Checking the Connection to the Network 2- 22
2.3.1 Summary 2- 22
2.3.2 Checking the Network Connection 2- 22
2.3.3 Ping Operation 2- 22
2.4 Troubleshooting the Network 2- 22
2.4.1 Summary 2- 22
2.4.2 Checking the Connection of Network Cable 2- 23
2.4.3 Making a Check Using a Loopback Address 2- 23
2.4.4 Making a Check Using a Local Host Address 2- 23
2.5 Installing the Copy Tray 2- 23
2.5.1 Checking the Attachments (Copy Tray-N1) 2- 23
2.5.2 Turning Off the Host Machine 2- 23
2.5.3 Installation Procedure 2- 23
2.6 Installing the Card Reader 2- 25
2.6.1 Checking Contents (Card Reader-D1) 2- 25
2.6.2 Turning off the Host Machine 2- 25
2.6.3 Installation Procedures 2- 26
2.6.4 Installation Procedure in the imageWARE Accounting Manager (henceforth: iWAM) environment 2- 27
2.7 Installing the Key Switch Unit 2- 27
2.7.1 Checking Contents (Key Switch Unit-A2) 2- 27
2.7.2 Turning off the Host Machine 2- 28
2.7.3 Installation Procedures 2- 28
2.7.4 Checking After the Installation 2- 29
2.8 Installing the Reader Heater 2- 30
2.8.1 Checking the Attachments (Reader Heater Unit-F1) 2- 30
2.8.2 Turning Off the Host Machine 2- 30
2.8.3 Installation Procedure 2- 30
2.9 Installing the Cassette Heater 2- 37
2.9.1 Checking the Attachments (Cassette Heater Kit-E1) 2- 37
2.9.2 Checking the Attachments (Cassette Heater Unit-24) 2- 38
2.9.3 Turning Off the Host Machine 2- 38
2.9.4 Installation Procedure (Cassette Heater Kit-E1) 2- 38
2.9.5 Installation Procedure (Cassette Heater Unit-24) 2- 39
2.10 Installing the Deck Heater 2- 41

2.10.1 Checking the Contents 2- 41
2.10.2 Installation Procedure 2- 41
2.11 Installing the Voice Guidance Kit 2- 47
2.11.1 Checking Contents (Voice Guidance Kit-A2) 2- 47
2.11.2 Turning off the Host Machine 2- 48
2.11.3 Installation Procedures 2- 48

Chapter 3 Basic Operation

3.1 Construction 3- 1
3.1.1 Functional Construction 3- 1
3.2 Basic Sequence 3- 1
3.2.1 Basic Sequence When the Power Is ON 3- 1
3.2.2 Basic Sequence of Operations 3- 2

Chapter 4 Basic Operations (As a Printer)

4.1 Construction of the Electrical Circuitry 4- 1
4.1.1 Configuration of Main PCBs 4- 1
4.1.2 DC Controller PCB 1 (IMG) 4- 1
4.1.3 DC Controller PCB 2 (MAISY) 4- 2
4.2 Basic Sequence 4- 3
4.2.1 Basic Sequence of Operations 4- 3
4.2.2 Basic Sequence of Operations 4- 4

Chapter 5 Main Controller

5.1 Construction 5- 1
5.1.1 Configuration/Functions 5- 1
5.2 Construction of the Electrical Circuitry 5- 2
5.2.1 Main Controller Circuit Board (MAIN) 5- 2
5.2.2 SRAM Circuit Board 5- 2
5.3 Start-Up Sequence 5- 3
5.3.1 Overview 5- 3
5.3.2 Start-Up Sequence 5- 3
5.4 Actions when HDD Error 5- 5
5.4.1 E602 Details 5- 5
5.5 Image Processing 5- 7
5.5.1 Overview of the Flow of Image Data 5- 7
5.5.2 Reader Input Image Processing 5- 8
5.5.3 Printer Output Image Processing 5- 8
5.5.4 Compression, Decompression, and Edit Processing Blocks 5- 9
5.6 Flow of Image Data 5- 10
5.6.1 Flow of Image Data for Copier Functions 5- 10
5.6.2 Flow of Image Data for Box Functions 5- 10
5.6.3 Flow of Image Data for SEND Functions 5- 11
5.6.4 Flow of Image Data for Fax Transmission Functions 5- 11
5.6.5 Flow of Image Data for Fax Reception Functions 5- 12
5.6.6 Flow of Image Data for PDL Functions 5- 12
5.7 Parts Replacement Procedure 5- 14
5.7.1 Main Controller Box 5- 14
5.7.1.1 Preparation for Removing the Main Controller Box 5- 14
5.7.1.2 Removing the Main Controller Box 5- 14
5.7.1.3 Removing the Main Controller Box 5- 14
5.7.2 Main Controller PCB (main) 5- 14
5.7.2.1 Preparation for Removing the Main Controller PCB (main) 5- 14

5.7.2.2 Removing the Main Controller PCB (main) 5- 14
5.7.3 Main Controller PCB (sub R-A) 5- 17
5.7.3.1 Preparation for Removing the Main Controller PCB (sub R-A) 5- 17
5.7.3.2 Removing the Main Controller PCB (sub R-A) 5- 17
5.7.3.3 Removing the Main Controller PCB (sub R-A) 5- 18
5.7.4 Main Controller PCB (sub PDRM-A) 5- 19
5.7.4.1 Preparation for Removing the Main Controller PCB (sub PDRM-EF-A) 5- 19
5.7.4.2 Removing the Main Controller PCB (sub PDRM-EF-A) 5- 19
5.7.5 Main Controller PCB (sub SJ-A) 5- 19
5.7.5.1 Preparation for Removing the Main Controller PCB (sub SJ-A) 5- 19
5.7.5.2 Removing the Main Controller PCB (sub SJ-A) 5- 19
5.7.5.3 Preparation for Removing the Main Controller PCB (sub S-JJ) 5- 20
5.7.5.4 Removing the Main Controller PCB (sub S-JJ) 5- 20
5.7.6 Main Controller PCB (sub LAN-A) 5- 21
5.7.6.1 Preparation for Removing the Main Controller PCB (sub LAN-bar-C) 5- 21
5.7.6.2 Removing the Main Controller PCB (sub LAN-bar-C) 5- 21
5.7.7 Main Controller PCB (sub RB-A) 5- 21
5.7.7.1 Preparation for Removing the Main Controller PCB (sub RB-A) 5- 21
5.7.7.2 Removing the Main Controller PCB (sub RB-A) 5- 21
5.7.8 SRAM PCB 5- 22
5.7.8.1 Preparation for Removing the SRAM PCB 5- 22
5.7.8.2 Removing the SRAM PCB 5- 22
5.7.8.3 When Replacing the SRAM PCB 5- 23
5.7.9 Boot ROM PCB 5- 23
5.7.9.1 Preparation for Removing the Boot ROM PCB 5- 23
5.7.9.2 Removing the Boot ROM PCB 5- 23
5.7.10 Image Memory (SDRAM) 5- 24
5.7.10.1 Preparation for Removing the Image Memory (SDRAM) 5- 24
5.7.10.2 Removing the Image Memory (SDRAM) PCB 5- 24
5.7.11 HDD 5- 25
5.7.11.1 Preparation for Removing the HDD 5- 25
5.7.11.2 Removing the HDD 5- 25
5.7.11.3 When Replacing the HDD 5- 25
5.7.12 Controller Fan 5- 26
5.7.12.1 Preparation for Removing the Controller Fan 5- 26
5.7.12.2 Removing the Controller Fan 5- 26

Chapter 6 Original Exposure System

6.1 Construction 6- 1
6.1.1 Specifications, Control Mechanisms, and Functions 6- 1
6.1.2 Major Components 6- 1
6.1.3 Construction of the Control System 6- 5
6.1.4 Reader Controller PCB 6- 7
6.2 Basic Sequence 6- 7
6.2.1 Basic Sequence of Operation at Power-On 6- 7
6.2.2 Basic Sequence of Operation in Response to a Press on the Start Key 6- 8
6.3 Various Control Mechanisms 6- 9
6.3.1 Controlling the Scanner Drive System 6- 9
6.3.1.1 Overview 6- 9
6.3.1.2 Controlling the Scanner Motor 6- 10
6.3.2 Enlargement/Reduction 6- 11
6.3.2.1 Changing the Magnification in Main Scanning Direction 6- 11
6.3.2.2 Changing the Magnification in Sub Scanning Direction 6- 11
6.3.3 Controlling the Scanning Lamp 6- 11
6.3.3.1 Overview 6- 11
6.3.3.2 Scanning Lamp 6- 12
6.3.3.3 Turning On and Off the Scanning Lamp 6- 12
6.3.4 Detecting the Size of Originals 6- 12

6.3.4.1 Identifying the Size of Originals 6- 12
6.3.4.2 Points of Measurement Used for Original Size Identification 6- 12
6.3.4.3 Overview of Operation 6- 14
6.3.5 Dirt Sensor Control 6- 15
6.3.5.1 Stream Reading Dust Detection Control 6- 15
6.3.5.2 White Plate Dust Detection Control 6- 16
6.3.6 Image Processing 6- 17
6.3.6.1 Overview 6- 17
6.3.6.2 CCD Drive 6- 18
6.3.6.3 CCD Gain Correction, Offset Correction 6- 19
6.3.6.4 CCD Output A/D Conversion 6- 19
6.3.6.5 Outline of Shading Correction 6- 19
6.3.6.6 Shading Adjustment 6- 19
6.3.6.7 Shading Correction 6- 19
6.4 Parts Replacement Procedure 6- 20
6.4.1 Copyboard Glass 6- 20
6.4.1.1 Removing the Copyboard Glass 6- 20
6.4.2 Exposure Lamp 6- 20
6.4.2.1 Preparation for Removing the Scanning Lamp 6- 20
6.4.2.2 Removing the Scanning Lamp 6- 20
6.4.2.3 After Replacing the Scanning Lanp 6- 21
6.4.3 Reader Controller PCB 6- 21
6.4.3.1 Preparation for Removing the Reader Controller PCB 6- 21
6.4.3.2 Removing the Reader Controller PCB 6- 21
6.4.3.3 After Replacing the Reader Controller PCB 6- 22
6.4.3.4 After Replacing the Reader Controller PCB 6- 22
6.4.4 Interface PCB 6- 23
6.4.4.1 Preparation for Removing the Interface PCB 6- 23
6.4.4.2 Removing the Interface PCB 6- 23
6.4.4.3 Removing the Interface PCB 6- 23
6.4.4.4 Points to Note When Attaching the Interface PCB 6- 24
6.4.5 Inverter PCB 6- 24
6.4.5.1 Preparation for Removing the Inverter PCB 6- 24
6.4.5.2 Removing the Inverter PCB 6- 24
6.4.5.3 After Replacing the Inverter PCB 6- 25
6.4.6 CCD Unit 6- 25
6.4.6.1 Preparation for Removing the CCD Unit 6- 25
6.4.6.2 Removing the CCD Unit 6- 25
6.4.6.3 After Replacing the CCD Unit 6- 25
6.4.6.4 After Replacing the CCD Unit 6- 26
6.4.7 Scanner Motor 6- 26
6.4.7.1 Preparation for Removing the Scanner Motor 6- 26
6.4.7.2 Removing the Scanner Motor 6- 26
6.4.7.3 Attaching the Scanner Motor 6- 26
6.4.8 ADF Open/Close Sensor 6- 27
6.4.8.1 Preparation for Removing the ADF Open /Close Sensor 6- 27
6.4.8.2 Removing the ADF Open/Closed Sensor 6- 27
6.4.9 Scanner HP Sensor 6- 27
6.4.9.1 Preparation for Removing the Mirror Base Home Position Sensor 6- 27
6.4.9.2 Removing the Mirror Base Home Position Sensor 6- 27
6.4.10 Original Sensor 6- 28
6.4.10.1 Preparation for Removing the Original Size Sensor 6- 28
6.4.10.2 Removing the Original Size Sensor 6- 28
6.4.11 Cooling Fan 6- 28
6.4.11.1 Preparation for Removing the Cooling Fan 6- 28
6.4.11.2 Removing the Cooling Fan 6- 28
6.4.12 Scanner Drive Cable 6- 29
6.4.12.1 Preparation for Removing the Scanner Drive Cable 6- 29
6.4.12.2 Removing the Scanner Drive Cable 6- 29
6.4.12.3 Attaching the Scanner Drive Cable 6- 32

6.4.12.4 Adjusting the Position of the No. 1/No. 2 Mirror Base 6- 33

Chapter 7 Image Processing System

7.1 Digital Image Processing 7- 1
7.1.1 Overview 7- 1
7.1.2 Shading Correction 7- 1

Chapter 8 Laser Exposure

8.1 Construction 8- 1
8.1.1 Specifications, Control Mechanisms, and Functions 8- 1
8.1.2 Major Components 8- 1
8.1.3 Construction of the Control System 8- 2
8.2 Basic Sequence 8- 3
8.2.1 Basic sequence of operation 8- 3
8.3 Various Control 8- 4
8.3.1 Controlling the Laser Activation Timing 8- 4
8.3.1.1 ON/OFF Control 8- 4
8.3.1.2 Controlling Synchronization in Main Scanning Direction 8- 6
8.3.1.3 Controlling Synchronization in Sub Scanning Direction 8- 7
8.3.2 Controlling the Intensity of Laser Light 8- 8
8.3.2.1 APC Control 8- 8
8.3.2.2 PWM Control 8- 8
8.3.3 Controlling the Laser Scanner Motor 8- 8
8.3.3.1 Laser scanner motor control 8- 8
8.3.3.2 Laser Scanner Motor Speed Change Control 8- 9
8.3.4 Controlling the Laser Shutter 8- 10
8.3.4.1 Laser shutter control 8- 10
8.3.5 Correcting Image Displacement 8- 10
8.3.5.1 Outline 8- 10
8.3.5.2 Timing of Color Displacement Detection/Correction 8- 11
8.3.5.3 Detecting/Correcting Color Displacement in Sub Scanning Direction 8- 11
8.3.5.4 Detecting/Correcting the Angle in Main Scanning Direction 8- 12
8.3.5.5 Detecting/Correcting Color Displacement in Main Scanning Direction 8- 13
8.3.5.6 Detecting/Correcting Changes in the Reproduction Ratio in Main Scanning Direction 8- 14
8.4 Parts Replacement Procedure 8- 16
8.4.1 Laser Unit 8- 16
8.4.1.1 Preparation for Removing the Laser Unit 8- 16
8.4.1.2 Removing the Laser Unit 8- 16
8.4.1.3 After Replacing the Laser Unit 8- 17

Chapter 9 Image Formation

9.1 Construction 9- 1
9.1.1 Specifications, Control Mechanisms, and Functions 9- 1
9.1.2 Major Components of the Image Formation System 9- 2
9.1.3 Charging Specifications 9- 3
9.2 Image Formation Process 9- 4
9.2.1 Image Formation Process (general) 9- 4
9.2.2 Image Formation Process (image formation) 9- 5
9.2.3 Image Formation Process (transfer) 9- 5
9.3 Basic Sequence 9- 6
9.3.1 At Power-On (1) 9- 6
9.3.2 At Power-OnÅi2Åj 9- 7
9.3.3 During Copying/Printing Operations (normal speed) 9- 7
9.3.4 Making Copies/Prints (half speed) 9- 8
9.3.5 After Replacing the Drum Unit (D-UNIT) 9- 8

9.3.6 Printing Originals Containing a Color Page 9- 9
9.4 Driving and Controlling the Image Formation System 9- 9
9.4.1 Driving and Controlling the Image Formation System and the High-Voltage System 9- 9
9.5 Image Stabilization Control 9- 10
9.5.1 Outline of Image Quality Control 9- 10
9.5.2 Automated Image Stabilization Control 9- 10
9.5.3 ATR Control 9- 13
9.5.4 Discharge Current Level Control 9- 14
9.5.5 ATVC Control (transfer bias level correction) 9- 14
9.5.6 PASCAL Control (image gradation) 9- 14
9.5.7 SALT-Dmax Control (development characteristics correction) 9- 15
9.5.8 SALT-Dhalf Control (development characteristics correction) 9- 15
9.5.9 Auto Gradation Control 9- 16
9.6 Drum Unit 9- 17
9.6.1 Outline of the Drum Unit 9- 17
9.6.1.1 Outline of the Drum Unit 9- 17
9.6.1.2 Drum Receptacle Presence / Absence Detection 9- 17
9.6.1.3 Drum Unit (D-UNIT) Drive Control 9- 18
9.6.2 Developing Assembly 9- 18
9.6.2.1 Construction of the Developing Assembly 9- 18
9.6.2.2 Controlling the Developing Bias 9- 19
9.6.3 Auxiliary Brush 9- 20
9.6.3.1 Construction of the Auxiliary Brush 9- 20
9.6.3.2 Controlling the Auxiliary Bias 9- 21
9.6.4 Charging Mechanism 9- 24
9.6.4.1 Construction of the Charging Mechanism 9- 24
9.6.4.2 Controlling the Charging Bias 9- 24
9.7 Toner Container 9- 26
9.7.1 Outline of the Toner Container 9- 26
9.7.2 Toner Receptacle Presence / Absence Detection 9- 26
9.7.3 Controlling the Toner Container Drive 9- 27
9.7.4 Checking the Level of Toner 9- 27
9.7.5 Controlling the Supply of Toner 9- 28
9.8 Transfer Unit 9- 28
9.8.1 Outline of the Transfer Unit 9- 28
9.8.1.1 Outline of the Transfer Unit 9- 28
9.8.1.2 Transfer Unit Drive Control 9- 29
9.8.2 Controlling the Transfer Bias 9- 29
9.8.2.1 Transfer Bias Control 9- 29
9.8.3 Cleaning 9- 31
9.8.3.1 Intermediate Transfer Belt (ITB) 9- 31
9.8.3.2 Secondary External Roller 9- 31
9.8.3.3 Waste Toner Collection Mechanism 9- 32
9.8.4 Separation Mechanism 9- 32
9.8.4.1 Separation 9- 32
9.9 Parts Replacement Procedure 9- 34
9.9.1 Drum ITB Motor 9- 34
9.9.1.1 Preparation for Removing the Drum ITB Motor 9- 34
9.9.1.2 Removing the Drum ITB Motor 9- 34
9.9.2 Drum Drive Unit 9- 34
9.9.2.1 Preparation for Removing the Drum Drive Unit 9- 34
9.9.2.2 Removing the Drum Drive Unit 9- 35
9.9.3 Drive Roller 9- 35
9.9.3.1 Preparation for Removing the Drive Roller 9- 35
9.9.3.2 Removing the Drive Roller 9- 36
9.9.4 Developing Motor (Bk/Y/M/C) 9- 36
9.9.4.1 Preparation for Removing the Developing Motor 9- 36
9.9.4.2 Removing the Developing Motor 9- 36

9.9.5 Secondary Transfer Unit 9- 37
9.9.5.1 Preparation for Removing the Secondary Transfer Unit 9- 37
9.9.5.2 Removing the Secondary Transfer Unit 9- 37
9.9.6 Intermediate Transfer Unit 9- 38
9.9.6.1 Preparation for Removing the Intermediate Transfer Unit 9- 38
9.9.6.2 Removing the Intermediate Transfer Unit 9- 38
9.9.7 Transfer Cleaning Unit 9- 38
9.9.7.1 Preparation for Removing the Transfer Cleaning Unit 9- 38
9.9.7.2 Removing the Transfer Cleaning Unit 9- 39
9.9.8 Intermediate Transfer Belt 9- 39
9.9.8.1 Preparation for Removing the Intermediate Transfer Belt 9- 39
9.9.8.2 Removing the Intermediate Transfer Belt 9- 39
9.9.9 Intermediate Transfer Belt Tension Roller 9- 41
9.9.9.1 Preparation for Removing the Intermediate Transfer Belt Tension Roller 9- 41
9.9.9.2 Removing the Intermediate Transfer Belt Tension Roller 9- 41
9.9.10 Primary Transfer Roller 9- 41
9.9.10.1 Preparation for Removing the Primary Transfer Roller 9- 41
9.9.10.2 Removing the Primary Transfer Roller 9- 41
9.9.11 Secondary Transfer External Roller 9- 42
9.9.11.1 Preparation for Removing the Secondary Transfer External Roller 9- 42
9.9.11.2 Removing the Secondary Transfer External Roller 9- 42
9.9.12 Secondary Transfer Internal Roller 9- 43
9.9.12.1 Preparation for Removing the Secondary Transfer Internal Roller 9- 43
9.9.12.2 Removing the Secondary Transfer Internal Roller 9- 43
9.9.13 Toner Container Drive Unit 9- 43
9.9.13.1 Preparation for Removing the Toner Container Drive Unit 9- 43
9.9.13.2 Removing the Toner Container Drive Unit 9- 44
9.9.14 Waste Toner Detection PCB 9- 44
9.9.14.1 Preparation for Removing the Waste Toner Detection PCB 9- 44
9.9.14.2 Removing the Waste Toner Detection PCB 9- 45
9.9.15 Feedscrew Rotation Sensor 9- 45
9.9.15.1 Preparation for Removing the Feedscrew Rotation Sensor 9- 45
9.9.15.2 Removing the Feedscrew Rotation Sensor 9- 47
9.9.16 Tone Container Motor 9- 47
9.9.16.1 Preparation for Removing the Toner Container Motor 9- 47
9.9.16.2 Removing the Toner Container Motor 9- 48
9.9.17 Waste Toner Feedscrew Case 9- 48
9.9.17.1 Preparation for Removing the Waste Toner Feedscrew Case 9- 48
9.9.17.2 Removing the Waste Toner Feedscrew Case 9- 49
9.9.18 Pattern Reader Unit 9- 49
9.9.18.1 Preparation for Removing the Pattern Reader Unit 9- 49
9.9.18.2 Removing the Pattern Reader Unit 9- 49
9.9.18.3 Procedure After Replacing the Pattern reader unit 9- 50
9.9.19 Auto Registration Sensor PCB 9- 50
9.9.19.1 Preparation for Removing the Auto Registration Sensor PCB 9- 50
9.9.19.2 Removing the Auto Registration Sensor PCB 9- 50
9.9.20 SALT Sensor 9- 51
9.9.20.1 Preparation for Removing the SALT Sensor 9- 51
9.9.20.2 Removing the SALT Sensor 9- 51

Chapter 10 Pickup/Feeding System

10.1 Construction 10- 1
10.1.1 Specifications, Control Mechanisms, and Functions 10- 1
10.1.2 Arrangement of he Units 10- 1
10.1.3 Arrangement of Rollers 10- 1
10.1.4 Diagram of the Paper Paths 10- 2
10.1.5 Arrangement of Sensors 10- 3
10.1.6 Arrangement of the Clutches and Solenoids 10- 4

10.1.7 Route of Dive 10- 4
10.2 Basic Sequence 10- 5
10.2.1 Basic Sequence of Operations at Power-On 10- 5
10.2.2 Basic Sequence of Operations in Response to a Press on the Start Key 10- 5
10.3 Detecting Jams 10- 6
10.3.1 Delay Jams 10- 6
10.3.1.1 Delay Jam in the Cassette Pickup Assembly 10- 6
10.3.1.2 Delay Jam Outside the Cassette Pickup Assembly 10- 6
10.3.2 Stationary Jams 10- 7
10.3.2.1 Stationary Jams 10- 7
10.3.2.2 Stationary Jams at Power-On 10- 7
10.4 Cassette 10- 7
10.4.1 Identifying the Paper Size 10- 7
10.4.2 Detecting the Level of Paper 10- 8
10.5 Cassette Pick-Up Unit 10- 10
10.5.1 Outline 10- 10
10.5.2 Basci Sequence of Operations 10- 11
10.6 Manual Feed Pickup Unit 10- 11
10.6.1 Outline 10- 11
10.6.2 Basic Sequence of Operations 10- 12
10.6.3 Identifying the Size of Paper 10- 12
10.6.4 Detecting the Presence/Absence of Paper 10- 13
10.6.5 Detecting the Last paper 10- 14
10.7 Registration Unit 10- 15
10.7.1 Outline 10- 15
10.8 Duplex Feeding Unit 10- 16
10.8.1 Outline 10- 16
10.8.2 Controling Horizontal Registration 10- 17
10.8.3 Face-Down Delivery, A4, 5 Sheets in Circulation 10- 18
10.8.4 Face-Down Delivery, A3, 3 Sheets in Cirucilation 10- 20
10.9 Delivery 10- 22
10.9.1 Delivery 10- 22
10.9.2 Movement in the Direction of Face-Down Delivery 10- 23
10.9.3 Movement in the Direction of Face-Up Delivery 10- 23
10.9.4 Movement for CenterTray delivery 10- 24
10.9.5 Moement for Copy Tray Dievyer 10- 24
10.10 Parts Replacement Procedure 10- 25
10.10.1 Cassette Pickup Unit 10- 25
10.10.1.1 Preparatipon for Removing the Pickup Unit 10- 25
10.10.1.2 Removing the Pickup Unit 10- 25
10.10.2 Cassette Size Detection Unit 10- 25
10.10.2.1 Preparation for Removing the Cassette Size Detection Unit 10- 25
10.10.2.2 Removing the Cassette Size Detection Unit 10- 25
10.10.3 Pre-registration Roller 10- 26
10.10.3.1 Preparation for Removing the Pre-registration Roller 10- 26
10.10.3.2 Removing the Pre-registration Roller 10- 26
10.10.4 Registration Upper Roller 10- 26
10.10.4.1 Preparation for Removing the Registration Lower Roller 10- 26
10.10.4.2 Remove the Registration Lower Roller 10- 26
10.10.5 Re-pickup Roller 10- 27
10.10.5.1 Preparation for Removing the Re-pickup Roller 10- 27
10.10.5.2 Removing the Re-pickup Roller 10- 27
10.10.6 Pickup Roller 10- 28
10.10.6.1 Preparation for Removing the Pickup Roller 10- 28
10.10.6.2 Removing the Pickup Roller 10- 28
10.10.7 Feed Roller 10- 28
10.10.7.1 Preparation for Removing the Feeding Roller 10- 28

10.10.7.2 Removing the Feeding Roller 10- 28
10.10.8 Separation Roller 10- 28
10.10.8.1 Preparation for Removing the Separation Roller 10- 28
10.10.8.2 Removing the Separation Roller 10- 28
10.10.9 Cassette Pickup Motor 10- 28
10.10.9.1 Preparation for Removing the Cassette Pickup Motor 10- 28
10.10.9.2 Removing the Cassette Pickup Motor 10- 29
10.10.10 Cassette Retry Paper Sensor 10- 29
10.10.10.1 Preparation for Removing the Cassette Retry Paper Sensor 10- 29
10.10.10.2 Removing the Cassette Retry Paper Sensor 10- 30
10.10.10.3 Points to Note When Mounting the Pickup System Sensor Mounting Plate 10- 30
10.10.11 Cassette Paper Sensor 10- 30
10.10.11.1 Preparation for Removing the Cassette Paper Sensor 10- 30
10.10.11.2 Removing the Cassette Paper Sensor 10- 31
10.10.11.3 Points to Note When Mounting the Pickup System Sensor Mounting Plate 10- 31
10.10.12 Cassette Paper Level Sensor (A/B) 10- 32
10.10.12.1 Preparation for Removing the Cassette Paper Level Sensor (A/B) 10- 32
10.10.12.2 Removing the Cassette Paper Level Sensor (A/B) 10- 32
10.10.12.3 Points to Note When Mounting the Pickup System Sensor Mounting Plate 10- 32
10.10.13 Slide Resistor 10- 33
10.10.13.1 Preparation for Removing the Slide Resistor 10- 33
10.10.13.2 Removing the Slide Resistor 10- 33
10.10.14 Cassette Pickup Solenoid 10- 34
10.10.14.1 Preparation for Removing the Cassette Pickup Solenoid 10- 34
10.10.14.2 Removing the Cassette Pickup Solenoid 10- 34
10.10.15 Manual Feed Tray Unit 10- 34
10.10.15.1 Preparation for Removing the Manual Feed Tray Unit 10- 34
10.10.15.2 Removing the Manual Feed Tray Unit 10- 34
10.10.16 Manual Feed Unit 10- 35
10.10.16.1 Removing the Manual Feed Unit 10- 35
10.10.17 Manual Feed Roller 10- 35
10.10.17.1 Preparation for Removing the Manual Feed Roller 10- 35
10.10.17.2 Removing the Manual Feed Roller 10- 35
10.10.18 Manual Feed Separation Roller 10- 36
10.10.18.1 Preparation for Removing the Manual Feed Separation Roller 10- 36
10.10.18.2 Removing the Manual Feed Separation Roller 10- 36
10.10.19 Manual Feed Last Paper Sensor 10- 37
10.10.19.1 Preparation for Removing the Manual Feed Last Paper Sensor 10- 37
10.10.19.2 Removing the Manual Feed Last Paper Sensor 10- 37
10.10.20 Manual Feed Sensor 10- 37
10.10.20.1 Preparation for Removing the Manual Feed sensor 10- 37
10.10.20.2 Removing the Manual Feed sensor 10- 37
10.10.21 Transparency Sensor (Front/Rear) 10- 38
10.10.21.1 Preparation for Removing the Transparency Sensor (front/rear) 10- 38
10.10.21.2 Removing the Transparency Sensor (front/rear) 10- 38
10.10.22 Manual Feed Pickup Solenoid 10- 39
10.10.22.1 Preparation for Removing the Manual Feed Pickup Solenoid 10- 39
10.10.22.2 Removing the Manual Feed Pickup Solenoid 10- 39
10.10.23 Registration Motor 10- 39
10.10.23.1 Preparation for Removing the Registration Motor 10- 39
10.10.23.2 Removing the Registration Motor 10- 39
10.10.24 Pre-Registration Motor 10- 39
10.10.24.1 Preparation for Removing the Pre-Registration Motor 10- 39
10.10.24.2 Removing the Pre-Registration Motor 10- 39
10.10.25 Horizontal Registration Motor 10- 40
10.10.25.1 Preparatiuon for Removing the Horizontal Registration Motor 10- 40
10.10.25.2 Removing the Horizontal Registration Motor 10- 41
10.10.26 Registration Sensor 10- 41
10.10.26.1 Preparation for Removing the Registration Sensor 10- 41
10.10.26.2 Removing the Registration Sensor 10- 41

10.10.27 Fixing/Feeder Unit 10- 41
10.10.27.1 Preparation for Removing the Fixing/Feeder Unit 10- 41
10.10.27.2 Removing the Fixing/Feeder Unit 10- 41
10.10.28 Pickup Vertical Path Roller 10- 41
10.10.28.1 Preparation for Removing the Vertical Path Roller 10- 41
10.10.28.2 Removing the Vertical Path Roller 10- 42
10.10.28.3 Points to Note When Mounting the Pickup System Sensor Mounting Plate 10- 42
10.10.29 Inside Delivery Roller 10- 43
10.10.29.1 Preparation for Removing the Inside Delivery Roller 10- 43
10.10.29.2 Removing the Inside Delivery Roller 10- 43
10.10.30 Fixing/Feeder Unit Open/Closed Sensor 10- 43
10.10.30.1 Preparation for Removing the Fixing/Feeder Unit Open/Closed Sensor 10- 43
10.10.30.2 Removing the Fixing/Feeder Unit Open/Closed Sensor 10- 44
10.10.30.3 Preparation for Removing the Fixing Feeding Unit Open/Closed Sensor 2 ..... 10- 44
10.10.30.4 Removing the Fixing Feeding Unit Open/Closed Sensor 2 ..... 10- 45
10.10.31 Fixing Arching Sensor 10- 45
10.10.31.1 Preparation forÅ@Removing the Fixing Arching Sensor 10- 45
10.10.31.2 Removing the Fixing Aching Sensor 10- 45
10.10.32 Pickup Vertical Path Cover Open/Closed Sensor 10- 46
10.10.32.1 Preparation for Removing the Pickup Vertical Path Cover Open/Closed Sensor 10- 46
10.10.32.2 Removing the Pickup Vertical Path Cover Open/Closed Sensor 10- 46
10.10.33 Fixing/Feeder Unit Open/Closed Detecting Switch 10- 46
10.10.33.1 Preparation for Removing the Fixing/Feeder Unit Open/Closed Detecting Switch 10- 46
10.10.33.2 Removing the Fixing/Feeder Unit Open/Closed Detecting Switch 10- 47
10.10.34 Drawer Connector (manual feed unit) 10- 47
10.10.34.1 Preparation for Removing the Disconnecting the Drawer Connector (manual feed unit) 10- 47
10.10.34.2 Removing the Disconnecting the Drawer Connector (manual feed unit) 10- 47
10.10.35 Drawer Connector (fixing/feeder unit) 10- 48
10.10.35.1 Preparation for Removing the Drawer Connector (fixing feeder unit) 10- 48
10.10.35.2 Removing the Drawer Connector (fixing feeder unit) 10- 48
10.10.36 Duplex Roller 1 ..... 10- 48
10.10.36.1 Preparation for Removing the Duplex Roller 1 ..... 10- 48
10.10.36.2 Removing the Duplex Roller 1 ..... 10- 48
10.10.37 Duplex Roller 2 ..... 10- 50
10.10.37.1 Preparation for Removing the Duplex Roller 2 ..... 10- 50
10.10.37.2 Removing the Duplex Roller 2 ..... 10- 50
10.10.38 Duplex Roller 3 ..... 10- 51
10.10.38.1 Preparation for Removing the Duplex Roller 3 ..... 10- 51
10.10.38.2 Removing the Duplex Roller 3 ..... 10- 52
10.10.39 Duplex Roller 4 ..... 10- 52
10.10.39.1 Preparation for Removing the Duplex Roller 4 ..... 10- 52
10.10.39.2 Removing of Duplexing Roller 4 ..... 10- 53
10.10.40 Duplex Feed Motor 10- 53
10.10.40.1 Preparation for Removing the Duplex Feed Motor 10- 53
10.10.40.2 Removing the Duplex Feed Motor 10- 53
10.10.41 Duplex Registration Sensor 10- 54
10.10.41.1 Preparation for Removing the Duplex Registration Sensor 10- 54
10.10.41.2 Removing the Duplex Registration Sensor 10- 54
10.10.42 Duplex Horizontal Registration Sensor 10- 54
10.10.42.1 Preparation for Removing the Duplex Horizontal Registration Sensor 10- 54
10.10.42.2 Removing the Duplex Horizontal Registration Sensor 10- 55
10.10.43 Duplex Pickup Sensor 10- 55
10.10.43.1 Preparation for Removing the Duplex Pickup Sensor 10- 55
10.10.43.2 Removing the Duplex Pickup Sensor 10- 57
10.10.44 Duplex Registration Clutch 10- 58
10.10.44.1 Preparation for Removing the Duplex Registration Clutch 10- 58
10.10.44.2 Removing the Duplex Registration Clutch 10- 58
10.10.45 Duplex Pickup Clutch 10- 59
10.10.45.1 Preparation for Removing the Duplex Pickup Clutch 10- 59
10.10.45.2 Removing the Duplex Pickup Clutch 10- 59

10.10.46 Delivery Vertical Path Unit 10- 60
10.10.46.1 Preparation for Removing the Delivery Vertical Path Unit 10- 60
10.10.46.2 Removing the Delivery Vertical Path Unit 10- 60
10.10.46.3 Removing the Delivery Vertical Path Cover 10- 61
10.10.46.4 Points to note when mouting the delivery vertical path unit 10- 61
10.10.47 Face-Down Delivery Roller 1 ..... 10- 62
10.10.47.1 Preparation for Removing the Face-Down Delivery Roller 1 ..... 10- 62
10.10.47.2 Removing the Face-Down Delivery Roller 1 ..... 10- 63
10.10.48 Face-Up Delivery Roller 10- 63
10.10.48.1 Preparation for Removing the Face-Up Delivery Roller 10- 63
10.10.48.2 Removing the Face-Up Delivery Roller 10- 64
10.10.49 Delivery Vertical Path Roller 1 ..... 10- 65
10.10.49.1 Preparation for Removing the Delivery Vertical Path Roller 1 ..... 10- 65
10.10.49.2 Removing the Delivery Vertical Path Roller 1 ..... 10- 66
10.10.50 Delivery Vertical Path Roller 2 ..... 10- 66
10.10.50.1 Preparation for Removing the Delivery Vertical Path Roller 2 ..... 10- 66
10.10.50.2 Removing the Delivery Vertical Path Roller 2 ..... 10- 67
10.10.51 Face-Down Delivery Motor 10- 67
10.10.51.1 Preparation for Removing the Face-Down Delivery Motor 10- 67
10.10.51.2 Removing the Face-Down Delivery Motor 10- 67
10.10.52 Delivery Vertical Path Motor 10- 67
10.10.52.1 Preparation for Removing the Delivery Vertical Path Motor 10- 67
10.10.52.2 Removing the Delivery Vertical Path Motor 10- 67
10.10.53 Face-Down Delivery Sensor 1 ..... 10- 68
10.10.53.1 Preparation for Removing the Face-Down Delivery Sensor 1 ..... 10- 68
10.10.53.2 Removing the Face-Down Delivery Sensor 1 ..... 10- 68
10.10.54 Center Delivery Tray Full sensor 10- 69
10.10.54.1 Preparaion for Removing the Center Delivery Tray Full sensor 10- 69
10.10.54.2 Removing the Center Delivery Tray Full sensor 10- 69
10.10.55 Face-Down Delivery Sensor 2 ..... 10- 69
10.10.55.1 Removing the Face-Down Delivery Sensor 2 ..... 10- 69
10.10.55.2 Removing the Face-Down Delivery Sensor 2 ..... 10- 69
10.10.56 Delivery Vertical Path Cover Open/Closed Sensor 10- 70
10.10.56.1 Preparation for Removing the Delivery Vertical Path Cover Open/Closed Sensor 10- 70
10.10.56.2 Removing the Delivery Vertical Path Cover Open/Closed Sensor 10- 70
10.10.57 Delivery Path Switching Solenoid 1 ..... 10- 70
10.10.57.1 Preparation for Removing the Delivery Path Switching Solenoid 1 ..... 10- 70
10.10.57.2 Removing the Delivery Path Switching Solenoid 1 ..... 10- 71
10.10.58 Delivery Path Switching Solenoid 2 ..... 10- 71
10.10.58.1 Preparation for Removing the Delivery Path Switching Solenoid 2 ..... 10- 71
10.10.58.2 Removing the Delivery Path Switching Solenoid 2 ..... 10- 71
10.10.59 Face-Down Delivery Roller 1 Drive Belt 10- 71
10.10.59.1 Preparation for Removing the Face-Down Delivery Roller 1 Drive Belt 10- 71
10.10.59.2 Removing the Face-Down Delivery Roller 1 Drive Belt 10- 71

Chapter 11 Fixing System

11.1 Construction 11- 1
11.1.1 Specifications, Control Mechanisms, and Functions 11- 1
11.1.2 Major Components 11- 1
11.1.3 Control system composition 11- 3
11.2 Various Control Mechanisms 11- 3
11.2.1 Controlling the Speed of the Fixing Roller 11- 3
11.2.1.1 Overview 11- 3
11.2.1.2 Controlling the Speed According to Paper Type 11- 4
11.2.1.3 Fixing Arch Control 11- 4
11.2.2 Controlling the Fixing Roller Temperature 11- 6
11.2.2.1 Overview 11- 6
11.2.2.2 At Power-On(Fixing belt less than 100Åé) 11- 6

11.2.2.3 At Power-On(Fixing belt 100deg C or more) 11- 8
11.2.2.4 Standby mode 11- 8
11.2.2.5 Print mode 11- 10
11.2.2.6 Temperature rise at end 11- 11
11.2.2.7 Measurements against heating of fixing tension roller 11- 11
11.2.2.8 In case of recovery from sleep-mode 11- 11
11.2.2.9 At Low-Power/Power Save Mode 11- 11
11.2.2.10 The service mode regarding the fixing temperature control. 11- 12
11.2.3 Detecting the Passage of Paper 11- 12
11.2.3.1 Detection of paper passage 11- 12
11.2.4 Belting inclined Control 11- 13
11.2.4.1 Belt Displacement Control 11- 13
11.2.4.2 Belt Full Displacement Temporary Escape Mode 11- 17
11.2.5 Checking Life 11- 19
11.2.5.1 Lifetime Detection of Fixing Assembly Belt Unit 11- 19
11.3 Belt Pressurizing Mechanism 11- 20
11.3.1 Pressurizing mechanism of pressure belt 11- 20
11.4 Protective Functions 11- 21
11.4.1 Power break due to thermo-switch operation at unusual temperature rise. 11- 21
11.5 Parts Replacement Procedure 11- 22
11.5.1 Notice When Handling the Fixing Assembly 11- 22
11.5.1.1 Notice When Handling the Fixing Assembly 11- 22
11.5.2 Fixing Drive Unit 11- 22
11.5.2.1 Removing the Fixing Drive Unit 11- 22
11.5.3 Fixing Assembly 11- 22
11.5.3.1 Preparation for Removing the Fixing Assembly 11- 22
11.5.3.2 Removing the Fixing Assembly 11- 22
11.5.4 IH Unit 11- 23
11.5.4.1 Preparation for Removing the IH Unit 11- 23
11.5.4.2 Removing the IH Unit 11- 23
11.5.5 Fixing Displacement Drive Unit 11- 24
11.5.5.1 Preparation for Removing the Belt Displacement Control Motor Unit 11- 24
11.5.5.2 Removing the Belt Displacement Control Motor Unit 11- 24
11.5.6 Fixing Unit 11- 26
11.5.6.1 Preparation for Removing the Fixing Unit 11- 26
11.5.6.2 Removing the Fixing Unit 11- 26
11.5.6.3 Replacing the Fixing Unit (Service Parts) 11- 28
11.5.6.4 Procedure at Replacing the Fixing Unit 11- 29
11.5.7 Fixing Delivery Lower Unit 11- 30
11.5.7.1 Preparation for Removing the Fixing Delivery Lower Unit 11- 30
11.5.7.2 Removing the Fixing Delivery Lower Unit 11- 30
11.5.8 Fixing Delivery Upper Unit 11- 30
11.5.8.1 Preparation for Removing the Fixing Delivery Upper Unit 11- 30
11.5.8.2 Removing the Fixing Delivery Upper Unit 11- 30
11.5.9 Pressure Heater 11- 31
11.5.9.1 Preparation for Removing the Pressure Heater 11- 31
11.5.9.2 Removing the Pressure Heater 11- 31
11.5.10 Fixing Inlet Lower Guide 11- 31
11.5.10.1 Preparation for Removing the Fixing Inlet Lower Guide 11- 31
11.5.10.2 Removing the Fixing Inlet Lower Guide 11- 32
11.5.11 Fixing Inlet Sensor 11- 32
11.5.11.1 Preparation for Removing the Fixing Inlet Sensor 11- 32
11.5.11.2 Removing the Fixing Inlet Sensor 11- 32
11.5.12 Fixing Delivery Sensor 11- 32
11.5.12.1 Preparation for Removing the Fixing Delivery Sensor 11- 32
11.5.12.2 Removing the Fixing Delivery Sensor 11- 32
11.5.13 Fixing Belt Position Sensor Unit 11- 32
11.5.13.1 Preparation for Removing the Fixing Belt Position Sensor Unit 11- 32
11.5.13.2 Removing the Fixing Belt Position Sensor Unit 11- 33

11.5.14 Fixing Releasing HP Sensor 11- 33
11.5.14.1 Preparation for Removing the Fixing Release HP Sensor 11- 33
11.5.14.2 Removing the Fixing Release HP Sensor 11- 33
11.5.15 Fixing Wrap Sensor 11- 34
11.5.15.1 Preparation for Removing the Fixing Wrap Sensor 11- 34
11.5.15.2 Removing the Fixing Wrap Sensor 11- 34
11.5.16 Fixing Motor Unit 11- 34
11.5.16.1 Preparation for Removing the Fixing Motor Unit 11- 34
11.5.16.2 Removing the Fixing Motor Unit 11- 34
11.5.17 Fixing Pressure Motor Unit 11- 34
11.5.17.1 Preparation for Removing the Fixing Pressure Motor Unit 11- 34
11.5.17.2 Removing the Fixing Pressure Motor Unit 11- 34
11.5.18 Fixing Belt Displacement Control Motor Unit 11- 35
11.5.18.1 Preparation for Removing the Fixing Belt Displacement Control Motor Unit 11- 35
11.5.18.2 Removing the Fixing Belt Displacement Control Motor Unit 11- 35
11.5.19 Pressure Belt Displacement Control Motor Unit 11- 35
11.5.19.1 Preparation for Removing the Pressure Belt Displacement Control Motor Unit 11- 35
11.5.19.2 Removing the Pressure Belt Displacement Control Motor Unit 11- 35

Chapter 12 Externals and Controls

12.1 Control Panel 12- 1
12.1.1 Outline 12- 1
12.1.2 LCD Processing 12- 1
12.1.3 LCD Contras Adjustment 12- 1
12.1.4 Functions of the Control Panel CPU 12- 1
12.2 Counters 12- 1
12.2.1 Outline 12- 1
12.2.2 Signal-Sided Print and 2nd Side of a Double-Sided Print 12- 2
12.2.3 Side of a Duplex Print (duplex model only) 12- 3
12.3 Fans 12- 3
12.3.1 Outline 12- 3
12.3.2 Fan Sequence 12- 4
12.4 Power Supply 12- 5
12.4.1 Power Supply 12- 5
12.4.1.1 Timing of Power Supply 12- 5
12.4.1.2 Wiring to Various Accessories 12- 5
12.4.1.3 Power Supply Path to Reader Unit 12- 6
12.4.1.4 Power Supply Path in Printer 12- 7
12.4.1.5 Power Supply Path in Pedestal (Accessory) 12- 8
12.4.2 Rated Output of DC Power Supply PCB 12- 9
12.4.2.1 Rated Output of DC Power Supply PCB 12- 9
12.4.2.2 Rated Output of the Optional DC Power Supply PCB 12- 10
12.4.3 Protection Function 12- 10
12.4.3.1 Protective Mechanisms 12- 10
12.4.4 Backup Battery 12- 10
12.4.4.1 Battery for Backup 12- 10
12.4.4.2 Backup Power Supply 12- 10
12.4.5 Energy-Saving Function 12- 11
12.4.5.1 Outline 12- 11
12.4.5.2 SNMP setup 12- 12
12.5 Parts Replacement Procedure 12- 14
12.5.1 External Covers 12- 14
12.5.1.1 Front Cover 12- 14
12.5.1.2 Upper Right Cover 12- 14
12.5.1.3 Right Front Cover 12- 14
12.5.1.4 Rear Right Cover 12- 14
12.5.1.5 Upper Left Cover 12- 14

12.5.1.6 Left Lower Cover 12- 15
12.5.1.7 Upper Left Cover (small) 12- 15
12.5.1.8 Left Rear Cover (Upper) 12- 15
12.5.1.9 Left Rear Cover (Lower) 12- 15
12.5.1.10 Rear Fan Cover 12- 15
12.5.1.11 Rear Upper Cover 12- 16
12.5.1.12 Rear Lower Cover 12- 16
12.5.1.13 Rear Left Cover (Upper) 12- 17
12.5.1.14 Rear Left Cover (Lower) 12- 17
12.5.1.15 Inside Cover (Upper) 12- 17
12.5.1.16 Inside Cover (Lower) 12- 17
12.5.1.17 Reader Rear Cover 12- 18
12.5.1.18 Manual Feeding Unit Cover 12- 19
12.5.2 Developing Drive Unit 12- 19
12.5.2.1 Preparation for Removing the Developing Drive Unit 12- 19
12.5.2.2 Removing the Developing Drive Unit 12- 19
12.5.3 High-Voltage Unit 12- 20
12.5.3.1 Preparation for Removing the High-Voltage Unit1 ..... 12- 20
12.5.3.2 Removing the High-Voltage Unit1 ..... 12- 20
12.5.3.3 Preparation for Removing the High-Voltage Unit 2 ..... 12- 20
12.5.3.4 Removing the High-Voltage Unit 2 ..... 12- 20
12.5.4 Secondary Transfer High-Voltage Unit 12- 20
12.5.4.1 Preparation for Removing the Secondary Transfer Hign-Voltage Unit 12- 20
12.5.4.2 Removing the Secondary Transfer Hign-Voltage Unit 12- 20
12.5.5 IH Power Supply Assembly 12- 21
12.5.5.1 Preparation for Removing the IH Power Supply Unit 12- 21
12.5.5.2 Removing the IH Power Supply Unit 12- 21
12.5.6 DC Power Supply Unit 12- 21
12.5.6.1 Preparation for Removing the DC Power Supply Unit 12- 21
12.5.6.2 Removing the DC Power Supply Unit 12- 21
12.5.6.3 Removing the DC Power Supply Unit 12- 22
12.5.7 Control Panel 12- 22
12.5.7.1 Preparation for Removing the Control Panel 12- 22
12.5.7.2 Removing the Control Panel 12- 22
12.5.8 Control Panel LCD Unit 12- 23
12.5.8.1 Preparation for Removing the Control Panel LCD Unit 12- 23
12.5.8.2 Removing the Control Panel LCD Unit 12- 23
12.5.9 DC Controller Box 12- 23
12.5.9.1 Preparation for Removing the DC Controller Box2 ..... 12- 23
12.5.9.2 Removing the DC Controller Box 2 ..... 12- 24
12.5.9.3 Preparation for Removing the DC Controller Box1 ..... 12- 24
12.5.9.4 Removing the DC Controller Box 1 ..... 12- 24
12.5.10 DC Controller PCB 12- 25
12.5.10.1 Preparation for Removing the DC Controller PCB2 (MAISY) 12- 25
12.5.10.2 Removing the DC Controller PCB2 (MAISY) 12- 25
12.5.10.3 Preparation for Removing the DC Controller PCB1 (IMG) 12- 25
12.5.10.4 Removing the DC Controller PCB1 (IMG) 12- 25
12.5.10.5 When Replacing the DC Controller PCB1(IMG) 12- 25
12.5.11 Main Power Supply PCB 12- 26
12.5.11.1 Preparation for Removing the Main Power Supply PCB 12- 26
12.5.11.2 Removing the Main Power Supply PCB 12- 26
12.5.12 All-Night Power Supply PCB 12- 26
12.5.12.1 Preparation for Removing the All-Night Power Supply PCB 12- 26
12.5.12.2 Removing the All-night Power Supply PCB 12- 26
12.5.13 IH Power Supply PCB 12- 26
12.5.13.1 Preparation for Removing the IH Power Supply PCB 12- 26
12.5.13.2 Removing the IH Power Supply PCB 12- 26
12.5.14 Leakage Breaker 12- 27
12.5.14.1 Preparation for Removing the Leakage Breaker 12- 27
12.5.14.2 Removing the Leakage Breaker 12- 27

12.5.15 Relay PCB 12- 27
12.5.15.1 Preparation for Removing the Relay PCB 12- 27
12.5.15.2 Removing the Relay PCB 12- 27
12.5.16 DC Relay 12- 27
12.5.16.1 Making Preparations to Remove the Main Power Relay Unit 12- 27
12.5.16.2 Removing the Main Power Relay Unit 12- 27
12.5.17 DC/DC Converter PCB 12- 29
12.5.17.1 Preparation for Removing the DC/DC Converter PCB (38V)1 ..... 12- 29
12.5.17.2 Removing the DC/DC Converter PCB (38V)1 ..... 12- 29
12.5.17.3 Preparation for Removing the DC/DC Converter PCB (38V)2 ..... 12- 29
12.5.17.4 Removing the DC/DC Converter PCB (38V)2 ..... 12- 29
12.5.17.5 Preparation for Removing the DC/DC Converter PCB (3.3V/5V/12V) 12- 29
12.5.17.6 Removing the DC/DC Converter PCB (3.3V/5V/12V) 12- 29
12.5.18 Intermediate Transfer Belt Sub PCB 12- 30
12.5.18.1 Preparation for Removing the Intermediate Transfer Belt Sub PCB 12- 30
12.5.18.2 Removing the Intermediate Transfer Belt Sub PCB 12- 30
12.5.19 AC Driver PCB 12- 30
12.5.19.1 Preparation for Removing the AC Driver PCB 12- 30
12.5.19.2 Removing the AC Driver PCB 12- 30
12.5.20 Relay PCB 1 ..... 12- 30
12.5.20.1 Preparation for Removing the Relay PCB 1 ..... 12- 30
12.5.20.2 Removing the Relay PCB 1 ..... 12- 30
12.5.21 Control Panel CPU PCB 12- 31
12.5.21.1 Preparation for Removing the Control Panel CPU PCB 12- 31
12.5.21.2 Removing the Control Panel CPU PCB 12- 31
12.5.22 Control Panel Key Switch PCB 12- 31
12.5.22.1 Preparation for Removing the Control Panel Key Switch PCB 12- 31
12.5.22.2 Removing the Control Panel Key Switch PCB 12- 32
12.5.23 Control Panel Inverter PCB 12- 32
12.5.23.1 Preparation for Removing the Control Panel Inverter PCB 12- 32
12.5.23.2 Removing the Control Panel Inverter PCB 12- 33
12.5.24 Environment Sensor 12- 33
12.5.24.1 Preparation for Removing the Environment Sensor 12- 33
12.5.24.2 Removing the Environment Sensor 12- 33
12.5.25 Manual Feed Unit Open/Closed Sensor 12- 34
12.5.25.1 Preparation for Removing the Manual Feed Unit Open/Closed Sensor 12- 34
12.5.25.2 Removing the Manual Feed Unit Open/Closed Sensor 12- 34
12.5.26 Front Cover Open/Closed Sensor 12- 34
12.5.26.1 Preparation for Removing the Front Cover Open/Closed Sensor 12- 34
12.5.26.2 Removing the Front Cover Open/Closed Sensor 12- 35
12.5.27 Main Power Switch 12- 35
12.5.27.1 Preparation for Removing the Main Power Switch 12- 35
12.5.27.2 Removing the Main Power Switch 12- 36
12.5.28 Manual Feed Unit Open/Closed Detecting Switch 12- 36
12.5.28.1 Preparation for Removing the Manual Feed Unit Open/Close Switch 12- 36
12.5.28.2 Removing the Manual Feed Unit Open/Close Switch 12- 37
12.5.29 Front Cover Open/Closed Detecting Switch 12- 38
12.5.29.1 Preparation for Removing the Front Cover Open/Close Switch 12- 38
12.5.29.2 Removing the Front Cover Open/Close Switch 12- 38
12.5.30 ITB Cooling Fan 12- 39
12.5.30.1 Preparation for Removing the ITB Cooling Fan 12- 39
12.5.30.2 Removing the ITB Cooling Fan 12- 39
12.5.30.3 Removing the ITB Belt Dust Proof Filter 12- 39
12.5.31 Face-down Tray Cooling Fan (rear/ front) 12- 39
12.5.31.1 Preparation for Removing the Face-Down Tray Cooling Fan Unit 12- 39
12.5.31.2 Removing the Face-Down Tray Cooling Fan Unit 12- 40
12.5.31.3 Preparation for Removing the Face-Down Tray Cooling Fan 12- 40
12.5.31.4 Removing the Face-Down Tray Cooling Fan 12- 40
12.5.32 Cleaner Fan 12- 40
12.5.32.1 Preparation for Removing the Cleaner Fan 12- 40

12.5.32.2 Removing the Cleaner Fan 12- 40
12.5.33 Manual Feed Cooling Fan 12- 40
12.5.33.1 Preparation for Removing the Manual Feed Cooling Fan 12- 40
12.5.33.2 Removing the Manual Feed Cooling Fan 12- 41
12.5.34 Fixing Heat Discharge Fan 12- 41
12.5.34.1 Preparation for Removing the Fixing Heat Discharge Fan 12- 41
12.5.34.2 Removing the Fixing Heat Discharge Fan 12- 41
12.5.34.3 Preparation for Removing the Toner Filter (Fixing Heat Discharge Fan Filter) 12- 41
12.5.34.4 Removing the Toner Filter (Fixing Heat Discharge Fan Filter) 12- 41
12.5.35 Power Supply Exhaust Fan 12- 41
12.5.35.1 Preparation for Removing the Power Supply Exhaust Fan 1 ..... 12- 41
12.5.35.2 Removing the Power Supply Exhaust Fan 1 ..... 12- 42
12.5.35.3 Preparation for Removing the Power Supply Exhaust Fan 2 ..... 12- 42
12.5.35.4 Removing the Power Supply Exhaust Fan 2 ..... 12- 42
12.5.36 IH Power Supply Cooling Fan 12- 42
12.5.36.1 Preparation for Removing the IH Power Supply Cooling Fan 12- 42
12.5.36.2 Removing the IH Power Supply Cooling Fan 12- 42
12.5.37 Delivery Cooling Fan 12- 42
12.5.37.1 Preparation for Removing the Delivery Cooling Fan 12- 42
12.5.37.2 Removing the Delivery Cooling Fan 12- 42
12.5.38 Machine Heat Discharge Fan 12- 43
12.5.38.1 Preparation for Removing the Machine Heat Discharge Fan 12- 43
12.5.38.2 Removing the Machine Heat Discharge Fan 12- 43
12.5.39 Delivery Vertical Path Cooling Fan 12- 43
12.5.39.1 Preparation for Removing the Delivery Vertical Path Cooling Fan 12- 43
12.5.39.2 Removing the Delivery Vertical Path Cooling Fan 12- 43
12.5.40 Delivery Vertical Path Exhaust Fan 12- 43
12.5.40.1 Preparation for Removing the Delivery Vertical Path Exhaust Fan 12- 43
12.5.40.2 Removing the Delivery Vertical Path Exhaust Fan 12- 43
12.5.41 Drum Unit Drive Belt 12- 44
12.5.41.1 Preparation for Removing the Drum Unit Drive Belt 12- 44
12.5.41.2 Removing the Drum Unit Drive Belt 12- 45

Chapter 13 MEAP

13.1 MEAP 13- 1
13.1.1 Overview 13- 1
13.1.2 Checking the Operating Environment. 13- 1
13.1.3 MEAP Counter 13- 3
13.1.4 Setting Up the Network 13- 4
13.1.5 Construction of the MEAP Platform 13- 5
13.1.6 Setting the method to login to SMS 13- 5
13.1.7 Login to SMS 13- 9
13.1.8 Checking Application List 13- 10
13.1.9 Starting and Stopping a MEAP Application 13- 11
13.1.10 Checking the Platform Information 13- 12
13.1.11 MEAP Specifications 13- 13
13.1.12 Checking the System Information of a MEAP Application with SMS 13- 14
13.1.13 Printing the System Information of a MEAP Application 13- 15
13.1.14 Reference (Application System Information) 13- 16
13.1.15 Installing an Application 13- 17
13.1.16 MEAP Enterprise Service Manager 13- 19
13.1.17 Adding a License File 13- 19
13.1.18 Disabling a License File (suspending a license) 13- 21
13.1.19 Downloading/Removing an Invalidated License File 13- 23
13.1.20 Reusable license 13- 25
13.1.21 License for forwarding 13- 26
13.1.22 Uninstalling an Application 13- 28

13.1.23 Changing Login Services 13- 29
13.1.24 Initializing the Password 13- 33
13.1.25 Creating a Backup for MEAP Application Area, Formatting the Hard Disk, Restoring the MEAP Application Area with the Backup, Using the SST (Service Support Tool) 13- 33
13.1.26 Replacing the Hard Disk Drive 13- 35
13.1.27 MEAP Safe Mode 13- 35
13.1.28 Setting HTTP port for MEAP application (level 2) 13- 36
13.1.29 Reference material 13- 39
13.1.30 Option for exclusive individual measure 13- 40

Chapter 14 RDS

14.1 RDS 14- 1
14.1.1 Application operation mode 14- 1
14.1.2 Service Center URL and Port Specification 14- 1
14.1.3 Communication test 14- 1
14.1.4 Communication log 14- 1
14.1.5 Detailed Communication log 14- 1
14.1.6 SOAP communication function 14- 1
14.1.7 Resend at SOAP transmission error 14- 2
14.1.8 e-RDS setting screen 14- 2
14.1.9 Sleep operation 14- 4
14.1.10 Network Setting (Maintenance) 14- 4
14.1.11 e-RDS Setting (Maintenance) 14- 4
14.1.12 Trouble shoot 14- 5
14.1.13 Error message 14- 5

Chapter 15 Maintenance and Inspection

15.1 Periodically Replaced Parts 15- 1
15.1.1 Periodically Replaced Parts 15- 1
15.1.2 Reader Unit 15- 1
15.1.3 Printer Unit 15- 1
15.2 Durables and Consumables 15- 1
15.2.1 Outline 15- 1
15.2.2 Reader Unit 15- 1
15.2.3 Printer Unit 15- 2
15.3 Scheduled Servicing Basic Procedure 15- 2
15.3.1 Scheduled Servicing Basic Procedure 15- 2
15.3.2 Scheduled Servicing (Reader Unit) 15- 3
15.3.3 Scheduled Servicing (Printer Unit) 15- 4

Chapter 16 Standards and Adjustments

16.1 Image Adjustments 16- 1
16.1.1 Standards for Image Position 16- 1
16.1.2 Checking the Image Position 16- 1
16.1.3 Adjusting the Left/Right Margin (Cassette) 16- 1
16.1.4 Adjusting the Left/Right Margin (Manual Feed Tray) 16- 2
16.1.5 Adjusting the Left/Right Margin (Side Paper Deck) 16- 2
16.2 Scanning System 16- 2
16.2.1 After Replacing the CCD Unit 16- 2
16.2.2 After Replacing the Scanning Lanp 16- 3
16.2.3 After Replacing the Copyboard Glass 16- 3
16.2.4 After Replacing the Reader Controller PCB or Initializing the RAM 16- 3
16.2.5 After Replacing the CCD Unit 16- 4

16.2.6 Treatment for ADF Replacement 16- 4
16.2.7 After Replacing the Reader Controller PCB 16- 5
16.3 Laser Exposure System 16- 6
16.3.1 Laser Exposure System 16- 6
16.4 Image Formation System 16- 6
16.4.1 Laser maker identification 16- 6
16.4.2 After Replacing the Transfer Unit 16- 6
16.4.3 After Replacing the Pattern Reading Unit 16- 6
16.4.4 Adjustments of Tilt in Intermediate Transfer Unit Rail 16- 6
16.5 Fixing System 16- 8
16.5.1 Treatment after Replacement of Fixing Unit 16- 8
16.6 Electrical Components 16- 8
16.6.1 After Replacing the Reader Controller PCB or Initializing the RAM 16- 8
16.6.2 After Replacing the Reader Controller PCB 16- 10
16.6.3 Replacing DC Controller PCB 1ÅiIMGÅj 16- 10
16.6.4 Replacing Main Controller PCB 16- 11
16.6.5 When Replacing the SRAM PCB 16- 11
16.6.6 When Replacing the HDD 16- 11
16.6.7 When Replacing the Power Supply PCB 16- 11
16.7 Pickup/Feeding System 16- 11
16.7.1 Adjusting the Horizontal Registration When Replacing the Pickup Cassette 16- 11
16.7.2 Adjusting the Horizontal Registration When Replacing the Duplex Unit 16- 12

Chapter 17 Correcting Faulty Images

17.1 Outline of Electrical Components 17- 1
17.1.1 Clutch/Solenoid 17- 1
17.1.1.1 Reader Unit 17- 1
17.1.1.2 Printer Unit 17- 1
17.1.2 Motor 17- 1
17.1.2.1 Reader Unit 17- 1
17.1.2.2 Printer Unit 17- 2
17.1.3 Fan 17- 3
17.1.3.1 Reader Unit 17- 3
17.1.3.2 Printer Unit 17- 3
17.1.4 Sensor 17- 4
17.1.4.1 Reader Unit 17- 4
17.1.4.2 Printer Unit 17- 4
17.1.5 Switch 17- 6
17.1.5.1 Reader Unit 17- 6
17.1.5.2 Printer Unit 17- 6
17.1.6 Lamps, Heaters, and Others 17- 7
17.1.6.1 Reader Unit 17- 7
17.1.6.2 Printer Unit 17- 7
17.1.7 PCBs 17- 8
17.1.7.1 Reader Unit 17- 8
17.1.7.2 Printer Unit 17- 9
17.1.8 Connectors 17- 11
17.1.8.1 List of connector 17- 11
17.1.8.2 List of connector 17- 20

Chapter 18 Self Diagnosis

18.1 Error Code Details 18- 1
18.1.1 Table of error code details 18- 1

Chapter 19 Service Mode

19.1 Outline 19- 1
19.1.1 Construction of Service Mode 19- 1
19.1.2 Entering or Selecting Service Modes 19- 1
19.1.3 Exiting Service Modes 19- 2
19.1.4 Back-up of Service Mode 19- 2
19.1.5 Initial Screen 19- 3
19.1.6 Main/Intermediate Item Screen 19- 4
19.1.7 Sub- Item Screen 19- 4
19.2 DISPLAY (Status Display Mode) 19- 5
19.2.1 COPIER 19- 5
19.2.1.1 COPIER Table 19- 5
19.2.2 FEEDER 19- 11
19.2.2.1 FEEDER Table 19- 11
19.3 I/O (I/O Display Mode) 19- 12
19.3.1 Overview 19- 12
19.3.2 DC-CON 19- 12
19.3.3 R-CON 19- 18
19.3.4 FEEDER 19- 20
19.3.5 SORTER 19- 22
19.3.6 MN-CONT 19- 29
19.4 ADJUST (Adjustment Mode) 19- 30
19.4.1 COPIER 19- 30
19.4.1.1 COPIER Table 19- 30
19.4.2 FEEDER 19- 43
19.4.2.1 FEEDER Table 19- 43
19.5 FUNCTION (Operation/Inspection Mode) 19- 43
19.5.1 COPIER 19- 43
19.5.1.1 COPIER Table 19- 43
19.5.2 FEEDER 19- 51
19.5.2.1 FEEDER Table 19- 51
19.6 OPTION (Machine Settings Mode) 19- 53
19.6.1 COPIER 19- 53
19.6.1.1 COPIER Table 19- 53
19.6.2 FEEDER 19- 85
19.6.2.1 FEEDER Table 19- 85
19.6.3 SORTER 19- 85
19.6.3.1 SORTER Table 19- 85
19.6.4 BOARD 19- 86
19.6.4.1 BOARD Table 19- 86
19.7 TEST (Test Print Mode) 19- 86
19.7.1 COPIER 19- 86
19.7.1.1 COPIER Table 19- 86
19.8 COUNTER (Counter Mode) 19- 88
19.8.1 COPIER 19- 88
19.8.1.1 COPIER Table 19- 88

Chapter 20 Upgrading

20.1 Outline 20- 1
20.1.1 Function/ Operation Overview 20- 1
20.1.2 Points to Note at Downloading 20- 4
20.2 Making Preparations 20- 4
20.2.1 Registration of System Software (System CD to SST) 20- 4
20.2.2 Registration of System Software (SST to USB memory) 20- 6
20.2.3 Connection (At Using SST) 20- 8
20.2.4 Connection (At Using USB Memory) 20- 9

20.3 Formatting the HDD 20- 9
20.3.1 Formatting All Partitions 20- 9
20.3.2 Formatting Selected Partitions 20- 10
20.3.3 Formatting the Partitions 20- 11
20.4 Downloading System Software 20- 12
20.4.1 Batch Downloading 20- 12
20.4.1.1 Overview 20- 12
20.4.1.2 Procedure for Downloading 20- 12
20.4.2 Downloading the System Software (Single) 20- 15
20.4.2.1 Downloading Procedure 20- 15
20.5 Uploading and Downloading Backup Data 20- 18
20.5.1 Outline 20- 18
20.5.2 Uploading Procedure 20- 18
20.5.3 Download Procedures 20- 20
20.6 Version Upgrade using USB 20- 21
20.6.1 Menu/Function Overview 20- 21
20.6.2 Points to Note at the Time of Operation/Use 20- 22
20.6.3 Download/Writing of System Software (Auto) 20- 24
20.6.4 Download of System Software (Auto, or Selectable) 20- 24
20.6.5 Download of System Software (Overwriting) 20- 25
20.6.6 Format HDD 20- 26
20.6.7 Other Functions 20- 27

Chapter 21 Service Tools

21.1 Service Tools 21- 1
21.1.1 Special Tools 21- 1
21.1.2 Solvents and Oils 21- 2

Chapter 1 Introduction

Contents

1.1 System Construction 1-1
1.1.1 System Configuration with Pickup/Delivery Accessories [EUR] 1-1
1.1.2 System Configuration with Pickup/Delivery Accessories [EUR] 1-2
1.1.3 System Configuration with Printing/Transmission Accessories [EUR] 1-3
1.1.4 System Configuration with Printing/Transmission Accessories [EUR] 1-4
1.1.5 Functions of Printing/Transmission Accessories 1-5
1.1.6 Overview of Printing/Transmitting Accessories 1-5
1.2 Product Specifications 1-6
1.2.1 Names of Parts 1-6
1.2.1.1 External View 1-6
1.2.1.2 Cross Section 1-7
1.2.2 Using the Machine 1-8
1.2.2.1 Turning On the Power Switch 1-8
1.2.2.2 Points to Note About Turing Off the Main Power Switch 1-9
1.2.2.3 Control Panel 1-10
1.2.3 User Mode Items 1-11
1.2.3.1 Common Settings 1-11
1.2.3.2 Timer Settings 1-12
1.2.3.3 Adjustments and Cleaning 1-12
1.2.3.4 Report Settings 1-13
1.2.3.5 System Settings 1-13
1.2.3.6 Copy Settings 1-15
1.2.3.7 Communications Settings 1-16
1.2.3.8 Mail Box Settings 1-17
1.2.3.9 Printer Settings 1-17
1.2.3.10 Address Book Settings 1-19
1.2.4 User Maintenance 1-19
1.2.4.1 Cleaning 1-19
1.2.4.2 Inspection 1-20
1.2.5 Safety 1-22
1.2.5.1 CDRH Regulations 1-22
1.2.5.2 Laser safety 1-22
1.2.5.3 Handling the Laser Assembly 1-22
1.2.5.4 Safety of Toner 1-23
1.2.5.5 Notes when handling a lithium battery 1-23
1.2.5.6 Notes at Replacing/Disposing the Fixing Unit 1-23
1.2.5.7 Notes before it works serving 1-23
1.2.6 Product Specifications 1-24
1.2.6.1 Type and Functions 1-24
1.2.7 Function List 1-24
1.2.7.1 Print Speed 1-24
1.2.7.2 Print Size 1-27
1.2.7.3 Others 1-27
1.2.7.4 Reader Unit Specifications 1-28

1.1 System Construction

1.1.1 System Configuration with Pickup/Delivery Accessories [EUR]

CLC5151 / / / CLC4040 / / iR C4580i / / iR C4080i / / / / Color Image Reader-F1 / Color Image Reader-E1

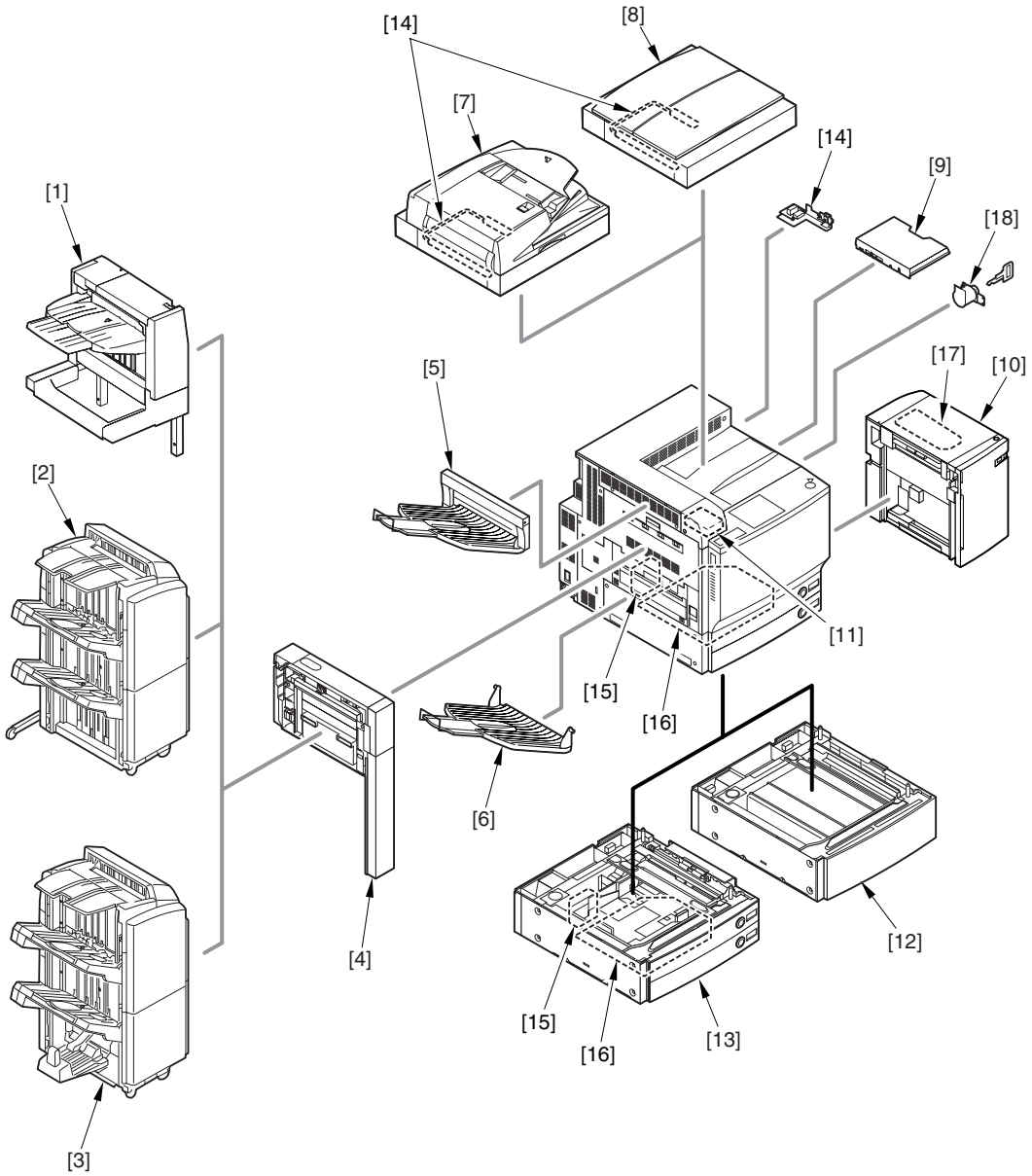

F-1-1

[1]	Finisher-X1	[10]	Paper Deck-Y1
[2]	Saddle Finisher-W2	[11]	Card Reader-D1
[3]	Finisher-W1	[12]	Plain Pedestal-E1/E2
[4]	Puncher Unit-AG1/AJ1/AK1	[13]	Cassette Feeding Unit-Z1/Z2
[5]	Copy Tray-N1	[14]	Reader Heater Kit-F1
[6]	Copy Tray-M1	[15]	Cassette Heater Kit-E1
[7]	Color Image Reader-F1 (standard)	[16]	Cassette Heater Unit-24
[8]	Color Image Reader-E1 (standard)	[17]	Cassette Heater Unit-31
[9]	Document Tray-J1 (standard)	[18]	Key Switch Unit-A2 (standard)

1.1.2 System Configuration with Pickup/Delivery Accessories [EUR]

Color Image Reader-F1 / Color Image Reader-E1 / Dupiex Color Image Reader-G1 / iR C5185N / / iR C5185i PRT /

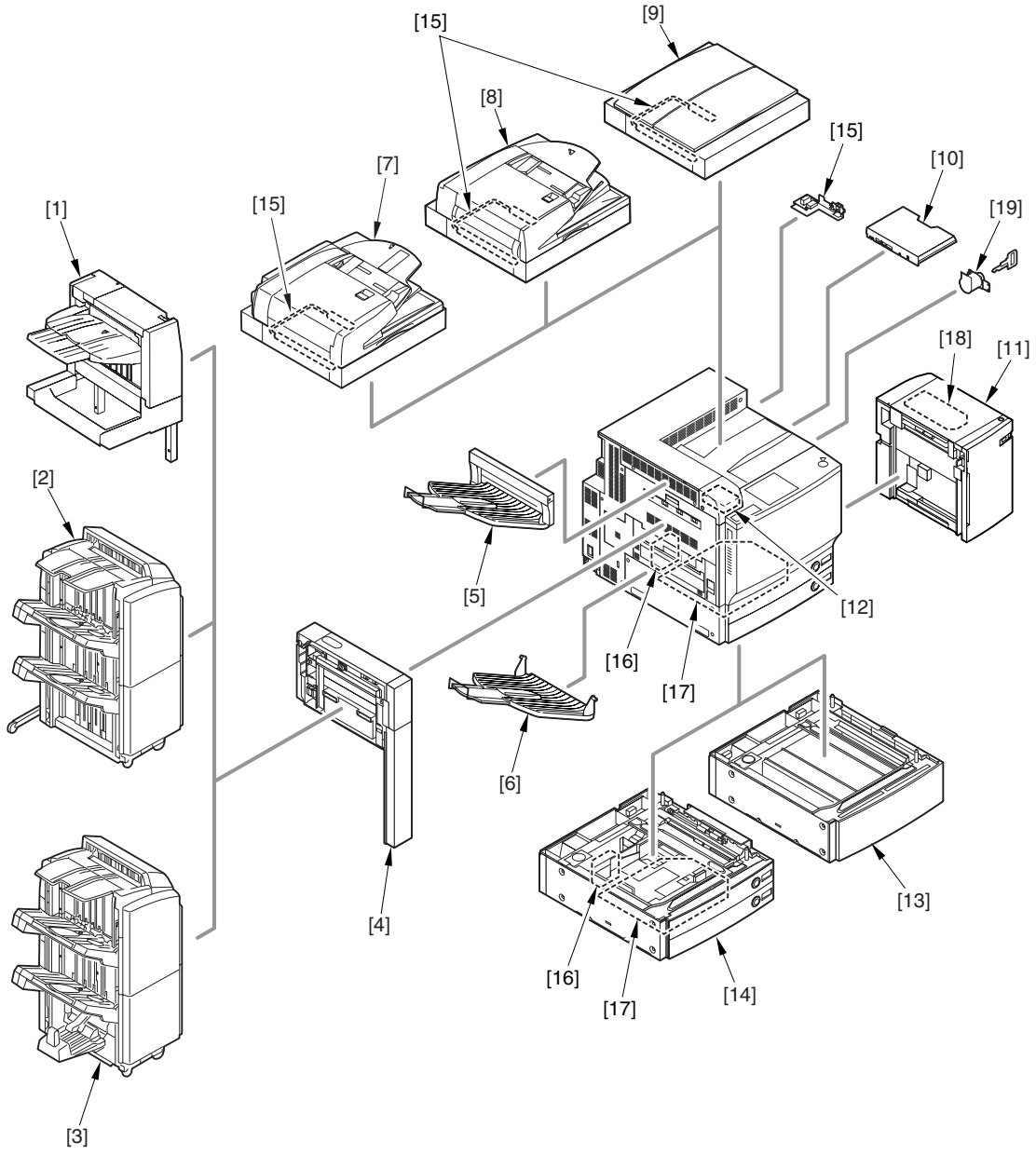

F-1-2

[1]	Finisher-X1	[11]	Paper Deck-Y1
[2]	Saddle Finisher-W2	[12]	Card Reader-D1
[3]	Finisher-W1	[13]	Plain Pedestal-E2
[4]	Puncher Unit-AG1/AJ1/AK1	[14]	Cassette Feeding Unit-Z2
[5]	Copy Tray-N1	[15]	Reader Heater Kit-F1
[6]	Copy Tray-M1	[16]	Cassette Heater Kit-E1
[7]	Color Image Reader-G1 (standard)	[17]	Cassette Heater Unit-24
[8]	Color Image Reader-E1 (standard)	[18]	Cassette Heater Unit-31
[9]	Color Image Reader-E1 (standard)	[19]	Key Switch Unit-A2 (standard)
[10]	Document Tray-J1 (standard)		

1.1.3 System Configuration with Printing/Transmission Accessories [EUR]

CLC5151 / / / CLC4040 / / iR C4580i / / iR C4080i / / / / Color Image Reader-F1 / Color Image Reader-E1

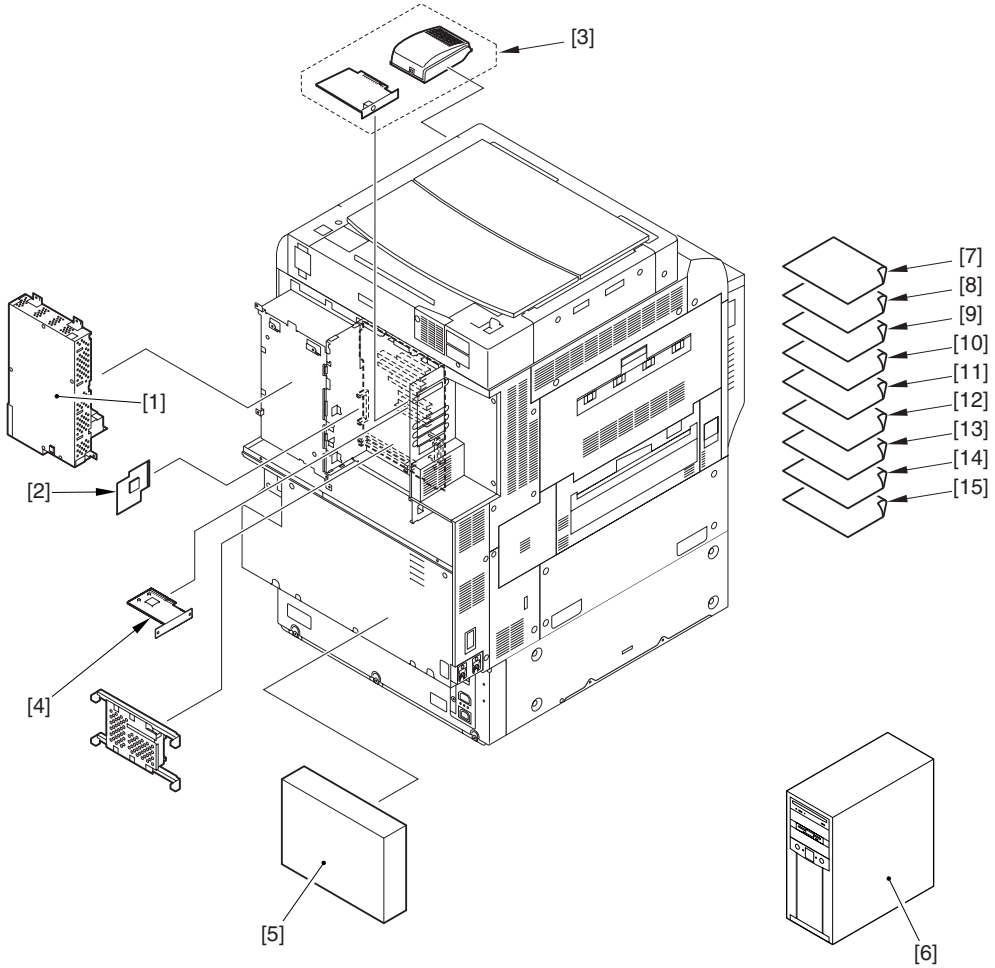

F-1-3

[1] Super G3 FAX Board-V1
[2] Main Controler Borad (Sub RB-A)
[3] Voice Guidance Kit-A2
[4] Security Expansion Board-E1
[5] Color Network Printer Unit-H1
[6] ColorPASS-GX100 or PS-GX100
[7] Barcode Printing Kit-A1
[8] Canon Color Universal Send Kit-F1 (licence)
[9] Universal Send PDF Advanced Feature Set-A1 (licence)
[10] Universal Send PDF Security Feature Set-A1 (licence)
[11] Digital User Signature PDF Kit-A1 (licence)
[12] Web Access Software-E1 (licence)
[13] Secure Watermark-A1 (licence)
[14] Encrypted Printing Software-C1 (licence)
[15] Remote Operator's Software Kit-A2 (licence)

1.1.4 System Configuration with Printing/Transmission Accessories [EUR]

Color Image Reader-F1 / Color Image Reader-E1 / Dupiex Color Image Reader-G1 / iR C5185N / / iR C5185i PRT /

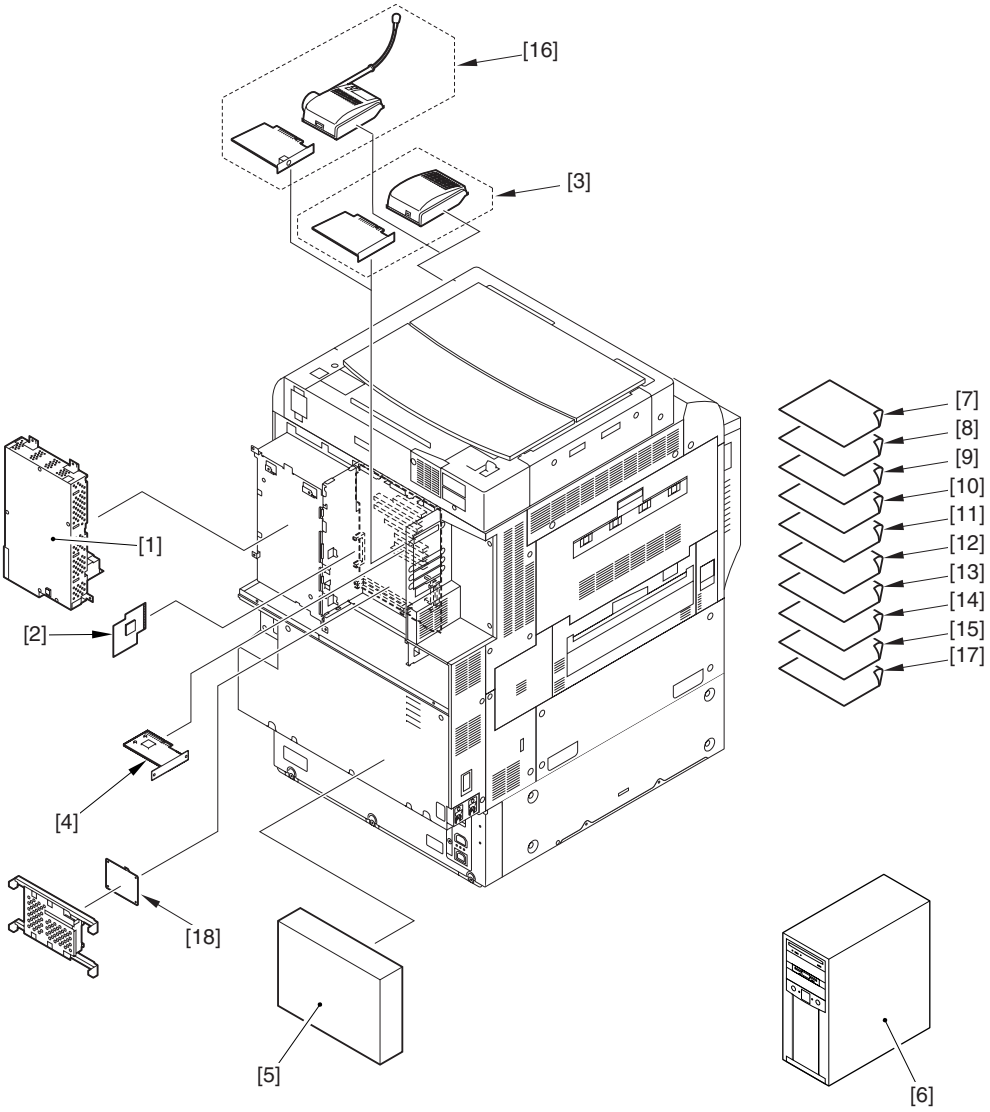

F-1-4

[1]	Super G3 FAX Board-V1
[2]	Main Controler Borad (Sub RB-A)
[3]	Voice Guidance Kit-A2
[4]	Security Expansion Board-E1
[5]	Color Network Printer Unit-H1
[6]	ColorPASS-GX100 or PS-GX100
[7]	Barcode Printing Kit-A1
[8]	Canon Color Universal Send Kit-F1 (licence)
[9]	Universal Send PDF Advanced Feature Set-A1 (licence)
[10]	Universal Send PDF Security Feature Set-A1 (licence)
[11]	Digital User Signature PDF Kit-A1 (licence)
[12]	Web Access Software-E1 (licence)
[13]	Secure Watermark-A1 (licence)
[14]	Encrypted Printing Software-C1 (licence)
[15]	Remote Operator's Software Kit-A2 (licence)
[16]	Voice Operation Kit-A1
[17]	HDD Data Erase Kit-A1 (licence)
[18]	HDD Data Encryption Kit-B1

1.1.5 Functions of Printing/Transmission Accessories

CLC5151 / / / CLC4040 / / iR C4580i / / iR C4080i / / / / Color Image Reader-F1 / Color Image Reader-E1 / Dupiex Color Image Reader-G1 / iR C5185N / / iR C5185i PRT /

Transmitting	-->	- Canon Color Universal Send Kit
		- iR512MB Expansion RAM
Searchable PDF	-->	- Universal Send Searchable PDF Kit
Faxing	-->	- Super G3 Fax Board
		- Super G3 Multi-Line FAX Board
		- iR512MB Expansion RAM
UFR II/PCL Printing	-->	- Color UFR II/PCL Printer Kit
		- iR512MB Expansion RAM
PS Printing	-->	- Color PS Printer Kit
		- Color PCL/PS Printer Kit
		- Color UFR II/PCL Printer Kit
		- Color UFR II Printer Kit
		- iR512MB Expansion RAM
PS Printing Server	-->	- Color Network Printer Unit
	-->	- imagePASS
PDF/TIFF/JPEG Direct Printing	-->	- Direct Printing Kit
		- Color UFR II/PCL/PS Printer Kit
		- Color UFR II/PCL Printer Kit
		- Color UFR II Printer Kit
		- iR512MB Expansion RAM

1.1.6 Overview of Printing/Transmitting Accessories

CLC5151 / / / CLC4040 / / iR C4580i / / iR C4080i / / / / Color Image Reader-F1 / Color Image Reader-E1 / Dupiex Color Image Reader-G1 / iR C5185N / / iR C5185i PRT /

The following gives an outline of individual accessories; for details, see the descriptions found in subsequent chapters:

- Color UFR II Printer Kit
Adds GDI-UFR II printing functions and scanning functions associated with ScanGear.
The base kit for Color PCL/PS Printer Kit, Color PS Printer Kit, and Direct Printing Kit.

- Color UFR II/PCL Printer Kit
Adds GDI-UFR II printing functions, PCL printing functions, and scanning functions associated with ScanGear.

- Color UFR II/PCL/PS Printer Kit
Adds GDI-UFR II printing functions, PCL printing functions, PS printing functions, and scanning functions associated with ScanGear.

- Color PCL/PS Printer Kit
Adds PCL printing functions and PS printing functions.
Requires a Color UFR II Printer Kit.

- Color PS Printer Kit
Adds PS printing functions.
Requires a Color UFR II Printer Kit or Color UFR II/PCL Printer Kit.

- Direct Printing Kit
Adds direct printing function to print PDF and TIFF/JPEG images through remote UI.
Requires a Color UFR II Printer Kit, Color UFR II/PCL Printer Kit, or Color UFR II/PCL/PS Printer Kit.

- Color Network Printer Unit
Print control server with PostScript3 software by Adobe Systems Inc. installed.
Cannot use simultaneously color UFR II Printer Kit, Color UFR II/PCL Printer Kit, Color UFR II/PCL/PS Printer Kit, Color PCL/PS Printer Kit, Color PS Printer Kit, and Direct Printing Kit.

- iR512MB Expansion RAM
Adds to the installed memory (512MB).
Required when MEAP functions are added.

- Super G3 Fax Board
Adds G3 fax functions. In G3 FAX, the document created by an application can be faxed directly from PC via network.
Cannot use simultaneously with multi-line Fax board.

- Super G3 Multi-Line Fax Board
In addition to the functions of super G3 Multi-Line FAX Board, adds two-line faxing function
Cannot use simultaneously with Super G3 Fax board.

- Canon Color Universal Send Kit
Adds the function of sending the read-in document as E-mail or I-fax document, and of storing them into file server and box.

- Encrypted PDF Extension Kit
Adds function of setting password for PDF created by this product and encrypting it.
Requires a Canon Color Universal Send Kit.

- Universal Send Searchable PDF Kit
Perform the OCR (optical character reader) processing for the document scanned by this machine and add the function to generate text search-capable PDF (searchable PDF).
Requires a Canon Color Universal Send Kit.

1.2 Product Specifications

1.2.1 Names of Parts

1.2.1.1 External View

CLC5151 / / / CLC4040 / / iR C4580i / / iR C4080i / / / / iR C5185N / / iR C5185i PRT /

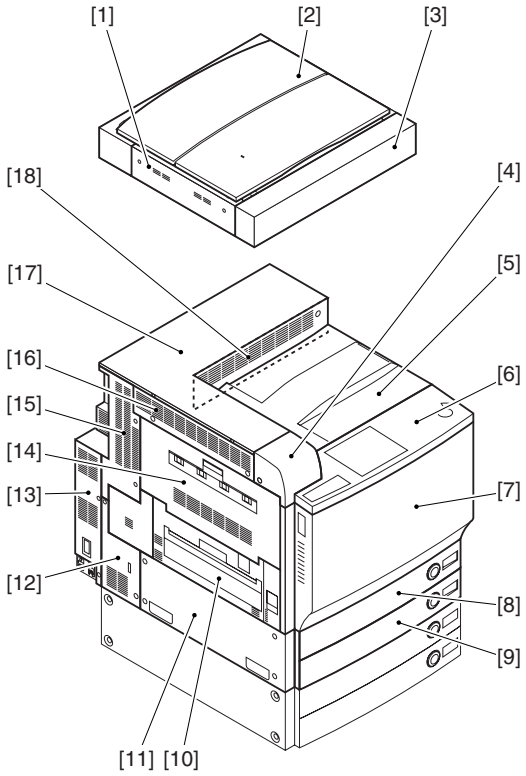

F-1-5

[1] Reader left cover
[2] Copyboard cover
[3] Reader front cover
[4] Card reader cover
[5] Center Delivery tray
[6] Control panel
[7] Front cover
[8] Cassette 1
[9] Cassette 2
[10] Fixing feeding unit cover
[11] Lower left cover
[12] Rear left cover (lower)
[13] Left rear cover (lower)
[14] Delivery vertical path cover
[15] Rear left cover (upper)
[16] Upper left cover
[17] Upper cover
[18] Inner upper cover

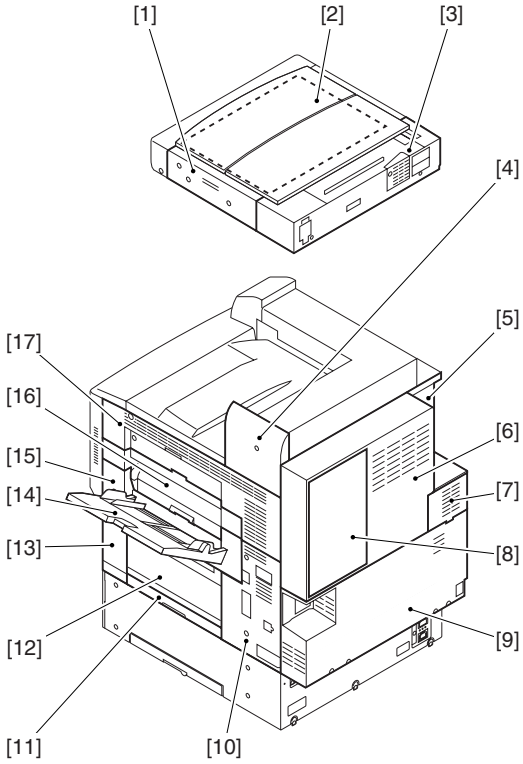

F-1-6

[1] Reader right cover
[2] Copyboard glass
[3] Reader rear cover
[4] Reader joint cover
[5] Left rear cover (upper)
[6] Upper rear cover
[7] Rear fan cover
[8] Shield cover
[9] Lower rear cover
[10] Rear right cover
[11] Pick-up vertical path lower cover
[12] Pick-up vertical path cover
[13] Front right cover
[14] Manual feed pick-up tray
[15] Manual feed pick-up unit cover
[16] Middle right cover
[17] Upper right cover

1.2.1.2 Cross Section

CLC5151 / / / CLC4040 / / iR C4580i / / iR C4080i / / / / iR C5185N / / iR C5185i PRT /

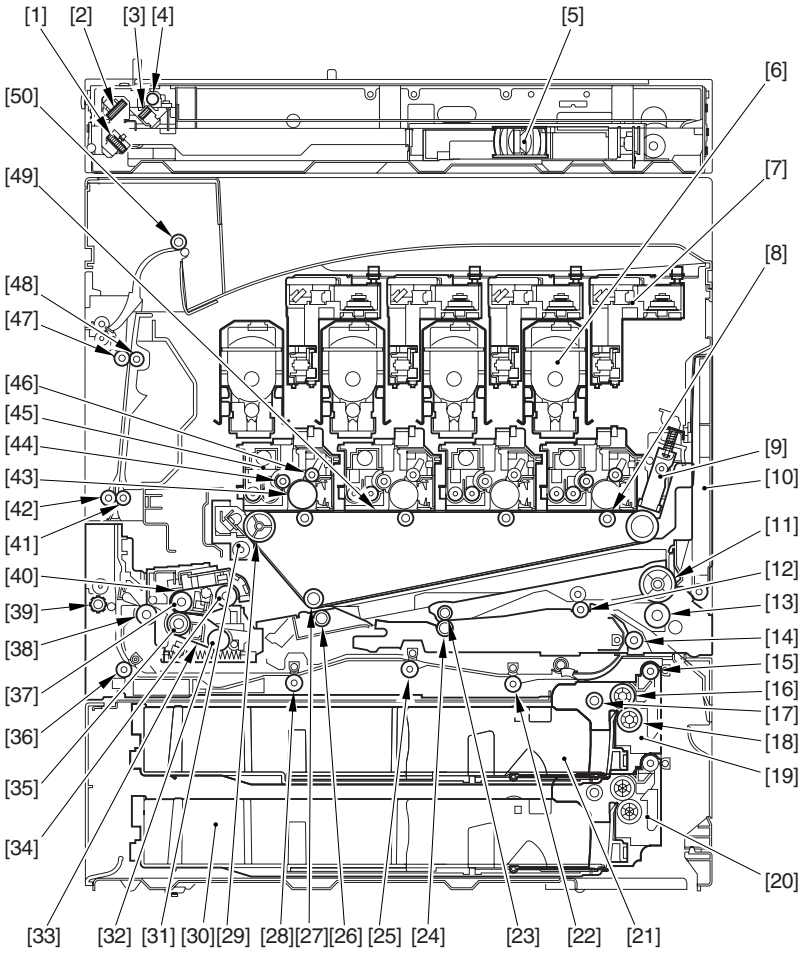

F-1-7

[1] No. 3 mirror
[2] No. 2 mirror
[3] No. 1 mirror
[4] Scanning lamp
[5] CCD unit
[6] Toner cartridge
[7] Laser unit
[8] Primary transfer roller
[9] Pattern reader unit
[10] Manual pickup tray unit
[11] Manual feed roller
[12] Pre-registration roller
[13] Manual feed separation roller
[14] Re-pickup roller
[15] Pickup vertical path roller
[16] Feed roller
[17] Pickup roller
[18] Separation roller
[19] Pickup unit 1
[20] Pickup unit 2
[21] Cassette 1
[22] Duplex feed roller 4
[23] Upper registration roller
[24] Lower registration roller
[25] Duplex feed roller 3
[26] Secondary transfer external roller
[27] Secondary transfer inside roller
[28] Duplex feed roller 2
[29] Intermediate transfer belt tension roller
[30] Cassette 2
[31] Intermediate transfer belt cleaner unit
[32] Pressure belt tension roller
[33] Pressure belt
[34] Fixing belt tension roller
[35] Pressure roller
[36] Duplex feed roller 1
[37] Fixing roller
[38] Inside delivery roller
[39] Face-up delivery roller
[40] Fixing belt
[41] Delivery vertical path member
[42] Delivery vertical path roller 2
[43] Photosensitive drum
[44] Developing cylinder
[45] Primary drum unit
[46] Charging roller
[47] Delivery vertical path roller 1
[48] Delivery vertical path member
[49] Intermediate transfer belt
[50] Face-down delivery roller 1

1.2.2 Using the Machine

1.2.2.1 Turning On the Power Switch

CLC5151 / / / CLC4040 / / iR C4580i / / iR C4080i / / /

The machine is equipped with 2 power switches: main power switch and control panel power switch.
The machine goes on when the main power switch is turned on (i.e., other than in power save mode, low power mode, sleep mode).

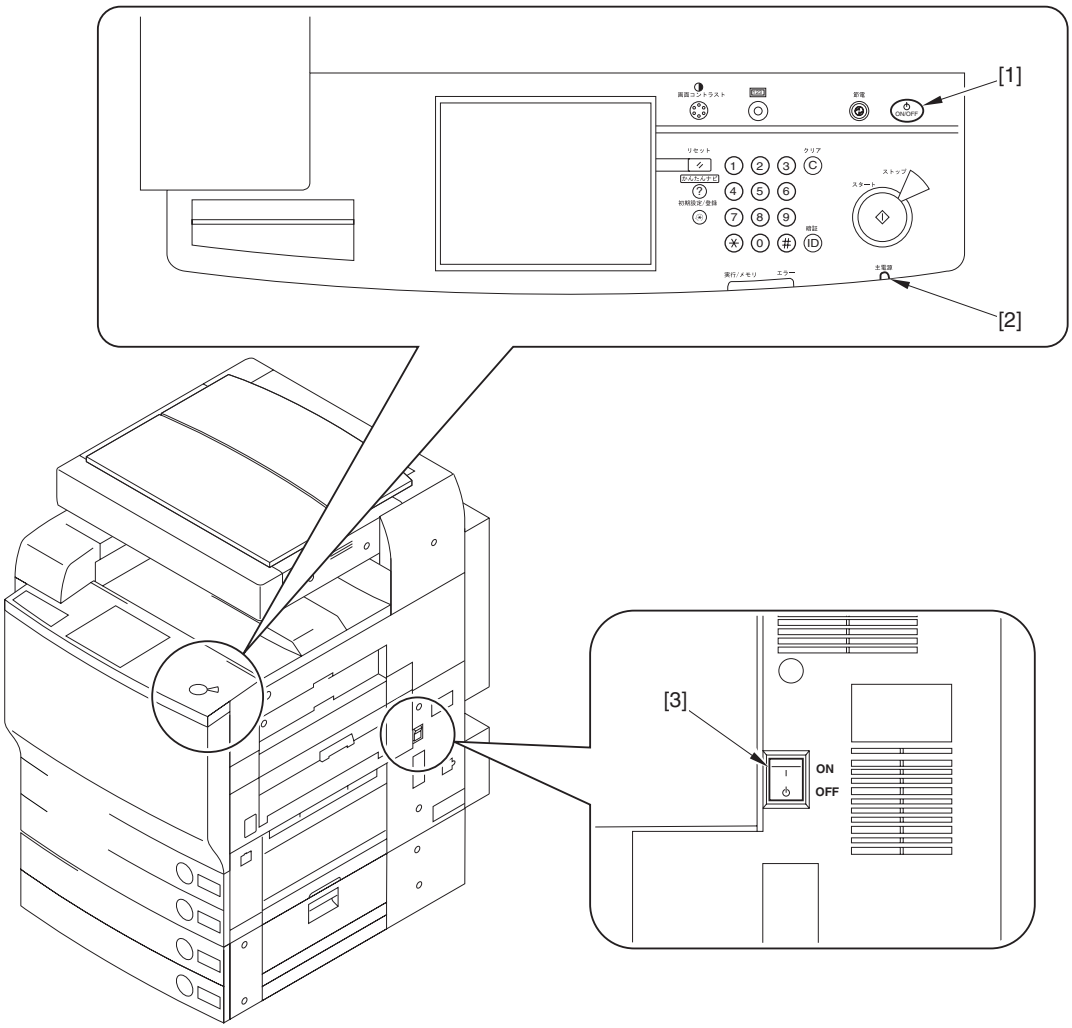

F-1-8

[1] Control panel power switch
[2] Main power indicator lamp
[3] Main power switch

Do not turn off the main power while the progress bar is indicated, during which access is made to the HDD. If deprived of power, the HDD can suffer a fault (E602).

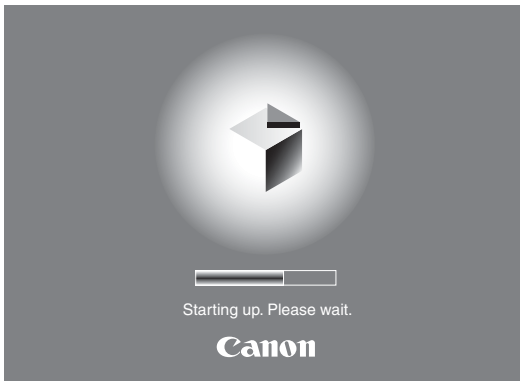

F-1-9

1.2.2.2 Points to Note About Turing Off the Main Power Switch

CLC5151 / / / CLC4040 / / iR C4580i / / iR C4080i / / /

When the main power switch is turned OFF, be sure to press the power switch of the control panel for 3 sec or more and execute shutdown sequence.

When Sending Data to the Printer or Using the Fax Unit
Be sure that the Execution/Memory lamp on the control panel is off before operating the main power switch. (Turning off the main power while a job is under way can cause loss of the data being processed.)

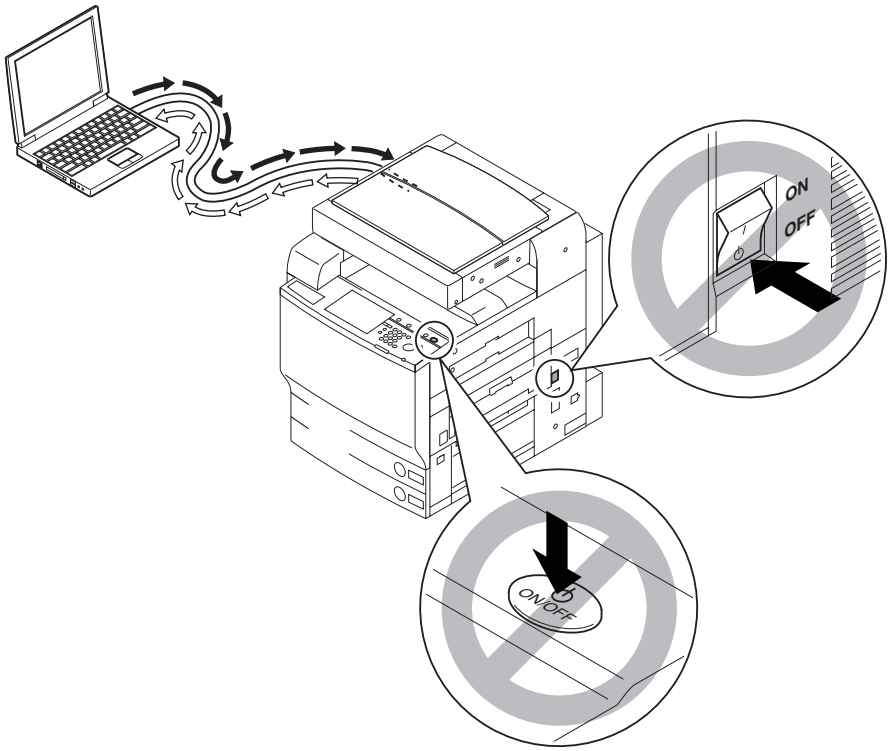

F-1-10

When Downloading Is Under Way

Do not turn off the control panel switch or the main power switch. (Turning off the main power switch while downloading is under way can disable the machine.)

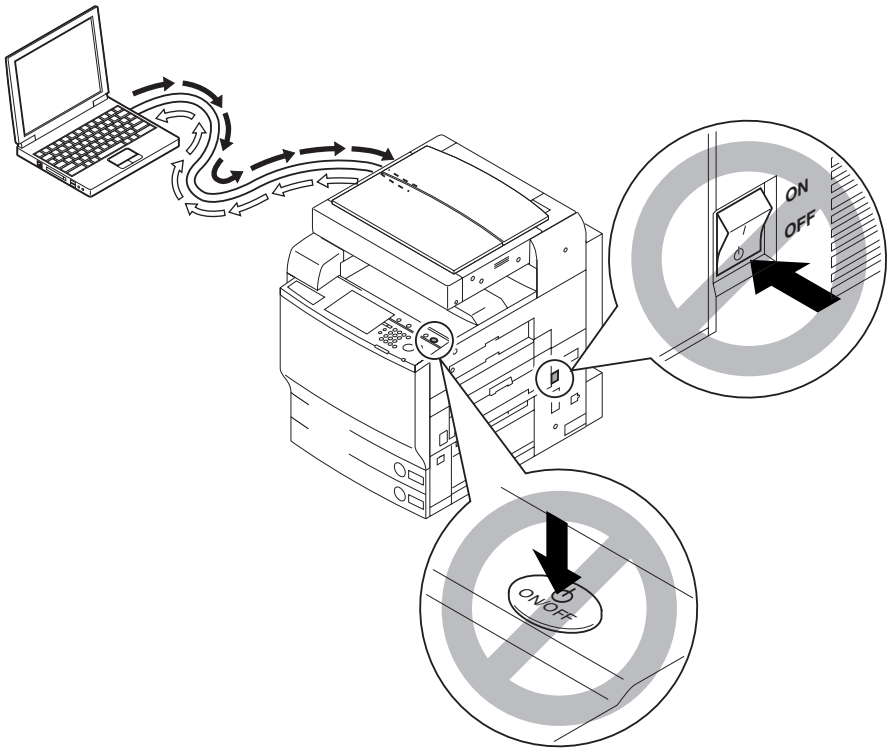

F-1-11

1.2.2.3 Control Panel

CLC5151 / / / CLC4040 / / iR C4580i / / iR C4080i / / /

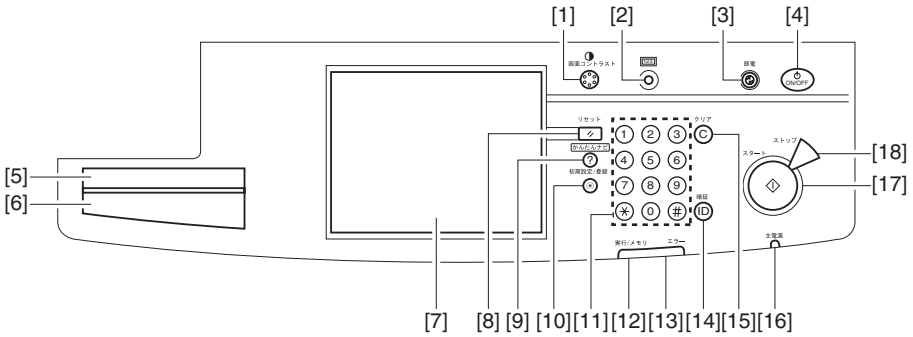

F-1-12

[1] Screen contrast adjustment dial
[2] Counter check key
[3] Power Save key
[4] Control panel power switch
[5] Place to put touch pen
[6] Plate to put clip
[7] Touch panel
[8] Reset key
[9] Help key (simplified navi)
[10] User mode key (initial setting/registration)
[11] Keypad
[12] Execute/Memory indicator lamp
[13] Error indicator lamp
[14] ID key
[15] Clear key
[16] Main power indicator lamp
[17] Start key
[18] Stop key

1.2.3 User Mode Items

1.2.3.1 Common Settings

CLC5151 / / / CLC4040 / / iR C4580i / / iR C4080i / / / / iR C5185N / / iR C5185i PRT /

*: Factory default.
*1: Indicates items that appear only when the appropriate optional equipment is attached.
*2: Indicates the items that appear only when the appropriate optional equipment is attached for iR C5185, iR C4580 and iR C3880 (Pre-installed in iR C5185N, iR C4580F and iR C3880F).

T-1-1

Mode	Description
Initial functions	*Copy, Send/Fax, Mail box, MEAP
	Use it to switch the System Status screen to the Initial screen: On, *Off
	Setup the initial screen of the system status: copy, send, fax, print, receive, *device.
Function after auto clear	*Return, do not return
Function order settings	Settings for Function Group Order: Group A/MEAP/ Group B
Enable/disable buzzer	Input correct: *On, Off
	Input incorrect: On, *Off
	Supply alert: On, *Off
	Alert: *On, Off
	Job end: *On, Off
	Residual original: On, *Off
Display Remaining Paper Message	*On, Off
Priority on text/photo upon selection of auto color	Text, *photo
Display the back mode shortcut key	On, *Off
Inch input	Enable inch input: On, *Off; On if 120 V
Paper type registration upon cassette auto selection	copier, printer, box, receive/fax, other (Manual feed : On, *Off; Other pickup points : *On, Off)
	Copy: consider the paper type: YES, *NO
Register paper type	*Plain, recycled, color, heavy, transparency
Indication priority of paper selection screen	*Simple, detail
Change power save mode	*-10%/-5%/-0%, immediate recovery
Power consumption in sleep state	*Little, much
Setup the delivery tray*1	When the finisher is not attached.
	Tray A: *copier, *box, *printer, *receive/fax, *other
	Tray B: copier, box, printer, receive/fax, other
	Tray C: copier, box, printer, receive/fax, other
	If the optional finisher-M1 is attached:
	Tray A: *copier, *box, *printer, receive/fax, other
	Tray B: copier, box, printer, *receive/fax, *other
	If the optional finisher-T1 or saddle finisher-T2 is attached:
	Tray A: copier, box, printer, *receive/fax, *other
	Tray B: *copier, *box, printer, receive/fax, other
	Tray C: copier, box, *printer, receive/fax, other
	Normal position of tray: *tray B, tray C, Off

Mode	Description
Priority on print	Copy: *1, 2, 3
	Printer: 1, *2, 3
	Box, receive/fax, other: 1, 2, *3
Form registration of image synthesis	Register, delete, check copy, detailed information
Image quality priority upon image synthesis	*Auto, document, form
Register character string of page print/stamp	Register, edit, delete
Register standard mode for manually fed paper	On, *Off
Register size set by user	Register/edit, delete, name registration
Switch pickup method	*Speed, print
Standard mode for local print	Paper select: *auto/pickup position select
	Print count: *1 to 9999
	Sorter:
	When the finisher is not attached, when copy tray unit H1/XX is attached: non-sort, *sort, rotation sort, group sort, rotation group
	When the finisher M1 is attached: non-sort, sort, *shift sort, group, shift group, staple (corner)
	When the finisher T1/saddle finisher T2 is attached: non-sort, sort, *group, shift group, staple (corner (upper left, lower left, upper right, lower right), double (left, right))
	When the finisher T1/saddle finisher T2 + puncher unit L1 are attached: non-sort, sort, *shift sort, group, shift group, staple (corner (upper left, lower left, upper right, lower right), double (left, right)), punch hole
	Double-sided print: On, *Off
	File delete after print: On, *Off
	Print merge: On, *Off
Switch language of display	On, *Off
Reverse screen color	On, *Off
Between-jobs shift*1	*On, Off
Separator between Jobs	On, *Off
Separator between Copies	On, *Off
Display print waiting time	Copier: On, *Off
	Box: On, *Off
	Other: On, *Off
Display set/waiting time status	*On, Off
Display the cleaning of the document reading part *2	*On, Off
JPEG compression rate at remote scan*2	High, *average, low
Gamma value at remote scan*2	g1.0/g1.4/*g1.8/g2.2
Function limit mode*1	On, *Off
Delete the toner level warning display	Clear
Initial setting of hold screen	All screen, *two-divided screen
Shut-down mode	Press [start]
Initialize common settings	*Yes, no

1.2.3.2 Timer Settings

CLC5151 / / / CLC4040 / / iR C4580i / / iR C4080i / / / / iR C5185N / / iR C5185i PRT /

*: Factory default.

T-1-2

Mode	Description
Time fine adjustment	00:00 to 23:59 (1-min increments)
Auto sleep time	10 min, 15 min, 20 min, 30 min, 40 min, 50 min, *1 hr, 90 min, 2 hr, 3 hr, 4 hr
Auto clear time	0: none; 1 to 9 min (1-min increments) (*2 min)
Set weekly timer	Sunday to Saturday, 00:00 to 23:59 (1-min increments)
Shift to low-power consumption mode	10 min, *15 min, 20 min, 30 min, 40 min, 50 min, 1 hr, 90 min, 2 hr, 3 hr, 4 hr

1.2.3.3 Adjustments and Cleaning

CLC5151 / / / CLC4040 / / iR C4580i / / iR C4080i / / / / iR C5185N / / iR C5185i PRT /

*: Factory default.
*1: Indicates items that appear only when the appropriate optional equipment is attached.
*2: Indicates items that appear only when the color image reader G1 is attached.

T-1-3

Mode	Description
Zoom fine adjust	X: -1.0 to +1.0%; 0.1% intervals (*0%)
	Y: -1.0 to +1.0%; 0.1% intervals (*0%)
Center binding staple edging*1	Press [start]
Center binding position change*1	Position: -2.0mm to +2.0mm; 0.25mm intervals (*0mm)
Auto gradation correction	Quick correction: press [start]
	Full correction: automatic correction after the machine prints and scans 3 sets of test prints.

Mode	Description
Density correction	Copy/box: 1 to 9 settings (*5)
	Black-and-white transmission: 1 to 9 settings (*5)
	Color transmission: 1 to 9 settings (*5)
Contrast adjustment of text/background	Relative contrast value: -7 to +7 (*0), print setting
	Setting of the standard value: standard contrast value: 0 to 64 (*20), sample print, print setting
	Density of latent area: 0 to 36 (*8)
Cleaning inside machine	Press [start]
Cleaning of feeder	Press [start]
How to clean the document reading part*2	Display the cleaning method

1.2.3.4 Report Settings

CLC5151 / / / CLC4040 / / iR C4580i / / iR C4080i / / / / iR C5185N / / iR C5185i PRT /

"Report Settings" is the item displayed when optional equipment is attached.
*: Factory default.

T-1-4

Mode	Description
Settings: send	
TX report	*For error only: On, Off
	Report with TX image: *On, Off
	Report with color TX image: On, *Off
Activity report	Every 100 communications auto print: *On, Off
	Daily activity report time: On, *Off
	Timer setting: 00:00 to 23:59
	Send/receive separate: On, *Off
Settings: fax	
Fax TX report	*For error only: On, Off
	Report with TX image: *On, Off
Fax activity report	Every 40 communications auto print: *On, Off
	Daily activity report time: On, *Off
	Timer setting: 00:00 to 23:59
	Send/receive separate: On, *Off
Fax RX report	For error only: On, *Off
Fax box RX report	*On, Off
Print list: send	
Address book list	Address book: 1 to 10, *address book 1; one-touch buttons
	Print list: print
User's data list	Print
Print list: fax	
User's data list	Print

1.2.3.5 System Settings

CLC5151 / / / CLC4040 / / iR C4580i / / iR C4080i / / / / iR C5185N / / iR C5185i PRT /

*: Factory default.
*1: Indicates items that appear only when the appropriate optional equipment is attached.
*2: Indicates the items that appear only when the appropriate optional equipment is attached for iR C5185, iR C4580 and iR C3880 (Pre-installed in iR C5185N, iR C4580F and iR C3880F).
*3: Indicates the items that appear only when the appropriate optional equipment is attached for iR C5185/iR C5185N, iR C4580 and iR C3880 (Pre-installed in iR C4580F and iR C3880F).
*4: The machine may not enter the sleep mode completely, depending on the status and type of installed MEAP applications.

T-1-5

Mode	Description
System Manager Settings	
System Manager ID	Seven digit number maximum
System Password	Seven digit number maximum
System Manager	32 characters maximum
E-mail Address	64 characters maximum
Contact Information	32 characters maximum
Comment	32 characters maximum
Dept. ID Management	
Dept. ID Management	On, *Off
Register Dept. ID/Password	Register, Edit, Erase, Limit Functions
Count management	Clear, Count print, Clear All Totals
Allow Printer Jobs with Unknown IDs	*On, Off
Allow Remote Scan Jobs with Unknown IDs	*On, Off
Allow Black Copy/Inbox Print Jobs	On, *Off

Mode	Description
Allow Black Printer Jobs	On, *Off
Communications Setting	
E-mail/I-Fax Common Settings*1	Maximum Data Size for Sending: 0 (Off), 1 to 99 MB (*3 MB)
	Default Subject: 40 characters maximum (*Attached Image)
	Designate an authenticated user address as the sender: On, *Off
E-mail Settings*1	Designate an authenticated user address as the sender: On, *Off
I-Fax Settings*1	Full Mode TX Timeout: 1 to 99 hours (*24 hours)
	Divided Data RX Timeout: 0 to 99 hours (*24 hours)
	Print MDN/DSN on Receipt: On, *Off
	Always send notice for RX errors: *On, Off
	Use Send Via Server: On, *Off
	Permit MDF not via the server: *On, Off
Fax Settings*1	Send Start Speed: *33600 bps, 14400 bps, 9600 bps, 7200 bps, 4800 bps, 2400 bps
	Receive Start Speed: *33600 bps, 14400 bps, 9600 bps, 7200 bps, 4800 bps, 2400 bps
	Receive Password: 20 digits maximum
	FIS switch: On, *Off
System box settings	System box PIN : Seven digit number
	Use Fax Memory RX : On, *Off
	Use I-Fax Memory RX: On, *Off
	Memory Receive Start Time: Everyday, Select Days, *Off
	Memory Receive End Time: Everyday, Select Days, *Off
Remote UI	*On, Off
	Use SSL: On/ *Off
Restrict Access to Destinations*1	
Address Book Password	Seven digit number
Access Number Management	On, *Off
Restrict New Addresses	On, *Off
Allow Fax Driver TX	*On, Off
E-mail/I-Fax Domain Sending Restriction	Restrict Sending to Domain: On, *Off
	TX permission domain: register, detail/edit, delete
Device Information Settings	
Device Name	32 characters maximum
Location	32 characters maximum
Forwarding Settings*2	Receive Type, Validate/Invalidate, Register (Registered Forwarding Settings), Forward w/o Conditions, E-mail Priority, Edit, Erase, Print List
Clear Message Board	Clear
Auto Online/Offline*2	
Auto Online	On, *Off
Auto Offline	On, *Off
Date & Time Settings	Date and Time Setting (12 digit number)
	Time Zone: GMT -12:00 to GMT +12:00 (*GMT+9:00)
	Daylight Saving Time: On, *Off
Limit Functions with the Security Key Off	*Partial Functions/All Functions
License Registration	24 characters maximum
Limits of system status screen	
Display job status before authentication	*On, Off
Permit secure print based on the print status	*On, Off
Display job history	*On, Off
	Acquisition of job history from a management software: Permit, *Not Permit
Register LDAP Server*1	Register, Edit, Erase, Print List
MEAP Settings*4	Use HTTP: *On, Off
	Use SSL: On, *Off
	Print System Information: Print
Copy Set Numbering Option Settings	On, *Off
	Dept. ID: On, *Off
	Date: On, *Off
	Characters: On, *Off
Display Remaining Toner Error Message	*On, Off
Display Dept.ID/ User Name	*On, Off
USB setting	
Use USB device	*On, Off
Use USB host	*On, Off
Device Information Delivery Settings	
Register Destinations	Auto Search/Register, Register, Details, Erase, Print List

Mode	Description
Auto Delivery Settings	Everyday, Select Days, *Off
	Initial setting/register setting value: On, *Off
	Network Settings: Include, *Exclude
	Dept. ID: On, *Off
	Address Book: On, *Off
	Printer specification setting: On, *Off
	Paper information: On, *Off
	Workflow Composer: On, *Off
Manual Delivery	Initial setting/register setting value: On, *Off
	Network Settings: Include, *Exclude
	Dept. ID: On, *Off
	Address Book: On, *Off
	Printer specification setting: On, *Off
	Paper information: On, *Off
	Workflow Composer: On, *Off
Restrictions for Receiving Device Info	On, *Off
Restore Data	Initial setting/register setting value, Dept. ID, Address Book, Paper information, Workflow Conposer
Receive Limit for Each Function	Initial setting/register setting value: *On, Off
	Dept. ID: *On, Off
	Address Book: *On, Off
	Printer specification setting: On, *Off
	Paper information: On, *Off
	Workflow Composer: On, *Off
Communication Log	Details, Print List, Report Settings
	Every 100 communications auto print: *On, Off
	Daily activity report time: On, *Off
	Timer setting: 00:00 to 23:59
	Separate by machine model: On, *Off
Initialize All Data/ Settings	Initialize
Use Asterisks to Enter Access No./Passwords	*On, Off
	Number of entry: 1 time entry, 2 times entry
Tint block mode	
Forced tint block print	Copy: *Off, On
	Box: *Off, On
	Printer: *Off, On
Printer driver tint block print	*On, Off
Encrypted secure print setting	
Receive only encrypted secure print	On, *Off
Auto print at the time of using IC card	On, *Off
Paper type settings	Detail/edit
	Name, type, basis weight, surface nature, shape
	Copy, erase
Time to Hold Job auto erase	0 = None, 1, 2, 3, 6, 12 hr
	1, 2, *3, 7, 30 days
User box collective setting	
Time to document auto erase	0 = None, 1, 2, 3, 6, 12 hr
	1, 2, *3, 7, 30 days
Print at the time of saving from printer driver	On, *Off
Limits of printer job	On, *Off
Page description language selection (plug and play)	FAX*3, LIPS LX*2, LIPS IV*1, PS*1

1.2.3.6 Copy Settings

CLC5151 / / / CLC4040 / / iR C4580i / / iR C4080i / / / / iR C5185N / / iR C5185i PRT /

*: Factory default.

T-1-6

Mode	Description
Paper Select Key Size for Express Copy Screen	*Large: Up to 4 (Stack Bypass, Stack bypass Settings, 1: Paper Drawer 1, 2: Paper Drawer 2, 3: Paper Drawer 3, 4: Paper Drawer 4, 5: Paper Deck-U1), Small; Four paper sources maximum
Standard Key 1, 2 Settings for Regular Screen	Each mode (*no settings)
Standard Key Settings for Express Copy Screen	Displayed Standard Keys: *Up to 5 Set Keys, Up to 10 Set Keys
	Each mode (*no settings)
Auto Collate**	*On, Off
Image Orientation Priority	On, *Off
Auto Orientation	*On, Off

Mode	Description
Standard Settings	Store, Initialize
Initialize Copy Settings	Initialize

1.2.3.7 Communications Settings

CLC5151 / / / CLC4040 / / iR C4580i / / iR C4080i / / / / iR C5185N / / iR C5185i PRT /

"Communications Settings" is the item that appears only when the appropriate optional equipment is attached for iR C5185/iR C5185N, iR C4580 and iR C3880 (Pre-installed in iR C4580F and iR C3880F).
*: Factory default.
*1: Indicates the items that appear only when the appropriate optional equipment is attached.
*2: Indicates the items that appear only when the color image reader G1 is attached.

T-1-7

Mode	Description
Common Settings: TX Settings	
Unit Name	24 characters maximum
Permit non-ASCII code for FTP TX specification*1	On, *Off
Erase Failed TX	*On, Off
Data compression rate*1	High, *Average, Low
Handle Documents with Forwarding Errors	Always Print, Store/Print, *Off
Retry Times*1	0 to 5 times; *3 times
Edit Standard Send Settings	When enabling color universal SEND kit
	Reading mode: Color / binary 200 x 200
	File format: TFF/PDF auto select
	Stamp: No stamp
	When fixing a FAX board
	Reading mode: black and white 200 x 100
	Stamp: No stamp
	When enabling color universal SEND kit + fixing a FAX board
	Reading mode: Color / binary 200 x 200
	File format: TIFF/PDF auto select
	Stamp: No stamp
Register Favorites Button	Register/Edit, Erase (M1 to M18)
Image Level for PDF (Compct)*1	Image Level in Text/Photo or Photo Mode: Data Size Priority, *Normal, Image Priority
	Image Level in Text Mode: Data Size Priority, *Normal, Image Priority
PDF(OCR) Settings*1	Smart Scan: *On, Off
	Num. of Char. for Doc. Name Setting: 1 to 24 characters; *24 characters
Outline PDF setting	Outline of figure: *On, Off
	Setting of outline for the figure: Standard, *Ignore overlap and complexity of figures
	Level of background image: Prioritize the data size, *Normally image prioritized
Confirm certificate of device signature*1	Certificate detailed information: Investigate the certificate
Confirm certificate of user signature*1	Certificate detailed information: Investigate the certificate
Confirmation display at the time of sending IC card signature*1	*On, Off
Default Screen for Send	Favorites Buttons, One-touch Buttons, *New Address
TX Terminal ID	*On, Off
Use chunk-separation sending at the time of WebDAV sending*1	*On, Off
Gamma Value for YCbCr Send Jobs*1	Gamma 1.0, Gamma 1.4, Gamma 1.8*1, Gamma 2.2
Display confirmation of the stamp at the time of both-side document sending*2	*On, Off
Initialize TX Settings	Initialize
Common Settings: RX Settings	
Two-sided Print	On, *Off
Select Cassette	Switch A: *On, Off
	Switch B: *On, Off
	Switch C: *On, Off
	Switch D: *On, Off
Image reduction	*On, Off
	Reduction mode: *Auto scalable, fixed
	Reduction ratio: 75 to 97 % (at 1% basis), *90%
	Reduction direction: both horizontal and vertical directions, *Only the vertical direction
Received Page Footer	On, *Off
2 on 1 Log	On, *Off
Gamma Value for YCbCr Received Jobs	Gamma 1.0, Gamma 1.4, Gamma 1.8*1, Gamma 2.2
Fax Settings: Basic Setting	
Registration of Sender name	01 to 99: Registration/edit, erase

Mode	Description
Volume Control	Alarm Volume: 0 to 8 levels; *4
	Monitor Volume: 0 to 8 levels; *4
Off-hook alarm*1	*On, Off
Fax Settings: TX Settings	
ECM TX	*On, Off
Pause Time	1 to 15 seconds; *2 seconds
Auto Redial	*On, Off
	Redial Times: 1 to 15 times; *2 times
	Redial Interval: 2 to 99 minutes; *2 minutes
	TX Error Resend: *Error and 1st Page, All pages, Off
Check Dial Tone Before Sending	*On, Off
Fax Settings: RX Settings	
ECM RX	*On, Off
Select RX mode	*Auto RX, FAX/TEL switch
	Calling start time: 0 to 30 sec, *8 sec
	Calling time: 15 to 300 sec, *7 sec
	Operation after calling: Finish, *Receive
	Voice response: On, *Off
RX call	On, *Off
	Calling frequency: 1 to 99 times, *Twice
Remote RX	On, *Off
	Remote receiving ID: 00 to 99, *25
Auto RX switch	On, *Off
	The number of seconds for calling: 1 to 99 sec, *15 sec
Receive number display	On, *Off
Fax setting: Line settings	
Unit Telephone #	20 digits maximum
Select abbreviated user name	24 characters maximum
Tel Line Type	Pulse, *Tone
Select TX line	Line 1: *prioritized TX/TX prohibition
	Line 2: prioritized TX/TX prohibition

1.2.3.8 Mail Box Settings

CLC5151 / / / CLC4040 / / iR C4580i / / iR C4080i / / / / iR C5185N / / iR C5185i PRT /

*: Factory default.
*1: Indicates the items that appear only when the appropriate optional equipment is attached for iR C5185/iR C5185N, iR C4580 and iR C3880 (Pre-installed in iR C4580F and iR C3880F).

T-1-8

Mode	Description
User Inboxes Settings	Inbox No.: 00 to 99
	Register Inbox Name: 24 characters maximum
	Password: Seven digits maximum
	Time until Doc. Auto Erase: 0 (Off), 1, 2, 3, 6, 12 hours, 1, 2, *3, 7, 30 days
	URL Send Settings
	Print data saved in the mail box from the printer driver: On, *Off
	Initialize
Standard Scan Settings	Store, Initialize
Confidential Fax Inboxes Settings*1	Inbox No.: 00 to 99
	Register Inbox Name: 24 characters maximum
	Password: Seven digits maximum
	URL Send Settings
	Initialize

1.2.3.9 Printer Settings

CLC5151 / / / CLC4040 / / iR C4580i / / iR C4080i / / / / iR C5185N / / iR C5185i PRT /

*: Factory default.
*1: Indicates the items that appear only when the appropriate optional equipment is attached.

T-1-9

Mode	Description
Copy count	*1 to 9999
Double-sided	Double-sided, *single-sided
Pickup	

Mode	Description
Default paper size	*A4, B5, A3, B4, A5, letter, legal, ledger, postcard, double postal card, four-face postcard, envelope (KAKUGATA2), envelope (NAGAGATA3), envelope Monarch, envelope COM10, envelope ISO-B5, envelope ISO-C5, 320 x 450 mm (SRA3), 305 x 457 mm
Default paper type	*Plain paper, transparency, heavy paper 1, heavy paper 2, recycled paper, color paper, tracing paper, label, punched paper, postcard, envelope, index paper, gloss paper
Switch-over the paper size	*On, Off
Print adjust	
Toner density*1	Cyan (C): -8 to *0 to +8
	Magenta (M): -8 to *0 to +8
	Yellow (Y): -8 to *0 to +8
	Black (Bk): -8 to *0 to +8
Toner save	On, *Off
Fine density correction	-2 to *0 to +2
Resolution	Super fine, *fine
Image compression	Prioritize image, *Standard, speed prioritized
Toner usage correction	*Standard, gradation prioritized, text prioritized
Line density	*Resolution prioritized, gradation prioritized
Layout	
Binding direction	*Long-edge, short-edge
Binding margin	-50.0 to *0.0 to +50.0 mm
Short-edge/long-edge direction shift (front)	-50.0 to *0.0 to +50.0 mm
Short-edge/long-edge direction shift (back)	-50.0 to *0.0 to +50.0 mm
Auto error skip	On, *Off
Secure print delete time	Print delete time length: *1, 2, 3, 6, 12, 24 hr
Time-out	*15 sec (between 5 and 300), off
Print after the completion of RIP	On, *Off
Finish	*Off, sort, turn sort**, turn group**, shift sort*1 (Note 1), shift group**, staple sort** (Note 2), staple group** (Note 3)
	The number of copy volumes at shift
	Note 1: Per 1 to 9999 copy volume
	Staple position
	Note 2: Left upper (corner), upper (double), right upper (corner), right (double), right lower (corner), lower (double), left lower (corner), left (double)
	Note 3: Group left upper (corner), group upper (double), group right upper (corner), group right (double), group right lower (corner), group lower (double), group left lower (corner), group left (double)
Punch*1	*Off, upper, lower, left, right
Book binding	*Off, left open, right open
Saddle stitch**	On, *Off
Creep (displacement) correction*1	*Off, auto, correction amount (0.00 to 10.00 mm)
Transparency interleaf	*Off, blank paper interleaf, printed paper interleaf
Set count	
Set count	On, *Off
Print position	*5 points, left upper, left lower, right upper, right lower, whole surface
Print start number	*1 to 9999
Print size	Small (12 points), middle (24 points), *large (36 points)
Density	1 to *3 to 5
Print color	Yellow, magenta, cyan, *black, red, green, blue
Adjustment of print position (vertical/horizontal)	-8 to *0 to +8 mm
Printer operation mode*1	*Auto, LIPS, N201, ESC/P, I5577, HP-GL, HP-GL/2, LIPS dump, Imaging, PDF1.5
Prioritized emulation*1	*Off, LIPS, N201, ESC/P, I5577, HP-GL, HP-GL/2, PDF1.5
Auto switch*1	LIPS: *On, Off
	N201: *On, Off
	ESC/P: *On, Off
	I5577: *On, Off
	HP-GL: *On, Off
	HP-GL/2: *On, Off
	Imaging: *On, Off
	PDF1.5: *On, Off
Color mode	*Auto, full color, mono color
Gradation setting	Gradation: *Off, smooth 1, smooth 2
	Applied to graphics**: *On, Off
	Applied to image**: *On, Off
Compressed image output	*Output, display an error

Mode	Description
Connection recognition*1	*On, Off
Printer settings initialization	-

1.2.3.10 Address Book Settings

CLC5151 / / / CLC4040 / / iR C4580i / / iR C4080i / / / / iR C5185N / / iR C5185i PRT /

"Address Book Settings" is the item that appears only when the appropriate optional equipment is attached for iR C5185/iR C5185N, iR C4580 and iR C3880 (Pre-installed in iR C4580F and iR C3880F).

T-1-10

Mode	Description
Address register	Register new address , detail/edit, or delete
Address list name register	Register name
One-touch button register	Register/edit, delete

1.2.4 User Maintenance

1.2.4.1 Cleaning

CLC5151 / / / CLC4040 / / / iR C4580i / / / iR C4080i / / / / Color Image Reader-F1 / Color Image Reader-E1 / Dupiex Color Image Reader-G1 / iR C5185N / / iR C5185i PRT /

The machine has some components that must be cleaned by the user on a periodical basis (about once a month); advise the user on how to clean such components:

1. Feeder(back) (Copyboard Cover)
Wipe the copyboard cover [1] using a cloth moistened with water or solution of mild detergent (well wrung); then, dry wipe it with a soft cloth.

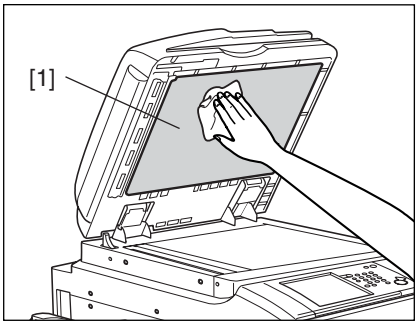

F-1-13

2. Rubber roller (Platen Roller)
Wipe the platen roller [1] using a cloth moistened with water or solution of mild detergent (well wrung); thereafter, dry wipe it with a soft cloth.

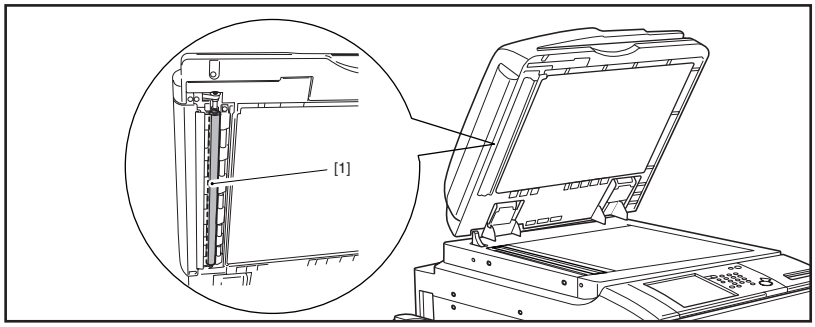

F-1-14

3. Copyboard Glass, Original reading area(ADF Reading Glass)
Wipe the copyboard glass [1] and the DF reading glass [2] using a cloth moistened with water or solution of mild detergent (well wrung); thereafter, dry wipe them with a soft cloth.

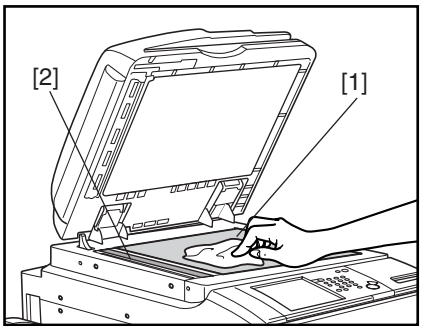

F-1-15

4. DF Glass Retainer, Edge Guide

Wipe the DF glass retainer [1] and the edge guide [2] using a cloth moistened with water or solution of mild detergent (well wrung); thereafter, dry wipe them with a soft cloth.

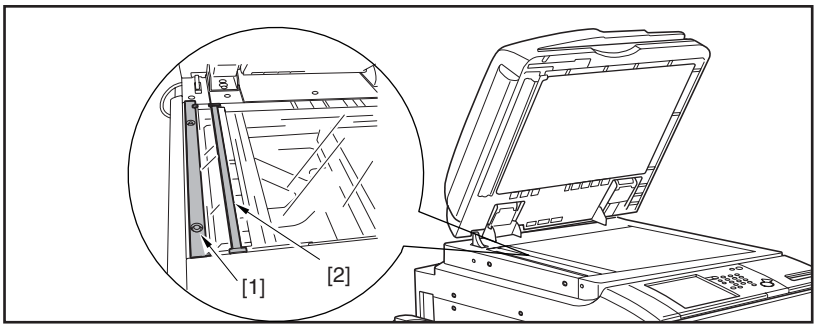

F-1-16

5. Vertical Size Plate
Clean the vertical size plate [1] using a cloth moistened with water or solution of middle detergent (well wrung); thereafter, dry wipe it with a soft cloth.

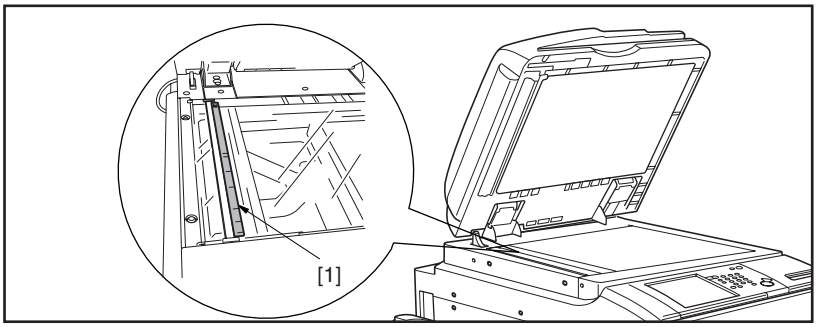

F-1-17

1.2.4.2 Inspection

CLC5151 / / / CLC4040 / / / iR C4580i / / / iR C4080i / / / / Color Image Reader-F1 / Color Image Reader-E1 / Dupiex Color Image Reader-G1 / iR C5185N / / iR C5185i PRT /

The machine is equipped with a breaker for detection of over-current and leakage current for enhanced safety, and it is important to check and see that the breaker operates properly.
Advise the user to check the breaker on a periodical basis (about once a month), and keep a record of inspection.
Go through the following:

1) Turn off the main power switch.
2) Push the test button [1] of the breaker with the tip of a ball-point pen or the like.

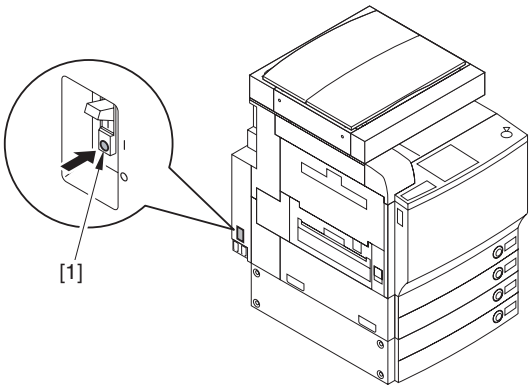

F-1-18

3) See that the breaker switch [1] shifts to the OFF side, thus cutting off the power.

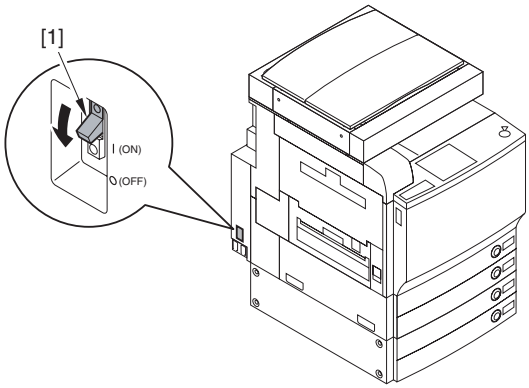

F-1-19

4) Turn off the main power switch.
5) Shift the breaker switch [1] back to the ON side.

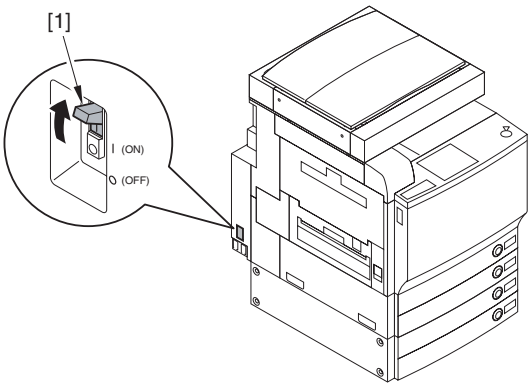

F-1-20

Check to be sure that the breaker switch is on the ON side. If it has stopped between the ON and OFF sides, push it back to the OFF side and then to the ON side.

6) Turn on the main power switch.

1.2.5 Safety

1.2.5.1 CDRH Regulations

CLC5151 / / / CLC4040 / / iR C4580i / / iR C4080i / / / / iR C5185N / / iR C5185i PRT /

The Center for Devices and Radiological Health of the US Food and Drum Administration put into force regulations concerning laser products on August 2, 1976. These regulations apply to laser products manufactured on and after August 1, 1976, and the sale of laser products not certified under the regulations is banned within the Untied States. The label shown here indicates compliance with the CDRH regulations, and its attachment is required on all laser products that are soled in the United States.

CANON INC.
30-2,SHIMOMARUKO,3-CHOME,OHTA-KU,TOKYO,
146.JAPAN

MANUFACTURED :

THIS PRODUCT CONFORMS WITH DHHS RADIATION
PERFORMANCE STANDARD 21CFR CHAPTER1
SUBCHAPTER J.

F-1-21

A different description may be used for a different product.

1.2.5.2 Laser safety

CLC5151 / / / CLC4040 / / iR C4580i / / iR C4080i / / / / iR C5185N / / iR C5185i PRT /

Laser beam radiation may pose a danger to the human body. A laser scanner mounted on the machine is sealed with the protection housing and external cover to prevent the laser beam from leaking to the outside. The laser beam never leaks out of the scanner as far as users operate the machine normally

The following warnings are given to comply with Safety Principles (EN60950).
Laserstrahlen können für den menschlichen Körper gefährlich sein. Aus diesem Grund ist das optische Lasersystem mit einem Schutzgehäuse und einer Außenabdeckung dicht verschlossen und hat eine Struktur, die keine Laserstrahlen nach außen dringen lässt. Unter der Voraussetzung, dass der Benutzer dieses Gerät normal bedient, ist ein Austritt von Laserstrahlen daher ausgeschlossen.

1.2.5.3 Handling the Laser Assembly

CLC5151 / / / CLC4040 / / iR C4580i / / iR C4080i / / / / iR C5185N / / iR C5185i PRT /

When servicing the area around the laser assembly, be sure to turn off the main power.
If you must servicr while the power is turned on, be sure to keep the followings:
- Do not use a screwdriver or tools that have a high level of reflectance in the laser path.
- Remove watches and rings before starting the work. (They can reflect the laser beam, possibly hitting the eye.)

The machine's covers that can reflect laser light are identified by means of a warning label (Figure). If you must detach a cover showing the label, be sure to take extra caution during the work.
The following warnings are given to comply with Safety Principles (EN60950).

Handhabung des Laserteils

Bei Servicearbeiten am oder in der Nähe des Laserteils zuerst das Hauptgerät abschalten.

Bei Servicearbeiten, die unbedingt bei eingeschaltetem Gerät durchgeführt werden müssen, auf jeden Fall die folgenden Vorsichtsmaßnahmen beachten.

• Keine stark reflektierenden Schraubenzieher oder ähnliche Werkzeuge direkt in den Lichtpfad des Laserstrahls bringen.

• Vor Beginn der Arbeit Uhren, Ringe und ähnliche Gegenstände abnehmen. (Reflektierte Laserstrahlen könnten sonst in die Augen geraten.)

Abdeckungen, die möglicherweise Laserstrahlen reflektieren, haben in der auf dem Bild gezeigten Position einen Aufkleber. Bei Servicearbeiten auf der Innenseite von Abdeckungen mit Aufkleber ist besondere Vorsicht erforderlich.

F-1-22

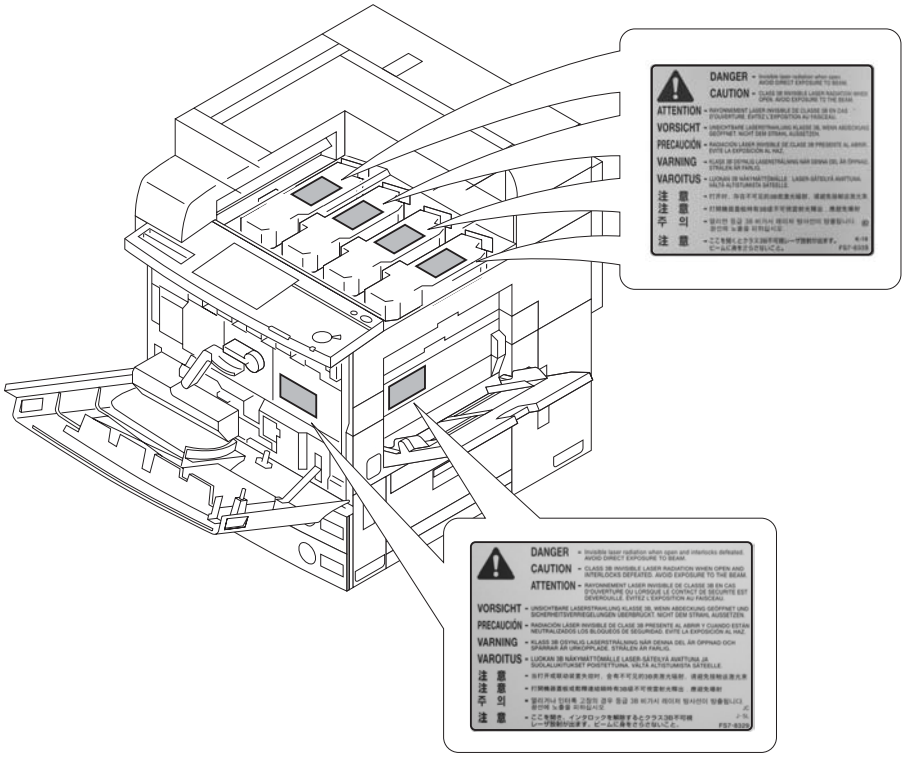

F-1-23

1.2.5.4 Safety of Toner

CLC5151 / / / CLC4040 / / iR C4580i / / iR C4080i / / / / iR C5185N / / iR C5185i PRT /

1. About Toner
The machine's toner is a non-toxic material made of plastic, iron, and small amounts of dye.

⚠
Do not throw toner into fire. It may cause explosion.

---

2. Toner on Clothing or Skin
- If your clothing or skin has come into contact with toner, wipe it off with tissue; then, wash it off with water.
- Do not use warm water, which will cause the toner to jell and fuse permanently with the fibers of the cloth.
- Do not bring toner into contact with plastic material. It tends to react easily.

1.2.5.5 Notes when handling a lithium battery

CLC5151 / / / CLC4040 / / iR C4580i / / iR C4080i / / / / iR C5185N / / iR C5185i PRT /

⚠
RISK OF EXPLOSION IF BATTERY IS REPLACED BY AN INCORRECT TYPE.
DISPOSE OF USED BATTERIES ACCORDING TO THE INSTRUCTIONS.

The following warnings are given to comply with Safety Principles (EN60950).

⚠
Wenn mit dem falschen Typ ausgewechselt, besteht Explosionsgefahr.
Gebrauchte Batterien gemäß der Anleitung beseitigen.

1.2.5.6 Notes at Replacing/Disposing the Fixing Unit

CLC5151 / / / CLC4040 / / iR C4580i / / iR C4080i / / / / iR C5185N / / iR C5185i PRT /

⚠ **Points to Notes at Replacing/Disposing the Fixing Unit**
Be sure not to throw the fixing unit into the fire in case of explosion.

1.2.5.7 Notes before it works serving

CLC5151 / / / CLC4040 / / iR C4580i / / iR C4080i / / / / iR C5185N / / iR C5185i PRT /

⚠Notes before it works serving
At servicing, be sure to turn OFF the power source according to the specified steps and disconnect the power plug.

1.2.6 Product Specifications

1.2.6.1 Type and Functions

CLC5151 / / / CLC4040 / / iR C4580i / / iR C4080i / / / / iR C5185N / / iR C5185i PRT /

Copyboard	Flat-bed
Body	Desk-top
Photosensitive medium	OPC drum 30.6 mm dia. (4 pc.)
Exposure method	Laser exposure
Charging method	Roller charging
Development method	Bk Dry, 2-component; Color Dry, 2-component
Cassette pickup method	Separation retard
Multifeeder pickup method	Simple retard
Transfer method	Intermediate transfer belt
Transfer method (primary transfer)	Transfer roller system
Transfer method (secondary transfer)	Transfer roller system
Separation method	Curvature separation (static eliminator)
Drum cleaning method	None
Trasnsfer cleaning method	Blade (with equalization) + spring pressure
Fixing method	Twin belt fixing
Delivery method	Face-down, face-up
Warm-up time	At power-on (at 20 deg C room temperature) - iR C5180/5185 Series: 4 min or less - iR C4580/3880 Series: 5 min or less
Print area	Maximum image guarantee area 301 x 452 mm; Maximum print area 305 x 452 mm
Printing resolution	1200 dpi x 1200 dpi
Toner level detection function	Yes
Drum wear detection function	Yes

1.2.7 Function List

1.2.7.1 Print Speed

CLC5151 / / / CLC4040 / / iR C4580i / / iR C4080i / / / / iR C5185N / / iR C5185i PRT /

A. First Print Time

T-1-11

Unit: sec

	Full-color	**Monochrome**
A4, plain (64 g/m2 to 105 g/m2)	8.0 (iR C5180/iR C5185) 9.5 (iR C4580/iR C3880)	6.2 (iR C5180/iR C5185) 6.7 (iR C4580/iR C3880)

B. Printing Speed

1. iR C5180/iR C5185
a. Single-sided

T-1-12

Unit: prints/min

Mode	**Paper size**	**Single-sided**			
		Cassette		**Manual Feeder**	
		Mono	**Color**	**Mono**	**Color**
Plain paper 64 to 105g/m2	SR-A3 (320x450mm)	-	-	19.5	19.5
	12x18inch (305x457mm)	24	24	19.5	19.5
	A3, LDR	25.5	25.5	19.5	19.5
	B4, LGL	25.5	25.5	22.3	22.3
	A4, LTR, B5	51	51	31	31
	A4R, LTRR, B5R	25.5	25.5	25.5	25.5
	A5R, STMTR	25.5	25.5	25.5	25.5

					Unit: prints/min
Heavy paper up to 105g/m2	SR-A3 (320x450mm)	-	-	9.75	9.75
	12x18inch (305x457mm)	12	12	9.75	9.75
	A3, LDR	12.75	12.75	9.75	9.75
	B4, LGL	15	15	11	11
	A4, LTR, B5	25.5	25.5	15.5	15.5
	A4R, LTRR, B5R	17.5	17.5	12.75	12.75
	A5R, STMTR	25.5	25.5	15	15
	Tab paper	-	-	14	14
Transparency	A3, A4, A4R, LTR, LTRR	11	9.5	11	9.5
Postcard		-	-	15	15

b. Double-sided

T-1-13

									Unit: prints/min
Mode	**Paper size**	**Double-sided**							
		Face-down				**Face-up**			
		Cassette		**Manual Feeder**		**Cassette**		**Manual Feeder**	
		Mono	**Color**	**Mono**	**Color**	**Mono**	**Color**	**Mono**	**Color**
Plain paper 64 to 105g/m2	SR-A3 (320x450mm)	-	-	-	-	-	-	-	-
	12x18inch (305x457mm)	19.4	19.4	18.0	18.0	17	17	15.5	15.5
	A3, LDR	20.1	20.1	18.2	18.2	17	17	15.1	15.1
	B4, LGL	20.1	20.1	19.3	19.3	17	17	16.1	16.1
	A4, LTR, B5	41.2	41.2	33.7	33.7	31.5	31.5	25.8	25.8
	A4R, LTRR, B5R	20.1	20.1	20.4	20.4	20.1	20.1	20	20
	A5R, STMTR	20.1	20.1	20.4	20.4	20.1	20.1	20	20
Heavy paper up to 105g/m2	SR-A3 (320x450mm)	-	-	-	-	-	-		
	12x18inch (305x457mm)	9.4	9.4	8.7	8.7	8.4	8.4	7.3	7.3
	A3, LDR	10.0	10.0	9.0	9.0	8.4	8.4	7.1	7.1
	B4, LGL	10.0	10.0	8.9	8.9	8.4	8.4	7.4	7.4
	A4, LTR, B5	20.8	20.8	16.7	16.7	15.8	15.8	12.4	12.4
	A4R, LTRR, B5R	11.6	11.6	10.4	10.4	10.8	10.8	9.4	9.4
	A5R, STMTR	20.8	20.8	17.5	17.5	17.8	17.8	14.5	14.5
	Tab paper	-	-	-	-	-	-	-	-

2. iR C4580
a. Single-sided

T-1-14

					Unit: prints/min
Mode	**Paper size**	**Single-sided**			
		Cassette		**Manual Feeder**	
		Mono	**Color**	**Mono**	**Color**
Plain paper 64 to 105g/m2	SR-A3 (320x450mm)	-	-	16.5	14.5
	12x18inch (305x457mm)	21	18.8	16.5	14.5
	A3, LDR	22.5	20	16.5	14.5
	B4, LGL	22.5	20	19	16.8
	A4, LTR, B5	45/40 *	40	26.5	23.5
	A4R, LTRR, B5R	22.5	20	21.5	19.3
	A5R, STMTR	22.5	20	21.5	19.3
Heavy paper up to 105g/m2	SR-A3 (320x450mm)	-	-	7	7
	12x18inch (305x457mm)	9.3	9.3	7	7
	A3, LDR	10	10	7	7
	B4, LGL	11.8	11.8	8.4	8.4
	A4, LTR, B5	20	20	11.8	11.8
	A4R, LTRR, B5R	13.7	13.7	10	10
	A5R, STMTR	20	20	11.8	11.8
	Tab paper	-	-	11	11
Transparency	A3, A4, A4R, LTR, LTRR	11	9.5	11	9.5
Postcard		-	-	11.8	11.8

* 40ppm for only CLC4040

b. Double-sided

T-1-15

Unit: prints/min

Mode	Paper size	Double-sided							
		Face-down				Face-up			
		Cassette		Manual Feeder		Cassette		Manual Feeder	
		Mono	Color	Mono	Color	Mono	Color	Mono	Color
Plain paper 64 to 105g/m2	SR-A3 (320x450mm)	-	-	-	-	-	-	-	-
	12x18inch (305x457mm)	17.1	15.1	15.6	13.6	15	13.1	13.8	11.9
	A3, LDR	17.7	15.8	15.7	13.9	15	13.1	13.5	11.7
	B4, LGL	17.7	15.8	16.8	14.9	15	13.1	14.3	12.4
	A4, LTR, B5	36.6	32.6	29.2	25.9	27.8	24.7	23.3	20.6
	A4R, LTRR, B5R	20.4	18.2	20.4	18.2	18.1	17	18.1	17
	A5R, STMTR	20.4	18.2	20.4	18.2	18.1	17	18.1	17
Heavy paper up to 105g/m2	SR-A3 (320x450mm)	-	-	-	-	-	-	-	-
	12x18inch (305x457mm)	7.5	7.5	6.6	6.6	6.7	6.7	5.9	5.9
	A3, LDR	7.6	7.6	6.5	6.5	6.7	6.7	5.8	5.8
	B4, LGL	7.6	7.6	6.7	6.7	6.7	6.7	6	6
	A4, LTR, B5	16.3	16.3	12.7	12.7	12.4	12.4	10.2	10.2
	A4R, LTRR, B5R	9	9	8.1	8.1	8.4	8.4	7.6	7.6
	A5R, STMTR	16.3	16.3	12.7	12.7	12.4	12.4	12.4	12.4
	Tab paper	-	-	-	-	-	-	-	-

3. iR C3880
a. Single-sided

T-1-16

Unit: prints/min

Mode	Paper size	Single-sided			
		Cassette		Manual Feeder	
		Mono	Color	Mono	Color
Plain paper 64 to 105g/m2	SR-A3 (320x450mm)	-	-	16.5	14.5
	12x18inch (305x457mm)	21	18.8	16.5	14.5
	A3, LDR	22.5	20	16.5	14.5
	B4, LGL	22.5	20	19	16.8
	A4, LTR, B5	38/40 *	36	26.5	23.5
	A4R, LTRR, B5R	22.5	20	21.5	19.3
	A5R, STMTR	22.5	20	21.5	19.3
Heavy paper up to 105g/m2	SR-A3 (320x450mm)	-	-	7	7
	12x18inch (305x457mm)	9.3	9.3	7	7
	A3, LDR	10	10	7	7
	B4, LGL	11.8	11.8	8.4	8.4
	A4, LTR, B5	20	20	11.8	11.8
	A4R, LTRR, B5R	13.7	13.7	10	10
	A5R, STMTR	20	20	11.8	11.8
	Tab paper	-	-	11	11
Transparency	A3, A4, A4R, LTR, LTRR	11	9.5	11	9.5
Postcard		-	-	11.8	11.8

* 38ppm for iR C3880 and iR3880F
40ppm for Color iR C4080, Color iR C4080, iR C4080i, iR C4080

b. Double-sided

T-1-17

Unit: prints/min

Mode	Paper size	Double-sided							
		Face-down				Face-up			
		Cassette		Manual Feeder		Cassette		Manual Feeder	
		Mono	Color	Mono	Color	Mono	Color	Mono	Color
Plain paper 64 to 105g/m2	SR-A3 (320x450mm)	-	-	-	-	-	-	-	-
	12x18inch (305x457mm)	17.1	15.1	15.6	13.6	15	13.1	13.8	11.9
	A3, LDR	17.7	15.8	15.7	13.9	15	13.1	13.5	11.7
	B4, LGL	17.7	15.8	16.8	14.9	15	13.1	14.3	12.4
	A4, LTR, B5	36.6	32.6	29.2	25.9	27.8	24.7	23.3	20.6
	A4R, LTRR, B5R	20.4	18.2	20.4	18.2	18.1	17	18.1	17
	A5R, STMTR	20.4	18.2	20.4	18.2	18.1	17	18.1	17
Heavy paper up to 105g/m2	SR-A3 (320x450mm)	-	-	-	-	-	-	-	-
	12x18inch (305x457mm)	7.5	7.5	6.6	6.6	6.7	6.7	5.9	5.9
	A3, LDR	7.6	7.6	6.5	6.5	6.7	6.7	5.8	5.8
	B4, LGL	7.6	7.6	6.7	6.7	6.7	6.7	6	6
	A4, LTR, B5	16.3	16.3	12.7	12.7	12.4	12.4	10.2	10.2
	A4R, LTRR, B5R	9	9	8.1	8.1	8.4	8.4	7.6	7.6
	A5R, STMTR	16.3	16.3	12.7	12.7	12.4	12.4	12.4	12.4
	Tab paper	-	-	-	-	-	-	-	-

1.2.7.2 Print Size

CLC5151 / / / CLC4040 / / iR C4580i / / iR C4080i / / / / iR C5185N / / iR C5185i PRT /

Paper Size

T-1-18

	Cassette	Manual Feed Tray	Cassette Pedestal	Side Paper Deck
A3	yes	yes	yes	no
A4	yes	yes	yes	yes
A4R	yes	yes	yes	no
A5R	yes	yes	yes	no
B4	yes	yes	yes	no
B5	yes	yes	yes	yes
B5R	yes	yes	yes	no
LGL	yes	yes	yes	no
LTR	yes	yes	yes	yes
LTR-R	yes	yes	yes	no
STMT-R	yes	yes	yes	no
279x432 [mm] (11x17)	yes	yes	yes	no
305x457 [mm] (12x18)	yes	yes	yes	no
320x450 [mm]	no	yes	no	no

Paper Type

T-1-19

	Cassette	Manual Feed Tray	Cassette Pedestal	Side Paper Deck
Plain paper (64 to 105 g/m2)	yes	yes	yes	yes
Heavy paper (up to 209 g/m2)	yes	yes	yes	yes
Recycled paper	yes	yes	yes	yes
Gloss paper *1	no	yes	no	no
Bond paper	yes	yes	yes	yes
Transparency *1	yes	yes	yes	no
Postcard	no	yes	no	no
2-pane postcard *1	no	yes	no	no
4-pane postcard *1	no	yes	no	no
Label paper *1	no	yes	no	no
Tracing paper *1	no	yes	no	no
Tab paper *1	no	yes	no	no
Envelope *1	no	yes	no	no
Pre-punched paper	no	yes	no	no

*1: support limited to single-sided printing.

1.2.7.3 Others

CLC5151 / / / CLC4040 / / iR C4580i / / iR C4080i / / / / iR C5185N / / iR C5185i PRT /

T-1-20

Operation environment	Temperature range	15 to 32.5 deg C
	Humidity range	25 to 75%
	Atmospheric pressure range	810.6 to 1013.3 hpa (0.8 to 1.0 atm)
Operating noise	In operation	iR C5185/5185N: 78 dB or less iR C5180/5180N/4580 /4580F/3880/3880F: 74 dB or less
	In standby	iR C5185/5185N: 58 dB or less iR C5180/5180N/4580 /4580F/3880/3880F: 50 dB or less
Power supply	100 V	
	120 V	
	230 V	
Power consumption (Reference value)	maximum	iR C5185/5185N: 2000 W or less (if equipped with cassette pedestal) iR C5180/5180N/4580 /4580F/3880/3880F: 1500 W or less (if equipped with cassette pedestal)
	In standby	100V: 344W* 120V: 350W* 230V: 350W* *When equipped with all accessories.
Ozone	Maximum	0.05 ppm or less
	Average	0.02 ppm or less
Dimensions	Width (W)	620 mm
	Depth (D)	850 mm
	Height (H)	1215 mm (including printer unit, reader unit, and ADF)
Weight	Total	130.0 kg (including printer unit; excluding toner cartridge)

The descriptions are subject to change for product improvement.

1.2.7.4 Reader Unit Specifications

CLC5151 / / / CLC4040 / / iR C4580i / / iR C4080i / / / / iR C5185N / / iR C5185i PRT /

T-1-21

Copyboard	Fixed
Original size detection	Feed sensors, reading CCD; copyboard cover angle
Original type	Sheet, book, 3-D object (2 kg max.)
Maximum original size	297 mm x 432 mm
Reproduction ratio	100%, Reduce I (1:0.25), Reduce II (1:0.50), Reduce III (1:0.61), Reduce IV (1:0.70), Reduce V (1:0.81), Reduce VI (1:0.86); Enlarge I (1:1.15), Enlarge II (1:1.22), Enlarge III (1:1.41), Enlarge IV (1:2.00), Enlarge V (1:4.00); Zoom (1:0.25 to 4.00; 25% to 400%: in 1% increments)
Reading resolution	Main scanning direction 600 dpi Sub scanning direction 600 dpi
Number of gradations	256
Reading maximum	Main scanning direction 0 to 2 mm against 297 mm Sub scanning direction 0 to 2 mm against 420 mm
Source of light	Xenon lamp
Dimensions	Width (W) 586 mm Depth (D) 565 mm Height (H) 104 mm
Weight	About 14 kg
Option	Anti-condensation heater (100/230V model only)

The descriptions are subject to change for product improvement.

Chapter 2 Installation

Contents

2.1 Making Pre-Checks 2-1
2.1.1 Points to Note 2-1
2.1.2 Spatial Requirements 2-2
2.1.3 Order of Installing Accessories 2-4
2.1.4 Checking the Contents 2-4
2.1.5 Checking the Contents 2-6
2.1.6 Checking the Contents (Color Image Reader-E1 / F1) 2-8
2.2 Unpacking and Installation 2-8
2.2.1 Installing the Printer Kit 2-8
2.2.2 Points to Note About Relocating the machine 2-9
2.2.3 Mounting the Reader Unit (Color Image Reader E1/F1) 2-9
2.2.4 Mounting the Transfer Cleaning Unit 2-13
2.2.5 Fitting the Toner Container in Place 2-14
2.2.6 Fitting the Drum Unit in Place 2-14
2.2.7 Fitting the Secondary Transfer Outside Roller Unit in Place 2-16
2.2.8 Cassette Setup 2-17
2.2.9 Other Work 2-17
2.2.10 Other Work 2-18
2.2.11 Dealing with power code mount 2-18
2.2.12 Connecting the Power Cord 2-20
2.2.13 Adjustment of Fixing Assembly 2-20
2.2.14 Checking the Image Margin 2-20
2.2.15 Adjustment of Left Margin of Image 2-20
2.2.16 Adjustment of the Margin along Leading Edge of Image 2-21
2.2.17 Adjustment of the Image Area (non-image width) 2-22
2.2.18 Setting the Auto Gradation Adjustment 2-22
2.3 Checking the Connection to the Network 2-22
2.3.1 Summary 2-22
2.3.2 Checking the Network Connection 2-22
2.3.3 Ping Operation 2-22
2.4 Troubleshooting the Network 2-22
2.4.1 Summary 2-22
2.4.2 Checking the Connection of Network Cable 2-23
2.4.3 Making a Check Using a Loopback Address 2-23
2.4.4 Making a Check Using a Local Host Address 2-23
2.5 Installing the Copy Tray 2-23
2.5.1 Checking the Attachments (Copy Tray-N1) 2-23
2.5.2 Turning Off the Host Machine 2-23
2.5.3 Installation Procedure 2-23
2.6 Installing the Card Reader 2-25
2.6.1 Checking Contents (Card Reader-D1) 2-25
2.6.2 Turning off the Host Machine 2-25
2.6.3 Installation Procedures 2-26
2.6.4 Installation Procedure in the imageWARE Accounting Manager (henceforth: iWAM) environment 2-27
2.7 Installing the Key Switch Unit 2-27
2.7.1 Checking Contents (Key Switch Unit-A2) 2-27
2.7.2 Turning off the Host Machine 2-28
2.7.3 Installation Procedures 2-28
2.7.4 Checking After the Installation 2-29
2.8 Installing the Reader Heater 2-30

2.8.1 Checking the Attachments (Reader Heater Unit-F1) 2-30
2.8.2 Turning Off the Host Machine 2-30
2.8.3 Installation Procedure 2-30
2.9 Installing the Cassette Heater 2-37
2.9.1 Checking the Attachments (Cassette Heater Kit-E1) 2-37
2.9.2 Checking the Attachments (Cassette Heater Unit-24) 2-38
2.9.3 Turning Off the Host Machine 2-38
2.9.4 Installation Procedure (Cassette Heater Kit-E1) 2-38
2.9.5 Installation Procedure (Cassette Heater Unit-24) 2-39
2.10 Installing the Deck Heater 2-41
2.10.1 Checking the Contents 2-41
2.10.2 Installation Procedure 2-41
2.11 Installing the Voice Guidance Kit 2-47
2.11.1 Checking Contents (Voice Guidance Kit-A2) 2-47
2.11.2 Turning off the Host Machine 2-48
2.11.3 Installation Procedures 2-48

2.1 Making Pre-Checks

2.1.1 Points to Note

CLC5151 / / / CLC4040 / / / iR C4580i / / / iR C4080i / / /

The site of installation must meet the following requirements; if possible, visit the site before the machine is delivered:
1) Moving a machine from a cold to warm place can cause condensation (i.e., droplets of water on its metal surfaces), consequently leading to faulty images. Be sure to leave the machine alone until it becomes used to the room temperature whenever condensation is expected.

MEMO;
Measures against condensation
- When transferring the body from the site in low temperature to in mild temperature, implement this mode before automatic graduation adjustment.

- Toner cartridge and drum unit should be removed before implementing this mode.
- Dummy transfer cleaning unit should be installed.
- Working time of this mode is six to eighteen minutes, varying due to its circumstances ("OK" is displayed if normally completed).

Enter the Srvice mode.
COPIER > FUNCTION > INSTALL > DRY-RT

2) The outlet that meets the requirements indicated in the following table should be enabled to connect to the power supply exclusively.

	iR C5180 / CLC5151	**iR C4580 / iR C3880 / CLC4040**
100V model	(100V, 20A or more)	(100V, 15A or more)
120V model	(120V to 127V, 20A or more)	(120V to 127V, 15A or more)
230V model	230V model	(220V to 240V, 10A or more)

3) The temperature and humidity should be within the range indicated in the following figure. Avoid areas near water faucets, water boilers, humidifiers, and refrigerators.

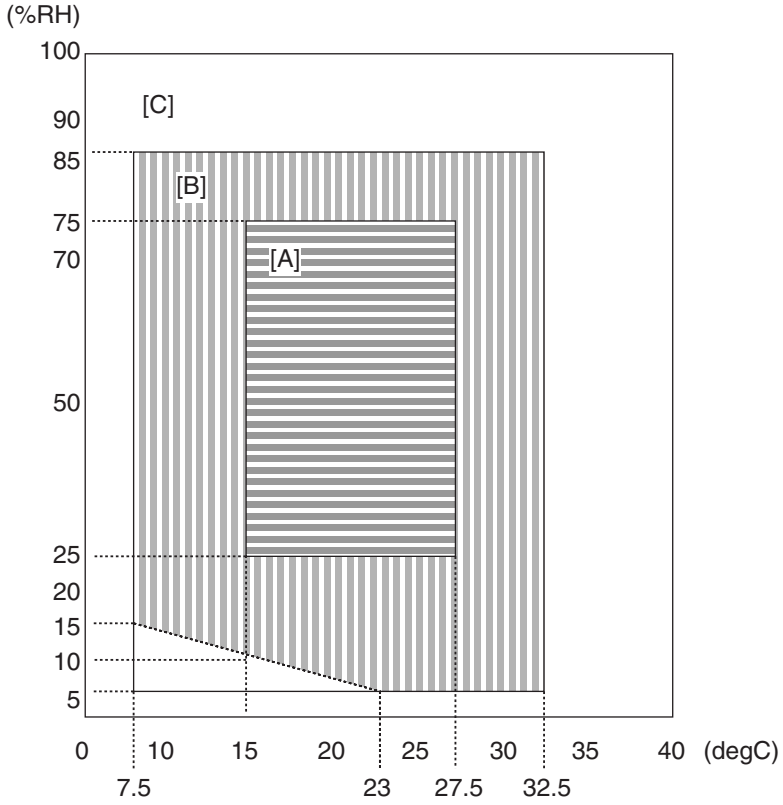

F-2-1

<Guaranteed Environment Zones>
[A]: A zone. All of the quality standard items are satisfied.
[B]: B zone. In this zone, some quality standard items do not satisfy the A zone criteria, and some other items are not applicable.
[C]: C zone. In this zone, there is no problems related to safety, malfunction, and faulty display, and the copy is operated normally.

4) The site must not be near sources of fire, and must be free of dust and ammonium gas. If the machine is likely to be subject to the direct rays of the sun, provide curtains or shades.
5) The site must be well-ventilated. It is important; however, that the machine will not be placed near air vents of the room. The amount of ozone generated by the machine should not affect the health of the individuals nearby. Nevertheless, some individuals may find the odor rather unpleasant. Be sure the room will be ventilated properly.
6) When lifting the machine, be sure to work as a group of 4 or more persons, since the machine weighs 130 kg. Also, be sure that the machine remains level.
7) The site must be such that the machine's feet will remain in contact with its floor and the machine will remain level.
8) The site must provide enough space for maintenance work.

2.1.2 Spatial Requirements

CLC5151 / / / CLC4040 / / / iR C4580i / / / iR C4080i / / /

The dimensions indicated in the figure are minimum requirements. Try to make available as much space as possible.

(a) Machine

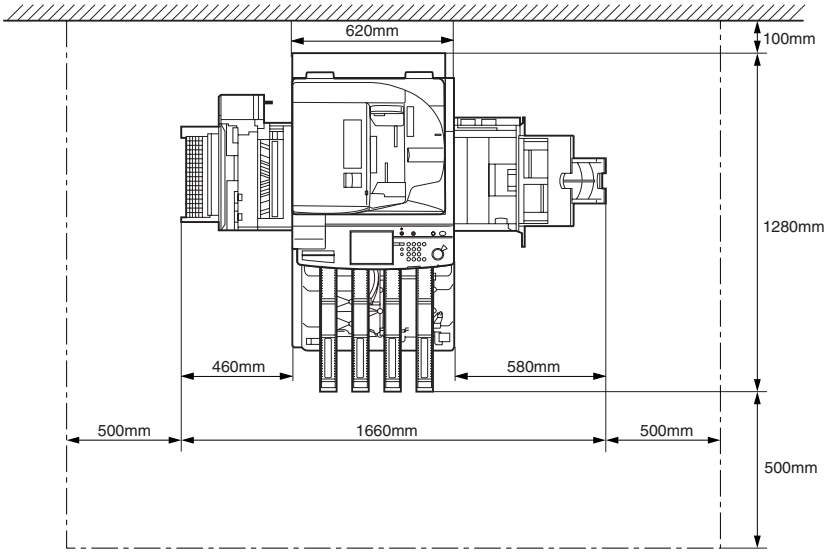

F-2-2

(b) Machine + Paper Deck + Finisher/Saddle Finisher + Fax + Puncher

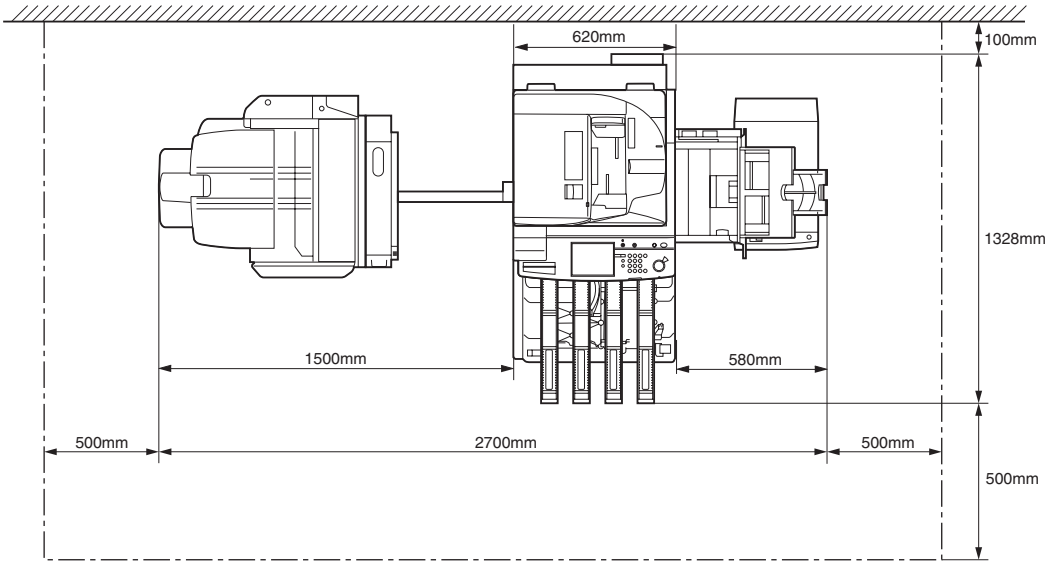

F-2-3

(c) Machine + Paper Deck + Finisher + Fax

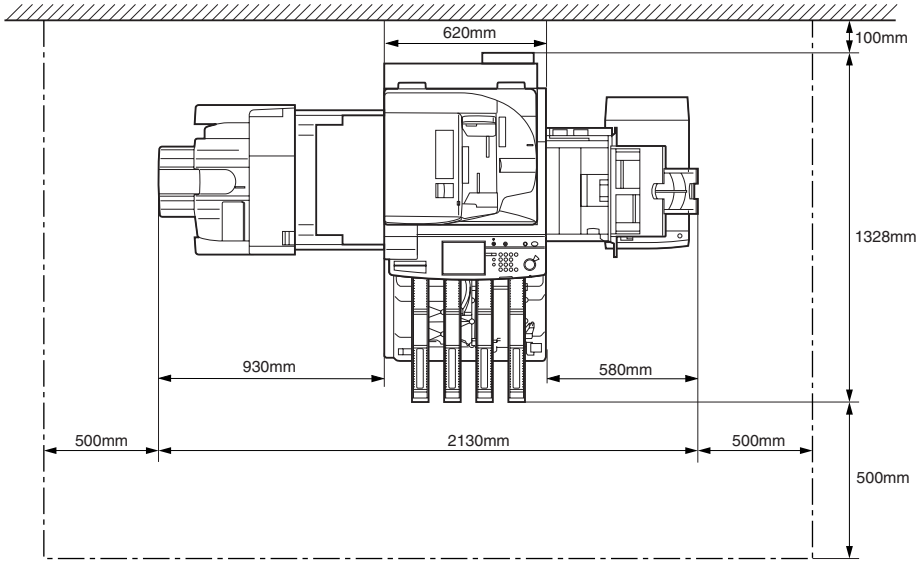

F-2-4

(d) Machine+ Paper Deck +Copy Tray + Fax

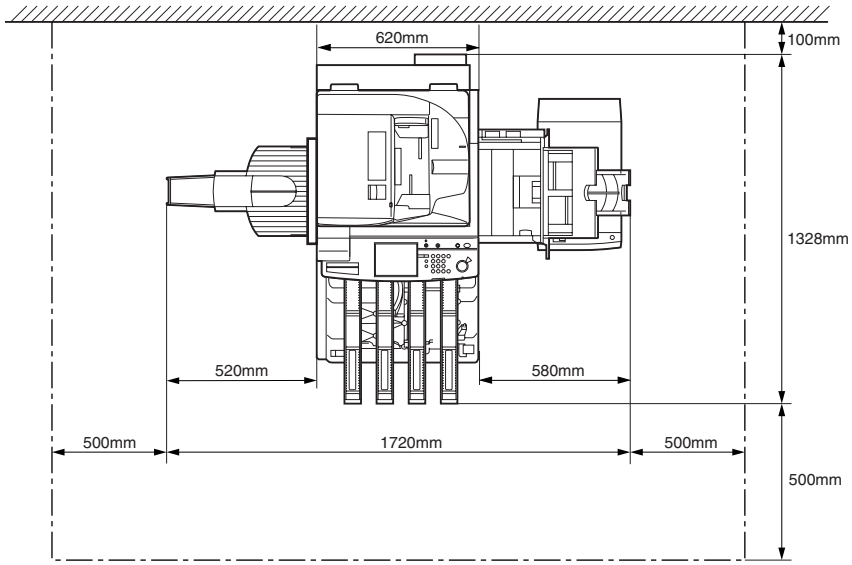

F-2-5

2.1.3 Order of Installing Accessories

CLC5151 / / / CLC4040 / / / iR C4580i / / / iR C4080i / / /

Be sure that the accessories, if any, are installed in the following order:

(1) Cassette heater kit (to the pedestal)
(2) 2-cassette pedestal, or plain pedestal (Note: Including the work to mount the main body on the pedestal.)
(3) Reader unit
(4) Main body
(5) Reader Heater
(6) Cassette heater kit (to the machine proper)
(7) Card reader
(8) Cassette heater
(9) Side paper deck
(10) Key switch unit
(11) Document Tray
(12) Copy Tray
(13) Finisher/saddle finisher

2.1.4 Checking the Contents

/ / / / iR C4580i / / / iR C4080i / / / / Color Image Reader-F1 / Color Image Reader-E1 / Dupiex Color Image Reader-G1

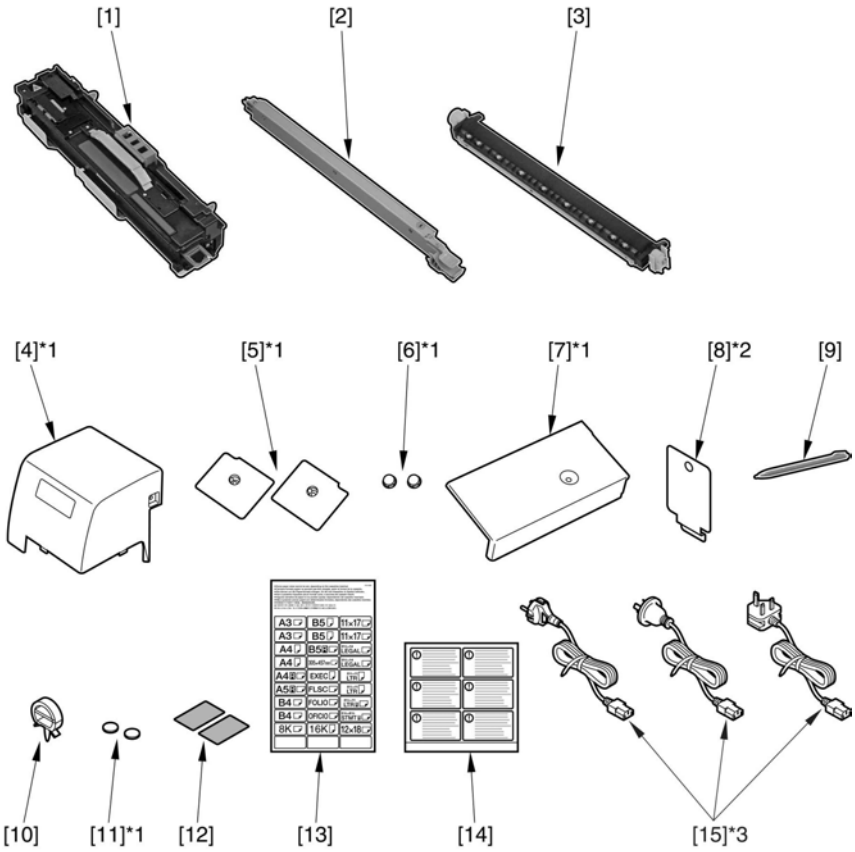

F-2-6

[1]	Drum unit (Y, M, C, Bk)	1 pc. each	[9]	Touch pen	1 pc.
[2]	Transfer cleaning unit	1 pc.	[10]	Clamp Large (Round)	8 pc.
[3]	Secondary transfer outside roller unit	1 pc.	[11]*1	Face Seal	2 pc.
[4]*1	card reader cover	1 pc.	[12]	Size plate	2 pc.
[5]*1	small cover (front, rear)	1 pc. Each	[13]	Paper size label	1 pc.
[6]*1	Cover Rubber	2 pc.	[14]	Shut-down instructions label	1 pc.
[7]*1	rack small cover	2 pc.	[15]*3	Power Cable	3 pc.
[8]*2	power cord face plate	1 pc.			

*1 Use it only for the printer model.

*2 Use it only when the plain pedestal/the 2-cassette pedestal is not installed.

*3 Use the appropriate power code for relevant country/area. Bring back unused power codes.

Check the contents (User's Manual, CD, and others) against the following tables:

User's Manual	iR C4580i	iR C4080i
Users guide	Yes	Yes
UFR II /PCL/PS Printer Guide	Yes	Yes
EULA	Yes	Yes
Network Quick Start Guide	Yes	Yes
Release Note	Yes	Yes
Universal Send Trial Kit-B1	Yes	Yes

CD, and others	iR C4580i	iR C4080i
Manual CD-ROM	Yes	Yes
Operatosr manual: Sending/Facsimile Guide	Yes	Yes
UFR II /PCL/PS Driver/Utility CD	Yes	Yes
Tutorial CD (UKE)	Yes	Yes
Tutorial CD (FRE)	Yes	Yes
Tutorial CD (ITA)	Yes	Yes
Tutorial CD (GER)	Yes	Yes
MEAP Administration software CD	Yes	Yes
iW DM MC CD	Yes	Yes

2.1.5 Checking the Contents

CLC5151 / CLC4040 / Color Image Reader-F1 / Color Image Reader-E1

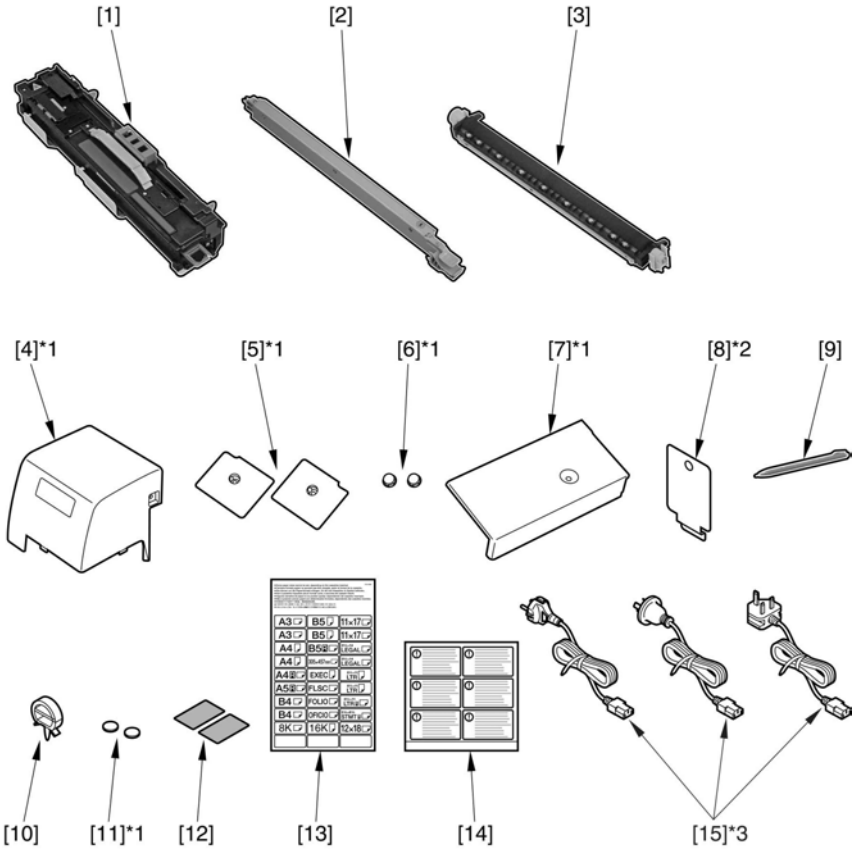

F-2-7

[1]	Drum unit (Y, M, C, Bk)	1 pc. each	[9]	Touch pen	1 pc.
[2]	Transfer cleaning unit	1 pc.	[10]	Clamp Large (Round)	8 pc.
[3]	Secondary transfer outside roller unit	1 pc.	[11]*1	Face Seal	2 pc.
[4]*1	card reader cover	1 pc.	[12]	Size plate	2 pc.
[5]*1	small cover (front, rear)	1 pc. Each	[13]	Paper size label	1 pc.
[6]*1	Cover Rubber	2 pc.	[14]	Shut-down instructions label	1 pc.
[7]*1	rack small cover	2 pc.	[15]*3	Power Cable	3 pc.
[8]*2	power cord face plate	1 pc.			

*1 Use it only for the printer model.

*2 Use it only when the plain pedestal/the 2-cassette pedestal is not installed.

*3 Use the appropriate power code for relevant country/area. Bring back unused power codes.

Check the contents (User's Manual, CD, and others) against the following tables:

User's Manual	CLC5151	CLC4040
Users guide	Yes	Yes
Universal Send Trial Kit-B1	Yes	Yes
EULA	Yes	Yes

CD, and others	CLC5151	CLC4040
Manual CD-ROM	Yes	Yes
Tutorial CD (UKE)	Yes	Yes
Tutorial CD (FRE)	Yes	Yes
Tutorial CD (ITA)	Yes	Yes
Tutorial CD (GER)	Yes	Yes
MEAP Administration software CD	Yes	Yes

2.1.6 Checking the Contents (Color Image Reader-E1 / F1)

CLC5151 / / / CLC4040 / / / iR C4580i / / / iR C4080i / / / / Color Image Reader-F1 / Color Image Reader-E1 / Dupiex Color Image Reader-G1

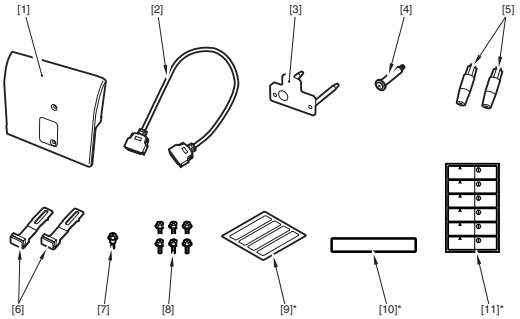

F-2-8

[1]	Reader Joint Cover	1 pc.
[2]	Reader Communication Cable	1 pc.
[3]	Reader Fixing Plate	1 pc.
[4]	Stepped Screw (42mm, approx.)	1 pc.
[5]	Reader Reference Shaft	2 pc.
[6]	Hook	2 pc.
[7]	Stepped Screw	1 pc.
[8]	Screw (RS tightening; M4X8)	6 pc.
[9]*	Original Size label	1 pc.
[10]*	Copy Inhibit Label	
	(only with the products designed for USA)	3 pc.
	(only with the products designed for EUR)	4 pc.
[11]*	Cleaning label	1 pc.

* Do not use it for the color image reader-E1.

2.2 Unpacking and Installation

2.2.1 Installing the Printer Kit

CLC5151 / / / CLC4040 / / / iR C4580i / / / iR C4080i / / / / Color Image Reader-F1 / Color Image Reader-E1 / Dupiex Color Image Reader-G1

1) Remove the center delivery tray [1].
   - 2 screws [2]

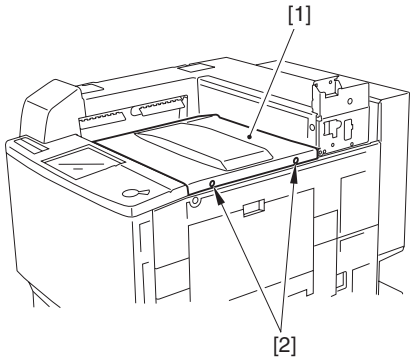

F-2-9

2) Remove the delivery rear cover [1].
   - 1 face plate [2]
   - 1 screw [3]

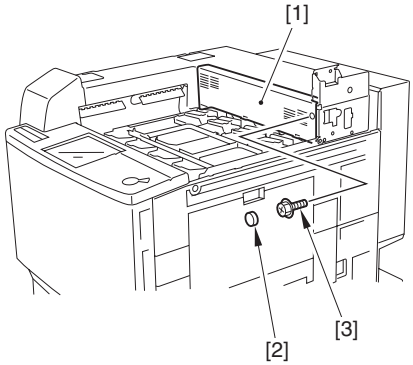

F-2-10

3) Remove the reader unit joint unit [1].
   - 6 screws [2]

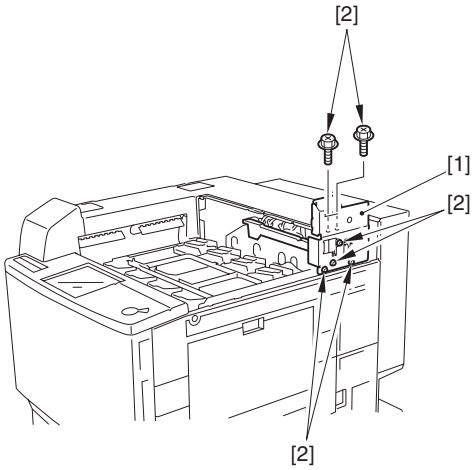

F-2-11

4) Mount the rack small cover [1].
   - 1 screw [2]

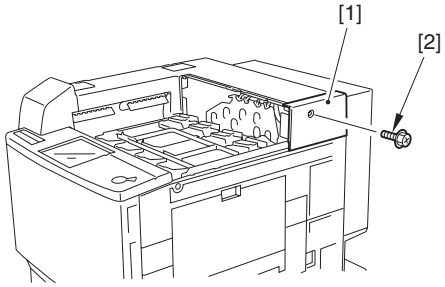

F-2-12

5) Remove the grounding screw [1].
   - 1 screw [2] each

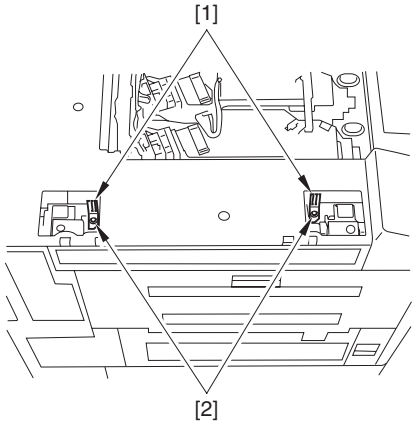

F-2-13

6) Remove the joint [1].
   - 1 screw [2] each

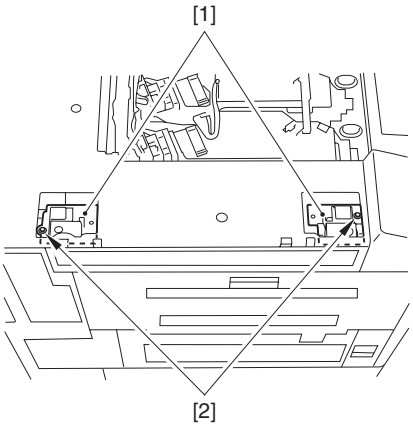

F-2-14

7) Mount the small cover (front) [1].
- 1 screw [2]
- 1 cover rubber price [3]

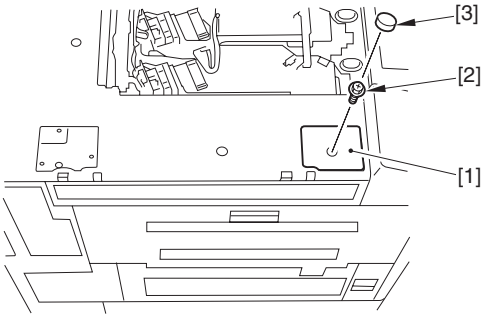

F-2-15

8) Mount he small cover (rear) [1].
- 1 screw [2]
- 1 cover rubber piece [3]

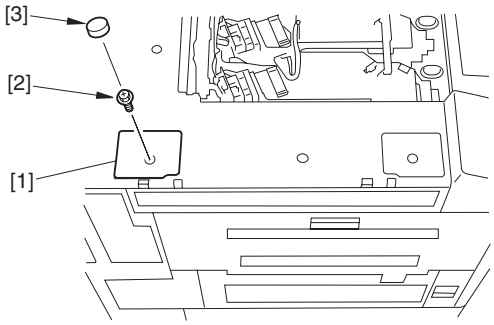

F-2-16

9) Remove the card reader cover [1].
- 1 face cover [2]
- 2 screws [3]

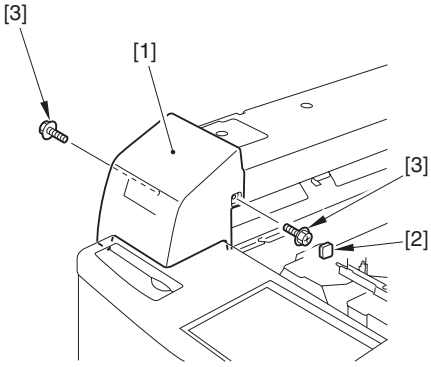

F-2-17

10) Mount the included card reader cover [1].

Mount the face cover using the screws removed in step 9).

11) Mount the following as shown:
- delivery rear cover
- center delivery tray

2.2.2 Points to Note About Relocating the machine

CLC5151 / / / CLC4040 / / / iR C4580i / / / iR C4080i / / / / Color Image Reader-F1 / Color Image Reader-E1 / Dupiex Color Image Reader-G1

Points to Note About Relocating the machine
Be sure not to push the machine strongly from the front side, otherwise it can fall over. (Especially in the case of the carpet floor.)

2.2.3 Mounting the Reader Unit (Color Image Reader E1/ F1)

CLC5151 / / / CLC4040 / / / iR C4580i / / / iR C4080i / / / / Color Image Reader-F1 / Color Image Reader-E1 / Dupiex Color Image Reader-G1

Working as a group of 4, hold the 4 grips (left, right), and lift the machine off the skid [1].

The machine weighs about 130 kg. Be sure to work as a group of 4. Also, lift the main body while keeping it level.

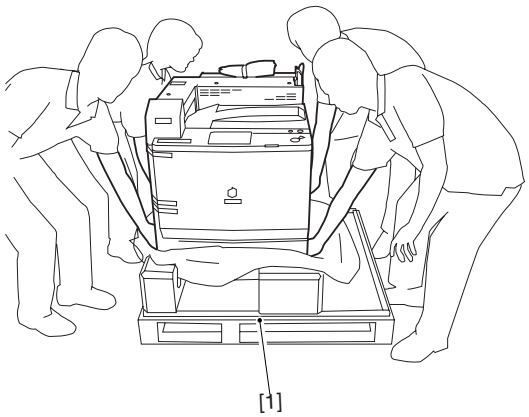

F-2-18

Install two-cassette pedestal and plane pedestal as in the following order.
1. Two-cassette pedestal and plane pedestal (including mounting the body on pedestal).
2. Reader
3. Main body

The Color Image Reader F1and the Color Image Reader E1 may be installed in the same way. The illustrations that follow are of the Color Image Reader F1.

1) Unpack and take the reader unit out of its shipping box.
2) Remove al tape from the reader unit and the machine.
3) Shift the reader unit [1] to the left as shown, and place it on the machine [2].

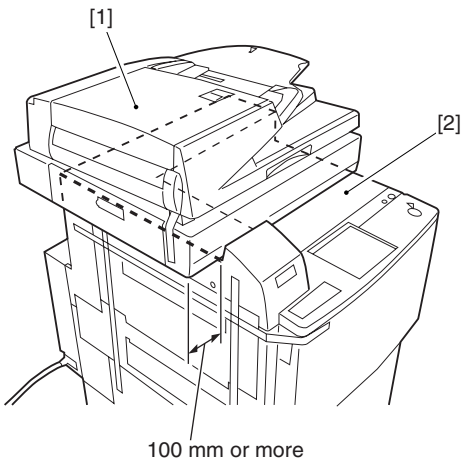

F-2-19

4) Using a screwdriver, fit the 2 reader unit positioning pins [1] to the reader unit [2].

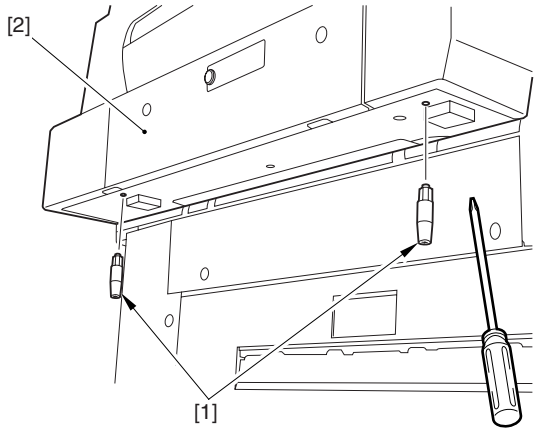

F-2-20

5) Lift the left side of the reader unit [1], and slide the unit in the direction of the arrow to force it against the plate; then, fit the pins [2] into the slots [3] while taking care to avoid impact.

Take care not to trap your hand between the reader unit and the host machine.

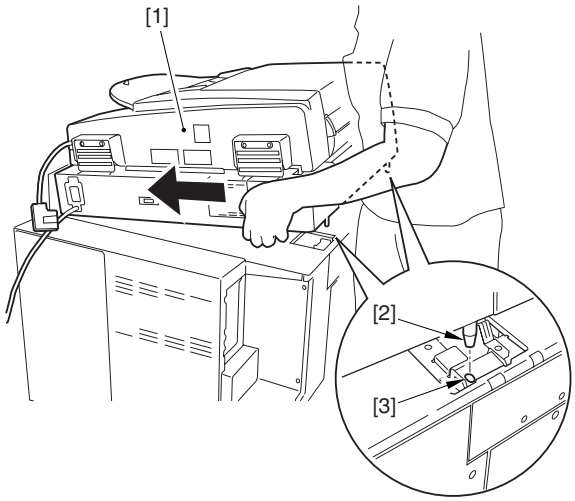

F-2-21

6) While lifting the reader unit slightly, fit the reader unit fixing plate [1], and fix it in place using a stepped screw [2].

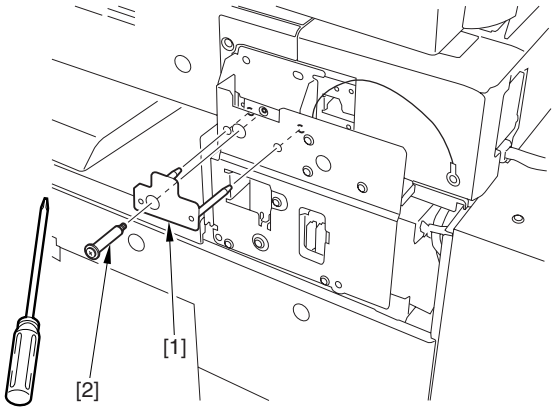

F-2-22

7) Fix the wire [1] in place using the stepped screw.

Be sure that the orientation of the wire is correct.

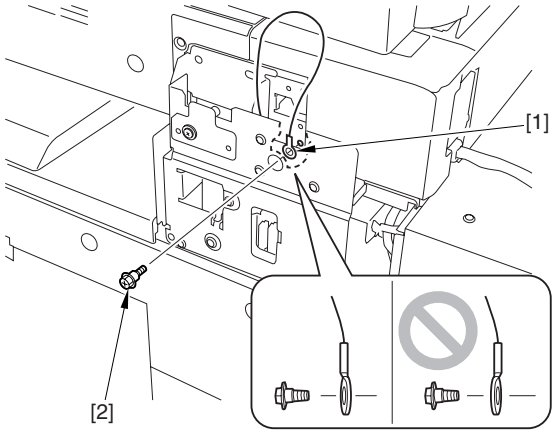

F-2-23

8) Hook the washer [1] fitted in step 7) on the screw [2].

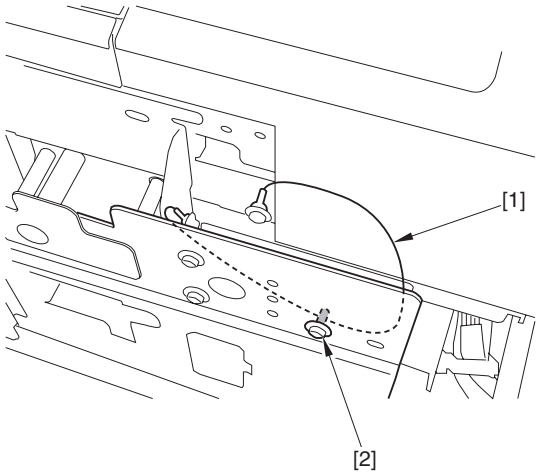

F-2-24

9)

Points to Note When Mounting the Joint Cover
Be sure the joint cover [1] has not trapped the wire [2].

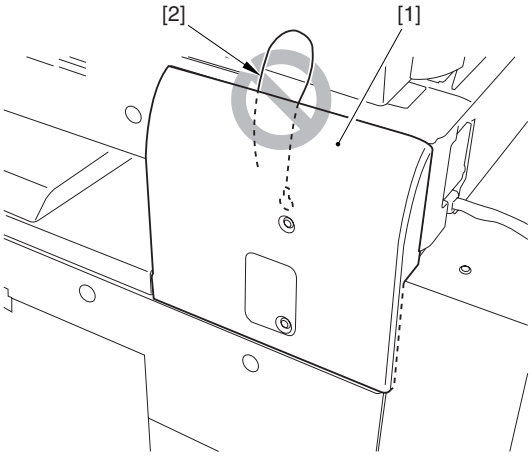

F-2-25

Mount the joint cover [1].
- 2 screws (RS tightening; M4X8) [2]

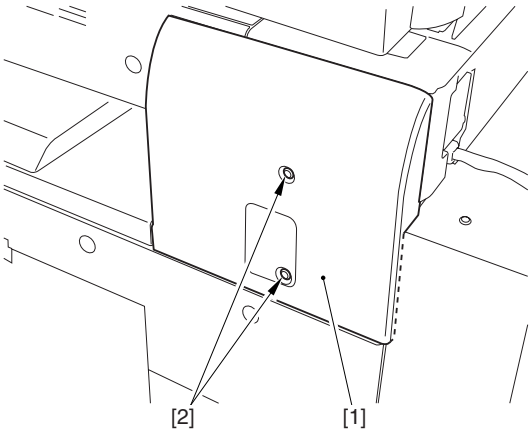

F-2-26

10) Remove the 3 mirror fixing screw [1].

Be sure to store the 3 mirror fixing screws [1] away. They will be needed when transporting the machine in the future.

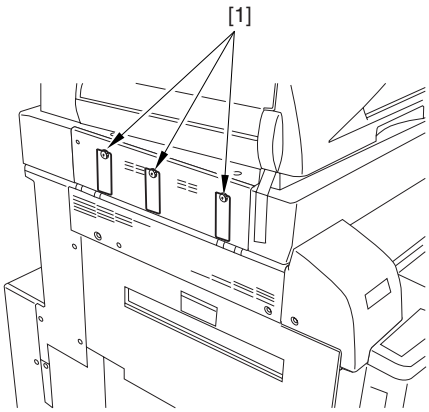

F-2-27

11) Remove the reader unit left cover [1].
- 2 screws [2]

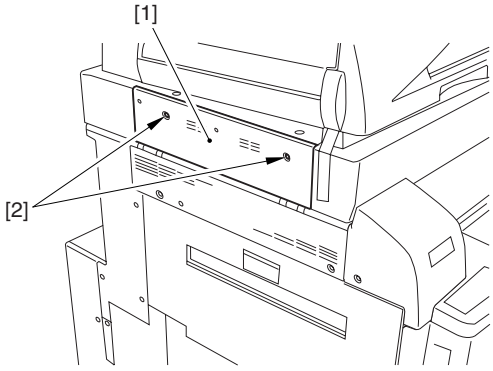

F-2-28

12) Remove the face cap [1] and the 2 screws [2]; then, detach the card reader cover [3].

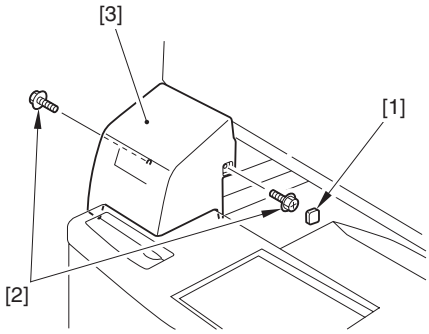

F-2-29

13) Remove the upper left cover [1].
- 2 screws [2]

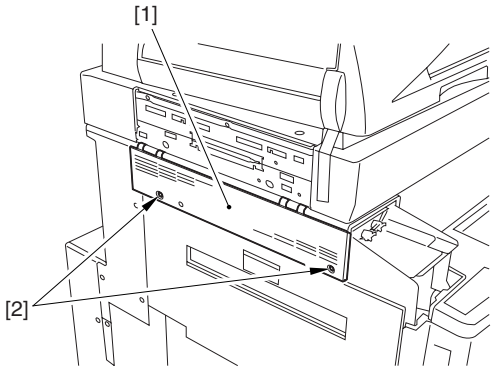

F-2-30

14) Cut the 2 areas [1] of the upper left cover claw using nippers, and remove the 2 areas [A].

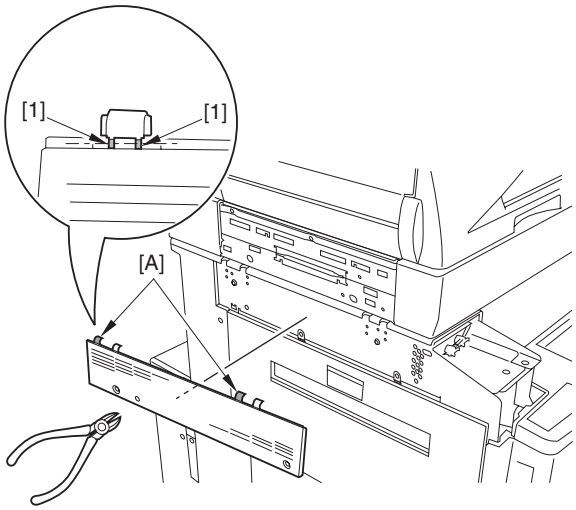

F-2-31

15) While forcing the 2 hooks [1] in the direction of the arrow, fix it in place using 2 screws [2] each.

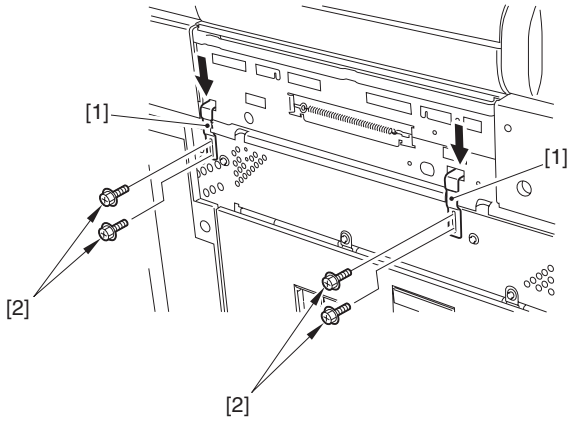

F-2-32

If the hook does not have a cushion area [A],
The cushion [1] will not fit on the plate if the hook is moved excessively.
Check to be sure that the cushion is on the plate.

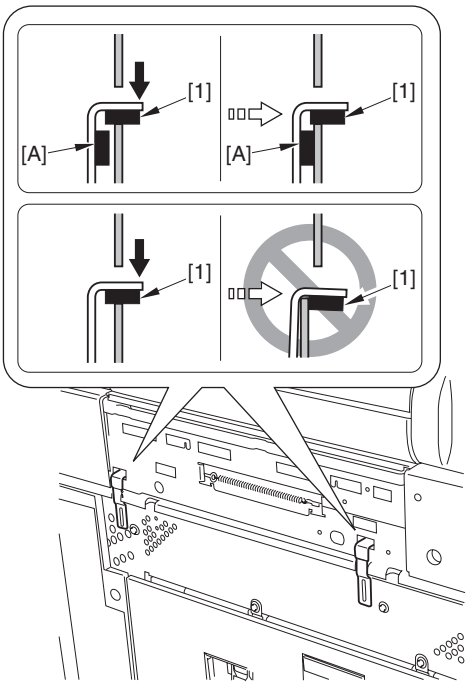

F-2-33

16) Put back the following parts in the order used to remove them but in reverse.
- upper left cover
- card reader cover
- reader left cover

17) Connect the reader communication cable [1], and fix it in place using a clamp [2].

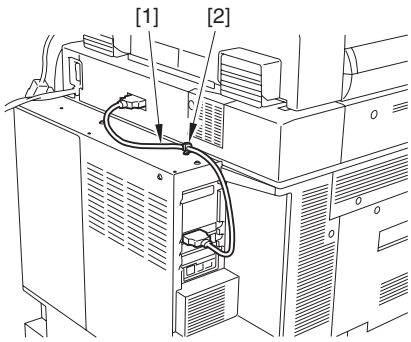

F-2-34

18) Connect the ADF power cable [1] to the reader.

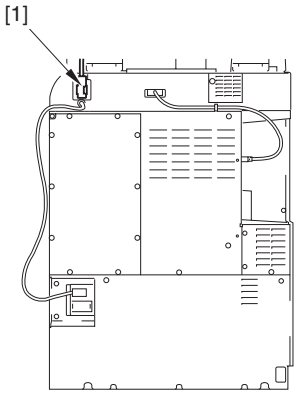

F-2-35

19) Mount the ADF power cable [1] to the host machine.

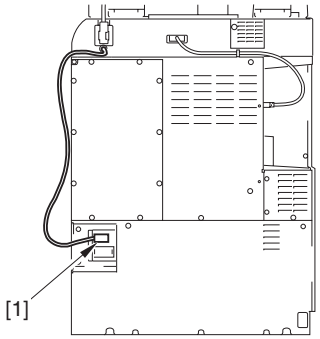

F-2-36

20) Fix the ADF power cable [1] in place using 3 clamps [2].

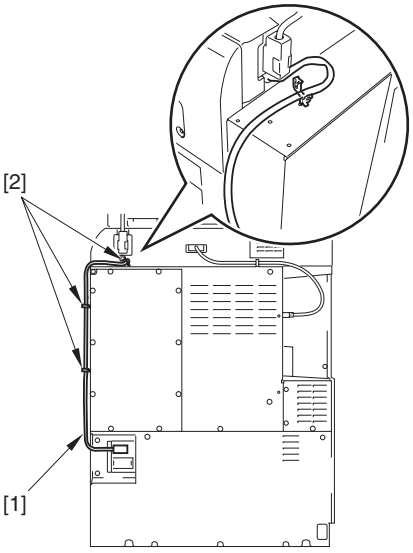

F-2-37

Adjustment of the Slack of the Cable
Fix the reader power supply cable [1] in place on the 3 clamps [3] from the bottom to adjust the slack of the cable on the upper side of the machine.

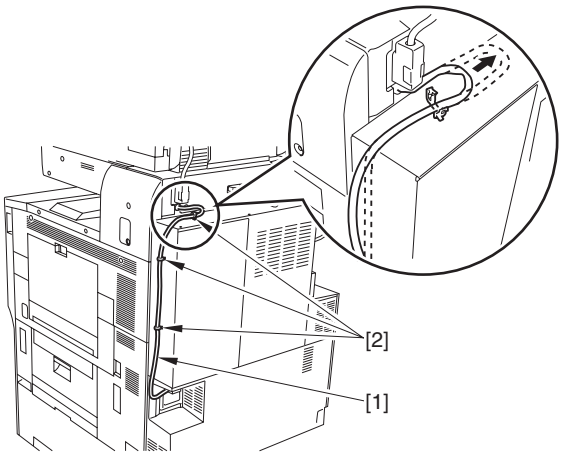

F-2-38

2.2.4 Mounting the Transfer Cleaning Unit

CLC5151 / / / CLC4040 / / / iR C4580i / / / iR C4080i / / /

1) Open the front cover.
2) Remove the tape, and turn the intermediate transfer unit release lever [1] in the direction of the arrow.

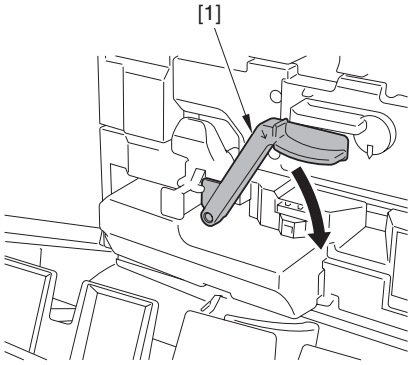

F-2-39

3) Remove the waste toner container [1].

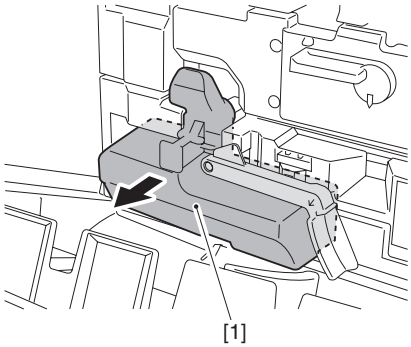

F-2-40

4) Remove the dummy transfer cleaning unit [1].
- 1 screw [2]

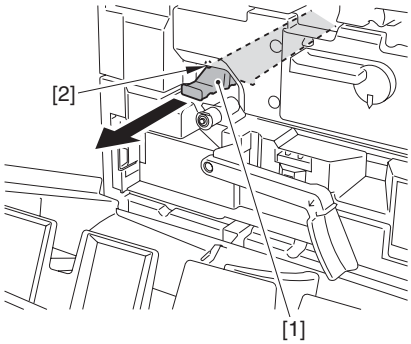

F-2-41

Be sure to store away the removed dummy transfer cleaning unit.

MEMO;
Measures against condensation
When transferring the body from the site in low temperature to in mild temperature, implement this mode before automatic graduation adjustment.

- Toner cartridge and drum unit should be removed before implementing this mode.
- Dummy transfer cleaning unit should be installed.
- Working time of this mode is six to eighteen minutes, varying due to its circumstances ("OK" is displayed if normally completed).
Service mode;
COPIER > FUNCTION > INSTALL > DRY-RT

5) Take out the included transfer cleaning unit from its packaging bag, and remove the packing material (cardboard).

Do not touch the tip of the transfer cleaning unit blade. The area is coated with lubricant.

6) Fit the included transfer cleaning unit [1] using the screw [2] removed in step 4).
(Match the boss [4] found at the top of the waste toner feedscrew case against the groove [3] in the transfer cleaning unit base.)

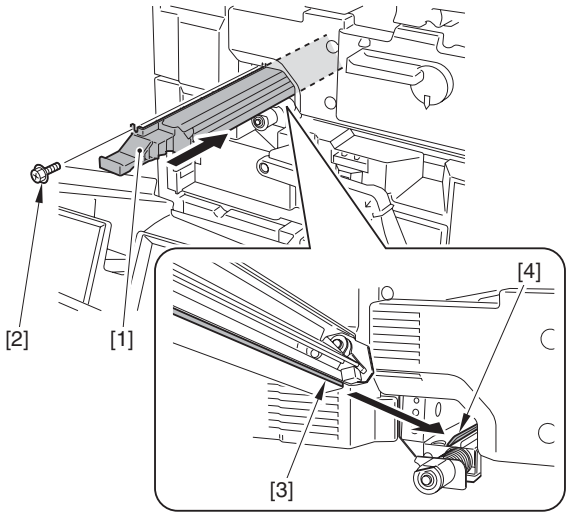

F-2-42

Be sure that the front cover rib [2] is not in contact with the edge [1] of the transfer cleaning unit blade.

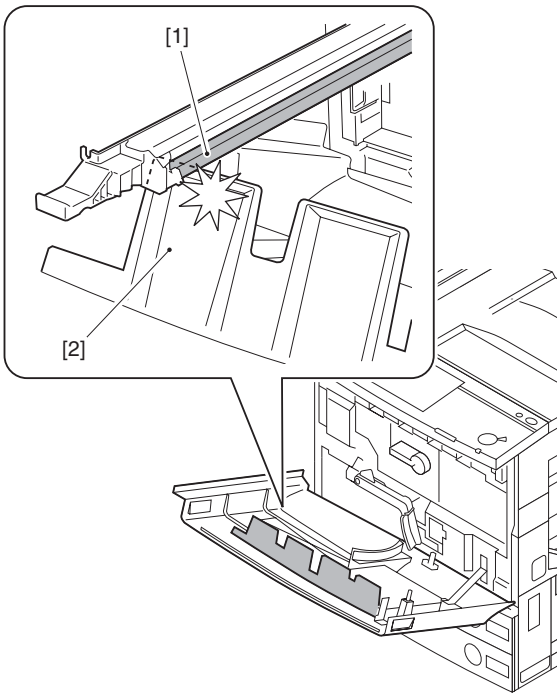

F-2-43

7) While holding the waste toner box down, shift the intermediate transfer unit release lever back to its initial position.

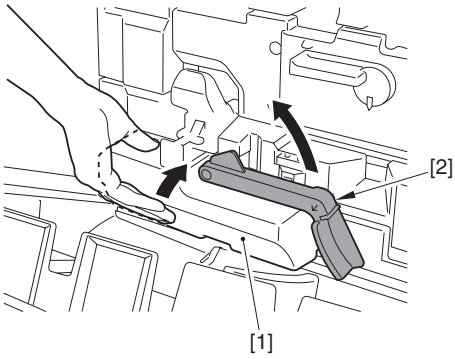

F-2-44

2.2.5 Fitting the Toner Container in Place

CLC5151 / / / CLC4040 / / / iR C4580i / / / iR C4080i / / /

The toner containers must be fitted in their own places (viewing from the control panel side and starting at the left, Y, M, C, and Bk). Do not force any container.

1) Fully shift the fixing lever [1] of the toner container (Y).

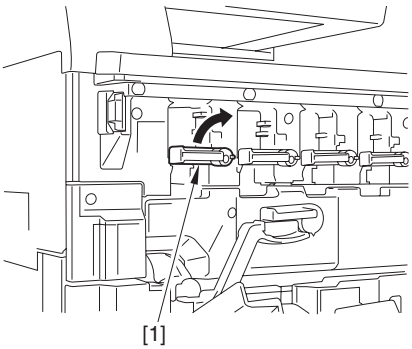

F-2-45

2) When mounting the toner container, be sure to fully turn the fixing lever [2] in the direction of the arrow while forcing the white member [1] toward the rear of the machine.

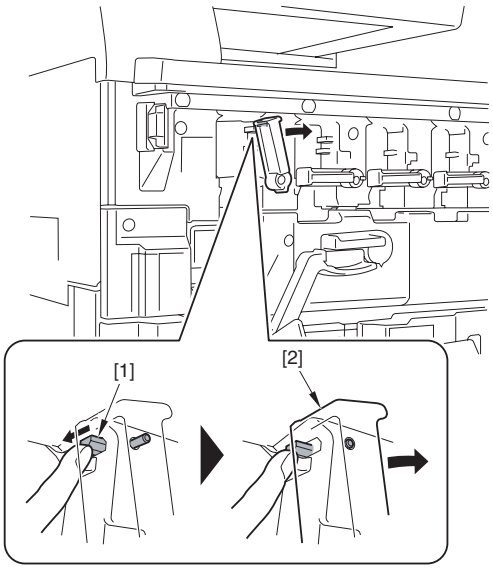

F-2-46

3) Take out the toner container (Y) from the packaging box.
4) Take out the toner container (Y) from the packaging bag.
5) Hold the toner container (Y) [1] with both hands, and shake it several times as if to rotate it.

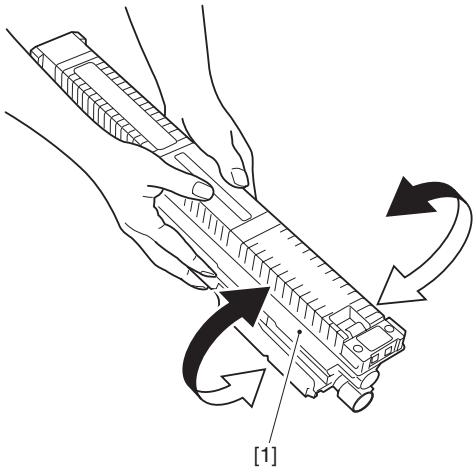

F-2-47

6) Push in the toner container [1] in the direction of the arrow.

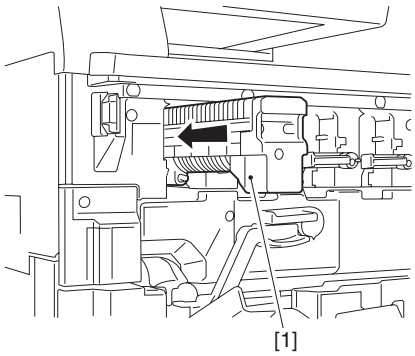

F-2-48

7) Shift the fixing lever of the toner container (Y) back into its initial position (90 deg in counterclockwise direction).
8) Fit the remaining containers (M, C, Bk) in the same way.

2.2.6 Fitting the Drum Unit in Place

CLC5151 / / / CLC4040 / / / iR C4580i / / / iR C4080i / / /

1) Take out the drum unit (Y) from its packaging box.
2)

Do not remove the protective cover [1] since it will serve as a rail later.

Take out the drum unit (Y) [1] from its packaging bag, and remove the drying agent [2].

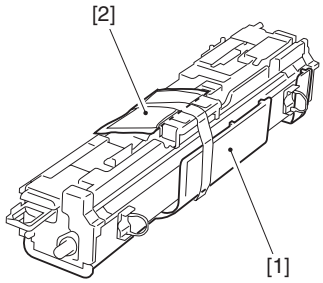

F-2-49

3) Pull out the front and rear pressure release hooks [1] in the direction of the arrow.

Be sure to remove the pressure release hooks [1].

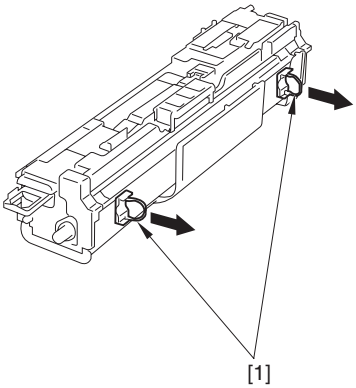

F-2-50

4) Push down the anti-interference member [1] in the direction of the arrow, and pull it out.

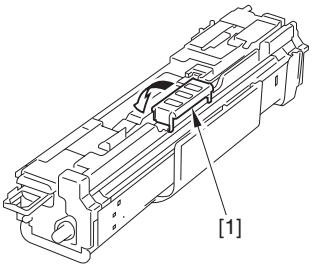

F-2-51

5) Turn the intermediate transfer unit release lever [1] in the direction of the arrow.

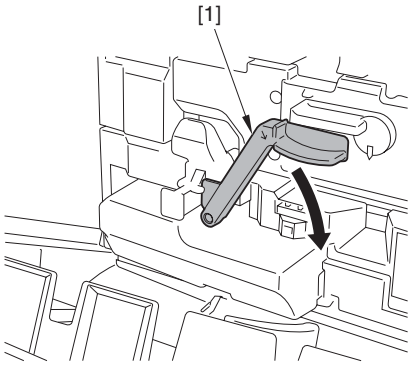

F-2-52

6) Turn the open/close lever [1] of the drum unit cover to the left by 90 deg to open the drum unit cover [2].

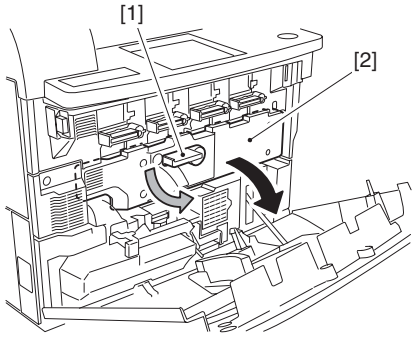

F-2-53

7) Match the bulge [2] found on the bottom of the protective cover against the dent [1] found in the back of the drum unit cover of the host machine.

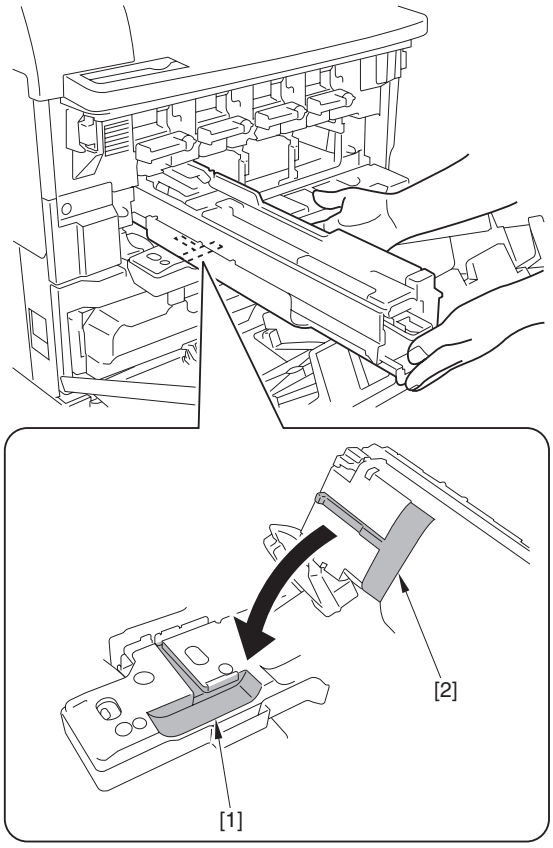

F-2-54

8) Hold the protective cover [2] horizontally, and push in the drum unit (Y) [2]. (starting from the left, Y, M, C, and Bk)

Store away the protective cover [1], as it will be used when fitting the drum unit in place.

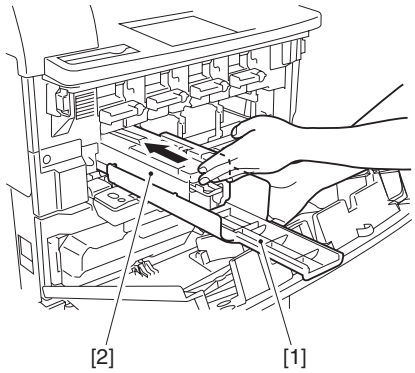

F-2-55

9) Pull out the sealing tape [1].

When pulling out the sealing tape [1], be sure to hold the drum unit in place to avoid inadvertently sliding out the drum unit.

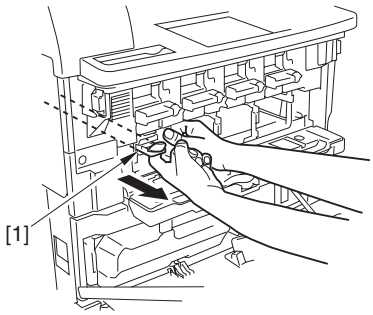

F-2-56

10) Fit the remaining drum units in the same way (M, C, Bk).
11) Close the drum unit cover; then, turn the open/close lever to the right by 90 deg to fix it in place.
12) Holding the waste toner box in place, shift the intermediate transfer unit release lever back into its initial position.

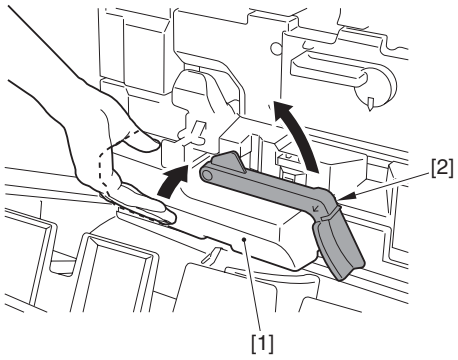

F-2-57

13) Close the front cover.

2.2.7 Fitting the Secondary Transfer Outside Roller Unit in Place

CLC5151 / / / CLC4040 / / / iR C4580i / / / iR C4080i / / /

1) Take out the secondary transfer outside roller unit from the packaging box.

Do not touch the roller of the secondary transfer outside roller unit.

2) Pull on the fixing release lever [1] to fully slide out the fixing feeding unit [2].

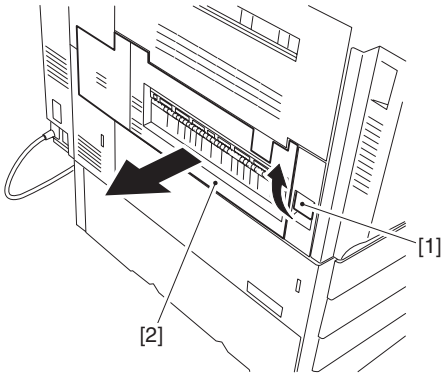

F-2-58

3) Hold the pick [1] of the secondary transfer outside roller, and place it on the secondary transfer unit [2] found inside the fixing feeding unit by matching it against the left and right grooves.

Do not touch the roller of the secondary transfer outside roller unit.

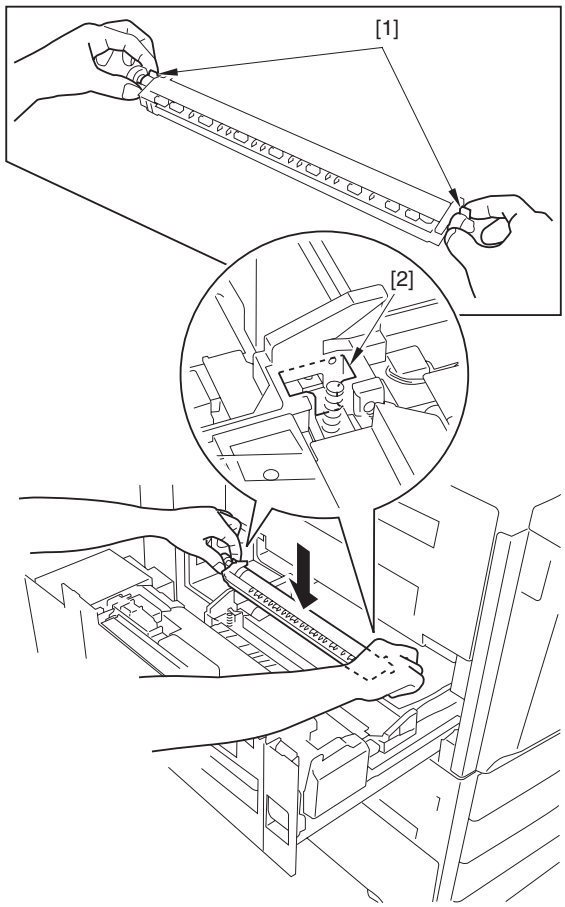

F-2-59

4) Push both ends [1] of the secondary transfer unit to fit it in place. (Be sure it is securely in place.)

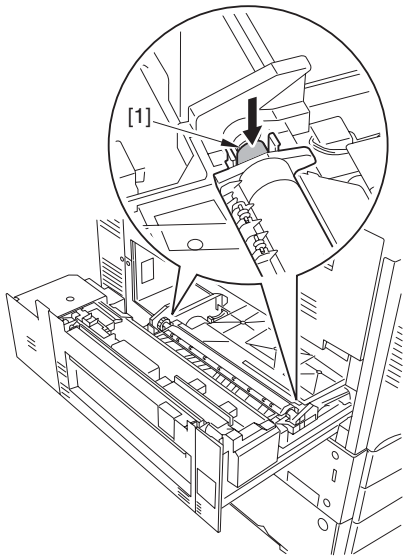

F-2-60

Making Checks After the Work
Check to be sure that the gear [A] of the secondary transfer roller unit rotates properly.

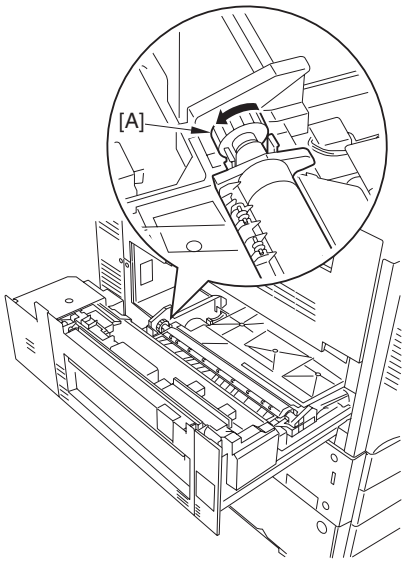

F-2-61

5) Close the fixing feeding unit.

2.2.8 Cassette Setup

CLC5151 / / / CLC4040 / / / iR C4580i / / / iR C4080i / / /

1) Pull out the upper cassette, and remove the tape and the lifting plate retainers [1]. (Do the same to the lower cassette.)

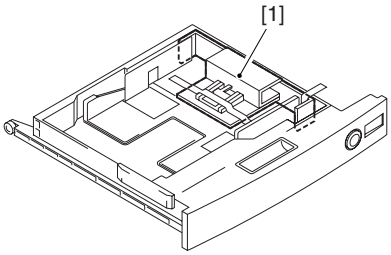

F-2-62

2) Check the type of paper a user will use, and adjust the slide guide [1] of each cassette to the paper size.

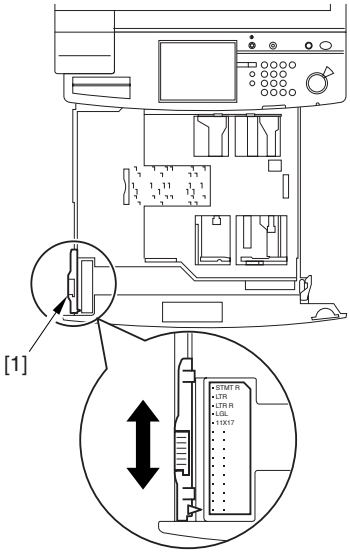

F-2-63

3) Adjust the side guide plate [1] and the end plate [2] to the scale of the paper size.

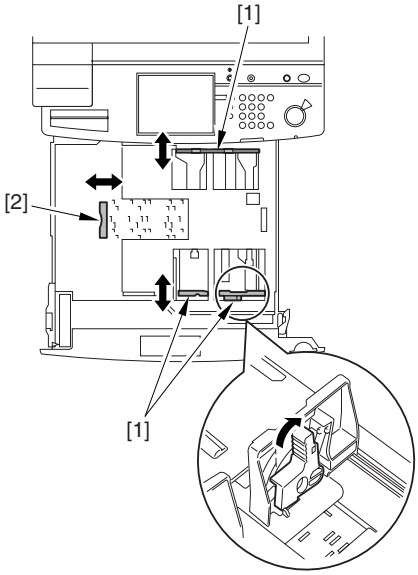

F-2-64

4) Attach the cassette size label [2] to the cassette size plate [1].

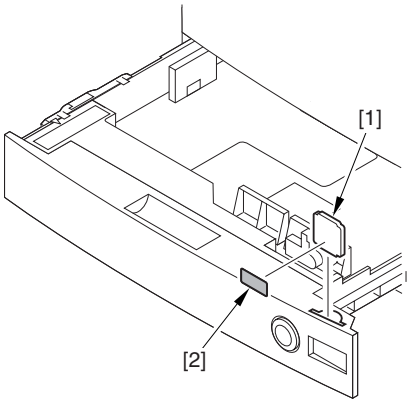

F-2-65

5) Deposit paper in each cassette, and set it to the main body.

2.2.9 Other Work

/ / / / iR C4580i / / / iR C4080i / / /

< Shut-Down Caution Label> (Included in the main body)

1) Attach the Shut-Down Caution Label [1] whose text is in the appropriate language within the frame of the rear right cover.

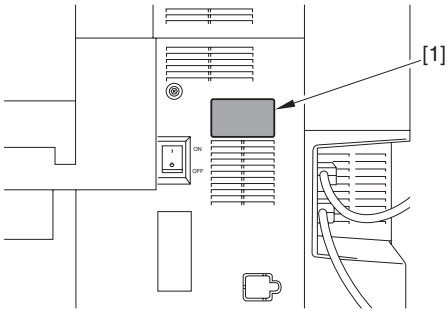

F-2-66

<Original Size Label> (Included in the reader)

1) Attach the Original Size Label [1] whose text is in the appropriate language while positioning it as shown on the ADF open/close cover.

MEMO;
Do not use it to the Color Image Reader E1.

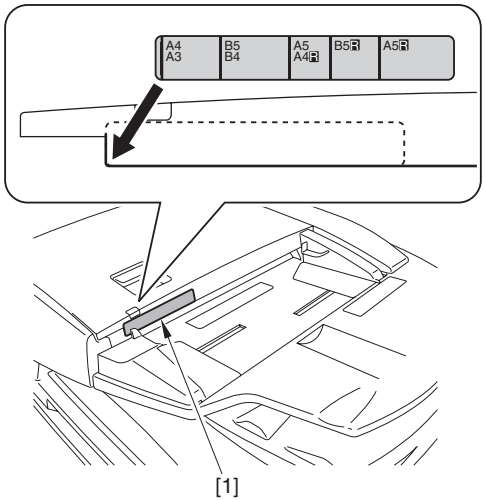

F-2-67

<Cleaning Position Label> (Included in the reader)

1) Attach the Cleaning Position Label [1] whose text is in the appropriate language while positioning it as shown on the front cover.

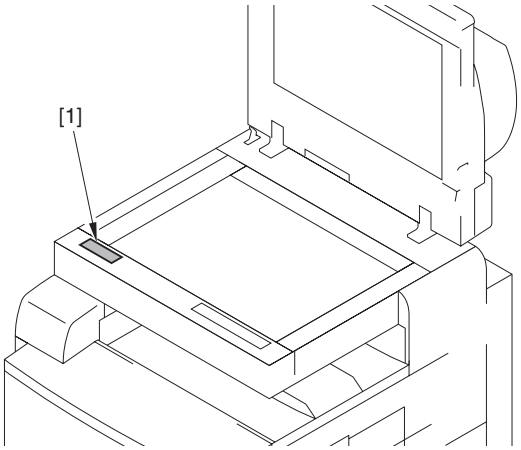

F-2-68

<Do Not Copy Label> (Included in the reader)

1) Attach the Do Not Copy Label [1] whose text is in the appropriate language while positioning it as shown on the front cover.

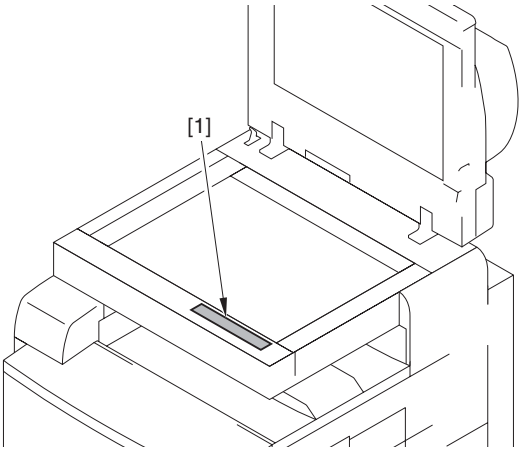

F-2-69

2.2.10 Other Work

CLC5151 / CLC4040

< Shut-Down Caution Label> (Included in the main body)

1) Attach the Shut-Down Caution Label [1] whose text is in the appropriate language within the frame of the rear right cover.

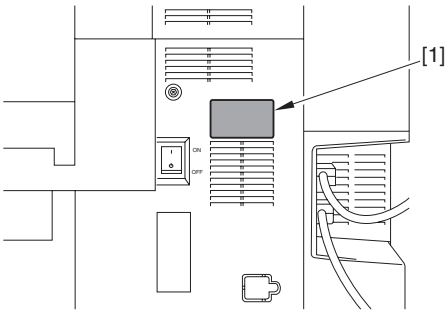

F-2-70

<Face Seal> (Included in the package)

1) Affix the 2 face seal [2] at two positions [1] in the chart of the rear cover.

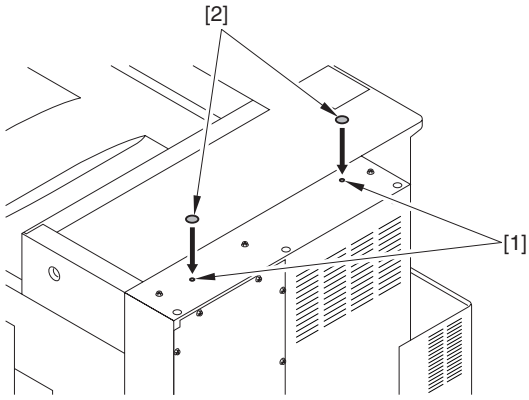

F-2-71

2.2.11 Dealing with power code mount

CLC5151 / / / CLC4040 / / / iR C4580i / / / iR C4080i / / /

Use the power cord mount only if you are not installing the plain pedestal/2-cassette pedestal.

1) Free the reader communication cable [1] and the reader power cable [2] from the 4 clamps [3]; and disconnect the connector [4].

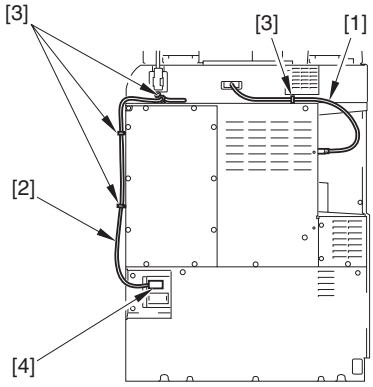

F-2-72

2) Remove the rear cover [1] of the host machine.
   - 10 screw [2] (Remove.)
   - 2 screws [3] (Loosen.)

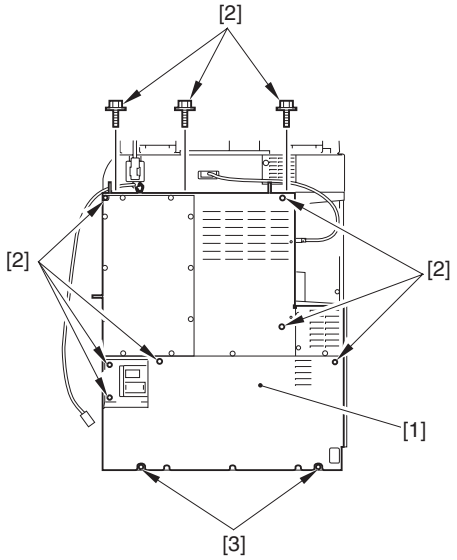

F-2-73

3) Remove the rear left cover [1] of the host machine.
- 2 screws [2]

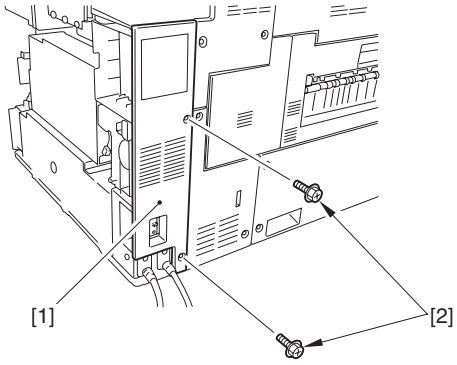

F-2-74

4) Disconnect the 4 connectors [1], and remove the 3 clamps [2] and the 4 screws [3].

Take care not to drop the screw.

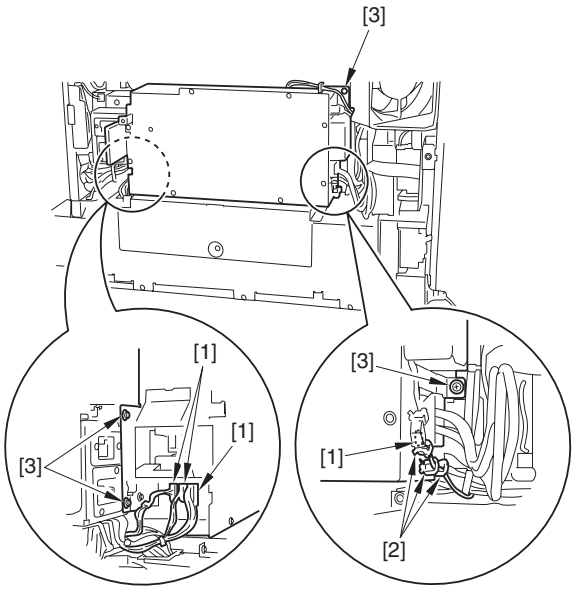

F-2-75

5) Slid the IH power supply unit [1] slightly in the direction of the arrow, and remove the clamp [2] and disconnect the 2 connectors [3].
6) Remove the IH power unit [1].

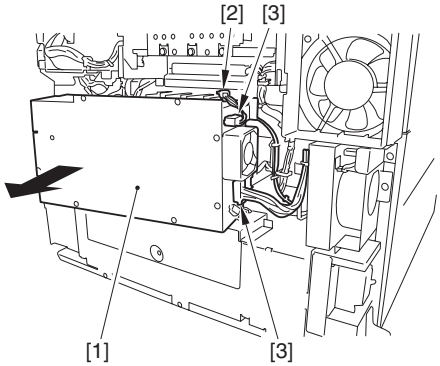

F-2-76

7) Remove the 4 screws [1], and slide the DC power supply unit [2] slightly toward the front.

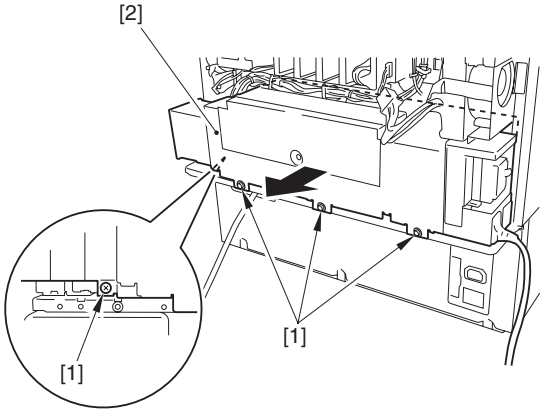

F-2-77

8) Remove the 3 screws [1], and pull out the power supply cord mount slightly to the front.

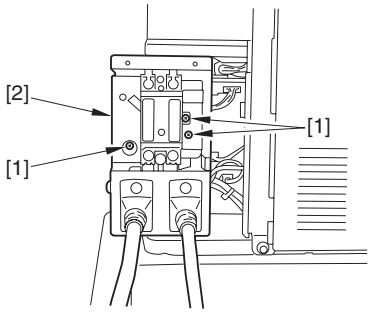

F-2-78

9) Disconnect the 2 connectors [1], and detach the power cord mount [2].

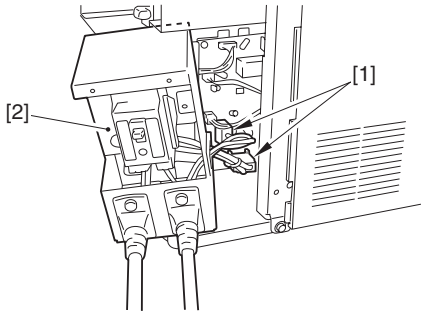

F-2-79

10) Remove the screw [1], and open the 2 clamps [2].

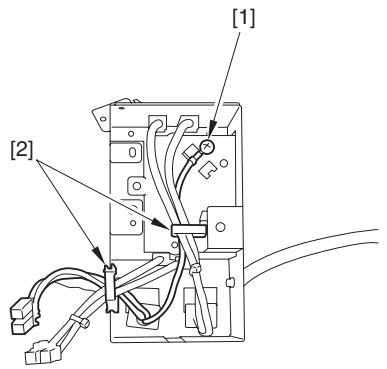

F-2-80

11) Remove the screw [1], and disconnect the power cord [2].

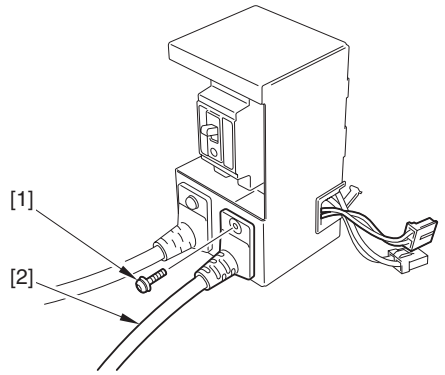

F-2-81

12) Fix the power cord face plate in place using the screw [1] removed in step 11).

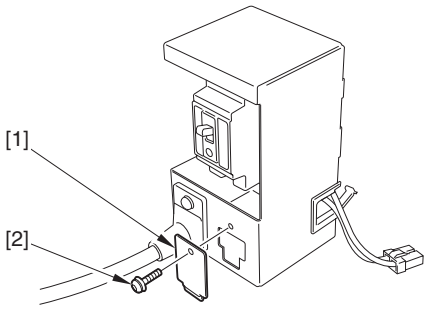

F-2-82

13) Fit the power cord mount, DC power supply unit, IH power supply unit, and covers in reverse order.

2.2.12 Connecting the Power Cord

CLC5151 / / / CLC4040 / / / iR C4580i / / / iR C4080i / / / / Color Image Reader-F1 / Color Image Reader-E1 / Dupiex Color Image Reader-G1

1) Connect the power cable (for outlet) of the main body.

2.2.13 Adjustment of Fixing Assembly

CLC5151 / / / CLC4040 / / / iR C4580i / / / iR C4080i / / / / Color Image Reader-F1 / Color Image Reader-E1 / Dupiex Color Image Reader-G1

1) Turn ON the main power switch.
2) Go through the shut-down sequence to turn OFF the power supply.

When turning ON the main power after installation of the reader, a shut-down sequence appears on the control panel. Go through the instructions on the shut-down sequence screen so that the main power switch will go off automatically.

E732-9999
When the reader is detected in the printer model for the first time, this error is displayed in Service Mode > COPIER > DISPLAY > ERR (It is not displayed on the user screen). Thus, because the reader is connected at the time of the installation of the host machine, the error 'E732-9999' is displayed in Service Mode > COPIER > DISPLAY > ERR.

3) Turn OFF the power as instructed on the shut-down sequence screen.

Only with the model equipped the SEND function as standard, the shut-down sequence screen is displayed on the control panel. Thus, it is necessary to turn OFF the power as instructed on the shut-down sequence screen.

E749-0003
This error is always displayed at the time of the installation only with the model equipped the SEND function as standard.

4) Turn ON the main power switch (Check if the status is standby).

How to Turn Off the Host Machine
When turning off the host machine, be sure to go through the following steps to protect the hard disk:
1) Hold down the control panel power switch for 3 sec or more.
2) Operate as instructed in the shut-down sequence screen (so that the main power switch will go off automatically).
3) Disconnect the power cable (for the power outlet).

5) Check that the host machine is in the standby state, and then, enter in the service mode. (If executing the service mode mentioned below while the host machine is not in the standby state, it does not work properly.)
Select COPIER > FUNCTION > FIXING > FX-UHP-S > OK
6) Check that 'FX-UHP-S is OK (It will take for about 3 minutes.)

7) Enter the Service mode.
Select COPIER > FUNCTION > FIXING > FX-LHP-S > OK
8) Check that 'FX- LHP -S is OK (It will take for about 5 minutes.)

2.2.14 Checking the Image Margin

CLC5151 / / / CLC4040 / / / iR C4580i / / / iR C4080i / / /

1) Place the test chart on the copyboard glass, make a copy by picking up paper from the cassette (1,2), and check the image.
(When the two-cassette pedestal is installed, pick up paper from the cassette 3, 4 and check the image.)
- Check to be sure that there is no unusual sound.
- Check the image quality every standard magnification.
- Check to be sure that the operation for specified number of sheets is performed correctly.
- Check to be sure that the image on the paper picked up from each cassette meets the specification.
Specification values should be as follows.
If the figure is out of the spec, see 'Adjustment of Left Margin of Image' and 'Adjustment of Margin along Leading Edge of Image'.
- Standard value for the left margin of image: L2 = 2.0 +/-1.5 mm
- Standard value for the margin along leading edge of image: L1 = 2.5 +/-1.5 mm

After the adjustment of left margin of image / margin along leading edge of image, if the margin is out of specification, be sure to make an adjustment of the image area (non-image area).

2.2.15 Adjustment of Left Margin of Image

CLC5151 / / / CLC4040 / / / iR C4580i / / / iR C4080i / / /

- Check to be sure that the margin of the side of the paper is L2 = 2.0 +/-1.5 mm when the paper is picked up from each cassette.

1) Pull out the cassette 1 and 2.
(Open the cassette 3 and 4 too if the two-cassette pedestal is installed.)
2) Open the pickup vertical path cover [1] and pull out the manual feed unit [2].
(Open the pickup vertical path cover of the two-cassette pedestal, when it is installed.)

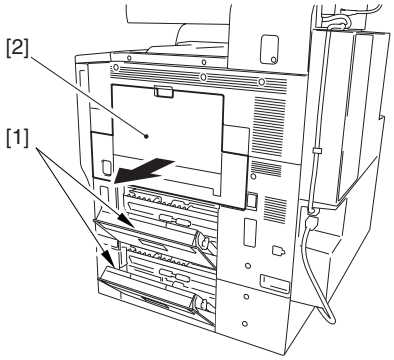

F-2-83

3) Detach the front right cover [1].
   - 2 screws [2]
   (Perform the same step when the two-cassette pedestal is installed.)

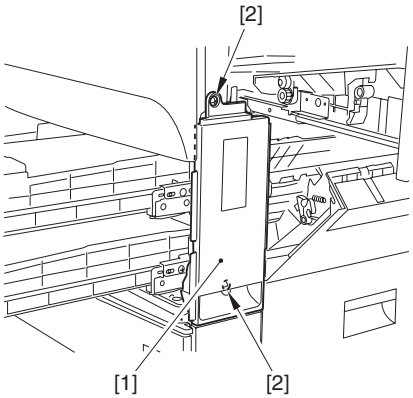

F-2-84

<Adjustment of the Cassette 1>
4) Insert the blade of the screwdriver into the hole of the front right stay and loosen the screw [1] to make an adjustment of the position of the adjusting plate [2].
(Perform the same step to the cassette 3 and 4.)

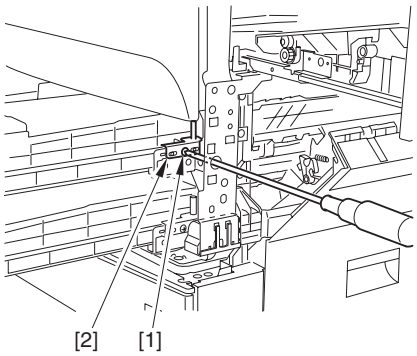

F-2-85

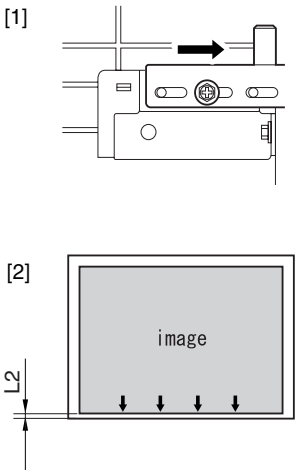

F-2-86

[1] If the adjusting plate is moved to the right,
[2] the margin of the front edge of the paper narrows.

<Adjustment of the Cassette 2>
5) Lift the 2 claws [1] slightly and slide out the grip [2] (front right).

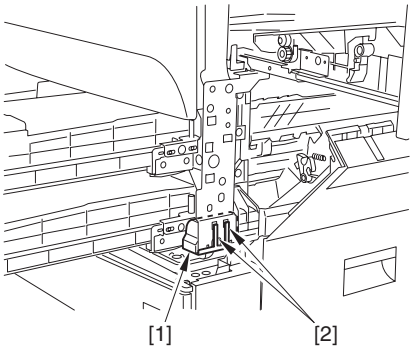

F-2-87

6) Insert the blade of the screwdriver into the hole of the front right stay and loosen the screw [1] to make an adjustment of the position of the adjusting plate [2].

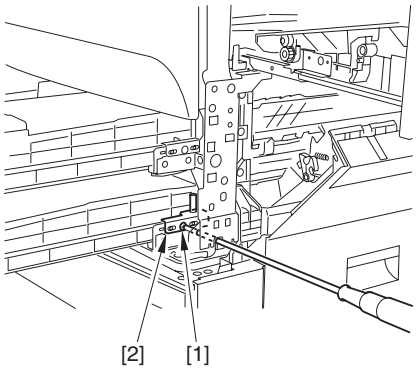

F-2-88

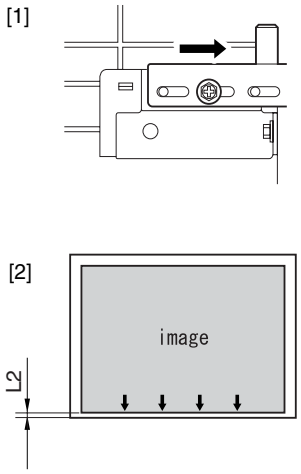

F-2-89

[1] If the adjusting plate is moved to the right,
[2] the margin of the front edge of the paper narrows.

7) Attach the cover etc., by the reverse procedure to detach them.
   - handle
   - front right cover
   - pickup vertical path cover
   - cassette

2.2.16 Adjustment of the Margin along Leading Edge of Image

CLC5151 / / / CLC4040 / / / iR C4580i / / / iR C4080i / / /

- -Check to see that the margin along leading edge of image is within the range of L1=2.5 -/+ 1.5mm.

1) Enter the Service mode.
2) Select: COPIER > ADJUST > FEED-ADJ > REGIST

3) Change the setting value to adjust
(0.1mm shift by each 1 setting value. By setting greater value, the image shifts in the direction of the leading edge)

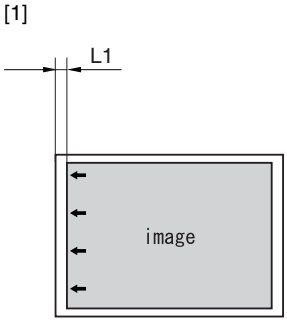

F-2-90

[1] By setting greater REGIST value, the image shifts in the direction of leading edge of the paper.

2.2.17 Adjustment of the Image Area (non-image width)

CLC5151 / / / CLC4040 / / / iR C4580i / / / iR C4080i / / /

1) Enter the Service mode.
2) Select: COPIER > ADJUST > BLANK > BLANK_T/L/B/R
3) Change the setting value to adjust (Increase of setting value by 24 increases the non-image width by ca.1mm. Setting range: 0 ~ 1000)

2.2.18 Setting the Auto Gradation Adjustment

CLC5151 / / / CLC4040 / / / iR C4580i / / / iR C4080i / / /

The Auto Gradation Adjustment (Full Adjust) for 'plain' and 'Heavy' must be executed by following the procedures described below.

1) Clean up the reading glass on the machine's copyboard.
2) Put A4 plain paper in Cassette 1.
3) Put A4 Heavy paper in Cassette 2.
4) Press [Registration].
5) Select [Common Settings] > [Register Paper Type] of > [Cassette 1] > [Plain] .
6) Select [Common Settings] > [Register Paper Type] of > [Cassette 2] > or [Heavy].
7) Enter the Service Mode.
Select COPIER > OPTION > BODY > PASCAL.
8) Check that the setup value is '1'.
9) Press [RESET] twice and get out from the service mode.
10) Press [Registration].
11) Select [Adjustment / Cleaning] > [Automatic Gradation Adjustment] > [Plain]or [Heavy] > [Full Adjust] > [Test Print 1].
In a response, test print 1 will be printed.
12) Place the test print 1 on the reading glass by following the operation screen.
13) Press [Start Scan].
In a response, test print 1 will be read.
14) Remove the test print 1 when 'Remove Test Print' is displayed.
15) Press [Test Print 2].
In a response, test print 2 will be printed.
16) Place the test print 2 on the reading glass by following the operation screen.
17) Press [Start Scan].
In a response, test print 2 will be read.
18) Remove the test print 2 when 'Remove Test Print' is displayed.
19) Press [Test Print 3].
In a response, test print 3 will be printed.
20) Place the test print 3 on the reading glass by following the operation screen.
21) Press [Start Scan].
In a response, test print 3 will be read.
22) Display [Adjustment/Cleaning] screen.
23) Remove the test print 3 when 'Remove Test Print' is displayed.
24) Press [Reset] and get out from Registration.
25) Put sheets of paper to be used in each cassette.
26) Open the front cover and remove the front inside cover [1].
- Screw [2]: 1

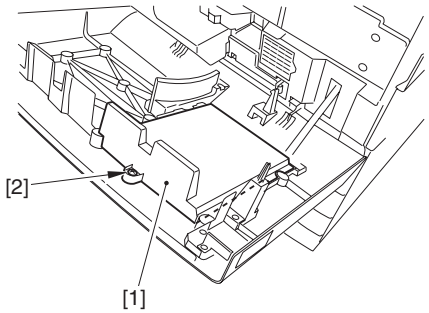

F-2-91

27) Write down necessary items in the Service Book.
28) Close the front cover.

2.3 Checking the Connection to the Network

2.3.1 Summary

CLC5151 / / / CLC4040 / / / iR C4580i / / / iR C4080i / / /

Perform the following procedures only when connecting the machine to the network.
When the network environment of the user is TCP/IP, use the Ping function to check to be sure that the network configuration is performed correctly.
When the network environment of the user is IPX/SPX or Apple Talk, it is not necessary to check the above.

2.3.2 Checking the Network Connection

CLC5151 / / / CLC4040 / / / iR C4580i / / / iR C4080i / / /

Perform the following procedures only when connecting the machine to the network.

1) Turn off the main power supply switch by following the shut-down sequence.
2) Connect the network cable to the machine and turn on the main power supply switch.
3) Report the completion of the installation to the user's system administrator and ask the machine's network configuration.

The following item 'Initial Setup / Register' must be 'ON' to perform the network configuration.
Initial Setup / Register > System Administration Settings > Network Settings > Change of Network Settings / Connection Check Display.

4) Turn off the main power supply switch by following the shut-down sequence.
5) Turn on the main power supply switch.

2.3.3 Ping Operation

CLC5151 / / / CLC4040 / / / iR C4580i / / / iR C4080i / / /

1) Select Initial Registration > System Settings > Network Settings > TCP/IP Settings > PING Command.
2) Execute the PING command to the machines connected to the network.
Enter the IP address using the numeric keypad and press [OK] key.
If the Ping succeeds, 'response from the host' is displayed. If it fails, 'no response from the host' is displayed.
If the message is 'no response from the host', enter 127.0.0.1 in the Ping and check to be sure that a response from the host has come.
If it fails to get a response from the host, ask the user's system administrator to check the network environment.
If there is a response from the host, the network function of the machine works normally.

2.4 Troubleshooting the Network

2.4.1 Summary

CLC5151 / / / CLC4040 / / / iR C4580i / / / iR C4080i / / /

Perform the following procedures only when connecting the machine to the network.
When connecting to the network fails, the possible causes are as follows:

- Fault of the machine's TCP/IP settings.
- User Network fault.

The following is the detailed checking procedure.

2.4.2 Checking the Connection of Network Cable

CLC5151 / / / CLC4040 / / / iR C4580i / / / iR C4080i / / /

1) Check to be sure if the network cable is correctly connected to the Ether port.
If the connection is wrong, correct it, and run a check once again using the remote host address.

2.4.3 Making a Check Using a Loopback Address

CLC5151 / / / CLC4040 / / / iR C4580i / / / iR C4080i / / /

The loopback address comes back before reaching the network PCB. By executing the PING command using the address, you can find out whether the machine's TCP/IP settings are correct.
1) Enter the loopback address (127.0.0.1) to the PING command.
- If the message is 'no response from the host', check the machine's TCP/IP settings and execute the PING command once again.
- If the message is 'response from the host', make the next check.

2.4.4 Making a Check Using a Local Host Address

CLC5151 / / / CLC4040 / / / iR C4580i / / / iR C4080i / / /

The 'local host address' is the IP address of the machine, and the address comes back after reaching the network PCB. By executing the PING command using the address, you can find out whether the network PCB is free of a fault.

1) Enter the machine's IP address to the PING command.
If the message is 'no response from the host' go through the following, and execute the PING command once again.
- The machine's IP address may be wrong: Check the machine's IP address settings, and check with the system administrator to see if the assigned IP address is a valid one.
- The connection of the network PCB may be wrong: Check the connection of the network PCB once again.
- The network PCB may be faulty: Try replacing it.

If the message is 'response from the host', suspect a problem in the user's network environment. Report to the system administrator for appropriate action.

2.5 Installing the Copy Tray

2.5.1 Checking the Attachments (Copy Tray-N1)

CLC5151 / / / CLC4040 / / / iR C4580i / / / iR C4080i / / / / Color Image Reader-F1 / Color Image Reader-E1 / Dupiex Color Image Reader-G1

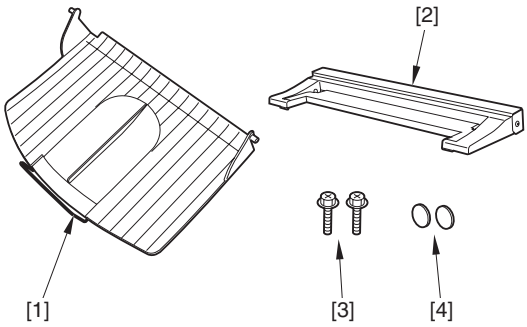

F-2-92

[1]	Delivery tray	1 pc.
[2]	Copy tray base	1 pc.
[3]	Screw (RS tightening; M4X16)	2 pc.
[4]	Face sticker	2 pc.

2.5.2 Turning Off the Host Machine

CLC5151 / / / CLC4040 / / / iR C4580i / / / iR C4080i / / / / Color Image Reader-F1 / Color Image Reader-E1 / Dupiex Color Image Reader-G1

How to Turn Off the Host Machine
When turning off the host machine, be sure to go through the following steps to protect the hard disk:
1) Hold down the control panel power switch for 3 sec or more.
2) Operate as instructed in the shut-down sequence screen (so that the main power switch will go off automatically).
3) Disconnect the power cable (for the power outlet).

2.5.3 Installation Procedure

CLC5151 / / / CLC4040 / / / iR C4580i / / / iR C4080i / / / / Color Image Reader-F1 / Color Image Reader-E1 / Dupiex Color Image Reader-G1

1) Remove the mounting screw [2] from the card reader cover [1] of the host machine. (The removed screw will no longer be used.)

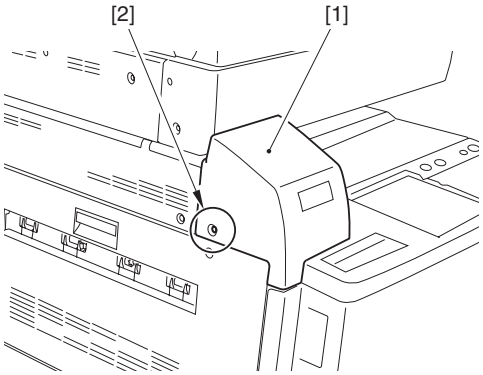

F-2-93

2) Bend the top [1] of the tray base in the direction of the arrow; then, hold it as shown, and fit the screw (RS tightening; M4X16) [2] in the hole on the left side.

The copy tray base (hereafter, "tray base") is under appreciable force by a spring. Be sure it remains bent and fixed in place. Unless it is firmly in place, you can get your hand trapped or the tray can fall out, possibly causing injuries.

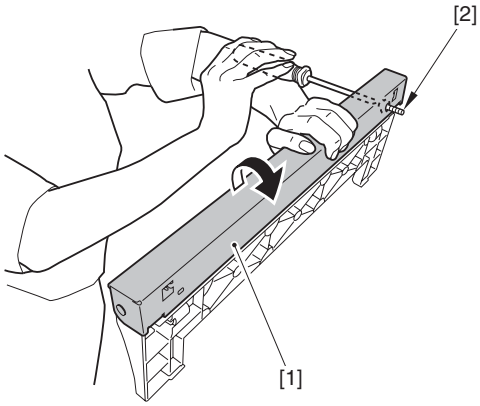

F-2-94

3) With the screw [2] fitted in the tray base [1], fit it to the host machine using the other screw (RS tightening; M4X16) [3]. (The screws are found at [A] and [B].)

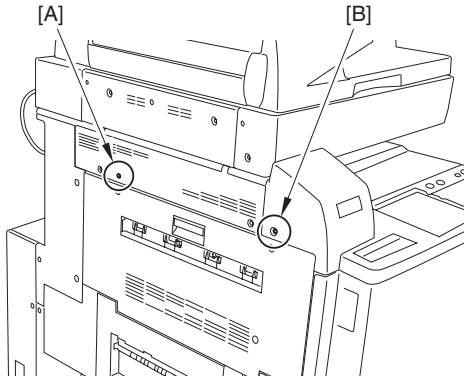

F-2-95

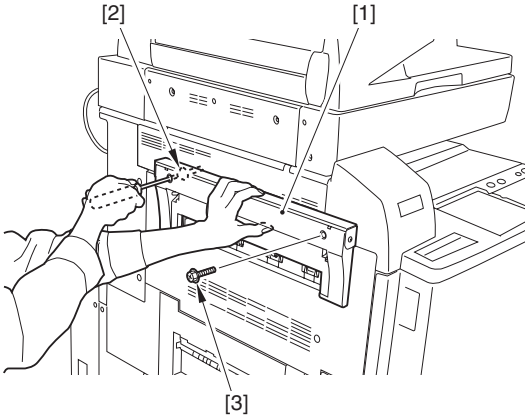

F-2-96

4) While moving down the tray base [1] slightly, match the protrusion [2] on either side of the delivery tray against the hole [3] in the tray base, and fix it in place.

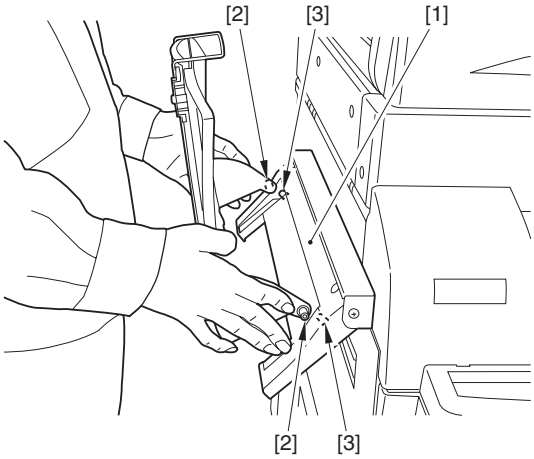

F-2-97

5) Lower the mounted delivery tray, and attach the 2 face stickers [1] over the screws.

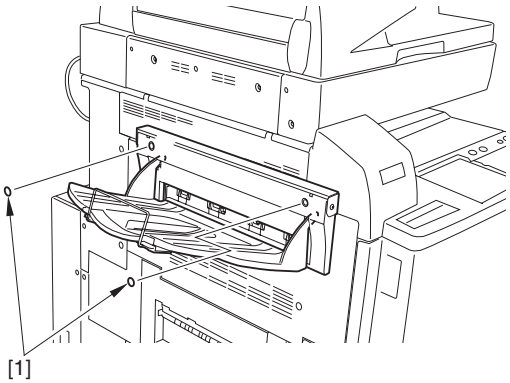

F-2-98

When detaching the delivery tray, be sure to do so while keeping the tray up. Otherwise, the force of the spring will snap up the tray base, possibly causing injuries.

2.6 Installing the Card Reader

2.6.1 Checking Contents (Card Reader-D1)

CLC5151 / / / CLC4040 / / / iR C4580i / / / iR C4080i / / /

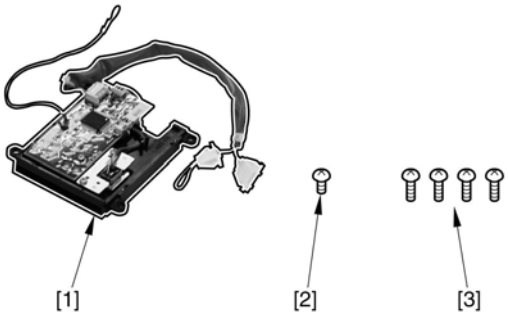

F-2-99

[1]	Card Reader	1 pc.
[2]	panhead screw (small)	1 pc.
[3]	screw (B tightening; M3X10)	4 pc.

2.6.2 Turning off the Host Machine

CLC5151 / / / CLC4040 / / / iR C4580i / / / iR C4080i / / / / Color Image Reader-F1 / Color Image Reader-E1 / Dupiex Color Image Reader-G1

How to Turn Off the Host Machine
When turning off the host machine, be sure to go through the following steps to protect the hard disk:
1) Hold down the control panel power switch for 3 sec or more.
2) Operate as instructed in the shut-down sequence screen (so that the main power switch will go off automatically).

3) Disconnect the power cable (for the power outlet).

2.6.3 Installation Procedures

CLC5151 / / / CLC4040 / / / iR C4580i / / / iR C4080i / / /

1) Remove the face cap [1] and the 2 screws [2], and then detach the card reader cover [3].

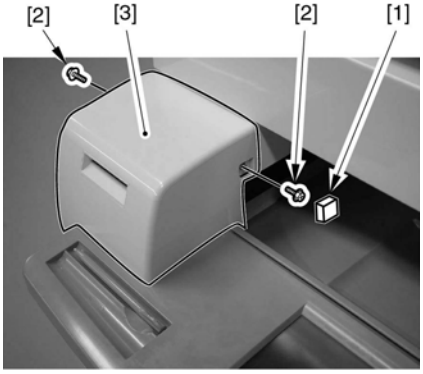

F-2-100

2) Detach the inside cover [2] by removing the 3 screws [1] on the back side of the upper left small cover, and then attach it by changing its direction as shown in the figure.

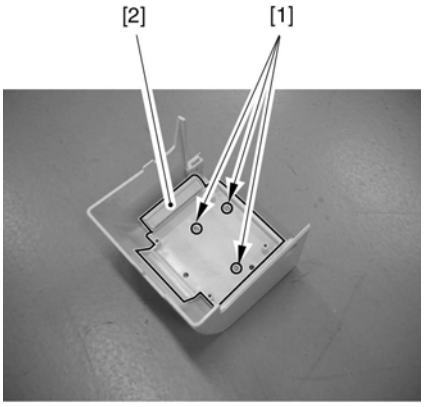

F-2-101

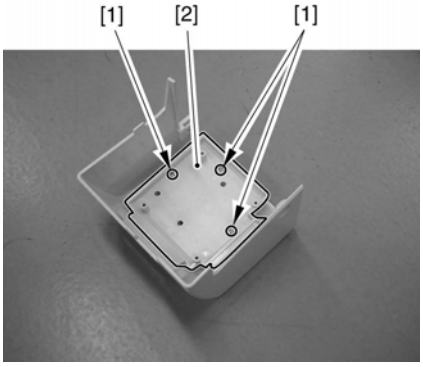

F-2-102

3) Attach the card reader [2] onto the inside cover with 4 truss head screws included in the package.

When attaching the card reader, be sure to attach it with its label indicating the direction to insert the card on the surface.

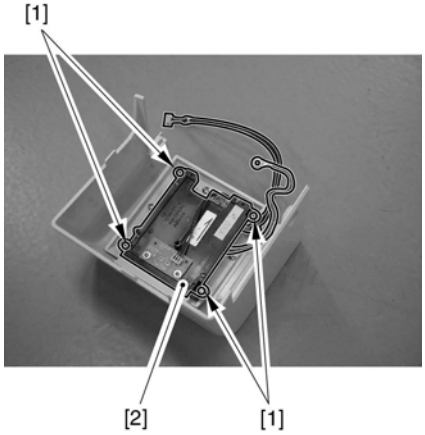

F-2-103

4) Attach the grounding wire [1] with the truss head screw [2] included in the package, and then connect the card reader connector [3] with the main body connector.

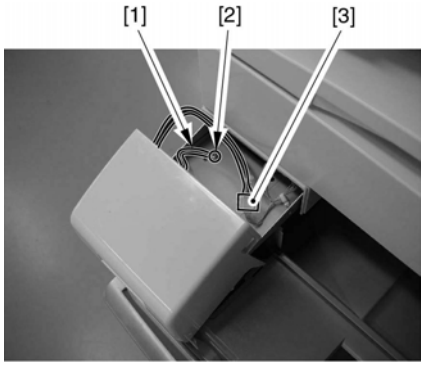

F-2-104

5) Attach the card reader cover with the screws removed in the step 1.
6) Turn ON the main power.
7) Enter the Service mode.
8) Select: COPIER > FUNCTION > INSTALL > CARD, and then enter a given number from 1 to 2001 (first number of the customer's user card)
9) Press [Reset] to exit from the service mode.
10) Turn OFF the power supply following the shut-down sequence.
11) Turn On the main power switch.

2.6.4 Installation Procedure in the imageWARE Accounting Manager (henceforth: iWAM) environment

CLC5151 / / / CLC4040 / / / iR C4580i / / / iR C4080i / / /

1) Check to see that 'ID00000001 to ID00001000' have been created in '[Initial Settings / Registration] > [System Administration Settings] > [Department ID management] > [Count Management]' (In the case of entering '1' as the first number in 'Service mode > COPIER > FUNCTION > INSTALL > CARD')
2) Press [Reset] to exit from [Initial Settings/ Registration].
3) Select: [Initial Settings / Registration] > [System Administration Settings] > [Network Settings] > [TCP/IP Settings] > [IP Address], and make settings of [IP Address], [Gateway Address], and [Subnet Mask] suitable for the user's environment.
4) Press [Reset] to exit from [Initial Settings / Registration].
5)

Be sure that without selecting: [Initial Settings / Registration] > [System Administration Settings] > [System Administrator Information Settings] and then registering [System Administration Department ID] and [System Administration Password], 'Card Registration to the Device' cannot be executed in the iWAM settings.

Select: [Initial Settings / Registration] > [System Administration Settings] > [System Administrator Information Settings], and then enter given numbers for [System Administration Department ID] and [System Administration Password].
6) Press [Reset] to exit from [Initial Settings / Registration].
7) Turn OFF the power supply following the shut-down sequence.

2.7 Installing the Key Switch Unit

2.7.1 Checking Contents (Key Switch Unit-A2)

CLC5151 / / / CLC4040 / / / iR C4580i / / / iR C4080i / / /

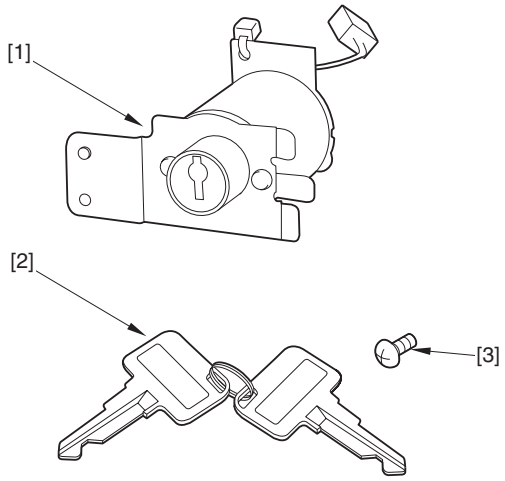

F-2-105

[1]	Key Switch Unit	1 pc.
[2]	Control Key	1 pc.
[3]	Screw (binding,; M4x6)	1 pc.

2.7.2 Turning off the Host Machine

CLC5151 / / / CLC4040 / / / iR C4580i / / / iR C4080i / / / / Color Image Reader-F1 / Color Image Reader-E1 / Dupiex Color Image Reader-G1

How to Turn Off the Host Machine
When turning off the host machine, be sure to go through the following steps to protect the hard disk:
1) Hold down the control panel power switch for 3 sec or more.
2) Operate as instructed in the shut-down sequence screen (so that the main power switch will go off automatically).
3) Disconnect the power cable (for the power outlet).

2.7.3 Installation Procedures

CLC5151 / / / CLC4040 / / / iR C4580i / / / iR C4080i / / /

1) Detach the center copy tray [1].
   - 2 screws [2]

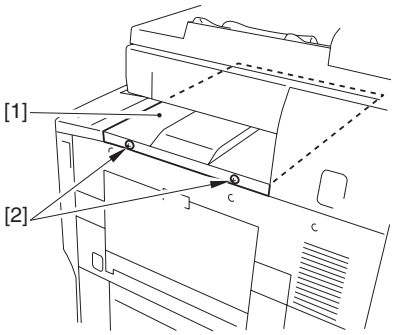

F-2-106

2) Slide the manual feeding tray out, and detach the center right cover [1].
   - 1 screw [2]

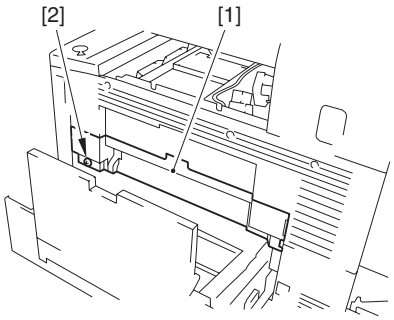

F-2-107

3) Detach the upper right cover [1]
   - 2 screws [2]

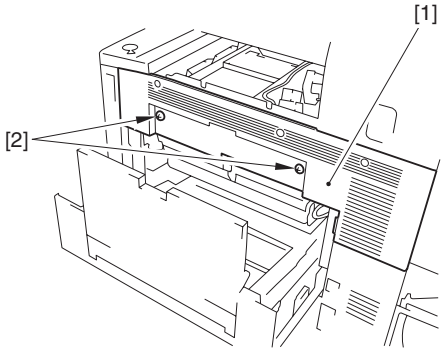

F-2-108

4) Cut off the [A] area of the upper right cover detached in the step 3 using nippers etc,.

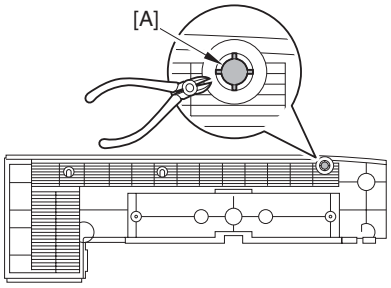

F-2-109

5) Attach the key switch unit to the cut-off of the upper right stay in the direction of the arrow.

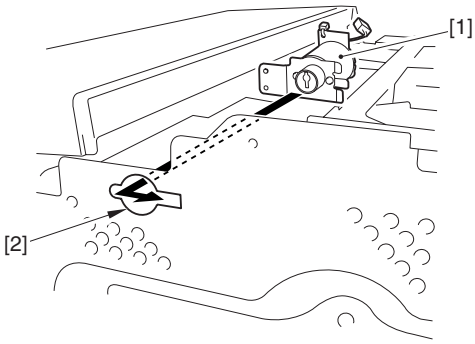

F-2-110

6) Fix the key switch unit [1] with the screw (binding; M4x6) [2], and connect the connector [3].

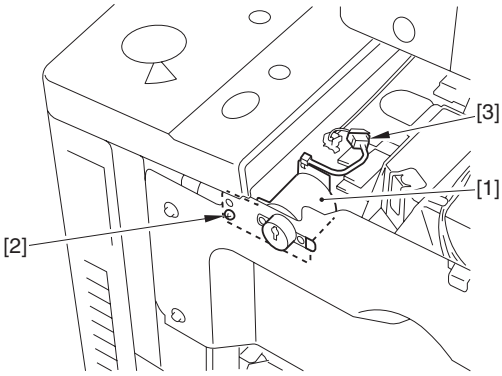

F-2-111

7) Attach the removed parts.
- Upper right cover
- Middle right cover
- Center copy tray

8) Return the manual feeding tray.

2.7.4 Checking After the Installation

CLC5151 / / / CLC4040 / / / iR C4580i / / / iR C4080i / / /

1) Enter the Service mode.
2) Select COPIER > FUNCTION > INSTALL > KEY, and enter '1'.
3) Turn off the power supply switch by following the shut-down sequence.

4) Turn on the main power supply switch.
5) Check that the message 'Set the control key' is displayed on the control panel screen.
6) Insert the Control Key and check that making a copy is possible.

2.8 Installing the Reader Heater

2.8.1 Checking the Attachments (Reader Heater Unit-F1)

/ / / / iR C4580i / / / iR C4080i / / / / Color Image Reader-F1 / Color Image Reader-E1 / Dupiex Color Image Reader-G1

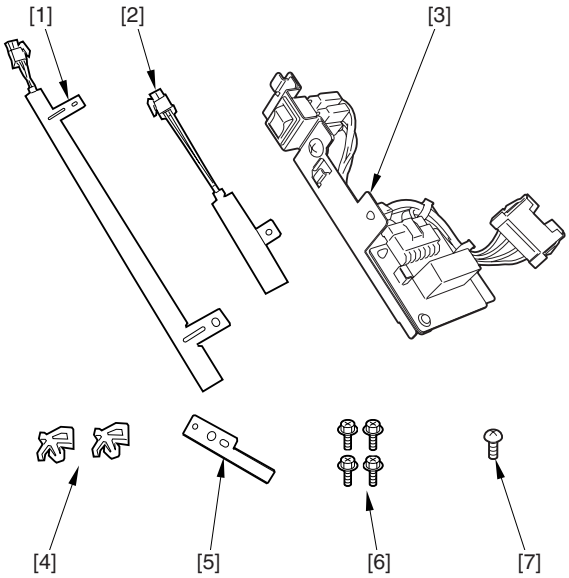

F-2-112

[1]	Mirror heater	FK2-0229-000	1 pc.
[2]	Lens heater	FK2-0228-000	1 pc.
[3]	Reader Heater Switch PCB	FM2-8197-000	1 pc.
[4]	Cable clamp	WT2-0507-000	2 pc.
[5]	Heater harness retainer	FC5-2945-000	1 pc.
[6]	screw (RS tightening; M4X8)	XB3-6400-805	4 pc.
[7]	screw (binding; M4X8)	XB1-2400-807	1 pc.

2.8.2 Turning Off the Host Machine

/ / / / iR C4580i / / / iR C4080i / / / / Color Image Reader-F1 / Color Image Reader-E1 / Dupiex Color Image Reader-G1

How to Turn Off the Host Machine
When turning off the host machine, be sure to go through the following steps to protect the hard disk:
1) Hold down the control panel power switch for 3 sec or more.
2) Operate as instructed in the shut-down sequence screen (so that the main power switch will go off automatically).
3) Disconnect the power cable (for the power outlet).

2.8.3 Installation Procedure

/ / / / iR C4580i / / / iR C4080i / / / / Color Image Reader-F1 / Color Image Reader-E1 / Dupiex Color Image Reader-G1

<installing the Heater>
1) Open the ADF.
2) Remove the 2 screws [1], and detach the glass retainer [2].
3) Remove the copyboard glass [3].

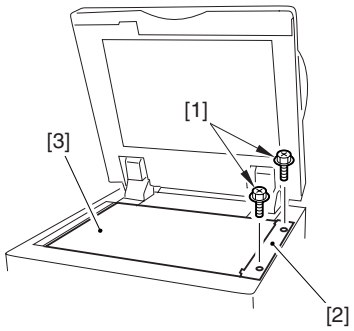

F-2-113

When detaching the copyboard glass, take care not to touch the glass surface and the white plate on its back. If soiled, clean the area using lint-free paper.

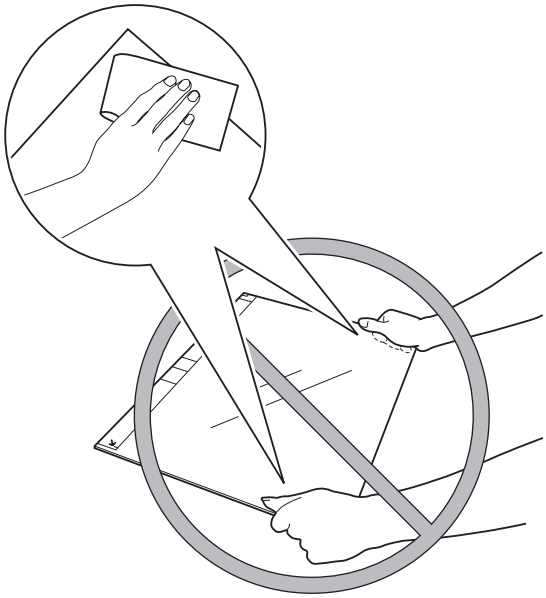

F-2-114

4) Hold the bend [A] of the mirror stay, and move the No. 1 mirror base [1] to the right until it stops.

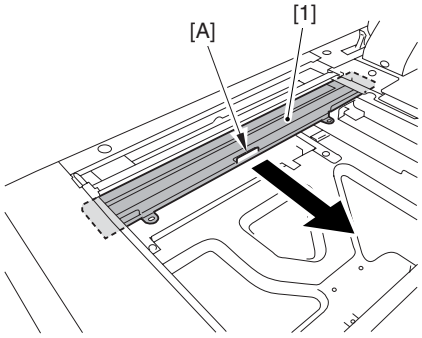

F-2-115

5) Fit the front side of the mirror heater [1] under the cable guide, and connect the connectors [2]; then, fix it in place with 2 screws (RS tightening; M4X8) [3].

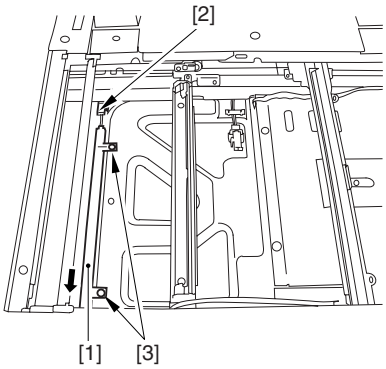

F-2-116

6) Fix the heater harness retainer [1] in place.
- 1 screw (RS tightening; M4X8) [2]

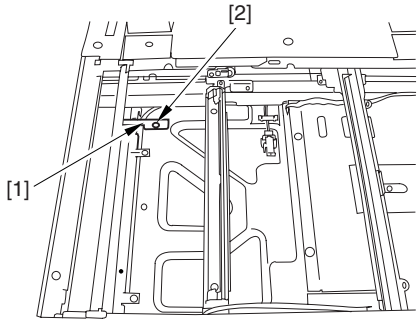

F-2-117

7) Move back the No. 1 mirror base [1] to the left until it stops.

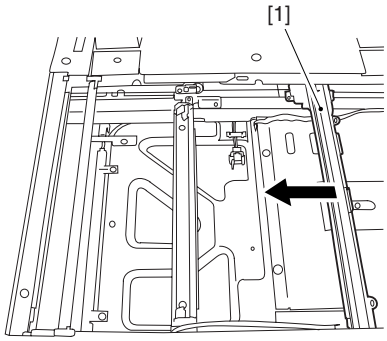

F-2-118

8) Fit the cable clamp [1] into the hole [2] of the frame.

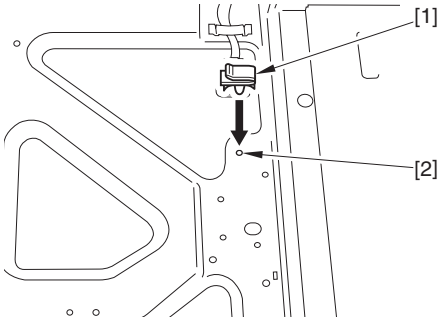

F-2-119

9) Mount the lens heater [1].
- 1 connector [2]
- 1 cable clamp [3]
- 1 screw (RS tightening; M4X8) [4]

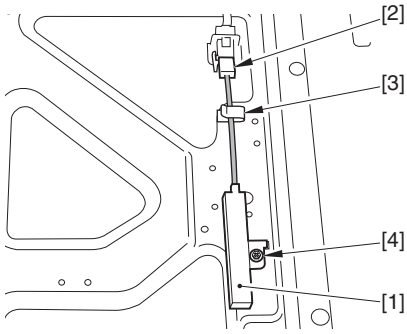

F-2-120

Tighten the screw [3] while forcing the lens heater [1] in the direction of the emboss [2]. When doing so, take care so that the heater claw [4] will not become displaced. Also, check to be sure that there is no gap under the heater.

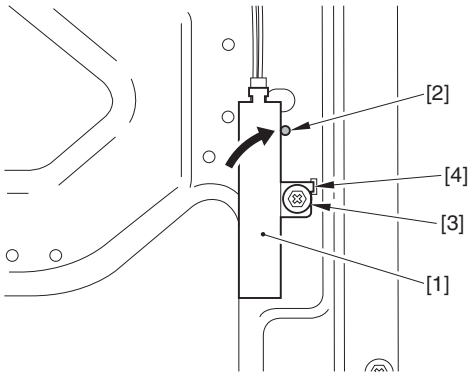

F-2-121

10) If the cable [1] is slack, fit the cable clamp [2] in the hole of the frame to take up the slack.

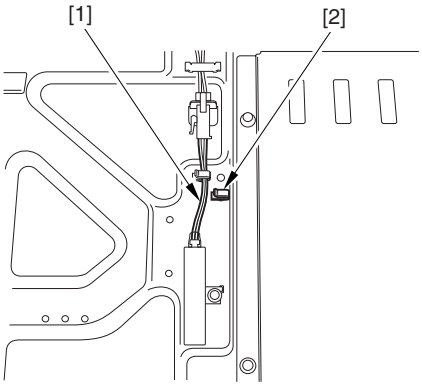

F-2-122

If there is a vertical side sensor, check to be sure that the cable is fixed in place using 2 clamps [A].

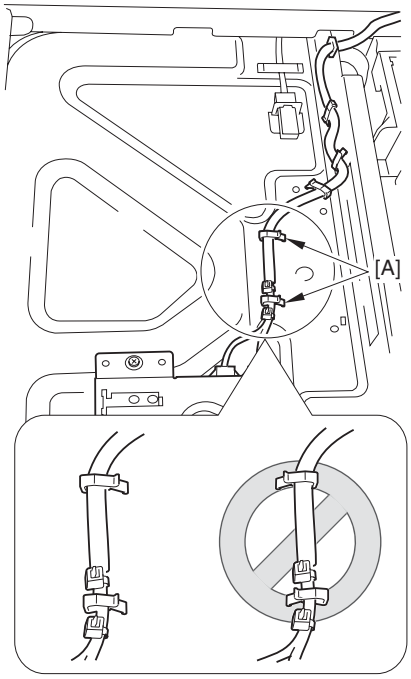

F-2-123

11) Mount the copyboard glass and the glass retainer by reversing the steps used to remove them.

<Installing the Reader Heater Switch PCB>

1) Free the reader communication cable [1] and the reader power supply cable [2] from the 4 clamps [3], and remove the connector [4].

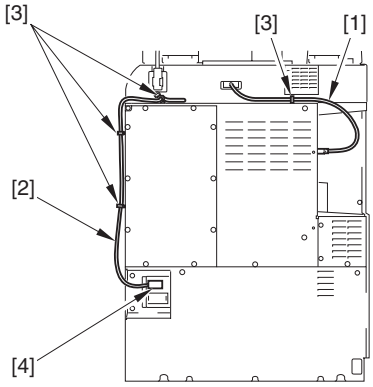

F-2-124

2) Remove the rear cover [1] of the host machine.
- 10 screws [2] (Remove)
- 2 screws [3] (Unfasten)

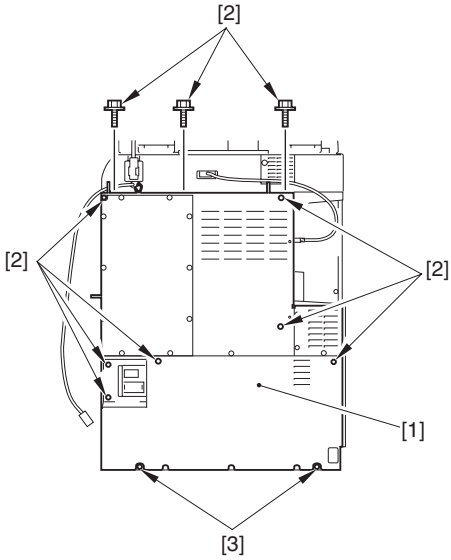

F-2-125

3) Pull out the fixing feeder unit [1] and open the pickup vertical path cover [2].

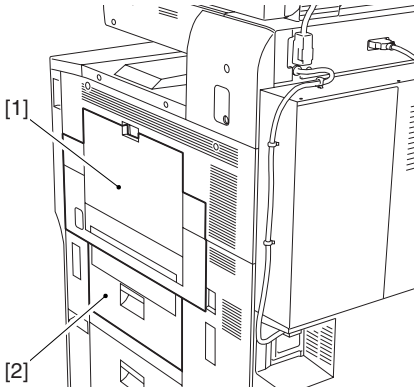

F-2-126

4) Remove the right rear cover [1] of the host machine.
- 3 screws [2]

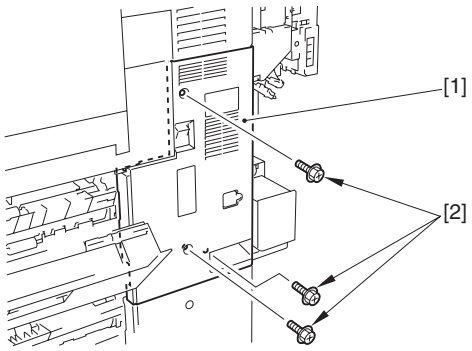

F-2-127

5) Cut off the right rear cover [1] of the host machine using nippers.

Be sure not to leave burrs on the area [A] that has been cut.

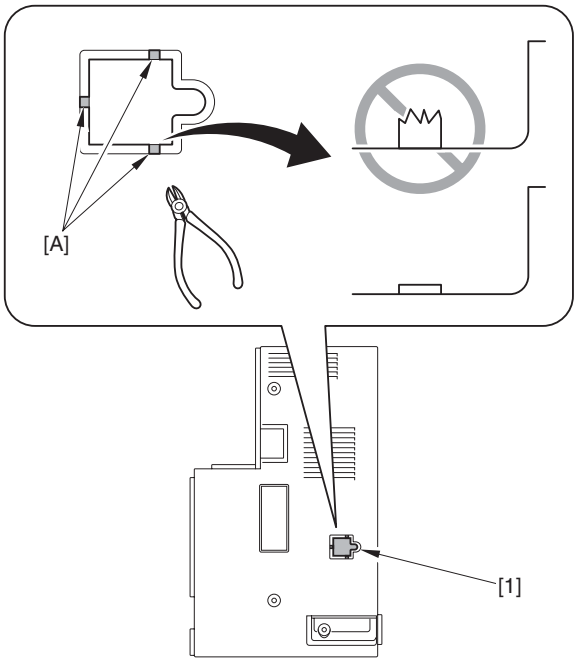

F-2-128

6) Open the clamp [1], free the harness [2], and then close the clamp [1].

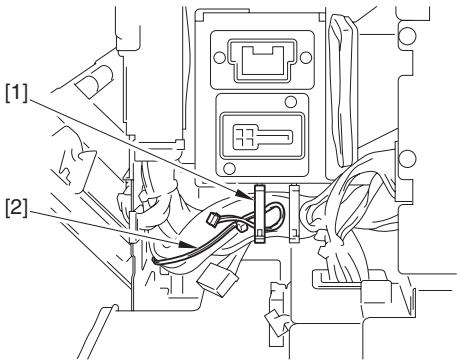

F-2-129

7) While lifting the harness [1], push in the reader heater switch PCB [2] to fix it in place with a screw (binding; M4X8) [3].

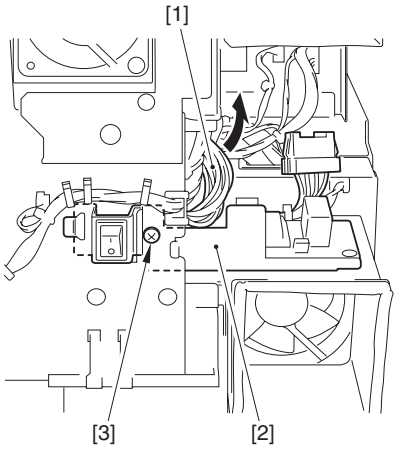

F-2-130

8) Connect the 2 connectors [1] to the reader heater switch PCB [2].

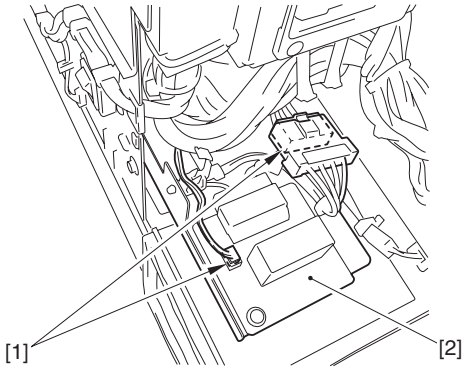

F-2-131

9) Route the harness [1] through the clamp [2], and close the clamp [2].

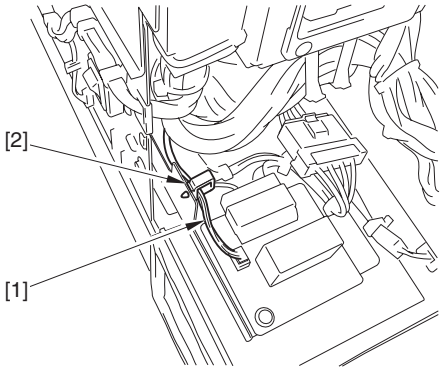

F-2-132

If the harness is too long, loop the harness around the clamp [2] as shown.

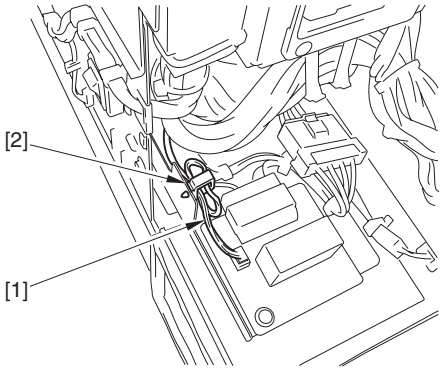

F-2-133

10) Attach the covers using the steps used to detach them but in reverse.
- right rear cover (of the host machine)

- manual feed unit
- pickup vertical path cover
- rear cover (of the host machine)

Fit the 10 claws [1] of the upper rear cover of the host machine in place. If they are not firmly in place, the cover will fail to remain in place.

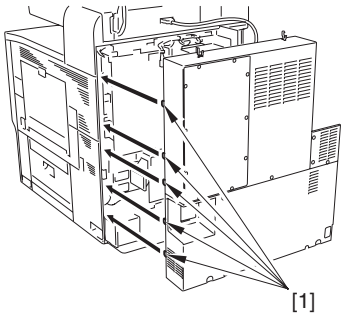

F-2-134

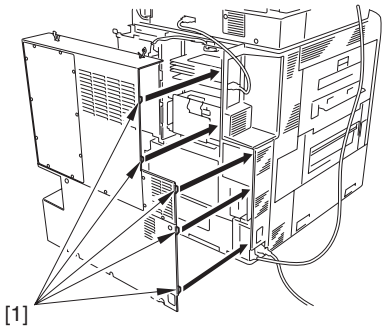

F-2-135

11) Fix the reader communication cable and the reader power supply cable with 4 clamps. Then connect the reader power supply cable.

Removing the Slack from the Cable

Fix the reader power cable [1] in place using the 3 clamps [2] starting at the bottom, and remove any excess slack at the top.

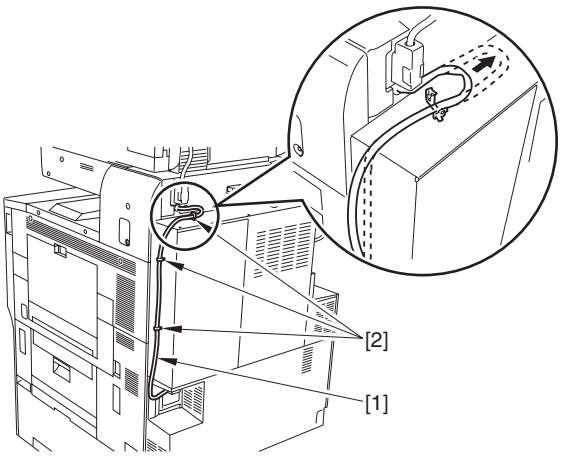

F-2-136

12) Turn on the reader heater switch.

2.9 Installing the Cassette Heater

2.9.1 Checking the Attachments (Cassette Heater Kit-E1)

CLC5151 / / / CLC4040 / / / iR C4580i / / / iR C4080i / / / / Color Image Reader-F1 / Color Image Reader-E1 / Dupiex Color Image Reader-G1

There must be a separately available Cassette Heater Unit-24 for the installation of the mounting kit.

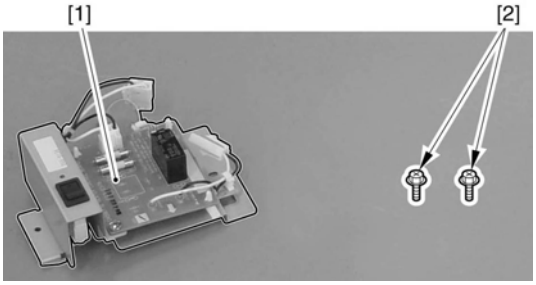

F-2-137

[1]	Heater PCB unit	FM2-8200-000	1 pc.
[2]	Screw (RS, tightening; M4X8)	XB3-6400-805	2 pc.

2.9.2 Checking the Attachments (Cassette Heater Unit-24)

CLC5151 / / / CLC4040 / / / iR C4580i / / / iR C4080i / / / / Color Image Reader-F1 / Color Image Reader-E1 / Dupiex Color Image Reader-G1

There must be a separately available Cassette Heater Kit-E1 for the installation of the heater unit.

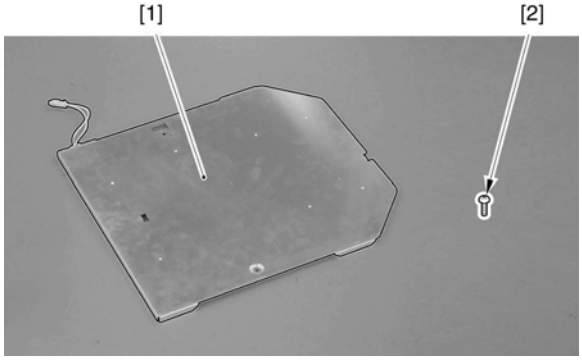

F-2-138

[1]	Heater unit	FH7-4742-000	1 pc.
[2]	Screw (binding; M4X4)	XB1-2400-407	1 pc.

2.9.3 Turning Off the Host Machine

CLC5151 / / / CLC4040 / / / iR C4580i / / / iR C4080i / / / / Color Image Reader-F1 / Color Image Reader-E1 / Dupiex Color Image Reader-G1

How to Turn Off the Host Machine
When turning off the host machine, be sure to go through the following steps to protect the hard disk:
1) Hold down the control panel power switch for 3 sec or more.
2) Operate as instructed in the shut-down sequence screen (so that the main power switch will go off automatically).
3) Disconnect the power cable (for the power outlet).

2.9.4 Installation Procedure (Cassette Heater Kit-E1)

CLC5151 / / / CLC4040 / / / iR C4580i / / / iR C4080i / / /

MEMO:
The Cassette Heater Kit-E1 may be installed to the cassettes of the host machine or a 2-cassette pedestal by going through the same instructions.

The instructions that follow are for installation to a 2-cassette pedestal.

1) Take out both cassettes.
2) Fit a screwdriver from the front of the host machine, and remove the heater PCB unit cover [1] found on the rear side plate of the host machine.
   - 1 screw [2]

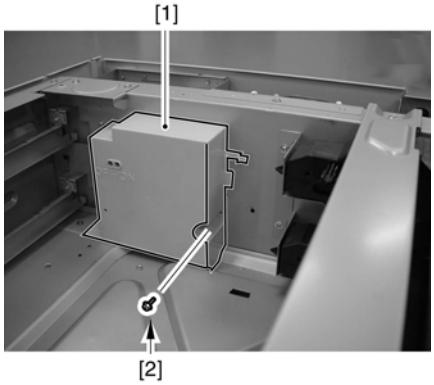

F-2-139

MEMO:
If the heater PCB unit cover is to be removed, pull on the stop [1] found on the cover while moving the cover upward.

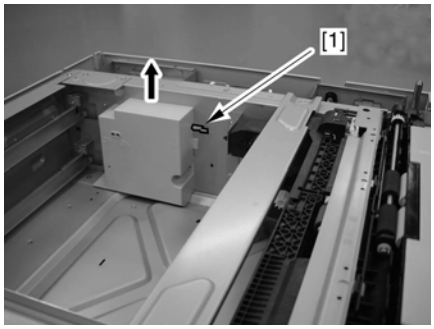

F-2-140

3) Attach the heater PCB unit [2] with 2 screws (RS, tightening; M4X8) [1]; then, connect the 2 connectors [3].

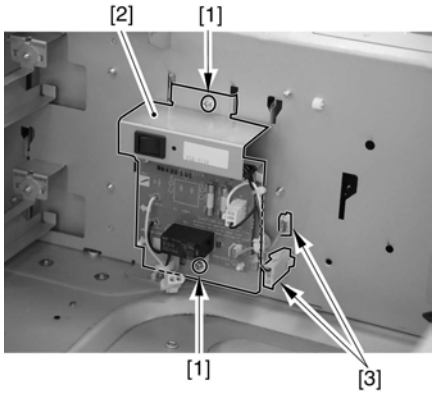

F-2-141

MEMO:
If a Cassette Heater Unit-24 is to be installed next, skip steps 4) and 5).

4) Attach the heater PCB unit cover.
5) Put back the cassettes.

2.9.5 Installation Procedure (Cassette Heater Unit-24)

CLC5151 / / / CLC4040 / / / iR C4580i / / / iR C4080i / / / / Color Image Reader-F1 / Color Image Reader-E1 / Dupiex Color Image Reader-G1

MEMO:
The Cassette Heater Unit-24 may be installed to the cassettes of the host machine or a 2-cassette pedestal in the same way.

The instructions that follow are for installation to a 2-cassette pedestal.

MEMO:
If a Cassette Heater Unit-24 is to be installed right after installing the Cassette Heater Kit-E1, skip steps 1) and 2).

1) Take out both cassettes.
2) Fit a screwdriver from the front of the host machine, and detach the heater PCB unit cover [1] found on the rear side plate of the host machine.
   - 1 screw [2]

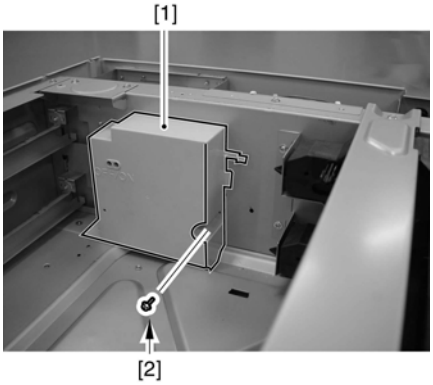

F-2-142

MEMO:
If the heater PCB unit cover is to be removed, pull on the stop [1] found on the cover while moving the cover upward.

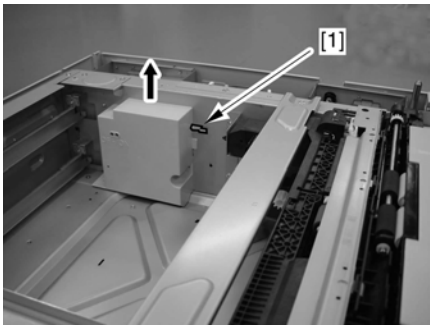

F-2-143

3) Connect the connector [1] of the heater unit and the connector [2] of the heater PCB unit.

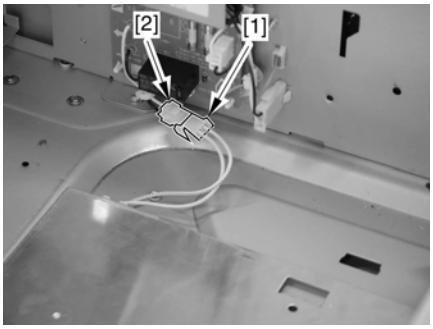

F-2-144

4) Fit the 3 hooks [2] of the heater unit [1] on the slits in the base plate, and fix it in place using a screw (binding; M4X4) [3] while matching the hole positions.

When mounting the heater unit, be sure that the 3 hooks [2] are firmly in place without a gap.

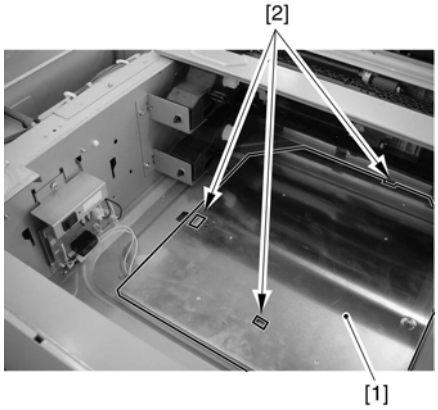

F-2-145

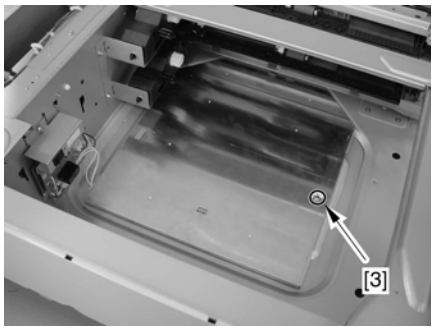

F-2-146

5) Shift the switch [1] of the heater PCB unit to the ON side.

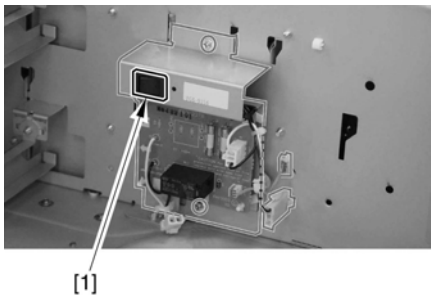

F-2-147

6) Attach the heater PCB unit cover.
7) Put the cassettes back in place.

2.10 Installing the Deck Heater

2.10.1 Checking the Contents

CLC5151 / / / CLC4040 / / / iR C4580i / / / iR C4080i / / / / Color Image Reader-F1 / Color Image Reader-E1 / Dupiex Color Image Reader-G1

Every components of the cassette heater unit are supplied as service parts, so have the following parts on hand.

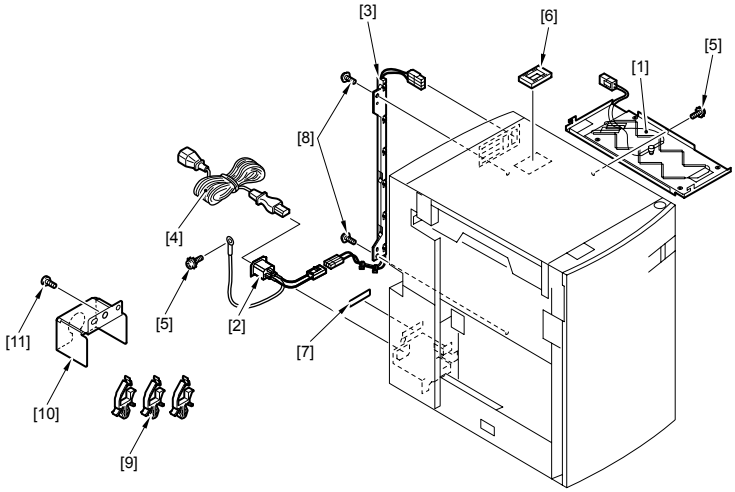

F-2-148

T-2-1

No.	Part name	Part number	QTY	No.	Part name	Part number	QTY
[1]	Heater unit	FG6-9651-000	1pc.	[7]	Power supply label	FS6-8725-000	2pcs.
[2]	AC input connector	FG6-1117-000	1pc.	[8]	RS tight screw (M4 X 8)	XA9-0628-000	2pcs.
[3]	Relay harness unit	FG6-2957-000	1pc.	[9]	Wire saddle	WT2-5730-000	3pcs.
[4]	AC cable	FK2-1777-000	1pc.	[10]	Plug cover	FC6-5776-000	1pc.
[5]	Screw (w/ washer)	XA9-0266-000	2pcs.	[11]	Binding screw (M4 X 4)	XB1-2400-409	1pc.
[6]	Cable protection bush	WT2-5098-000	1pc.				

2.10.2 Installation Procedure

CLC5151 / / / CLC4040 / / / iR C4580i / / / iR C4080i / / / / Color Image Reader-F1 / Color Image Reader-E1 / Dupiex Color Image Reader-G1

1. Installing to the paper deck

When installing the heater to the paper deck, take the following precautions;
a. The AC power plug of the host machine must have been removed from the outlet.
b. Install the heater afterinstalling the host machine and paper deck.
c. Use correct screws (lengths and diameters) at correct positions.

<Procedure>
1) Remove two reusable bands [1], and then disconnect the paper deck connector [2] from the host machine.

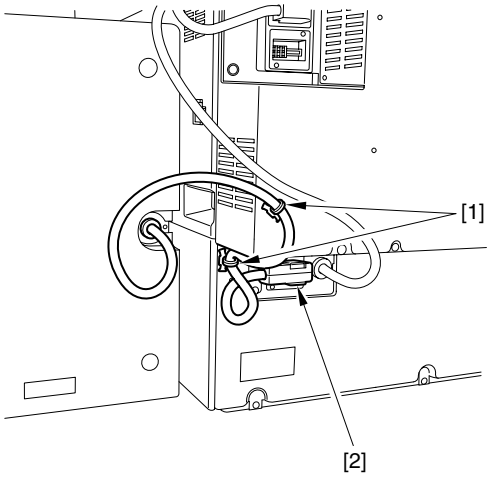

F-2-149

2) Release the paper deck[1] from the host machine, and then press down the latch plate[2] of the paper deck housing with your finger to open the housing[3].
(A: Rear, B: Front)

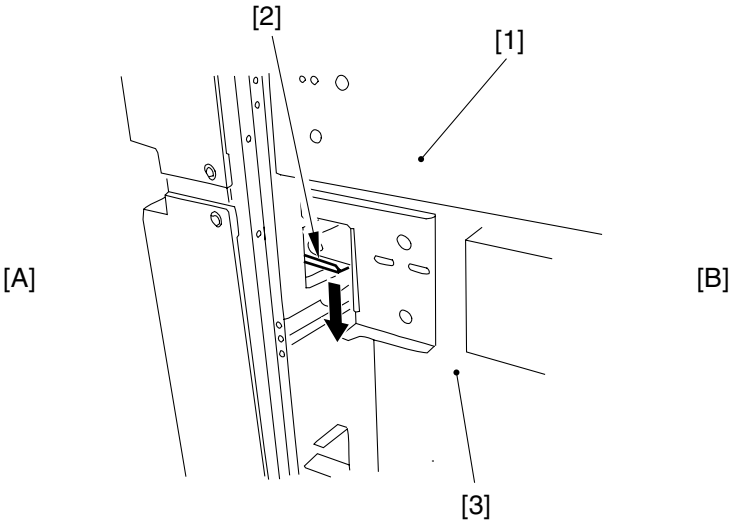

F-2-150

3) Remove three screws[1], and then detach the right cover[2] of the paper deck to the direction of the arrow shown.

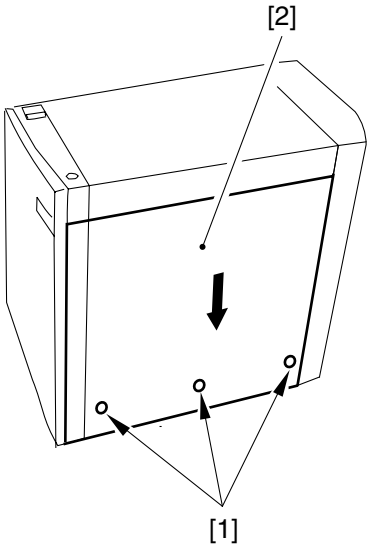

F-2-151

4) Remove the four screws[1] and two other screws[2], and then detach the rear cover[3] of the paper deck.

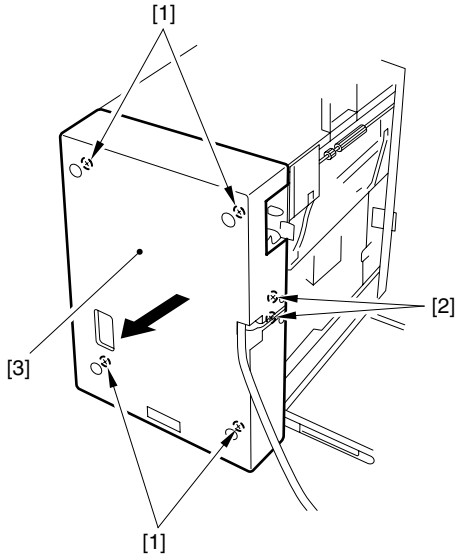

F-2-152

5) Remove three screws[1] and one connector[2], and then detach the front-upper cover[3].

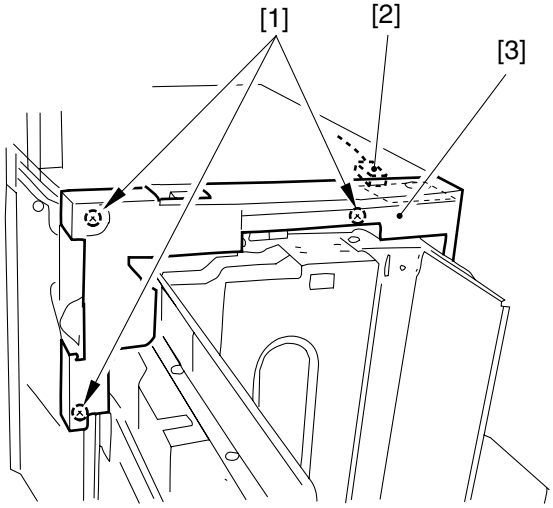

F-2-153

6) Remove two screws[1], and then detach the top cover[2].

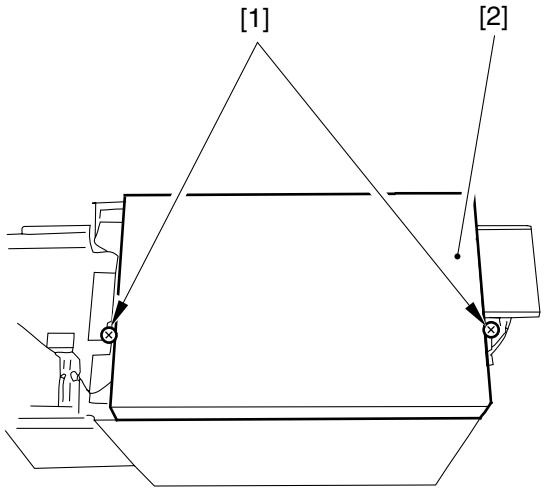

F-2-154

7) Attach the supplied cable protection bushing[1] into the hole[2] on the top panel of the paper deck.

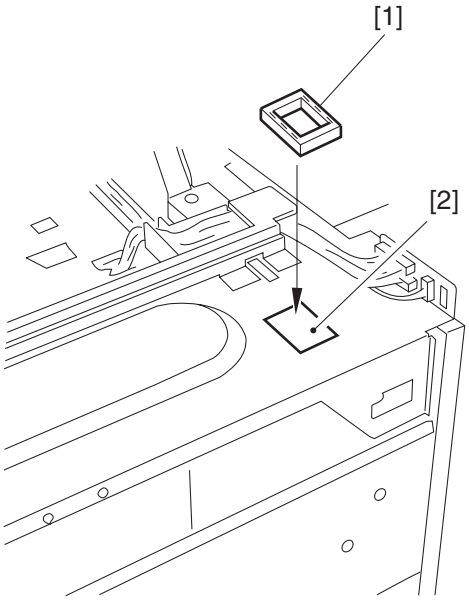

F-2-155

8) Place the heater unit[1] under the top panel[2] of the paper deck, and then take the connector[3] out from the hole[4] on the top plate.
9) Insert two hooks[5] of the heater unit[1] to the holes[6] on the top plate of the paper deck, and then secure the heater unit to the paper deck using a screw with toothed washer[7].

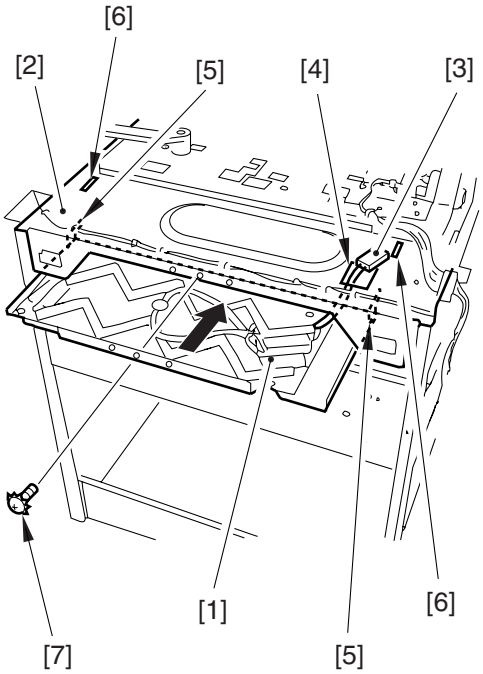

F-2-156

10) Attach the heater connector[2] to the panel mount[1].

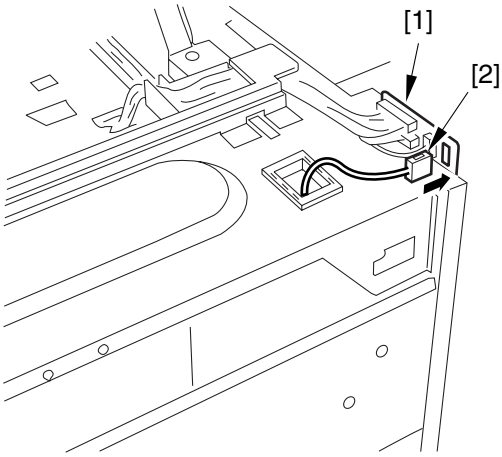

F-2-157

2. Connecting to the Host Machine
1) Remove one screw[2] and remove the blind plate[1] from the power cord mount of the paper deck.

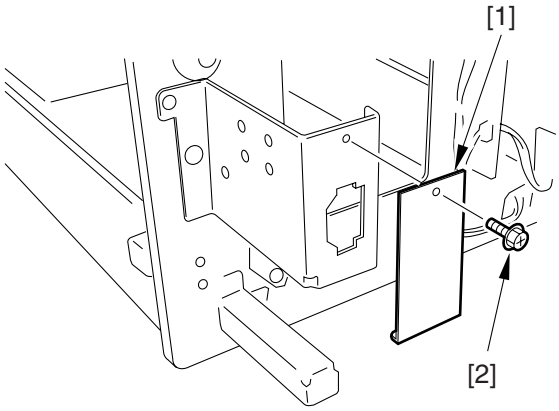

F-2-158

2) Install the supplied AC input connector[1] in two steps([A] > [B]).
3) Install the ground cable[2] using a screw with toothed washer[3].

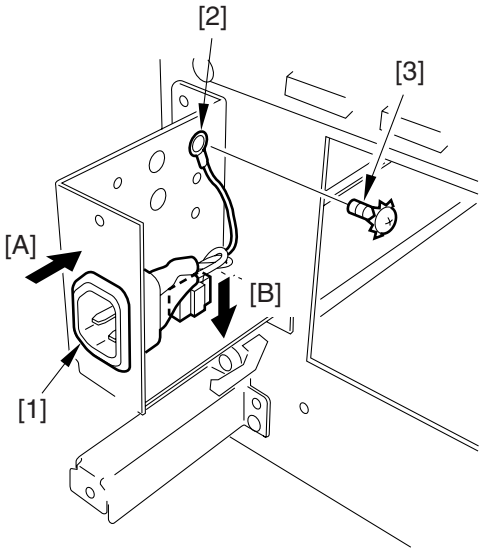

F-2-159

4) Install the relay harness unit[2] to the rear side panel of the paper deck using two screws(M4 X 8)[1], and then connect the connector[3].

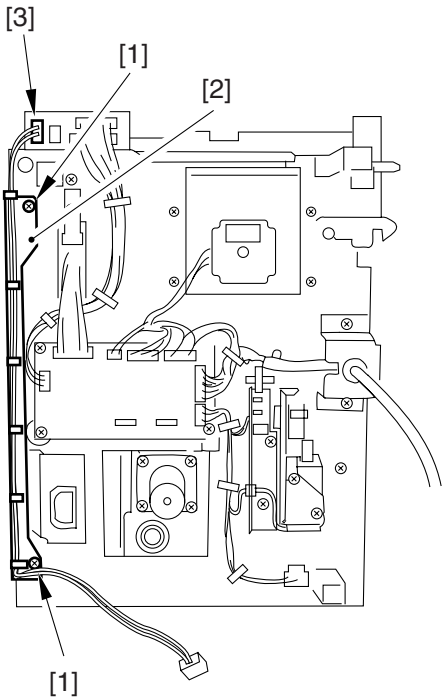

F-2-160

5) Wind the relay harness[1](one and half turns) around the cable guides[2] on the power cord mount, and then connect the connector.

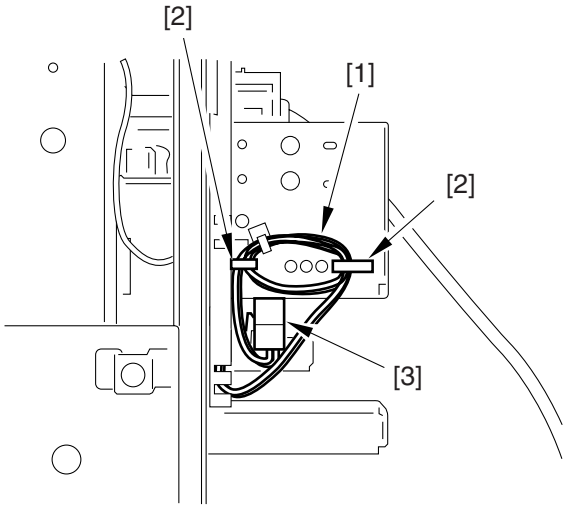

F-2-161

6) Reattach the exterior covers of the paper deck in the following sequence;
[1] Top cover (take care not to have the cables caught) [M4X8: 2pcs.]
[2] Front-upper cover (insert the connector) [M4X8: 3pcs.]
[3] Rear cover [M3X8: 2pcs. M4X8: 4pcs.]
[4] Right cover [M4X8: 3pcs.]
7) Manually slide the paper deck to the left to place it aside of the host machine.
8) Attach two reusable bands[1], and then connect the connector[2] of the paper deck to the back of the host machine.

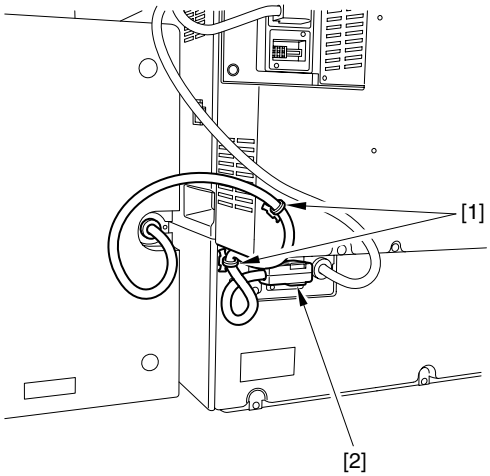

F-2-162

9) Stick the power supply label[1] to the rear panel of the paper deck.

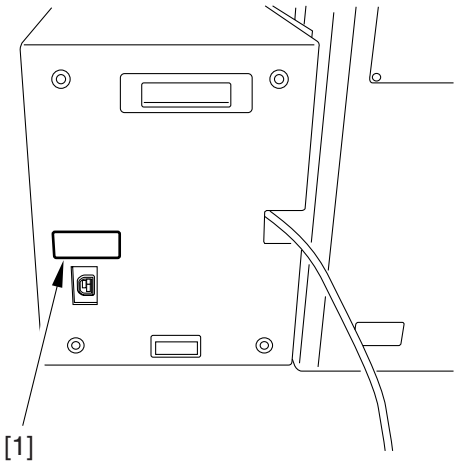

F-2-163

10) Attach three wire saddles[1] to the rear panel of the host machine, and then connect the AC cable connector[2] to the power cord mount of the heater.
11) Route the AC cable[3] as shown, and then connect the other connector (plug)[4] to the receptacle on the rear panel of the host machine.

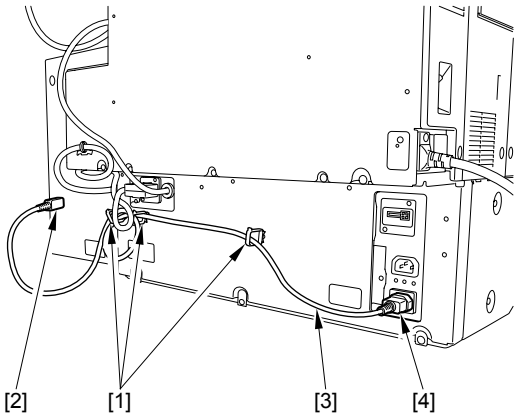

F-2-164

12) Install the plug cover[1] using a binding screw(M4X4) [2].

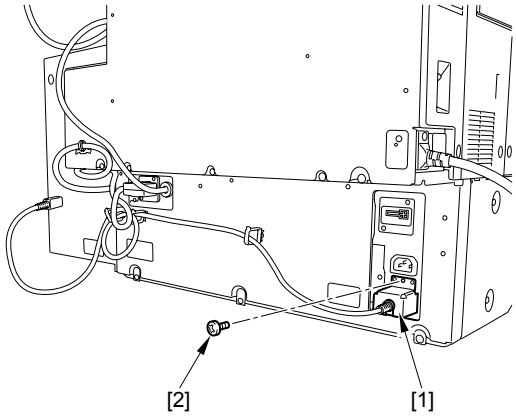

F-2-165

To ensure smooth connection of the heater power connectors, explain to the user that any obstacle that can prevent the paper deck from opening should not be placed in the hatched area.
[1]: Host machine
[2]: Paper deck
[A]: Front

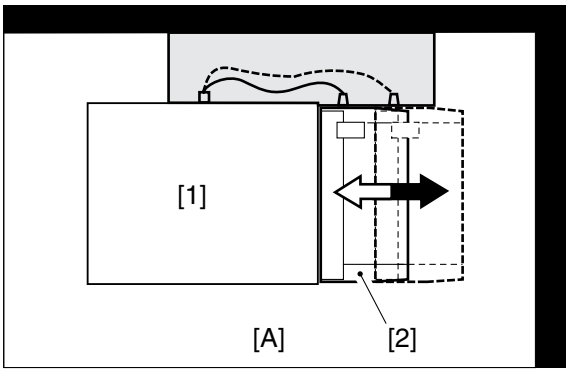

F-2-166

2.11 Installing the Voice Guidance Kit

2.11.1 Checking Contents (Voice Guidance Kit-A2)

CLC5151 / / / CLC4040 / / / iR C4580i / / / iR C4080i / / /

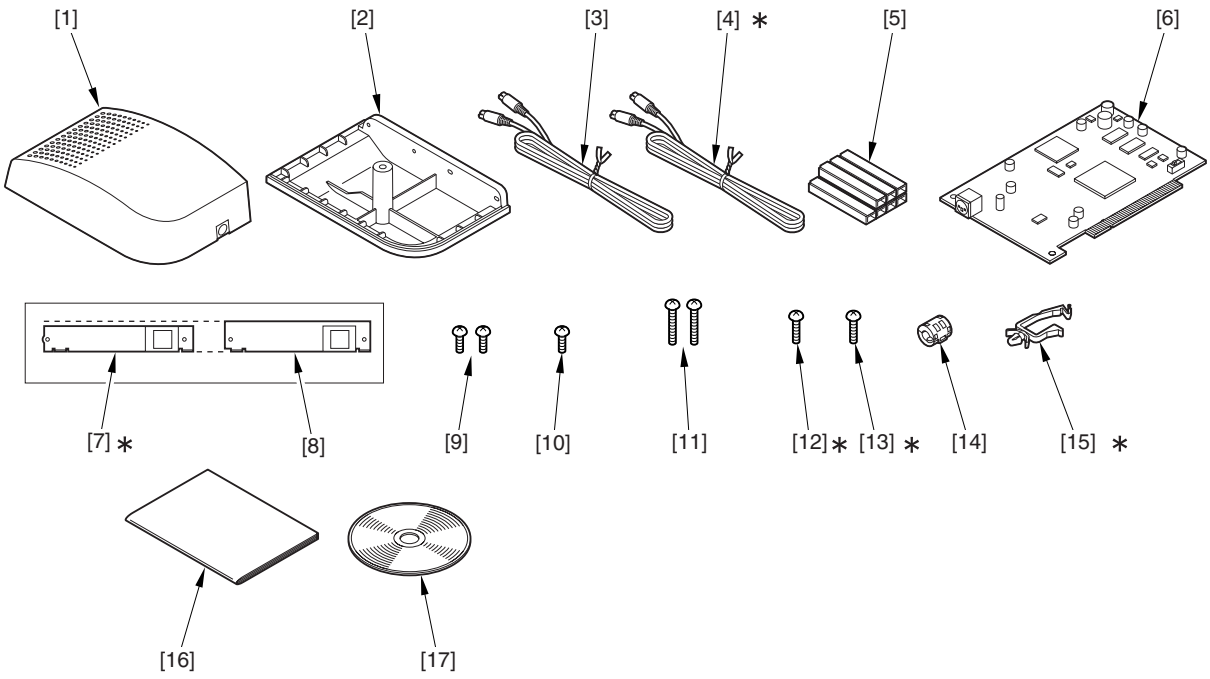

F-2-167

[1]	Speaker unit (upper)	1 pc.
[2]	Speaker unit (lower)	1 pc.
[3]	Cable (1,300 mm)	1 pc.
[4]*	Cable (1,850 mm)	1 pc.
[5]	Cord guide (Use 4 in this machine)	7 pc.
[6]	Voice board	1 pc.
[7]*	Voice board face plate	1 pc.
[8]	Voice board face plate	1 pc.
[9]	Screw (Binding; M3X6)	2 pc.
[10]	Screw (Binding; M4X6)	1 pc.
[11]	Screw (Binding; M4X40)	2 pc.
[12]*	Screw (Binding; M3X16)	1 pc.
[13]*	Screw (Binding; M4X16)	1 pc.
[14]	Ferrite core	1 pc.
[15]*	Clamp	1 pc.
[16]	User's Guide	1 pc.
[17]	17 User Manual CD-ROM	1 pc.
	* Not used in this machine.	

2.11.2 Turning off the Host Machine

CLC5151 / / / CLC4040 / / / iR C4580i / / / iR C4080i / / /

How to Turn Off the Host Machine
When turning off the host machine, be sure to go through the following steps to protect the hard disk:
1) Hold down the control panel power switch for 3 sec or more.
2) Operate as instructed in the shut-down sequence screen (so that the main power switch will go off automatically).
3) Disconnect the power cable (for the power outlet).

2.11.3 Installation Procedures

CLC5151 / / / CLC4040 / / / iR C4580i / / / iR C4080i / / /

1. Points to note when installing the voice guidance kit
1) Free the reader communication cable [1], reader power supply cable [2] from the 4 clamps [3], and then disconnect the connector [4].

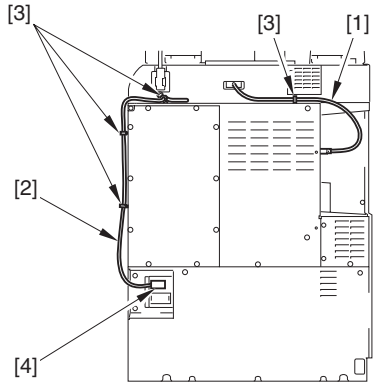

F-2-168

2) Detach the rear upper cover [1].
- 10 screws [2]

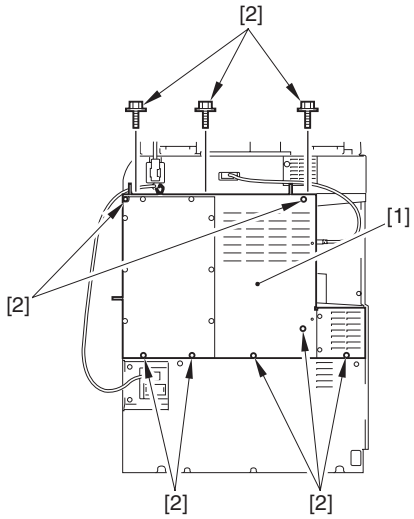

F-2-169

3) Free the cable [1] from the 2 clamps [2].

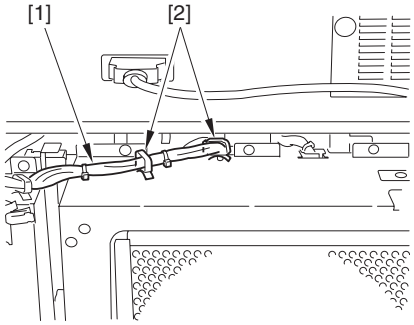

F-2-170

4) Detach the controller box cover [1].
- 14 screws [2]

Do not drop the screws.

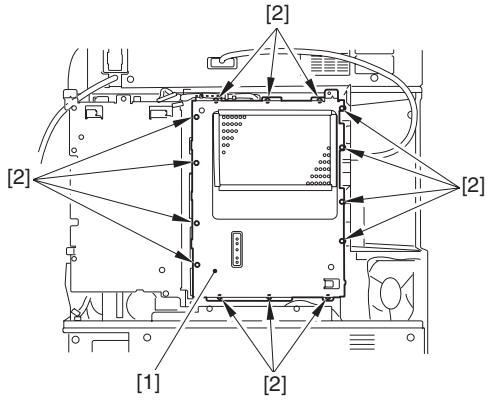

F-2-171

5) Mount the voice board face plate [2] to the voice board [1] with the 2 screws (Binding; M3X6) [3].

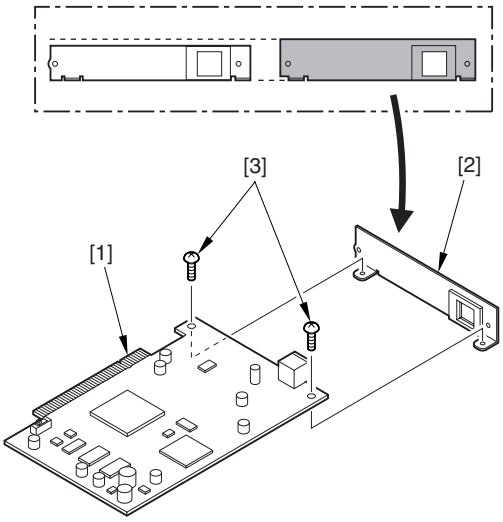

F-2-172

6) Slide the slide switch SW1 on the voice board to 66MHz from 33MHz of the factory setting.

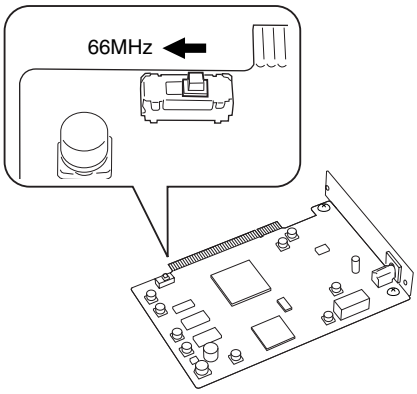

F-2-173

The slide switch SW1 on the voice board is mounted to switch between 33MHz and 66MHz in accordance with the transfer speed of PCI bus.
If the position of the switch does not match the transfer speed, the voice is not correctly played such as the interruption.
If you move the switch by mistake, be sure to return it to the correct position.
In this machine, the switch should be positioned at 66MHz.

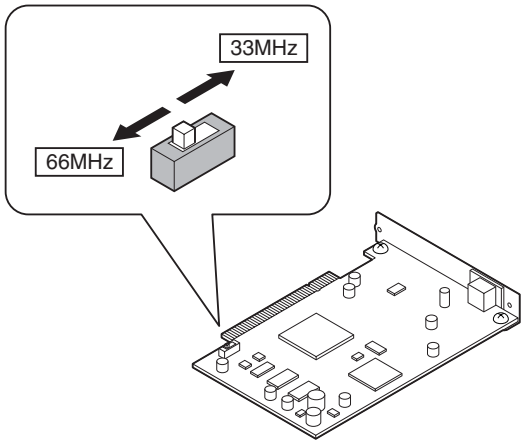

F-2-174

7) Remove the 2 screws [1] and detach the blanking plate [2].

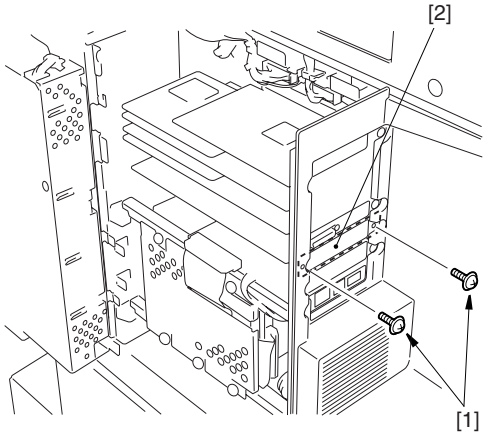

F-2-175

8) Insert the voice board [1] into the connector (J1052) of the main controller PCB and secure it with the 2 screws [2] that have been removed in step 7).

When inserting the voice board into the connector, be sure that the voice board is vertical against the connector.

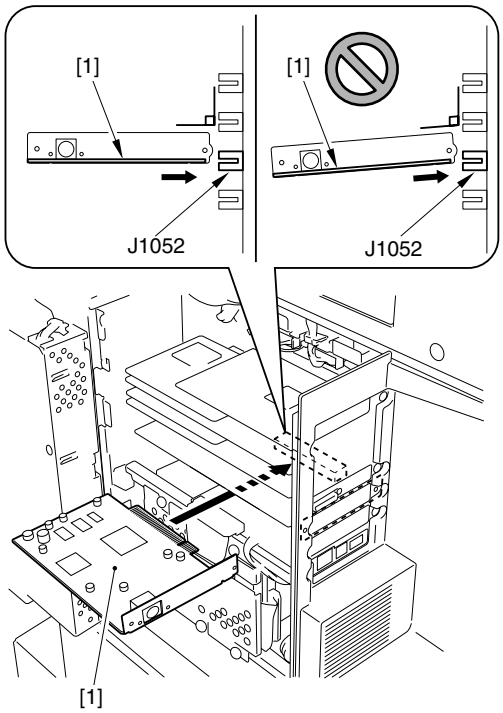

F-2-176

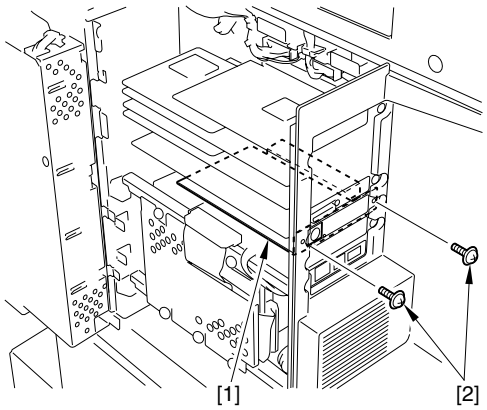

F-2-177

9) Go through the following steps to attach the removed parts.
- Controller box cover
- Rear upper cover

10) Fix the reader communication cable with the clamp.
11) Connect the reader power supply cable and then fix it with the clamp.
12) Remove the blanking labels [1] of the host machine.

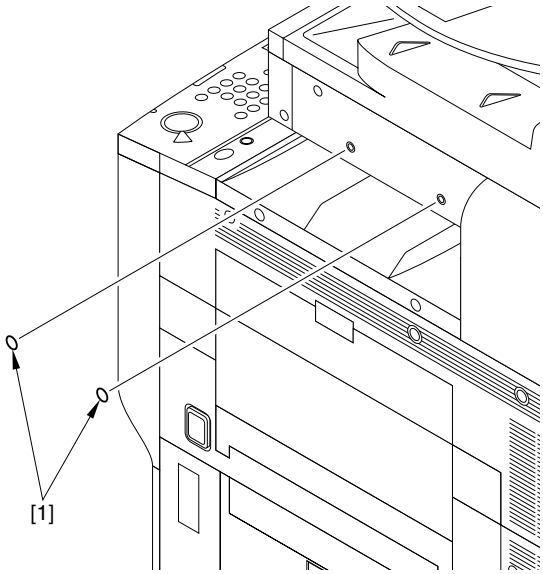

F-2-178

13) Mount the speaker unit (lower) [1] on the upper right cover of the host machine with the 2 screws (Binding; M4X40) [2].

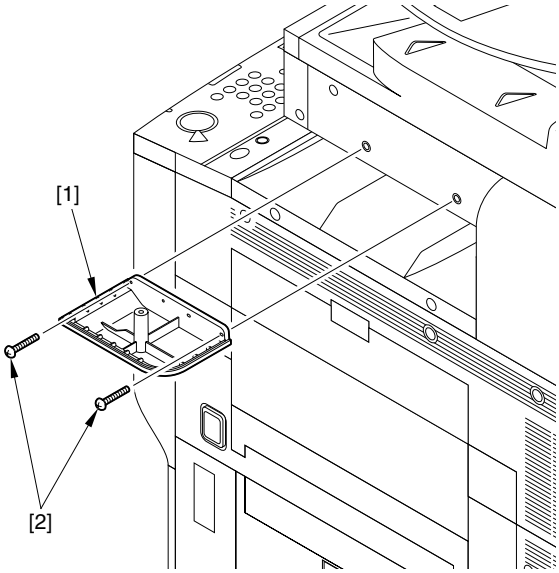

F-2-179

14) Mount the speaker unit (upper) [1] on the speaker unit (lower) that has been mounted in step 13, and fix them with the screw (Binding; M4X6) [2] from underneath.

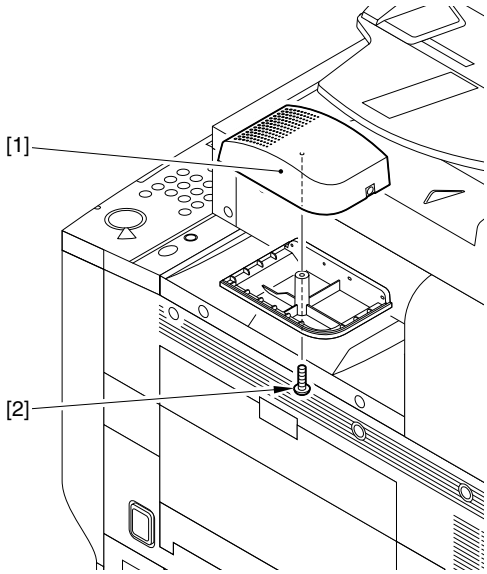

F-2-180

15) Slide out the cord guide cover [1].

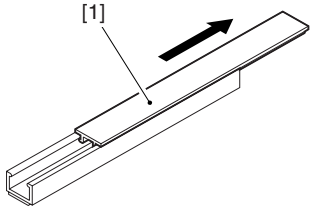

F-2-181

16) Remove the released paper from the cord guide [1] and attach the guide to the host machine as shown in the figure.

Be careful not to cover the screw hole [2] entirely or partially with the cord guide [1].

On the right ... 1 location

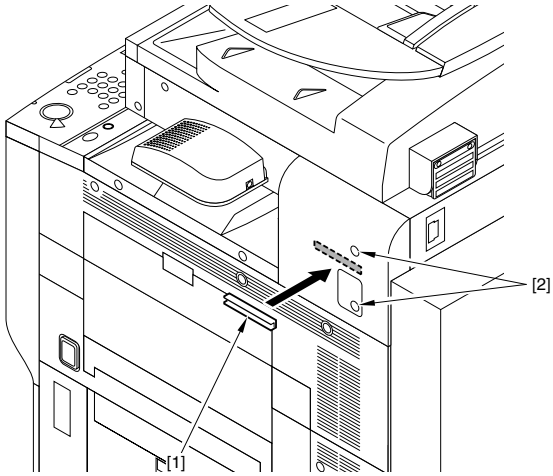

F-2-182

Be careful not to cover the screw hole [2] entirely or partially with the cord guide [1].

On the back ... 3 locations

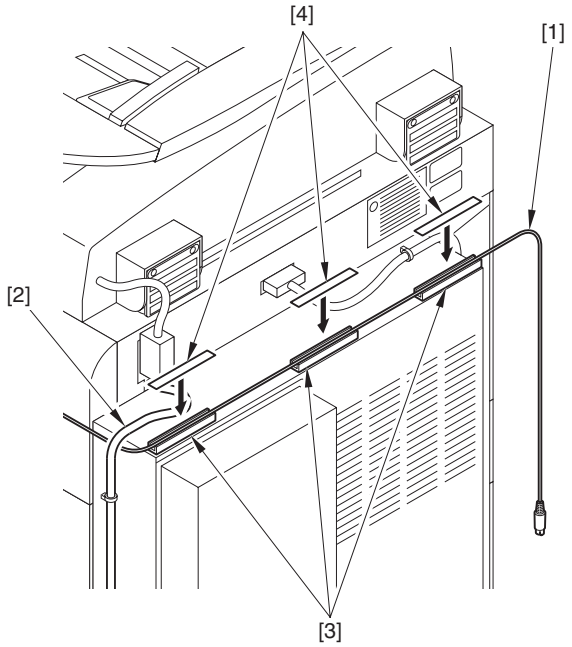

F-2-186

19) Attach the ferrite core [1] to the cable.
Be sure that the length [2] is 50 mm or shorter.

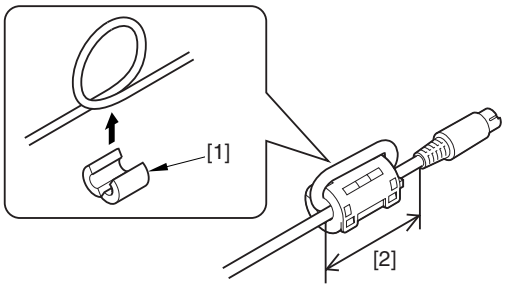

F-2-187

20) Connect the cable [1] to the terminal [2] of the voice board.

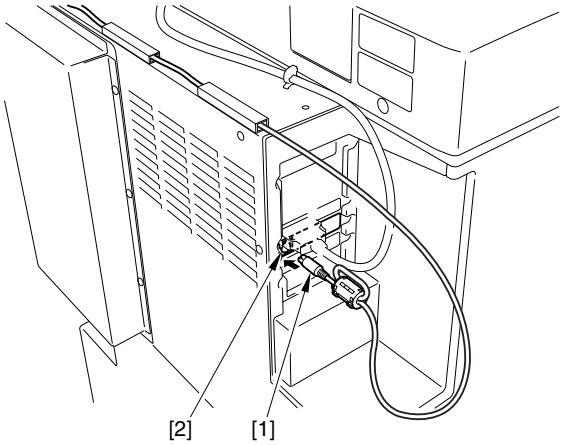

F-2-188

21) Plug the power cable (for socket) of the host machine into the outlet.
22) Turn on the main power switch.
23) Check to be sure that the voice board is recognized.
24) Enter the Service mode.
25) Select COPIER > DISPLAY > ACC-STS > PCI1. If "Voice Board" is displayed, that means that the voice board is correctly recognized.

3. Setting after the installation
To use the voice guidance kit-A2 after power-on, it is necessary to set the followings.
1) Select Initial Registration > System Setting > Voice Guide Management Settings > Use Voice Guide.
2) Select 'ON' key.
3) Press 'OK' key.
Default: OFF

4. Checking the Operation
- When using the voice guidance
1) Press 'Reset' key for 3 sec or longer.

2) When the display of the number of copy is enclosed with red lines on the screen, "Voice Guidance" becomes enabled.

- When stopping the usage

1) Press 'Reset' key for 3 sec or longer.

Chapter 3 Basic Operation

Contents

3.1 Construction 3-1
3.1.1 Functional Construction 3-1
3.2 Basic Sequence 3-1
3.2.1 Basic Sequence When the Power Is ON 3-1
3.2.2 Basic Sequence of Operations 3-2

3.1 Construction

3.1.1 Functional Construction

CLC5151 / / / CLC4040 / / iR C4580i / / iR C4080i / / / / iR C5185N / / iR C5185i PRT /

The machine can roughly be divided into the following functional blocks:

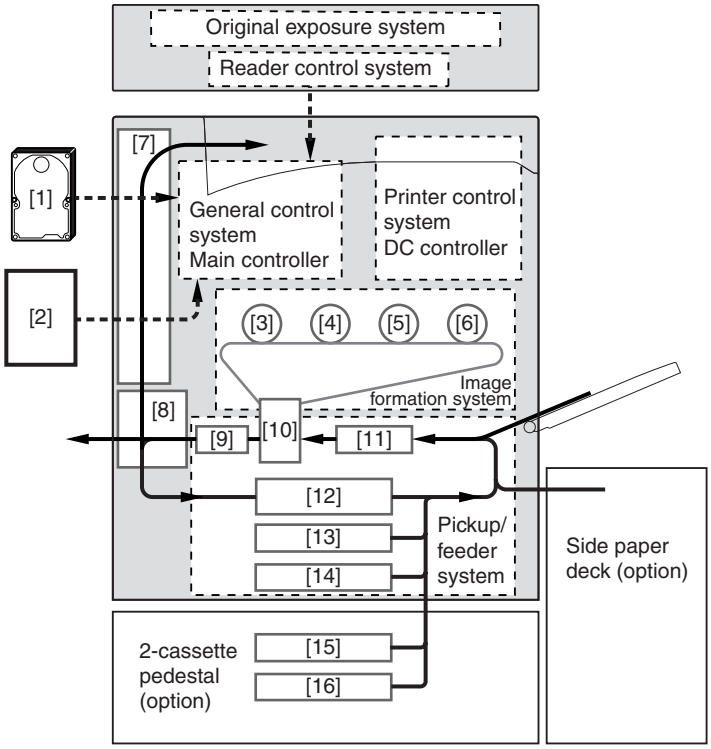

F-3-1

T-3-1

[1] HDD	[9] Feeding system
[2] Option boards	[10] Transfer system
[3] Photosensitive drum (Y)	[11] Pickup control
[4] Photosensitive drum (M)	[12] Duplex/feeder
[5] Photosensitive drum (C)	[13] Cassette 1
[6] Photosensitive drum (Bk)	[14] Cassette 2
[7] Delivery system	[15] Cassette 3
[8] Fixing system	[16] Cassette 4

3.2 Basic Sequence

3.2.1 Basic Sequence When the Power Is ON

CLC5151 / / / CLC4040 / / / iR C4580i / / / iR C4080i / / / / Color Image Reader-F1 / Color Image Reader-E1 / Dupiex Color Image Reader-G1 / iR C5185N / / iR C5185i PRT /

T-3-2

Interval Name	Definition of Interval
SREDY(Scanner Ready)	An interval in which the shading correction is executed after the Start key is pressed.
SSTBY(Scanner Standby)	An interval between the completion of the shading correction and switching the Start key ON / turning the main power OFF.
WMUP(Warm-up)	An interval in which the drive system stops, and it ends when the completion requirements of the fixing assembly startup is fulfilled.
WMUPR(Warm-up Rotation)	An interval in which the drive system starts, and the bias adjustment is executed.
PSTBY(Printer Standby)	An interval in which the copy/print request signal can be accepted.

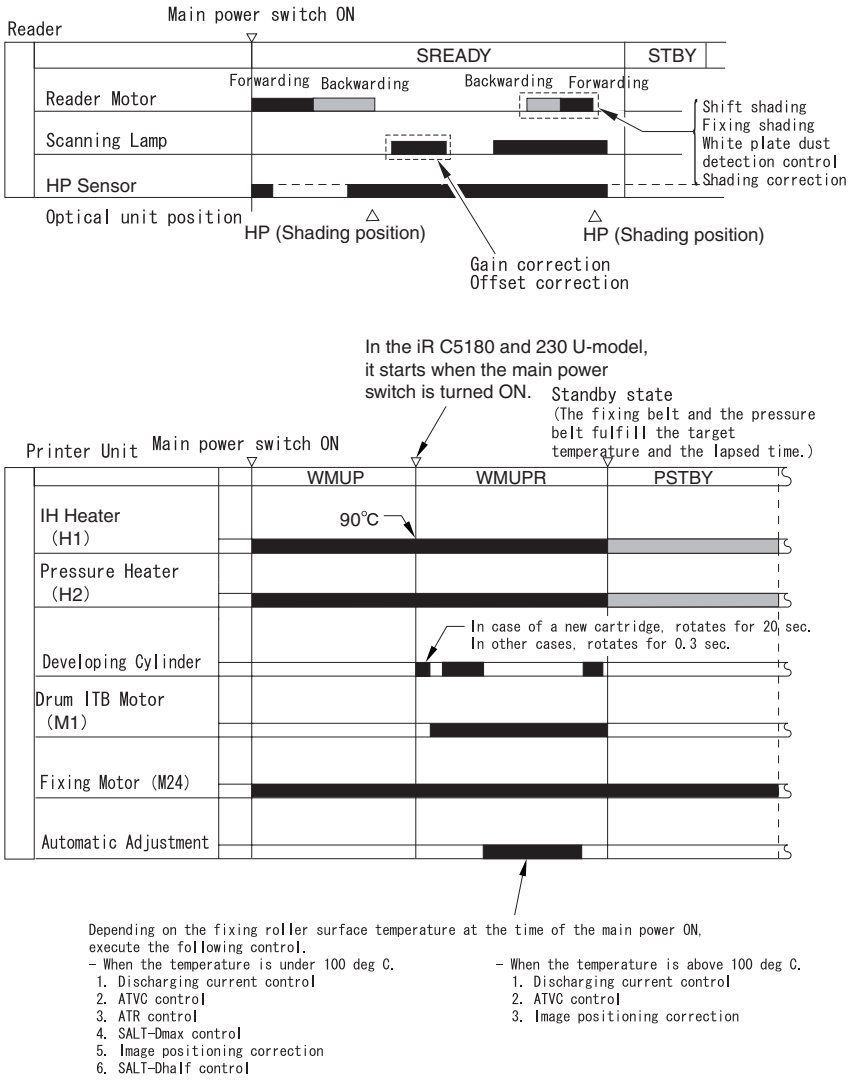

F-3-2

3.2.2 Basic Sequence of Operations

CLC5151 / / / CLC4040 / / / iR C4580i / / / iR C4080i / / / / Color Image Reader-F1 / Color Image Reader-E1 / Dupiex Color Image Reader-G1 / iR C5185N / / iR C5185i PRT /

1. Full color
Full color, A4, 2 prints (continuous), 1-to-1 copy, cassette 1 pickup

T-3-3

Interval Name	Definition of Interval
SREDY(Scanner Ready)	An interval in which the shading correction is executed after the Start key is pressed.
SSTBY(Scanner Standby)	An interval between the completion of the shading correction and switching the Start key ON / turning the main power OFF.
PSTBY(Print Standby State)	An interval in which the copy/print request signal can be accepted.
PINTR(Printer Initial Rotation)	An interval between the reception of the print request signal and the state the image signal is sent.
PRINT	An interval in which all toner is transferred on the paper, and the paper is delivered.
LSTR(Last Rotation)	An interval between the completion of the paper delivery and the stop of all drives.

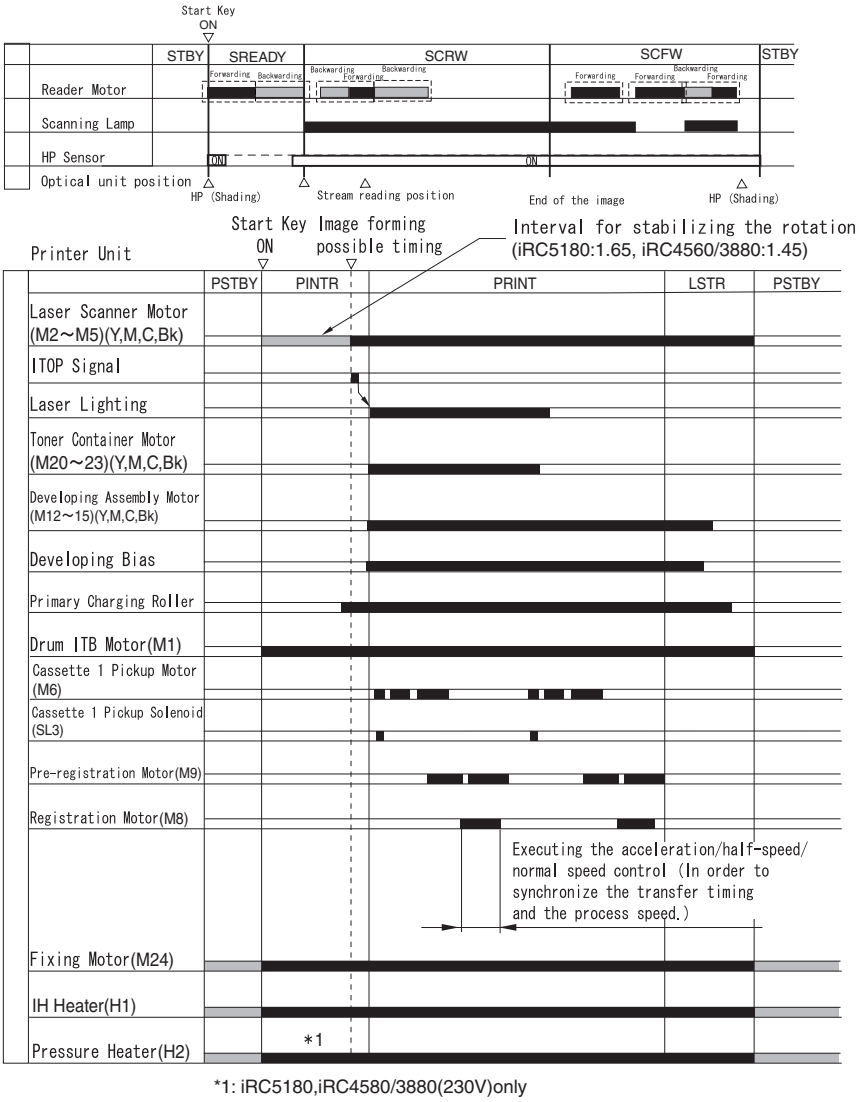

F-3-3

1. Monochrome
monochrome, A4, 2 copies continuous, 100%, cassette 1

T-3-4

Interval Name	Definition of Interval
SREDY(Scanner Ready)	An interval in which the shading correction is executed after the Start key is pressed.
SSTBY(Scanner Standby)	An interval between the completion of the shading correction and switching the Start key ON / turning the main power OFF.
PSTBY(Print Standby State)	An interval in which the copy/print request signal can be accepted.
PINTR(Printer Initial Rotation)	An interval between the reception of the print request signal and the state the image signal is sent.
PRINT	An interval in which all toner is transferred on the paper, and the paper is delivered.
LSTR(Last Rotation)	An interval between the completion of the paper delivery and the stop of all drives.

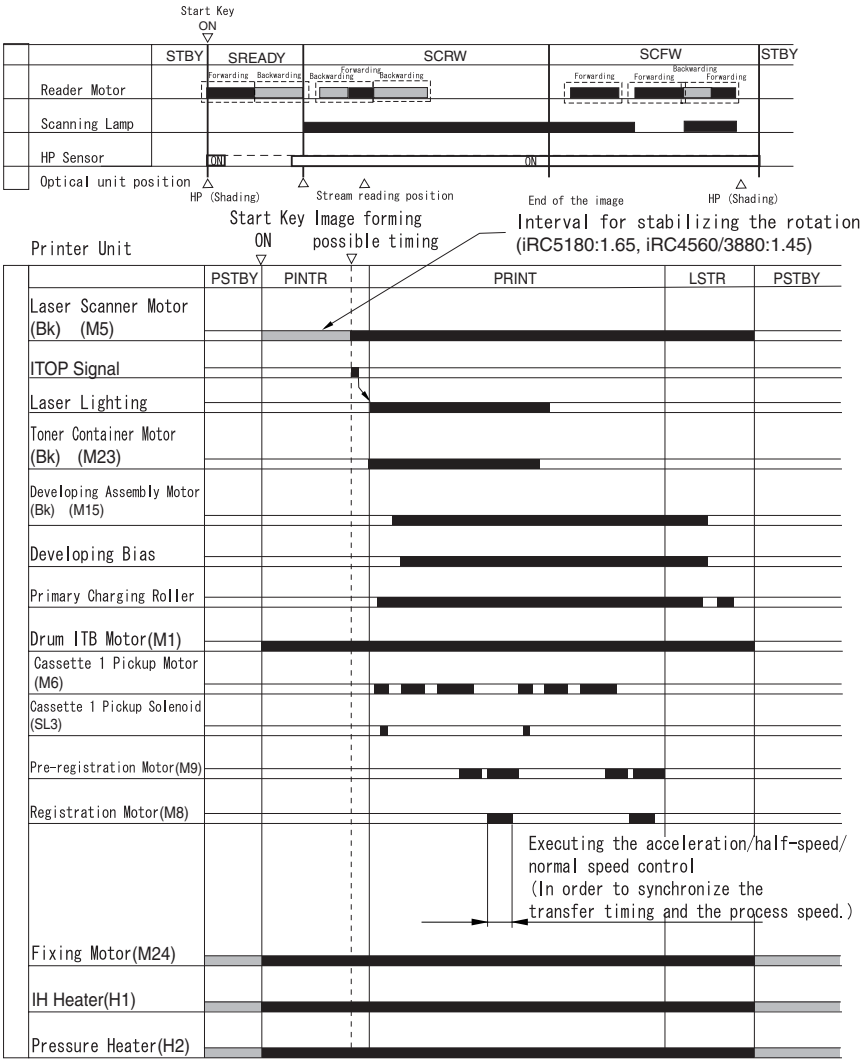
Start Key ON
STBY
SREADY
SCRW
SCFW
STBY
Forwarding
Backwarding
Reader Motor
Scanning Lamp
HP Sensor
ON
Optical unit position
HP (Shading)
Stream reading position
End of the image
HP (Shading)
Start Key ON
Image forming possible timing
Interval for stabilizing the rotation (iRC5180:1.65, iRC4560/3880:1.45)
Printer Unit
PSTBY
PINTR
PRINT
LSTR
PSTBY
Laser Scanner Motor (Bk) (M5)
ITOP Signal
Laser Lighting
Toner Container Motor (Bk) (M23)
Developing Assembly Motor (Bk) (M15)
Developing Bias
Primary Charging Roller
Drum ITB Motor(M1)
Cassette 1 Pickup Motor (M6)
Cassette 1 Pickup Solenoid (SL3)
Pre-registration Motor(M9)
Registration Motor(M8)
Executing the acceleration/half-speed/ normal speed control (In order to synchronize the transfer timing and the process speed.)
Fixing Motor(M24)
IH Heater(H1)
Pressure Heater(H2)

F-3-4

Chapter 4 Basic Operations (As a Printer)

Contents

4.1 Construction of the Electrical Circuitry 4-1
4.1.1 Configuration of Main PCBs 4-1
4.1.2 DC Controller PCB 1 (IMG) 4-1
4.1.3 DC Controller PCB 2 (MAISY) 4-2
4.2 Basic Sequence 4-3
4.2.1 Basic Sequence of Operations 4-3
4.2.2 Basic Sequence of Operations 4-4

4.1 Construction of the Electrical Circuitry

4.1.1 Configuration of Main PCBs

CLC5151 / / / CLC4040 / / / iR C4580i / / / iR C4080i / / /

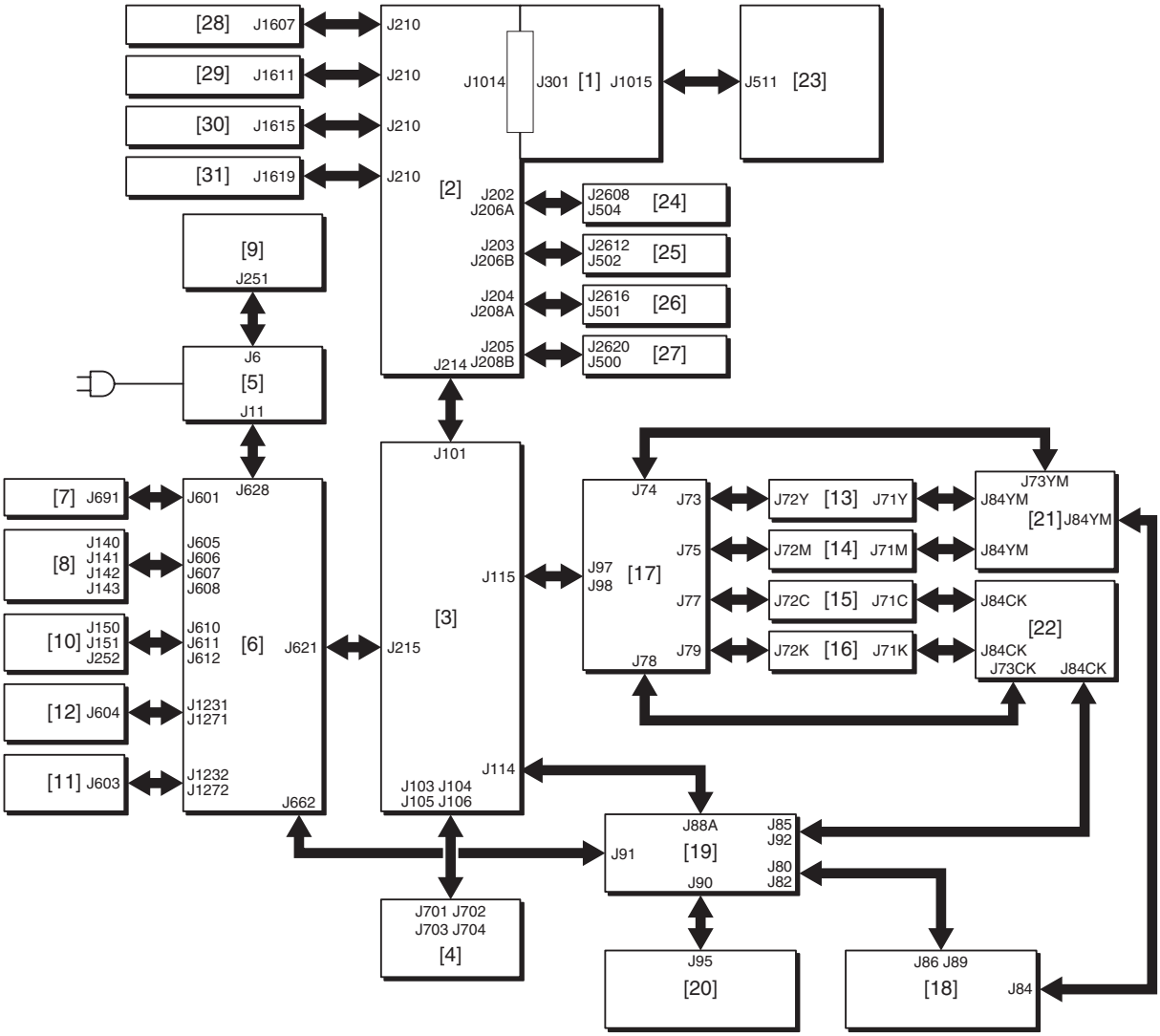

F-4-1

[1]	Main Controller PCB (main)	[12]	DC/DC Converter PCB (38V) 2	[23]	Control Panel CPU PCB
[2]	DC Controller PCB 1 (IMG)	[13]	HV1 Mount (Y)	[24]	Laser Driver PCB (Y)
[3]	DC Controller PCB 2 (MAISY)	[14]	HV1 Mount (M)	[25]	Laser Driver PCB (M)
[4]	Mount	[15]	HV1 Mount (C)	[26]	Laser Driver PCB (C)
[5]	AC Driver PCB	[16]	HV1 Mount (Bk)	[27]	Laser Driver PCB (Bk)
[6]	Relay PCB	[17]	HV1_SUB PCB	[28]	BD Detection PCB (Y)
[7]	All Night Power PCB	[18]	HV2 PCB	[29]	BD Detection PCB (Y)
[8]	Main Power PCB	[19]	HV2_SUB PCB	[30]	BD Detection PCB (Y)
[9]	IH Power PCB	[20]	HV3 PCB	[31]	BD Detection PCB (Y)
[10]	DC/DC Converter PCB (12/5/3.3V)	[21]	HV4 PCB (Y, M)		
[11]	DC/DC Converter PCB (38V) 1	[22]	HV4 PCB (C, Bk)		

The symbol <=> in the figure indicates the main connections between PCBs, not the signal direction.

4.1.2 DC Controller PCB 1 (IMG)

CLC5151 / / / CLC4040 / / / iR C4580i / / / iR C4080i / / / / Color Image Reader-F1 / Color Image Reader-E1 / Dupiex Color Image Reader-G1

The main IC functions of the DC controller PCB 1 (IMG) is shown below.

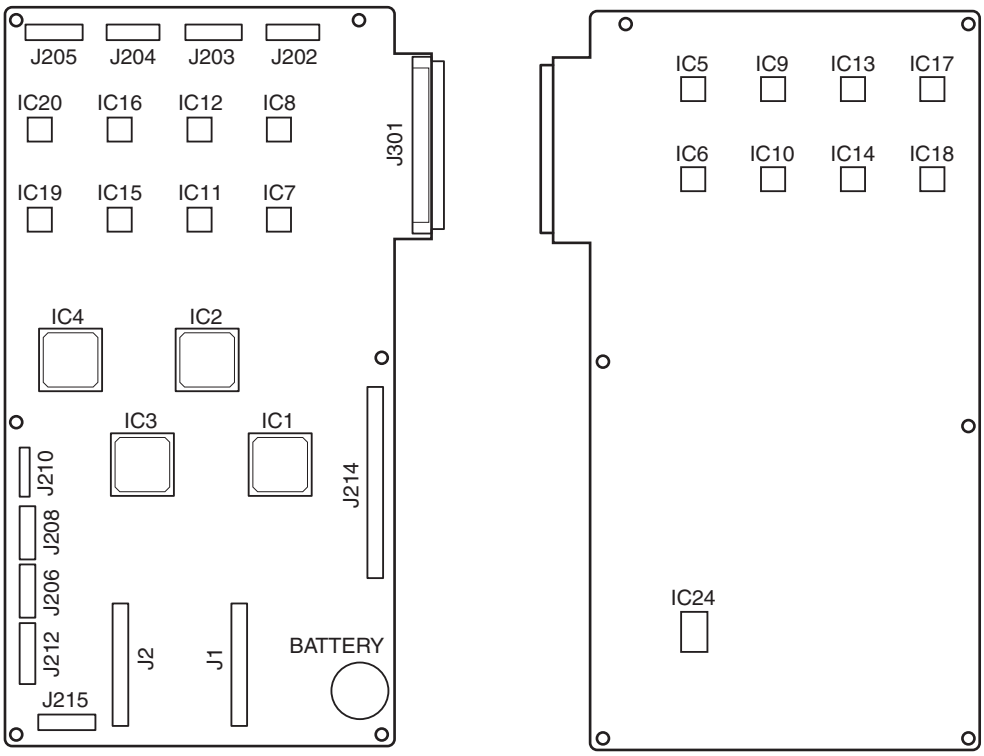

F-4-2

T-4-1

IC No.	ASIC Name	Main Function
IC1	IMG(Y)	1. Image processing Receives the image data from the controller. Send the image data to the PM1100 (PWMIC). Setup each image setting (e.g., laser write start timing, flame) via PM110 (PWMIC). 2. Laser Scanner Motor Control 3. Laser Driver Control
IC2	IMG(M)	
IC3	IMG(C)	
IC4	IMG(K)	
IC5 to 8	PWM(Y)	Execute the pulse width modulation depending on the density of the image data that is received in parallel, and output. 5 to 8: For A to D beams of the Y laser. 9 to 12: For A to D beams of the M laser. 13 to 16: For A to D beams of the C laser. 17 to 20: For A to D beams of the K laser.
IC9 to 12	PWM(M)	
IC13 to 16	PWM(C)	
IC17 to 20	PWM(K)	
IC21	CPU	-
IC22	EEPROM	Embedded startup program. (BOOT is embedded.)
IC23	SRAM	Retain the setup data of the service mode.
IC24	FLASH ROM	Store the firmware.

4.1.3 DC Controller PCB 2 (MAISY)

CLC5151 / / / CLC4040 / / / iR C4580i / / / iR C4080i / / /

The main IC functions of the DC controller PCB 2 (MAISY) is shown below.

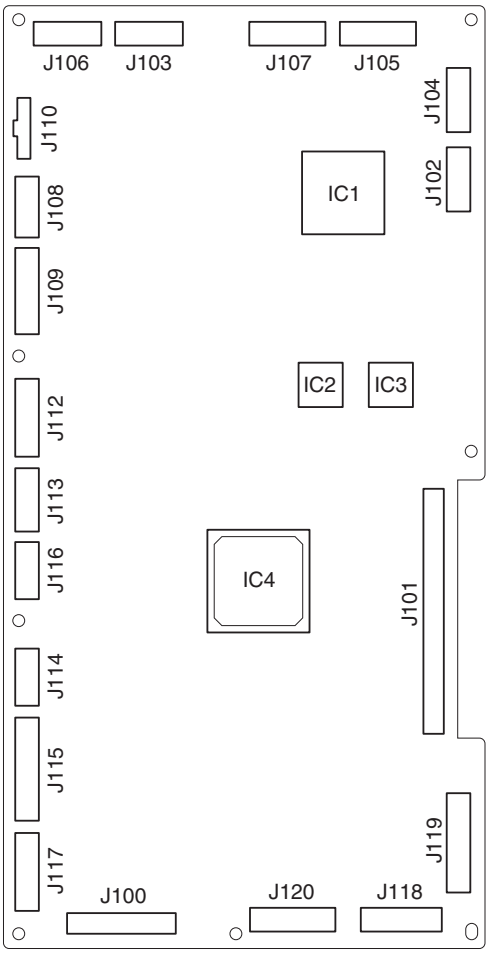

F-4-3

T-4-2

IC No.	ASIC Name	Main Function
IC1	TREAD	IH Control, Halogen Heater Control, AD Control (Thermistor temperature, temperature sensor), Stepping Motor Control (fixing), Cartridge Memory Control, Fixing Motor Control, Safety Circuit of the Fixing Assembly, I/O (mainly Fan Motor Control)
IC2	-	I/O (Everything that can be controlled with the digital values.) Input of each sensor, Fan Motor Control, Solenoid/Clutch Control, High-Voltage Control (Excludes the analog value.)
IC3	-	
IC4	MAISY	1. Stepping Motor Control (Pickup Motor, Pre-registration Motor, Registration Motor, Duplexing Motor, Developing Assembly Motor (Y/M/C/K) 2. Toner Container Motor (Y/M/C/K) Control 3. High-Voltage Clock Generation 4. Drum ITB Motor Drive Clock Generation 5. Registration Sensor 6. DA Control (for high-voltage control)

4.2 Basic Sequence

4.2.1 Basic Sequence of Operations

CLC5151 / / / CLC4040 / / / iR C4580i / / / iR C4080i / / /

T-4-3

Interval Name	Definition of Interval
WMUP(Warm-up)	An interval in which the drive system stops, and it ends when the completion requirements of the fixing assembly startup is fulfilled.
WMUPR(Warm-up Rotation)	An interval in which the drive system starts, and the bias adjustment is executed.
PSTBY(Printer Standby)	An interval in which the copy/print request signal can be accepted.

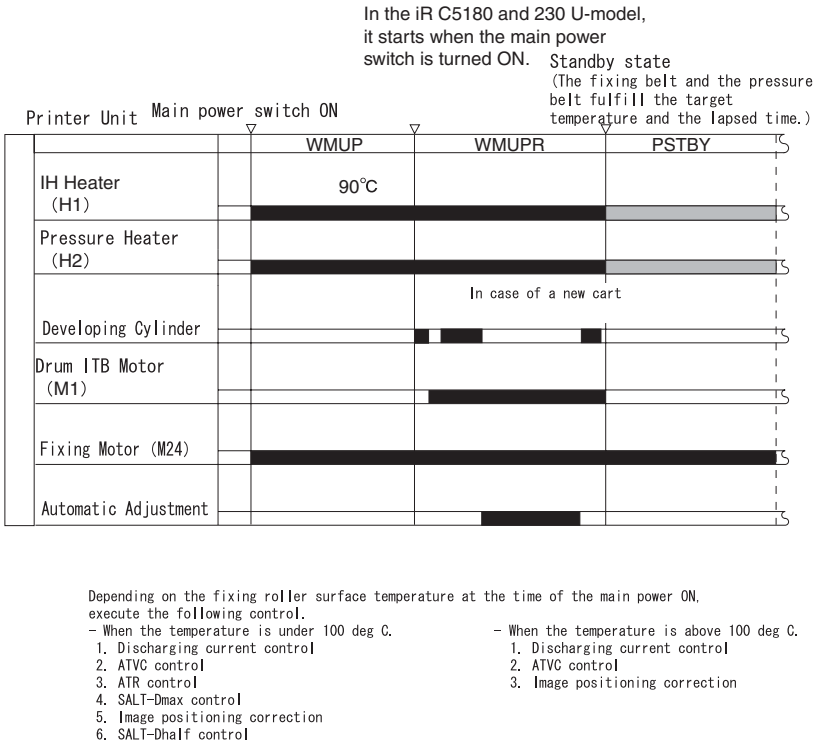

F-4-4

4.2.2 Basic Sequence of Operations

CLC5151 / / / CLC4040 / / / iR C4580i / / / iR C4080i / / /

1. Full color
Full color, A4, 2 prints (continuous), 1-to-1 copy, cassette 1 pickup

T-4-4

Interval Name	Definition of Interval
PSTBY(Print Standby State)	An interval in which the copy/print request signal can be accepted.
PINTR(Printer Initial Rotation)	An interval between the reception of the print request signal and the state the image signal is sent.
PRINT	An interval in which all toner is transferred on the paper, and the paper is delivered.
LSTR(Last Rotation)	An interval between the completion of the paper delivery and the stop of all drives.

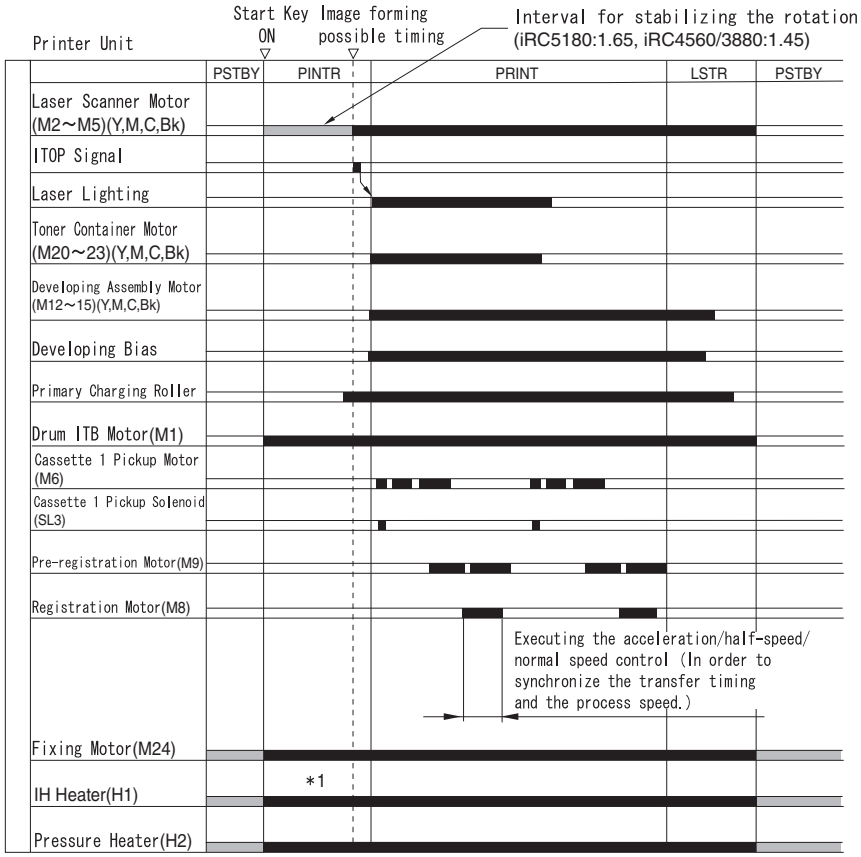

*1 : iRC5180,IRC4580/3880の230V機のみON

F-4-5

1. Monochrome

monochrome, A4, 2 copies continuous, 100%, cassette 1

T-4-5

Interval Name	Definition of Interval
PSTBY(Print Standby State)	An interval in which the copy/print request signal can be accepted.
PINTR(Printer Initial Rotation)	An interval between the reception of the print request signal and the state the image signal is sent.
PRINT	An interval in which all toner is transferred on the paper, and the paper is delivered.
LSTR(Last Rotation)	An interval between the completion of the paper delivery and the stop of all drives.

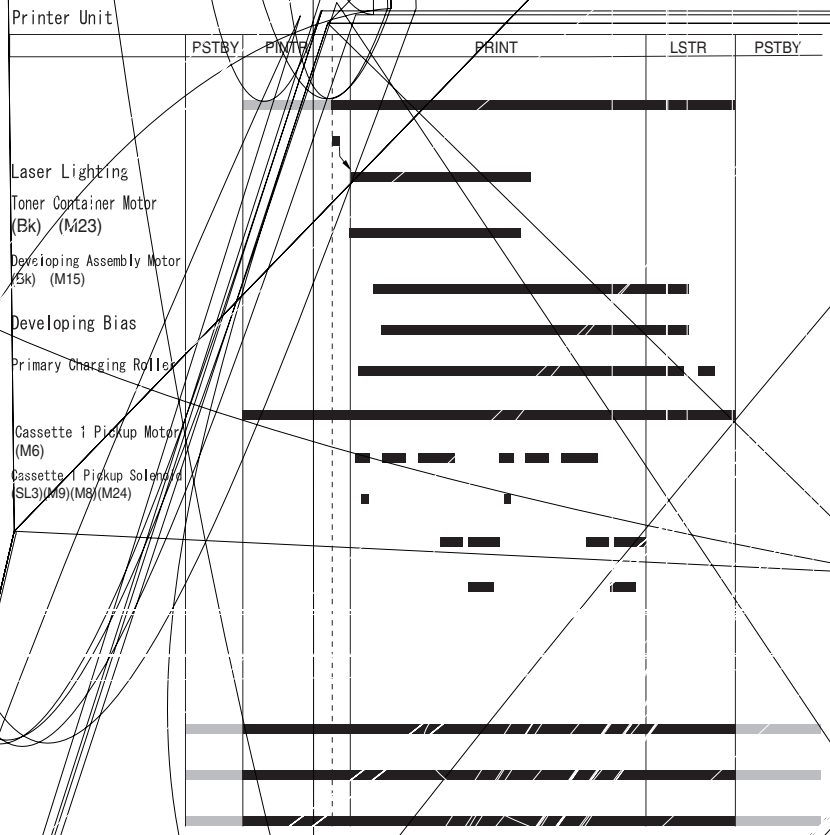
Printer Unit
PSTBY
PRINT
PRINT
LSTR
PSTBY
Laser Lighting
Toner Container Motor
(Bk) (M23)
Developing Assembly Motor
(Bk) (M15)
Developing Bias
Primary Charging Roller
Cassette 1 Pickup Motor
(M6)
Cassette 1 Pickup Solenoid
(SL3)(M9)(M8)(M24)

F-4-6

Chapter 5 Main Controller

Contents

5.1 Construction 5-1
5.1.1 Configuration/Functions 5-1
5.2 Construction of the Electrical Circuitry 5-2
5.2.1 Main Controller Circuit Board (MAIN) 5-2
5.2.2 SRAM Circuit Board 5-2
5.3 Start-Up Sequence 5-3
5.3.1 Overview 5-3
5.3.2 Start-Up Sequence 5-3
5.4 Actions when HDD Error 5-5
5.4.1 E602 Details 5-5
5.5 Image Processing 5-7
5.5.1 Overview of the Flow of Image Data 5-7
5.5.2 Reader Input Image Processing 5-8
5.5.3 Printer Output Image Processing 5-8
5.5.4 Compression, Decompression, and Edit Processing Blocks 5-9
5.6 Flow of Image Data 5-10
5.6.1 Flow of Image Data for Copier Functions 5-10
5.6.2 Flow of Image Data for Box Functions 5-10
5.6.3 Flow of Image Data for SEND Functions 5-11
5.6.4 Flow of Image Data for Fax Transmission Functions 5-11
5.6.5 Flow of Image Data for Fax Reception Functions 5-12
5.6.6 Flow of Image Data for PDL Functions 5-12
5.7 Parts Replacement Procedure 5-14
5.7.1 Main Controller Box 5-14
5.7.1.1 Preparation for Removing the Main Controller Box 5-14
5.7.1.2 Removing the Main Controller Box 5-14
5.7.1.3 Removing the Main Controller Box 5-14
5.7.2 Main Controller PCB (main) 5-14
5.7.2.1 Preparation for Removing the Main Controller PCB (main) 5-14
5.7.2.2 Removing the Main Controller PCB (main) 5-14
5.7.3 Main Controller PCB (sub R-A) 5-17
5.7.3.1 Preparation for Removing the Main Controller PCB (sub R-A) 5-17
5.7.3.2 Removing the Main Controller PCB (sub R-A) 5-17
5.7.3.3 Removing the Main Controller PCB (sub R-A) 5-18
5.7.4 Main Controller PCB (sub PDRM-A) 5-19
5.7.4.1 Preparation for Removing the Main Controller PCB (sub PDRM-EF-A) 5-19
5.7.4.2 Removing the Main Controller PCB (sub PDRM-EF-A) 5-19
5.7.5 Main Controller PCB (sub SJ-A) 5-19
5.7.5.1 Preparation for Removing the Main Controller PCB (sub SJ-A) 5-19
5.7.5.2 Removing the Main Controller PCB (sub SJ-A) 5-19
5.7.5.3 Preparation for Removing the Main Controller PCB (sub S-JJ) 5-20
5.7.5.4 Removing the Main Controller PCB (sub S-JJ) 5-20
5.7.6 Main Controller PCB (sub LAN-A) 5-21
5.7.6.1 Preparation for Removing the Main Controller PCB (sub LAN-bar-C) 5-21
5.7.6.2 Removing the Main Controller PCB (sub LAN-bar-C) 5-21
5.7.7 Main Controller PCB (sub RB-A) 5-21
5.7.7.1 Preparation for Removing the Main Controller PCB (sub RB-A) 5-21
5.7.7.2 Removing the Main Controller PCB (sub RB-A) 5-21
5.7.8 SRAM PCB 5-22
5.7.8.1 Preparation for Removing the SRAM PCB 5-22
5.7.8.2 Removing the SRAM PCB 5-22
5.7.8.3 When Replacing the SRAM PCB 5-23

5.7.9 Boot ROM PCB 5-23
5.7.9.1 Preparation for Removing the Boot ROM PCB 5-23
5.7.9.2 Removing the Boot ROM PCB 5-23
5.7.10 Image Memory (SDRAM) 5-24
5.7.10.1 Preparation for Removing the Image Memory (SDRAM) 5-24
5.7.10.2 Removing the Image Memory (SDRAM) PCB 5-24
5.7.11 HDD 5-25
5.7.11.1 Preparation for Removing the HDD 5-25
5.7.11.2 Removing the HDD 5-25
5.7.11.3 When Replacing the HDD 5-25
5.7.12 Controller Fan 5-26
5.7.12.1 Preparation for Removing the Controller Fan 5-26
5.7.12.2 Removing the Controller Fan 5-26

5.1 Construction

5.1.1 Configuration/Functions

CLC5151 / / / CLC4040 / / iR C4580i / / iR C4080i / / / / iR C5185N / / iR C5185i PRT /

The Main Controller primarily has the following configuration and functions.

T-5-1

	PC Board Name	Function
[1]	Main Controller Circuit Board (MAIN)	System control, memory control, and printer output image processing control
[2]	Main Controller Circuit Board (SUB R-A)	Color space conversion, rotation for electronic sorting, binarization, resolution conversion
[3]	Main Controller Circuit Board (SUB PDRM-EF-A)	Image processing for printer output (color space compression, under color removal, log conversion, direct mapping, color balance, fine zoom adjustment, gradation conversion, screen processing, trimming, add-on)
[4]	Main Controller Circuit Board (SUB SJ-A)	Scanner interface, scanner image processing (resolution conversion, image rotation, compression/decompression)
	Main Controller Circuit Board (SUB S-JJ)	
[5]	Main Controller Circuit Board (SUB LAN-bar-C)	LAN connection, HDD controller, HDD power supply
[6]	BOOT ROM	ROM memory storing the boot program
[7]	SRAM Circuit Board	SRAM mounting
[8]	DDR-SDRAM	Program-related data save, image data save
[9]	Main Controller Circuit Board (SUB RB-A)	Transform 1200dpi PDL image data with character spacing information equivalent to 1200dpi into image data equivalent to 600dpi.
HDD	HDD	System software storage, image data storage, image data save for BOX/FAX function

*1 Other than iR C5185
*2 iR C5185

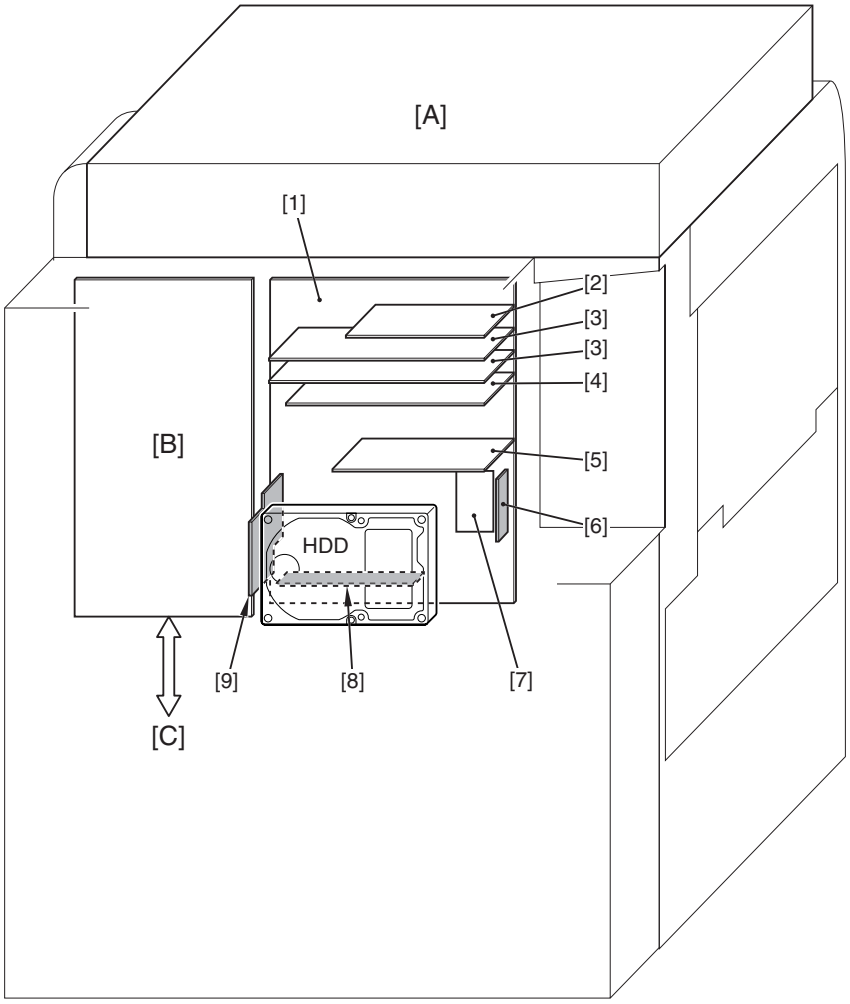

F-5-1

[A] Reader Unit
[B] DC controller Circuit Board
[C] Printer Unit

5.2 Construction of the Electrical Circuitry

5.2.1 Main Controller Circuit Board (MAIN)

CLC5151 / / / CLC4040 / / iR C4580i / / iR C4080i / / / / iR C5185N / / iR C5185i PRT /

The main jacks of the Main Controller Circuit Board (MAIN) are shown below.

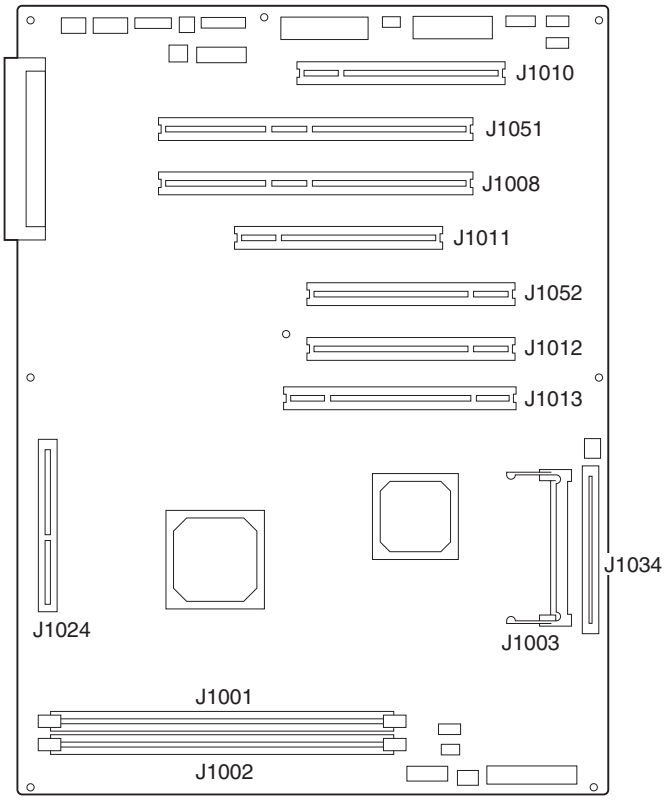

F-5-2

T-5-2

J No.	Function
J1001	Image memory (1GB DDR-SDRAM standard)
J1002	Image memory (512 MB DDR-SDRAM) *1
J1003	SRAM circuit board connector slot
J1008	Main Controller Circuit Board (SUB PDRM-EF-A) connector slot
J1010	Main Controller Circuit Board (SUB R-A) connector slot
J1011	Main Controller Circuit Board (SUB SJ-A) *1/Main Controller Circuit Board (SUB S-JJ) *2connector slot
J1012	Option board connector slot (Security expansion board)
J1013	Main Controller Circuit Board (SUB LAN-bar-C) connector slot
J1024	Main Controller Circuit Board (SUB RB-A) connector slot *3
J1034	BOOTROM connector slot
J1051	Main Controller Circuit Board (SUB PDRM-EF-A) connector slot
J1052	Option board connector slot (Voice guidance board)

*1 Other than iR C5185
*2 iR C5185
*3 This may be optional due to the model.

5.2.2 SRAM Circuit Board

CLC5151 / / / CLC4040 / / / iR C4580i / / / iR C4080i / / / / iR C5185N / / iR C5185i PRT /

Primary control of the SRAM Circuit Board is shown below for each IC.

Front

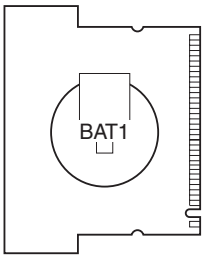

F-5-3

Back

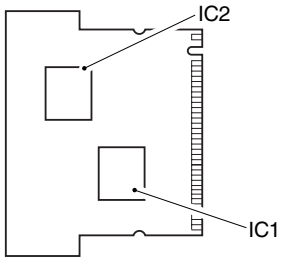

F-5-4

T-5-3

IC No.	Function
IC1,2(SRAM)	Saves image data management information, service mode settings data, and user mode settings data saved on the HDD

5.3 Start-Up Sequence

5.3.1 Overview

CLC5151 / / / CLC4040 / / / iR C4580i / / / iR C4080i / / / / iR C5185N / / iR C5185i PRT /

The system software used to control the operation of the machine is stored on the HDD.
When the machine is started up, the CPU on the main controller PCB reads the system software from the HDD into the image memory (DDR-SDRAM) of the main controller PCB for use as instructed by the boot program of the boot ROM.
The following screen remains on the control panel white the CPU is reading the system memory from the HDD into the image memory (DDR-SDRAM), with the bar indicating the progress of the startup sequence.

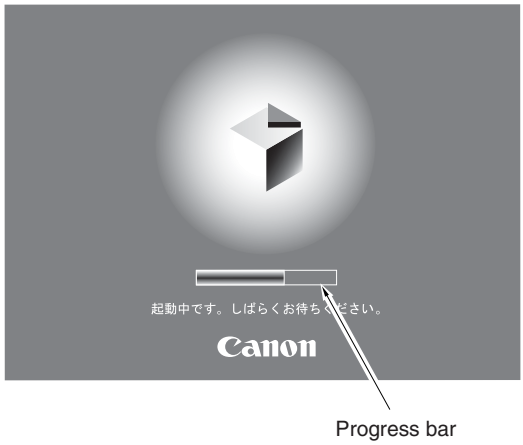

F-5-5

Never turn off the main power while the progress bar is indicated. The CPU is accessing the HDD, and turning off the power can cause a fault (E602) on the HDD.

5.3.2 Start-Up Sequence

CLC5151 / / / CLC4040 / / iR C4580i / / iR C4080i / / / / iR C5185N / / iR C5185i PRT /

Start-Up Sequence
<Boot Program Area>

-Boot Program (interval 1)

The boot program is executed by the CPU on the main controller PCB when the main power switch is turned on, making checks on the image memory (DDR-SDRAM) and the HDD condition.

An error code will be indicated if a fault is detected. If the check ends normally, the control program is read from the HDD to the memory.

<Control Program Area>

-Control Program 1 (interval 2)

1.The individual devices (i.e., hardware components on the controller PCB) are checked and initialized.
2.If the engine was not previously turned off appropriately (i.e., by performing its shut-down sequence), the system files are repaired as necessary. (The engine may need an extra time when starting up.)
3.The individual program modules are initialized.

-Control Program 2 (interval 3)

1. The individual software modules are initialized, and the printer and screen configurations are established.
2. The start-up sequence ends when the printer and scanner are correctly recognized. Otherwise, an error code (E732/E733) will be indicated at the end of a connection time-out.

The engine becomes ready to accept a job when the start-up sequence ends normally. (Its control panel displays the control screen, and the Start key LED changes from red to green.)

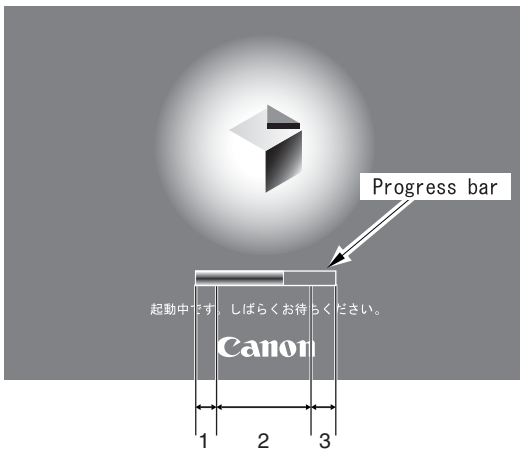

F-5-6

-When Executing the Boot Program

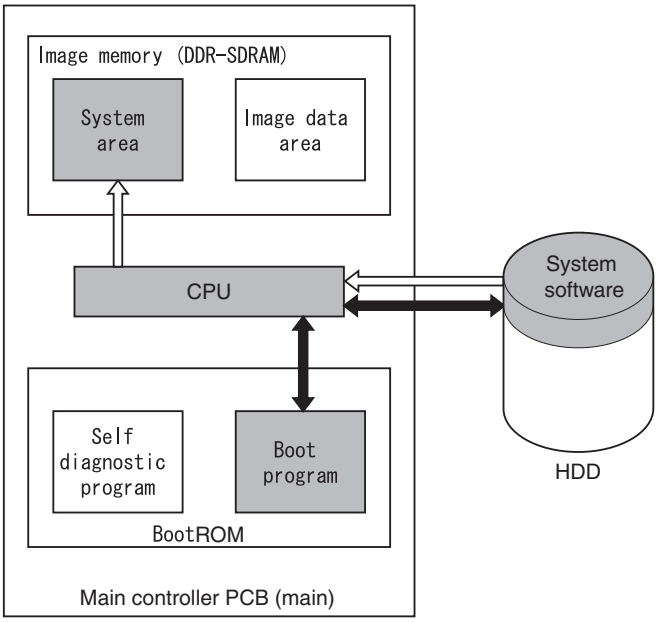

: access to the program at time of execution.
: flow of system program operations.

F-5-7

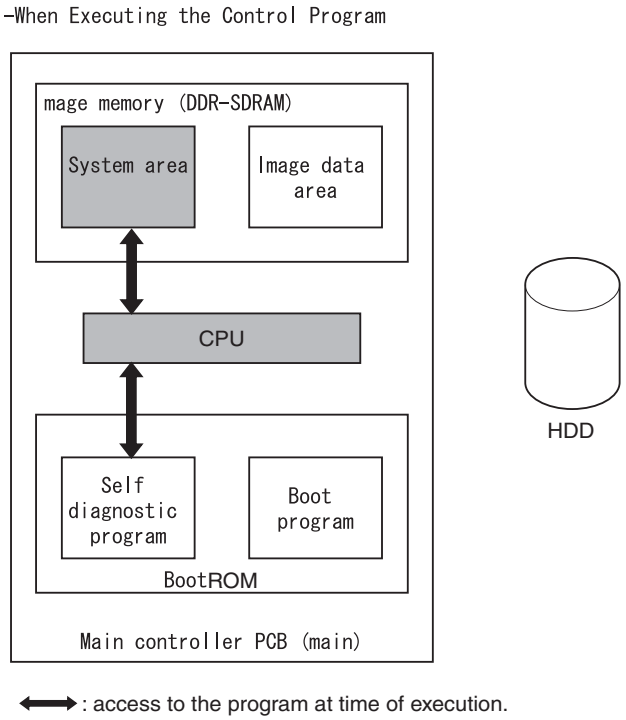

F-5-8

5.4 Actions when HDD Error

5.4.1 E602 Details

CLC5151 / / / CLC4040 / / iR C4580i / / iR C4080i / / / / iR C5185N / / iR C5185i PRT /

E602-XXYY

- When XX=00
*1
CHK-TYPE = COPIER>FUNCTION>SYSTEM>CHK-TYPE
(Specifies the partitions to be formatted by HD-CLEAR)
HD-CHECK = COPIER>FUNCTION>SYSTEM>HD-CHECK
(Performs Write Abort repairs for the entire HDD when CHK-TYPE = 0)
HD-CLEAR = COPIER>FUNCTION>SYSTEM>HD-CLEAR
(Formats the partitions specified by CHK-TYPE)

T-5-4

XX	YY	Description	Remedy
00	01	HDD cannot be recognized. Boot partition (BOOTDEV) not found during startup.	1. Turn the Main Power Switch OFF and check the HDD cable connection. After confirmation, turn the Main Power Switch ON. 2. After turning the Main Power Switch ON, check that the HDD spins up and that 5 V/12 V power is being supplied. 3. If the above does not correct the problem, replace the HDD and reinstall the system. If this doesn't work, replace the main board.
	02	No system for main CPU	1. Start the system in Safe Mode (1+7), perform a full format using SST, reinstall the system (System, Lang, RUI), and turn the Main Power Switch OFF and then ON again. 2. If the above does not correct the problem, the HDD may be assumed to be damaged, so replace the HDD and reinstall the system.
	03	WriteAbort detected for Boot Device	1. Perform Write Abort Sector detect and repair. <When a monochrome-related Error Code is displayed> 1-1. Since Service Mode cannot be entered, perform the following procedure. 1-2. Turn the power OFF. Turn the power ON again while holding down the 1 and 9 keys. This will automatically start the Write Abort Sector repair routine, causing the screen to go completely black. 1-3. Progress status will appear after a short time as this routine takes about 40 to 50 minutes to execute. Execution is done when the screen goes completely white. <When wrench mark (normal indication) is displayed> 1-1. Set CHK-TYPE = 0, execute HD-CHECK (takes 40 to 50 minutes), and turn the Main Power Switch OFF and then ON again. 2. If the above does not correct the problem, start up in Safe Mode, perform a full format using SST, reinstall the system (System, Lang, RUI), and turn the Main Power Switch OFF and then ON again. 3. If the problem is still not corrected, the HDD may be assumed to be damaged, so replace the HDD and reinstall the system.
	06	No system for sub-CPU	1. Start the system in Safe Mode (1+7), perform a full format using SST, reinstall the system (System, Lang, RUI), and turn the Main Power Switch OFF and then ON again. 2. If the above does not correct the problem, the HDD may be assumed to be damaged, so replace the HDD and reinstall the system.
	07	No ICCProfile	1. Start the system in Safe Mode (1+7), perform a full format using SST, reinstall the system (System, Lang, RUI), and turn the Main Power Switch OFF and then ON again. 2. If the above does not correct the problem, the HDD may be assumed to be damaged, so replace the HDD and reinstall the system.

- When XX=01 - FF

T-5-5

XX				YY						HDD Format			
XX	CHK-TYPE	Corresponding Partition	Contents	YY=03	YY=05	YY=00,01,02,04	YY=11,21	YY=13,25	YY=10,12,14,22,23,24				
				Generated at Startup			During Normal Operation						
				Remedy	Remedy	Remedy	Remedy	Remedy	Remedy	Typical Items Deleted	HDD Format during HD-CLEAR	HDD Format during Normal Mode+SST	HDD format during Safe Mode +SST
1	1	FSTDEV	Image date save area (BOX, etc.)	#1	#5	#9	#10	#11	#12	All accumulated image data, such as BOX, etc.	Possible (3 partitions at once)	Specify FSTDEV (3 partitions at once)	
2		IMG_MNG	Image management data, etc	#1	#5	#9	#10	#11	#12				
3		FSTCDEV	Image data save area (for Chasing)	#1	#5	#9	#10	#11	#12				
4		THUMDEV	Thumbnail	#1	#5	#9	#10	#11	#12				
5	2	APL_GEN	General-purpose data save area	#1	#5	#9	#10	#11	#12	General	Possible (4 partitions at once)	Specify APL_GEN (4 partitions at once)	
6		TMP_GEN	General-purpose data save data (temporary files)	#1	#5	#9	#10	#11	#12	General			
7		TMP_FAX	FAX (temporary files)	#1	#5	#9	#10	#11	#12	FAX			
8		TMP_PSS	PSS (temporary files)	#1	#5	#9	#10	#11	#12	PSS			
9	3	PDLDEV	PDL-related file save area (fonts, registration forms, color correction information file for ICCProfile-PDL function)	#1	#5	#9	#10	#11	#12	UserFont IccProfile	Possible	Specify PDLDEV	
10	4	BOOTDEV	Firmware save area (Bootable, MEAP, key, ID, PDF dictionary, RUI contents, audio dictionary (ICC profile, PS test data))	#3	#8	#9	#10	#11	#12	System	Impossible	Impossible	
11	5	APL_MEAP	MEAP	#1	#5	#9	#10	#11	#12	MEAP	Possible	Possible	
12	6	APL_SEND	Address book, filter	#2	#5	#9	#10	#11	#12	SEND	Impossible	Impossible	
13	7	APL_KEEP	MEAP save data	#3	#8	#9	#10	#11	#12	System	Impossible	Impossible	
14	8	APL_LOG	System log save area	#1	#5	#9	#10	#11	#12	Log	Possible	Possible	
FF	0	Cannot be identified	Overall HDD fault sector check and restore	#4	#7	#9	#10	#11	#12	-	-	-	-

	YY	Contents	Remedy
#1	03	Write Abort (during startup)	1. Enter CHK-TYPE for the partition, execute HDD-CHECK (may take anywhere from several minutes to several tens of minutes), and then turn the power OFF and then ON again. 2. If the above does not restore the system, enter CHK-TYPE for the partition, execute HDD-CLEAR, and turn the Main Power Switch OFF and then ON again.
#2	03	Write Abort (during startup)	1. If possible, have the user pull up address log data by remote UI. 2. Enter CHK-TYPE for the partition, execute HDD-CHECK (may take anywhere from several minutes to several tens of minutes), and then turn the power OFF and then ON again. 3. If the above does not restore the system, enter Download Mode, perform a full format using SST, reinstall the system (System, Lang, RUI), and turn the Main Power Switch OFF and then ON again.
#3	03	Write Abort (during startup)	Repair operations in the boot partition can only be performed when using SST in Safe Mode. 1. Set CHK-TYPE = 0, execute HDD-CHECK (may take several tens of minutes), and then turn the power OFF and then ON again. 2. If the above does not restore the system, enter Download Mode, perform a full format using SST, reinstall the system (System, Lang, RUI), and turn the Main Power Switch OFF and then ON again.
#4	03	Write Abort (during startup)	1. Set CHK-TYPE = 0, execute HDD-CHECK (may take several tens of minutes), and then turn the power OFF and then ON again. 2. If the above does not restore the system, execute HDD-CLEAR for CHK-TYPE = 1, 2, 3, 5, and then turn the power OFF and then ON again.
#5	05	File system error	1. Enter CHK-TYPE for the partition, execute HDD-CLEAR, and turn the Main Power Switch OFF and then ON again. 2. If the above does not correct the problem, the HDD may be assumed to be damaged, so replace the HDD and reinstall the system.
#6	05	File system error	To prevent the mistaken erasure of information in this partition such as address logs and filter data, HDD-CLEAR cannot be executed in Service Mode. 1. If possible, have the user pull up address log data by remote UI. 2. From Service Mode, enter Download Mode, perform a full format using SST, reinstall the system (System, Lang, RUI), and turn the Main Power Switch OFF and then ON again.
#7	05	File system error	This error is not usually generated. 1. Execute HDD-CLEAR for CHK-TYPE = 1, 2, 3, 5, and then turn the power OFF and then ON again. 2. If the above does not correct the problem, the HDD may be assumed to be damaged, so replace the HDD and reinstall the system.
#8	05	File system error	Repair operations in the boot partition can only be performed when using SST in Safe Mode. 1. Start the system in Safe Mode, perform a full format using SST, reinstall the system (System, Lang, RUI), and turn the Main Power Switch OFF and then ON again. 2. If the above does not correct the problem, the HDD may be assumed to be damaged, so replace the HDD and reinstall the system.
#9	00,01, 02,04	Faulty HDD connection or v x Works system error	1. 0Check cables and connectors. 2. If the above does not correct the problem, start the system in Safe Mode, perform a full format using SST, reinstall the system (System, Lang, RUI), and turn the Main Power Switch OFF and then ON again. 3. If the above still does not correct the problem, the HDD may be assumed to be damaged, so replace the HDD and reinstall the system.
#10	11,21	Faulty HDD connection or similar problem	This error is not usually generated at the read/write level. 1. Check cables and connectors. 2. If the above does not correct the problem, the HDD may be assumed to be damaged, so replace the HDD and reinstall the system.
#11	13,25	WriteAbort	There is a high likelihood that document data such as BOX on the HDD is damaged. 1. Enter the CHK-TYPE for the partition, execute HDD-CHECK (may take anywhere from several minutes to several tens of minutes), and then turn the power OFF and then ON again. 2. If the above does not restore the system, enter CHK-TYPE for the partition, execute HDD-CLEAR, and turn the Main Power Switch OFF and then ON again. (For the BOOTDEV, BOOTDEV2, and APL_SEND partitions, reformat and reinstall using SST.) 3. If the above still does not correct the problem, the HDD may be assumed to be damaged, so replace the HDD and reinstall the system.
#12	10,12, 14 22,23, 24	System error or packet data error	This error is generated due to invalid data or software bug. 1. Start the system in Safe Mode, perform a full format using SST, reinstall the system (System, Lang, RUI), and turn the Main Power Switch OFF and then ON again. 2. If the above does not correct the problem, the HDD may be assumed to be damaged, so replace the HDD and reinstall the system.

T-5-6

Ecode	Contents	Remedy
E602	HDD ERR	
2000	Authentication error of the main unit and encryption board	- Check the connection of the encryption board. (Turn the power OFF/ON.) - Execute "Key Clear" to the encryption board using SST. (Since this action makes the HDD unformatted, you need to format the HDD and reinstall the system firmware.)
2001	Mismatch of the encryption board operation	- Execute "Key Clear" to the encryption board using SST. (Since this action makes the HDD unformatted, you need to format the HDD and reinstall the system firmware.)
2002	Failure of the encryption board	- Check the connection of the encryption board. (Turn the power OFF/ON.) - Execute "Key Clear" to the encryption board using SST. (Since this action makes the HDD unformatted, you need to format the HDD and reinstall the system firmware.) - Format the HDD and reinstall SYSTEM using SST after replacing the encryption board. - Replace the main controller PCB (Sub LAN-bar-C). - Replace the main controller PCB.

5.5 Image Processing

5.5.1 Overview of the Flow of Image Data

/ / / / iR C4580i / / / iR C4080i / / / / iR C5185N / / iR C5185i PRT /

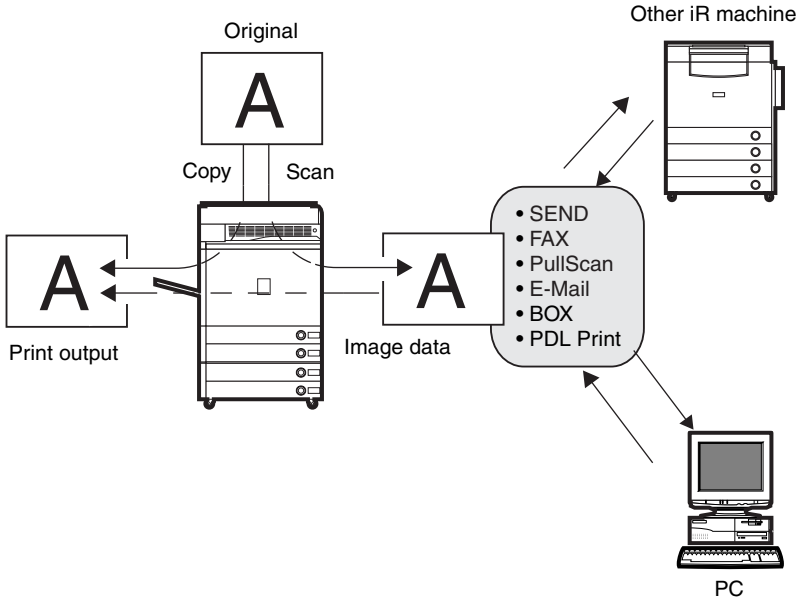

F-5-9

5.5.2 Reader Input Image Processing

CLC5151 / / / CLC4040 / / iR C4580i / / iR C4080i / / / / iR C5185N / / iR C5185i PRT /

The image data (RGB data) collected by the CCD is processed by the main controller PCB (sub SJ-A*1/S-JJ*2, sub R-A, sub PDRM-PE-A).
*1: Other than iR C5185
*2: iR C5185

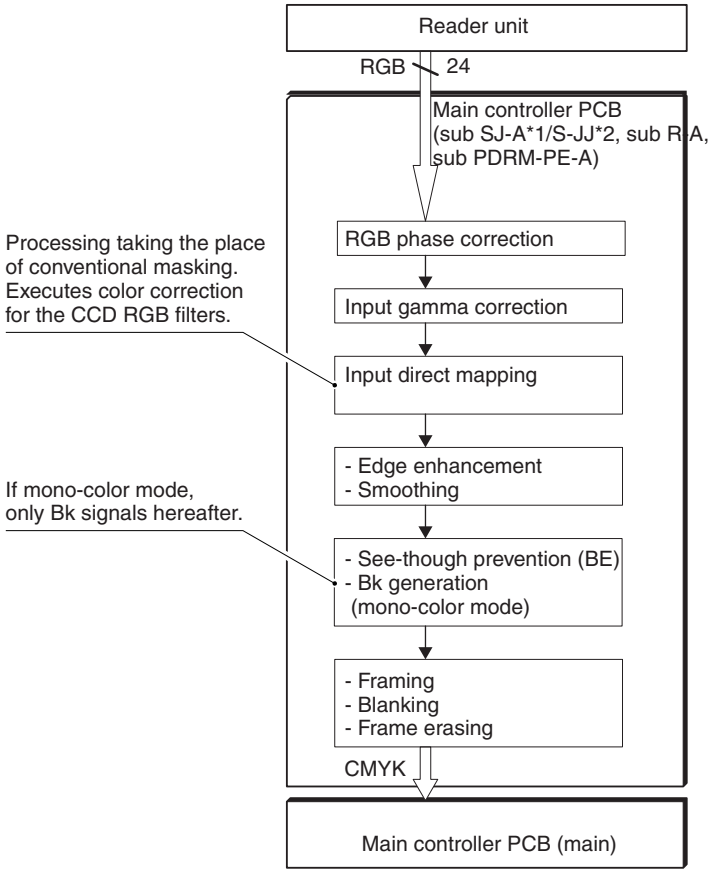

F-5-10

5.5.3 Printer Output Image Processing

/ / / / iR C4580i / / / iR C4080i / / / / iR C5185N / / iR C5185i PRT /

The main controller processes the image data arriving from the reader unit for output to the printer unit.

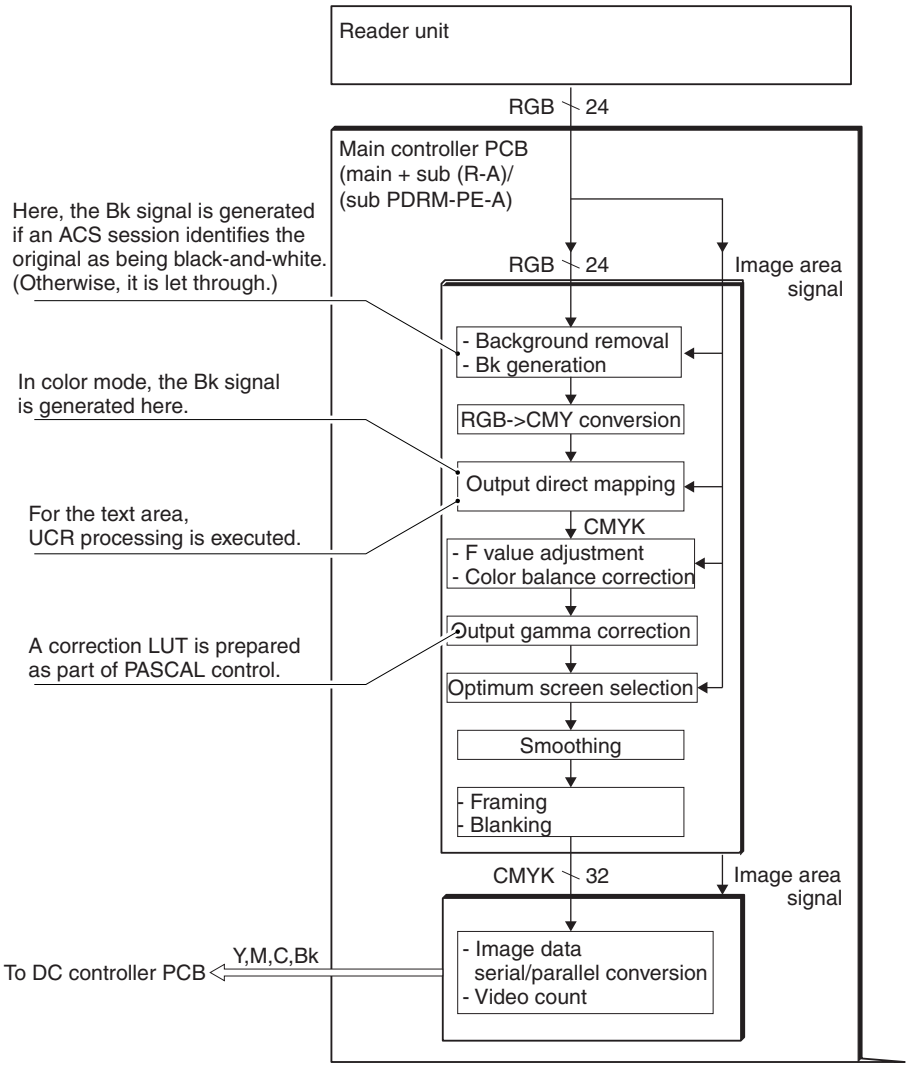

F-5-11

5.5.4 Compression, Decompression, and Edit Processing Blocks

/ / / / iR C4580i / / / iR C4080i / / / / iR C5185N / / iR C5185i PRT /

The main controller PCB processes data for compression, decompression, and editing.

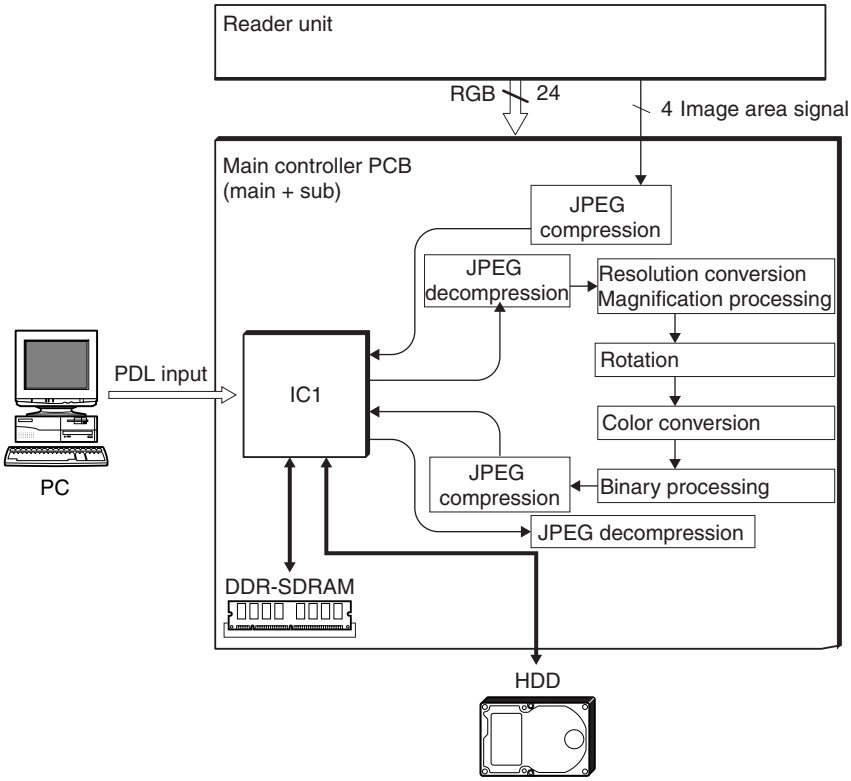

F-5-12

5.6 Flow of Image Data

5.6.1 Flow of Image Data for Copier Functions

/ / / / iR C4580i / / / iR C4080i / / / / iR C5185N / / iR C5185i PRT /

The following shows the flow of image data when a copier function is being used:

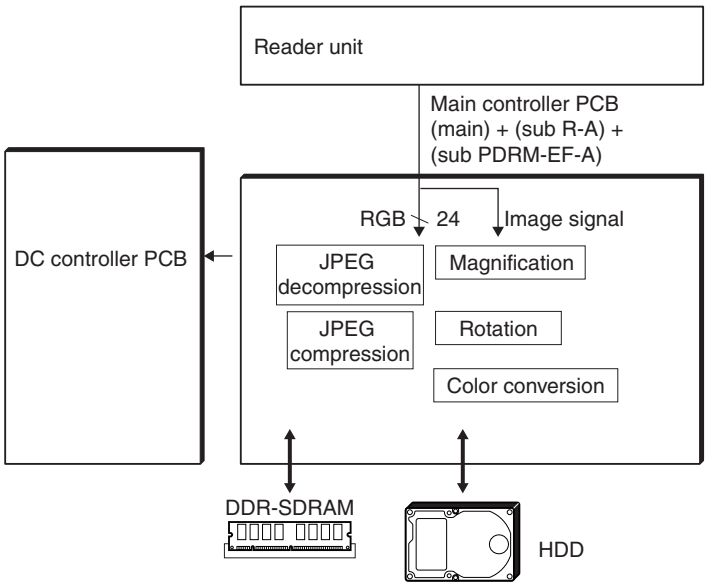

F-5-13

5.6.2 Flow of Image Data for Box Functions

/ / / / iR C4580i / / / iR C4080i / / / / iR C5185N / / iR C5185i PRT /

The following shows the flow of image data when a Box function is being used:

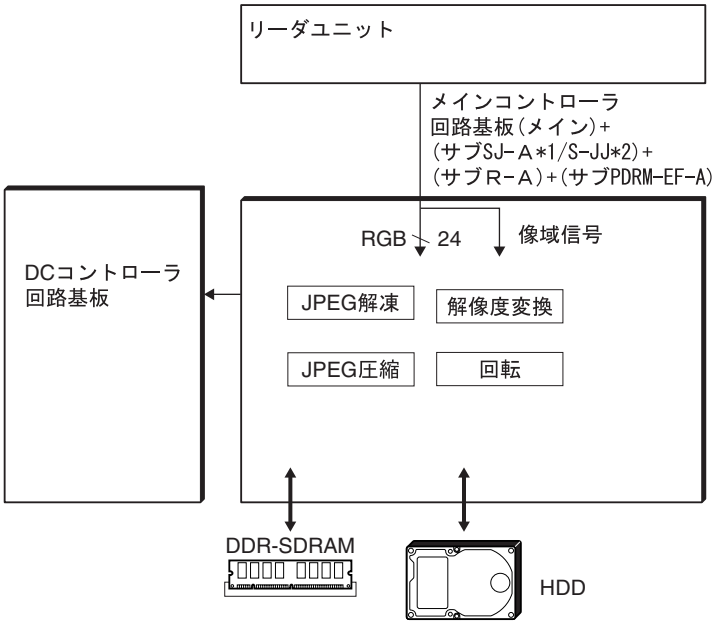

F-5-14

*1: Other than iR C5185
*2: iR C5185

5.6.3 Flow of Image Data for SEND Functions

CLC5151 / / / CLC4040 / / iR C4580i / / iR C4080i / / / / iR C5185N / / iR C5185i PRT /

The following shows the flow of image data when a SEND function is used:

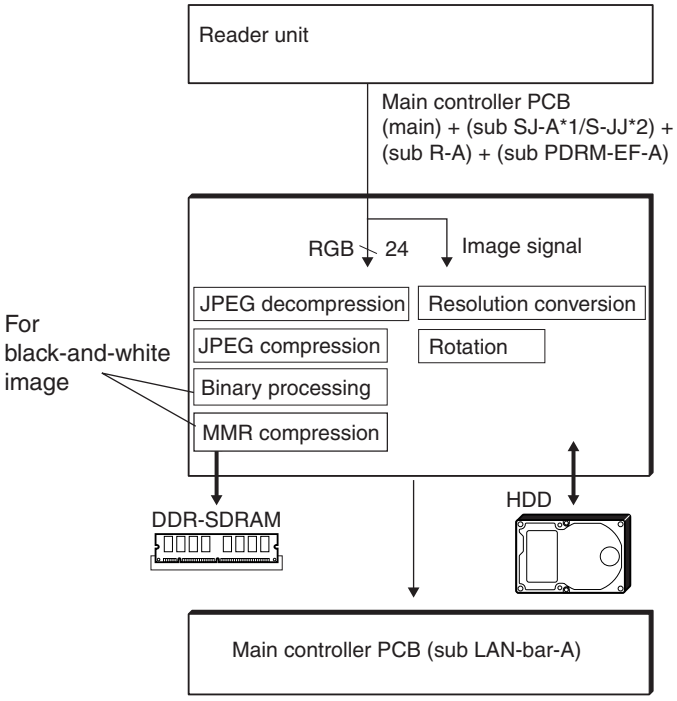

F-5-15

*1: Other than iR C5185
*2: iR C5185

5.6.4 Flow of Image Data for Fax Transmission Functions

CLC5151 / / / CLC4040 / / iR C4580i / / iR C4080i / / / / iR C5185N / / iR C5185i PRT /

The following shows the flow of image data when a fax transmission function is being used:

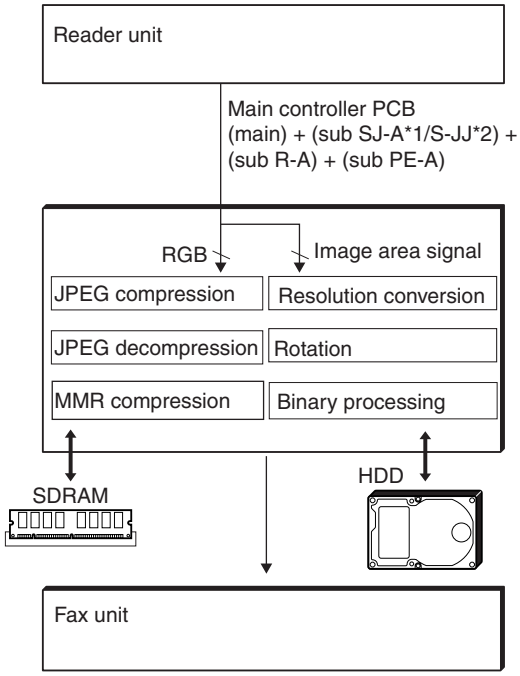

F-5-16

*1: Other than iR C5185
*2: iR C5185

5.6.5 Flow of Image Data for Fax Reception Functions

CLC5151 / / / CLC4040 / / / iR C4580i / / / iR C4080i / / / / iR C5185N / / iR C5185i PRT /

The following shows the flow of image data when a fax reception function is being used:

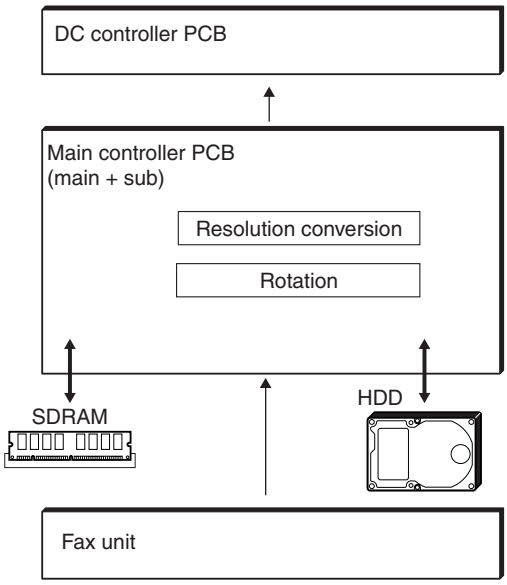

F-5-17

5.6.6 Flow of Image Data for PDL Functions

CLC5151 / / / CLC4040 / / / iR C4580i / / / iR C4080i / / / / iR C5185N / / iR C5185i PRT /

The following shows the flow of image data when a PDL function is being used:

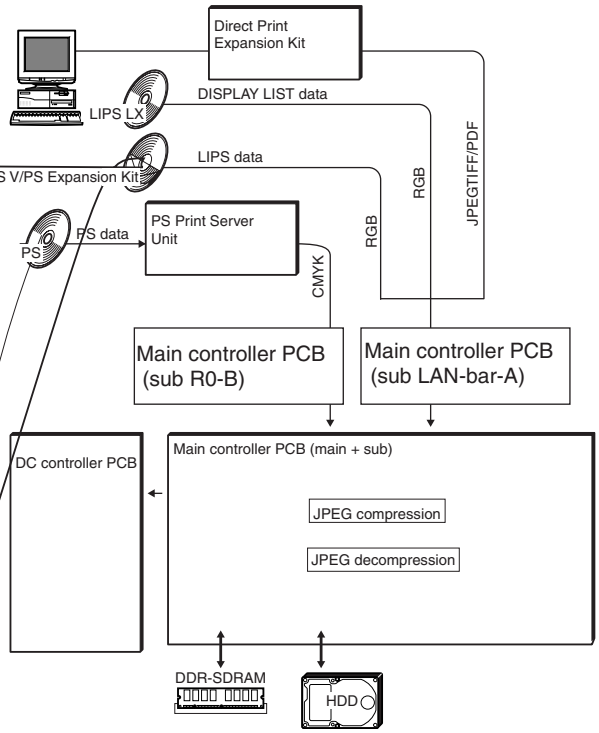
Direct Print
Expansion Kit
DISPLAY LIST data
LIPS LX
LIPS data
LIPS V/PS Expansion Kit
RGB
JPEGTIFF/PDF
PS Print Server
Unit
PS data
PS
RGB
CMYK
Main controller PCB
(sub R0-B)
Main controller PCB
(sub LAN-bar-A)
DC controller PCB
Main controller PCB (main + sub)
JPEG compression
JPEG decompression
DDR-SDRAM
HDD

F-5-18

5.7 Parts Replacement Procedure

5.7.1 Main Controller Box

5.7.1.1 Preparation for Removing the Main Controller Box

CLC5151 / / / CLC4040 / / / iR C4580i / / / iR C4080i / / / / Color Image Reader-F1 / Color Image Reader-E1 / Dupiex Color Image Reader-G1 / iR C5185N / / iR C5185i PRT /

1) Remove the rear upper cover.(page 12-16)Reference[Removing the Rear Upper Cover]
2) Remove the rear left cover (upper).(page 12-17)Reference[Removing the Rear Left Cover (Upper)]
3) Remove the left rear cover (upper).(page 12-15)Reference[Removing the Left Rear Cover (Upper)]

5.7.1.2 Removing the Main Controller Box

CLC5151 / / / CLC4040 / / / iR C4580i / / / iR C4080i / / / / Color Image Reader-F1 / Color Image Reader-E1 / Dupiex Color Image Reader-G1

1) Remove the main controller box cover [3].
   - 1 harness (free from wire saddle [1])
   - 15 screws [2]

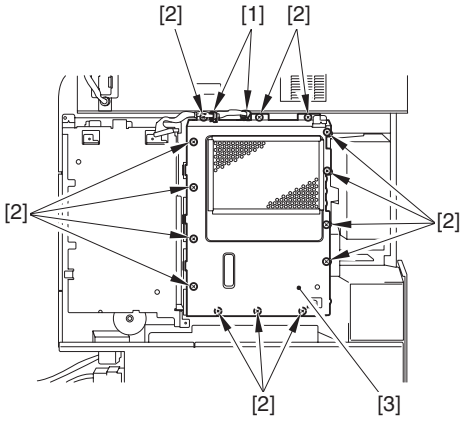

F-5-19

2) Remove the main controller box [3].
   - 13 connectors (on PCB)
   - 6 clamps [1]
   - 6 screws [2]

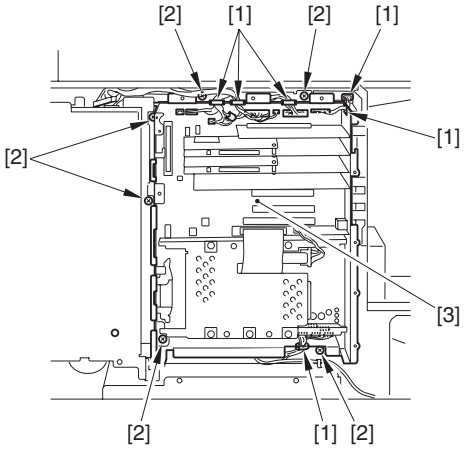

F-5-20

5.7.1.3 Removing the Main Controller Box

Dupiex Color Image Reader-G1 / iR C5185N / / iR C5185i PRT /

1) Remove the main controller box cover [3].
   - 1 harness (free from wire saddle [1])
   - 14 screws [2]

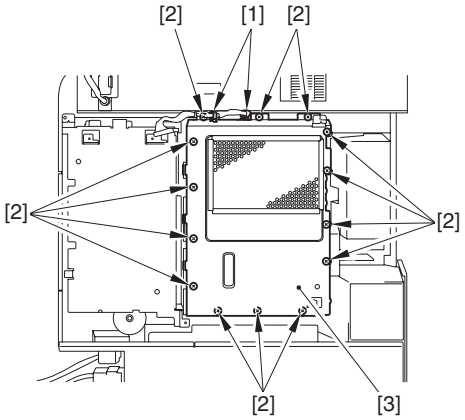

F-5-21

2) Remove the main controller box [3].
   - 15 connectors (on PCB)
   - 5 edge saddles [1]
   - 6 screws [2]
   - 1 connector [3]

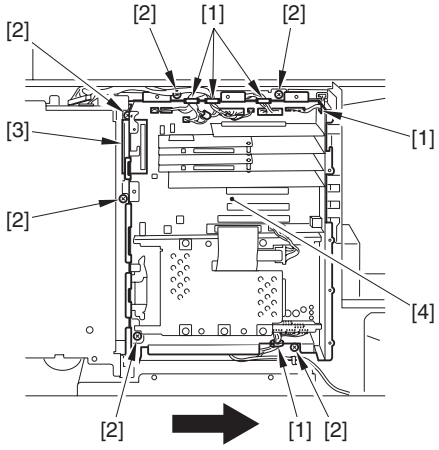

F-5-22

5.7.2 Main Controller PCB (main)

5.7.2.1 Preparation for Removing the Main Controller PCB (main)

CLC5151 / / / CLC4040 / / / iR C4580i / / / iR C4080i / / / / Color Image Reader-F1 / Color Image Reader-E1 / Dupiex Color Image Reader-G1 / iR C5185N / / iR C5185i PRT /

1) Remove the rear upper cover.(page 12-16)Reference[Removing the Rear Upper Cover]
2) Remove the rear left cover (upper).(page 12-17)Reference[Removing the Rear Left Cover (Upper)]
3) Remove the left rear cover (upper).(page 12-15)Reference[Removing the Left Rear Cover (Upper)]
4) Remove the main controller box.

5.7.2.2 Removing the Main Controller PCB (main)

CLC5151 / / / CLC4040 / / / iR C4580i / / / iR C4080i / / / / Color Image Reader-F1 / Color Image Reader-E1 / Dupiex Color Image Reader-G1 / iR C5185N / / iR C5185i PRT /

1) Remove the main controller PCB (sub R-A) [3] together with its mounting plate.
   - 2 screws [1]
   - 1 connector [2]

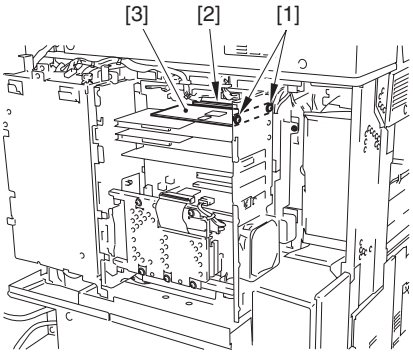

F-5-23

Points to Note When Mounting Main Controller PCB (Sub R-A)
After mounting the main controller PCB (sub R-A) to the main controller PCB (main), tighten the screw [1] at the cover side and then the screw [2] at the connector side, in that order.
Tightening the screws in reverse order may cause poor contact with the main controller PCB (main) (E747/E748).

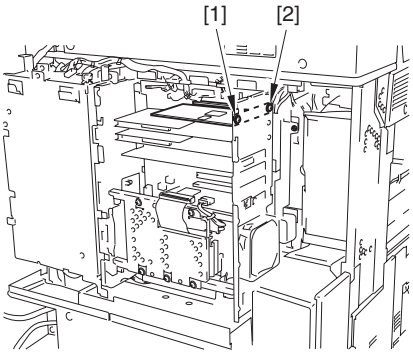

F-5-24

2) Remove the main controller PCB (sub PDRM-EF-A) [3] together with its mounting plate.
- 2 screws [1]
- 1 connectors [2]

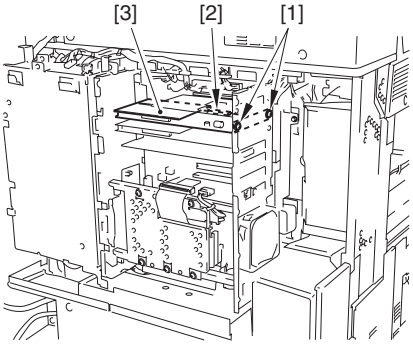

F-5-25

Points to Note When Mounting Main Controller PCB (Sub PDRM-EF-A)
After mounting the main controller PCB (sub PDRM-EF-A) to the main controller PCB (main), tighten the screw [1] at the cover side and then the screw [2] at the connector side, in that order.
Tightening the screws in reverse order may cause poor contact with the main controller PCB (main) (E747/E748).

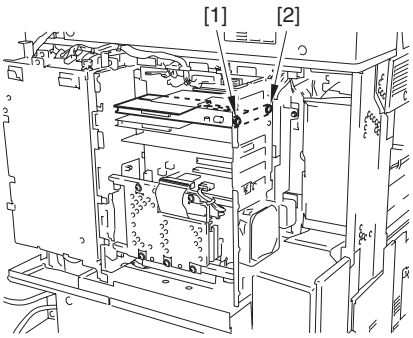

F-5-26

3) Remove the main controller PCB (sub SJ-A/sub S-JJ) [3] together with its mounting plate.
sub SJ-A: except for iR C5185/iR C5185N/Color iR C5185/Color iR C5185i
sub S-JJ: iR C5185/iR C5185N/Color iR C5185/Color iR C5185i
- 2 screws [1]
- 1 connector [2]

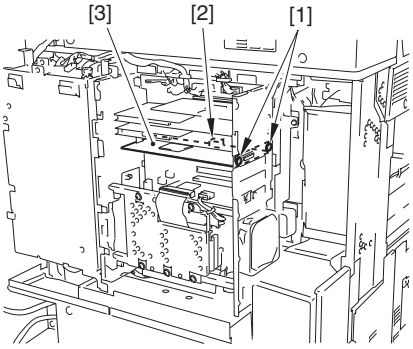

F-5-27

Points to Note When Mounting Main Controller PCB (Sub SJ-A)
After mounting the main controller PCB (sub SJ-A) to the main controller PCB (main), tighten the screw [1] at the cover side and then the screw [2] at the connector side, in that order.
Tightening the screws in reverse order may cause poor contact with the main controller PCB (main) (E747/E748).

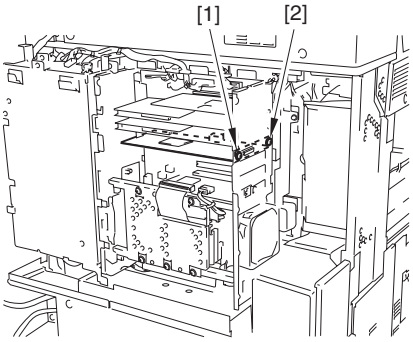

F-5-28

4) Remove the main controller PCB (sub LAN-bar-C) [4] together with its mounting plate.
- 2 connectors [1]
- 2 screws [2]
- 1 connector [3]

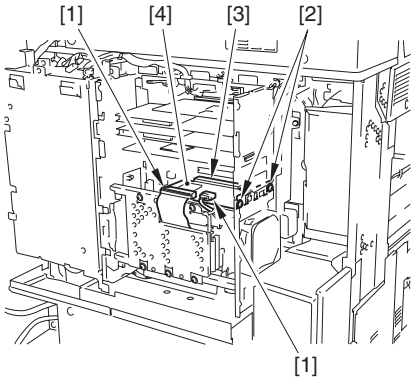

F-5-29

Points to Note When Mounting Main Controller PCB (Sub LAN-bar-C)
After mounting the main controller PCB (sub LAN-bar-C) to the main controller PCB (main), tighten the screw [1] at the cover side and then the screw [2] at the connector side, in that order.
Tightening the screws in reverse order may cause poor contact with the main controller PCB (main) (E747/E748).

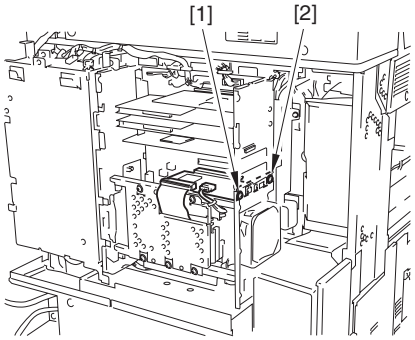

F-5-30

Points to Note When Removing the HDD
Take care to avoid static damage when removing the HDD.
It is also important to protect the HDD from impact.

5) Remove the HDD [3].
- 1 clamp [1]
- 6 screws [2]

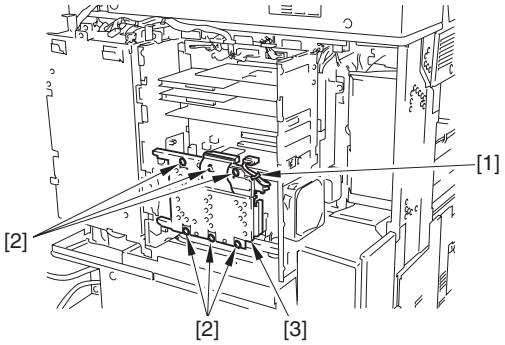

F-5-31

6) Remove the 2 HDD mounting plates [2].
- 2 screws each [1]

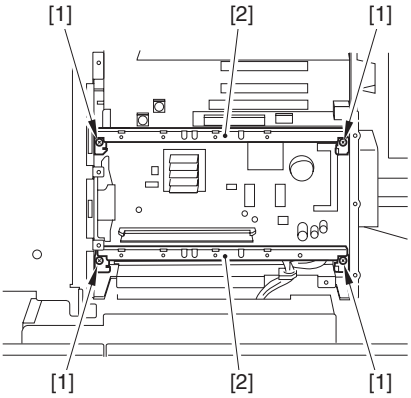

F-5-32

7) Remove the main controller PCB (sub RB-A) [4].

Skip this step if there is no main controller PCB (sub RB-A).

- 2 screws [1]
- 1 mounting plate [2]
- 1 connector [3]

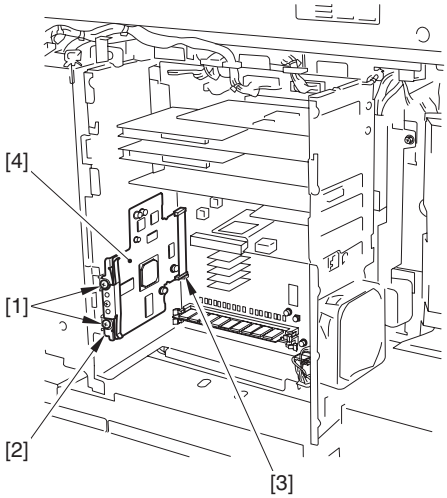

F-5-33

Points to Note When Mounting the Main Controller PCB (sub RB-A)
Check to be sure that the PCB [3] is between the mounting plate [1] and the leaf spring [2].

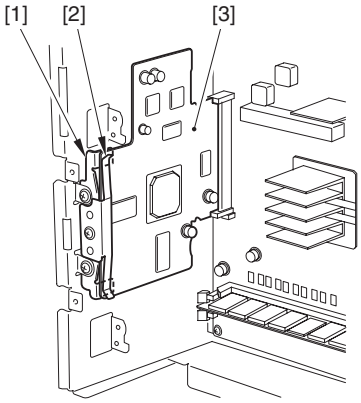

F-5-34

8) Remove the image memory (SDRAM) [1].

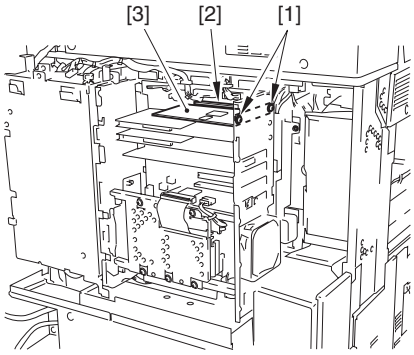

F-5-41

Points to Note When Mounting Main Controller PCB (Sub R-A)
After mounting the main controller PCB (sub R-A) to the main controller PCB (main), tighten the screw [1] at the cover side and then the screw [2] at the connector side, in that order.
Tightening the screws in reverse order may cause poor contact with the main controller PCB (main) (E747/E748).

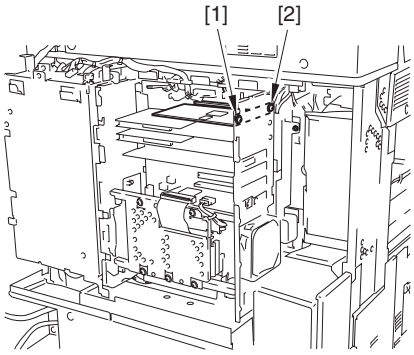

F-5-42

3) Remove the main controller PCB (sub R-A) [3] from the mounting plate [2].
- 2 screws [1]

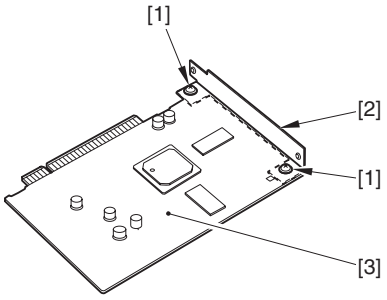

F-5-43

5.7.3.3 Removing the Main Controller PCB (sub R-A)

Dupiex Color Image Reader-G1 / iR C5185N / / iR C5185i PRT /

1) Remove the main controller box cover [3].
- 1 harness (free from wire saddle [1])
- 14 screws [2]

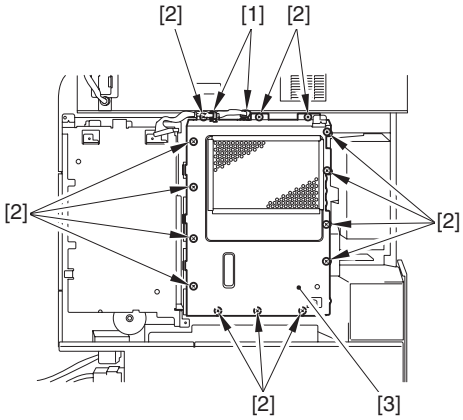

F-5-44

2) Remove the main controller PCB (sub R-A) [3] together with its mounting plate.
- 2 screws [1]
- 1 connector [2]

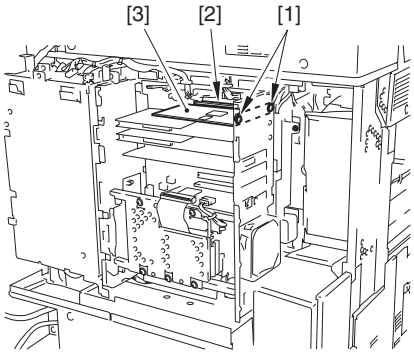

F-5-45

Points to Note When Mounting Main Controller PCB (Sub R-A)
After mounting the main controller PCB (sub R-A) to the main controller PCB (main), tighten the screw [1] at the cover side and then the screw [2] at the connector side, in that order.
Tightening the screws in reverse order may cause poor contact with the main controller PCB (main) (E747/E748).

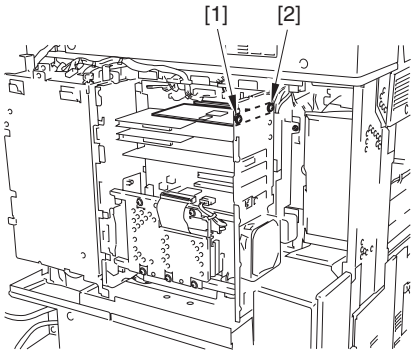

F-5-46

3) Remove the main controller PCB (sub R-A) [3] from the mounting plate [2].
- 2 screws [1]

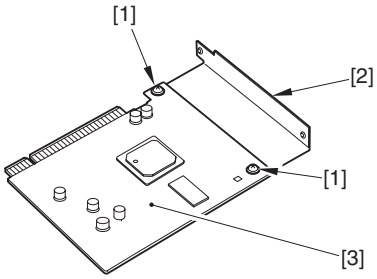

F-5-47

5.7.4 Main Controller PCB (sub PDRM-A)

5.7.4.1 Preparation for Removing the Main Controller PCB (sub PDRM-EF-A)

CLC5151 / / / CLC4040 / / / iR C4580i / / / iR C4080i / / / / Color Image Reader-F1 / Color Image Reader-E1 / Dupiex Color Image Reader-G1 / iR C5185N / / iR C5185i PRT /

1) Remove the rear upper cover.(page 12-16)Reference[Removing the Rear Upper Cover]
2) Remove the rear left cover (upper).(page 12-17)Reference[Removing the Rear Left Cover (Upper)]
3) Remove the left rear cover (upper).(page 12-15)Reference[Removing the Left Rear Cover (Upper)]

5.7.4.2 Removing the Main Controller PCB (sub PDRM-EF-A)

CLC5151 / / / CLC4040 / / / iR C4580i / / / iR C4080i / / / / Color Image Reader-F1 / Color Image Reader-E1 / Dupiex Color Image Reader-G1 / iR C5185N / / iR C5185i PRT /

1) Remove the main controller box cover [3].
   - 1 harness (free from wire saddle [1])
   - 15 screws [2]

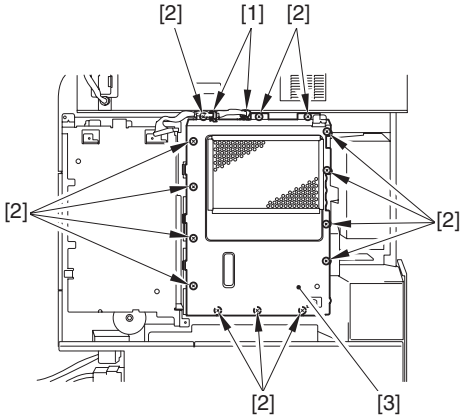

F-5-48

2) Remove the main controller PCB (sub PDRM-EF-A) [3] together with its mounting plate.

Note:
There are 2 main controller PCBs (sub PDRM-EF-A), and they may be removed in the same way.

   - 2 screws [1]
   - 1 connector [2]

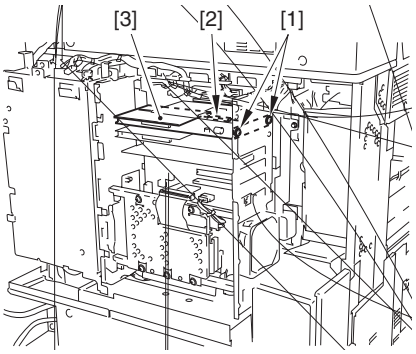

F-5-49

Points to Note When Mounting Main Controller PCB (Sub PDRM-EF-A)
After mounting the main controller PCB (sub PDRM-EF-A) to the main controller PCB (main), tighten the screw [1] at the cover side and then the screw [2] at the connector side, in that order.
Tightening the screws in reverse order may cause poor contact with the main controller PCB (main) (E747/E748).

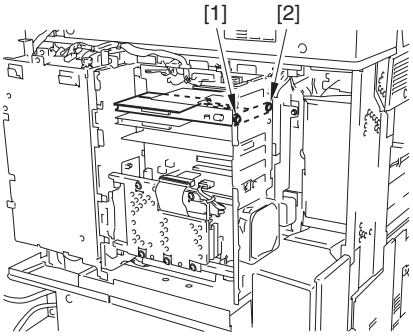

F-5-50

3) Remove the main controller PCB (sub PDRM-EF-A) [3] from the mounting plate [2].
   - 2 screws [1]

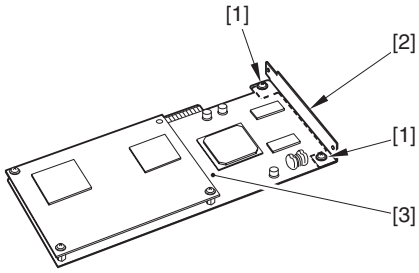

F-5-51

5.7.5 Main Controller PCB (sub SJ-A)

5.7.5.1 Preparation for Removing the Main Controller PCB (sub SJ-A)

CLC5151 / / / CLC4040 / / / iR C4580i / / / iR C4080i / / / / Color Image Reader-F1 / Color Image Reader-E1 / Dupiex Color Image Reader-G1

1) Remove the rear upper cover.(page 12-16)Reference[Removing the Rear Upper Cover]
2) Remove the rear left cover (upper).(page 12-17)Reference[Removing the Rear Left Cover (Upper)]
3) Remove the left rear cover (upper).(page 12-15)Reference[Removing the Left Rear Cover (Upper)]

5.7.5.2 Removing the Main Controller PCB (sub SJ-A)

CLC5151 / / / CLC4040 / / / iR C4580i / / / iR C4080i / / / / Color Image Reader-F1 / Color Image Reader-E1 / Dupiex Color Image Reader-G1

1) Remove the main controller box cover [3].
   - 1 harness (free from wire saddle [1])
   - 15 screws [2]

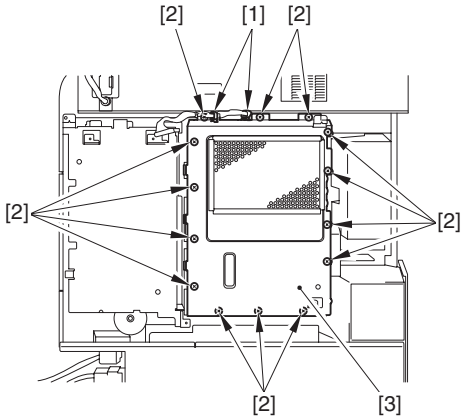

F-5-52

2) Remove the main controller PCB (sub SJ-A) [3] together with its mounting plate.
   - 2 screws [1]
   - 1 connector [2]

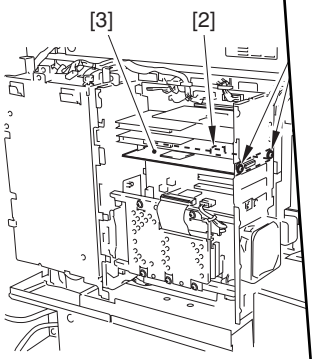

F-5-53

Points to Note When Mounting Main Conti
After mounting the main controller PCB (sub SJ-
PCB (main), tighten the screw [1] at the cover side
the connector side, in that order.
Tightening the screws in reverse order may cause p
controller PCB (main) (E747/E748).

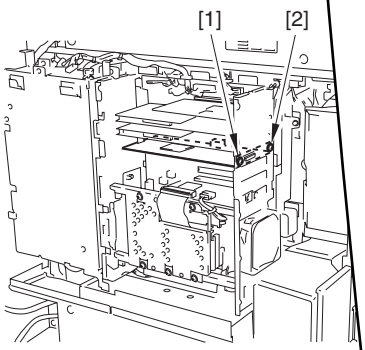

F-5-54

3) Remove the main controller PCB (sub SJ-A) [3]
mounting plate [2].
- 2 screws [1]

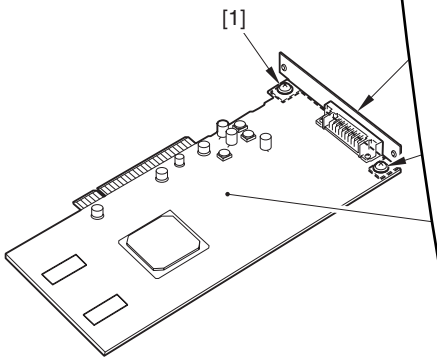

F-5-55

5.7.5.3 Preparation for Removing the Main Con
PCB (sub S-JJ)

Dupiex Color Image Reader-G1 / iR C5185N / / iR C51

1) Remove the rear upper cover.(page 12-16) Refe
Rear Upper Cover]
2) Remove the rear left cover (upper).(page 12-17
the Rear Left Cover (Upper)]
3) Remove the left rear cover (upper).(page 12-15) R
the Left Rear Cover (Upper)]

5.7.5.4 Removing the Main Controller PCB (sub S-J

Dupiex Color Image Reader-G1 / iR C5185N / / iR C5185i PRT /

1) Remove the main controller box cover [3].
- 1 harness (free from wire saddle [1])
- 14 screws [2]

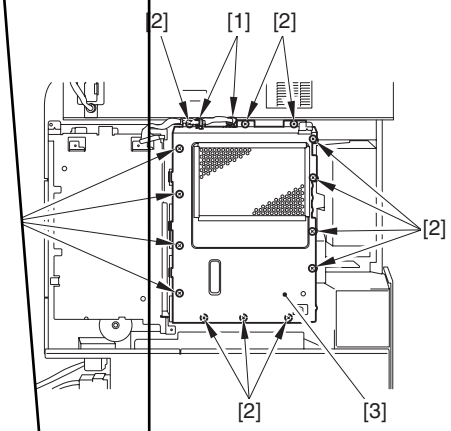

F-5-56

ain controller PCB (sub S-JJ) [3] together with its mounting

2]

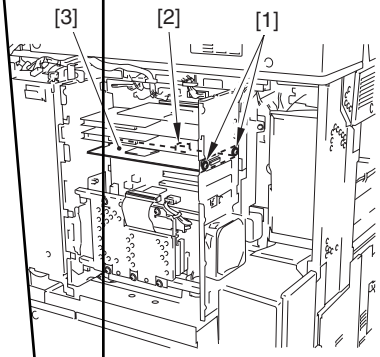

F-5-57

hen Mounting Main Controller PCB (Sub S-JJ)
ain controller PCB (sub S-JJ) to the main controller
e screw [1] at the cover side and then the screw [2] at
hat order.
n reverse order may cause poor contact with the main
E747/E748).

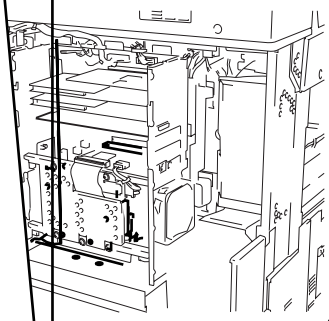

F-5-58

er PCB (sub S-JJ) [3] conne

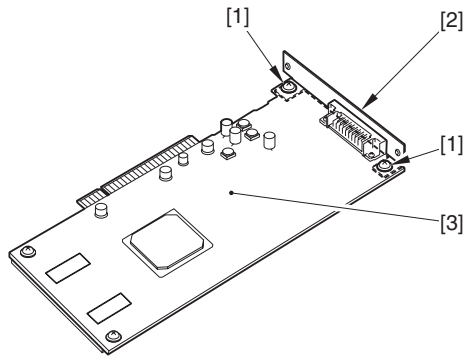

F-5-59

5.7.6 Main Controller PCB (sub LAN-A)

5.7.6.1 Preparation for Removing the Main Controller PCB (sub LAN-bar-C)

CLC5151 / / / CLC4040 / / / iR C4580i / / / iR C4080i / / / / Color Image Reader-F1 / Color Image Reader-E1 / Dupiex Color Image Reader-G1 / iR C5185N / / iR C5185i PRT /

1) Remove the rear upper cover.(page 12-16)Reference[Removing the Rear Upper Cover]
2) Remove the rear left cover (upper).(page 12-17)Reference[Removing the Rear Left Cover (Upper)]
3) Remove the left rear cover (upper).(page 12-15)Reference[Removing the Left Rear Cover (Upper)]

5.7.6.2 Removing the Main Controller PCB (sub LAN-bar-C)

CLC5151 / / / CLC4040 / / / iR C4580i / / / iR C4080i / / / / Color Image Reader-F1 / Color Image Reader-E1 / Dupiex Color Image Reader-G1 / iR C5185N / / iR C5185i PRT /

1) Remove the main controller box cover [3].
   - 1 harness (free from wire saddle [1])
   - 15 screws [2]

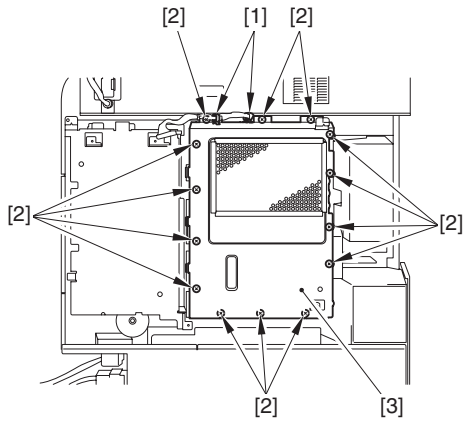

F-5-60

2) Remove the main controller PCB (sub LAN-bar-C) [4] together with its mounting plate.
   - 2 connectors [1]
   - 2 screws [2]
   - 1 connector [3]

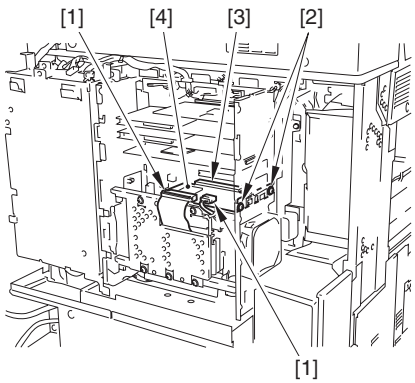

F-5-61

Points to Note When Mounting Main Controller PCB (Sub LAN-bar-C)
After mounting the main controller PCB (sub LAN-bar-C) to the main controller PCB (main), tighten the screw [1] at the cover side and then the screw [2] at the connector side, in that order.
Tightening the screws in reverse order may cause poor contact with the main controller PCB (main) (E747/E748).

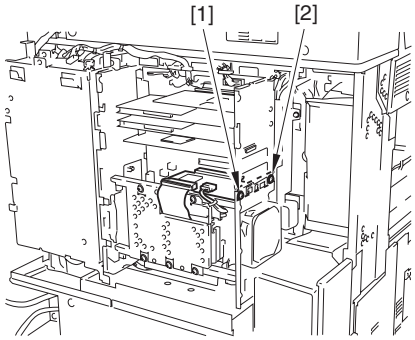

F-5-62

3) Remove the main controller PCB (sub LAN-bar-C) [3] from the mounting plate [2].
   - 2 screws [1]

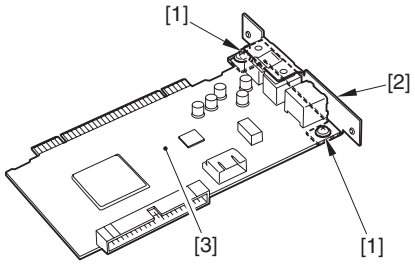

F-5-63

5.7.7 Main Controller PCB (sub RB-A)

5.7.7.1 Preparation for Removing the Main Controller PCB (sub RB-A)

CLC5151 / / / CLC4040 / / / iR C4580i / / / iR C4080i / / / / Color Image Reader-F1 / Color Image Reader-E1 / Dupiex Color Image Reader-G1 / iR C5185N / / iR C5185i PRT /

1) Remove the rear upper cover.(page 12-16)Reference[Removing the Rear Upper Cover]
2) Remove the rear left cover (upper).(page 12-17)Reference[Removing the Rear Left Cover (Upper)]
3) Remove the left rear cover (upper).(page 12-15)Reference[Removing the Left Rear Cover (Upper)]

5.7.7.2 Removing the Main Controller PCB (sub RB-A)

CLC5151 / / / CLC4040 / / / iR C4580i / / / iR C4080i / / / / Color Image Reader-F1 / Color Image Reader-E1 / Dupiex Color Image Reader-G1 / iR C5185N / / iR C5185i PRT /

1) Remove the main controller box cover [3].

- 1 harness (free from wire saddle [1])
- 15 screws [2]

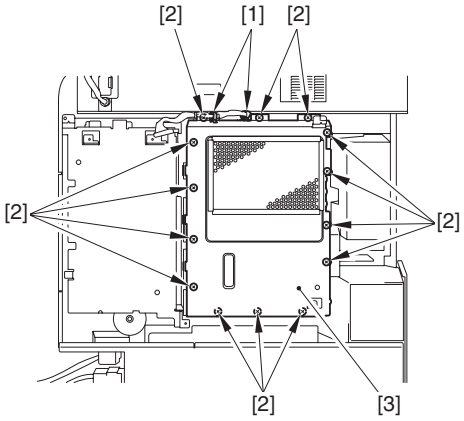

F-5-64

Points to Note When Removing the HDD
Take care to avoid static damage when removing the HDD.
It is also important to protect the HDD from impact.

2) Remove the HDD [4].
- 1 clamp [1]
- 2 connectors [2]
- 6 screws [3]

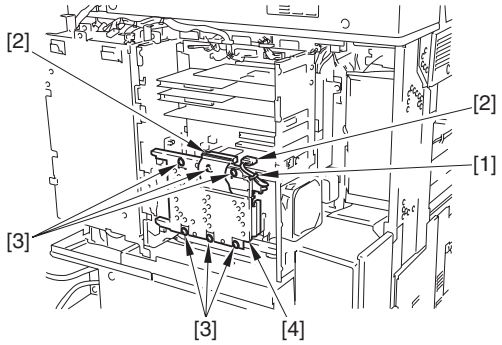

F-5-65

3) Remove the 2 HDD mounting plates [2].
- 2 screws each [1]

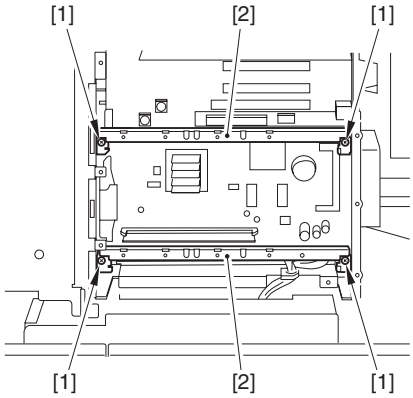

F-5-66

4) Remove the main controller PCB (sub RB-A) [4].

Skip this step if there is no main controller PCB (sub RB-A).

- 2 screws [1]
- 1 mounting plate [2]
- 1 connector [3]

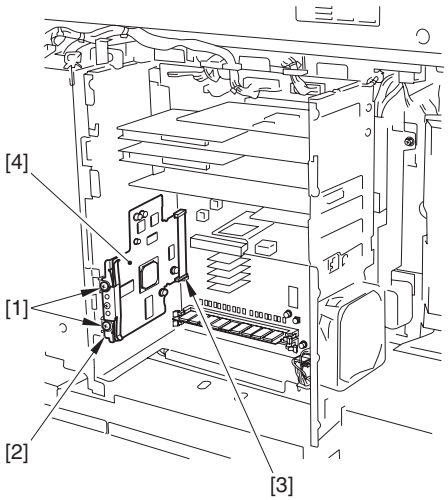

F-5-67

Points to Note When Mounting the Main Controller PCB (sub RB-A)
Check to be sure that the PCB [3] is between the mounting plate [1] and the leaf spring.

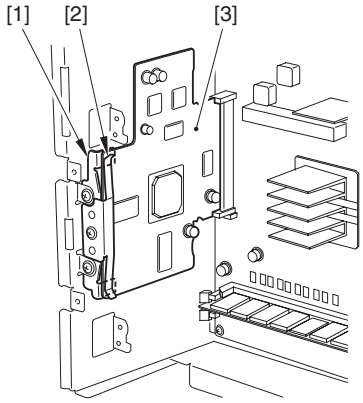

F-5-68

5.7.8 SRAM PCB

5.7.8.1 Preparation for Removing the SRAM PCB

CLC5151 / / / CLC4040 / / / iR C4580i / / / iR C4080i / / / / Color Image Reader-F1 / Color Image Reader-E1 / Dupiex Color Image Reader-G1 / iR C5185N / / iR C5185i PRT /

1) Remove the rear upper cover.(page 12-16)Reference[Removing the Rear Upper Cover]
2) Remove the rear left cover (upper).(page 12-17)Reference[Removing the Rear Left Cover (Upper)]
3) Remove the left rear cover (upper).(page 12-15)Reference[Removing the Left Rear Cover (Upper)]

5.7.8.2 Removing the SRAM PCB

CLC5151 / / / CLC4040 / / / iR C4580i / / / iR C4080i / / / / Color Image Reader-F1 / Color Image Reader-E1 / Dupiex Color Image Reader-G1 / iR C5185N / / iR C5185i PRT /

1) Remove the main controller box cover [3].
- 1 harness (free from wire saddle [1])
- 15 screws [2]

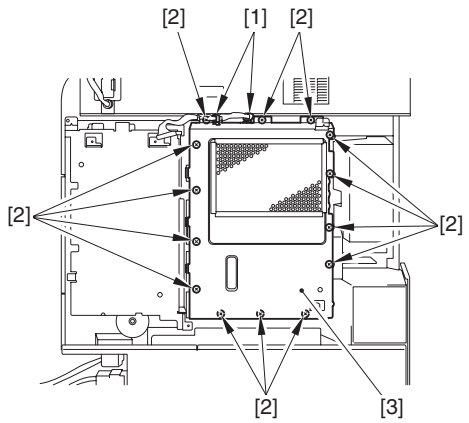

F-5-69

Points to Note When Removing the HDD
Take care to avoid static damage when removing the HDD.
It is also important to protect the HDD from impact.

2) Remove the HDD [4].
- 1 clamp [1]
- 2 connectors [2]
- 6 screws [3]

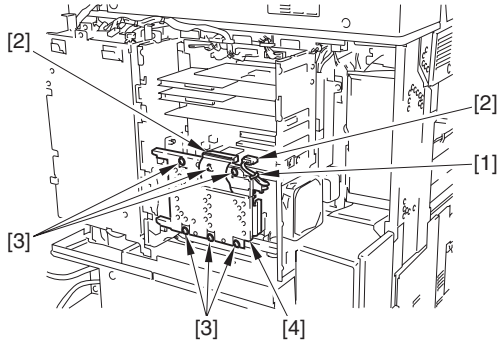

F-5-70

3) Remove the 2 HDD mounting plates [2].
- 2 screws each [1]

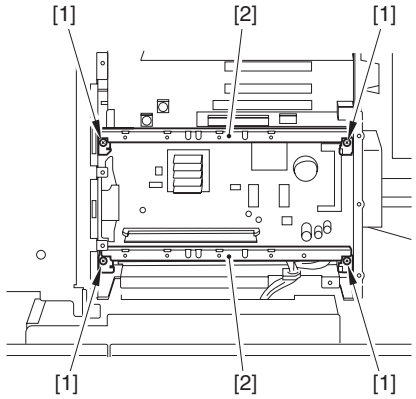

F-5-71

4) Remove the SRAM PCB [1].

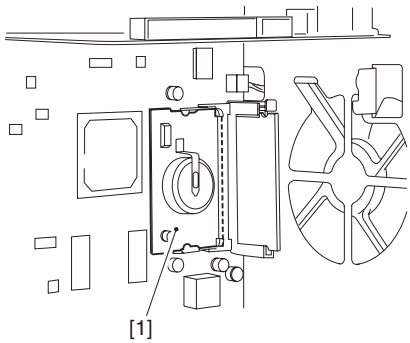

F-5-72

5.7.8.3 When Replacing the SRAM PCB

CLC5151 / / / CLC4040 / / / iR C4580i / / / iR C4080i / / / / Color Image Reader-F1 / Color Image Reader-E1 / Dupiex Color Image Reader-G1 / iR C5185N / / iR C5185i PRT /

When the SRAM PCB is replaced, all data in its memory will be lost (file-related, user mode-related, service mode-related, history-related files). There will be no error operation, and initialization will take place automatically.Å@
If you pull out the SRAM PCB from machine B and mount it to machine A, the PCB will be initialized and be rendered useless for machine A or B. Take full care.

1) When you turn on the power after replacing the SRAM PCB, the machine will perform automatic initialization and will indicate a message on its panel to the effect that you are to turn off and then on the power switch found on its right side. Follow the message and turn off and then on the machine.
2) Using service mode, initialize the RAM.
COPIER>FUNCTION>CLEAR>MN-CON

Inform the user that the following steps will result in the loss of all image data in the Box before starting the work.

5.7.9 Boot ROM PCB

5.7.9.1 Preparation for Removing the Boot ROM PCB

CLC5151 / / / CLC4040 / / / iR C4580i / / / iR C4080i / / / / Color Image Reader-F1 / Color Image Reader-E1 / Dupiex Color Image Reader-G1 / iR C5185N / / iR C5185i PRT /

1) Remove the rear upper cover.(page 12-16)Reference[Removing the Rear Upper Cover]
2) Remove the rear left cover (upper).(page 12-17)Reference[Removing the Rear Left Cover (Upper)]
3) Remove the left rear cover (upper).(page 12-15)Reference[Removing the Left Rear Cover (Upper)]

5.7.9.2 Removing the Boot ROM PCB

CLC5151 / / / CLC4040 / / / iR C4580i / / / iR C4080i / / / / Color Image Reader-F1 / Color Image Reader-E1 / Dupiex Color Image Reader-G1 / iR C5185N / / iR C5185i PRT /

1) Remove the main controller box cover [3].
- 1 harness (free from wire saddle [1])
- 15 screws [2]

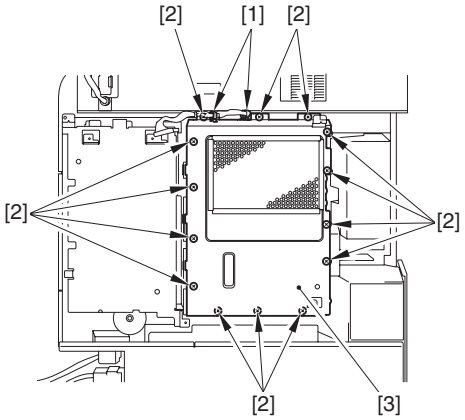

F-5-73

Points to Note When Removing the HDD
Take care to avoid static damage when removing the HDD.
It is also important to protect the HDD from impact.

2) Remove the HDD [4].
- 1 clamp [1]
- 2 connectors [2]
- 6 screws [3]

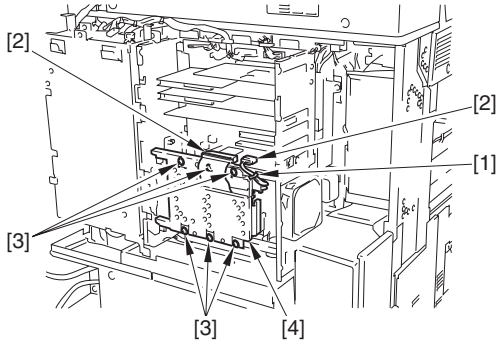

F-5-74

3) Remove the 2 HDD mounting plates [2].
- 2 screws each [1]

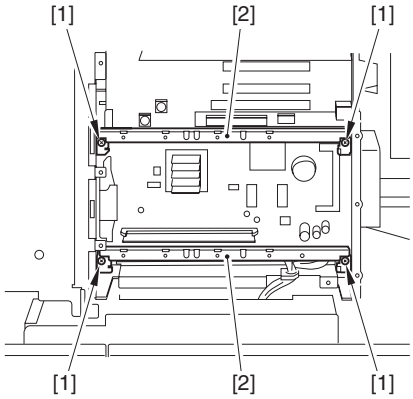

F-5-75

4) Press the PCB release button [1] to detach the boot ROM PCB [2].

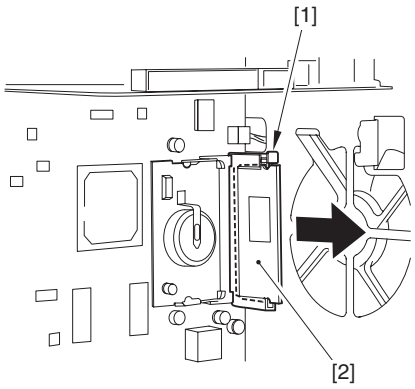

F-5-76

5.7.10 Image Memory (SDRAM)

5.7.10.1 Preparation for Removing the Image Memory (SDRAM)

CLC5151 / / / CLC4040 / / / iR C4580i / / / iR C4080i / / / / Color Image Reader-F1 / Color Image Reader-E1 / Dupiex Color Image Reader-G1 / iR C5185N / / iR C5185i PRT /

1) Remove the rear upper cover.(page 12-16)Reference[Removing the Rear Upper Cover]
2) Remove the rear left cover (upper).(page 12-17)Reference[Removing the Rear Left Cover (Upper)]
3) Remove the left rear cover (upper).(page 12-15)Reference[Removing the Left Rear Cover (Upper)]

5.7.10.2 Removing the Image Memory (SDRAM) PCB

CLC5151 / / / CLC4040 / / / iR C4580i / / / iR C4080i / / / / Color Image Reader-F1 / Color Image Reader-E1 / Dupiex Color Image Reader-G1 / iR C5185N / / iR C5185i PRT /

1) Remove the main controller box cover [3].
- 1 harness (free from wire saddle [1])
- 15 screws [2]

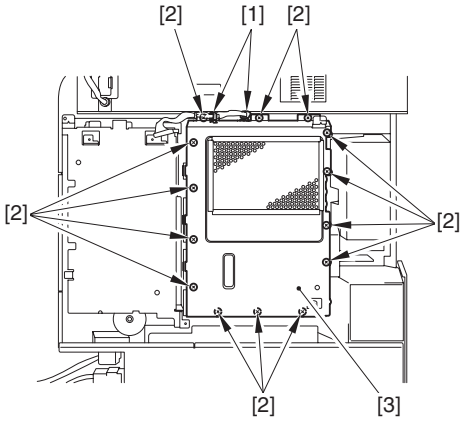

F-5-77

Points to Note When Removing the HDD
Take care to avoid static damage when removing the HDD.
It is also important to protect the HDD from impact.

2) Remove the HDD [4].
- 1 clamp [1]
- 2 connectors [2]
- 6 screws [3]

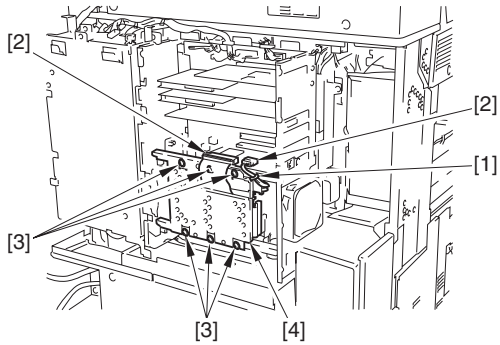

F-5-78

3) Remove the 2 HDD mounting plates [2].
   - 2 screws each [1]

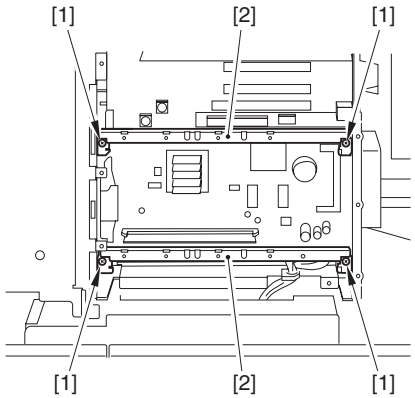

F-5-79

4) Open the fixing member in the direction of the arrow, and detach the image memory (SDARAM) PCB [1].

If there are 2 image memory (SDRAM) PCBs, be sure to remove both of them.

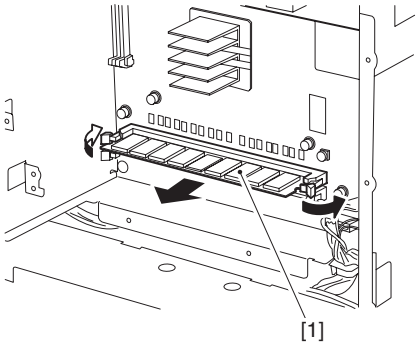

F-5-80

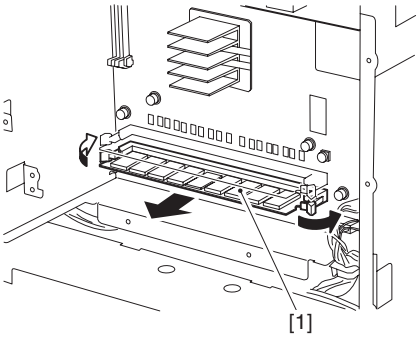

F-5-81

5.7.11 HDD

5.7.11.1 Preparation for Removing the HDD

CLC5151 / / / CLC4040 / / / iR C4580i / / / iR C4080i / / / / Color Image Reader-F1 / Color Image Reader-E1 / Dupiex Color Image Reader-G1 / iR C5185N / / iR C5185i PRT /

1) Remove the rear upper cover. (page 12-16) Reference[Removing the Rear Upper Cover]
2) Remove the rear left cover (upper). (page 12-17) Reference[Removing the Rear Left Cover (Upper)]
3) Remove the left rear cover (upper). (page 12-15) Reference[Removing the Left Rear Cover (Upper)]

5.7.11.2 Removing the HDD

CLC5151 / / / CLC4040 / / / iR C4580i / / / iR C4080i / / / / Color Image Reader-F1 / Color Image Reader-E1 / Dupiex Color Image Reader-G1 / iR C5185N / / iR C5185i PRT /

1) Remove the main controller box cover [3].
   - 1 harness (free from wire saddle [1])
   - 15 screws [2]

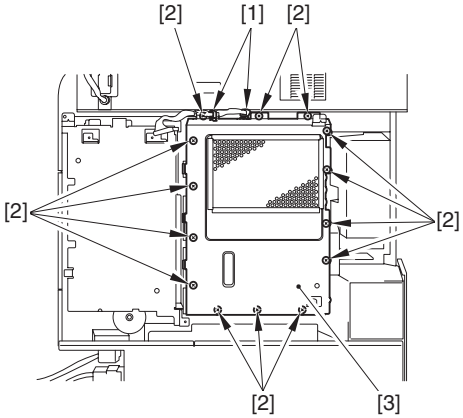

F-5-82

Points to Note When Removing the HDD
Take care to avoid static damage when removing the HDD.
It is also important to protect the HDD from impact.

2) Remove the HDD [4].
   - 1 clamp [1]
   - 2 connectors [2]
   - 6 screws [3]

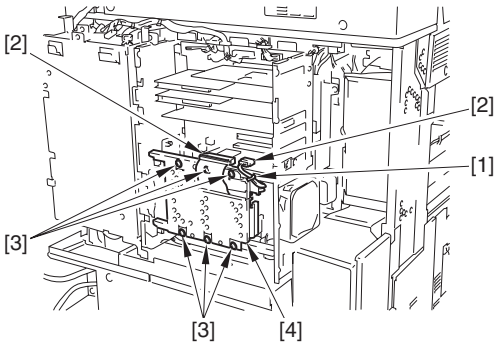

F-5-83

5.7.11.3 When Replacing the HDD

CLC5151 / / / CLC4040 / / / iR C4580i / / / iR C4080i / / / / Color Image Reader-F1 / Color Image Reader-E1 / Dupiex Color Image Reader-G1 / iR C5185N / / iR C5185i PRT /

1. If NetSpot Accountant (NSA) Is Not Used
1) Formatting the HDD
   While holding down the 2 and 8 keys on the control panel, turn on the power to start up. Using the HD formatting function of the SST, format all partitions.
2) Downloading the Software
   Using the SST, download the various software (system, language, RUI). The machine will take about 10 min to start up after downloading.

2. If NetSpot Accountant (NSA) Is Used Together with a Card Reader
The card ID used by the NSA resides on the HDD. If you have replaced the

HDD, therefore, you will have to newly download the card data from NSA to enable the statistical operations of NSA. After going through steps 1) and 2) above, perform the following:

1) Set the following in service mode:
   Select the following : COPIER >FUNCTION >INSTALL >CARD; then, enter the number of the first card, and press [OK].
   (For instance, if cards No. 1 through No. 1000 are used for group control, enter '1')
2) Turn off and then on the machine; when the machine has started up, perform the following in user mode:
   Select the following : user mode >system control settings >group ID control >count control; then, check that IDs from 00000001 through 00001000 have been prepared.
   Select the following : user mode >system control settings >network settings >TCP/IP settings >IP address; then, set up 'IP address' 'gateway address' and 'subnet mask'
   Select the following : user mode >system administrator setup; then, fill in 'system control group ID' and 'system control ID No.' thereafter, turn off and then on the machine.
   If you leave out 'system control group ID' and 'system control ID No.' the service engineer will not be able to 'register card to device' as part of setup work for NSA.
3) With the machine in standby state, download the card ID to be used from NSA.
4) When the card data has been downloaded from NSA, check that the ID data has correctly been downloaded on the screen brought up by making the following selections:
   user mode>system control settings>group ID control
   (Only the downloaded ID data must be indicated.)
5) Make copies using a user card registered with NSA, and check that statistical operations are made for the device in question.

5.7.12 Controller Fan

5.7.12.1 Preparation for Removing the Controller Fan

CLC5151 / / / CLC4040 / / / iR C4580i / / / iR C4080i / / / / Color Image Reader-F1 / Color Image Reader-E1 / Dupiex Color Image Reader-G1 / iR C5185N / / iR C5185i PRT /

1) Remove the rear upper cover.(page 12-16)Reference[Removing the Rear Upper Cover]
2) Remove the rear left cover (upper).(page 12-17)Reference[Removing the Rear Left Cover (Upper)]
3) Remove the left rear cover (upper).(page 12-15)Reference[Removing the Left Rear Cover (Upper)]

5.7.12.2 Removing the Controller Fan

CLC5151 / / / CLC4040 / / / iR C4580i / / / iR C4080i / / / / Color Image Reader-F1 / Color Image Reader-E1 / Dupiex Color Image Reader-G1 / iR C5185N / / iR C5185i PRT /

1) Remove the controller fan [3].
   - 1 connector [1]
   - 2 screws [2]

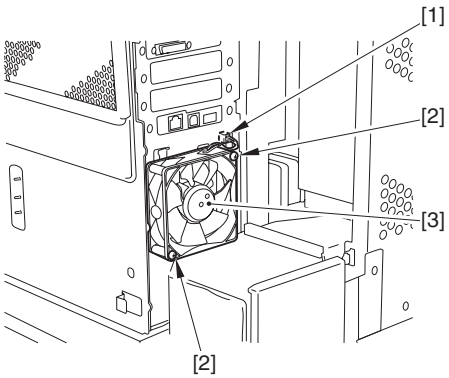

F-5-84

Chapter 6 Original Exposure System

Contents

6.1 Construction 6-1
6.1.1 Specifications, Control Mechanisms, and Functions 6-1
6.1.2 Major Components 6-1
6.1.3 Construction of the Control System 6-5
6.1.4 Reader Controller PCB 6-7
6.2 Basic Sequence 6-7
6.2.1 Basic Sequence of Operation at Power-On 6-7
6.2.2 Basic Sequence of Operation in Response to a Press on the Start Key 6-8
6.3 Various Control Mechanisms 6-9
6.3.1 Controlling the Scanner Drive System 6-9
6.3.1.1 Overview 6-9
6.3.1.2 Controlling the Scanner Motor 6-10
6.3.2 Enlargement/Reduction 6-11
6.3.2.1 Changing the Magnification in Main Scanning Direction 6-11
6.3.2.2 Changing the Magnification in Sub Scanning Direction 6-11
6.3.3 Controlling the Scanning Lamp 6-11
6.3.3.1 Overview 6-11
6.3.3.2 Scanning Lamp 6-12
6.3.3.3 Turning On and Off the Scanning Lamp 6-12
6.3.4 Detecting the Size of Originals 6-12
6.3.4.1 Identifying the Size of Originals 6-12
6.3.4.2 Points of Measurement Used for Original Size Identification 6-12
6.3.4.3 Overview of Operation 6-14
6.3.5 Dirt Sensor Control 6-15
6.3.5.1 Stream Reading Dust Detection Control 6-15
6.3.5.2 White Plate Dust Detection Control 6-16
6.3.6 Image Processing 6-17
6.3.6.1 Overview 6-17
6.3.6.2 CCD Drive 6-18
6.3.6.3 CCD Gain Correction, Offset Correction 6-19
6.3.6.4 CCD Output A/D Conversion 6-19
6.3.6.5 Outline of Shading Correction 6-19
6.3.6.6 Shading Adjustment 6-19
6.3.6.7 Shading Correction 6-19
6.4 Parts Replacement Procedure 6-20
6.4.1 Copyboard Glass 6-20
6.4.1.1 Removing the Copyboard Glass 6-20
6.4.2 Exposure Lamp 6-20
6.4.2.1 Preparation for Removing the Scanning Lamp 6-20
6.4.2.2 Removing the Scanning Lamp 6-20
6.4.2.3 After Replacing the Scanning Lanp 6-21
6.4.3 Reader Controller PCB 6-21
6.4.3.1 Preparation for Removing the Reader Controller PCB 6-21
6.4.3.2 Removing the Reader Controller PCB 6-21
6.4.3.3 After Replacing the Reader Controller PCB 6-22
6.4.3.4 After Replacing the Reader Controller PCB 6-22
6.4.4 Interface PCB 6-23
6.4.4.1 Preparation for Removing the Interface PCB 6-23
6.4.4.2 Removing the Interface PCB 6-23
6.4.4.3 Removing the Interface PCB 6-23
6.4.4.4 Points to Note When Attaching the Interface PCB 6-24
6.4.5 Inverter PCB 6-24
6.4.5.1 Preparation for Removing the Inverter PCB 6-24

6.4.5.2 Removing the Inverter PCB 6-24
6.4.5.3 After Replacing the Inverter PCB 6-25
6.4.6 CCD Unit 6-25
6.4.6.1 Preparation for Removing the CCD Unit 6-25
6.4.6.2 Removing the CCD Unit 6-25
6.4.6.3 After Replacing the CCD Unit 6-25
6.4.6.4 After Replacing the CCD Unit 6-26
6.4.7 Scanner Motor 6-26
6.4.7.1 Preparation for Removing the Scanner Motor 6-26
6.4.7.2 Removing the Scanner Motor 6-26
6.4.7.3 Attaching the Scanner Motor 6-26
6.4.8 ADF Open/Close Sensor 6-27
6.4.8.1 Preparation for Removing the ADF Open /Close Sensor 6-27
6.4.8.2 Removing the ADF Open/Closed Sensor 6-27
6.4.9 Scanner HP Sensor 6-27
6.4.9.1 Preparation for Removing the Mirror Base Home Position Sensor 6-27
6.4.9.2 Removing the Mirror Base Home Position Sensor 6-27
6.4.10 Original Sensor 6-28
6.4.10.1 Preparation for Removing the Original Size Sensor 6-28
6.4.10.2 Removing the Original Size Sensor 6-28
6.4.11 Cooling Fan 6-28
6.4.11.1 Preparation for Removing the Cooling Fan 6-28
6.4.11.2 Removing the Cooling Fan 6-28
6.4.12 Scanner Drive Cable 6-29
6.4.12.1 Preparation for Removing the Scanner Drive Cable 6-29
6.4.12.2 Removing the Scanner Drive Cable 6-29
6.4.12.3 Attaching the Scanner Drive Cable 6-32
6.4.12.4 Adjusting the Position of the No. 1/No. 2 Mirror Base 6-33

6.1 Construction

6.1.1 Specifications, Control Mechanisms, and Functions

/ / / / iR C4580i / / / iR C4080i / / / / iR C5185N / / iR C5185i PRT /

The following shows major specifications, control mechanisms, and functions of the machine's original exposure system:

T-6-1

Item	Description
Scanning lamp	xenon lamp (white)
scanning	book mode: by moving optical unit
	ADF mode: by moving original
Reading resolution	600 (main scanning) x 600 (sub scanning) dpi
Halftone	256 gradations
Scanner position detection	scanner HP sensor (PS501)
Lens	single-focus, fixed
Magnification	50%, 100% or digital variable reproduction ratio mode (25 to 400 %)
	50%, 100% or digital variable reproduction ratio mode (25 to 400 %)
	main scanning direction: image processing by controller block
	sub scanning direction: image processing by controller block
Scanner drive control	No. 1/No. 2 mirror base: by pulse motor (M501)
Original scanning lamp	[1]activation control by inverter circuit
	[2]error detection control
Original size detection	[1]book mode
	sub scanning direction: by reflection type sensor
	main scanning direction: by CCD
	[2]w/ ADF in use
	main scanning direction: by slide guide in ADF
	sub scanning direction: by photo sensor in ADF

6.1.2 Major Components

/ / / / iR C4580i / / / iR C4080i / / / / iR C5185N / / iR C5185i PRT /

The original exposure system consists of the following major components:
[For iR C5185]

T-6-2

Parts	Code	Functions/Specifications
Scanning lamp	LA1	Xenon tube: Illumination at 77,500 lx
Optical motor	M501	2-phase pulse motor: Pulse control
Reader cooling fan	FM501	Cooling of the reader
ADF open/close sensor 1	PS501	Detects the state (open/closed) of the ADF; at 5 deg
Optical HP sensor	PS502	Detection of the optical home position
ADF open/close sensor 2	PS503	Detects the state (open/closed) of the ADF (detects timing of size detection at 25 deg)
Document size sensor (AB-size group)	---	Detection of the size in a sub scanning direction (AB-size group)
Document size sensor (INCH-size group)	---	Detection of the size in a sub scanning direction (INCH-size group)
Mirror	---	Mirrors 1, 2, and 3
Interface PCB	---	Control of the motors/fans, Connection between the printer/and ADF
Memory PCB	---	Sending/receiving of data between the main controller/reader controller and ADF
Inverter PCB	---	Driving of the scanning lamp
CCD unit	---	Image scanning, Analog image processing
Reader controller PCB	---	Control of the entire reader, Digital image processing

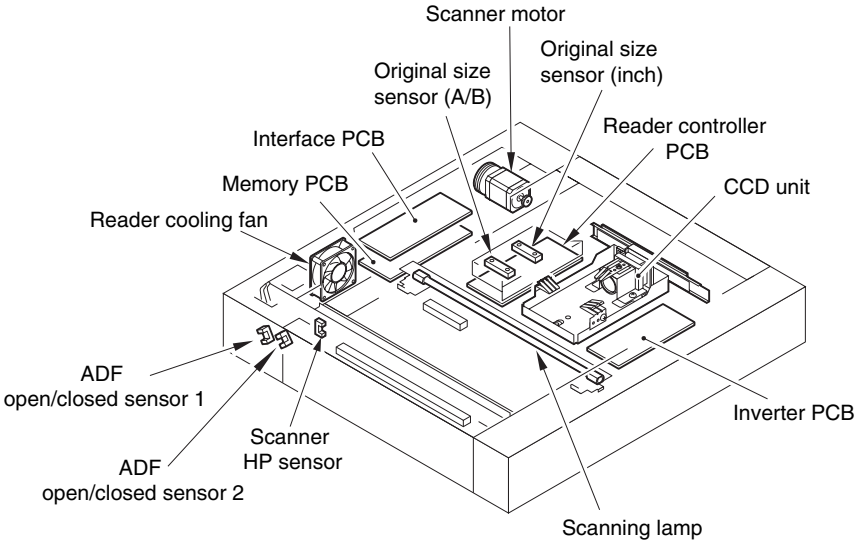
Scanner motor
Original size sensor (inch)
Original size sensor (A/B)
Reader controller PCB
Interface PCB
Memory PCB
CCD unit
Reader cooling fan
ADF open/closed sensor 1
Inverter PCB
Scanner HP sensor
ADF open/closed sensor 2
Scanning lamp

F-6-1

[For iR C5180/4580/3880]

T-6-3

Item	NotationDescription	Description
Scanning lamp	LA1	xenon lamp: 77.500 lx
Scanner motor	M501	2-phase pulse motor: pulse control
Reader Cooling fan	FM13	cools the reader assembly.
Scanner HP sensor	PS501	detects the home position of the scanner.
ADF open/closed sensor 1	PS502	detects the state (open/closed) of the ADF using the ADF open/closed sensor (5 deg).
ADF open/closed sensor 2	PS503	detects the size with the ADF at 25 deg or less.
Original size sensor (AB-configuration)	---	detects the size in sub scanning direction (AB-configuration)
Original size sensor (inch-configuration)	---	detects the size in sub scanning direction (inch-configuration)
Mirror	---	No. 1, No. 2, No. 3, mirror

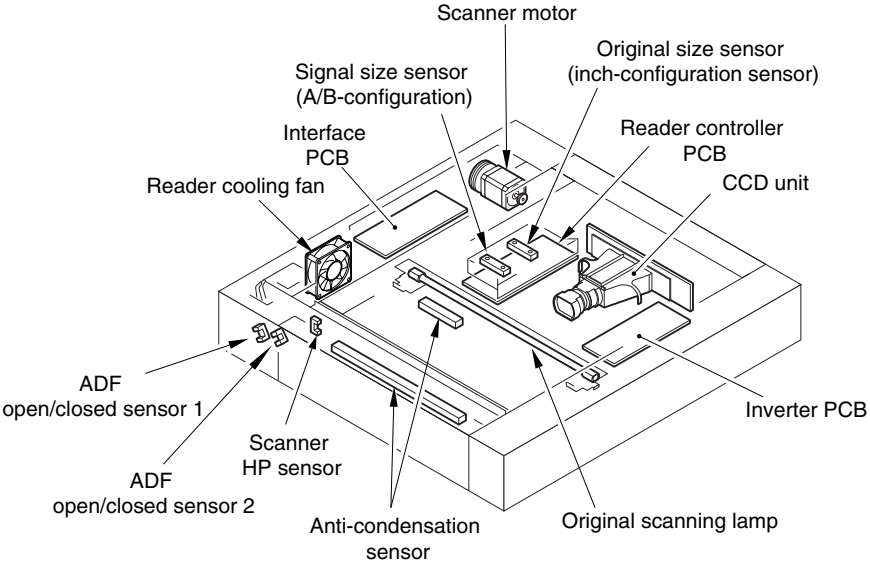

F-6-2

[Common to all models]

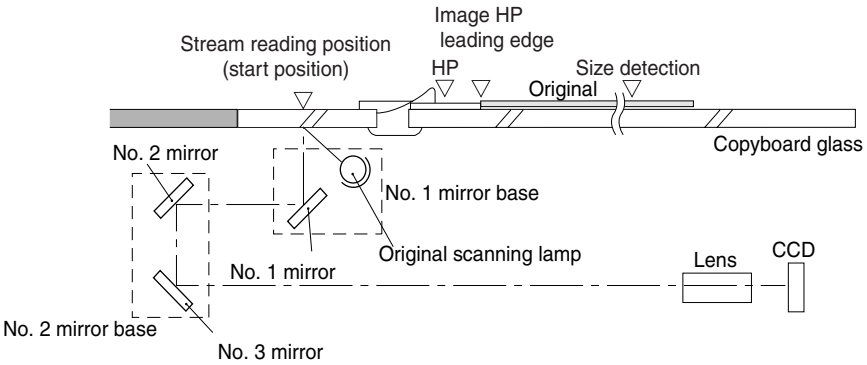

F-6-3

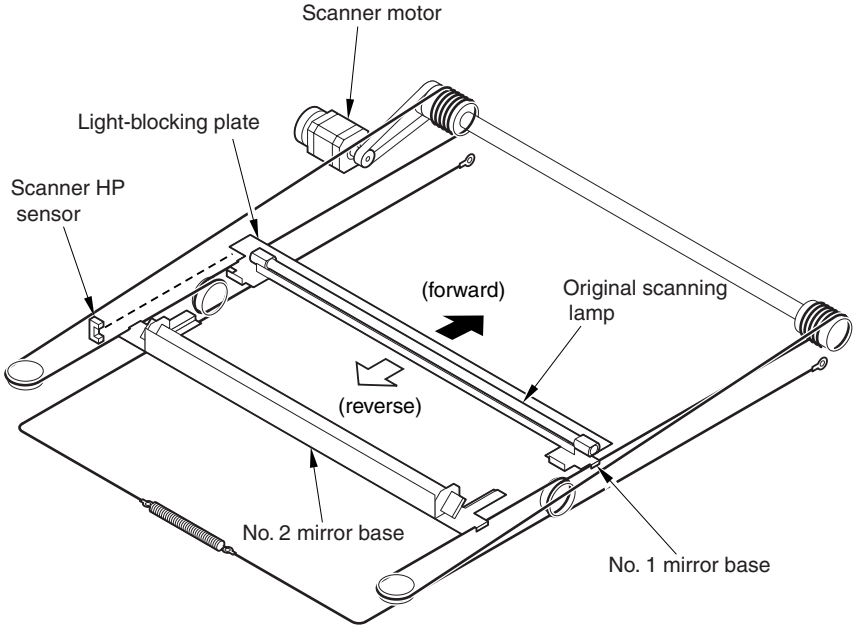

F-6-4

6.1.3 Construction of the Control System

/ / / / iR C4580i / / / iR C4080i / / / / iR C5185N / / iR C5185i PRT /

The following shows the construction of the control system of the original exposure system:
[For iR C5185]

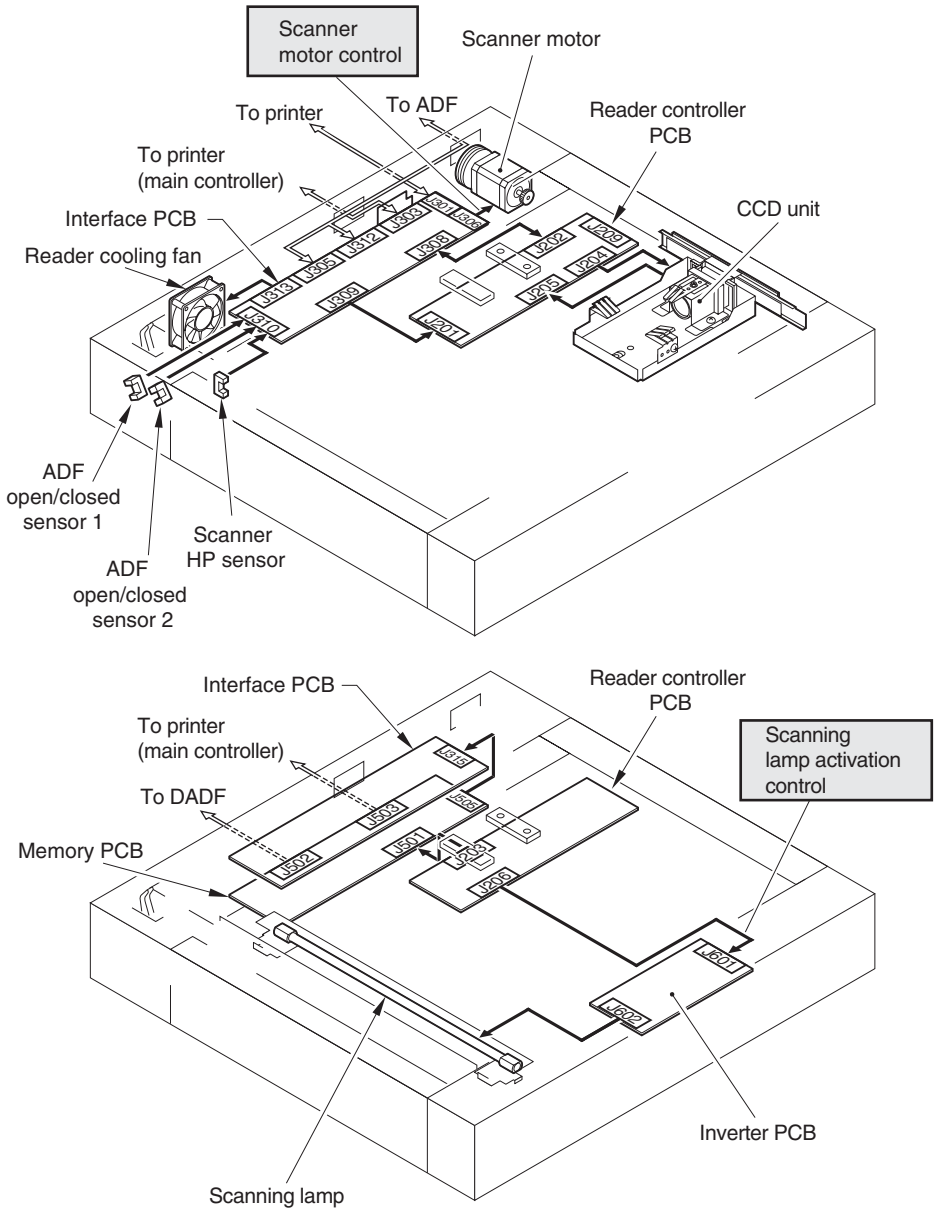

F-6-5

[For iR C5180/4580/3880]

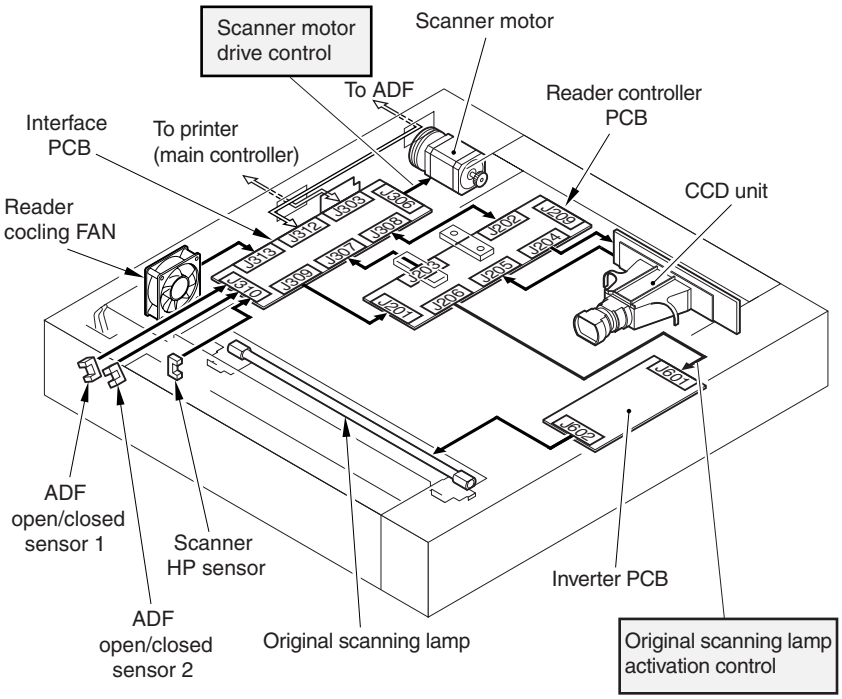

F-6-6

6.1.4 Reader Controller PCB

/ / / / iR C4580i / / / iR C4080i / / / / iR C5185N / / iR C5185i PRT /

The following shows the functional construction of the reader controller PCB:

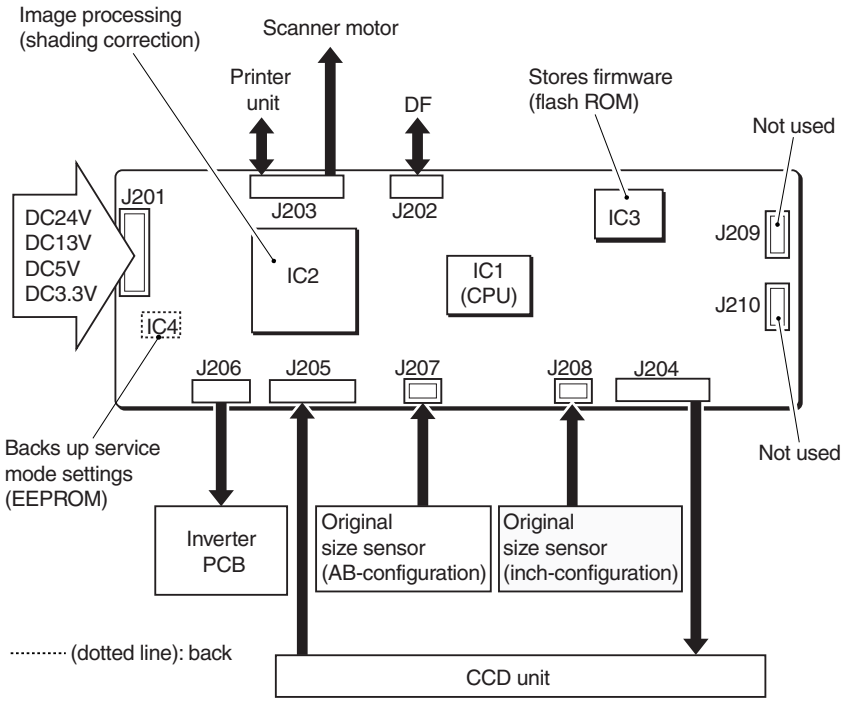

F-6-7

Jack No	Description
J201	used for the power from the machine (printer unit).
J202	For communication with ADF (for communication with sensor signal input, fan control, scanner motor control, and controller)
J203	used for communications with the printer unit (connection with the scanner motor). used for communications with the ADF (image signal input).
J204	used for connection with the CCD unit.
J205	used for connection with the CCD unit.
J206	used for connection with the inverter PCB.
J207	used for connection with the original size sensor (AB-configuration).
J208	used for connection with the original size sensor (inch-configuration).
J209	not used
J210	not used

T-6-4

IC	Description
IC1	CPU (stores boot program)
IC2	ASCI (built-in RAM)
IC3	flash RAM (stores firmware)
IC4	EEPROM (backs up service mode settings)

6.2 Basic Sequence

6.2.1 Basic Sequence of Operation at Power-On

/ / / / iR C4580i / / / iR C4080i / / / / iR C5185N / / iR C5185i PRT /

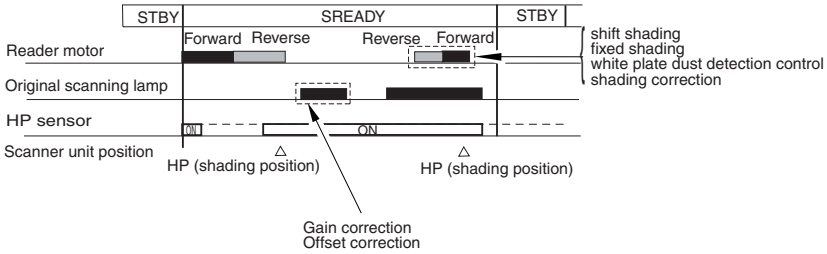

F-6-8

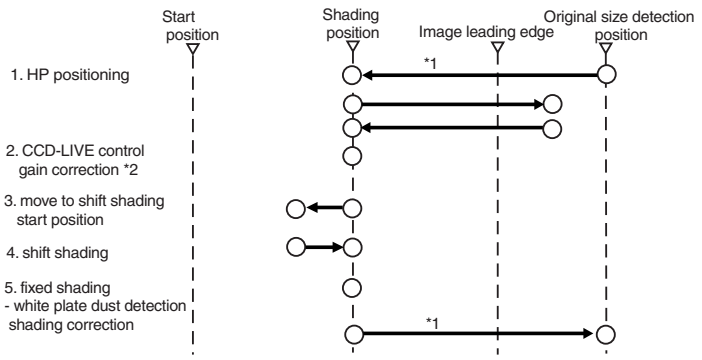

*1: shifts only if the copyboard (ADF) is open.
*2: controls by turning on/off the power of the CCD and the circuitry around it for power saving and for protection against overheating.

F-6-9

6.2.2 Basic Sequence of Operation in Response to a Press on the Start Key

/ / / / iR C4580i / / / iR C4080i / / / / iR C5185N / / iR C5185i PRT /

1. Basic Sequence of Operation in Response to a Press on the Start Key (book mode; 1 original)

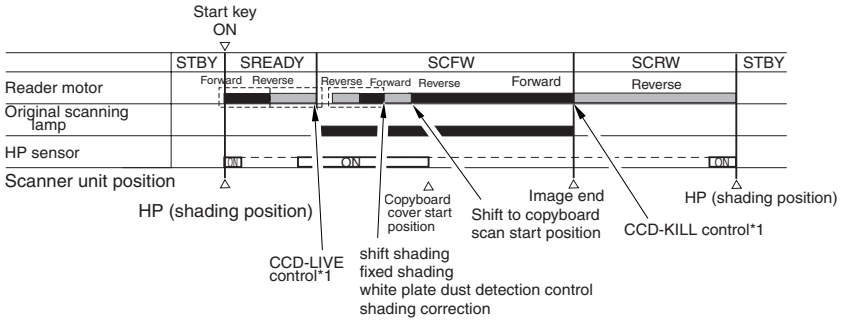

*1: controls by turning on/off the power of the CCD and the circuitry around it for power saving and for protection against overheating.

F-6-10

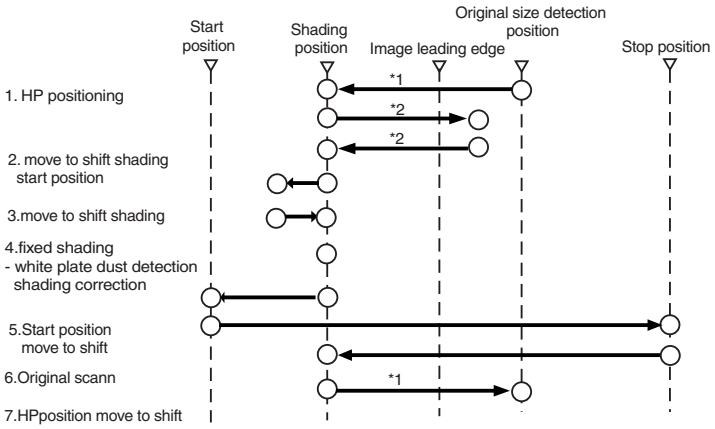

*1: shifts only if the copyboard cover (ADF) is open.
*2: executed only if 1 min or more (power off) has passed from the previous session.

F-6-11

2. Basic Sequence of Operation in Response to a Press on the Start Key (ADF mode; 1 original)

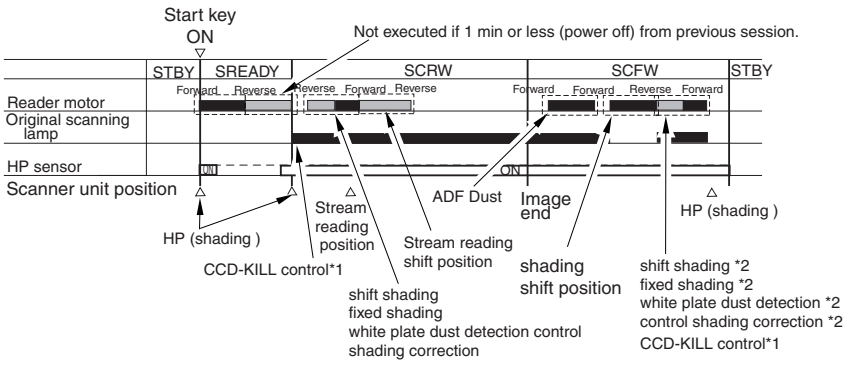

*1: controls by turning on/off the power of the CCD and the circuitry around it for power saving and for protection against overheating.

*2: Not performed for iR C5185.

F-6-12

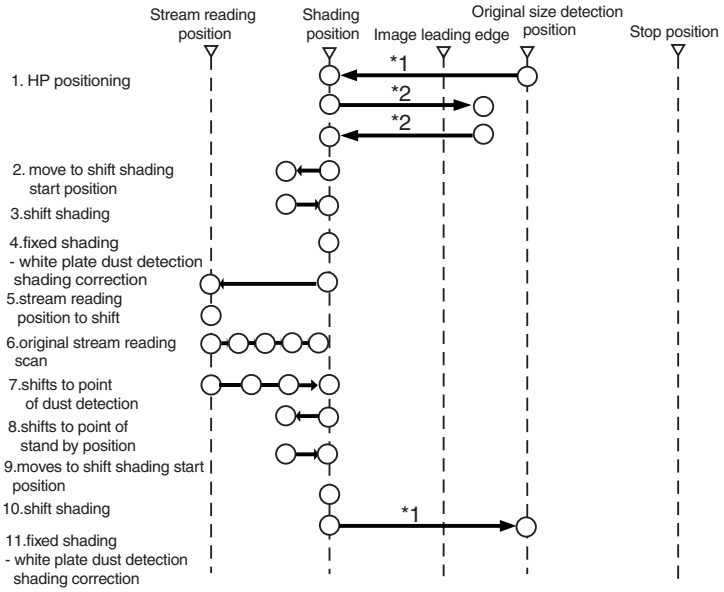

*1: shifts only if the copyboard cover (ADF) is open

*2: executed only if 1 min (power ON) or more has passed from the previous session.

F-6-13

6.3 Various Control Mechanisms

6.3.1 Controlling the Scanner Drive System

6.3.1.1 Overview

/ / / / iR C4580i / / / iR C4080i / / / / iR C5185N / / iR C5185i PRT /

The following shows the arrangement of the components associated with the drive of the scanner:

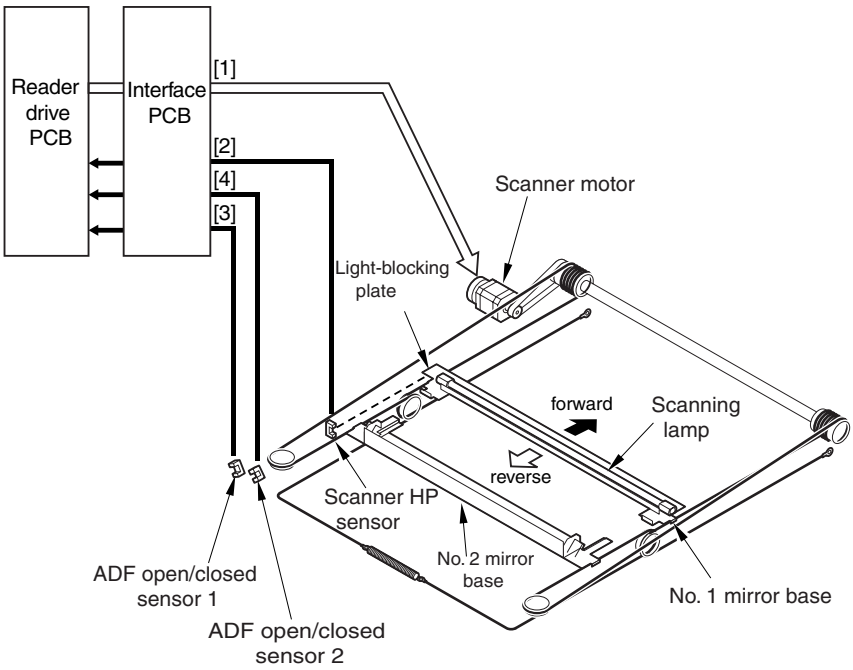

F-6-14

[1] Scanner Motor M501 Drive Signal
controls the activation/deactivation of the motor and the direction and speed of the motor.
[2] Scanner HP Sensor PS501 Detection Signal
used in reference to the detection of the No. 1 mirror base at its home position.
[3] ADF Open/Closed Sensor 1 PS502 Detection Signal
used in reference to the detection of the state (open/closed) of the ADF.
[4] ADF Open/Closed Sensor 2 PS503 Detection Signal
used in reference to the detection of the state (open/closed) of the ADF.

6.3.1.2 Controlling the Scanner Motor

/ / / / iR C4580i / / / iR C4080i / / / / iR C5185N / / iR C5185i PRT /

The following shows the construction of the mechanisms used to control the scanner motor.
The motor driver on the interface PCB controls the rotation (activation/deactivation) of the scanner motor and its direction and speed of rotation according to the signals from the CPU.

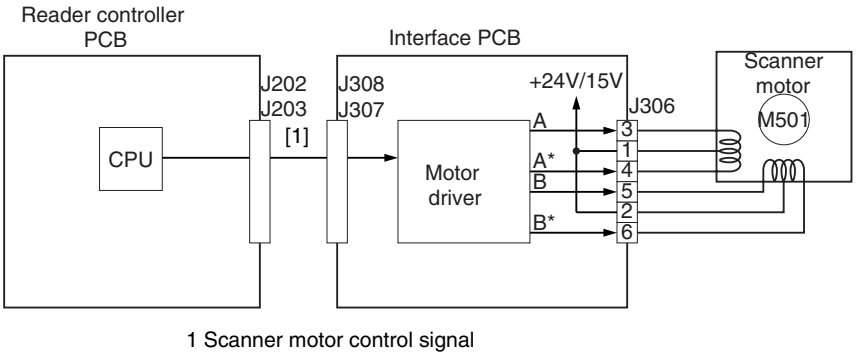

F-6-15

- Moving the Scanner in Reverse After an Image Scan
After an image scan, the No. 1 mirror base is moved in reverse to shading position at 234 mm/sec regardless of the selected color mode.

- Moving the Scanner Forward for an Image Scan
When making an image scan, the No. 1 mirror base unit is moved by controlling the motor as follows:

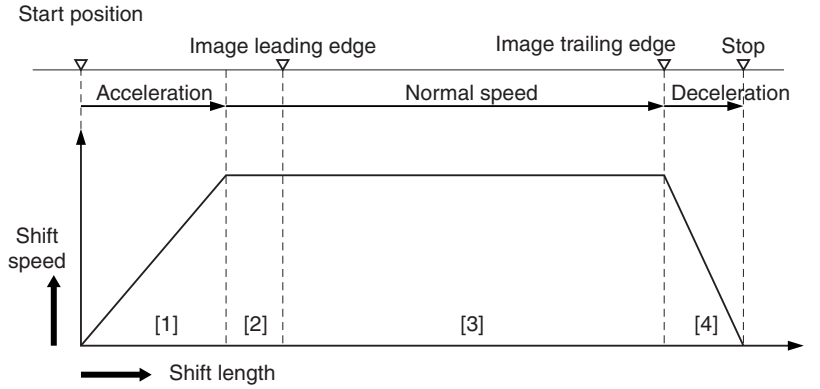

1. Acceleration Zone: accelerates to suit the selected mode
2. Approach Zone: moves for speed stabilization.
3. Image Read Zone: reads the image at a specific speed.
(if black-and-white/SEND mode, twice as fast as in full-color mode)
4. Deceleration Zone: past the image trailing edge, immediately decelerates and stops.

F-6-16

The machine uses the following scanning speeds to suit different modes;

T-6-5

Function	Mode	Scanning speed
Copier	black-and-white	234 mm/sec
	full-color	234 mm/sec
SEND	black-and-white	468 mm/sec
	full-color	234 mm/sec(600dpi)
		468 mm/sec(300dpi)

Error Codes:
E202 (HP detection error)
-0001: The Mirror 1 moves forward but does not reach the HP sensor within a specified period.
-0002: The Mirror 1 moves backward but does not reach the HP sensor within a specified period.

Service Mode:
COPIER>ADJUST>ADJ-XY>ADJ-X (Adjustment of the optical image leading edge position)
Entering the value adjusts the image leading edge position.
Setting range: 1 to 100 (When the value is changed by 10, the position moves by 1mm.)

COPIER>ADJUST>ADJ-XY>ADJ-S (Optical home position)
Do not change the value.

6.3.2 Enlargement/Reduction

6.3.2.1 Changing the Magnification in Main Scanning Direction

/ / / / iR C4580i / / / iR C4080i / / / / iR C5185N / / iR C5185i PRT /

For main scanning direction in both copyboard and ADF modes, the image is read at 100%, and the magnification is varied by the main controller block.

6.3.2.2 Changing the Magnification in Sub Scanning Direction

/ / / / iR C4580i / / / iR C4080i / / / / iR C5185N / / iR C5185i PRT /

For sub scanning direction in both copyboard and ADF modes, the image is read at 100%, and the magnification is changed by the main controller block.
In SEND mode, the reading size is switched between 100% and 50% depending on the selected resolution.

6.3.3 Controlling the Scanning Lamp

6.3.3.1 Overview

/ / / / iR C4580i / / / iR C4080i / / / / iR C5185N / / iR C5185i PRT /

The scanning lamp is controlled for the following, with associated control mechanisms operating as follows:

1. Turning On and Off the Scanning Lamp
The scanning lamp is turned on or off by the drive signal (XE-ON) generated by the CPU of the reader controller PCB. When the signal is generated, the inverter PCB generates high-frequency high voltage using the activation control circuit from the drive voltage (+24V) supplied by the reader controller PCB, thus turning on the scanning lamp.

2. Detection Error Activation
The machine detects a fault in the intensity of the lamp as an activation error caused by a fault in the intensity of the lamp at time of initial activation (shading correction).

ERROR CODE:
E225
-0001: At shading, the detected light volume does not reach the standard value.

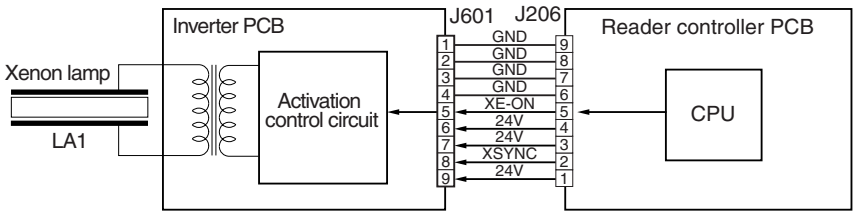

F-6-17

6.3.3.2 Scanning Lamp

/ / / / iR C4580i / / / iR C4080i / / / / iR C5185N / / iR C5185i PRT /

The machine's scanning lamp is a xenon lamp, which uses xenon gas sealed inside. On the outside of the glass tube, 2 electrodes are arranged in parallel with the tube; the inside of the tube, on the other hand, is coated with fluorescent material. When a high-frequency high voltage is applied to the electrodes, the gas inside the tube starts to discharge, causing the fluorescent material to emit light.

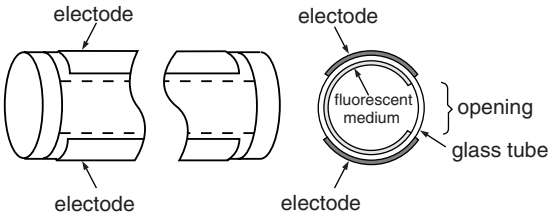

F-6-18

6.3.3.3 Turning On and Off the Scanning Lamp

/ / / / iR C4580i / / / iR C4080i / / / / iR C5185N / / iR C5185i PRT /

The scanning lamp is turned on and off by the drive signal (LAMP_ON) generated by the CPU of the reader control PCB. When the signal is generated, the inverter PCB generates high-frequency high voltage in the activation control circuit using the drive voltage (+24 V) supplied by the reader controller PCB to turn on the xenon lamp.

ä÷òAÉGÉâÅ[ÉRÅ[ÉhÅF
Relevant Error Code:
E220 (Lamp ON fault when the power is ON.)
Inverter PCB fault, reader controller PCB fault, or scanning lamp fault.

6.3.4 Detecting the Size of Originals

6.3.4.1 Identifying the Size of Originals

/ / / / iR C4580i / / / iR C4080i / / / / iR C5185N / / iR C5185i PRT /

The machine identifies the size of an original based on combinations of measurements taken of the light reflected by specific points (using a reflection type sensor and CCD). In consideration of possible displacement of the original when the ADF is closed, the machine uses a 2-point CCD check.
- Main Scanning Direction:
  by CCD (AB-configuration; 8-point measurement; inch-configuration, 6-point measurement)
- Sub Scanning Direction:
  reflection type photo sensor (AB-configuration: 1-point measurement; inch-configuration: 1-point measurement)

Specifically, the following takes place:
1) External Light Search (main scanning direction only)
   While keeping the scanning lamp off, the machine measures the level of the CCD at specific points in main scanning direction.
2) Sensor Output Level Detection
   The machine turns on the scanning lamp, and measures the sensor output at specific points. It then checks combinations of these measurement to find the size of the original.

6.3.4.2 Points of Measurement Used for Original Size Identification

/ / / / iR C4580i / / / iR C4080i / / / / iR C5185N / / iR C5185i PRT /

For main scanning direction, the machine moves the No. 1 mirror base to the following points in relation to the location of the original to measure the levels of the CCD. For sub scanning direction, the machine checks the states of the sensors arranged as follows:

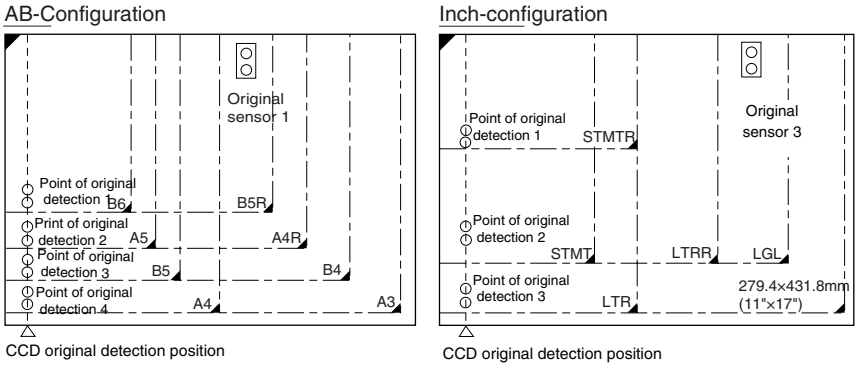

F-6-19

To raise the accuracy of original size identification (as when the original is displaced while the ADF is closed), the machine makes use of the following 2 types of mechanisms:

1. Presence/Absence of an Original at 2 Points (for each point of measurement)

For each point of measurement in main scanning direction, the machine checks the presence/absence of an original with reference to the CCD output at 2 points near the point of measurement.

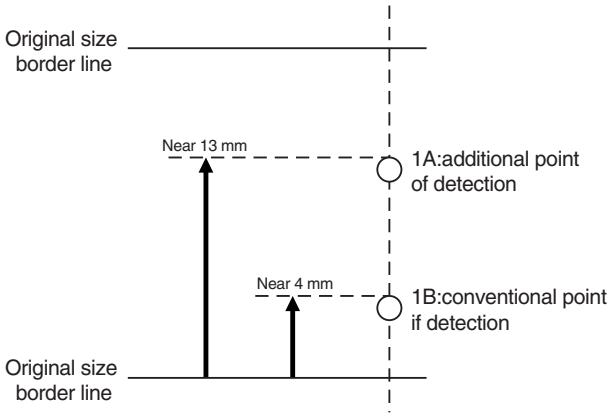

F-6-20

T-6-6

Result of measurement		Result of detection
A	B	
no	no	original absent
yes	yes	original present
no	yes	original present
yes	yes	original present

Note:
Changes in the Signal (from ADF open to close)
change: no
other: yes
The machine uses OR combinations for identification.

2. Priority on the Front Sensors

When checking the measurements for main scanning direction, if the absence of an original is indicated at the rear while the presence of an original is indicated at the front, the machine will give priority to the indication at the front (i.e., presence of an original).

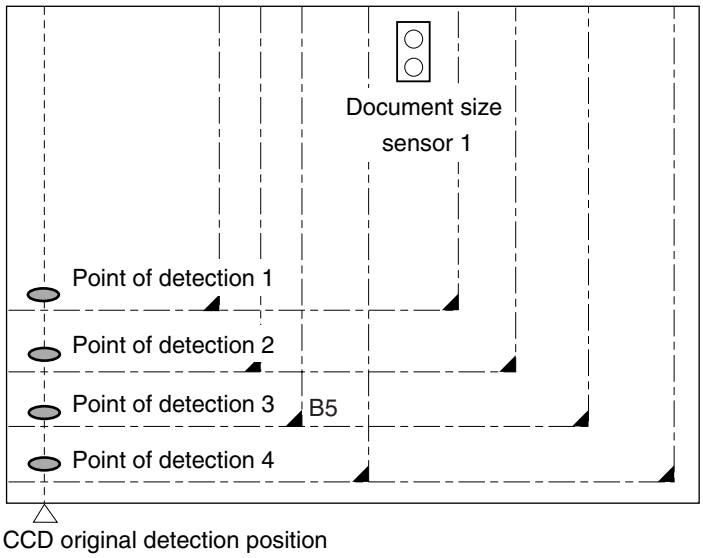

F-6-21

T-6-7

Point of detection	yes/no	Size identified
1	yes	yes
2	no	yes
3	yes	yes
4	no	no
Result		B5

Note:
Change in the Signal (ADF open to closed)
change: no
other: yes

6.3.4.3 Overview of Operation

/ / / / iR C4580i / / / iR C4080i / / / / iR C5185N / / iR C5185i PRT /

1) Standby
No.1 mirror base: shading position
xenon lamp: off
original sensor: off

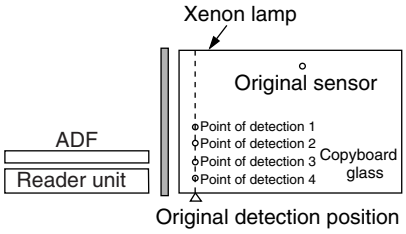

F-6-22

2) ADF Opened
No.1 mirror base: moves to original detection position
xenon tube: off
original sensor: off

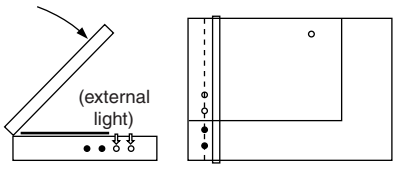

F-6-23

3) ADF Closed
3-1) When the ADF is brought to 25 deg, the area covered by an original will be blocked from external light; therefore, the machine will assume the absence of an original at points that detect external light (external search).
The ADF open/closed sensor 2 identifies the condition as being "closed," and the machine starts original size identification.
At this position, B5, B4, A4, and A3 are excluded from the list of possible sizes.
3-2) The machine executes an external light search: for main scanning direction, it turns on the xenon lamp to check its light (reflected) at 4 points using the CCD; for the sub scanning direction, the machine checks the state of the original sensor.

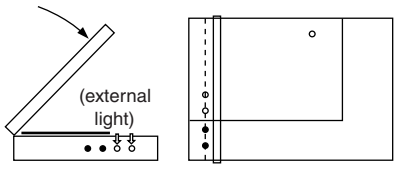

F-6-24

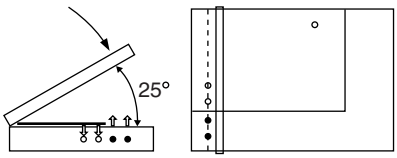

F-6-25

4) ADF Cover Fully Closed (5 deg or less).
The machine checks for a change in the output levels of the sensors for 2 sec after the ADF open/closed sensor has identified the ADF as being "closed"; the machine assumes the absence of an original at points without a change.
The machine then identifies the size of the original based on the combination of changes at 5 points.

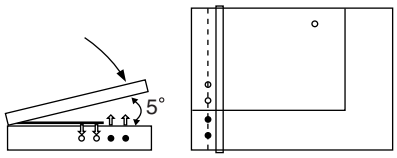

F-6-26

5) Standby (in wait for a press on the Start key)
No. 1 mirror base: at point of original detection
xenon lamp: off
original sensor: off

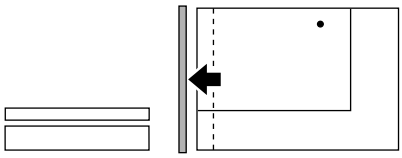

F-6-27

AB-Configuration

Original size	Point of CCD detection 1 A	1 B	2 A	2 B	3 A	3 B	4 A	4 B	Original sensor 1	
A3	○	○	○	○	○	○	○	○	○	○
B4	○	○	○	○	○	○	●	●	○	○
A4R	○	○	○	○	●	●	●	●	○	○
A4	○	○	○	○	○	○	○	○	●	●
B5	○	○	○	○	○	○	●	●	●	●
B5R	○	○	●	●	●	●	●	●	○	○
A5	○	○	○	○	●	●	●	●	●	●
B6	○	○	●	●	●	●	●	●	●	●
absent	●	●	●	●	●	●	●	●	●	●

Inch-configuration

Original size	Point of CCD detection 1 A	1 B	2 A	2 B	3 A	3 B	Original sensor 3	
11"x17"	○	○	○	○	○	○	○	○
LGL	○	○	○	○	●	●	○	○
LTRR	○	○	○	○	●	●	●	●
LTR	○	○	○	○	○	○	●	●
STMTR	○	○	●	●	●	●	●	●
STMT	○	○	○	○	●	●	●	●
absent	●	●	●	●	●	●	●	●

○:unchanged ●:changed

F-6-28

6.3.5 Dirt Sensor Control

6.3.5.1 Stream Reading Dust Detection Control

/ / / / iR C4580i / / / iR C4080i / / / / iR C5185N / / iR C5185i PRT /

The machine checks the stream reading glass and the ADF platen roller for the presence/absent of dust. It then changes the point of reading or executes image correction depending on the result of detection, thereby avoiding reproduction of dust particles in its output images. The machine executes the detection mechanism only when the ADF is used:

1. Timing of Detection
(1) at the end of a job
(2) between sheets (for every sheet read)

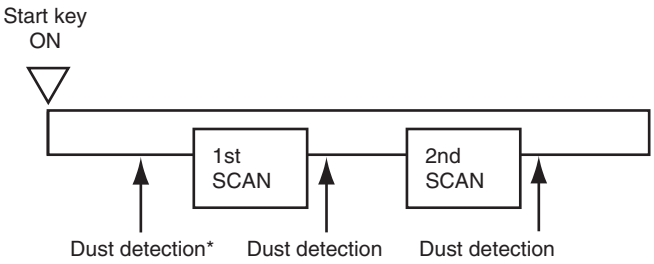

F-6-29

*Executed only if dust has been detected at all points, i.e., A, B, C, D, and E in the previous job. If so, the machine uses the point with least dust as the reading position and executes dust correction before starting reading operation.

2. Particulars of Control

(1) at the end of a job (makes a change to the point of stream reading dust reading position)

The machine checks the light reflected by the platen roller at the reading position to see if there is dust, moving to the next point if it finds dust (from A to B, C, D, and then to E; 5 points max.). It uses the first point that is free of dust as the reading point for the next job.

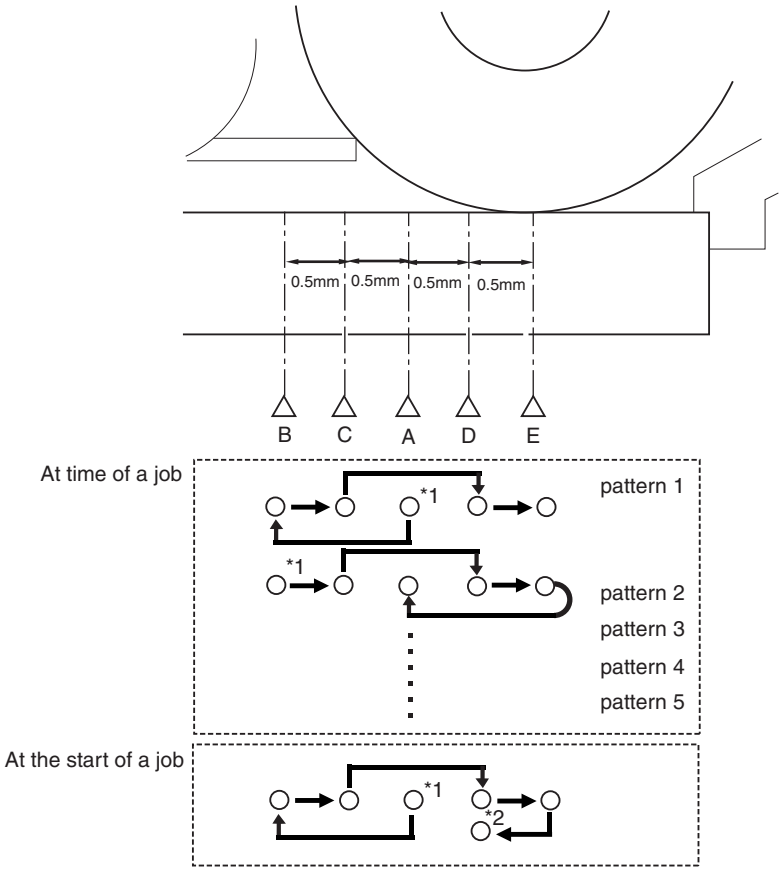

F-6-30

If it finds dust at all 5 points (A, B, C, D, E), then it will indicate an alarm when an original is placed in the ADF, prompting the user for cleaning. To reset, press [close].

When it starts a job, it will run the session once again and use a point with no dust or little dust as the reading position.

*1: reading position at the end of the previous job.

*2: point with no dust or little dust.

T-6-8

A	reading reference position (1.0 mm to the left from the center of the platen roller)
B	1.0 mm to the left from the reference position
C	0.5 mm to the left from the reference position
D	0.5 mm to the right from the reference position
E	1.0 mm to the right from the reference position (center of the platen roller)

(2) between sheets (dust correction)

The machine does not move the xenon lamp for dust detection.

If dust is detected between sheets, the machine executes dust correction by making correction on the pixels on both sides of the area where dust is found.

MEMO:

COPIER > OPTION > BODY > DFDST-L1 (level 1)
(adjustment of dust detection level between sheets)
COPIER > OPTION > BODY > DFDST-L2 (level 1)
(adjustment of dust detection at job end)

6.3.5.2 White Plate Dust Detection Control

/ / / / iR C4580i / / / iR C4080i / / / / iR C5185N / / iR C5185i PRT /

The machine uses a fan to cool the inside of the reader unit to prevent overheating otherwise caused by the xenon lamp in stream reading mode. The fact, however, can cause stray dust inside the reader unit to collect on the white plate, showing up as lines in output images.

1. Timing of Control

(1) Before a Job
- (a) white plate dust detection
- (b) white plate dust correction

(2) After a Job
- (a) white plate dust detection
- (b) white plate dust correction

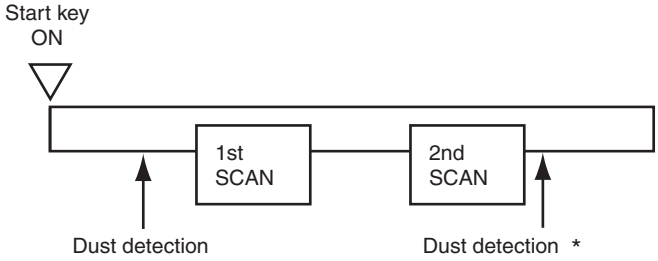

F-6-31

*: White plate dirt detection/correction after job processing is not performed for iR C5185.

2. Particulars of Control

(1) White Plate Dust Detection

The machine compares the shading coefficient obtained from shift shading and the shading coefficient obtained from fixed shading to identify the presence/absence of dust and, if any, coordinates and width of the area.

(2) White Plate Dust Correction

If the machine detects dust as a result of white plate dust detection, it corrects the shading coefficient of the area using the shading coefficient of both sides so as to decrease the effects of the presence of dust. It executes shading correction using the coefficient it obtains after correction.

If the result of white plate dust detection indicates the presence of dust, the shading coefficient of the area in question will be corrected by the coefficients of its adjacent areas during shading correction with the aim of reducing the effects of the presence of dust. Thereafter, shading correction will be executed using the corrected coefficient.

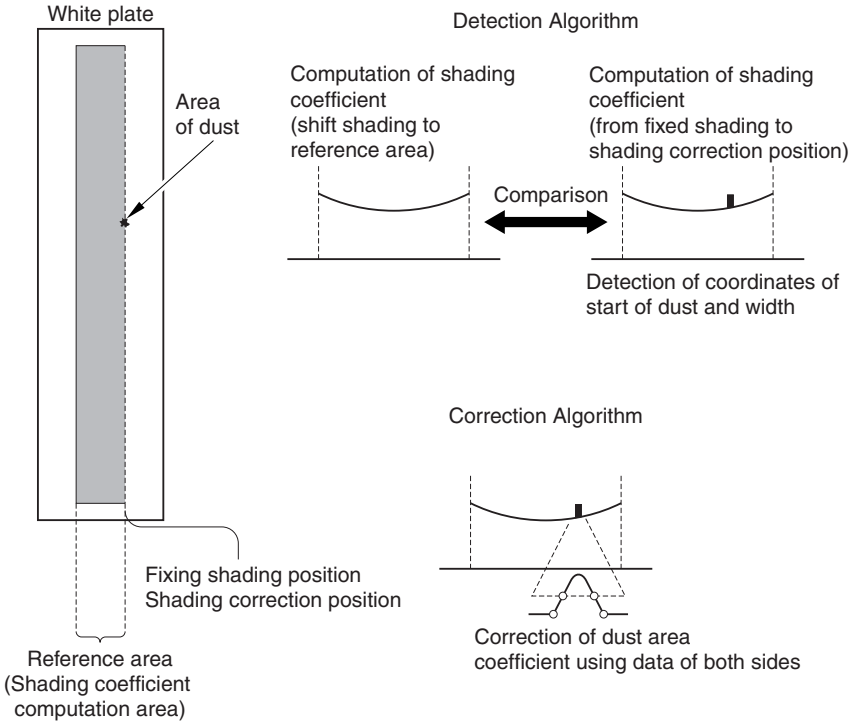

F-6-32

6.3.6 Image Processing

6.3.6.1 Overview

/ / / / iR C4580i / / / iR C4080i / / / / iR C5185N / / iR C5185i PRT /

The following shows the major functions of the machine' s image processing system:

- CCD (image sensor)
  - number of lines: 3 (RGB, 1 line each)
  - number of pixels: 7350
  - size of pixel: 9.3 x 9.3 ym
- Shading Correction shading adjustment: in service mode
  - shading correction: performed for every copy

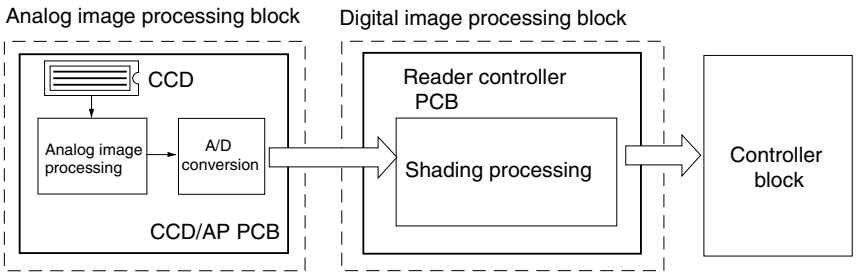

F-6-33

The following shows the functions of the PCBs associated with the image processing system:
CCD/AP PCB: CCD drive, analog image processing, A/D conversion
reader controller PCB: shading correction
The machine performs image processing for every RGB line using the reader controller PCB, and the major functions involved are as follows:

(1) Analog Image processing
(a) CCD drive
(b) CCD output gain correction, offset correction
(c) CCD output A/D conversion

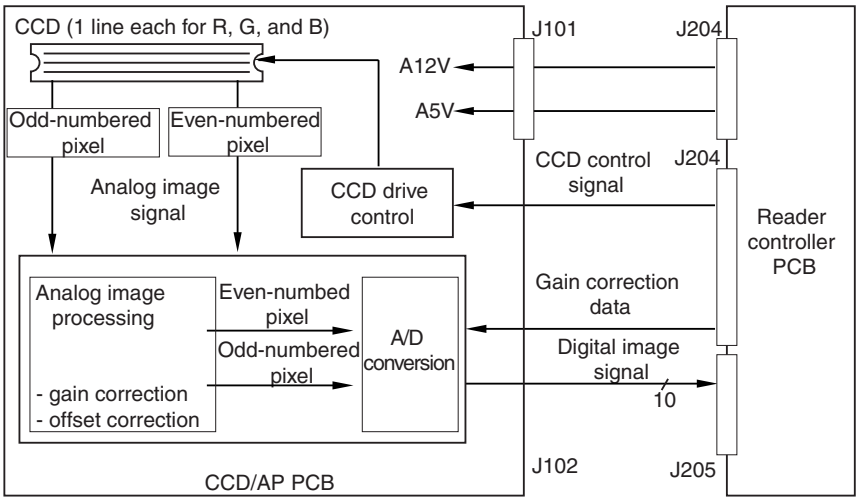

F-6-34

(2) Digital Image Processing
(a) Shading Correction

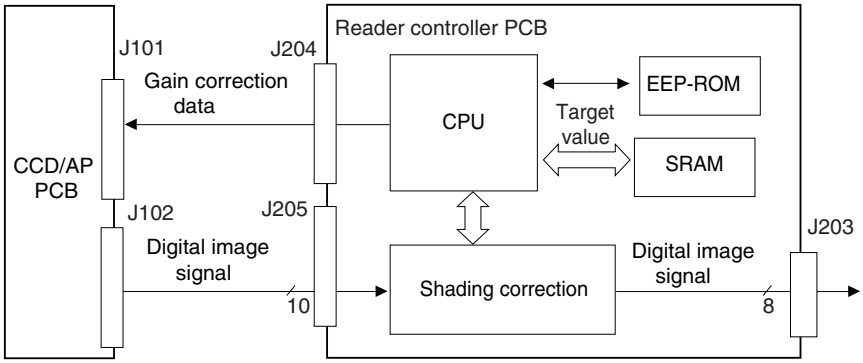

F-6-35

6.3.6.2 CCD Drive

/ / / / iR C4580i / / / iR C4080i / / / / iR C5185N / / iR C5185i PRT /

The machine's CCD is a linear image sensor consisting of 3 lines (R, G, B, 1 line each), each line composed of 7350 photo cells. The signal that has been put through photo-conversion in the light-receiving segment is divided into 2 analog signals of 2 channels for output: even-numbered pixels (EVEN) and odd-numbered pixels (ODD).

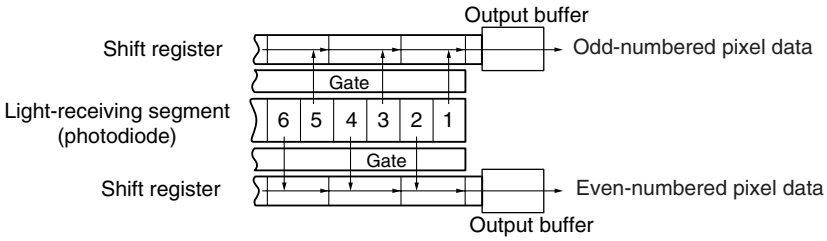

F-6-36

6.3.6.3 CCD Gain Correction, Offset Correction

/ / / / iR C4580i / / / iR C4080i / / / / iR C5185N / / iR C5185i PRT /

The analog video signal from the CCD is processed so that the rate of amplification is even (gain correction); the output in the absence of incident light is also processed for a specific level (offset correction).

6.3.6.4 CCD Output A/D Conversion

/ / / / iR C4580i / / / iR C4080i / / / / iR C5185N / / iR C5185i PRT /

The odd-numbered and even-numbered pixel analog video signals after the foregoing correction are then converted into 10-bit digital signals by the A/D converter according to their pixel voltage levels.

6.3.6.5 Outline of Shading Correction

/ / / / iR C4580i / / / iR C4080i / / / / iR C5185N / / iR C5185i PRT /

The output of the CCD may not always be uniform because of the following reasons even when the density of the original in question is uniform:
- variation in the sensitivity among individual pixels of the CCD.
- difference in the level of transmission between the center and the edge of the lens.
- difference in the intensity of light between the middle and the edges of the scanning lamp.
- deterioration of the scanning lamp

The machine executes shading correction to even out the output of the CCD.

The machine executes either of the following 2 shading mechanisms: shading correction it carries out for every copy and shading adjustment for which the target value is set in service mode.

6.3.6.6 Shading Adjustment

/ / / / iR C4580i / / / iR C4080i / / / / iR C5185N / / iR C5185i PRT /

The machine performs shading adjustment in response to a command made in service mode. The machine measures the density of blank white paper and that of the white plate to obtain density data; it then computes the data to produce the target value for use at time of shading correction.

6.3.6.7 Shading Correction

/ / / / iR C4580i / / / iR C4080i / / / / iR C5185N / / iR C5185i PRT /

The machine executes shading correction each time it scans an original.
The machine directs the light from the scanning lamp against the standard white plate, and converts the reflected light into a digital signal by the analog image processing block on the CCD/AP PCB. The result (i.e., a digital signal representing the intensity of the reflected light) is sent to the shading correction circuit of the reader controller PCB as a shading coefficient. The shading correction circuit in turn compares the coefficient against the target value it holds, and offers the difference as the shading correction value.
The machine uses the shading correction value to correct the variation that may exist among the individual pixels of the CCD, thereby keeping the image density to a specific level at all times.

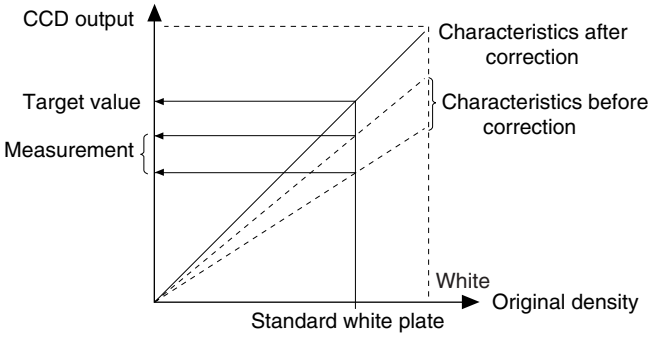

F-6-37

6.4 Parts Replacement Procedure

6.4.1 Copyboard Glass

6.4.1.1 Removing the Copyboard Glass

CLC5151 / / / CLC4040 / / / iR C4580i / / / iR C4080i / / / / Color Image Reader-F1 / Color Image Reader-E1 / Dupiex Color Image Reader-G1 / iR C5185N / / iR C5185i PRT /

1) Open the ADF.
2) Remove the copyboard glass[3].
   - 2 screws[1]
   - right glass retainer[2]

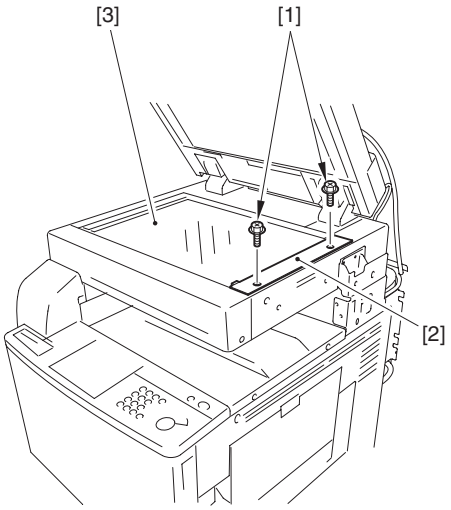

F-6-38

When removing the copyboard glass, take care not to touch the white plate attached to its back. (soiling can cause lines in the image) If soiled, clean it using lint-free paper moistened with alcohol.

6.4.2 Exposure Lamp

6.4.2.1 Preparation for Removing the Scanning Lamp

CLC5151 / / / CLC4040 / / / iR C4580i / / / iR C4080i / / / / Color Image Reader-F1 / Color Image Reader-E1 / Dupiex Color Image Reader-G1 / iR C5185N / / iR C5185i PRT /

1) Remove Copyboard Glass.
2) Remove the Reader Right Cover.
3) Remove the Reader Left Cover.
4) Remove the Reader Front Cover.
5) Remove the Reader Rear Cover.
6) Remove the CCD unit cover [2].
   - 9 screws [1]

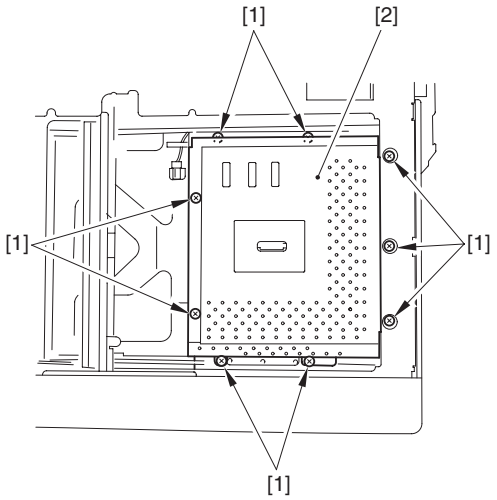

F-6-39

6.4.2.2 Removing the Scanning Lamp

CLC5151 / / / CLC4040 / / / iR C4580i / / / iR C4080i / / / / Color Image Reader-F1 / Color Image Reader-E1 / Dupiex Color Image Reader-G1 / iR C5185N / / iR C5185i PRT /

1) Remove the cable [2] from the cable guide [3].
   - connector [1]

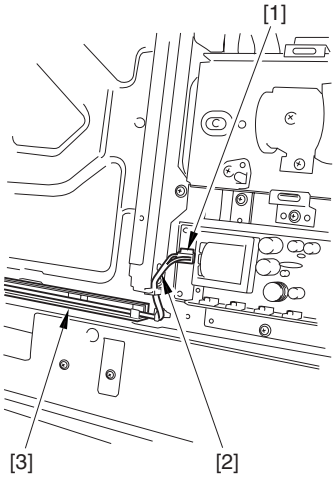

F-6-40

2) Move the No. 1 mirror base [1] to the right to match it against the cut-off [2] of the frame.

Reference:
When moving the No. 1 mirror base, be sure to hold it by the cut-up tab [A] of the mirror stay.

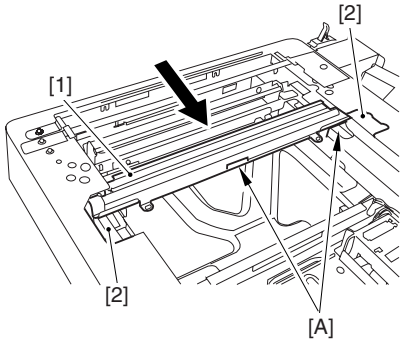

F-6-41

3) Remove the scanning lamp [2].
   - 2 screws [1]

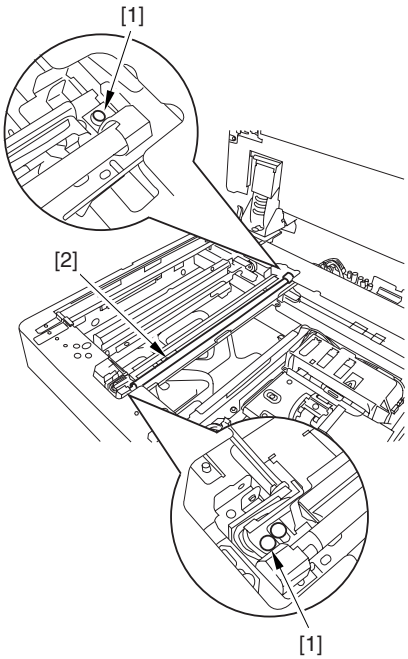

F-6-42

6.4.2.3 After Replacing the Scanning Lanp

CLC5151 / / / CLC4040 / / / iR C4580i / / / iR C4080i / / / / Color Image Reader-F1 / Color Image Reader-E1 / Dupiex Color Image Reader-G1 / iR C5185N / / iR C5185i PRT /

execute COPIER > FUNCTION > MISC-R > 1PCLBRST.

6.4.3 Reader Controller PCB

6.4.3.1 Preparation for Removing the Reader Controller PCB

CLC5151 / / / CLC4040 / / / iR C4580i / / / iR C4080i / / / / Color Image Reader-F1 / Color Image Reader-E1 / Dupiex Color Image Reader-G1 / iR C5185N / / iR C5185i PRT /

Be sure to print out the settings using P-PRINT before replacing the reader controller.

1) Remove the Copyboard Glass.
2) Remove the CCD unit cover [2].
   - 9 screws [1]

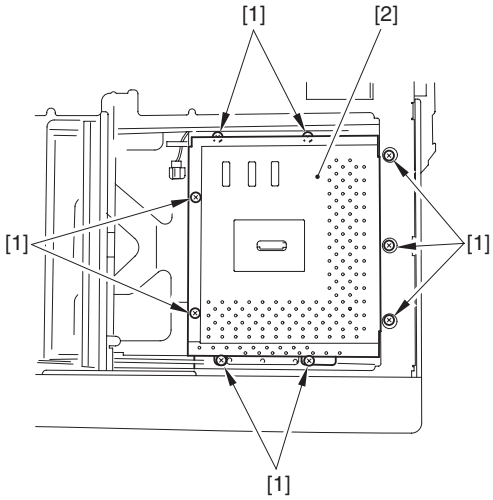

F-6-43

3) Remove the Original Size Sensor Unit.
3-1) Remove the original size detection unit [2].
   - 3 screws [1]

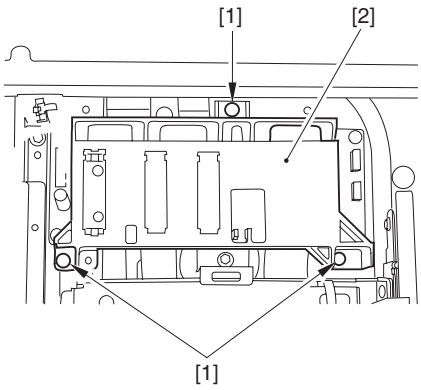

F-6-44

3-2) Remove the original size sensor unit [2].
   - connector [1]

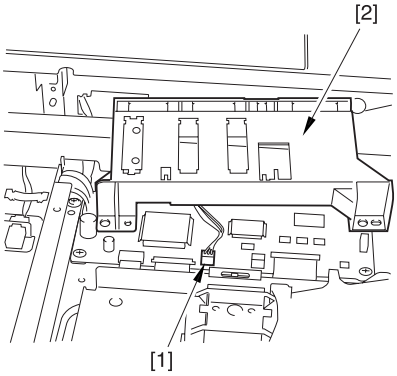

F-6-45

6.4.3.2 Removing the Reader Controller PCB

CLC5151 / / / CLC4040 / / / iR C4580i / / / iR C4080i / / / / Color Image Reader-F1 / Color Image Reader-E1 / Dupiex Color Image Reader-G1 / iR C5185N / / iR C5185i PRT /

1) Remove the reader controller PCB [4].
   - 5 flat cables [1]
   - connector [2]
   - 4 screws [3]

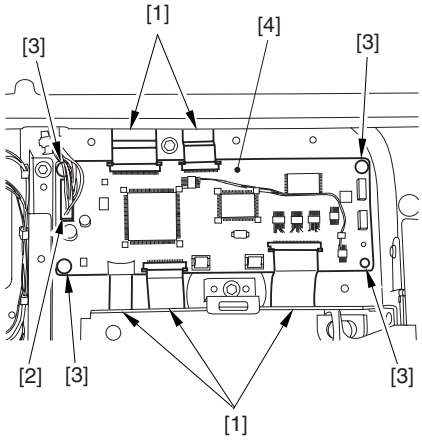

F-6-46

Reference: Disconnecting the Flat Cable
Slide the locking lever [1] in the direction of the arrow; then, disconnect the flat cable [2].

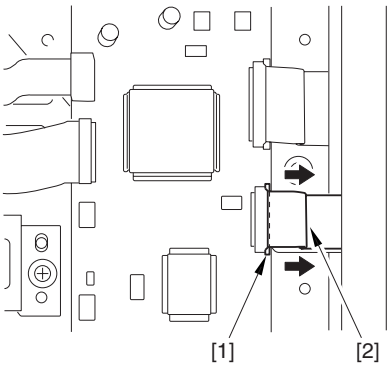

F-6-47

6.4.3.3 After Replacing the Reader Controller PCB

CLC5151 / / / CLC4040 / / / iR C4580i / / / iR C4080i / / / / Color Image Reader-F1 / Color Image Reader-E1

Initializing the RAM of the Reader Controller Without Replacing the PCB.Using the SST, upload the backup data of the reader controller; after you have initialized the RAM, download the backup data, thereby eliminating the need for the following adjustment work.

1. Reader Unit-Related Adjustment

1) Using the SST, download the latest system software (R-CON).
2) Make the following selections in service mode, and press the OK key to initialize the RAM:
   COPIER>FUNCTION>CLER>R-CON.
   Then, turn off and then on the main power.
3) Enter the following settings in service mode:
   (1) standard while plate white level data
      COPIER>ADJUST>CCD-W-PLATE-X,Y,Z

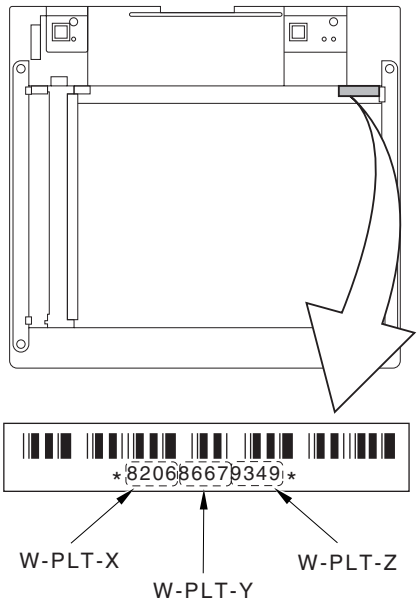

F-6-48

   (2) service mode label record (behind reader front cover)
      (a) image read start position adjustment (x direction; for fixed position reading)
         COPIER>ADJUST>ADJ-XY>ADJ-X
      (b) image read start position adjustment (Y direction: for fixed reading)
         COPIER>ADJUST>ADJ-XY>ADJ-Y
      (c) shading position adjustment (for fixed reading)
         COPIER>ADJUST>ADJ-XY>ADJ-S
      (d) feeder mode main scanning position adjustment
         COPIER>ADJUST>ADJ-XY>ADJ-Y-DF
      (e) ADF stream reading CCD read position adjustment
         COPIER>ADJUST>ADJ-XY>STRD-POS
      (f) CCD unit RG/GB sub scanning direction color displacement correction
         COPIER>ADJUST>CCD>CCDU-RG/GB
      (g) factory default CD unit RG/GB sub scanning color displacement correction
         COPIER>ADJUST>CCD>FCCDU-RG/GB
      (h) auto gradation correction target value
         COPIER>ADJUST>PASCAL>OFFSET-P-Y,M,C,K

b. ADF-Related Adjustment

The machine retains ADF-related service data in the RAM of its reader controller, calling for adjustment of the ADF if you have initialized its RAM.

1) In service mode, enter the settings indicated on the P-PRINT printout you have previously obtained:
   (1) original stop position adjustment
      FEEDER>ADJUST>DOCST
   (2) original feed speed (magnification) adjustment
      FEEDER>ADJUST>LA-SPEED
2) Make the following adjustments using the following service mode items:
   (1) ADF sensor sensitivity adjustment
      FEEDER>FUNCTION>SENS-IN
   (2) tray width adjustment
      FEEDER>FUNCTION>TRY-A4
      FEEDER>FUNCTION>TRY-A5R
      FEEDER>FUNCTION>TRY-LTR
      FEEDER>FUNCTION>TRY-LTRR
   (3) white level adjustment
      COPIER>FUNCTION>CCD>DF-WLVL1
      COPIER>FUNCTION>CCD>DF-WLVL2

When done, put the P-PRINT printout [1] in the service book case, disposing of the previous printout.

6.4.3.4 After Replacing the Reader Controller PCB

Dupiex Color Image Reader-G1 / iR C5185N / / iR C5185i PRT /

Be sure to print out the latest P-PRINT before replacing the reader controller PCB.
<When executing "RAM Clear" to the reader controller instead of replacing the PCB>
Upload the R-CON backup data using SST and download the data after executing "RAM Clear". In this case, it is not necessary to make adjustments explained below.

1) Download the latest system software (R-CON) using SST.
2) Select "COPIER > FUNCTION > CLEAR > R-CON" in the service mode and press the OK key to execute "RAM Clear". Then, turn off/on the main power.
3) Check the value specified in COPIER>ADJUST>CCD>CCD-CHNG for P-PRINT.
   - When 0 is specified, go to Procedure 4). (Enter the MTF value.)
   - When 1 is specified, go to Procedure 6). (Do not enter the MTF value.)
4) Enter each correction value indicated on the service label (attached inside of the reader front cover).
   a. MTF values
      COPIER > ADJUST > CCD > MTMF2-M1 to M9
      COPIER > ADJUST > CCD > MTMF2-S1 to S9

      After entry of the values, execute COPIER > FUNCTION > MTF-CLC.
   b. Correction values for color displacement in a sub scanning direction between RG and GB, which depends on CCD specified at factory setting
      COPIER > ADJUST > CCD > FCCDU-RG
      COPIER > ADJUST > CCD > FCCDU-GB
5) Enter each correction value indicated on the service label (attached inside of the reader front cover).
   a-1. Adjustment of the image scanning start position (X direction) (at copyboard reading)
      COPIER > ADJUST > ADJ-XY > ADJ-X
   a-2. Adjustment of the image scanning start position (Y direction) (at copyboard reading)
      COPIER > ADJUST > ADJ-XY > ADJ-Y
   a-3. Adjustment of the optical shading measurement position (at copyboard reading)
      COPIER > ADJUST > ADJ-XY > ADJ-S
   a-4. Adjustment of the feeder mode position in a main scanning direction
      COPIER > ADJUST > ADJ-XY > ADJ-Y-DF
   a-5. Adjustment of the CCD scanning position at ADF stream reading
      COPIER > ADJUST > ADJ-XY > STRD-POS
   a-6. White level data of the standard white plate
      COPIER > ADJUST > CCD > W-PLT-X
      COPIER > ADJUST > CCD > W-PLT-Y
      COPIER > ADJUST > CCD > W-PLT-Z
   a-7. Correction value for color displacement in a sub scanning direction between RG and GB, which depends on CCD
      COPIER > ADJUST > CCD > CCDU-RG
      COPIER > ADJUST > CCD > CCDU-GB
   a-8. Entry of the shading target value (R/G/B) for ADF reading (at a normal document scanning position)
      COPIER > ADJUST > CCD > DFTAR-R

COPIER > ADJUST > CCD > DFTAR-G
COPIER > ADJUST > CCD > DFTAR-B

a-9. Adjustment of density correction values
COPIER > ADJUST > CCD > DFCH2R2
COPIER > ADJUST > CCD > DFCH2R10
COPIER > ADJUST > CCD > DFCH2B2
COPIER > ADJUST > CCD > DFCH2B10
COPIER > ADJUST > CCD > DFCH2G2
COPIER > ADJUST > CCD > DFCH2G10

a-10. Target value for automatic gradation correction
COPIER > ADJUST > PASCAL > OFSE-P-Y
COPIER > ADJUST > PASCAL > OFSE-P-M
COPIER > ADJUST > PASCAL > OFSE-P-C
COPIER > ADJUST > PASCAL > OFSE-P-K

After entry of the values, execute COPIER > FUNCTION > DF-LNR.

This machine stores ADF-related service data in the RAM of the reader controller.
It is necessary to make an adjustment for ADF when replacing the reader controller and executing "RAM Clear".

b. Adjustment of the image scanning start position (X direction) (at stream reading)
FEEDER > ADJSUT > DOCST

c. Adjustment of the document feed speed (magnification)
FEEDER > ADUST > LA-SPEED

6) Make adjustments using the following items.

a. Adjustment of sensitivity of each ADF sensor
FEEDER > FUNCTION > SENS-INT

b. Adjustment of the tray width
For AB-size group
FEEDER > FUNCTION > TRY-A4
FEEDER > FUNCTION > TRY-A5R
For INCH-size group
FEEDER > FUNCTION > TRY-LTR
FEEDER > FUNCTION > TRY-LTRR

c. Adjustment of the ADF white level
COPIER > FUNCTION > CCD > DF-WLVL1
COPIER > FUNCTION > CCD > DF-WLVL2

Be sure to make adjustment of the white plate data before making adjustment of the ADF white level.

After these adjustments are completed, store the previously-printed P-PRINT in the service book case, and abandon the past P-PRINT.

6.4.4 Interface PCB

6.4.4.1 Preparation for Removing the Interface PCB

CLC5151 / / / CLC4040 / / / iR C4580i / / / iR C4080i / / / / Color Image Reader-F1 / Color Image Reader-E1 / Dupiex Color Image Reader-G1 / iR C5185N / / iR C5185i PRT /

1) Remove the reader rear cover.

6.4.4.2 Removing the Interface PCB

CLC5151 / / / CLC4040 / / / iR C4580i / / / iR C4080i / / / / Color Image Reader-F1 / Color Image Reader-E1

1) Remove the interface PCB cover [3].
- 4 RS tightening screws [1]
- 2 binding screws [2]

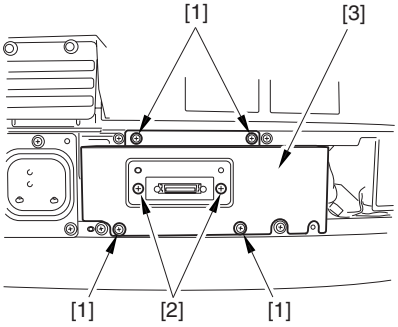

F-6-49

2) Remove the interface PCB unit [4].
- 7 connectors [1]
- 2 flat cables [2]
- 5 screws [3]

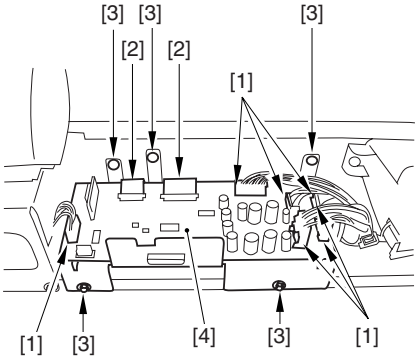

F-6-50

Reference: How to Remove the Flat Cable
Move the locking lever [1] in the direction of the arrow, and remove the flat cable [2].

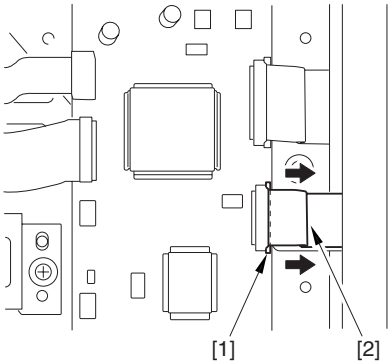

F-6-51

3) Remove the interface PCB [2].
- 9 screws [1]

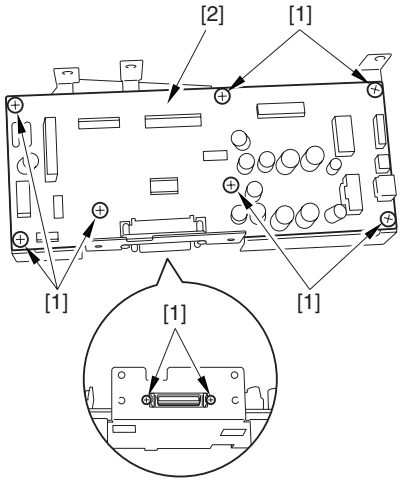

F-6-52

6.4.4.3 Removing the Interface PCB

Dupiex Color Image Reader-G1 / iR C5185N / / iR C5185i PRT /

1) Remove the interface PCB mount [4].
- 9 connectors [1]
- 1 flat cable [2]
- 9 screws [3]

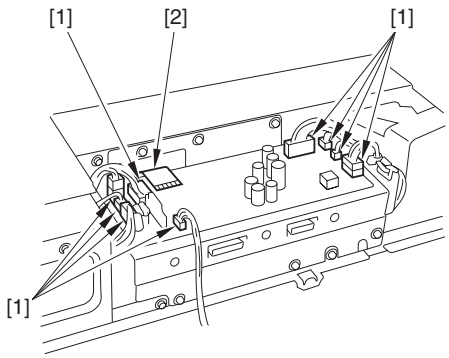

F-6-53

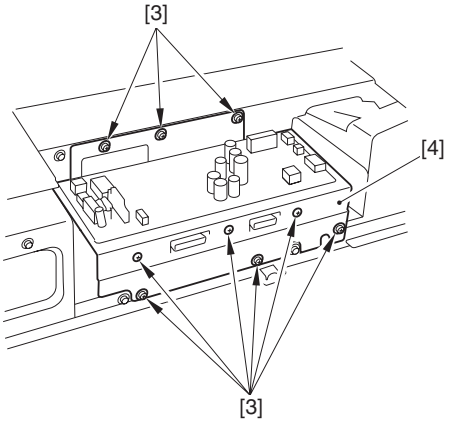

F-6-54

How to remove the flat cable
Slide the lock lever [1] to the direction shown by an arrow and unlock it. Then, remove the flat cable [2].

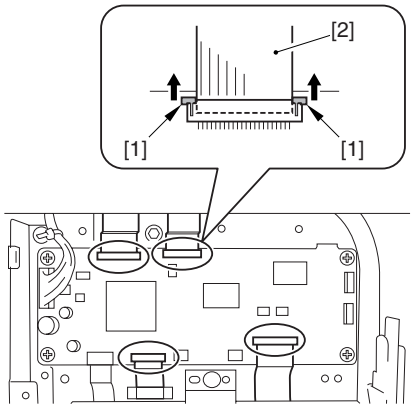

F-6-55

2) Remove the interface PCB [2].
- 6 screws [1]

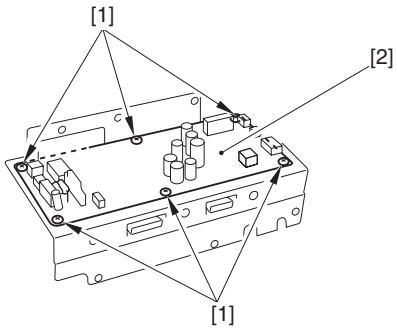

F-6-56

6.4.4.4 Points to Note When Attaching the Interface PCB

CLC5151 / / / CLC4040 / / / iR C4580i / / / iR C4080i / / / / Color Image Reader-F1 / Color Image Reader-E1 / Dupiex Color Image Reader-G1 / iR C5185N / / iR C5185i PRT /

If the tie-wrap [1] of the scanner motor harness is closer to the motor than the wire guide [2], the harness will come into contact with the rotor and suffer damage. Be sure that the tie-wrap is closer to the interface PCB than the wire guide.

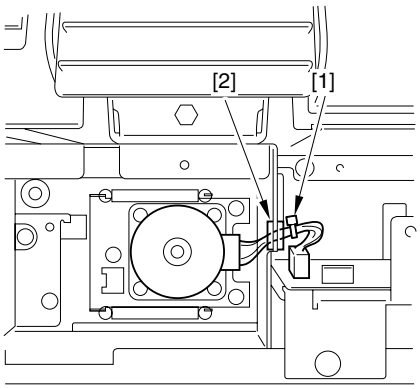

F-6-57

6.4.5 Inverter PCB

6.4.5.1 Preparation for Removing the Inverter PCB

CLC5151 / / / CLC4040 / / / iR C4580i / / / iR C4080i / / / / Color Image Reader-F1 / Color Image Reader-E1 / Dupiex Color Image Reader-G1 / iR C5185N / / iR C5185i PRT /

1) Remove the Copyboard Glass.
2) Remove the CCD unit cover [2].
- 9 screws [1]

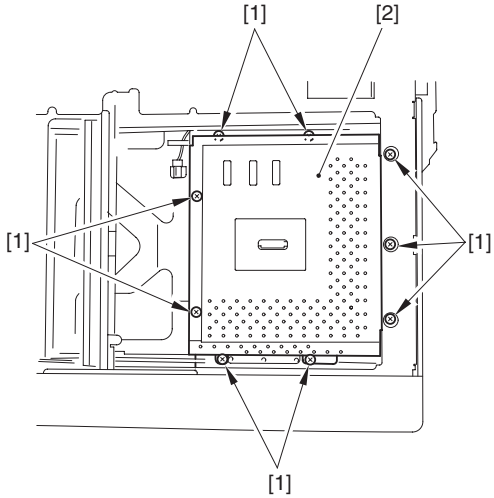

F-6-58

6.4.5.2 Removing the Inverter PCB

CLC5151 / / / CLC4040 / / / iR C4580i / / / iR C4080i / / / / Color Image Reader-F1 / Color Image Reader-E1 / Dupiex Color Image Reader-G1 / iR C5185N / / iR C5185i PRT /

1) Remove the 2 PCB supports [4], and remove the inverter PCB [5].
- connector [1]
- flat cable [2]
- screw [3]

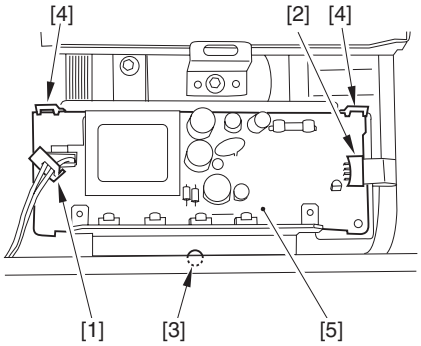

F-6-59

6.4.5.3 After Replacing the Inverter PCB

CLC5151 / / / CLC4040 / / / iR C4580i / / / iR C4080i / / / / Color Image Reader-F1 / Color Image Reader-E1 / Dupiex Color Image Reader-G1 / iR C5185N / / iR C5185i PRT /

There is no special adjustment after replacing the inverter PCB.

6.4.6 CCD Unit

6.4.6.1 Preparation for Removing the CCD Unit

CLC5151 / / / CLC4040 / / / iR C4580i / / / iR C4080i / / / / Color Image Reader-F1 / Color Image Reader-E1 / Dupiex Color Image Reader-G1 / iR C5185N / / iR C5185i PRT /

1) Remove the Copyboard Glass.
2) Remove the CCD unit cover [2].
- 9 screws [1]

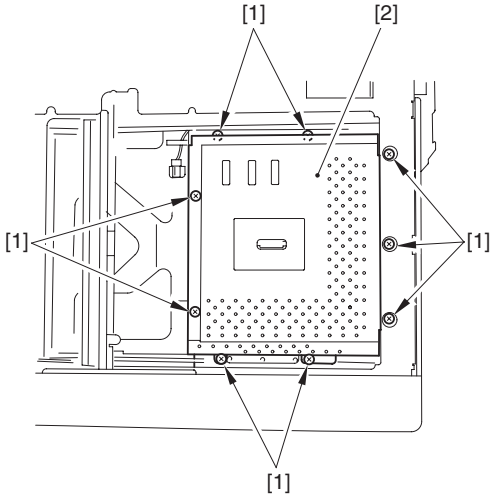

F-6-60

3) Remove the Original Size Sensor Unit.
3-1) Remove the original size detection unit [2].
- 3 screws [1]

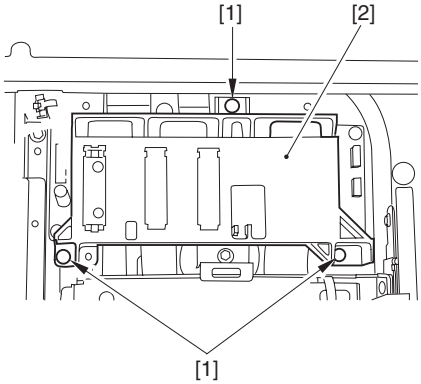

F-6-61

3-2) Remove the original size sensor unit [2].
- connector [1]

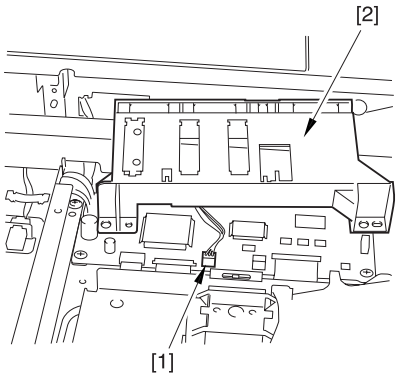

F-6-62

6.4.6.2 Removing the CCD Unit

CLC5151 / / / CLC4040 / / / iR C4580i / / / iR C4080i / / / / Color Image Reader-F1 / Color Image Reader-E1 / Dupiex Color Image Reader-G1 / iR C5185N / / iR C5185i PRT /

1) Remove the CCD unit [4].
- 2 flat cables [1] from the reader controller PCB
- 2 screws [2]
- 2 leaf springs [3]

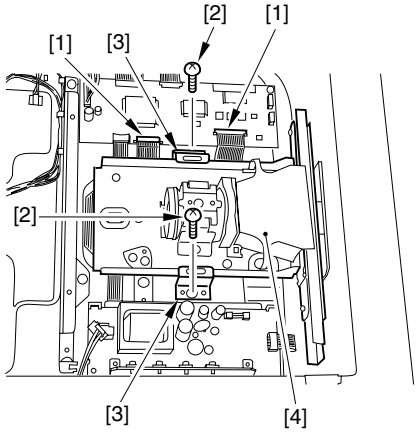

F-6-63

6.4.6.3 After Replacing the CCD Unit

CLC5151 / / / CLC4040 / / / iR C4580i / / / iR C4080i / / / / Color Image Reader-F1 / Color Image Reader-E1

If you have replaced the CCD unit, be sure to enter the settings indicated on the label attached to the CCD unit:

COPIER>ADJUST>CCD>CCDU-RG
(to enter the correction value for CCD-dependent RG color displacement in sub scanning direction)
COPIER>ADJUST>CCD>CCDU-GB
(to enter the correction value for CCD-dependent GB color displacement in sub scanning direction)

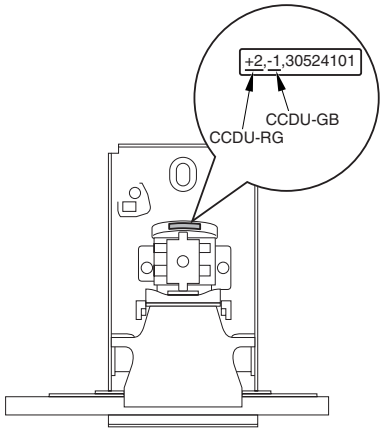

F-6-64

Moreover, be sure to update the settings indicated on the service label at-

tached behind the reader unit front cover with the settings indicated on the label attached to the CCD unit.

6.4.6.4 After Replacing the CCD Unit

Dupiex Color Image Reader-G1 / iR C5185N / / iR C5185i PRT /

1) Enter each correction value indicated on the service label contained in the CCD unit.
   Correction value for color displacement in a sub scanning direction between RG, which depends on CCD
      COPIER > ADJUST > CCD > CCDU-RG
   Correction value for color displacement in a sub scanning direction between GB, which depends on CCD
      COPIER > ADJUST > CCD > CCDU-GB

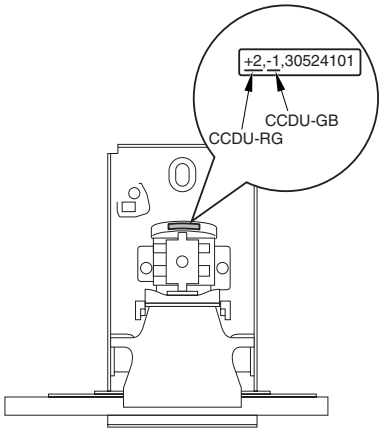

F-6-65

   Adjustment of density correction values
      COPIER > ADJUST > CCD > DFCH2R2
      COPIER > ADJUST > CCD > DFCH2R10
      COPIER > ADJUST > CCD > DFCH2B2
      COPIER > ADJUST > CCD > DFCH2B10
      COPIER > ADJUST > CCD > DFCH2G2
      COPIER > ADJUST > CCD > DFCH2G10
2) Execute COPIER > FUNCTION > DF-LNR.
3) Set "COPIER > ADJUST >CCD > CCD-CHNG" to 1.
4) Attach the label contained in service parts to an appropriate position inside of the reader front cover.
5) Execute COPIER > FUNCTION > MISC-R > 1PCLBRST.

6.4.7 Scanner Motor

6.4.7.1 Preparation for Removing the Scanner Motor

CLC5151 / / / CLC4040 / / / iR C4580i / / / iR C4080i / / / / Color Image Reader-F1 / Color Image Reader-E1 / Dupiex Color Image Reader-G1 / iR C5185N / / iR C5185i PRT /

1) Remove the reader rear cover.

6.4.7.2 Removing the Scanner Motor

CLC5151 / / / CLC4040 / / / iR C4580i / / / iR C4080i / / / / Color Image Reader-F1 / Color Image Reader-E1 / Dupiex Color Image Reader-G1 / iR C5185N / / iR C5185i PRT /

1) Remove the cover [2].
   - 4 screws [1]

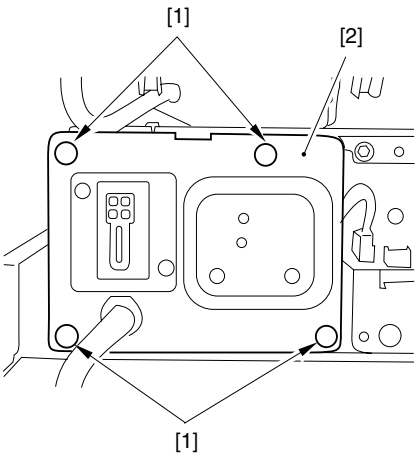

F-6-66

2) Remove the 2 harness retainers [2] from the back of the cover [1] to remove the cover.

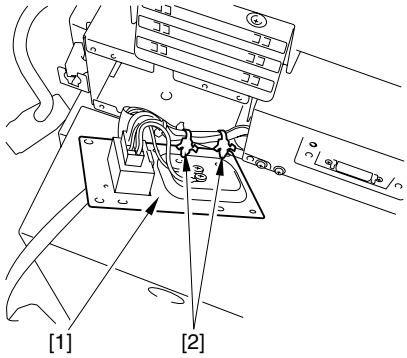

F-6-67

3) Move the scanner motor [3] in the direction of the arrow to remove.
   - 3 screws [1]
   - 2 springs [2]

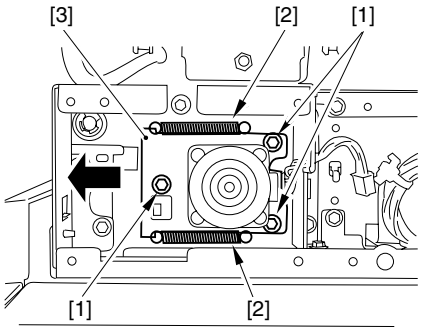

F-6-68

4) Remove the scanner motor [2].
   - connector [1]

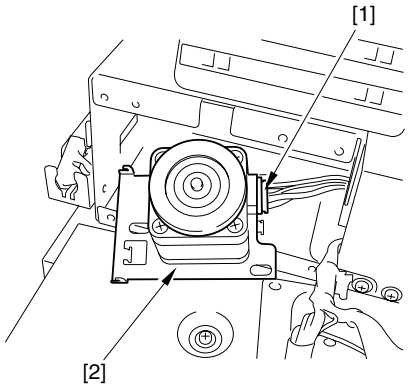

F-6-69

6.4.7.3 Attaching the Scanner Motor

CLC5151 / / / CLC4040 / / / iR C4580i / / / iR C4080i / / / / Color Image Reader-F1 / Color Image Reader-E1 / Dupiex Color Image Reader-G1 / iR C5185N / / iR C5185i PRT /

When attaching the scanner motor, be sure that the timing belt [3] is securely attached to the scanner pulley [1] and the motor shaft [2].

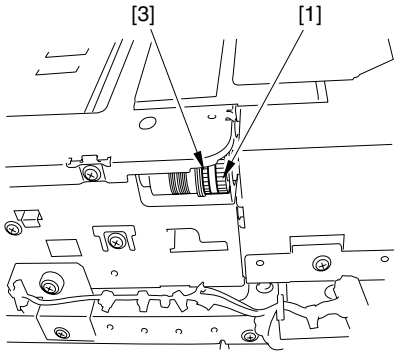

F-6-70

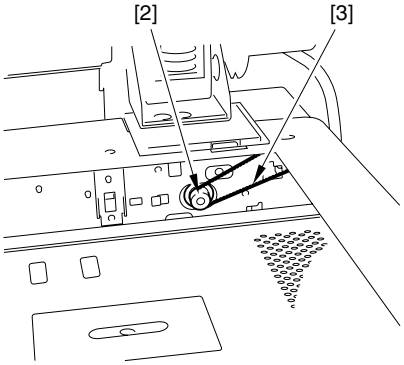

F-6-71

If the tie-wrap [1] of the scanner motor harness is closer to the motor side than the wire guide [2], the harness can come into contact with the rotor of the scanner motor and suffer damage. Be sure that the tie-wrap is closer to the interface PCB than the wire guide when mounting the scanner motor.

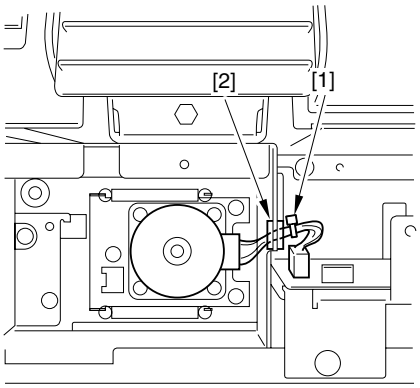

F-6-72

6.4.8 ADF Open/Close Sensor

6.4.8.1 Preparation for Removing the ADF Open /Close Sensor

CLC5151 / / / CLC4040 / / / iR C4580i / / / iR C4080i / / / / Color Image Reader-F1 / Color Image Reader-E1 / Dupiex Color Image Reader-G1 / iR C5185N / / iR C5185i PRT /

1) Remove the reader rear cover.

6.4.8.2 Removing the ADF Open/Closed Sensor

CLC5151 / / / CLC4040 / / / iR C4580i / / / iR C4080i / / / / Color Image Reader-F1 / Color Image Reader-E1 / Dupiex Color Image Reader-G1 / iR C5185N / / iR C5185i PRT /

1) Disconnect the connector [1] from the ADF open/closed sensor [2].

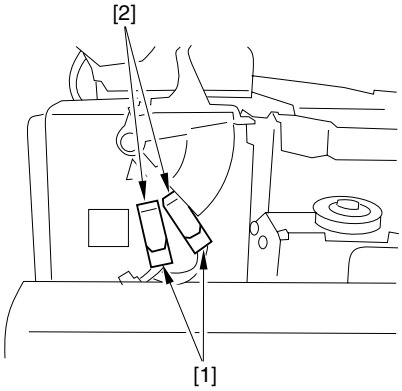

F-6-73

2) Remove the ADF open/closed sensor cover [2].
- 4 screws [1]

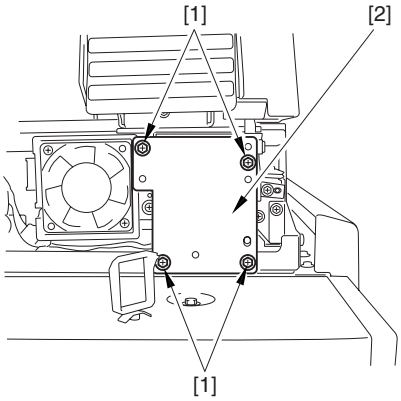

F-6-74

3) Remove the ADF open/closed sensor (1, 2).
- hook [1]

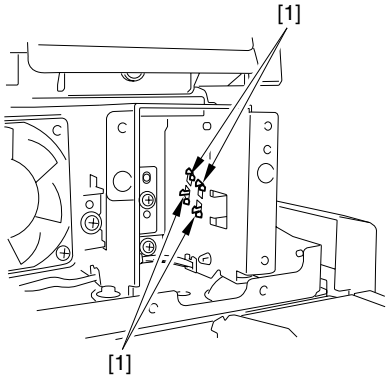

F-6-75

6.4.9 Scanner HP Sensor

6.4.9.1 Preparation for Removing the Mirror Base Home Position Sensor

CLC5151 / / / CLC4040 / / / iR C4580i / / / iR C4080i / / / / Color Image Reader-F1 / Color Image Reader-E1 / Dupiex Color Image Reader-G1 / iR C5185N / / iR C5185i PRT /

1) Remove the reader rear cover.

6.4.9.2 Removing the Mirror Base Home Position Sensor

CLC5151 / / / CLC4040 / / / iR C4580i / / / iR C4080i / / / / Color Image Reader-F1 / Color Image Reader-E1 / Dupiex Color Image Reader-G1 / iR C5185N / / iR C5185i PRT /

1) Remove the ADF open/closed sensor cover [2].
- 4 screws [1]

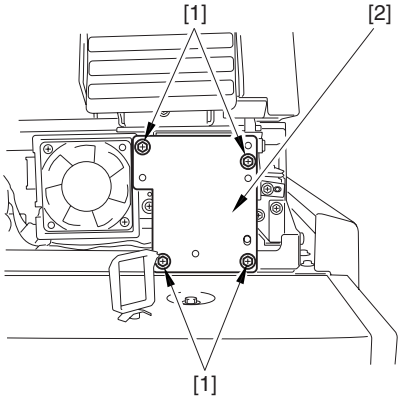

F-6-76

2) Remove the sensor mounting plate [2].
- screw [1]

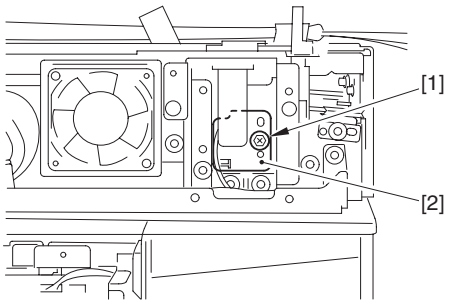

F-6-77

3) Remove the home position sensor [1].
- connector [1]

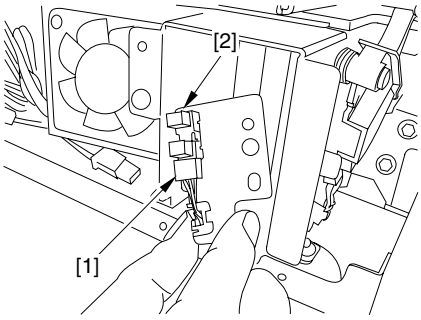

F-6-78

6.4.10 Original Sensor

6.4.10.1 Preparation for Removing the Original Size Sensor

CLC5151 / / / CLC4040 / / / iR C4580i / / / iR C4080i / / / / Color Image Reader-F1 / Color Image Reader-E1 / Dupiex Color Image Reader-G1 / iR C5185N / / iR C5185i PRT /

1) Remove the Copyboard Glass.
2) Remove the CCD unit cover [2].
- 9 screws [1]

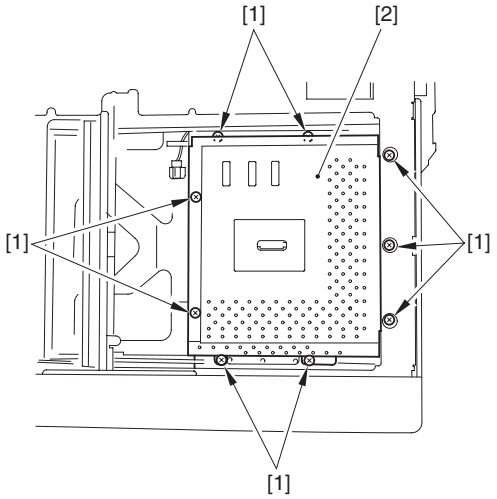

F-6-79

3) Remove the Original Size Sensor Unit.
3-1) Remove the original size detection unit [2].
- 3 screws [1]

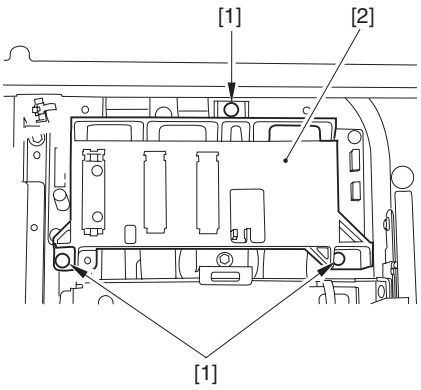

F-6-80

3-2) Remove the original size sensor unit [2].
- connector [1]

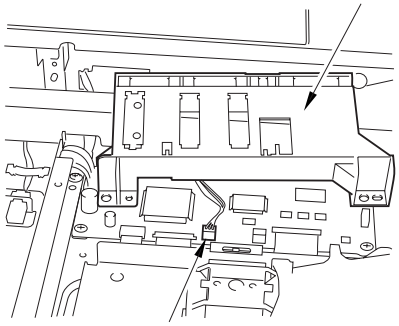

F-6-81

6.4.10.2 Removing the Original Size Sensor

CLC5151 / / / CLC4040 / / / iR C4580i / / / iR C4080i / / / / Color Image Reader-F1 / Color Image Reader-E1 / Dupiex Color Image Reader-G1 / iR C5185N / / iR C5185i PRT /

1) While removing the claw at the edge, remove the original size sensor [1].

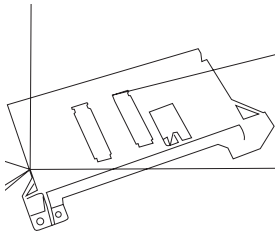

F-6-82

6.4.11 Cooling Fan

6.4.11.1 Preparation for Removing the Cooling Fan

CLC5151 / / / CLC4040 / / / iR C4580i / / / iR C4080i / / / / Color Image Reader-F1 / Color Image Reader-E1 / Dupiex Color Image Reader-G1 / iR C5185N / / iR C5185i PRT /

1) Remove the Reader Rear Cover.

6.4.11.2 Removing the Cooling Fan

CLC5151 / / / CLC4040 / / / iR C4580i / / / iR C4080i / / / / Color Image Reader-F1 / Color Image Reader-E1 / Dupiex Color Image Reader-G1 / iR C5185N / / iR C5185i PRT /

1) Remove the cooling fan [4].
- 1 connector [2] (open the wire guide [1], and remove the cable)
- 2 screws [3]

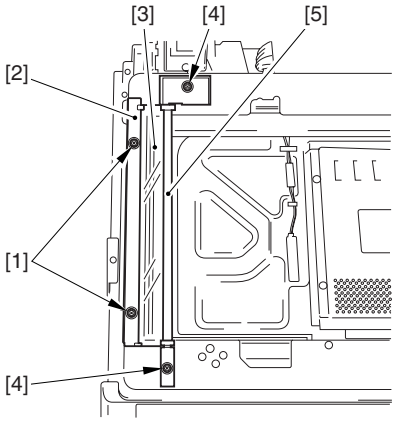

F-6-87

When attaching it, be sure to hold down both ends of the leaf spring [A] with your fingers. (Take care not to bend the leaf spring.)
Be sure to attach it while forcing the left glass retainer [B] against the reading glass [C].
Check to make sure that the side of the reading glass and the leaf spring [D] of the left glass retainer are in firm contact.
Otherwise, dust from the reading glass can start to collect, causing lines in images.

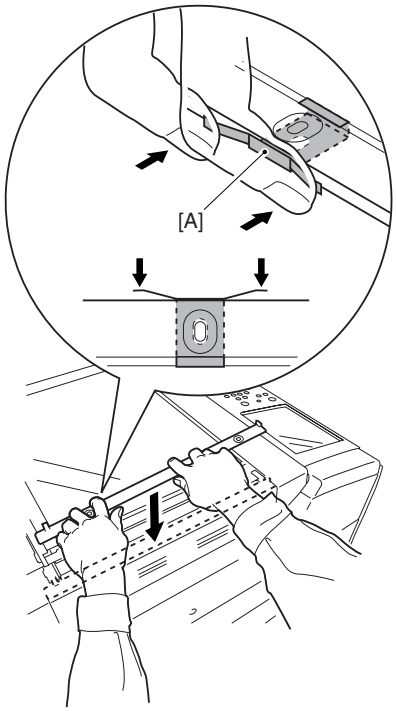

F-6-88

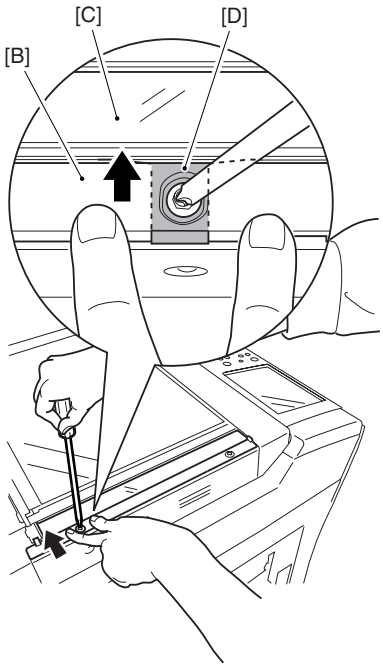

F-6-89

4) Remove the ADF right screw cover [2].
-screw [1]

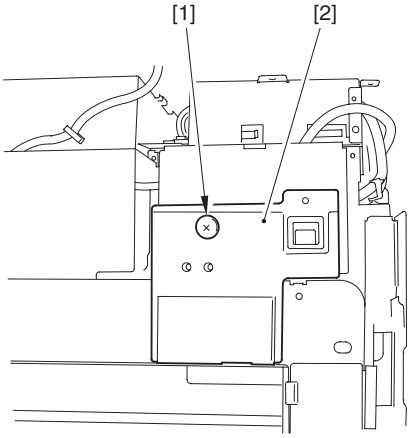

F-6-90

5) Remove the ADF left screw cover [2].
-the screw[1]

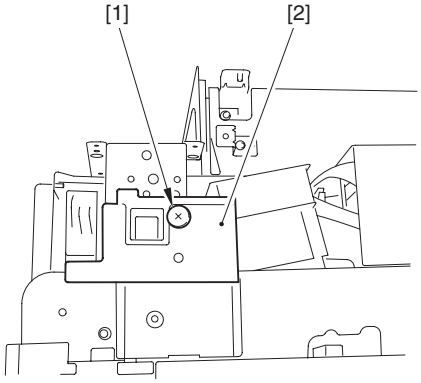

F-6-91

6) Remove the interface PCB cover [3].
- 4 RS tightening screws [1]
- 2 binding screws [2]

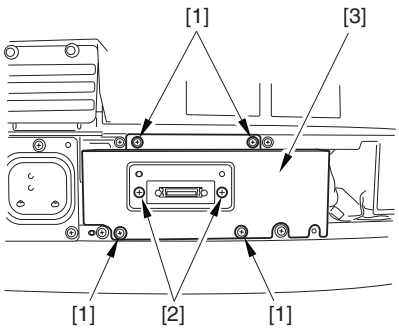

F-6-92

7) Remove the interface PCB unit [4].
- 7 connectors [1]
- 2 flat cables [2]
- 5 screws [3]

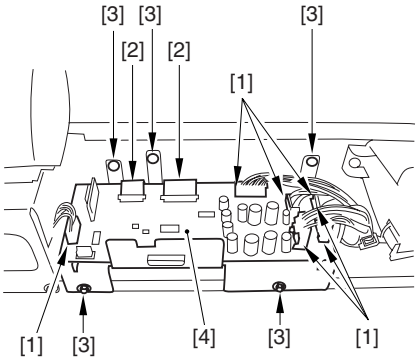

F-6-93

Reference:How to Remove the Flat Cable
Move the lock lever [1] in the direction of the arrow to release; then, detach the flat cable [2].

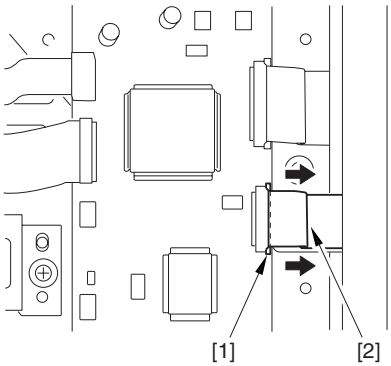

F-6-94

8) Remove the interface PCB [2].
- 9 screws [1]

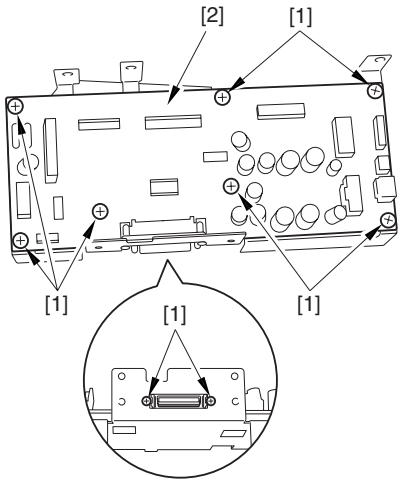

F-6-95

9) Disconnect the reader communication cable [1].
- Open the 2 wire saddles [2].

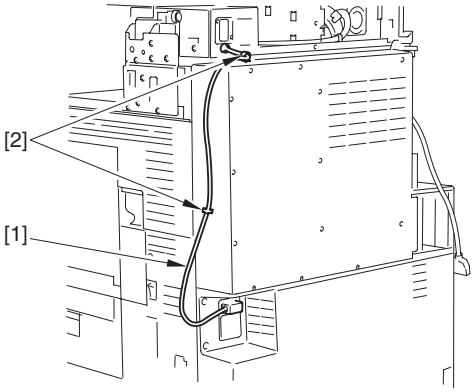

F-6-96

10) Open the 3 wire saddles [1], and disconnect the connector [2].
11) Remove the motor cover [4] together with the harness.
- 4 screws [3]

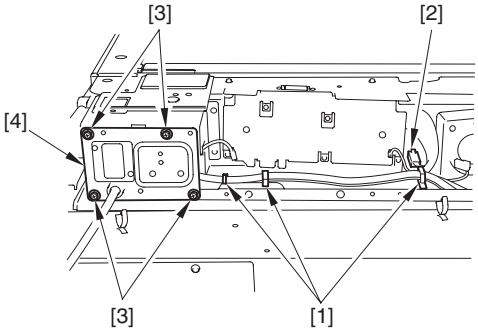

F-6-97

12) Remove the motor frame [3].
- 1 wire saddle [1] (Remove the harness)
- 6 screws [2]

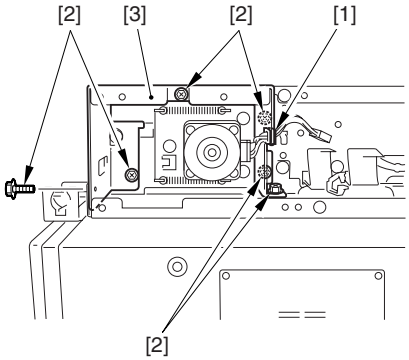

F-6-98

13) Remove the ADF open/closed sensor cover [2].
- 4 screws [1]

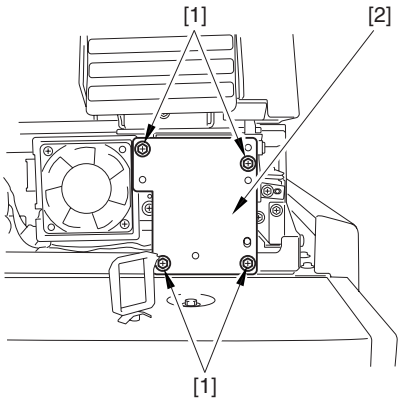

F-6-99

14) Remove the harness from the wire saddle [3].
- 2 connectors [1]

- snap-open band [2]

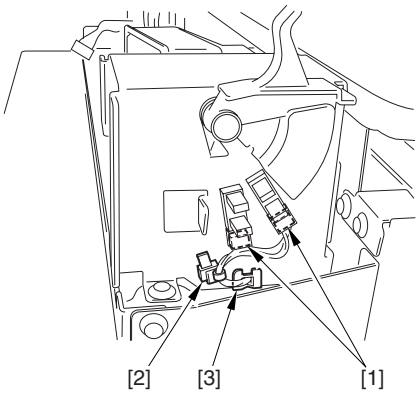

F-6-100

15) Remove the ADF open/closed sensor base [3].
- harness [1] (From the wire saddle)
- 6 screws [2]

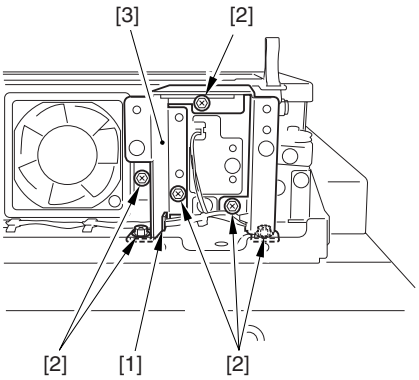

F-6-101

16) Remove the reader upper frame [2].
- 24 screws [1]

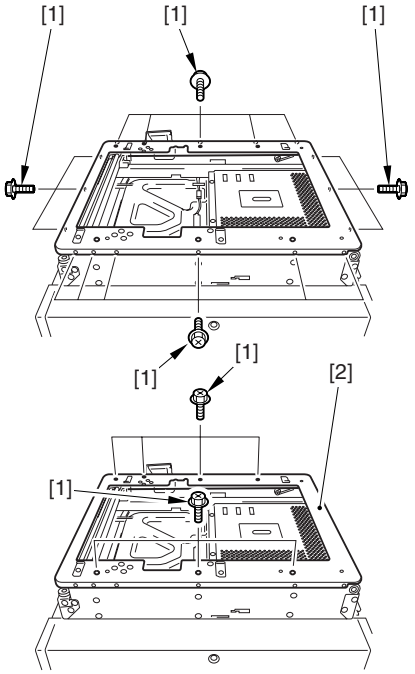

F-6-102

17) Remove the 2 cable fixing screws [2] of the No. 1 mirror base [1].
18) Remove the spring [3] used to hold the cable in place.
19) Remove the 2 hooks of the cable from the right side of the reader frame.
20) Remove the cable from the pulleys.

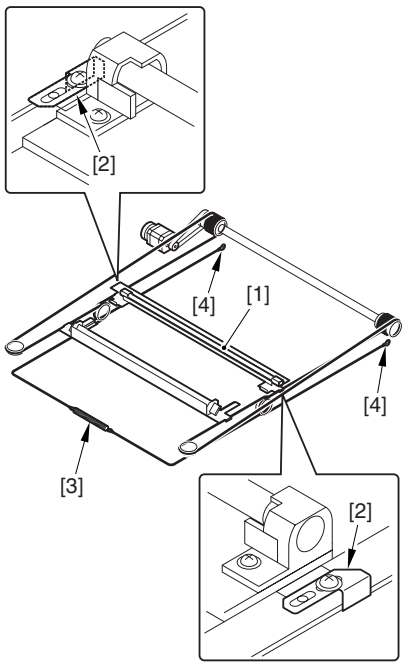

F-6-103

6.4.12.3 Attaching the Scanner Drive Cable

CLC5151 / / / CLC4040 / / / iR C4580i / / / iR C4080i / / / / Color Image Reader-F1 / Color Image Reader-E1 / Dupiex Color Image Reader-G1 / iR C5185N / / iR C5185i PRT /

1) Attach the ball of the cable in the hole of the drive pulley [1], and wind the cable (4 times inside, 5 times outside); then, attach it using tape or the like. At this time, be sure that the cable fixing [2] is on the inside.
2) Engage the cable on the pulleys; then, engage one end of the cable on the hook [3] of the left side and the other end on the hook of the right side.
3) Temporarily fix the cable fixing plate [2] in place to the No. 1 mirror base [5].
4) Attach the reader upper frame.

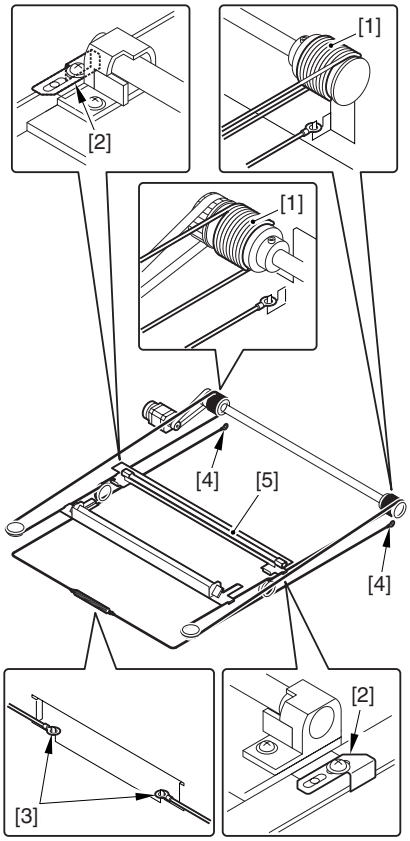

F-6-104

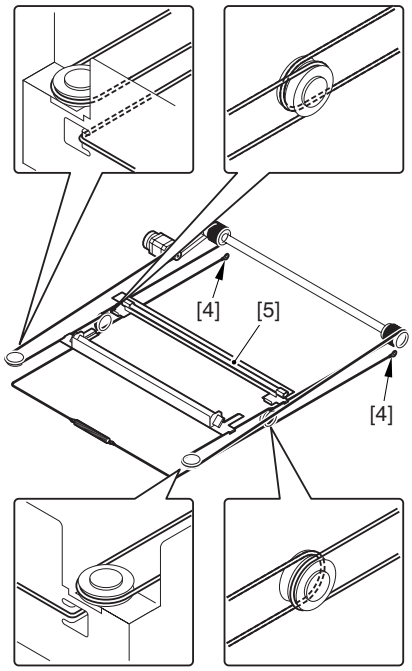

F-6-105

6.4.12.4 Adjusting the Position of the No. 1/No. 2 Mirror Base

CLC5151 / / / CLC4040 / / / iR C4580i / / / iR C4080i / / / / Color Image Reader-F1 / Color Image Reader-E1 / Dupiex Color Image Reader-G1 / iR C5185N / / iR C5185i PRT /

1) Set the pins at the rear of the mirror positioning tool (FY9-3009-040) in such a way so that the tool may be used for the machine.

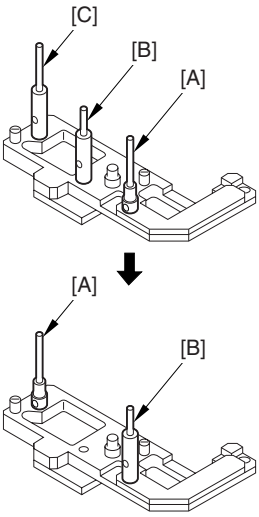

F-6-106

2) Set the pins at the front of the mirror positioning tool in such a way so that the tool may be used for the machine.

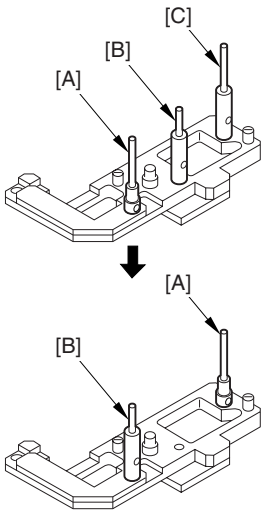

F-6-107

3) Insert the pins of the mirror positioning tool (front [2]; rear [3]) of the mirror positioning tool into the holes [1] of the No. 1 mirror base, No. 2 mirror base, and rail.

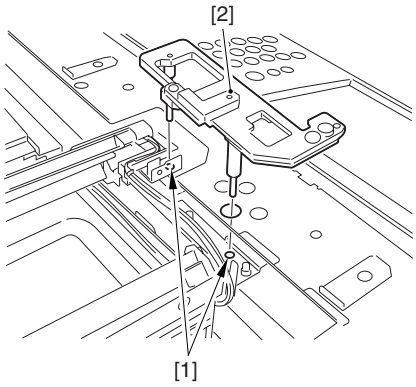

F-6-108

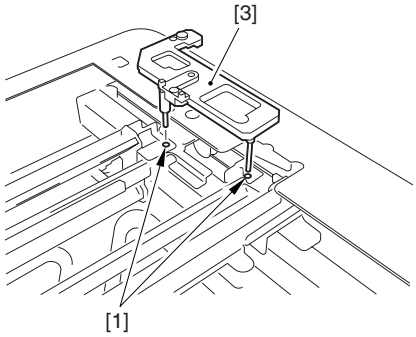

F-6-109

4) Fix the trailing rear edge of the wire, which was temporarily tightened to the hook of the reader flame, with the screw.
5) Tighten the screws of front/rear side of the wire fixing plate.
6) Remove the mirror positioning tool (front, rear).
7) Put back the parts by reversing the steps used to remove them.

Chapter 7 Image Processing System

Contents

7.1 Digital Image Processing 7-1
7.1.1 Overview 7-1
7.1.2 Shading Correction 7-1

7.1 Digital Image Processing

7.1.1 Overview

CLC5151 / / / CLC4040 / / / iR C4580i / / / iR C4080i / / / / iR C5185N / / iR C5185i PRT /

Digital image processing is performed at the reader controller PCB.
Major functions are as follows:
(1) Shading correction

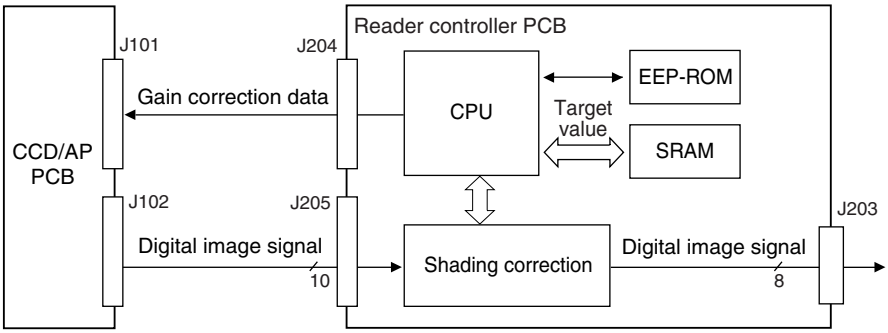

F-7-1

7.1.2 Shading Correction

CLC5151 / / / CLC4040 / / / iR C4580i / / / iR C4080i / / / / iR C5185N / / iR C5185i PRT /

Despite of the even original density, the CCD output will not always be even because of the following reasons:
(1) Variation in sensitivity of pixels of CCD.
(2) Difference of transmission light intensity between the center area and the peripheral area of the lens.
(3) Difference of light intensity between the center area and the peripheral area of the scanning lamp.
(4) Deterioration of the scanning lamp.
Shading correction is performed to correct unevenness of the CCD output.
Shading correction is performed by determining the target value at service mode and also by every scanning of the original.

1. Target value Correction
This correction is performed by measuring each level (R, G, B) with the standard white plate to store these density data. The memorized data is processed by computation to use as a target value at shading correction.

2. Shading Correction
This correction is performed at every scanning of the original. By measuring the density of the standard white plate to compare the measured value with the target value that is pre-stored at the shading correction circuit, set the difference as a shading correction value. Using this shading correction value, it corrects the variation in each element of the CCD at original scanning to even the density level.

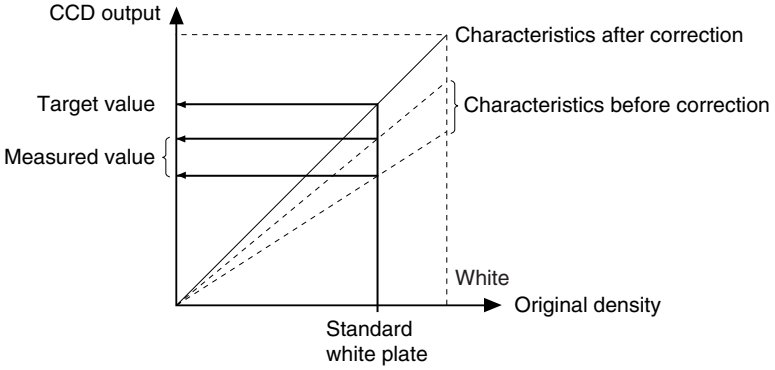

F-7-2

Chapter 8 Laser Exposure

Contents

8.1 Construction 8-1
8.1.1 Specifications, Control Mechanisms, and Functions 8-1
8.1.2 Major Components 8-1
8.1.3 Construction of the Control System 8-2
8.2 Basic Sequence 8-3
8.2.1 Basic sequence of operation 8-3
8.3 Various Control 8-4
8.3.1 Controlling the Laser Activation Timing 8-4
8.3.1.1 ON/OFF Control 8-4
8.3.1.2 Controlling Synchronization in Main Scanning Direction 8-6
8.3.1.3 Controlling Synchronization in Sub Scanning Direction 8-7
8.3.2 Controlling the Intensity of Laser Light 8-8
8.3.2.1 APC Control 8-8
8.3.2.2 PWM Control 8-8
8.3.3 Controlling the Laser Scanner Motor 8-8
8.3.3.1 Laser scanner motor control 8-8
8.3.3.2 Laser Scanner Motor Speed Change Control 8-9
8.3.4 Controlling the Laser Shutter 8-10
8.3.4.1 Laser shutter control 8-10
8.3.5 Correcting Image Displacement 8-10
8.3.5.1 Outline 8-10
8.3.5.2 Timing of Color Displacement Detection/Correction 8-11
8.3.5.3 Detecting/Correcting Color Displacement in Sub Scanning Direction 8-11
8.3.5.4 Detecting/Correcting the Angle in Main Scanning Direction 8-12
8.3.5.5 Detecting/Correcting Color Displacement in Main Scanning Direction 8-13
8.3.5.6 Detecting/Correcting Changes in the Reproduction Ratio in Main Scanning Direction 8-14
8.4 Parts Replacement Procedure 8-16
8.4.1 Laser Unit 8-16
8.4.1.1 Preparation for Removing the Laser Unit 8-16
8.4.1.2 Removing the Laser Unit 8-16
8.4.1.3 After Replacing the Laser Unit 8-17

8.1 Construction

8.1.1 Specifications, Control Mechanisms, and Functions

CLC5151 / / / CLC4040 / / / iR C4580i / / / iR C4080i / / / / iR C5185N / / iR C5185i PRT /

T-8-1

Laser light	
Wave length	780 nm (infrared)
Output	5 mW
Number of laser beams	4 Beams

T-8-2

Scanner motor	
Type of motor	DC brush-less
Number of revolutions	iR C5180 : ca. 37000rpm iR C4580/4040 : ca. 33000rpm iR C3880/4080 : ca. 29000rpm
Type of bearing	Oil

T-8-3

Polygon mirror	
Number of facets	4 facets (f20)

T-8-4

Control mechanisms	
Sync control	main scanning direction sub scanning direction
Light intensity	APC control PWM control
Color displacement correction	reproduction ratio in main scanning direction displacement in main scanning direction
Others	scanner motor control Laser Scanner Motor Speed Change Control laser shutter control laser ON/OFF control

8.1.2 Major Components

CLC5151 / / / CLC4040 / / / iR C4580i / / / iR C4080i / / / / iR C5185N / / iR C5185i PRT /

T-8-5

Name	Description
Laser driver	generates laser light.
Polygon mirror	scans the laser beam in main scanning direction.
guide mirror	directs laser light in the direction of the drum.
Corrective lens	corrects displacement of laser light coming from the guide mirror in main scanning direction.
displacement correction motor	moves the corrective lens to correct displacement in main scanning direction.
BD detection PCB	detects laser light as a BD signal.
BD mirror	reflects the laser light in the direction of the BD detection PCB.

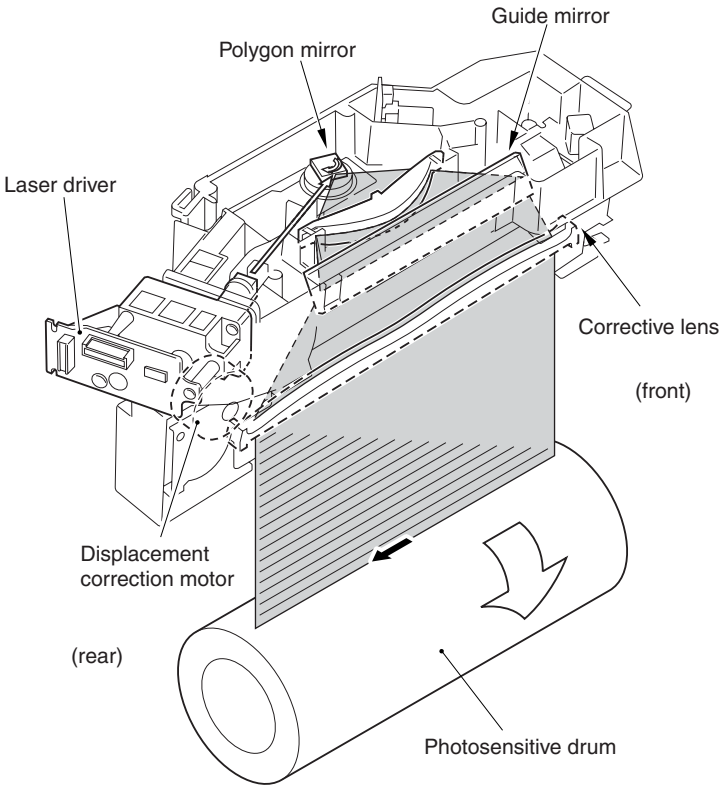

F-8-1

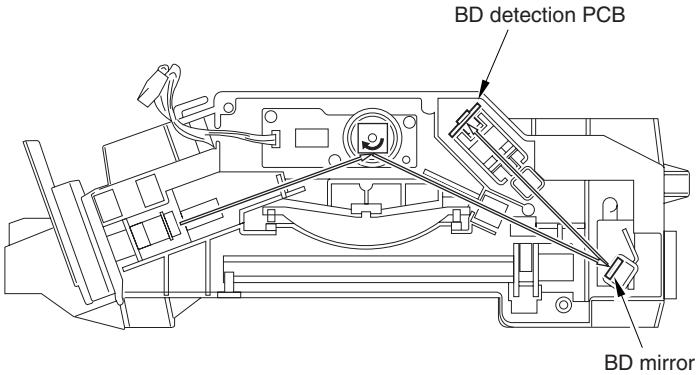

F-8-2

8.1.3 Construction of the Control System

CLC5151 / / / CLC4040 / / / iR C4580i / / / iR C4080i / / / / iR C5185N / / iR C5185i PRT /

The laser exposure system is controlled mainly by the DC controller PCB2(MAICY).

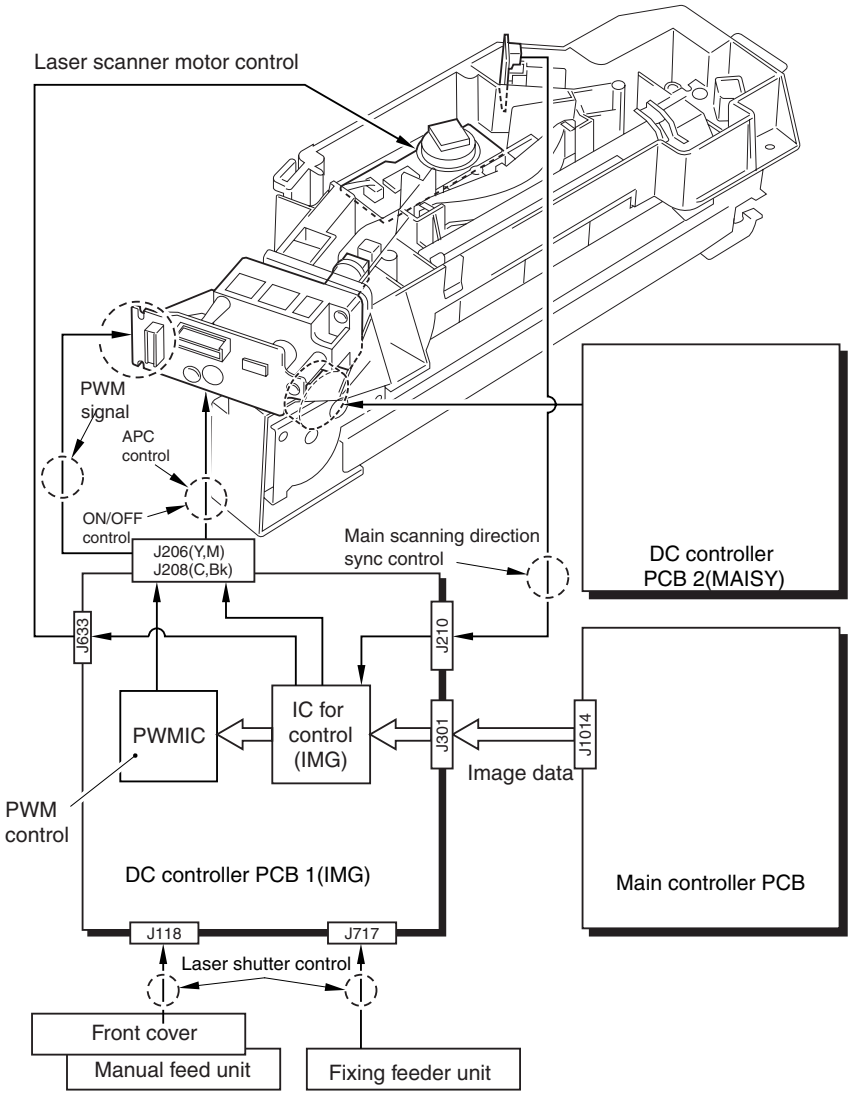

F-8-3

8.2 Basic Sequence

8.2.1 Basic sequence of operation

CLC5151 / / / CLC4040 / / / iR C4580i / / / iR C4080i / / / / iR C5185N / / iR C5185i PRT /

The laser scanner motor starts to rotate when the Start key is turned on (or, in response to the print requset signal). Thereafter, when the rotation has stabilized, the printer unit becomes ready to form images, indicating the fact by its sync signal (PTOP).
The machine uses the signal to generate the sub scanning direction signals (Y-TOP, M-TOP, C-TOP, K-TOP) for individual colors, and turns on the lasers of the corresponding colors.

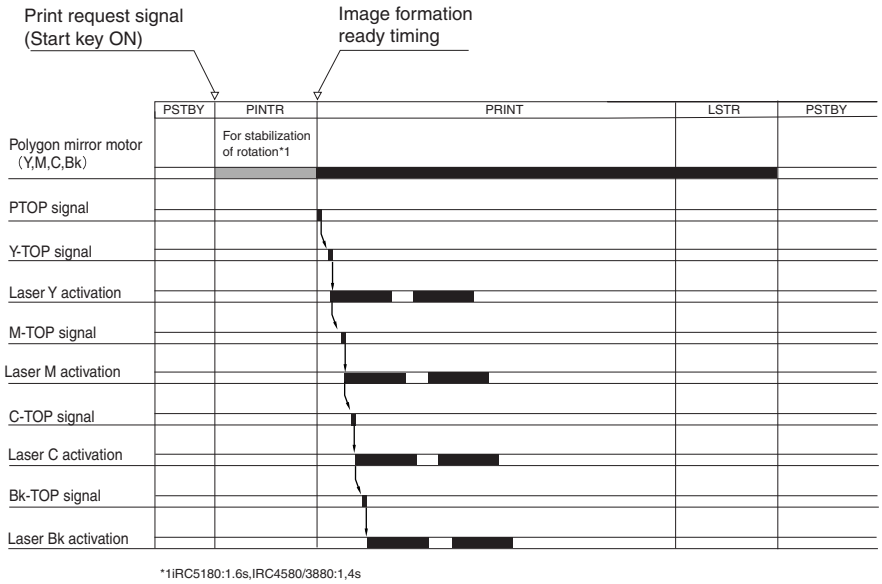

F-8-4

8.3 Various Control

8.3.1 Controlling the Laser Activation Timing

8.3.1.1 ON/OFF Control

CLC5151 / / / CLC4040 / / / iR C4580i / / / iR C4080i / / / / iR C5185N / / iR C5185i PRT /

The 4 laser beams are turned on/off by the combination of control signals from the DC controller PCB 2.

T-8-6

CTRL2_1	CTRL1_1	CTRL0_1	CTRL2_2	CTRL1_2	CTRL0_2	LD_A	LD_B	LD_C	LD_D
0	0	0	0	0	0	DIS	DIS	DIS	DIS
0	1	0	0	1	1	APC	OFF	OFF	OFF
0	0	1	0	1	1	OFF	APC	OFF	OFF
0	1	1	0	0	1	OFF	OFF	APC	OFF
0	1	1	0	1	0	OFF	OFF	OFF	APC
0	1	1	0	1	1	OFF	OFF	OFF	OFF
1	1	1	1	1	1	DATA	DATA	DATA	DATA

DISK: off without retaining the level of voltage that corresponds to the intensity of laser light (in relation to APC; state of the machine at power-on).
OFF: off while retaining the level of voltage that corresponds to the intensity of laser light (short APC period; used for sequence light emission).
DATA: light emission in keeping with image data.

MEMO:
As many as 64 combinations are possible using 6 control signals. The combinations in the table are limited to those used in the said sequence.

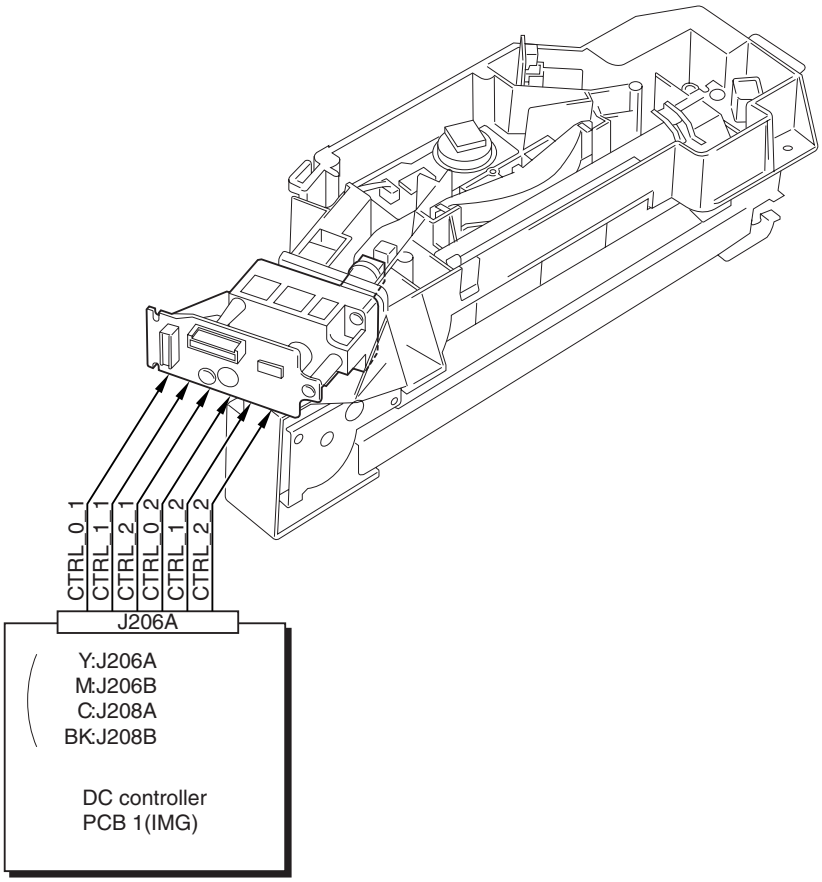

F-8-5

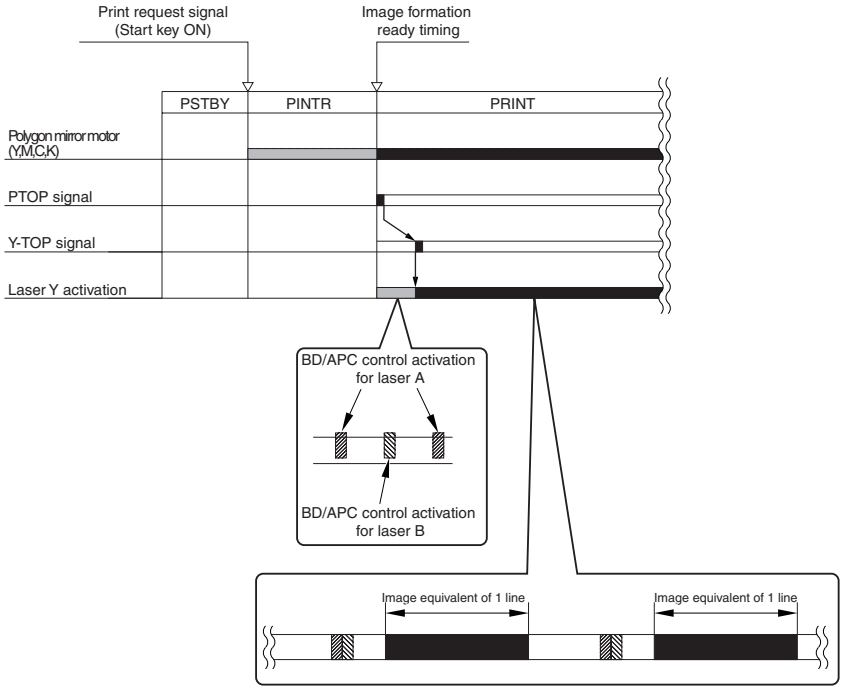

F-8-6

MEMO: Image processing at the main controller PCB (sub RB-A)
This machine switches over the resolution of both the main scanning direction and the sub scanning direction from 1200 dpi to 600 dpi by converting the image data to 600 dpi while the character interval information remained as 1200 dpi at the main controller PCB (sub RB-A).
It is resolved by exposing the same data by 2-dot for the main scanning direction, and by exposing the same data for A & B, and for C & D, of 4 beams for the sub scanning direction with the feeding speed remains.

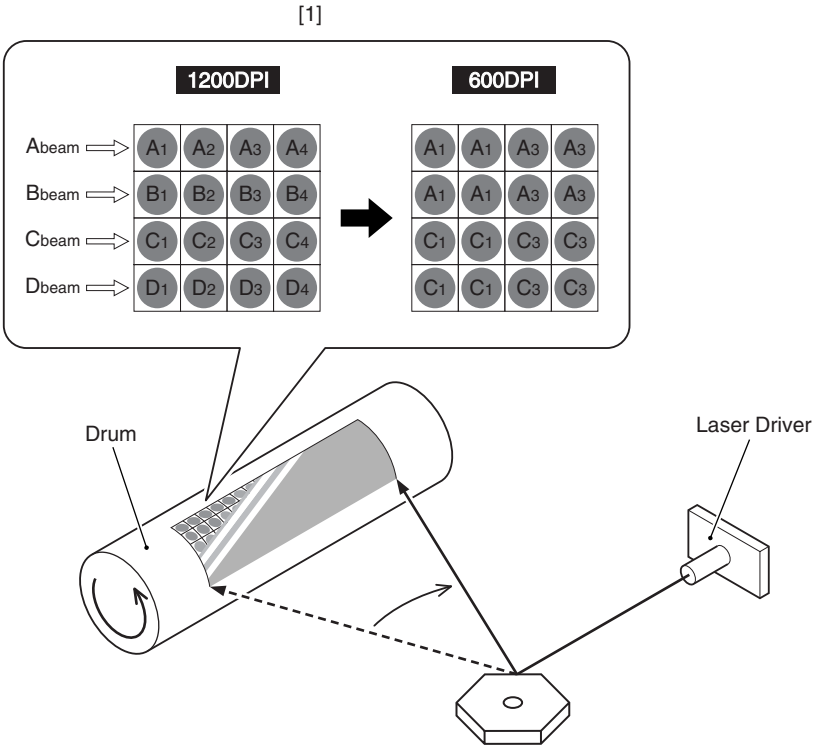

F-8-7

[1] 1 pixel

8.3.1.2 Controlling Synchronization in Main Scanning Direction

CLC5151 / / / CLC4040 / / / iR C4580i / / / iR C4080i / / / / iR C5185N / / iR C5185i PRT /

The control of synchronization in main scanning direction is based on the BD signal.

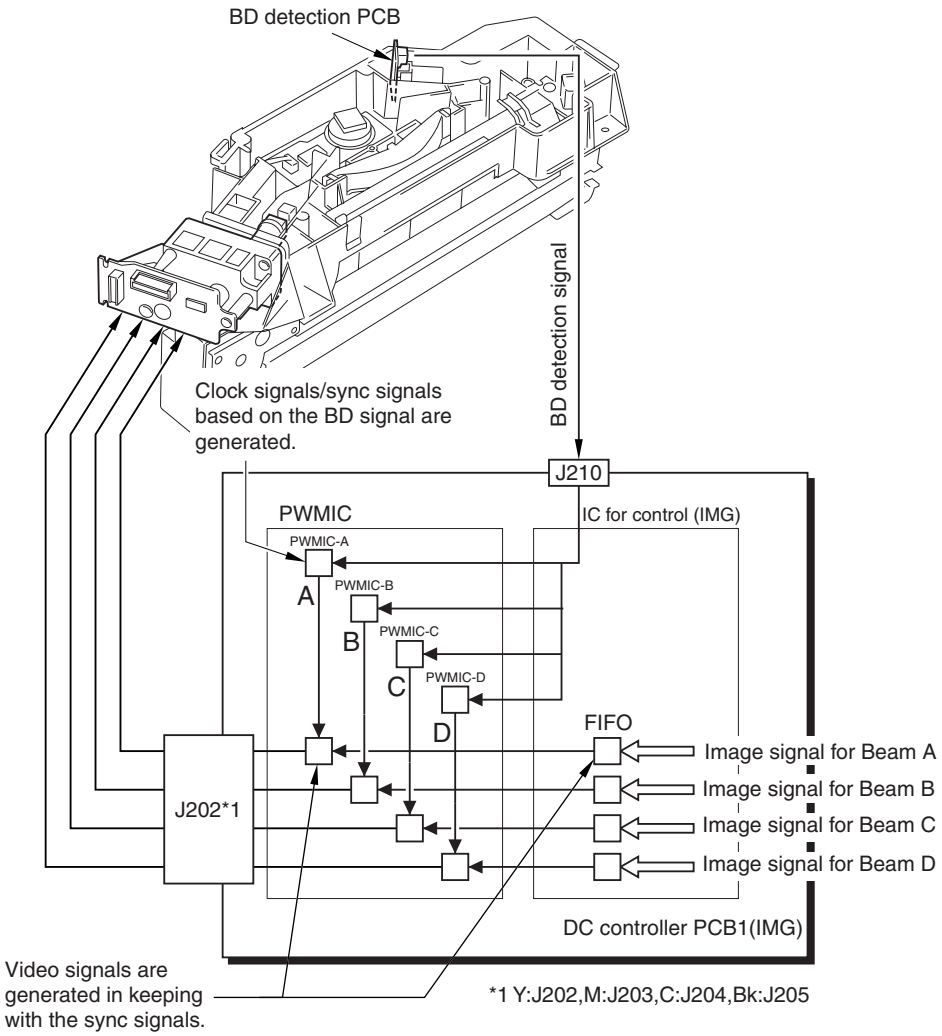

F-8-8

8.3.1.3 Controlling Synchronization in Sub Scanning Direction

CLC5151 / / / CLC4040 / / / iR C4580i / / / iR C4080i / / / / iR C5185N / / iR C5185i PRT /

- The synchronization in sub scanning direction is controlled with reference to the PTOP signal (image formation start signal).
- When the mechanism becomes ready for image formation, the PTOP signal (image formation start signal) is generated, turning on the individual lasers based on the signal.

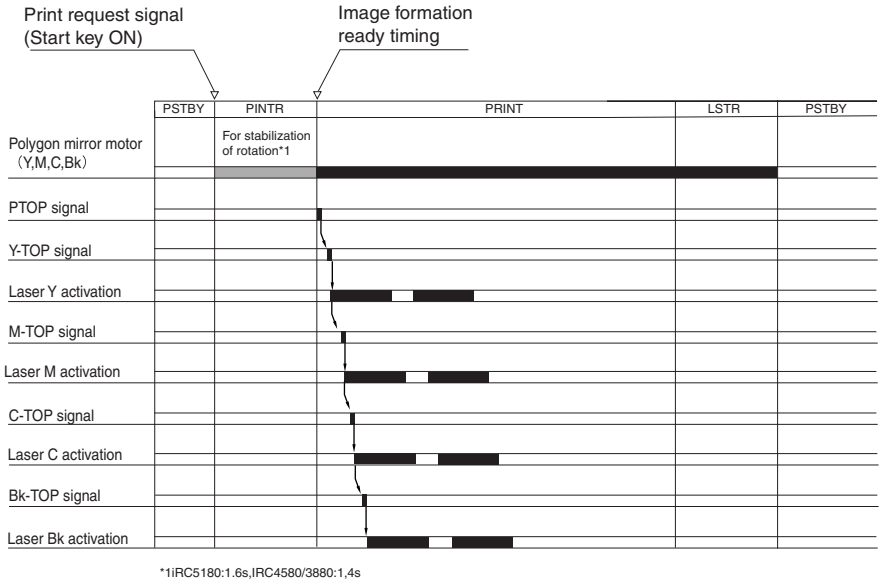

F-8-9

8.3.2 Controlling the Intensity of Laser Light

8.3.2.1 APC Control

CLC5151 / / / CLC4040 / / / iR C4580i / / / iR C4080i / / / / iR C5185N / / iR C5185i PRT /

The machine uses the photodiode mounted on the laser driver PCB to monitor the intensify of laser light so as to ensure that it remains at a specific level.

8.3.2.2 PWM Control

CLC5151 / / / CLC4040 / / / iR C4580i / / / iR C4080i / / / / iR C5185N / / iR C5185i PRT /

- A single pixel is divided into 32, and a 16-level activation pattern is selected to suit the image data in question.

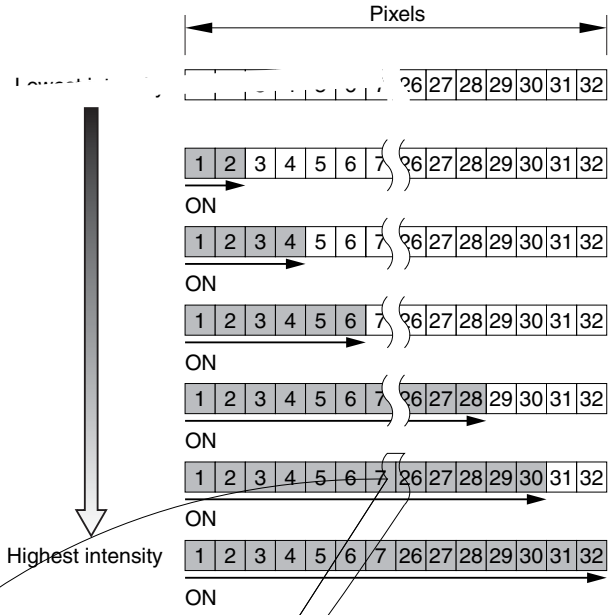

F-8-10

8.3.3 Controlling the Laser Scanner Motor

8.3.3.1 Laser scanner motor control

CLC5151 / / / CLC4040 / / / iR C4580i / / / iR C4080i / / / / iR C5185N / / iR C5185i PRT /

The machine uses the acceleration/deceleration signal to control the speed of rotation of the laser scanner motor so that the BD signal from individual laser units will be of the same phase as the reference signal (if the BD signal is behind the reference signal, accelerate; if ahead, decelerates).

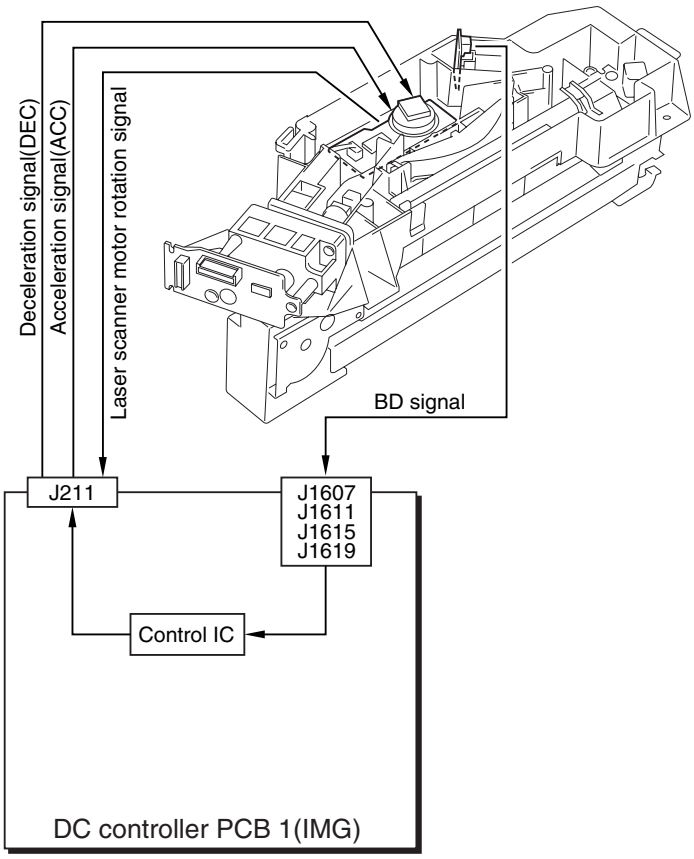

F-8-11

8.3.3.2 Laser Scanner Motor Speed Change Control

CLC5151 / / / CLC4040 / / / iR C4580i / / / iR C4080i / / / / iR C5185N / / iR C5185i PRT /

In the case of iRC4580/iRC3880, the Processing Speed varies among Mono, Color, and Transparency modes, ie., 185, 163, and 105 mm/sec. Because those Ratios are not Integer, the Polygon Motor Speed of those machines must be changed appropriately for their operation. These machines adopt Polygon Motor Speed Change for this reason.
(In 1/2 speed, with the ratio being an integer, lines drawn by laser beams may be skipped, e.g., by drawing every other line)

Polygon Motor Speed needs to be changed when Processing Speeds are switched to as shown in the Table below.

T-8-7

		Process speed after the speed change				
Process speed before the speed change		210	105	185	163	81.5
210	iRC5180 Constant Speed by		X	-	-	-
105	Constant Speed by iRC5180 or Transparency mode by iRC4580/3880	X		O	O	O
185	Bk Monochrome by iRC4580/3880	-	O		O	O
163	4C by iRC4580/3880	-	O	O		X
81.5	1/2 Speed by iRC4580/3880	-	O	O	X	

*1
O: Speed Changed
X: Speed Not Changed
-: Combinations that do not exist

The following table shows the printing speed according to mode, and the process control against process speed.

T-8-8

Mode	iRC4580		iRC3880		iRC3880	
	msec/ppm	Remedy	msec/ppm	Remedy	msec/ppm	Remedy
Normal speed mode	210	Normal operation	163(40*1)	Speed change control*2	163(36*1)	Speed change control*2
Bk high speed mode	-	-	185(45)	Speed change control*2	185(45)	Speed change control*2
Half speed mode	105Åi25.5Åj	Thinning out of laser	81.5Åi20Åj	Thinning out of laser	81.5Åi20Åj	Thinning out of laser
Transparency mode	105Åi11*1Åj	Thinning out of laser	105Åi11*1Åj	Speed change control*2	105Åi11*1Åj	Speed change control*2

*1 Adjust at paper interval
*2 Speed change control is needed when switching the process speed. If there is no switching, speed controls is not performed.

8.3.4 Controlling the Laser Shutter

8.3.4.1 Laser shutter control

CLC5151 / / / CLC4040 / / / iR C4580i / / / iR C4080i / / / / iR C5185N / / iR C5185i PRT /

When any of the following covers is opened (possibly causing leakage of laser light), the laser is turned off.
- front cover
- manual feeder unit
- fixing/feeding unit

When these covers (unit) are opened, the operating voltage (5 V) applied to the laser driver is turned off and, in addition, the laser control signal/image signal is also turned off.

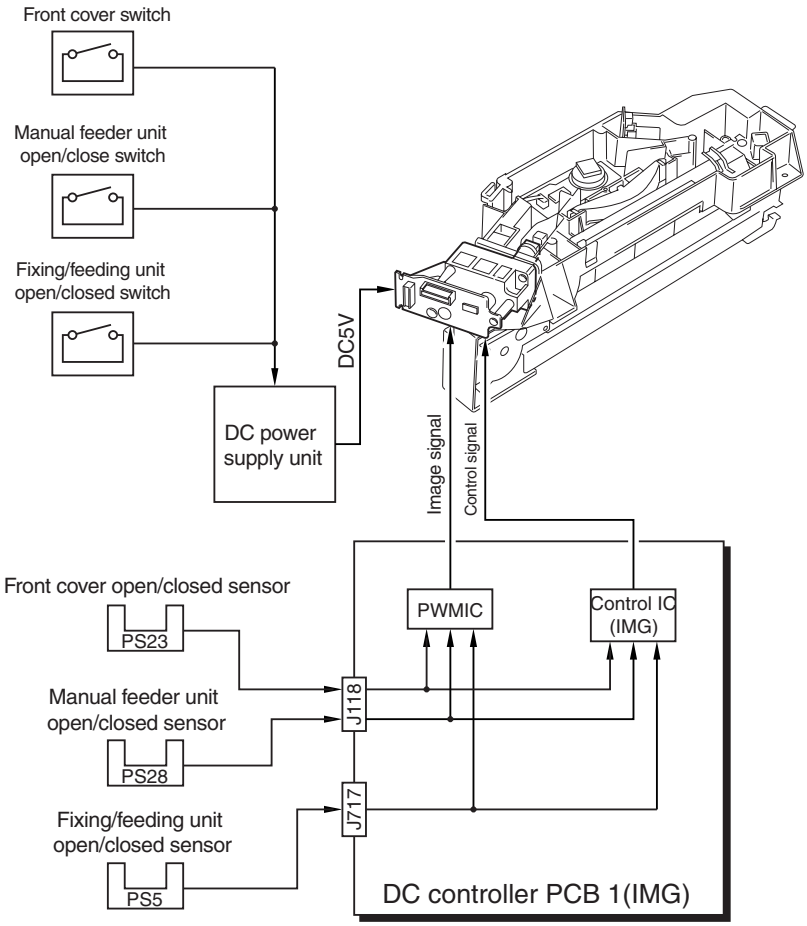

F-8-12

8.3.5 Correcting Image Displacement

8.3.5.1 Outline

CLC5151 / / / CLC4040 / / / iR C4580i / / / iR C4080i / / / / iR C5185N / / iR C5185i PRT /

The following factors can displace images of individual colors:
- displacement of the photosensitive drum caused by replacement of the drum unit/toner container
  ->displacement in sub scanning direction
- displacement of laser path caused by replacement of laser unit
  ->displacement/angle in main scanning direction
- displacement in laser path length caused by changes in temperature inside machine
  ->variation in magnification

To correct the discrepancies in images, the machine executes corrective control for image position; it detects displacement in color by forming a pattern of a specific color on the transfer belt and reading it against the correct position.

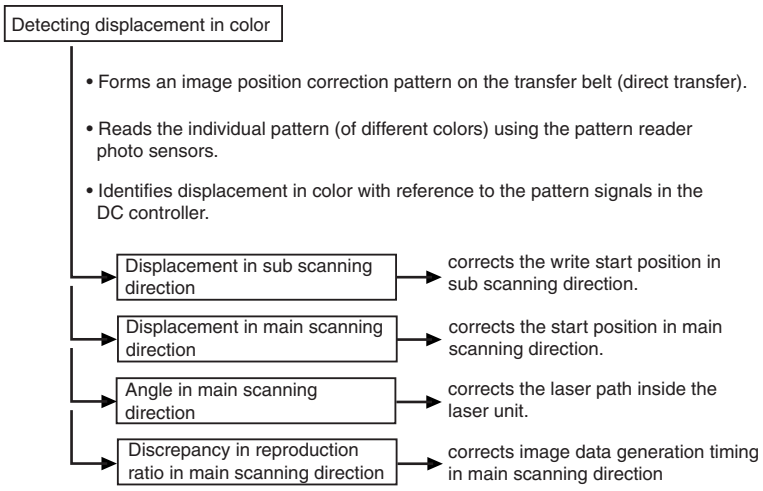

F-8-13

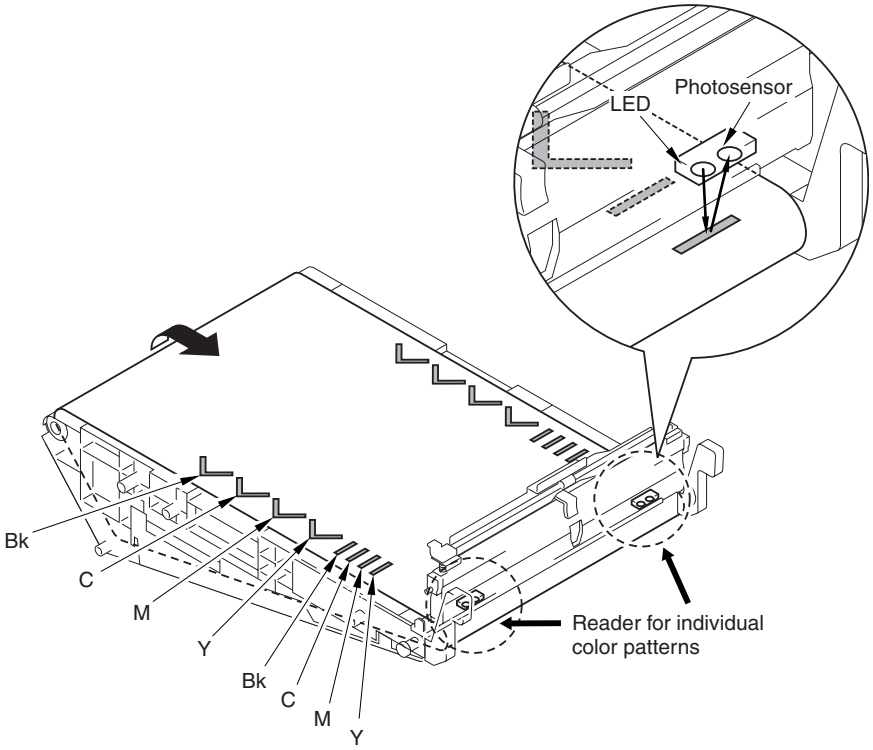

F-8-14

8.3.5.2 Timing of Color Displacement Detection/Correction

CLC5151 / / / CLC4040 / / / iR C4580i / / / iR C4080i / / / / iR C5185N / / iR C5185i PRT /

The machine detects/corrects color displacement at the following timing:
- during warm-up after the main power switch is turned on
- during warm-up after jam clear
- during warm-up after return from sleep
- during warm-up after replacement of the drum unit (not when the toner container is replaced)
- during warm-up when low-power mode is turned on after opening/closing of the cover while the machine is in low-power mode
- 10 hr after the machine has been left alone in standby state
- during quick correction (auto gradation correction)
- after sheet-to-sheet auto correction when 300 sheets (small-size, equivalent in single-sided) have been fed continuously
- during last rotation auto correction at time of counter increments occurring after intermittent jobs of 300 pages (small-size, equivalent of single-sided)
- in response to changes in the environment
- when replacing the toner cartridge

8.3.5.3 Detecting/Correcting Color Displacement in Sub Scanning Direction

CLC5151 / / / CLC4040 / / / iR C4580i / / / iR C4080i / / / / iR C5185N / / iR C5185i PRT /

The Y pattern is used as the reference. The machine identifies the degree of color displacement in sub scanning direction with reference to the timing at which other color patterns are checked after a check on the Y pattern.
If the timing is not correct, the machine corrects the laser write start timing in sub scanning direction.

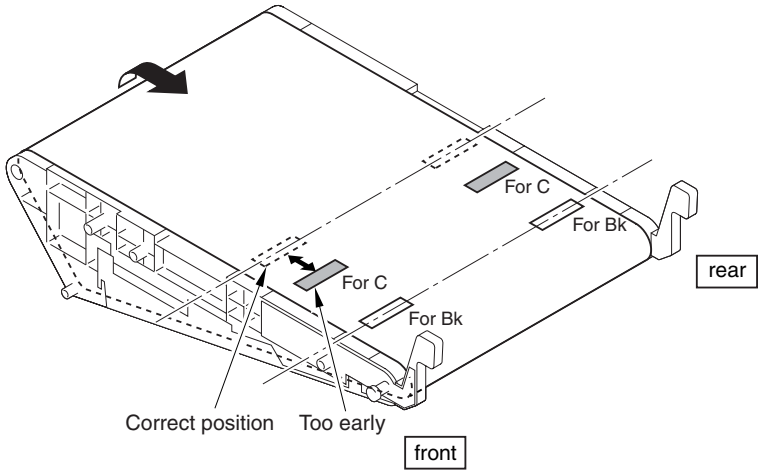

F-8-15

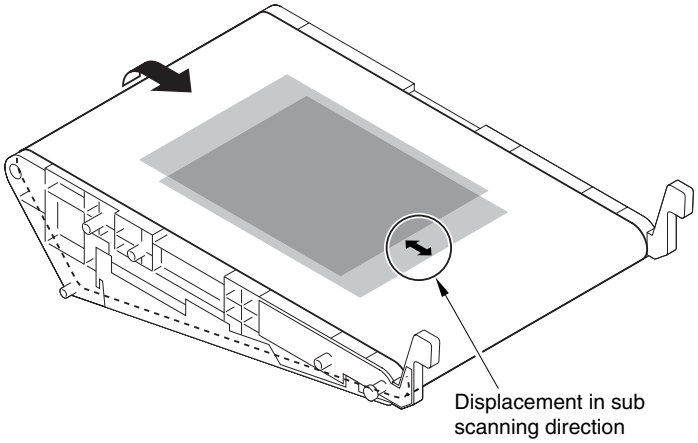

F-8-16

8.3.5.4 Detecting/Correcting the Angle in Main Scanning Direction

CLC5151 / / / CLC4040 / / / iR C4580i / / / iR C4080i / / / / iR C5185N / / iR C5185i PRT /

The Bk pattern is used as the reference. The machine identifies the angle in main scanning direction with reference to front/rear discrepancies of individual colors.

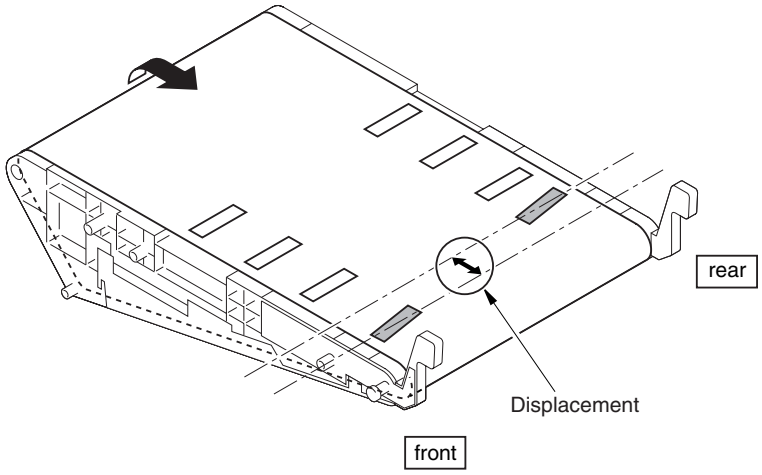

F-8-17

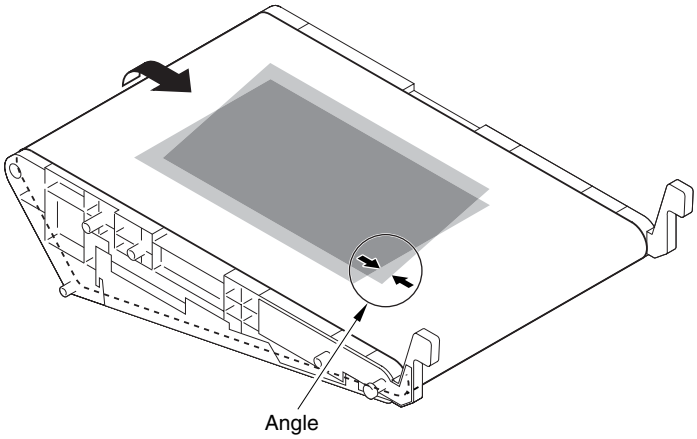

F-8-18

If the machine detects any angle, it turns on the main scanning direction angle correction motor located inside the laser unit.

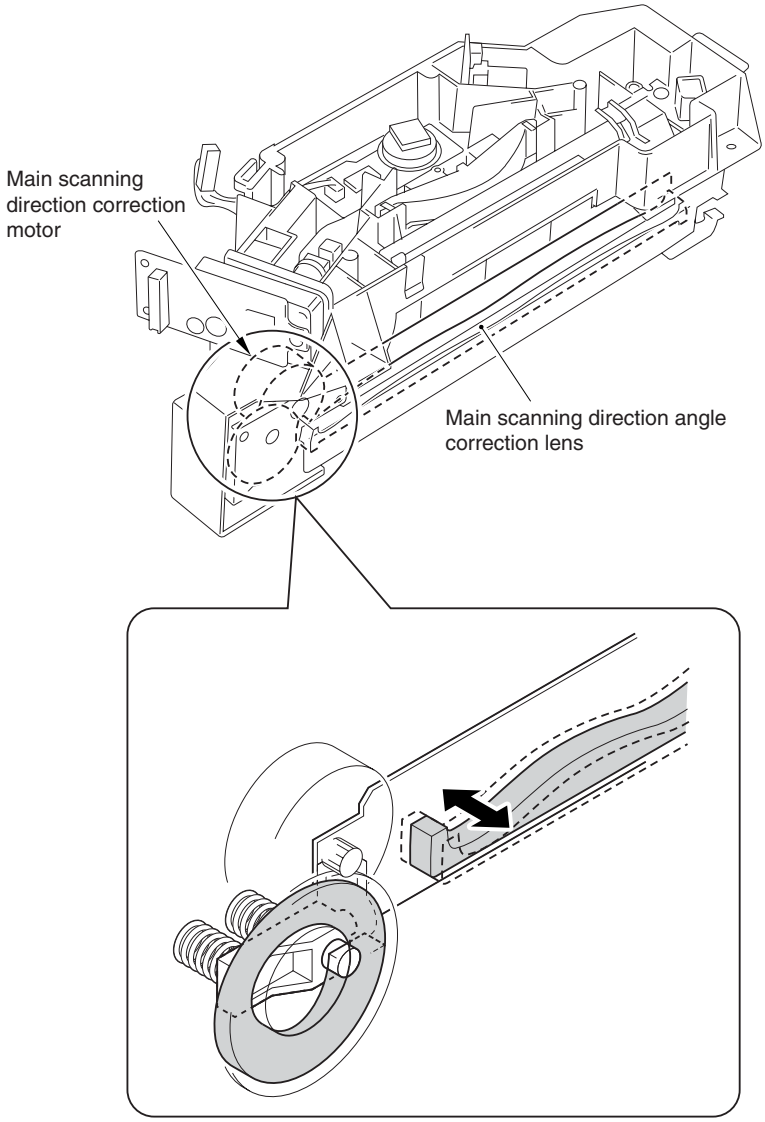

F-8-19

8.3.5.5 Detecting/Correcting Color Displacement in Main Scanning Direction

CLC5151 / / / CLC4040 / / / iR C4580i / / / iR C4080i / / / / iR C5185N / / iR C5185i PRT /

The Bk pattern is used as the reference. The machine compares the length of the center line of the Bk image position correction pattern (front) and the length of the center line of the image position correction pattern (front) of individual colors, and identifies the difference between the two as the degree of color displacement in main scanning direction.
When the machine detects color displacement, it corrects the timing at which the laser is started in main scanning direction.

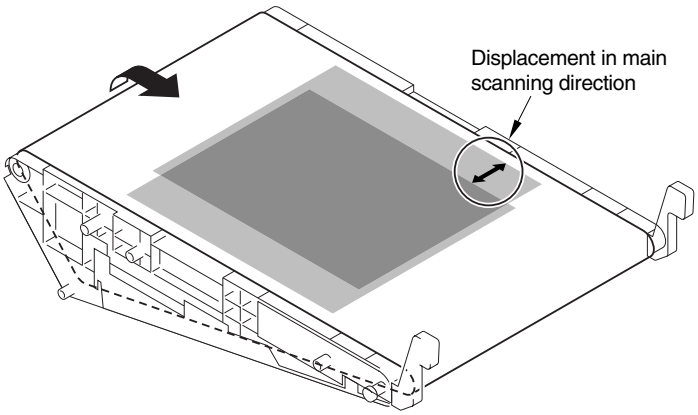

F-8-20

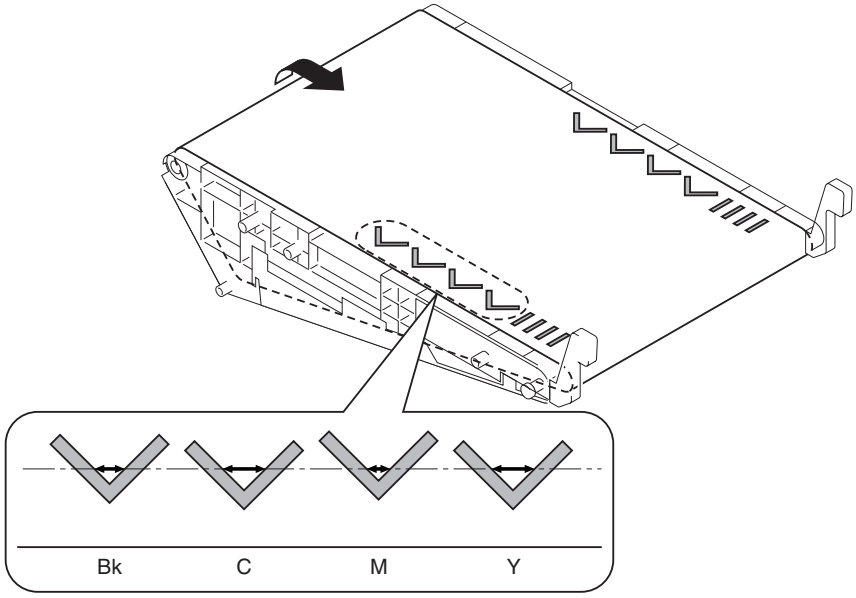

F-8-21

8.3.5.6 Detecting/Correcting Changes in the Reproduction Ratio in Main Scanning Direction

CLC5151 / / / CLC4040 / / / iR C4580i / / / iR C4080i / / / / iR C5185N / / iR C5185i PRT /

The Bk pattern is used as the reference. The machine copies the center line of the Bk image correction pattern (rear) and the center line of the individual image position correction patterns (rear), and identifies the difference between the two as the change in the reproduction ratio in main scanning direction.
When the machine detects any change, it corrects the timing at which the video signals are transferred to the laser unit.

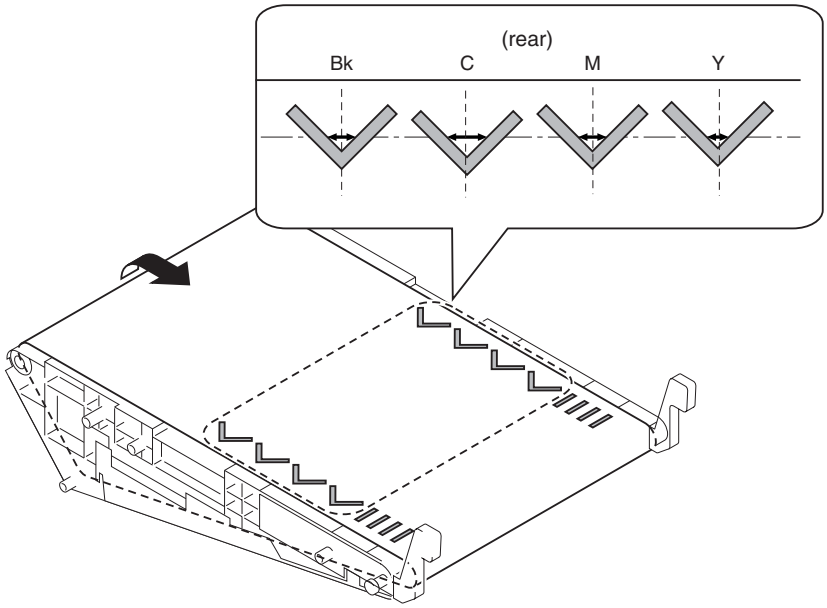

F-8-22

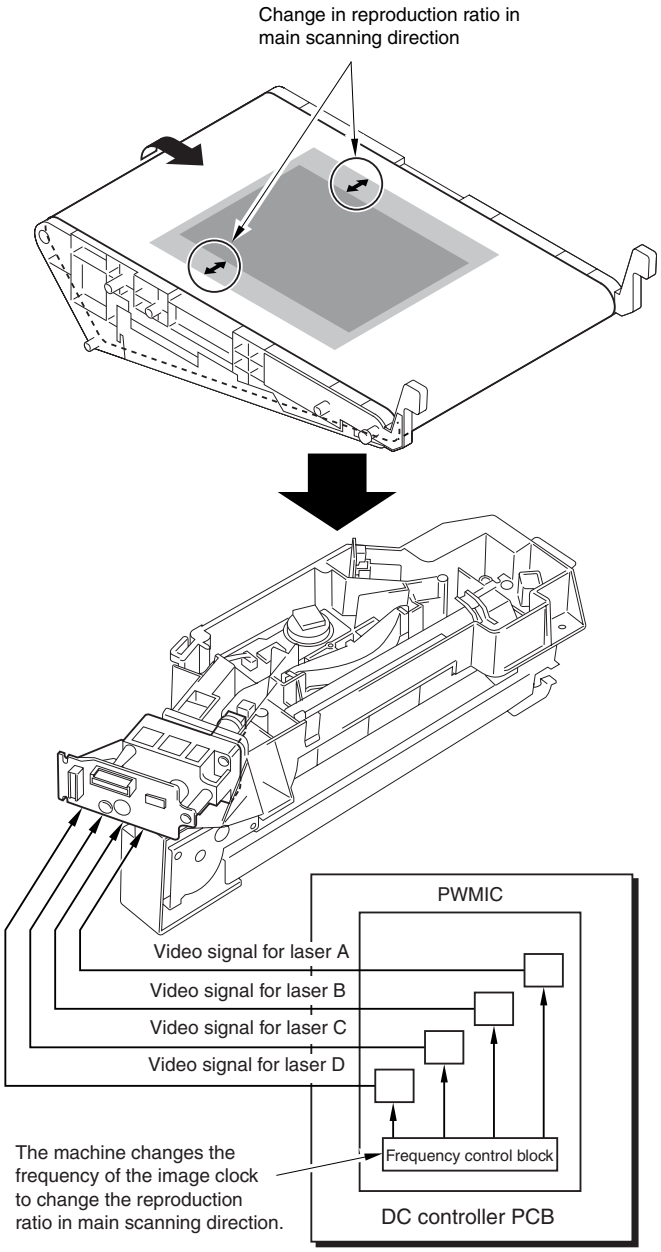
Change in reproduction ratio in main scanning direction
PWMIC
Video signal for laser A
Video signal for laser B
Video signal for laser C
Video signal for laser D
Frequency control block
The machine changes the frequency of the image clock to change the reproduction ratio in main scanning direction.
DC controller PCB

F-8-23

8.4 Parts Replacement Procedure

8.4.1 Laser Unit

8.4.1.1 Preparation for Removing the Laser Unit

CLC5151 / / / CLC4040 / / / iR C4580i / / / iR C4080i / / / / Color Image Reader-F1 / Color Image Reader-E1 / Dupiex Color Image Reader-G1 / iR C5185N / / iR C5185i PRT /

1) Remove the center delivery tray [2].
   - 2 screws [1]

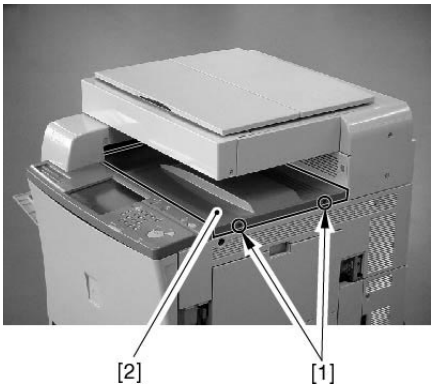

F-8-24

2) Remove the connectors [1], [2], and the wire guide [3].

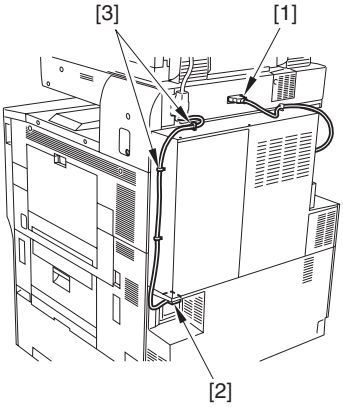

F-8-25

8.4.1.2 Removing the Laser Unit

CLC5151 / / / CLC4040 / / / iR C4580i / / / iR C4080i / / / / Color Image Reader-F1 / Color Image Reader-E1 / Dupiex Color Image Reader-G1 / iR C5185N / / iR C5185i PRT /

1) Remove the reader link unit cover [2].
   - 2 screws [1]

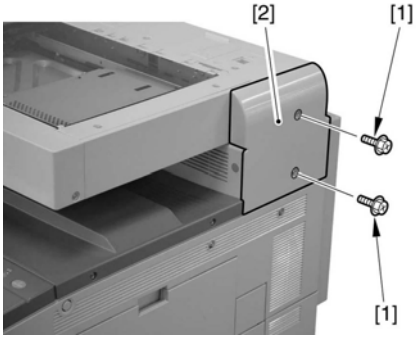

F-8-26

2) Remove the positioning pin [2] from the reader link unit.
   - 1 stepped screw [1]

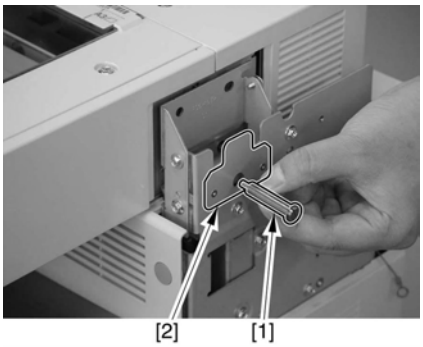

F-8-27

3) While lifting the rear reader unit [3] slightly, remove the upper inside cover [4].
   - 1 face cap [1]
   - 1 screw [2]

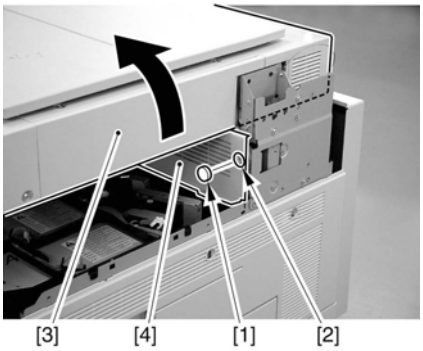

F-8-28

When detaching the inside upper cover [2], push the top middle of the cover to free the hook [1].

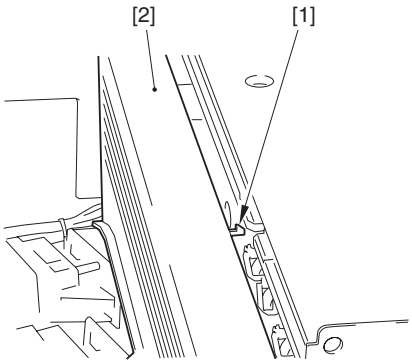

F-8-29

4) Shift the arm [1] of the reader link unit 90 deg to support the reader unit.

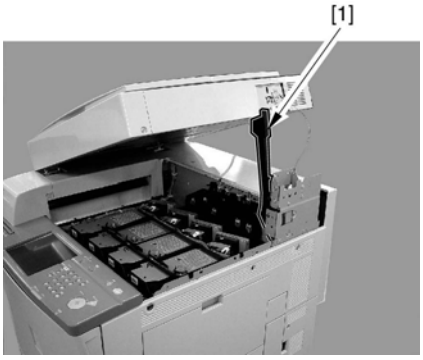

F-8-30

5) Remove the harness guide [2].
   - 8 connectors [1]

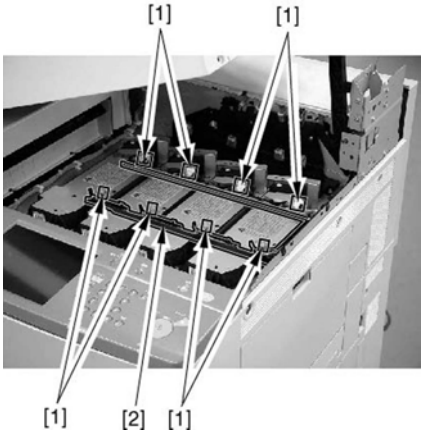

F-8-31

6) Remove the laser unit [3].
- 2 connector[1]
- 4 screws [2]

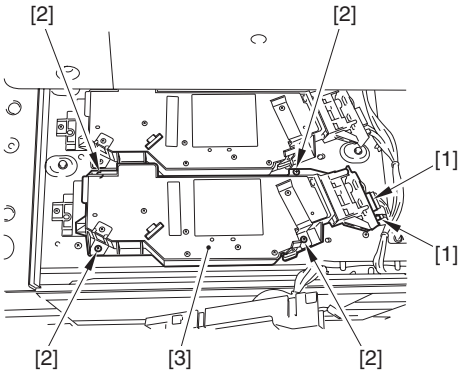

F-8-32

MEMO:
When attaching the laser unit, tighten the screws in diagonal sequence for proper balance.

8.4.1.3 After Replacing the Laser Unit

CLC5151 / / / CLC4040 / / / iR C4580i / / / iR C4080i / / / / Color Image Reader-F1 / Color Image Reader-E1 / Dupiex Color Image Reader-G1 / iR C5185N / / iR C5185i PRT /

When replacing the laser unit, enter the values indicated in the label attached on the upper surface of the new laser unit to the following Service Mode items.
Laser maker identification
[1] COPIER > ADJUST > LASER > LA-MK-Y/M/C/K
Laser magnification
[2] COPIER > ADJUST > LASER > LDADJ1-Y/M/C/K
[3] COPIER > ADJUST > LASER > LDADJ2-Y/M/C/K
[4] COPIER > ADJUST > LASER > LDADJ3-Y/M/C/K
Laser phase difference
[5] COPIER > ADJUST > LASER > LDADJ4-Y/M/C/K
[6] COPIER > ADJUST > LASER > LDADJ4-Y/M/C/K
[7] COPIER > ADJUST > LASER > LDADJ4-Y/M/C/K

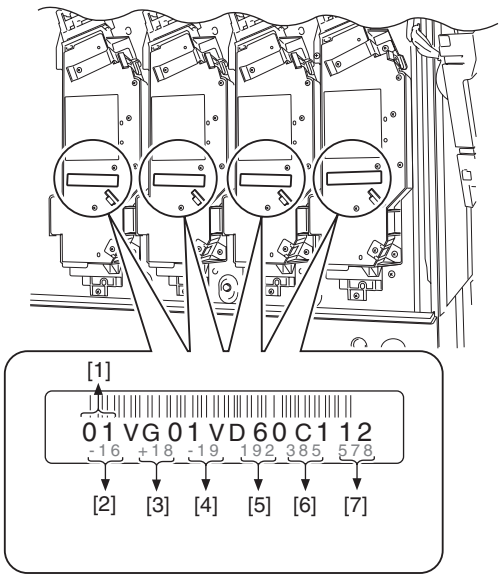

F-8-33

Chapter 9 Image Formation

Contents

9.1 Construction 9-1
9.1.1 Specifications, Control Mechanisms, and Functions 9-1
9.1.2 Major Components of the Image Formation System 9-2
9.1.3 Charging Specifications 9-3
9.2 Image Formation Process 9-4
9.2.1 Image Formation Process (general) 9-4
9.2.2 Image Formation Process (image formation) 9-5
9.2.3 Image Formation Process (transfer) 9-5
9.3 Basic Sequence 9-6
9.3.1 At Power-On (1) 9-6
9.3.2 At Power-On（2） 9-7
9.3.3 During Copying/Printing Operations (normal speed) 9-7
9.3.4 Making Copies/Prints (half speed) 9-8
9.3.5 After Replacing the Drum Unit (D-UNIT) 9-8
9.3.6 Printing Originals Containing a Color Page 9-9
9.4 Driving and Controlling the Image Formation System 9-9
9.4.1 Driving and Controlling the Image Formation System and the High-Voltage System 9-9
9.5 Image Stabilization Control 9-10
9.5.1 Outline of Image Quality Control 9-10
9.5.2 Automated Image Stabilization Control 9-10
9.5.3 ATR Control 9-13
9.5.4 Discharge Current Level Control 9-14
9.5.5 ATVC Control (transfer bias level correction) 9-14
9.5.6 PASCAL Control (image gradation) 9-14
9.5.7 SALT-Dmax Control (development characteristics correction) 9-15
9.5.8 SALT-Dhalf Control (development characteristics correction) 9-15
9.5.9 Auto Gradation Control 9-16
9.6 Drum Unit 9-17
9.6.1 Outline of the Drum Unit 9-17
9.6.1.1 Outline of the Drum Unit 9-17
9.6.1.2 Drum Receptacle Presence / Absence Detection 9-17
9.6.1.3 Drum Unit (D-UNIT) Drive Control 9-18
9.6.2 Developing Assembly 9-18
9.6.2.1 Construction of the Developing Assembly 9-18
9.6.2.2 Controlling the Developing Bias 9-19
9.6.3 Auxiliary Brush 9-20
9.6.3.1 Construction of the Auxiliary Brush 9-20
9.6.3.2 Controlling the Auxiliary Bias 9-21
9.6.4 Charging Mechanism 9-24
9.6.4.1 Construction of the Charging Mechanism 9-24
9.6.4.2 Controlling the Charging Bias 9-24
9.7 Toner Container 9-26
9.7.1 Outline of the Toner Container 9-26
9.7.2 Toner Receptacle Presence / Absence Detection 9-26
9.7.3 Controlling the Toner Container Drive 9-27
9.7.4 Checking the Level of Toner 9-27
9.7.5 Controlling the Supply of Toner 9-28
9.8 Transfer Unit 9-28
9.8.1 Outline of the Transfer Unit 9-28
9.8.1.1 Outline of the Transfer Unit 9-28
9.8.1.2 Transfer Unit Drive Control 9-29

9.8.2 Controlling the Transfer Bias 9-29
9.8.2.1 Transfer Bias Control 9-29
9.8.3 Cleaning 9-31
9.8.3.1 Intermediate Transfer Belt (ITB) 9-31
9.8.3.2 Secondary External Roller 9-31
9.8.3.3 Waste Toner Collection Mechanism 9-32
9.8.4 Separation Mechanism 9-32
9.8.4.1 Separation 9-32
9.9 Parts Replacement Procedure 9-34
9.9.1 Drum ITB Motor 9-34
9.9.1.1 Preparation for Removing the Drum ITB Motor 9-34
9.9.1.2 Removing the Drum ITB Motor 9-34
9.9.2 Drum Drive Unit 9-34
9.9.2.1 Preparation for Removing the Drum Drive Unit 9-34
9.9.2.2 Removing the Drum Drive Unit 9-35
9.9.3 Drive Roller 9-35
9.9.3.1 Preparation for Removing the Drive Roller 9-35
9.9.3.2 Removing the Drive Roller 9-36
9.9.4 Developing Motor (Bk/Y/M/C) 9-36
9.9.4.1 Preparation for Removing the Developing Motor 9-36
9.9.4.2 Removing the Developing Motor 9-36
9.9.5 Secondary Transfer Unit 9-37
9.9.5.1 Preparation for Removing the Secondary Transfer Unit 9-37
9.9.5.2 Removing the Secondary Transfer Unit 9-37
9.9.6 Intermediate Transfer Unit 9-38
9.9.6.1 Preparation for Removing the Intermediate Transfer Unit 9-38
9.9.6.2 Removing the Intermediate Transfer Unit 9-38
9.9.7 Transfer Cleaning Unit 9-38
9.9.7.1 Preparation for Removing the Transfer Cleaning Unit 9-38
9.9.7.2 Removing the Transfer Cleaning Unit 9-39
9.9.8 Intermediate Transfer Belt 9-39
9.9.8.1 Preparation for Removing the Intermediate Transfer Belt 9-39
9.9.8.2 Removing the Intermediate Transfer Belt 9-39
9.9.9 Intermediate Transfer Belt Tension Roller 9-41
9.9.9.1 Preparation for Removing the Intermediate Transfer Belt Tension Roller 9-41
9.9.9.2 Removing the Intermediate Transfer Belt Tension Roller 9-41
9.9.10 Primary Transfer Roller 9-41
9.9.10.1 Preparation for Removing the Primary Transfer Roller 9-41
9.9.10.2 Removing the Primary Transfer Roller 9-41
9.9.11 Secondary Transfer External Roller 9-42
9.9.11.1 Preparation for Removing the Secondary Transfer External Roller 9-42
9.9.11.2 Removing the Secondary Transfer External Roller 9-42
9.9.12 Secondary Transfer Internal Roller 9-43
9.9.12.1 Preparation for Removing the Secondary Transfer Internal Roller 9-43
9.9.12.2 Removing the Secondary Transfer Internal Roller 9-43
9.9.13 Toner Container Drive Unit 9-43
9.9.13.1 Preparation for Removing the Toner Container Drive Unit 9-43
9.9.13.2 Removing the Toner Container Drive Unit 9-44
9.9.14 Waste Toner Detection PCB 9-44
9.9.14.1 Preparation for Removing the Waste Toner Detection PCB 9-44
9.9.14.2 Removing the Waste Toner Detection PCB 9-45
9.9.15 Feedscrew Rotation Sensor 9-45
9.9.15.1 Preparation for Removing the Feedscrew Rotation Sensor 9-45
9.9.15.2 Removing the Feedscrew Rotation Sensor 9-47
9.9.16 Tone Container Motor 9-47
9.9.16.1 Preparation for Removing the Toner Container Motor 9-47
9.9.16.2 Removing the Toner Container Motor 9-48
9.9.17 Waste Toner Feedscrew Case 9-48
9.9.17.1 Preparation for Removing the Waste Toner Feedscrew Case 9-48

9.9.17.2 Removing the Waste Toner Feedscrew Case....9-49
9.9.18 Pattern Reader Unit.... 9-49
9.9.18.1 Preparation for Removing the Pattern Reader Unit....9-49
9.9.18.2 Removing the Pattern Reader Unit....9-49
9.9.18.3 Procedure After Replacing the Pattern reader unit....9-50
9.9.19 Auto Registration Sensor PCB.... 9-50
9.9.19.1 Preparation for Removing the Auto Registration Sensor PCB....9-50
9.9.19.2 Removing the Auto Registration Sensor PCB....9-50
9.9.20 SALT Sensor.... 9-51
9.9.20.1 Preparation for Removing the SALT Sensor....9-51
9.9.20.2 Removing the SALT Sensor....9-51

9.1 Construction

9.1.1 Specifications, Control Mechanisms, and Functions

CLC5151 / / / CLC4040 / / iR C4580i / / iR C4080i / / / / iR C5185N / / iR C5185i PRT /

T-9-1

	Photosensitive drum		
Drum unit (D-UNIT)	Type of drum	OPC	
	Diameter of drum	30.6 mm	
	Cleaning mechanism	Cleaner-less The residual toner after transfer is charged for collection by the developing assembly.	
	Process speed	Plain Paper*1	iRC5180: 210mm/sec iRC4580: Color 163mm/sec Black and White 185mm/sec iRC3880: Color 163mm/sec Black and White 185mm/sec
		Thick Paper*1	iRC5180:105mm/sec iRC4580:81.5mm/sec iRC3880:Color 81.5mm/sec
		OHP, Gloss Paper*1	iRC4580/3880:105mm/sec *2

*1: Paper Types described above refers to the followings:
Plain Paper: Plain Paper,Colored Paper, Recycled Paper, Bond Paper, Letterhead (except Thick Paper and OHP)
Thick Paper: Thick Paper,, Postcard, Quadrouple Postcard, Envelope, Labe Paperl, Tab Paper, Intermediate Paper
OHP: OHP, Gloss Paper
*2: iRC4580 and iRC3880 have the same Processing Speed, but different productivitiy due to their different Sheet-to-Sheet length.

T-9-2

	Developing assembly	
	Diameter of developing cylinder	16 mm
	Method of development	dry, 2-component
	Toner	non-magnetic, negative (S toner)
	Detection of toner inside developing assembly	ATR sensor (magnetic sensor)
	Starter	held by drum unit

T-9-3

	Primary charging assembly	
	Method of charging	roller, contact charging
	Diameter of charging roller	14 mm
	Cleaning mechanism	cleaning sheet, in contact (reciprocating movement of 5 mm; Interval: 1.5 to 2.4 seconds (It depends on the processing speed.))

T-9-4

	Auxiliary brush	
	Type of brush	fur brush
	Intrusion of brush	1.3 mm (upstream) 1.3 mm (downstream)

T-9-5

	Others	
	Items of control by internal memory	color of toner inside drum unit cumulative number of prints cumulative number of video counts data on life of drum unit data on toner supply control

T-9-6

Toner container	Detection of toner level	in reference to number of rotations made by toner feedscrew

	Toner volume	iRC5180 Y : 550g M : 550g C : 550g Bk : 550g iRC4580 Y : 490g M : 470g C : 470g Bk : 530g iRC3880 Y : 490g M : 470g C : 470g Bk : 530g

T-9-7

	Others	
	Items of control by internal memory	color of toner inside toner container data on life of toner container

T-9-8

Inter-mediate transfer unit	Intermediae transfer belt (ITB)	seamless
	Drive for belt	through gears from drum ITB motor
	Feeding speed	130 mm/sec (plain paper) 65 mm/sec (thick paper, special paper, transparency)
	Cleaning mechanism	cleaning blade

T-9-9

Image stabili-zation mecha-nism	Descharge current level control	to prevent image faults caused by changes in environment
	ATVC control	to ensure good transfer
	ATR control	to correct toner density (about)
	PASCAL control	to correct image gradation characteristics
	SALT-Dmax control	to correct development density (maximum density) characteristics
	SALT-Dhalf control	to correct development density (gradation) characteristics

9.1.2 Major Components of the Image Formation System

CLC5151 / / / CLC4040 / / / iR C4580i / / / iR C4080i / / / / iR C5185N / / iR C5185i PRT /

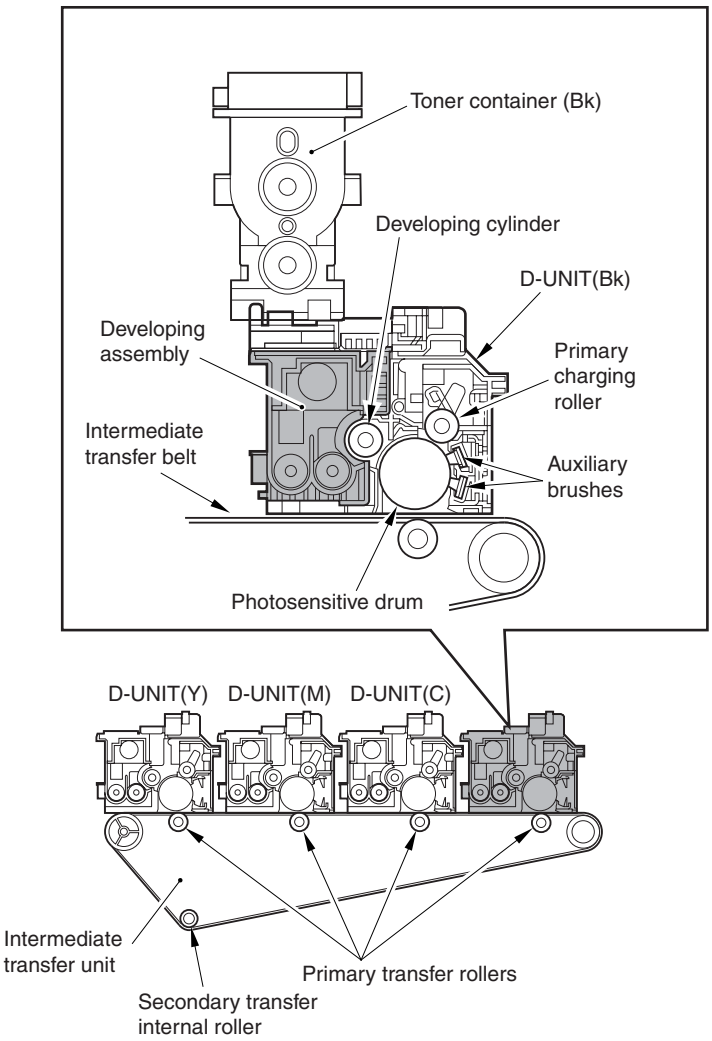

F-9-1

9.1.3 Charging Specifications

CLC5151 / / / CLC4040 / / / iR C4580i / / / iR C4080i / / / / iR C5185N / / iR C5185i PRT /

Drum unit (high voltage)

T-9-10

Photosensitive drum charging	
Method of primary charging	roller contact
AC component rating specifications range	1300 to 2000 Vp-p (standard: 1500 Vp-p)
DC component rating specifications range	-300 to -700 V (standard: -450 V)
AC component voltage correction factor	environment sensor
DC component voltage correction factor	environment sensor, SALT sensor

T-9-11

Auxiliary charging	
Method of charging	fur brush (upstream, downstream)
Upstream auxiliary brush AC component rating specifications range	200 Vp-p
Upstream auxiliary brush DC component rating specifications range	+200 to +300 V (standard: +250 V)
Downstream brush DC component rating specifications range	-700 to -850 V (standard: -750 V)
Voltage correction factor	environment sensor

T-9-12

Developing bias	
AC component standard value	1800 Vp-p (fixed)
DC component rating specifications range	-150 to -550 V (standard: -300 V)
Voltage correction factor	environment sensor, SALT sensor

Transfer unit specifications (high-voltage)

T-9-13

Primary transfer	
Method of transfer	Roller transfer
Object of transfer	Transfer belt (ITB)
DC component rating use range	0 to +1400 V
Voltage control factor	environment sensor, print mode*

T-9-14

Secondary transfer	
Method of transfer	roller
Object of transfer	paper (transfer media)
DC component rating use range	-2500 to +7000 V
Voltage correction factor	paper type, environment sensor reading, print mode*

*Full color or monochrome mode.

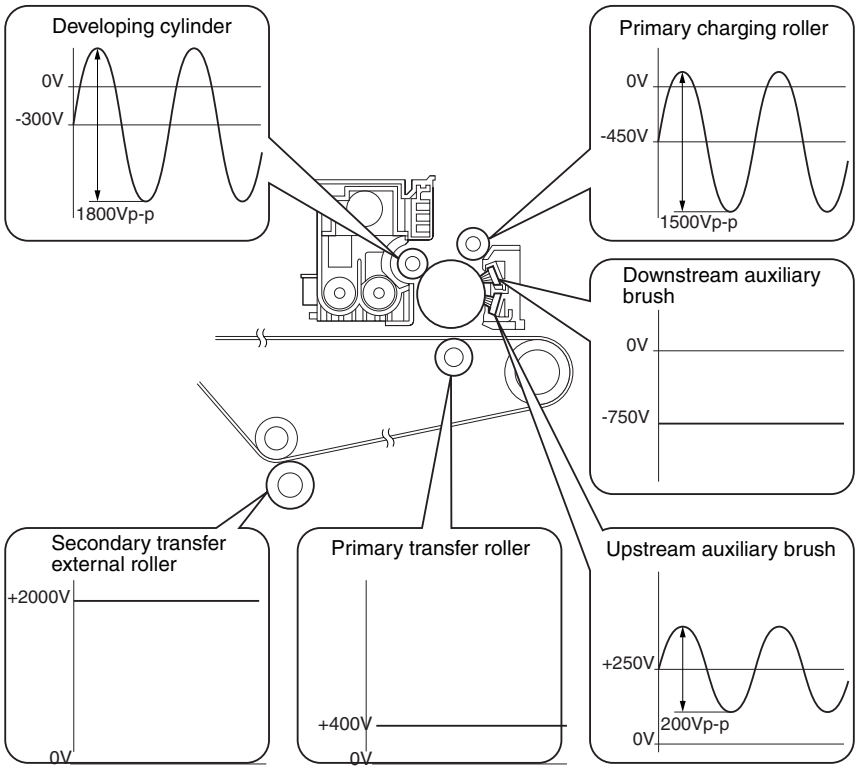

Full color, Plain paper, Normal temperature/humidify

F-9-2

9.2 Image Formation Process

9.2.1 Image Formation Process (general)

CLC5151 / / / CLC4040 / / / iR C4580i / / / iR C4080i / / / / iR C5185N / / iR C5185i PRT /

T-9-15

Functional block	STEP	Description
Electrostatic latent image formation block	1, 2	forms an electrostatic latent image on the photosensitive drum.
Development block	3	deposits toner over the electrostatic latent image, thereby turning it into a visible image.
Transfer block	4, 5, 6	moves the toner image to the ITB or paper.
Intermediate transfer belt (ITB) cleaning block	7	collects residual toner from the ITB.
Photosensitive drum cleaning block	8, 9, 10	collects residual toner from the photosensitive drum.

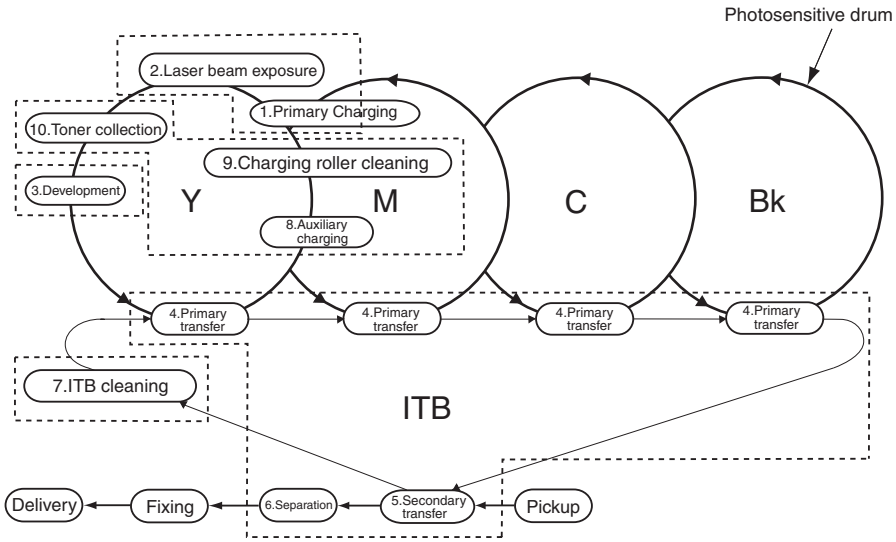

F-9-3

9.2.2 Image Formation Process (image formation)

CLC5151 / / / CLC4040 / / / iR C4580i / / / iR C4080i / / / / iR C5185N / / iR C5185i PRT /

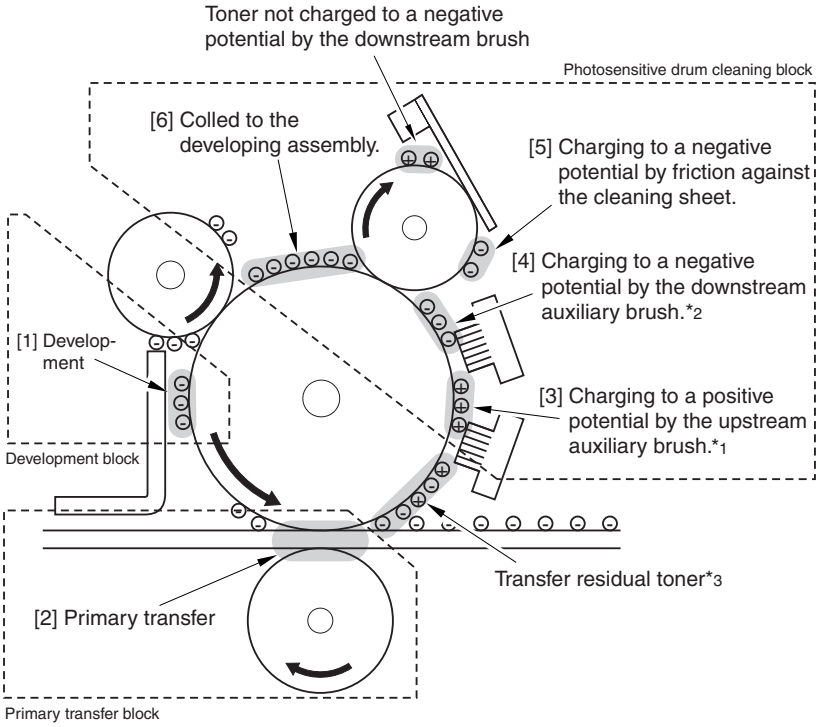

*1: reducing negative charges on toner (removal of charges)
*2: evening out charge to a specific level
*3: toner left behind from secondary transfer (mix of positive and negative charges)

F-9-4

9.2.3 Image Formation Process (transfer)

CLC5151 / / / CLC4040 / / / iR C4580i / / / iR C4080i / / / / iR C5185N / / iR C5185i PRT /

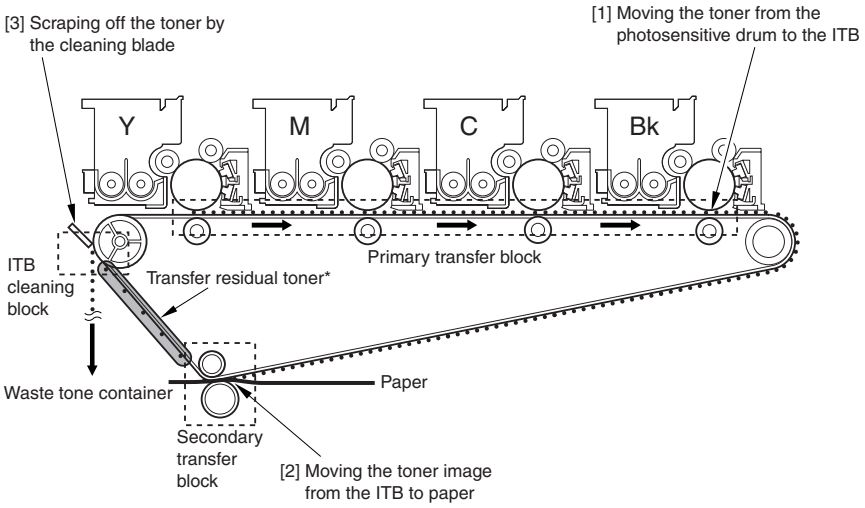

* Toner left behind from secondary transfer.

F-9-5

9.3 Basic Sequence

9.3.1 At Power-On (1)

CLC5151 / / / CLC4040 / / / iR C4580i / / / iR C4080i / / / / iR C5185N / / iR C5185i PRT /

If the main power switch is turned on while the surface temperature of the fixing roller is less than 100°C
(e.g., first time in the morning or after a long period of no use),
Characteristics
- the same control timing is used for the Y, M, C, and Bk drum units.
- the machine takes about 300 to 360 sec before it enters PSTBY.

T-9-16

	iRC5180	iRC4580	iRC3880
100V	240sec	300sec	300sec
120V	240sec	270sec	270sec
230V	240sec	240sec	240sec

- the machine executes image stabilization control in the following order while it is warming up:
  discharge current level control
  ATVC control
  ATR control
  SALT-Dmax control
  image position control
  SALT-Dhalf control

Start-up sequence of the drum unit (Y; with surface temperature of fixing roller Less than 100℃).

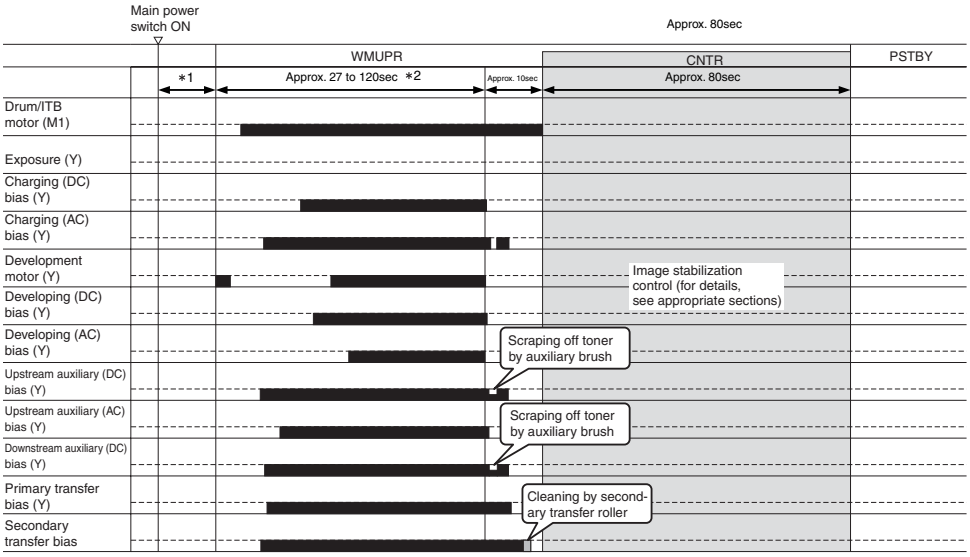

*1 : Time when it reaches temperature of target of the fixing unit. (iR C5180、iR C4580/2880 (230V) 0sec)
*2 : It changes according to the environment and installation features.
*3 : It is time for iRC5180.

F-9-6

9.3.2 At Power-OnÅi2Åj

CLC5151 / / / CLC4040 / / / iR C4580i / / / iR C4080i / / / / iR C5185N / / iR C5185i PRT /

If the main power switch is turned on while the surface temperature of the fixing roller is 100°C or more
(i.e., after it returns from jam recovery*, after it has been forced off and then on, or after its front cover has been opened and then closed while an imaged is made).
Characteristics
- the same control timing is used for the Y, M, C, and Bk drum units.
- the machine takes about 80 sec before it enters PSTBY.
- the machine executes image stabilization in the following order while it is warming up:
  discharge current level control
  ATVC control
  image position correction

*If the surface temperature of the fixing roller is less than 100°C after jam recovery, the machine uses the sequence it uses at power-on (1).

Start-up sequence of the drum unit (Y; with surface temperature of fixing roller at 100˚C or more).

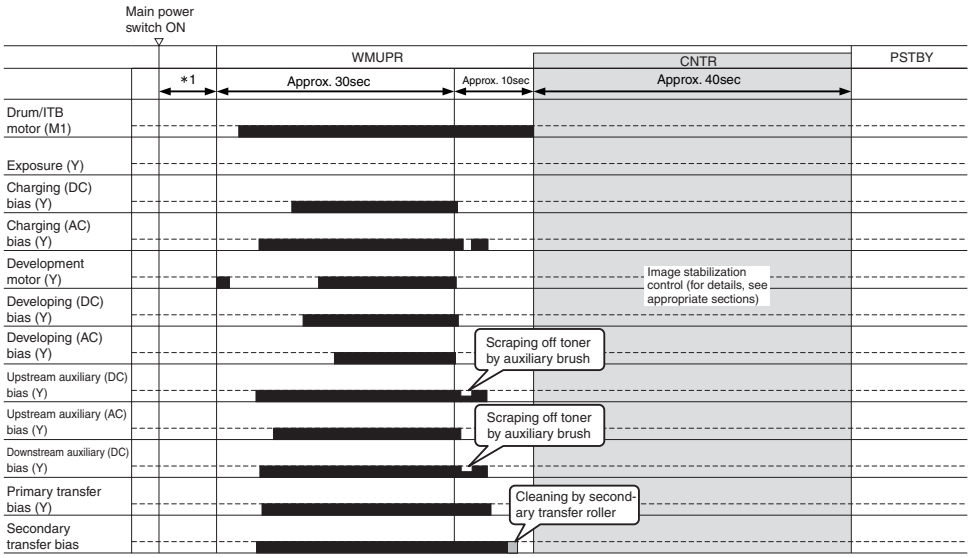

*1:Time when it reaches temperature of target of the fixing unit(iR C5180、iR C4580/2880 (230V): 0sec)
*2:It is time for iRC5180.

F-9-7

9.3.3 During Copying/Printing Operations (normal speed)

CLC5151 / / / CLC4040 / / / iR C4580i / / / iR C4080i / / / / iR C5185N / / iR C5185i PRT /

Full color, Plain paper, A4, 2 copies/prints, Y drum unit
Characteristics
- in response to a press on the Start key, the intermediate transfer belt (ITB) stars to rotate.
- the sequence of operations for drum units after exposure starts with a delay of 0.7 sec each
- the ITB continues to rotate after delivery of paper from the fixing unit (for post-imaging control)

Y Drum Unit Sequence of Image Formation (plain paper)

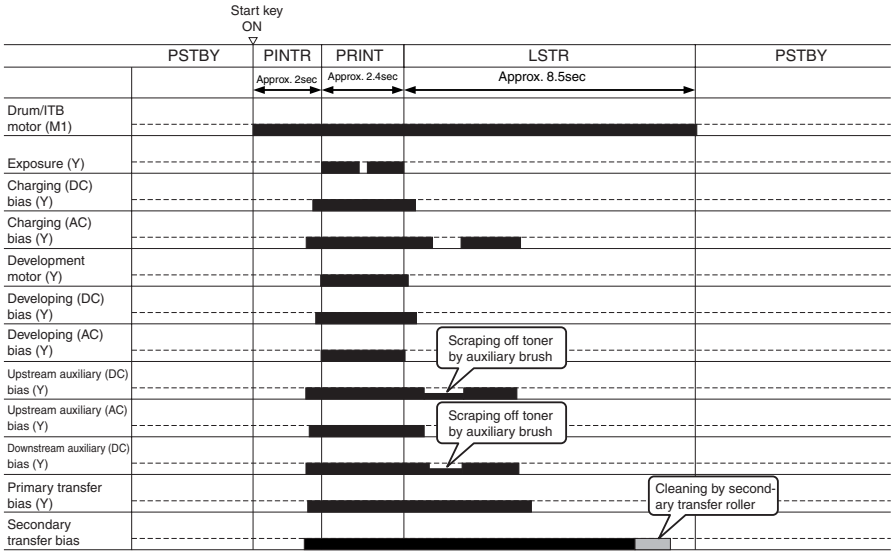

*1:It is time for iRC5180.

F-9-8

When Making Y/M/C Monochrome Copies/Prints
If not for Bk (i.e., for Y, M, C), a high voltage is applied for the 4 colors as for full-color output when making monochrome copies/prints. (Exposure is not executed for colors other than those in question.)

When Making Bk Monochrome Copies/Prints
When making Bk monochrome copies/prints, no high voltage is applied for Y or M, and the developing motors for these colors are not driven.

9.3.4 Making Copies/Prints (half speed)

CLC5151 / / / CLC4040 / / / iR C4580i / / / iR C4080i / / / / iR C5185N / / iR C5185i PRT /

Full color, Thick paper/Special paper/Transparency, A4, 2 copies/prints, Y drum unit
Characteristics
- in response to a press on the Start key, the photosensitive drum and the intermediate transfer belt (ITB) start to rotate
- the sequence of operations of the drum units after exposure starts with a delay of 1.5 sec
- the photosensitive drum and the ITB continue to rotate after paper has been discharged from the fixing unit
(for post-imaging control)

Y Drum Formation Sequence (thick paper/special paper/transparency)

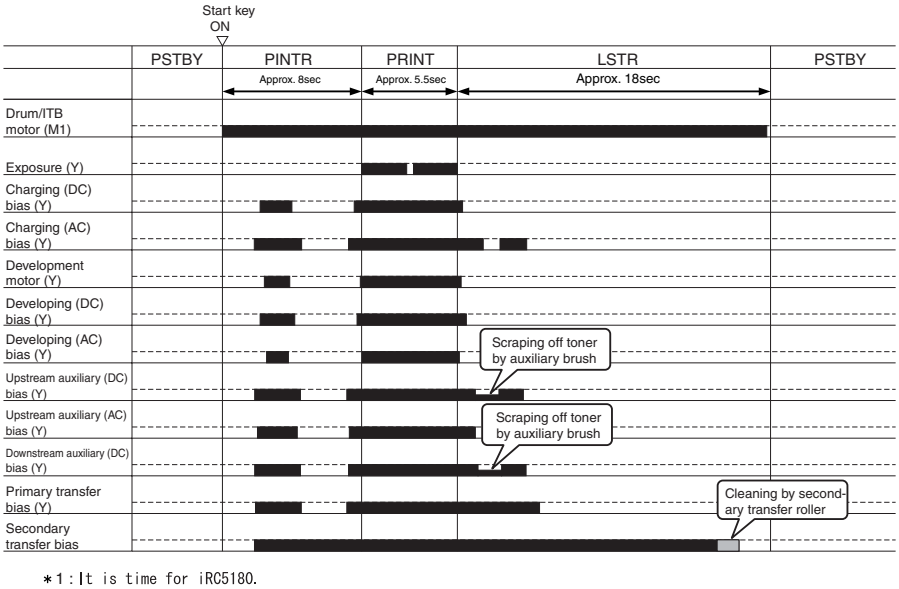

F-9-9

*1ÅFLSTR is done for the following conditions.
-cumulative output (number of pages) is 100 or more
-cumulative output (number of pages) is 100 or more from Image position correction
ÅEcumulative output (number of pages) is 100 or more from SALT- Dmax control

9.3.5 After Replacing the Drum Unit (D-UNIT)

CLC5151 / / / CLC4040 / / / iR C4580i / / / iR C4080i / / / / iR C5185N / / iR C5185i PRT /

When a new drum unit (D-UNIT) has been installed,
Characteristics
- when a drum unit is fitted and the machine's front cover is closed, the developing cylinder starts to rotate.*1
- so that the developing cylinder may be coated evenly with developer, the cylinder is rotated for 30 sec at the beginning
*1Whether it is a new drum unit is judged by the accumulated print number of memory tag in the drum unit. If not a new D-UNIT is set, this sequence is not executed.
- if the drum unit is not new, this sequence is not executed; the sequence used at power-on (1) or (2) is executed
- about 150 sec after the drum unit has been fitted, image stabilization control is executed in the following order
discharge current level control
ATVC control
ATR control
SALT-Dmax control
image position correctionSALT-Dhalf control

Y Drum Unit Initialization Sequence

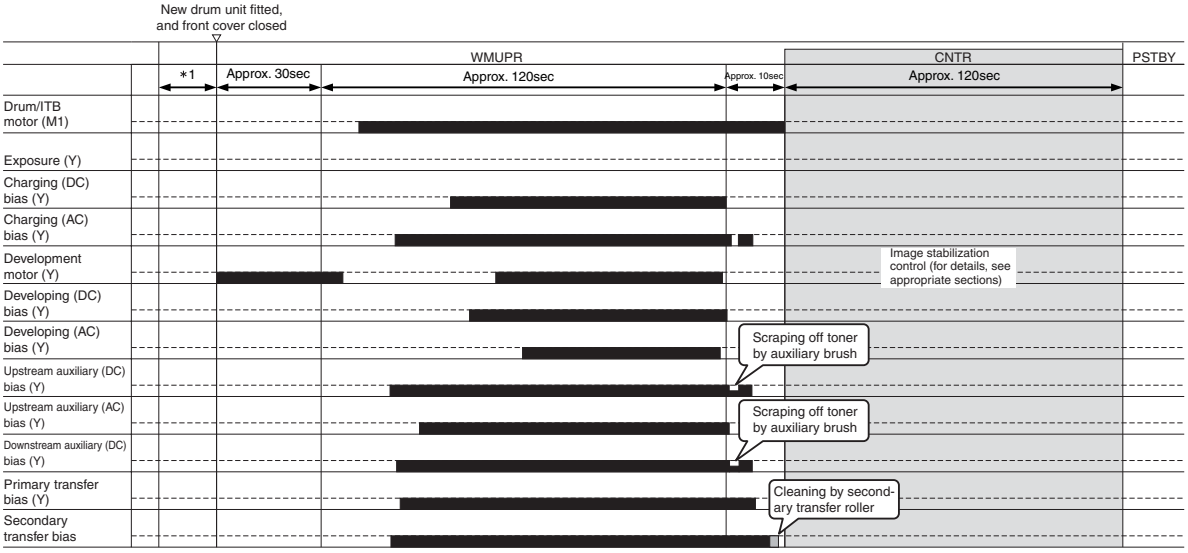

*1: Time when it reaches temperature of target of fixing unit. (iR C5180、iR C4580/2880 (230V): 0sec)
*2: It is time for iR C5180.

F-9-10

9.3.6 Printing Originals Containing a Color Page

CLC5151 / / / CLC4040 / / / iR C4580i / / / iR C4080i / / / / iR C5185N / / iR C5185i PRT /

When making copies/prints of originals containing a color page, the machine uses the following sequence to avoid a drop in productivity:

T-9-17

color original:	full-color mode sequence
monochrome original:	for 4rd and subsequent copies/prints after color page, full-color mode sequence for 5th and subsequent copies/prints after color page, monochrome sequence

MEMO:
A switch-over from full-color mode to monochrome mode requires a sequence in which the high voltage of YMC must be lowered. By reducing the use of such a sequence, the machine avoids an appreciable drop in productivity.

9.4 Driving and Controlling the Image Formation System

9.4.1 Driving and Controlling the Image Formation System and the High-Voltage System

CLC5151 / / / CLC4040 / / / iR C4580i / / / iR C4080i / / / / Color Image Reader-F1 / Color Image Reader-E1 / Dupiex Color Image Reader-G1 / iR C5185N / / iR C5185i PRT /

1.Drive Control

The image formation system is driven by the toner container motor, developing motor, and drum ITB motor through gears. (For details, see the appropriate sections.)

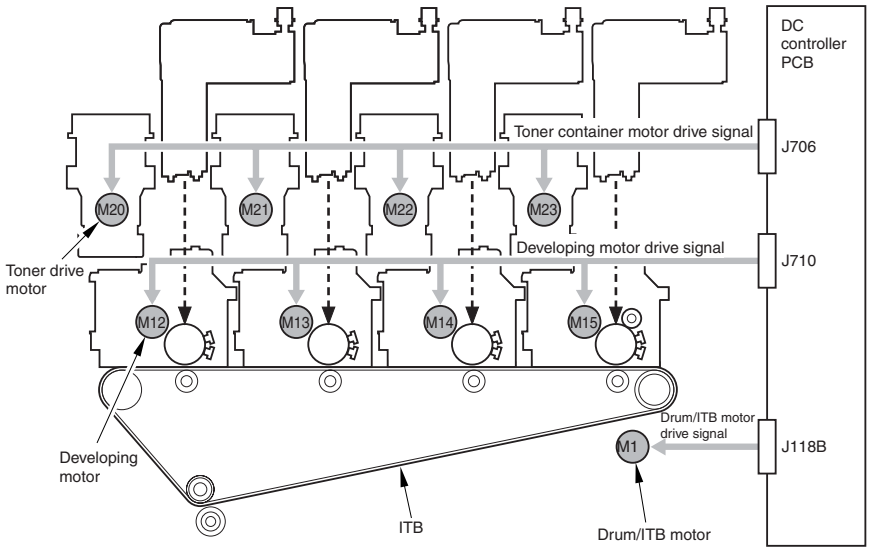

F-9-11

2.High-Voltage Control

The high-voltage unit is used to supply high voltage to each of the blocks in the image formation system.
(For details, see the appropriate sections.)

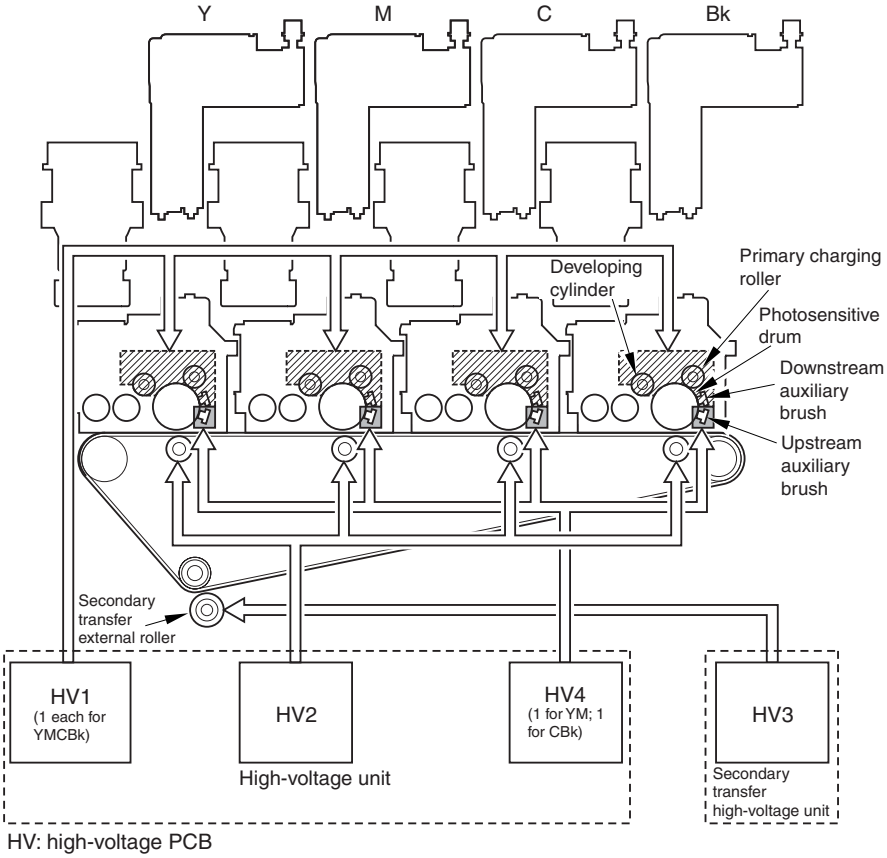

F-9-12

9.5 Image Stabilization Control

9.5.1 Outline of Image Quality Control

CLC5151 / / / CLC4040 / / / iR C4580i / / / iR C4080i / / / / iR C5185N / / iR C5185i PRT /

Changes in temperature/humidity or passage of time can cause the machine to produce images of varying quality. To ensure that the quality of images remain stable, the levels of voltage outputs and volumes of toner supply are corrected:

T-9-18

So that the machine's image reproduction remains stable, the following control mechanisms are used:	
ATR Control	to suit changes in toner density/toner consumption
Discharge Current Level Control	to prevent faulty images in a high humidity environment (correction of charging AC bias)
ATVC Control	to ensure good transfer (correction of transfer bias level)
PASCAL Control/SALT Control	to suit changes in image density and gradation (correction of charging/developing/transfer bias; correction of image correction table)

9.5.2 Automated Image Stabilization Control

CLC5151 / / / CLC4040 / / / iR C4580i / / / iR C4080i / / / / iR C5185N / / iR C5185i PRT /

T-9-19

Operation	discharge current control	ATVC control	ATR control	SALT-Dmax control	image position correction	SALT-Dhalf control	time required [sec]
power introduction / jam recovery	When the fixing roller surface temperature is =/> 100 deg C						
	Yes	Yes			Yes		ca. 70 *6
	When the fixing roller surface temperature is < 100 deg C						
	Yes	Yes	Yes	Yes	Yes	Yes *11	ca. 180 *7

Operation	discharge current control	ATVC control	ATR control	SALT-Dmax control	image position correction	SALT-Dhalf control	time required [sec]
toner receptacle replacement	When the toner supply screw revolution reaches the threshold and the ATR sensor value is lower than specified. *8						
	Yes	Yes	Yes	Yes	Yes	Yes	ca. 170
	When the toner supply screw revolution reaches 100 % of the specified value. *8						
	Yes	Yes	Yes	Yes	Yes		ca. 130
drum unit replacement	Yes	Yes	Yes	Yes	Yes	Yes	ca. 220 *7
cover*1 open / close	When the fixing roller surface temperature is =/> 100 deg C *2						
							ca. 20
	When the fixing roller surface temperature is < 100 deg C						
	Yes	Yes	Yes	Yes	Yes	Yes	ca. 180 *7
specified number of sheet *10	4C counter *12: every cumulated output of 100 to under 200 sheets (last rotation) *3 Bk counter *12: every cumulated output of 200 to under 400 sheets (last rotation) *3, *13						
	Yes	Yes	Yes		(Yes: 300 sheets *9)		ca. 20 (30)
	4C counter *12: every cumulated output of 100 to under 200 sheets (initial rotation) *3 Bk counter *12: every cumulated output of 200 to under 400 sheets (initial rotation) *3						
	Yes	Yes					ca. 15
	4C counter *12: every 200 =/> sheets of cumulated output (interval) *3 Bk counter *12: every 400 =/> sheets of cumulated output (interval) *3, *12, *13						
	Yes	Yes	Yes		(Yes: 400 sheets *9)		ca. 30 (50)
	500 =/> sheets of cumulated output *3						
	Yes	Yes	Yes	Yes	Yes		ca. 45 (70)
at detection of significant environmental change after being left for 10 hours in STBY mode *3.	Yes	Yes	Yes	Yes	Yes	Yes	ca. 100
recovery from low-power mode	When there is no open / close of cover during low-power mode						
							ca. 20 *4
	When there is open / close of cover during low-power mode						
	Yes	Yes			Yes		ca. 70 *6
recovery from sleep mode	When the time for STBY + low-power mode is 1.9 h or longer before entering into sleep mode						
	Yes	Yes	Yes	Yes	Yes	Yes	ca. 180 *7
	When the time for STBY + low-power mode is shorter than 1.9 h before entering into sleep mode *5						
	Yes	Yes	(Yes)	(Yes)	Yes	(Yes)	ca. 70 *6 (ca. 180 *7)

*1:'Cover' includes all the cover.
*2:At open / close of the cover (fixing roller surface temperature =/> 100 deg C), open / close of cover before shifting into stand-by mode leads to execution of the sequence same as open / close of cover (fixing roller surface temperature < 100 deg C).
*3:See the corresponding service mode.
*4:Indicates the time it takes to make the fixing roller surface temperature ready for job start.
*5:Depends on the fixing roller surface temperature at recovery from the sleep mode.
*6:Indicates the time including the ca. 30 sec of operation before image stabilization control starts.
*7:Indicates the time including the ca. 120 sec of operation before image stabilization control starts.
*8:Indicates state in which the toner receptacle life is detected to be over.
*9:When the image position correction counter indicates =/> 300 sheets, image position correction is executed as well as the other image stabilization control.
*10:There are 3 sheet counters as shown below:
- set of discharge current control, ATVC control, and ATR control
- set of discharge current control, ATVC control, ATR control, and SALT-Dmax
- image position correction

*11:Executed when the Dhalf control counter indicates =/> 1000 sheets.
Control for each specified sheet number is carried out by the timings shown below:

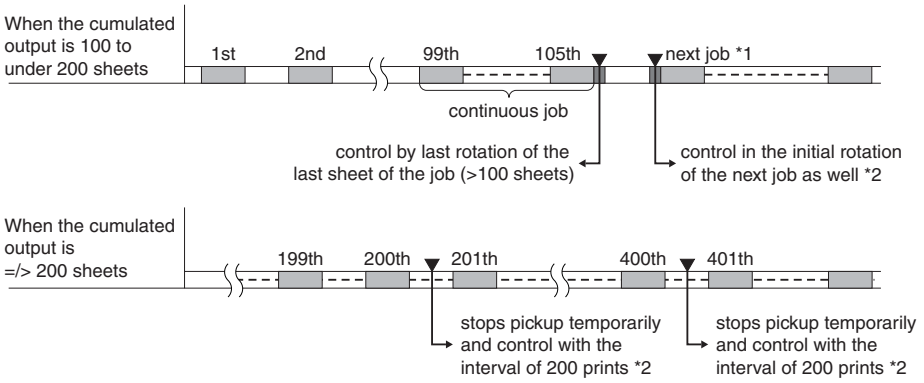

*1 : The job that follows the job of more than 100 prints
*2 : When the control operation is executed, the counter is reset to '0'.
▼ : Control starting point

F-9-13

*12:In 4C counter, the count is increased by color copy / print. In Bk counter, the counter is increased by mono copy / print. Image stabilization control is carried out when either of the 4C or the Bk counter reaches the specified value. When the image stabilization control is carried out, the counter that reached the specified value is cleared.

Also, if the 4C counter is higher than 80 % of the specified value when the Bk counter value reaches the specified value and the image stabilization control is carried out as a result, both of the 4C and Bk counters are cleared.

Bk counter is increased when black-and-white or mono is selected on the control panel or driver screen.

Control Panel

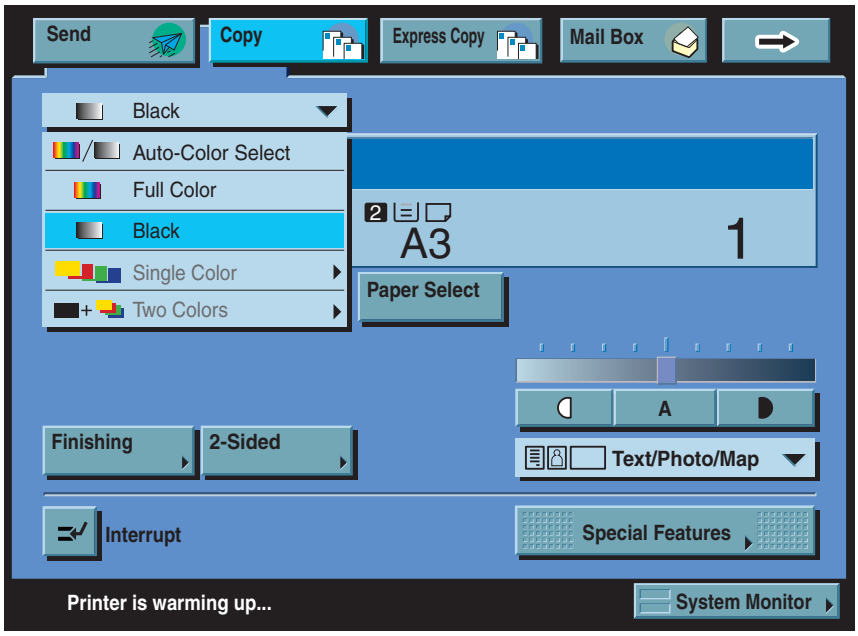

F-9-14

Driver Screen

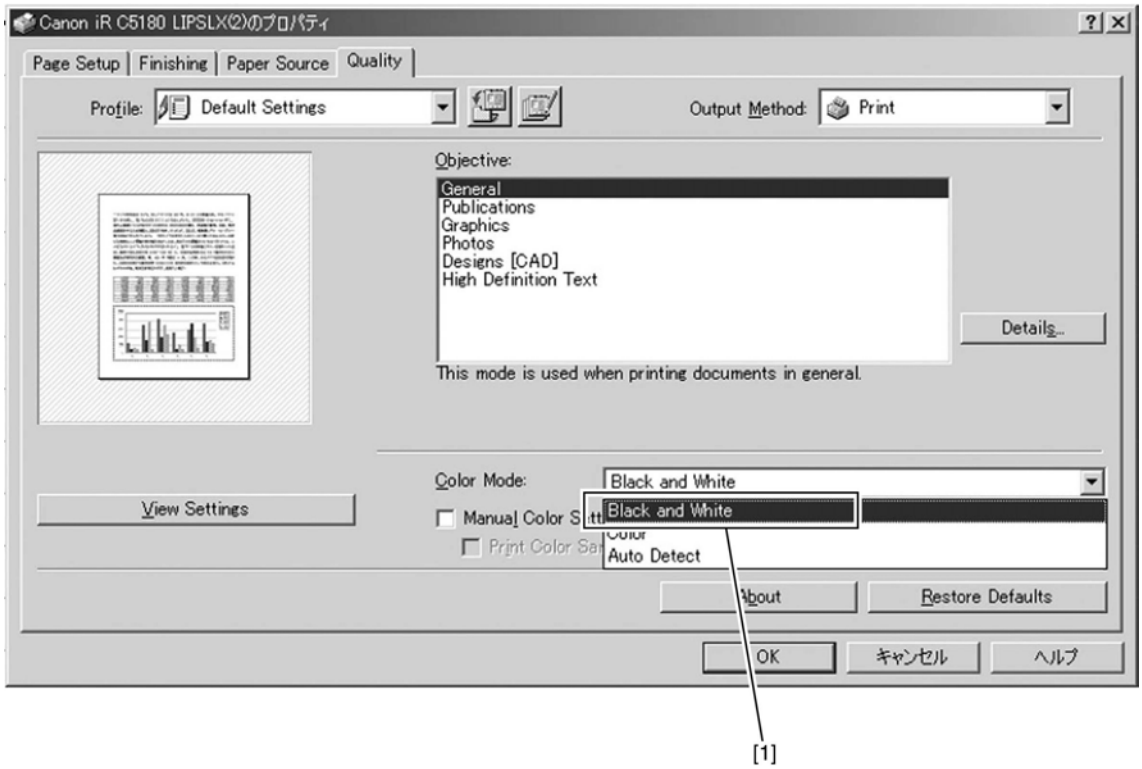

F-9-15

*13:When the image stabilization control is carried out as the Bk counter's count reached the specified value, image position correction is not carried out.

Service Mode:
COPIER > OPTION > BODY > INTROT-1
Use it to change the intervals between sessions of execution of image stabilization control (adjustment set-1) for initial/last rotation in terms of the number of pages.
Default (at shipment/upon RAM initialization): 100

COPIER > OPTION > BODY > INTROT-2
Use it to change the intervals between execution sessions of image stabilization control (adjustment set-2) for initial/last rotation in terms of the number of pages.
Default (at shipment/upon RAM initialization): 500

COPIER > OPTION > BODY > INTPPR-1
Use it to change the intervals of execution sessions (adjustment set-1) for image stabilization control between sheets in terms of the number of pages.
Default (at shipment/upon RAM initialization): 200

COPIER > OPTION > BODY > INTROT-T
Use it to change the intervals of execution sessions for image stabilization control for standby.
Default (at shipment/upon RAM initialization): 10

COPIER > OPTION > BODY > ADJ-LVL
Use it to change the execution mode settings for image stabilization control for a specific number of pages.
Default (at shipment/upon RAM initialization): 0

9.5.3 ATR Control

CLC5151 / / / CLC4040 / / / iR C4580i / / / iR C4080i / / / / iR C5185N / / iR C5185i PRT /

The machine executes ATR control to maintain a specific image density, which otherwise would change as more and more toner is used.
The machine measures the concentration of toner and adjusts its supply.

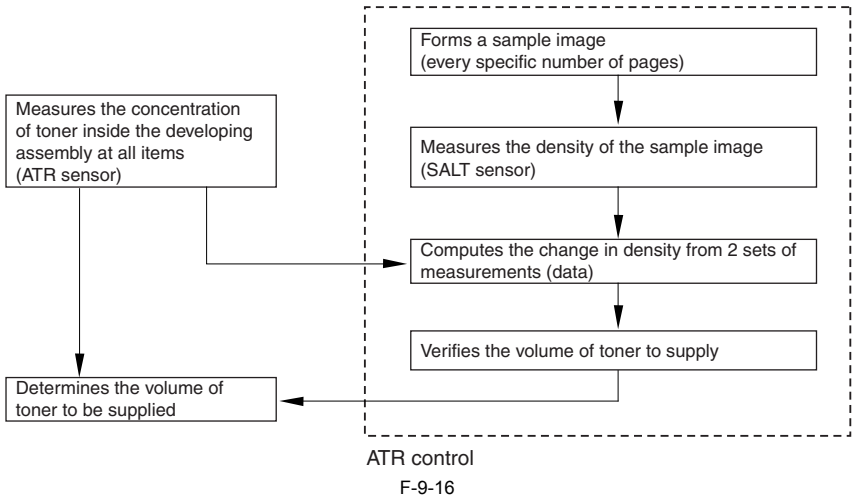

F-9-16

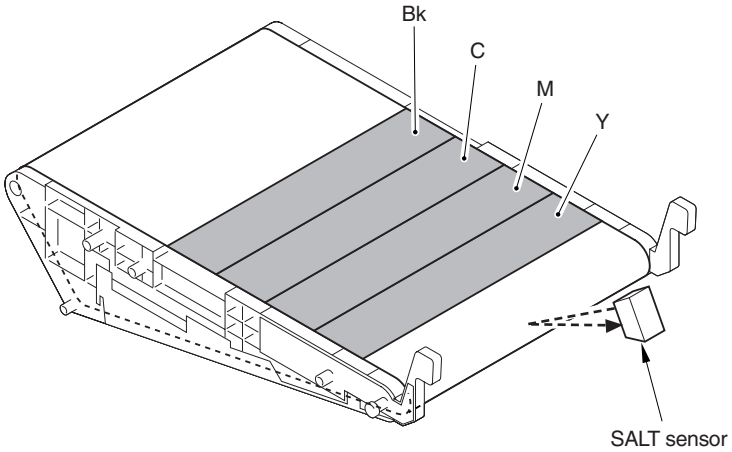

F-9-17

9.5.4 Discharge Current Level Control

CLC5151 / / / CLC4040 / / / iR C4580i / / / iR C4080i / / / / iR C5185N / / iR C5185i PRT /

- The machine controls the level of discharge current so as to ensure the optimum level in keeping with changes in temperature/humidify. (The term "discharge current"refers to the current that occurs between the primary charging roller and the photosensitive drum.) The current is controlled to a level that enables prevention of faulty images in a high humidity environment and, at the same time, permits collection of toner remaining from transfer to the developing assembly.
  Operation
1. An AC bias is applied to the primary charging assembly; the level of current occurring at the time is measured by the high-voltage PCB (HV1-SUB) and is sent to the CPU on the DC controller PCB as feedback.
2. The roller is charged using the AC charging bias corrected by the CPU.
- Frequency of AC Bias on Primary Corona Roller is adjustable by its Processing Speed

9.5.5 ATVC Control (transfer bias level correction)

CLC5151 / / / CLC4040 / / / iR C4580i / / / iR C4080i / / / / iR C5185N / / iR C5185i PRT /

The ATVC control mechanism is used to determine the optimum level of transfer voltage for transfer of images from the photosensitive drum to the ITB, and from the ITB to paper.
The level of transfer voltage is corrected in relation to changes in temperature/humidity, deterioration of rollers, and types of paper.
Description of Control
1. A reference voltage is applied to the transfer roller, and the level of current that occurs in response is checked by the high-voltage PCB and communicated to the CPU on the DC controller PCB as feedback.
2. The machine executes transfer using a transfer voltage which is the result of correction by the CPU.

T-9-20

Item	Description
Primary transfer	Applies a reference voltage to the primary charging roller.
	Uses the high-voltage PCB (HV-2) to check the level of current, and the result is fed back to the CPU for determination of the optimum level.
Secondary transfer	Applies a reference voltage to the secondary transfer external roller.
	Uses the high-voltage PCB (HV-3) to check the level of current, and the result is fed back to the CPU for determination of the optimum level.

9.5.6 PASCAL Control (image gradation)

CLC5151 / / / CLC4040 / / / iR C4580i / / / iR C4080i / / / / iR C5185N / / iR C5185i PRT /

The PASCAL control mechanism is used to stabilize gradation characteristics of images on paper.
It makes up for the changes in gradation occurring in response to changes in temperature/humidity or as the machine is used over time.
- PASCAL Control for Half-Speed
  The mechanism is used to correct the changes in the gradation characteristics that otherwise would occur when thick paper, special paper, or transparency is used. The test print used for the mechanism is the same as the test print used for plain paper.

Description of Control
Start-up
V
Prints out the test pattern stored in the main controller (3 types).
V
Uses the scanner to read the test print (previously printed out) set in the reader.
V
Prepares the image correction table A (data processing).
V
End

Timing of Control
- Service Person Interaction
  The mechanism is executed when 'full correction'is executed while auto gradation correction is under way in user mode.

MEMO;
Differences Among 3 Test Patterns
- Test Print 1
  It shows 64 gradations expressed by means of error diffusion processing, which is not subject to moire and, therefore, used in text/photo/map, print photo, and text mode.
- Test Print 2
  It shows 64 gradations expressed by means of screening with a low number of lines, which is suitable for the expression of gradation and, therefore, is used for print film photo mode and when priority is placed on PDL.
- Test Print 3

It shows 64 gradations expressed by means of screening with a high number of lines, which is suitable for the achievement of a high resolution and is, therefore, used when priority is placed on PDL resolution.

Test Print

F-9-18

9.5.7 SALT-Dmax Control (development characteristics correction)

CLC5151 / / / CLC4040 / / / iR C4580i / / / iR C4080i / / / / iR C5185N / / iR C5185i PRT /

This mechanism is used to stabilize the maximum resolution on the intermediate transfer belt (ITB).
It is used to make up for changes in the maximum density (Dmax), changes in response to deterioration in developer or the drum, changes in temperature/humidity, or changes occurring as the machine is used over time.
Description of Control

Start-up
V
Measures the light reflected by the surface of the ITB (background measurement).
V
Forms a sample patch of the maximum solid density stored in the DC controller.
V
Uses the SALT sensor to take the reading.
V
Converts density (performs computation using the measurement taken).
V
Determines the charging DC bias, developing DC bias, and primary charging current level.
V
End

Timing of Control
- Service Person InteractionThe mechanism is executed when 'full correction' or 'quick correction' of auto gradation correction is under way in user mode.

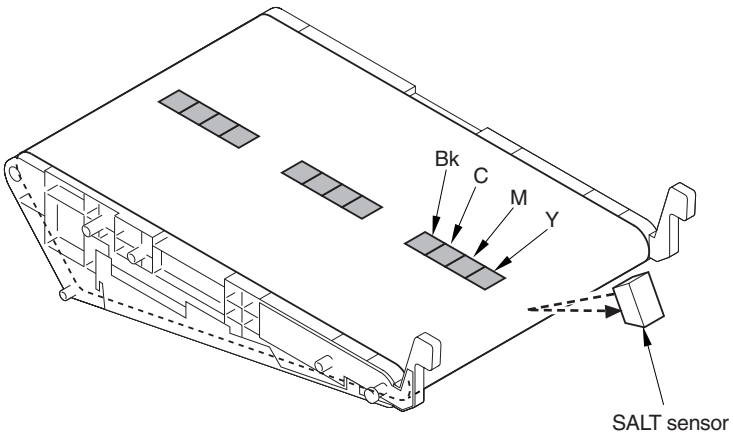

F-9-19

9.5.8 SALT-Dhalf Control (development characteristics correction)

CLC5151 / / / CLC4040 / / / iR C4580i / / / iR C4080i / / / / iR C5185N / / iR C5185i PRT /

The SALT-Dhalf control mechanism is used to stabilize the gradation of images on the ITB.
It makes up for the changes in gradation characteristics that occur in response to the deterioration in developer or photopositive drum, changes in temperature/humidity, and changes that occur as the machine is used over time.
Gradation Density Control for Half Speed

The control mechanism is used to make up for the changes in the gradation in images when thick paper, special paper, or transparency is used.
When the mechanism is enabled in service mode, it is activated when auto control is executed.
The time it takes is about double the time taken when plain paper is used.

Description of Control

Start-up*
V
Measures the light reflected by the surface of the ITB (background measurement).

V
Forms a sample patch of a gradation pattern stored in the main controller on the ITB.
V
Uses the SALT sensor to take a reading.
V
Performs density conversion (performs computation using the measurement taken).
V
Prepares an image correction table B/C (data processing).
V
End

- Non-AutomaticThe mechanism is executed when 'full correction'or 'quick correction' is under way in user mode.

COPIER>OPTION>BODY>CAL-SW
Use it to change the conditions that initiate automatic control.
default: 0 (disable gradation density control for half speed)

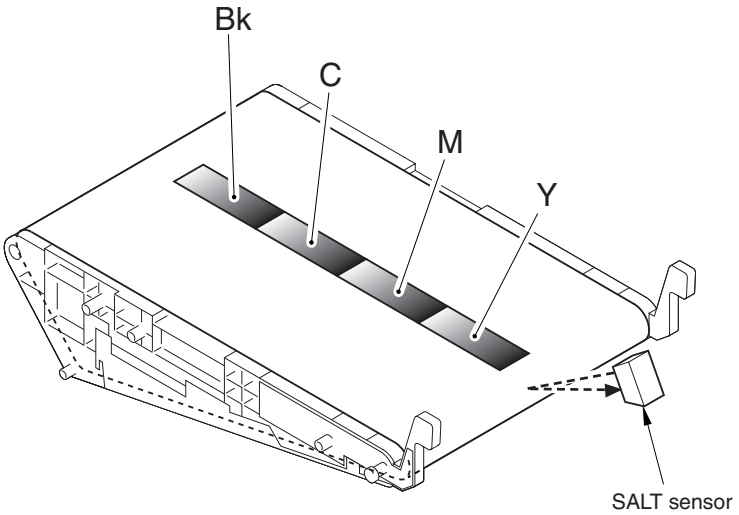

F-9-20

9.5.9 Auto Gradation Control

CLC5151 / / / CLC4040 / / iR C4580i / / iR C4080i / / / / iR C5185N / / iR C5185i PRT /

Outline
The auto gradation control mechanism is used to correct image gradation by correcting the laser output so as to obtain ideal gradation characteristics.

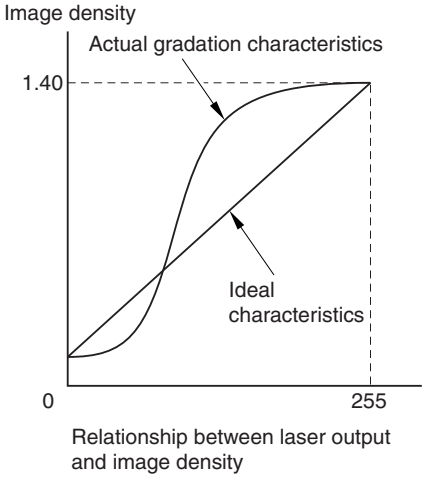

F-9-21

T-9-21

Full Correction:	The machine knows the actual gradation characteristics based on the 64-gradation density data collected from the scanner.
Quick Correction:	The machine knows the actual gradation characteristics based on the 9-gradation density data.

User Mode
The machine uses 2 types of auto gradation correction mechanisms, combining the best mechanisms to suit individual requirements.

T-9-22

	Full correction	Quick correction
Description	Start up | v	Start up | v

	Full correction	Quick correction
	SALT-Dmax control (determines developing DC, charging DC, primary current levels) | v PASCAL control (prepares image correction table A) | v Image position correction | v SALT-Dhalf control (prepares image correction table B) | v End	SALT-Dmax control (determines developing DC, charging DC, and primary transfer levels) | | | | | v Image position correction | v SALT-Dhalf control (prepares image correction table C) | v End

T-9-23

Image correction table for use at time of image formation	Image correction table A	Table prepared by the result of including the contents of the table A to the result of compari-son between image correction tables B and C

T-9-24

Characteristics	A test print must be printed and read by the machine.	The machine does not use (print) a test print.

9.6 Drum Unit

9.6.1 Outline of the Drum Unit

9.6.1.1 Outline of the Drum Unit

CLC5151 / / / CLC4040 / / / iR C4580i / / / iR C4080i / / / / iR C5185N / / iR C5185i PRT /

The drum unit consists of the developing assembly, photosensitive drum, auxiliary brush, and charging mechanism.
As many as 4 units are used (Y, M, C, Bk), and all of them have the same construction.

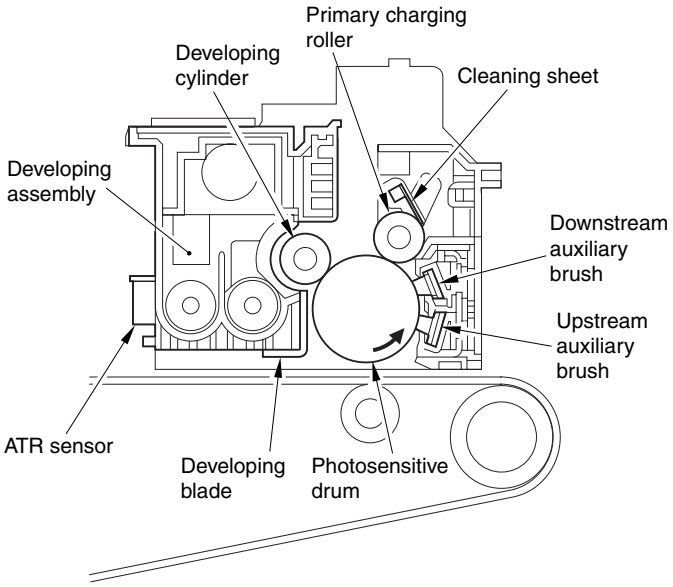

F-9-22

9.6.1.2 Drum Receptacle Presence / Absence Detection

CLC5151 / / / CLC4040 / / / iR C4580i / / / iR C4080i / / / / Color Image Reader-F1 / Color Image Reader-E1 / Dupiex Color Image Reader-G1 / iR C5185N / / iR C5185i PRT /

Drum unit presence / absence detection
Drum presence / absence is detected by measuring the current on the primary charging roller.
The current on the primary charging roller (i) is detected by the HV1 PCB, and voltage is calculated by I/V conversion of the current value.
By rectifying this voltage using the HV1-SUB PCB and by A/D conversion using the DC controller PCB, the detected voltage V is calculated.
The detected voltage V and the specified voltage v are compared to detect the presence / absence of the drum unit.

- In the case the drum unit is present
  Detected voltage V < specified voltage v

- In the case the drum unit is absent
  Detected voltage V > specified voltage v

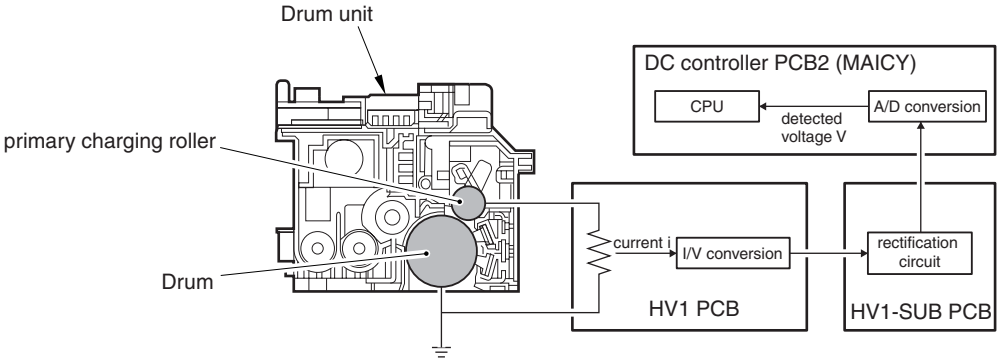

F-9-23

9.6.1.3 Drum Unit (D-UNIT) Drive Control

CLC5151 / / / CLC4040 / / / iR C4580i / / / iR C4080i / / / / iR C5185N / / iR C5185i PRT /

T-9-25

parts name	drive	remarks
developing cylinder	developing motor (M12 to 15)	driven via the gear
toner stirring screw	developing motor (M12 to 15)	driven via the gear
primary charging roller	follows the photosensitive drum	
photosensitive drum	drum ITB motor (M1)	driven via the gear
auxiliary brush, cleaning sheet	drum ITB motor (M1)	(reciprocate in the direction of the drum shaft)

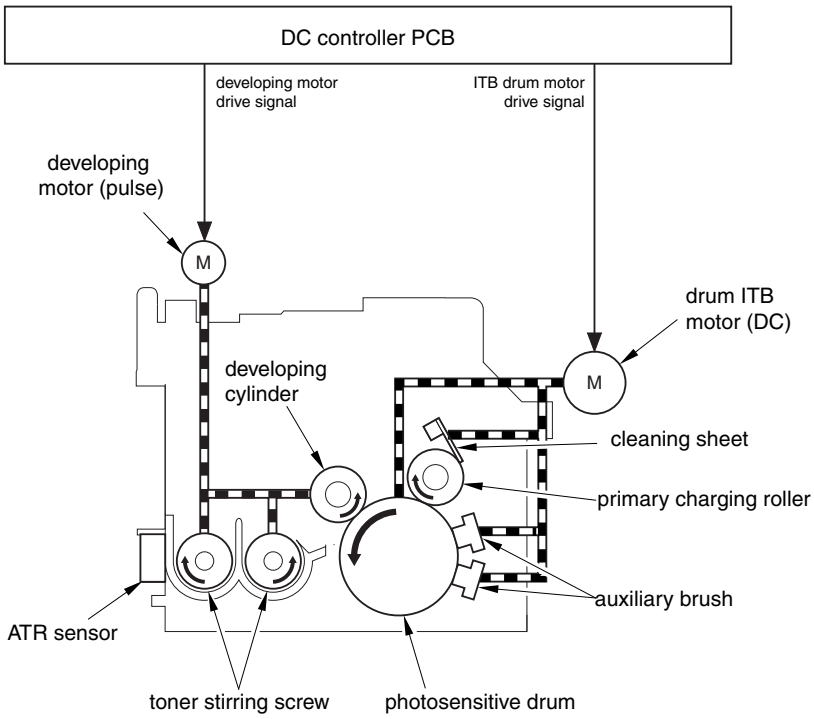

F-9-24

9.6.2 Developing Assembly

9.6.2.1 Construction of the Developing Assembly

CLC5151 / / / CLC4040 / / / iR C4580i / / / iR C4080i / / / / iR C5185N / / iR C5185i PRT /

Outline and Uses

1. turning latent static image into visible image (development)
2. collecting residual toner from photosensitive drum
- eliminates the need for a cleaning mechanism for the photosensitive drum

T-9-26

Component	
Developing cylinder	- deposits toner on the photosensitive drum.
	- collects toner from the photosensitive drum coming from upstream
Developing blade	- serves to coat the developing cylinder with a uniform layer of developerserves to coat the developing cylinder with a uniform layer of developer

Component	
Toner stirring screw	- stirs the toner and the developer inside the developing assembly (thus, charging the toner to a negative potential).
ATR sensor	- detects the amount (concentration of toner) inside the developing assembly.

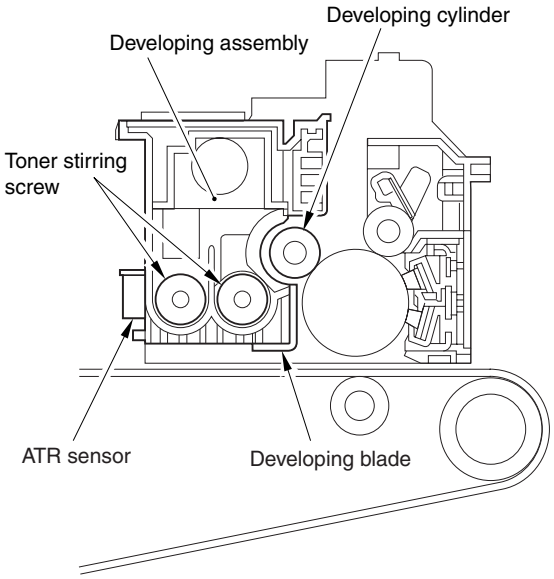

F-9-25

9.6.2.2 Controlling the Developing Bias

CLC5151 / / / CLC4040 / / / iR C4580i / / / iR C4080i / / / / iR C5185N / / iR C5185i PRT /

1) AC Component
fixed; used to increase the density of output images.
2) DC Component
output suited to the reading of the environment sensor/SALT sensor;
changes the median voltage of the AC bias to adjust the image density
a-1. Route of the Developing Bias

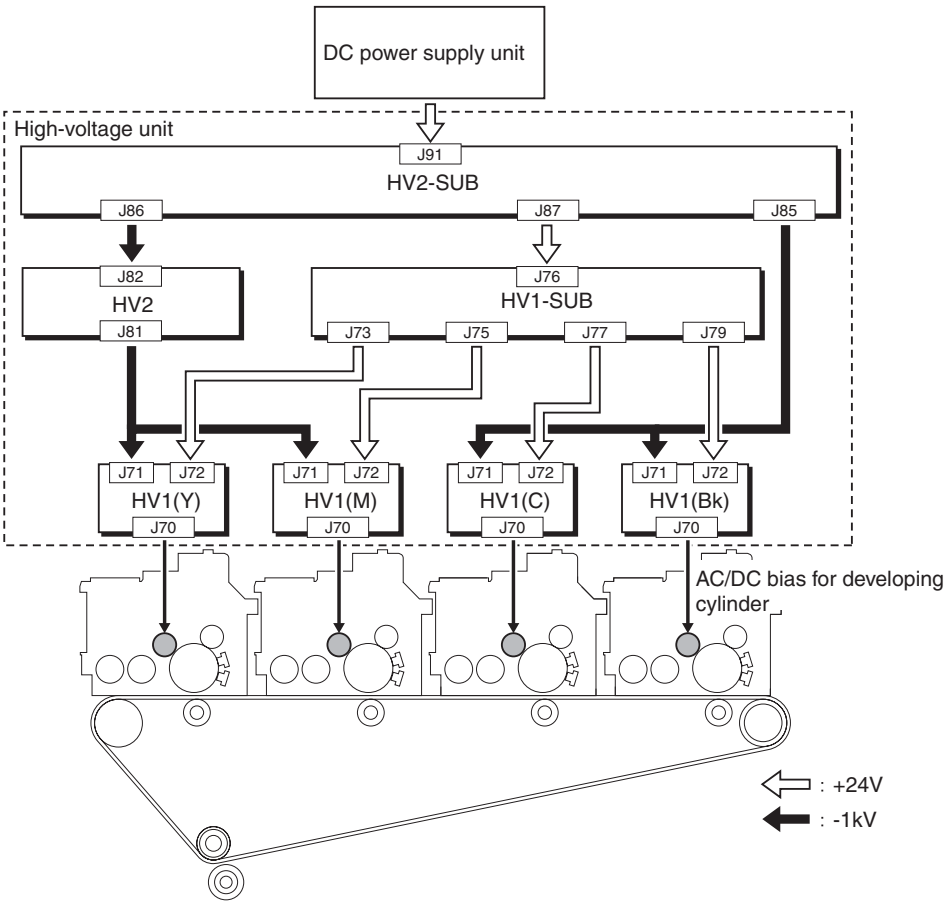

F-9-26

a-2. Route of the Developing Cylinder Control Signal

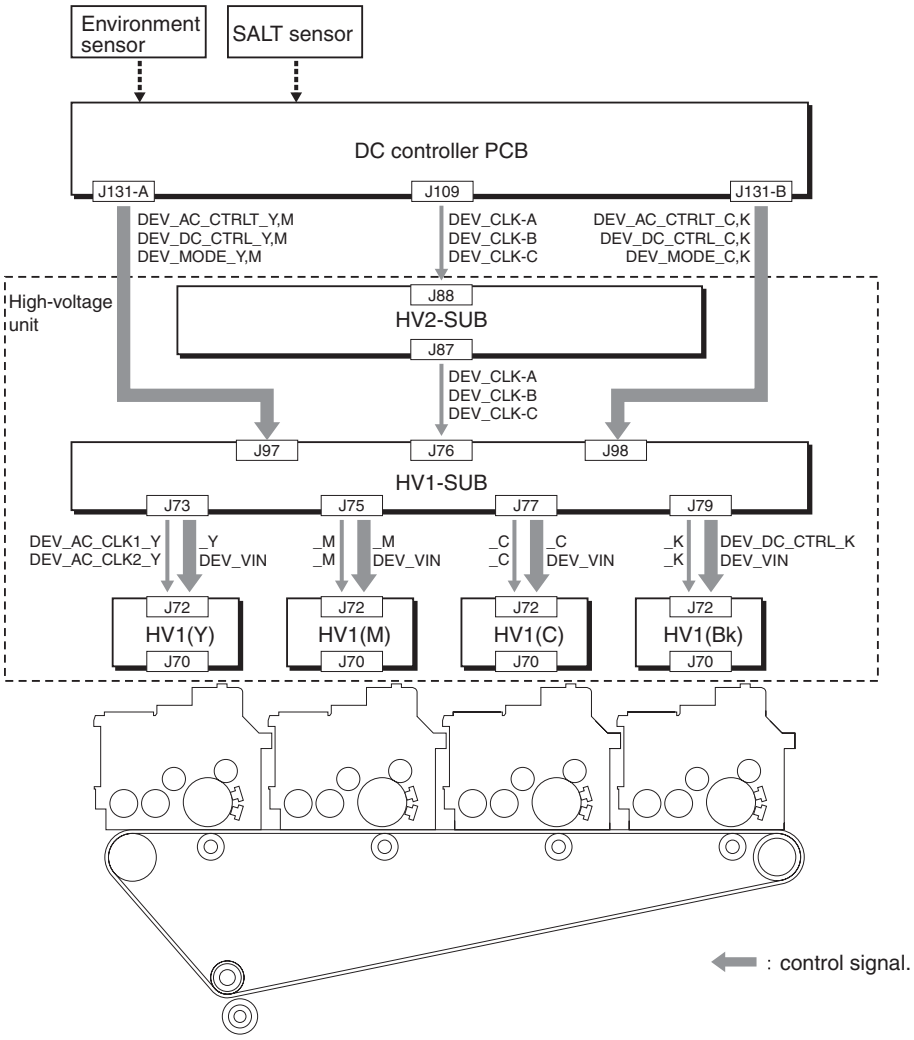

F-9-27

9.6.3 Auxiliary Brush

9.6.3.1 Construction of the Auxiliary Brush

CLC5151 / / / CLC4040 / / / iR C4580i / / / iR C4080i / / / / iR C5185N / / iR C5185i PRT /

Outline and Uses
1. removes charges from the photosensitive drum; charges residual toner
2. controls the polarity of residual toner
- thereby preventing adhesion of toner to the primary charging roller
- thereby eliminating the need for a cleaning mechanism for the photosensitive drum

T-9-27

Component	
Upstream auxiliary brush	- removes charge from the photosensitive drum. (in preparation for the next image formation session, the latent static image from the previous session is removed)
	- charges the residual toner to a positive potential. (to increase the effects of charging by the downstream brush as part of the upcoming operation)
Downstream auxiliary brush	- charges the photosensitive drum to a negative potential.
	- charges the residual toner to a negative potential. (to facilitate collection by the developing assembly)

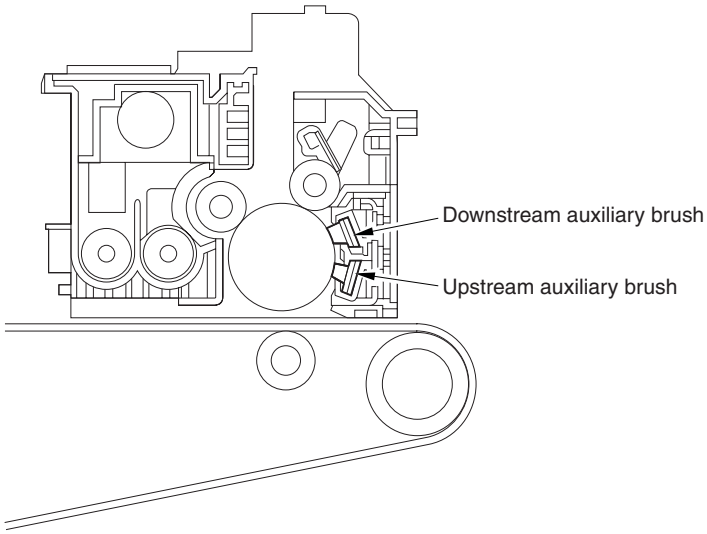

F-9-28

9.6.3.2 Controlling the Auxiliary Bias

CLC5151 / / / CLC4040 / / / iR C4580i / / / iR C4080i / / / / iR C5185N / / iR C5185i PRT /

T-9-28

AC Component:	level of output suited to the reading of the environment sensor. (upstream auxiliary brush)
DC Component:	level of output suited to the reading of the environment sensor. (upstream/ downstream auxiliary brush)

b-1. Route of the Upstream Auxiliary Brush Bias

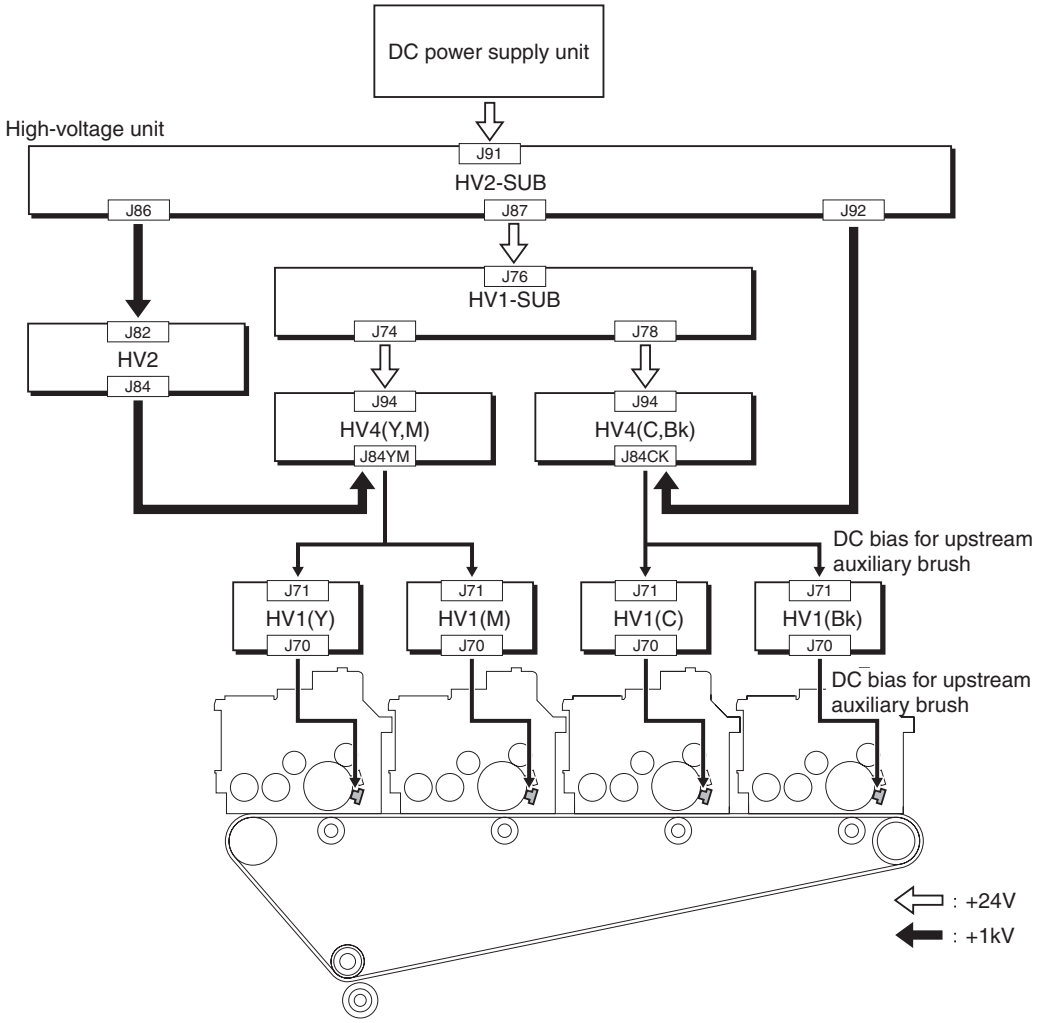

F-9-29

b-2. Route of the Upstream Auxiliary Brush Bias Control Signal

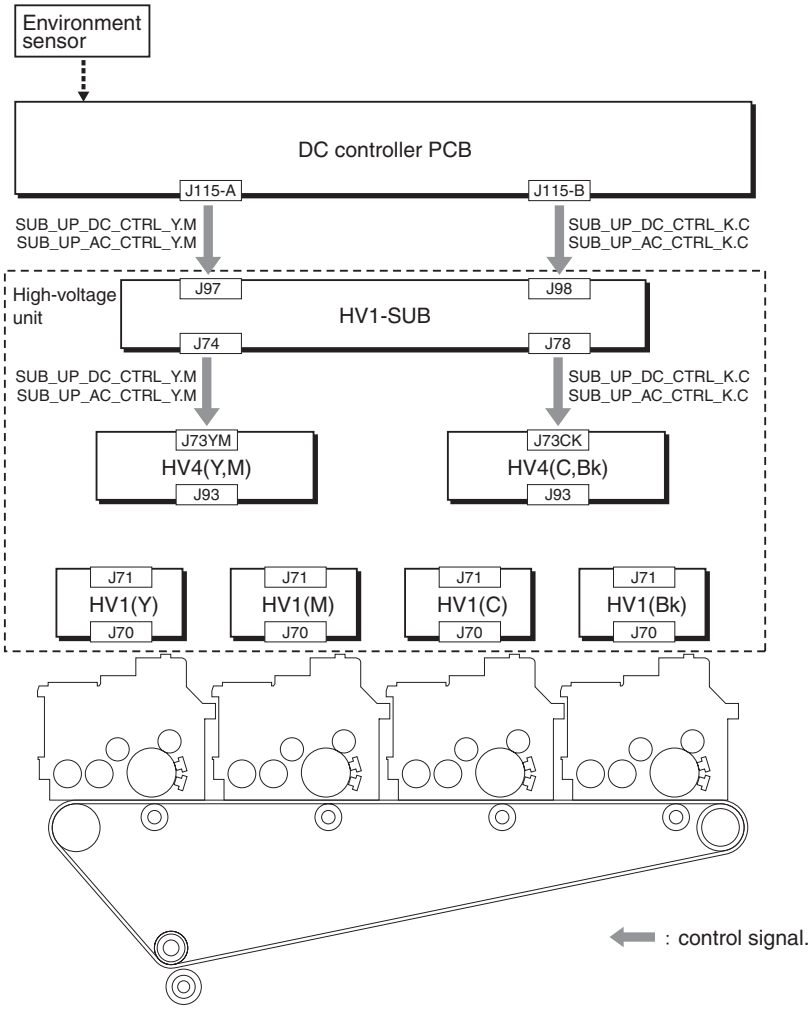

F-9-30

c-1. Route of the Downstream Auxiliary Brush Bias

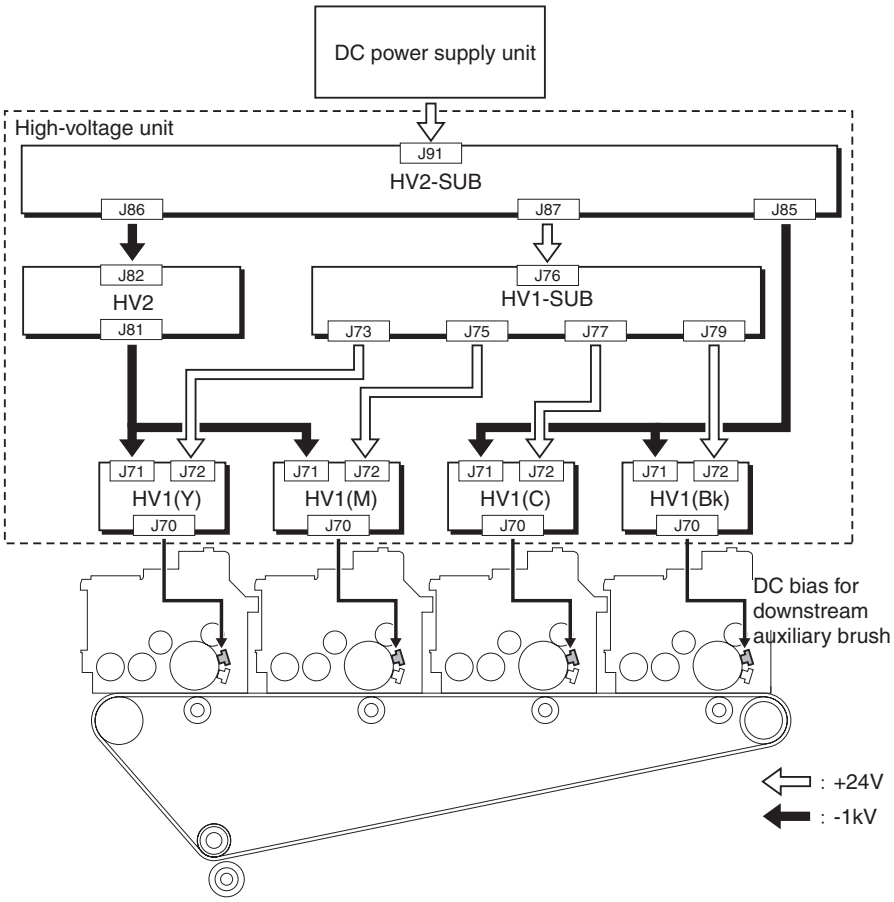

F-9-31

c-2. Route for the Downstream Auxiliary Brush Bias Control Signal

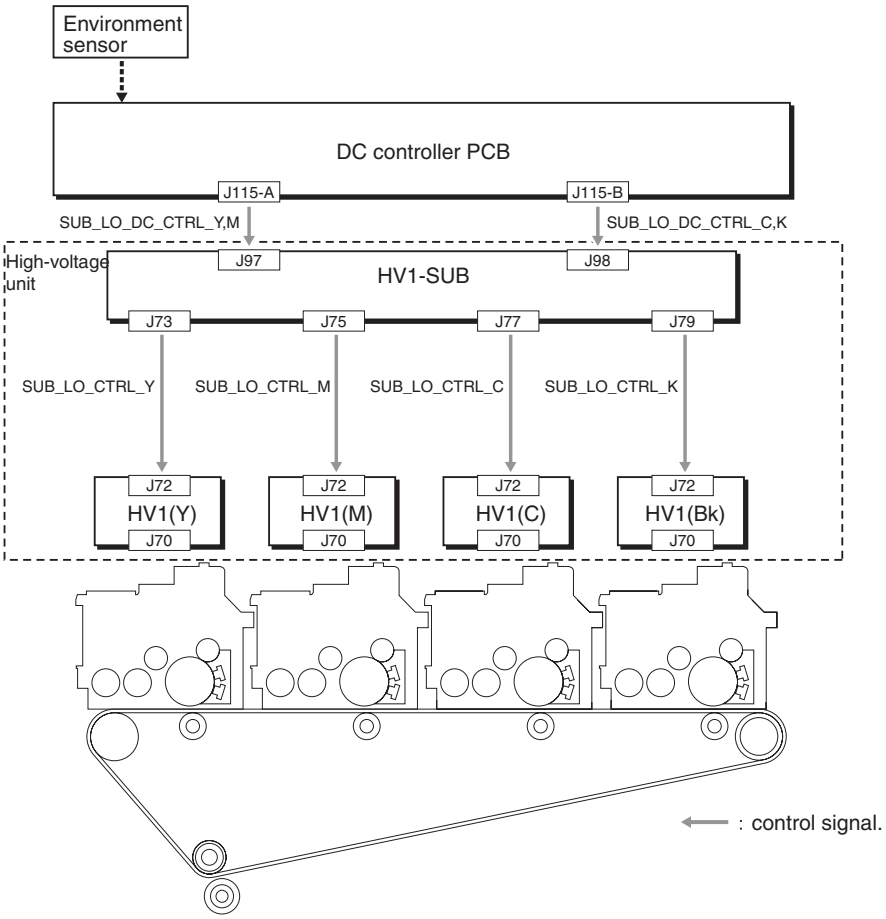

F-9-32

9.6.4 Charging Mechanism

9.6.4.1 Construction of the Charging Mechanism

CLC5151 / / / CLC4040 / / / iR C4580i / / / iR C4080i / / / / iR C5185N / / iR C5185i PRT /

Outline and Uses
1. charging the photosensitive drum
2. controlling the polarity of residual toner by the cleaning sheet

T-9-29

Component	thus preventing the adhesion of toner to the primary changing roller thus eliminating the need for a cleaning mechanism for the photosensitive drum
Primary charging roller	1. in preparation for the next image formation session, the photosensitive drum is evenly charged to a negative potential. 2. returns the toner changed to a negative potential to the photosensitive drum (for collection in the developing assembly).
Primary charging roller cleaning sheet	charges residual toner to a negative potential by friction (thereby returning the toner to the photosensitive drum).

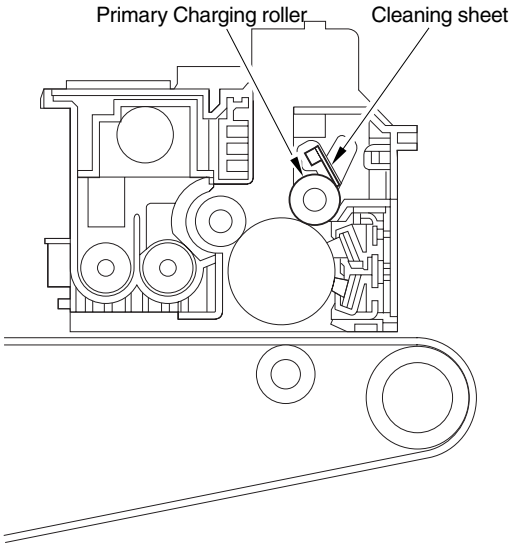

F-9-33

9.6.4.2 Controlling the Charging Bias

CLC5151 / / / CLC4040 / / / iR C4580i / / / iR C4080i / / / / iR C5185N / / iR C5185i PRT /

T-9-30

AC Component:	level of output suited to discharge current control
DC Component:	level of output suited to the reading of the environment sensor/SALT sensor

d-1. Route of the Primary Charging Bias

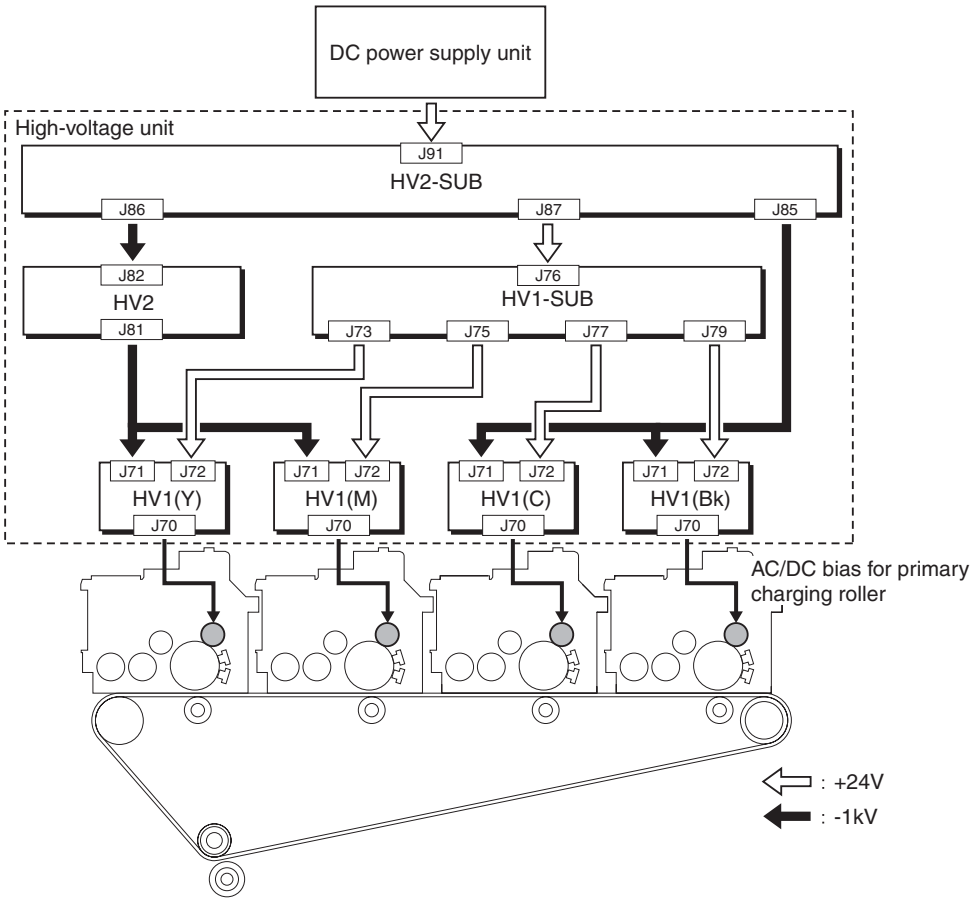

F-9-34

d-2. Route for the Primary Charging Bias Control Signal

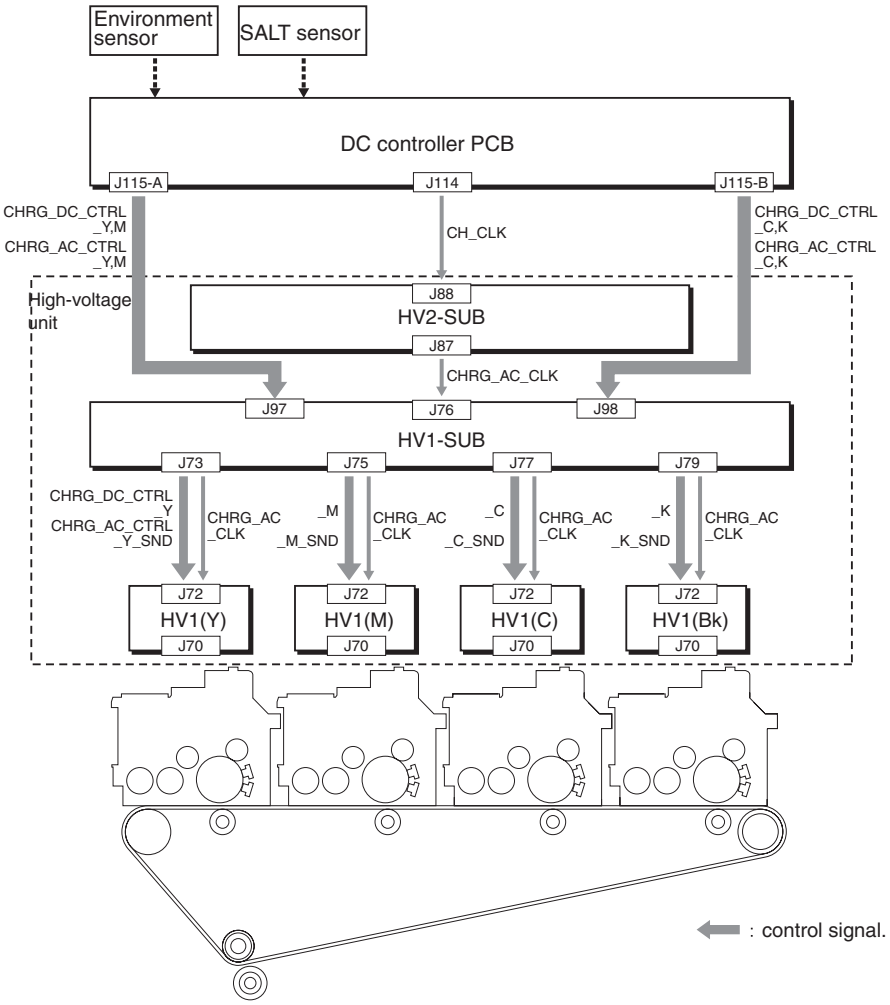

F-9-35

9.7 Toner Container

9.7.1 Outline of the Toner Container

CLC5151 / / / CLC4040 / / / iR C4580i / / / iR C4080i / / / / iR C5185N / / iR C5185i PRT /

The toner container consists of toner, stirring blade, and toner feedscrew;
as many as 4 containers are used (Y, M, C, Bk), and all of them are of the same construction.

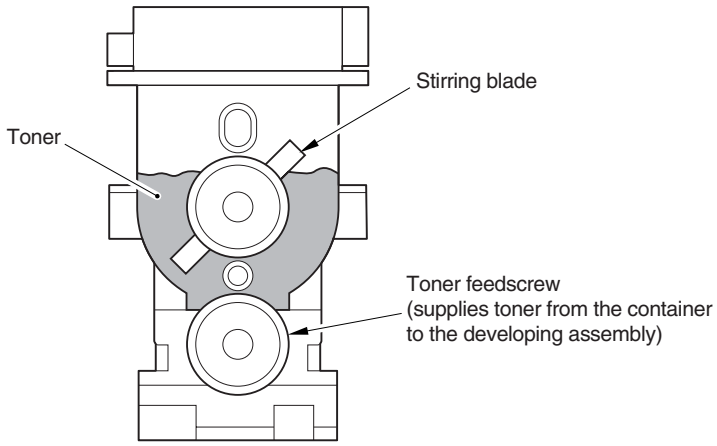

F-9-36

9.7.2 Toner Receptacle Presence / Absence Detection

CLC5151 / / / CLC4040 / / / iR C4580i / / / iR C4080i / / / / Color Image Reader-F1 / Color Image Reader-E1 / Dupiex Color Image Reader-G1 / iR C5185N / / iR C5185i PRT /

Toner Receptacle Presence / Absence Detection
There is no software mechanism to detect the toner receptacle presence / absence.
When there is no toner receptacle, releasing lever cannot be locked, and therefore the machine cannot be started.

9.7.3 Controlling the Toner Container Drive

CLC5151 / / / CLC4040 / / / iR C4580i / / / iR C4080i / / / / iR C5185N / / iR C5185i PRT /

T-9-31

Part	Source of drive	Remarks
Stirring blade	Toner container motor (M20 to 23)	driven through gars
Toner feedscrew	Toner container motor (M20 to 23)	driven through gears

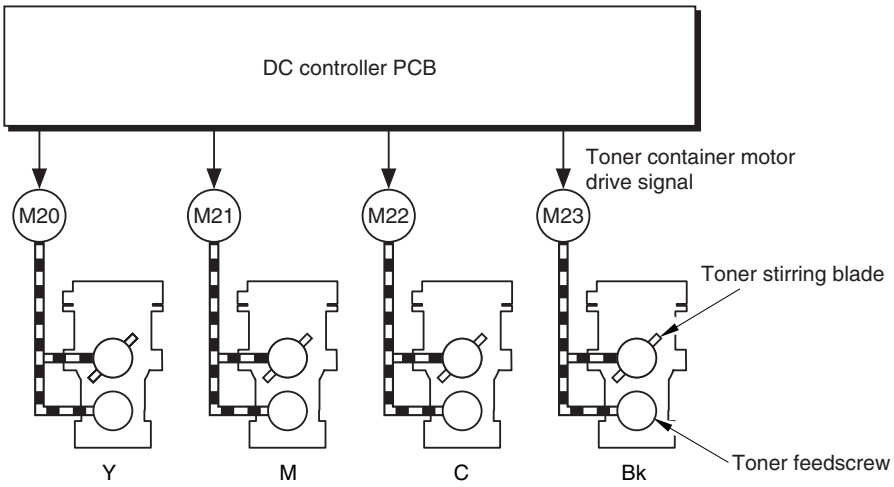

F-9-37

9.7.4 Checking the Level of Toner

CLC5151 / / / CLC4040 / / / iR C4580i / / / iR C4080i / / / / iR C5185N / / iR C5185i PRT /

The machine checks the level of toner using the following sensors:

T-9-32

Developing assembly	**ATR sensor** **magnetic sensor** Description checks the concentration of toner inside the developing assembly. relies on the fact that a change in the ratio between carrier (magnetic) and toner (non-magnetic) changes the force of magnetism. detects changes to identify the level of toner. SALT Sensor photo sensor Description checks the sample toner formed on the intermediate transfer belt (ITB) at such times as programmed. checks the density of the toner image after development.

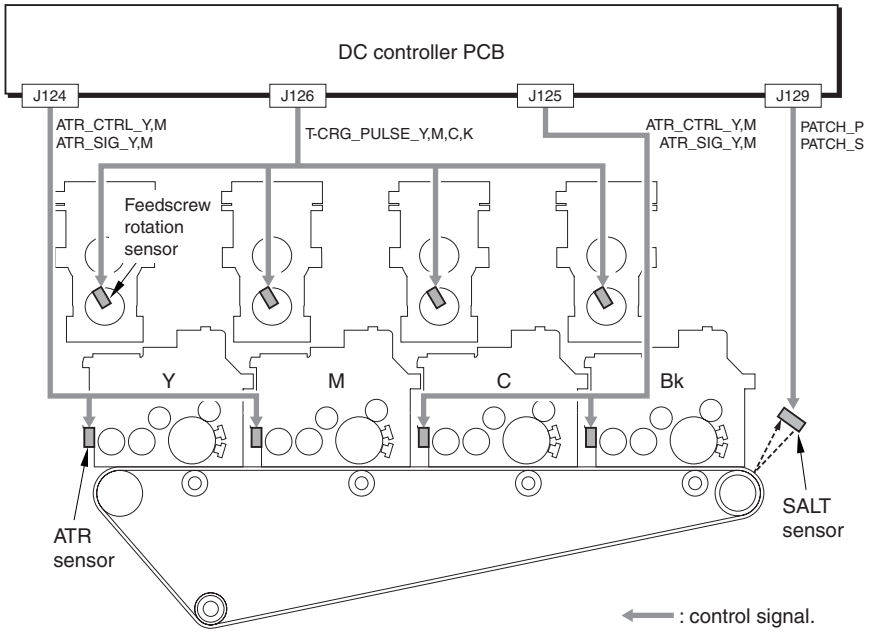

F-9-38

9.7.5 Controlling the Supply of Toner

CLC5151 / / / CLC4040 / / / iR C4580i / / / iR C4080i / / / / iR C5185N / / iR C5185i PRT /

1. Developing Assembly
When the ATR sensor detects the low toner level within the developing assembly, toner supply control from the toner receptacle to the developing assembly is carried out.
The toner supply level is determined by detecting the revolution of the toner supply screw using the toner supply screw revolution sensor inside the toner receptacle. Toner supply level to the developing assembly per 1 revolution of the screw is constant. Therefore, the toner level is calculated by cumulated revolution number.

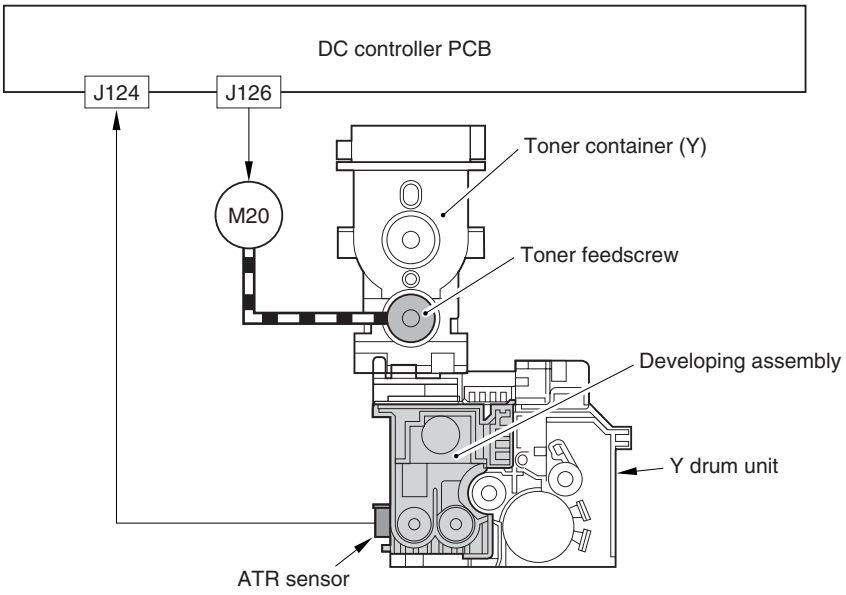

F-9-39

9.8 Transfer Unit

9.8.1 Outline of the Transfer Unit

9.8.1.1 Outline of the Transfer Unit

CLC5151 / / / CLC4040 / / / iR C4580i / / / iR C4080i / / / / iR C5185N / / iR C5185i PRT /

The transfer unit consists of 2 units: intermediate transfer unit and secondary transfer unit:
Intermediate Transfer Unit
- intermediate transfer belt (ITB)
- primary transfer roller (1 pc. each for Y, M, C, and Bk)
- ITB cleaning blade
- secondary transfer internal roller

Secondary Transfer Unit
- secondary transfer external roller
- static eliminator

feed guide

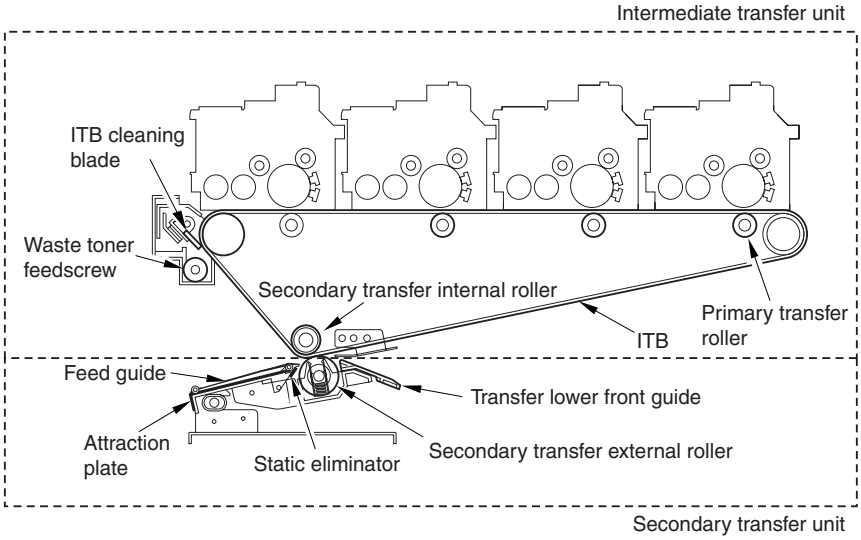

F-9-40

9.8.1.2 Transfer Unit Drive Control

CLC5151 / / / CLC4040 / / / iR C4580i / / / iR C4080i / / / / iR C5185N / / iR C5185i PRT /

T-9-33

parts	drive	remarks
drive roller	drum ITB motor (M1)	
intermediate transfer belt (ITB)	follows the drive roller	
primary transfer roller	follows the ITB	
secondary transfer inside roller	follows the ITB	
secondary transfer outside roller	secondary transfer inside roller	driven via the gear
tension roller	follows the ITB	
waste toner feeding screw	tension roller	driven via the gear

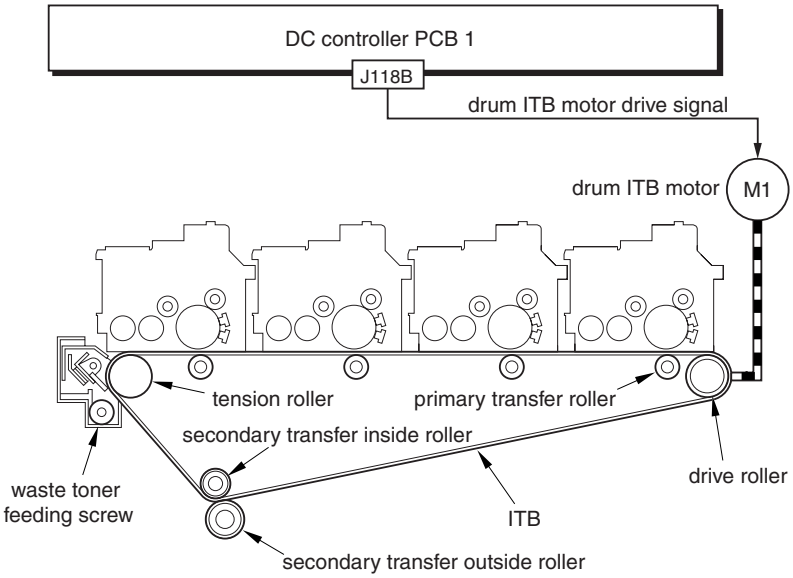

F-9-41

9.8.2 Controlling the Transfer Bias

9.8.2.1 Transfer Bias Control

CLC5151 / / / CLC4040 / / / iR C4580i / / / iR C4080i / / / / iR C5185N / / iR C5185i PRT /

(1) Primary transfer bias: output according to the environmental sensor, color mode, and ATVC control
(2) Secondary transfer bias: output according to the paper type, environmental sensor, color mode (full / mono), and ATVC control

e. Primary transfer bias / bias control signal flow path

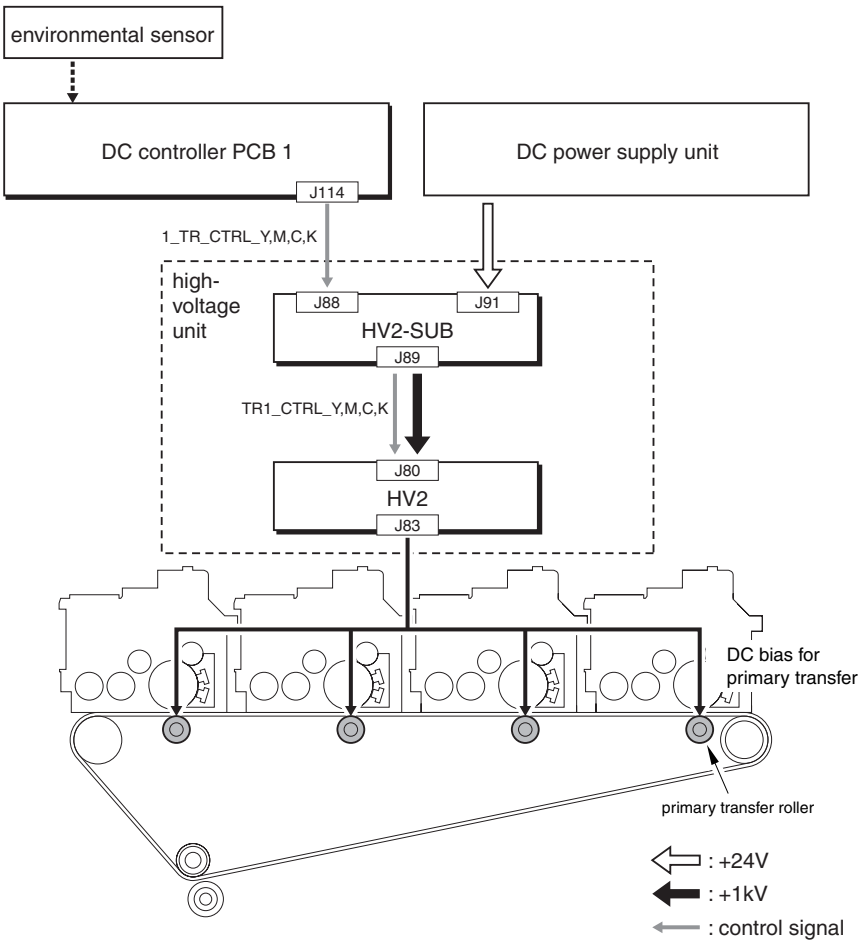

F-9-42

f. Secondary transfer bias / bias control signal flow path

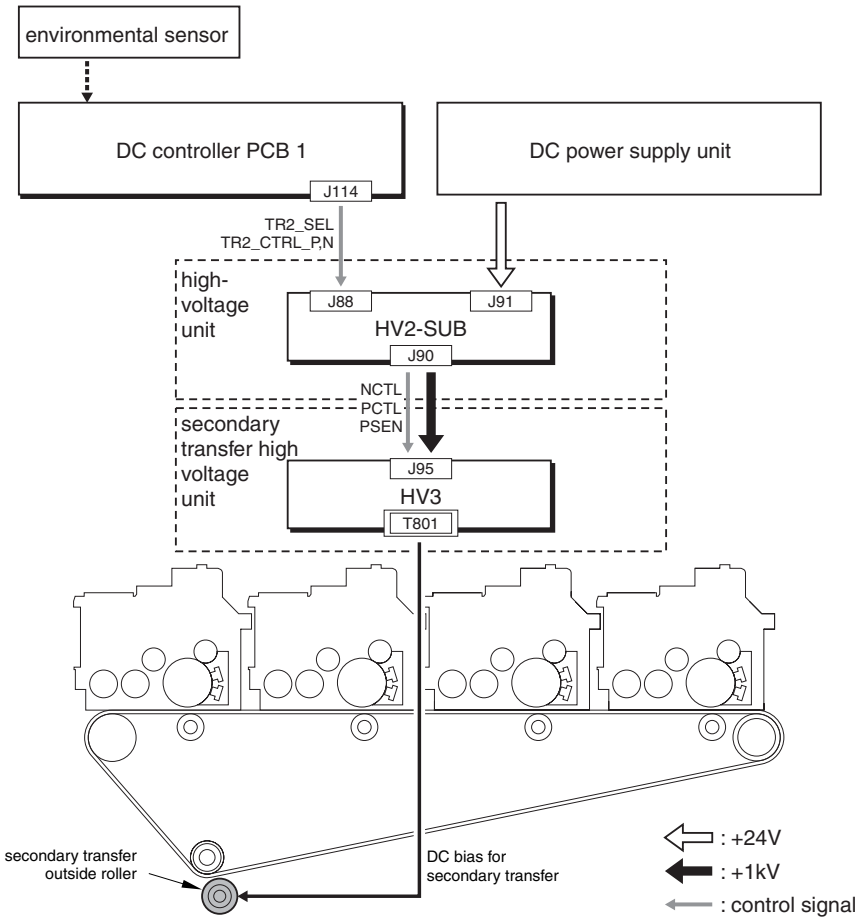

F-9-43

9.8.3 Cleaning

9.8.3.1 Intermediate Transfer Belt (ITB)

CLC5151 / / / CLC4040 / / / iR C4580i / / / iR C4080i / / / / iR C5185N / / iR C5185i PRT /

The machine uses a cleaning blade to clean the intermediate transfer belt (ITB).

T-9-34

Cleaning belt:	remains in contact with the ITB at all times, and used to scrape off toner from the ITB.
Scoop-up sheet:	used to prevent fall of toner.

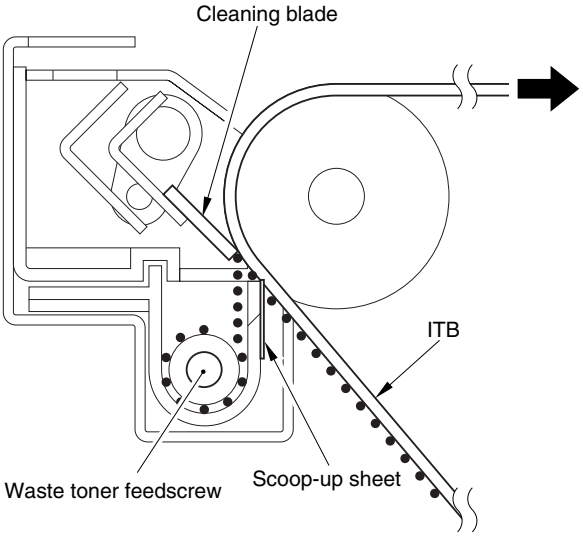

F-9-44

9.8.3.2 Secondary External Roller

CLC5151 / / / CLC4040 / / iR C4580i / / iR C4080i / / / / iR C5185N / / iR C5185i PRT /

The secondary transfer external roller is cleaned electrostatically.

Description of Control
A bias is applied to the secondary transfer external roller alternately using the polarity used for image formation and the polarity opposite it for longer than the time it takes the roller to make a single rotation, thereby returning the toner remaining on the roller to the ITB.
Timing of Control
1. Operation before/after a Copy/Print Job
2. after recovery from a jam.
3. when a sample image (or test pattern) is formed as part of image stabilization control.

9.8.3.3 Waste Toner Collection Mechanism

CLC5151 / / / CLC4040 / / / iR C4580i / / / iR C4080i / / / / iR C5185N / / iR C5185i PRT /

Waste toner is collected by the following mechanisms:
- waste toner
scraped by the cleaning blade and fed to the waste toner box by the waste toner feeding screw.

- waste toner box full detection
detected by the waste toner sensor composed of the LED (light emission) and the photo-transister (light reception).

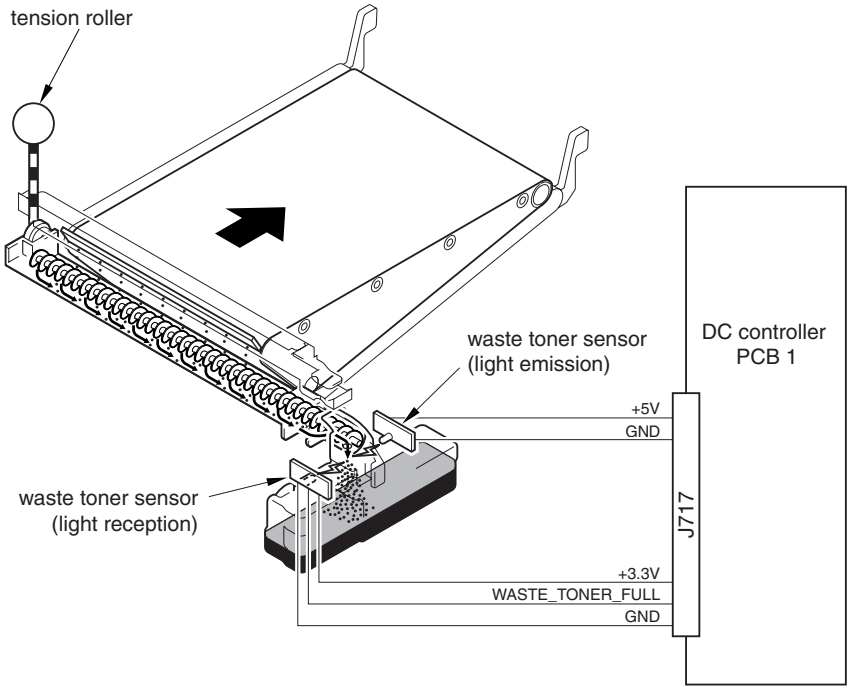

F-9-45

9.8.4 Separation Mechanism

9.8.4.1 Separation

CLC5151 / / / CLC4040 / / / iR C4580i / / / iR C4080i / / / / iR C5185N / / iR C5185i PRT /

The machine uses the following mechanism to separate paper:

T-9-35

1. Separation	- Curvature (mechanical) - Static Eliminator (static electricity) It is grounded to lower the potential occurring on the back of paper, thus facilitating the separation of paper from the ITB.

T-9-36

2. Separate Auxiliary Mechanism	- Feed Guide It is used to prevent increases in the potential occurring on the back of paper because of friction used when it is moved to the fixing assembly. It is used to prevent image faults caused by contact with the attraction plate. - Attraction Plate It is grounded, and is used to draw paper.

The eccentric arrangement of the 2 rollers causes the paper to separate by taking advantage of the rigidity of paper (curvature separation).

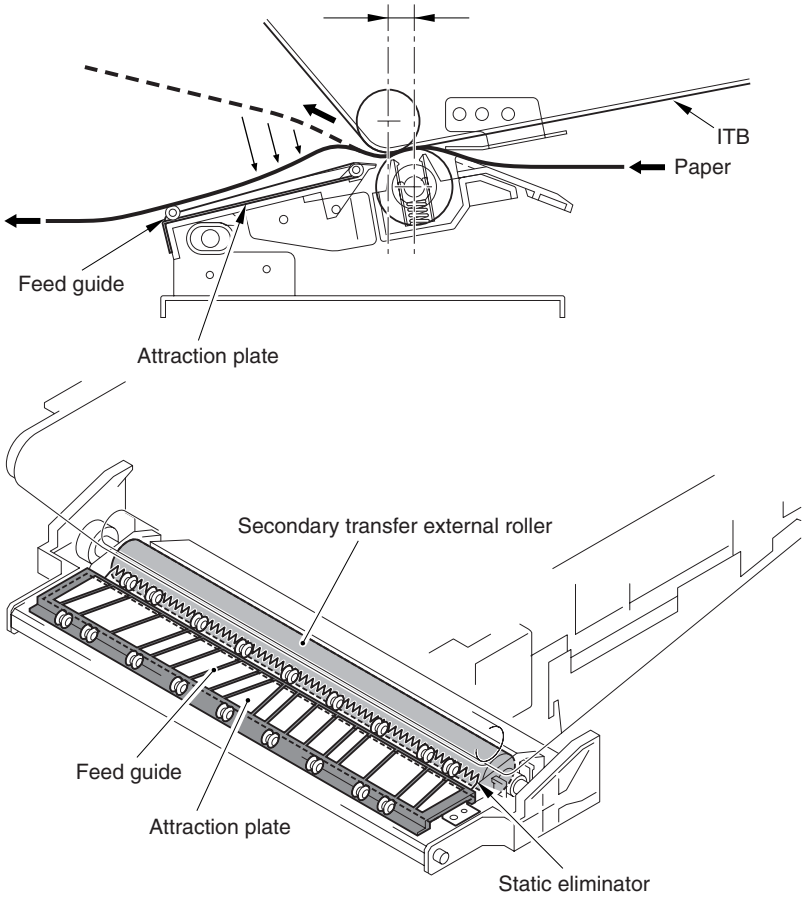

F-9-46

9.9 Parts Replacement Procedure

9.9.1 Drum ITB Motor

9.9.1.1 Preparation for Removing the Drum ITB Motor

CLC5151 / / / CLC4040 / / / iR C4580i / / / iR C4080i / / / / Color Image Reader-F1 / Color Image Reader-E1 / Dupiex Color Image Reader-G1 / iR C5185N / / iR C5185i PRT /

1) Open the front cover and pull out the drum unit.(page 12-14)Reference[Removing the Front Cover]
2) Remove the rear fan cover.(page 12-15)Reference[Removing the Rear Fan Cover]
3) Remove the rear upper cover.(page 12-16)Reference[Removing the Rear Upper Cover]
4) Remove the rear lower cover.(page 12-16)Reference[Removing the Rear Lower Cover]
5) Remove the DC controller box 2. (page 12-24)Reference[Removing the DC Controller Box2]
6) Remove the DC controller box 1.(page 12-24)Reference[Removing the DC Controller Box1]
7) Remove the IH power supply unit. (page 12-21)Reference[Removing the IH Power Supply Unit]
8) Remove the lattice connector mount [4].
   - 2 clamps [1]
   - 1 screw [2]
   - 6 connectors [1]

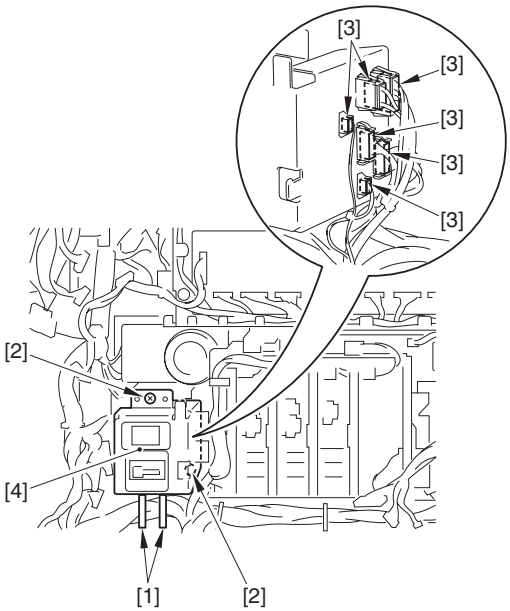

F-9-47

9) Remove the high-voltage unit 2.(page 12-20)Reference[Removing the High-Voltage Unit 2]

Points to Note When Removing the Drum ITB Motor Mounting
To remove, put your hand into the inside where you have slid out the manual feed unit; then, while holding down the swing plate [1] found to the rear of the drum drive unit, remove from the machine's rear side plate.
The drum drive unit is hooked on the protrusion from the rear side plate; lift it slightly to remove.

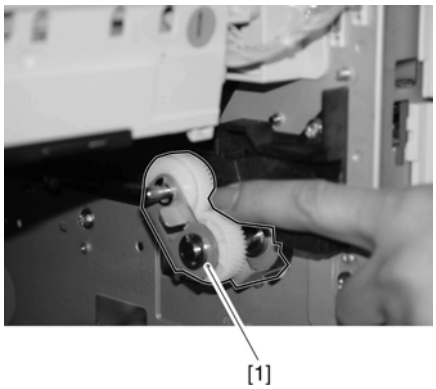

F-9-48

10) Remove the drum ITB motor base [3].
   - 2 connectors [1]
   - 3 screws [2]

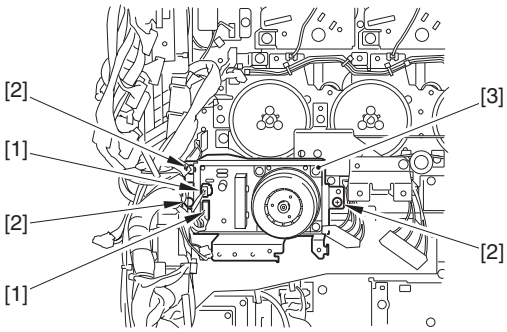

F-9-49

9.9.1.2 Removing the Drum ITB Motor

CLC5151 / / / CLC4040 / / / iR C4580i / / / iR C4080i / / / / Color Image Reader-F1 / Color Image Reader-E1 / Dupiex Color Image Reader-G1 / iR C5185N / / iR C5185i PRT /

1) Remove the drum ITB motor [2].
   - 4 screws [1]

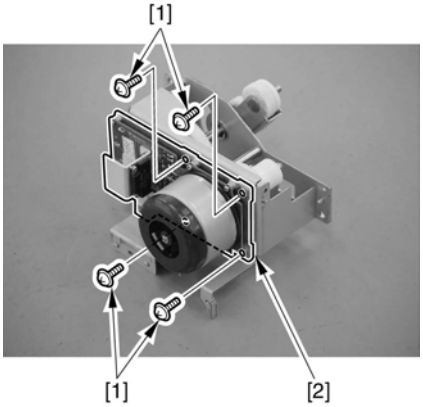

F-9-50

9.9.2 Drum Drive Unit

9.9.2.1 Preparation for Removing the Drum Drive Unit

CLC5151 / / / CLC4040 / / / iR C4580i / / / iR C4080i / / / / Color Image Reader-F1 / Color Image Reader-E1 / Dupiex Color Image Reader-G1 / iR C5185N / / iR C5185i PRT /

1) Open the front cover and pull out the drum unit.(page 12-14)Reference[Removing the Front Cover]
2) Remove the rear fan cover.(page 12-15)Reference[Removing the Rear Fan Cover]
3) emove the upper rear cover.(page 12-16)Reference[Removing the Rear Upper Cover]
4) Remove the lower rear cover.(page 12-16)Reference[Removing the Rear Lower Cover]
5) Remove the rear left cover (upper).(page 12-15)Reference[Removing the Left Rear Cover (Upper)]

6) Remove the left rear cover (upper).(page 12-17)Reference[Removing the Rear Left Cover (Upper)]
7) Remove the main controller cover.(page 5-14)Reference[Removing the Main Controller Box]
8) Remove the DC controller box 2.(page 12-24)Reference[Removing the DC Controller Box2]
9) Remove the DC controller box 1.(page 12-24)Reference[Removing the DC Controller Box1]
10) Remove the IH power supply unit.(page 12-21)Reference[Removing the IH Power Supply Unit]
11) Remove the high-voltage unit 1.(page 12-20)Reference[Removing the High-Voltage Unit1]
12) Remove the mount [3].
- 19 connectors
- 7 clamps [1]
- 4 screws [2]

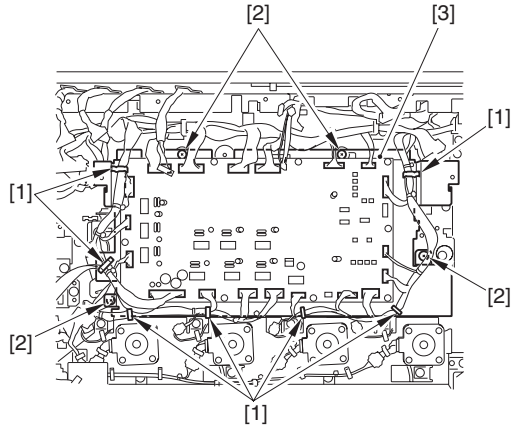

F-9-51

13) Remove the lattice connector mount [4].
- 2 clamps [1]
- 2 screws [2]
- 6 connectors [3]

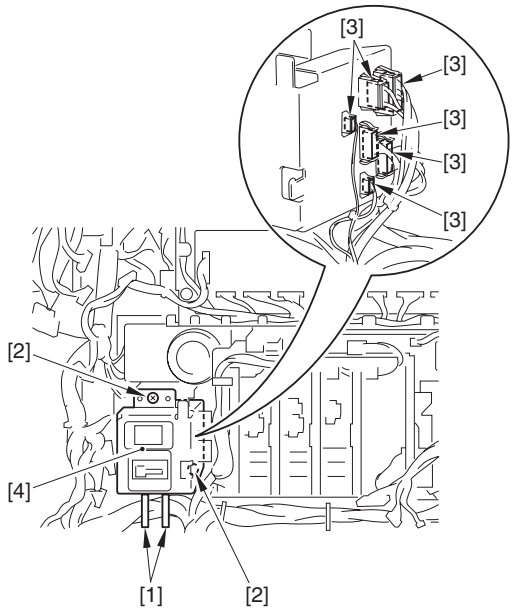

F-9-52

14) Remove the high-voltage unit 2.(page 12-20)Reference[Removing the High-Voltage Unit 2]

Points to Note When Removing the Drum ITB Motor Mounting
To remove, put your hand into the inside where you have slid out the manual feed unit; then, while holding down the swing plate [1] found to the rear of the drum drive unit, remove from the machine's rear side plate.
The drum drive unit is hooked on the protrusion from the rear side plate; lift it slightly to remove.

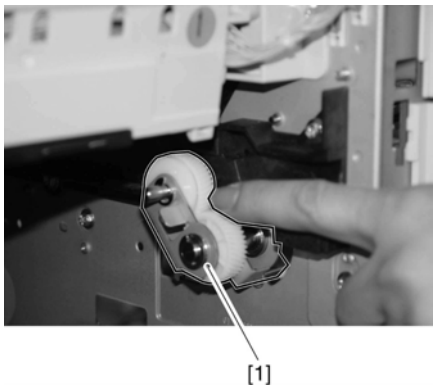

F-9-53

15) Remove the drum ITB motor base [3].
- 2 connectors [1]
- 3 screws [2]

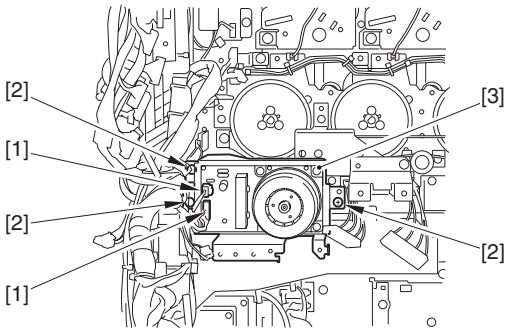

F-9-54

16) Remove the developing drive unit [4].
- 6 wire saddles [1]
- 1 connector [2]
- 7 screws [3]

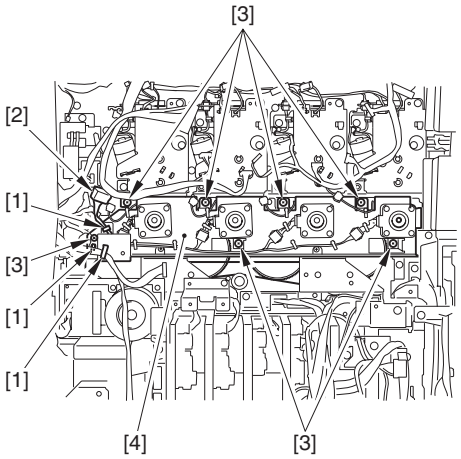

F-9-55

9.9.2.2 Removing the Drum Drive Unit

CLC5151 / / / CLC4040 / / / iR C4580i / / / iR C4080i / / / / Color Image Reader-F1 / Color Image Reader-E1 / Dupiex Color Image Reader-G1 / iR C5185N / / iR C5185i PRT /

1) Remove the drum drive unit [3].
- 6 connectors [1]
- 7 screws [2]

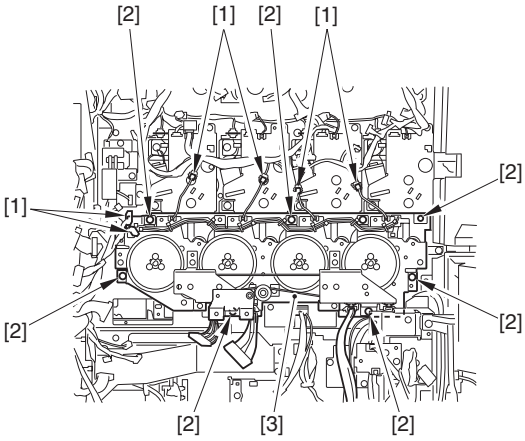

F-9-56

9.9.3 Drive Roller

9.9.3.1 Preparation for Removing the Drive Roller

CLC5151 / / / CLC4040 / / / iR C4580i / / / iR C4080i / / / / Color Image Reader-F1 / Color Image Reader-E1 / Dupiex Color Image Reader-G1 / iR C5185N / / iR C5185i PRT /

1) Slide out the manual feed unit.
2) Removing the intermediate transfer unit. (page 9-38) Reference[Removing the Intermediate Transfer Unit]
3) Remove the intermediate transfer belt. (page 9-39) Reference[Removing the Intermediate Transfer Belt]

9.9.3.2 Removing the Drive Roller

CLC5151 / / / CLC4040 / / / iR C4580i / / / iR C4080i / / / / Color Image Reader-F1 / Color Image Reader-E1 / Dupiex Color Image Reader-G1 / iR C5185N / / iR C5185i PRT /

Point to note when removing the drive roller
- The spring found at the front is under pressure; thus, starting at the front can cause the spring to snap out. Be sure to start at the rear.
- When removing the gear, be sure to take care not to lose the parallel pin.

At the rear, remove the following: E-ring [1], washer [2], bearing [3], E-ring [4], gear [5], parallel pin [6], gear butting spacer [7], bearing [8], and 2 E-rings [9].
1) At the rear, remove the following: E-ring [1], washer [2], bearing [3], E-ring [4], gear [5], parallel pin [6], gear butting spacer [7], bearing [8], and 2 E-rings [9].

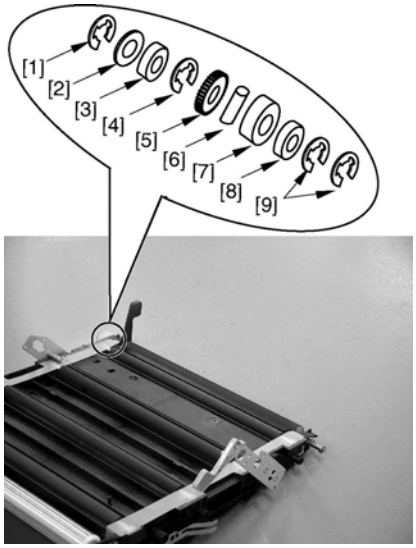

F-9-57

2) At the front, remove the following: E-ring [1], washer [2], bearing [3], E-ring [4], washer [5], spring [6], washer [7], bearing [8], grounding plate [9].

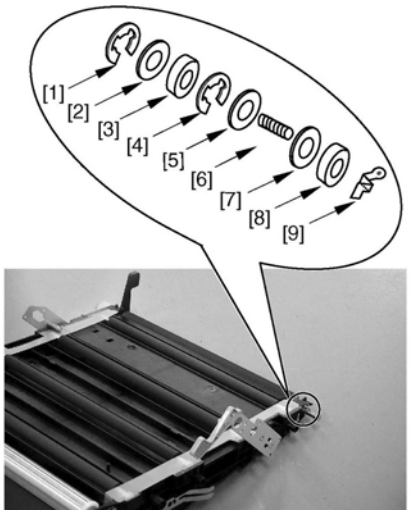

F-9-58

3) Remove the drive roller [2] from the cut-off [A] of the frame found at the front.
   - 1 bearing [1] found at the rear

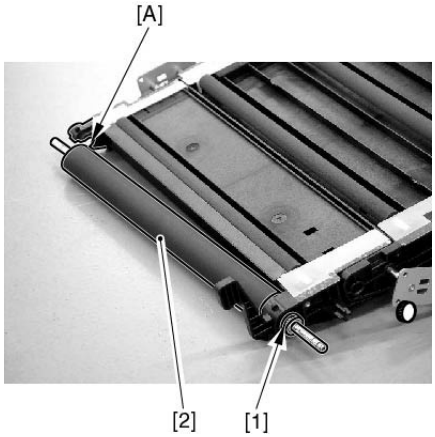

F-9-59

Point to note when attaching the drive roller
When attaching the washer, spring, and washer at the front, be sure to fit the E-ring after forcing down the spring together with the washer until the E-ring groove [A] of the drive roller shaft is in view.

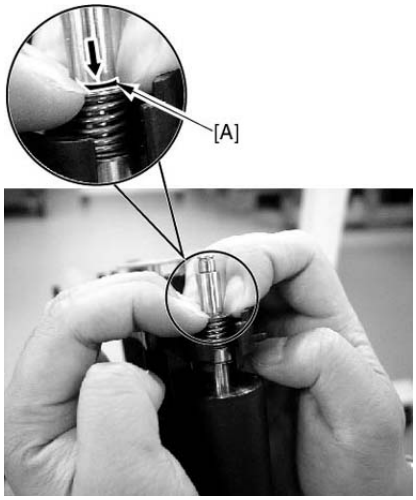

F-9-60

9.9.4 Developing Motor (Bk/Y/M/C)

9.9.4.1 Preparation for Removing the Developing Motor

CLC5151 / / / CLC4040 / / / iR C4580i / / / iR C4080i / / / / Color Image Reader-F1 / Color Image Reader-E1 / Dupiex Color Image Reader-G1 / iR C5185N / / iR C5185i PRT /

1) Remove the rear fan cover.(page 12-15)Reference[Removing the Rear Fan Cover]
2) Remove the upper rear cover.(page 12-16)Reference[Removing the Rear Upper Cover]
3) Remove the rear lower cover.(page 12-16)Reference[Removing the Rear Lower Cover]
4) Remove the left rear cover (upper).(page 12-15)Reference[Removing the Left Rear Cover (Upper)]
5) Remove the main controller box. (page 5-14)Reference[Removing the Main Controller Box]
6) Remove the DC controller box 2. (page 12-24)Reference[Removing the DC Controller Box2]
7) Remove the DC controller box 1. (page 12-24)Reference[Removing the DC Controller Box1]
8) Remove the high-voltage unit 1. (page 12-20)Reference[Removing the High-Voltage Unit1]

9.9.4.2 Removing the Developing Motor

CLC5151 / / / CLC4040 / / / iR C4580i / / / iR C4080i / / / / Color Image Reader-F1 / Color Image Reader-E1 / Dupiex Color Image Reader-G1 / iR C5185N / / iR C5185i PRT /

There are 4 developing motors (Bk, Y, M, C). The steps to remove are the same for those 4 (Bk, Y, M, C).
MEMO:
The cassette 1/2 and the pick-up unit 1/2 may also be removed in the same way.

1) Remove the developing drive unit [4].
- 6 wire saddles [1]
- 1 connector [2]
- 7 screws [3]

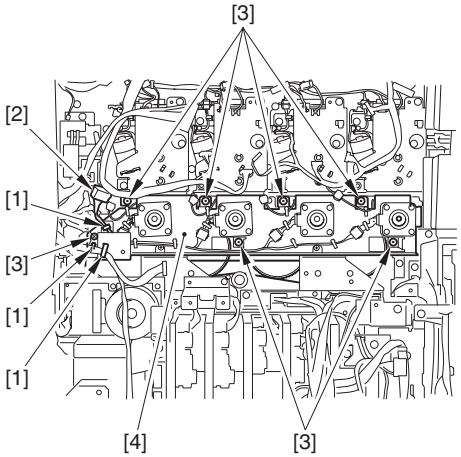

F-9-61

2) Remove the wire saddle [1] and connector [2].

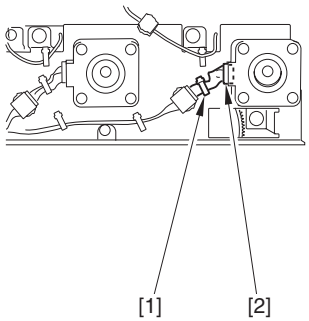

F-9-62

3) Remove the developing motor [4].
- 1 E-ring [1]
- 1 gear [2]
- 2 screws [3]

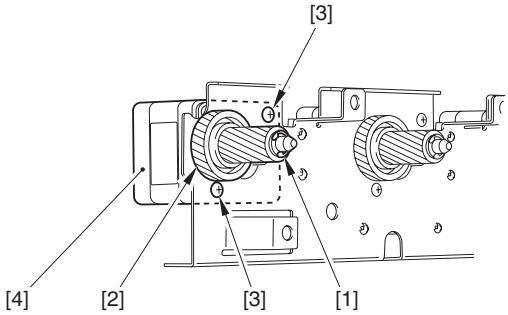

F-9-63

9.9.5 Secondary Transfer Unit

9.9.5.1 Preparation for Removing the Secondary Transfer Unit

CLC5151 / / / CLC4040 / / / iR C4580i / / / iR C4080i / / / / Color Image Reader-F1 / Color Image Reader-E1 / Dupiex Color Image Reader-G1 / iR C5185N / / iR C5185i PRT /

1) Remove the fixing unit.
1-1) Remove the fixing drive unit.(page 11-22)Reference[Removing the Fixing Drive Unit]
1-2) Remove the fixing unit.
2) Remove the fixing/feeder unit.(page 10-41)Reference[Removing the Fixing/Feeder Unit]
3) Lift the duplexing open/close guide [3] in the direction of [A] and shift it in the direction of [B]. Then, remove it.
- 1 connector [2] (Open sheet [1].)

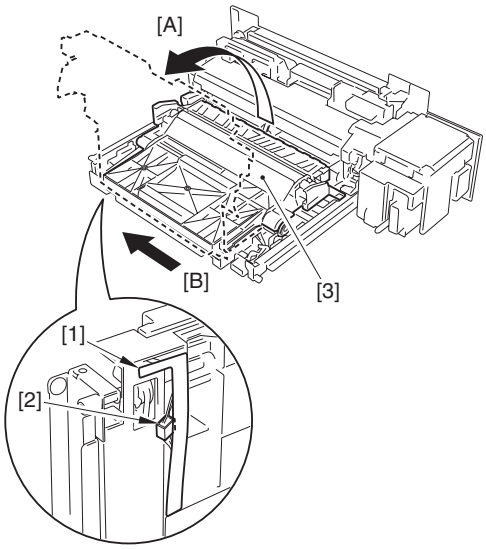

F-9-64

9.9.5.2 Removing the Secondary Transfer Unit

CLC5151 / / / CLC4040 / / / iR C4580i / / / iR C4080i / / / / Color Image Reader-F1 / Color Image Reader-E1 / Dupiex Color Image Reader-G1 / iR C5185N / / iR C5185i PRT /

1) Remove the secondary transfer unit retainer [2].
- 1 screw [1] at the front

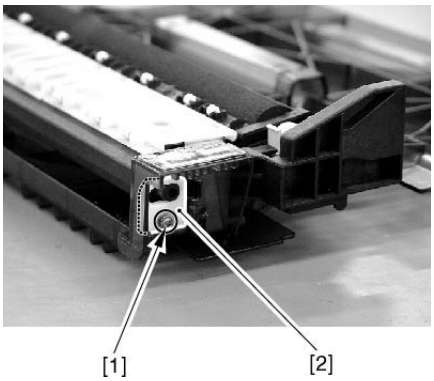

F-9-65

When removing the secondary transfer unit, be sure to take care not to lose the tension spring [1] found behind it.

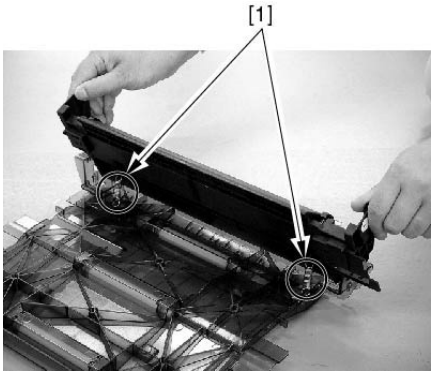

F-9-66

2) Hold the grips at the front and the rear, and move the front side to the right to pull out the secondary transfer unit [1].

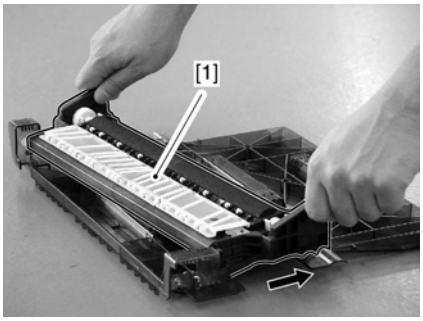

F-9-67

9.9.6 Intermediate Transfer Unit

9.9.6.1 Preparation for Removing the Intermediate Transfer Unit

CLC5151 / / / CLC4040 / / / iR C4580i / / / iR C4080i / / / / Color Image Reader-F1 / Color Image Reader-E1 / Dupiex Color Image Reader-G1 / iR C5185N / / iR C5185i PRT /

1) Slide out the manual feed unit.

9.9.6.2 Removing the Intermediate Transfer Unit

CLC5151 / / / CLC4040 / / / iR C4580i / / / iR C4080i / / / / Color Image Reader-F1 / Color Image Reader-E1 / Dupiex Color Image Reader-G1 / iR C5185N / / iR C5185i PRT /

1) Pressure release of the intermediate transfer unit.
1-1) Open the front cover, and turn the intermediate transfer unit releasing lever[1] to unlock it.

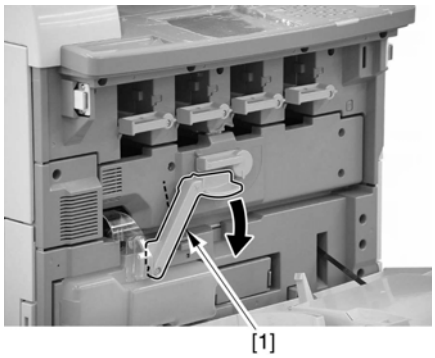

F-9-68

1-2) Remove the middle right cover [2].
- 1 screw [1]

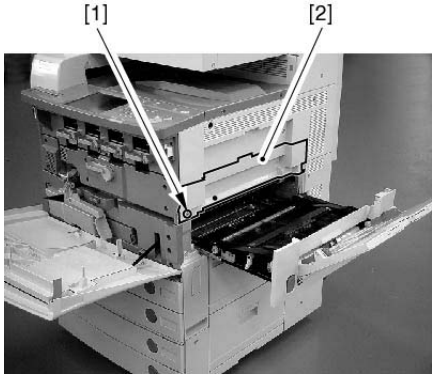

F-9-69

1-3) Release the U-turn lever [1], and fix it with the tape [2], etc.

Unless the pressure release lever is fixed, the release lever will fall down, which may cause a flaw on ITB.

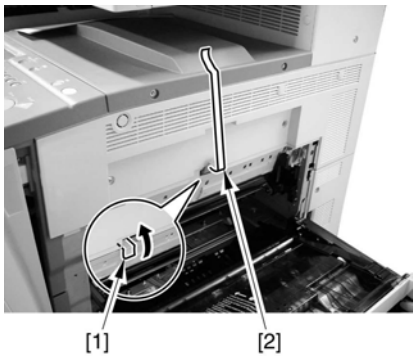

F-9-70

When removing the intermediate transfer unit, be careful to keep the upper side from contact with the main unit.

F-9-71

2) While picking the tabs at the front and the rear, slide out the intermediate transfer unit [1]; then, remove it by holding it by the indicated area [2].

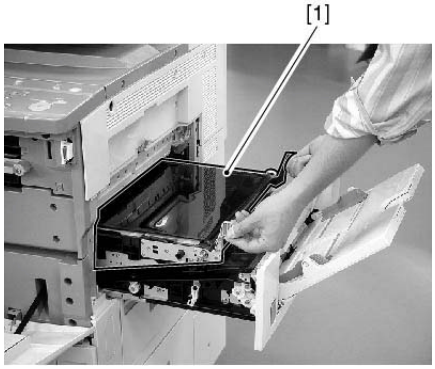

F-9-72

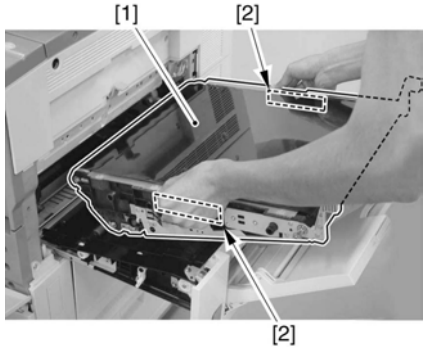

F-9-73

9.9.7 Transfer Cleaning Unit

9.9.7.1 Preparation for Removing the Transfer Cleaning Unit

CLC5151 / / / CLC4040 / / / iR C4580i / / / iR C4080i / / / / Color Image Reader-F1 / Color Image Reader-E1 / Dupiex Color Image Reader-G1 / iR C5185N / / iR C5185i PRT /

1) Open the front cover, and turn the intermediate transfer unit releasing lever [1].

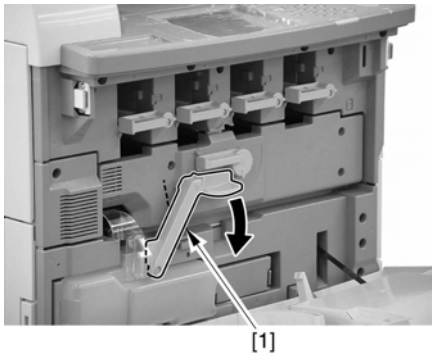

F-9-74

2) Remove the waste toner container [1].

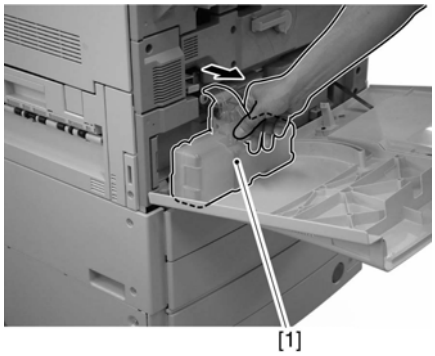

F-9-75

9.9.7.2 Removing the Transfer Cleaning Unit

CLC5151 / / / CLC4040 / / / iR C4580i / / / iR C4080i / / / / Color Image Reader-F1 / Color Image Reader-E1 / Dupiex Color Image Reader-G1 / iR C5185N / / iR C5185i PRT /

1) Remove the transfer cleaning unit [2].
   - 1 screw [1]

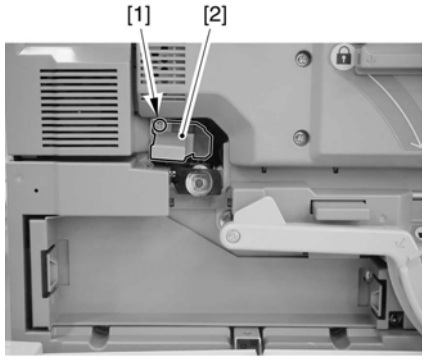

F-9-76

9.9.8 Intermediate Transfer Belt

9.9.8.1 Preparation for Removing the Intermediate Transfer Belt

CLC5151 / / / CLC4040 / / / iR C4580i / / / iR C4080i / / / / Color Image Reader-F1 / Color Image Reader-E1 / Dupiex Color Image Reader-G1 / iR C5185N / / iR C5185i PRT /

1) Slide out the manual feed unit.
2) Removing the intermediate transfer unit. (page 9-38) Reference[Removing the Intermediate Transfer Unit]

9.9.8.2 Removing the Intermediate Transfer Belt

CLC5151 / / / CLC4040 / / / iR C4580i / / / iR C4080i / / / / Color Image Reader-F1 / Color Image Reader-E1 / Dupiex Color Image Reader-G1 / iR C5185N / / iR C5185i PRT /

1) Remove the belt cover [2].
   - 4 screws [1]

When removing the belt cover [2], be careful not to make flaws on the intermediate transfer belt.

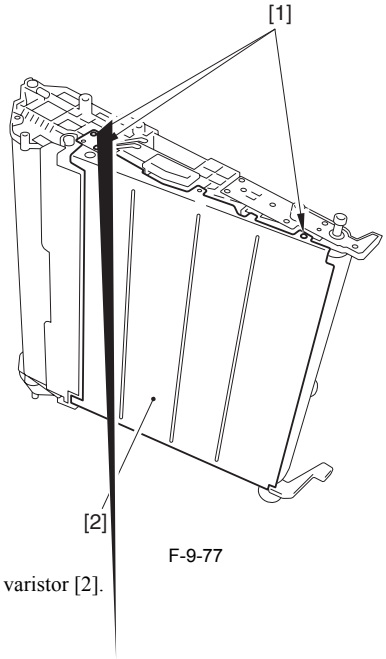

F-9-77

2) Remove the varistor [2].
   - screw [1]

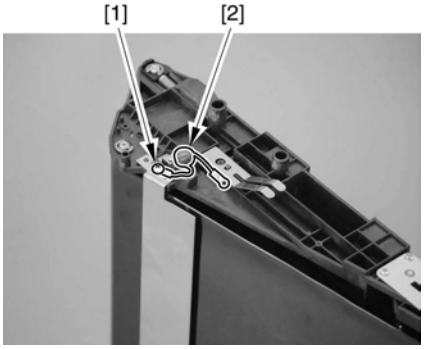

F-9-78

3) Remove the transfer guide plate [2].
   - screw [1]

When removing the transfer guide plate [2], be careful not to make flaws on the intermediate transfer belt.

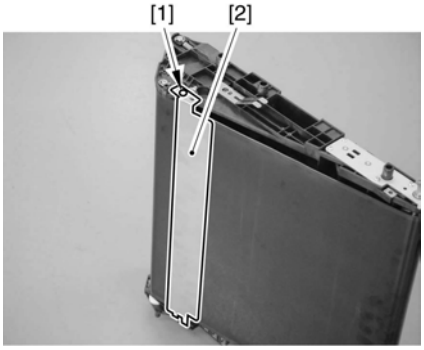

F-9-79

4) Pull out the link plate (rear) [2].
   - 4 screws [1] at the rear

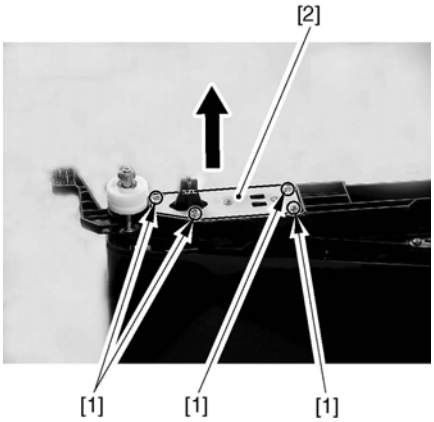

F-9-80

Be sure to fix the connecting plate (rear) with screws while pressing the transfer frame in the direction shown by the arrows.

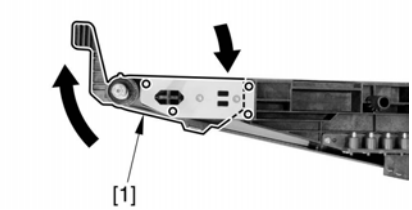

F-9-81

5) Fit the boss [1] on the frame at the rear into the recess [A] in the middle right cover so that the unit is upright.

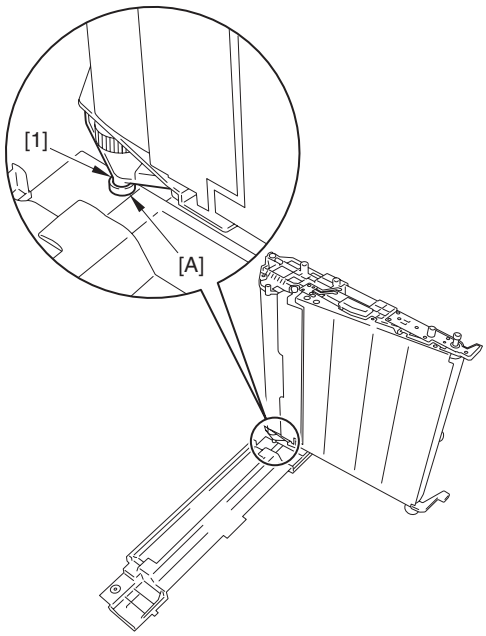

F-9-82

6) Be sure that the rear link plate [1] is on the opposite of the middle right cover so that the intermediate transfer unit will not fall down.

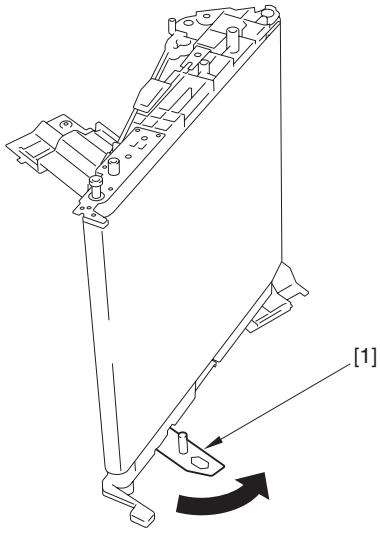

F-9-83

7) Remove the 4 screws at the rear [1], and pull out the link plate (front) [2]; then, rotate it 180 deg.

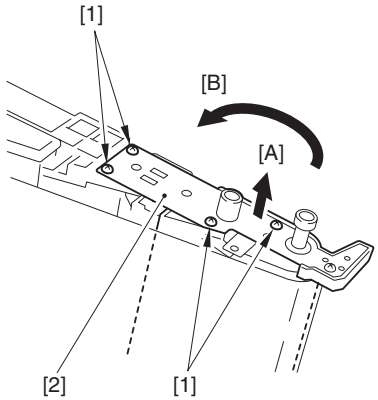

F-9-84

Be sure to fix the connecting plate (front) with screws while pressing the transfer frame in the direction shown by the arrows.

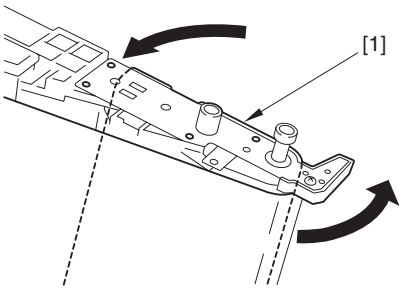

F-9-85

8) After bending the transfer frame, pull out the transfer belt [1] upward.

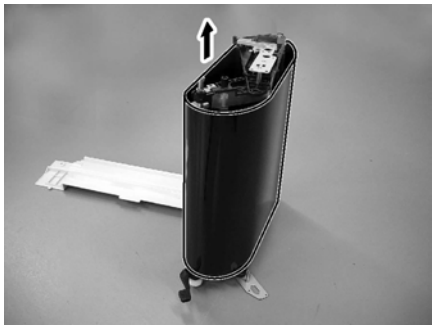

F-9-86

When pulling out the belt, be careful not to break it by pressing it against the unit.

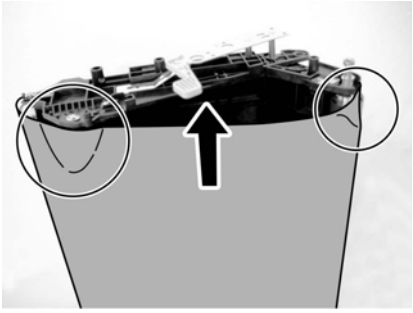

F-9-87

After removing the belt, set it up to prevent damage, or place it on a paper.

Check that there is no dirt on the secondary transfer internal roller. When it is dirty, clean it with alcohol.

Cautions in attaching the intermediate transfer belt

1) Attach it so that the red mark on the intermediate transfer belt rib is placed in the rear side.

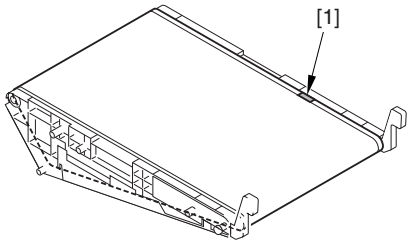

F-9-88

2) When attaching the belt, place the unit at a low level so that the belt can be inserted straight from the upper level.

F-9-89

3) Be careful so that the rib [2] in the belt [1] does not run into the tension roller [3].

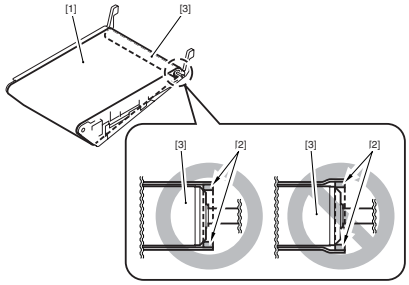

F-9-90

9.9.9 Intermediate Transfer Belt Tension Roller

9.9.9.1 Preparation for Removing the Intermediate Transfer Belt Tension Roller

CLC5151 / / / CLC4040 / / / iR C4580i / / / iR C4080i / / / / Color Image Reader-F1 / Color Image Reader-E1 / Dupiex Color Image Reader-G1 / iR C5185N / / iR C5185i PRT /

1) Pull out the manual feeder unit.
2) Remove the intermediate transfer unit. (page 9-38) Reference[Removing the Intermediate Transfer Unit]
3) Remove the intermediate transfer belt. (page 9-39) Reference[Removing the Intermediate Transfer Belt]

9.9.9.2 Removing the Intermediate Transfer Belt Tension Roller

CLC5151 / / / CLC4040 / / / iR C4580i / / / iR C4080i / / / / Color Image Reader-F1 / Color Image Reader-E1 / Dupiex Color Image Reader-G1 / iR C5185N / / iR C5185i PRT /

1) Remove the intermediate transfer belt tension roller [6].
   - 3 E-rings [1]
   - 2 washers [2]
   - 1 gear [3]
   - 2 bearings [4]
   - 2 screws [5]

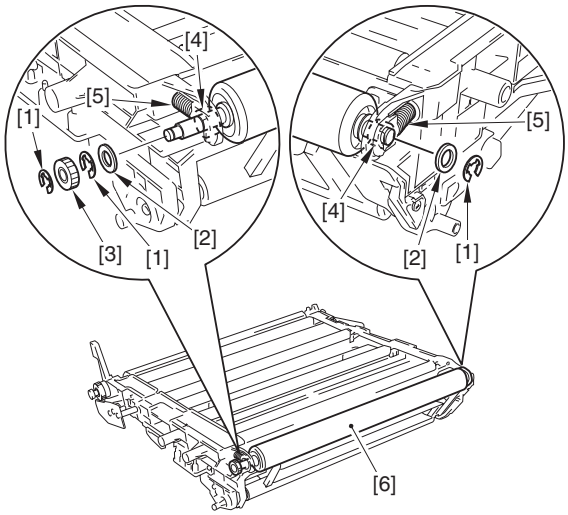

F-9-91

9.9.10 Primary Transfer Roller

9.9.10.1 Preparation for Removing the Primary Transfer Roller

CLC5151 / / / CLC4040 / / / iR C4580i / / / iR C4080i / / / / Color Image Reader-F1 / Color Image Reader-E1 / Dupiex Color Image Reader-G1 / iR C5185N / / iR C5185i PRT /

1) Slide out the manual feed unit.
2) Removing the intermediate transfer unit. (page 9-38) Reference[Removing the Intermediate Transfer Unit]
3) Remove the intermediate transfer belt. (page 9-39) Reference[Removing the Intermediate Transfer Belt]

9.9.10.2 Removing the Primary Transfer Roller

CLC5151 / / / CLC4040 / / / iR C4580i / / / iR C4080i / / / / Color Image Reader-F1 / Color Image Reader-E1 / Dupiex Color Image Reader-G1 / iR C5185N / / iR C5185i PRT /

1) Bend over the edge of the sheet [1] at the rear; while picking the edge [3] of the primary transfer roller[2], remove it upward.

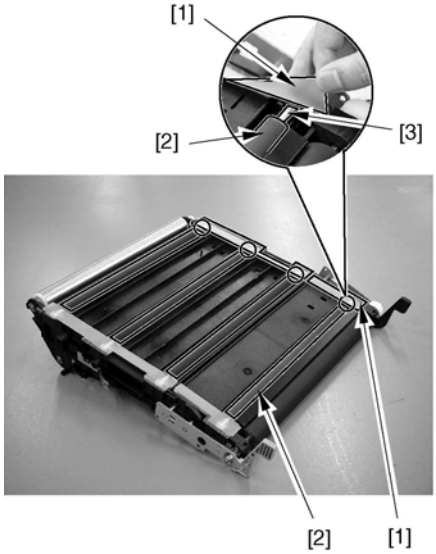

F-9-92

Points to Note When Attaching the Primary Transfer Roller

1) Bend over the edge of the sheet [1] at the front, and fit the edge [2] of the roller and then fit its rear side.

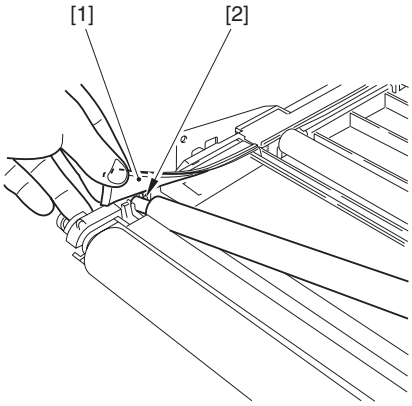

F-9-93

2) Check that the edge of the sheet [1] is on the inner side of the rib [2].

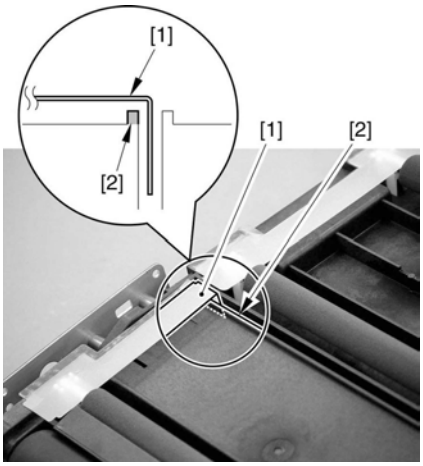

F-9-94

9.9.11 Secondary Transfer External Roller

9.9.11.1 Preparation for Removing the Secondary Transfer External Roller

CLC5151 / / / CLC4040 / / / iR C4580i / / / iR C4080i / / / / Color Image Reader-F1 / Color Image Reader-E1 / Dupiex Color Image Reader-G1 / iR C5185N / / iR C5185i PRT /

1) Remove the fixing unit.
1-1) Remove the fixing drive unit. (page 11-22) Reference[Removing the Fixing Drive Unit]
1-2) Remove the fixing unit.
2) Remove the fixing/feeder unit. (page 10-41) Reference[Removing the Fixing/Feeder Unit]

9.9.11.2 Removing the Secondary Transfer External Roller

CLC5151 / / / CLC4040 / / / iR C4580i / / / iR C4080i / / / / Color Image Reader-F1 / Color Image Reader-E1 / Dupiex Color Image Reader-G1 / iR C5185N / / iR C5185i PRT /

Take care not to touch the surface of the secondary transfer external roller.

1) Holding the tabs [A] at both ends, remove the secondary transfer roller [2].

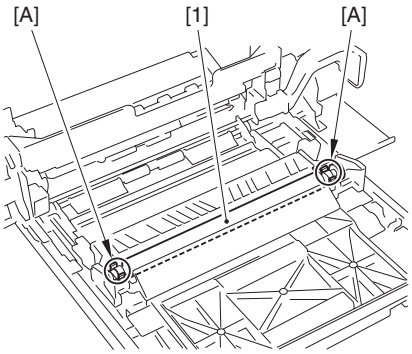

F-9-95

Points to Note When Attaching the Secondary Transfer Roller

1) If the white spacer [2] of the secondary transfer roller [1] becomes soiled with toner or the like, the roller can fail to rotate, causing lines. Be sure to check that the spacer moves.

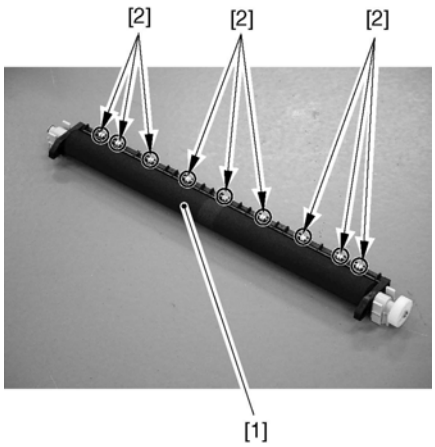

F-9-96

2) When attaching the roller [1], be sure that the edge of the leaf spring [2] found at the rear and used for electrical continuity is not bent over.

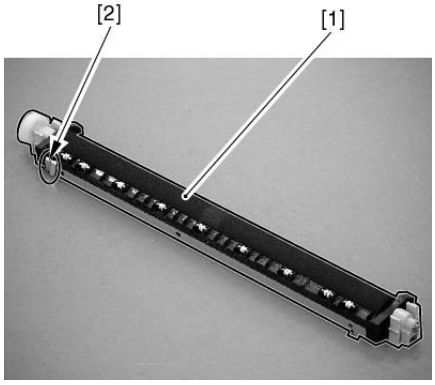

F-9-97

3) Be sure that the spring [1] is securely fitted to the back of the tab used to remove/attach the roller.
Pay attention to the orientation of the spring, as different types are used between front and rear.

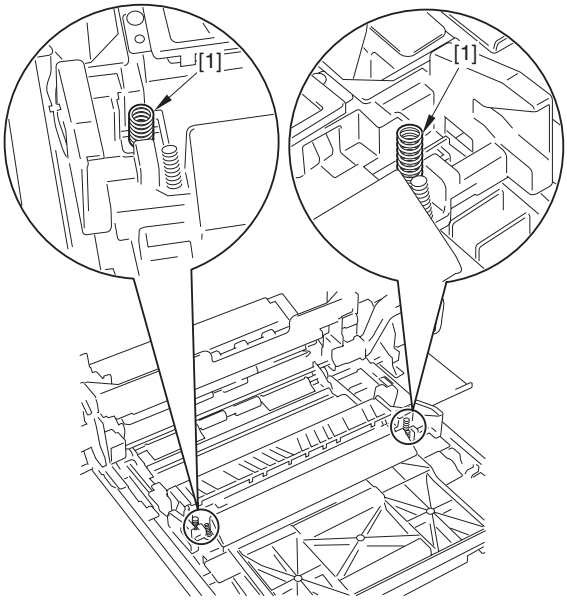

F-9-98

9.9.12 Secondary Transfer Internal Roller

9.9.12.1 Preparation for Removing the Secondary Transfer Internal Roller

CLC5151 / / / CLC4040 / / / iR C4580i / / / iR C4080i / / / / Color Image Reader-F1 / Color Image Reader-E1 / Dupiex Color Image Reader-G1 / iR C5185N / / iR C5185i PRT /

1) Slide out the manual feed unit.
2) Removing the intermediate transfer unit. (page 9-38) Reference[Removing the Intermediate Transfer Unit]
3) Remove the intermediate transfer belt. (page 9-39) Reference[Removing the Intermediate Transfer Belt]

9.9.12.2 Removing the Secondary Transfer Internal Roller

CLC5151 / / / CLC4040 / / / iR C4580i / / / iR C4080i / / / / Color Image Reader-F1 / Color Image Reader-E1 / Dupiex Color Image Reader-G1 / iR C5185N / / iR C5185i PRT /

1) Extend the belt frame, and fit the link plate at both front and rear.
2) Remove the positioning block [2] at the rear.
   - 2 screws [1]

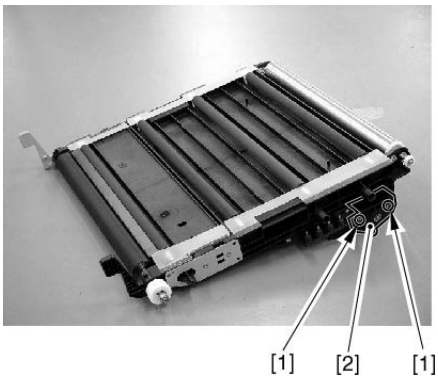

F-9-99

3) Remove the E-ring [1], gear [2], and bushing [3].

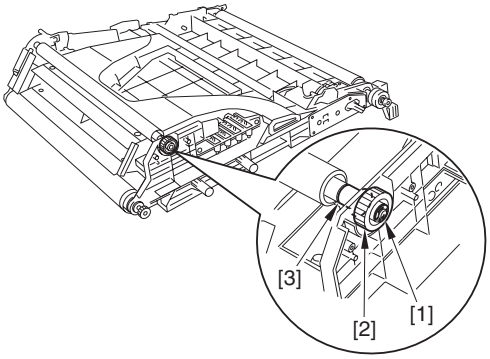

F-9-100

4) Remove the secondary transfer internal roller [3].
   - 1 E-ring [1]
   - 1 bushing [2] at the front

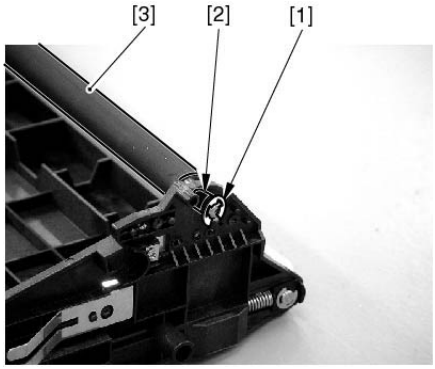

F-9-101

Points to Note When Attacing the Secondary Transfer Internal Roller
When Attaching the bushing at the front, be sure to fit the bushing [2] while avoiding the spring [1] found on the inner side of the frame.

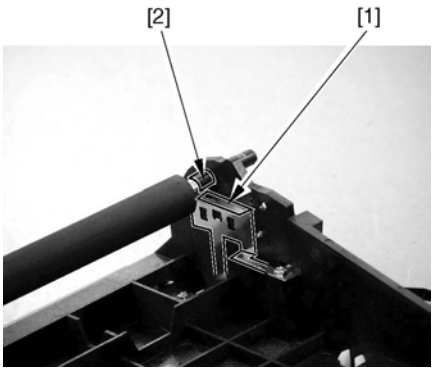

F-9-102

9.9.13 Toner Container Drive Unit

9.9.13.1 Preparation for Removing the Toner Container Drive Unit

CLC5151 / / / CLC4040 / / / iR C4580i / / / iR C4080i / / / / Color Image Reader-F1 / Color Image Reader-E1 / Dupiex Color Image Reader-G1 / iR C5185N / / iR C5185i PRT /

1) Remove the waste toner container.
1-1) Open the front cover, and turn the intermediate transfer unit releasing lever [1].

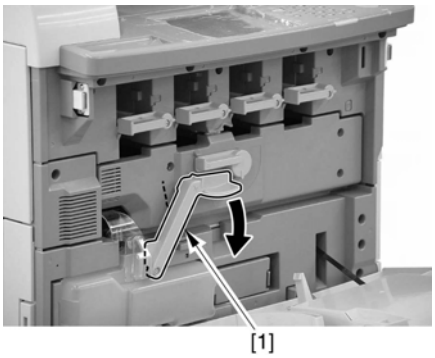

F-9-103

1-2) Remove the waste toner container [2].

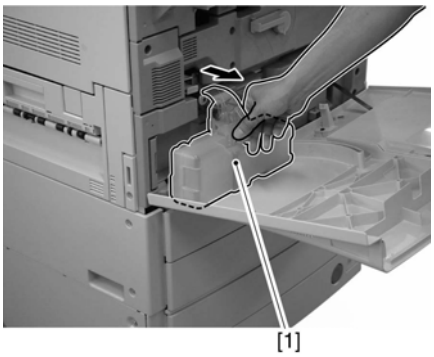

F-9-104

2) Remove the rear fan cover. (page 12-15) Reference[Removing the Rear Fan Cover]
3) Remove the rear upper cover. (page 12-16) Reference[Removing the Rear Upper Cover]
4) Remove the rear lower cover. (page 12-16) Reference[Removing the Rear Lower Cover]
5) Remove the rear left cover (upper). (page 12-17) Reference[Removing the Rear Left Cover (Upper)]
6) Remove the left rear cover (upper). (page 12-15) Reference[Removing the Left Rear Cover (Upper)]
7) Remove the main controller box. (page 5-14) Reference[Removing the Main Controller Box]
8) Remove the DC controller box 2. (page 12-24) Reference[Removing the DC Controller Box2]
9) Remove the DC controller box 1. (page 12-24) Reference[Removing the DC Controller Box1]
10) Remove the high-voltage unit 1. (page 12-20) Reference[Removing the High-Voltage Unit1]
11) Remove the mount [3].
- 19 connectors attached to the mount
- 7 clamps [1] (Remove the harness of the developing motor.)
- 4 screws [2]

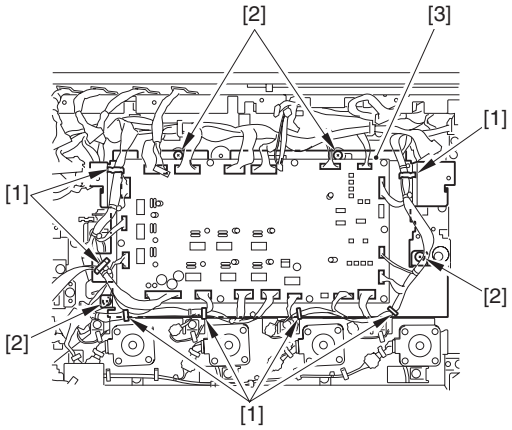

F-9-105

9.9.13.2 Removing the Toner Container Drive Unit

CLC5151 / / / CLC4040 / / / iR C4580i / / / iR C4080i / / / / Color Image Reader-F1 / Color Image Reader-E1 / Dupiex Color Image Reader-G1 / iR C5185N / / iR C5185i PRT /

1) Remove the toner container drive unit [3].
- 2 connectors [1]
- 3 screws [2]

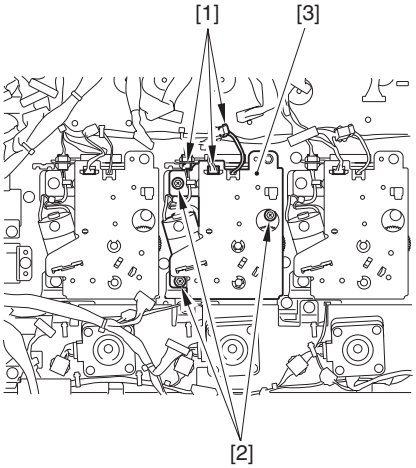

F-9-106

9.9.14 Waste Toner Detection PCB

9.9.14.1 Preparation for Removing the Waste Toner Detection PCB

CLC5151 / / / CLC4040 / / / iR C4580i / / / iR C4080i / / / / Color Image Reader-F1 / Color Image Reader-E1 / Dupiex Color Image Reader-G1 / iR C5185N / / iR C5185i PRT /

1) Remove the waste toner container.
1-1) Open the front cover, and turn the intermediate transfer unit releasing lever [1].

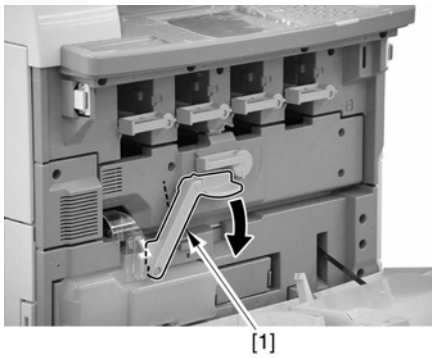

F-9-107

1-2) Remove the waste toner container [2].

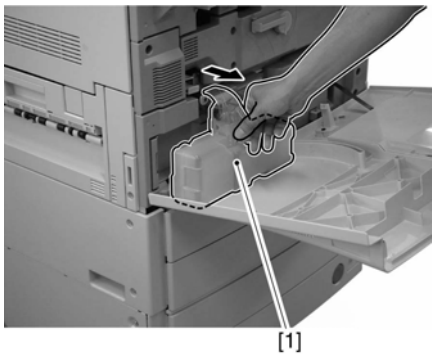

F-9-108

2) Remove the front cover. (page 12-14)Reference[Removing the Front Cover]
3) Remove the intermediate transfer unit releasing lever [2].
- 1 screw [1]

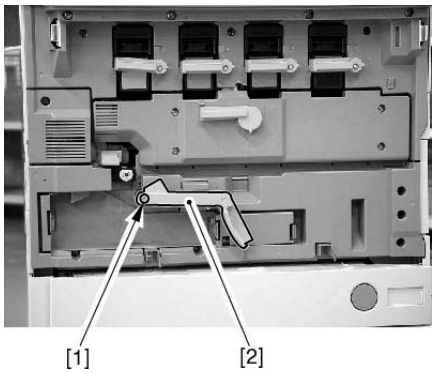

F-9-109

4) Removing the cleaner fan cover [2].
- 1 screw [1]

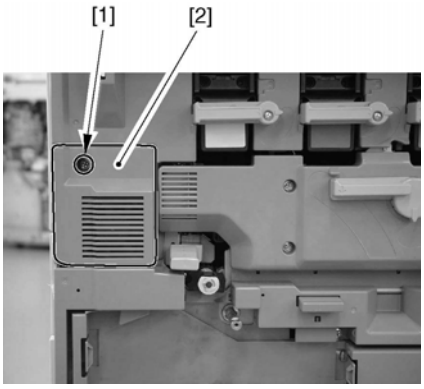

F-9-110

5) Remove the inside cover (lower) [3].
- 1 connector [1]
- 5 screws [2]

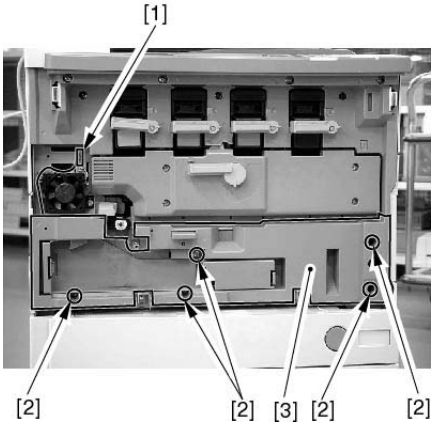

F-9-111

9.9.14.2 Removing the Waste Toner Detection PCB

CLC5151 / / / CLC4040 / / / iR C4580i / / / iR C4080i / / / / Color Image Reader-F1 / Color Image Reader-E1 / Dupiex Color Image Reader-G1 / iR C5185N / / iR C5185i PRT /

1) Remove the waste toner detection PCB cover [2].
- 2 screws [1] found behind the fixing/feeder unit

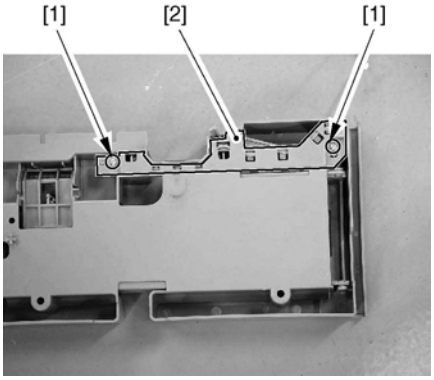

F-9-112

2) Remove the waste toner detection PCB [1] from the cover, and remove the connector [2] for replacement.

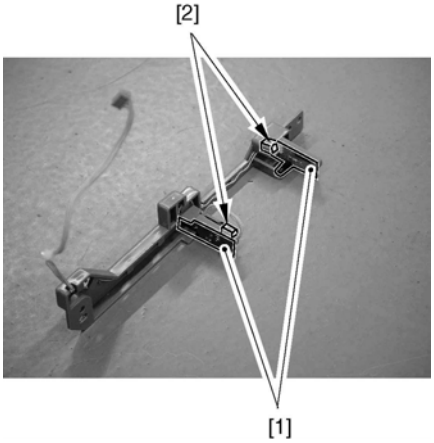

F-9-113

9.9.15 Feedscrew Rotation Sensor

9.9.15.1 Preparation for Removing the Feedscrew Rotation Sensor

CLC5151 / / / CLC4040 / / / iR C4580i / / / iR C4080i / / / / Color Image Reader-F1 / Color Image Reader-E1 / Dupiex Color Image Reader-G1 / iR C5185N / / iR C5185i PRT /

1) Remove the waste toner container.
1-1) Open the front cover, and turn the intermediate transfer unit releasing lever [1].

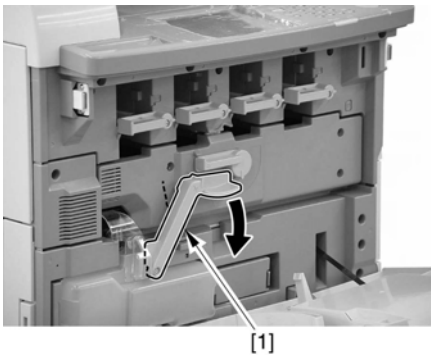

F-9-114

1-2) Remove the waste toner container [2].

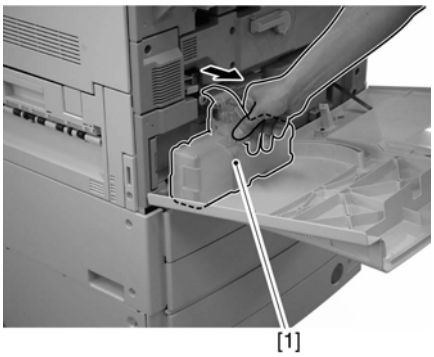

F-9-115

2) Remove the rear fan cover. (page 12-15) Reference[Removing the Rear Fan Cover]
3) Remove the rear upper cover. (page 12-16) Reference[Removing the Rear Upper Cover]
4) Remove the rear lower cover. (page 12-16) Reference[Removing the Rear Lower Cover]
5) Remove the rear left cover (upper). (page 12-17) Reference[Removing the Rear Left Cover (Upper)]
6) Remove the left rear cover (upper). (page 12-15) Reference[Removing the Left Rear Cover (Upper)]
7) Remove the main controller box. (page 5-14) Reference[Removing the Main Controller Box]
8) Remove the DC controller box 2. (page 12-24) Reference[Removing the DC Controller Box2]
9) Remove the DC controller box 1. (page 12-24) Reference[Removing the DC Controller Box1]
10) Remove the high-voltage unit 1. (page 12-20) Reference[Removing the High-Voltage Unit1]
11) Remove the mount [3].
- 19 connectors attached to the mount
- 7 clamps [1] (Remove the harness of the developing motor.)
- 4 screws [2]

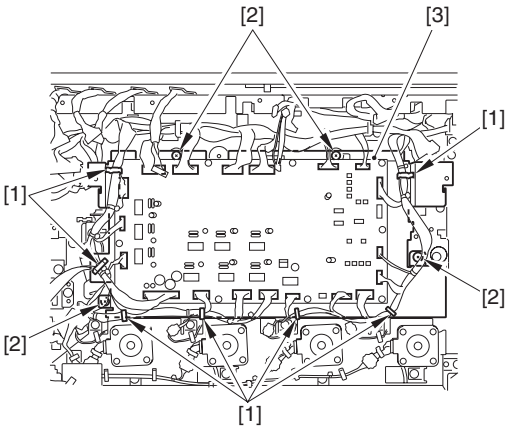

F-9-116

12) Remove the toner container drive unit. (page 9-44) Reference[Removing the Toner Container Drive Unit]
13) Remove the toner container drive assembly top plate [7].
- screw [1]
- 2 E-rings [2]
- 2 bushings [3]
- harness from the edge saddle [4]
- harness [5] of the toner container motor from the cord clamp [6]

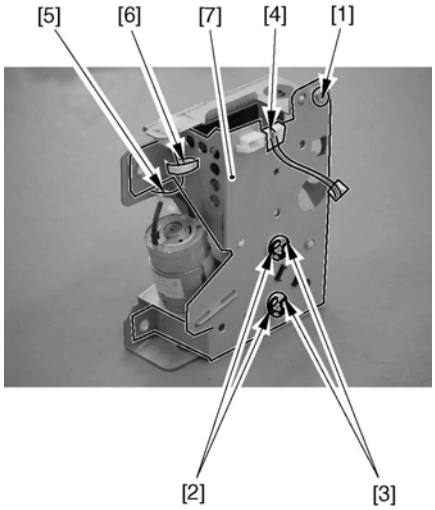

F-9-117

Points to Note When Attaching the Toner Container Drive Assembly Upper Plate

When attaching the top plate, check to attach the edge of the idler gear [1] after matching it against the hole [2] in the top plate and the hole [3] in the bottom plate.

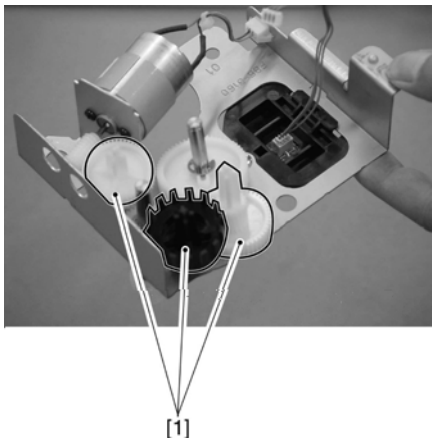

F-9-118

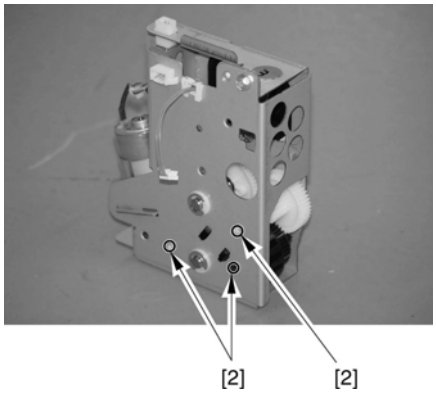

F-9-119

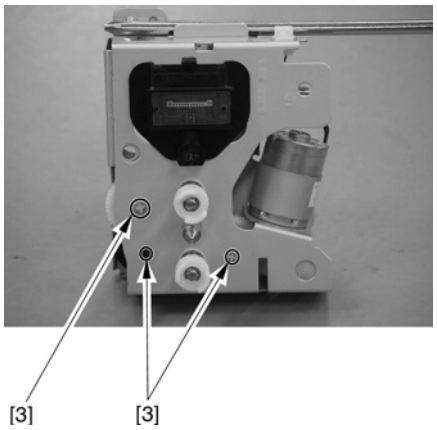

F-9-120

9.9.15.2 Removing the Feedscrew Rotation Sensor

CLC5151 / / / CLC4040 / / / iR C4580i / / / iR C4080i / / / / Color Image Reader-F1 / Color Image Reader-E1 / Dupiex Color Image Reader-G1 / iR C5185N / / iR C5185i PRT /

1) Remove the feedscrew rotation sensor [2].
   - 1 connector [1]

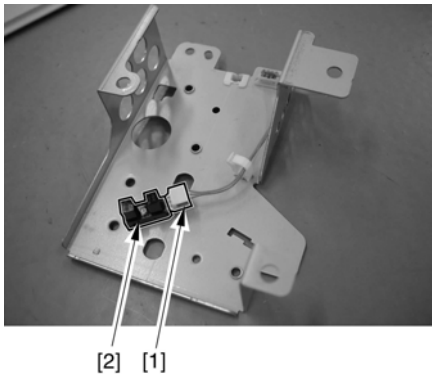

F-9-121

9.9.16 Tone Container Motor

9.9.16.1 Preparation for Removing the Toner Container Motor

CLC5151 / / / CLC4040 / / / iR C4580i / / / iR C4080i / / / / Color Image Reader-F1 / Color Image Reader-E1 / Dupiex Color Image Reader-G1 / iR C5185N / / iR C5185i PRT /

1) Remove the waste toner container.
1-1) Open the front cover, and turn the intermediate transfer unit releasing lever [1].

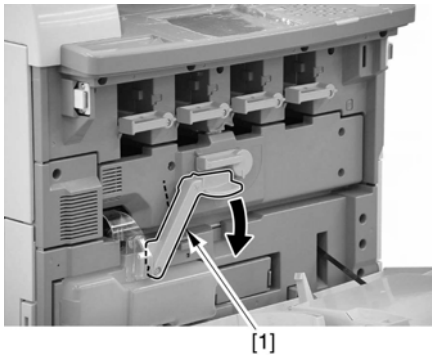

F-9-122

1-2) Remove the waste toner container [2].

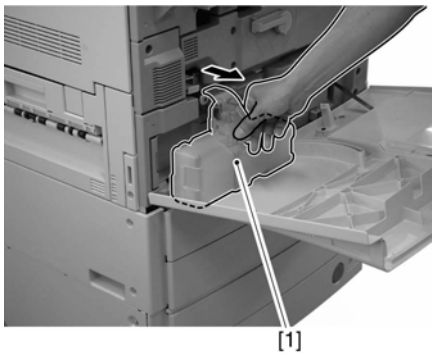

F-9-123

2) Remove the rear fan cover. (page 12-15) Reference[Removing the Rear Fan Cover]
3) Remove the rear upper cover. (page 12-16) Reference[Removing the Rear Upper Cover]
4) Remove the rear lower cover. (page 12-16) Reference[Removing the Rear Lower Cover]
5) Remove the rear left cover (upper). (page 12-17) Reference[Removing the Rear Left Cover (Upper)]
6) Remove the left rear cover (upper). (page 12-15) Reference[Removing the Left Rear Cover (Upper)]
7) Remove the main controller box. (page 5-14) Reference[Removing the Main Controller Box]
8) Remove the DC controller box 2. (page 12-24) Reference[Removing the DC Controller Box2]
9) Remove the DC controller box 1. (page 12-24) Reference[Removing the DC Controller Box1]
10) Remove the high-voltage unit 1. (page 12-20) Reference[Removing the High-Voltage Unit1]
11) Remove the mount [3].
   - 19 connectors attached to the mount
   - 7 clamps [1] (Remove the harness of the developing motor.)
   - 4 screws [2]

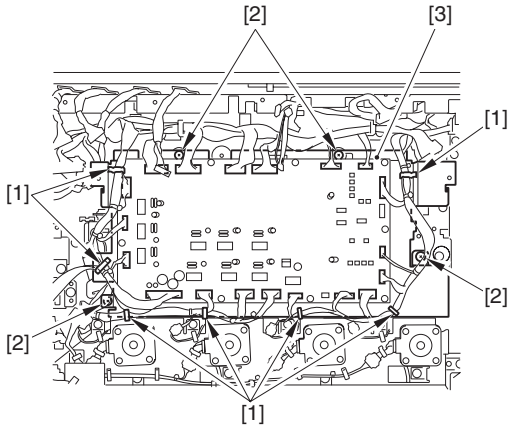

F-9-124

12) Remove the toner container drive unit. (page 9-44) Reference[Removing the Toner Container Drive Unit]
13) Remove the toner container drive assembly top plate [7].
   - screw [1]
   - 2 E-rings [2]
   - 2 bushings [3]
   - harness from the edge saddle [4]
   - harness [5] of the toner container motor from the cord clamp [6]

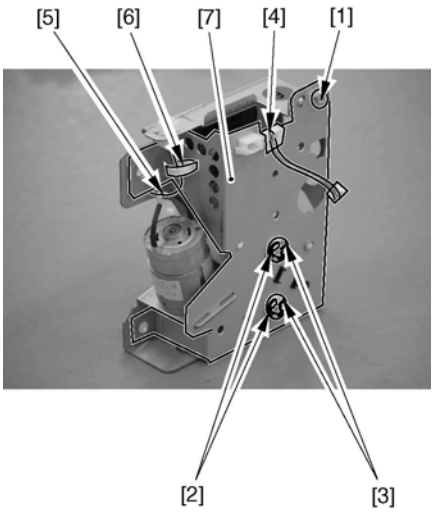

F-9-125

Points to Note When Attaching the Toner Container Drive Assembly Upper Plate
When attaching the top plate, check to attach the edge of the idler gear [1] after matching it against the hole [2] in the top plate and the hole [3] in the bottom plate.

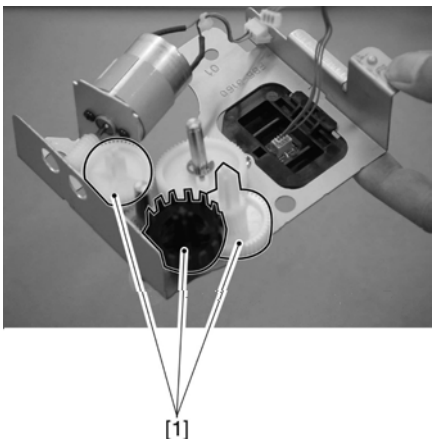

F-9-126

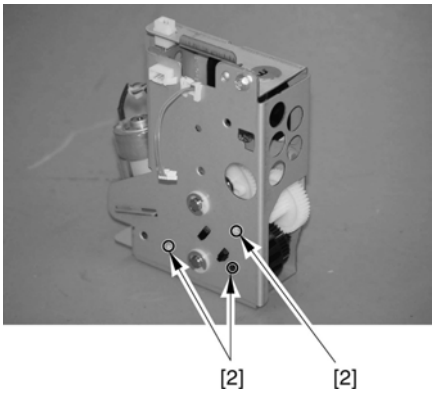

F-9-127

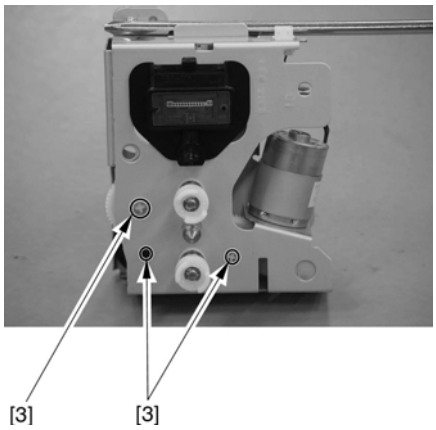

F-9-128

9.9.16.2 Removing the Toner Container Motor

CLC5151 / / / CLC4040 / / / iR C4580i / / / iR C4080i / / / / Color Image Reader-F1 / Color Image Reader-E1 / Dupiex Color Image Reader-G1 / iR C5185N / / iR C5185i PRT /

1) Remove the gear [2] that is engaged with the gear [1] found at the tip of the toner container motor.

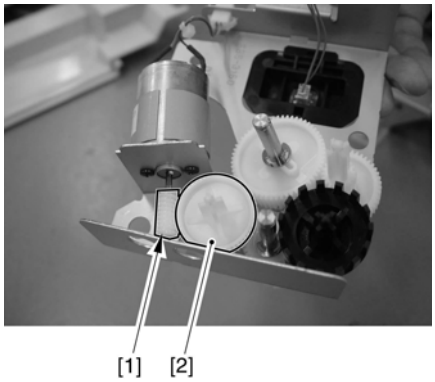

F-9-129

2) Remove the toner container motor [3].
- 2 screws [1]
- connector [2]

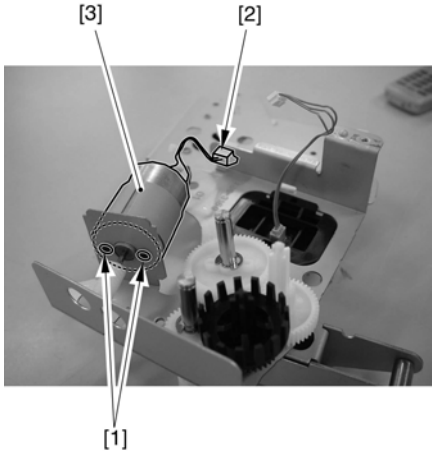

F-9-130

9.9.17 Waste Toner Feedscrew Case

9.9.17.1 Preparation for Removing the Waste Toner Feedscrew Case

CLC5151 / / / CLC4040 / / / iR C4580i / / / iR C4080i / / / / Color Image Reader-F1 / Color Image Reader-E1 / Dupiex Color Image Reader-G1 / iR C5185N / / iR C5185i PRT /

1) Remove the waste toner container.
1-1) Open the front cover, and turn the intermediate transfer unit releasing lever [1].

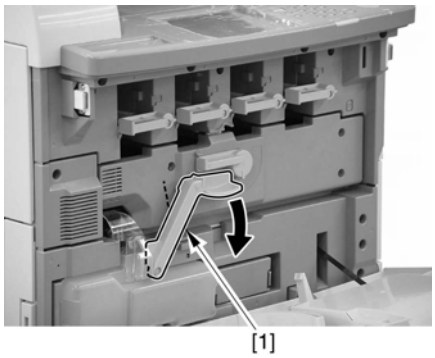

F-9-131

1-2) Remove the waste toner container [1].

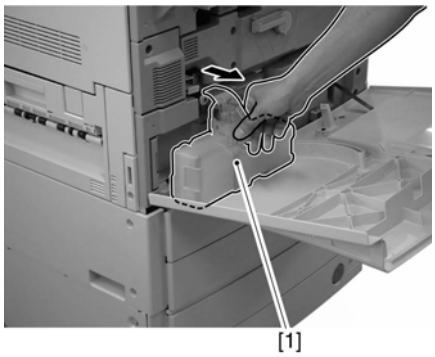

F-9-132

2) Remove the transfer cleaning unit [2].
- 1 screw [1]

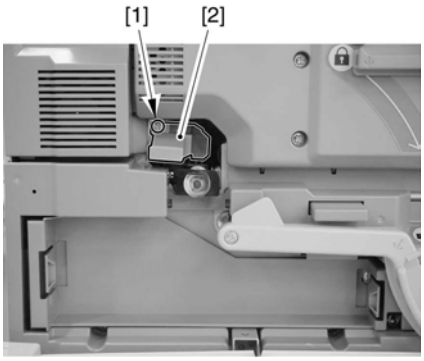

F-9-133

9.9.17.2 Removing the Waste Toner Feedscrew Case

CLC5151 / / / CLC4040 / / / iR C4580i / / / iR C4080i / / / / Color Image Reader-F1 / Color Image Reader-E1 / Dupiex Color Image Reader-G1 / iR C5185N / / iR C5185i PRT /

Points to Note When Removing the Waste Toner Feedscrew Case
Remove the waste toner feedscrew only when a jam has occurred and the sheet [1] attached to the feedscrew has become damaged or bent (rendered useless).

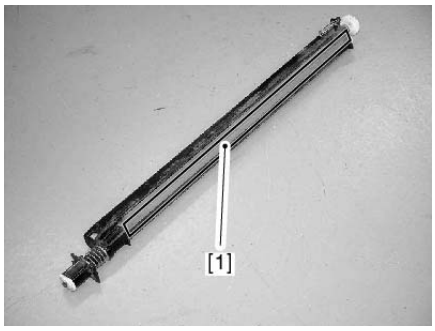

F-9-134

1) Turn the intermediate transfer unit releasing lever [1] slightly counterclockwise, and remove the screw [2]; then, remove the waste toner feedscrew case[3].

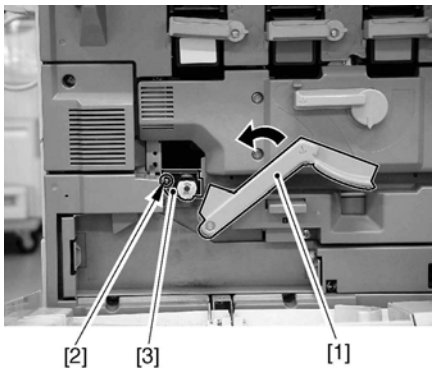

F-9-135

9.9.18 Pattern Reader Unit

9.9.18.1 Preparation for Removing the Pattern Reader Unit

CLC5151 / / / CLC4040 / / / iR C4580i / / / iR C4080i / / / / Color Image Reader-F1 / Color Image Reader-E1 / Dupiex Color Image Reader-G1 / iR C5185N / / iR C5185i PRT /

1) Slide out the manual feed unit.
2) Removing the intermediate transfer unit. (page 9-38) Reference[Removing the Intermediate Transfer Unit]
3) Remove the upper right cover. (page 12-14) Reference[Removing the Upper Right Cover]

9.9.18.2 Removing the Pattern Reader Unit

CLC5151 / / / CLC4040 / / / iR C4580i / / / iR C4080i / / / / Color Image Reader-F1 / Color Image Reader-E1 / Dupiex Color Image Reader-G1 / iR C5185N / / iR C5185i PRT /

1) Remove the pattern reader unit [5].
- 2 connectors [1]
- 1 screw [2]
- 1 plate [4] from the hook of the upper right stay [3]

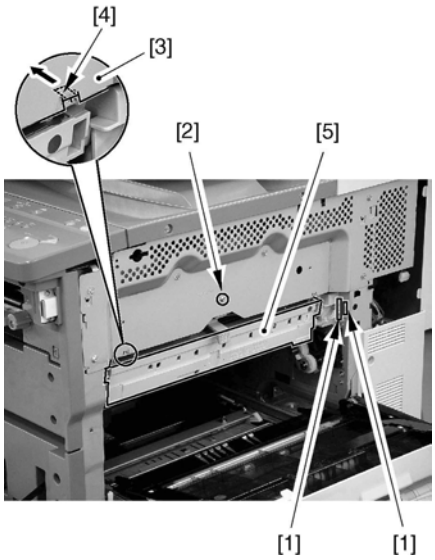

F-9-136

Point to Note When Attaching the Pattern Reader Unit
Attaching to the Machine
1) Match the boss [1] with the rail [2].

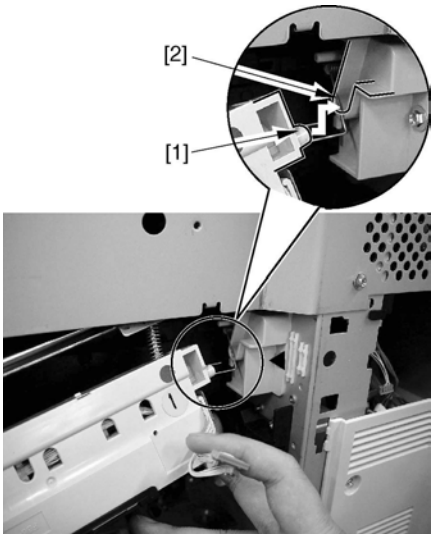

F-9-137

2) While pushing the cleaning member [1] to the right, fit it in while taking care so that it will not hit the slide rail [2] of the intermediate transfer unit on the side of the machine's side plate.

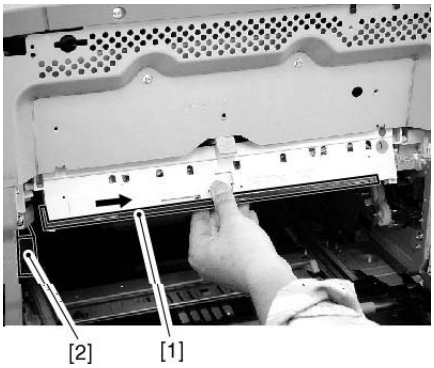

F-9-138

3) Connect the connector [1]; then, while pulling the escape lever [2] toward the front, hook the plate [3] on the left/right claw [4], and secure it in place with a screw [5] over the screw hole.

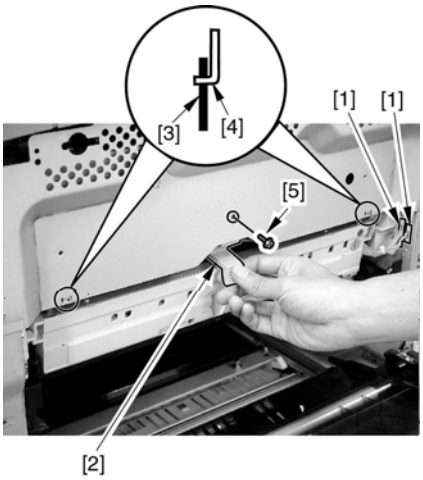

F-9-139

9.9.18.3 Procedure After Replacing the Pattern reader unit

CLC5151 / / / CLC4040 / / / iR C4580i / / / iR C4080i / / / / Color Image Reader-F1 / Color Image Reader-E1 / Dupiex Color Image Reader-G1 / iR C5185N / / iR C5185i PRT /

When replacing the pattern reader unit, input the value 'a' [2] (4 digits) described on the label [1] on the upper side of the new pattern reader unit.

Adjustment of P wave and S wave of the patch sensor
COPIER > ADJUST > DENS > P-ALPHA

9.9.19 Auto Registration Sensor PCB

9.9.19.1 Preparation for Removing the Auto Registration Sensor PCB

CLC5151 / / / CLC4040 / / / iR C4580i / / / iR C4080i / / / / Color Image Reader-F1 / Color Image Reader-E1 / Dupiex Color Image Reader-G1 / iR C5185N / / iR C5185i PRT /

1) Slide out the manual feed unit.
2) Removing the intermediate transfer unit. (page 9-38) Reference[Removing the Intermediate Transfer Unit]
3) Remove the upper right cover. (page 12-14) Reference[Removing the Upper Right Cover]
4) Remove the pattern reader unit. (page 9-49) Reference[Removing the Pattern Reader Unit]

9.9.19.2 Removing the Auto Registration Sensor PCB

CLC5151 / / / CLC4040 / / / iR C4580i / / / iR C4080i / / / / Color Image Reader-F1 / Color Image Reader-E1 / Dupiex Color Image Reader-G1 / iR C5185N / / iR C5185i PRT /

1) Remove the plate found to the rear of the pattern reader unit [2].
   - 3 screws [1]

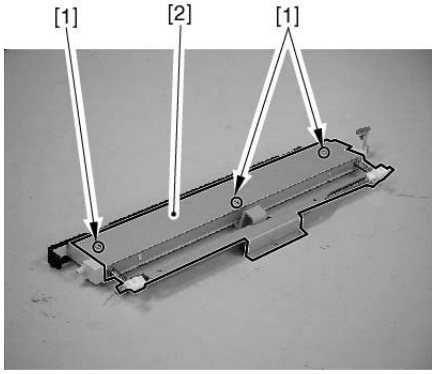

F-9-140

2) Remove the auto registration sensor PCB (front) [3].
   - 2 screws [1]
   - 2 connectors [2]

MEMO:
The auto registration sensor PCB (rear) is also removed in the same way.

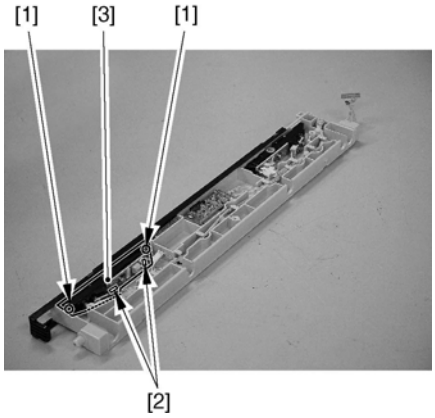

F-9-141

⚠ Points to Note When Attaching the Auto Registration Sensor PCB
When Attaching the plate [1], be sure that its edge is farther on the inner side than the cleaning member [2].

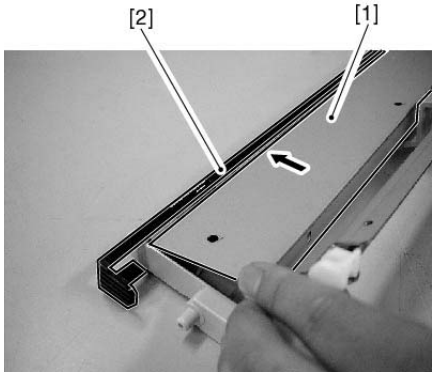

F-9-142

9.9.20 SALT Sensor

9.9.20.1 Preparation for Removing the SALT Sensor

CLC5151 / / / CLC4040 / / / iR C4580i / / / iR C4080i / / / / Color Image Reader-F1 / Color Image Reader-E1 / Dupiex Color Image Reader-G1 / iR C5185N / / iR C5185i PRT /

1) Slide out the manual feed unit.
2) Removing the intermediate transfer unit. (page 9-38)Reference[Removing the Intermediate Transfer Unit]
3) Remove the upper right cover. (page 12-14)Reference[Removing the Upper Right Cover]
4) Remove the pattern reader unit. (page 9-49)Reference[Removing the Pattern Reader Unit]

9.9.20.2 Removing the SALT Sensor

CLC5151 / / / CLC4040 / / / iR C4580i / / / iR C4080i / / / / Color Image Reader-F1 / Color Image Reader-E1 / Dupiex Color Image Reader-G1 / iR C5185N / / iR C5185i PRT /

1) Remove the plate from the rear of the pattern reader unit [2].
   - 3 screws [1]

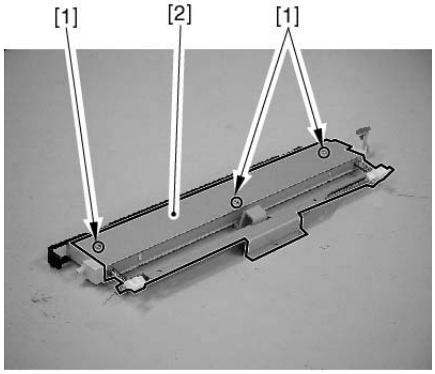

F-9-143

2) Remove the SALT sensor [3].
   - 2 screws [1]
   - 1 connector [2]

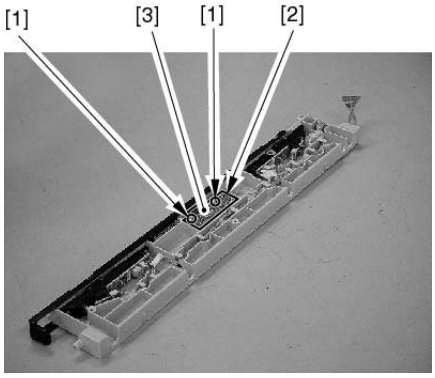

F-9-144

Points to Note When Attaching the Plate

When Attaching the plate [1], be sure to position it so that it is farther on the inner side than the cleaning member [2].

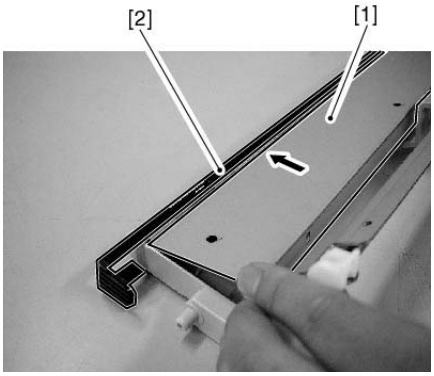

F-9-145

Chapter 10 Pickup/Feeding System

Contents

10.1 Construction 10-1
10.1.1 Specifications, Control Mechanisms, and Functions 10-1
10.1.2 Arrangement of he Units 10-1
10.1.3 Arrangement of Rollers 10-1
10.1.4 Diagram of the Paper Paths 10-2
10.1.5 Arrangement of Sensors 10-3
10.1.6 Arrangement of the Clutches and Solenoids 10-4
10.1.7 Route of Dive 10-4
10.2 Basic Sequence 10-5
10.2.1 Basic Sequence of Operations at Power-On 10-5
10.2.2 Basic Sequence of Operations in Response to a Press on the Start Key 10-5
10.3 Detecting Jams 10-6
10.3.1 Delay Jams 10-6
10.3.1.1 Delay Jam in the Cassette Pickup Assembly 10-6
10.3.1.2 Delay Jam Outside the Cassette Pickup Assembly 10-6
10.3.2 Stationary Jams 10-7
10.3.2.1 Stationary Jams 10-7
10.3.2.2 Stationary Jams at Power-On 10-7
10.4 Cassette 10-7
10.4.1 Identifying the Paper Size 10-7
10.4.2 Detecting the Level of Paper 10-8
10.5 Cassette Pick-Up Unit 10-10
10.5.1 Outline 10-10
10.5.2 Basci Sequence of Operations 10-11
10.6 Manual Feed Pickup Unit 10-11
10.6.1 Outline 10-11
10.6.2 Basic Sequence of Operations 10-12
10.6.3 Identifying the Size of Paper 10-12
10.6.4 Detecting the Presence/Absence of Paper 10-13
10.6.5 Detecting the Last paper 10-14
10.7 Registration Unit 10-15
10.7.1 Outline 10-15
10.8 Duplex Feeding Unit 10-16
10.8.1 Outline 10-16
10.8.2 Controling Horizontal Registration 10-17
10.8.3 Face-Down Delivery, A4, 5 Sheets in Circulation 10-18
10.8.4 Face-Down Delivery, A3, 3 Sheets in Cirucilation 10-20
10.9 Delivery 10-22
10.9.1 Delivery 10-22
10.9.2 Movement in the Direction of Face-Down Delivery 10-23
10.9.3 Movement in the Direction of Face-Up Delivery 10-23
10.9.4 Movement for CenterTray delivery 10-24
10.9.5 Moement for Copy Tray Dievyer 10-24
10.10 Parts Replacement Procedure 10-25
10.10.1 Cassette Pickup Unit 10-25
10.10.1.1 Preparatipon for Removing the Pickup Unit 10-25
10.10.1.2 Removing the Pickup Unit 10-25
10.10.2 Cassette Size Detection Unit 10-25
10.10.2.1 Preparation for Removing the Cassette Size Detection Unit 10-25
10.10.2.2 Removing the Cassette Size Detection Unit 10-25

10.10.3 Pre-registration Roller 10-26
10.10.3.1 Preparation for Removing the Pre-registration Roller 10-26
10.10.3.2 Removing the Pre-registration Roller 10-26
10.10.4 Registration Upper Roller 10-26
10.10.4.1 Preparation for Removing the Registration Lower Roller 10-26
10.10.4.2 Remove the Registration Lower Roller 10-26
10.10.5 Re-pickup Roller 10-27
10.10.5.1 Preparation for Removing the Re-pickup Roller 10-27
10.10.5.2 Removing the Re-pickup Roller 10-27
10.10.6 Pickup Roller 10-28
10.10.6.1 Preparation for Removing the Pickup Roller 10-28
10.10.6.2 Removing the Pickup Roller 10-28
10.10.7 Feed Roller 10-28
10.10.7.1 Preparation for Removing the Feeding Roller 10-28
10.10.7.2 Removing the Feeding Roller 10-28
10.10.8 Separation Roller 10-28
10.10.8.1 Preparation for Removing the Separation Roller 10-28
10.10.8.2 Removing the Separation Roller 10-28
10.10.9 Cassette Pickup Motor 10-28
10.10.9.1 Preparation for Removing the Cassette Pickup Motor 10-28
10.10.9.2 Removing the Cassette Pickup Motor 10-29
10.10.10 Cassette Retry Paper Sensor 10-29
10.10.10.1 Preparation for Removing the Cassette Retry Paper Sensor 10-29
10.10.10.2 Removing the Cassette Retry Paper Sensor 10-30
10.10.10.3 Points to Note When Mounting the Pickup System Sensor Mounting Plate 10-30
10.10.11 Cassette Paper Sensor 10-30
10.10.11.1 Preparation for Removing the Cassette Paper Sensor 10-30
10.10.11.2 Removing the Cassette Paper Sensor 10-31
10.10.11.3 Points to Note When Mounting the Pickup System Sensor Mounting Plate 10-31
10.10.12 Cassette Paper Level Sensor (A/B) 10-32
10.10.12.1 Preparation for Removing the Cassette Paper Level Sensor (A/B) 10-32
10.10.12.2 Removing the Cassette Paper Level Sensor (A/B) 10-32
10.10.12.3 Points to Note When Mounting the Pickup System Sensor Mounting Plate 10-32
10.10.13 Slide Resistor 10-33
10.10.13.1 Preparation for Removing the Slide Resistor 10-33
10.10.13.2 Removing the Slide Resistor 10-33
10.10.14 Cassette Pickup Solenoid 10-34
10.10.14.1 Preparation for Removing the Cassette Pickup Solenoid 10-34
10.10.14.2 Removing the Cassette Pickup Solenoid 10-34
10.10.15 Manual Feed Tray Unit 10-34
10.10.15.1 Preparation for Removing the Manual Feed Tray Unit 10-34
10.10.15.2 Removing the Manual Feed Tray Unit 10-34
10.10.16 Manual Feed Unit 10-35
10.10.16.1 Removing the Manual Feed Unit 10-35
10.10.17 Manual Feed Roller 10-35
10.10.17.1 Preparation for Removing the Manual Feed Roller 10-35
10.10.17.2 Removing the Manual Feed Roller 10-35
10.10.18 Manual Feed Separation Roller 10-36
10.10.18.1 Preparation for Removing the Manual Feed Separation Roller 10-36
10.10.18.2 Removing the Manual Feed Separation Roller 10-36
10.10.19 Manual Feed Last Paper Sensor 10-37
10.10.19.1 Preparation for Removing the Manual Feed Last Paper Sensor 10-37
10.10.19.2 Removing the Manual Feed Last Paper Sensor 10-37
10.10.20 Manual Feed Sensor 10-37
10.10.20.1 Preparation for Removing the Manual Feed sensor 10-37
10.10.20.2 Removing the Manual Feed sensor 10-37
10.10.21 Transparency Sensor (Front/Rear) 10-38
10.10.21.1 Preparation for Removing the Transparency Sensor (front/rear) 10-38
10.10.21.2 Removing the Transparency Sensor (front/rear) 10-38
10.10.22 Manual Feed Pickup Solenoid 10-39

10.10.22.1 Preparation for Removing the Manual Feed Pickup Solenoid 10-39
10.10.22.2 Removing the Manual Feed Pickup Solenoid 10-39
10.10.23 Registration Motor 10-39
10.10.23.1 Preparation for Removing the Registration Motor 10-39
10.10.23.2 Removing the Registration Motor 10-39
10.10.24 Pre-Registration Motor 10-39
10.10.24.1 Preparation for Removing the Pre-Registration Motor 10-39
10.10.24.2 Removing the Pre-Registration Motor 10-39
10.10.25 Horizontal Registration Motor 10-40
10.10.25.1 Preparatiuon for Removing the Horizontal Registration Motor 10-40
10.10.25.2 Removing the Horizontal Registration Motor 10-41
10.10.26 Registration Sensor 10-41
10.10.26.1 Preparation for Removing the Registration Sensor 10-41
10.10.26.2 Removing the Registration Sensor 10-41
10.10.27 Fixing/Feeder Unit 10-41
10.10.27.1 Preparation for Removing the Fixing/Feeder Unit 10-41
10.10.27.2 Removing the Fixing/Feeder Unit 10-41
10.10.28 Pickup Vertical Path Roller 10-41
10.10.28.1 Preparation for Removing the Vertical Path Roller 10-41
10.10.28.2 Removing the Vertical Path Roller 10-42
10.10.28.3 Points to Note When Mounting the Pickup System Sensor Mounting Plate 10-42
10.10.29 Inside Delivery Roller 10-43
10.10.29.1 Preparation for Removing the Inside Delivery Roller 10-43
10.10.29.2 Removing the Inside Delivery Roller 10-43
10.10.30 Fixing/Feeder Unit Open/Closed Sensor 10-43
10.10.30.1 Preparation for Removing the Fixing/Feeder Unit Open/Closed Sensor 10-43
10.10.30.2 Removing the Fixing/Feeder Unit Open/Closed Sensor 10-44
10.10.30.3 Preparation for Removing the Fixing Feeding Unit Open/Closed Sensor 2 10-44
10.10.30.4 Removing the Fixing Feeding Unit Open/Closed Sensor 2 10-45
10.10.31 Fixing Arching Sensor 10-45
10.10.31.1 Preparation for Removing the Fixing Arching Sensor 10-45
10.10.31.2 Removing the Fixing Aching Sensor 10-45
10.10.32 Pickup Vertical Path Cover Open/Closed Sensor 10-46
10.10.32.1 Preparation for Removing the Pickup Vertical Path Cover Open/Closed Sensor 10-46
10.10.32.2 Removing the Pickup Vertical Path Cover Open/Closed Sensor 10-46
10.10.33 Fixing/Feeder Unit Open/Closed Detecting Switch 10-46
10.10.33.1 Preparation for Removing the Fixing/Feeder Unit Open/Closed Detecting Switch 10-46
10.10.33.2 Removing the Fixing/Feeder Unit Open/Closed Detecting Switch 10-47
10.10.34 Drawer Connector (manual feed unit) 10-47
10.10.34.1 Preparation for Removing the Disconnecting the Drawer Connector (manual feed unit) 10-47
10.10.34.2 Removing the Disconnecting the Drawer Connector (manual feed unit) 10-47
10.10.35 Drawer Connector (fixing/feeder unit) 10-48
10.10.35.1 Preparation for Removing the Drawer Connector (fixing feeder unit) 10-48
10.10.35.2 Removing the Drawer Connector (fixing feeder unit) 10-48
10.10.36 Duplex Roller 1 10-48
10.10.36.1 Preparation for Removing the Duplex Roller 1 10-48
10.10.36.2 Removing the Duplex Roller 1 10-48
10.10.37 Duplex Roller 2 10-50
10.10.37.1 Preparation for Removing the Duplex Roller 2 10-50
10.10.37.2 Removing the Duplex Roller 2 10-50
10.10.38 Duplex Roller 3 10-51
10.10.38.1 Preparation for Removing the Duplex Roller 3 10-51
10.10.38.2 Removing the Duplex Roller 3 10-52
10.10.39 Duplex Roller 4 10-52
10.10.39.1 Preparation for Removing the Duplex Roller 4 10-52
10.10.39.2 Removing of Duplexing Roller 4 10-53
10.10.40 Duplex Feed Motor 10-53
10.10.40.1 Preparation for Removing the Duplex Feed Motor 10-53
10.10.40.2 Removing the Duplex Feed Motor 10-53
10.10.41 Duplex Registration Sensor 10-54

10.10.41.1 Preparation for Removing the Duplex Registration Sensor 10-54
10.10.41.2 Removing the Duplex Registration Sensor 10-54
10.10.42 Duplex Horizontal Registration Sensor 10-54
10.10.42.1 Preparation for Removing the Duplex Horizontal Registration Sensor 10-54
10.10.42.2 Removing the Duplex Horizontal Registration Sensor 10-55
10.10.43 Duplex Pickup Sensor 10-55
10.10.43.1 Preparation for Removing the Duplex Pickup Sensor 10-55
10.10.43.2 Removing the Duplex Pickup Sensor 10-57
10.10.44 Duplex Registration Clutch 10-58
10.10.44.1 Preparation for Removing the Duplex Registration Clutch 10-58
10.10.44.2 Removing the Duplex Registration Clutch 10-58
10.10.45 Duplex Pickup Clutch 10-59
10.10.45.1 Preparation for Removing the Duplex Pickup Clutch 10-59
10.10.45.2 Removing the Duplex Pickup Clutch 10-59
10.10.46 Delivery Vertical Path Unit 10-60
10.10.46.1 Preparation for Removing the Delivery Vertical Path Unit 10-60
10.10.46.2 Removing the Delivery Vertical Path Unit 10-60
10.10.46.3 Removing the Delivery Vertical Path Cover 10-61
10.10.46.4 Points to note when mouting the delivery vertical path unit 10-61
10.10.47 Face-Down Delivery Roller 1 10-62
10.10.47.1 Preparation for Removing the Face-Down Delivery Roller 1 10-62
10.10.47.2 Removing the Face-Down Delivery Roller 1 10-63
10.10.48 Face-Up Delivery Roller 10-63
10.10.48.1 Preparation for Removing the Face-Up Delivery Roller 10-63
10.10.48.2 Removing the Face-Up Delivery Roller 10-64
10.10.49 Delivery Vertical Path Roller 1 10-65
10.10.49.1 Preparation for Removing the Delivery Vertical Path Roller 1 10-65
10.10.49.2 Removing the Delivery Vertical Path Roller 1 10-66
10.10.50 Delivery Vertical Path Roller 2 10-66
10.10.50.1 Preparation for Removing the Delivery Vertical Path Roller 2 10-66
10.10.50.2 Removing the Delivery Vertical Path Roller 2 10-67
10.10.51 Face-Down Delivery Motor 10-67
10.10.51.1 Preparation for Removing the Face-Down Delivery Motor 10-67
10.10.51.2 Removing the Face-Down Delivery Motor 10-67
10.10.52 Delivery Vertical Path Motor 10-67
10.10.52.1 Preparation for Removing the Delivery Vertical Path Motor 10-67
10.10.52.2 Removing the Delivery Vertical Path Motor 10-67
10.10.53 Face-Down Delivery Sensor 1 10-68
10.10.53.1 Preparation for Removing the Face-Down Delivery Sensor 1 10-68
10.10.53.2 Removing the Face-Down Delivery Sensor 1 10-68
10.10.54 Center Delivery Tray Full sensor 10-69
10.10.54.1 Preparaion for Removing the Center Delivery Tray Full sensor 10-69
10.10.54.2 Removing the Center Delivery Tray Full sensor 10-69
10.10.55 Face-Down Delivery Sensor 2 10-69
10.10.55.1 Removing the Face-Down Delivery Sensor 2 10-69
10.10.55.2 Removing the Face-Down Delivery Sensor 2 10-69
10.10.56 Delivery Vertical Path Cover Open/Closed Sensor 10-70
10.10.56.1 Preparation for Removing the Delivery Vertical Path Cover Open/Closed Sensor 10-70
10.10.56.2 Removing the Delivery Vertical Path Cover Open/Closed Sensor 10-70
10.10.57 Delivery Path Switching Solenoid 1 10-70
10.10.57.1 Preparation for Removing the Delivery Path Switching Solenoid 1 10-70
10.10.57.2 Removing the Delivery Path Switching Solenoid 1 10-71
10.10.58 Delivery Path Switching Solenoid 2 10-71
10.10.58.1 Preparation for Removing the Delivery Path Switching Solenoid 2 10-71
10.10.58.2 Removing the Delivery Path Switching Solenoid 2 10-71
10.10.59 Face-Down Delivery Roller 1 Drive Belt 10-71
10.10.59.1 Preparation for Removing the Face-Down Delivery Roller 1 Drive Belt 10-71
10.10.59.2 Removing the Face-Down Delivery Roller 1 Drive Belt 10-71

10.1 Construction

10.1.1 Specifications, Control Mechanisms, and Functions

CLC5151 / / / CLC4040 / / / iR C4580i / / / iR C4080i / / / / iR C5185N / / iR C5185i PRT /

The major specifications, control mechanisms, and functions of the pickup feeder system are as follows:

T-10-1

Item	Description	
Method of paper accommodation	Front loading	
Method of pickup	Separation retard	
Paper feed reference	Center	
Size of paper accommodation	Cassette 1/2	550 sheets (80 g/m2)
	Manual feed tray	100 sheets (80 g/m2)
Size of paper	Cassette 1/2	A3, A4, A4R, B4, B5, B5R, A5R, 12x18, 11x17, LGL, LTR, LTRR, STMTR
	Manual feed tray	98 to 320 mm (main scanning direction) 148 to 457.2 mm (sub scanning direction)
Type of paper	Plain , Heavy, transparency	64 g/m2 to 209 g/m2 (from cassette) 64 g/m2 to 253 g/m2 (from manual feeder)
Paper size switching	Cassette 1/2	by user
	Manual feed tray	by user
Duplex print	Through path	

10.1.2 Arrangement of he Units

CLC5151 / / / CLC4040 / / / iR C4580i / / / iR C4080i / / / / iR C5185N / / iR C5185i PRT /

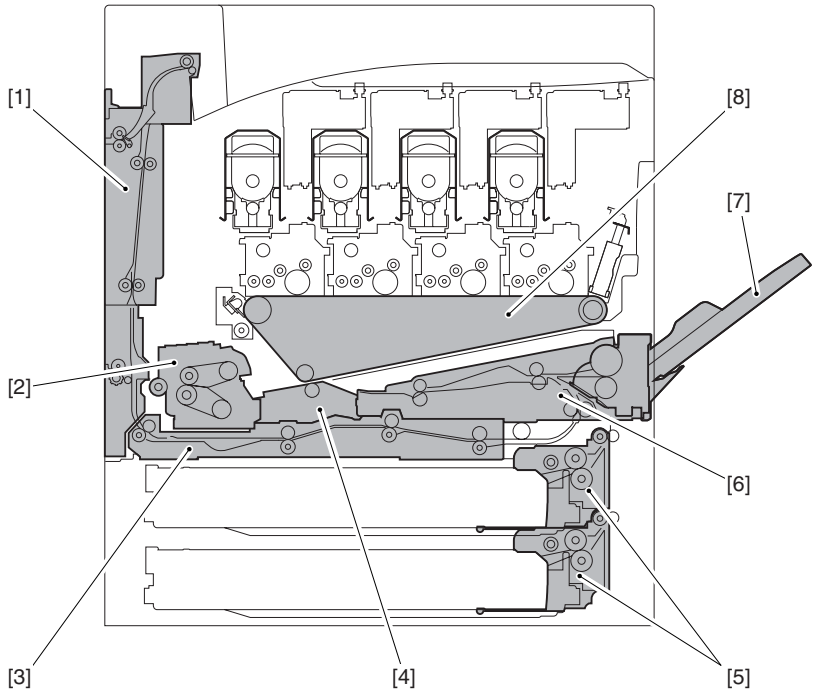

F-10-1

T-10-2

[1] Delivery assembly
[2] Fixing unit
[3] Duplex unit
[4] Secondary transfer unit
[5] Pickup unit
[6] Registration unit
[7] Manual feed unit
[8] Intermediate transfer unit

10.1.3 Arrangement of Rollers

CLC5151 / / / CLC4040 / / / iR C4580i / / / iR C4080i / / / / iR C5185N / / iR C5185i PRT /

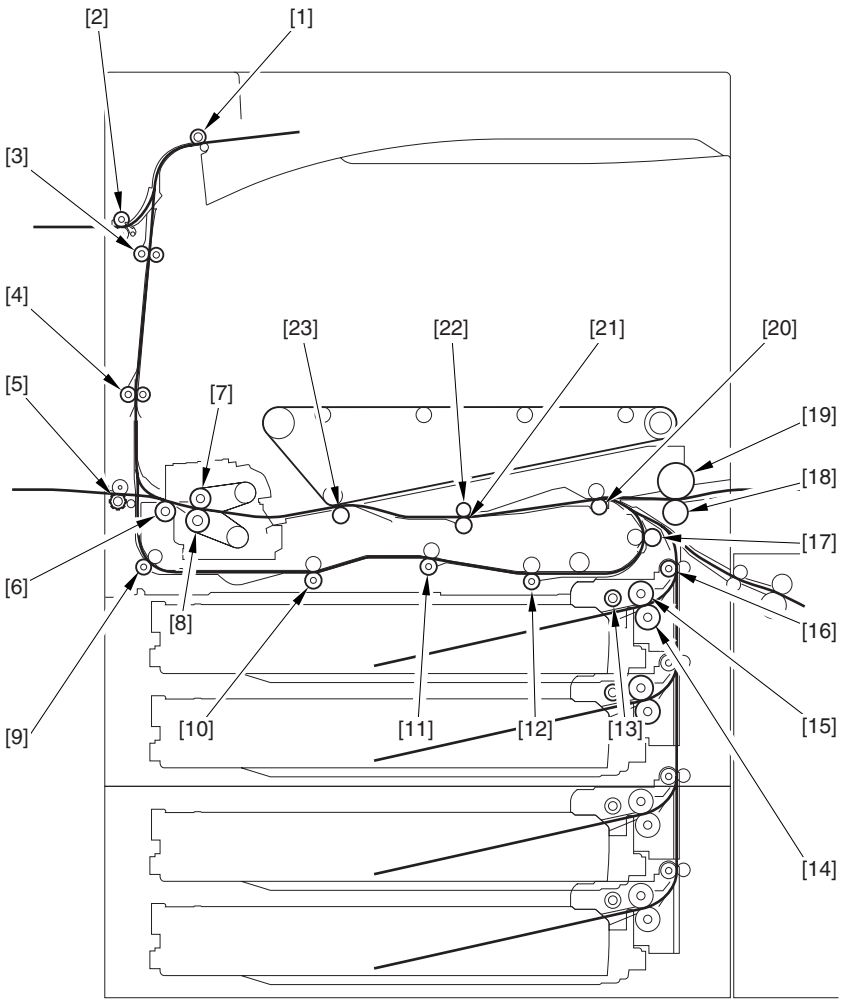

F-10-2

T-10-3

[1] Face-down delivery roller 1
[2] Face-down delivery roller 2
[3] Delivery vertical path roller 1
[4] Delivery vertical path roller 2
[5] Face-up delivery roller
[6] Internal delivery roller
[7] Fixing roller (fixing upper roller)
[8] Pressure roller (fixing lower roller)
[9] Duplex roller 1
[10] Duplex roller 2
[11] Duplex roller 3
[12] Duplex roller 4
[13] Pickup roller
[14] Separation roller
[15] Feed roller
[16] Pickup vertical path roller
[17] Re-pickup roller
[18] Manual feed separation roller
[19] Manual feed roller
[20] Pre-registration roller
[21] Lower registration roller
[22] Upper registration roller
[23] secondary transfer outside roller

10.1.4 Diagram of the Paper Paths

CLC5151 / / / CLC4040 / / / iR C4580i / / / iR C4080i / / / / iR C5185N / / iR C5185i PRT /

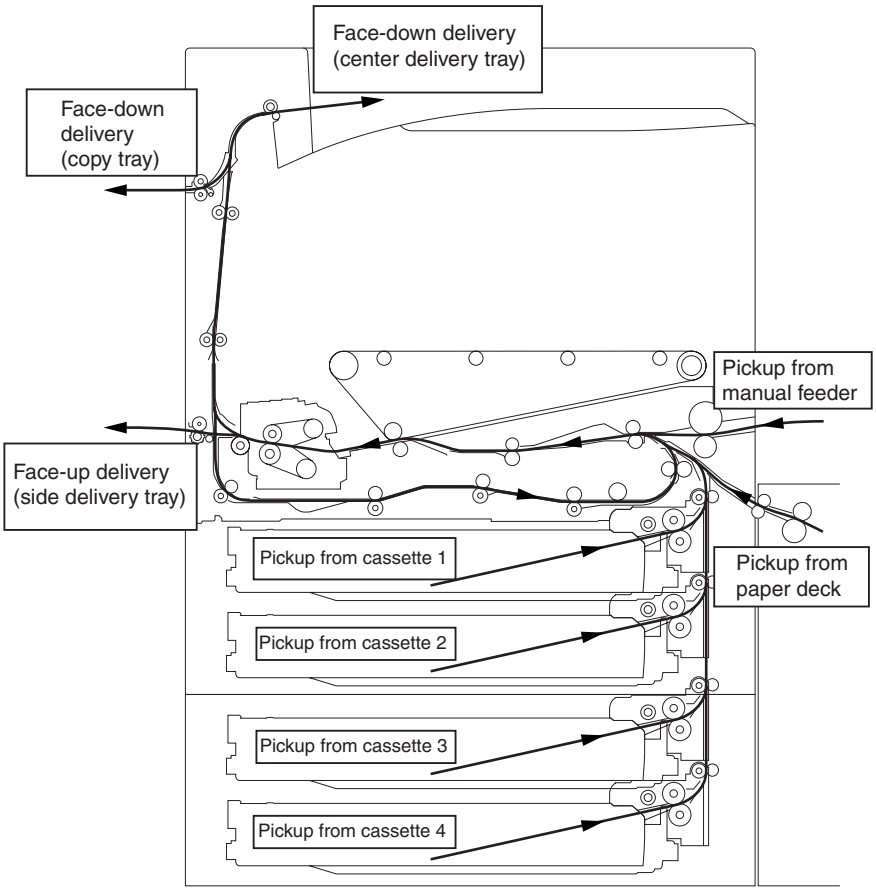

F-10-3

10.1.5 Arrangement of Sensors

CLC5151 / / / CLC4040 / / / iR C4580i / / / iR C4080i / / / / iR C5185N / / iR C5185i PRT /

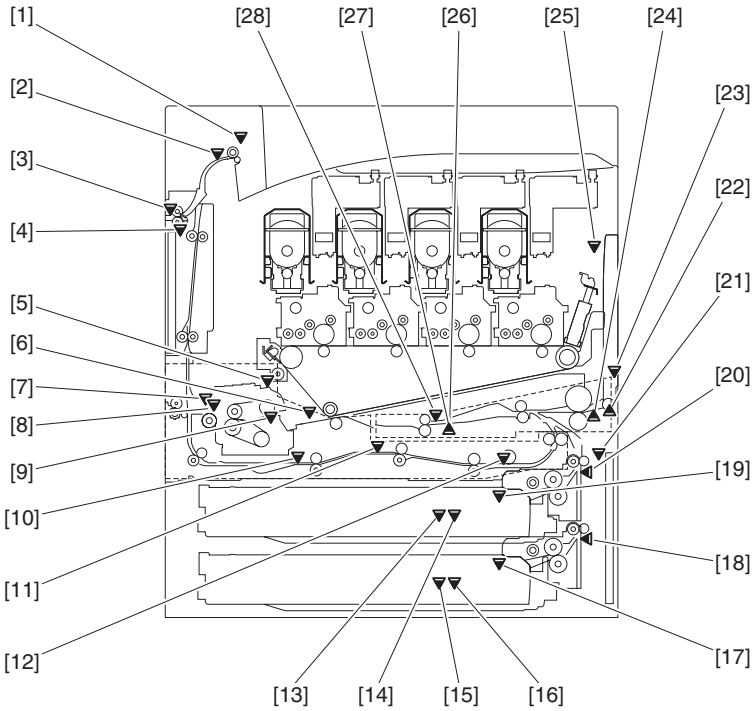

F-10-4

T-10-4

[1] Center delivery tray full sensor (PS8)
[2] Face-down delivery sensor 1 (PS12)
[3] Face-down delivery sensor 2 (PS6)
[4] Delivery vertical path cover open/closed sensor (PS13)
[15] Cassette 2 paper level sensor (B; PS18)
[16] Cassette 2 paper level sensor (A; PS20)
[17] Cassette 2 paper sensor (PS19)
[18] Cassette 2 retry paper sensor (PS17)

[5] Fixing feeder unit open/closed sensor (PS5)
[6] Fixing arch sensorÅiPS47Åj
[7] Fixing delivery sensor (PS25)
[8]fixing wrap sensor ÅiPS29Åj
[9] Fixing inlet sensor (PS27)
[10] Duplex registration sensor (PS21)
[11] Duplex horizontal registration sensor (PS22)
[12] Duplex pick sensor (PS24)
[13] Cassette 1 paper level sensor (B; PS15)
[14] Cassette 1 paper level sensor (A; PS14)
[19] Caste 1 paper sensor (PS7)
[20] Cassette 1 retry paper sensor (PS16)
[21] Pickup vertical path cover open/closed sensor (PS11)
[22] Manual feed last paper sensor (PS9)
[23] Manual fed unit open/closed sensor (PS28)
[24] Manual feed paper sensor (PS10)
[25] Front cover open/closed sensor (PS23)
[26] Transparency sensor (front; OHP1)
[27] Transparency sensor (rear; OHP2)
[28] Registration sensor (PS26)

10.1.6 Arrangement of the Clutches and Solenoids

CLC5151 / / / CLC4040 / / / iR C4580i / / / iR C4080i / / / / iR C5185N / / iR C5185i PRT /

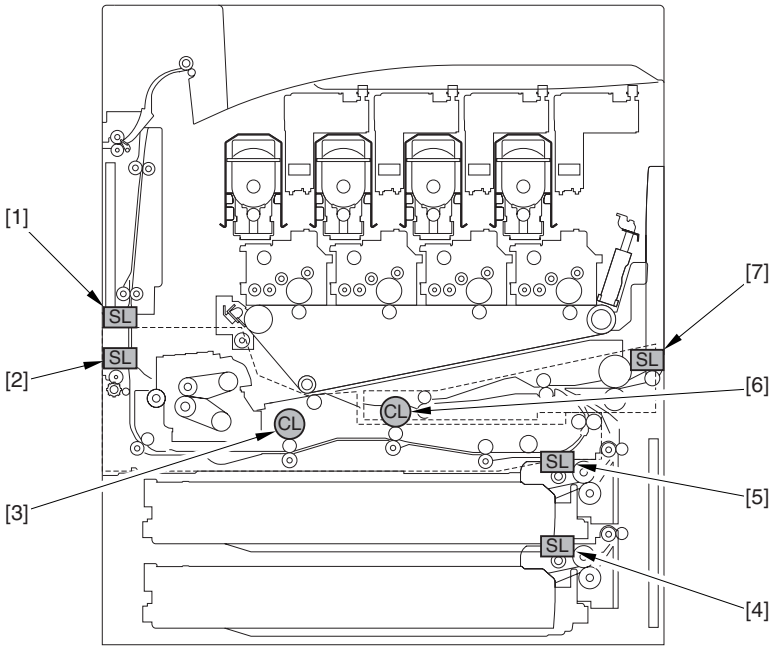

F-10-5
T-10-5

[1] Delivery path switching solenoid 1 (SL2)
[2] Delivery path switching solenoid 2 (SL5)
[3] Duplex registration clutch (CL1)
[4] Cassette 2 pickup solenoid (SL4)
[5] Cassette 1 pickup solenoid (SL3)
[6] Duplex pickup solenoid (CL2)
[7] manual feed pickup solenoid (SL1)

10.1.7 Route of Dive

CLC5151 / / / CLC4040 / / / iR C4580i / / / iR C4080i / / / / iR C5185N / / iR C5185i PRT /

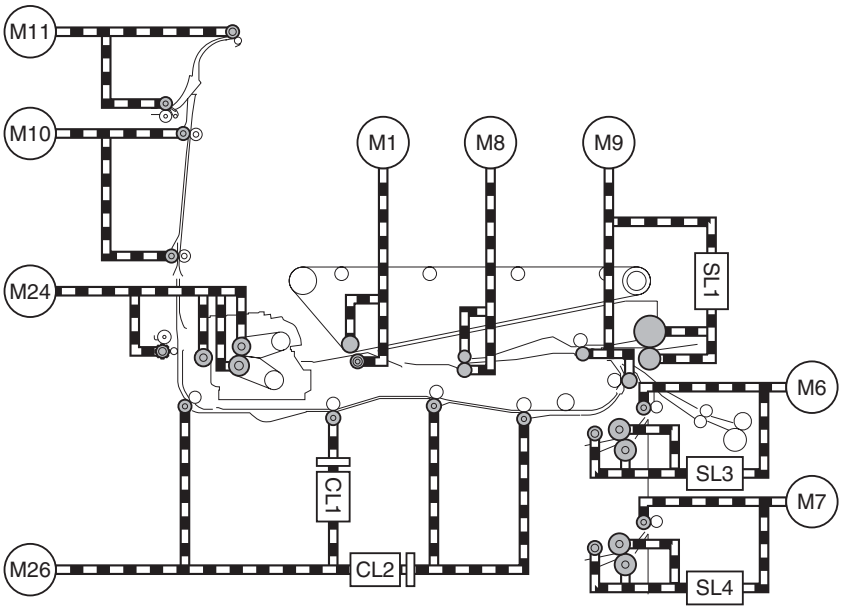

F-10-6

T-10-6

CL1	duplex registration clutch	M10	delivery vertical path motor
CL2	duplex pickup clutch	M11	face-down delivery motor
M1	drum ITB motor	M24	fixing motor
M6	cassette 1 pickup motor	M26	duplex feeder motor
M7	caste 2 pickup motor	SL1	manual feed pickup solenoid
M8	registration motor	SL3	caste 1 pickup solenoid
M9	pre-registration motor	SL4	cassette 2 pickup solenoid

10.2 Basic Sequence

10.2.1 Basic Sequence of Operations at Power-On

CLC5151 / / / CLC4040 / / / iR C4580i / / / iR C4080i / / / / iR C5185N / / iR C5185i PRT /

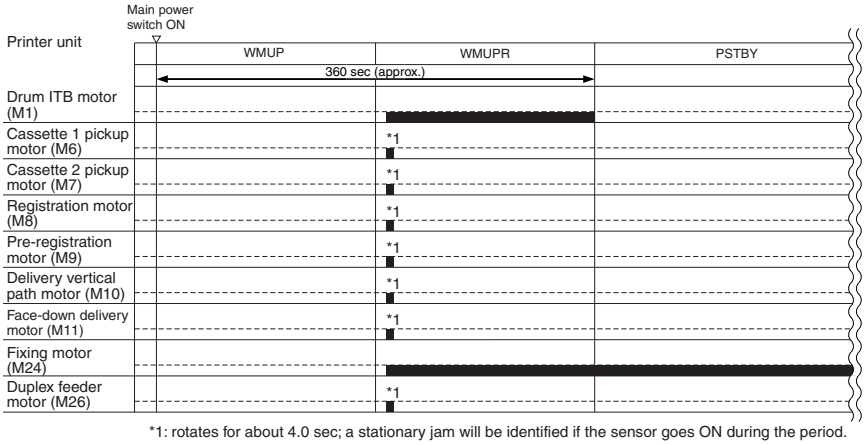

F-10-7

10.2.2 Basic Sequence of Operations in Response to a Press on the Start Key

CLC5151 / / / CLC4040 / / / iR C4580i / / / iR C4080i / / / / iR C5185N / / iR C5185i PRT /

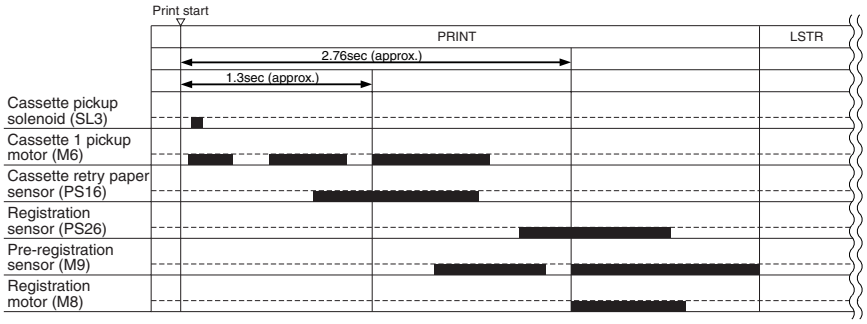

F-10-8

10.3 Detecting Jams

10.3.1 Delay Jams

10.3.1.1 Delay Jam in the Cassette Pickup Assembly

CLC5151 / / / CLC4040 / / / iR C4580i / / / iR C4080i / / / / Color Image Reader-F1 / Color Image Reader-E1 / Dupiex Color Image Reader-G1 / iR C5185N / / iR C5185i PRT /

The leading edge of paper is not at the sensor within a specific period of time (for feeding) after the motor has gone ON.

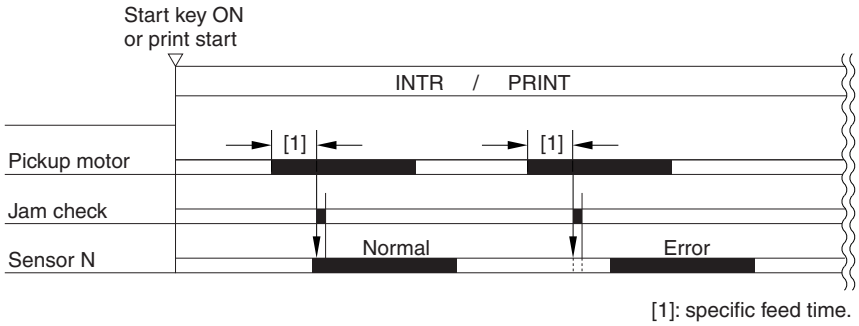

F-10-9

T-10-7

Source	Motor	Sensor
Cassette 1	Pickup motor (M6)	Cassette 1 retry paper sensor (PS16)
Cassette 2	Pickup motor (M7)	Cassette 2 retry paper sensor (PS17)

10.3.1.2 Delay Jam Outside the Cassette Pickup Assembly

CLC5151 / / / CLC4040 / / / iR C4580i / / / iR C4080i / / / / iR C5185N / / iR C5185i PRT /

A delay jam occurring outside the cassette pickup assembly is identified at the following timing:
The period of time during which paper is moved form the sensor N-1 to the delay jam sensor N in question is controlled, and a delay jam will be identified if the delay jam sensor N in question does not go ON within a specific period of time after the sensor N-1 has gone ON.

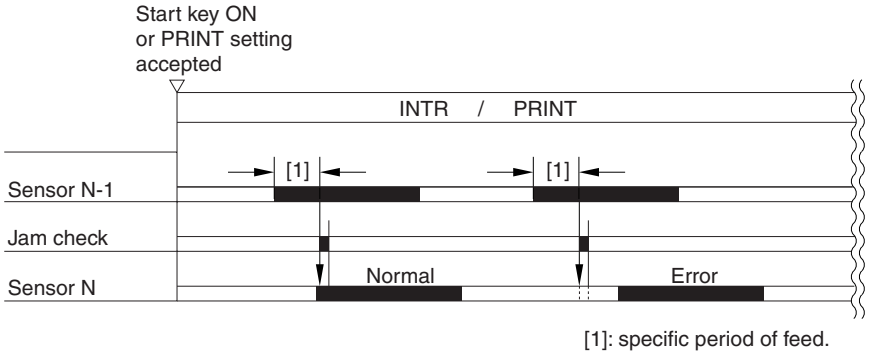

F-10-10

T-10-8

Sensor
Registration sensor (PS26)
Fixing delivery sensor (PS25)
Face-down delivery sensor 1 (PS12)
Face-down delivery sensor 2 (PS6)
Duplex registration sensor (PS21)
Duplex pickup sensor (PS24)

10.3.2 Stationary Jams

10.3.2.1 Stationary Jams

CLC5151 / / / CLC4040 / / / iR C4580i / / / iR C4080i / / / / iR C5185N / / iR C5185i PRT /

A stationary jam will be identified if the sensor N does not go OFF within a specific period of tie after the sensor N has gone ON.

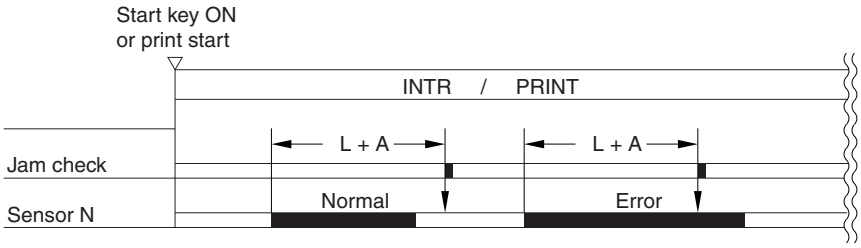

(L = paper length feed distance; A = specific feed distance)

F-10-11

T-10-9

Sensor
Cassette 1 retry paper sensor (PS16)
Caste 2 retry paper sensor (PS17)
Registration sensor (PS26)
Fixing delivery sensor (PS25)
Fixing inlet sensor (PS27)
Face-down delivery sensor 1 (PS12)
Face-down deliver y sensor 2 (PS6)
Duplex registration sensor (PS21)
Duplex pickup sensor (PS24)
Fixing wrap sensor ÅiPS29Åj

10.3.2.2 Stationary Jams at Power-On

CLC5151 / / / CLC4040 / / / iR C4580i / / / iR C4080i / / / / iR C5185N / / iR C5185i PRT /

The machine checks the absence of paper over the following sensors before it starts initial multiple rotations at power-on:

T-10-10

Sensor
Caste 1 retry paper sensor (PS16)
Cassette 2 retry paper sensor (PS17)
Registration sensor (PS26)
Fixing delivery sensor (PS25)
Face-down delivery sensor 1 (PS12)
Face-down delivery sensor 2 (PS6)
Duplex registration sensor (PS21)
Duplex pickup sensor (PS24)
Fixing inlet sensor (PS27)
Fixing wrap sensor ÅiPS29Åj
Fixing arch sensorÅiPS47Åj

10.4 Cassette

10.4.1 Identifying the Paper Size

CLC5151 / / / CLC4040 / / / iR C4580i / / / iR C4080i / / / / iR C5185N / / iR C5185i PRT /

The machine identifies the size of paper into the cassette with reference to the slide guide (15 settings) of the cassette. The 4-in-a-row actuator designed for the identification of the cassette size found on the machine side goes ON/OFF according to the position of the slide guide, permitting the machine to identify 15 settings. In the absence of a cassette, all 4 actuators will go OFF.

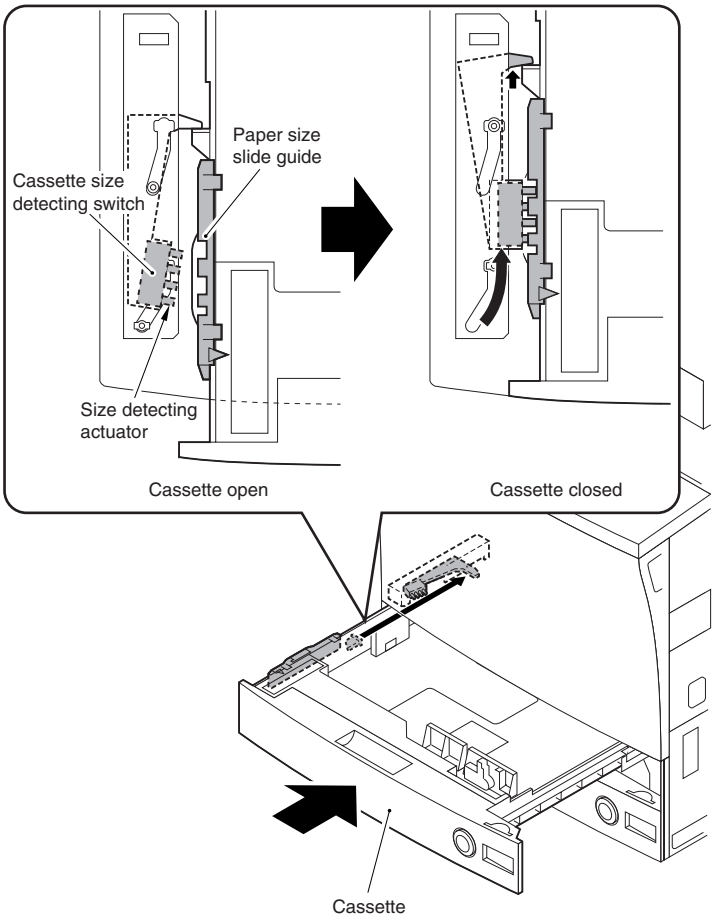

F-10-12
T-10-11

		4-in-a-row actuator			
		Rear			Front
	Paper size	Bit3	Bit2	Bit1	Bit0
1	STMT R	ON			
2	LTR		ON		
3	LTR R	ON		ON	
4	LGL		ON		ON
5	11X17*1			ON	
6	A5 R	ON			ON
7	A4	ON	ON		
8	A4 R		ON	ON	
9	A3	ON		ON	ON
10	B5	ON	ON		ON
11	B5 R	ON	ON	ON	
12	B4	ON	ON	ON	ON
13	12X18*2		ON	ON	ON
14	U1			ON	ON
15	U2				ON
16	no cassette				

ON: actuator pressed (i.e... '0'in reference to a check in I/O mode).

*1:279 x 431.8[mm]
*2:305 x 457[mm]

10.4.2 Detecting the Level of Paper

CLC5151 / / / CLC4040 / / / iR C4580i / / / iR C4080i / / / / iR C5185N / / iR C5185i PRT /

The level of paper inside the cassette is detected using the following three sensors:

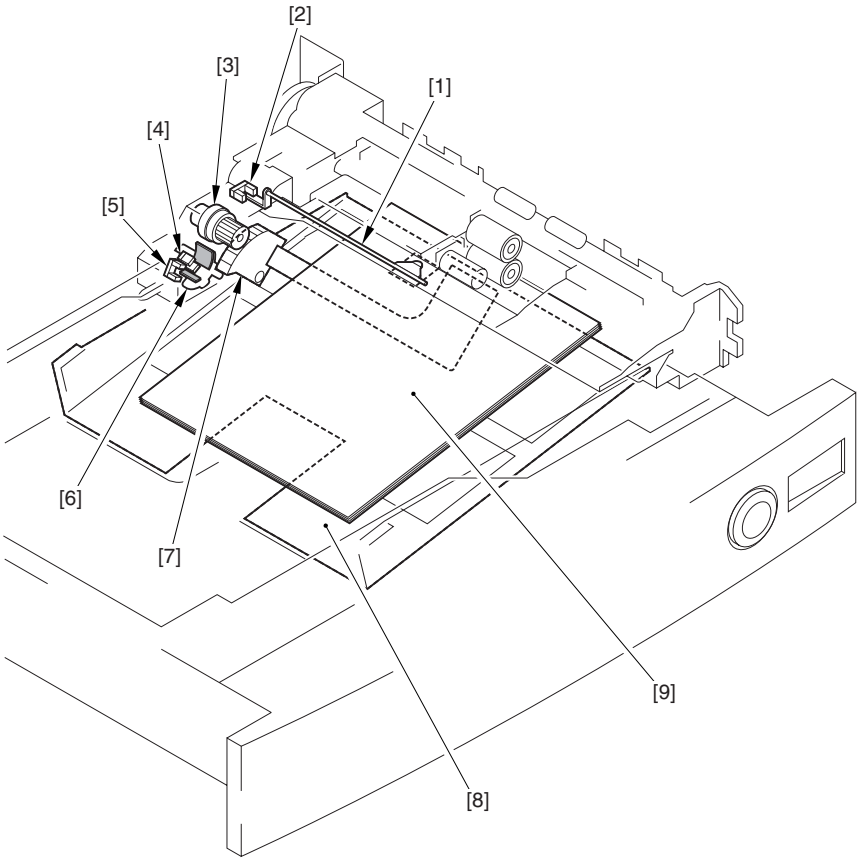

F-10-13
T-10-12

[1] Flag
[2] Cassette paper sensor
[3] Gear
[4] Cassette paper level sensor (A)
[5] Cassette paper level sensor (B)
[6] Paper level sensor flag
[7] Lifter gear
[8] Tray
[9] Paper

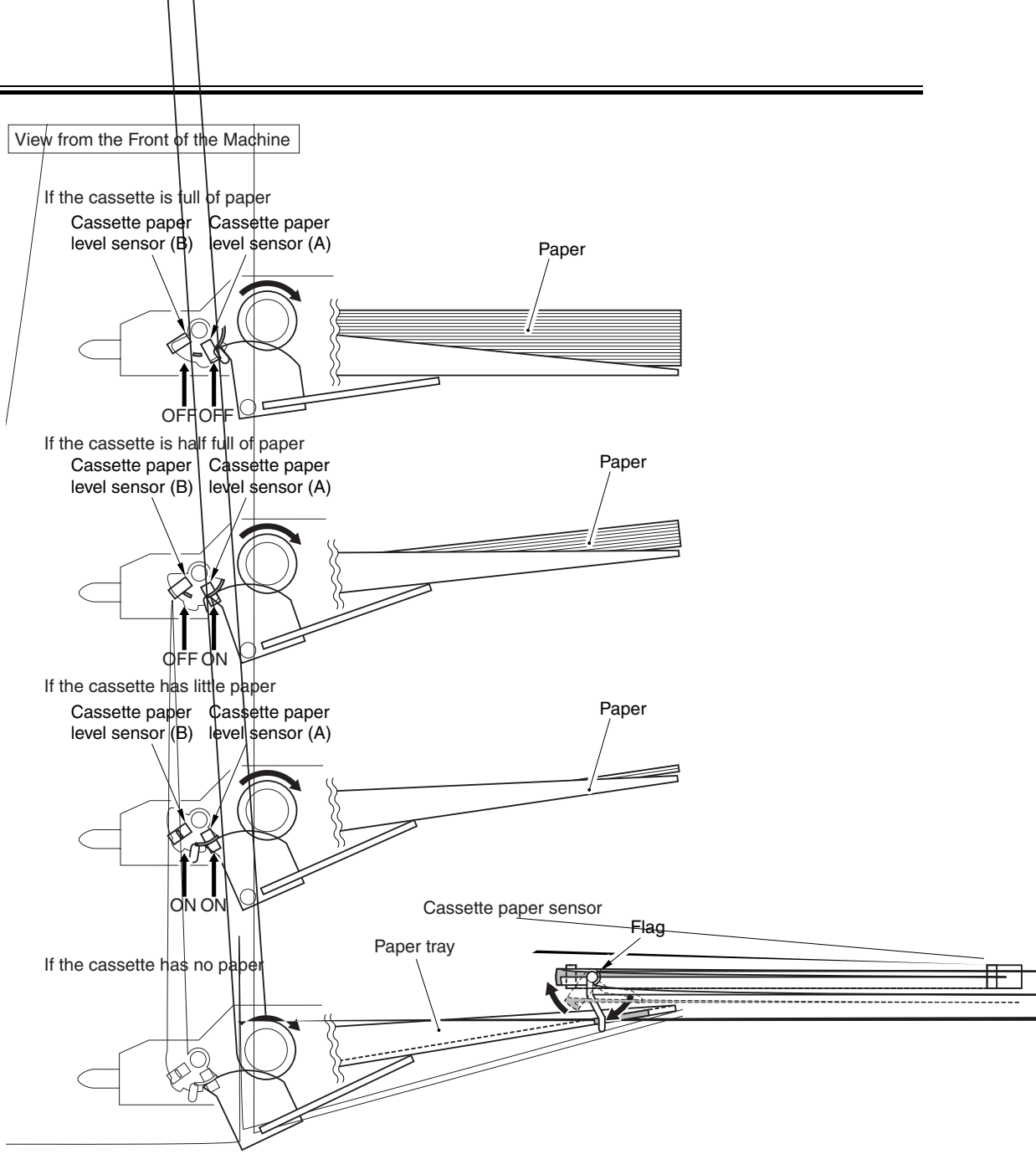

F-10-14

T-10-13

Paper level sensor (A)	Paper level sensor (B)	Paper sensor	Level of paper	Indication on control panel
off	off	off	100% to 50% of capacity	
ON	off	off	about 50% to about 50 sheets	
ON	ON	off	About 50 sheets or less	
---	---	ON	No paper	

10.5 Cassette Pick-Up Unit

10.5.1 Outline

CLC5151 / / / CLC4040 / / / iR C4580i / / / iR C4080i / / / / iR C5185N / / iR C5185i PRT /

The paper inside the cassette is held up by the lifter plate, and the pickup roller is borught down to the paper for pickup.
The feed roller and the srpaton roller are used to make sure that no more than a single sheet of paper is moved to the feeing assembly; the pickup vertical path roller/ pre-registration roller is then used to move the paper a fara as the kegistatoin roller (upper, lower).
The pickup vertical path roller and the pre-registration roller are each driven by the pickup 1 motor and the pre-registration motor, respectively.

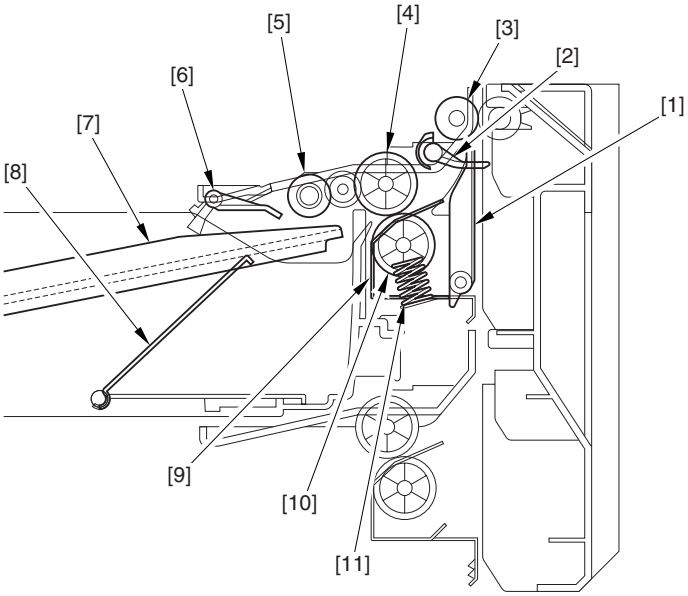

F-10-15

T-10-14

[1] Vertical path guide	[7] Holding plate
[2] Caste retray paper sensor	[8] Lifter plate
[3] Pickup vertical path roller	[9] Retard guide
[4] Feed roller (roller B)	[10] Separation ton roller (roller C)
[5] Pickup roller (roller A)	[11] Retard spring
[6] Cassette paper sensor	

10.5.2 Basci Sequence of Operations

CLC5151 / / / CLC4040 / / / iR C4580i / / / iR C4080i / / / / iR C5185N / / iR C5185i PRT /

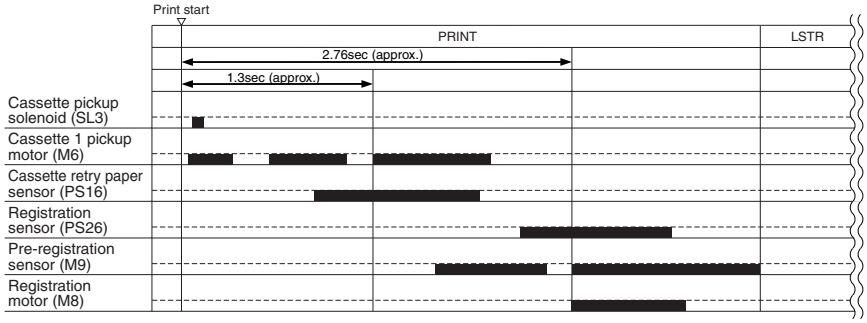

F-10-16

10.6 Manual Feed Pickup Unit

10.6.1 Outline

CLC5151 / / / CLC4040 / / / iR C4580i / / / iR C4080i / / / / iR C5185N / / iR C5185i PRT /

The paper in the manual feed pickup unit is forced against the pickup feeder roller as the lifter moves up, an a single sheet of paper is separed and moved ahead by the work of the pickup feeder roller and the separation roller.

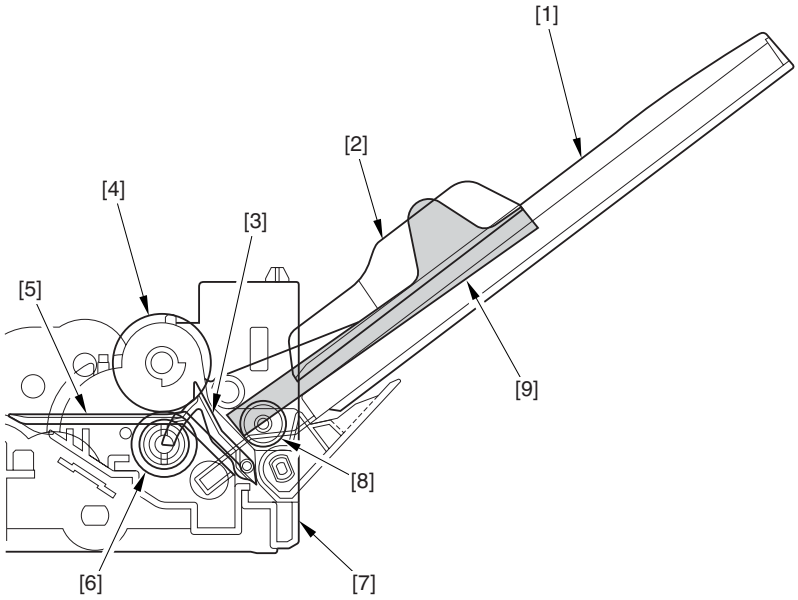

F-10-17

T-10-15

[1] Paper tray	[6] Manual feeder separation roller
[2] Side guide plate	[7] Registration multi frame
[3] Paper flag	[8] Last paper pick roll
[4] Manual feed feeder roller	[9] Lifter
[5] Pickup guide plate	

10.6.2 Basic Sequence of Operations

CLC5151 / / / CLC4040 / / / iR C4580i / / / iR C4080i / / / / iR C5185N / / iR C5185i PRT /

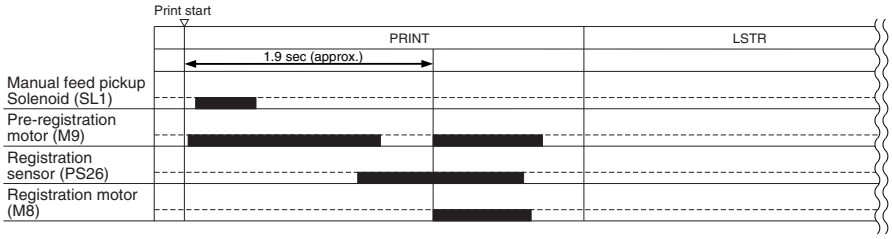

F-10-18

10.6.3 Identifying the Size of Paper

CLC5151 / / / CLC4040 / / / iR C4580i / / / iR C4080i / / / / iR C5185N / / iR C5185i PRT /

The machine checks the widht of paper in reference to the level of output ffrom the variable resistor operating in conjunction with the movemetn of the side guide epatle. The side guide plate on the manual feed tray is set by the user when he/she deposit paper.

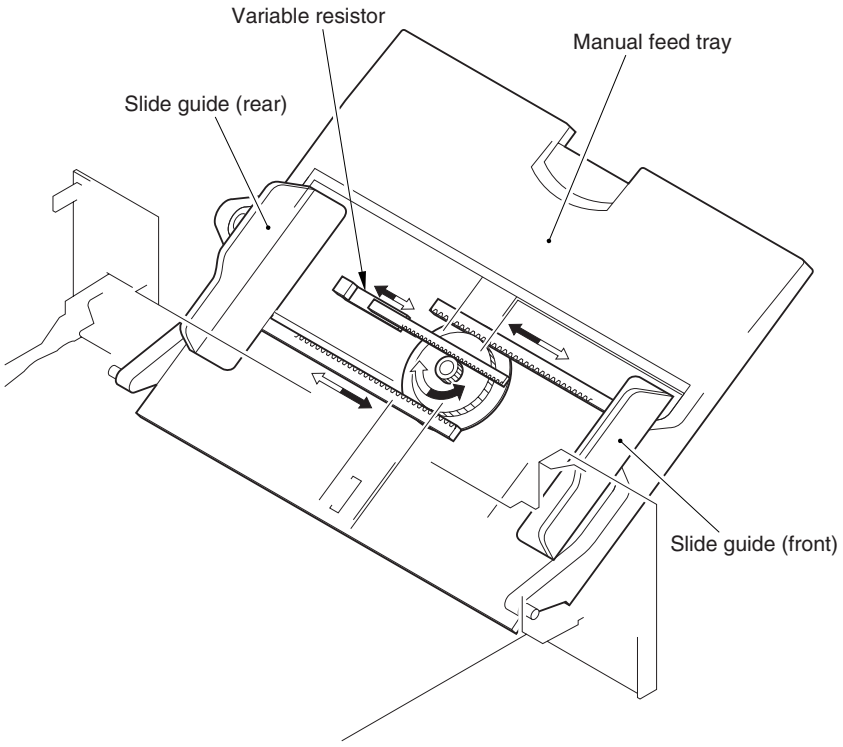

F-10-19

10.6.4 Detecting the Presence/Absence of Paper

CLC5151 / / / CLC4040 / / / iR C4580i / / / iR C4080i / / / / iR C5185N / / iR C5185i PRT /

When paper is placed, its weight pushes down the paper detecting flag, thus enabling the manual feed paper sensor (PS10) to detect the presence of paper.

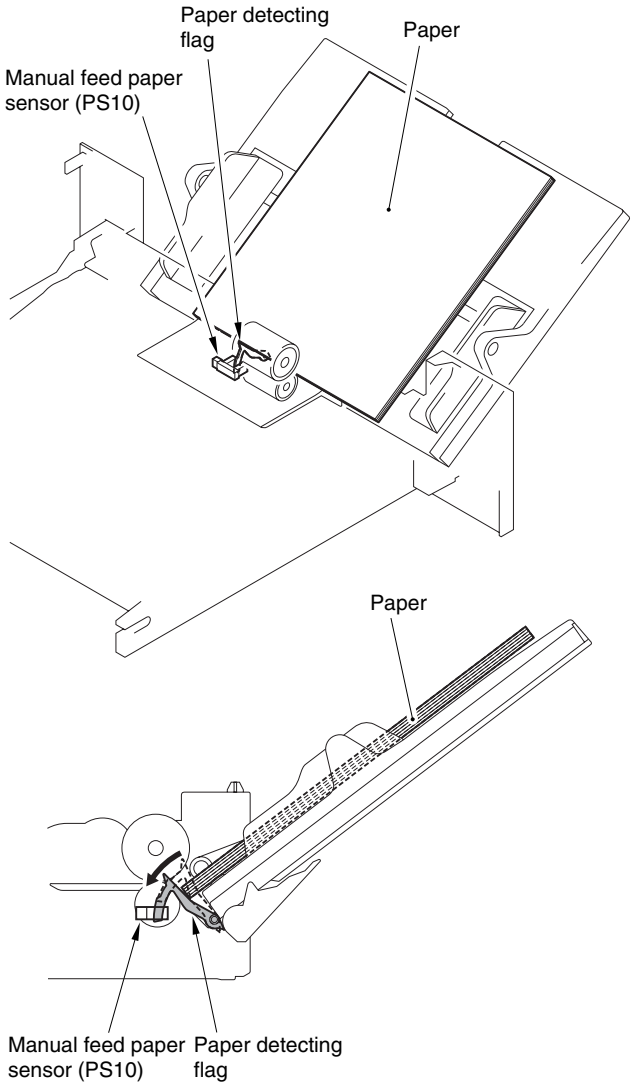

F-10-20

10.6.5 Detecting the Last paper

CLC5151 / / / CLC4040 / / / iR C4580i / / / iR C4080i / / / / iR C5185N / / iR C5185i PRT /

When the last paper pickup roll rotates, the slit in the roll cuses the output of the last paper sensor (PS9) to beocme wave-form pusles. The last paper roll rotates only when the last paper is picked up; otherwise, it remains still. The machine will identify the paper to be the last paper if it detects 4 or more output pules form the lat paper sensor.

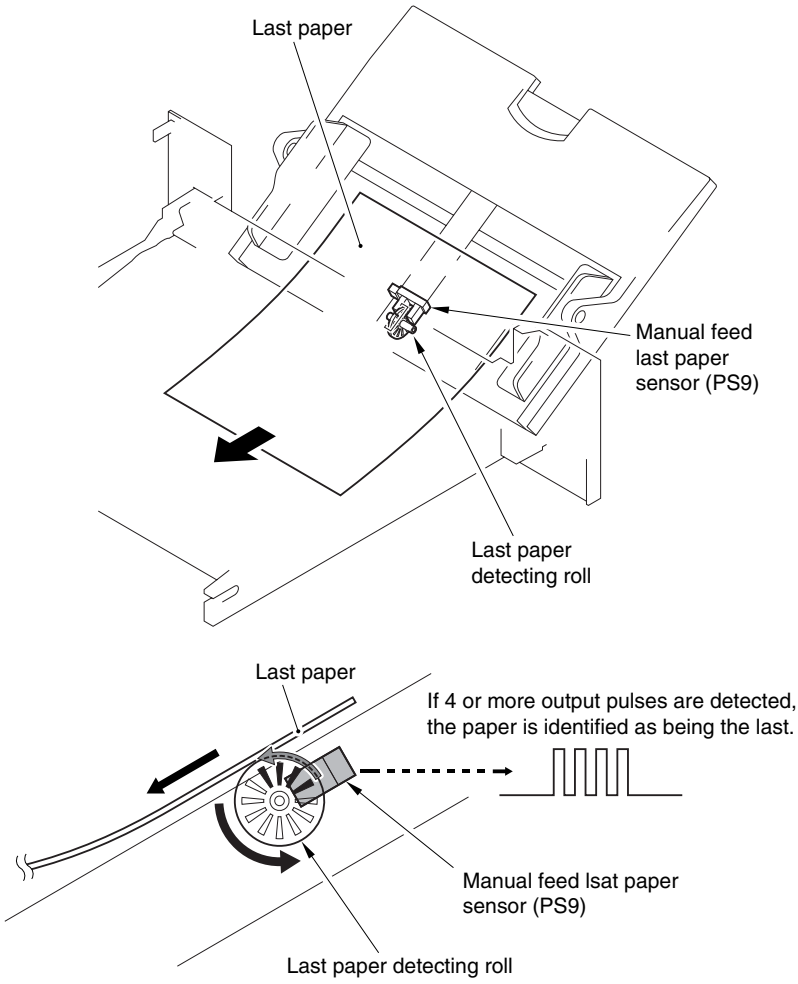

F-10-21

10.7 Registration Unit

10.7.1 Outline

CLC5151 / / / CLC4040 / / / iR C4580i / / / iR C4080i / / / / iR C5185N / / iR C5185i PRT /

The upper registraont roller an the lower registration roller are dreiven by the registration motor (M8), and are used to make user aht the paper an the image on the intermediate transfer rbelt mach at a specific position. The upper guide locking arm latches in place when the unit is fitted to the machine.

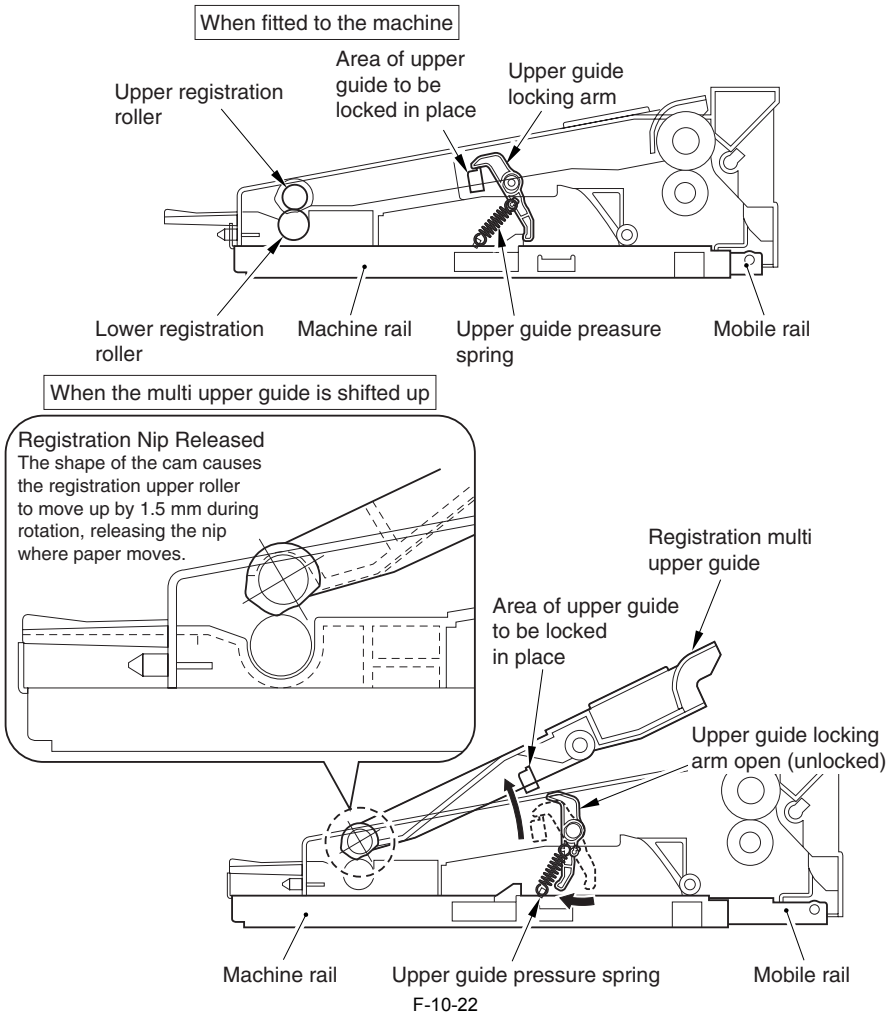

F-10-22

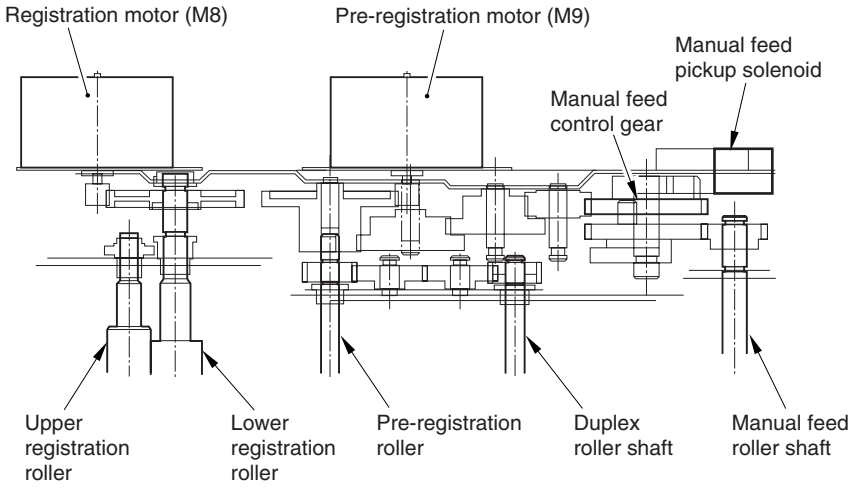

F-10-23

10.8 Duplex Feeding Unit

10.8.1 Outline

CLC5151 / / / CLC4040 / / / iR C4580i / / / iR C4080i / / / / iR C5185N / / iR C5185i PRT /

The duplex nit is drivn by the duplex motor (M26), and is sued when making double-sided prints.

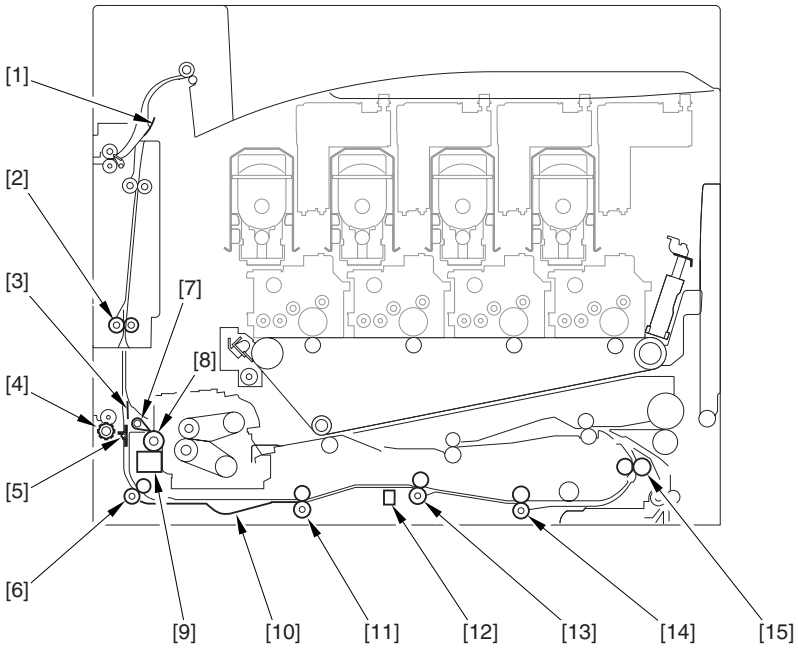

F-10-24

T-10-16

[1] Reversing sheet	[9] Delivery cooling duct
[2] Reversing rollre	[10] Arching assembly
[3] Reversing sheet	[11] Duplex roller 2
[4] Face-up delivery roller	[12] Duplex horizontal registration sensor (PS22)
[5] Cross path flapper	[13] Duplex roller 3
[6] Duple roller 1	[14] Duplex roller 4
[7] FU/FD swtycing flapper	[15] Re-pickup roller
[8] Internal delivery roller	

10.8.2 Controling Horizontal Registration

CLC5151 / / / CLC4040 / / / iR C4580i / / / iR C4080i / / / / iR C5185N / / iR C5185i PRT /

When in duplexing mode, the machine executes horizontal registration detection for paper coming from the duplex feed assembly to see if there is any discrepancy in main scanning direction (front-rear direction), thus adjusting the point of laser exposure.

T-10-17

Detecting of paper position:	duplex horizontal registration sensor (PS22)
Timing of detection:	starts a specifi peirrod of time after pasage over the duplex registraont neosr (PS21)
Dive	horizontal registration motor (M25)
Identifiaotin of position:	with refenced to the pulse form the horizontal registration motor

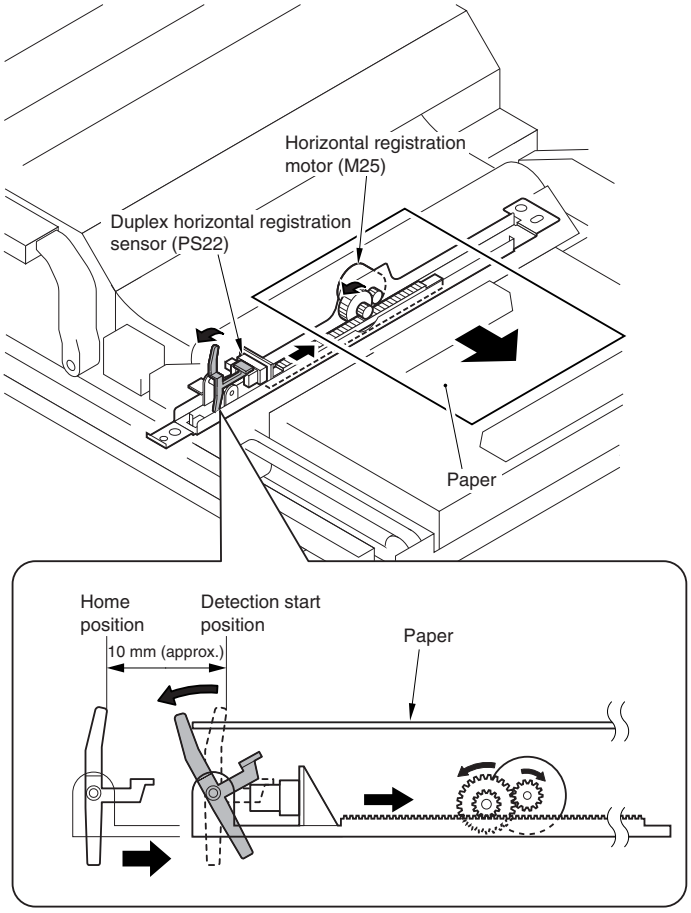

F-10-25

10.8.3 Face-Down Delivery, A4, 5 Sheets in Circulation

CLC5151 / / / CLC4040 / / / iR C4580i / / / iR C4080i / / / / iR C5185N / / iR C5185i PRT /

The number on a white backgoudn and the nbuer on a black background indicated the 1s side and the 2nd side, respse3ctively.

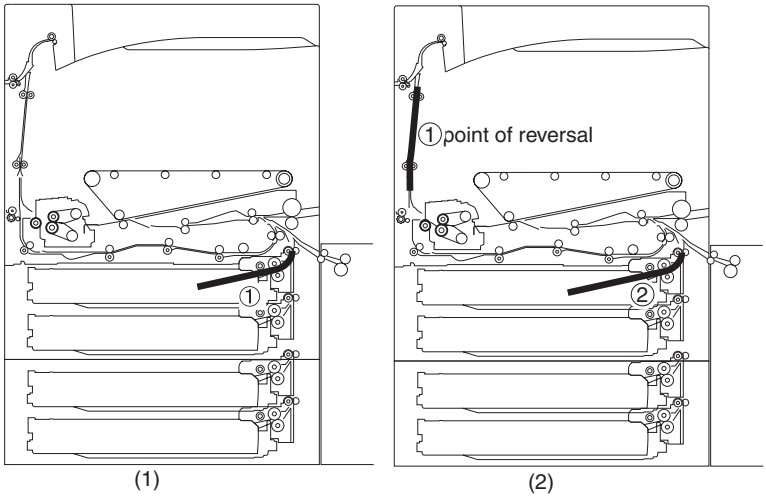

F-10-26

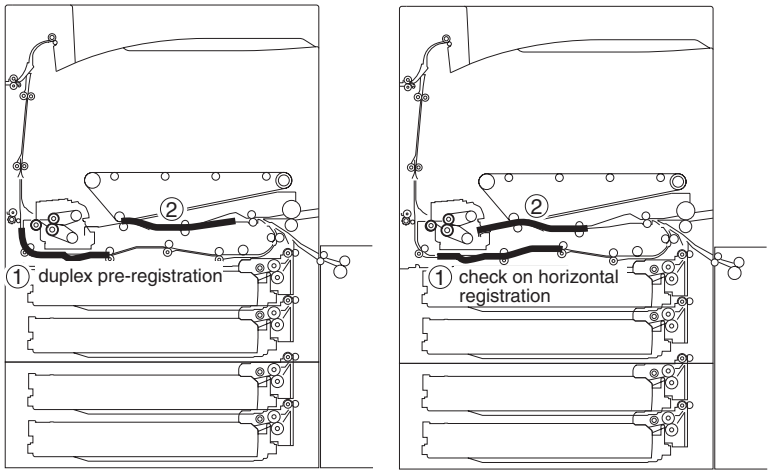

(3) (4)

F-10-27

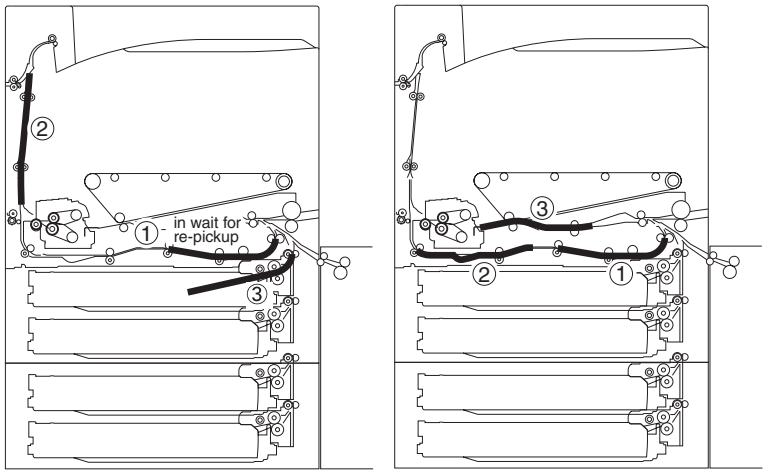

(5) (6) with 2 sheets inside duplex unit

F-10-28

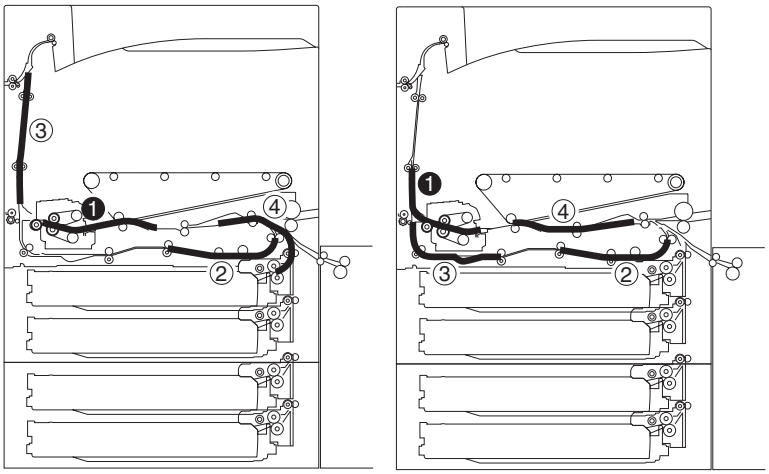

(7) (8)

F-10-29

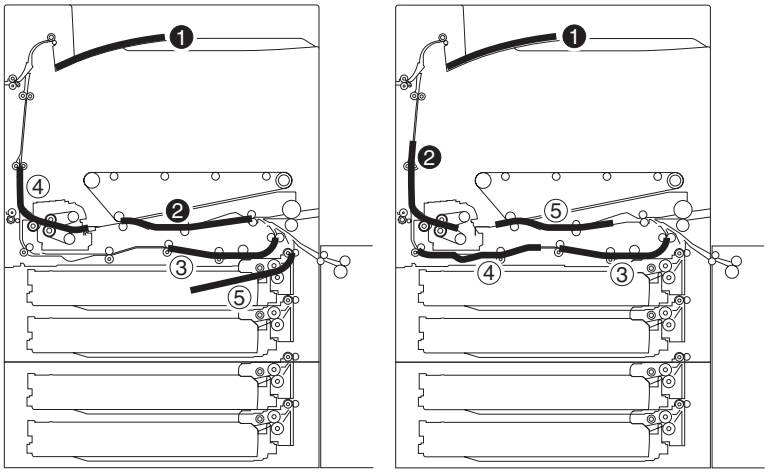

(9) (10)

thereafter, repeats (7) through (10)

F-10-30

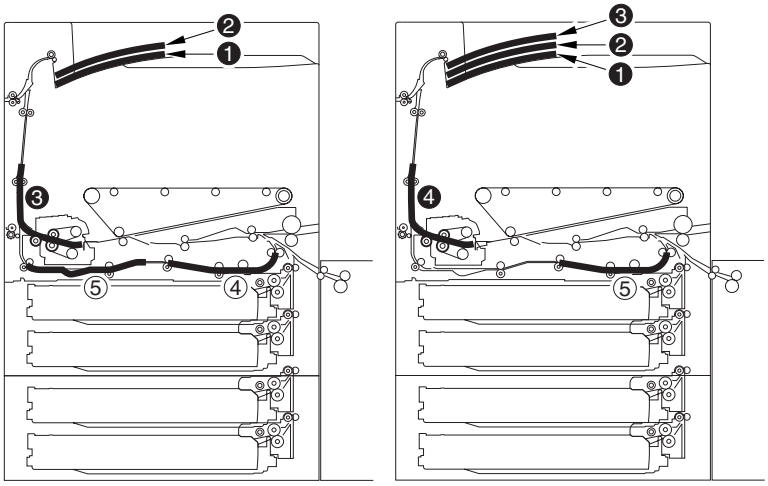

(11) (12)

F-10-31

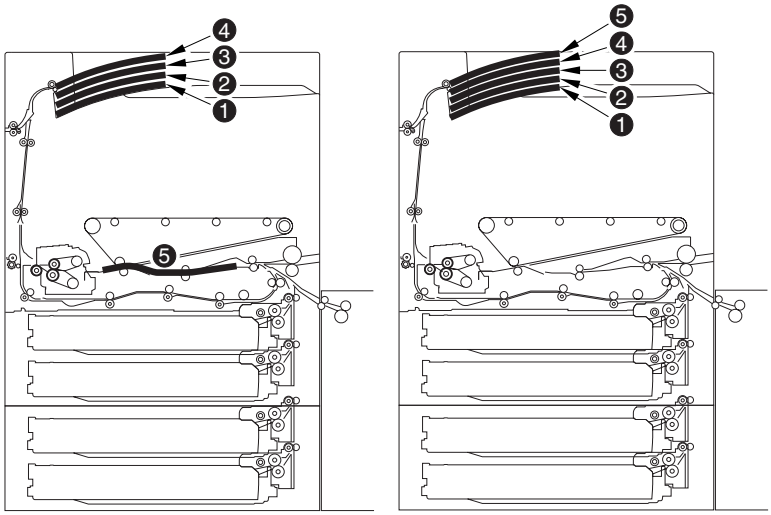

(13) (14)

F-10-32

10.8.4 Face-Down Delivery, A3, 3 Sheets in Cirucilation

CLC5151 / / / CLC4040 / / / iR C4580i / / / iR C4080i / / / / iR C5185N / / iR C5185i PRT /

The nbuemr on a white background and the nbuemr on a black backgrdoun indicated the 1st side and he 2nd side, respectively.

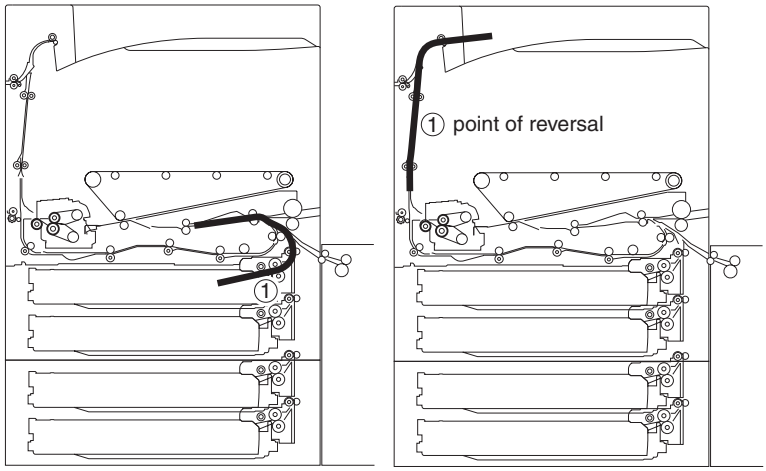

(1) (2)

F-10-33

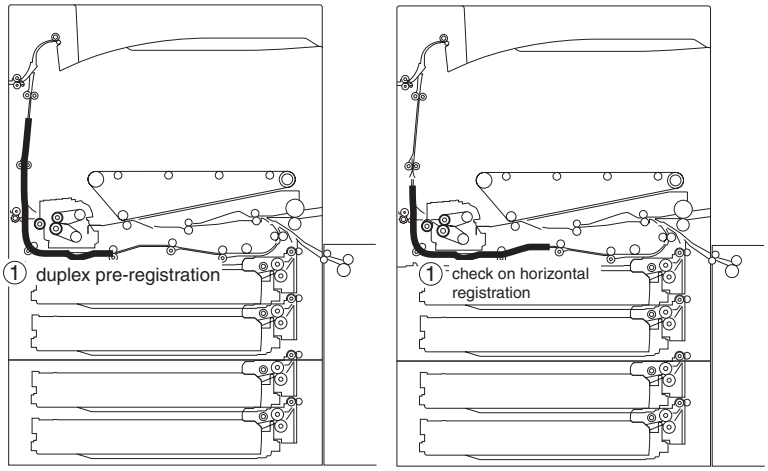

(3) (4)

F-10-34

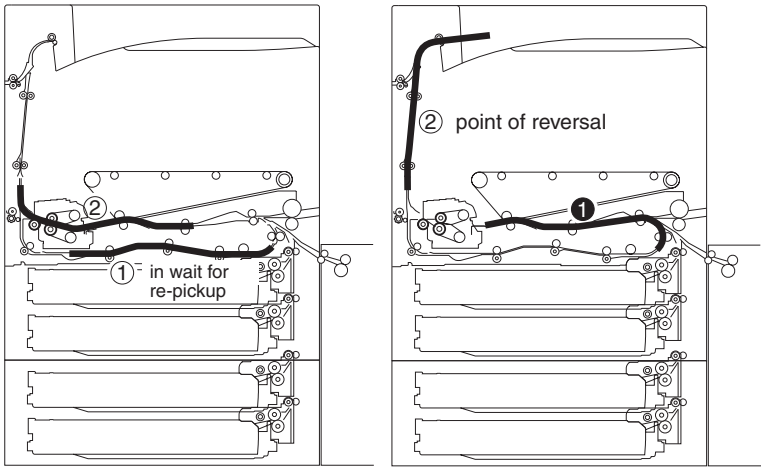

(5) (6)

F-10-35

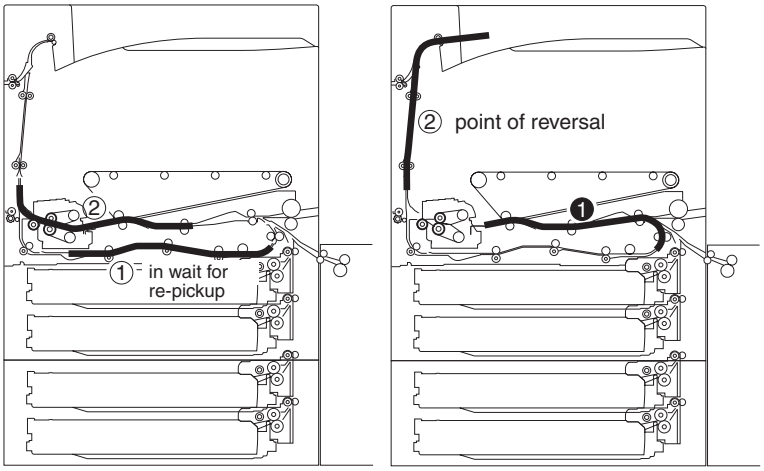

(5) (6)

F-10-36

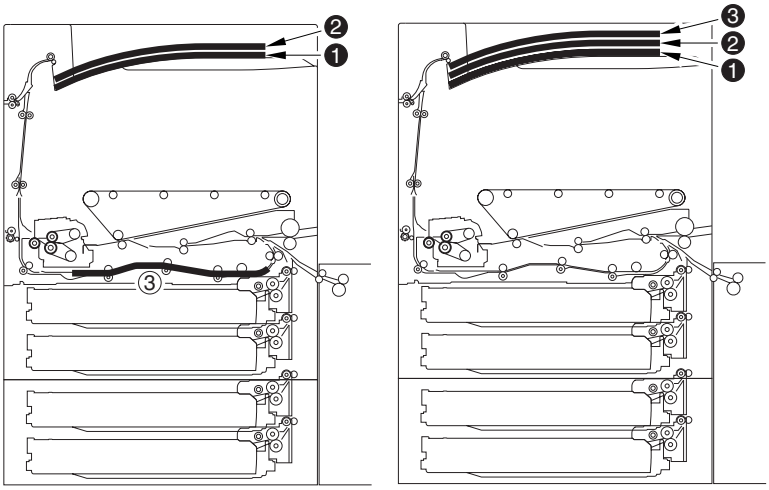

(9) (10)

F-10-37

10.9 Delivery

10.9.1 Delivery

CLC5151 / / / CLC4040 / / / iR C4580i / / / iR C4080i / / / / iR C5185N / / iR C5185i PRT /

The machine uses any of the following 3 types of delivery (paper apths):
face-deown delivery (center delivery tray)
face-down delivery (copy tray)
face-up device r(side delivery tray)

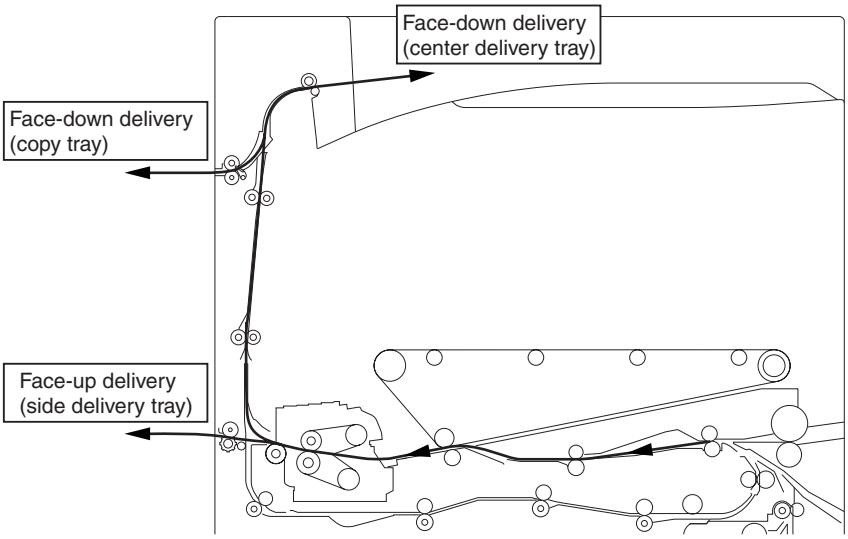

F-10-38

10.9.2 Movement in the Direction of Face-Down Delivery

CLC5151 / / / CLC4040 / / / iR C4580i / / / iR C4080i / / / / iR C5185N / / iR C5185i PRT /

After moving thtough the fixing unit, the paper moves along the FU/FD switching flapper now facing downawar; it then pushes down the plastic sheet to move to the vertical path diecoint for face-down delivery.

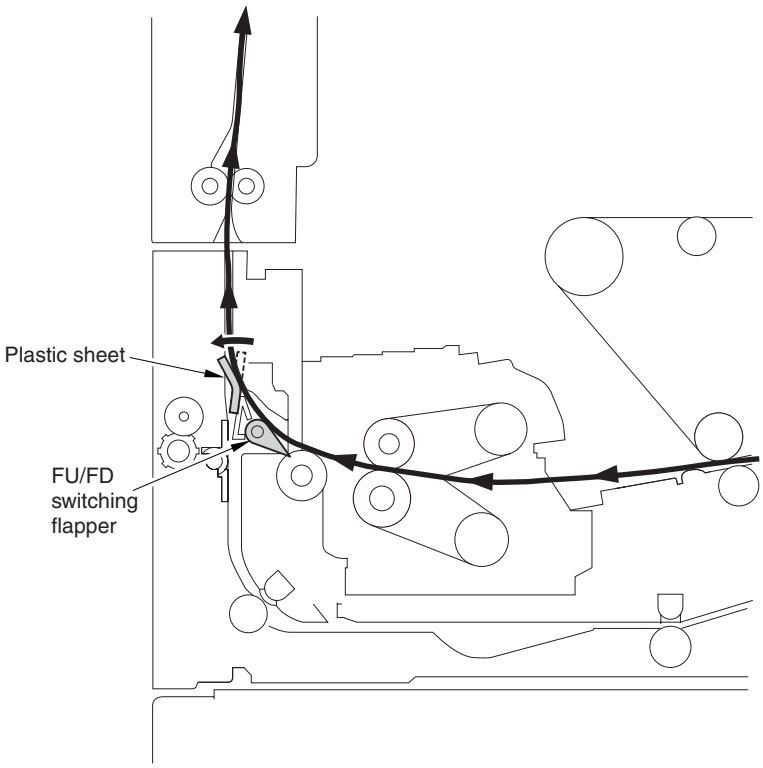

F-10-39

10.9.3 Movement in the Direction of Face-Up Delivery

CLC5151 / / / CLC4040 / / / iR C4580i / / / iR C4080i / / / / iR C5185N / / iR C5185i PRT /

After moving through he fixing unit, the paper moves uder the FU/FD swtichign flapper, which has been shfited up by the delivery path switching solenoid (SL2); at this time the cross path flapper is also siwtched over by the work of the delivery path switching solenoid 2 (SL5), thus guding the paper into the direction of face-up delivery.

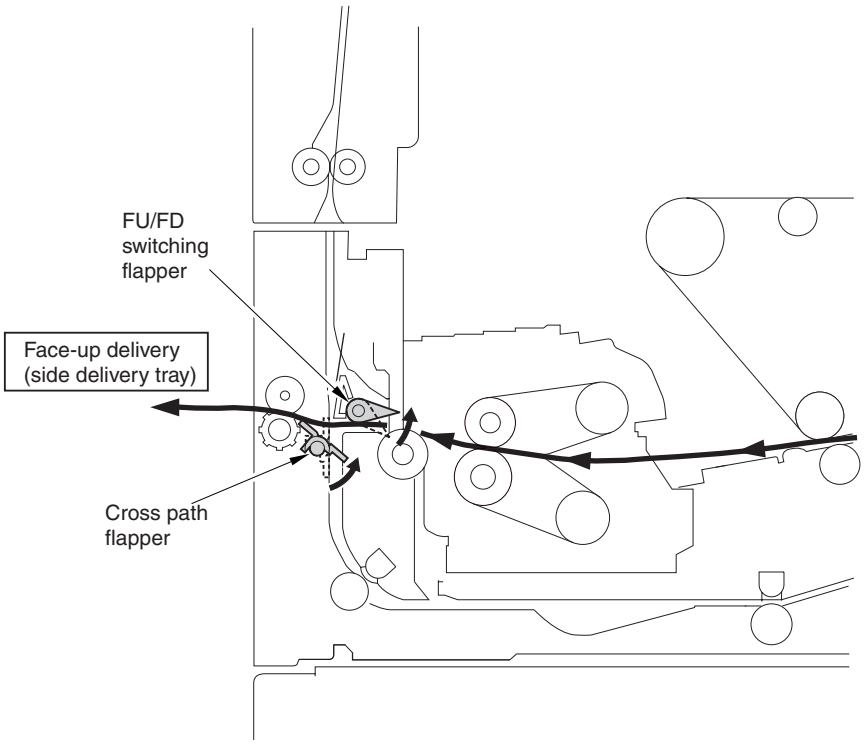

F-10-40

10.9.4 Movement for CenterTray delivery

CLC5151 / / / CLC4040 / / / iR C4580i / / / iR C4080i / / / / iR C5185N / / iR C5185i PRT /

The paper moves while pushing down the plastic sheet, and then moves ahead for center tray delivery.

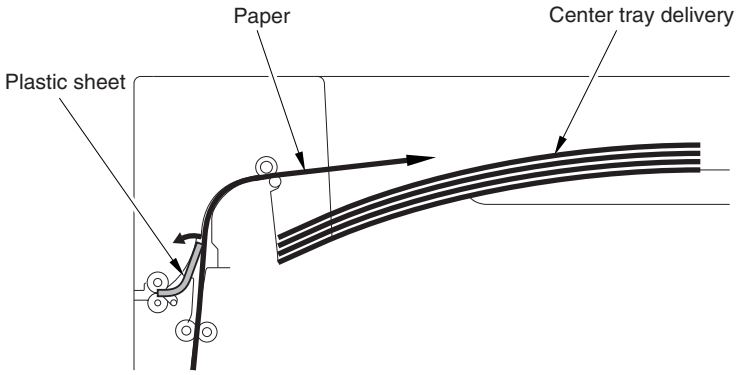

F-10-41

10.9.5 Moement for Copy Tray Dievyer

CLC5151 / / / CLC4040 / / / iR C4580i / / / iR C4080i / / / / iR C5185N / / iR C5185i PRT /

The paper meos while pushign down the plastic sheet, and then moves ahead in the direction of the centra tray. Immeiately after the trailig edge of the paper moves past the palstc film the momevement stops, at which time the movmeent rverses so that the paper moves along the plastic sheet in the direction of the copy tray.

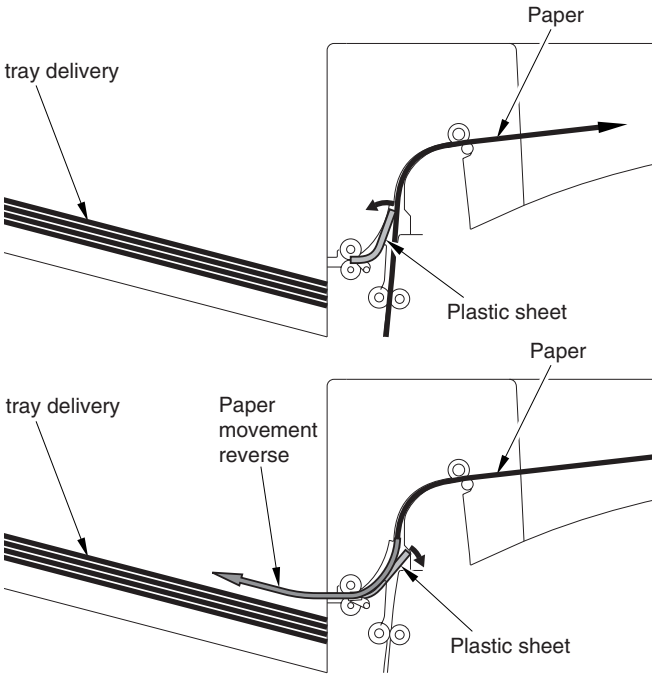

F-10-42

10.10 Parts Replacement Procedure

10.10.1 Cassette Pickup Unit

10.10.1.1 Preparatipon for Removing the Pickup Unit

CLC5151 / / / CLC4040 / / / iR C4580i / / / iR C4080i / / / / Color Image Reader-F1 / Color Image Reader-E1 / Dupiex Color Image Reader-G1 / iR C5185N / / iR C5185i PRT /

MEMO:
The cassette 1/2 and the pick-up unit 1/2 may also be removed in the same way.

1) Slide out the cassette.
2) Remove the front right cover. (page 12-14)Reference[Removing the Right Front Cover]
3) Remove the rear right cover. (page 12-14)Reference[Removing of the Right Rear Cover]
4) Remove the pickup vertical path cover [3].
   - screw [2] (remove the pickup vertical path lower cover [1])

If the machine is equipped with a pedestal, remove the pedestal right cover; then, detach the pickup vertical path lower cover in advance.

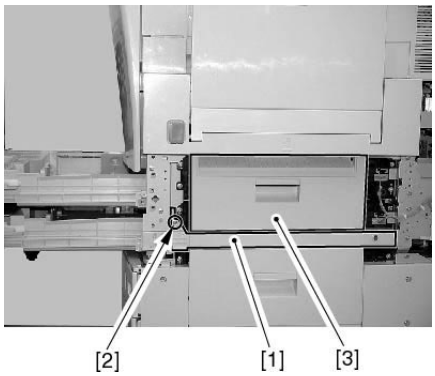

F-10-43

10.10.1.2 Removing the Pickup Unit

CLC5151 / / / CLC4040 / / / iR C4580i / / / iR C4080i / / / / Color Image Reader-F1 / Color Image Reader-E1 / Dupiex Color Image Reader-G1 / iR C5185N / / iR C5185i PRT /

1) Remove the pickup unit [3].
   - connector [1]
   - 4 screws [2]

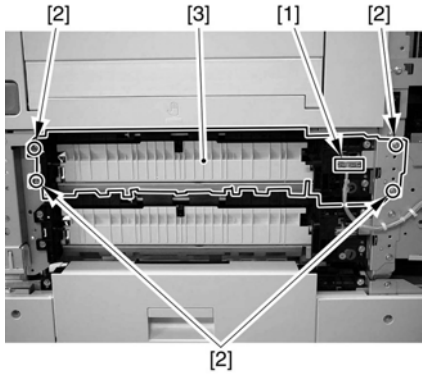

F-10-44

10.10.2 Cassette Size Detection Unit

10.10.2.1 Preparation for Removing the Cassette Size Detection Unit

CLC5151 / / / CLC4040 / / / iR C4580i / / / iR C4080i / / / / Color Image Reader-F1 / Color Image Reader-E1 / Dupiex Color Image Reader-G1 / iR C5185N / / iR C5185i PRT /

1) Remove the cassette.

MEMO:
The cassette 1/2 and the pick-up unit 1/2 may also be removed in the same way.

1-1) Slide out the cassette.

10.10.2.2 Removing the Cassette Size Detection Unit

CLC5151 / / / CLC4040 / / / iR C4580i / / / iR C4080i / / / / Color Image Reader-F1 / Color Image Reader-E1 / Dupiex Color Image Reader-G1 / iR C5185N / / iR C5185i PRT /

1) Remove the machine's lower left cover [2].
   - 4 screws [1]

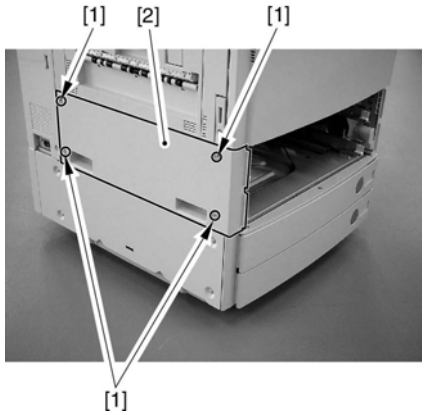

F-10-45

2) Push the protrusion [A] from the left to release the lock; then, remove the cassette size detection unit [2] for the machine's front.
   - connector [1]

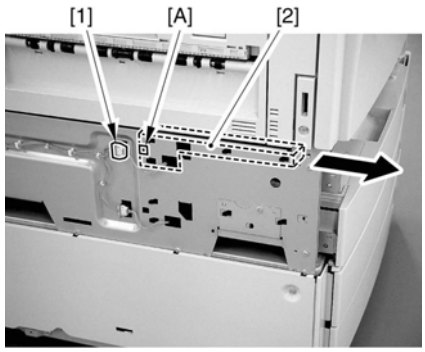

F-10-46

MEMO:
When attaching the cassette size detection unit, try pushing the 4 protrusions into the holes of the machine's stay.

10.10.3 Pre-registration Roller

10.10.3.1 Preparation for Removing the Pre-registration Roller

CLC5151 / / / CLC4040 / / / iR C4580i / / / iR C4080i / / / / Color Image Reader-F1 / Color Image Reader-E1 / Dupiex Color Image Reader-G1 / iR C5185N / / iR C5185i PRT /

1) Remove the manual feeder unit. (page 10-35) Reference[Removing the Manual Feed Unit]
2) Remove the manual feeder unit cover. (page 12-19) Reference[Removing the Manual Feed Unit Cover]
3) Remove the motor cover.
3-1) Remove the motor cover [2] found at the rear.
- 1 screw [1]

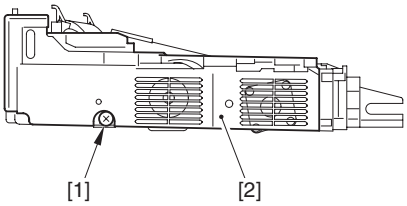

F-10-47

4) Remove the motor mounting plate.
- 3 clamps [1]
- 3 connectors [2]
- 3 screws [3]

10.10.3.2 Removing the Pre-registration Roller

CLC5151 / / / CLC4040 / / / iR C4580i / / / iR C4080i / / / / Color Image Reader-F1 / Color Image Reader-E1 / Dupiex Color Image Reader-G1 / iR C5185N / / iR C5185i PRT /

1) Remove the pre-registration roller.
1-1) Remove the 2 E-rings [1], 1 gear [2], 1 parallel pin [3], and 1 bearing [4].

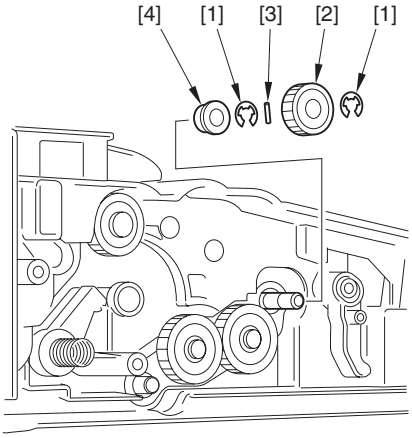

F-10-48

1-2) Remove the bearing [1]; then, move the pre-registration roller [2] in the direction of the arrow to detach.

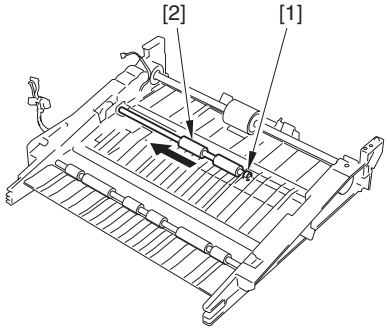

F-10-49

10.10.4 Registration Upper Roller

10.10.4.1 Preparation for Removing the Registration Lower Roller

CLC5151 / / / CLC4040 / / / iR C4580i / / / iR C4080i / / / / Color Image Reader-F1 / Color Image Reader-E1 / Dupiex Color Image Reader-G1 / iR C5185N / / iR C5185i PRT /

1) Remove the manual feeder unit. (page 10-35) Reference[Removing the Manual Feed Unit]
2) Remove the manual feeder unit cover. (page 12-19) Reference[Removing the Manual Feed Unit Cover]
3) Remove the motor cover.
3-1) Remove the motor cover [2] found at the rear.
- 1 screw [1]

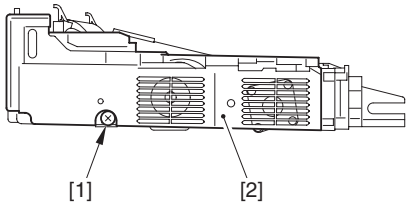

F-10-50

4) Remove the motor mounting plate.
- 3 clamps [1]
- 3 connectors [2]
- 3 screws [3]

10.10.4.2 Remove the Registration Lower Roller

CLC5151 / / / CLC4040 / / / iR C4580i / / / iR C4080i / / / / Color Image Reader-F1 / Color Image Reader-E1 / Dupiex Color Image Reader-G1 / iR C5185N / / iR C5185i PRT /

1) Remove the belt [1]ÅAwasher [2]ÅAE-rings [3]ÅAgear [4] found at the rear.

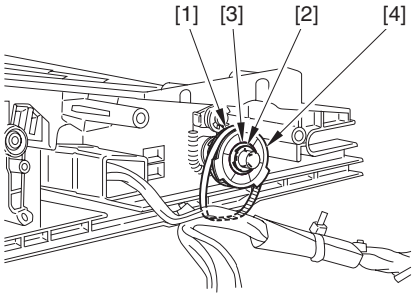

F-10-51

2) Remove the 2 E-rings [1], spring [2], and bearings [3] [4] found at the rear.

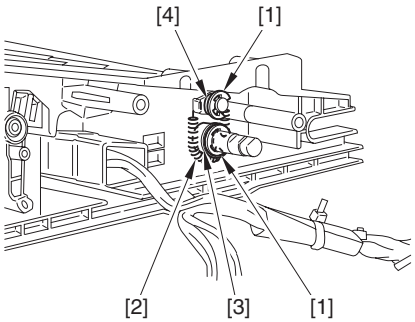

F-10-52

3) Remove the 2 gears [1] found at the front.

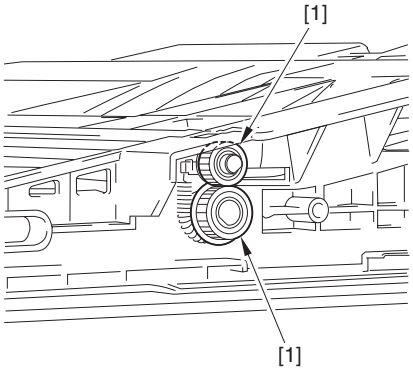

F-10-53

4) Remove the 2 E-rings [1], spring [2], and bearings [3] [4] found at the front.

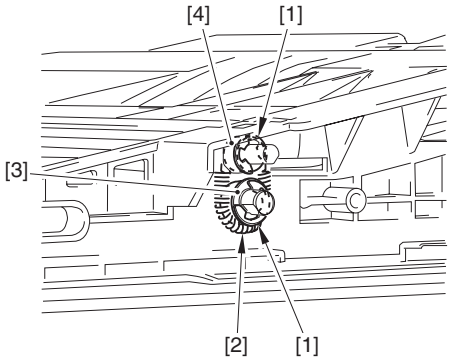

F-10-54

5) Remove the shaft [1], and detach the guide [2].

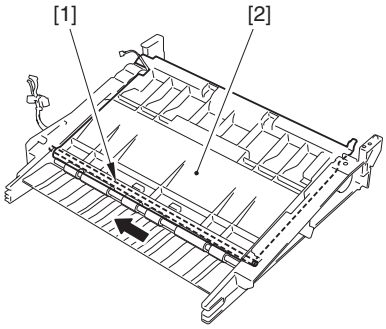

F-10-55

6) Remove the registration lower roller [1].

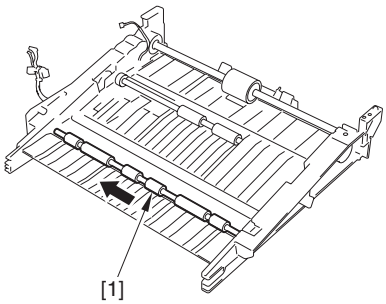

F-10-56

10.10.5 Re-pickup Roller

10.10.5.1 Preparation for Removing the Re-pickup Roller

CLC5151 / / / CLC4040 / / / iR C4580i / / / iR C4080i / / / / Color Image Reader-F1 / Color Image Reader-E1 / Dupiex Color Image Reader-G1 / iR C5185N / / iR C5185i PRT /

1) Remove the manual feeder unit. (page 10-35)Reference[Removing the Manual Feed Unit]
2) Remove the manual feeder unit cover. (page 12-19)Reference[Removing the Manual Feed Unit Cover]
3) Remove the motor cover.
3-1) Remove the motor cover [2] found at the rear.
-Å@1 screw [1]

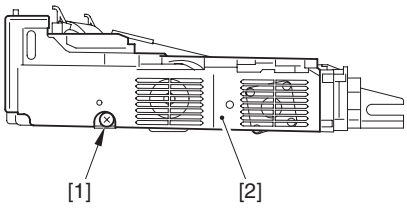

F-10-57

4) Remove the motor mounting plate.
-Å@3 clamps [1]
-Å@3 connectors [2]
-Å@3 screws [3]

10.10.5.2 Removing the Re-pickup Roller

CLC5151 / / / CLC4040 / / / iR C4580i / / / iR C4080i / / / / Color Image Reader-F1 / Color Image Reader-E1 / Dupiex Color Image Reader-G1 / iR C5185N / / iR C5185i PRT /

1) Remove the 2 E-rings [1], gear [2], parallel pin [3], and bearing [4] found at the rear.

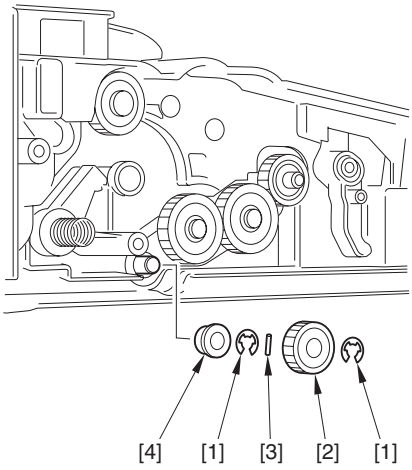

F-10-58

2) Remove the 3 screws [1], and detach the guide [2].

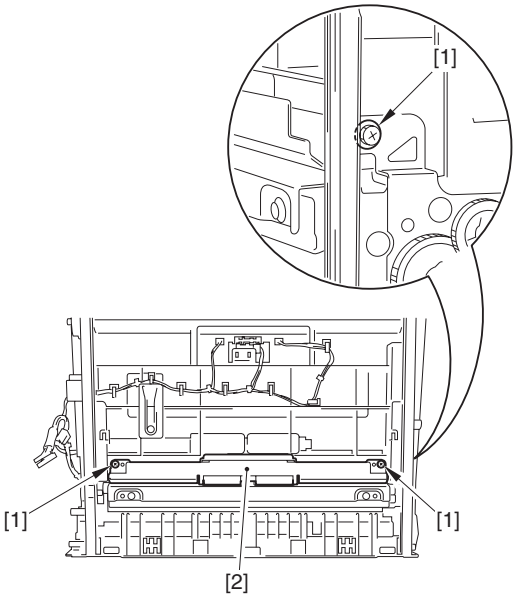

F-10-59

3) Remove the 2 screws [1], and detach the guide [2].

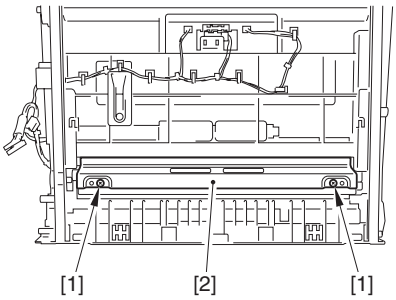

F-10-60

4) Remove the bearing [1]; then, move the roller [2] in the direction of the arrow to detach.

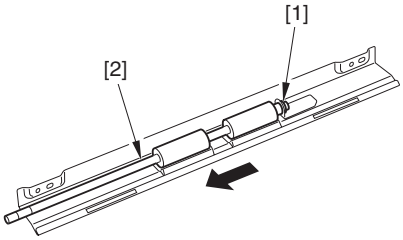

F-10-61

10.10.6 Pickup Roller

10.10.6.1 Preparation for Removing the Pickup Roller

CLC5151 / / / CLC4040 / / / iR C4580i / / / iR C4080i / / / / Color Image Reader-F1 / Color Image Reader-E1 / Dupiex Color Image Reader-G1 / iR C5185N / / iR C5185i PRT /

1) Remove the cassette.

MEMO:
The cassette 1/2 and the pick-up unit 1/2 may also be removed in the same way.

1-1) Slide out the cassette.

10.10.6.2 Removing the Pickup Roller

CLC5151 / / / CLC4040 / / / iR C4580i / / / iR C4080i / / / / Color Image Reader-F1 / Color Image Reader-E1 / Dupiex Color Image Reader-G1 / iR C5185N / / iR C5185i PRT /

1) Put your hand through the machine's front; then, pick the tab [A] of the pickup roller [1], and pull it out.

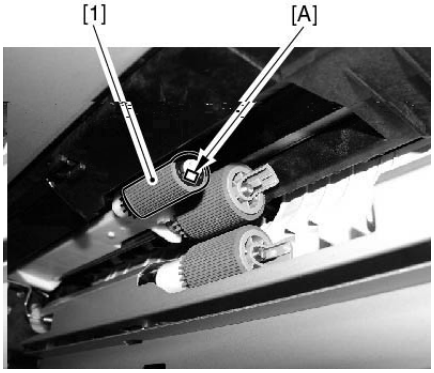

F-10-62

10.10.7 Feed Roller

10.10.7.1 Preparation for Removing the Feeding Roller

CLC5151 / / / CLC4040 / / / iR C4580i / / / iR C4080i / / / / Color Image Reader-F1 / Color Image Reader-E1 / Dupiex Color Image Reader-G1 / iR C5185N / / iR C5185i PRT /

1) Remove the cassette.

MEMO:
The cassette 1/2 and the pick-up unit 1/2 may also be removed in the same way.

1-1) Slide out the cassette.

10.10.7.2 Removing the Feeding Roller

CLC5151 / / / CLC4040 / / / iR C4580i / / / iR C4080i / / / / Color Image Reader-F1 / Color Image Reader-E1 / Dupiex Color Image Reader-G1 / iR C5185N / / iR C5185i PRT /

1) Put your hand through the machine's front; then, pick the tab [A] of the feed roller, and pull it out.

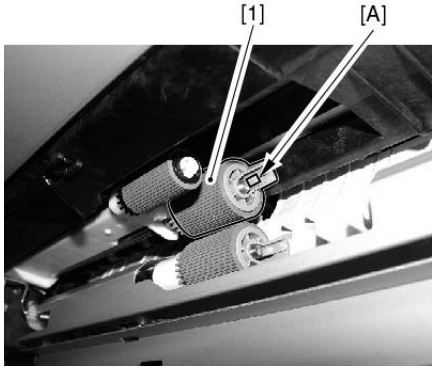

F-10-63

10.10.8 Separation Roller

10.10.8.1 Preparation for Removing the Separation Roller

CLC5151 / / / CLC4040 / / / iR C4580i / / / iR C4080i / / / / Color Image Reader-F1 / Color Image Reader-E1 / Dupiex Color Image Reader-G1 / iR C5185N / / iR C5185i PRT /

1) Remove the cassette.

MEMO:
The cassette 1/2 and the pick-up unit 1/2 may also be removed in the same way.

1-1) Slide out the cassette.

10.10.8.2 Removing the Separation Roller

CLC5151 / / / CLC4040 / / / iR C4580i / / / iR C4080i / / / / Color Image Reader-F1 / Color Image Reader-E1 / Dupiex Color Image Reader-G1 / iR C5185N / / iR C5185i PRT /

1) Put your hand through the front of the machine; then, pick the tab [A] of the separation roller [1], and pull it out.

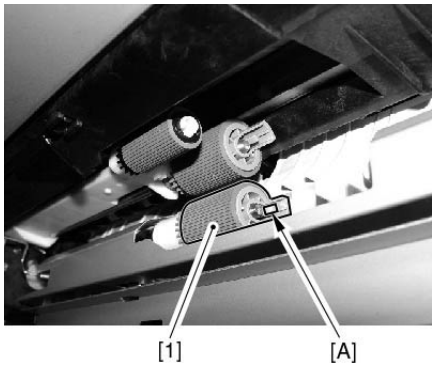

F-10-64

10.10.9 Cassette Pickup Motor

10.10.9.1 Preparation for Removing the Cassette Pickup Motor

CLC5151 / / / CLC4040 / / / iR C4580i / / / iR C4080i / / / / Color Image Reader-F1 / Color Image Reader-E1 / Dupiex Color Image Reader-G1 / iR C5185N / / iR C5185i PRT /

1) Remove the rear fan cover.(page 12-15)Reference[Removing the Rear Fan Cover]
2) Remove the rear upper cover.(page 12-16)Reference[Removing the Rear Upper Cover]
3) Remove the rear lower cover.(page 12-16)Reference[Removing the Rear Lower Cover]
4) Remove the IH power supply unit.(page 12-21)Reference[Removing

the IH Power Supply Unit]
5) Remove the DC power supply unit. (page 12-21) Reference[Removing the DC Power Supply Unit]

10.10.9.2 Removing the Cassette Pickup Motor

CLC5151 / / / CLC4040 / / / iR C4580i / / / iR C4080i / / / / Color Image Reader-F1 / Color Image Reader-E1 / Dupiex Color Image Reader-G1 / iR C5185N / / iR C5185i PRT /

1) Remove the cassette pickup motor mounting plate [3].
-Å@2 connectors [1]
-Å@4 screws [2]

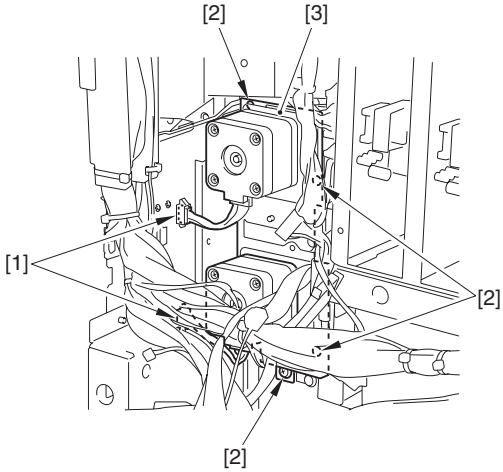

F-10-65

2) Remove the cassette pickup motor [2] together with its mounting plate.
-Å@4 screws [1]

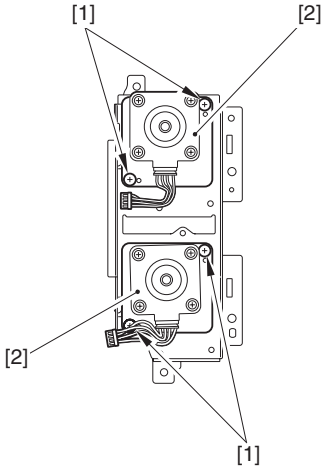

F-10-66

Å@Points to Note When Mounting the Pickup Motor
Be sure that the belt [2] is fitted on the gear [1] of the motor.

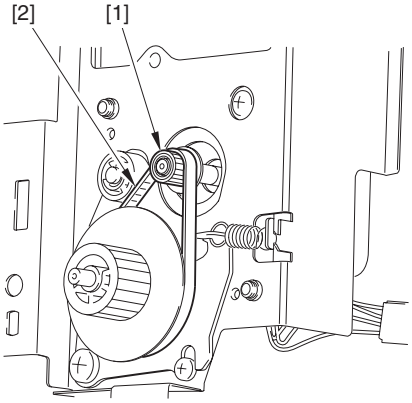

F-10-67

10.10.10 Cassette Retry Paper Sensor

10.10.10.1 Preparation for Removing the Cassette Retry Paper Sensor

CLC5151 / / / CLC4040 / / / iR C4580i / / / iR C4080i / / / / Color Image Reader-F1 / Color Image Reader-E1 / Dupiex Color Image Reader-G1 / iR C5185N / / iR C5185i PRT /

1) Remove the cassette.

MEMO:
The cassette 1/2 and the pick-up unit 1/2 may also be removed in the same way.

1-1) Slide out the cassette.
2) Remove the front right cover. (page 12-14) Reference[Removing the Right Front Cover]
3) Remove the rear right cover. (page 12-14) Reference[Removing of the Right Rear Cover]
4) Remove the pickup vertical path cover [3].
- 1 screw [2] (remove the pickup vertical path lower cover [1])

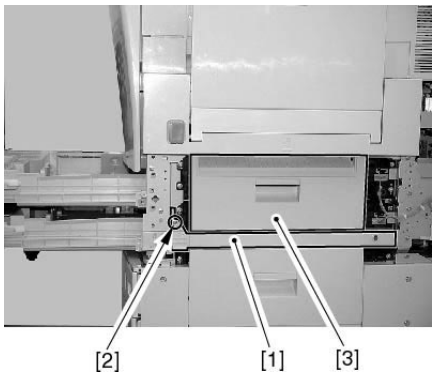

F-10-68

5) Remove the pickup unit. (page 10-25) Reference[Removing the Pickup Unit]
6) Remove the pick-up system sensor mounting plate.
6-1) Remove the bracket [2].
- 2 screws [1] at the rear

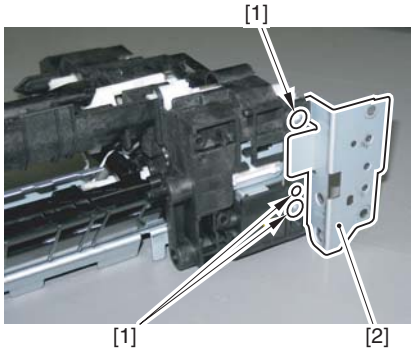

F-10-69

6-2) Remove the sensor mounting plate [5].
- connector [1]
- screw [2]
- cassette pickup solenoid [3]
- 5 screws [4]

Points to Note When Mounting the Sensor Mounting Plate
Any of the gears can drop off. When attaching the sensor mounting plate, be sure that the pickup unit will not face downward.

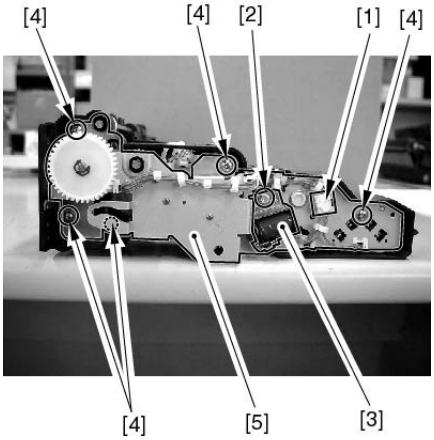

F-10-70

10.10.10.2 Removing the Cassette Retry Paper Sensor

CLC5151 / / / CLC4040 / / / iR C4580i / / / iR C4080i / / / / Color Image Reader-F1 / Color Image Reader-E1 / Dupiex Color Image Reader-G1 / iR C5185N / / iR C5185i PRT /

1) Remove the cassette retry paper sensor [2].
   - connector [1]

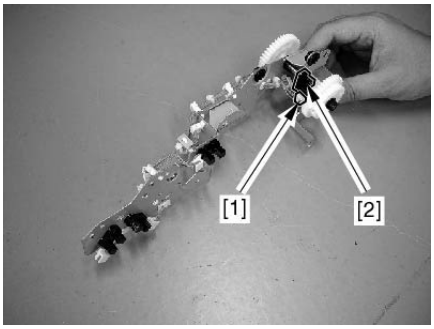

F-10-71

10.10.10.3 Points to Note When Mounting the Pickup System Sensor Mounting Plate

CLC5151 / / / CLC4040 / / / iR C4580i / / / iR C4080i / / / / Color Image Reader-F1 / Color Image Reader-E1 / Dupiex Color Image Reader-G1 / iR C5185N / / iR C5185i PRT /

Points to Note When Mounting the Sensor Mounting Plate
Any of the gears can drop off. When attaching the sensor mounting plate, be sure that the pickup unit will not face downward.

1) Remove the E-ring and the gear [1].

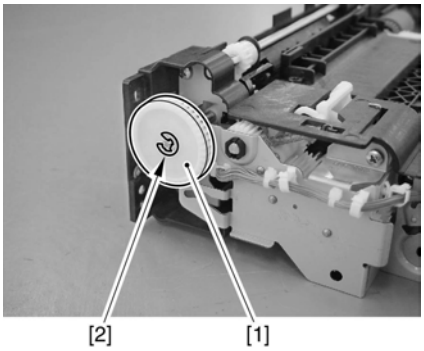

F-10-72

2) Attach the bushing [1] to the frame; then, attach the gear shaft [2].

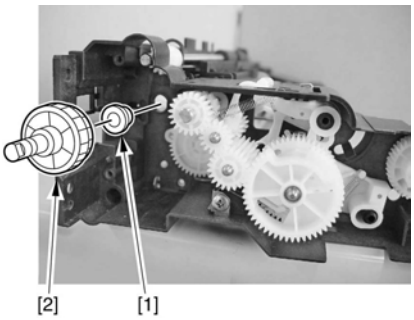

F-10-73

3) Fit the 6 locations [A] indicated in the figure firmly into the holes of the mounting plate; then, secure the sensor mounting plate [2] in place.

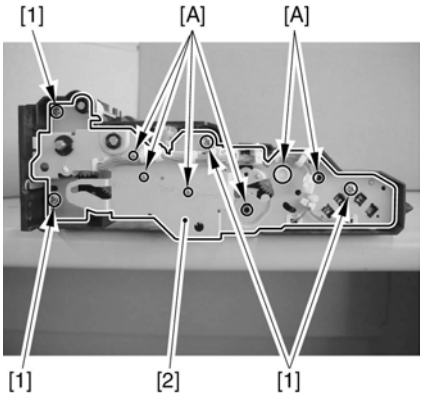

F-10-74

4) Attach the gear [1] and the E-ring [2].

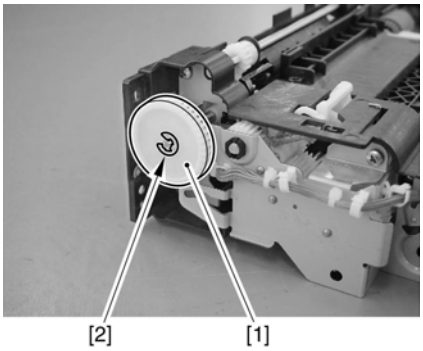

F-10-75

5) Turn the gears to see that the movement is smooth.

10.10.11 Cassette Paper Sensor

10.10.11.1 Preparation for Removing the Cassette Paper Sensor

CLC5151 / / / CLC4040 / / / iR C4580i / / / iR C4080i / / / / Color Image Reader-F1 / Color Image Reader-E1 / Dupiex Color Image Reader-G1 / iR C5185N / / iR C5185i PRT /

1) Remove the cassette.

MEMO:
The cassette 1/2 and the pick-up unit 1/2 may also be removed in the same way.

1-1) Slide out the cassette.
2) Remove the front right cover. (page 12-14)Reference[Removing the Right Front Cover]
3) Remove the rear right cover. (page 12-14)Reference[Removing of the Right Rear Cover]
4) Remove the pickup vertical path cover [3].
   - 1 screw [2] (remove the pickup vertical path lower cover [1])

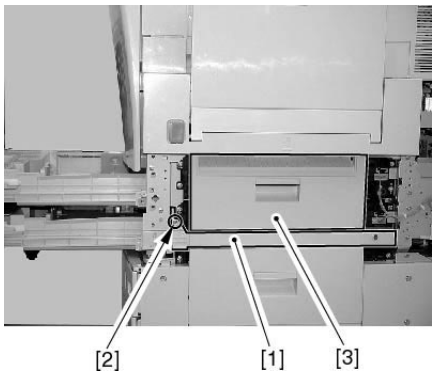

F-10-76

5) Remove the pickup unit. (page 10-25) Reference[Removing the Pickup Unit]
6) Remove the pick-up system sensor mounting plate.
6-1) Remove the bracket [2].
- 2 screws [1] at the rear

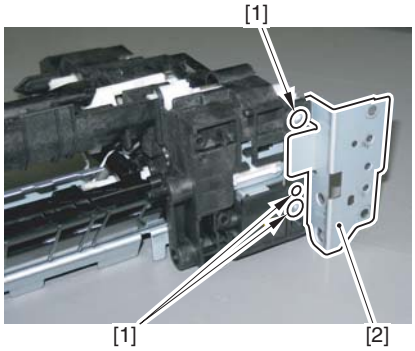

F-10-77

6-2) Remove the sensor mounting plate [5].
- connector [1]
- screw [2]
- cassette pickup solenoid [3]
- 5 screws [4]

Points to Note When Mounting the Sensor Mounting Plate
Any of the gears can drop off. When attaching the sensor mounting plate, be sure that the pickup unit will not face downward.

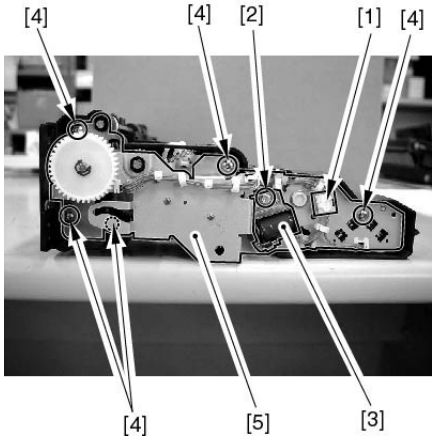

F-10-78

10.10.11.2 Removing the Cassette Paper Sensor

CLC5151 / / / CLC4040 / / / iR C4580i / / / iR C4080i / / / / Color Image Reader-F1 / Color Image Reader-E1 / Dupiex Color Image Reader-G1 / iR C5185N / / iR C5185i PRT /

1) Remove the cassette paper sensor [2].
- connector [1]

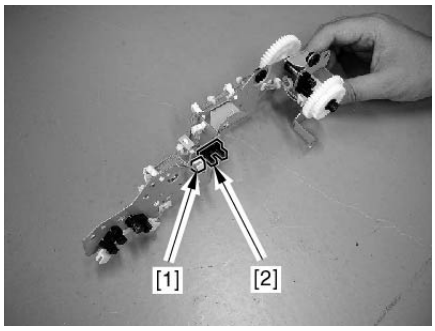

F-10-79

10.10.11.3 Points to Note When Mounting the Pickup System Sensor Mounting Plate

CLC5151 / / / CLC4040 / / / iR C4580i / / / iR C4080i / / / / Color Image Reader-F1 / Color Image Reader-E1 / Dupiex Color Image Reader-G1 / iR C5185N / / iR C5185i PRT /

Points to Note When Mounting the Sensor Mounting Plate
Any of the gears can drop off. When attaching the sensor mounting plate, be sure that the pickup unit will not face downward.

1) Remove the E-ring and the gear [1].

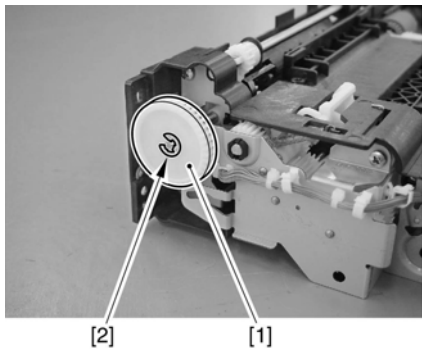

F-10-80

2) Attach the bushing [1] to the frame; then, attach the gear shaft [2].

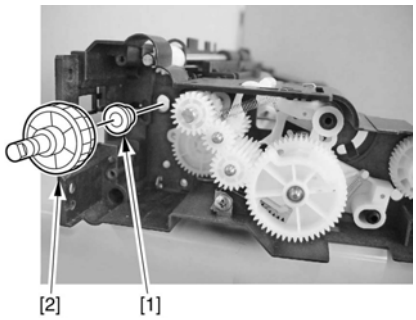

F-10-81

3) Fit the 6 locations [A] indicated in the figure firmly into the holes of the mounting plate; then, secure the sensor mounting plate [2] in place.

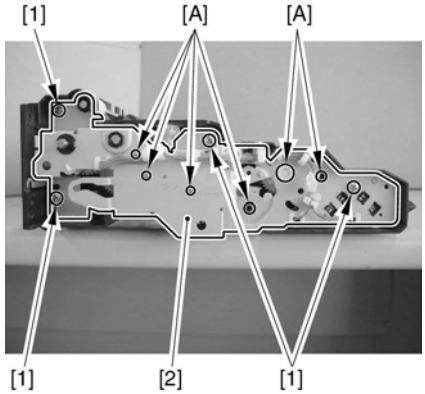

F-10-82

4) Attach the gear [1] and the E-ring [2].

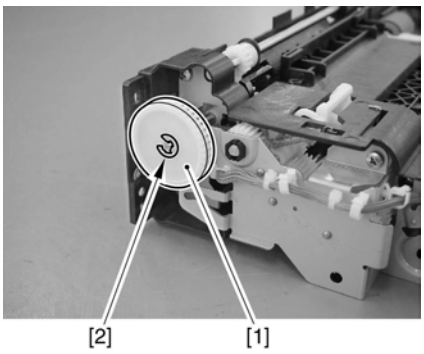

F-10-83

5) Turn the gears to see that the movement is smooth.

10.10.12 Cassette Paper Level Sensor (A/B)

10.10.12.1 Preparation for Removing the Cassette Paper Level Sensor (A/B)

CLC5151 / / / CLC4040 / / / iR C4580i / / / iR C4080i / / / / Color Image Reader-F1 / Color Image Reader-E1 / Dupiex Color Image Reader-G1 / iR C5185N / / iR C5185i PRT /

1) Remove the cassette.

MEMO:
The cassette 1/2 and the pick-up unit 1/2 may also be removed in the same way.

1-1) Slide out the cassette.
2) Remove the front right cover. (page 12-14)Reference[Removing the Right Front Cover]
3) Remove the rear right cover. (page 12-14)Reference[Removing of the Right Rear Cover]
4) Remove the pickup vertical path cover [3].
- 1 screw [2] (remove the pickup vertical path lower cover [1])

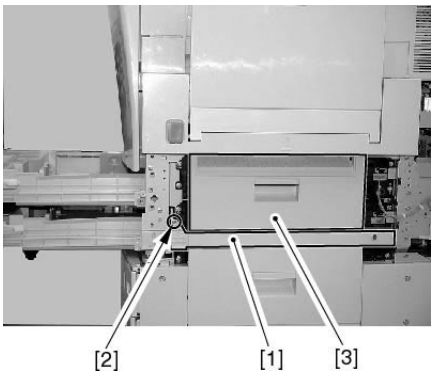

F-10-84

5) Remove the pickup unit. (page 10-25)Reference[Removing the Pickup Unit]
6) Remove the pick-up system sensor mounting plate.
6-1) Remove the bracket [2].
- 2 screws [1] at the rear

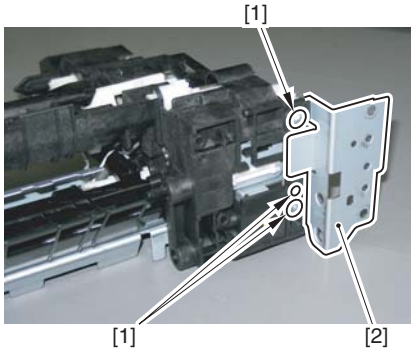

F-10-85

6-2) Remove the sensor mounting plate [5].
- connector [1]
- screw [2]
- cassette pickup solenoid [3]
- 5 screws [4]

Points to Note When Mounting the Sensor Mounting Plate
Any of the gears can drop off. When attaching the sensor mounting plate, be sure that the pickup unit will not face downward.

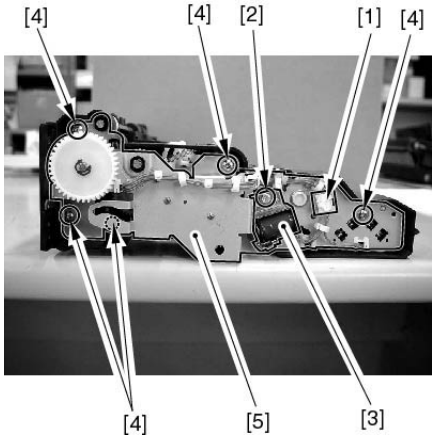

F-10-86

10.10.12.2 Removing the Cassette Paper Level Sensor (A/B)

CLC5151 / / / CLC4040 / / / iR C4580i / / / iR C4080i / / / / Color Image Reader-F1 / Color Image Reader-E1 / Dupiex Color Image Reader-G1 / iR C5185N / / iR C5185i PRT /

1) Remove the cassette paper sensor (A/B) [2].
- connector [1]

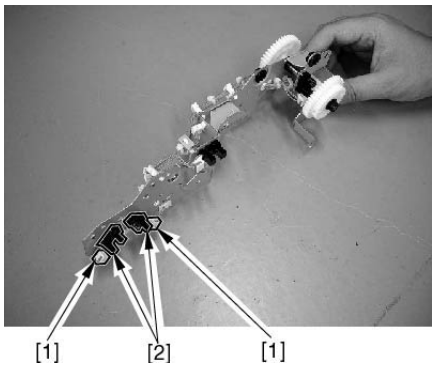

F-10-87

10.10.12.3 Points to Note When Mounting the Pickup System Sensor Mounting Plate

CLC5151 / / / CLC4040 / / / iR C4580i / / / iR C4080i / / / / Color Image Reader-F1 / Color Image Reader-E1 / Dupiex Color Image Reader-G1 / iR C5185N / / iR C5185i PRT /

Points to Note When Mounting the Sensor Mounting Plate
Any of the gears can drop off. When attaching the sensor mounting plate, be sure that the pickup unit will not face downward.

1) Remove the E-ring and the gear [1].

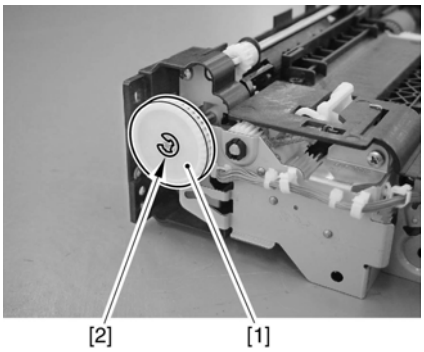

F-10-88

2) Attach the bushing [1] to the frame; then, attach the gear shaft [2].

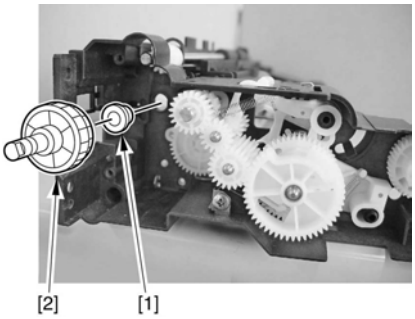

F-10-89

3) Fit the 6 locations [A] indicated in the figure firmly into the holes of the mounting plate; then, secure the sensor mounting plate [2] in place.

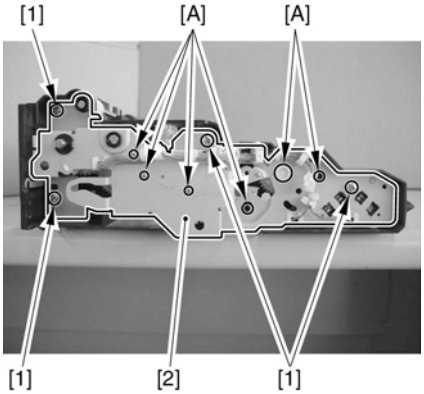

F-10-90

4) Attach the gear [1] and the E-ring [2].

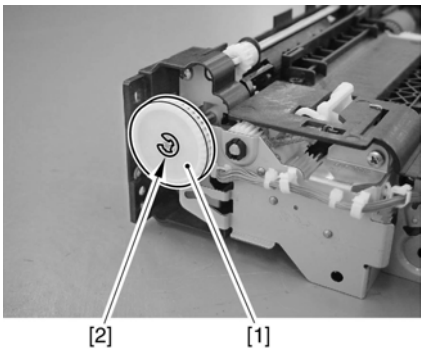

F-10-91

5) Turn the gears to see that the movement is smooth.

10.10.13 Slide Resistor

10.10.13.1 Preparation for Removing the Slide Resistor

CLC5151 / / / CLC4040 / / / iR C4580i / / / iR C4080i / / / / Color Image Reader-F1 / Color Image Reader-E1 / Dupiex Color Image Reader-G1 / iR C5185N / / iR C5185i PRT /

1) Remove the manual feed unit.(page 10-35)Reference[Removing the Manual Feed Unit]
2) Removing the manual feed tray unit.(page 10-34)Reference[Removing the Manual Feed Tray Unit]
3) Remove the manual feed tray upper cover/lower cover.
3-1) Spread the side guide [1] of the manual feed tray unit, and remove the upper cover [2].

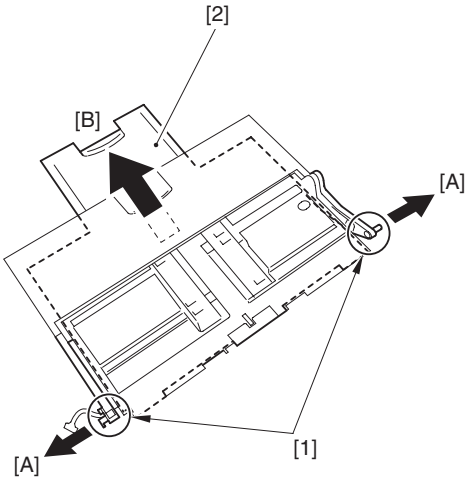

F-10-92

MEMO:
When attaching the upper cover [1] and the lower cover [2], match the markings [A] found on the side, and move them into place.

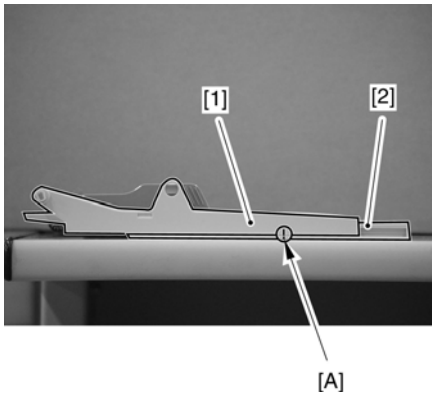

F-10-93

10.10.13.2 Removing the Slide Resistor

CLC5151 / / / CLC4040 / / / iR C4580i / / / iR C4080i / / / / Color Image Reader-F1 / Color Image Reader-E1 / Dupiex Color Image Reader-G1 / iR C5185N / / iR C5185i PRT /

⚠Points to Note Removing the Slide Resistor
When removing the slide resistor, do not apply excess force when spreading the claw of the lower cover; otherwise, the claw can break.
When attaching the slide resistor, take care not to touch the connector [1] at the edge of the slide resistor. Try to match the black protrusion [A] behind the slide resistor against the hole [A] in the tray.

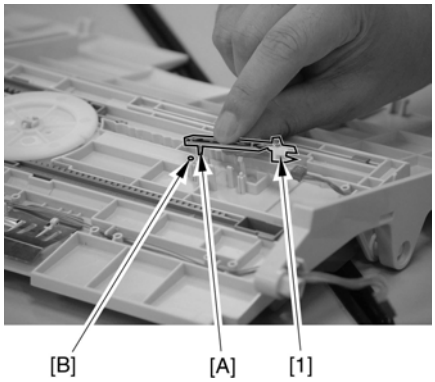

F-10-94

1) Spread the claw [A], and detach the slide resistor [2].

- connector [1] on the lower cover side

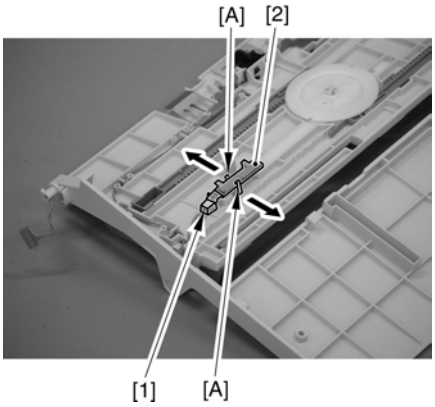

F-10-95

10.10.14 Cassette Pickup Solenoid

10.10.14.1 Preparation for Removing the Cassette Pickup Solenoid

CLC5151 / / / CLC4040 / / / iR C4580i / / / iR C4080i / / / / Color Image Reader-F1 / Color Image Reader-E1 / Dupiex Color Image Reader-G1 / iR C5185N / / iR C5185i PRT /

1) Remove the cassette.

MEMO:
The cassette 1/2 and the pick-up unit 1/2 may also be removed in the same way.

1-1) Slide out the cassette.
2) Remove the front right cover. (page 12-14)Reference[Removing the Right Front Cover]
3) Remove the rear right cover. (page 12-14)Reference[Removing of the Right Rear Cover]
4) Remove the pickup vertical path cover [3].
   - 1 screw [2] (remove the pickup vertical path lower cover [1])

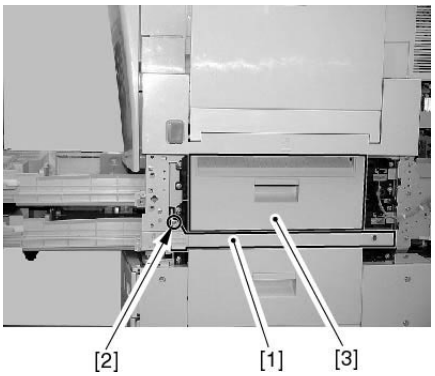

F-10-96

5) Remove the pickup unit. (page 10-25)Reference[Removing the Pickup Unit]

10.10.14.2 Removing the Cassette Pickup Solenoid

CLC5151 / / / CLC4040 / / / iR C4580i / / / iR C4080i / / / / Color Image Reader-F1 / Color Image Reader-E1 / Dupiex Color Image Reader-G1 / iR C5185N / / iR C5185i PRT /

1) Remove the cassette pickup solenoid [3].
   - connector [1]
   - 2 screws [2]

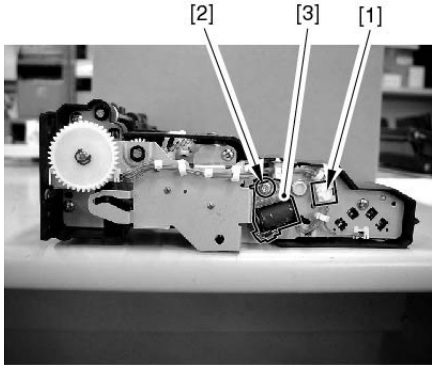

F-10-97

10.10.15 Manual Feed Tray Unit

10.10.15.1 Preparation for Removing the Manual Feed Tray Unit

CLC5151 / / / CLC4040 / / / iR C4580i / / / iR C4080i / / / / Color Image Reader-F1 / Color Image Reader-E1 / Dupiex Color Image Reader-G1 / iR C5185N / / iR C5185i PRT /

1) Remove the manual feed unit. (page 10-35)Reference[Removing the Manual Feed Unit]
1-2) Remove the manual feed unit cover. (page 12-19)Reference[Removing the Manual Feed Unit Cover]

10.10.15.2 Removing the Manual Feed Tray Unit

CLC5151 / / / CLC4040 / / / iR C4580i / / / iR C4080i / / / / Color Image Reader-F1 / Color Image Reader-E1 / Dupiex Color Image Reader-G1 / iR C5185N / / iR C5185i PRT /

1) Remove the base [2].
   - 3 screws [1]

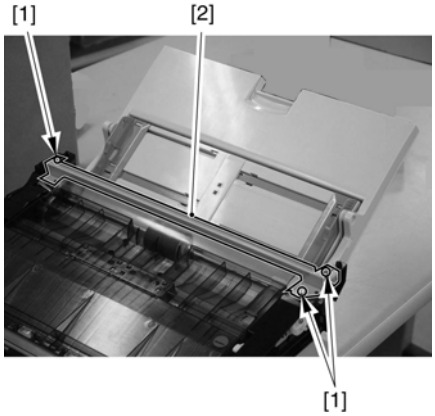

F-10-98

2) Remove the motor cover [2].
   - 1 screw [1]

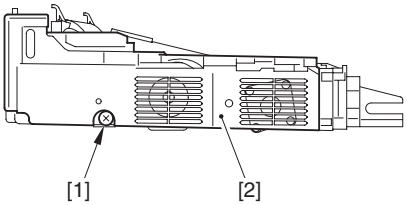

F-10-99

3) While opening the face plate [2], shift the manual feed tray [3] 90 deg or more to detach it upward.
   - 1 connector [1] at the rear

When detaching the face plate, take care not to lose the spring attached to the front.

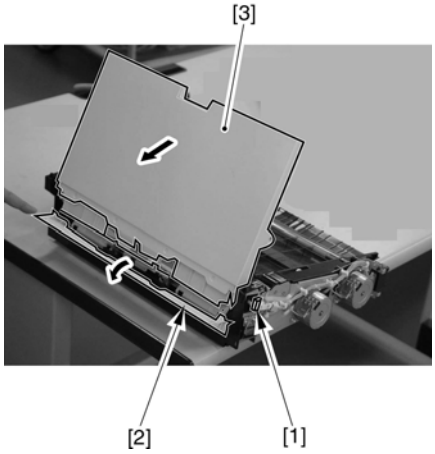

F-10-100

10.10.16 Manual Feed Unit

10.10.16.1 Removing the Manual Feed Unit

CLC5151 / / / CLC4040 / / / iR C4580i / / / iR C4080i / / / / Color Image Reader-F1 / Color Image Reader-E1 / Dupiex Color Image Reader-G1 / iR C5185N / / iR C5185i PRT /

1) Press the release button [1] on the machine's right side to slide out the manual feed unit [2].

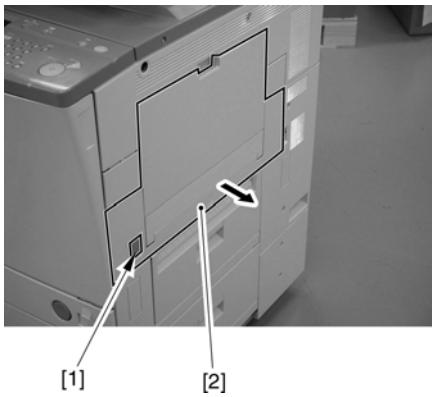

F-10-101

2) Remove the manual feed unit [3].
   - screw [1]
   - stopper plate [2]

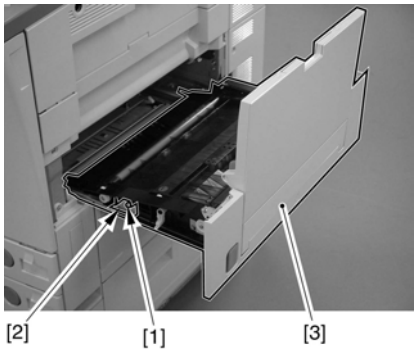

F-10-102

10.10.17 Manual Feed Roller

10.10.17.1 Preparation for Removing the Manual Feed Roller

CLC5151 / / / CLC4040 / / / iR C4580i / / / iR C4080i / / / / Color Image Reader-F1 / Color Image Reader-E1 / Dupiex Color Image Reader-G1 / iR C5185N / / iR C5185i PRT /

1) Remove the manual feed unit. (page 10-35)Reference[Removing the Manual Feed Unit]
2) Remove the manual feed unit cover. (page 12-19)Reference[Removing the Manual Feed Unit Cover]

10.10.17.2 Removing the Manual Feed Roller

CLC5151 / / / CLC4040 / / / iR C4580i / / / iR C4080i / / / / Color Image Reader-F1 / Color Image Reader-E1 / Dupiex Color Image Reader-G1 / iR C5185N / / iR C5185i PRT /

1) Remove the mounting plate [2].
   - 3 screws [1]

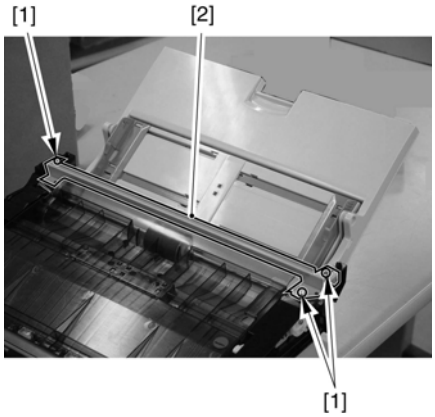

F-10-103

2) Remove the bushing [2].
   - gear [1] at the front
   (For both gear and the bushing, free the claw fitted in the groove of the roller for detachment.)

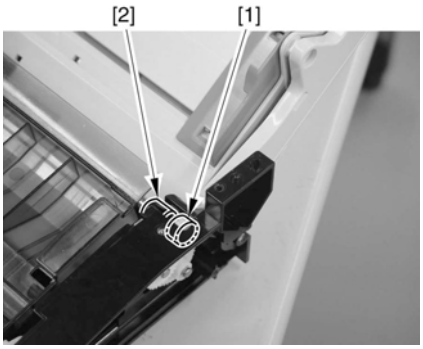

F-10-104

3) Push in the bearing [1] found at the rear to detach.

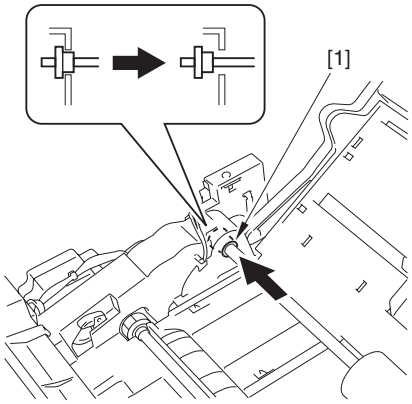

F-10-105

4) Pull out the manual feed roller [2].
   - resin clamp [1]

When attaching the manual feed roller, be sure that the groove of the parallel pin is toward the rear.

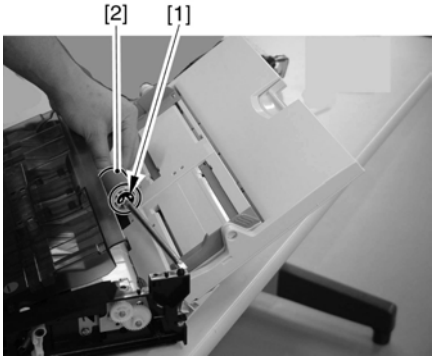

F-10-106

When attaching the bushing and the gear at the front, check to be sure that the claw is hooked on the groove of the roller.

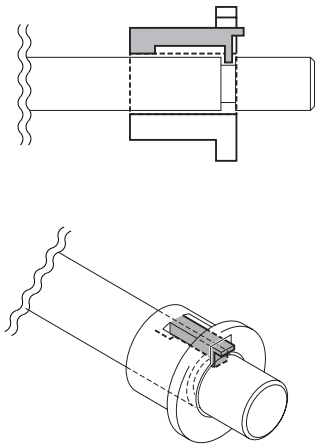

F-10-107

10.10.18 Manual Feed Separation Roller

10.10.18.1 Preparation for Removing the Manual Feed Separation Roller

CLC5151 / / / CLC4040 / / / iR C4580i / / / iR C4080i / / / / Color Image Reader-F1 / Color Image Reader-E1 / Dupiex Color Image Reader-G1 / iR C5185N / / iR C5185i PRT /

1) Remove the manual feed unit. (page 10-35) Reference[Removing the Manual Feed Unit]
2) Remove the manual feed unit cover. (page 12-19) Reference[Removing the Manual Feed Unit Cover]
3) Remove the motor cover.
3-1) Remove the motor cover [2] at the rear.
- 1 screw [1]

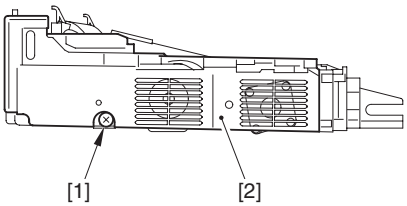

F-10-108

4) Remove the manual feed roller. (page 10-35) Reference[Removing the Manual Feed Roller]
5) Remove the manual feed tray unit. (page 10-34) Reference[Removing the Manual Feed Tray Unit]

10.10.18.2 Removing the Manual Feed Separation Roller

CLC5151 / / / CLC4040 / / / iR C4580i / / / iR C4080i / / / / Color Image Reader-F1 / Color Image Reader-E1 / Dupiex Color Image Reader-G1 / iR C5185N / / iR C5185i PRT /

1) Remove the face plate [1].

Take care not to lose the spring found at the front when removing the face plate.

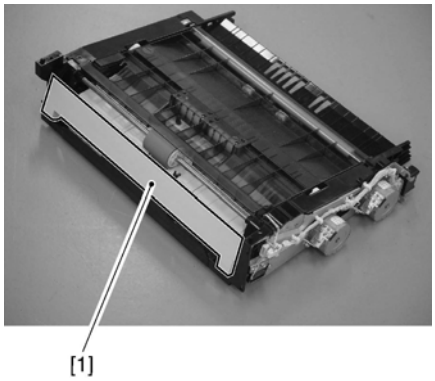

F-10-109

When attaching the face plate, be sure that the spring [2] fits into the hole [1] found on the front side of the arm.

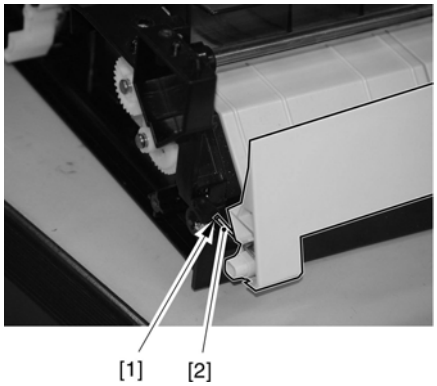

F-10-110

2) Remove the rear guide [1] and the middle guide [2]. (Free the snap-in claw.)

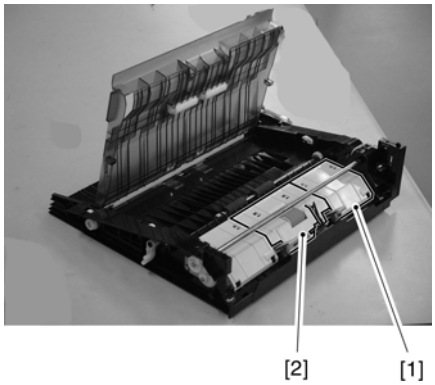

F-10-111

3) Pick the tab [A] of the manual feed separation roller [2], and pull it out in the direction of the arrow.

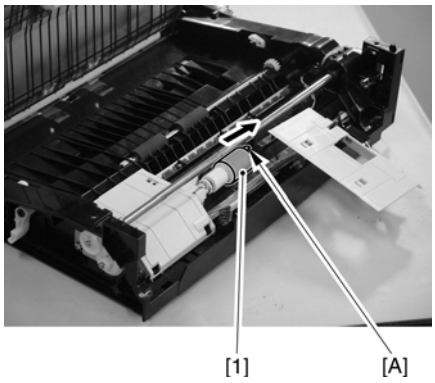

F-10-112

10.10.19 Manual Feed Last Paper Sensor

10.10.19.1 Preparation for Removing the Manual Feed Last Paper Sensor

CLC5151 / / / CLC4040 / / / iR C4580i / / / iR C4080i / / / / Color Image Reader-F1 / Color Image Reader-E1 / Dupiex Color Image Reader-G1 / iR C5185N / / iR C5185i PRT /

1) Remove the manual feed unit. (page 10-35)Reference[Removing the Manual Feed Unit]
2) Remove the manual feed unit cover. (page 12-19)Reference[Removing the Manual Feed Unit Cover]
3) Removing the manual feed tray unit. (page 10-34)Reference[Removing the Manual Feed Tray Unit]
4) Remove the manual feed tray upper cover/lower cover.
4-1) Spread the side guide [1] of the manual feed tray unit, and separate it into the upper cover [2] and the lower cover [3] (for detachment).

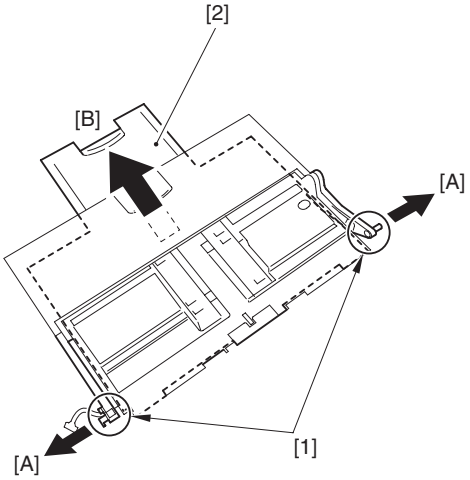

F-10-113

MEMO:
When attaching the upper cover [1] and the lower cover [2], match the markings [A] found on the side, and move them into place.

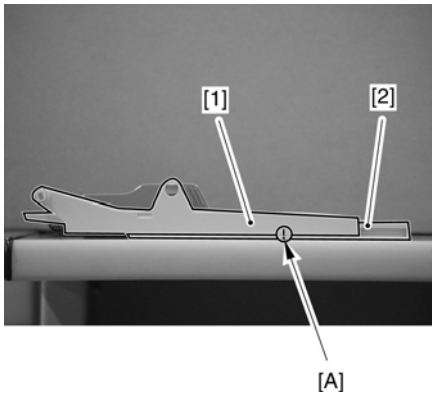

F-10-114

10.10.19.2 Removing the Manual Feed Last Paper Sensor

CLC5151 / / / CLC4040 / / / iR C4580i / / / iR C4080i / / / / Color Image Reader-F1 / Color Image Reader-E1 / Dupiex Color Image Reader-G1 / iR C5185N / / iR C5185i PRT /

1) Rremove the detecting roll [1].

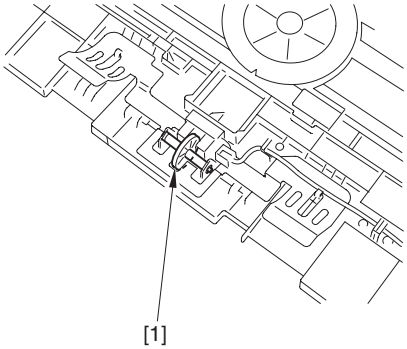

F-10-115

2) Remove the manual feed last paper sensor [2].
- connector [1]

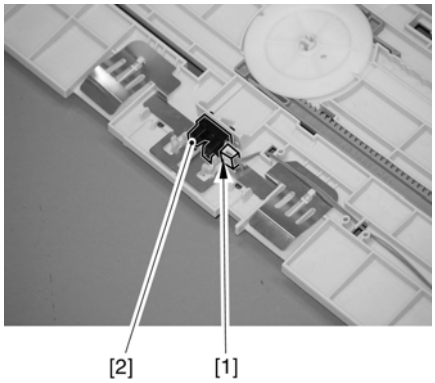

F-10-116

10.10.20 Manual Feed Sensor

10.10.20.1 Preparation for Removing the Manual Feed sensor

CLC5151 / / / CLC4040 / / / iR C4580i / / / iR C4080i / / / / Color Image Reader-F1 / Color Image Reader-E1 / Dupiex Color Image Reader-G1 / iR C5185N / / iR C5185i PRT /

1) Remove the manual feed unit. (page 10-35)Reference[Removing the Manual Feed Unit]
2) Remove the manual feed unit cover. (page 12-19)Reference[Removing the Manual Feed Unit Cover]
3) Remove the manual feed roller. (page 10-35)Reference[Removing the Manual Feed Roller]
4) Remove the motor cover.
4-1) Remove the motor cover [2] at the rear.
- screw [1]

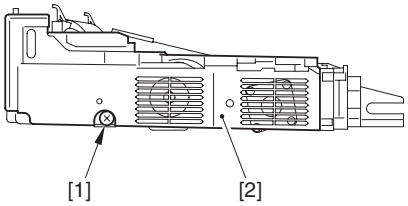

F-10-117

5) Remove the manual feeder tray unit.(page 10-34)Reference[Removing the Manual Feed Tray Unit]

10.10.20.2 Removing the Manual Feed sensor

CLC5151 / / / CLC4040 / / / iR C4580i / / / iR C4080i / / / / Color Image Reader-F1 / Color Image Reader-E1 / Dupiex Color Image Reader-G1 / iR C5185N / / iR C5185i PRT /

1) Remove the face plate [1].

Take care not to lose the spring found at the front when removing the face plate.

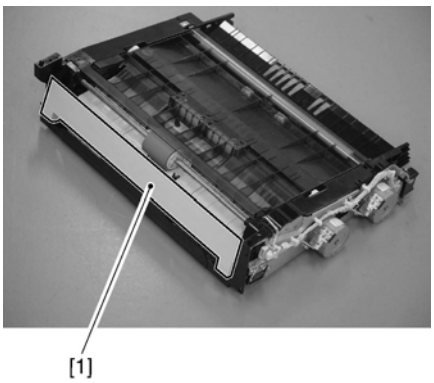

F-10-118

When attaching the face plate, be sure that the spring [2] fits into the hole [1] found on the front side of the arm.

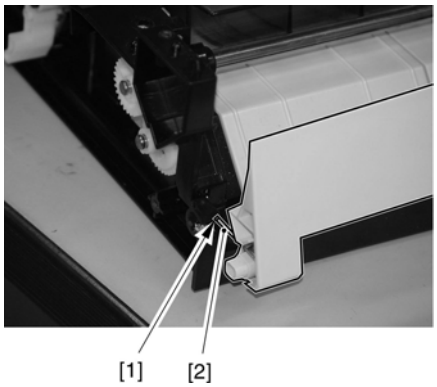

F-10-119

2) Remove the rear guide [1] and the middle guide [2]. (Free the snap-in claw.)

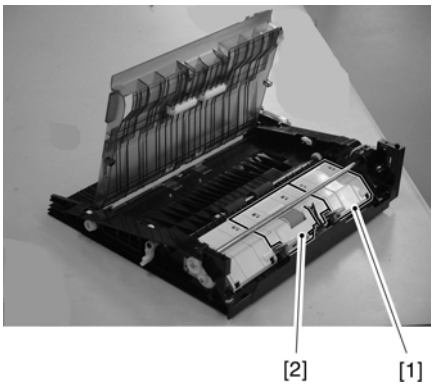

F-10-120

3) Remove the sensor flag [2] attached to the middle guide [1].

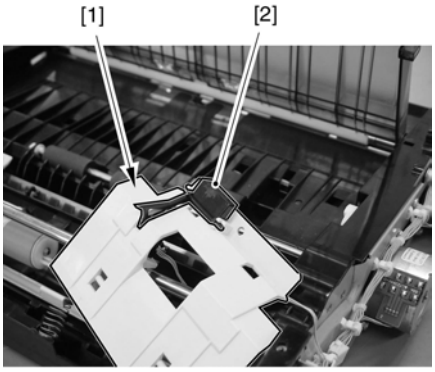

F-10-121

4) Remove the manual feed paper sensor [2].
- connector [1] from behind the middle guide

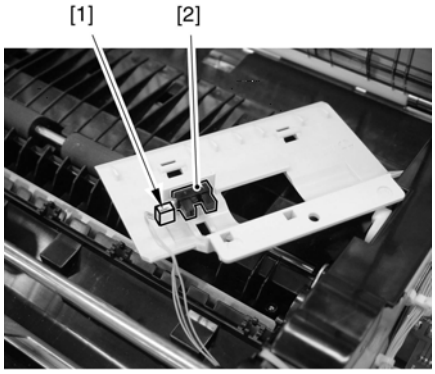

F-10-122

10.10.21 Transparency Sensor (Front/Rear)

10.10.21.1 Preparation for Removing the Transparency Sensor (front/rear)

CLC5151 / / / CLC4040 / / / iR C4580i / / / iR C4080i / / / / Color Image Reader-F1 / Color Image Reader-E1 / Dupiex Color Image Reader-G1 / iR C5185N / / iR C5185i PRT /

1) Remove the manual feed unit. (page 10-35)Reference[Removing the Manual Feed Unit]
2) Remove the transparency sensor mounting Plate.
2-1) Remove the sensor base [3] found at the bottom.
- 3 connectors [1]
- 2 screws [2]

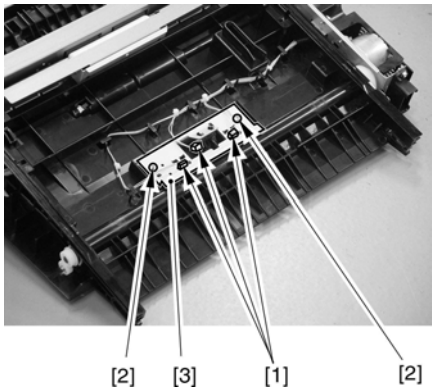

F-10-123

10.10.21.2 Removing the Transparency Sensor (front/rear)

CLC5151 / / / CLC4040 / / / iR C4580i / / / iR C4080i / / / / Color Image Reader-F1 / Color Image Reader-E1 / Dupiex Color Image Reader-G1 / iR C5185N / / iR C5185i PRT /

1) While taking care not to touch the light-emitting face, remove the transparency sensor [1].

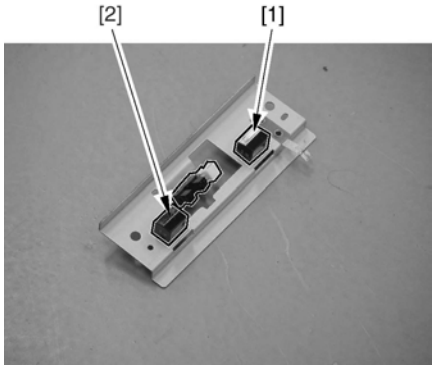

F-10-124

10.10.2 ual Feed Pickup So id

10.10.2 .1 Preparation for Remo the Ma Pickup Solenoid

CL 51 / / / CLC4040 / / / iR C4580i / C4080i
P -F1 / Color Image Reader-E1 / Du lor Ima
N / / iR C5185i PRT /

1) ove the manual feed unit. (page) Refer
nual Feed Unit]
2) ove the manual feed unit cover. (p -19) R
Manual Feed Unit Cover]
3) ove the motor cover.
3-1) Remove the motor cover [2] at the rea
- screw [1]

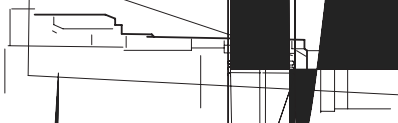

F-10-125

0.10.22.2 Removing the Manual Feed Pickup Solenoid

LC5151 / / / CLC4040 / / / iR C4580i / / / iR C4080i / / / / Color Image Reader-F1 / Color Image Reader-E1 / Dupiex Color Image Reader-G1 / iR C5185N / / iR C518 i PRT /

1) Remove the man l feed pickup solenoid [3].
- connector [1]
- screw [2]

F-10-126

Points to N hen Attaching the Manual Feed Pickup Solenoid
hen attaching olenoid [1], be sure to hook the flapper [A] on the claw of the gear [ ].

F-10-127

10.10.23 Registration Motor

10.10.23.1 Preparation for Removing the Registration Motor

CLC5151 / / / CLC4040 / / / iR C4580i / / / iR C4080i / / / / Color Image Reader-F1 / Color Image Reader-E1 / Dupiex Color Image Reader-G1 / iR C5185N / / iR C5185i PRT /

1) Remove the manual feed unit. (page 10-35) Reference[Removing the

d unit cover. (page 12-19) Reference[Removi
Cover]
.
ver [2] at the rear.

F-

th
/
Reader-F1 / Color Image Reader-E1 / Dupiex Color Image Reader-G1 / iR C5185N / / iR C5185i PRT /

1) Remove the registration motor [3].
- connector [1]
- 2 screws [2]

F-10-129

When mounting the registration motor, b ed to the gear of the motor shaft.

10.10.24 Pre-Registratio

10.10.24.1 Preparation f Removing the Pre-Registration Motor

CLC5151 / / / CLC4040 / / / iR C4580i / / / iR C4080i / / / / Color Image Reader-F1 / Color Image Reader-E1 / Dupiex Color Image Reader-G1 / iR C5185N / / iR C5185i PRT /

1) Remove the manual feed unit. (page 10-35) Refe ce[Removing the Manual Feed Unit]
2) Remove the manual feed unit cover. (page) Reference[Removing the Manual Feed Unit Cover]
3) Remove the motor cover.
3-1) Remove the motor cover [2]
- screw [1]

F-10-130

10.10.24.2 Removing the Pre-Registration Motor

CLC5151 / / / CLC4040 / / / iR C4580i / / / iR C4080i / / / / Color Image Reader-F1 / Color Image Reader-E1 / Dupiex Color Image Reader-G1 / iR C5185N / / iR C5185i PRT /

1) Remove the pre-registration motor [3].
- connector [1]
- 2 screws [2]

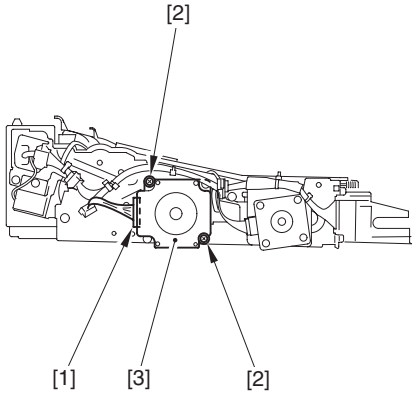

F-10-131

When mounting the registration motor, be sure that the belt is fitted to the gear of the motor shaft.

10.10.25 Horizontal Registration Motor

10.10.25.1 Preparatiuon for Removing the Horizontal Registration Motor

CLC5151 / / / CLC4040 / / / iR C4580i / / / iR C4080i / / / / Color Image Reader-F1 / Color Image Reader-E1 / Dupiex Color Image Reader-G1 / iR C5185N / / iR C5185i PRT /

1) Remove the fixing unit.
1-1) Remove the fixing drive unit.(page 11-22)Reference[Removing the Fixing Drive Unit]
1-2) Remove the fixing unit.
2) Remove the fixing/feeder unit.(page 10-41)Reference[Removing the Fixing/Feeder Unit]
3) Lift the duplexing open/close guide [3] in the direction of [A] and shift it in the direction of [B]. Then, remove it.
- 1 connector [2] (Open sheet [1].)

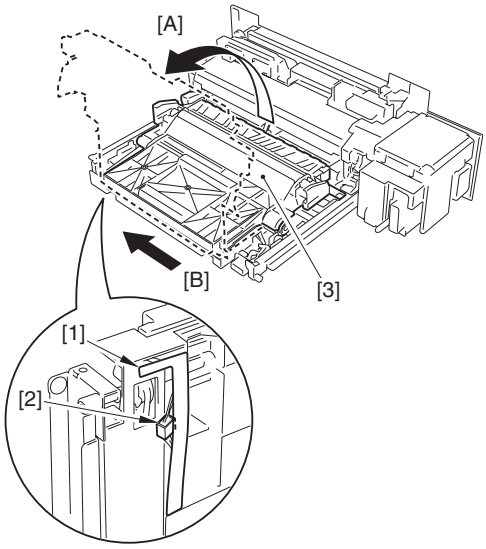

F-10-132

4) Remove the fixing/feeder assembly back sheet.
4-1) Stand it so that the fixing feeder unit cover is at the bottom.

- When placing the fixing feeder unit upright, be sure to use paper to prevent dirt from collecting.
- If you forgot to use paper, make a double-sided test copy before ending the work.

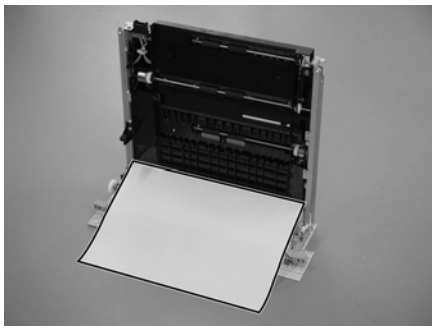

F-10-133

4-2) Remove the sheet [1] from behind the fixing feeder assembly.
- 6 snap-ons [A]
- 3 hooks [B]

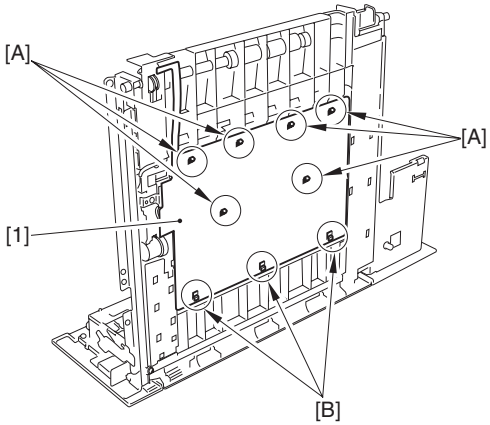

F-10-134

5) Remove the horizontal registration motor support plate [3].
- connector [1]
- 2 screws [2]

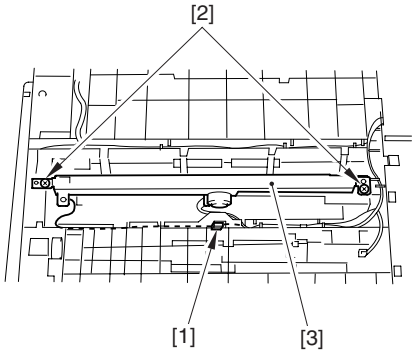

F-10-135

- When mounting to the horizontal registration motor support plate [1], be sure that the area [A] of the horizontal registration motor support plate is in firm contact with the ground spring [2] found at the bottom of the guide plate.
- After replacement, check to make sure that the sensor flag moves smoothly.

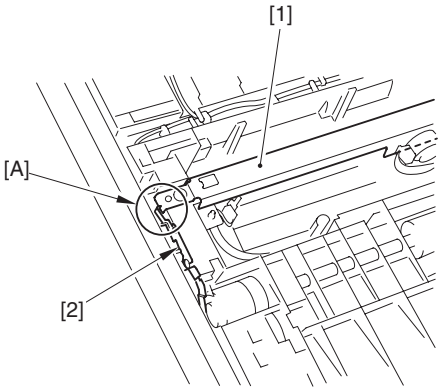

F-10-136

10.10.25.2 Removing the Horizontal Registration Motor

CLC5151 / / / CLC4040 / / / iR C4580i / / / iR C4080i / / / / Color Image Reader-F1 / Color Image Reader-E1 / Dupiex Color Image Reader-G1 / iR C5185N / / iR C5185i PRT /

1) Remove the horizontal registration motor [3].
   - connector [1]
   - 2 screws [2]

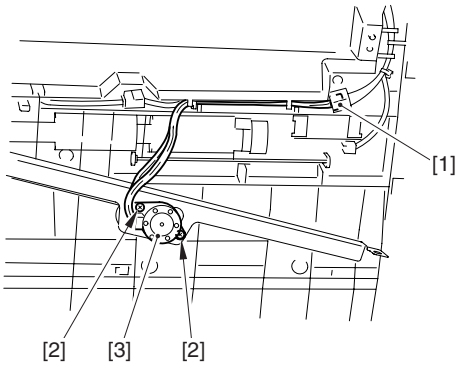

F-10-137

10.10.26 Registration Sensor

10.10.26.1 Preparation for Removing the Registration Sensor

CLC5151 / / / CLC4040 / / / iR C4580i / / / iR C4080i / / / / Color Image Reader-F1 / Color Image Reader-E1 / Dupiex Color Image Reader-G1 / iR C5185N / / iR C5185i PRT /

1) Remove the manual feed unit. (page 10-35) Reference[Removing the Manual Feed Unit]
2) Remove the transparency sensor mounting Plate.
2-1) Remove the sensor base [3] found at the bottom.
   - 3 connectors [1]
   - 2 screws [2]

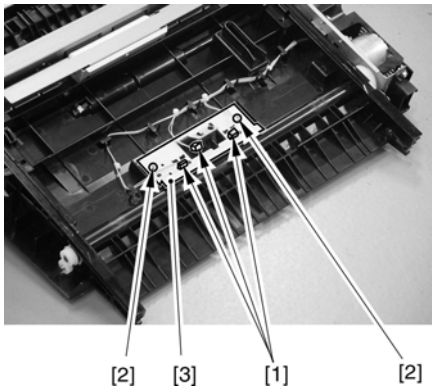

F-10-138

10.10.26.2 Removing the Registration Sensor

CLC5151 / / / CLC4040 / / / iR C4580i / / / iR C4080i / / / / Color Image Reader-F1 / Color Image Reader-E1 / Dupiex Color Image Reader-G1 / iR C5185N / / iR C5185i PRT /

1) While taking care not to touch the light-emitting face of the transparency sensor [1], remove the registration sensor [2].

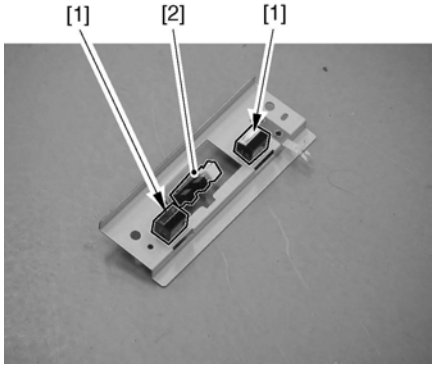

F-10-139

10.10.27 Fixing/Feeder Unit

10.10.27.1 Preparation for Removing the Fixing/Feeder Unit

CLC5151 / / / CLC4040 / / / iR C4580i / / / iR C4080i / / / / Color Image Reader-F1 / Color Image Reader-E1 / Dupiex Color Image Reader-G1 / iR C5185N / / iR C5185i PRT /

1) Remove the fixing unit.
1-1) Remove the fixing drive unit. (page 11-22) Reference[Removing the Fixing Drive Unit]
1-2) Remove the fixing unit.
2) Remove the fixing/feeder unit. (page 10-41) Reference[Removing the Fixing/Feeder Unit]

10.10.27.2 Removing the Fixing/Feeder Unit

CLC5151 / / / CLC4040 / / / iR C4580i / / / iR C4080i / / / / Color Image Reader-F1 / Color Image Reader-E1 / Dupiex Color Image Reader-G1 / iR C5185N / / iR C5185i PRT /

1) Remove the fixing/feeder unit [2].
   - 2 stoppers [1]

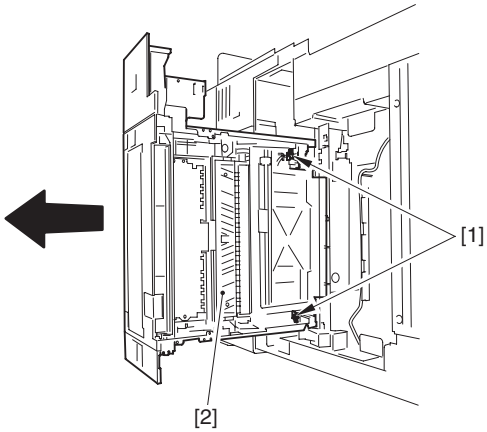

F-10-140

10.10.28 Pickup Vertical Path Roller

10.10.28.1 Preparation for Removing the Vertical Path Roller

CLC5151 / / / CLC4040 / / / iR C4580i / / / iR C4080i / / / / Color Image Reader-F1 / Color Image Reader-E1 / Dupiex Color Image Reader-G1 / iR C5185N / / iR C5185i PRT /

1) Remove the cassette.

MEMO:
The cassette 1/2 and the pick-up unit 1/2 may also be removed in the same way.

1-1) Slide out the cassette.
2) Remove the front right cover. (page 12-14) Reference[Removing the Right Front Cover]
3) Remove the rear right cover. (page 12-14) Reference[Removing of the

Right Rear Cover]
4) Remove the pickup vertical path cover [3].
- 1 screw [2] (remove the pickup vertical path lower cover [1])

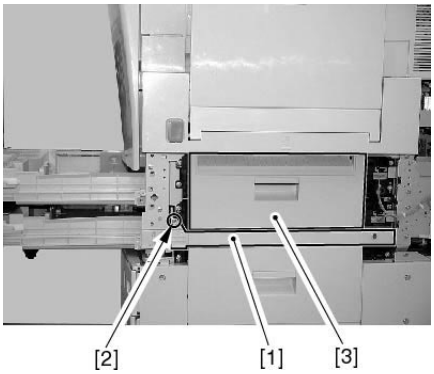

F-10-141

5) Remove the pickup unit. (page 10-25)Reference[Removing the Pickup Unit]
6) Remove the pick-up system sensor mounting plate.
6-1) Remove the bracket [2].
- 3 screws [1] at the rear

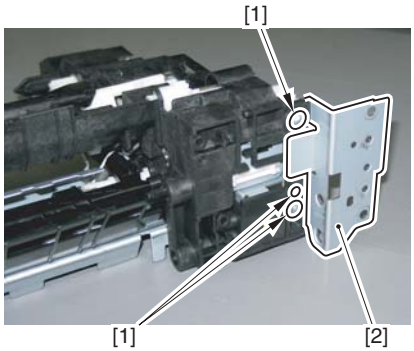

F-10-142

6-2) Remove the sensor mounting plate [5].
- connector [1]
- screw [2]
- cassette pickup solenoid [3]
- 5 screws [4]

Points to Note When Mounting the Sensor Mounting Plate
Any of the gears can drop off. When attaching the sensor mounting plate, be sure that the pickup unit will not face downward.

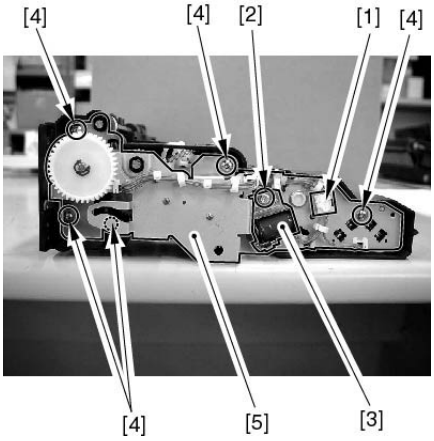

F-10-143

10.10.28.2 Removing the Vertical Path Roller

CLC5151 / / / CLC4040 / / / iR C4580i / / / iR C4080i / / / / Color Image Reader-F1 / Color Image Reader-E1 / Dupiex Color Image Reader-G1 / iR C5185N / / iR C5185i PRT /

1) Free the claw [A] of the gear [1] at the rear, and remove the gear and the bushing [2].

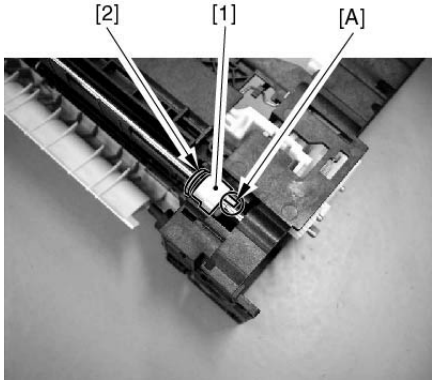

F-10-144

2) Free the claw [A] of the bushing [1] at the front; move the vertical path roller [2] to the rear and then pull it upward to remove.

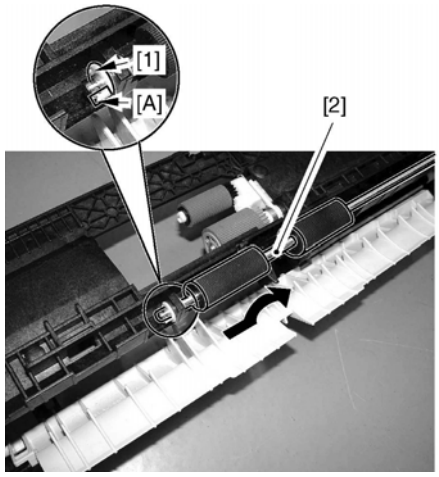

F-10-145

10.10.28.3 Points to Note When Mounting the Pickup System Sensor Mounting Plate

CLC5151 / / / CLC4040 / / / iR C4580i / / / iR C4080i / / / / Color Image Reader-F1 / Color Image Reader-E1 / Dupiex Color Image Reader-G1 / iR C5185N / / iR C5185i PRT /

Points to Note When Mounting the Sensor Mounting Plate
Any of the gears can drop off. When attaching the sensor mounting plate, be sure that the pickup unit will not face downward.

1) Remove the E-ring and the gear [1].

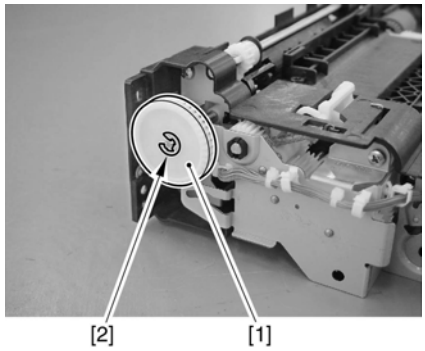

F-10-146

2) Attach the bushing [1] to the frame; then, attach the gear shaft [2].

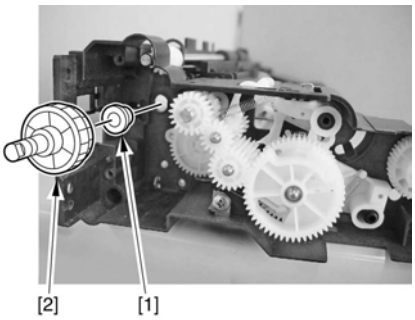

F-10-147

3) Fit the 6 locations [A] indicated in the figure firmly into the holes of the mounting plate; then, secure the sensor mounting plate [2] in place.

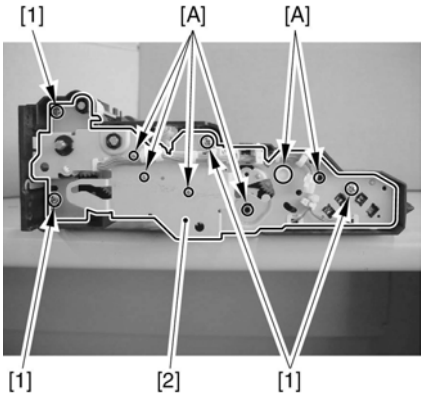

F-10-148

4) Attach the gear [1] and the E-ring [2].

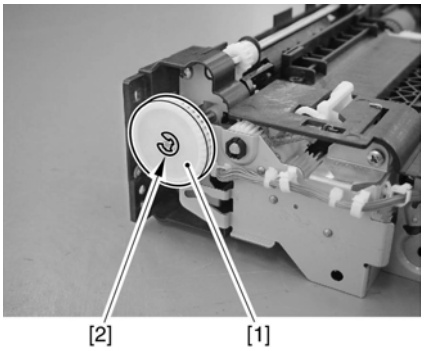

F-10-149

5) Turn the gears to see that the movement is smooth.

10.10.29 Inside Delivery Roller

10.10.29.1 Preparation for Removing the Inside Delivery Roller

CLC5151 / / / CLC4040 / / / iR C4580i / / / iR C4080i / / / / Color Image Reader-F1 / Color Image Reader-E1 / Dupiex Color Image Reader-G1 / iR C5185N / / iR C5185i PRT /

1) Remove the fixing unit.
1-1) Remove the fixing drive unit.(page 11-22)Reference[Removing the Fixing Drive Unit]
1-2) Remove the fixing unit.
2) Remove the fixing/feeder unit.(page 10-41)Reference[Removing the Fixing/Feeder Unit]

10.10.29.2 Removing the Inside Delivery Roller

CLC5151 / / / CLC4040 / / / iR C4580i / / / iR C4080i / / / / Color Image Reader-F1 / Color Image Reader-E1 / Dupiex Color Image Reader-G1 / iR C5185N / / iR C5185i PRT /

1) Open the fixing feeder unit cover.

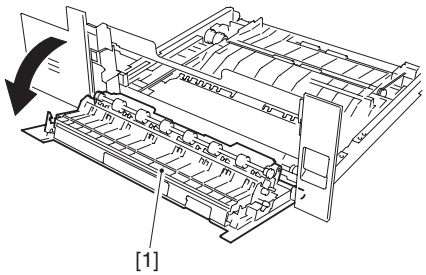

F-10-150

2) Remove the E-ring[1] and the bushing [2] at the front; then, remove the gear [3] and the bushing [4] at the rear.

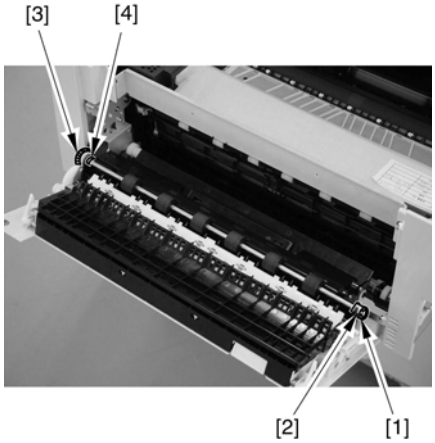

F-10-151

3) Free the internal delivery roller [1] from the cut-off of the frame at the front; then, remove it.

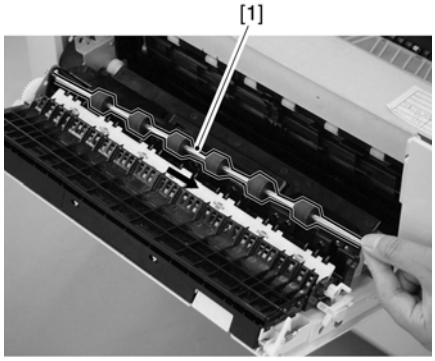

F-10-152

10.10.30 Fixing/Feeder Unit Open/Closed Sensor

10.10.30.1 Preparation for Removing the Fixing/Feeder Unit Open/Closed Sensor

CLC5151 / / / CLC4040 / / / iR C4580i / / / iR C4080i / / / / Color Image Reader-F1 / Color Image Reader-E1 / Dupiex Color Image Reader-G1 / iR C5185N / / iR C5185i PRT /

1) Remove the upper left cover. (page 12-14)Reference[Removing the Upper Left Cover]
2) Remove the center delivery tray [2].
- 2 screws [1]

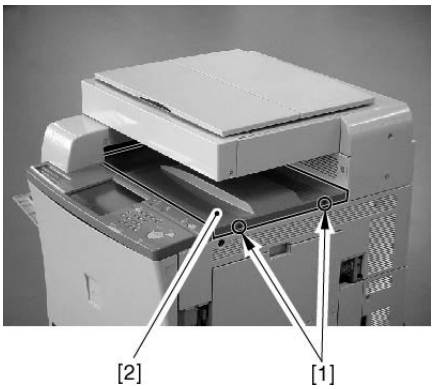

F-10-153

3) Remove the delivery vertical path unit (New). (page 10-60)Reference[Removing the Delivery Vertical Path Unit]
4) Remove the fixing/feeder unit open/closed sensor mounting plate.

Before removing the fixing/feeder unit, be sure to mark its position using a scriber.

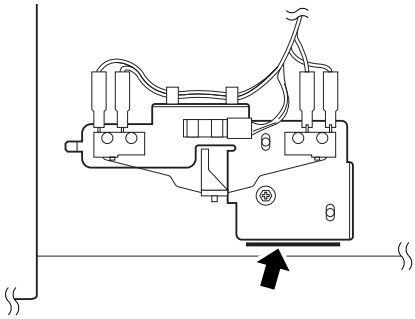

F-10-154

4-1) Remove the fixing/feeder unit open/closed sensor mounting plate [4].
- 1 connector [1]
- 1 screw [3]
- 4 terminals [2]

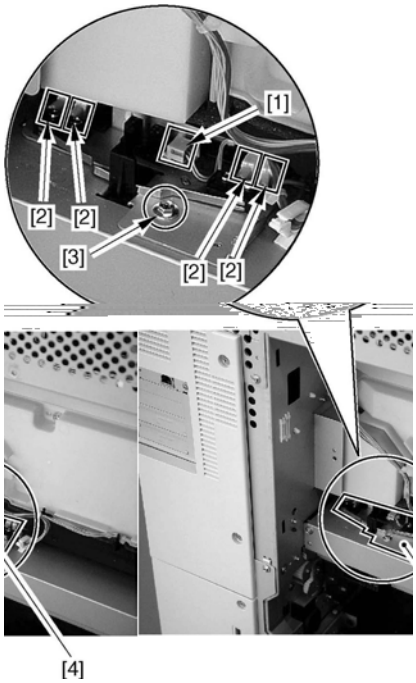

F-10-155

10.10.30.2 Removing the Fixing/Feeder Unit Open/Closed Sensor

CLC5151 / / / CLC4040 / / / iR C4580i / / / iR C4080i / / / / Color Image Reader-F1 / Color Image Reader-E1 / Dupiex Color Image Reader-G1 / iR C5185N / / iR C5185i PRT /

1) Remove the fixing/feeder open/closed sensor [1].

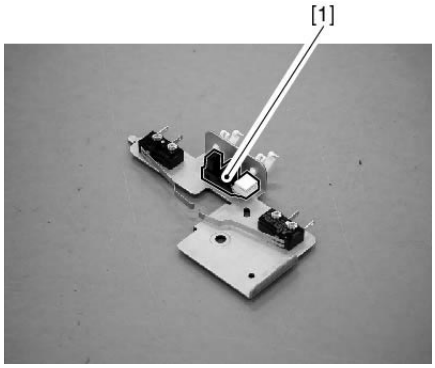

F-10-156

10.10.30.3 Preparation for Removing the Fixing Feeding Unit Open/Closed Sensor 2

CLC5151 / / / CLC4040 / / / iR C4580i / / / iR C4080i / / / / Color Image Reader-F1 / Color Image Reader-E1 / Dupiex Color Image Reader-G1 / iR C5185N / / iR C5185i PRT /

1) Remove the waste toner container.
1-1) Open the front cover, and turn the intermediate transfer unit release lever [1] to disengage.

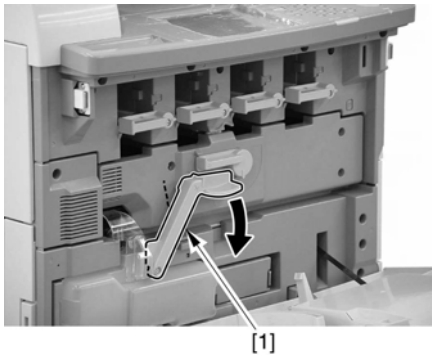

F-10-157

1-2) Remove the waste toner container [1].

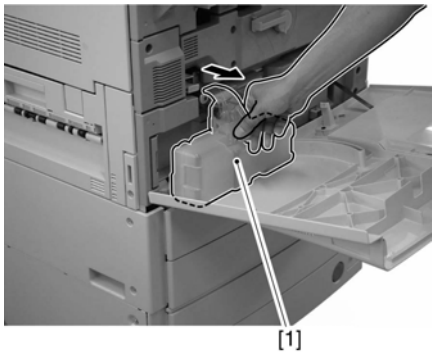

F-10-158

2) Remove the front cover. (page 12-14)Reference[Removing the Front Cover]
3) Remove the intermediate transfer unit releasing lever [2].
- 1 screw [1]

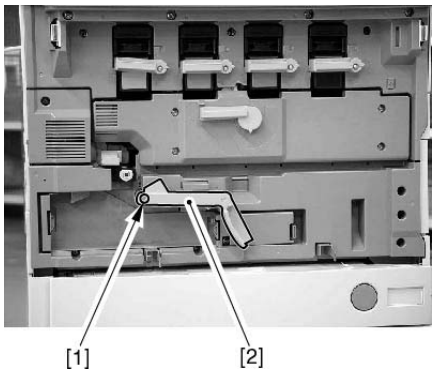

F-10-159

4) Remove the cleaner fan cover [2].
- 1 screw [1]

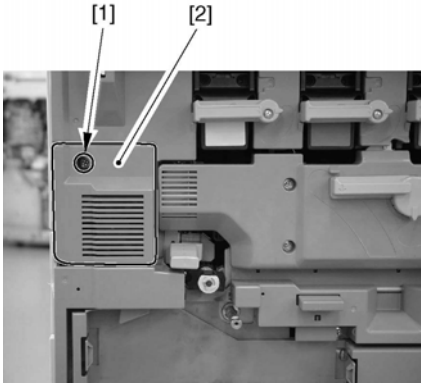

F-10-160

5) Remove the inside cover (lower) [3].
- 1 connector [1]
- 5 screws [2]

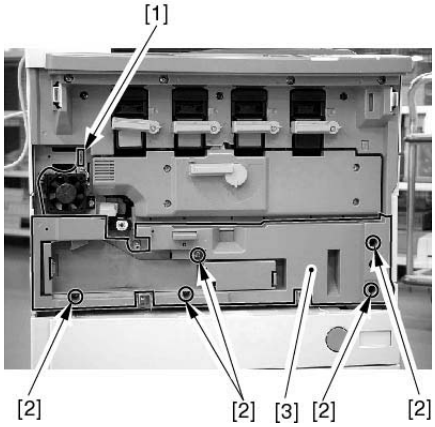

F-10-161

10.10.30.4 Removing the Fixing Feeding Unit Open/ Closed Sensor 2

CLC5151 / / / CLC4040 / / / iR C4580i / / / iR C4080i / / / / Color Image Reader-F1 / Color Image Reader-E1 / Dupiex Color Image Reader-G1 / iR C5185N / / iR C5185i PRT /

1) Remove the fixing feeding unit open/closed sensor 2 mounting plate [4].
- 1 edge saddle [1]
- 1 connector [2]
- 2 screws [3]

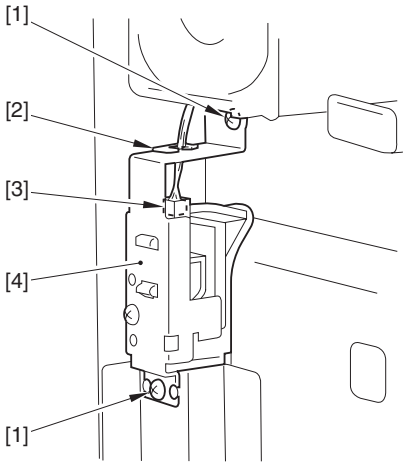

F-10-162

Points to Note When Removing the Sensor Cover
When removing the sensor cover, be sure to take care so that the sensor flag and the spring found on the inside the sensor cover will not snap out.

2) Remove the sensor cover [2].
- 1 screw [1]

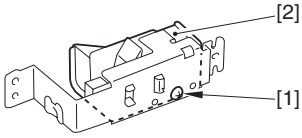

F-10-163

3) Remove the fixing feeding unit open/close sensor 2 [1].

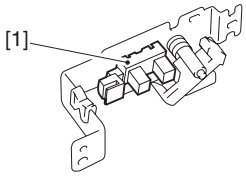

F-10-164

10.10.31 Fixing Arching Sensor

10.10.31.1 Preparation forÅ@Removing the Fixing Arching Sensor

CLC5151 / / / CLC4040 / / / iR C4580i / / / iR C4080i / / / / Color Image Reader-F1 / Color Image Reader-E1 / Dupiex Color Image Reader-G1 / iR C5185N / / iR C5185i PRT /

1) Remove the fixing unit.
1-1) Remove the fixing drive unit.(page 11-22)Reference[Removing the Fixing Drive Unit]
1-2) Remove the fixing unit.
2) Remove the fixing/feeder unit.(page 10-41)Reference[Removing the Fixing/Feeder Unit]

10.10.31.2 Removing the Fixing Aching Sensor

CLC5151 / / / CLC4040 / / / iR C4580i / / / iR C4080i / / / / Color Image Reader-F1 / Color Image Reader-E1 / Dupiex Color Image Reader-G1 / iR C5185N / / iR C5185i PRT /

1) Lift the secondary transfer unit [1], and remove the fixing arching sensor mounting plate [4].
-Å@1 connector [1]
-Å@1 screw [2]

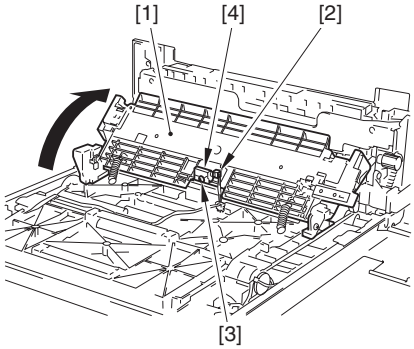

F-10-165

2) Remove the Fixing Arching Sensor.

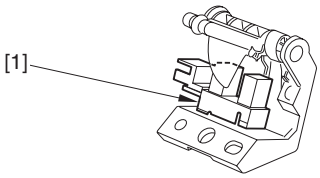

F-10-166

10.10.32 Pickup Vertical Path Cover Open/Closed Sensor

10.10.32.1 Preparation for Removing the Pickup Vertical Path Cover Open/Closed Sensor

CLC5151 / / / CLC4040 / / / iR C4580i / / / iR C4080i / / / / Color Image Reader-F1 / Color Image Reader-E1 / Dupiex Color Image Reader-G1 / iR C5185N / / iR C5185i PRT /

1) Remove the cassette.

MEMO:
The cassette 1/2 and the pick-up unit 1/2 may also be removed in the same way.

1-1) Slide out the cassette.
2) Remove the front right cover. (page 12-14)Reference[Removing the Right Front Cover]
3) Remove the rear right cover. (page 12-14)Reference[Removing of the Right Rear Cover]
4) Remove the pickup vertical path cover [3].
   - 1 screw [2] (remove the pickup vertical path lower cover [1])

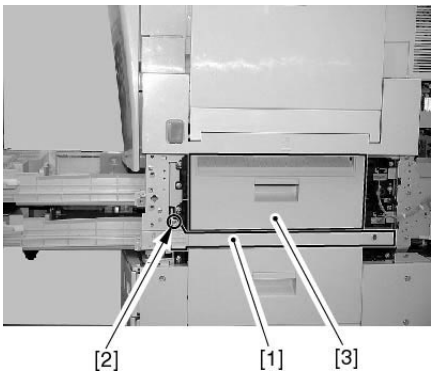

F-10-167

5) Remove the pickup unit [3]. (page 10-25)Reference[Removing the Pickup Unit]

10.10.32.2 Removing the Pickup Vertical Path Cover Open/Closed Sensor

CLC5151 / / / CLC4040 / / / iR C4580i / / / iR C4080i / / / / Color Image Reader-F1 / Color Image Reader-E1 / Dupiex Color Image Reader-G1 / iR C5185N / / iR C5185i PRT /

1) Remove the sensor mounting plate [3].
   - connector [1]
   - screw [2]

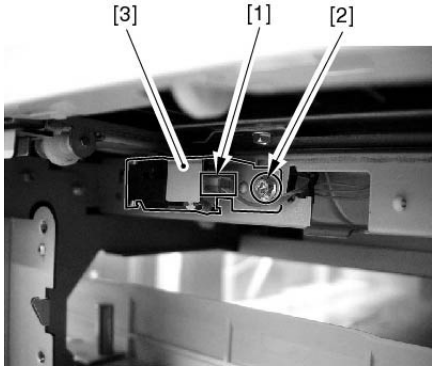

F-10-168

2) Remove the sensor flag [2].
   - spring [1]

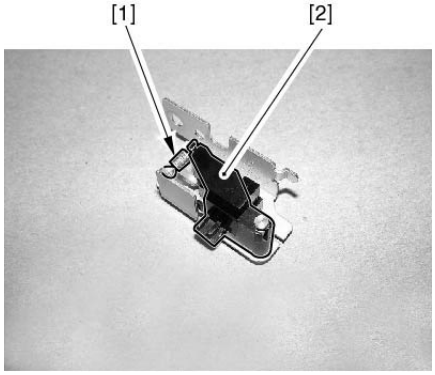

F-10-169

3) Remove the pickup vertical path cover open/closed sensor [1].

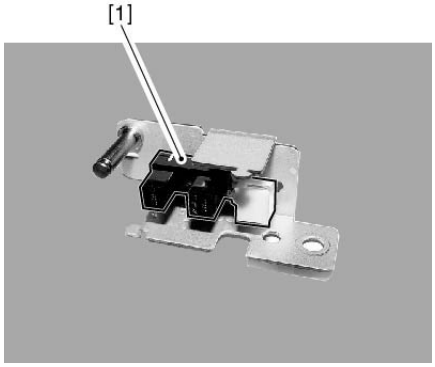

F-10-170

10.10.33 Fixing/Feeder Unit Open/Closed Detecting Switch

10.10.33.1 Preparation for Removing the Fixing/Feeder Unit Open/Closed Detecting Switch

CLC5151 / / / CLC4040 / / / iR C4580i / / / iR C4080i / / / / Color Image Reader-F1 / Color Image Reader-E1 / Dupiex Color Image Reader-G1 / iR C5185N / / iR C5185i PRT /

1) Remove the upper left cover. (page 12-14)Reference[Removing the Upper Left Cover]
2) Remove the center delivery tray [2].
   - 2 screws [1]

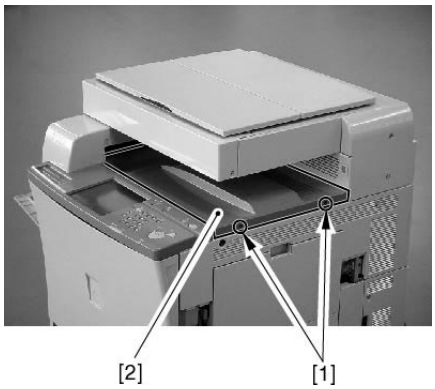

F-10-171

3) Remove the delivery vertical path unit (New). (page 10-60)Reference[Removing the Delivery Vertical Path Unit]
4) Remove the fixing/feeder unit open/closed sensor mounting plate.

Before removing the fixing/feeder unit, be sure to mark its position using a scriber.

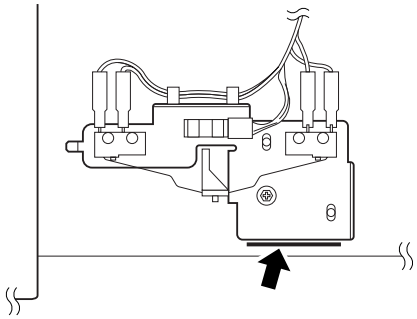

F-10-172

4-1) Remove the fixing/feeder unit open/closed sensor mounting plate [4].
- 1 connector [1]
- 1 screw [3]
- 4 terminals [2]

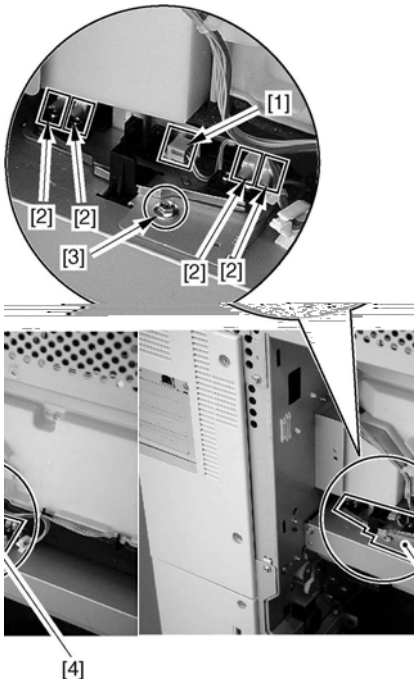

F-10-173

10.10.33.2 Removing the Fixing/Feeder Unit Open/Closed Detecting Switch

CLC5151 / / / CLC4040 / / / iR C4580i / / / iR C4080i / / / / Color Image Reader-F1 / Color Image Reader-E1 / Dupiex Color Image Reader-G1 / iR C5185N / / iR C5185i PRT /

MEMO:
The fixing/feeder unit open/closed switches 1 and 2 may be removed in the same way.

1) Remove the fixing/feeder open/closed sensor [2].
- 2 screws [1]

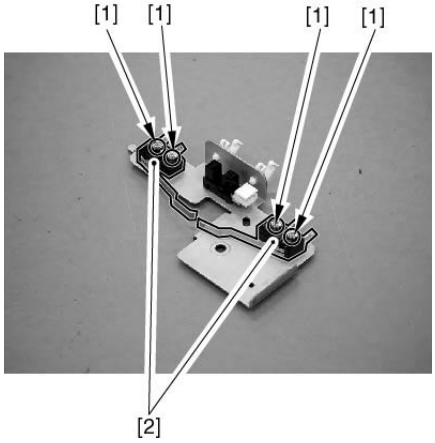

F-10-174

10.10.34 Drawer Connector (manual feed unit)

10.10.34.1 Preparation for Removing the Disconnecting the Drawer Connector (manual feed unit)

CLC5151 / / / CLC4040 / / / iR C4580i / / / iR C4080i / / / / Color Image Reader-F1 / Color Image Reader-E1 / Dupiex Color Image Reader-G1 / iR C5185N / / iR C5185i PRT /

1) Remove the manual feed unit. (page 10-35)Reference[Removing the Manual Feed Unit]

10.10.34.2 Removing the Disconnecting the Drawer Connector (manual feed unit)

CLC5151 / / / CLC4040 / / / iR C4580i / / / iR C4080i / / / / Color Image Reader-F1 / Color Image Reader-E1 / Dupiex Color Image Reader-G1 / iR C5185N / / iR C5185i PRT /

1) Slide out the drawer connector [2].
- 2 screws [1]

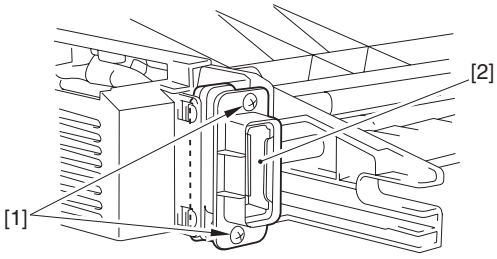

F-10-175

2) Remove the drawer connector [2].
- 2 connectors [1] from behind

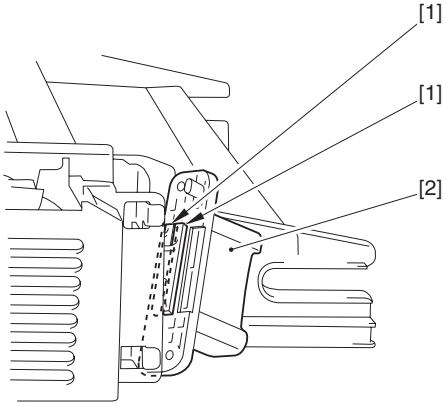

F-10-176

10.10.35 Drawer Connector (fixing/feeder unit)

10.10.35.1 Preparation for Removing the Drawer Connector (fixing feeder unit)

CLC5151 / / / CLC4040 / / / iR C4580i / / / iR C4080i / / / / Color Image Reader-F1 / Color Image Reader-E1 / Dupiex Color Image Reader-G1 / iR C5185N / / iR C5185i PRT /

1) Remove the fixing unit.
1-1) Remove the fixing drive unit.(page 11-22)Reference[Removing the Fixing Drive Unit]
1-2) Remove the fixing unit.
2) Remove the fixing/feeder unit.(page 10-41)Reference[Removing the Fixing/Feeder Unit]

10.10.35.2 Removing the Drawer Connector (fixing feeder unit)

CLC5151 / / / CLC4040 / / / iR C4580i / / / iR C4080i / / / / Color Image Reader-F1 / Color Image Reader-E1 / Dupiex Color Image Reader-G1 / iR C5185N / / iR C5185i PRT /

1) Remove the connector base [5].
- harness [2] from the cable clamp [1]
- 2 connectors [3]
- 2 screws [4]

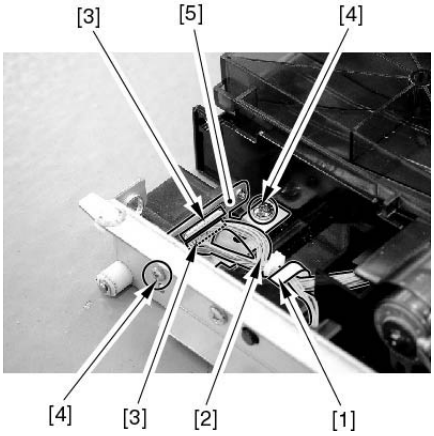

F-10-177

2) Remove the drawer connector [2].
- 2 screws [1]

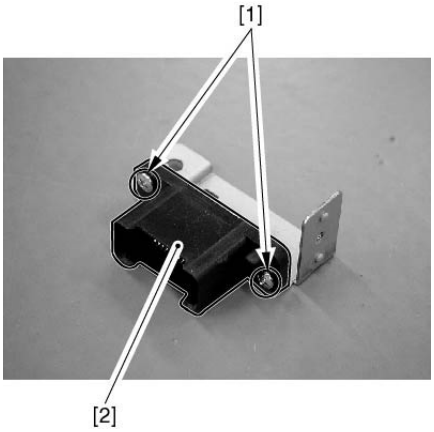

F-10-178

10.10.36 Duplex Roller 1

10.10.36.1 Preparation for Removing the Duplex Roller 1

CLC5151 / / / CLC4040 / / / iR C4580i / / / iR C4080i / / / / Color Image Reader-F1 / Color Image Reader-E1 / Dupiex Color Image Reader-G1 / iR C5185N / / iR C5185i PRT /

1) Remove the fixing unit.
1-1) Remove the fixing drive unit.(page 11-22)Reference[Removing the Fixing Drive Unit]
1-2) Remove the fixing unit.
2) Remove the fixing/feeder unit.(page 10-41)Reference[Removing the Fixing/Feeder Unit]

10.10.36.2 Removing the Duplex Roller 1

CLC5151 / / / CLC4040 / / / iR C4580i / / / iR C4080i / / / / Color Image Reader-F1 / Color Image Reader-E1 / Dupiex Color Image Reader-G1 / iR C5185N / / iR C5185i PRT /

1) Open the cover of the fixing feeder unit [1].

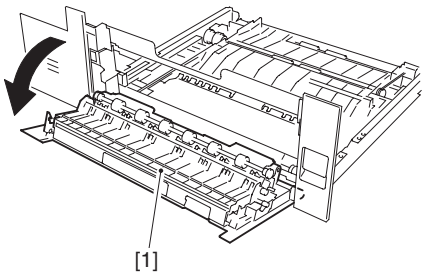

F-10-179

2) Remove the duct [2].
- 2 screws [1]

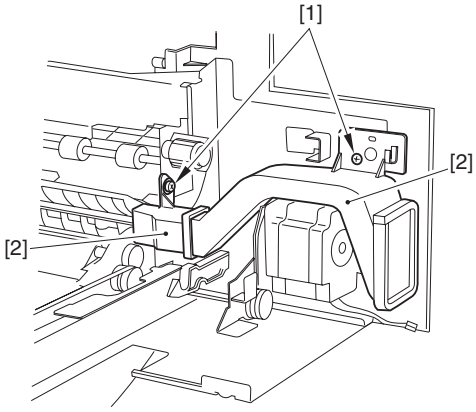

F-10-180

3) Remove the fixing feeding unit cover.
3-1) Release the link [4].
- screw [1] at the rear
- 1 grounding wire [2]
- 1 E-ring [3]

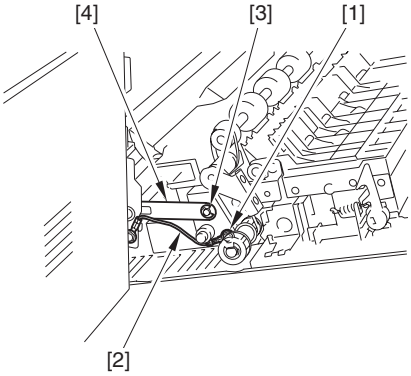

F-10-181

3-2) Remove the fixing feeding unit cover.
- 1 screw [1] at the front
- 1 cover fixing pin [2]

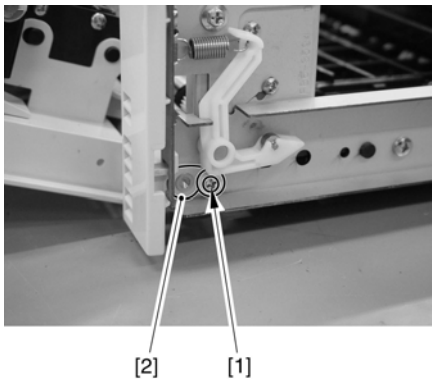

F-10-182

4) Remove the gear mounting plate.
4-1) Remove the fixing stay found at the rear.
- 3 screws [1]

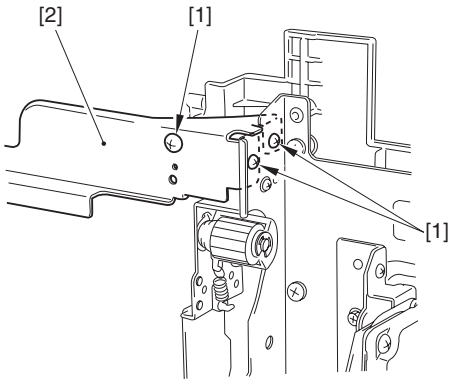

F-10-183

4-2) Remove the gear mounting plate [2].
- 2 screws [1]

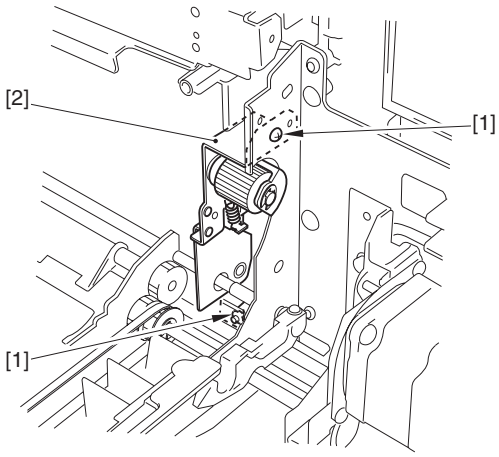

F-10-184

5) Remove the motor mounting plate [2], and move the gear [3].
- 2 screws [1]

When moving the motor mounting plate, take care so that the belt [4] will not slip off the gear [3].

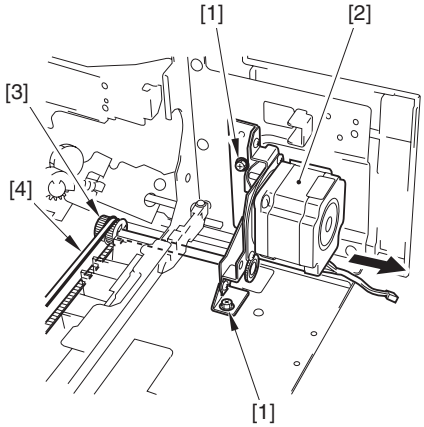

F-10-185

6) Remove the gear [1] and the bearing [2] at the rear.

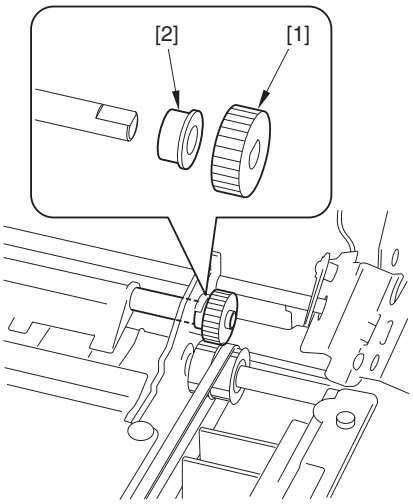

F-10-186

7) Remove the 2 duplex auxiliary guides [1] of the duplex roller.

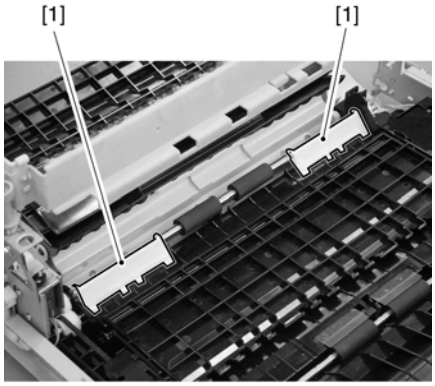

F-10-187

8) Remove the delivery path switching solenoid 2 [3] together with the base.
- screw [1]
- connector [2]

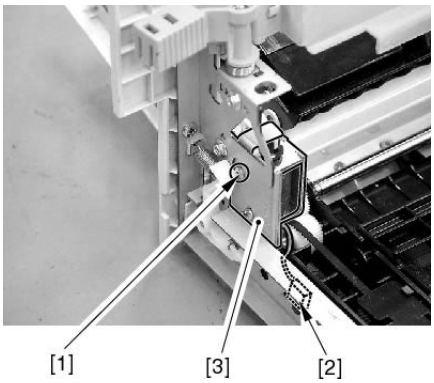

F-10-188

9) Free the claw of the gear [1] at the front; then, move the roller [3] to the rear, and remove the gear [1] and the bearing [2].

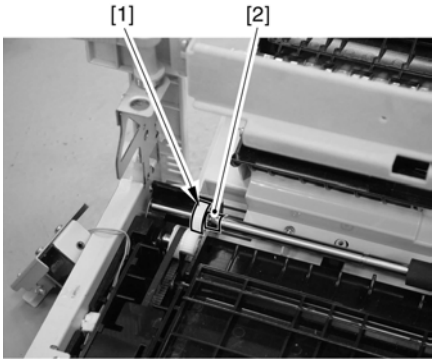

F-10-189

10) Remove the duplexing roller [1].

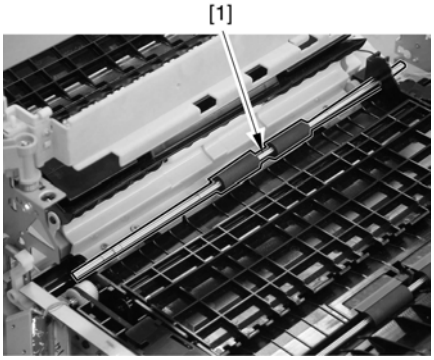

F-10-190

Points to Note When Attaching the Duplex Roller

(1) Be sure that the longer side [A] of the D-cut in the roller shaft [1] is toward the front.

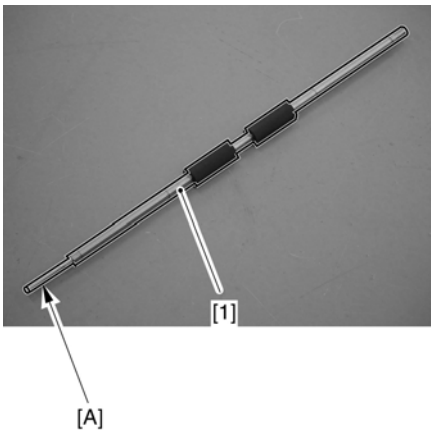

F-10-191

(2) When attaching, be sure that the front tip of the roller shaft is in contact with the grounding plate [A].

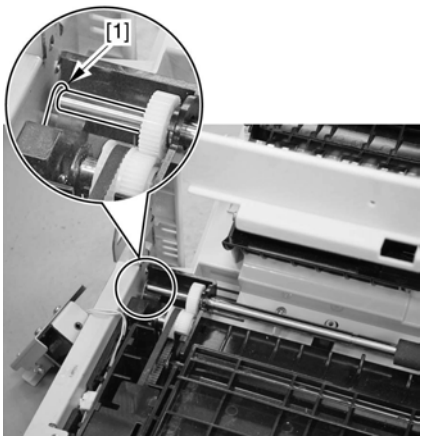

F-10-192

10.10.37 Duplex Roller 2

10.10.37.1 Preparation for Removing the Duplex Roller 2

CLC5151 / / / CLC4040 / / / iR C4580i / / / iR C4080i / / / / Color Image Reader-F1 / Color Image Reader-E1 / Dupiex Color Image Reader-G1 / iR C5185N / / iR C5185i PRT /

1) Remove the fixing unit.

1-1) Remove the fixing drive unit.(page 11-22)Reference[Removing the Fixing Drive Unit]

1-2) Remove the fixing unit.

2) Remove the fixing/feeder unit.(page 10-41)Reference[Removing the Fixing/Feeder Unit]

3) Lift the duplexing open/close guide [3] in the direction of [A] and shift it in the direction of [B]. Then, remove it.
- 1 connector [2] (Open sheet [1].)

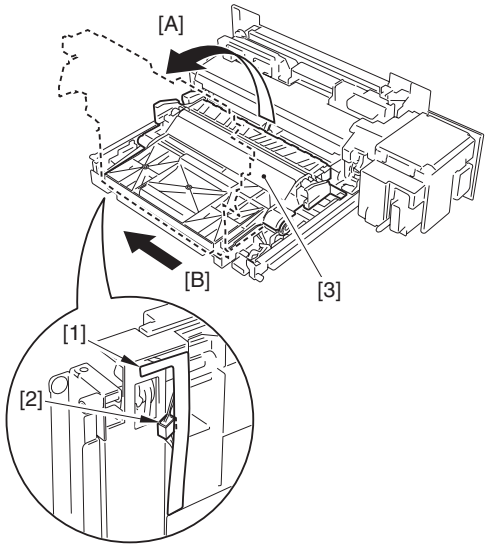

F-10-193

10.10.37.2 Removing the Duplex Roller 2

CLC5151 / / / CLC4040 / / / iR C4580i / / / iR C4080i / / / / Color Image Reader-F1 / Color Image Reader-E1 / Dupiex Color Image Reader-G1 / iR C5185N / / iR C5185i PRT /

1) Remove the 2 E-rings [1].

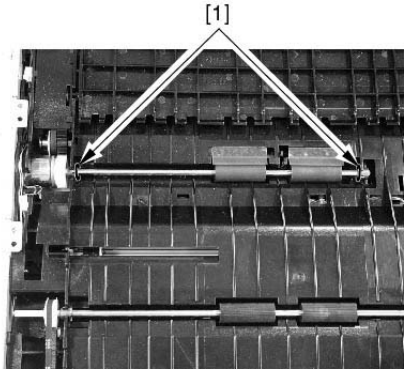

F-10-194

2) Move the bearing [1] to release the duplexing roller 2 [2].

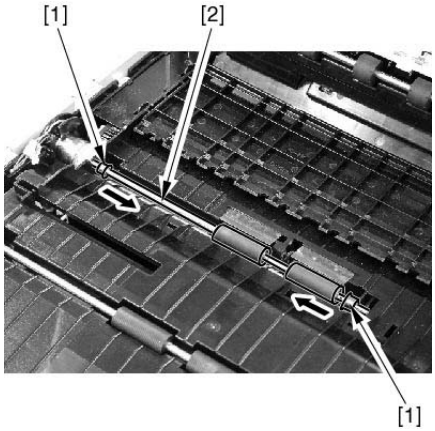

F-10-195

When mounting it, fit it while turning the duplexing roller 2 [2] so that the sheet [1] of the duplexing guide plate will not bend.

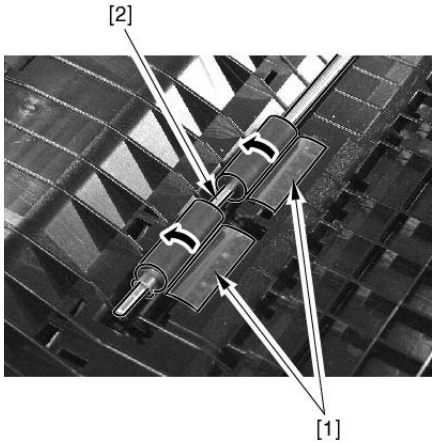

F-10-196

3) Detach the duplexing registration clutch [3] in the upward direction, and detach it together with the roller shaft.
- 1 connector [1]
- 1 clutch stop [2]

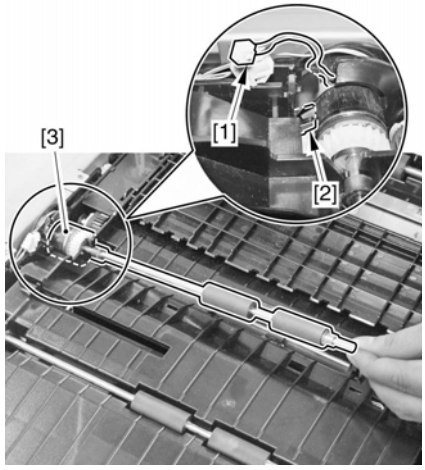

F-10-197

4) Remove the duplexing roller 2 [4].
- 1 E-ring [1]
- 1 clutch [2]
- 2 bearings [3]

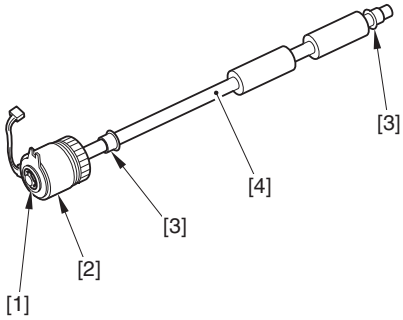

F-10-198

10.10.38 Duplex Roller 3

10.10.38.1 Preparation for Removing the Duplex Roller 3

CLC5151 / / / CLC4040 / / / iR C4580i / / / iR C4080i / / / / Color Image Reader-F1 / Color Image Reader-E1 / Dupiex Color Image Reader-G1 / iR C5185N / / iR C5185i PRT /

1) Remove the fixing unit.
1-1) Remove the fixing drive unit.(page 11-22)Reference[Removing the Fixing Drive Unit]
1-2) Remove the fixing unit.
2) Remove the fixing/feeder unit.(page 10-41)Reference[Removing the Fixing/Feeder Unit]
3) Lift the duplexing open/close guide [3] in the direction of [A] and shift it in the direction of [B]. Then, remove it.
- 1 connector [2] (Open sheet [1].)

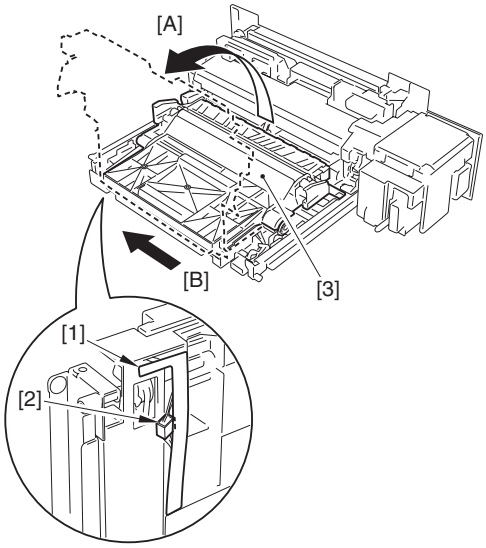

F-10-199

10.10.38.2 Removing the Duplex Roller 3

CLC5151 / / / CLC4040 / / / iR C4580i / / / iR C4080i / / / / Color Image Reader-F1 / Color Image Reader-E1 / Dupiex Color Image Reader-G1 / iR C5185N / / iR C5185i PRT /

1) Remove the 2 E-rings [1].

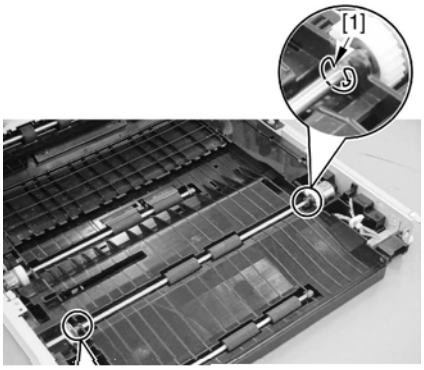

F-10-200

2) Move the bearing [1] toward the inside of the duplexing feeding guide.

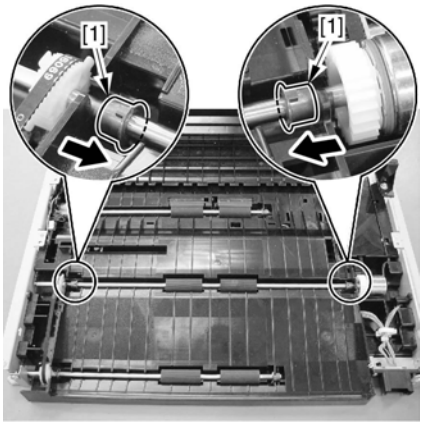

F-10-201

3) Disconnect the connector of the duplexing pickup clutch.
3-1) Bend the frame [2] in the direction of the arrow slightly, and route the connectors [3] between the frame and the guide.
- 3 screws [1]

3-2) Disconnect the connector [3].

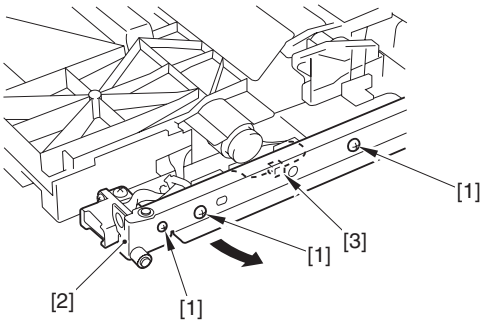

F-10-202

4) Remove the duplexing roller 3 together with the duplexing pickup clutch and the roller shaft.
5) Remove the duplexing roller 3 [5].
- 1 E-ring [1]
- 1 clutch [2]
- 2 bearings [3]
- 1 gear [4]

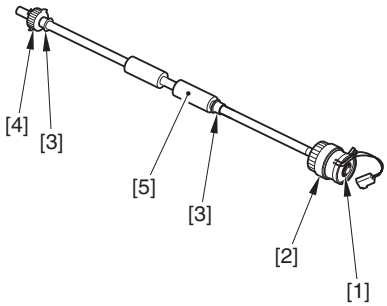

F-10-203

When mounting it, be sure to orient it so that the clutch stop [A] is at the bottommost.

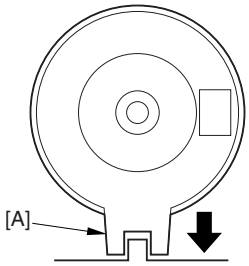

F-10-204

Be sure to mount it so that the front side of the roller shaft is in contact with the leaf spring [1].

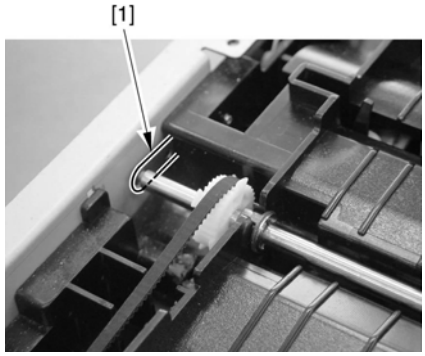

F-10-205

10.10.39 Duplex Roller 4

10.10.39.1 Preparation for Removing the Duplex Roller 4

CLC5151 / / / CLC4040 / / / iR C4580i / / / iR C4080i / / / / Color Image Reader-F1 / Color Image Reader-E1 / Dupiex Color Image Reader-G1 / iR C5185N / / iR C5185i PRT /

1) Remove the fixing unit.
1-1) Remove the fixing drive unit.(page 11-22)Reference[Removing the Fixing Drive Unit]
1-2) Remove the fixing unit.
2) Remove the fixing/feeder unit.(page 10-41)Reference[Removing the Fixing/Feeder Unit]
3) Lift the duplexing open/close guide [3] in the direction of [A] and shift it in the direction of [B]. Then, remove it.
- 1 connector [2] (Open sheet [1].)

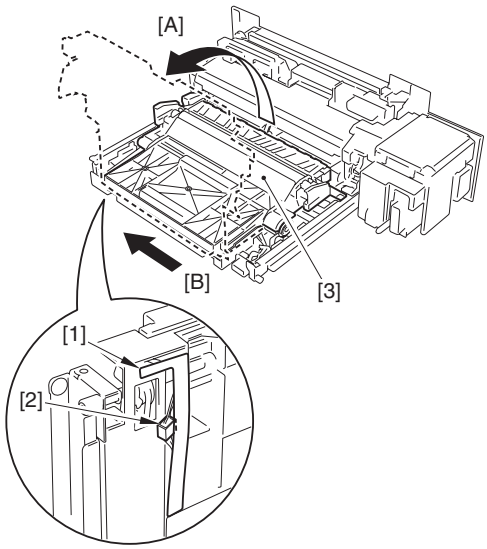

F-10-206

10.10.39.2 Removing of Duplexing Roller 4

CLC5151 / / / CLC4040 / / / iR C4580i / / / iR C4080i / / / / Color Image Reader-F1 / Color Image Reader-E1 / Dupiex Color Image Reader-G1 / iR C5185N / / iR C5185i PRT /

1) Remove the duplexing roller 4 [3].
- 3 E-ring [1]
- 2 Bearing [2]

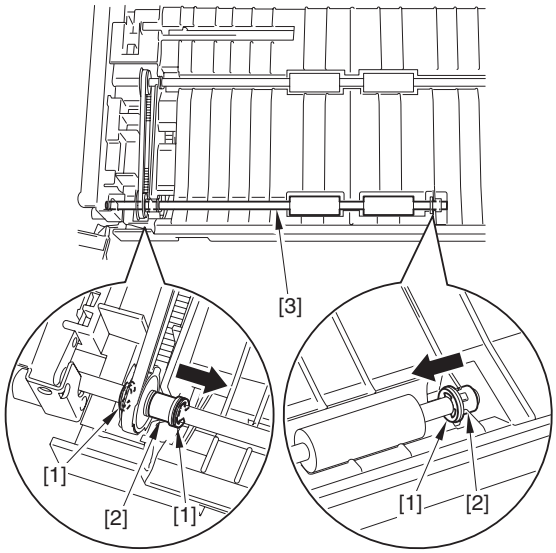

F-10-207

When mounting the roller, the roller shaft [2] must contact to the leaf spring [1] located in the front side.

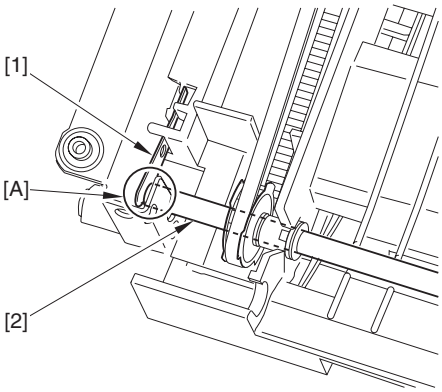

F-10-208

10.10.40 Duplex Feed Motor

10.10.40.1 Preparation for Removing the Duplex Feed Motor

CLC5151 / / / CLC4040 / / / iR C4580i / / / iR C4080i / / / / Color Image Reader-F1 / Color Image Reader-E1 / Dupiex Color Image Reader-G1 / iR C5185N / / iR C5185i PRT /

1) Remove the fixing unit.
1-1) Remove the fixing drive unit.(page 11-22)Reference[Removing the Fixing Drive Unit]
1-2) Remove the fixing unit.
2) Remove the fixing/feeder unit.(page 10-41)Reference[Removing the Fixing/Feeder Unit]

10.10.40.2 Removing the Duplex Feed Motor

CLC5151 / / / CLC4040 / / / iR C4580i / / / iR C4080i / / / / Color Image Reader-F1 / Color Image Reader-E1 / Dupiex Color Image Reader-G1 / iR C5185N / / iR C5185i PRT /

1) Remove the screw [1], then remove the duct [2].

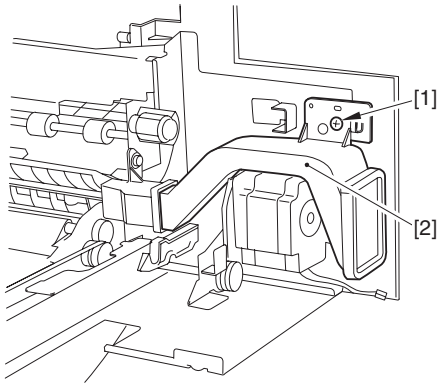

F-10-209

2) Remove the duplex feeder motor [2].
- Screws[1]2

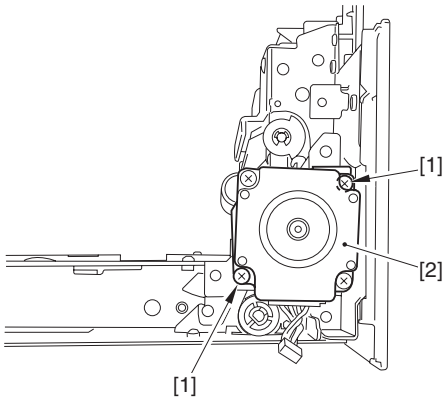

F-10-210

Points to Note When Attaching the Duplex Feed Motor
(1) Be sure that the connector area is at the bottom.
(2) When mounting the motor, check to be sure that the belt [2] is hooked on to the gear [1].

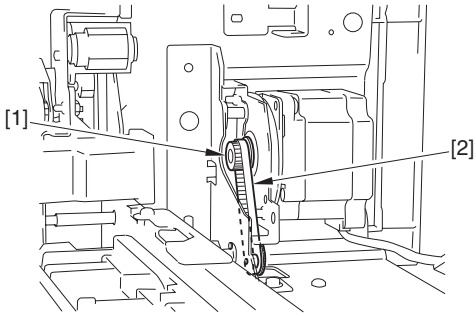

F-10-211

10.10.41 Duplex Registration Sensor

10.10.41.1 Preparation for Removing the Duplex Registration Sensor

CLC5151 / / / CLC4040 / / / iR C4580i / / / iR C4080i / / / / Color Image Reader-F1 / Color Image Reader-E1 / Dupiex Color Image Reader-G1 / iR C5185N / / iR C5185i PRT /

1) Remove the fixing unit.
1-1) Remove the fixing drive unit.(page 11-22)Reference[Removing the Fixing Drive Unit]
1-2) Remove the fixing unit.
2) Remove the fixing/feeder unit.(page 10-41)Reference[Removing the Fixing/Feeder Unit]
3) Remove the fixing/feeder assembly back sheet.

- When placing the fixing feeder unit upright, be sure to use paper to prevent dirt from collecting.
- If you forgot to use paper, make a double-sided test copy before ending the work.

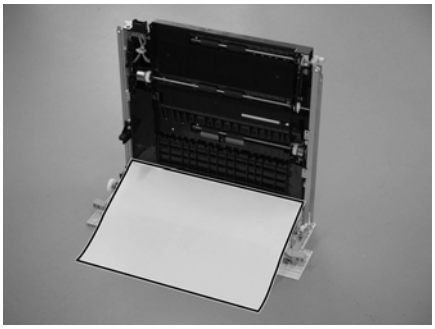

F-10-212

3-1) Stand it so that the fixing feeder unit cover is at the bottom.
3-2) Remove the sheet [1] from behind the fixing feeder assembly.
- 6 snap-ons [A]
- 3 hooks [B]

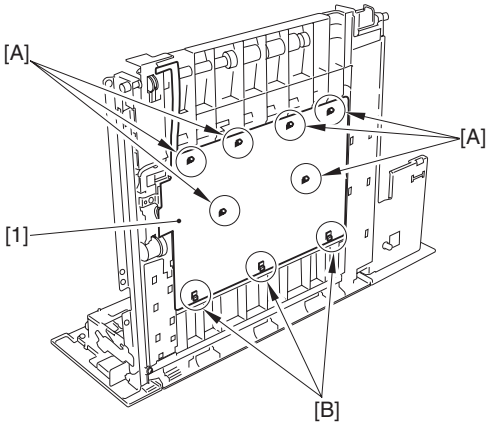

F-10-213

10.10.41.2 Removing the Duplex Registration Sensor

CLC5151 / / / CLC4040 / / / iR C4580i / / / iR C4080i / / / / Color Image Reader-F1 / Color Image Reader-E1 / Dupiex Color Image Reader-G1 / iR C5185N / / iR C5185i PRT /

1) Remove the duplex registration sensor [4].
- connector [1]
- 2 claws [2]
- sensor base [3]

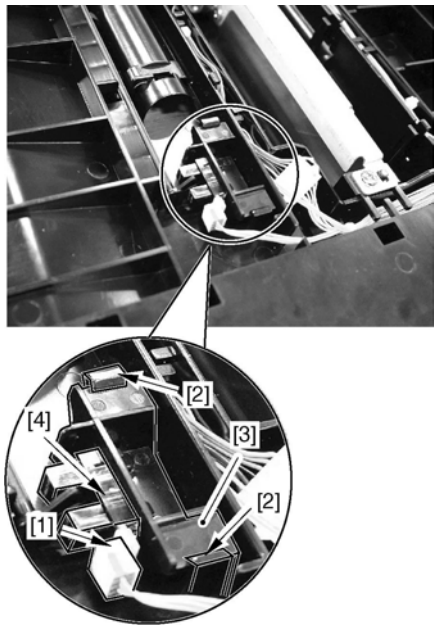

F-10-214

10.10.42 Duplex Horizontal Registration Sensor

10.10.42.1 Preparation for Removing the Duplex Horizontal Registration Sensor

CLC5151 / / / CLC4040 / / / iR C4580i / / / iR C4080i / / / / Color Image Reader-F1 / Color Image Reader-E1 / Dupiex Color Image Reader-G1 / iR C5185N / / iR C5185i PRT /

1) Remove the fixing unit.
1-1) Remove the fixing drive unit.(page 11-22)Reference[Removing the Fixing Drive Unit]
1-2) Remove the fixing unit.
2) Remove the fixing/feeder unit.(page 10-41)Reference[Removing the Fixing/Feeder Unit]
3) Remove the fixing/feeder assembly back sheet.

- When placing the fixing feeder unit upright, be sure to use paper to prevent dirt from collecting.
- If you forgot to use paper, make a double-sided test copy before ending the work.

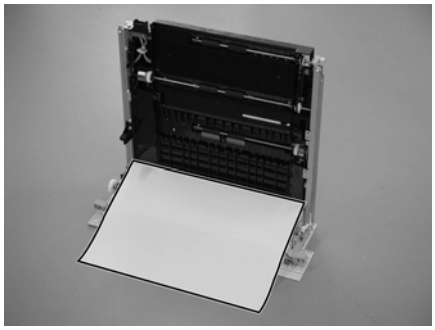

F-10-215

3-1) Stand it so that the fixing feeder unit cover is at the bottom.
3-2) Remove the sheet [1] from behind the fixing feeder assembly.
- 6 snap-ons [A]
- 3 hooks [B]

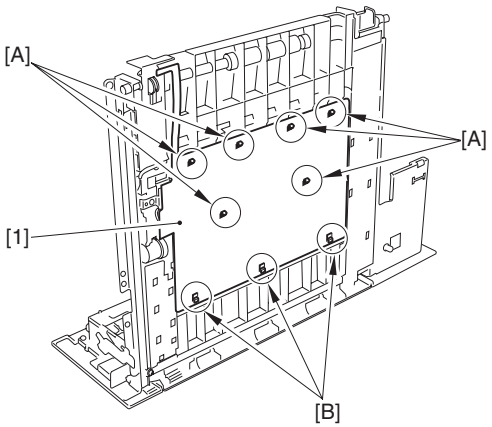

F-10-216

4) Remove the horizontal registration motor support plate [3].
- connector [1]
- 2 screws [2]

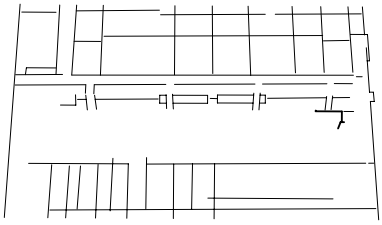

F-10-217

- When attaching the horizontal registration motor support plate [1], be sure to bring the horizontal registration motor support plate firmly in contact with the grounding lead spring [2] found under the guide plate.
- After replacement, check that the sensor flag moves smoothly.

F-10-218

10.10.42.2 Removing the Duplex Horizontal Registration Sensor

CLC5151 / / / CLC4040 / / / iR C4580i / / / iR C4080i / / / / Color Image Reader-F1 / Color Image Reader-E1 / Dupiex Color Image Reader-G1 / iR C5185N / / iR C5185i PRT /

1) Remove the duplex horizontal registration sensor [2].
- connector [1]

F-10-219

Be sure to mach the protrusion [B] of the harness guide found behind the guide plate against the area [A] marked on the flat cable [1] coming from the duplex horizontal registration sensor.
(if you twist it inadvertently, the loop area will not move smoothly.)

F-10-220

After replacement, check that the sensor flag moves smoothly.

10.10.43 Duplex Pickup Sensor

10.10.43.1 Preparation for Removing the Duplex Pickup Sensor

CLC5151 / / / CLC4040 / / / iR C4580i / / / iR C4080i / / / / Color Image Reader-F1 / Color Image Reader-E1 / Dupiex Color Image Reader-G1 / iR C5185N / / iR C5185i PRT /

1) Remove the cleaner fan cover.
1-1) Open the front cover.
1-2) Remove the cleaner fan cover [2].
- 1 screw [1]

F-10-221

2) Remove the intermediate transfer unit releasing lever [2].
- screw [1]

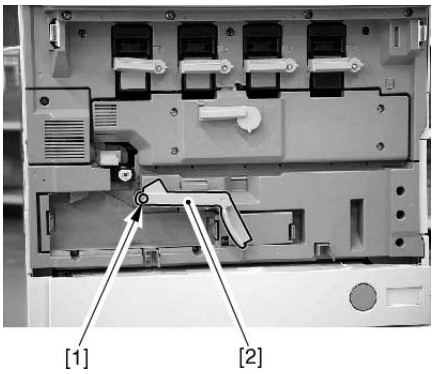

F-10-222

3) Remove the inside cover (lower) [3].
- 1 connector [1]
- 4 screws [2]

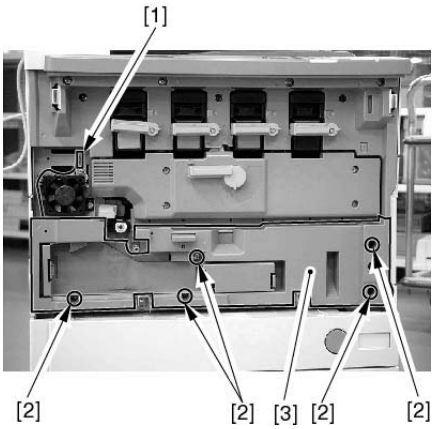

F-10-223

4) Remove the cassette.

MEMO:
The cassette 1/2 and the pick-up unit 1/2 may also be removed in the same way.

4-1) Slide out the cassette.
5) Remove the manual feed unit. (page 10-35)Reference[Removing the Manual Feed Unit]
6) Remove the front cover. (page 12-14)Reference[Removing the Front Cover]
7) Remove the rear right cover. (page 12-14)Reference[Removing of the Right Rear Cover]
8) Pull out the pickup cassette and open the pickup vertical path cover; then, remove the front right cover.
- 2 Screws
9) Remove the pickup vertical path cover [3].
- screws [2](Remove the pickup vertical path lower cover [1])

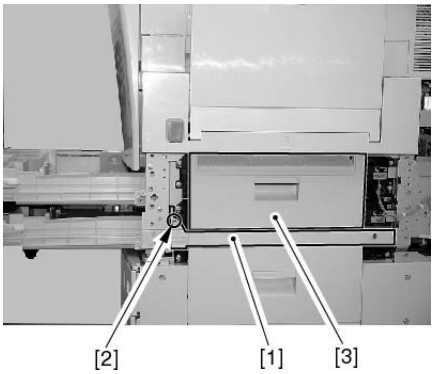

F-10-224

10) Remove the pickup unit. (page 10-25)Reference[Removing the Pickup Unit]
11)Remove the rear fan cover. (page 12-15)Reference[Removing the Rear Fan Cover]
12) Remove the rear upper cover. (page 12-16)Reference[Removing the Rear Upper Cover]
13) Remove the rear lower cover. (page 12-16)Reference[Removing the Rear Lower Cover]
14) Remove the DC controller box 2. (page 12-24)Reference[Removing the DC Controller Box2]
15) Remove the DC controller box 1. (page 12-24)Reference[Removing the DC Controller Box1]
16) Remove the IH power supply unit. (page 12-21)Reference[Removing the IH Power Supply Unit]
17) Remove the lattice connector mount [4].
- 2 Clamps [1]
- 2 Screws [2]
- 6 Connectors [3]

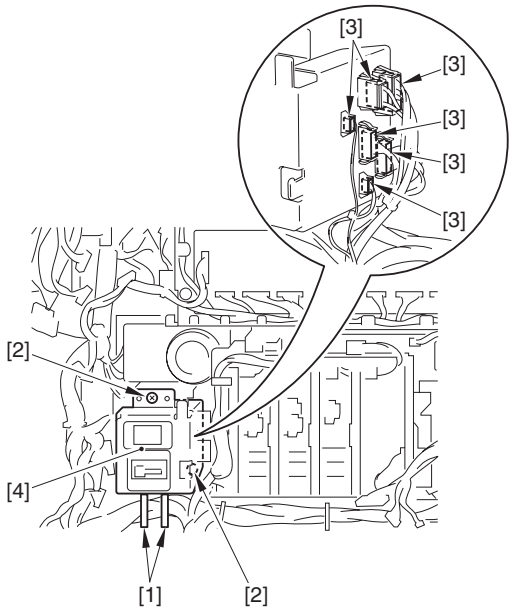

F-10-225

18) Remove the high-voltage unit 2. (page 12-20)Reference[Removing the High-Voltage Unit 2]
19) Remove the drum ITB motor mount.
- 2 Connectors [1]
- 3 Screws [2]

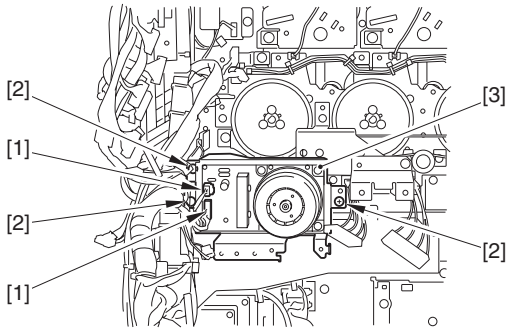

F-10-226

Points to note when removing the drum ITB motor mount
When removing it, insert a hand from the inside of the pulled out manual feed unit. Then remove it from the rear side plate while pressing the swing plate [1] located in the read side of the drum drive unit.
The drum drive unit is hung from a boss attached to the rear side plate, so lift up the unit when removing it.

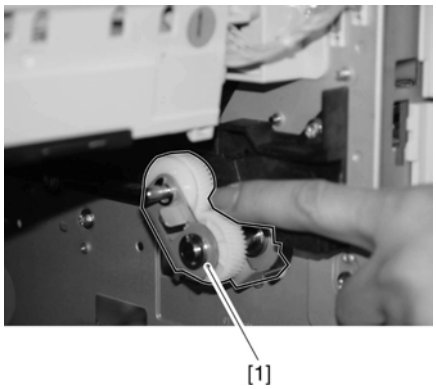

F-10-227

20) Remove the manual feed cooling fan duct [4] including the fan.
- 2 Wire saddle [1]
- 1 Connectors [2]
- 3 Screws [3]

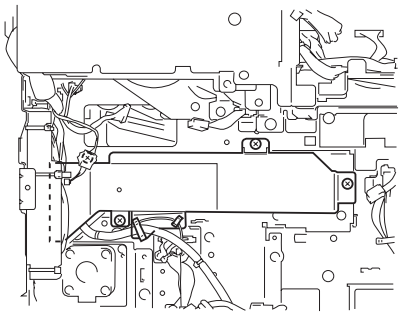

F-10-228

21) Remove the duplexing driver PCB [2].
- 4 Screws [1]

F-10-229

10.10.43.2 Removing the Duplex Pickup Sensor

CLC5151 / / / CLC4040 / / / iR C4580i / / / iR C4080i / / / / Color Image Reader-F1 / Color Image Reader-E1 / Dupiex Color Image Reader-G1 / iR C5185N / / iR C5185i PRT /

1) Remove the rail support plate [2] of the manual feed unit.
- 2 screws [1] from the rear side plate side

F-10-230

2) Remove the rail guide [3] of the manual feed unit as shown.
- 3 screws [1] from the side of the rear side plate
- 3 screws [2] from the side of the front side plate

F-10-231

3) Remove the drawer connector support plate [2].
- 2 screws [1]

F-10-232

4) Remove the lower guide plate [2].
- 2 screws [1]

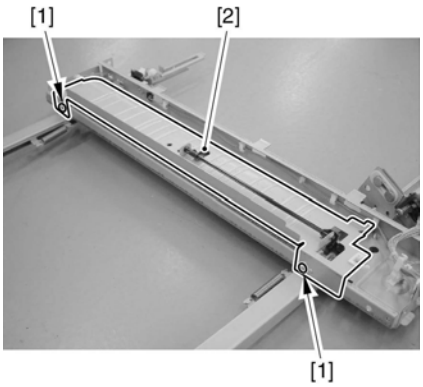

F-10-233

5) Remove the sensor support plate [3].
- connector [1]
- screw [2]

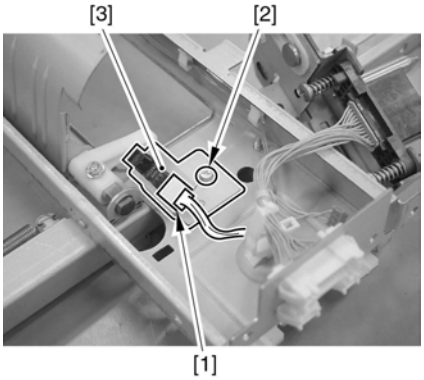

F-10-234

6) Remove the duplex pickup sensor [1].

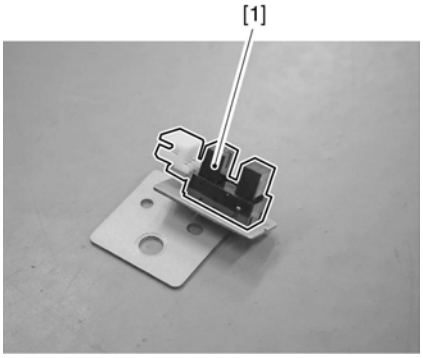

F-10-235

10.10.44 Duplex Registration Clutch

10.10.44.1 Preparation for Removing the Duplex Registration Clutch

CLC5151 / / / CLC4040 / / / iR C4580i / / / iR C4080i / / / / Color Image Reader-F1 / Color Image Reader-E1 / Dupiex Color Image Reader-G1 / iR C5185N / / iR C5185i PRT /

1) Remove the fixing unit.
1-1) Remove the fixing drive unit.(page 11-22)Reference[Removing the Fixing Drive Unit]
1-2) Remove the fixing unit.
2) Remove the fixing/feeder unit.(page 10-41)Reference[Removing the Fixing/Feeder Unit]
3) Lift the duplexing open/close guide [3] in the direction of [A] and shift it in the direction of [B]. Then, remove it.
- 1 connector [2] (Open sheet [1].)

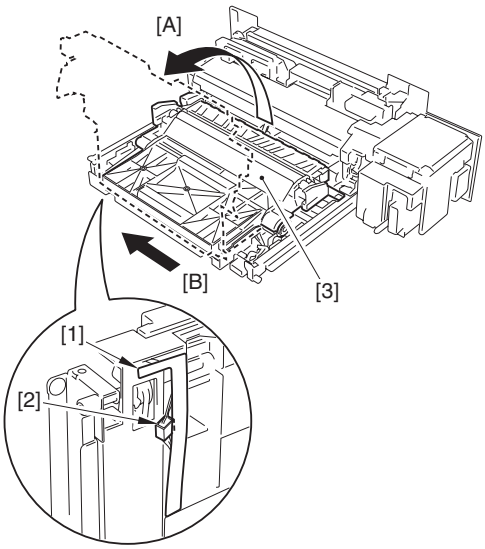

F-10-236

10.10.44.2 Removing the Duplex Registration Clutch

CLC5151 / / / CLC4040 / / / iR C4580i / / / iR C4080i / / / / Color Image Reader-F1 / Color Image Reader-E1 / Dupiex Color Image Reader-G1 / iR C5185N / / iR C5185i PRT /

1) Remove the 2 E-rings [1].

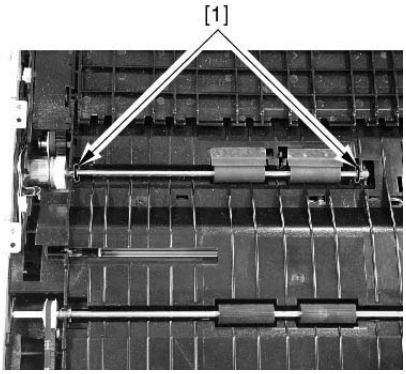

F-10-237

2) Move the bushing [1] to free the duplex roller 2 [2].

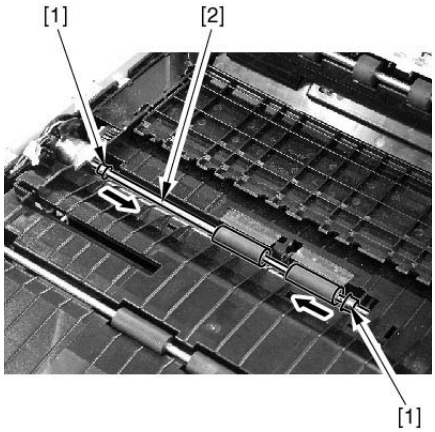

F-10-238

When attaching it, fit it while turning the duplex roller 2 [2] so as not to bend the sheet [1] of the duplex guide plate. (Do not shift up the sheet by hand.)

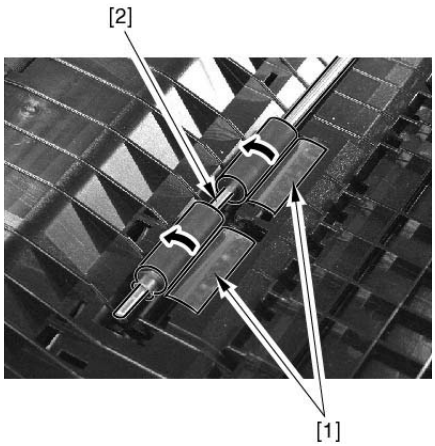

F-10-239

3) Pull the duplex registration clutch [3] upward to remove.
- 1 connector [1]
- 1 clutch stop [2]

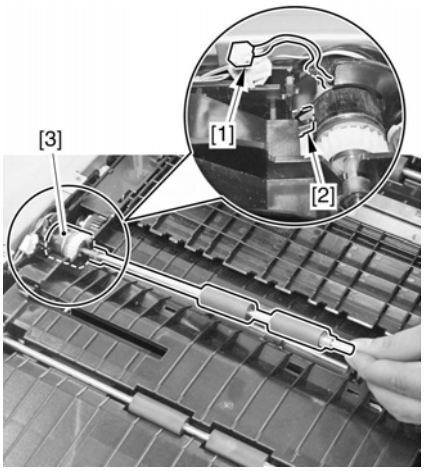

F-10-240

4) Remove the duplex registration clutch [2].
- 1 E-ring [1]

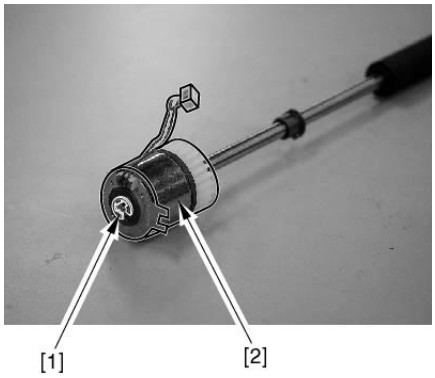

F-10-241

10.10.45 Duplex Pickup Clutch

10.10.45.1 Preparation for Removing the Duplex Pickup Clutch

CLC5151 / / / CLC4040 / / / iR C4580i / / / iR C4080i / / / / Color Image Reader-F1 / Color Image Reader-E1 / Dupiex Color Image Reader-G1 / iR C5185N / / iR C5185i PRT /

1) Remove the fixing unit.
1-1) Remove the fixing drive unit.(page 11-22) Reference[Removing the Fixing Drive Unit]
1-2) Remove the fixing unit.
2) Remove the fixing/feeder unit.(page 10-41) Reference[Removing the Fixing/Feeder Unit]
3) Lift the duplexing open/close guide [3] in the direction of [A] and shift it in the direction of [B]. Then, remove it.
- 1 connector [2] (Open sheet [1].)

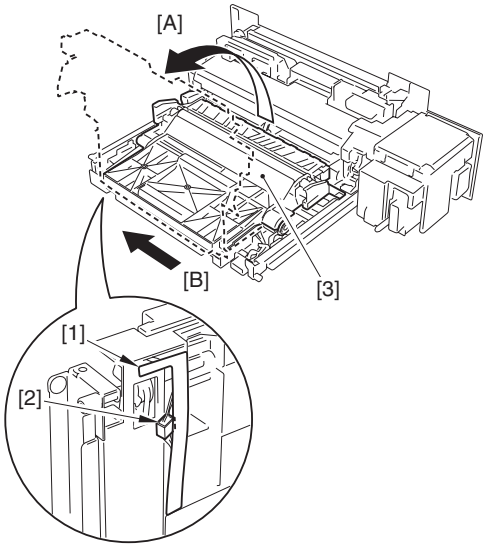

F-10-242

10.10.45.2 Removing the Duplex Pickup Clutch

CLC5151 / / / CLC4040 / / / iR C4580i / / / iR C4080i / / / / Color Image Reader-F1 / Color Image Reader-E1 / Dupiex Color Image Reader-G1 / iR C5185N / / iR C5185i PRT /

1) Open the cover of the fixing feeder unit [1].

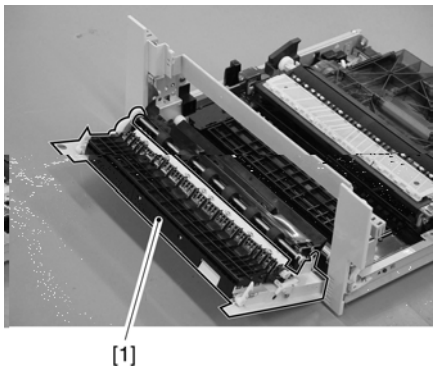

F-10-243

2) Remove the 2 E-rings [1].

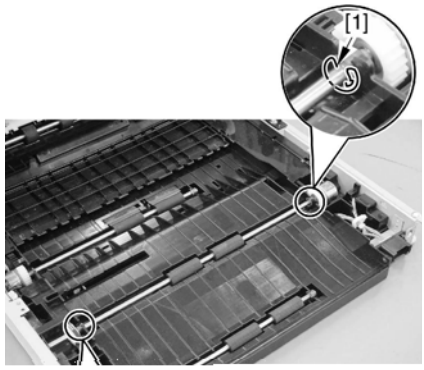

F-10-244

3) Move the bushing [1] to the inside of the duplex feeder guide.

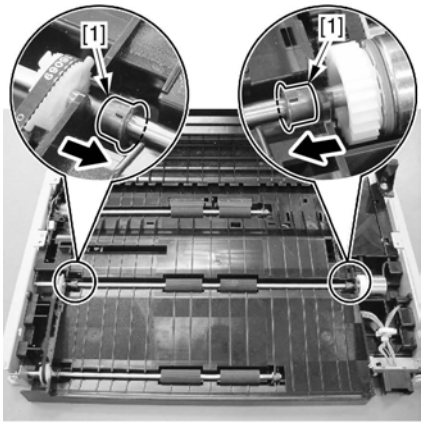

F-10-245

4) Remove the connector of the duplex pickup clutch.
4-1) Remove the 3 screws [1].
4-2) Pull the plate [2] in the direction of the arrow, and pull out the connector [3] located the inner of the plate.

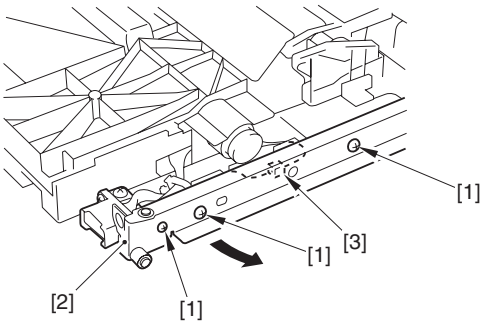

F-10-246

4-3) Remove the connector [3].

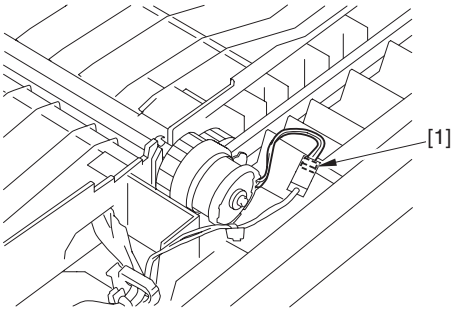

F-10-247

5) Remove the duplex pickup clutch [2].
- 1 roller shaft
- 1 E-ring [1]

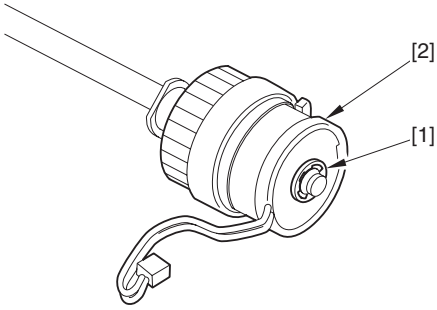

F-10-248

When attaching, be sure that the stop [A] of the clutch is at the bottommost.

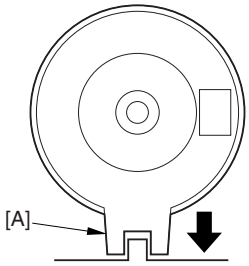

F-10-249

Make sure that the front side of the roller shaft is in contact with the leaf spring [1].

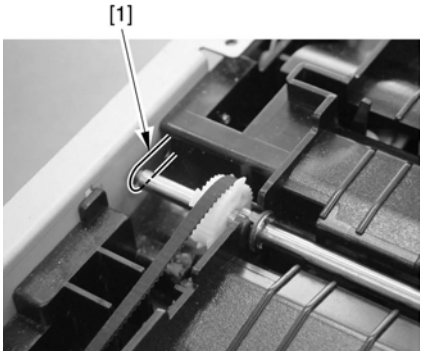

F-10-250

10.10.46 Delivery Vertical Path Unit

10.10.46.1 Preparation for Removing the Delivery Vertical Path Unit

CLC5151 / / / CLC4040 / / / iR C4580i / / / iR C4080i / / / / Color Image Reader-F1 / Color Image Reader-E1 / Dupiex Color Image Reader-G1 / iR C5185N / / iR C5185i PRT /

1) Remove the center delivery tray [2].
- 2 screws [1]

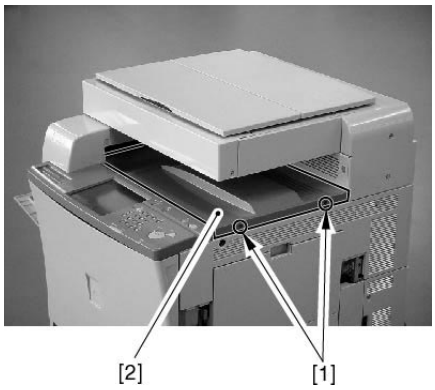

F-10-251

2) Remove the upper left cover. (page 12-14)Reference[Removing the Upper Left Cover]

10.10.46.2 Removing the Delivery Vertical Path Unit

CLC5151 / / / CLC4040 / / / iR C4580i / / / iR C4080i / / / / Color Image Reader-F1 / Color Image Reader-E1 / Dupiex Color Image Reader-G1 / iR C5185N / / iR C5185i PRT /

For the new delivery vertical path unit to function, the version of the DC controller must be 3.06 or later. Be sure to check its version in service mode: COPIER>DISPLAY>VERSION>D-CON.

1) Slide out the fixing/feeding unit.
2) Remove the delivery vertical path cover [3].
- 1 screw [1]

- 1 delivery inside cover [2]

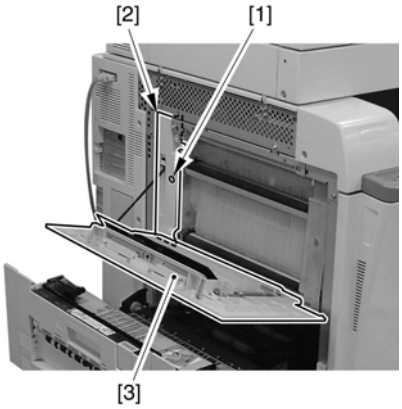

F-10-252

3) Remove the delivery path vertical unit [4].
   - 2 concoctors [1]
   - 1 concoctors [3]
   - 4 screws [2]

To remove the delivery vertical path unit, lift the unit and then pull it out toward the front.

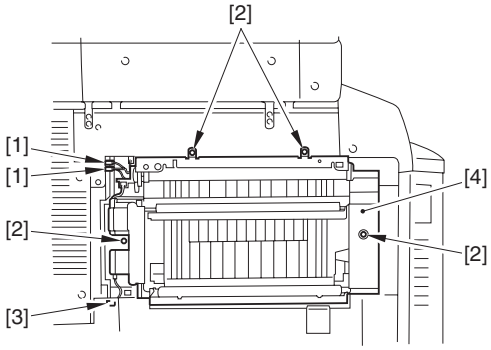

F-10-253

10.10.46.3 Removing the Delivery Vertical Path Cover

CLC5151 / / / CLC4040 / / / iR C4580i / / / iR C4080i / / / / Color Image Reader-F1 / Color Image Reader-E1 / Dupiex Color Image Reader-G1 / iR C5185N / / iR C5185i PRT /

1) Using a flat-blade screwdriver, remove the slip-stop [2] from the delivery vertical path cover [1]; then, remove the strap [3] from the delivery inside cover.

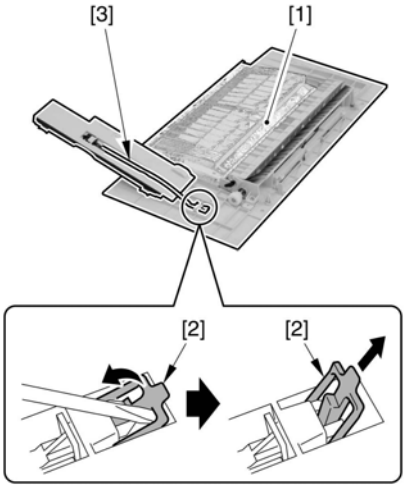

F-10-254

2) Attach the strap [1] found on the delivery inside cover to the new delivery vertical path cover [2]; then, fix it in place using the slip-stop [3].

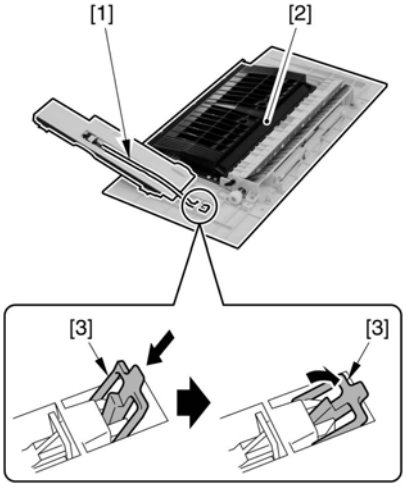

F-10-255

10.10.46.4 Points to note when mouting the delivery vertical path unit

CLC5151 / / / CLC4040 / / / iR C4580i / / / iR C4080i / / / / Color Image Reader-F1 / Color Image Reader-E1 / Dupiex Color Image Reader-G1 / iR C5185N / / iR C5185i PRT /

1) Attach the top [1] of the delivery vertical path inside of the machine plate [2].

When attaching the delivery vertical path unit, be sure to lift it once before setting it in place.

Engage the left and right hooks [3] on the machine plate [4] so as to attach the new delivery vertical path unit.

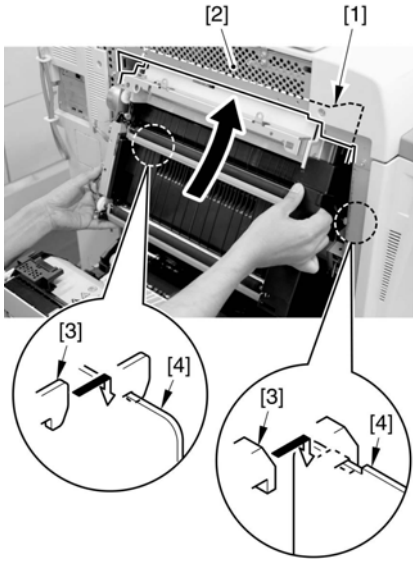

F-10-256

2) Using 4 screws, secure the delivery vertical path unit [3] in place; then, connect the 3 connectors. At this time, check that the machine positioner [4] is properly in place.

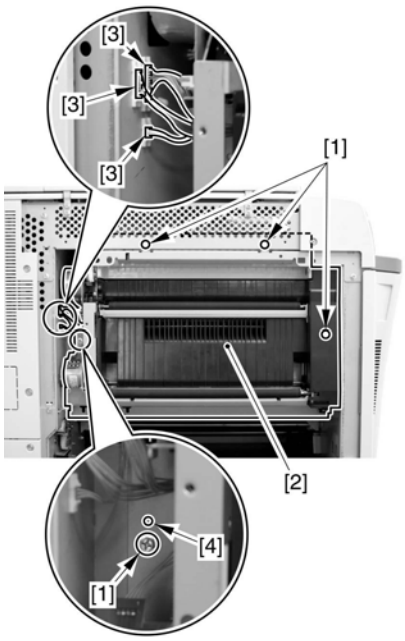

F-10-257

3) Attach the delivery vertical path cover [1] to the machine; then, fix the delivery inside cover [2] in place using a screw [3].

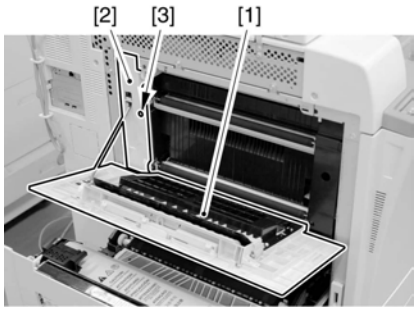

F-10-258

4) Attach the upper left cover [1] using 2 screws [2]; then, close the delivery vertical path cover [3], and put the fixing/feeding unit back in its initial position.

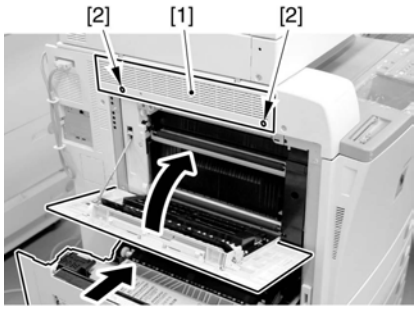

F-10-259

10.10.47 Face-Down Delivery Roller 1

10.10.47.1 Preparation for Removing the Face-Down Delivery Roller 1

CLC5151 / / / CLC4040 / / / iR C4580i / / / iR C4080i / / / / Color Image Reader-F1 / Color Image Reader-E1 / Dupiex Color Image Reader-G1 / iR C5185N / / iR C5185i PRT /

1) Remove the upper left cover. (page 12-14)Reference[Removing the Upper Left Cover]
2) Remove the center delivery tray [2].
   - 2 screws [1]

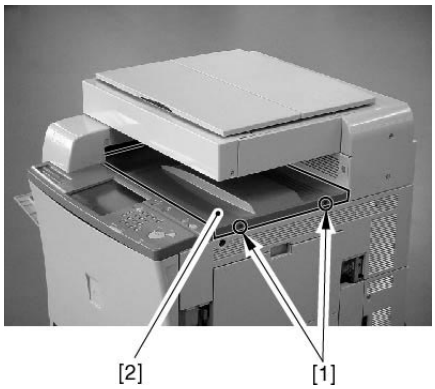

F-10-260

3) Remove the delivery vertical path unit. (page 10-60)Reference[Removing the Delivery Vertical Path Unit]
4) Remove the delivery sensor mounting plate.
4-1) Remove the sensor mounting plate [2].
   - 1 screw [1]

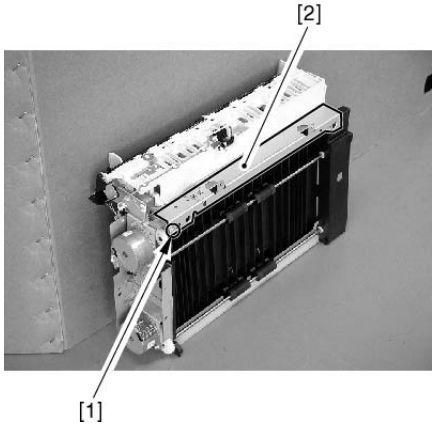

F-10-261

Points to Note When Attaching the Delivery Sensor Mounting Plate
When attaching the sensor mounting plate, secure it in place with screws first and then route the wire to facilitate the work.

5) Remove the face-down delivery sensor flag.
5-1) Shift up the sensor flag [1] of the face-down delivery sensor 1, and pull it upward to remove.

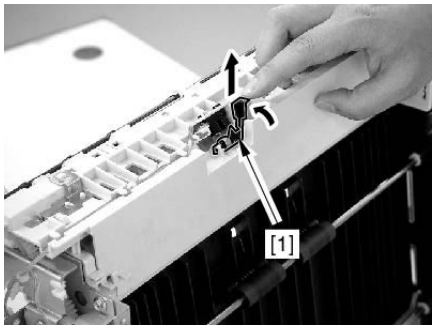

F-10-262

MEMO:
The edge of the sensor flag is cut to an I-shape, permitting it to be removed upward.

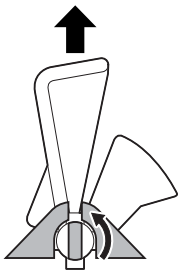

F-10-263

Points to Note When Attaching the Sensor Flag
When attaching the sensor flag, be sure to match the L-shaped area [A] of the spring against the groove [B] of the face-down delivery sub frame.

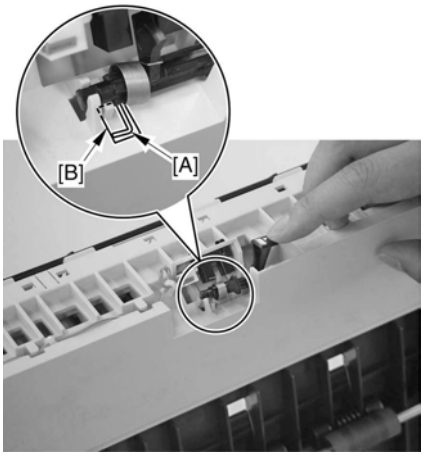

F-10-264

10.10.47.2 Removing the Face-Down Delivery Roller 1

CLC5151 / / / CLC4040 / / / iR C4580i / / / iR C4080i / / / / Color Image Reader-F1 / Color Image Reader-E1 / Dupiex Color Image Reader-G1 / iR C5185N / / iR C5185i PRT /

1) Shift up the grounding leaf spring [1] using a flat-blade screwdriver, and remove the 2 claws.

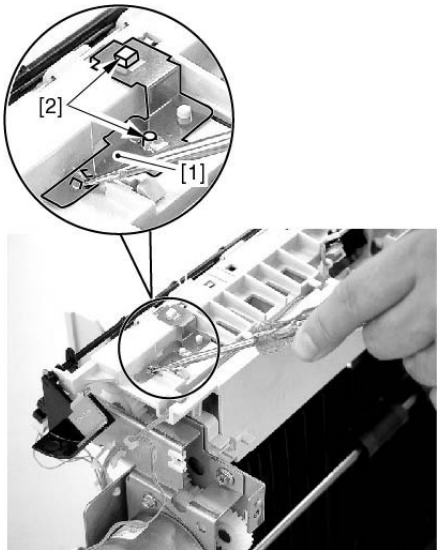

F-10-265

2) Remove the face-down delivery sub frame [4].
- connector [1]
- sensor cable [2] from the face-down delivery sub frame
- flag [3] of the face-down delivery sensor 1

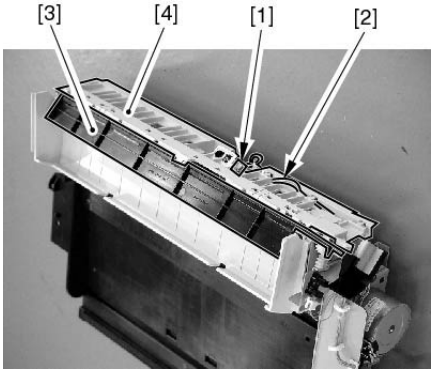

F-10-266

Points to Note When Attaching the grounding Leaf Spring
When attaching, shape the grounding leaf plate removed in 3) into a half-loop, and work so that the frame plate [1] and the grounding leaf spring [2] are in contact.

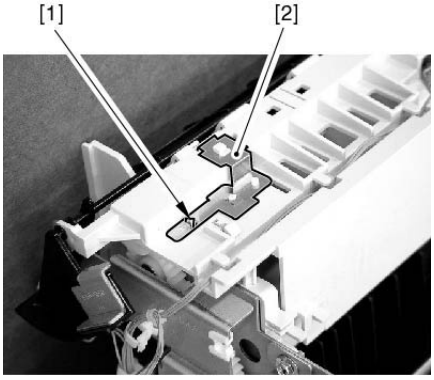

F-10-267

3) Remove the face-down delivery roller 1 [5].
- E-ring [1]
- bushing [2]
- 1 gear [3]
- 1 bushing [4] found to the rear of the face-down delivery roller 1

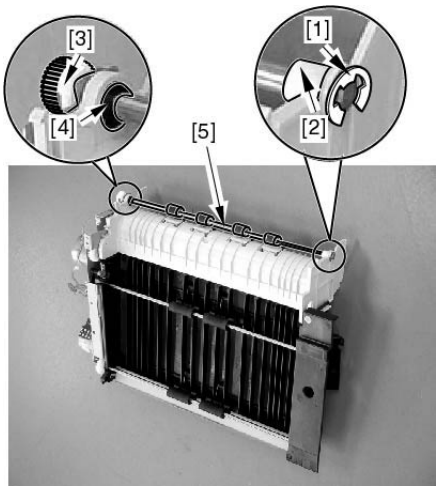

F-10-268

10.10.48 Face-Up Delivery Roller

10.10.48.1 Preparation for Removing the Face-Up Delivery Roller

CLC5151 / / / CLC4040 / / / iR C4580i / / / iR C4080i / / / / Color Image Reader-F1 / Color Image Reader-E1 / Dupiex Color Image Reader-G1 / iR C5185N / / iR C5185i PRT /

1) Remove the fixing unit.
1-1) Remove the fixing drive unit.(page 11-22)Reference[Removing the Fixing Drive Unit]
1-2) Remove the fixing unit.
2) Remove the fixing/feeder unit.(page 10-41)Reference[Removing the

Fixing/Feeder Unit]
3) Remove the fixing/feeder unit cover.
3-1) Release the link [4].
- 1 screw [1] at the rear
- 1 grounding wire [2]
- 1 E-ring [3]

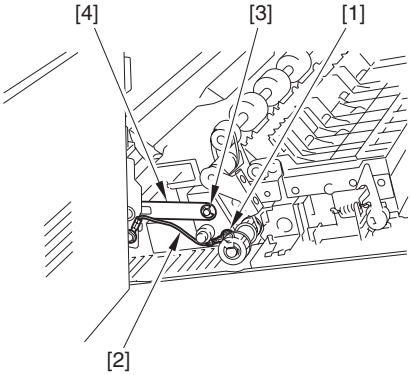

F-10-269

3-2) Remove the fixing/feeder unit cover[3].
- screw [1] at the front
- cover fixing pin [2]

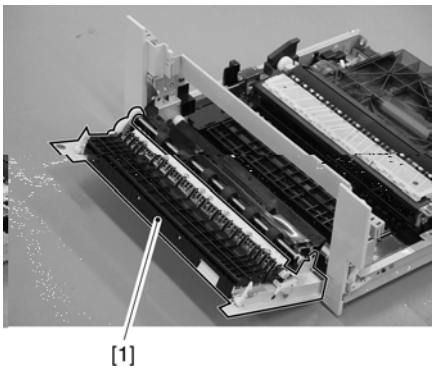

F-10-270

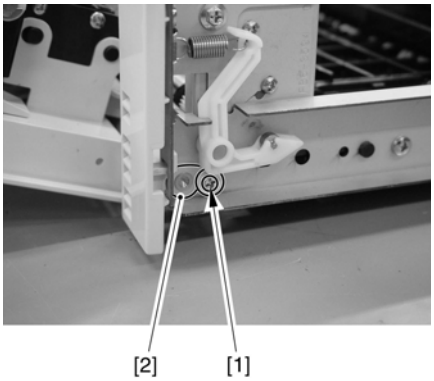

F-10-271

4) Remove the inside delivery roller.
4-1) Remove the E-ring[1] and the bushing [2] at the front; then, remove the gear [3] and the bushing [4] at the rear.

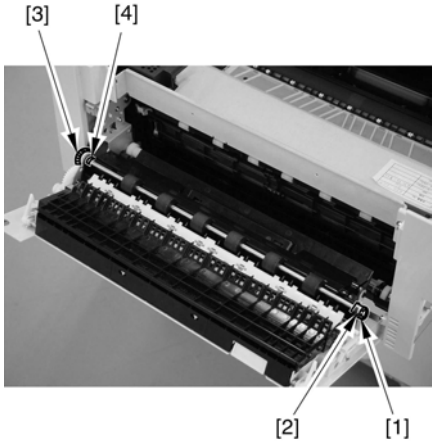

F-10-272

4-2ÅjFree the internal delivery roller [1] from the cut-off of the frame at the front; then, remove it.

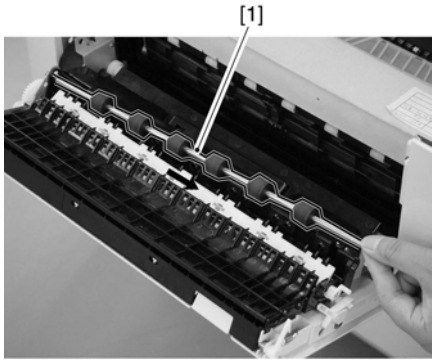

F-10-273

10.10.48.2 Removing the Face-Up Delivery Roller

CLC5151 / / / CLC4040 / / / iR C4580i / / / iR C4080i / / / / Color Image Reader-F1 / Color Image Reader-E1 / Dupiex Color Image Reader-G1 / iR C5185N / / iR C5185i PRT /

1) Remove the lower guide 2 [2].
- 2 screws [1]

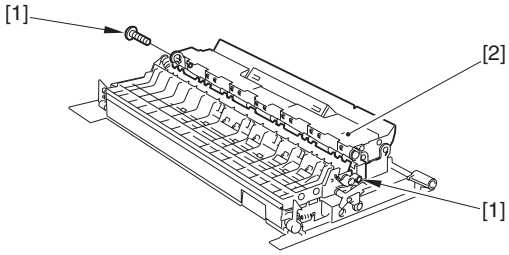

F-10-274

2) Remove the gear [3].
- 1 Screw [1]
- 1 Gear mount [2]
- 2 Belt [4]

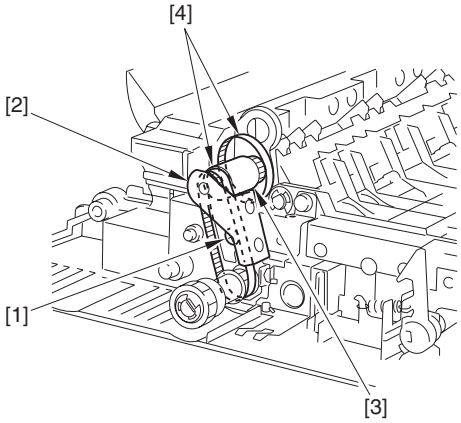

F-10-275

3) Remove the upper guide [3].
- screw [1] of the gear mounting plate [2]

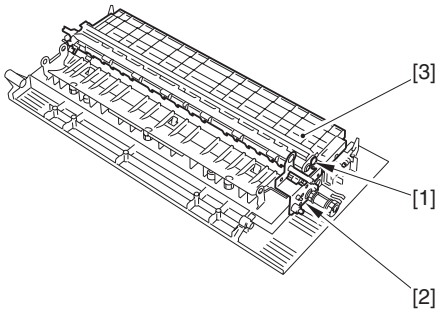

F-10-276

The spring [1] hooked on the flapper of the upper guide is small and can easily be lost. Remove it in advance.

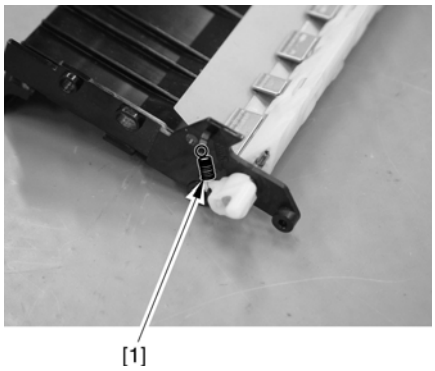

F-10-277

4) Remove the lower guide [2].
- 3 screws [1]

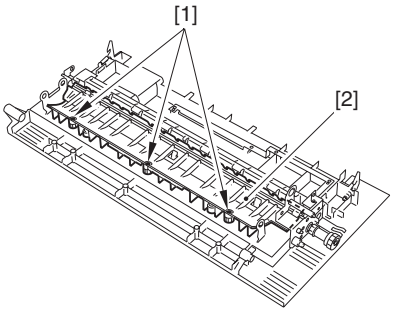

F-10-278

5) Remove the 3 E-rings [1], gear [2], bushing [4], and gear mounting plate [5] at the rear.

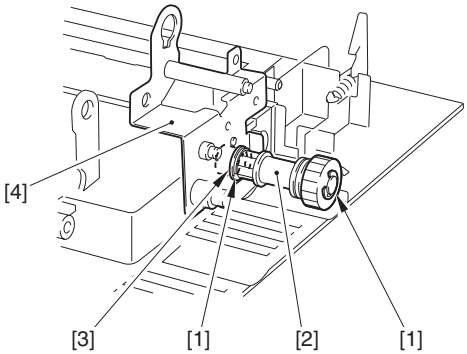

F-10-279

6) Remove the face-up delivery roller [3].
- 1 E-ring [1]
- 1 bushing [2] at the front

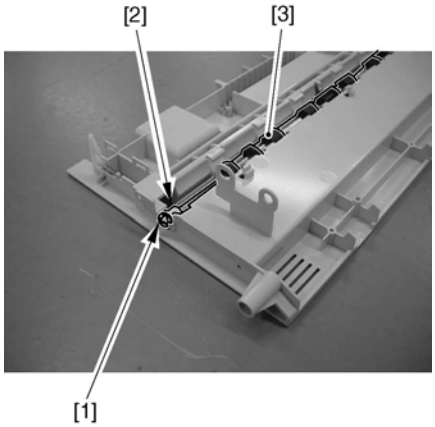

F-10-280

10.10.49 Delivery Vertical Path Roller 1

10.10.49.1 Preparation for Removing the Delivery Vertical Path Roller 1

CLC5151 / / / CLC4040 / / / iR C4580i / / / iR C4080i / / / / Color Image Reader-F1 / Color Image Reader-E1 / Dupiex Color Image Reader-G1 / iR C5185N / / iR C5185i PRT /

1) Remove the upper left cover. (page 12-14)Reference[Removing the Upper Left Cover]
2) Remove the center delivery tray [2].
- 2 screws [1]

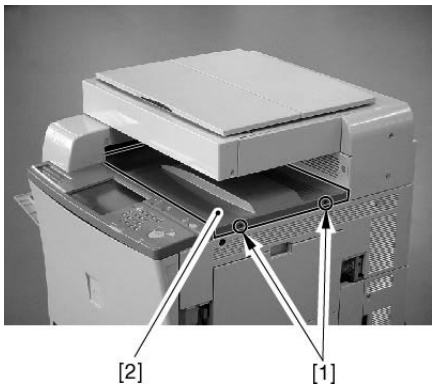

F-10-281

3) Remove the delivery vertical path unit. (page 10-60)Reference[Removing the Delivery Vertical Path Unit]
4) Remove the face-down delivery Motor. (page 10-67)Reference[Removing the Face-Down Delivery Motor]
5) Remove the delivery vertical path motor. (page 10-67)Reference[Removing the Delivery Vertical Path Motor]
6) Remove the motor mount [2].
- 4 Screws [1]

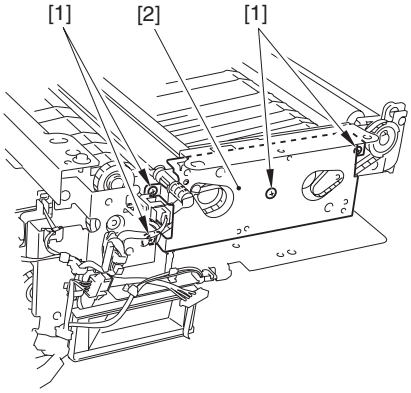

F-10-282

10.10.49.2 Removing the Delivery Vertical Path Roller 1

CLC5151 / / / CLC4040 / / / iR C4580i / / / iR C4080i / / / / Color Image Reader-F1 / Color Image Reader-E1 / Dupiex Color Image Reader-G1 / iR C5185N / / iR C5185i PRT /

1) Remove the delivery vertical path roller 1 [6].
   - 1 E-ring [1]
   - 1 bushing [2] at the front
   - 1 Crossmember [1]
   - 1 gear [3]
   - 1 belt [4]
   - 1 bushing [5]

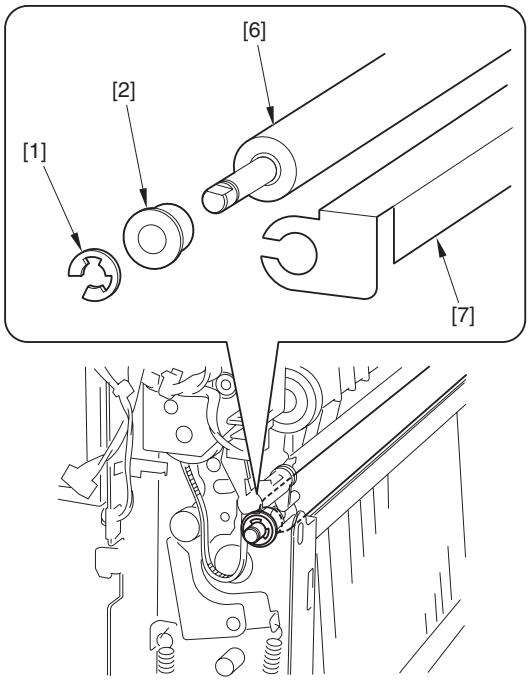

F-10-283

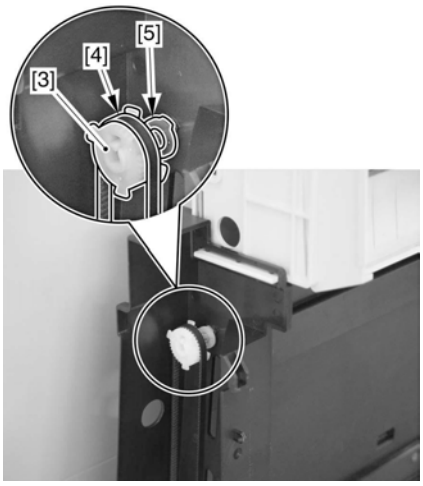

F-10-284

10.10.50 Delivery Vertical Path Roller 2

10.10.50.1 Preparation for Removing the Delivery Vertical Path Roller 2

CLC5151 / / / CLC4040 / / / iR C4580i / / / iR C4080i / / / / Color Image Reader-F1 / Color Image Reader-E1 / Dupiex Color Image Reader-G1 / iR C5185N / / iR C5185i PRT /

1) Remove the upper left cover. (page 12-14)Reference[Removing the Upper Left Cover]
2) Remove the center delivery tray [2].
   - 2 screws [1]

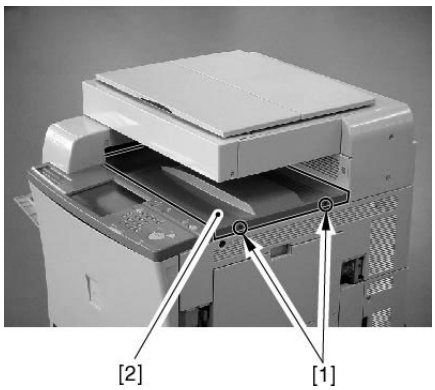

F-10-285

3) Remove the delivery vertical path unit. (page 10-60)Reference[Removing the Delivery Vertical Path Unit]
4) Remove the face-down delivery motor. (page 10-67)Reference[Removing the Face-Down Delivery Motor]
5) Remove the delivery vertical path motor. (page 10-67)Reference[Removing the Delivery Vertical Path Motor]
6) Remove the motor mount [2].
   - 4 Screws [1]

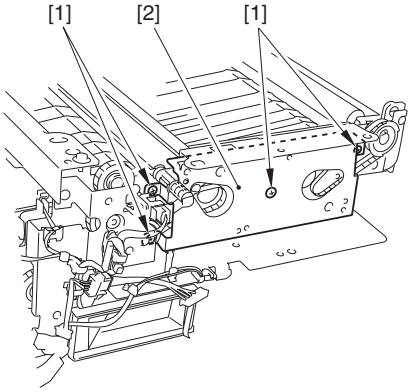

F-10-286

10.10.50.2 Removing the Delivery Vertical Path Roller 2

CLC5151 / / / CLC4040 / / / iR C4580i / / / iR C4080i / / / / Color Image Reader-F1 / Color Image Reader-E1 / Dupiex Color Image Reader-G1 / iR C5185N / / iR C5185i PRT /

1) Remove the gear [1], the belt [2] and the bushing [3].

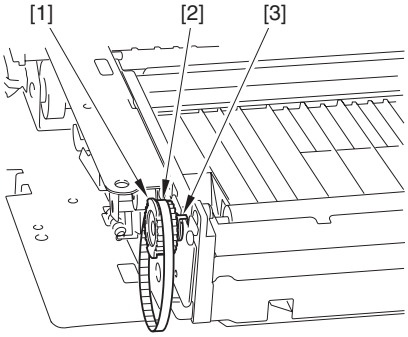

F-10-287

2) Remove the delivery vertical roller 2 [4].
- gear [1]
- belt [2] at the rear
- bushing [3]

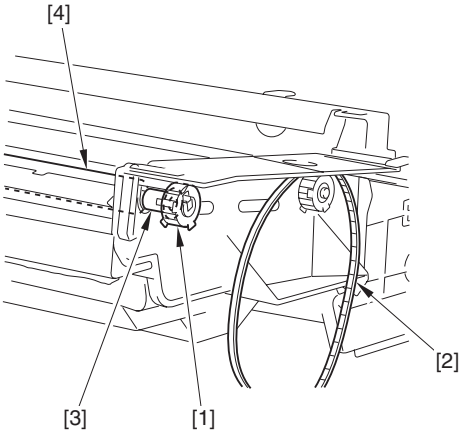

F-10-288

10.10.51 Face-Down Delivery Motor

10.10.51.1 Preparation for Removing the Face-Down Delivery Motor

CLC5151 / / / CLC4040 / / / iR C4580i / / / iR C4080i / / / / Color Image Reader-F1 / Color Image Reader-E1 / Dupiex Color Image Reader-G1 / iR C5185N / / iR C5185i PRT /

1) Remove the upper left cover. (page 12-14)Reference[Removing the Upper Left Cover]
2) Remove the center delivery tray [2].
- 2 screws [1]

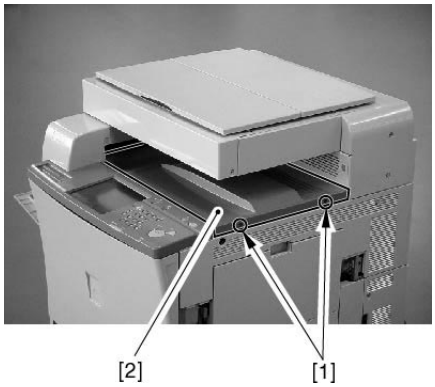

F-10-289

3) Remove the delivery vertical path unit. (page 10-60)Reference[Removing the Delivery Vertical Path Unit]

10.10.51.2 Removing the Face-Down Delivery Motor

CLC5151 / / / CLC4040 / / / iR C4580i / / / iR C4080i / / / / Color Image Reader-F1 / Color Image Reader-E1 / Dupiex Color Image Reader-G1 / iR C5185N / / iR C5185i PRT /

1) Remove the face-down delivery motor [5].
- 1 Harness [2] (free from the wire saddle [1])
- 1 Connector [3]
- 2 Screw [4]

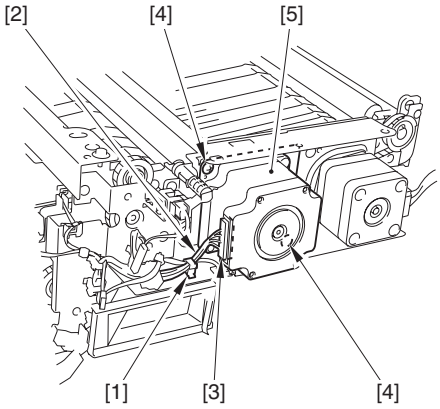

F-10-290

10.10.52 Delivery Vertical Path Motor

10.10.52.1 Preparation for Removing the Delivery Vertical Path Motor

CLC5151 / / / CLC4040 / / / iR C4580i / / / iR C4080i / / / / Color Image Reader-F1 / Color Image Reader-E1 / Dupiex Color Image Reader-G1 / iR C5185N / / iR C5185i PRT /

1) Remove the upper left cover. (page 12-14)Reference[Removing the Upper Left Cover]
2) Remove the center delivery tray [2].
- 2 screws [1]

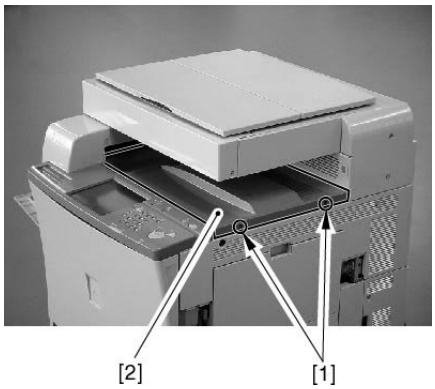

F-10-291

3) Remove the delivery vertical path unit. (page 10-60)Reference[Removing the Delivery Vertical Path Unit]

10.10.52.2 Removing the Delivery Vertical Path Motor

CLC5151 / / / CLC4040 / / / iR C4580i / / / iR C4080i / / / / Color Image Reader-F1 / Color Image Reader-E1 / Dupiex Color Image Reader-G1 / iR C5185N / / iR C5185i PRT /

1) Remove the delivery vertical path motor [2].
- 2 screws [1]

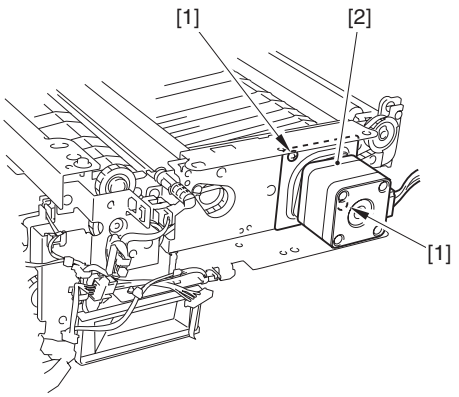

F-10-292

10.10.53 Face-Down Delivery Sensor 1

10.10.53.1 Preparation for Removing the Face-Down Delivery Sensor 1

CLC5151 / / / CLC4040 / / / iR C4580i / / / iR C4080i / / / / Color Image Reader-F1 / Color Image Reader-E1 / Dupiex Color Image Reader-G1 / iR C5185N / / iR C5185i PRT /

1) Remove the upper left cover. (page 12-14)Reference[Removing the Upper Left Cover]
2) Remove the center delivery tray [2].
   - 2 screws [1]

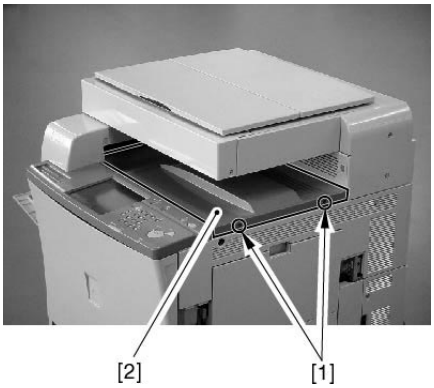

F-10-293

3) Remove the delivery vertical path unit. (page 10-60)Reference[Removing the Delivery Vertical Path Unit]

10.10.53.2 Removing the Face-Down Delivery Sensor 1

CLC5151 / / / CLC4040 / / / iR C4580i / / / iR C4080i / / / / Color Image Reader-F1 / Color Image Reader-E1 / Dupiex Color Image Reader-G1 / iR C5185N / / iR C5185i PRT /

1) Press down the flag retainer [1] in the direction of [A] and pull up the sensor flag [2] in the direction of [B]. Then, remove the sensor flag by pulling it in the direction of [C].

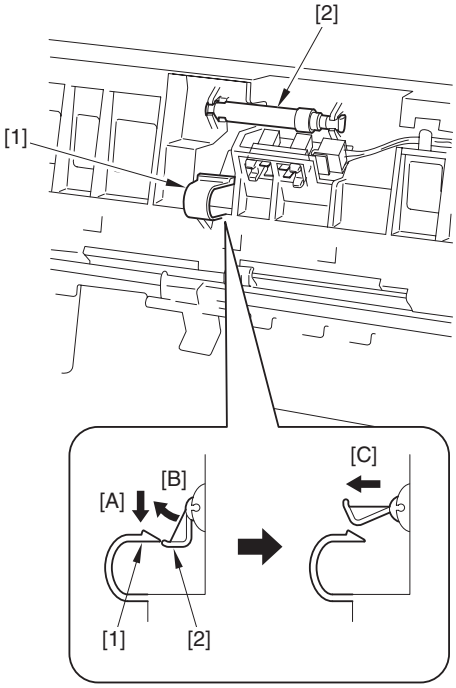

F-10-294

MEMO:
The edge of the sensor flag is cut to an I-shape, permitting it to be removed upward.

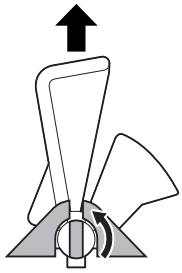

F-10-295

Points to Note When Attaching the Sensor Flag
When attaching the sensor flag, be sure to match the L-shaped area [A] of the spring against the groove [B] in the face-down delivery sub frame.

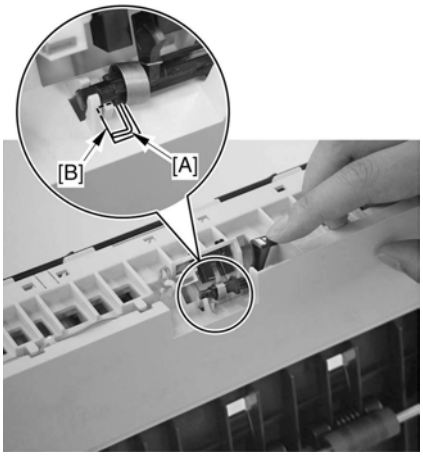

F-10-296

2) Remove the face-down delivery sensor 1 [2].
   - 1 connector [1]

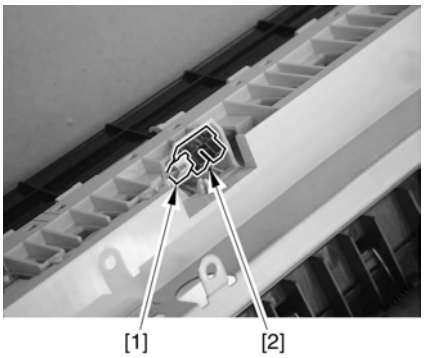

F-10-297

10.10.54 Center Delivery Tray Full sensor

10.10.54.1 Preparaion for Removing the Center Delivery Tray Full sensor

CLC5151 / / / CLC4040 / / / iR C4580i / / / iR C4080i / / / / Color Image Reader-F1 / Color Image Reader-E1 / Dupiex Color Image Reader-G1 / iR C5185N / / iR C5185i PRT /

1) Remove the upper left cover. (page 12-14)Reference[Removing the Upper Left Cover]
2) Remove the center delivery tray [2].
   - 2 screws [1]

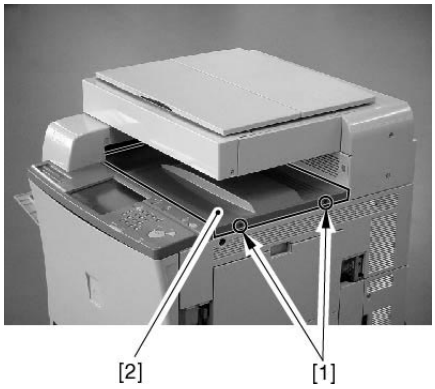

F-10-298

3) Remove the delivery vertical path unit. (page 10-60)Reference[Removing the Delivery Vertical Path Unit]

10.10.54.2 Removing the Center Delivery Tray Full sensor

CLC5151 / / / CLC4040 / / / iR C4580i / / / iR C4080i / / / / Color Image Reader-F1 / Color Image Reader-E1 / Dupiex Color Image Reader-G1 / iR C5185N / / iR C5185i PRT /

1) Remove the center delivery tray full sensor [3].
   - 1 sensor flag [1]
   - 1 connector [2]

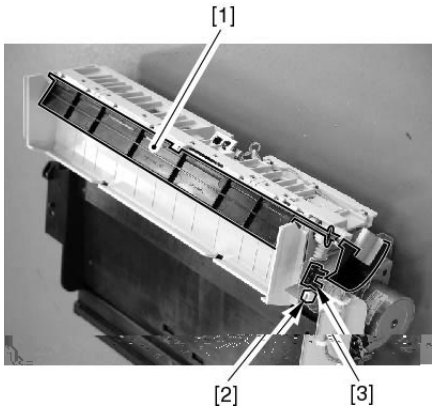

F-10-299

10.10.55 Face-Down Delivery Sensor 2

10.10.55.1 Removing the Face-Down Delivery Sensor 2

CLC5151 / / / CLC4040 / / / iR C4580i / / / iR C4080i / / / / Color Image Reader-F1 / Color Image Reader-E1 / Dupiex Color Image Reader-G1 / iR C5185N / / iR C5185i PRT /

1) Remove the upper left cover. (page 12-14)Reference[Removing the Upper Left Cover]
2) Remove the center delivery tray [2].
   - 2 screws [1]

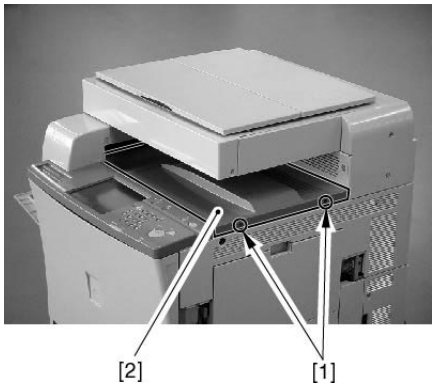

F-10-300

3) Remove the delivery vertical path unit. (page 10-60)Reference[Removing the Delivery Vertical Path Unit]

10.10.55.2 Removing the Face-Down Delivery Sensor 2

CLC5151 / / / CLC4040 / / / iR C4580i / / / iR C4080i / / / / Color Image Reader-F1 / Color Image Reader-E1 / Dupiex Color Image Reader-G1 / iR C5185N / / iR C5185i PRT /

1) Remove the face-down delivery motor mounting plate. (page 10-67)Reference[Removing the Face-Down Delivery Motor]
2) Remove the delivery vertical path motor. (page 10-67)Reference[Removing the Delivery Vertical Path Motor]
3) Remove the motor mount [2].
   - 4 Screws [1]

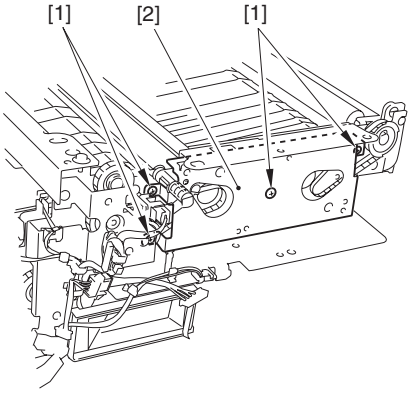

F-10-301

4) Remove the face-down delivery sensor 2 [3].
   - 1 Sensor plug [1]
   - 1 Connector [2]

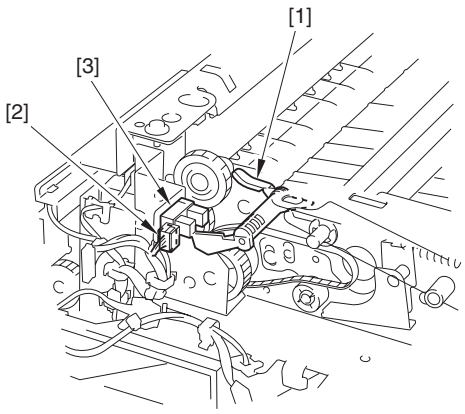

F-10-302

Points to Note When Attaching the Sensor Flag
When attaching the sensor flag [1], hook one end of the inside spring [2] and hook the other end on the flag.

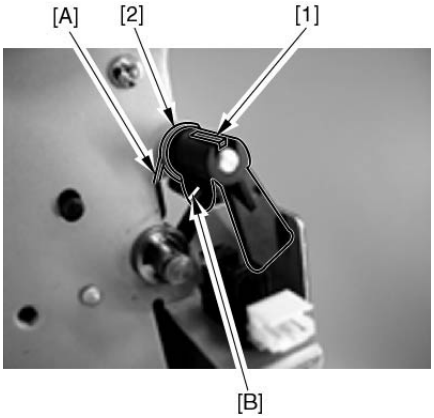

F-10-303

10.10.56 Delivery Vertical Path Cover Open/Closed Sensor

10.10.56.1 Preparation for Removing the Delivery Vertical Path Cover Open/Closed Sensor

CLC5151 / / / CLC4040 / / / iR C4580i / / / iR C4080i / / / / Color Image Reader-F1 / Color Image Reader-E1 / Dupiex Color Image Reader-G1 / iR C5185N / / iR C5185i PRT /

1) Remove the upper left cover. (page 12-14)Reference[Removing the Upper Left Cover]
2) Remove the center delivery tray [2].
   - 2 screws [1]

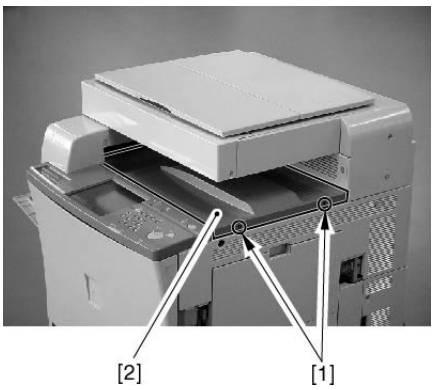

F-10-304

3) Remove the delivery vertical path unit. (page 10-60)Reference[Removing the Delivery Vertical Path Unit]

10.10.56.2 Removing the Delivery Vertical Path Cover Open/Closed Sensor

CLC5151 / / / CLC4040 / / / iR C4580i / / / iR C4080i / / / / Color Image Reader-F1 / Color Image Reader-E1 / Dupiex Color Image Reader-G1 / iR C5185N / / iR C5185i PRT /

1) Remove the crossmember [1].
   - 1 Screw [2]

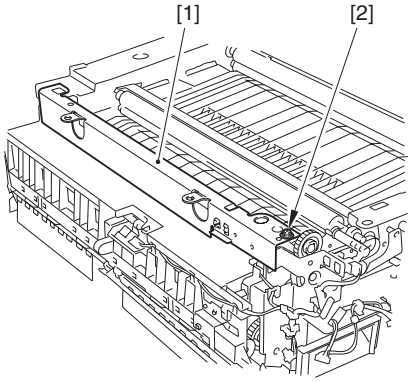

F-10-305

2) Remove the delivery vertical path cover open/closed sensor [2].
   - 1 connector [1]

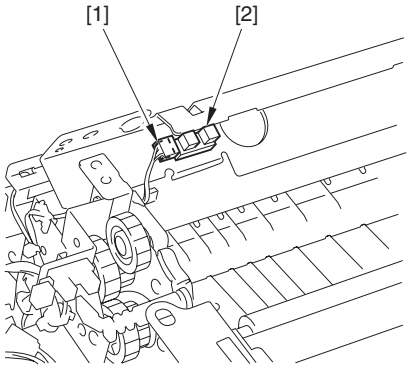

F-10-306

10.10.57 Delivery Path Switching Solenoid 1

10.10.57.1 Preparation for Removing the Delivery Path Switching Solenoid 1

CLC5151 / / / CLC4040 / / / iR C4580i / / / iR C4080i / / / / Color Image Reader-F1 / Color Image Reader-E1 / Dupiex Color Image Reader-G1 / iR C5185N / / iR C5185i PRT /

1) Remove the upper left cover. (page 12-14)Reference[Removing the Upper Left Cover]
2) Remove the center delivery tray [2].
   - 2 screws [1]

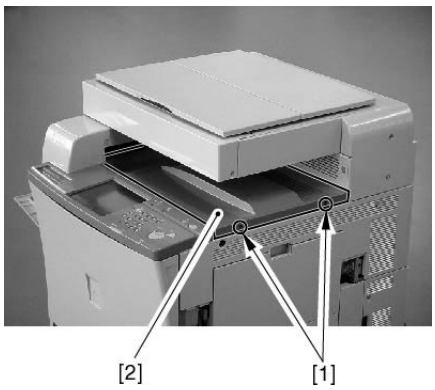

F-10-307

3) Remove the delivery vertical path unit. (page 10-60)Reference[Removing the Delivery Vertical Path Unit]
4) Remove the cleaner fan cover.
5) Remove the cleaner fan [2].(page 12-40)Reference[Removing the Cleaner Fan]

Leave the 2 screws as they are, and disconnect the cable from the guide around the fan.

10.10.57.2 Removing the Delivery Path Switching Solenoid 1

CLC5151 / / / CLC4040 / / / iR C4580i / / / iR C4080i / / / / Color Image Reader-F1 / Color Image Reader-E1 / Dupiex Color Image Reader-G1 / iR C5185N / / iR C5185i PRT /

1) Remove the delivery path switching solenoid 1 [3].
   - 1 connector [1]
   - 1 screw [2]

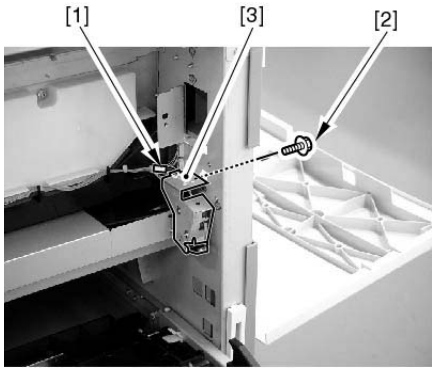

F-10-308

10.10.58 Delivery Path Switching Solenoid 2

10.10.58.1 Preparation for Removing the Delivery Path Switching Solenoid 2

CLC5151 / / / CLC4040 / / / iR C4580i / / / iR C4080i / / / / Color Image Reader-F1 / Color Image Reader-E1 / Dupiex Color Image Reader-G1 / iR C5185N / / iR C5185i PRT /

1) Remove the fixing unit.
1-1) Remove the fixing drive unit. (page 11-22) Reference[Removing the Fixing Drive Unit]
1-2) Remove the fixing unit.
2) Remove the fixing/feeder unit. (page 10-41) Reference[Removing the Fixing/Feeder Unit]

10.10.58.2 Removing the Delivery Path Switching Solenoid 2

CLC5151 / / / CLC4040 / / / iR C4580i / / / iR C4080i / / / / Color Image Reader-F1 / Color Image Reader-E1 / Dupiex Color Image Reader-G1 / iR C5185N / / iR C5185i PRT /

1) Open the fixing/feeder unit cover.

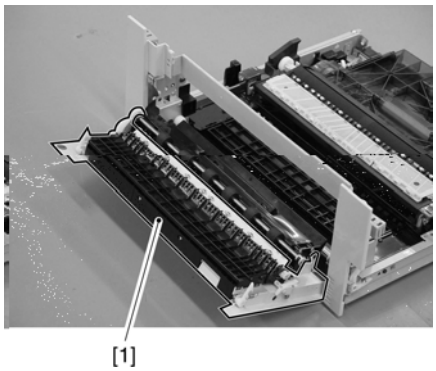

F-10-309

2) Pull the lever [2], and remove the delivery path switching solenoid 2 [4] with its mount.
   - 1 Connector [1]
   - 1 Screw [3]

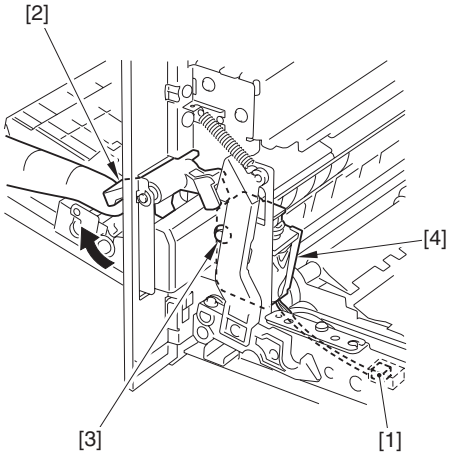

F-10-310

10.10.59 Face-Down Delivery Roller 1 Drive Belt

10.10.59.1 Preparation for Removing the Face-Down Delivery Roller 1 Drive Belt

CLC5151 / / / CLC4040 / / / iR C4580i / / / iR C4080i / / / / Color Image Reader-F1 / Color Image Reader-E1 / Dupiex Color Image Reader-G1 / iR C5185N / / iR C5185i PRT /

1) Remove the upper left cover. (page 12-14) Reference[Removing the Upper Left Cover]
2) Remove the center delivery tray [2].
   - 2 screws [1]

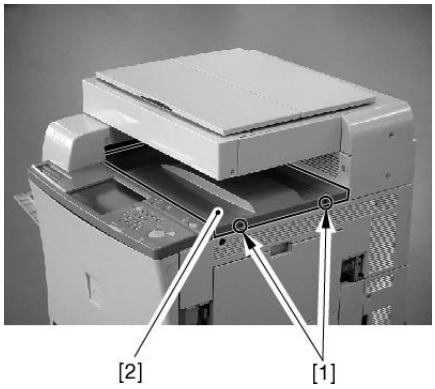

F-10-311

3) Remove the delivery vertical path unit. (page 10-60) Reference[Removing the Delivery Vertical Path Unit]

10.10.59.2 Removing the Face-Down Delivery Roller 1 Drive Belt

CLC5151 / / / CLC4040 / / / iR C4580i / / / iR C4080i / / / / Color Image Reader-F1 / Color Image Reader-E1 / Dupiex Color Image Reader-G1 / iR C5185N / / iR C5185i PRT /

1) Free the protrusion [1] of the belt pulley (upper or lower) from the groove of the shaft, and move it; then, remove the belt [2].

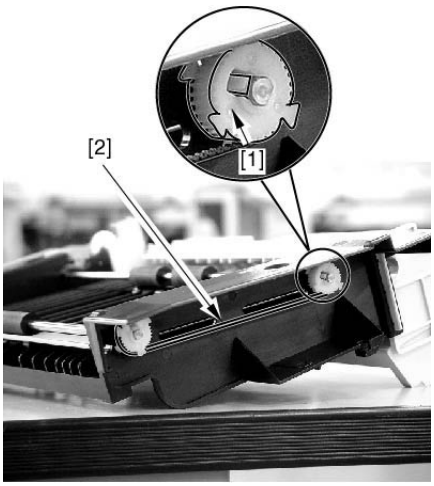

F-10-312

Chapter 11 Fixing System

Contents

11.1 Construction 11-1
11.1.1 Specifications, Control Mechanisms, and Functions 11-1
11.1.2 Major Components 11-1
11.1.3 Control system composition 11-3
11.2 Various Control Mechanisms 11-3
11.2.1 Controlling the Speed of the Fixing Roller 11-3
11.2.1.1 Overview 11-3
11.2.1.2 Controlling the Speed According to Paper Type 11-4
11.2.1.3 Fixing Arch Control 11-4
11.2.2 Controlling the Fixing Roller Temperature 11-6
11.2.2.1 Overview 11-6
11.2.2.2 At Power-On(Fixing belt less than 100 ℃) 11-6
11.2.2.3 At Power-On(Fixing belt 100deg C or more) 11-8
11.2.2.4 Standby mode 11-8
11.2.2.5 Print mode 11-10
11.2.2.6 Temperature rise at end 11-11
11.2.2.7 Measurements against heating of fixing tension roller 11-11
11.2.2.8 In case of recovery from sleep-mode 11-11
11.2.2.9 At Low-Power/Power Save Mode 11-11
11.2.2.10 The service mode regarding the fixing temperature control. 11-12
11.2.3 Detecting the Passage of Paper 11-12
11.2.3.1 Detection of paper passage 11-12
11.2.4 Belting inclined Control 11-13
11.2.4.1 Belt Displacement Control 11-13
11.2.4.2 Belt Full Displacement Temporary Escape Mode 11-17
11.2.5 Checking Life 11-19
11.2.5.1 Lifetime Detection of Fixing Assembly Belt Unit 11-19
11.3 Belt Pressurizing Mechanism 11-20
11.3.1 Pressurizing mechanism of pressure belt 11-20
11.4 Protective Functions 11-21
11.4.1 Power break due to thermo-switch operation at unusual temperature rise. 11-21
11.5 Parts Replacement Procedure 11-22
11.5.1 Notice When Handling the Fixing Assembly 11-22
11.5.1.1 Notice When Handling the Fixing Assembly 11-22
11.5.2 Fixing Drive Unit 11-22
11.5.2.1 Removing the Fixing Drive Unit 11-22
11.5.3 Fixing Assembly 11-22
11.5.3.1 Preparation for Removing the Fixing Assembly 11-22
11.5.3.2 Removing the Fixing Assembly 11-22
11.5.4 IH Unit 11-23
11.5.4.1 Preparation for Removing the IH Unit 11-23
11.5.4.2 Removing the IH Unit 11-23
11.5.5 Fixing Displacement Drive Unit 11-24
11.5.5.1 Preparation for Removing the Belt Displacement Control Motor Unit 11-24
11.5.5.2 Removing the Belt Displacement Control Motor Unit 11-24
11.5.6 Fixing Unit 11-26
11.5.6.1 Preparation for Removing the Fixing Unit 11-26
11.5.6.2 Removing the Fixing Unit 11-26
11.5.6.3 Replacing the Fixing Unit (Service Parts) 11-28
11.5.6.4 Procedure at Replacing the Fixing Unit 11-29
11.5.7 Fixing Delivery Lower Unit 11-30
11.5.7.1 Preparation for Removing the Fixing Delivery Lower Unit 11-30
11.5.7.2 Removing the Fixing Delivery Lower Unit 11-30

11.5.8 Fixing Delivery Upper Unit 11-30
11.5.8.1 Preparation for Removing the Fixing Delivery Upper Unit 11-30
11.5.8.2 Removing the Fixing Delivery Upper Unit 11-30
11.5.9 Pressure Heater 11-31
11.5.9.1 Preparation for Removing the Pressure Heater 11-31
11.5.9.2 Removing the Pressure Heater 11-31
11.5.10 Fixing Inlet Lower Guide 11-31
11.5.10.1 Preparation for Removing the Fixing Inlet Lower Guide 11-31
11.5.10.2 Removing the Fixing Inlet Lower Guide 11-32
11.5.11 Fixing Inlet Sensor 11-32
11.5.11.1 Preparation for Removing the Fixing Inlet Sensor 11-32
11.5.11.2 Removing the Fixing Inlet Sensor 11-32
11.5.12 Fixing Delivery Sensor 11-32
11.5.12.1 Preparation for Removing the Fixing Delivery Sensor 11-32
11.5.12.2 Removing the Fixing Delivery Sensor 11-32
11.5.13 Fixing Belt Position Sensor Unit 11-32
11.5.13.1 Preparation for Removing the Fixing Belt Position Sensor Unit 11-32
11.5.13.2 Removing the Fixing Belt Position Sensor Unit 11-33
11.5.14 Fixing Releasing HP Sensor 11-33
11.5.14.1 Preparation for Removing the Fixing Release HP Sensor 11-33
11.5.14.2 Removing the Fixing Release HP Sensor 11-33
11.5.15 Fixing Wrap Sensor 11-34
11.5.15.1 Preparation for Removing the Fixing Wrap Sensor 11-34
11.5.15.2 Removing the Fixing Wrap Sensor 11-34
11.5.16 Fixing Motor Unit 11-34
11.5.16.1 Preparation for Removing the Fixing Motor Unit 11-34
11.5.16.2 Removing the Fixing Motor Unit 11-34
11.5.17 Fixing Pressure Motor Unit 11-34
11.5.17.1 Preparation for Removing the Fixing Pressure Motor Unit 11-34
11.5.17.2 Removing the Fixing Pressure Motor Unit 11-34
11.5.18 Fixing Belt Displacement Control Motor Unit 11-35
11.5.18.1 Preparation for Removing the Fixing Belt Displacement Control Motor Unit 11-35
11.5.18.2 Removing the Fixing Belt Displacement Control Motor Unit 11-35
11.5.19 Pressure Belt Displacement Control Motor Unit 11-35
11.5.19.1 Preparation for Removing the Pressure Belt Displacement Control Motor Unit 11-35
11.5.19.2 Removing the Pressure Belt Displacement Control Motor Unit 11-35

11.1 Construction

11.1.1 Specifications, Control Mechanisms, and Functions

CLC5151 / / / CLC4040 / / iR C4580i / / iR C4080i / / / / iR C5185N / / iR C5185i PRT /

The fixing system has the following principal functions:

T-11-1

Item	Description
Fixing method	by twin belt
Fixing heater	IH heater
	pressure roller (1 pc.; halogen heater)
Control temperature	fixing belt: 200 deg C (in STBY) pressure belt: 140 or 120 deg c (in STBY)
Fixing drive control	fixing roller speed control (according to paper type/mode)
Fixing temperature detection	Upper Belt Unit - fixing main thermistor (contact) - fixing sub thermistor 1 (contact) - fixing sub thermistor 2 (contact)
	Lower Belt Unit - pressure main thermistor (non-contact) - pressure sub thermistor 1 (contact) - pressure sub thermistor 2 (contact)
Protective mechanism	A check is run for the following, thereby cutting the power to the fixing heater in the event of a fault:
	- thermistor temperature (TH1/TH2/TH3/TH4/TH5/TH6)
	- fixing thermal switch (TP1) operating temperature: 242 +/-7 deg C - pressure thermal switch (TP2) operating temperature: 170 +/-5 deg C
Separation claw	non-contact type (facilitates paper separation)

11.1.2 Major Components

CLC5151 / / / CLC4040 / / iR C4580i / / iR C4080i / / / / iR C5185N / / iR C5185i PRT /

T-11-2

Ref.	Component	Notation	Description
[A] Fixing Belt Unit			
[1]	Fixing belt		50 mm dia.
[2]	Fixing roller		center: 20mm dia. ends: 20 mm dia.
[3]	Fixing belt tension roller		center: 22 mm dia. ends: 21.5 mm dia.
[4]	Fixing main thermistor	TH1	contact type (temperature control, overheating detection)
[5]	Fixing sub thermistor 1	TH2	contact type (overheating detection)
[6]	Fixing sub thermistor 2	TH3	contact type (overheating detection)
[7]	Fixing thermal switch	TP1	contact type
[8]	Fixing pad		nip area formation
[9]	Fixing cleaning felt		prevents intrusion of dust between fixing belt and sliding sheet
[10]	Fixing sliding sheet		limits wear on Fixing belt and Fixing pad
[B] Pressure Belt Unit			
[11]	Pressure belt		50 mm dia.
[12]	Pressure roller		center: 23.5 mm dia. ends: 18.5 mm dia.
[13]	Pressure belt tension roller		center: 21.5 mm dia. ends: 18.5 mm dia.
[14]	Pressure heater	H1	halogen heater: 300 W
[15]	Pressure main thermistor	TH4	non-contact type (temperature control, overheating detection)
[16]	Pressure sub thermistor	TH5	contact type (overheating detection)
[17]	Pressure sub thermistor 2	TH6	contact type (overheating detection)
[18]	Pressure thermal switch	TP3	non-contact type
[19]	Pressure pad		forms nip area
[20]	Pressure belt oil applying rolller		prevents wear on pressure belt
[21]	Oil collecting felt		prevents oil from reaching belt surface
[22]	Pressure sliding sheet		limits wear on pressure belt and pressure pad
[C] IH unit			
[23]	IH coil		
[D] Fixing Drive System			
[24]	Fixing motor	M24	controls fixing/pressure
[25]	Fixing belt displacement control motor	M28	controls displacement of fixing belt
[26]	Pressure belt displacement control motor	M29	controls displacement of pressure belt
[27]	Fixing pressure release motor	M27	controls engagement of pressure belt unit

Ref.	Component	Notation	Description
[28]	Fixing belt position sensor 1	PS33	detects fixing belt position
[29]	Fixing belt position sensor 2	PS34	
[30]	Fixing belt position sensor 3	PS35	
[31]	Fixing belt HP sensor	PS31	detects fixing belt home position
[32]	Pressure belt position sensor 1	PS36	Detects pressure belt position
[33]	Pressure belt position sensor 2	PS37	
[34]	Pressure belt position sensor 3	PS38	
[35]	Pressure belt HP sensor	PS30	detects pressure belt home position
[36]	Fixing pressure release HP sensor	PS46	detects pressure belt engagement
[37]	Fixing inlet sensor	PS27	detects fixing inlet jams
[38]	Fixing outlet sensor	PS25	detects fixing outlet jams
[39]	Fixing wrap jam sensor	PS29	detects wrap jams

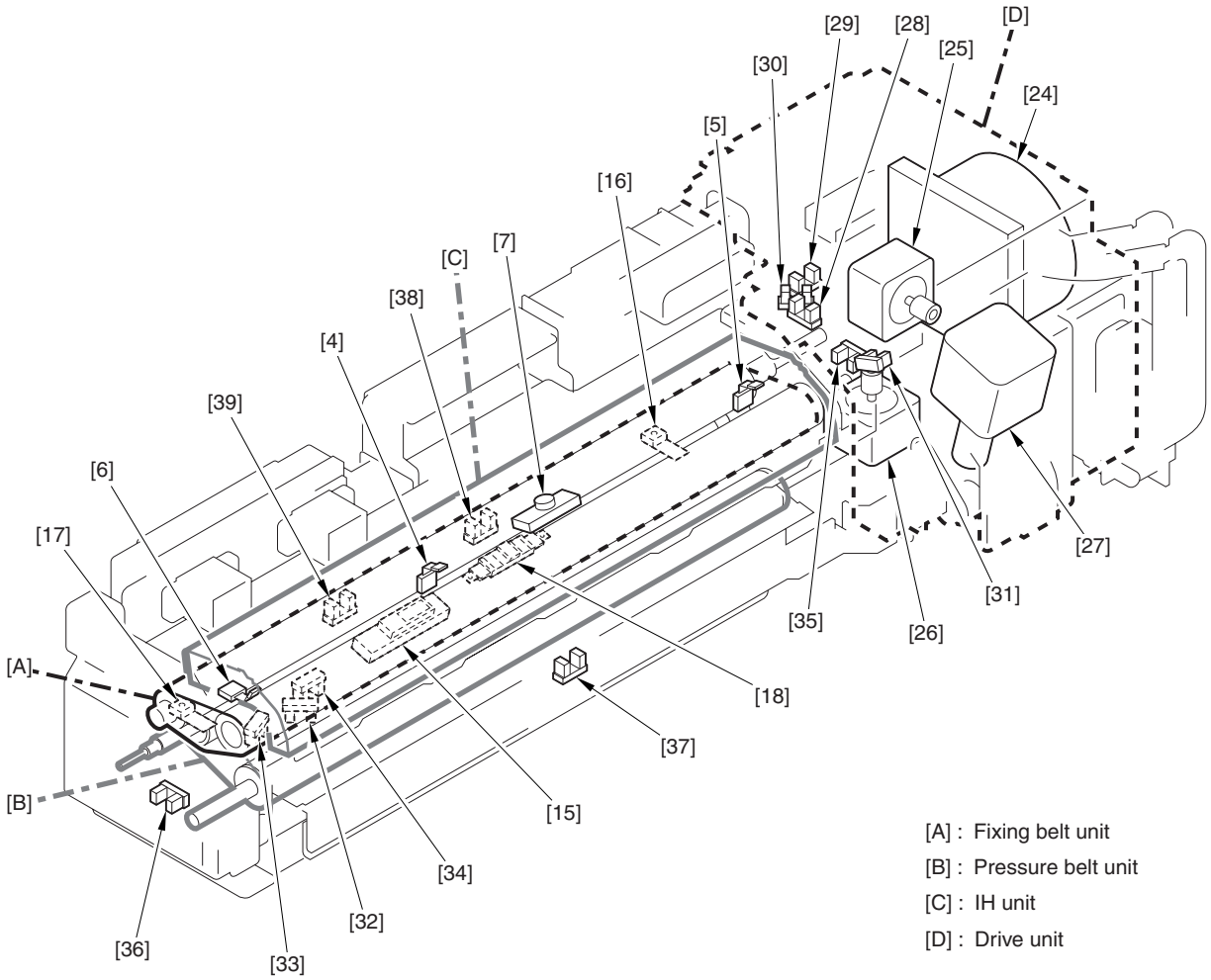

F-11-1

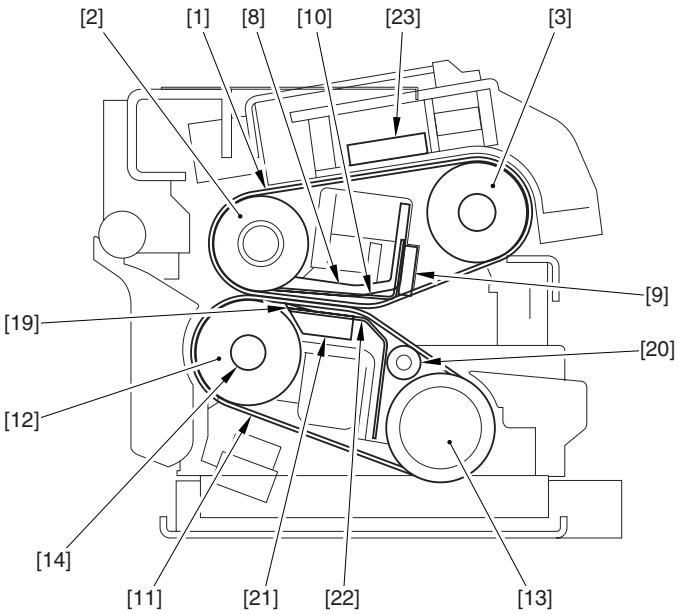

F-11-2

11.1.3 Control system composition

CLC5151 / / / CLC4040 / / / iR C4580i / / / iR C4080i / / / / iR C5185N / / iR C5185i PRT /

The following shows the major components of the fixing system:

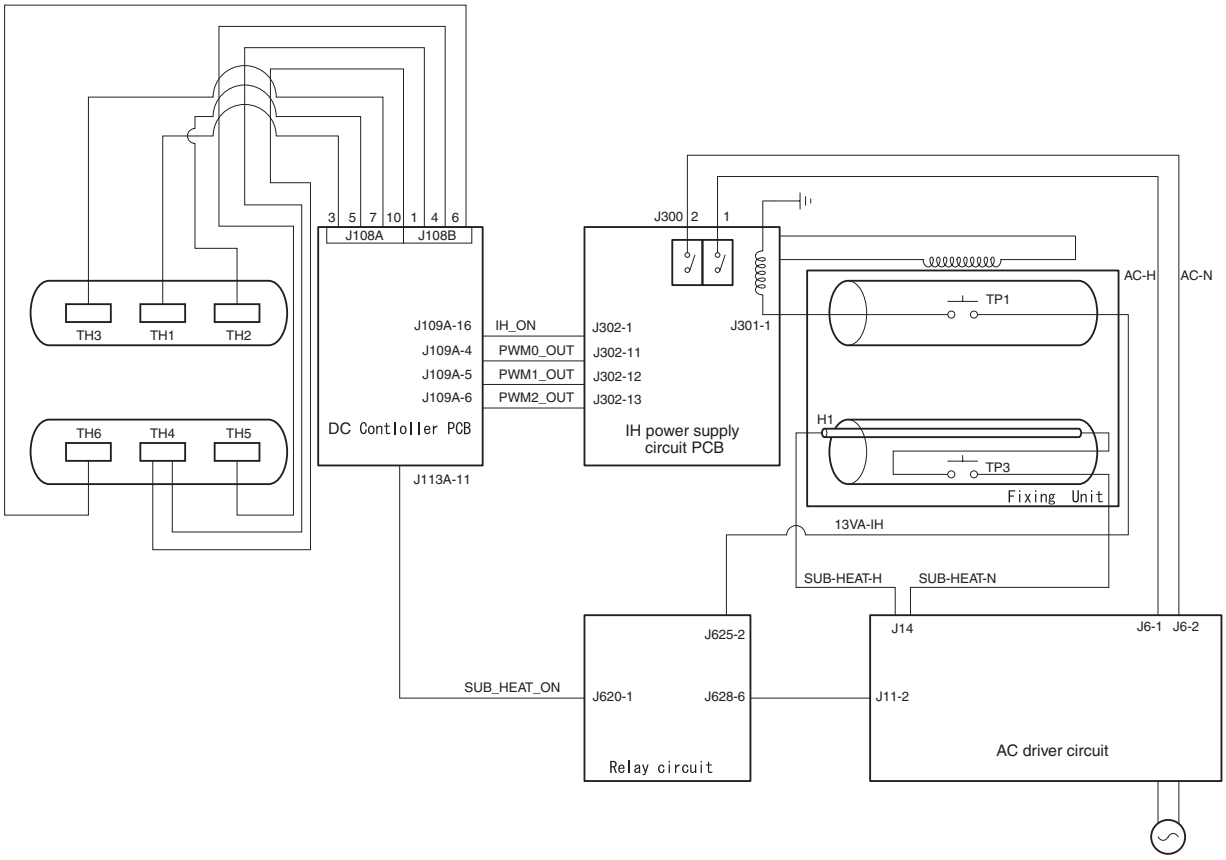

F-11-3

11.2 Various Control Mechanisms

11.2.1 Controlling the Speed of the Fixing Roller

11.2.1.1 Overview

CLC5151 / / / CLC4040 / / / iR C4580i / / / iR C4080i / / / / iR C5185N / / iR C5185i PRT /

The fixing drive motor (M24) is used to drive the fixing roller and the pressure motor, which in turn rotate the pressure belt.
The speed of the The fixing drive motor (M24) is varied to suit the type of paper being used.

-controlling the speed to suit paper types

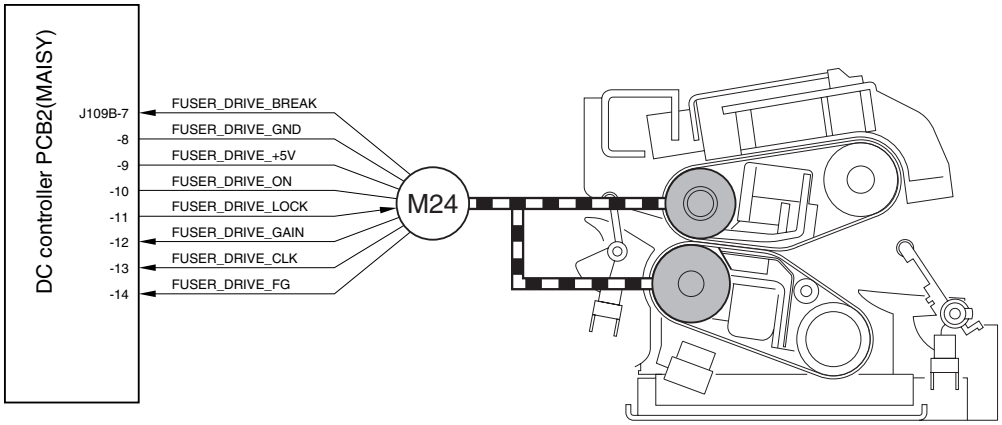

F-11-4

11.2.1.2 Controlling the Speed According to Paper Type

CLC5151 / / / CLC4040 / / / iR C4580i / / / iR C4080i / / / / iR C5185N / / iR C5185i PRT /

The machine controls the speed of the fixing roller according to the paper type .

T-11-3

Mode	Paper type	Productivity/fixing (process) speed		
		iR C5180	iR C4580	iR C3880
Normal speed mode	plain paper	51/210	40/163	40/163
1/2 speed	heavy paper*1	25.5/105	20/81.5	20/81.5
Bk high-speed mode	as set in service mode	-	45/185*2	38/185*2
Transparency mode	transparency, gloss paper	11(Bk)ÅA9.5(4C)/105		

*1: The speed of the fixing roller is decreased (to 1/2) to ensure fixing on heavy paper and, in the case of full color mode, to ensure fixing of the color toner layer on the transparency.
*2: In the case of the Bk single-color mode, the speed is 45cpm, 185mm/sec, however in the case of the automatic selection job (ACS) of black and white/color (even the print of only Bk), the speed is 40cpm, 163mm/sec.
Once operates in the color mode (40cpm, 163mm/sec), it will not switch to the Bk single-color mode (45cpm, 185mm/sec) unless the standby stop of the printer.

11.2.1.3 Fixing Arch Control

CLC5151 / / / CLC4040 / / / iR C4580i / / / iR C4080i / / / / iR C5185N / / iR C5185i PRT /

Controlling Fixing Arch
The fixing arch control is the control for forming appropriate arching of paper.
After the paper reached the nip of the fixing assembly, lower the feeding speed of the fixing drive motor (M24) and form arch using the difference of the speeds between the fixing roller and the secondary transfer roller.
When there is enough arching, the fixing arch sensor (PS47) turns OFF.
When the fixing arch sensor (PS47) goes OFF, the fixing drive motor (M24) increases its rotation speed.
By adjusting the speed of the fixing drive motor (M24), an appropriate arching can be always formed.
This control ends when the trailing edge of paper leaves the secondary transfer roller.

Flow of Control

[1] Starting to Monitor the Arching of Paper
The machine starts to monitor the arching of paper as soon as its leading edge has fully reached a point +10 mm of the fixing nip (i.e., where the leading edge has fully reached the fixing assembly).

[2] Controlling the Speed of the Fixing Motor
Paper is first moved to the fixing assembly at 99% of the process speed, which is then switched as follows:
When the fixing arch sensor goes on [B],
increases the fixing motor speed (to 103% of the process speed).
When the fixing arch sensor goes off [C],
decreases the fixing motor speed (to 99% of the process speed).

[3] The machine ends monitoring the arching when the trailing edge of paper leaves the secondary transfer roller.

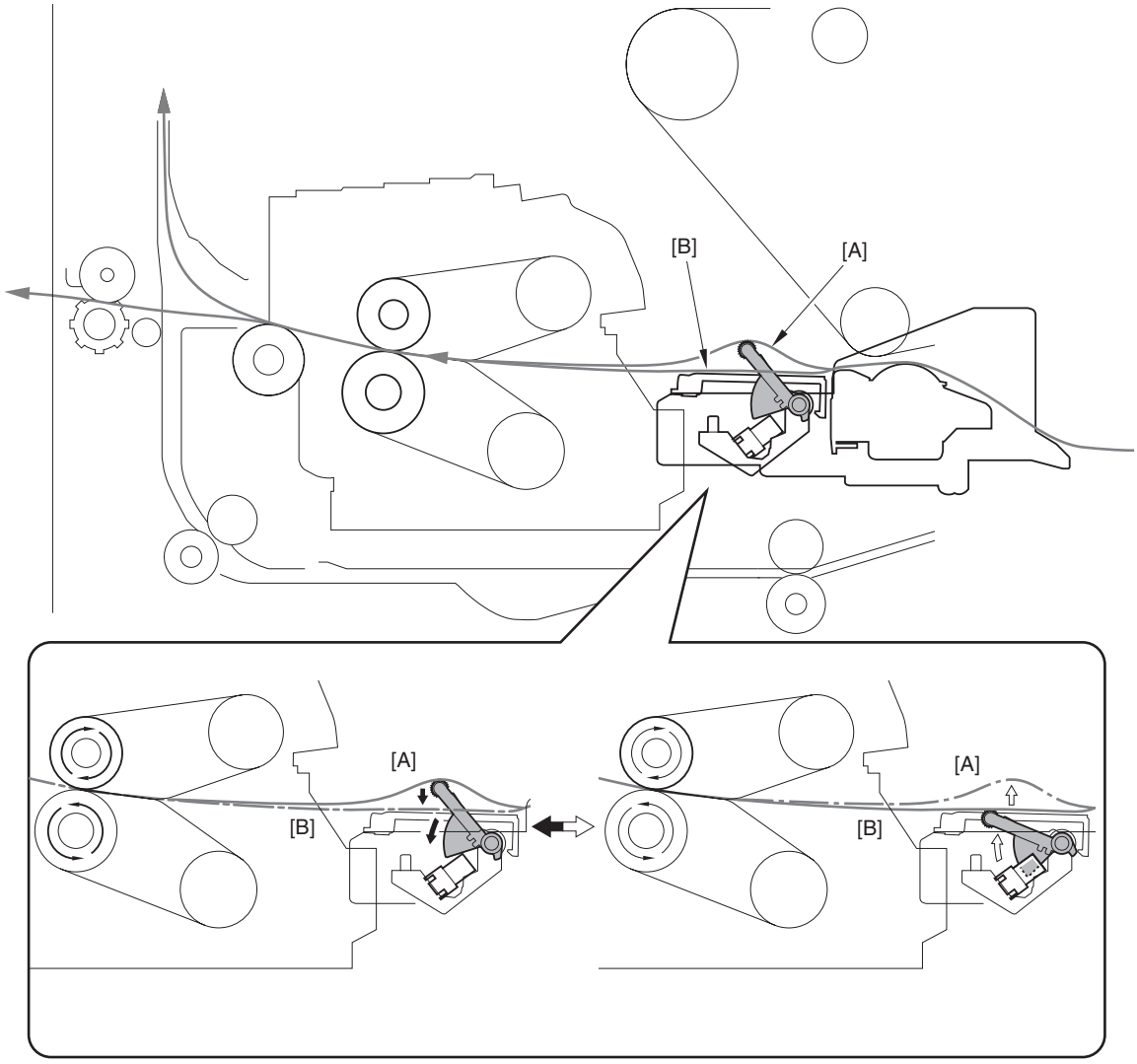

F-11-5

11.2.2 Controlling the Fixing Roller Temperature

11.2.2.1 Overview

CLC5151 / / / CLC4040 / / / iR C4580i / / / iR C4080i / / / / iR C5185N / / iR C5185i PRT /

The temperature control mechanism of the fixing roller is as follows:
See the next and subsequent pages for details of the temperature control mechanism for the following:
(1) at power-on
(2) in standby
(3) during printing
(4) in response to overheating of the ends
(5) in response to overheating of the fixing tension roller
(6) during recovery from low-power mode
(6) during recovery from sleep mode

11.2.2.2 At Power-On(Fixing belt less than 100Åé)

CLC5151 / / / CLC4040 / / / iR C4580i / / / iR C4080i / / / / iR C5185N / / iR C5185i PRT /

While the machine is starting up, the fixing start-up sequence is based on the mechanism used when the fixing belt temperature is less than 100 deg C.
In fixing start-up sequence, the fixing belt target temperature and the pressure target temperature are used as target temperatures while the machine starts up, supplying the IH heater with power to turn on the pressure heater until the start-up end condition*1 is satisfied, at which time the machine moves to standby sequence.
The machine also drives the fixing motor while it starts up to rotate the fixing belt and the pressure belt at 32 mm/sec. The pressure belt is not in contact with the fixing belt (i.e., away).

Note 1: The condition of setup completion varies depending on the environment and model (iR C5180, iR C4580, or iR C3880). See the following:

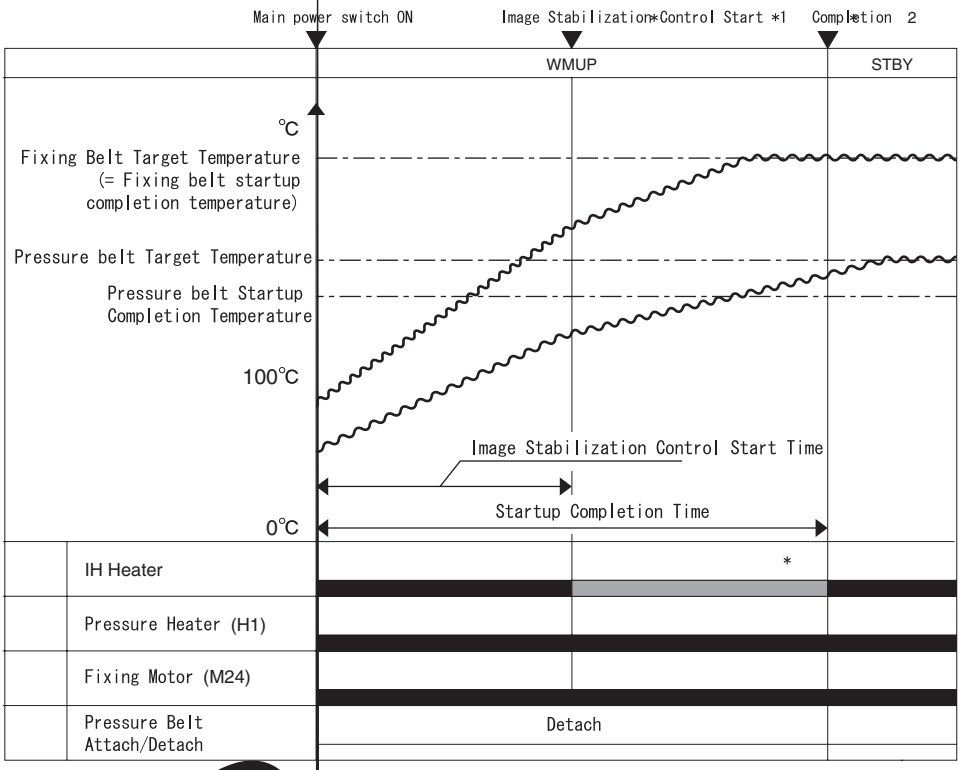

F-11-6

1. Temperature Table (no temperature >/= 18 deg C)

T-11-4

		iR C5180	iR C4580/3880		
			100V	120V	230V
Targ	fixing belt(deg C)	200			
	pressure belt(deg C)	140			
ure (deg C)	fixing belt	200	200	200	200
	pressure belt	100	120		
	WUT(sec)				

2. Tem (low-temperature environment: room tem

T-11-5

		iR C5180	iR C4580/3880		
			100V	**120V**	**230V**
Target temperature (deg C)	fixing belt	210			
	pressure belt	140			
Start-up end temperature (deg C)	fixing belt	200	200	200	200
	pressure belt	100	120	110	100

3. Temperature Table (high-temperature environment: room temperature >/= 21 deg C)

T-11-6

		iR C5180	iR C4580/3880		
			100V	**120V**	**230V**
Target temperature	fixing belt(deg C)	200			
	pressure belt(deg C)	120			
Start-up end temperature (deg C)	fixing belt	200	200	200	200
	pressure belt	100	120	110	100
	WUT(sec)	240	300	270	240

11.2.2.3 At Power-On(Fixing belt 100deg C or more)

CLC5151 / / / CLC4040 / / / iR C4580i / / / iR C4080i / / / / iR C5185N / / iR C5185i PRT /

In fixing start-up sequence (fixing belt 100 deg C or more), turn on IH heater and pressure heater at power on, control the temperatures of the fixing/pressure belts so that they reach their target temperatures.
When the fixing/pressure belts reach their target temperature, the machine moves to the standby mode.

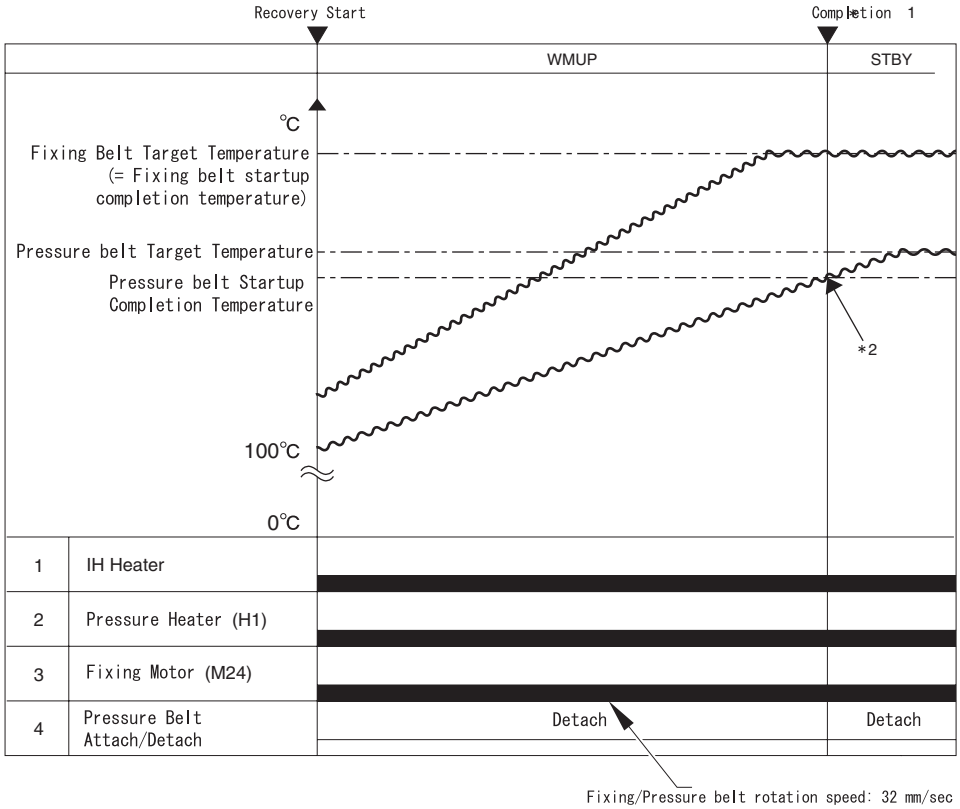

*1: When the startup requirements are fulfilled, it shifts to the standby mode.
*2: If it does not reach to the target temperature before the completion of the startup, heating is continued until it gets to the target temperature.

F-11-7

1. Temperature Table (normal environment: 21 deg C > ROM temperature >/= 18 deg C)

T-11-7

		iRC5180	iRC4580/3880		
			100V	120V	230V
Target temperature	Fixing belt (deg C)	200			
	Pressure belt (deg C)	140			
Start-up end condition	Fixing belt (deg C)	200	200	200	200
	Pressure belt (deg C)	100	120	110	100

2. Temperature Table (low-temperature environment: room temperature < 18 deg C)

T-11-8

		iRC5180	iRC4580/3880		
			100V	120V	230V
Target temperature	Fixing belt (deg C)	210			
	Pressure belt (deg C)	140			
Start-up end condition	Fixing belt (deg C)	200	200	200	200
	Pressure belt (deg C)	100	120	110	100

3. Temperature Table (high-temperature environment: room temperature >/= 21 deg C)

T-11-9

		iRC5180	iRC4580/3880		
			100V	120V	230V
Target temperature	Fixing belt (deg C)	200			
	Pressure beltPressuPressure belt (deg C)	120			
Start-up end condition	Fixing belt (deg C)	200	200	200	200
	Pressure belt (deg C)	100	120	110	100

11.2.2.4 Standby mode

CLC5151 / / / CLC4040 / / / iR C4580i / / / iR C4080i / / / / iR C5185N / / iR C5185i PRT /

After the system moves to standby mode, the temperatures of the fixing belt and pressure belt are controlled at each target temperature in a standby sequence. The

fixing belt is driven and the fixing belt and the pressure belt are rotated in a speed of 32 mm/sec. The pressure belt remains "demounted". In addition, the pressure heater is ON during printing, except iRC5180 and 230V iRC4580/3880 machine.
The standby sequence is continued until the system moves to low power mode or print mode.
The target temperatures of the fixing belt and the pressure belt in the standby sequence are shown in the following table.
1. Temperature Table (Normal: 21 deg C > Room temperature >/= 18 deg C)

T-11-10

		Time passed from 'ready' (sec) *1	
		0 to 899	**900 to**
iR C5180 Standby	Fixing belt	200 deg C	200 deg C
	Pressure belt	140 deg C	140 deg C
iR C4580/3880 Standby	Fixing belt	200 deg C	200 deg C
	Pressure belt	140 deg C	140 deg C

*1 incl. Job time
2. Temperature Table (Low temperature: Room temperature < 18 deg C)

T-11-11

		Time passed from 'ready' (sec) *1	
		0 to 899	**900 to**
iR C5180 Standby	Fixing belt	210 deg C	200 deg C
	Pressure belt	140 deg C	140 deg C
iR C4580/3880 Standby	Fixing belt	210 deg C	200 deg C
	Pressure belt	140 deg C	140 deg C

*1 incl. Job time
3. Temperature Table (High temperature: Room temperature >/= 21 deg C)

T-11-12

		Time passed from 'ready (sec) *1	
		0 to 899	**900 to**
iR C5180 Standby	Fixing belt	200 deg C	200 deg C
	Pressure belt	120 deg C	120 deg C
iR C4580/3880 Standby	Fixing belt	200 deg C	200 deg C
	Pressure belt	120 deg C	120 deg C

*1 incl. Job time

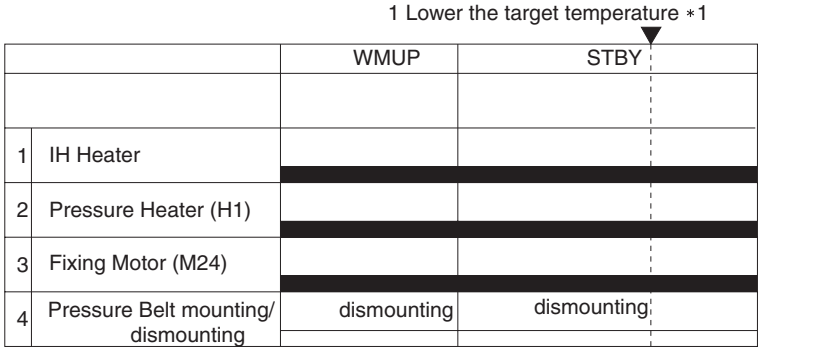

*1 : 900 sec or longer after the machine moves to standby mode at the low temperature environment.

F-11-8

11.2.2.5 Print mode

CLC5151 / / / CLC4040 / / / iR C4580i / / / iR C4080i / / / / iR C5185N / / iR C5185i PRT /

In the fixing startup sequence, the room temperature is detected to set the target temperature at the start of printing.
At the start of printing, the IH heater is powered and the pressure heater is turned to off.
In addition, the fixing motor is stopped and the rotations of the fixing belt/the pressure belt are stopped. (It needs 0.5 sec to stop them completely.) At the same time, the fixing pressure motor is driven and the pressure belt is pressurized to the fixing belt.
When the fixing pressure HP sensor is turned to on (approx. 3 sec), the fixing pressure motor is stopped and the fixing motor is driven. And the IH heater is powered and the pressure heater is turned to on. *1: The target temperature of the fixing belt is lowered in stages between 10 and 50 sec after the print is started. (Refer to the following table.) The following table indicates in case of the plain paper.
When the fixing delivery sensor is turned to off after the last sheet passes, the power applied to the IH heater is stopped. At the same time, both the fixing motor and the fixing pressure motor are stopped and the pressure belt is freed (approx. 3 sec).
When the fixing pressure HP sensor is turned to off, the IH heater is powered again, the fixing motor is driven, and the fixing belt and the pressure belt are rotated in a speed of 32 mm/sec.
The system moves to standby mode.
*1: Only the iR C5180, iR C4580/3880 (230V)

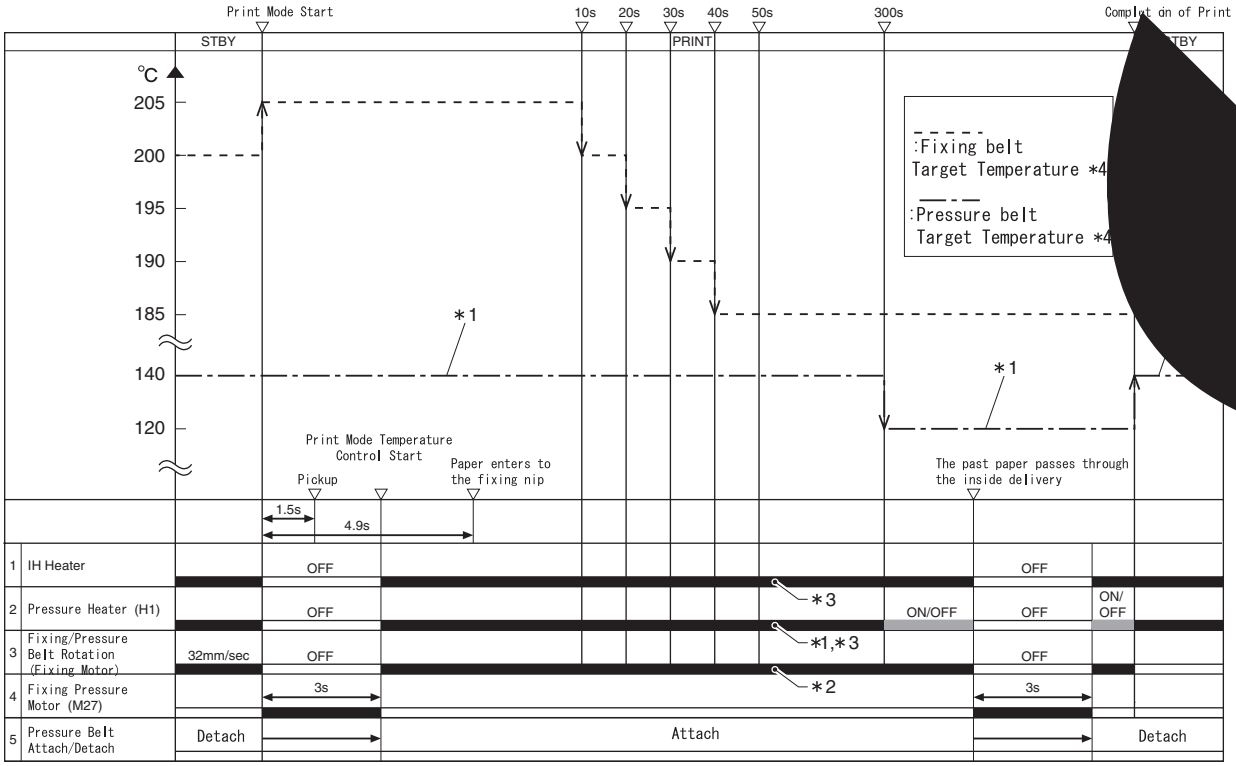

*1: Only the iR C5180 and the 230V model of the iR C4580/C3880, it is ON.
*2: The rotation speed of the belt varies depending on the paper type.
*3: The target temperature during printing varies depending on the environment.
*4: The indicated target temperature is for the iR C5180. (27 deg C > room temperature >/= 18 deg C)

F-11-9

1. Temperature Table (Normal: 21 deg C > Room temperature >/= 18 deg C)

T-11-13

		Time passed from Start of Printing						
		0 to 9	**10 to 19**	**20 to 29**	**30 to 39**	**40 to 49**	**50 to**	**300 to**
iR C5180 Plain paper	Fixing belt	205 deg C	200 deg C	195 deg C	190 deg C	185 deg C	185 deg C	185 deg C
	Pressure belt	140 deg C						120 deg C
iR C4580/3880 Plain paper	Fixing belt	205 deg C	200 deg C	195 deg C	190 deg C	185 deg C	180 deg C	180 deg C
	Pressure belt	OFF						

2. Temperature Table (Low temperature: Room temperature < 18 deg C)
First in the morning (during 15 min after start-up): To 899 sec from 'ready'

T-11-14

		Time passed from Start of Printing						
		0 to 9	**10 to 19**	**20 to 29**	**30 to 39**	**40 to 49**	**50 to**	**300 to**
iR C5180 Plain paper	Fixing belt	210 deg C	205 deg C	200 deg C	195 deg C	190 deg C	190 deg C	190 deg C
	Pressure belt	140 deg C						120 deg C
iR C4580/3880 Plain paper	Fixing belt	210 deg C	205 deg C	200 deg C	195 deg C	190 deg C	185 deg C	185 deg C
	Pressure belt	OFF						

STBY (15 min after start-up): 900 sec or later from 'ready'

T-11-15

		Time passed from Start of Printing						
		0 to 9	**10 to 19**	**20 to 29**	**30 to 39**	**40 to 49**	**50 to**	**300 to**
iR C5180 Plain paper	Fixing belt	205 deg C	200 deg C	195 deg C	190 deg C	190 deg C	190 deg C	190 deg C
	Pressure belt	140 deg C						120 deg C
iR C4580/3880 Plain paper	Fixing belt	205 deg C	200 deg C	195 deg C	190 deg C	185 deg C	185 deg C	185 deg C
	Pressure belt	OFF						

3. Temperature Table (High temperature: Room temperature >/= 21 deg C)

T-11-16

		Time passed from Start of Printing						
		0 to 9	**10 to 19**	**20 to 29**	**30 to 39**	**40 to 49**	**50 to**	**300 to**
iR C5180 Plain paper	Fixing belt	205 deg C	200 deg C	195 deg C	190 deg C	185 deg C	185 deg C	185 deg C
	Pressure belt	120 deg C						120 deg C
iR C4580/3880 Plain paper	Fixing belt	205 deg C	200 deg C	195 deg C	190 deg C	185 deg C	180 deg C	180 deg C
	Pressure belt	OFF						

11.2.2.6 Temperature rise at end

CLC5151 / / / CLC4040 / / / iR C4580i / / / iR C4080i / / / / iR C5185N / / iR C5185i PRT /

1. Temperature rise control at end of IH heater
[1] Step 1
If either the sub-thermistor 1 (TH2) or the sub-thermistor 2 (TH3) detects 215 deg C, the upper limit of power applied to the IH heater is lowered. (Power at print mode *1 -> 500W)
If both of the sub-thermistor 1 (TH2) and the sub-thermistor 2 (TH3) detect less than 215 deg C, the upper limit of power applied to the IH heater is returned to original. (500W -> Power at print mode)

[2] Step 2
If either the fixing sub-thermistor 1 (TH2) or the fixing sub-thermistor 2 (TH3) detects 220 deg C, the power applied to the IH heater becomes 0W.
If both of the fixing sub-thermistor 1 (TH2) and the fixing sub-thermistor 2 (TH3) detect less than 215 deg C, the system moves to step 1.

T-11-17

	IH Power at normal	IH Power Upper limit / Temperature 1 to change	IH Power Upper limit / Temperature 2 to change
IH Power Upper limit	1100 W	500 W	0 W
Fixing sub-thermistor 1/2	Less than 215 deg C	215 deg C	220 deg C

2. Temperature rise control at end of Pressure heater *1
If either the pressure sub-thermistor 1 (TH5) or the pressure sub-thermistor 2 (TH6) detects 215 deg C or higher, the pressure heater is turned to off.
If both the pressure sub-thermistor 1 (TH5) and the pressure sub-thermistor 2 (TH6) are less than 215 deg C, the temperature in print mode is controlled.
*1: Only for iR C5180 and iR C4580/3880 (230 V)

T-11-18

	Pressure heater forced off temperature
Pressure sub-thermistor 1/2	215 deg C

11.2.2.7 Measurements against heating of fixing tension roller

CLC5151 / / / CLC4040 / / / iR C4580i / / / iR C4080i / / / / iR C5185N / / iR C5185i PRT /

Objective
- To detect the high-temperature error by bringing fixing sub thermistor into contact with tension roller if the fixing belt becomes torn.
- To detect high-temperature error by fixing sub thermistor 2 as fixing tension roller (metal) temperature becomes higher than the inside of the belt at the time of start-up.

These operations against the heating of tension roller are conducted during warm-up, recovery mode, and stand-by.

[1] Step 1
The system lowers the electric power capacity on the IH heater when either of sub thermistor 1 (TH2) or sub thermistor 2 (TH3) detects the temperature higher than 215 deg C. (electric capacity *1 in the print mode -> 700W)
The system recovers the electric capacity when both of sub thermistor 1 (TH2) or sub thermistor 2 (TH3) detect the temperature lower than 215 deg C. (700W -> electric capacity *1 in the print mode)

[2] Step2
The system sets the electric power capacity on the IH heater 0W when either of sub thermistor 1 (TH2) or sub thermistor 2 (TH3) detects the temperature higher than 220 deg C.
The system goes to the step [1] when both of sub thermistor 1 (TH2) or sub thermistor 2 (TH3) detect the temperature lower than 215 deg C.

T-11-19

	temperature to change IH electric capacity 1	temperature to change IH electric capacity 2
IH electric capacity	700 W	0 W
Fixing sub-thermistor 1/2	215 deg C	220 deg C

11.2.2.8 In case of recovery from sleep-mode

CLC5151 / / / CLC4040 / / / iR C4580i / / / iR C4080i / / / / iR C5185N / / iR C5185i PRT /

The system starts the same temperature controlling as that of the Power-On (Fixing belt less than 100deg C) operation.

11.2.2.9 At Low-Power/Power Save Mode

CLC5151 / / / CLC4040 / / / iR C4580i / / / iR C4080i / / / / Color Image Reader-F1 / Color Image Reader-E1 / Dupiex Color Image Reader-G1 / iR C5185N / / iR C5185i PRT /

This machine has the low power and power save mode for energy conservation.
Reducing energy consumption is possible by lowering the fixing belt temperature target and turning off the pressure heater, respectively.
The following are the fixing belt temperature control, pressure heater ON/OFF and recovery time at lower power/power save mode.

T-11-20

		Model		
Mode	Item	iRC 5180	iRC 45180	iRC 3880
Power save mode (-10%)	Fixing belt temperature control (deg C)	110/140*1	90/130*1	200
	Pressure heater	Off	Off	140*2
	Recovery time (sec)	170sec or less	230/200/170sec or less *3	-
Power save mode (-25%)	Fixing belt temperature control (deg C)	200	200	200
	Pressure heater	Off	Off	Off
	Recovery time (sec)	Approx. 30	Approx. 30	Approx. 30
Power save mode (-50%)	Fixing belt temperature control (deg C)	190	190	190
	Pressure heater	Off	Off	Off
	Recovery time (sec)	Approx. 30	Approx. 30	Approx. 30
Lower power mode	Fixing belt temperature control (deg C)	140	140	140
	Pressure heater	Off	Off	Off
	Recovery time (sec)	Approx. 80	Approx. 80	Approx. 80

*1: Copier/Multi-function copier
*2: 120 deg C for high-humidity environment (ROM temperature>/=27 deg C)
*3: 230/200/170sec are for 100V/120V/230V machines respectively.

11.2.2.10 The service mode regarding the fixing temperature control.

CLC5151 / / / CLC4040 / / / iR C4580i / / / iR C4080i / / / / Color Image Reader-F1 / Color Image Reader-E1 / Dupiex Color Image Reader-G1 / iR C5185N / / iR C5185i PRT /

1.Fixing Belt Standby Temperature Change
[Mode name]
COPIER > OPTION > BODY > FX-U-STB
[Functional Description]
Change the standby temperature of the fixing belt.
[Setting Values]
0: Default
1: +10
2: +5
3: -5
4: -10
[Usage]
Depending on the installation site (environment) or the customers' way of using, change the temperature at the standby.
If fixing fault occurs, raise the temperature for standby temperature control.
If the crease occurs, lower the temperature for standby temperature control.
Å@
2.Pressure Belt Standby Temperature Change
[Mode name]
COPIER > OPTION > BODY > FX-L-STB
[Functional Description]
Change the standby temperature of the pressure belt.
[Setting Values]
0: Default
1: +20
2: +10
3: -20
4: -40
[Usage]
Depending on the installation site (environment) or the customers' way of using, change the temperature at the standby.
If fixing fault occurs, raise the temperature for standby temperature control.
If the crease occurs, lower the temperature for standby temperature control.
Å@Å@

11.2.3 Detecting the Passage of Paper

11.2.3.1 Detection of paper passage

CLC5151 / / / CLC4040 / / / iR C4580i / / / iR C4080i / / / / iR C5185N / / iR C5185i PRT /

Paper passage detection components of the fixing unit are described as follows:
- Fixing inlet sensor(PS27) Detects the passage of paper fed to the fixing unit
- Fixing delivery sensor(PS25) Detects the paper delivered from the fixing unit
-Fixing wrap jam sensor (PS29) Detects wrap jams

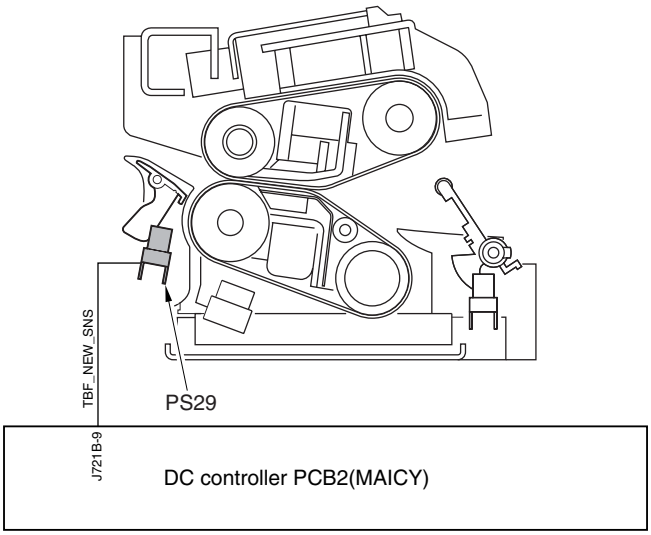

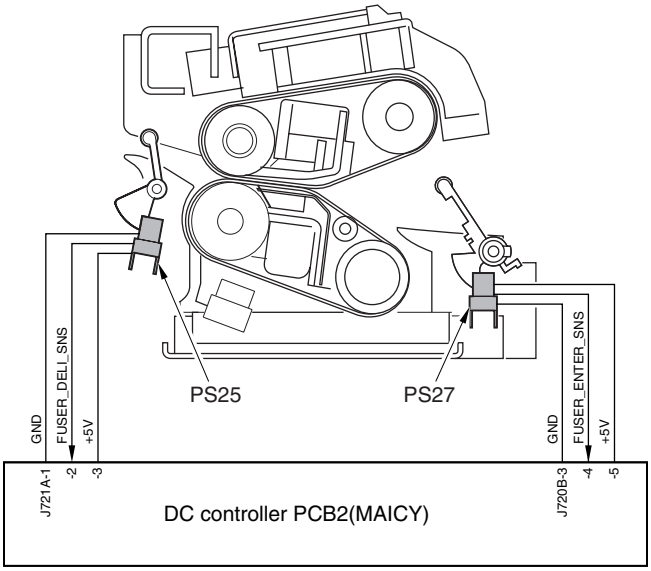

F-11-10

11.2.4 Belting inclined Control

11.2.4.1 Belt Displacement Control

CLC5151 / / / CLC4040 / / / iR C4580i / / / iR C4080i / / / / iR C5185N / / iR C5185i PRT /

Purpose
Control the fixing / pressure belt position in order to prevent the belt damage that is caused by the displacement of the fixing belt and the pressure belt to one side.

Description of Control
Control the fixing (pressure) belt [1] to be always at the center position (standard position). When it is moving toward the standard position (center), do not control. The position of the fixing (pressure) belt is detected with the 3 fixing (pressure) belt position sensors (PS33/34/35, and PS36/37/38).

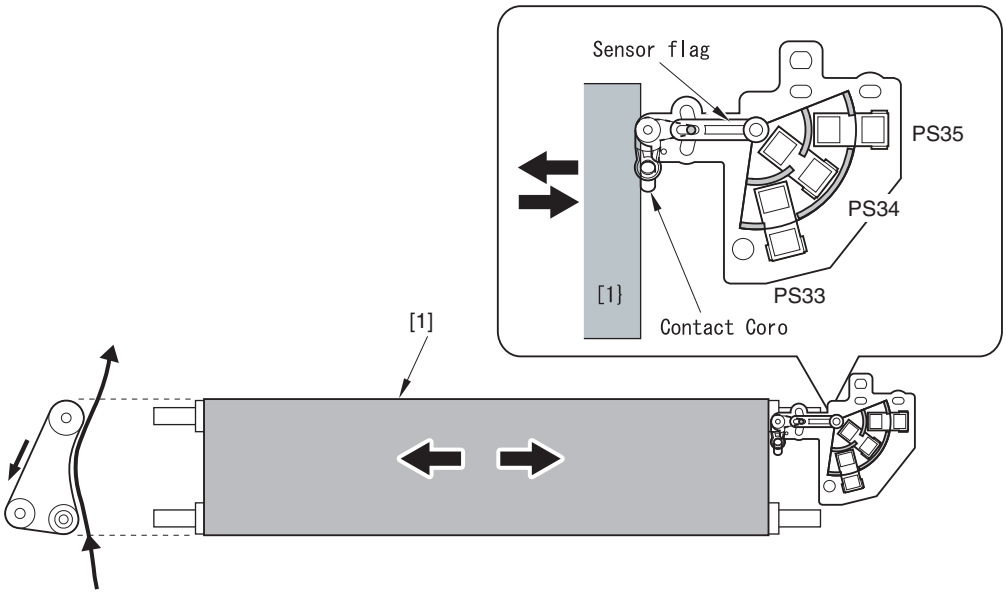

F-11-11

The figure shows the case of the fixing belt.
The position of the belt is detected with the fixing (pressure) belt position sensor, and the rotational directions of the fixing (pressure) displacement control motors (M28/M29) are determined by the detected position and the shifting direction of the belts.
By driving the fixing (pressure) displacement control motor (M28/M29), shift the position of the tension roller in the 5 levels. *1
If the belt shifts toward the front (getting away from the standard position), shift the belt to the center by rotating the fixing (pressure) displacement control motor in a clockwise direction and then shift the fixing (pressure) tension roller to upward (level 1 (upper) / level 2 (upper)).

On the other hand, if the belt shifts toward the rear (getting away from the standard position), shift the belt to the center by rotating the fixing (pressure) displacement control motor (M28/M29) in a counter clockwise direction and then shift the fixing (pressure) tension roller to downward (level 1 (lower) / level 2 (lower)).
By figuring out the HP with the belt HP sensor (PS31/PS30) and driving the fixing (pressure) displacement control motor (M28/M29) with the specified pulse from the HP, the position of the tension roller (5 levels) is remained constant.

If the tension roller does not shift to the center although setting it at the level 2 (upper or lower), it shifts to the belt full displacement temporary avoidance mode (see the belt temporary displacement avoidance mode).
*1: The composition of 5 levels is as follows: standard position, level 1 (lower), level 2 (lower), level 1 (upper), and level 2 (upper).
*1: The 5-level consists of the standard position, the level-1 (down), the level-2 (down), the level-1 (up), and the level-2 (up).
The figure shows the case of the fixing belt.

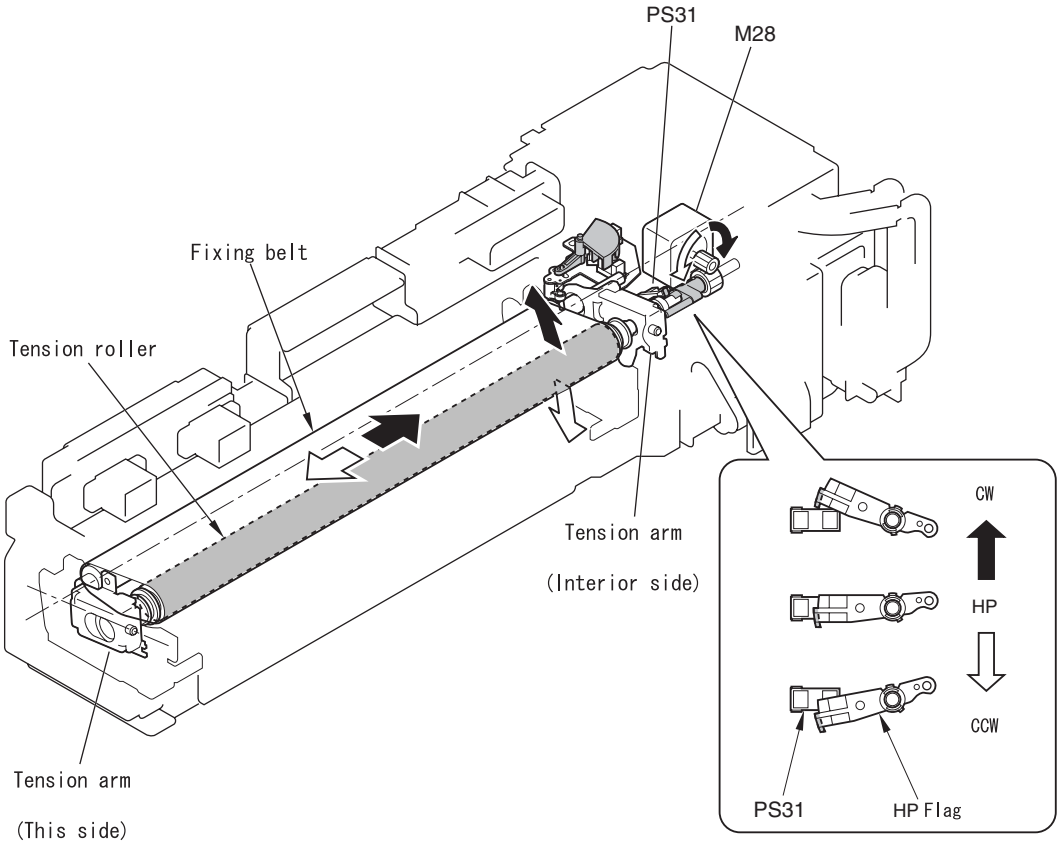

F-11-12

Example: A condition that the belt tilts toward front.

<0 to +1.5 Level 1 control ON> à it still tilts toward front.

<+1.5 to +2.5 Level 2 control ON> à the belt shifts toward the center.

<Sensor state changes from +2.5 to +1.5 No controlling>

<Sensor state changes from +1.5 to 0 No controlling> *1
*1: When passing the specified time after the value becomes 0, return the belt unit to the horizontal level.

<Sensor state changes from 0 to -1.5 Level 1 control at rear side ON>
*1: The standard position of the belt ‘0’ does not mean that the belt level is horizontal. Thus, return the belt unit to the horizontal level when its standard position becomes ‘0’.

T-11-21

Position of the tension roller	**Level 2 (upper)**		**Level 1 (upper)**	**Standard Position**	**Level 1 (lower)**	**Level 2 (lower)**	
Belt position	**Front**	**Å©**	**Å®**	**Center**	**Å©**	**Å®**	**Rear**
Distance from the belt standard position	+4*1	2.5	1.5	0	-1.5	-2.5	-4*1
Belt position sensor 1 (PS33)	1*2	1	1	0	0	0	1
Belt position sensor 2 (PS34)	1	0	0	0	1	1	1
Belt position sensor 3 (PS35)	1	1	0	0	0	1	1
Tension roller HP sensor	0	0	0	1	1	1	1
Sensor position	áF	áE	áD	áC	áB	áA	á@
Displacement control motor	Stop	Clockwise rotation	Clockwise rotation	Stop	Counter clockwise rotation	Counter clockwise rotation	Stop
Tension roller position	--	0.5	0.25	0	-0.25	-0.5	--

*1: Displaying the error message E007.
*2: Light shielding: 1, Permeation: 0

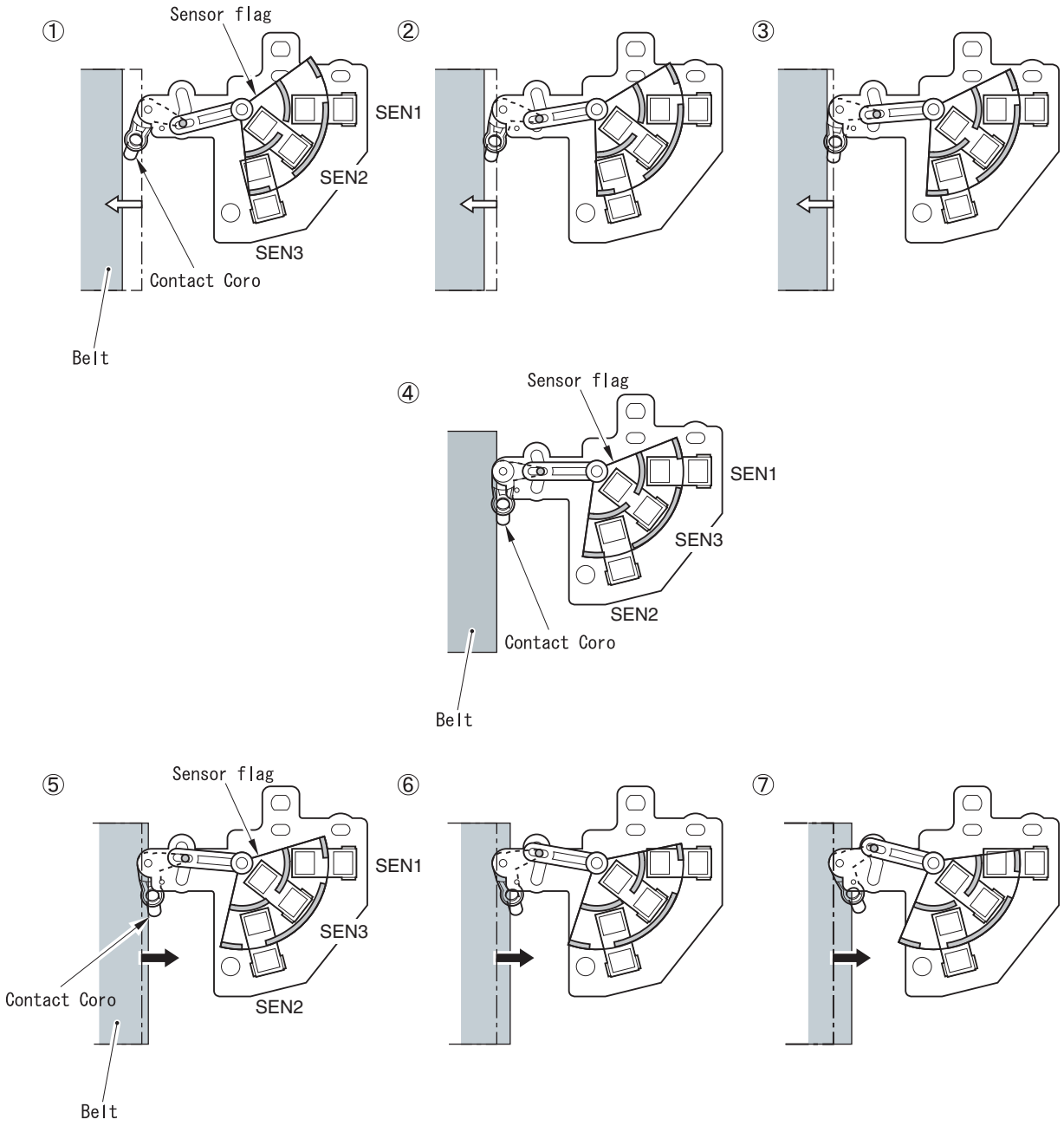
①
Sensor flag
SEN1
SEN2
SEN3
Contact Coro
Belt
②
③
④
Sensor flag
SEN1
SEN3
SEN2
Contact Coro
Belt
⑤
Sensor flag
SEN1
SEN3
SEN2
Contact Coro
Belt
⑥
⑦

F-11-13

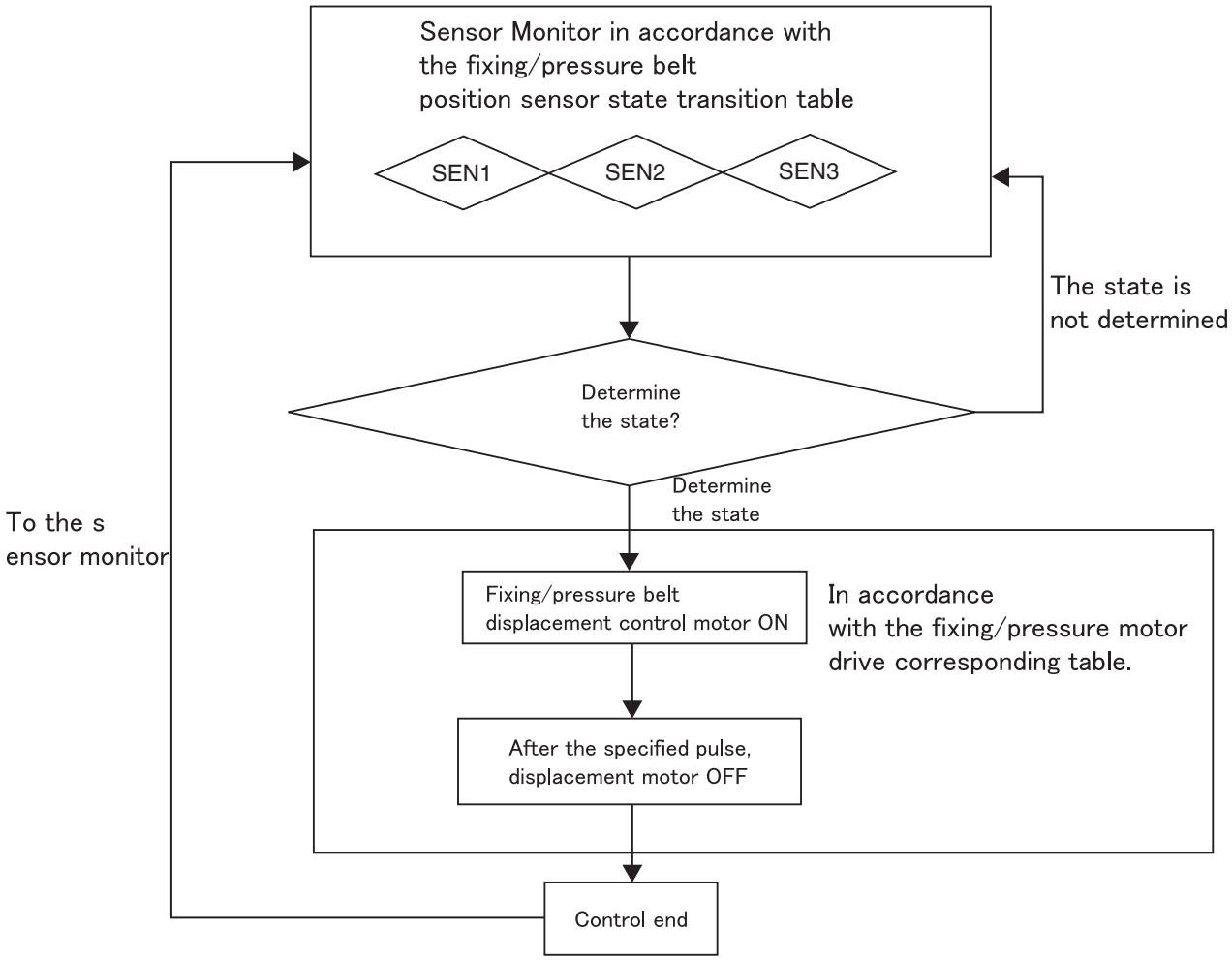

F-11-14

Error Codes Relevant to Fixing/Pressure Belt Displacement Control
E007 Fixing belt displacement error
0001: Upper belt displacement fault. (Either the upper belt full displacement or the belt displacement sensor fault.)
0002: Lower belt displacement fault. (Either the lower belt full displacement or the belt displacement sensor fault.)
0101: Upper belt HP detection error.
0102: Lower belt HP detection error.

Note:
Adjust the fixing/pressure unit HP with the following service mode at the installation or when replacing the fixing (pressure) belt.
COPIER > FUNCTION > FIXNG > FX-UHP-S
> FX-LHP-S

⚠Points to Note When Replacing Fixing Unit
By executing the service mode, the alarm code is closed and the total rotation time is cleared. Thus, this mode must be executed when replacing the fixing unit.
If the mode is not executed, the following symptoms will occur.
-The alarm code is not closed.
06-0002: Fixing unit life alarm (Caused by the belt displacement)
06-0004: Fixing unit life alarm (Caused by the torque up)
-Although the total rotation time of the replaced fixing assemble does not reach to the message threshold, the machine wrongly recognize that it reaches to the threshold and displays the message.
Be sure not to execute the mode except at the installation and the fixing unit replacement. If not, an error message may not be displayed when the fixing unit reaches to its life.

11.2.4.2 Belt Full Displacement Temporary Escape Mode

CLC5151 / / / CLC4040 / / / iR C4580i / / / iR C4080i / / / / Color Image Reader-F1 / Color Image Reader-E1 / Dupiex Color Image Reader-G1 / iR C5185N / / iR C5185i PRT /

Purpose
In this machine, belt displacement control is performed to prevent full displacement of fixing belt.
However, belt displacement occasionally occurs. At full displacement, display E007-0001 or 0002 and stop the machine.
To eliminate downtime of the machine due to the error display, execute belt full displacement temporary escape mode.

Control contents
When the belt end reaches +2.5/-2.5 from the belt standard position, the displacement control motor is activated to move the position of the belt (tension roller) to the two-step position (See the belt displacement control).
When the belt end stays there (+2.5/-2.5 from the belt standard position) 10 seconds or more after moving the belt (tension roller) to two-step position, it is judged that the belt cannot be moved to the center, and full displacement temporary escape mode is executed.
Perform pressure release of the pressure belt for the full displacement temporary escape mode (While printing/copying, deliver papers at the machine first and perform this procedure).
When releasing pressure, the belt is moved to the center. If full displacement occurs after the pressure release, E007-0001 or 0002 is displayed and the machine is stopped.

'Printer in Preparation' is displayed on the control panel during this time.
When the belt returns to the center position, start-up sequence is performed, the pressure belt is pressured and printing is started again.
*1 The belt is displaced most when applying pressure to the pressure belt. So, it shifts to the center by releasing the pressure of the pressure belt at the 2 level positions.

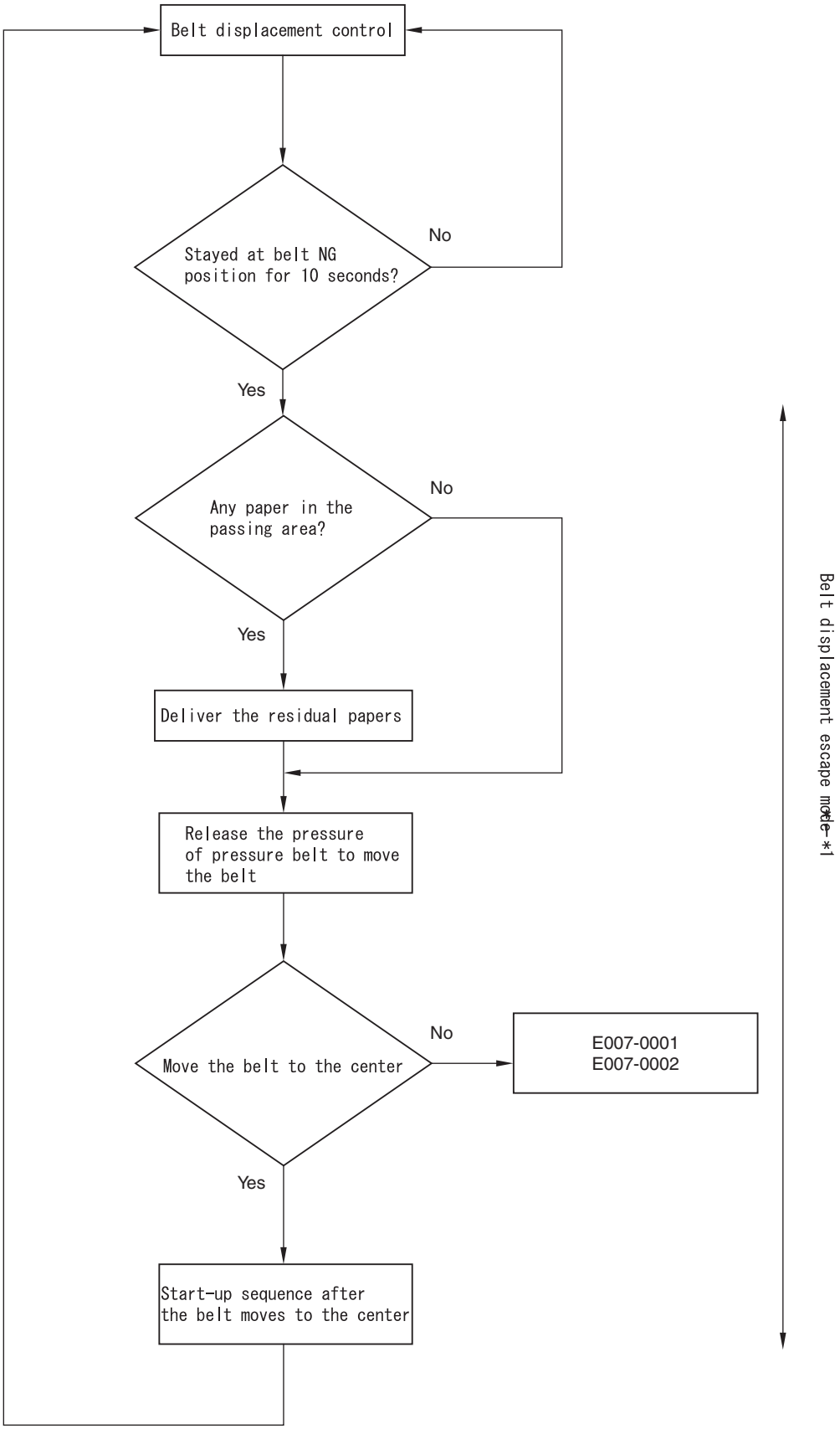

F-11-15

The fixing assembly activating the full displacement temporary escape mode is the one that is not correctly controlled (full displacement occurs). Display 'The fixing unit has little lifetime left. Please inform it to the responsible servicing person', which is the message when the fixing assembly reached its lifetime, to urge replacement.
The message displayed when the fixing assembly reaches its lifetime is same as the one displayed on the control panel when executing the full displacement temporary escape mode.
There is an alarm code to distinguish the above two cases.

06-0002 Fixing assembly belt lifetime alarm (Occurred when belt displacement occurred)
06-0004 Fixing assembly belt lifetime alarm (Occurred when torque was increased)
The cause can be identified by seeing Service Mode > COPIER > ALARM-2.

11.2.5 Checking Life

11.2.5.1 Lifetime Detection of Fixing Assembly Belt Unit

CLC5151 / / / CLC4040 / / / iR C4580i / / / iR C4080i / / / / Color Image Reader-F1 / Color Image Reader-E1 / Dupiex Color Image Reader-G1 / iR C5185N / / iR C5185i PRT /

The lifetime of the fixing assembly is estimated by the following three values.
When the following three values reach their thresholds, message and E008-0001 are displayed.
The main cause of reducing the lifetime is torque increase of the fixing drive motor. It is mainly because the message is displayed by reading the current (torque) running through the fixing drive motor.
1.Current Value (Torque) Flowed Into the Fixing Drive Motor
By monitoring the current amount flowed into the fixing motor (M24), detect the life of the fixing unit.
As the fixing/pressure belt is worn, the amount of oil inside of the fixing/pressure belt decreases so that the frictional force inside of the belt becomes greater.
As the frictional force gets greater, the torque of the fixing motor becomes higher to rotate the drive roller; hence, the current amount (voltage) flown into the fixing motor also becomes higher. Monitor this current amount ((V1-V2)/É÷) and when it reaches to the specified level (warning level), the warning message is displayed on the control panel. As the fixing/pressure belt is worn further, the current amount reaches to the specified level (error level) and E008-0001 is displayed (a message is also displayed on the service mode initial screen.)
As a rough estimation, the decrease of the oil amount that determines the life of the fixing unit starts around 300,000 sheets (fixing delivered number). Hence, by checking the fixing delivered number with the service mode (COPIER > FUNCTION > DRBL-1 > FX-BLT-U), the occurrence timing of the warning and the error can be predicted to some extent.
The estimated number of copies from the warning message to the error is about 10,000 sheets.

Current value (torque)	Control panel display
Message display threshold	User display: Replace the fixing unit.
	Service mode: replace the fixing Unit
Error display threshold	E code display Display E008-0001

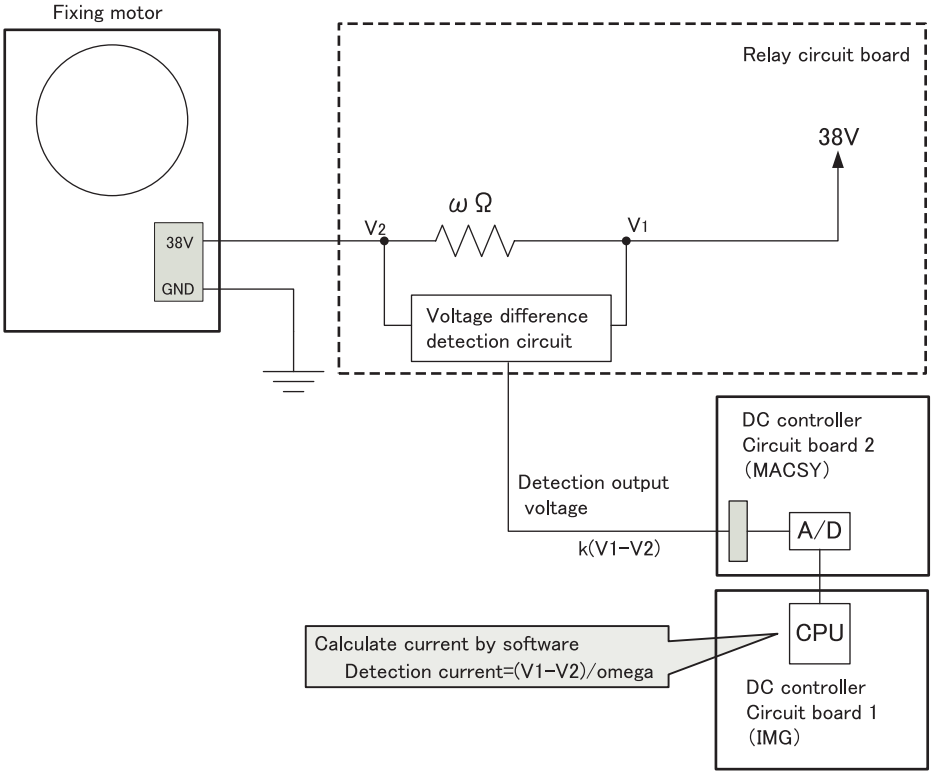

F-11-16

2. Total rotation time of the fixing assembly
When the pressure belt is separated and rotates for long period and at low speed (convenience store, etc), the lifetimes of thermistor and thermoswitch may end.
Total rotation time should be included in the condition of the lifetime of the fixing unit.
Totaling displays E008-0001 when it will reach in 15,000 hours at the total rotation time.
The total rotation time includes the total time of standby mode (pressure belt detached), and print mode (pressure belt unit pressed).

The number of the paper that passed through the fixing unit can be checked from the service mode below. However, the count number shown by this service mode is not related to the life detection control. Still though, it is recommended to check the data using this service mode to figure out the life of the fixing unit as it varies depending on the idiosyncracy, or how it is used.
COPIER > COUNTER > DRBL-1 > FX-BLT-U

⚠Points to Note When Replacing Fixing Unit
The total rotation time of the fixing unit is cleared (closing the alarm code) when executing the following service mode.
COPIER > FUNCTION > FIXING > FX-UHP-S
> FX-LHP-S
If the mode is not executed, the following symptoms will occur.
-The alarm code is not closed.
06-0002: Fixing unit life alarm (Caused by the belt displacement)
06-0004: Fixing unit life alarm (Caused by the torque up)
-Although the total rotation time of the replaced fixing assemble does not reach to the message threshold, the machine wrongly recognize that it reaches to the threshold and displays the message.
Be sure not to execute the mode except at the installation and the fixing unit replacement. If not, an error message may not be displayed when the fixing unit reaches to its life.

11.3 Belt Pressurizing Mechanism

11.3.1 Pressurizing mechanism of pressure belt

CLC5151 / / / CLC4040 / / / iR C4580i / / / iR C4080i / / / / iR C5185N / / iR C5185i PRT /

Objective
The pressure roller is engaged only while printing is under way to prevent deformation of the fixing (pressure) belt. The pressure roller is engaged/disengaged as necessary.
Pressure belt releasing sequence
Pressure belt touches fixing belt only when printing is conducted to form a fixing nip.
Pressurizing / Releasing pressure motor is driven by fixing pressure release motor (M27).
When fixing pressure release motor (M27) rotates, pressure belt is pressurized. When rotated reversally, the pressure is released.
It takes 3 seconds from driving the fixing pressure release motor (M27) to change the pressure belt from released condition to pressurized condition, or from pressurized condition to released condition.
The released / pressurized condition of the pressure belt is detected by the fixing pressure release HP sensor (PS46) at the timing described below.
- When the main power is turned ON
- When opening/closing the front cover, manual feed tray, fixing feeding unit
- When recovering from sleep mode
Illustration to be inserted

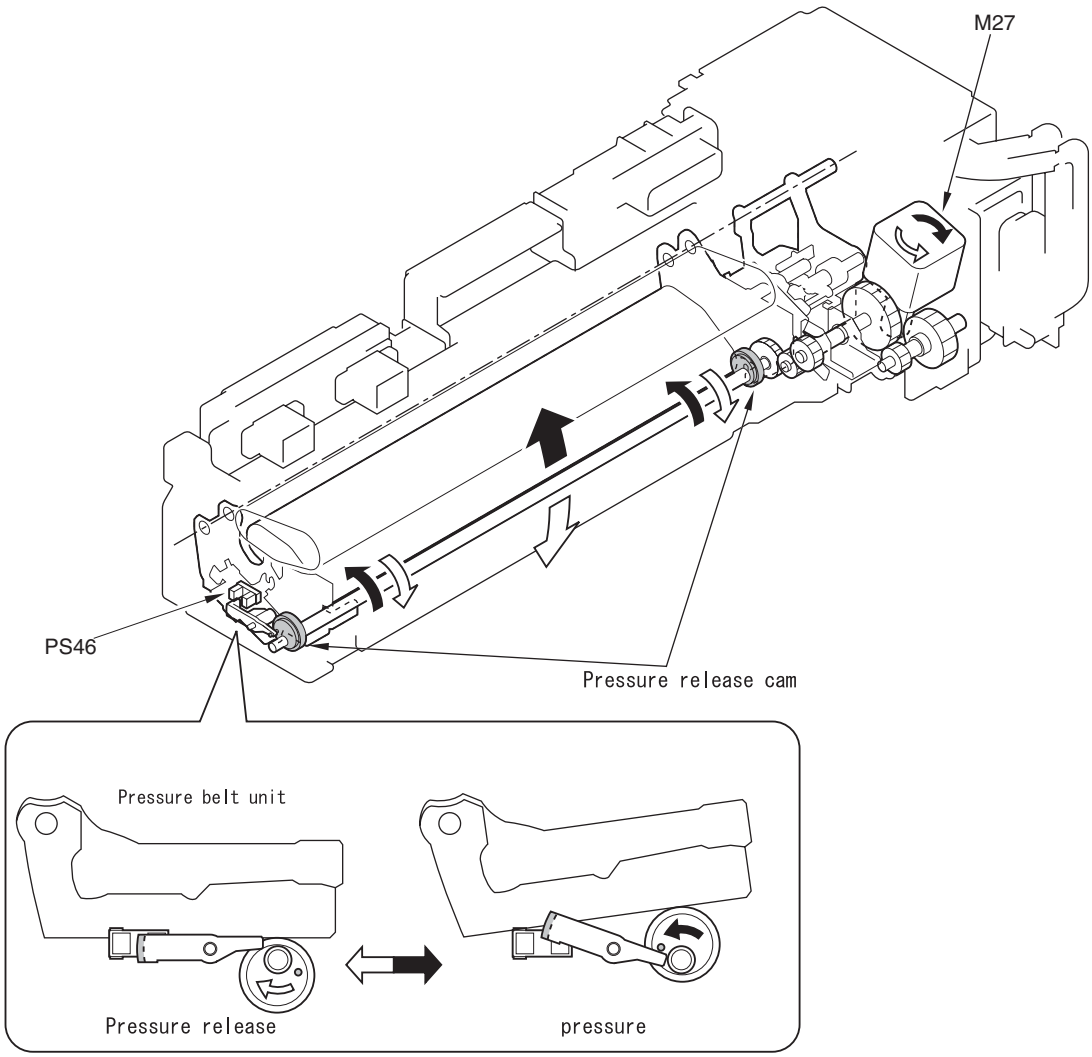

F-11-17

11.4 Protective Functions

11.4.1 Power break due to thermo-switch operation at unusual temperature rise.

CLC5151 / / / CLC4040 / / / iR C4580i / / / iR C4080i / / / / iR C5185N / / iR C5185i PRT /

The contact of thermo-switch does not recover once opened. Replace it instead of re-using it.

The machine is equipped with the following protective mechanisms to detect overheating of the fixing assembly, thus cutting off the power to the heater:
1.DC controller (CPU)

2.ASIC

3.thermal switch
Å@(fixing thermal switch rated at 236 +/-8; pressure thermal switch rated at 238 +/-8)

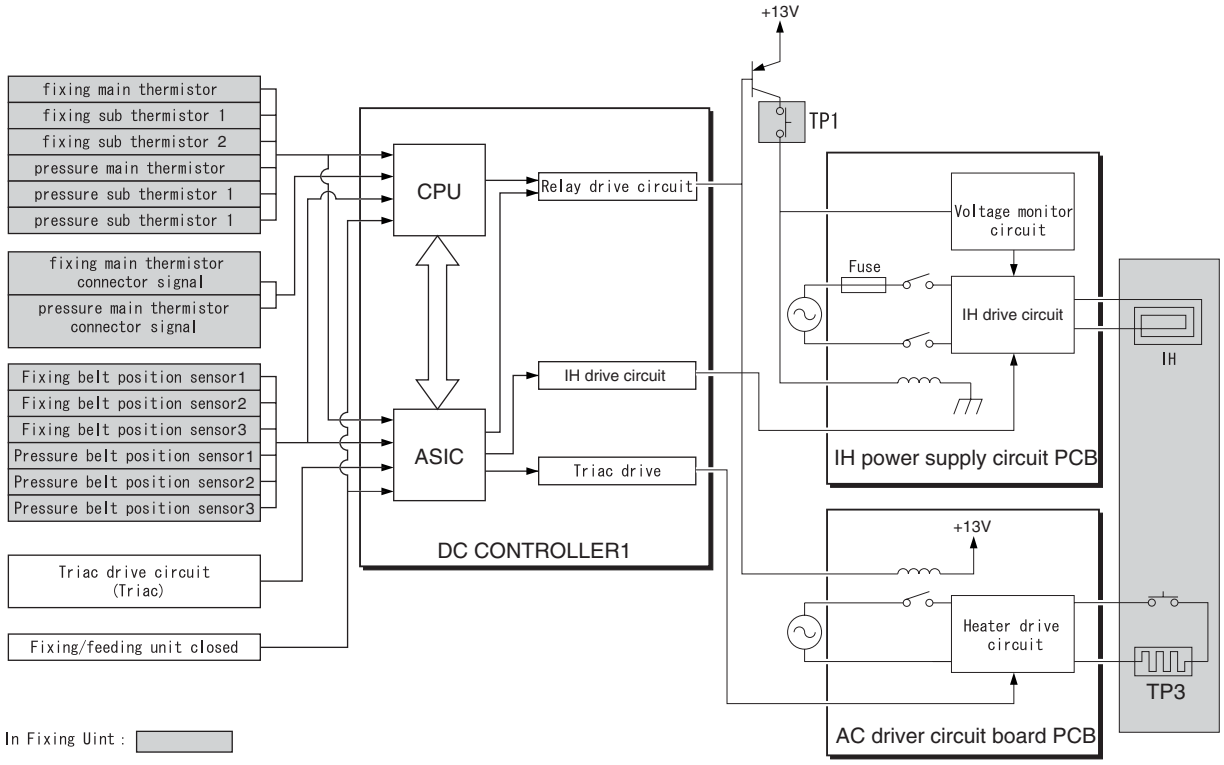

F-11-18

11.5 Parts Replacement Procedure

11.5.1 Notice When Handling the Fixing Assembly

11.5.1.1 Notice When Handling the Fixing Assembly

CLC5151 / / / CLC4040 / / / iR C4580i / / / iR C4080i / / / / Color Image Reader-F1 / Color Image Reader-E1 / Dupiex Color Image Reader-G1 / iR C5185N / / iR C5185i PRT /

Notice When Handling the Fixing Assembly
When mounting the IH heater unit and the fixing belt sensor mount unit etc. to the fixing assembly, the fixing belt may be damaged to break the fixing belt and E007-0001 will be displayed. Be careful not to cause damage on the fixing belt at installation.

11.5.2 Fixing Drive Unit

11.5.2.1 Removing the Fixing Drive Unit

CLC5151 / / / CLC4040 / / / iR C4580i / / / iR C4080i / / / / Color Image Reader-F1 / Color Image Reader-E1 / Dupiex Color Image Reader-G1 / iR C5185N / / iR C5185i PRT /

1) Slide out the fixing/feeding unit [1].
2) Remove the fixing drive cover [3].
   - 2 screws [2]

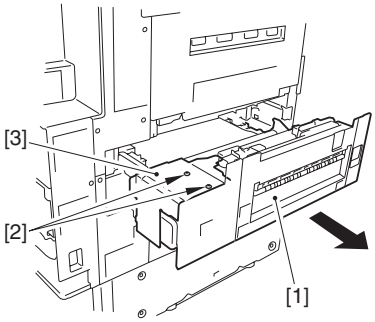

F-11-19

3) Move the joint plate [2] to the side to detach.
   - 2 resin E-rings [1](Use precision pliers.)

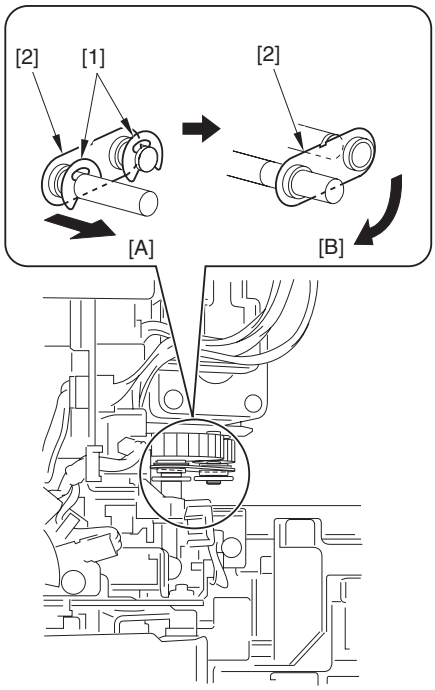

F-11-20

4) Remove the harness guide cover [1].

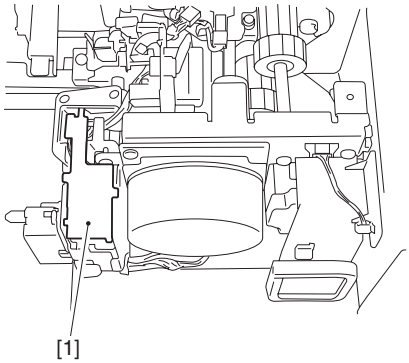

F-11-21

5) Disconnect the 4 connectors [1].

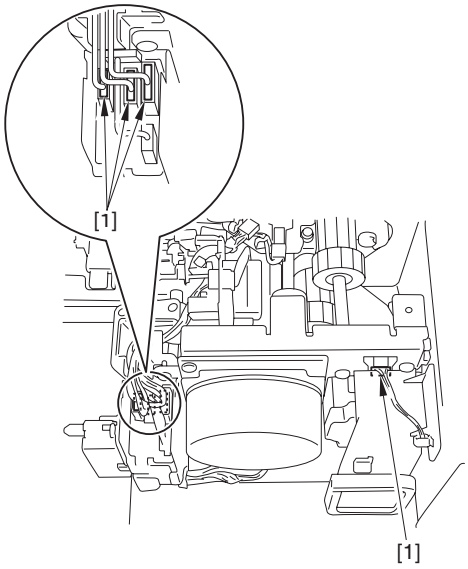

F-11-22

6) Remove the fixing drive unit [2].
   - 3 screws [1]

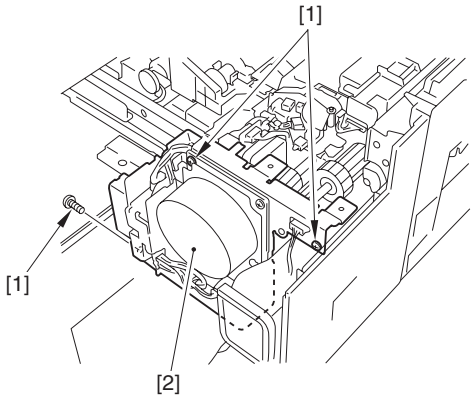

F-11-23

11.5.3 Fixing Assembly

11.5.3.1 Preparation for Removing the Fixing Assembly

CLC5151 / / / CLC4040 / / / iR C4580i / / / iR C4080i / / / / Color Image Reader-F1 / Color Image Reader-E1 / Dupiex Color Image Reader-G1 / iR C5185N / / iR C5185i PRT /

1) Remove the fixing drive unit.(page 11-22)Reference[Removing the Fixing Drive Unit]

11.5.3.2 Removing the Fixing Assembly

CLC5151 / / / CLC4040 / / / iR C4580i / / / iR C4080i / / / / Color Image Reader-F1 / Color Image Reader-E1 / Dupiex Color Image Reader-G1 / iR C5185N / / iR C5185i PRT /

1) Open the Fixing/Feeding unit cover [1].

Points to Note When Removing the Fixing Assembly
Hold the grips of the fixing assembly, and lift it slightly toward the host machine to detach it in the upward direction.

2) Remove the fixing assembly [3].
- 2 screws [2]

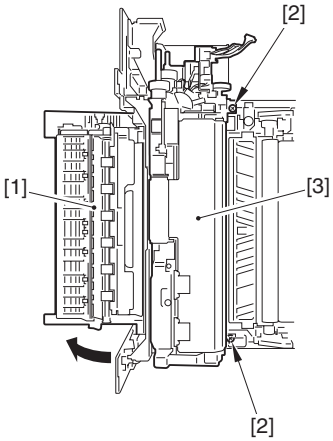

F-11-24

11.5.4 IH Unit

11.5.4.1 Preparation for Removing the IH Unit

CLC5151 / / / CLC4040 / / / iR C4580i / / / iR C4080i / / / / Color Image Reader-F1 / Color Image Reader-E1 / Dupiex Color Image Reader-G1 / iR C5185N / / iR C5185i PRT /

1) Remove the fixing drive unit.(page 11-22)Reference[Removing the Fixing Drive Unit]
2) Remove the fixing assembly.(page 11-22)Reference[Removing the Fixing Assembly]

11.5.4.2 Removing the IH Unit

CLC5151 / / / CLC4040 / / / iR C4580i / / / iR C4080i / / / / Color Image Reader-F1 / Color Image Reader-E1 / Dupiex Color Image Reader-G1 / iR C5185N / / iR C5185i PRT /

1) Remove the fixing front cover [3].
- 1 screws, stepped [1]
- 1 screws [2]

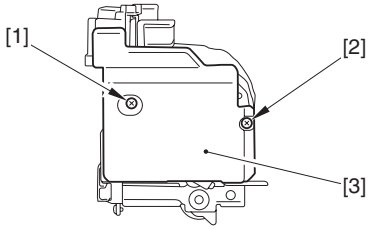

F-11-25

Points to Note when Attaching the Fixing Front Cover
Be sure to attach the fixing front cover [3] while placing the cable [2] of IH heater onto the frame [2].
When the cable [1] of IH heater is put through the side or bottom of the frame [2], it may be stuck when attaching the fixing front cover [3], resulting in short circuit and activation of the leakage breaker.

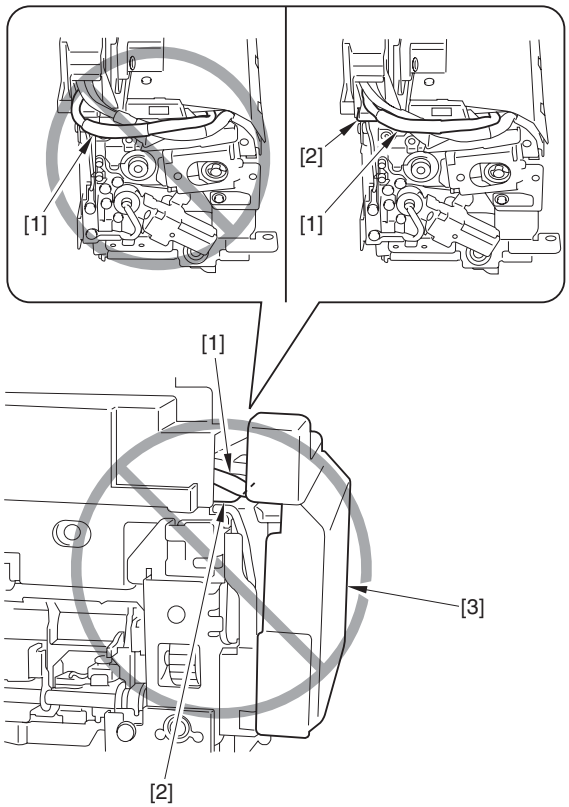

F-11-26

2) Remove the front drawer cover [2].
This step is performed when replacing into a new IH unit.
- 1 screw [1]

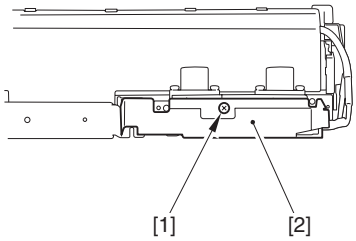

F-11-27

3) Remove the front drawer unit [2].
- 2 screws [1]

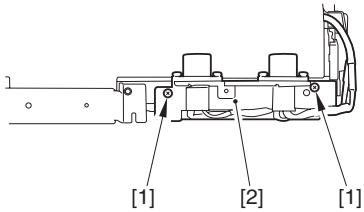

F-11-28

4) Move the small cover [1] in the direction of the arrow, and remove it.

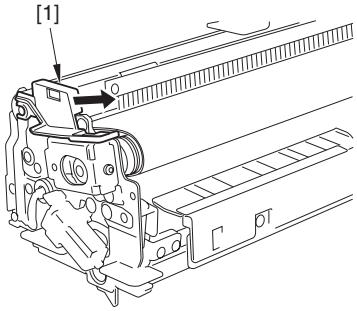

F-11-29

5) Slide the IH unit [2] to the front, and remove the IH fixing pin [3].

- 1 screw [1]

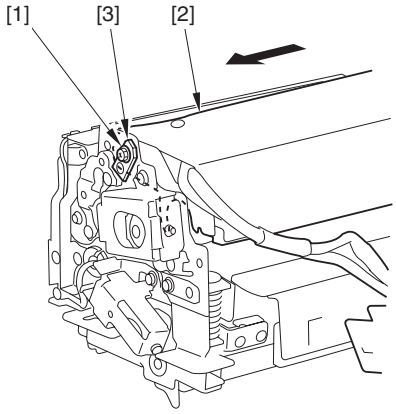

F-11-30

6) Turn the IH unit [1] slightly.

Points to Note When Removing the IH Unit
Be sure to take care when turning the IH unit. Turning it excessively can damage the fixing belt.
Open carefully the IH unit. If it is opened too much, the pulley of the IH unit may cause damage on the fixing belt.

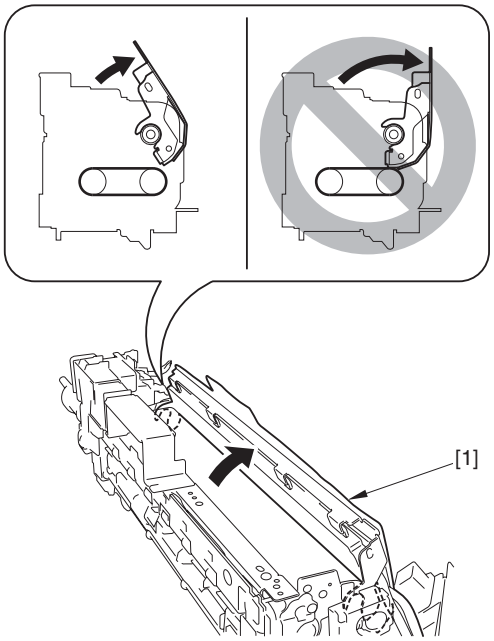

F-11-31

7) Move the IH unit [1] in the direction of the arrow [A], and free the cut-off from the bearing; then, detach it in the direction of the arrow [B].

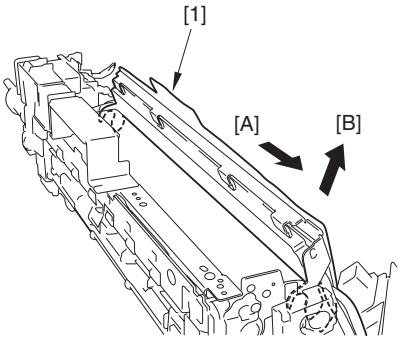

F-11-32

Points to Note When Mounting the IH Unit
- Insert the arm area of the IH unit towards the shaft of the tension roller, and fix the cut-off [1] of the IH unit into the bearing [2].

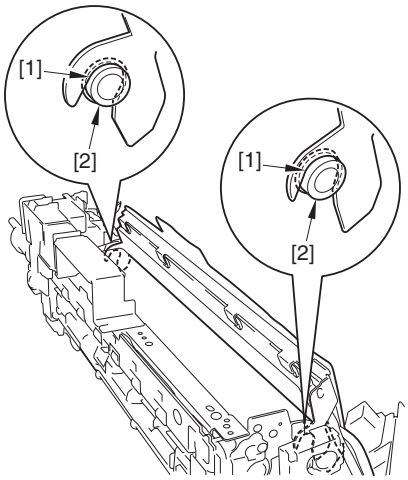

F-11-33

- Take care not to trap the felt extension [A] of the IH unit [1] in the gap between the IH unit and the fixing belt unit [2], making sure that the extension is on top of the belt unit.

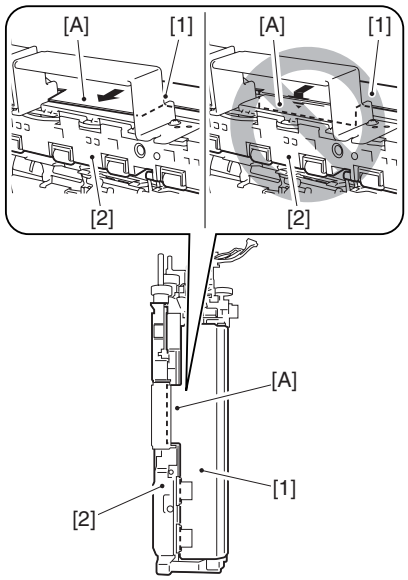

F-11-34

11.5.5 Fixing Displacement Drive Unit

11.5.5.1 Preparation for Removing the Belt Displacement Control Motor Unit

CLC5151 / / / CLC4040 / / / iR C4580i / / / iR C4080i / / / / Color Image Reader-F1 / Color Image Reader-E1 / Dupiex Color Image Reader-G1 / iR C5185N / / iR C5185i PRT /

1) Remove the fixing drive unit.(page 11-22)Reference[Removing the Fixing Drive Unit]
2) Remove the fixing assembly.(page 11-22)Reference[Removing the Fixing Assembly]
3) Remove the IH unit.(page 11-23)Reference[Removing the IH Unit]

11.5.5.2 Removing the Belt Displacement Control Motor Unit

CLC5151 / / / CLC4040 / / / iR C4580i / / / iR C4080i / / / / Color Image Reader-F1 / Color Image Reader-E1 / Dupiex Color Image Reader-G1 / iR C5185N / / iR C5185i PRT /

1) Move the harness guide [3].
   - 2 connectors [1]
   - 2 screws [2]

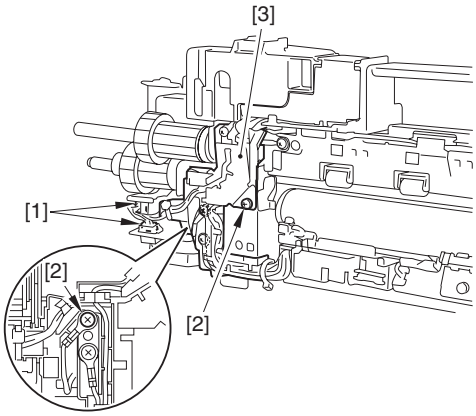

F-11-35

2) Remove the connector [1].

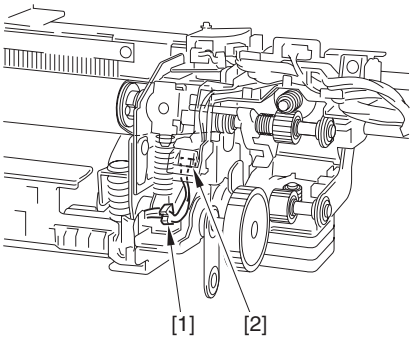

F-11-36

3) Free the harness from the harness guide [2].
- 2 connectors [1]

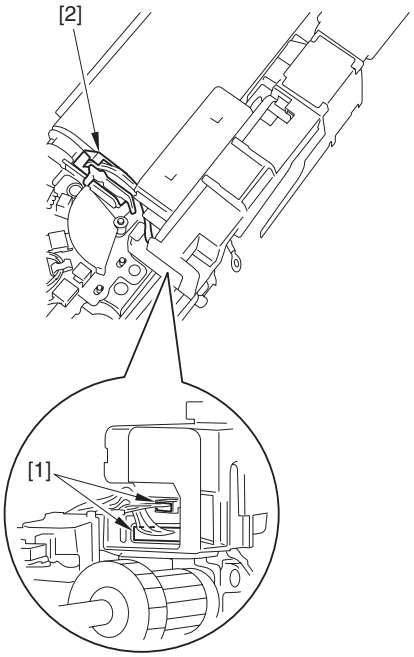

F-11-37

4) Remove the harness guide [1] (Move it to the side, and detach it by freeing it from the pin).

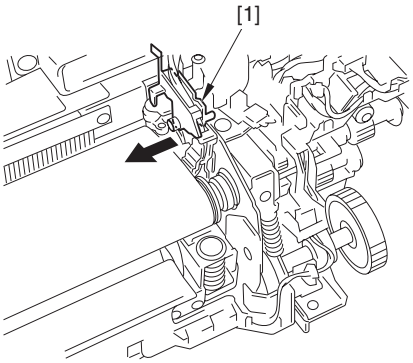

F-11-38

When moving the sensor unit, take care not to remove the screws glued in place.

5) Remove the fixing belt position sensor unit [2].
- 2 screws [1]

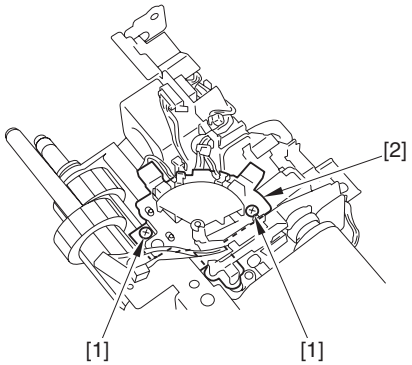

F-11-39

Points to Note When Mounting the Sensor Unit

Make sure that the sensor flag (bar) [2] is in contact with the edge of the fixing belt]1].

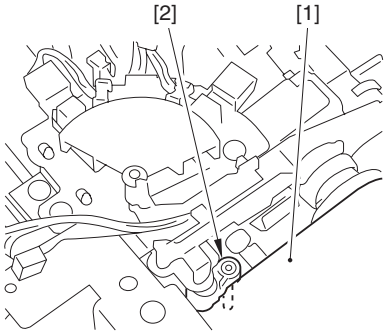

F-11-40

6) Remove the belt displacement control motor unit [3].
- 1 spring [1]
- 4 screws [2]

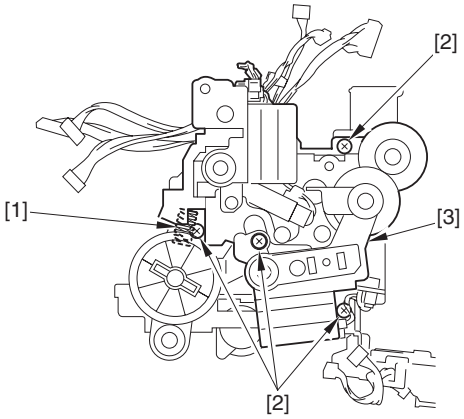

F-11-41

Points to Note When Mounting the Belt Displacement Control Motor Unit

Be sure that tip of the arms of the 2 sensor flags [1] [2] is positioned at the top [A] of the holder of the tensioners [3] [4].

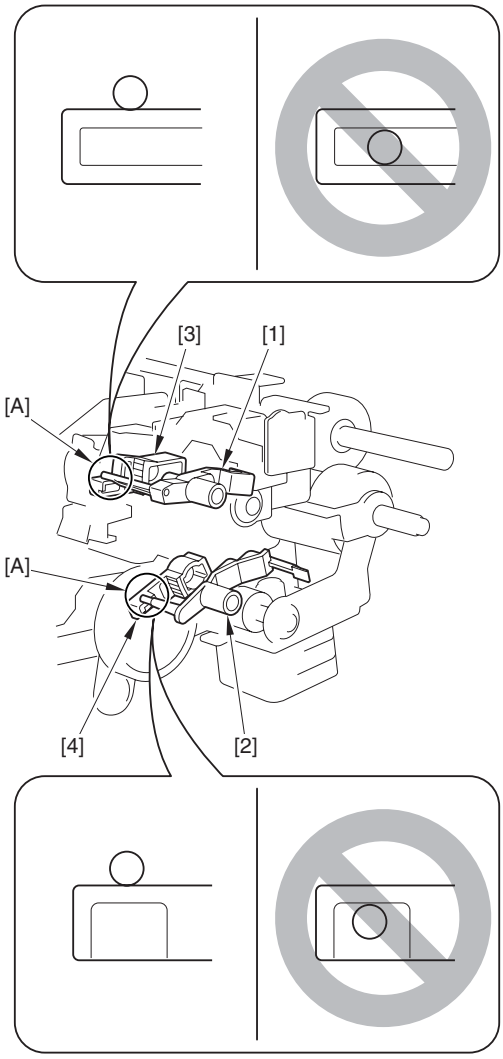

F-11-42

11.5.6 Fixing Unit

11.5.6.1 Preparation for Removing the Fixing Unit

CLC5151 / / / CLC4040 / / / iR C4580i / / / iR C4080i / / / / Color Image Reader-F1 / Color Image Reader-E1 / Dupiex Color Image Reader-G1 / iR C5185N / / iR C5185i PRT /

1) Remove the fixing drive unit.(page 11-22)Reference[Removing the Fixing Drive Unit]
2) Remove the fixing assembly.(page 11-22)Reference[Removing the Fixing Assembly]
3) Remove the IH unit.(page 11-23)Reference[Removing the IH Unit]

11.5.6.2 Removing the Fixing Unit

CLC5151 / / / CLC4040 / / / iR C4580i / / / iR C4080i / / / / Color Image Reader-F1 / Color Image Reader-E1 / Dupiex Color Image Reader-G1 / iR C5185N / / iR C5185i PRT /

Points to Note When Removing the Fixing Unit

Do not remove the screws that are locked with red bond. If removing the bond-locked screw, it will cause the failed adjustment of the parts. These parts are adjusted in the factory and cannot be adjusted in the field.
Also, do not remove the screws that fix the steering [1]. If removing these screws, it will cause the mismatch with the fixing nip by failed adjustment, and the displacement control does not operate normally.

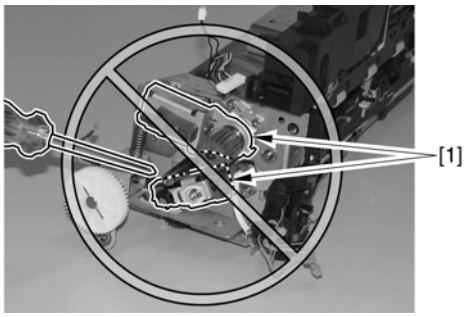

F-11-43

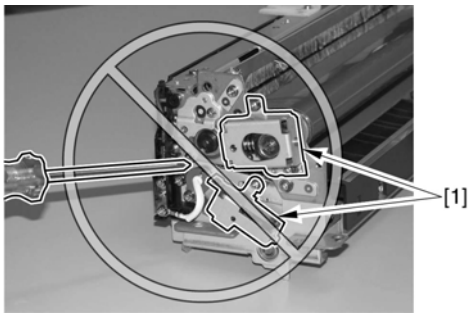

F-11-44

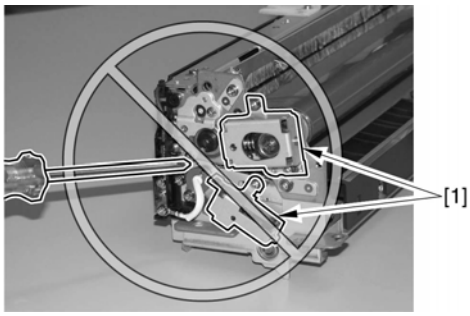

F-11-45

1) Move the harness guide [3].
   - 2 connectors [1]
   - 2 screws [2]

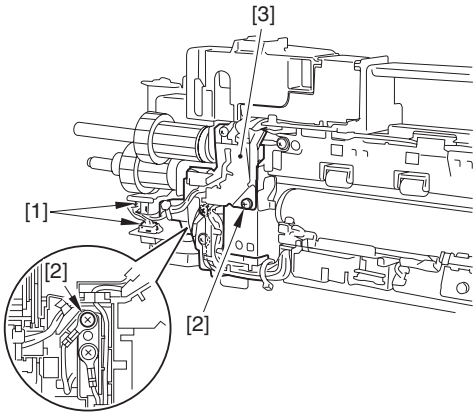

F-11-46

2) Remove the connector [1].

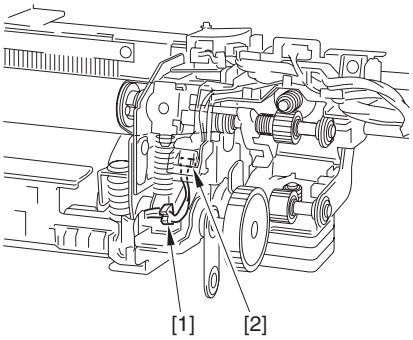

F-11-47

3) Free the harness from the harness guide [2].
- 2 connectors [1]

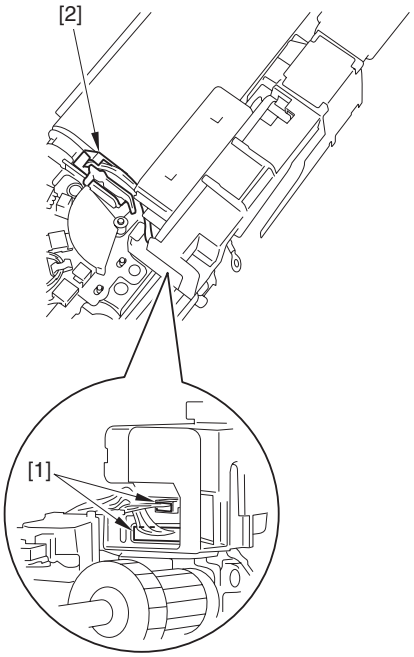

F-11-48

4) Remove the harness guide [1]ÅiMove it to the side, and detach it by freeing it from the pinÃj.

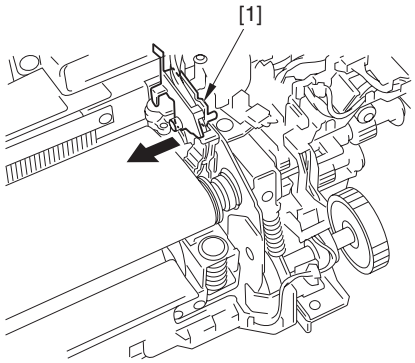

F-11-49

When moving the sensor unit, take care not to remove the screws glued in place.

5) Move the fixing belt position sensor unit [2].
- 2 screws [1]

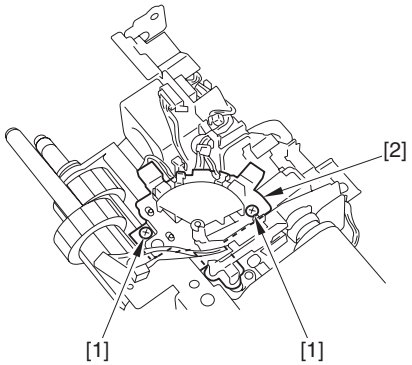

F-11-50

Points to Note When Mounting the Sensor Flag

Check to be sure that the sensor flag (bar) [2] is in contact with the edge of the belt [1].

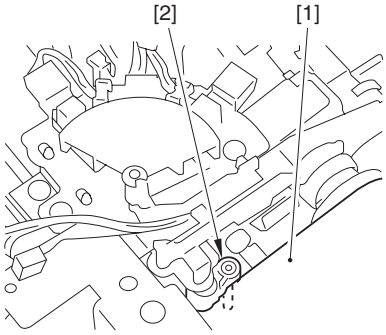

F-11-51

6) Remove the belt displacement control motor unit [3]. The component left behind is the fixing unit (service part).
- 1 spring [1]
- 4 screws [2]

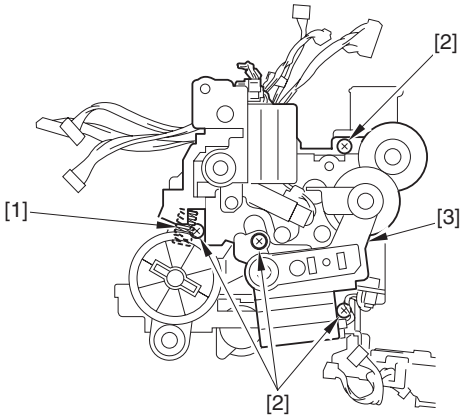

F-11-52

Points to Note When Mounting the Belt Displacement Control Motor Unit

Be sure that tip of the arms of the 2 sensor flags [1] [2] is positioned at the top [A] of the holder of the tensioners [3] [4].

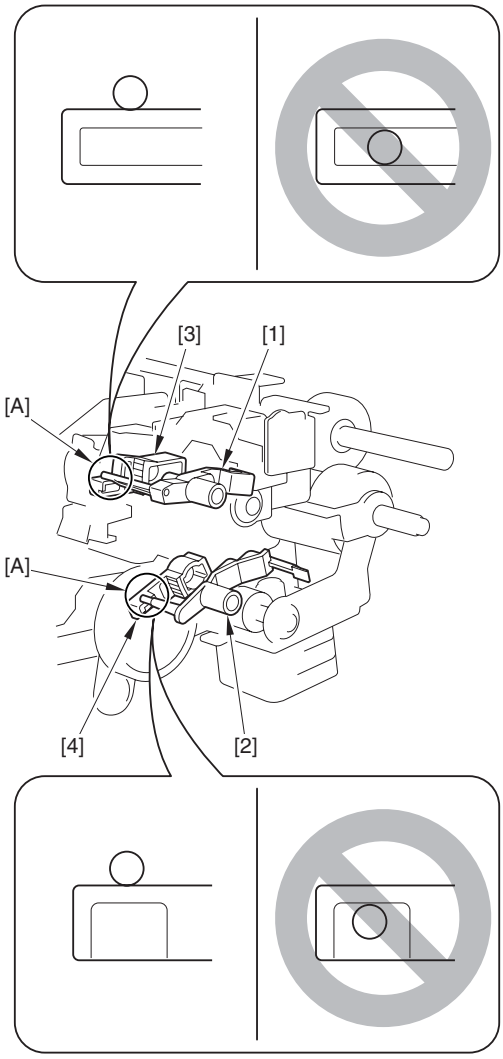

F-11-53

11.5.6.3 Replacing the Fixing Unit (Service Parts)

CLC5151 / / / CLC4040 / / / iR C4580i / / / iR C4080i / / / / Color Image Reader-F1 / Color Image Reader-E1 / Dupiex Color Image Reader-G1 / iR C5185N / / iR C5185i PRT /

1) Remove the protective stay [2] from the fixing unit.
   - 2 screws [1]

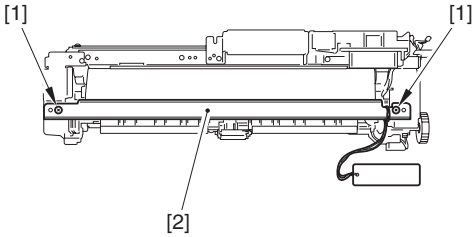

F-11-54

2) Remove the protective cover [2] on the front side of the fixing unit.
   - 3 screws [1]

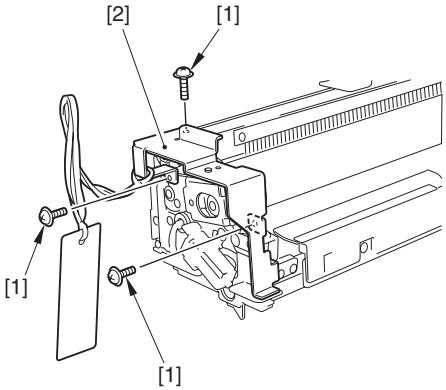

F-11-55

3) Remove the 2 screws [1]. The removed screws will be used during mounting work.

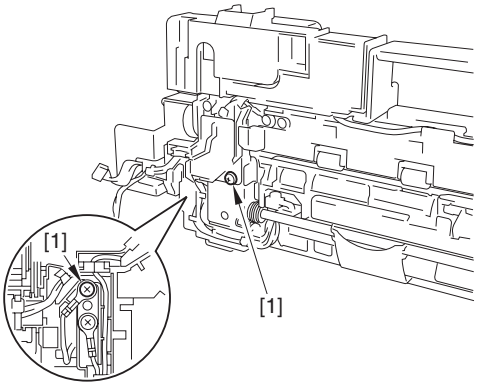

F-11-56

4) Remove the spring [1]. The removed spring will be used during mounting work.

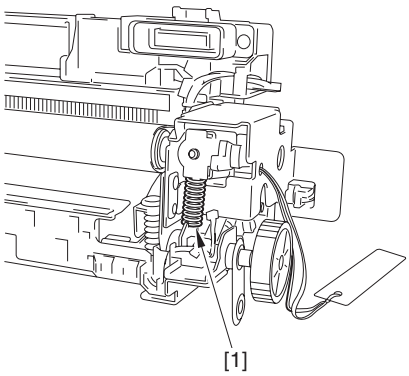

F-11-57

5) Remove the protective cover [2] on the rear side of the fixing unit.
   - 3 screws [1]

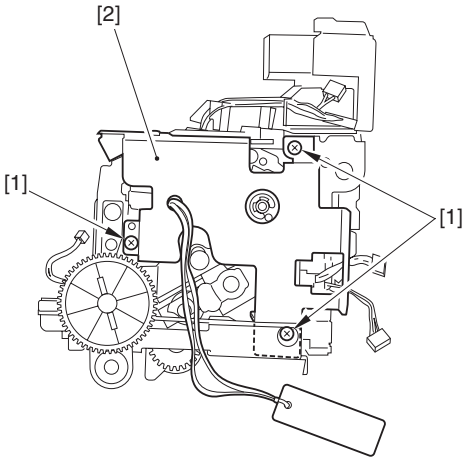

F-11-58

6) Remove the harness from the harness guide [2].
   - 2 connectors [1]

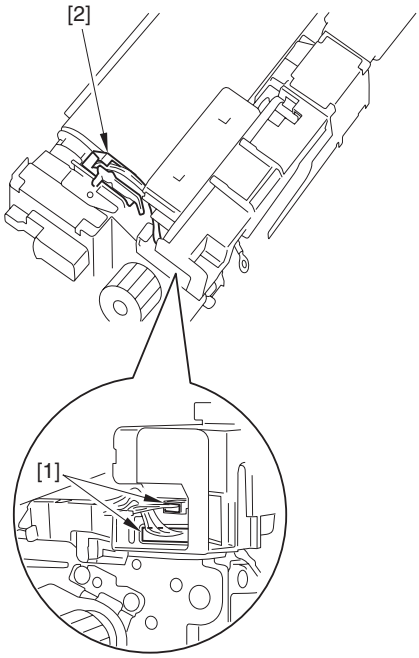

F-11-59

7) Remove the harness guide [1]. (Shift it to the side, and pull it off the pin to detach.) The removed harness guide will be used during mounting work.

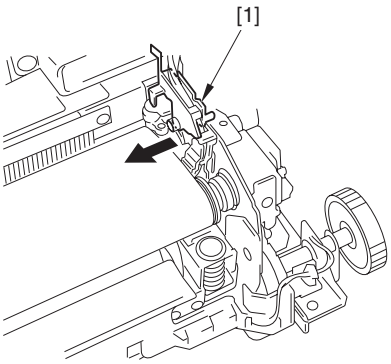

F-11-60

8) Mount the fixing unit using the steps used to remove it but in reverse.

Points to Notes at Replacing/Disposing the Fixing Unit
The heat pipe is used at the upper belt of the fixing unit to even the heat at the rear front direction. The heat pipe is a part that the small amount of liquid is vacuum-encapsulated in the airtight container. Thus, do not throw the heat pipe in the fire because it will burst. When disposing the fixing unit, be sure to shred.

11.5.6.4 Procedure at Replacing the Fixing Unit

CLC5151 / / / CLC4040 / / / iR C4580i / / / iR C4080i / / / / Color Image Reader-F1 / Color Image Reader-E1 / Dupiex Color Image Reader-G1 / iR C5185N / / iR C5185i PRT /

Points to Notes at Replacing/Disposing the Fixing Unit
The heat pipe is used at the upper belt of the fixing unit to even the heat at the rear front direction. The heat pipe is a part that the small amount of liquid is vacuum-encapsulated in the airtight container. Thus, do not throw the heat pipe in the fire because it will burst. When disposing the fixing unit, be sure to shred.

1. Applying Grease to the Fixing Drive Unit/Belt Displacement Control Motor Unit
When replacing the fixing unit, apply SUPER LUBE GREASE (the standard tool: parts number FY9-6005-000, in tube) to the specified locations of the fixing drive unit and belt displacement control motor unit.

Points to Note at Applying Grease
Do not apply Super Lube Grease to the areas other than the specified areas. It may cause failure.

a. Applying Grease to the Fixing Drive Unit
The portions to apply grease are as follows.
- Apply approx. two soybean-size of grease to the center area [A] of the gear [1].
- Apply approx. one soybean-size of grease to the end [B] of the gear [1].

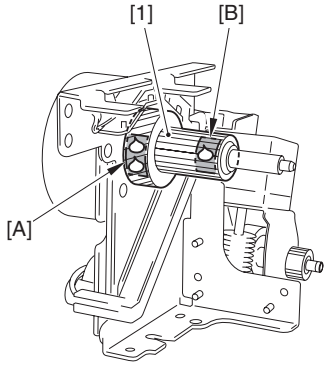

F-11-61

b. Apply Grease to the Belt Displacement Control Motor Unit
The portions to apply grease are as follows.
- Apply approx. one soybean-size of grease to the end [A] of the gear [1].
- Apply approx. one soybean-size of grease to the center area [B] (inside of the sheet metal [3]) of the gear [2].
- Apply approx. one soybean-size of grease to the end [C] of the gear [2].
- Apply approx. one soybean-size of grease to each end [D] [E] of the gear [4].

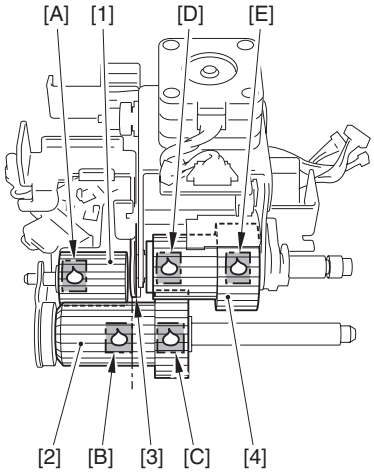

F-11-62

2. Executing the Service Mode After Replacing the Fixing Unit
When the fixing unit was replaced, be sure to perform the following proce-

dure at the service mode.
- Clear the fixing delivery print counter
  COPIER > COUNTER > DRBL-1 > FX-BLT-U
- Execute the operation of HP search of the fixing belt and the pressure belt
  COPIER > FUNCTION > FIXING > FX-UHP-S
  COPIER > FUNCTION > FIXING > FX-LHP-S

Points to Note When Replacing the Fixing Unit
In the case of executing HP search operation of the fixing belt and the pressure belt, the alarm code is closed, and the total rotating time of the fixing assembly is cleared.
Thus, make sure to execute this mode when replacing the fixing unit otherwise it may cause the following symptoms:
-The alarm code is not closed
06-0002: fixing unit life alarm (occurs by belt displacement)
06-0004: fixing unit life alarm (occurs by torque-up)
-The message is displayed for the machine misidentify that the total rotating time reaches the message threshold value although it does not.
Do not execute this mode other than when installing or when replacing the fixing unit. There may be no error indication although the fixing unit comes to the end of its life.

11.5.7 Fixing Delivery Lower Unit

11.5.7.1 Preparation for Removing the Fixing Delivery Lower Unit

CLC5151 / / / CLC4040 / / / iR C4580i / / / iR C4080i / / / / Color Image Reader-F1 / Color Image Reader-E1 / Dupiex Color Image Reader-G1 / iR C5185N / / iR C5185i PRT /

1) Remove the fixing drive unit.(page 11-22)Reference[Removing the Fixing Drive Unit]
2) Remove the fixing assembly.(page 11-22)Reference[Removing the Fixing Assembly]

11.5.7.2 Removing the Fixing Delivery Lower Unit

CLC5151 / / / CLC4040 / / / iR C4580i / / / iR C4080i / / / / Color Image Reader-F1 / Color Image Reader-E1 / Dupiex Color Image Reader-G1 / iR C5185N / / iR C5185i PRT /

1) Remove the fixing delivery lower unit [4].
   - 1 harness guide cover [1] (Open it.)
   - 1 connector [2]
   - 1 screw [3]

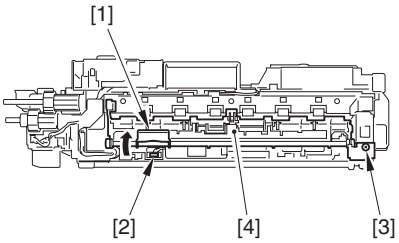

F-11-63

Points to Note When Mounting the Fixing Delivery Lower Unit
Be sure to match the end of the spring [1] fitted to the shaft at the rear against the cut-off [2] of the frame.

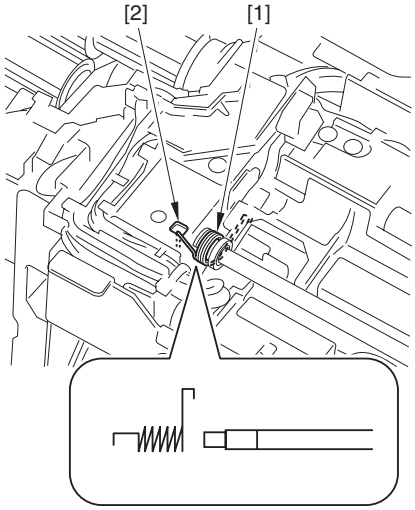

F-11-64

11.5.8 Fixing Delivery Upper Unit

11.5.8.1 Preparation for Removing the Fixing Delivery Upper Unit

CLC5151 / / / CLC4040 / / / iR C4580i / / / iR C4080i / / / / Color Image Reader-F1 / Color Image Reader-E1 / Dupiex Color Image Reader-G1 / iR C5185N / / iR C5185i PRT /

1) Remove the fixing drive unit.(page 11-22)Reference[Removing the Fixing Drive Unit]
2) Remove the fixing assembly.(page 11-22)Reference[Removing the Fixing Assembly]
3) Remove the IH unit.(page 11-23)Reference[Removing the IH Unit]
4) Remove the fixing delivery lower unit.(page 11-30)Reference[Removing the Fixing Delivery Lower Unit]

11.5.8.2 Removing the Fixing Delivery Upper Unit

CLC5151 / / / CLC4040 / / / iR C4580i / / / iR C4080i / / / / Color Image Reader-F1 / Color Image Reader-E1 / Dupiex Color Image Reader-G1 / iR C5185N / / iR C5185i PRT /

1) Remove the 2 connectors [1], and the 3 screws [2].

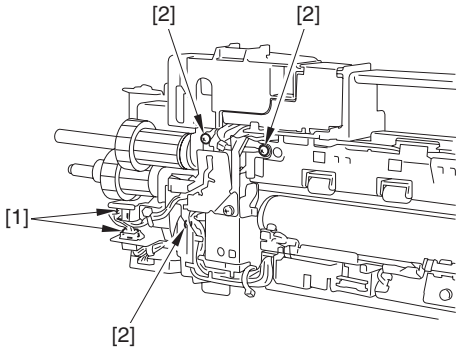

F-11-65

2) Open the harness guide cover [1] of the rear drawer.

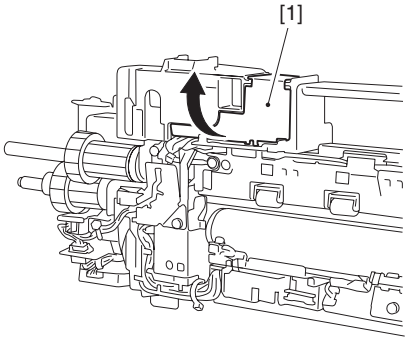

F-11-66

3) Remove the 2 connectors [1].

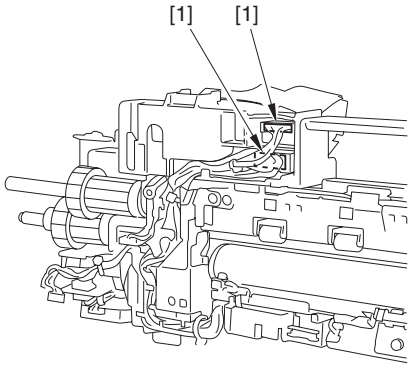

F-11-67

4) Remove the rear drawer [3].
- 2 connectors [1] to the side of the rear drawer
- 2 screws at the top of the rear drawer

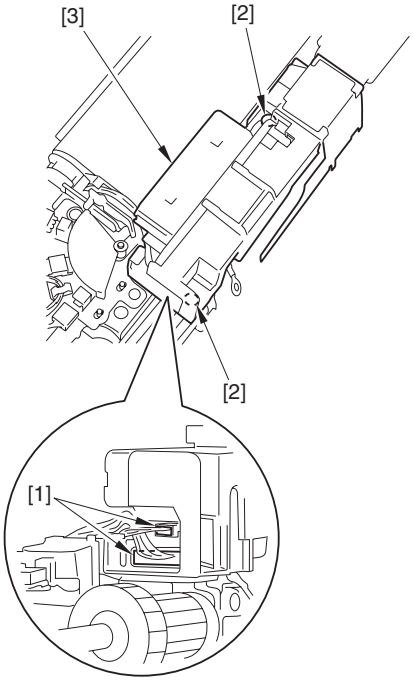

F-11-68

5) Remove the harness guide [2].
- 3 screws [1]

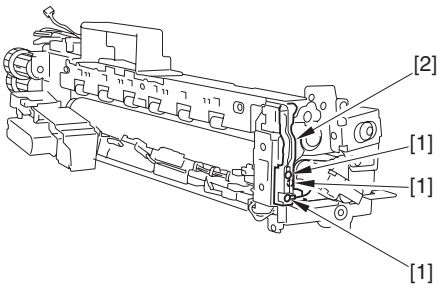

F-11-69

6) Remove the fixing delivery upper unit [3].
- 2 screws, stepped [1]
- 1 screw [2]

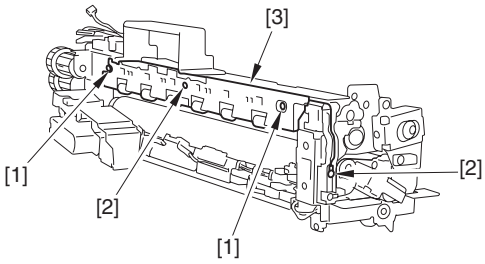

F-11-70

11.5.9 Pressure Heater

11.5.9.1 Preparation for Removing the Pressure Heater

CLC5151 / / / CLC4040 / / / iR C4580i / / / iR C4080i / / / / Color Image Reader-F1 / Color Image Reader-E1 / Dupiex Color Image Reader-G1 / iR C5185N / / iR C5185i PRT /

1) Remove the fixing drive unit.(page 11-22)Reference[Removing the Fixing Drive Unit]
2) Remove the fixing assembly.(page 11-22)Reference[Removing the Fixing Assembly]
3) Remove the IH unit.(page 11-23)Reference[Removing the IH Unit]
4) Remove the belt displacement control motor unit.(page 11-24)Reference[Removing the Belt Displacement Control Motor Unit]

11.5.9.2 Removing the Pressure Heater

CLC5151 / / / CLC4040 / / / iR C4580i / / / iR C4080i / / / / Color Image Reader-F1 / Color Image Reader-E1 / Dupiex Color Image Reader-G1 / iR C5185N / / iR C5185i PRT /

1) Remove the pressure heater [3].
- 3 screws [1]
- 2 holders [2] of the pressure heater

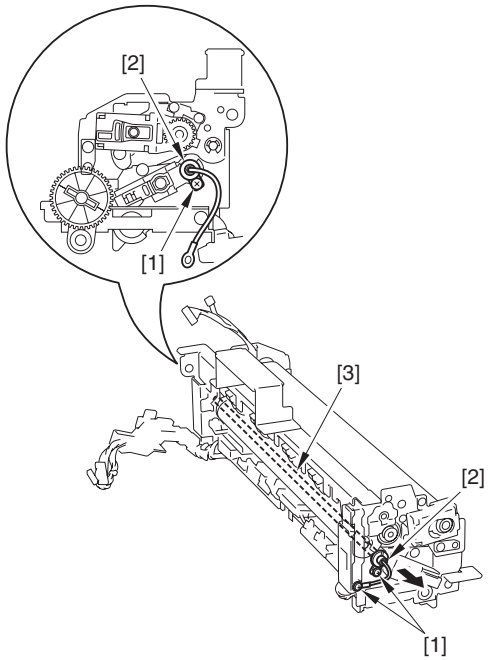

F-11-71

Points to Note When Mounting the Pressure Heater
Be sure that the white wire is to the front of the machine and the black wire is to the rear.

11.5.10 Fixing Inlet Lower Guide

11.5.10.1 Preparation for Removing the Fixing Inlet Lower Guide

CLC5151 / / / CLC4040 / / / iR C4580i / / / iR C4080i / / / / Color Image Reader-F1 / Color Image Reader-E1 / Dupiex Color Image Reader-G1 / iR C5185N / / iR C5185i PRT /

1) Remove the fixing drive unit.(page 11-22)Reference[Removing the Fixing Drive Unit]
2) Remove the fixing assembly.(page 11-22)Reference[Removing the Fixing Assembly]

11.5.10.2 Removing the Fixing Inlet Lower Guide

CLC5151 / / / CLC4040 / / / iR C4580i / / / iR C4080i / / / / Color Image Reader-F1 / Color Image Reader-E1 / Dupiex Color Image Reader-G1 / iR C5185N / / iR C5185i PRT /

1) Remove the wire saddle [1], and remove the connector [2].

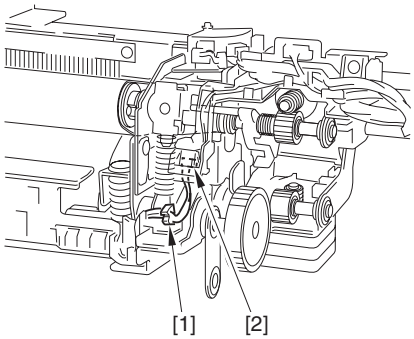

F-11-72

2) Remove the fixing inlet lower guide [2]. (Move it to the side to remove.)
- 1 screw [1]

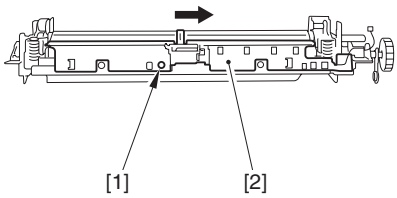

F-11-73

11.5.11 Fixing Inlet Sensor

11.5.11.1 Preparation for Removing the Fixing Inlet Sensor

CLC5151 / / / CLC4040 / / / iR C4580i / / / iR C4080i / / / / Color Image Reader-F1 / Color Image Reader-E1 / Dupiex Color Image Reader-G1 / iR C5185N / / iR C5185i PRT /

1) Remove the fixing drive unit.(page 11-22)Reference[Removing the Fixing Drive Unit]
2) Remove the fixing assembly.(page 11-22)Reference[Removing the Fixing Assembly]
3) Remove the fixing inlet lower guide.(page 11-32)Reference[Removing the Fixing Inlet Lower Guide]

11.5.11.2 Removing the Fixing Inlet Sensor

CLC5151 / / / CLC4040 / / / iR C4580i / / / iR C4080i / / / / Color Image Reader-F1 / Color Image Reader-E1 / Dupiex Color Image Reader-G1 / iR C5185N / / iR C5185i PRT /

1) Remove the sensor flag [3] of the fixing inlet sensor from the fixing inlet lower guide.
- 1 E-ring [1]
- 1 shaft [2]

Points to Note When Mounting the Sensor Flag
Be sure that the spring [4] of the sensor is correctly mounted.

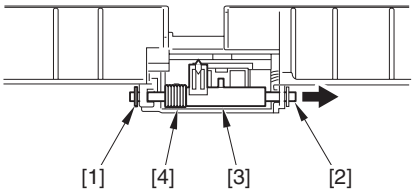

F-11-74

2) Remove the fixing inlet sensor [1].
- 1 connector [2]

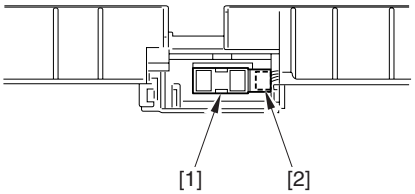

F-11-75

11.5.12 Fixing Delivery Sensor

11.5.12.1 Preparation for Removing the Fixing Delivery Sensor

CLC5151 / / / CLC4040 / / / iR C4580i / / / iR C4080i / / / / Color Image Reader-F1 / Color Image Reader-E1 / Dupiex Color Image Reader-G1 / iR C5185N / / iR C5185i PRT /

1) Remove the fixing drive unit.(page 11-22)Reference[Removing the Fixing Drive Unit]
2) Remove the fixing assembly.(page 11-22)Reference[Removing the Fixing Assembly]
3) Remove the fixing delivery lower unit.(page 11-30)Reference[Removing the Fixing Delivery Lower Unit]

11.5.12.2 Removing the Fixing Delivery Sensor

CLC5151 / / / CLC4040 / / / iR C4580i / / / iR C4080i / / / / Color Image Reader-F1 / Color Image Reader-E1 / Dupiex Color Image Reader-G1 / iR C5185N / / iR C5185i PRT /

1) Remove the rod-shaped spring [1] from the fixing delivery lower unit. (Pull it off.)

Points to Note When Mounting the Spring
Be sure to fit the middle [A] of the spring and the bend of the spring end on the hook found in the fixing delivery lower unit.

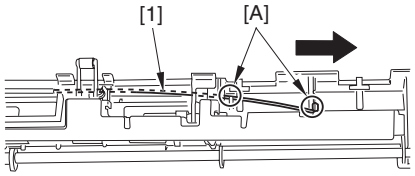

F-11-76

2) Remove the sensor cover from the fixing delivery lower unit. (Move it away.)
- 4 screws [1]

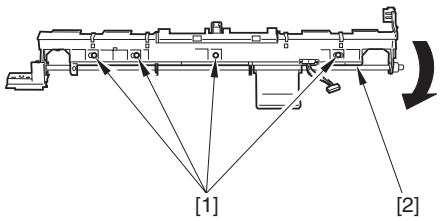

F-11-77

3) Remove the fixing delivery sensor [1].
- 1 connector [2]

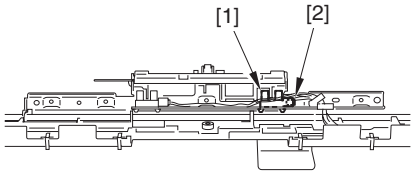

F-11-78

11.5.13 Fixing Belt Position Sensor Unit

11.5.13.1 Preparation for Removing the Fixing Belt Position Sensor Unit

CLC5151 / / / CLC4040 / / / iR C4580i / / / iR C4080i / / / / Color Image Reader-F1 / Color Image Reader-E1 / Dupiex Color Image Reader-G1 / iR

C5185N / / iR C5185i PRT /

1) Remove the fixing drive unit.(page 11-22)Reference[Removing the Fixing Drive Unit]
2) Remove the fixing assembly.(page 11-22)Reference[Removing the Fixing Assembly]
3) Remove the IH unit.(page 11-23)Reference[Removing the IH Unit]

11.5.13.2 Removing the Fixing Belt Position Sensor Unit

CLC5151 / / / CLC4040 / / / iR C4580i / / / iR C4080i / / / / Color Image Reader-F1 / Color Image Reader-E1 / Dupiex Color Image Reader-G1 / iR C5185N / / iR C5185i PRT /

1) Remove the harness from the harness guide [2].
   - 2 connectors [1]

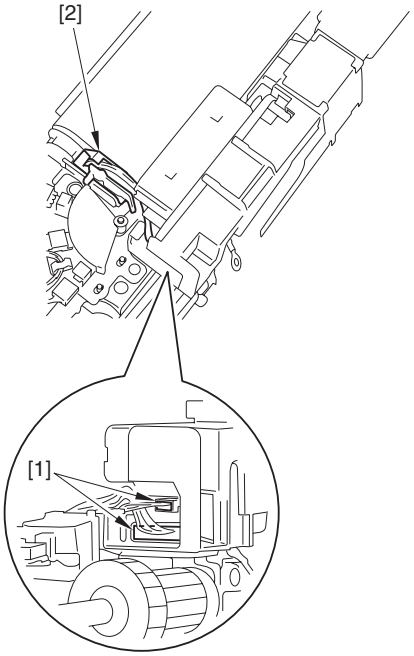

F-11-79

2) Remove the harness guide [1] (Move it to the side, and detach it by freeing it from the pin).

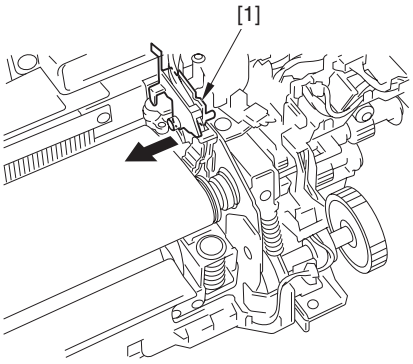

F-11-80

When moving the sensor unit, take care not to remove the screws glued in place.

3) Remove the fixing belt position sensor unit [4].
   - 2 clamps [1]
   - 3 connectors [2]
   - 2 screws [3]

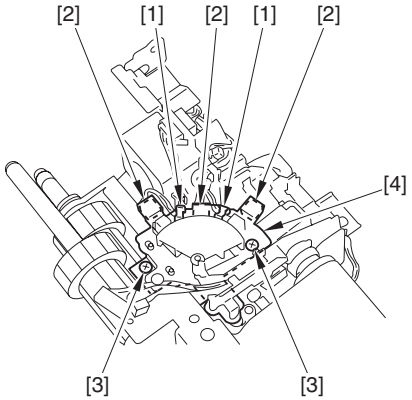

F-11-81

Points to Note When Mounting the Sensor Unit
- Be sure that the sensor flag (rod) [2] is in contact with the edge of the fixing belt [1].

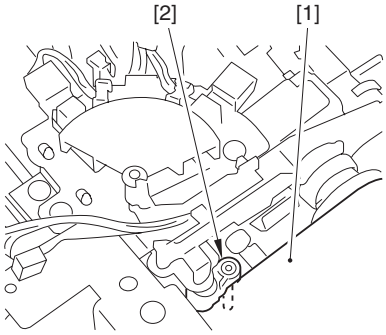

F-11-82

- When disconnecting the connector,Be sure to match the color of the connector to the color indicated by the marking on the sensor mounting plate (W being white [1]; K being black [2]; and B being blue [3]).

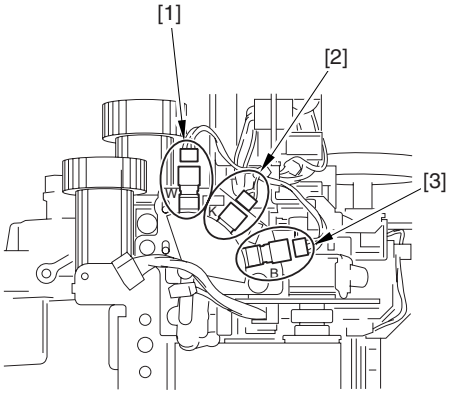

F-11-83

11.5.14 Fixing Releasing HP Sensor

11.5.14.1 Preparation for Removing the Fixing Release HP Sensor

CLC5151 / / / CLC4040 / / / iR C4580i / / / iR C4080i / / / / Color Image Reader-F1 / Color Image Reader-E1 / Dupiex Color Image Reader-G1 / iR C5185N / / iR C5185i PRT /

1) Remove the fixing drive unit.(page 11-22)Reference[Removing the Fixing Drive Unit]
2) Remove the fixing assembly.(page 11-22)Reference[Removing the Fixing Assembly]
3) Remove the fixing delivery lower unit.(page 11-30)Reference[Removing the Fixing Delivery Lower Unit]

11.5.14.2 Removing the Fixing Release HP Sensor

CLC5151 / / / CLC4040 / / / iR C4580i / / / iR C4080i / / / / Color Image Reader-F1 / Color Image Reader-E1 / Dupiex Color Image Reader-G1 / iR

C5185N / / iR C5185i PRT /

1) Remove the fixing release HP sensor [5].
   - 1 edge saddle [1]
   - 1 connector [2]
   - 1 screw [3]
   - 1 fixing release HP sensor mounting plate [4]

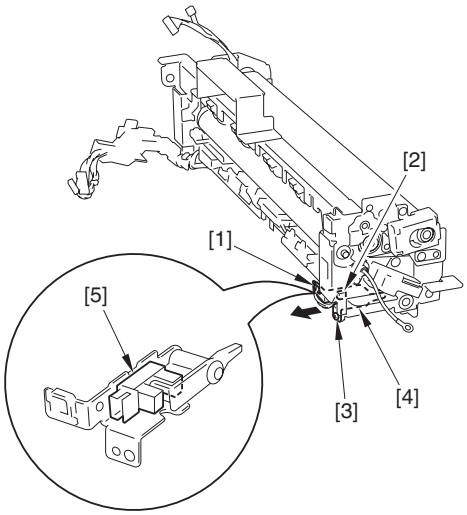

F-11-84

11.5.15 Fixing Wrap Sensor

11.5.15.1 Preparation for Removing the Fixing Wrap Sensor

CLC5151 / / / CLC4040 / / / iR C4580i / / / iR C4080i / / / / Color Image Reader-F1 / Color Image Reader-E1 / Dupiex Color Image Reader-G1 / iR C5185N / / iR C5185i PRT /

1) Remove the fixing drive unit.(page 11-22)Reference[Removing the Fixing Drive Unit]
2) Remove the fixing assembly.(page 11-22)Reference[Removing the Fixing Assembly]
3) Remove the fixing delivery lower unit.(page 11-30)Reference[Removing the Fixing Delivery Lower Unit]

11.5.15.2 Removing the Fixing Wrap Sensor

CLC5151 / / / CLC4040 / / / iR C4580i / / / iR C4080i / / / / Color Image Reader-F1 / Color Image Reader-E1 / Dupiex Color Image Reader-G1 / iR C5185N / / iR C5185i PRT /

1) Remove the rod-shaped spring [1] connected to the fixing delivery lower unit. (Pull it out.)

Points to Note When Mounting the Spring
Be sure to fit the bend of the spring end and the middle [A] of the spring on the hook found in the fixing delivery lower unit.

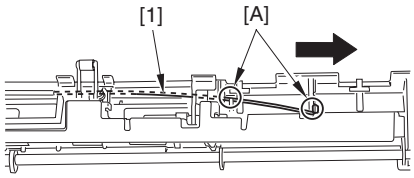

F-11-85

2) Remove the sensor cover from the fixing delivery lower unit. (Move it away.)
   - 4 screws, stepped [1]

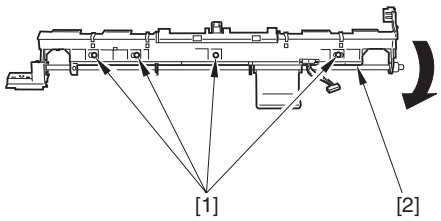

F-11-86

3) Remove the fixing wrap sensor [1].
   - 1 connector [2]

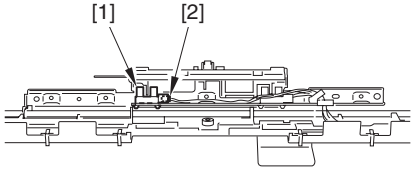

F-11-87

11.5.16 Fixing Motor Unit

11.5.16.1 Preparation for Removing the Fixing Motor Unit

CLC5151 / / / CLC4040 / / / iR C4580i / / / iR C4080i / / / / Color Image Reader-F1 / Color Image Reader-E1 / Dupiex Color Image Reader-G1 / iR C5185N / / iR C5185i PRT /

1) Remove the fixing drive unit.(page 11-22)Reference[Removing the Fixing Drive Unit]

11.5.16.2 Removing the Fixing Motor Unit

CLC5151 / / / CLC4040 / / / iR C4580i / / / iR C4080i / / / / Color Image Reader-F1 / Color Image Reader-E1 / Dupiex Color Image Reader-G1 / iR C5185N / / iR C5185i PRT /

1) Remove the fixing motor unit [3].
   - 2 connectors [1]
   - 3 screws [2]

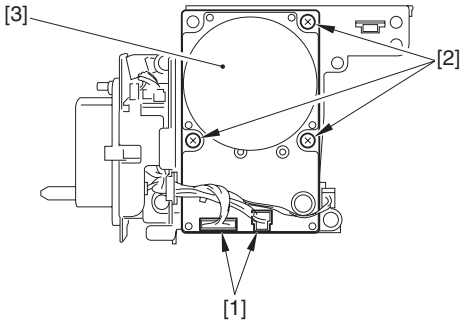

F-11-88

11.5.17 Fixing Pressure Motor Unit

11.5.17.1 Preparation for Removing the Fixing Pressure Motor Unit

CLC5151 / / / CLC4040 / / / iR C4580i / / / iR C4080i / / / / Color Image Reader-F1 / Color Image Reader-E1 / Dupiex Color Image Reader-G1 / iR C5185N / / iR C5185i PRT /

1) Remove the fixing drive unit.(page 11-22)Reference[Removing the Fixing Drive Unit]

11.5.17.2 Removing the Fixing Pressure Motor Unit

CLC5151 / / / CLC4040 / / / iR C4580i / / / iR C4080i / / / / Color Image Reader-F1 / Color Image Reader-E1 / Dupiex Color Image Reader-G1 / iR C5185N / / iR C5185i PRT /

1) Remove the fixing pressure motor unit [3].
   - 1 connector [1]
   - 3 screws [2]

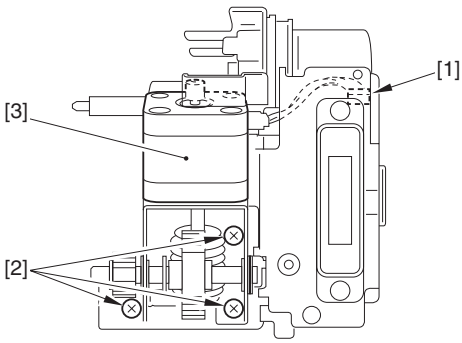

F-11-89

11.5.18 Fixing Belt Displacement Control Motor Unit

11.5.18.1 Preparation for Removing the Fixing Belt Displacement Control Motor Unit

CLC5151 / / / CLC4040 / / / iR C4580i / / / iR C4080i / / / / Color Image Reader-F1 / Color Image Reader-E1 / Dupiex Color Image Reader-G1 / iR C5185N / / iR C5185i PRT /

1) Remove the fixing drive unit. (page 11-22)Reference[Removing the Fixing Drive Unit]
2) Remove the fixing assembly.(page 11-22)Reference[Removing the Fixing Assembly]
3) Remove the IH unit.(page 11-23)Reference[Removing the IH Unit]
4) Remove the belt displacement control motor unit.(page 11-24)Reference[Removing the Belt Displacement Control Motor Unit]

11.5.18.2 Removing the Fixing Belt Displacement Control Motor Unit

CLC5151 / / / CLC4040 / / / iR C4580i / / / iR C4080i / / / / Color Image Reader-F1 / Color Image Reader-E1 / Dupiex Color Image Reader-G1 / iR C5185N / / iR C5185i PRT /

Points to Note When Removing the Fixing Belt Displacement Control Motor Unit
In the case of removing the fixing belt displacement control motor unit, make sure to remove only the parts described in the following steps to remove. Do not remove other parts such as the sensor and the flag. Because the sensor position and the flag position are fine adjusted in the factory, it will be difficult to adjust in the field if removing these parts.

1) Move the pressure belt displacement control motor unit [4] in the direction of the arrow to detach the cover [3].
   - 1 E-ring [1]
   - 1 screw [2]

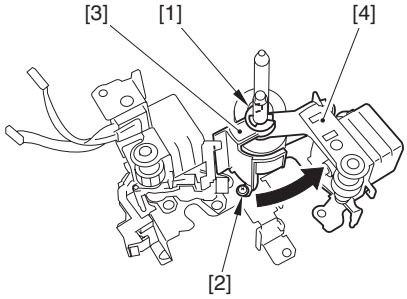

F-11-90

2) Along with the gear [1] and the 2 bearings [2], remove the pressure belt displacement control motor unit [4] from the shaft [3].

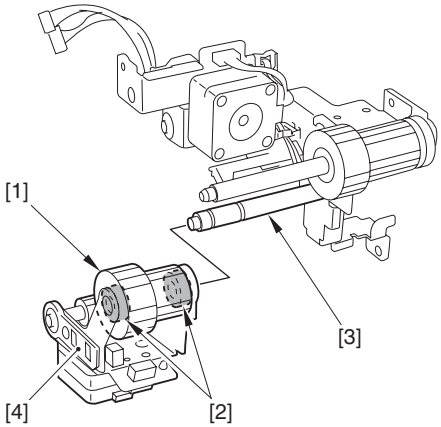

F-11-91

3) From the shaft [4] of the fixing belt displacement control motor unit [5], remove the E-ring [1], the gear [2], and the 2 bearings [3]. This fixing belt displacement control motor unit [5] (the unit that the E-ring, the gear, and the 2 bearings are removed) is to be a service part.

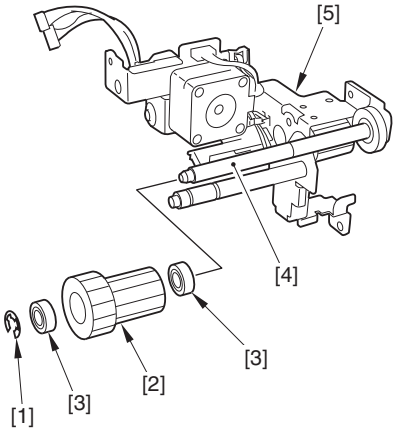

F-11-92

11.5.19 Pressure Belt Displacement Control Motor Unit

11.5.19.1 Preparation for Removing the Pressure Belt Displacement Control Motor Unit

CLC5151 / / / CLC4040 / / / iR C4580i / / / iR C4080i / / / / Color Image Reader-F1 / Color Image Reader-E1 / Dupiex Color Image Reader-G1 / iR C5185N / / iR C5185i PRT /

1) Remove the fixing drive unit.(page 11-22)Reference[Removing the Fixing Drive Unit]
2) Remove the fixing assembly.(page 11-22)Reference[Removing the Fixing Assembly]
3) Remove the IH unit.(page 11-23)Reference[Removing the IH Unit]
4) Remove the belt displacement control motor unit.(page 11-24)Reference[Removing the Belt Displacement Control Motor Unit]

11.5.19.2 Removing the Pressure Belt Displacement Control Motor Unit

CLC5151 / / / CLC4040 / / / iR C4580i / / / iR C4080i / / / / Color Image Reader-F1 / Color Image Reader-E1 / Dupiex Color Image Reader-G1 / iR C5185N / / iR C5185i PRT /

Points to Note When Removing the Pressure Belt Displacement Control Motor Unit
In the case of removing the pressure belt displacement control motor unit, remove only the parts described in the following steps to remove. Do not remove other parts such as the sensor and the flag. Because the sensor position and the flag position are fine adjusted in the factory, it will be difficult to adjust in the field if removing these parts.

1) Move the pressure belt displacement control motor unit [4] in the direction of the arrow to detach the cover [3].
   - 1 E-ring [1]
   - 1 screw [2]

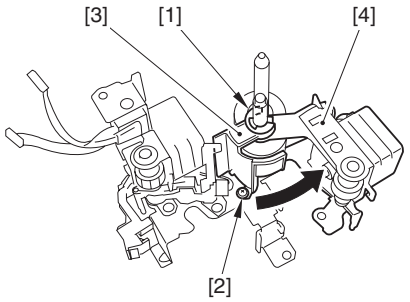

F-11-93

2) Along with the gear [1] and the 2 bearings [2], remove the pressure belt displacement control motor unit [4] from the shaft [3]. This pressure belt displacement control motor unit [4] (the unit that the gear and the 2 bearings are removed) is to be a service part.

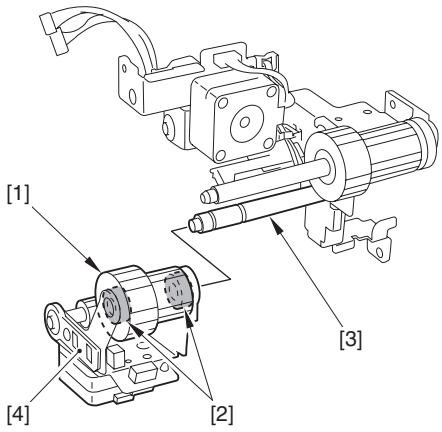

F-11-94

Chapter 12 Externals and Controls

Contents

12.1 Control Panel 12-1
12.1.1 Outline 12-1
12.1.2 LCD Processing 12-1
12.1.3 LCD Contras Adjustment 12-1
12.1.4 Functions of the Control Panel CPU 12-1
12.2 Counters 12-1
12.2.1 Outline 12-1
12.2.2 Signal-Sided Print and 2nd Side of a Double-Sided Print 12-2
12.2.3 Side of a Duplex Print (duplex model only) 12-3
12.3 Fans 12-3
12.3.1 Outline 12-3
12.3.2 Fan Sequence 12-4
12.4 Power Supply 12-5
12.4.1 Power Supply 12-5
12.4.1.1 Timing of Power Supply 12-5
12.4.1.2 Wiring to Various Accessories 12-5
12.4.1.3 Power Supply Path to Reader Unit 12-6
12.4.1.4 Power Supply Path in Printer 12-7
12.4.1.5 Power Supply Path in Pedestal (Accessory) 12-8
12.4.2 Rated Output of DC Power Supply PCB 12-9
12.4.2.1 Rated Output of DC Power Supply PCB 12-9
12.4.2.2 Rated Output of the Optional DC Power Supply PCB 12-10
12.4.3 Protection Function 12-10
12.4.3.1 Protective Mechanisms 12-10
12.4.4 Backup Battery 12-10
12.4.4.1 Battery for Backup 12-10
12.4.4.2 Backup Power Supply 12-10
12.4.5 Energy-Saving Function 12-11
12.4.5.1 Outline 12-11
12.4.5.2 SNMP setup 12-12
12.5 Parts Replacement Procedure 12-14
12.5.1 External Covers 12-14
12.5.1.1 Front Cover 12-14
12.5.1.1.1 Removing the Front Cover 12-14
12.5.1.2 Upper Right Cover 12-14
12.5.1.2.1 Removing the Upper Right Cover 12-14
12.5.1.3 Right Front Cover 12-14
12.5.1.3.1 Removing the Right Front Cover 12-14
12.5.1.4 Rear Right Cover 12-14
12.5.1.4.1 Removing of the Right Rear Cover 12-14
12.5.1.5 Upper Left Cover 12-14
12.5.1.5.1 Removing the Upper Left Cover 12-14
12.5.1.6 Left Lower Cover 12-15
12.5.1.6.1 Removing the Left Lower Cover 12-15
12.5.1.7 Upper Left Cover (small) 12-15
12.5.1.7.1 Removing the Card Reader Cover 12-15
12.5.1.8 Left Rear Cover (Upper) 12-15
12.5.1.8.1 Removing the Left Rear Cover (Upper) 12-15
12.5.1.9 Left Rear Cover (Lower) 12-15
12.5.1.9.1 Removing the Left Rear Cover (Lower) 12-15
12.5.1.10 Rear Fan Cover 12-15
12.5.1.10.1 Removing the Rear Fan Cover 12-15
12.5.1.10.2 Removing the Rear Fan Cover 12-16

12.5.1.11 Rear Upper Cover 12-16
12.5.1.11.1 Removing the Rear Upper Cover 12-16
12.5.1.11.2 Removing the Rear Upper Cover 12-16
12.5.1.12 Rear Lower Cover 12-16
12.5.1.12.1 Removing the Rear Lower Cover 12-16
12.5.1.12.2 Removing the Rear Lower Cover 12-16
12.5.1.13 Rear Left Cover (Upper) 12-17
12.5.1.13.1 Removing the Rear Left Cover (Upper) 12-17
12.5.1.14 Rear Left Cover (Lower) 12-17
12.5.1.14.1 Removing the Rear Left Cover (Lower) 12-17
12.5.1.15 Inside Cover (Upper) 12-17
12.5.1.15.1 Removing the Inside Cover (Upper) 12-17
12.5.1.16 Inside Cover (Lower) 12-17
12.5.1.16.1 Removing the Inside Cover (Lower) 12-17
12.5.1.17 Reader Rear Cover 12-18
12.5.1.17.1 Removing the Reader Rear Cover 12-18
12.5.1.17.2 Removing the Reader Rear Cover 12-18
12.5.1.18 Manual Feeding Unit Cover 12-19
12.5.1.18.1 Removing the Manual Feed Unit Cover 12-19
12.5.2 Developing Drive Unit 12-19
12.5.2.1 Preparation for Removing the Developing Drive Unit 12-19
12.5.2.2 Removing the Developing Drive Unit 12-19
12.5.3 High-Voltage Unit 12-20
12.5.3.1 Preparation for Removing the High-Voltage Unit1 12-20
12.5.3.2 Removing the High-Voltage Unit1 12-20
12.5.3.3 Preparation for Removing the High-Voltage Unit 2 12-20
12.5.3.4 Removing the High-Voltage Unit 2 12-20
12.5.4 Secondary Transfer High-Voltage Unit 12-20
12.5.4.1 Preparation for Removing the Secondary Transfer Hign-Voltage Unit 12-20
12.5.4.2 Removing the Secondary Transfer Hign-Voltage Unit 12-20
12.5.5 IH Power Supply Assembly 12-21
12.5.5.1 Preparation for Removing the IH Power Supply Unit 12-21
12.5.5.2 Removing the IH Power Supply Unit 12-21
12.5.6 DC Power Supply Unit 12-21
12.5.6.1 Preparation for Removing the DC Power Supply Unit 12-21
12.5.6.2 Removing the DC Power Supply Unit 12-21
12.5.6.3 Removing the DC Power Supply Unit 12-22
12.5.7 Control Panel 12-22
12.5.7.1 Preparation for Removing the Control Panel 12-22
12.5.7.2 Removing the Control Panel 12-22
12.5.8 Control Panel LCD Unit 12-23
12.5.8.1 Preparation for Removing the Control Panel LCD Unit 12-23
12.5.8.2 Removing the Control Panel LCD Unit 12-23
12.5.9 DC Controller Box 12-23
12.5.9.1 Preparation for Removing the DC Controller Box2 12-23
12.5.9.2 Removing the DC Controller Box 2 12-24
12.5.9.3 Preparation for Removing the DC Controller Box1 12-24
12.5.9.4 Removing the DC Controller Box 1 12-24
12.5.10 DC Controller PCB 12-25
12.5.10.1 Preparation for Removing the DC Controller PCB2 (MAISY) 12-25
12.5.10.2 Removing the DC Controller PCB2 (MAISY) 12-25
12.5.10.3 Preparation for Removing the DC Controller PCB1 (IMG) 12-25
12.5.10.4 Removing the DC Controller PCB1 (IMG) 12-25
12.5.10.5 When Replacing the DC Controller PCB1(IMG) 12-25
12.5.11 Main Power Supply PCB 12-26
12.5.11.1 Preparation for Removing the Main Power Supply PCB 12-26
12.5.11.2 Removing the Main Power Supply PCB 12-26
12.5.12 All-Night Power Supply PCB 12-26
12.5.12.1 Preparation for Removing the All-Night Power Supply PCB 12-26
12.5.12.2 Removing the All-night Power Supply PCB 12-26

12.5.13 IH Power Supply PCB 12-26
12.5.13.1 Preparation for Removing the IH Power Supply PCB 12-26
12.5.13.2 Removing the IH Power Supply PCB 12-26
12.5.14 Leakage Breaker 12-27
12.5.14.1 Preparation for Removing the Leakage Breaker 12-27
12.5.14.2 Removing the Leakage Breaker 12-27
12.5.15 Relay PCB 12-27
12.5.15.1 Preparation for Removing the Relay PCB 12-27
12.5.15.2 Removing the Relay PCB 12-27
12.5.16 DC Relay 12-27
12.5.16.1 Making Preparations to Remove the Main Power Relay Unit 12-27
12.5.16.2 Removing the Main Power Relay Unit 12-27
12.5.17 DC/DC Converter PCB 12-29
12.5.17.1 Preparation for Removing the DC/DC Converter PCB (38V)1 12-29
12.5.17.2 Removing the DC/DC Converter PCB (38V)1 12-29
12.5.17.3 Preparation for Removing the DC/DC Converter PCB (38V)2 12-29
12.5.17.4 Removing the DC/DC Converter PCB (38V)2 12-29
12.5.17.5 Preparation for Removing the DC/DC Converter PCB (3.3V/5V/12V) 12-29
12.5.17.6 Removing the DC/DC Converter PCB (3.3V/5V/12V) 12-29
12.5.18 Intermediate Transfer Belt Sub PCB 12-30
12.5.18.1 Preparation for Removing the Intermediate Transfer Belt Sub PCB 12-30
12.5.18.2 Removing the Intermediate Transfer Belt Sub PCB 12-30
12.5.19 AC Driver PCB 12-30
12.5.19.1 Preparation for Removing the AC Driver PCB 12-30
12.5.19.2 Removing the AC Driver PCB 12-30
12.5.20 Relay PCB 1 12-30
12.5.20.1 Preparation for Removing the Relay PCB 1 12-30
12.5.20.2 Removing the Relay PCB 1 12-30
12.5.21 Control Panel CPU PCB 12-31
12.5.21.1 Preparation for Removing the Control Panel CPU PCB 12-31
12.5.21.2 Removing the Control Panel CPU PCB 12-31
12.5.22 Control Panel Key Switch PCB 12-31
12.5.22.1 Preparation for Removing the Control Panel Key Switch PCB 12-31
12.5.22.2 Removing the Control Panel Key Switch PCB 12-32
12.5.23 Control Panel Inverter PCB 12-32
12.5.23.1 Preparation for Removing the Control Panel Inverter PCB 12-32
12.5.23.2 Removing the Control Panel Inverter PCB 12-33
12.5.24 Environment Sensor 12-33
12.5.24.1 Preparation for Removing the Environment Sensor 12-33
12.5.24.2 Removing the Environment Sensor 12-33
12.5.25 Manual Feed Unit Open/Closed Sensor 12-34
12.5.25.1 Preparation for Removing the Manual Feed Unit Open/Closed Sensor 12-34
12.5.25.2 Removing the Manual Feed Unit Open/Closed Sensor 12-34
12.5.26 Front Cover Open/Closed Sensor 12-34
12.5.26.1 Preparation for Removing the Front Cover Open/Closed Sensor 12-34
12.5.26.2 Removing the Front Cover Open/Closed Sensor 12-35
12.5.27 Main Power Switch 12-35
12.5.27.1 Preparation for Removing the Main Power Switch 12-35
12.5.27.2 Removing the Main Power Switch 12-36
12.5.28 Manual Feed Unit Open/Closed Detecting Switch 12-36
12.5.28.1 Preparation for Removing the Manual Feed Unit Open/Close Switch 12-36
12.5.28.2 Removing the Manual Feed Unit Open/Close Switch 12-37
12.5.29 Front Cover Open/Closed Detecting Switch 12-38
12.5.29.1 Preparation for Removing the Front Cover Open/Close Switch 12-38
12.5.29.2 Removing the Front Cover Open/Close Switch 12-38
12.5.30 ITB Cooling Fan 12-39
12.5.30.1 Preparation for Removing the ITB Cooling Fan 12-39
12.5.30.2 Removing the ITB Cooling Fan 12-39
12.5.30.3 Removing the ITB Belt Dust Proof Filter 12-39
12.5.31 Face-down Tray Cooling Fan (rear/ front) 12-39

12.5.31.1 Preparation for Removing the Face-Down Tray Cooling Fan Unit 12-39
12.5.31.2 Removing the Face-Down Tray Cooling Fan Unit 12-40
12.5.31.3 Preparation for Removing the Face-Down Tray Cooling Fan 12-40
12.5.31.4 Removing the Face-Down Tray Cooling Fan 12-40
12.5.32 Cleaner Fan 12-40
12.5.32.1 Preparation for Removing the Cleaner Fan 12-40
12.5.32.2 Removing the Cleaner Fan 12-40
12.5.33 Manual Feed Cooling Fan 12-40
12.5.33.1 Preparation for Removing the Manual Feed Cooling Fan 12-40
12.5.33.2 Removing the Manual Feed Cooling Fan 12-41
12.5.34 Fixing Heat Discharge Fan 12-41
12.5.34.1 Preparation for Removing the Fixing Heat Discharge Fan 12-41
12.5.34.2 Removing the Fixing Heat Discharge Fan 12-41
12.5.34.3 Preparation for Removing the Toner Filter (Fixing Heat Discharge Fan Filter) 12-41
12.5.34.4 Removing the Toner Filter (Fixing Heat Discharge Fan Filter) 12-41
12.5.35 Power Supply Exhaust Fan 12-41
12.5.35.1 Preparation for Removing the Power Supply Exhaust Fan 1 12-41
12.5.35.2 Removing the Power Supply Exhaust Fan 1 12-42
12.5.35.3 Preparation for Removing the Power Supply Exhaust Fan 2 12-42
12.5.35.4 Removing the Power Supply Exhaust Fan 2 12-42
12.5.36 IH Power Supply Cooling Fan 12-42
12.5.36.1 Preparation for Removing the IH Power Supply Cooling Fan 12-42
12.5.36.2 Removing the IH Power Supply Cooling Fan 12-42
12.5.37 Delivery Cooling Fan 12-42
12.5.37.1 Preparation for Removing the Delivery Cooling Fan 12-42
12.5.37.2 Removing the Delivery Cooling Fan 12-42
12.5.38 Machine Heat Discharge Fan 12-43
12.5.38.1 Preparation for Removing the Machine Heat Discharge Fan 12-43
12.5.38.2 Removing the Machine Heat Discharge Fan 12-43
12.5.39 Delivery Vertical Path Cooling Fan 12-43
12.5.39.1 Preparation for Removing the Delivery Vertical Path Cooling Fan 12-43
12.5.39.2 Removing the Delivery Vertical Path Cooling Fan 12-43
12.5.40 Delivery Vertical Path Exhaust Fan 12-43
12.5.40.1 Preparation for Removing the Delivery Vertical Path Exhaust Fan 12-43
12.5.40.2 Removing the Delivery Vertical Path Exhaust Fan 12-43
12.5.41 Drum Unit Drive Belt 12-44
12.5.41.1 Preparation for Removing the Drum Unit Drive Belt 12-44
12.5.41.2 Removing the Drum Unit Drive Belt 12-45

12.1 Control Panel

12.1.1 Outline

CLC5151 / / / CLC4040 / / / iR C4580i / / / iR C4080i / / / / iR C5185N / / iR C5185i PRT /

The machine's control panel consists of PCBs, LCD, and touch panel as shown below; the control panel is associated with the following functions:
- LCD indication
- contrast adjustment
- touch switch input
- hard key input

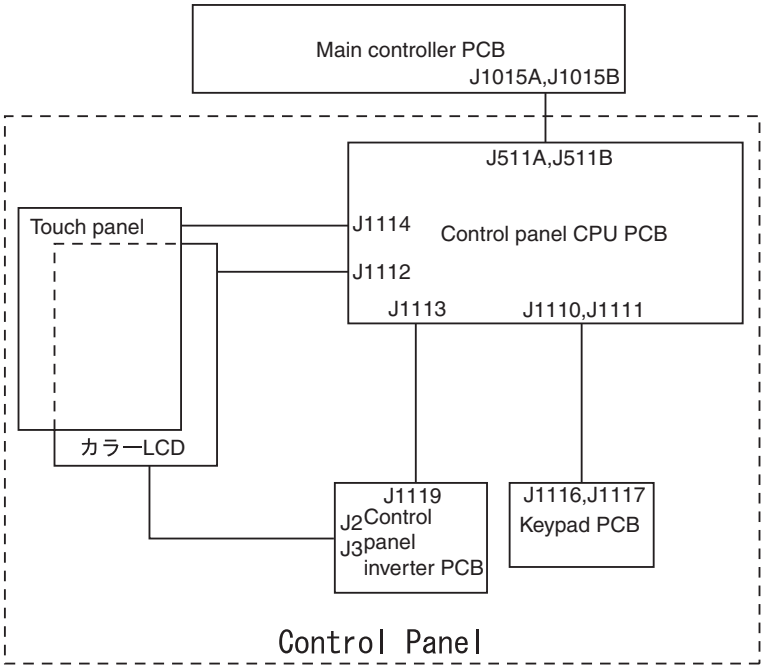

F-12-1

12.1.2 LCD Processing

CLC5151 / / / CLC4040 / / / iR C4580i / / / iR C4080i / / / / iR C5185N / / iR C5185i PRT /

The CPU on the main controller PCB sends data (display information) to the control panel CPU PCB as instructed by various programs.
The CPU on the main controller PCB sends data (display information) to the control panel CPU PCB as instructed by various programs.

12.1.3 LCD Contras Adjustment

CLC5151 / / / CLC4040 / / / iR C4580i / / / iR C4080i / / / / iR C5185N / / iR C5185i PRT /

The machine is equipped with a dial on its control panel designed for use by the user for adjustment of the LCD contrast.

12.1.4 Functions of the Control Panel CPU

CLC5151 / / / CLC4040 / / / iR C4580i / / / iR C4080i / / / / iR C5185N / / iR C5185i PRT /

- Monitoring key inputs (relays the inputs made by keypad keys and function keys to the CPU on the main controller PCB)
- Controlling the buzzer sound
- Turning on/off thecontrolpanel LEDs

12.2 Counters

12.2.1 Outline

CLC5151 / / / CLC4040 / / / iR C4580i / / / iR C4080i / / / / iR C5185N / / iR C5185i PRT /

The machine is equipped with counters that keep track of the number of prints made according to the type of print; a specific counter reading is shown in response to a press on the Check key on the control panel.The particulars of the counter settings made at time of shipment from factory and grouped by model are as follows:

T-12-1

Model	Counter 1	Counter 2	Counter 3	Counter 4	Counter 5	Counter 6	Counter7	Counter8
100V (*1Åj	Total 1	Total (B&W 1)	Copy (full color + mono color/1)	Print (full color + mono color/1)	(disabled at default) May be changedÅ@in service mode	(disabled at default) May be changedÅ@in service mode	(disabled at default) May be changedÅ@in service mode	(disabled at default) May be changedÅ@in service mode
	101	108	232	324	0	0	0	0
120V (*2Åj	Total 1	Total (B&W 1)	Copy (full color + mono color/large) Å@Å@	Copy (full color +mono color/small) Å@Å@	Print (full color + mono color/large) Å@Å@	Print (full color +mono color/small) Å@Å@	(disabled at default) May be changedÅ@in service mode	(disabled at default) May be changedÅ@in service mode
	101	108	229	230	321	322	0	0

Model	Counter 1	Counter 2	Counter 3	Counter 4	Counter 5	Counter 6	Counter7	Counter8
230V General(*3Åj	Total 1	Total (B&W 1)	Copy + print (full color/large) Å@Å@	Copy + print (full color/small) Å@Å@	Total (mono color/1)	totalÅiduplex)	(disabled at default) May be changedÅ@in service mode	(disabled at default) May be changedÅ@in service mode
	101	108	401	402	118	114	0	0
240V UK (*4Åj	Total ÅiB&W/ largeÅj	Total ÅiB&W/ smallÅj	Total (full color + mono color/large) Å@Å@	Total (full color + mono color/smal) Å@Å@	scan (total 1)	scan (total 2)	(disabled at default) May be changedÅ@in service mode	(disabled at default) May be changedÅ@in service mode
	112	113	122	123	501	301	0	0
240V CA(*5Åj	Total 1	Total (B&W 1)	Copy (full color + mono color/large) Å@Å@	Copy (full color +mono color/small) Å@Å@	Print (full color + mono color/large) Å@Å@	Print (full color +mono color/small) Å@Å@	(disabled at default) May be changedÅ@in service mode	(disabled at default) May be changedÅ@in service mode
	101	108	229	230	321	322	0	0
230V FRN (*4Åj	Total ÅiB&W/ largeÅj	Total ÅiB&W/ smallÅj	Total (full color + mono color/large) Å@Å@	Total (full color + mono color/smal) Å@Å@	scan (total 1)	scan (total 2)	(disabled at default) May be changedÅ@in service mode	(disabled at default) May be changedÅ@in service mode
	112	113	122	123	501	301	0	0
230V GER (*4Åj	Total ÅiB&W/ largeÅj	Total ÅiB&W/ smallÅj	Total (full color + mono color/large) Å@Å@	Total (full color + mono color/smal) Å@Å@	scan (total 1)	scan (total 2)	(disabled at default) May be changedÅ@in service mode	(disabled at default) May be changedÅ@in service mode
	112	113	122	123	501	301	0	0
230V AMS(*4Åj	Total ÅiB&W/ largeÅj	Total ÅiB&W/ smallÅj	Total (full color + mono color/large) Å@Å@	Total (full color + mono color/smal) Å@Å@	scan (total 1)	scan (total 2)	(disabled at default) May be changedÅ@in service mode	(disabled at default) May be changedÅ@in service mode
	112	113	122	123	501	301	0	0
230V ITA(*4Åj	Total ÅiB&W/ largeÅj	Total ÅiB&W/ smallÅj	Total (full color + mono color/large) Å@Å@	Total (full color + mono color/smal) Å@Å@	scan (total 1)	scan (total 2)	(disabled at default) May be changedÅ@in service mode	(disabled at default) May be changedÅ@in service mode
	112	113	122	123	501	301	0	0

Description of Symbols
- Large: indicates the large size paper (in case the size is more than 364 mm in the feeding direction / count up x 1 time)
- Small: indicates the small size paper (in case the size is less than 364 mm in the feeding direction)
- Total: indicates the count up with ALL (C+P) x 1 time.
- 2-sided: indicates the count up at the time of automatic 2-sided copy x 1 time.

The 3-digit symbols in the counter column indicate the setting value of the service mode items indicated below.
COPIER > OPTION > USER > COUNTER 1 to 6
(For the detail, see the foregoing items of the service mode.)

It is possible to set different counter mode with the service mode. (For 120/230V model, all counters are available.)

Medium Oredr(print unit)

*1:F14-8011/8012/8016/8017/8111/8113/8211/8213
F15-3211/3213/3311/3313

*2:F14-8032/8035/8036/8038/8132/8135/8232/8235
F15-3232/3235/3332/3335

*3:F14-8041/8042/8046/8047/8077/8007/8141/8142
F15-3241/3242/3281/3272

*4:F14-8091/8098/8195/8191/8295
F15-3191/3291/3295/3395/3361

*5:F14-8061/8066/8161/8261
F15-3261

12.2.2 Signal-Sided Print and 2nd Side of a Double-Sided Print

CLC5151 / / / CLC4040 / / / iR C4580i / / / iR C4080i / / / / iR C5185N / / iR C5185i PRT /

When making a single-side print or printing on the 2nd side of a double-side print, the counter reading is incremented when the trailing edge of paper leaves the machine, as indicated by the output of the following sensor:

T-12-2

Condition	Sensor	
Finisher absent	face-down delivery (center tray):	center delivery tray full sensor (PS8)
	face-down delivery (copy tray):	face-down delivery sensor 2 (PS6)
	face-up delivery (side tray):	fixing delivery sensor (PS25)
Finisher present	finisher delivery sensor	

12.2.3 Side of a Duplex Print (duplex model only)

CLC5151 / / / CLC4040 / / / iR C4580i / / / iR C4080i / / / / iR C5185N / / iR C5185i PRT /

The machine identifies the end of printing on the 1st side of a double-sided print and increments the counter reading when the duplex pickup sensor (PS24) goes ON.

12.3 Fans

12.3.1 Outline

CLC5151 / / / CLC4040 / / / iR C4580i / / / iR C4080i / / / / iR C5185N / / iR C5185i PRT /

The names and functions of the fans equipped to the machine are shown in the table below.

T-12-3

Symbol	Name	Function / Other
FM1	Power Supply Exhaust Fan 1	Exhaust heat in the power supply unit.
FM2	Fixing Exhaust Fan	Exhaust heat in the fixing unit
FM3	Main Body Exhaust Fan	Exhaust heat in the main body.
FM4	Cleaner Fan	Ease heat in the main body.
FM5	Delivery Cooling Fan	Cool the paper being delivered.
FM6	Manual Feeder Cooling Fan	Cool the paper being fed manually.
FM7	Controller Cooling Fan	Cool the controller.
FM8	Delivery Vertical Path Cooling Fan	Cool the delivery vertical path.
FM9	IH Power Supply Cooling Fan	Cool the IH power supply unit.
FM10	Power Supply Exhaust Fan 2	Exhaust heat in the power supply unit.
FM11	ITB Power Supply Cooling Fan	Cool the intermediate transfer unit.
FM12	Face-down Tray Cooling Fan (Front)	Cool the paper being delivered.
FM13	Vertical Path Delivery Exhaust Fan	Exhaust heat in the main body.
FM14	Face-down Tray Cooling Fan (Rear)	Cool the paper being delivered.

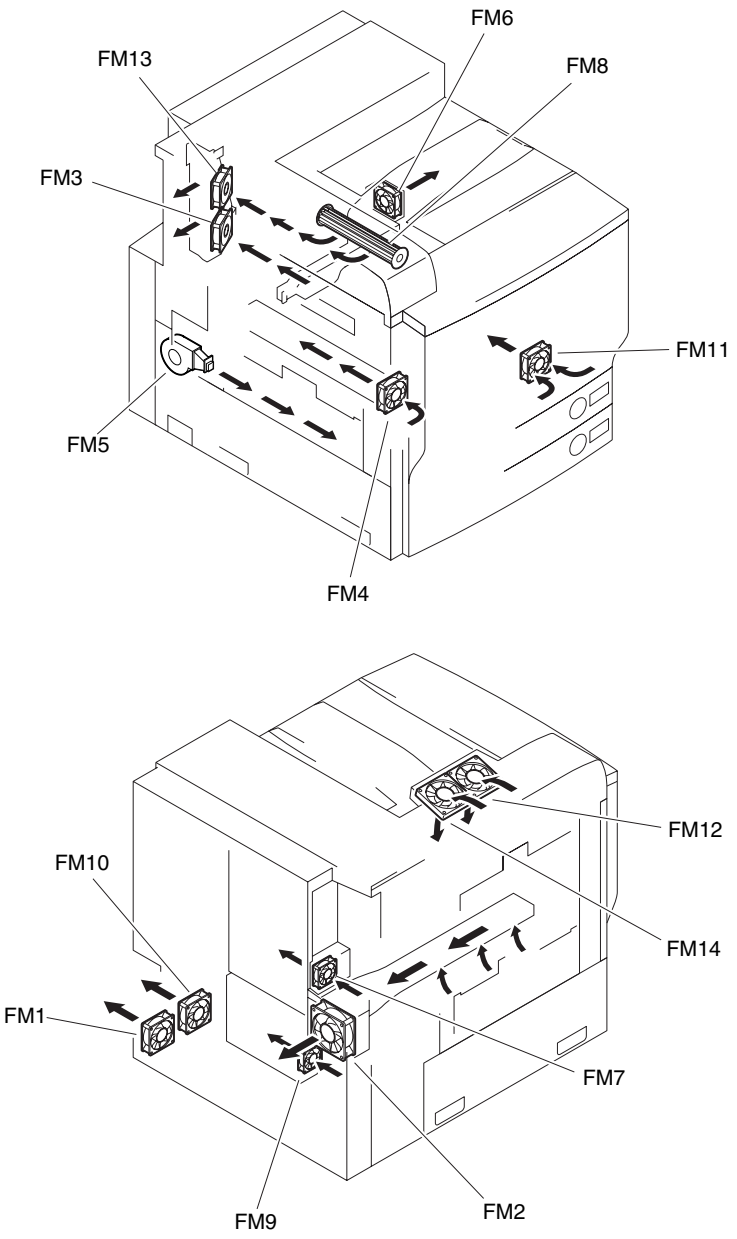

F-12-2

12.3.2 Fan Sequence

CLC5151 / / / CLC4040 / / / iR C4580i / / / iR C4080i / / / / iR C5185N / / iR C5185i PRT /

The fan sequence of the main body is shown below.
When the control panel power switch is pressed to get in the sleep mode, the LCD on the

Main Power Switch ON | Print Request Signal | Control Panel Power Switch OFF OFF | Main Power Switch OFF

	Warm up	Standby	Print		Low-Power Mode	Power Saving Mode	Sleep Mode
			Single-sided	Double-sided			
Power Supply Exhaust Fan 1, 2 (FM1,10)	13V	13V	24V	24V	13V*5		
Fixing Exhaust Fan (FM2)	13V*1	13V*1	24/13V*3	24/13V*6	13V*1*5	13V*1*5	
Cleaner Fan (FM4)	13V	13V	24V	24V	13V		
Delivery Cooling Fan (FM5)			24V*4	24V			
Main Body Exhaust Fan (FM3)		13V*2	24/13V*2	24/13V*2			
Delivery Vertical Path Cooling Fan (FM8)				24V			
Manual Feeder Cooling Fan (FM6)				24V*3			
Controller Cooling Fan (FM7)	12V	12V	12V	12V	12V	12V	12V
IH Power Supply Cooling Fan (FM9)	24V	13V	24V	24V	13V		
Vertical Path Delivery Exhaust Fan (FM13)				24V			
ITB Cooling Fan (FM11)				24V			
Face-down Tray Cooling Fan (FM12,13)				24V			

: Full speed : Half speed : 3rd Speed

*1: 3rd Speed (Drive equivalent to 10V)
*2: Depending on the environment, switch ON/OFF and full speed/half speed.
*3: Normally the speed of fan is half speed when operating 1-sided copy.
When the environment SNS atmosphere temperature is more 30 deg C or more,
accelerate the speed of fan from half speed to full speed. When it is less than 28 deg C,
deaccelerate the speed from full speed to half speed.
*4: Drive only selecting the following settings at Service Mode: COPIER > OPTION > BODY > DEVL-FAN (Level 2)
*5: Depending on the environment, switch ON/OFF.

F-12-3

12.4 Power Supply

12.4.1 Power Supply

12.4.1.1 Timing of Power Supply

CLC5151 / / / CLC4040 / / / iR C4580i / / / iR C4080i / / / / iR C5185N / / iR C5185i PRT /

The reader unit is supplied with 24 VDC by the printer unit at the following timing of operation:

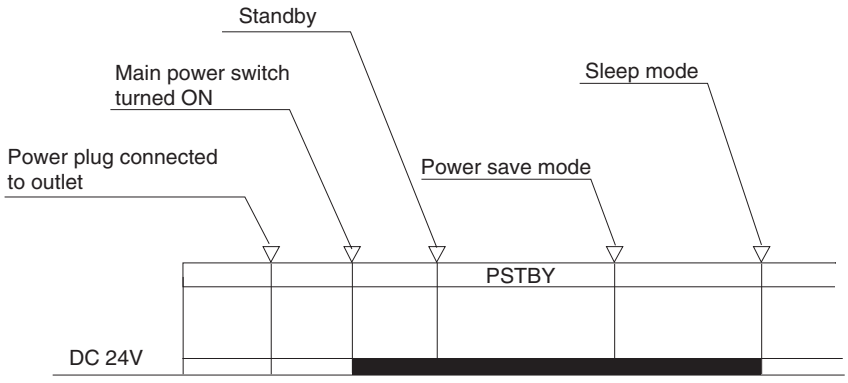

F-12-4

12.4.1.2 Wiring to Various Accessories

CLC5151 / / / CLC4040 / / / iR C4580i / / / iR C4080i / / / / iR C5185N / / iR C5185i PRT /

The power supply connection between the printer and accessories is shown in the figure below.

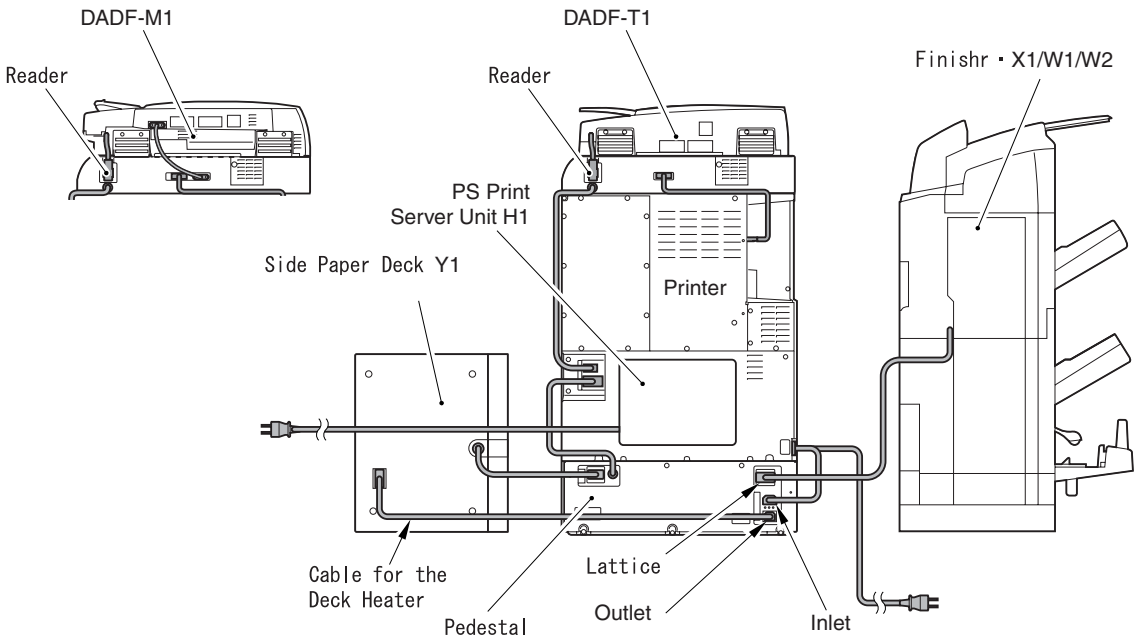

F-12-5

12.4.1.3 Power Supply Path to Reader Unit

CLC5151 / / / CLC4040 / / / iR C4580i / / / iR C4080i / / / / iR C5185N / / iR C5185i PRT /

The I/F PCB generates the following DC voltages based on DC24V and DC13V supplied from the printer unit.
- DC5V (for sensor drive)
- DC3.3V (for IC drive)
- DC2.5V (for IC drive)
- DC15V (for scanner motor drive)
- DC24V (for scanner motor drive)

The reader controller PCB generates the following DC voltages.
- DC12V (for CCD unit drive)
- DC5V

ÅEColor Image Reader-E1/F1

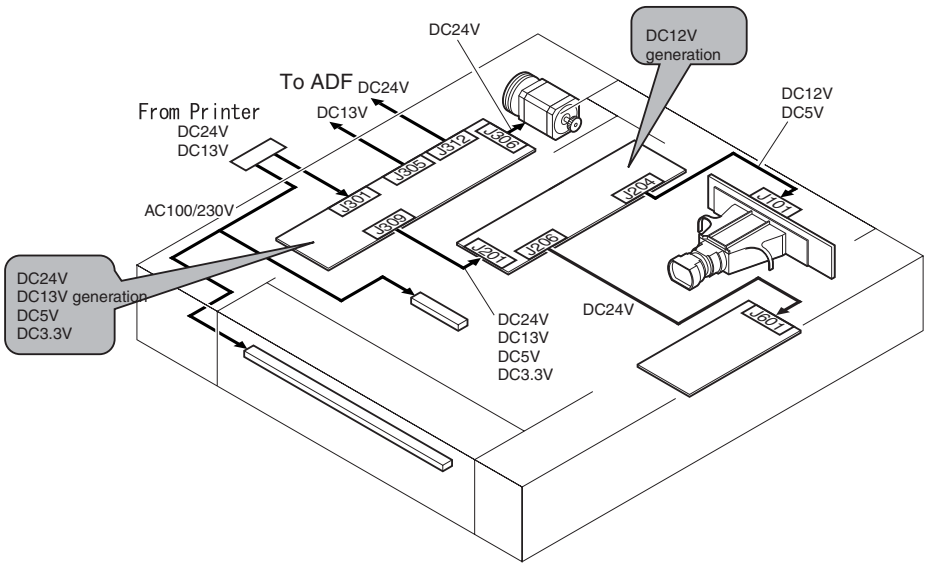

F-12-6

ÅEColor Image Reader-G1

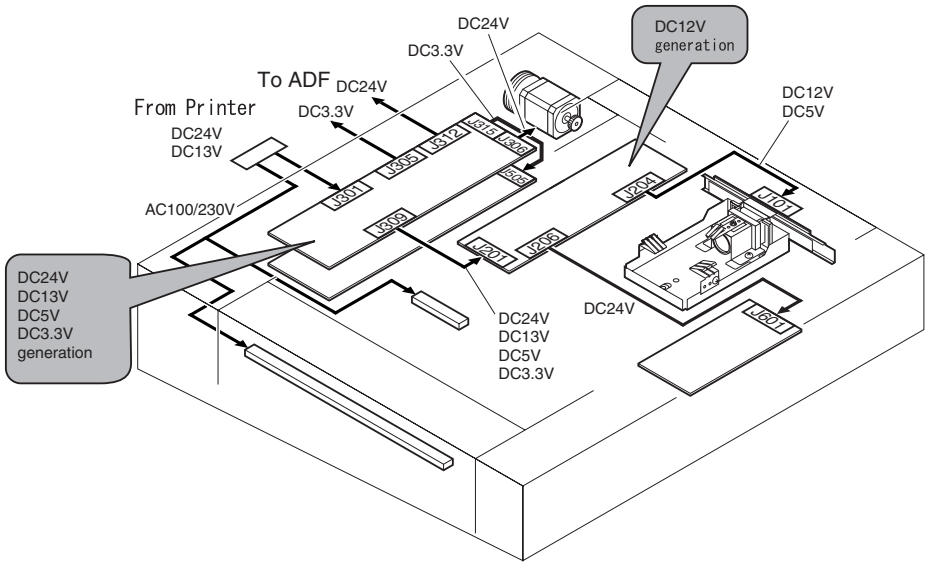

F-12-7

12.4.1.4 Power Supply Path in Printer

CLC5151 / / / CLC4040 / / / iR C4580i / / / iR C4080i / / / / iR C5185N / / iR C5185i PRT /

The DC power supply of this machine is supplied from 4 DC power supply PCBs (main power supply PCB, DC/DC converter PCB (12V/5V/3.3V), DC/DC converter PCB 1 (38V), and DC/DC converter PCB 2 (38V)) in the main power supply unit.

Main Power Supply PCB
- Generate DC voltage from AC voltage.
- Overcurrent / overvoltage protection
- Distribute DC power supply to each load.

DC/DC Converter PCB (12V/5V/3.3V)
- Generate 12V, 5V, and 3.3V from DC power supply 13V.
- Overcurrent / overvoltage protection
- Distribute DC power supply to each load.

DC/DC Converter PCB 1/2 (38V)
- Generate 38V from DC power supply 24V.
- Overcurrent / overvoltage protection
- Distribute DC power supply to each load.

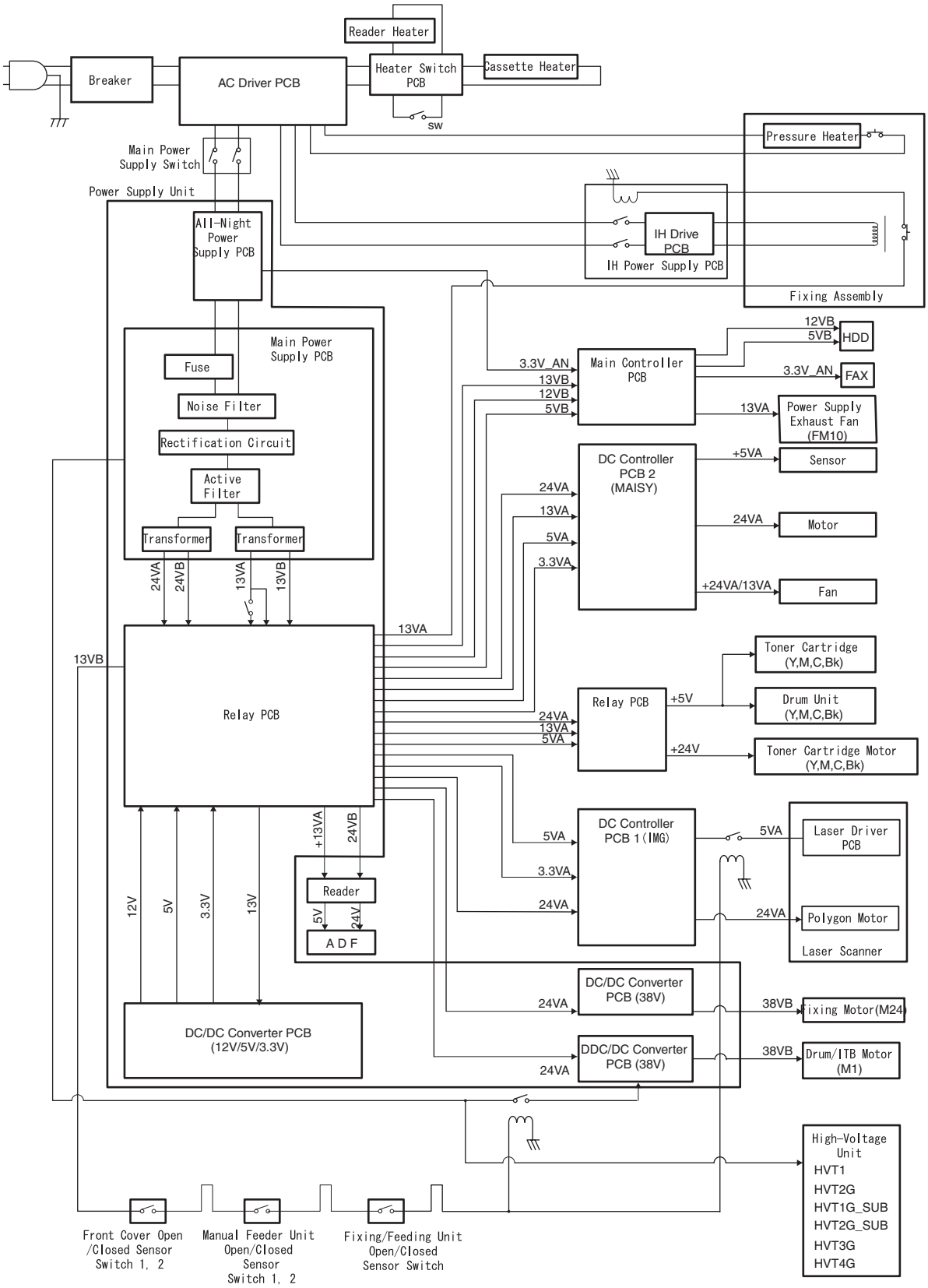

F-12-8

12.4.1.5 Power Supply Path in Pedestal (Accessory)

CLC5151 / / / CLC4040 / / / iR C4580i / / / iR C4080i / / / / Color Image Reader-F1 / Color Image Reader-E1 / Dupiex Color Image Reader-G1 / iR C5185N / / iR C5185i PRT /

The DC power supply of the pedestal (plan pedestal and cassette pedestal) is supplied from 4 DC power supply PCBs for optional power (optional power supply PCB 1, optional power supply PCB 2, and optional sub power supply PCB,DC power supply PCB(13V)*1).
DC power supply PCBs for optional power (optional power supply PCB 1, optional power supply PCB 2, and optional sub power supply PCB,DC power supply PCB(13V)*1)

-Generate DC power supply from AC power supply
-Overcurrent / overvoltage protection
-Distribute DC power supply to accessories (paper deck, finisher)

-Distribute DC power supply to the Reader
*1 For Plain Pedestal-E2/CST. Feeding Unit-Z2 only
ÅEPlain Pedestal-E1/CST. Feeding Unit-Z1

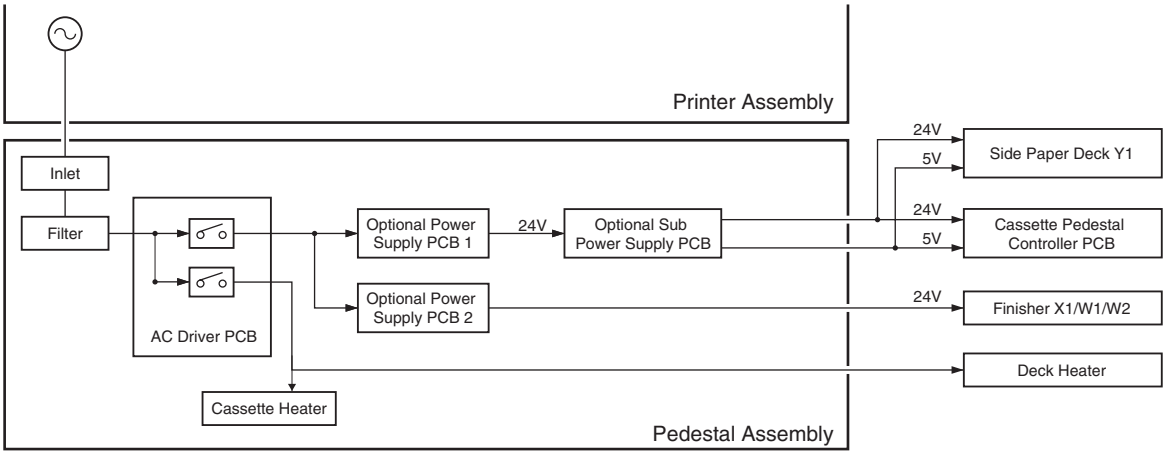

F-12-9

ÅEPlain Pedestal-E2/CST. Feeding Unit-Z2

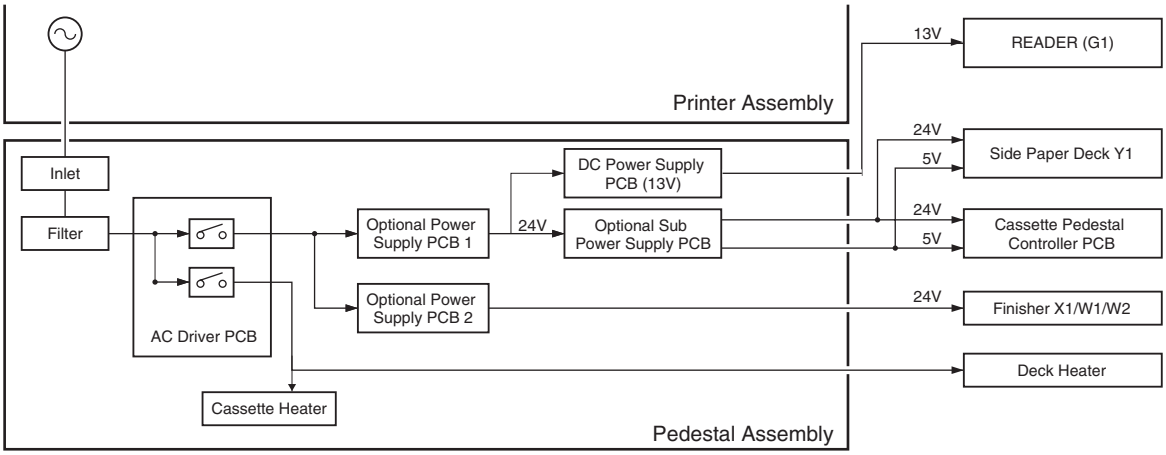

F-12-10

12.4.2 Rated Output of DC Power Supply PCB

12.4.2.1 Rated Output of DC Power Supply PCB

CLC5151 / / / CLC4040 / / iR C4580i / / iR C4080i / / / / iR C5185N / / iR C5185i PRT /

Rated Output of DC Power Supply PCB
1.Rated Output of DC Power Supply of the Main Body

T-12-4

Output Name	13VA	13VB	24VA	24VB
All-night/Non-all-night	Non-all-night	Non-all-night	Non-all-night	Non-all-night
Rated output	+13.2V	+13.2V	+24.0V	+24.0V
Tolerance	+/-3%	+/-3%	+8/-6%	+8/-6%

2.2. DC/DC Power Supply PCB (12V/5V/3.3V)

T-12-5

Output Name	3.3VA	5VA 5VB	12VB
All-night/Non-all-night	All-night/Non-all-night	All-night/Non-all-night	All-night/Non-all-night
Rated output	+3.4 V	+5.1V	+12.0 V
Tolerance	+/-4%	+/-3%	+/-5%

3.DC/DC Power Supply PCB (38V)

T-12-6

Output Name	38VA 38VB
All-night/Non-all-night	All-night/Non-all-night
Rated output	+38V
Tolerance	+/-10%

4.**All-night Power Supply PCB (3.3V)**

T-12-7

Output Name	3.3VA
All-night/Non-all-night	All-night/Non-all-night
Rated output	+3.3V
Tolerance	+/-3%

12.4.2.2 Rated Output of the Optional DC Power Supply PCB

CLC5151 / / / CLC4040 / / iR C4580i / / iR C4080i / / / / iR C5185N / / iR C5185i PRT /

The rated output and tolerance of the optional power supply PCB are shown in the table below.

1.Optional Power Supply PCB 1/2

T-12-8

Output Name	24VA
All-night/Non-all-night	Non-all-night
Non-all-night	24Çu
Tolerance	+7/-5%

2.Optional Sub Power Supply PCB

T-12-9

Output Name	5VA	24VA
All-night/Non-all-night	Non-all-night	Non-all-night
Non-all-night	5V	24Çu
Tolerance	+/-5V	+7/-5%

3.DC Power Supply PCB

T-12-10

Output Name	13VA
All-night/Non-all-night	Non-all-night
Non-all-night	13.4 Çu
Tolerance	+5/-5%

12.4.3 Protection Function

12.4.3.1 Protective Mechanisms

CLC5151 / / / CLC4040 / / / iR C4580i / / / iR C4080i / / / / iR C5185N / / iR C5185i PRT /

The machine's power supply PCB and the power supply PCBs of its accessories are equipped with an overcurrent/voltage protective mechanisms that prevent damage to the power supply circuit by automatically cutting off the output voltage in the event of an overcurrent/voltage caused, for example, by a short-circuit in any of its loads.
If the protective function has gone ON, turn off the power switch of the printer unit, disconnect the power plug of the printer unit or the accessories power supply circuit, and remove the cause of activation; then, leave the machine alone for about 3 min, and turn it on to reset.

12.4.4 Backup Battery

12.4.4.1 Battery for Backup

CLC5151 / / / CLC4040 / / / iR C4580i / / / iR C4080i / / / / iR C5185N / / iR C5185i PRT /

The SRAM PCB located at the main controller PCB and the DC controller PCB 1(IMG) of this machine are equipped each 1 of lithium battery as a backup power supply for each data in the case when there is blackout or the power plug is disconnected

SRAM PCB	Manganese Dioxide/Lithium Battery (3V, 100mAh)
DC controller PCB	Lithium Battery (3V, 560mAh)
Life of the Battery	10 years or more for both batteries (the state that the power plug is disconnected)
Replacement of the Battery	Replacement of the battery itself is not available in the servicing field.
Remedy after replacement of the battery at the workshop	Enter the value indicated on the service label

Wenn mit dem falschen Typ ausgewechselt, besteht Explosionsgefahr.
Gebrauchte Batterien gemas der Anleitung beseitigen.

12.4.4.2 Backup Power Supply

CLC5151 / / / CLC4040 / / / iR C4580i / / / iR C4080i / / / / iR C5185N / / iR C5185i PRT /

The SRAM PCB and the DC controller PCB of the machine's main controller PCB are each equipped with a lithium battery for backup in the event of a power outage or disconnection of the power plug.

T-12-11

SRAM PCB	manganese dioxide/lithium battery (3 V, 1000 mAh)
DC controller PCB	lithium battery (3 V, 560 mAh)

T-12-12

Battery life	10 yr or more (for both; with power plug disconnected)
Battery replacement	not possible (on its own, in the field)
After replacement of battery in workshop	input of values indicated on service label

⚠ The lithium battery must be replaced only with the one indicated in the Parts Catalog; otherwise, it may trigger a fire or explosion.
Do not charge, disassemble, or incinerate the lithium battery; mishandling can lead to a fire or a chemical explosion.
Keep the lithium battery out of reach of children. Be sure to dispose of a used battery strictly in accordance with all applicable regulations.

12.4.5 Energy-Saving Function

12.4.5.1 Outline

CLC5151 / / / CLC4040 / / / iR C4580i / / / iR C4080i / / / / iR C5185N / / iR C5185i PRT /

1. Standby Mode
In standby mode, the machine is in operation or is ready to operate, with all its parts supplied with power.
2. Power-Save Mode
The term "power-save mode" is used generically to refer to the following modes, in which the machine is supplied with power differently than it is in normal mode: power-save, low-power, sleep. A shift in the direction of 'resent power-save mode' to 'low-power mode' and then to 'sleep' mode occurs automatically.
- Power-Save Mode

T-12-13

Shift:	A shift to power-save mode is initiated only in response to a press on the Save Power button on the control panel.
Description:	The power used by the machine is reduced according to the settings made in user mode (immediate recovery, -10%, -25%, -50%; the fixing unit is controlled to 190 deg C).

- Low-Power Mode (factory setting)
This mode conforms to the standards under Energy Star.

T-12-14

Shift:	A shift is made only in response to the passage of time (auto low-power shift time) selected in user mode.
Description:	The power used by the machine is reduced to enable the machine to remain in a state that satisfies the standards under Energy Star.The power supplied to the reader unit will remain ON except the +24V power, which the reader unit uses to generate internal power. (All operations remain at rest.) The printer unit keeps the temperature of the fixing unit to a specific level (190 deg C) which is lower than when the machine is in normal operating mode.

- Sleep Mode (sleep mode 1 or sleep mode 2)

T-12-15

Shift:	A shift is made in response to the passage of time (auto sleep shift time) specified in user mode or in response to a press on the control panel software power switch.
Description:	In sleep mode 1 (relatively higher power consumption), the fixing assembly is totally deprived of power. The DC controller PCB, however, remains supplied with power. In sleep mode 2 (relatively lower power consumption), on the other hand, the printer unit (including the fixing assembly) remains OFF; the main controller PCB is supplied with all-night power as indicated in the table:

T-12-16

Controller	+3.3 VAN	CPU, main memory
	+12 VAN	controller cooling fan
FAX	+5 VAN	fax arrival detection

3. AC OFF Mode
AC OFF mode occurs when the main power switch is turned off, i.e., all parts of the machine is deprived of power.
The supply of power to the various systems of the machine in each of the foregoing modes is as follows:

T-12-17

			Standby mode	Power-save mode	Low-power mode	Sleep mode 1	Sleep mode 2	AC OFF mode
Main controller	Non-all night power	+12V	ON	ON	ON	ON	OFF	OFF
		+5V	ON	ON	ON	ON	OFF	OFF
		+3.3V	ON	ON	ON	ON	OFF	OFF
	All-night power	+3.3VAN	ON	ON	ON	ON	ON	OFF
		+12VAN	ON	ON	ON	ON	ON	OFF
Reader unit		+24V	ON	OFF	OFF	OFF	OFF	OFF
Printer unit		+24V	ON	ON	ON	ON	OFF	OFF
		+12V	ON	ON	ON	ON	OFF	OFF
		+5V	ON	ON	ON	ON	OFF	OFF
		+3.3V	ON	ON	ON	ON	OFF	OFF
FAX	Non-all night power	+5V	ON	ON	ON	ON	OFF	OFF
		+3.3V	ON	ON	ON	ON	OFF	OFF
	All-night power	+5VAN	ON	ON	ON	ON	ON	OFF

12.4.5.2 SNMP setup

CLC5151 / / / CLC4040 / / / iR C4580i / / / iR C4080i / / / / iR C5185N / / iR C5185i PRT /

When the machine is used as a Windows printer, enabling 'Use SNMP' causes the operating system to collect machine status information at specific intervals, preventing the machine from starting a sleep state.
To avoid the situation, disable the setting (Windows' printer properties).
-Disabling 'Use SNMP'
1) Select 'Configure Port' on the Ports screen (printer properties).

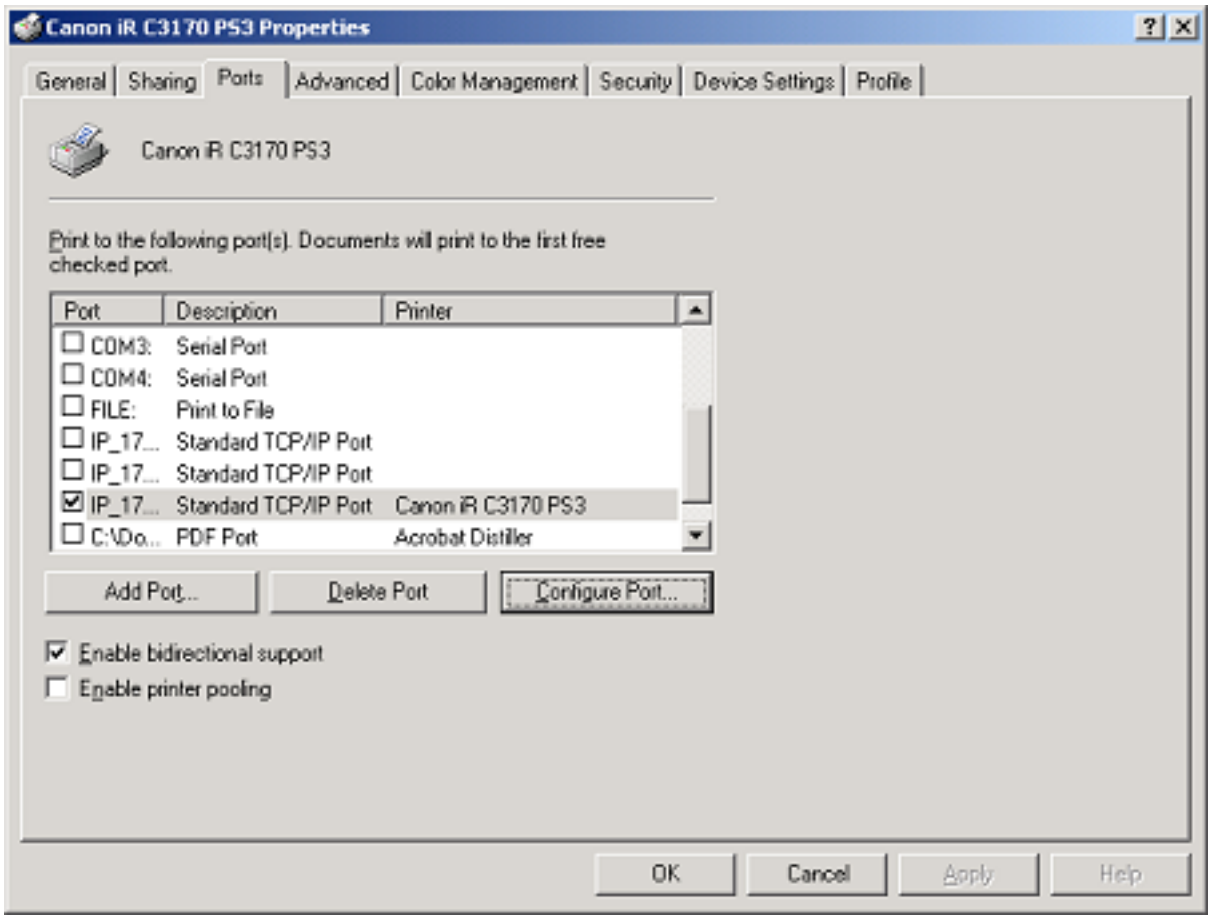

F-12-11

2) Remove the check mark from 'SNMP Status Enabled'.

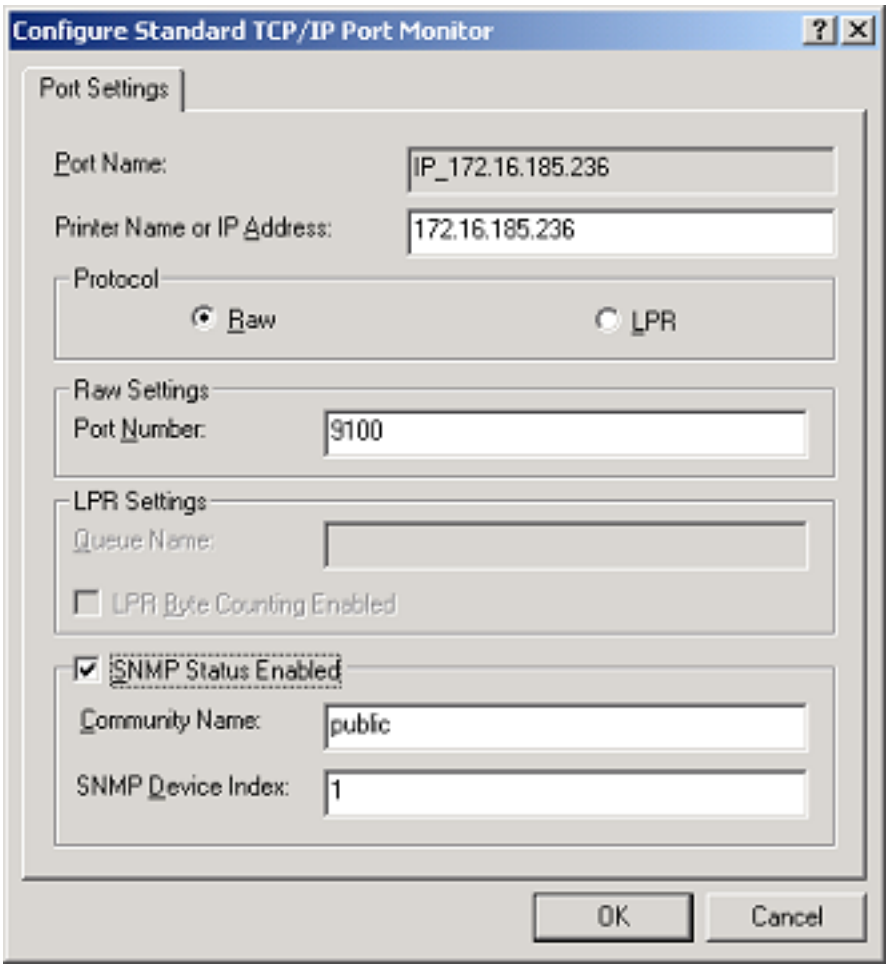
Configure Standard TCP/IP Port Monitor
Port Settings
Port Name:
IP_172.16.185.236
Printer Name or IP Address:
172.16.185.236
Protocol
Raw
LPR
Raw Settings
Port Number:
9100
LPR Settings
Queue Name:
LPR Byte Counting Enabled
SNMP Status Enabled
Community Name:
public
SNMP Device Index:
1
OK
Cancel

F-12-12

12.5 Parts Replacement Procedure

12.5.1 External Covers

12.5.1.1 Front Cover

12.5.1.1.1 Removing the Front Cover

0013-1812

CLC5151 / / / CLC4040 / / / iR C4580i / / / iR C4080i / / / / Color Image Reader-F1 / Color Image Reader-E1 / Dupiex Color Image Reader-G1 / iR C5185N / / iR C5185i PRT /

1) Open the front cover.
2) Remove the front cover [3].
   - 1 screw [1]
   - 2 hinge pins [2]

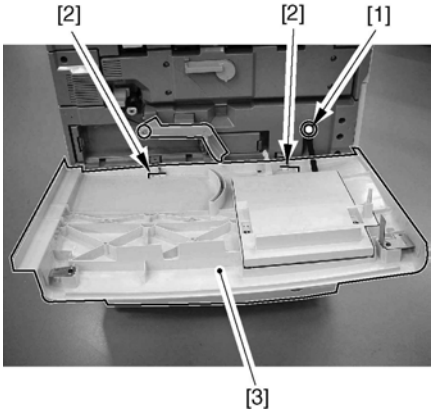

F-12-13

12.5.1.2 Upper Right Cover

12.5.1.2.1 Removing the Upper Right Cover

0012-4644

CLC5151 / / / CLC4040 / / / iR C4580i / / / iR C4080i / / / / Color Image Reader-F1 / Color Image Reader-E1 / Dupiex Color Image Reader-G1 / iR C5185N / / iR C5185i PRT /

1) Pull out the manual feeder unit.
2) Remove the upper right cover [2].
   - 2 screws [1]

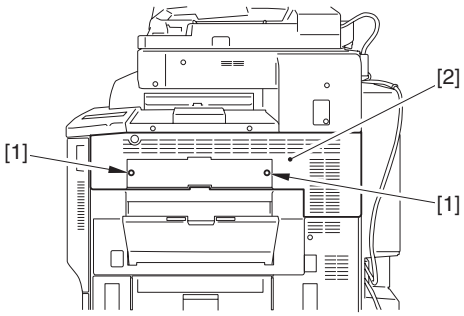

F-12-14

12.5.1.3 Right Front Cover

12.5.1.3.1 Removing the Right Front Cover

0013-1819

CLC5151 / / / CLC4040 / / / iR C4580i / / / iR C4080i / / / / Color Image Reader-F1 / Color Image Reader-E1 / Dupiex Color Image Reader-G1 / iR C5185N / / iR C5185i PRT /

1) Slide out the manual feed unit, and open the pickup vertical path cover.
2) Remove the machine's front right cover [2].
   - 2 screws [1]

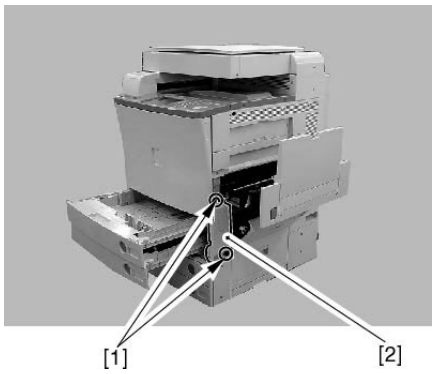

F-12-15

12.5.1.4 Rear Right Cover

12.5.1.4.1 Removing of the Right Rear Cover

0013-1821

CLC5151 / / / CLC4040 / / / iR C4580i / / / iR C4080i / / / / Color Image Reader-F1 / Color Image Reader-E1 / Dupiex Color Image Reader-G1 / iR C5185N / / iR C5185i PRT /

1) Pull the manual feeder unit and open the feeding vertical path cover.

The rear right cover is fitted with the rear lower cover; shift it to the direction indicated to detach.

2) Remove the right rear cover [3] while pulling the manual feeder feeding unit [1].
   - 3 screws [2]

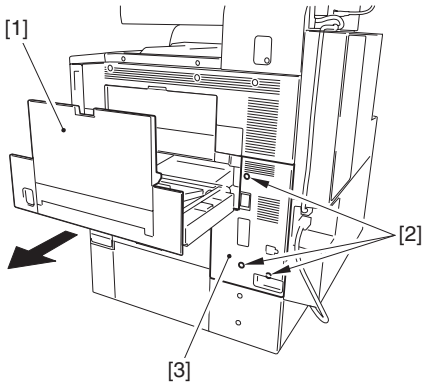

F-12-16

12.5.1.5 Upper Left Cover

12.5.1.5.1 Removing the Upper Left Cover

0012-4645

CLC5151 / / / CLC4040 / / / iR C4580i / / / iR C4080i / / / / Color Image Reader-F1 / Color Image Reader-E1 / Dupiex Color Image Reader-G1 / iR C5185N / / iR C5185i PRT /

1) Open the delivery vertical path cover [1].
2) Remove the left upper cover [3].
   - 3 screws [2] (Including 1 screw for the cut reader cover)

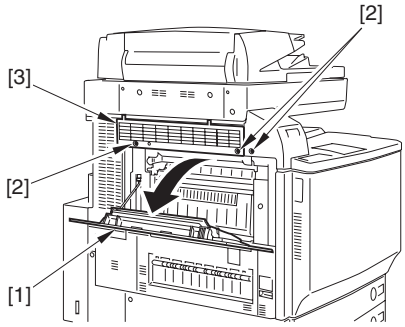

F-12-17

12.5.1.6 Left Lower Cover

12.5.1.6.1 Removing the Left Lower Cover

0013-3725

CLC5151 / / / CLC4040 / / / iR C4580i / / / iR C4080i / / / / Color Image Reader-F1 / Color Image Reader-E1 / Dupiex Color Image Reader-G1 / iR C5185N / / iR C5185i PRT /

1) Pull out the pickup cassette [1].
2) Remove the left lower cover [3].
   - 4 screws [2]

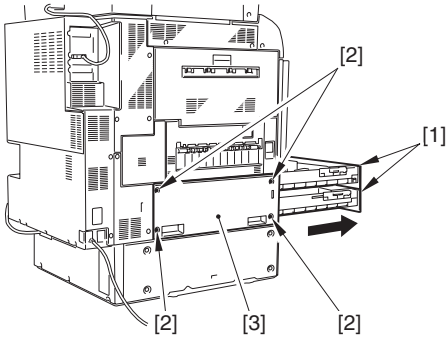

F-12-18

12.5.1.7 Upper Left Cover (small)

12.5.1.7.1 Removing the Card Reader Cover

0013-1828

CLC5151 / / / CLC4040 / / / iR C4580i / / / iR C4080i / / / / Color Image Reader-F1 / Color Image Reader-E1 / Dupiex Color Image Reader-G1 / iR C5185N / / iR C5185i PRT /

1) Open the delivery vertical path cover [1].
2) Remove the card reader cover [4].
   - 1 rubber cover [2]
   - 2 screws [3]

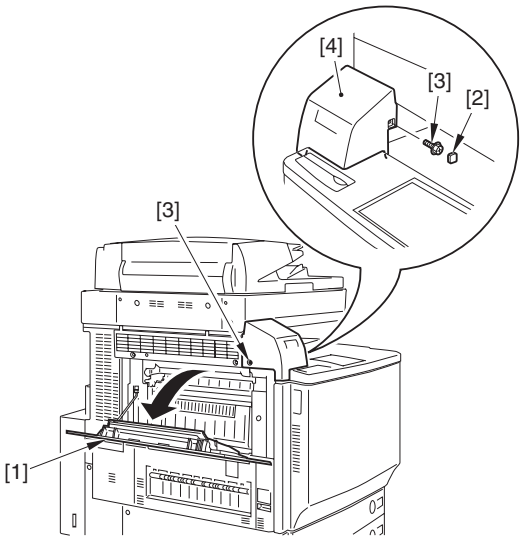

F-12-19

12.5.1.8 Left Rear Cover (Upper)

12.5.1.8.1 Removing the Left Rear Cover (Upper)

0013-1833

CLC5151 / / / CLC4040 / / / iR C4580i / / / iR C4080i / / / / Color Image Reader-F1 / Color Image Reader-E1 / Dupiex Color Image Reader-G1 / iR C5185N / / iR C5185i PRT /

1) Remove the left rear cover (upper) [1].
   - 3 screws [2]

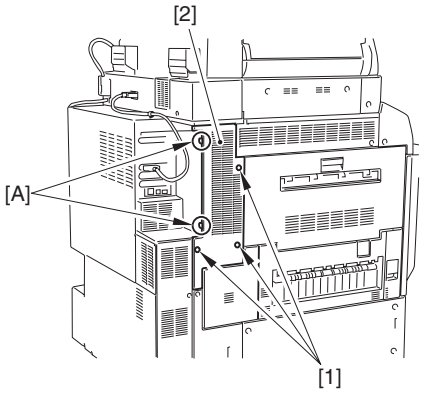

F-12-20

When attaching the rear left cover (upper), be sure to fit the cut-off to the hook [A].

12.5.1.9 Left Rear Cover (Lower)

12.5.1.9.1 Removing the Left Rear Cover (Lower)

0013-2330

CLC5151 / / / CLC4040 / / / iR C4580i / / / iR C4080i / / / / Color Image Reader-F1 / Color Image Reader-E1 / Dupiex Color Image Reader-G1 / iR C5185N / / iR C5185i PRT /

1) Pull out the pickup cassette.
2) Remove the lower left cover. (page 12-15) Reference[Removing the Left Lower Cover]
3) Remove the left rear cover (lower) [2].
   - 2 screws [1]

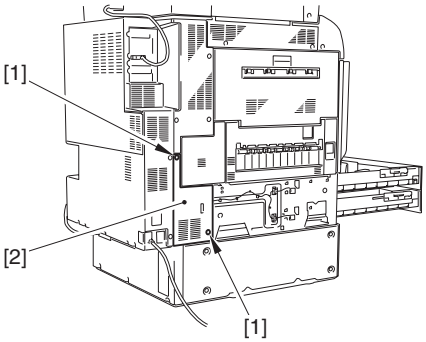

F-12-21

12.5.1.10 Rear Fan Cover

12.5.1.10.1 Removing the Rear Fan Cover

0013-3727

CLC5151 / / / CLC4040 / / / iR C4580i / / / iR C4080i / / / / Color Image Reader-F1 / Color Image Reader-E1

1) Remove the rear fan cover [1].
   - 3 screws [2]

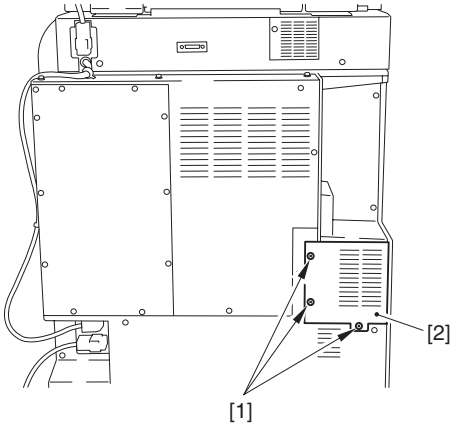

F-12-22

12.5.1.10.2 Removing the Rear Fan Cover

0015-9711

Dupiex Color Image Reader-G1 / iR C5185N / / iR C5185i PRT /

1) Remove the rear fan cover [1].
   - 3 screws [2]

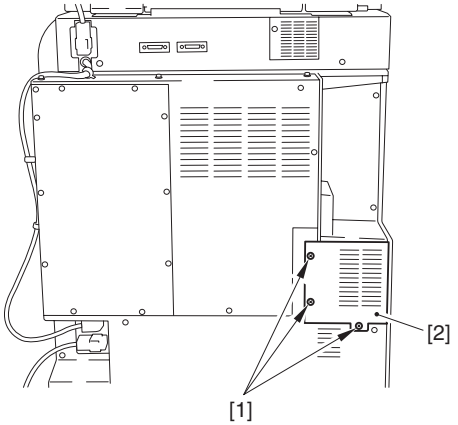

F-12-23

12.5.1.11 Rear Upper Cover

12.5.1.11.1 Removing the Rear Upper Cover

0012-4646

CLC5151 / / / CLC4040 / / / iR C4580i / / / iR C4080i / / / / Color Image Reader-F1 / Color Image Reader-E1

1) Remove the rear fan cover. (page 12-15) Reference[Removing the Rear Fan Cover]
2) Remove the rear upper cover [3].
   - 2 clamps [1]
   - 9 screws [2]

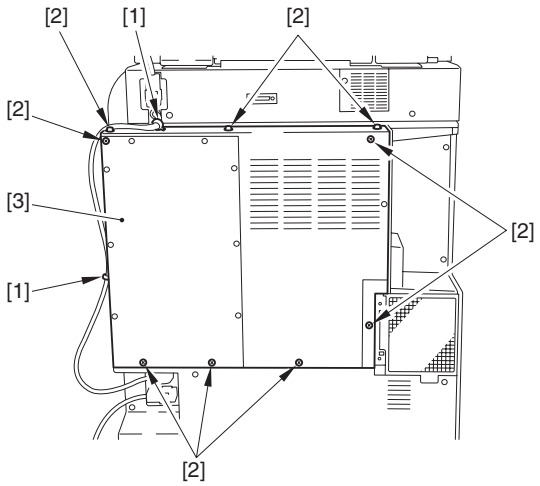

F-12-24

12.5.1.11.2 Removing the Rear Upper Cover

0015-9712

Dupiex Color Image Reader-G1 / iR C5185N / / iR C5185i PRT /

1) Remove the rear fan cover. (page 12-15) Reference[Removing the Rear Fan Cover]
2) Remove the rear upper cover [3].
   - 3 clamps [1]
   - 9 screws [2]

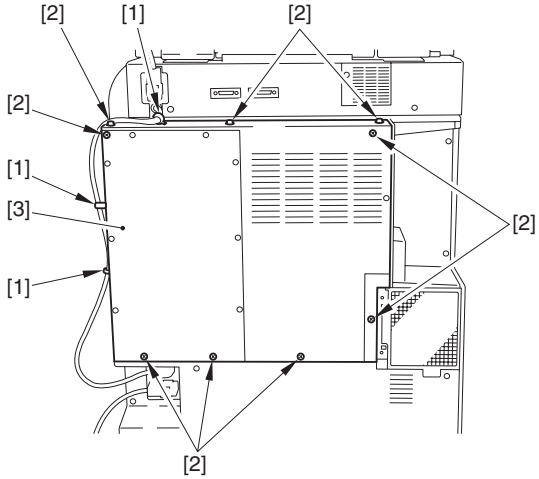

F-12-25

12.5.1.12 Rear Lower Cover

12.5.1.12.1 Removing the Rear Lower Cover

0012-4647

CLC5151 / / / CLC4040 / / / iR C4580i / / / iR C4080i / / / / Color Image Reader-F1 / Color Image Reader-E1

1)Remove the rear fan cover. (page 12-15) Reference[Removing the Rear Fan Cover]
2)Remove the rear upper cover.
3) Remove the rear lower cover [3].
   - 1 clamp [1]
   - 5 screws [2]

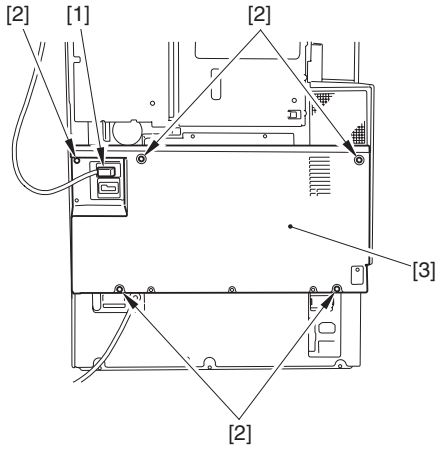

F-12-26

12.5.1.12.2 Removing the Rear Lower Cover

0016-1061

Dupiex Color Image Reader-G1 / iR C5185N / / iR C5185i PRT /

1) Remove the rear fan cover. (page 12-15) Reference[Removing the Rear Fan Cover]
2) Remove the rear upper cover.
3) Remove the rear lower cover [3].
   - 1 connector [1]
   - 5 screws [2]

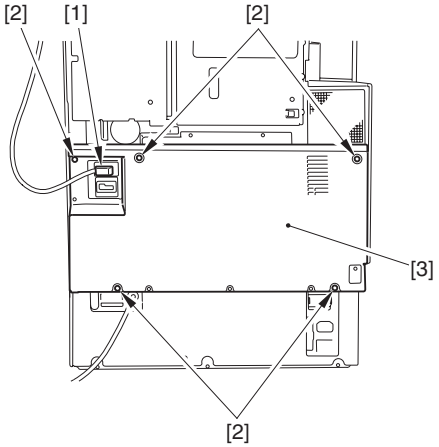

F-12-27

12.5.1.13 Rear Left Cover (Upper)

12.5.1.13.1 Removing the Rear Left Cover (Upper)

0013-3728

CLC5151 / / / CLC4040 / / / iR C4580i / / / iR C4080i / / / / Color Image Reader-F1 / Color Image Reader-E1 / Dupiex Color Image Reader-G1 / iR C5185N / / iR C5185i PRT /

1) Remove the left rear cover (upper). (page 12-15)Reference[Removing the Left Rear Cover (Upper)]
2) Remove the rear left cover (upper).
   - 1 connector [1]
   - 2 screws [2]

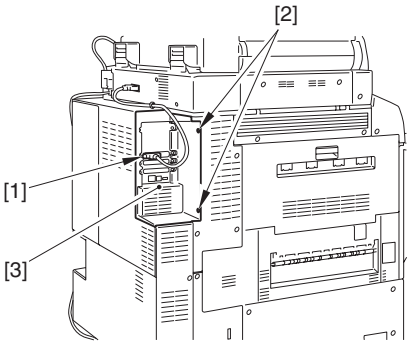

F-12-28

12.5.1.14 Rear Left Cover (Lower)

12.5.1.14.1 Removing the Rear Left Cover (Lower)

0016-0444

CLC5151 / / / CLC4040 / / / iR C4580i / / / iR C4080i / / / / Color Image Reader-F1 / Color Image Reader-E1 / iR C5185N / / iR C5185i PRT /

1) Remove the left rear cover (lower).
   - 2 screws [2]

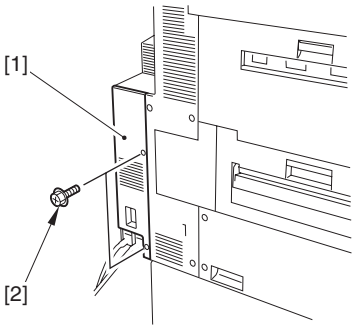

F-12-29

12.5.1.15 Inside Cover (Upper)

12.5.1.15.1 Removing the Inside Cover (Upper)

0013-2332

CLC5151 / / / CLC4040 / / / iR C4580i / / / iR C4080i / / / / Color Image Reader-F1 / Color Image Reader-E1 / Dupiex Color Image Reader-G1 / iR C5185N / / iR C5185i PRT /

1) Remove the card reader cover. (page 12-15)Reference[Removing the Card Reader Cover]
2) Remove the front cover. (page 12-14)Reference[Removing the Front Cover]
3) Remove the toner receptacle releasing lever.
3-1) Lift the toner receptacle releasing lever and remove 4 toner receptacle.
3-2) Remove 4 toner receptacle releasing levers [2].
   - 4 screws [1]

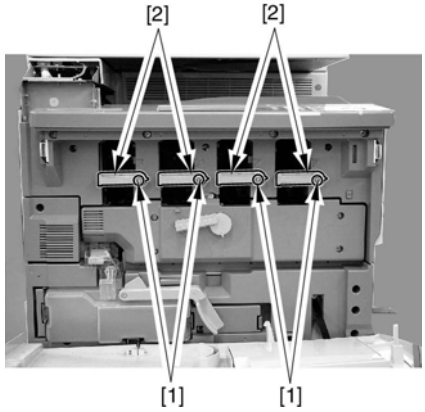

F-12-30

4) Remove the cleaner fan cover [2].
   - 1 screw [1]

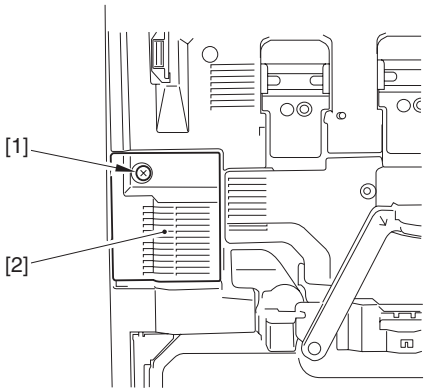

F-12-31

5) Remove the inner cover (upper).
5-1) Open the drum unit cover.
5-2) Remove the inner cover (upper) [2].
   - 5 screws [1]

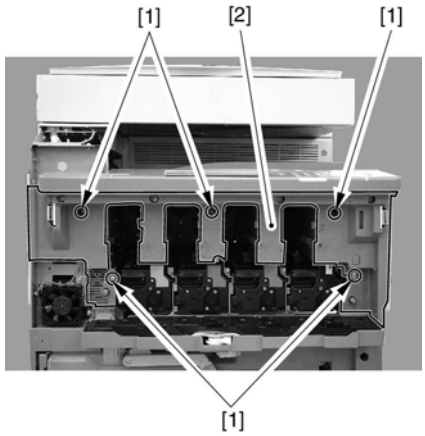

F-12-32

12.5.1.16 Inside Cover (Lower)

12.5.1.16.1 Removing the Inside Cover (Lower)

0013-2395

CLC5151 / / / CLC4040 / / / iR C4580i / / / iR C4080i / / / / Color Image Reader-F1 / Color Image Reader-E1 / Dupiex Color Image Reader-G1 / iR C5185N / / iR C5185i PRT /

1) Remove the front cover. (page 12-14) Reference[Removing the Front Cover]
2) Remove the toner container [3].
3) Remove the intermediate transfer unit releasing lever [2].
   - 1 screw [1]

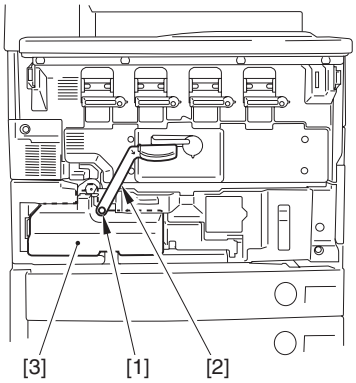

F-12-33

4) Remove the cleaner fan cover [2].
   - 1 screw [1]

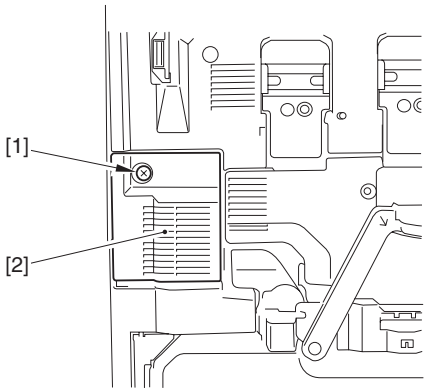

F-12-34

5) Remove the inner cover (lower) [3].
   - 1 connector [1]
   - 4 screws [2]

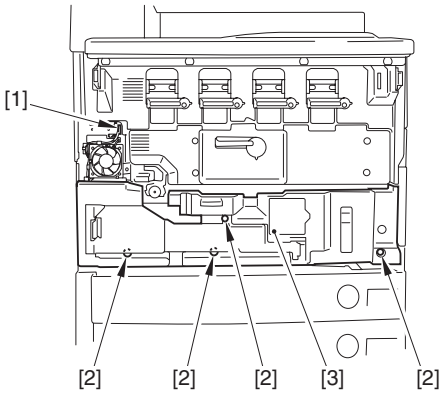

F-12-35

12.5.1.17 Reader Rear Cover

12.5.1.17.1 Removing the Reader Rear Cover

0012-4648

CLC5151 / / / CLC4040 / / / iR C4580i / / / iR C4080i / / / / Color Image Reader-F1 / Color Image Reader-E1

1) Free the reader power supply cable.
   - 2 clamps [1]
   - 2 connectors [2]

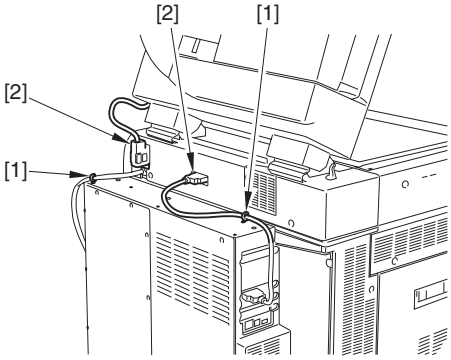

F-12-36

2) Remove the reader controller communication cable.
3) Remove the reader rear cover [2].
   - 5 screws [1]

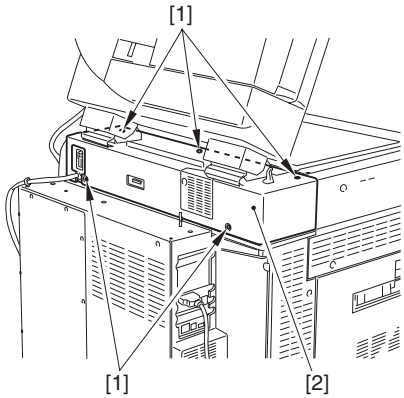

F-12-37

12.5.1.17.2 Removing the Reader Rear Cover

0015-9713

Dupiex Color Image Reader-G1 / iR C5185N / / iR C5185i PRT /

1) Free the ADF power cable, ADF communication cable, reader communication cable.
   - 2 clamps [1]
   - 2 connectors [2]

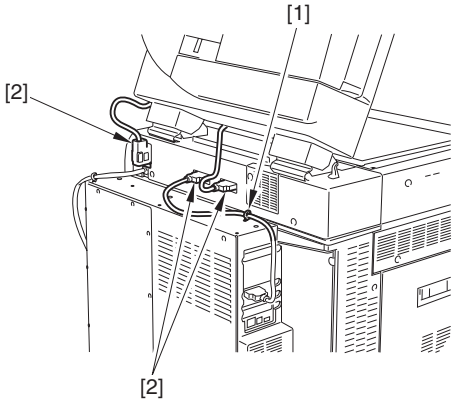

F-12-38

2) Remove the reader rear cover [2].
   - 5 screws [1]

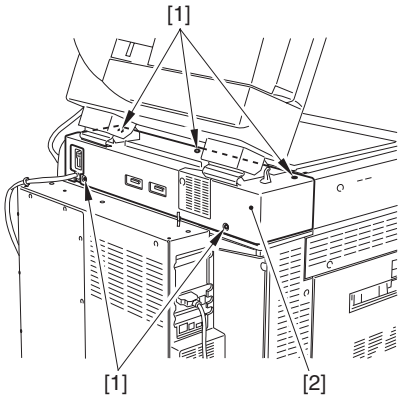

F-12-39

12.5.1.18 Manual Feeding Unit Cover

12.5.1.18.1 Removing the Manual Feed Unit Cover

0014-5554

CLC5151 / / / CLC4040 / / / iR C4580i / / / iR C4080i / / / / Color Image Reader-F1 / Color Image Reader-E1 / Dupiex Color Image Reader-G1 / iR C5185N / / iR C5185i PRT /

1) Remove the manual feed unit.
1-1) Press the release button [1] on the machine's right side to slide out the manual feed unit [2].

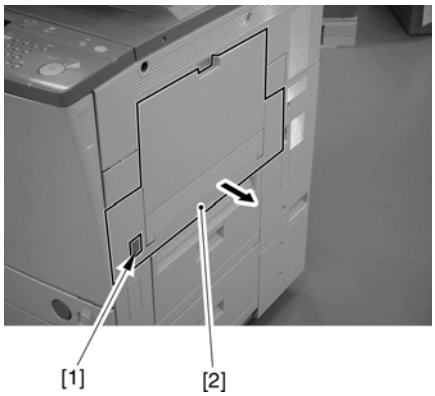

F-12-40

1-2) Remove the manual feed unit [3].
- screw [1]
- stopper plate [2]

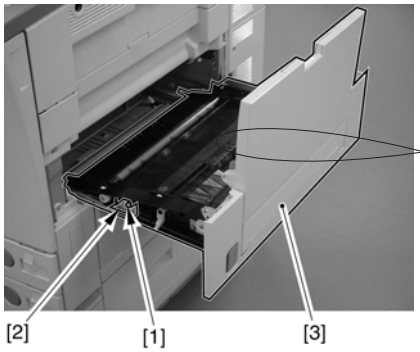

F-12-41

2) Remove the manual feed unit cover.
2-1) Remove the manual feed unit cover [4].
- 2 screw [1]
- 3 claws [2]
- 3 snap-ons [3]

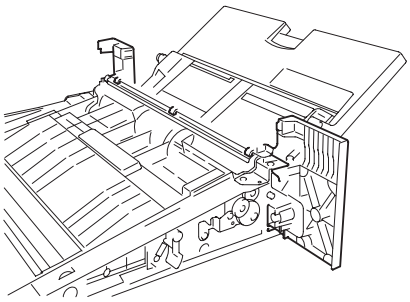

F-12-42

F-12-43

12.5.2 Developing Drive Unit

12.5.2.1 Preparation for Removing the Developing Drive Unit

CLC5151 / / / CLC4040 / / / iR C4580i / / / iR C4080i / / / / Color Image Reader-F1 / Color Image Reader-E1 / Dupiex Color Image Reader-G1 / iR C5185N / / iR C5185i PRT /

1) Remove the rear fan cover.(page 12-15)Reference[Removing the Rear Fan Cover]
2) Remove the rear upper cover.(page 12-16)Reference[Removing the Rear Upper Cover]
3) Remove the rear left cover (upper).(page 12-17)Reference[Removing the Rear Left Cover (Upper)]
4) Remove the main controller box cover.
5) Remove the main controller box.(page 5-14)Reference[Removing the Main Controller Box]
6) Remove the DC controller PCB cover.
7) Remove the DC controller box2.(page 12-24)Reference[Removing the DC Controller Box2]
8) Remove the DC controller box1.(page 12-24)Reference[Removing the DC Controller Box1]
9) Remove the high-voltage unit1.(page 12-20)Reference[Removing the High-Voltage Unit1]

12.5.2.2 Removing the Developing Drive Unit

CLC5151 / / / CLC4040 / / / iR C4580i / / / iR C4080i / / / / Color Image Reader-F1 / Color Image Reader-E1 / Dupiex Color Image Reader-G1 / iR C5185N / / iR C5185i PRT /

1) Remove the development driving unit [4].
- 6 wire saddles [1]
- 1 connector [2]
- 7 screws [3]

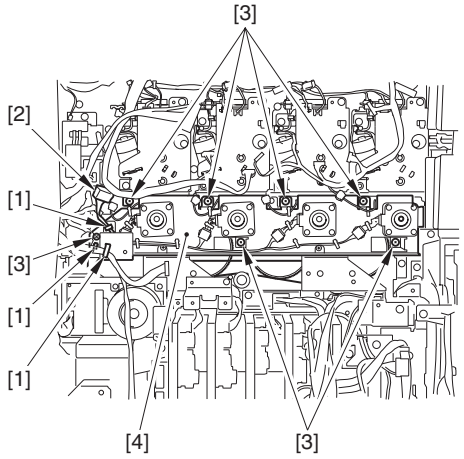

F-12-44

12.5.3 High-Voltage Unit

12.5.3.1 Preparation for Removing the High-Voltage Unit1

CLC5151 / / / CLC4040 / / / iR C4580i / / / iR C4080i / / / / Color Image Reader-F1 / Color Image Reader-E1 / Dupiex Color Image Reader-G1 / iR C5185N / / iR C5185i PRT /

1) Remove the rear fan cover.(page 12-15)Reference[Removing the Rear Fan Cover]
2) Remove the rear upper cover.(page 12-16)Reference[Removing the Rear Upper Cover]
3) Remove the rear left cover (upper).(page 12-17)Reference[Removing the Rear Left Cover (Upper)]
4) Remove the main controller box cover.
5) Remove the main controller box.(page 5-14)Reference[Removing the Main Controller Box]
6) Remove the DC controller PCB cover.
7) Remove the DC controller box2.(page 12-24)Reference[Removing the DC Controller Box2]
8) Remove the DC controller box1.(page 12-24)Reference[Removing the DC Controller Box1]

12.5.3.2 Removing the High-Voltage Unit1

CLC5151 / / / CLC4040 / / / iR C4580i / / / iR C4080i / / / / Color Image Reader-F1 / Color Image Reader-E1 / Dupiex Color Image Reader-G1 / iR C5185N / / iR C5185i PRT /

1) Remove the high-voltage unit1 [4].
   - 1 clamp [1]
   - 11 connectors [2]
   - 5 screws [3] (Including 1 screw for the grounding wire)

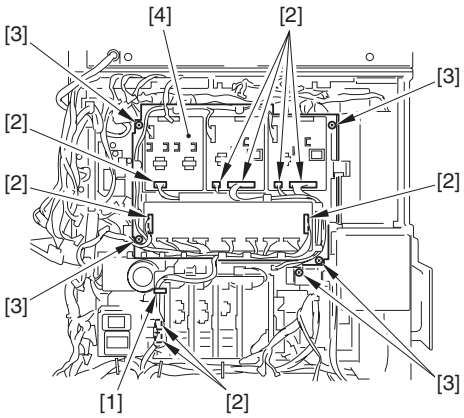

F-12-45

12.5.3.3 Preparation for Removing the High-Voltage Unit 2

CLC5151 / / / CLC4040 / / / iR C4580i / / / iR C4080i / / / / Color Image Reader-F1 / Color Image Reader-E1 / Dupiex Color Image Reader-G1 / iR C5185N / / iR C5185i PRT /

1) Remove the rear fan cover. (page 12-15)Reference[Removing the Rear Fan Cover]
2) Remove the rear upper cover. (page 12-16)Reference[Removing the Rear Upper Cover]
3) Remove the rear lower cover. (page 12-16)Reference[Removing the Rear Lower Cover]
4) Remove the IH power supply unit.(page 12-21)Reference[Removing the IH Power Supply Unit]

12.5.3.4 Removing the High-Voltage Unit 2

CLC5151 / / / CLC4040 / / / iR C4580i / / / iR C4080i / / / / Color Image Reader-F1 / Color Image Reader-E1 / Dupiex Color Image Reader-G1 / iR C5185N / / iR C5185i PRT /

1) Remove the high-voltage unit 2 [4].
   - 1 clamp [1]
   - 9 connectors [2]
   - 3 screws [3]

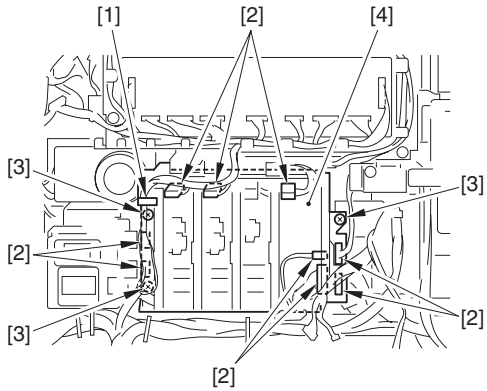

F-12-46

12.5.4 Secondary Transfer High-Voltage Unit

12.5.4.1 Preparation for Removing the Secondary Transfer Hign-Voltage Unit

CLC5151 / / / CLC4040 / / / iR C4580i / / / iR C4080i / / / / Color Image Reader-F1 / Color Image Reader-E1 / Dupiex Color Image Reader-G1 / iR C5185N / / iR C5185i PRT /

1) Remove the rear fan cover. (page 12-15)Reference[Removing the Rear Fan Cover]
2) Remove the rear upper cover. (page 12-16)Reference[Removing the Rear Upper Cover]
3) Remove the rear lower cover. (page 12-16)Reference[Removing the Rear Lower Cover]
4) Remove the left rear cover (lower).(page 12-15)Reference[Removing the Left Rear Cover (Lower)]

12.5.4.2 Removing the Secondary Transfer Hign-Voltage Unit

CLC5151 / / / CLC4040 / / / iR C4580i / / / iR C4080i / / / / Color Image Reader-F1 / Color Image Reader-E1 / Dupiex Color Image Reader-G1 / iR C5185N / / iR C5185i PRT /

1) With the fan, pull out the secondary transfer high-voltage unit [4].
   - 1 screw [3]
   - 3 connectors [2]
   - 2 clamps [1]

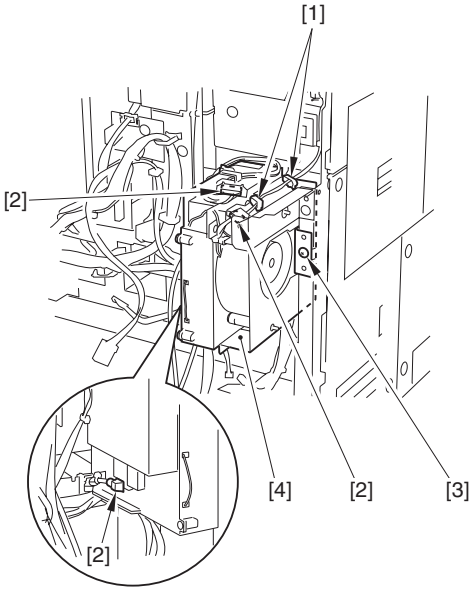

F-12-47

2) Remove the secondary transfer high-voltage unit [3].
   - 1 wire saddle [1]
   - 3 screws [2] (include 1 screw for the ground wire.)

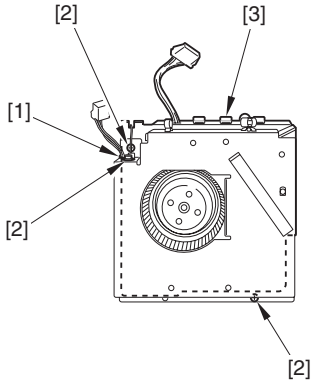

F-12-48

12.5.5 IH Power Supply Assembly

12.5.5.1 Preparation for Removing the IH Power Supply Unit

CLC5151 / / / CLC4040 / / / iR C4580i / / / iR C4080i / / / / Color Image Reader-F1 / Color Image Reader-E1 / Dupiex Color Image Reader-G1 / iR C5185N / / iR C5185i PRT /

1) Remove the rear fan cover. (page 12-15) Reference[Removing the Rear Fan Cover]
2) Remove the rear upper cover. (page 12-16) Reference[Removing the Rear Upper Cover]
3) Remove the rear lower cover. (page 12-16) Reference[Removing the Rear Lower Cover]

12.5.5.2 Removing the IH Power Supply Unit

CLC5151 / / / CLC4040 / / / iR C4580i / / / iR C4080i / / / / Color Image Reader-F1 / Color Image Reader-E1 / Dupiex Color Image Reader-G1 / iR C5185N / / iR C5185i PRT /

1) Remove the IH power supply unit [4].
   - 4 screws [1]
   - 5 clamps [2]
   - 6 connectors [3]

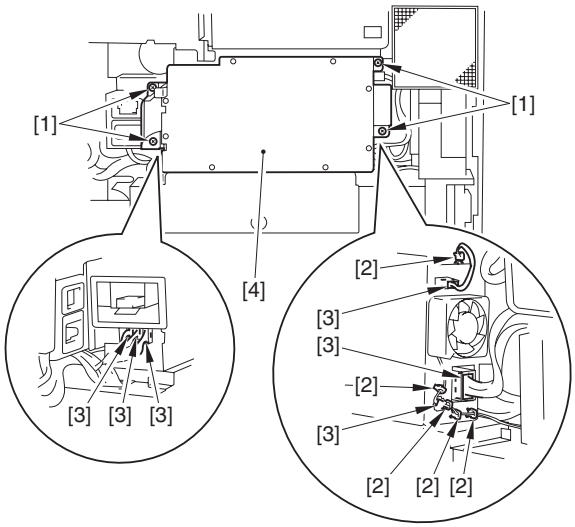

F-12-49

12.5.6 DC Power Supply Unit

12.5.6.1 Preparation for Removing the DC Power Supply Unit

CLC5151 / / / CLC4040 / / / iR C4580i / / / iR C4080i / / / / Color Image Reader-F1 / Color Image Reader-E1 / Dupiex Color Image Reader-G1 / iR C5185N / / iR C5185i PRT /

1) Remove the rear fan cover. (page 12-15) Reference[Removing the Rear Fan Cover]
2) Remove the rear upper cover. (page 12-16) Reference[Removing the Rear Upper Cover]
3) Remove the rear lower cover. (page 12-16) Reference[Removing the Rear Lower Cover]
4) Remove the left rear cover (lower). (page 12-15) Reference[Removing the Left Rear Cover (Lower)]
5) Remove the IH power supply unit. (page 12-21) Reference[Removing the IH Power Supply Unit]

12.5.6.2 Removing the DC Power Supply Unit

CLC5151 / / / CLC4040 / / / iR C4580i / / / iR C4080i / / / / Color Image Reader-F1 / Color Image Reader-E1

1) Remove the DC power supply unit connector cover [2].
   - 3 screws [1]

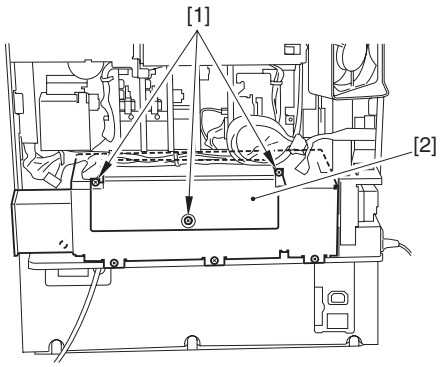

F-12-50

2) Remove the DC power supply unit [4].
   - 4 screws [1]
   - 2 clamps [2]
   - 22 connectors [3]

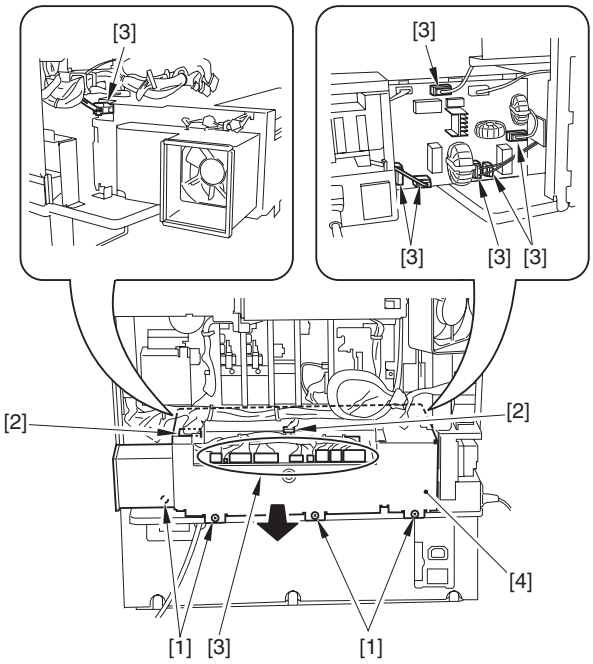

F-12-51

12.5.6.3 Removing the DC Power Supply Unit

Dupiex Color Image Reader-G1 / iR C5185N / / iR C5185i PRT /

1) Remove the DC power supply unit connector cover [2].
   - 3 screws [1]

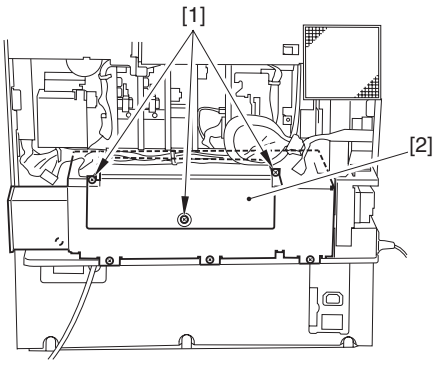

F-12-52

2) Remove the DC power unit [4].
   - 4 screws [1]
   - 2 edge saddles [2]
   - 24 connectors [3]

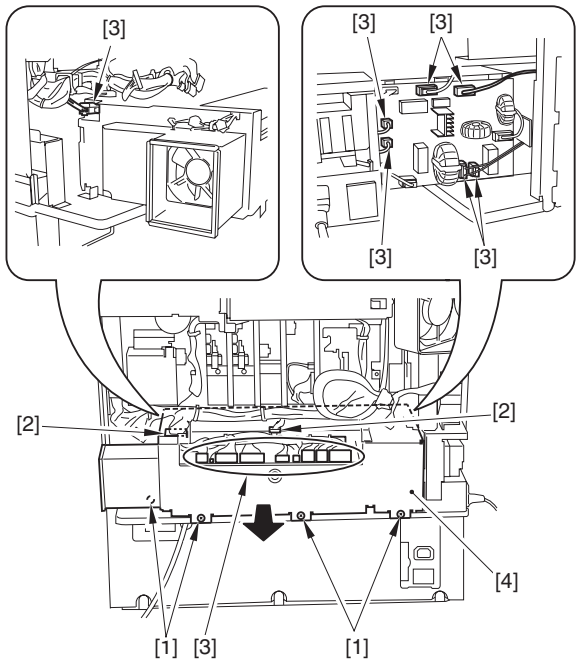

F-12-53

If it is difficult to remove the DC power unit, remove the sheet metal [2].
   - 9 screws [1]

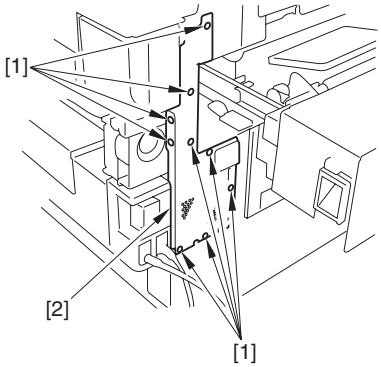

F-12-54

12.5.7 Control Panel

12.5.7.1 Preparation for Removing the Control Panel

CLC5151 / / / CLC4040 / / / iR C4580i / / / iR C4080i / / / / Color Image Reader-F1 / Color Image Reader-E1 / Dupiex Color Image Reader-G1 / iR C5185N / / iR C5185i PRT /

1) Remove the card reader cover.(page 12-15)Reference[Removing the Card Reader Cover]
2) Remove the front cover.(page 12-14)Reference[Removing the Front Cover]

12.5.7.2 Removing the Control Panel

CLC5151 / / / CLC4040 / / / iR C4580i / / / iR C4080i / / / / Color Image Reader-F1 / Color Image Reader-E1 / Dupiex Color Image Reader-G1 / iR C5185N / / iR C5185i PRT /

1) Remove the control panel [2] toward the front.
   - 4 screws [1]

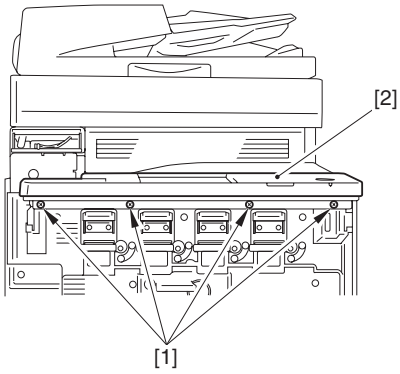

F-12-55

2) Remove the control panel [2].
   - 1 connector [1]

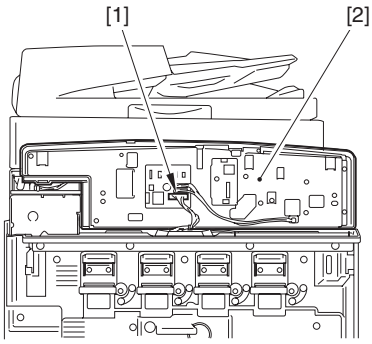

F-12-56

12.5.8 Control Panel LCD Unit

12.5.8.1 Preparation for Removing the Control Panel LCD Unit

CLC5151 / / / CLC4040 / / / iR C4580i / / / iR C4080i / / / / Color Image Reader-F1 / Color Image Reader-E1 / Dupiex Color Image Reader-G1 / iR C5185N / / iR C5185i PRT /

1) Remove the card reader cover. (page 12-15) Reference[Removing the Card Reader Cover]
2) Remove the front cover. (page 12-14) Reference[Removing the Front Cover]
3) Remove the control panel [2] toward the front.
   - 4 screws [1]

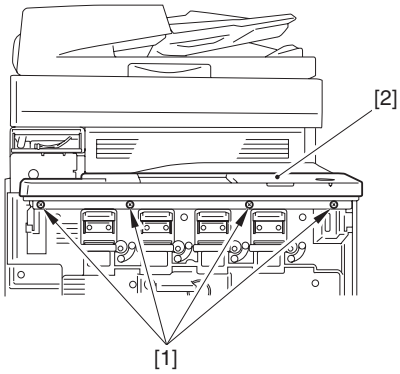

F-12-57

4) Remove the control panel [2].
   - 1 connector [1]

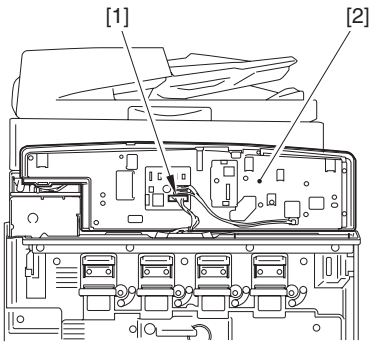

F-12-58

5) Remove the control panel back plate [6].
   - 3 connectors [1] from the CPU PCB (Free the cable from the clamp.)
   - 2 flat cables [2]
   - 2 connectors [3] from the inverter PCB (Free the cable from the clamp.)
   - 1 binding screw [4]
   - 8 self-tapping screws [5]

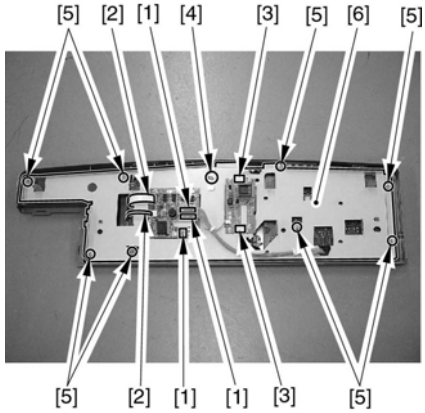

F-12-59

12.5.8.2 Removing the Control Panel LCD Unit

CLC5151 / / / CLC4040 / / / iR C4580i / / / iR C4080i / / / / Color Image Reader-F1 / Color Image Reader-E1 / Dupiex Color Image Reader-G1 / iR C5185N / / iR C5185i PRT /

1) Remove the control panel LCD unit [2].
   - 3 screws [1]

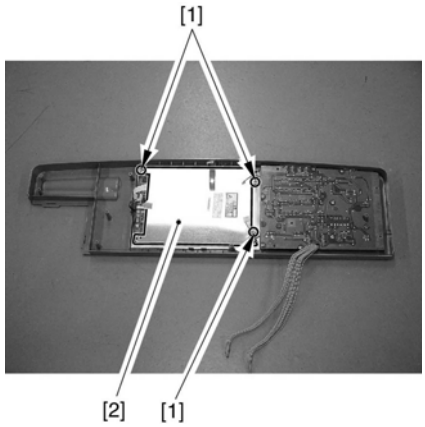

F-12-60

12.5.9 DC Controller Box

12.5.9.1 Preparation for Removing the DC Controller Box2

CLC5151 / / / CLC4040 / / / iR C4580i / / / iR C4080i / / / / Color Image Reader-F1 / Color Image Reader-E1 / Dupiex Color Image Reader-G1 / iR C5185N / / iR C5185i PRT /

1) Remove the rear fan cover. (page 12-15) Reference[Removing the Rear Fan Cover]
2) Remove the rear upper cover. (page 12-16) Reference[Removing the Rear Upper Cover]

12.5.9.2 Removing the DC Controller Box 2

CLC5151 / / / CLC4040 / / / iR C4580i / / / iR C4080i / / / / Color Image Reader-F1 / Color Image Reader-E1 / iR C5185N / / iR C5185i PRT /

1) Remove the DC controller PCB cover [3].
   - 8 screws [1]
   - 2 wire saddles [2] (Remove the harness.)

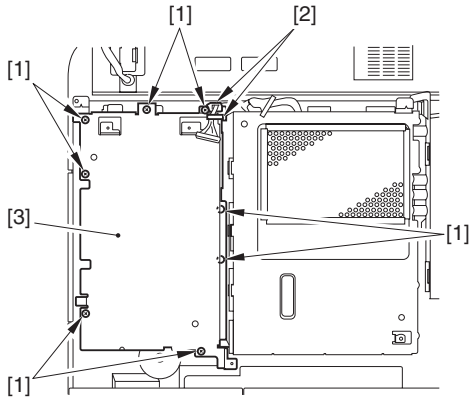

F-12-61

2) Remove the connectors, clamps, and flat cable of the DC controller box.
   - 19 connectors
   - 4 wire saddles [1]
   - 2 edge saddles [2]
   - 1 flat cable [3]

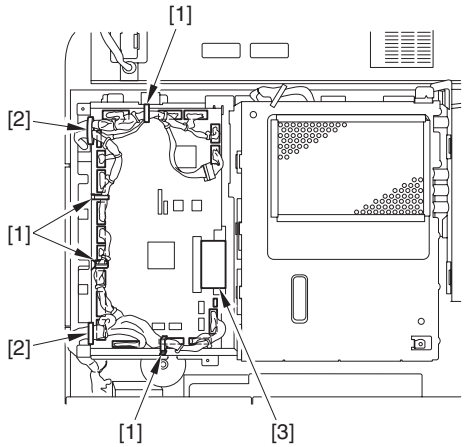

F-12-62

3) Remove the DC controller box 2 [3].
   - 2 claws [1] (Remove the guide.)
   - 9 screws [2]

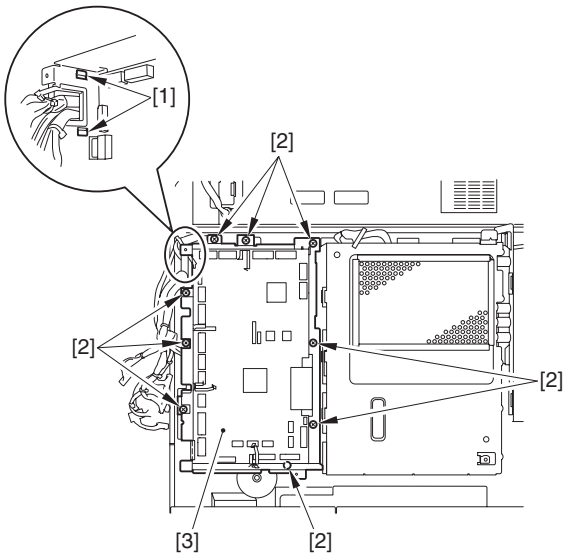

F-12-63

12.5.9.3 Preparation for Removing the DC Controller Box1

CLC5151 / / / CLC4040 / / / iR C4580i / / / iR C4080i / / / / Color Image Reader-F1 / Color Image Reader-E1 / Dupiex Color Image Reader-G1 / iR C5185N / / iR C5185i PRT /

1) Remove the rear fan cover.(page 12-15)Reference[Removing the Rear Fan Cover]
2) Remove the rear upper cover.(page 12-16)Reference[Removing the Rear Upper Cover]
3) Remove the DC controller box2.(page 12-24)Reference[Removing the DC Controller Box2]

12.5.9.4 Removing the DC Controller Box 1

CLC5151 / / / CLC4040 / / / iR C4580i / / / iR C4080i / / / / Color Image Reader-F1 / Color Image Reader-E1 / iR C5185N / / iR C5185i PRT /

1) Remove the connectors, wire saddles, and clamps of the DC controller box 1.
   - 9 connectors
   - 6 edge saddles [1]
   - 4 wire saddles [2]
   - 1 reuse band [3]

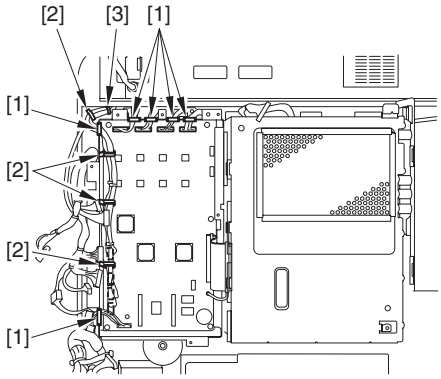

F-12-64

2) Remove the sheet metal [2].
   - 2 screws [1]

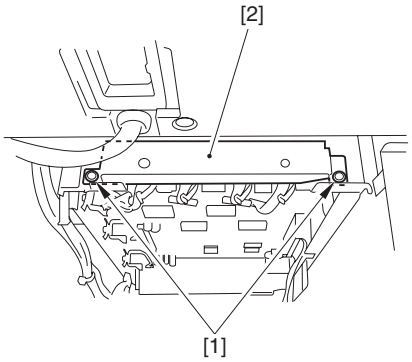

F-12-65

3) Move the DC controller box 1 [4] to the left side and remove it.
   - 2 claws [1]
   - 7 screws [2]
   - 1 connector [3]

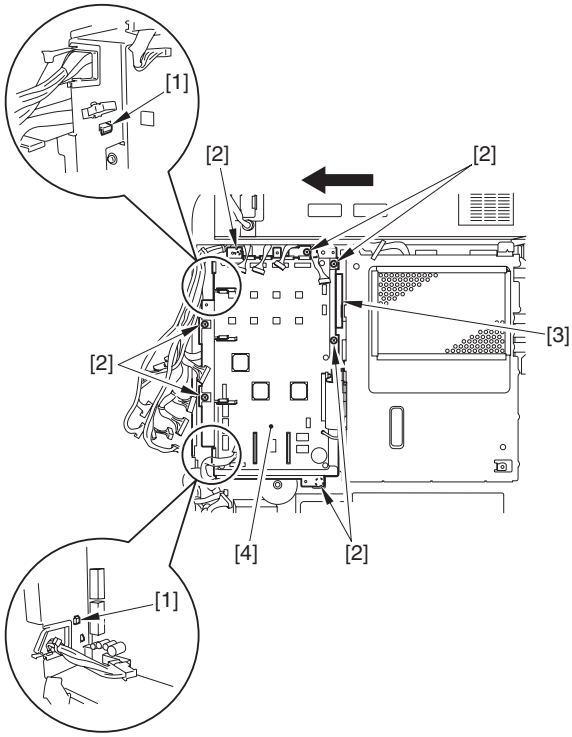

F-12-66

12.5.10 DC Controller PCB

12.5.10.1 Preparation for Removing the DC Controller PCB2 (MAISY)

CLC5151 / / / CLC4040 / / / iR C4580i / / / iR C4080i / / / / Color Image Reader-F1 / Color Image Reader-E1 / Dupiex Color Image Reader-G1 / iR C5185N / / iR C5185i PRT /

1) Remove the rear fan cover.(page 12-15)Reference[Removing the Rear Fan Cover]
2) Remove the rear upper cover.(page 12-16)Reference[Removing the Rear Upper Cover]
3) Remove the DC controller box2.(page 12-24)Reference[Removing the DC Controller Box2]

12.5.10.2 Removing the DC Controller PCB2 (MAISY)

CLC5151 / / / CLC4040 / / / iR C4580i / / / iR C4080i / / / / Color Image Reader-F1 / Color Image Reader-E1 / Dupiex Color Image Reader-G1 / iR C5185N / / iR C5185i PRT /

1) Remove the DC controller PCB2 (DCCON MAISY).
   - 8 screws [1]

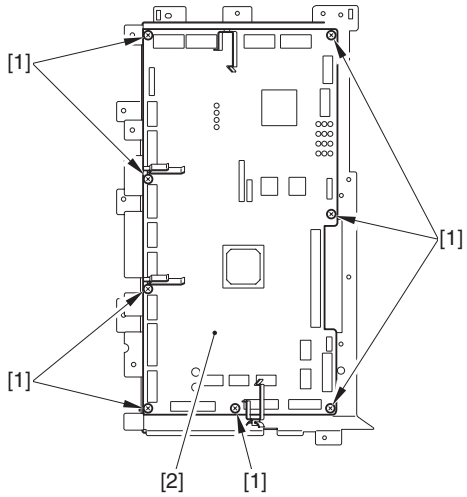

F-12-67

12.5.10.3 Preparation for Removing the DC Controller PCB1 (IMG)

CLC5151 / / / CLC4040 / / / iR C4580i / / / iR C4080i / / / / Color Image Reader-F1 / Color Image Reader-E1 / Dupiex Color Image Reader-G1 / iR C5185N / / iR C5185i PRT /

1) Remove the rear fan cover.(page 12-15)Reference[Removing the Rear Fan Cover]
2) Remove the rear upper cover.(page 12-16)Reference[Removing the Rear Upper Cover]
3) Remove the DC controller box2.(page 12-24)Reference[Removing the DC Controller Box2]
4) Remove the DC controller box1.(page 12-24)Reference[Removing the DC Controller Box1]

12.5.10.4 Removing the DC Controller PCB1 (IMG)

CLC5151 / / / CLC4040 / / / iR C4580i / / / iR C4080i / / / / Color Image Reader-F1 / Color Image Reader-E1 / Dupiex Color Image Reader-G1 / iR C5185N / / iR C5185i PRT /

1) Remove the DC controller PCB1 (DCCON IMG) [3].
   - 6 screws [1]
   - 1 flat cable [2]

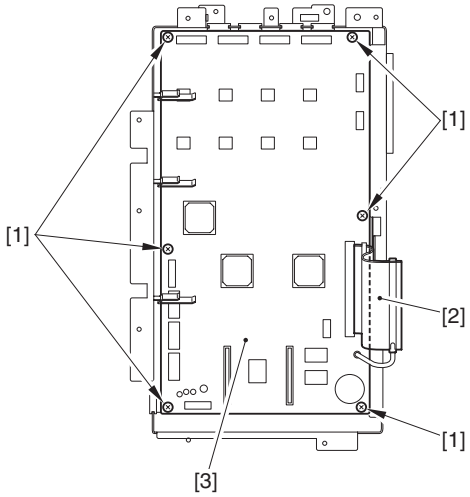

F-12-68

12.5.10.5 When Replacing the DC Controller PCB1(IMG)

CLC5151 / / / CLC4040 / / / iR C4580i / / / iR C4080i / / / / Color Image Reader-F1 / Color Image Reader-E1 / Dupiex Color Image Reader-G1 / iR C5185N / / iR C5185i PRT /

1)After replacing the DC controller PCB, clear the memory of the DC controller PCB with the following service mode.
COPIER > FUNCTION > CLEAR > DC-CON
COPIER>FUNCTION>CLEAR>DC-CON
2) Enter the value written on the service label from the following service mode.
Laser Main Scanning Writ Start Position Adjustment
COPIER > ADJUST > LASER > PVE-OFST

Laser Maker Identification
COPIER > ADJUST > LASER > LA-MK-Y/M/C/K
Laser Magnification
COPIER > ADJUST > LASER > LDADJ1-Y/M/C/K
Å@LDADJ2-Y/M/C/K
Å@Å@Å@LDADJ3-Y/M/C/K
Laser Phase Difference
COPIER > ADJUST > LASER > LDADJ4-Y/M/C/K
Å@Å@Å@LDADJ5-Y/M/C/K
Å@Å@Å@LDADJ6-Y/M/C/K
Patch Constants Adjustment
COPIER > OPTION > BODY > P-ALPHA
Write Start Position Adjustment (Margin along leading edge of image)
COPIER > ADJUST > FEED-ADJ > REGIST
Duplexing Side Registration Adjustment
COPIER > ADJUST > FEED-ADJ > ADJ-REFE
Duplexing Write Start Position Adjustment
COPIER > ADJUST > FEED-ADJ > REGIST2
Adjustment of Paper Width Standard Value of Manual Feed Tray
COPIER > ADJUST > CST-ADJ > MF-A4R
COPIER > ADJUST > CST-ADJ > MF-A6R
COPIER > ADJUST > CST-ADJ > MF-A4
Adjusting the paper width standard value of the manual feed tray.
3)Turn OFF/ON the main power switch.
Adjust the P wave and S wave ratio of the SALT sensor

COPIER > ADJUST > DENS > P-ALPHA

12.5.11 Main Power Supply PCB

12.5.11.1 Preparation for Removing the Main Power Supply PCB

CLC5151 / / / CLC4040 / / / iR C4580i / / / iR C4080i / / / / Color Image Reader-F1 / Color Image Reader-E1 / Dupiex Color Image Reader-G1 / iR C5185N / / iR C5185i PRT /

1) Remove the rear fan cover.(page 12-15)Reference[Removing the Rear Fan Cover]
2) Remove the rear lower cover.(page 12-16)Reference[Removing the Rear Lower Cover]
3) Remove the IH power supply unit.(page 12-21)Reference[Removing the IH Power Supply Unit]
4) Remove the DC power supply unit.(page 12-21)Reference[Removing the DC Power Supply Unit]
5) Remove the relay PCB.(page 12-27)Reference[Removing the Relay PCB]
6) Remove the All-night Power Supply PCB.(page 12-26)Reference[Removing the All-night Power Supply PCB]
7) Remove the DC/DC converter PCB (38V) 1.(page 12-29)Reference[Removing the DC/DC Converter PCB (38V)1]
8) Remove the DC/DC converter PCB (38V) 2.(page 12-29)Reference[Removing the DC/DC Converter PCB (38V)2]

12.5.11.2 Removing the Main Power Supply PCB

CLC5151 / / / CLC4040 / / / iR C4580i / / / iR C4080i / / / / Color Image Reader-F1 / Color Image Reader-E1 / Dupiex Color Image Reader-G1 / iR C5185N / / iR C5185i PRT /

1) Remove the main power-supply middle support plate [3].
   - 4 clamps [1]
   - 8 screws [2]

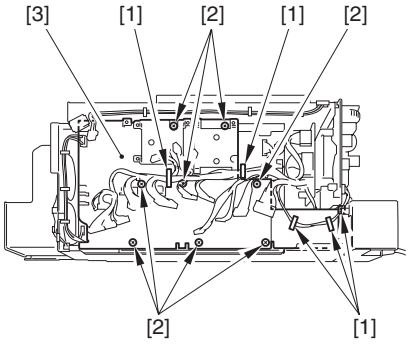

F-12-69

2) Remove the main power-supply PCB [3].
   - 1 connector [1]
   - 6 screws [2]

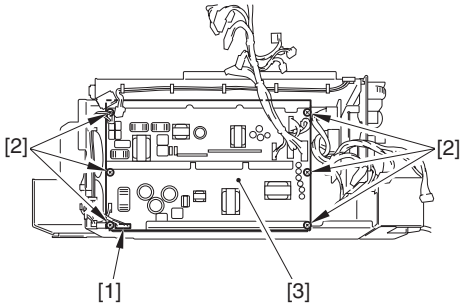

F-12-70

12.5.12 All-Night Power Supply PCB

12.5.12.1 Preparation for Removing the All-Night Power Supply PCB

CLC5151 / / / CLC4040 / / / iR C4580i / / / iR C4080i / / / / Color Image Reader-F1 / Color Image Reader-E1 / Dupiex Color Image Reader-G1 / iR C5185N / / iR C5185i PRT /

1) Remove the rear fan cover.(page 12-15)Reference[Removing the Rear Fan Cover]
2) Remove the rear lower cover.(page 12-16)Reference[Removing the Rear Lower Cover]
3) Remove the IH power supply unit.(page 12-21)Reference[Removing the IH Power Supply Unit]
4) Remove the DC power supply unit.(page 12-21)Reference[Removing the DC Power Supply Unit]

12.5.12.2 Removing the All-night Power Supply PCB

CLC5151 / / / CLC4040 / / / iR C4580i / / / iR C4080i / / / / Color Image Reader-F1 / Color Image Reader-E1 / Dupiex Color Image Reader-G1 / iR C5185N / / iR C5185i PRT /

1) Remove the DC power supply unit cover [2].
   - 7 screws [1]

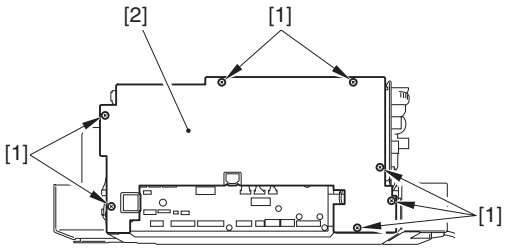

F-12-71

2) Remove the night-light power supply PCB [3].
   - 5 connectors [1]
   - 4 screws [2]

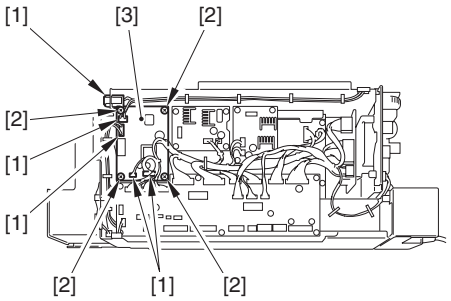

F-12-72

12.5.13 IH Power Supply PCB

12.5.13.1 Preparation for Removing the IH Power Supply PCB

CLC5151 / / / CLC4040 / / / iR C4580i / / / iR C4080i / / / / Color Image Reader-F1 / Color Image Reader-E1 / Dupiex Color Image Reader-G1 / iR C5185N / / iR C5185i PRT /

1) Remove the IH power supply unit.(page 12-21)Reference[Removing the IH Power Supply Unit]

12.5.13.2 Removing the IH Power Supply PCB

CLC5151 / / / CLC4040 / / / iR C4580i / / / iR C4080i / / / / Color Image Reader-F1 / Color Image Reader-E1 / Dupiex Color Image Reader-G1 / iR C5185N / / iR C5185i PRT /

1) Remove the IH power-supply unit cover [2].
   - 8 screws [1]

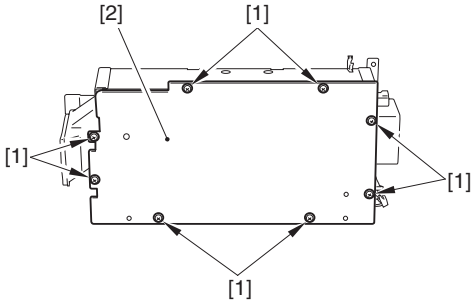

F-12-73

2) Remove the IH power-supply PCB [3].
   - 4 connectors [1]
   - 7 screws [2]

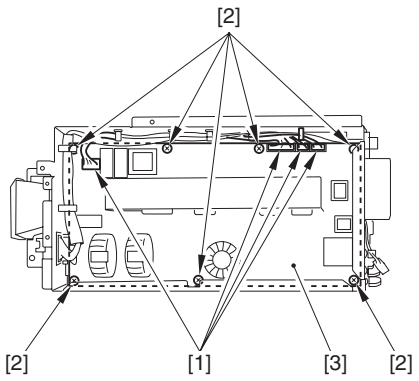

F-12-74

12.5.14 Leakage Breaker

12.5.14.1 Preparation for Removing the Leakage Breaker

CLC5151 / / / CLC4040 / / / iR C4580i / / / iR C4080i / / / / Color Image Reader-F1 / Color Image Reader-E1 / Dupiex Color Image Reader-G1 / iR C5185N / / iR C5185i PRT /

1) Remove the rear fan cover.(page 12-15)Reference[Removing the Rear Fan Cover]
2) Remove the rear lower cover.(page 12-16)Reference[Removing the Rear Lower Cover]
3) Remove the IH power-supply unit.(page 12-21)Reference[Removing the IH Power Supply Unit]
4) Remove the DC power-supply unit.(page 12-21)Reference[Removing the DC Power Supply Unit]

12.5.14.2 Removing the Leakage Breaker

CLC5151 / / / CLC4040 / / / iR C4580i / / / iR C4080i / / / / Color Image Reader-F1 / Color Image Reader-E1 / Dupiex Color Image Reader-G1 / iR C5185N / / iR C5185i PRT /

1) Remove the leak breaker unit [4].
   - 1 clamp [1]
   - 2 connectors [2]
   - 3 screws [3]

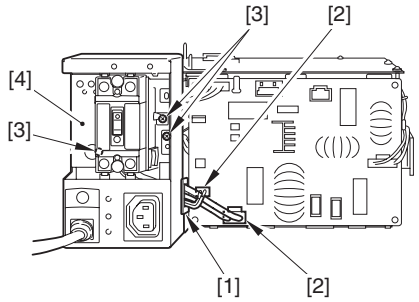

F-12-75

2) Remove the leak breaker [4].
   - 2 screws [1]
   - 1 clamp [2]
   - 4 connectors [3]

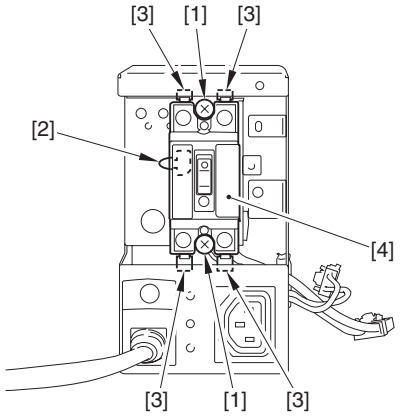

F-12-76

12.5.15 Relay PCB

12.5.15.1 Preparation for Removing the Relay PCB

CLC5151 / / / CLC4040 / / / iR C4580i / / / iR C4080i / / / / Color Image Reader-F1 / Color Image Reader-E1 / Dupiex Color Image Reader-G1 / iR C5185N / / iR C5185i PRT /

1) Remove the rear fan cover.(page 12-15)Reference[Removing the Rear Fan Cover]
2) Remove the rear lower cover.(page 12-16)Reference[Removing the Rear Lower Cover]
3) Remove the IH power supply unit.(page 12-21)Reference[Removing the IH Power Supply Unit]
4) Remove the DC power-supply unit.(page 12-21)Reference[Removing the DC Power Supply Unit]

12.5.15.2 Removing the Relay PCB

CLC5151 / / / CLC4040 / / / iR C4580i / / / iR C4080i / / / / Color Image Reader-F1 / Color Image Reader-E1 / Dupiex Color Image Reader-G1 / iR C5185N / / iR C5185i PRT /

1) Remove the DC power-supply unit cover [2].
   - 7 screws [1]

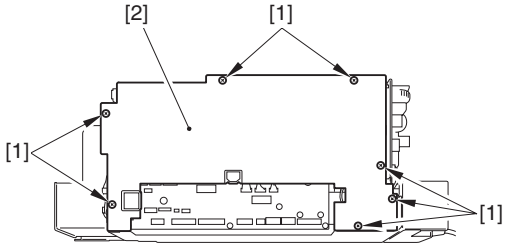

F-12-77

2) Remove the relay PCB [2].
   - 14 connectors on the PCB
   - 6 screws [1]

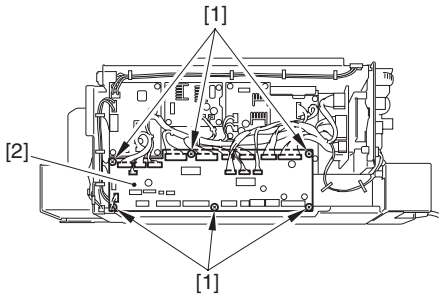

F-12-78

12.5.16 DC Relay

12.5.16.1 Making Preparations to Remove the Main Power Relay Unit

CLC5151 / / / CLC4040 / / / iR C4580i / / / iR C4080i / / / / Color Image Reader-F1 / Color Image Reader-E1 / iR C5185N / / iR C5185i PRT /

1) Remove the rear fan cover. (page 12-16)Reference[Removing the Rear Fan Cover]
2) Remove the upper rear cover. (page 12-16)Reference[Removing the Rear Upper Cover]
3) Remove the lower rear cover. (page 12-16)Reference[Removing the Rear Lower Cover]
4) Remove the rear left cover (lower). (page 12-17)Reference[Removing the Rear Left Cover (Lower)]
5) Remove the left rear cover (upper). (page 12-17)Reference[Removing the Rear Left Cover (Upper)]
6) Remove the left rear cover (lower). (page 12-15)Reference[Removing the Left Rear Cover (Lower)]
7) Remove the IH power unit. (page 12-21)Reference[Removing the IH Power Supply Unit]
8) Remove the DC power unit. (page 12-22)Reference[Removing the DC Power Supply Unit]

12.5.16.2 Removing the Main Power Relay Unit

CLC5151 / / / CLC4040 / / / iR C4580i / / / iR C4080i / / / / Color Image Reader-F1 / Color Image Reader-E1 / iR C5185N / / iR C5185i PRT /

1) Remove the DC power unit cover [2].

- 7 screws [1]

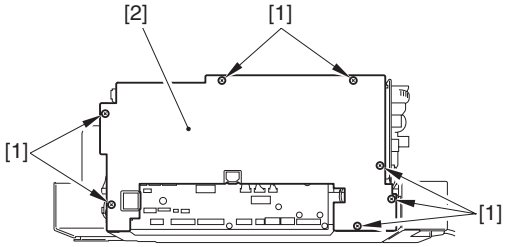

F-12-79

move the all-night power PCB [3].
connectors [1]
screws [2]

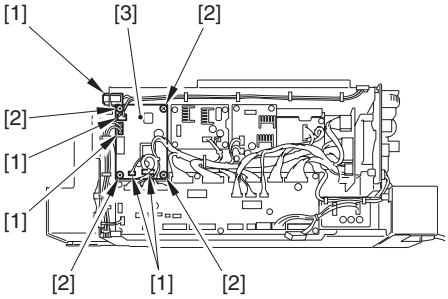

F-12-80

move the DC/DC converter PCB (38V) 1 [3].
connectors [1]
screws [2]

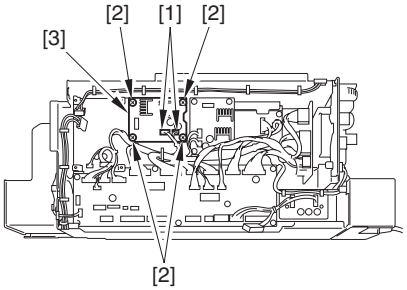

F-12-81

move the DC/DC converter PCB (38V) 2 [3].
connectors [1]
screws [2]

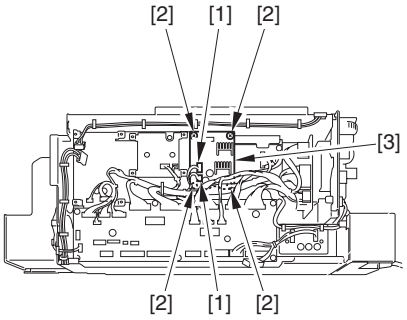

F-12-82

move the intermediate transfer belt sub PCB [4].
wire saddles [1] (Remove the cable.)
connectors [2]
PCB supports [3]

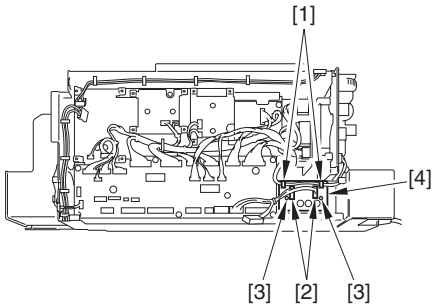

F-12-83

6) Remove the cable from the 3 wire saddles [1].

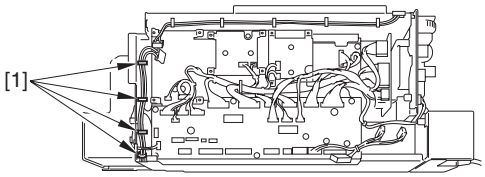

F-12-84

7) Remove the 6 connectors [1] from the relay PCB.

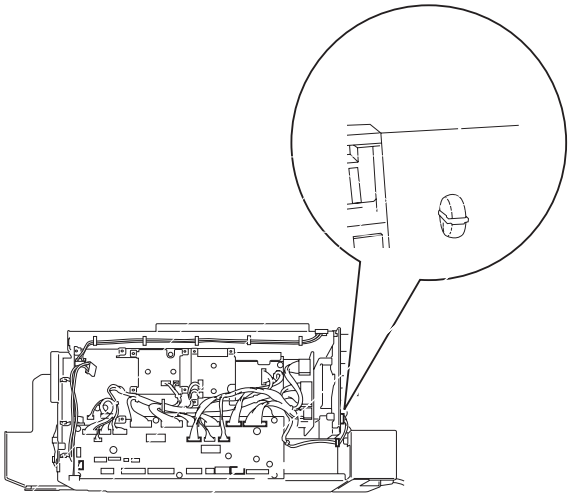

F-12-85

8) Remove the DC/DC converter PCB (3.3V/5V/12V) mount [2].
- 2 screws [1]

F-12-86

9) Remove the main power relay unit [2].
- 8 screws [1]

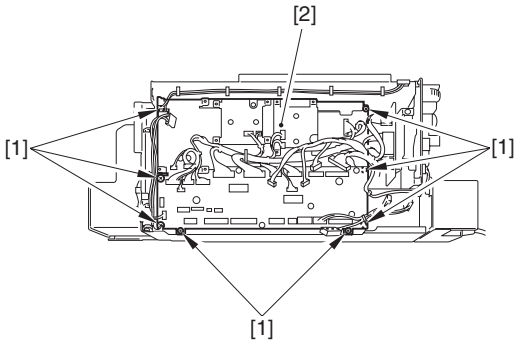

F-12-87

12.5.17 DC/DC Converter PCB

12.5.17.1 Preparation for Removing the DC/DC Converter PCB (38V)1

CLC5151 / / / CLC4040 / / / iR C4580i / / / iR C4080i / / / / Color Image Reader-F1 / Color Image Reader-E1 / Dupiex Color Image Reader-G1 / iR C5185N / / iR C5185i PRT /

1) Remove the rear fan cover.(page 12-15)Reference[Removing the Rear Fan Cover]
2) Remove the rear lower cover.(page 12-16)Reference[Removing the Rear Lower Cover]
3) Remove the IH power supply unit.(page 12-21)Reference[Removing the IH Power Supply Unit]
4) Remove the DC power supply unit.(page 12-21)Reference[Removing the DC Power Supply Unit]

12.5.17.2 Removing the DC/DC Converter PCB (38V)1

CLC5151 / / / CLC4040 / / / iR C4580i / / / iR C4080i / / / / Color Image Reader-F1 / Color Image Reader-E1 / Dupiex Color Image Reader-G1 / iR C5185N / / iR C5185i PRT /

1) Remove the DC power supply unit cover [2].
   - 7 screws [1]

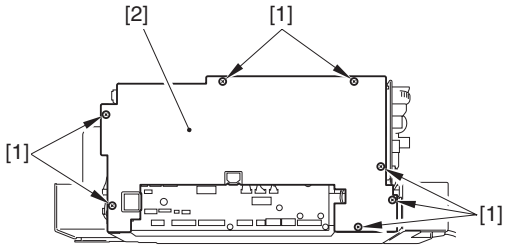

F-12-88

2) Remove the DC/DC converter PCB (38V)1 [3].
   - 2 connectors [1]
   - 4 screws [2]

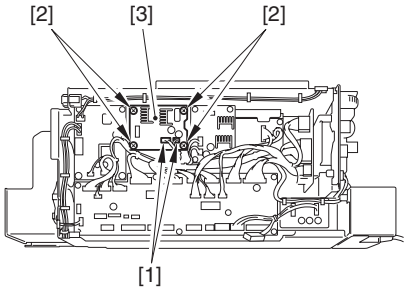

F-12-89

12.5.17.3 Preparation for Removing the DC/DC Converter PCB (38V)2

CLC5151 / / / CLC4040 / / / iR C4580i / / / iR C4080i / / / / Color Image Reader-F1 / Color Image Reader-E1 / Dupiex Color Image Reader-G1 / iR C5185N / / iR C5185i PRT /

1) Remove the rear fan cover.(page 12-15)Reference[Removing the Rear Fan Cover]
2) Remove the rear lower cover.(page 12-16)Reference[Removing the Rear Lower Cover]
3) Remove the IH power supply unit.(page 12-21)Reference[Removing the IH Power Supply Unit]
4) Remove the DC power supply unit.(page 12-21)Reference[Removing the DC Power Supply Unit]

12.5.17.4 Removing the DC/DC Converter PCB (38V)2

CLC5151 / / / CLC4040 / / / iR C4580i / / / iR C4080i / / / / Color Image Reader-F1 / Color Image Reader-E1 / Dupiex Color Image Reader-G1 / iR C5185N / / iR C5185i PRT /

1) Remove the DC power supply unit cover [2].
   - 7 screws [1]

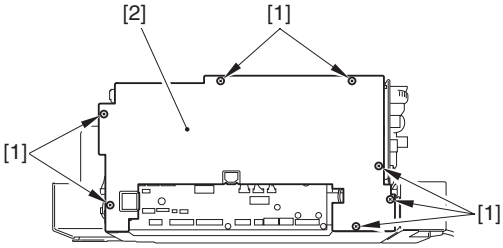

F-12-90

2) Remove the DC/DC converter PCB (38V)2 [3].
   - 2 connectors [1]
   - 4 screws [2]

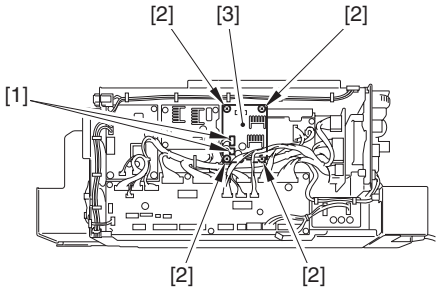

F-12-91

12.5.17.5 Preparation for Removing the DC/DC Converter PCB (3.3V/5V/12V)

CLC5151 / / / CLC4040 / / / iR C4580i / / / iR C4080i / / / / Color Image Reader-F1 / Color Image Reader-E1 / Dupiex Color Image Reader-G1 / iR C5185N / / iR C5185i PRT /

1) Remove the rear fan cover.(page 12-15)Reference[Removing the Rear Fan Cover]
2) Remove the rear lower cover.(page 12-16)Reference[Removing the Rear Lower Cover]
3) Remove the IH power supply unit.(page 12-21)Reference[Removing the IH Power Supply Unit]
4) Remove the DC power supply unit.(page 12-21)Reference[Removing the DC Power Supply Unit]
5) Remove the main power supply PCB.(page 12-26)Reference[Removing the Main Power Supply PCB]

12.5.17.6 Removing the DC/DC Converter PCB (3.3V/5V/12V)

CLC5151 / / / CLC4040 / / / iR C4580i / / / iR C4080i / / / / Color Image Reader-F1 / Color Image Reader-E1 / Dupiex Color Image Reader-G1 / iR C5185N / / iR C5185i PRT /

1) Remove the DC/DC converter PCB (3.3V/5V/12V) mount [3].
   - 3 connectors [1]
   - 2 screws [2]

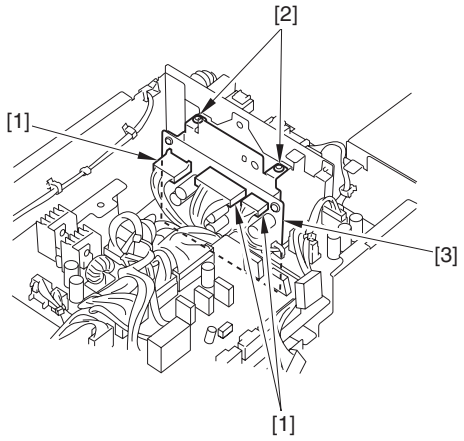

F-12-92

2) Remove the DC/DC converter PCB (3.3V/5V/12V) [2].
   - 4 screws [1]

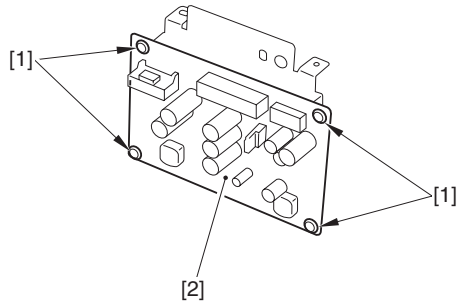

F-12-93

12.5.18 Intermediate Transfer Belt Sub PCB

12.5.18.1 Preparation for Removing the Intermediate Transfer Belt Sub PCB

iR C5185N / / iR C5185i PRT /

1) Remove the rear fan cover.(page 12-15)Reference[Removing the Rear Fan Cover]
2) Remove the rear lower cover.(page 12-16)Reference[Removing the Rear Lower Cover]
3) Remove the IH power supply unit.(page 12-21)Reference[Removing the IH Power Supply Unit]
4) Remove the DC power supply unit.(page 12-21)Reference[Removing the DC Power Supply Unit]

12.5.18.2 Removing the Intermediate Transfer Belt Sub PCB

CLC5151 / / / CLC4040 / / / iR C4580i / / / iR C4080i / / / / Color Image Reader-F1 / Color Image Reader-E1 / iR C5185N / / iR C5185i PRT /

1) Remove the DC power unit cover [2].
   - 7 screws [1]

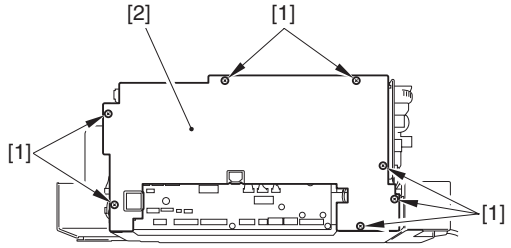

F-12-94

2) Remove the intermediate transfer belt sub PCB [4].
   - 2 wire saddles [1] (Remove the cable.)
   - 2 connectors [2]
   - 2 PCB supports [3]

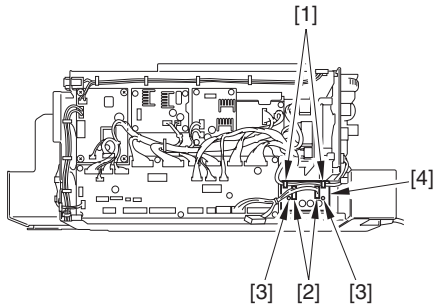

F-12-95

12.5.19 AC Driver PCB

12.5.19.1 Preparation for Removing the AC Driver PCB

CLC5151 / / / CLC4040 / / / iR C4580i / / / iR C4080i / / / / Color Image Reader-F1 / Color Image Reader-E1 / Dupiex Color Image Reader-G1 / iR C5185N / / iR C5185i PRT /

1) Remove the rear fan cover.(page 12-15)Reference[Removing the Rear Fan Cover]
2) Remove the rear lower cover.(page 12-16)Reference[Removing the Rear Lower Cover]
3) Remove the IH power supply unit.(page 12-21)Reference[Removing the IH Power Supply Unit]
4) Remove the DC power supply unit.(page 12-21)Reference[Removing the DC Power Supply Unit]

12.5.19.2 Removing the AC Driver PCB

CLC5151 / / / CLC4040 / / / iR C4580i / / / iR C4080i / / / / Color Image Reader-F1 / Color Image Reader-E1 / Dupiex Color Image Reader-G1 / iR C5185N / / iR C5185i PRT /

1) Remove the AC driver PCB [3].
   - 3 connectors [1]
   - 4 screws [2]

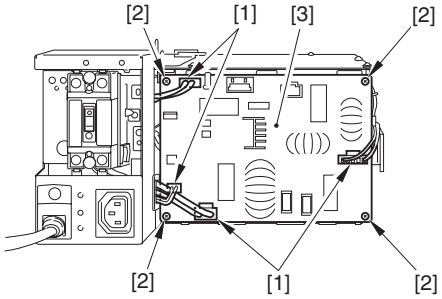

F-12-96

12.5.20 Relay PCB 1

12.5.20.1 Preparation for Removing the Relay PCB 1

CLC5151 / / / CLC4040 / / / iR C4580i / / / iR C4080i / / / / Color Image Reader-F1 / Color Image Reader-E1 / Dupiex Color Image Reader-G1 / iR C5185N / / iR C5185i PRT /

1) Remove the rear fan cover.(page 12-15)Reference[Removing the Rear Fan Cover]
2) Remove the rear upper cover.(page 12-16)Reference[Removing the Rear Upper Cover]
3) Remove the left rear cover (upper).(page 12-15)Reference[Removing the Left Rear Cover (Upper)]
4) Remove the rear left cover (upper).(page 12-17)Reference[Removing the Rear Left Cover (Upper)]
5) Remove the main controller box.(page 5-14)Reference[Removing the Main Controller Box]
6) Remove the DC controller box 2.(page 12-24)Reference[Removing the DC Controller Box2]
7) Remove the DC controller box 1.(page 12-24)Reference[Removing the DC Controller Box1]
8) Remove the high-voltage unit 1.(page 12-20)Reference[Removing the High-Voltage Unit1]

12.5.20.2 Removing the Relay PCB 1

CLC5151 / / / CLC4040 / / / iR C4580i / / / iR C4080i / / / / Color Image Reader-F1 / Color Image Reader-E1 / Dupiex Color Image Reader-G1 / iR

C5185N / / iR C5185i PRT /

1) Remove elay PCB mount base [3].
   - 19 connectors
   - 7 clamps [1] (free the harness)
   - 4 screws [2]

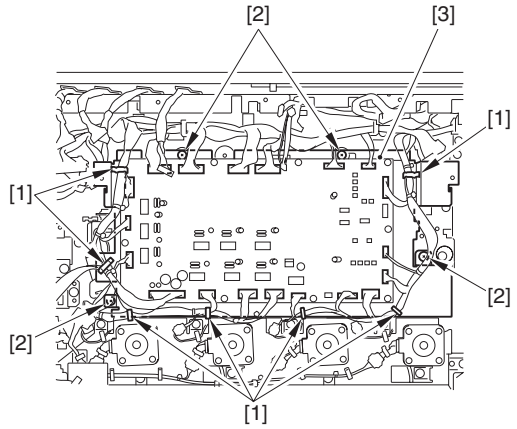

F-12-97

2) Remove the relay PCB [2].
   - 10 screws [1]

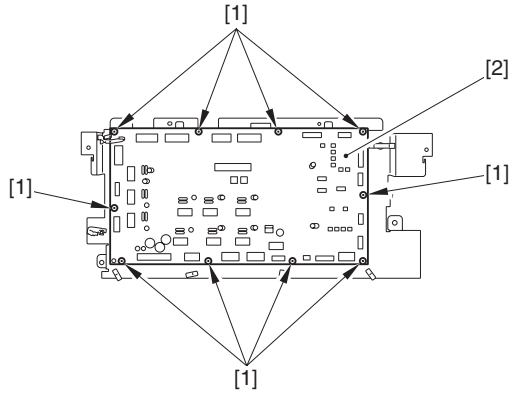

F-12-98

12.5.21 Control Panel CPU PCB

12.5.21.1 Preparation for Removing the Control Panel CPU PCB

CLC5151 / / / CLC4040 / / / iR C4580i / / / iR C4080i / / / / Color Image Reader-F1 / Color Image Reader-E1 / Dupiex Color Image Reader-G1 / iR C5185N / / iR C5185i PRT /

1) Remove the card reader cover.(page 12-15)Reference[Removing the Card Reader Cover]
2) Remove the front cover.(page 12-14)Reference[Removing the Front Cover]
3) Slide the control panel to the front.
   - 4screws [1]

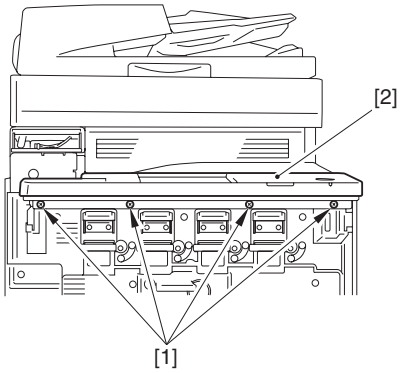

F-12-99

4) Dismount the control panel [2].
   - 1 connector [1]

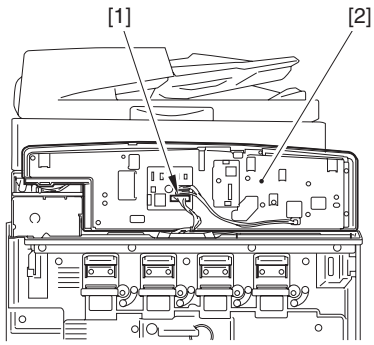

F-12-100

12.5.21.2 Removing the Control Panel CPU PCB

CLC5151 / / / CLC4040 / / / iR C4580i / / / iR C4080i / / / / Color Image Reader-F1 / Color Image Reader-E1 / Dupiex Color Image Reader-G1 / iR C5185N / / iR C5185i PRT /

1) Remove the control panel CPU PCB [4].
   - 3 connectors [1]
   - 2 flat cables [2]
   - 4 screws [3]

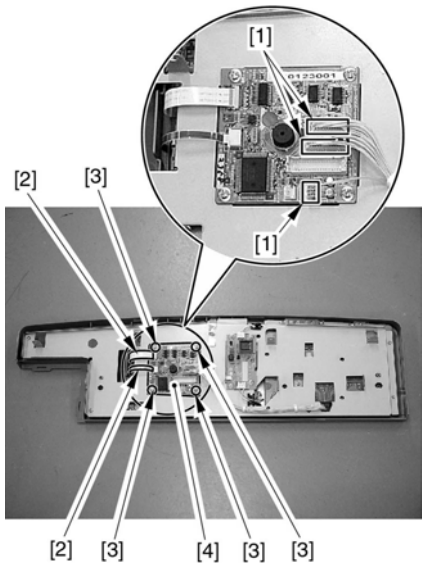

F-12-101

12.5.22 Control Panel Key Switch PCB

12.5.22.1 Preparation for Removing the Control Panel Key Switch PCB

CLC5151 / / / CLC4040 / / / iR C4580i / / / iR C4080i / / / / Color Image Reader-F1 / Color Image Reader-E1 / Dupiex Color Image Reader-G1 / iR C5185N / / iR C5185i PRT /

1) Remove the card reader cover.(page 12-15)Reference[Removing the Card Reader Cover]
2) Remove the front cover.(page 12-14)Reference[Removing the Front Cover]
3) Remove the control panel [2] toward the front.
   - 4screws [1]

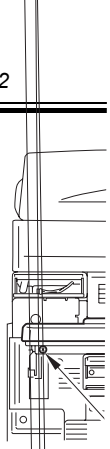

[2]

4) Remove the control par
- 1 connector [1]

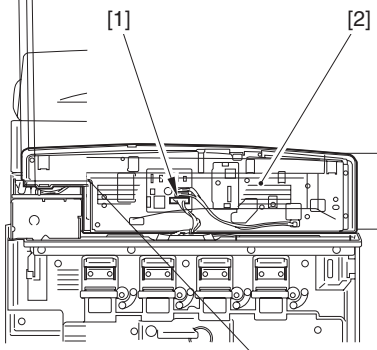

F-12-103

5) Remove the control panel back plate [6].
- 3 connectors [1] from the CPU PCB (Free the cable from the clamp.)
- 2 flat cables [2]
- 2 connectors [3] from the inverter PCB (Free the cable from the clamp.)
- 1 binding screw [4]
- 8 self-tapping screws [5]

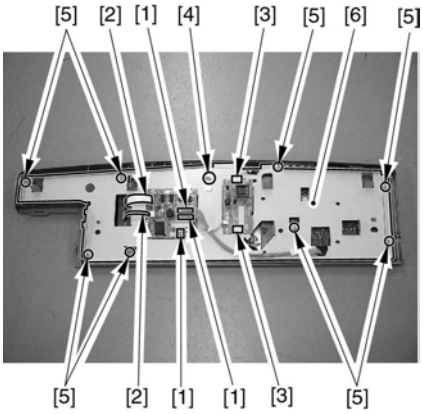

F-12-104

12.5.22.2 Removing the Control Panel Key Switch PCB

CLC5151 / / / CLC4040 / / / iR C4580i / / / iR C4080i / / / / Color Image Reader-F1 / Color Image Reader-E1 / Dupiex Color Image Reader-G1 / iR C5185N / / iR C5185i PRT /

1) Remove the control panel key switch PCB [2].
- 7 screws [1]

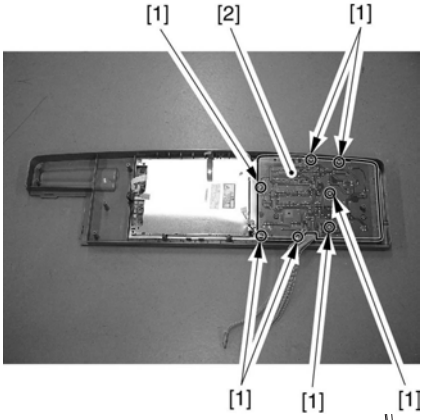

F-12-105

12.5.23 Control Panel Inverter PCB

12.5.23.1 Preparation for Removing the Control Panel Inverter PCB

CLC5151 / / / CLC4040 / / / iR C4580i / / / iR C4080i / / / / Color Image Reader-F1 / Color Image Reader-E1 / Dupiex Color Image Reader-G1 / iR C5185N / / iR C5185i PRT /

1) Remove the card reader cover.(page 12-15)Reference[Removing the Card Reader Cover]
2) Remove the front cover.(page 12-14)Reference[Removing the Front Cover]
3) Remove the control panel [2] toward the front.
- 4 screws [1]

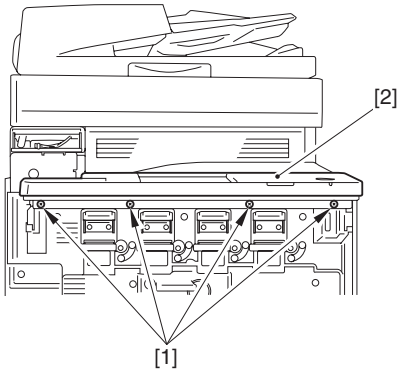

F-12-106

4) Remove the control panel [2].
- 1 connector [1]

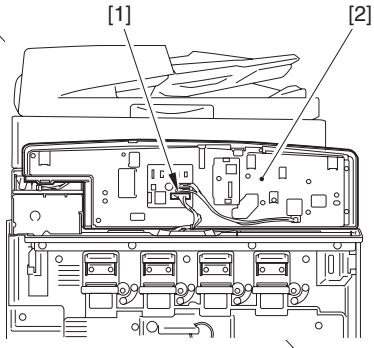

F-12-107

5) Remove the control panel back plate [6].
- 3 connectors [1] from the CPU PCB (Free the cable from the clamp.)
- 2 flat cables [2]
- 2 connectors [3] from the inverter PCB (Free the cable from the clamp.)
- 1 binding screw [4]
- 8 self-tapping screws [5]

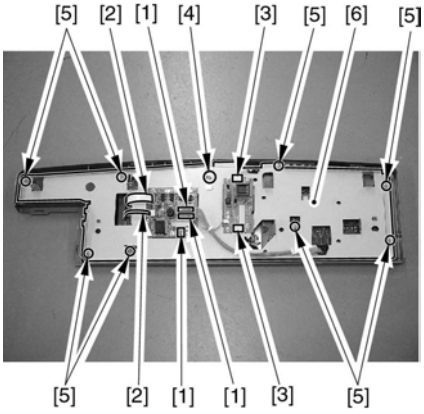

F-12-108

12.5.23.2 Removing the Control Panel Inverter PCB

CLC5151 / / / CLC4040 / / / iR C4580i / / / iR C4080i / / / / Color Image Reader-F1 / Color Image Reader-E1 / Dupiex Color Image Reader-G1 / iR C5185N / / iR C5185i PRT /

1) Remove the control panel inverter PCB [3].
   - 3 connectors [1]
   - 4 screws [2]

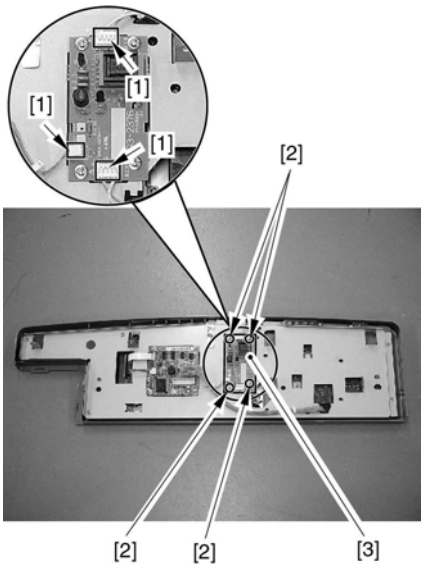

F-12-109

12.5.24 Environment Sensor

12.5.24.1 Preparation for Removing the Environment Sensor

CLC5151 / / / CLC4040 / / / iR C4580i / / / iR C4080i / / / / Color Image Reader-F1 / Color Image Reader-E1 / Dupiex Color Image Reader-G1 / iR C5185N / / iR C5185i PRT /

1) Pressure release of the intermediate transfer unit.
1-1) Open the front cover, and turn the intermediate transfer unit pressure release lever to release it.
1-2) Slide the manual feeding unit out.
1-3) Remove the right middle cover [2].
   - 1 screw [1]

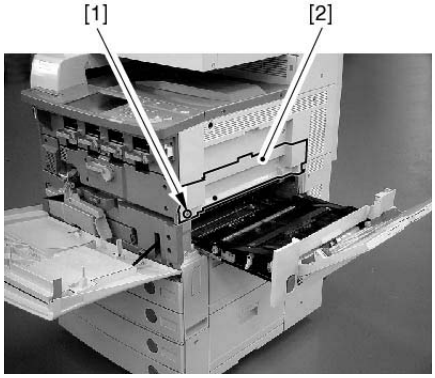

F-12-110

1-4) Release the escape lever [1] and fix with the tape [2] etc.

When the pressure release lever is not fixed, release lever may drop and damage the ITB.

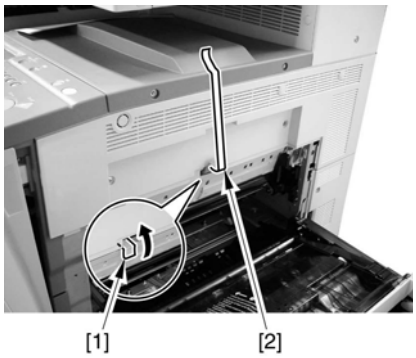

F-12-111

2) Remove the right upper cover [2].
   - 4 screws [1]

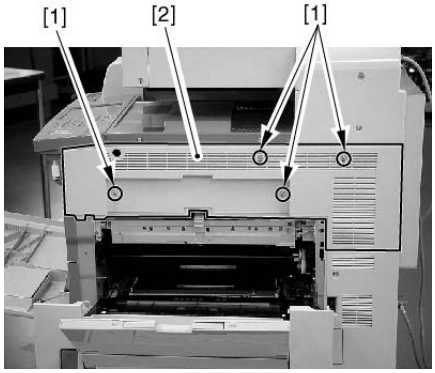

F-12-112

3) Remove the pattern reader unit. (page 9-49) Reference[Removing the Pattern Reader Unit]

12.5.24.2 Removing the Environment Sensor

CLC5151 / / / CLC4040 / / / iR C4580i / / / iR C4080i / / / / Color Image Reader-F1 / Color Image Reader-E1 / Dupiex Color Image Reader-G1 / iR C5185N / / iR C5185i PRT /

1) Insert a screwdriver from the hole on the right upper stay of the main body, and remove the 1 screw [1] to dismount the environment sensor mount [2].

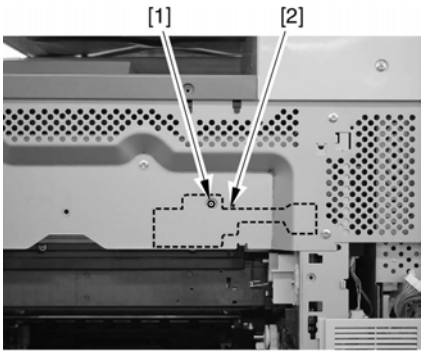

F-12-113

2) Free the claw [2] at the sensor mount to detach the environment sensor [2].
   - 1 connector [1]

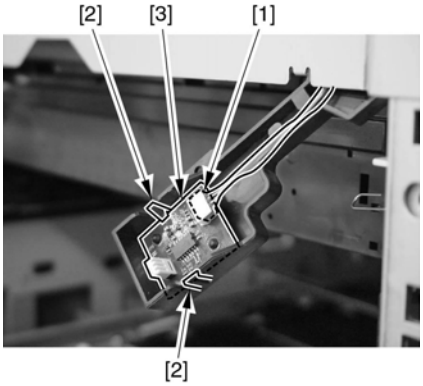

F-12-114

12.5.25 Manual Feed Unit Open/Closed Sensor

12.5.25.1 Preparation for Removing the Manual Feed Unit Open/Closed Sensor

CLC5151 / / / CLC4040 / / / iR C4580i / / / iR C4080i / / / / Color Image Reader-F1 / Color Image Reader-E1 / Dupiex Color Image Reader-G1 / iR C5185N / / iR C5185i PRT /

1) Remove the rear fan cover.(page 12-15)Reference[Removing the Rear Fan Cover]
2) Remove the rear upper cover.(page 12-16)Reference[Removing the Rear Upper Cover]
3) Remove the DC controller PCB cover.
4) Remove the DC controller box2.(page 12-24)Reference[Removing the DC Controller Box2]
5) Remove the DC controller box1.(page 12-24)Reference[Removing the DC Controller Box1]
6) Remove the manual feeder unit open/close sensor mount [3].
   - 4 connectors [1]
   - 1 screw [2]

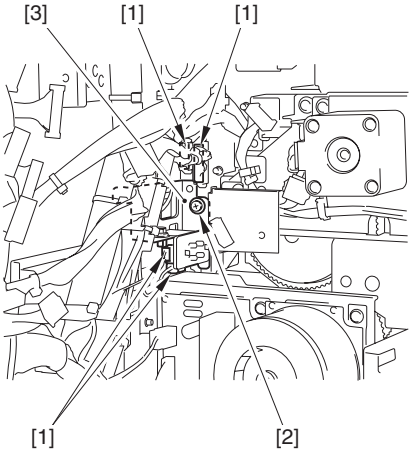

F-12-115

12.5.25.2 Removing the Manual Feed Unit Open/Closed Sensor

CLC5151 / / / CLC4040 / / / iR C4580i / / / iR C4080i / / / / Color Image Reader-F1 / Color Image Reader-E1 / Dupiex Color Image Reader-G1 / iR C5185N / / iR C5185i PRT /

1) Remove the manual feeder unit open/close sensor [2].
   - 1 connector [1]

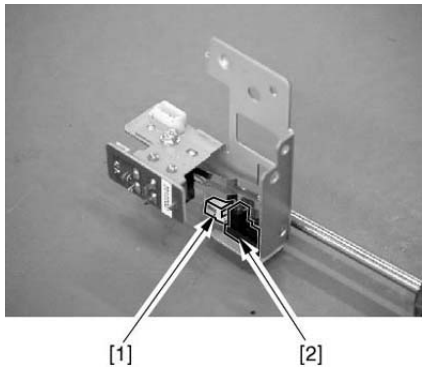

F-12-116

12.5.26 Front Cover Open/Closed Sensor

12.5.26.1 Preparation for Removing the Front Cover Open/Closed Sensor

CLC5151 / / / CLC4040 / / / iR C4580i / / / iR C4080i / / / / Color Image Reader-F1 / Color Image Reader-E1 / Dupiex Color Image Reader-G1 / iR C5185N / / iR C5185i PRT /

1) Remove the control panel.(page 12-22)Reference[Removing the Control Panel]
2) Remove the inside cover (upper).(page 12-17)Reference[Removing the Inside Cover (Upper)]
3) Remove the rear upper cover.(page 12-16)Reference[Removing the Rear Upper Cover]
4) Remove the rear lower cover.(page 12-16)Reference[Removing the Rear Lower Cover]
5) Remove the left rear cover (upper).(page 12-15)Reference[Removing the Left Rear Cover (Upper)]
6) Remove the DC controller PCB cover [2].
   - 8 screws [1]

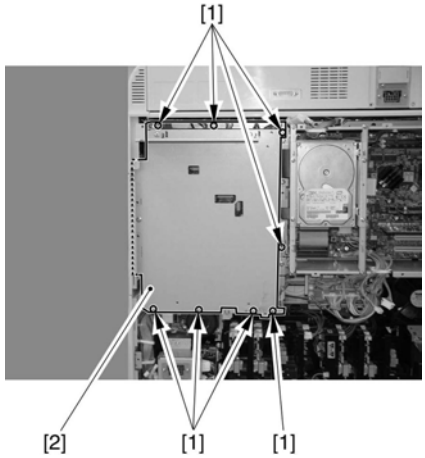

F-12-117

When Attaching the DC Controller PCB Cover
When attaching the cover, take care so that the cut-off will not come into contact with the latch of the flat cable. Otherwise, the flat cable can come loose.

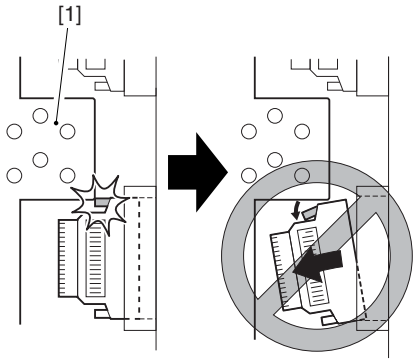

F-12-118

7) Remove the DC controller mounting.
7-1) Remove all connectors from the PCB, and free all harnesses from the cable clamps; then, remove the 7 screws [1], and remove the DC controller PCB [2] together with its base.

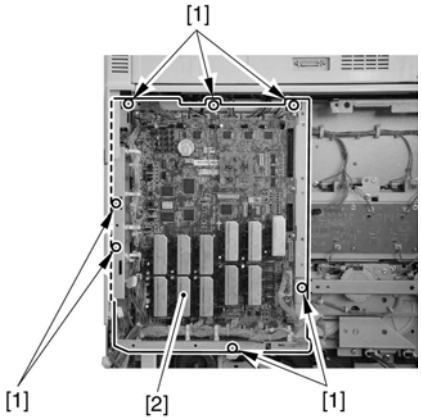

F-12-119

12.5.26.2 Removing the Front Cover Open/Closed Sensor

CLC5151 / / / CLC4040 / / / iR C4580i / / / iR C4080i / / / / Color Image Reader-F1 / Color Image Reader-E1 / Dupiex Color Image Reader-G1 / iR C5185N / / iR C5185i PRT /

1) Remove the sensor flag retaining plate [2] found at the front.
- 1 screw [1]

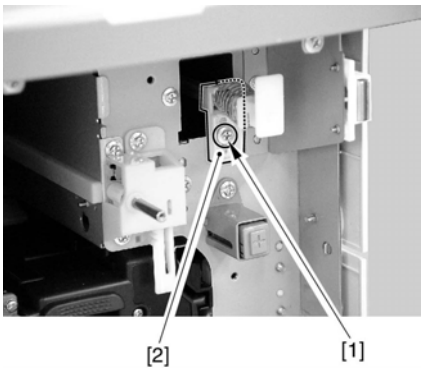

F-12-120

2) Pull out the sensor mounting plate [3] (The sensor flag retaining plate is found between the front side plate and the rear side plate).
- 2 connectors [1]
- 2 screws [2]

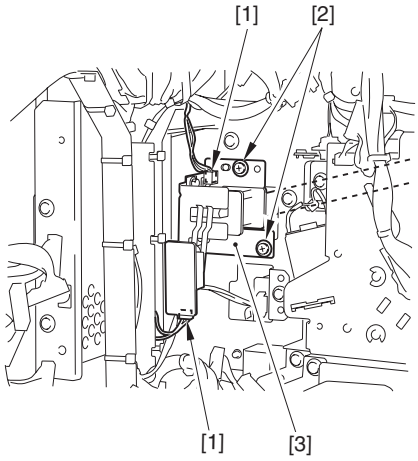

F-12-121

3) Remove the sensor cover [2].
- 2 screws [1]

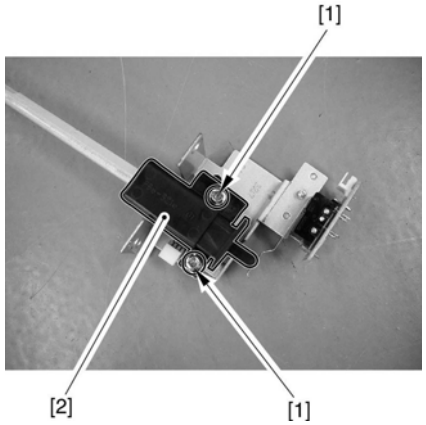

F-12-122

4) Remove the front cover open/closed sensor [3].
- 2 connectors [1]
- 3 screws [2]

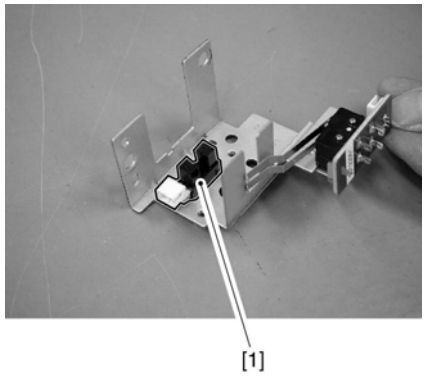

F-12-123

12.5.27 Main Power Switch

12.5.27.1 Preparation for Removing the Main Power Switch

CLC5151 / / / CLC4040 / / / iR C4580i / / / iR C4080i / / / / Color Image Reader-F1 / Color Image Reader-E1 / Dupiex Color Image Reader-G1 / iR C5185N / / iR C5185i PRT /

1) With the manual feeder unit [1] pulled out, remove the rear right cover [3].
- 3 screws [2]

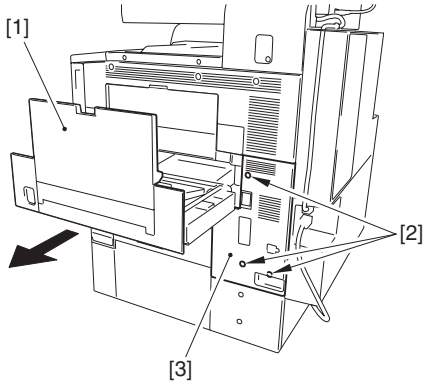

F-12-124

12.5.27.2 Removing the Main Power Switch

CLC5151 / / / CLC4040 / / / iR C4580i / / / iR C4080i / / / / Color Image Reader-F1 / Color Image Reader-E1 / Dupiex Color Image Reader-G1 / iR C5185N / / iR C5185i PRT /

1) Remove the mounting plate [2].
   - 5 screws [1]

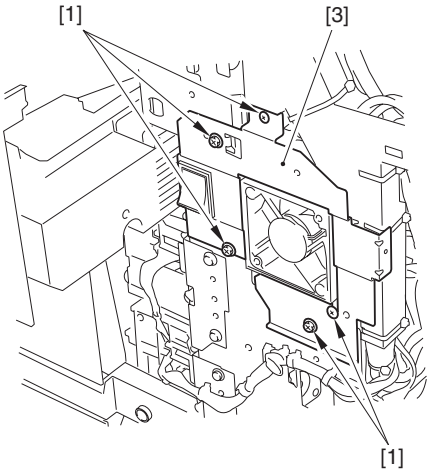

F-12-125

2) Remove 2 terminals [1].
3) Pick up the stopper [A], and remove the main power switch [2].

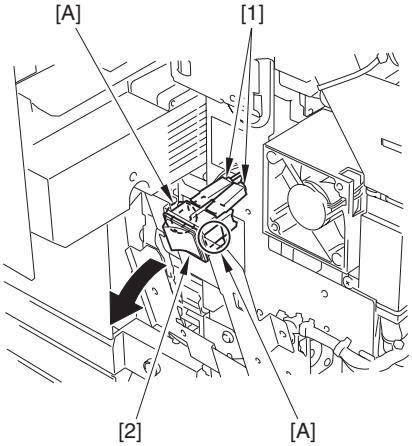

F-12-126

12.5.28 Manual Feed Unit Open/Closed Detecting Switch

12.5.28.1 Preparation for Removing the Manual Feed Unit Open/Close Switch

CLC5151 / / / CLC4040 / / / iR C4580i / / / iR C4080i / / / / Color Image Reader-F1 / Color Image Reader-E1 / Dupiex Color Image Reader-G1 / iR C5185N / / iR C5185i PRT /

1) Remove the rear upper cover.(page 12-16)Reference[Removing the Rear Upper Cover]
2) Remove the rear lower cover.(page 12-16)Reference[Removing the Rear Lower Cover]
3) Remove the left rear cover (upper).(page 12-15)Reference[Removing the Left Rear Cover (Upper)]
4) Remove the controller box cover.
4-1) Remove the main controller cover [4].
   - 1 connector J1512 [1] from the power distribution PCB
   - harness from the wire saddle [2]
   - 6 screws [3]

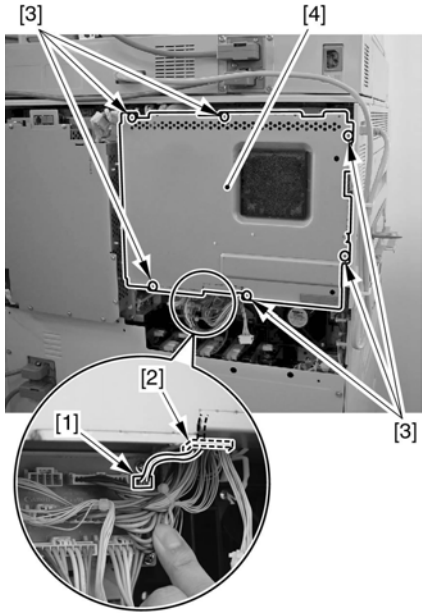

F-12-127

5) Remove the DC controller PCB cover [2].
   - 8 screws [1]

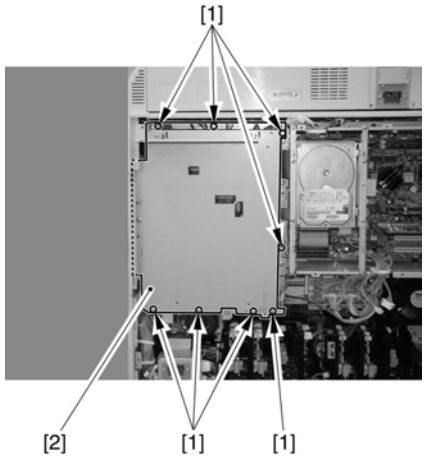

F-12-128

When Attaching the DC Controller PCB Cover
When attaching the cover, take care so that the cut-off will not come into contact with the latch of the flat cable. Otherwise, the flat cable can come loose.

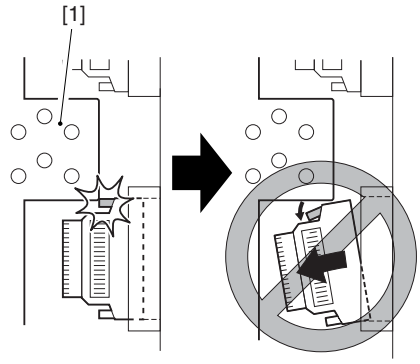

F-12-129

6) Open the main controller box
6-1) Remove the 2 flat cables [1] used to connect the DC controller PCB and the main controller PCB.

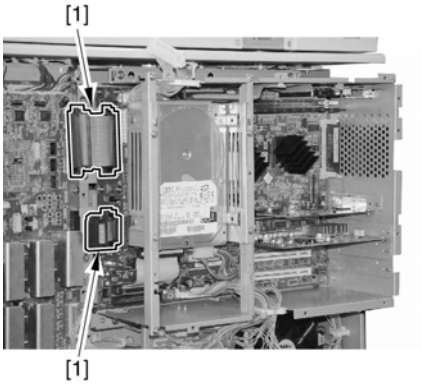

F-12-130

6-2) Remove the 9 screws [1] of the main controller box.

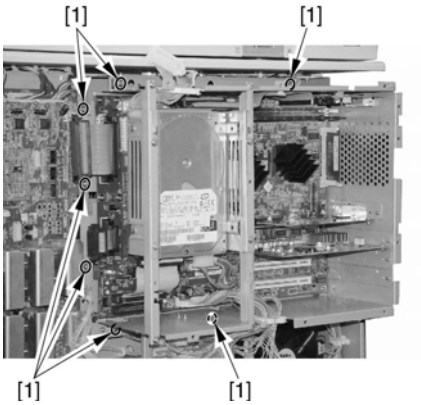

F-12-131

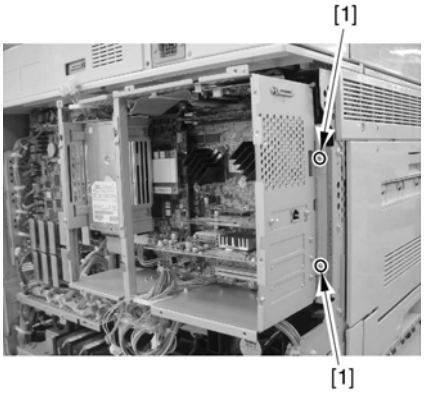

F-12-132

6-3) Remove the controller box from the hook [A/B] at the top of the main controller box.

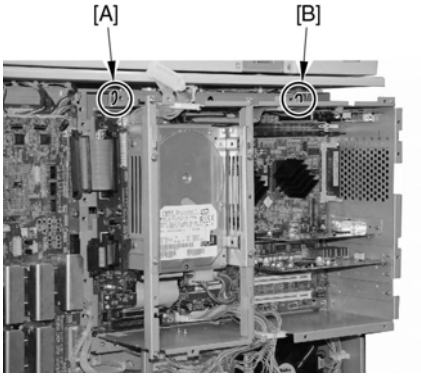

F-12-133

6-4) Engage the hook [1] found on the right side of the main controller box on the stay [2] of the machine, and open it.

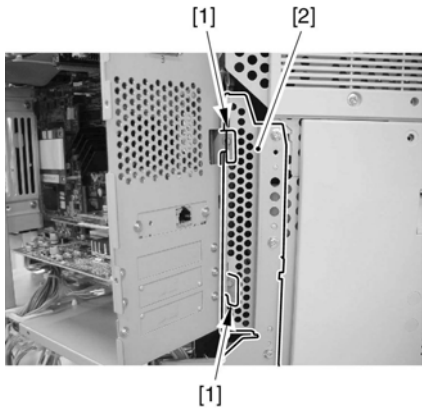

F-12-134

7) Remove the DC controller mounting.
7-1) Remove all connectors from the PCB, and free all harnesses from the cable clamps; then, remove the 7 screws [1], and remove the DC controller PCB [2] together with its base.

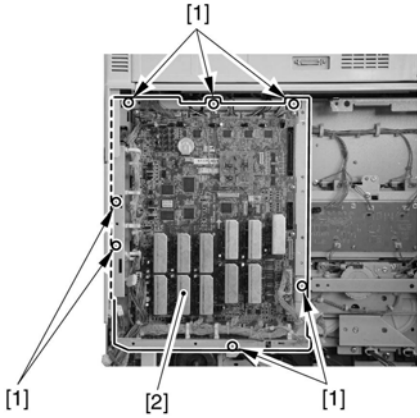

F-12-135

8) Remove the registration unit open/closed sensor mounting [3].
- 4 connectors [1]
- 1 screw [2]

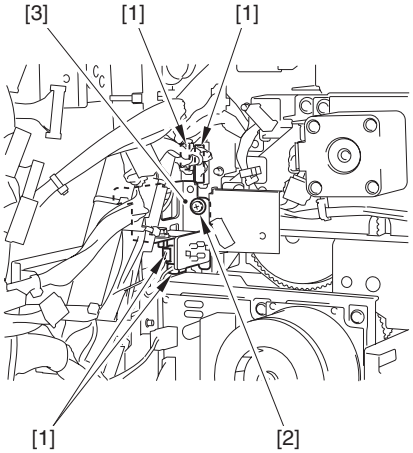

F-12-136

12.5.28.2 Removing the Manual Feed Unit Open/Close Switch

CLC5151 / / / CLC4040 / / / iR C4580i / / / iR C4080i / / / / Color Image Reader-F1 / Color Image Reader-E1 / Dupiex Color Image Reader-G1 / iR C5185N / / iR C5185i PRT /

1) Remove the manual feeder unit open/close switch [2].
- 1 screw [1]

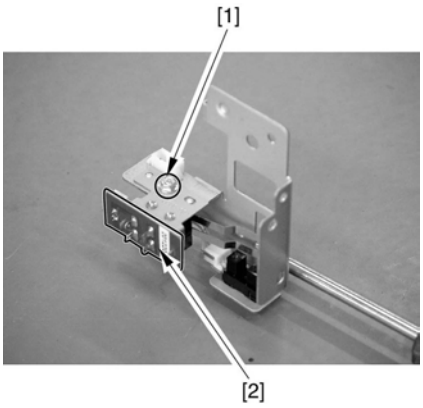

F-12-137

12.5.29 Front Cover Open/Closed Detecting Switch

12.5.29.1 Preparation for Removing the Front Cover Open/Close Switch

CLC5151 / / / CLC4040 / / / iR C4580i / / / iR C4080i / / / / Color Image Reader-F1 / Color Image Reader-E1 / Dupiex Color Image Reader-G1 / iR C5185N / / iR C5185i PRT /

1) Remove the control panel.(page 12-22)Reference[Removing the Control Panel]
2) Remove the inside cover (upper).(page 12-17)Reference[Removing the Inside Cover (Upper)]
3) Remove the rear upper cover.(page 12-16)Reference[Removing the Rear Upper Cover]
4) Remove the rear lower cover.(page 12-16)Reference[Removing the Rear Lower Cover]
5) Remove the left rear cover (upper).(page 12-15)Reference[Removing the Left Rear Cover (Upper)]
6) Remove the DC controller PCB cover [2].
   - 8 screws [1]

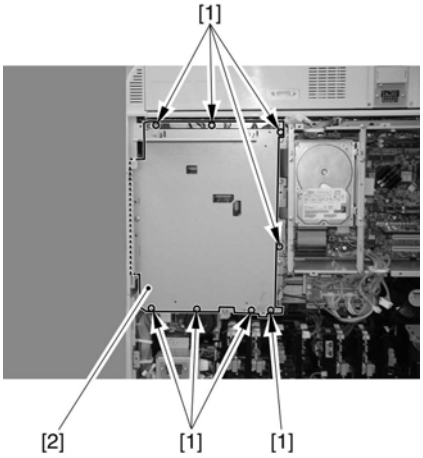

F-12-138

When Attaching the DC Controller PCB Cover
When attaching the cover, take care so that the cut-off will not come into contact with the latch of the flat cable. Otherwise, the flat cable can come loose.

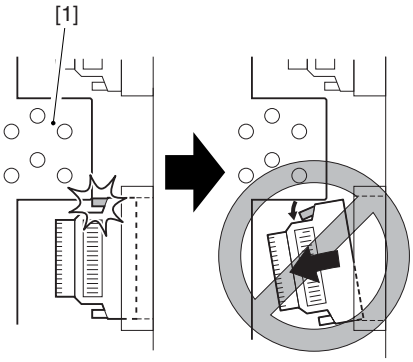

F-12-139

7) Remove the DC controller mounting.
7-1) Remove all connectors from the PCB, and free all harnesses from the cable clamps; then, remove the 7 screws [1], and remove the DC controller PCB [2] together with its base.

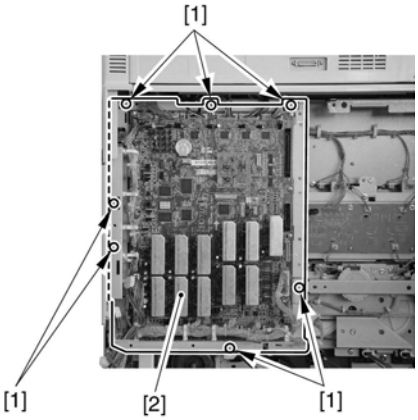

F-12-140

12.5.29.2 Removing the Front Cover Open/Close Switch

CLC5151 / / / CLC4040 / / / iR C4580i / / / iR C4080i / / / / Color Image Reader-F1 / Color Image Reader-E1 / Dupiex Color Image Reader-G1 / iR C5185N / / iR C5185i PRT /

1) Remove the right rear cover [3] while pulling the manual feeder feeding unit [1].
   - 3 screws [2]

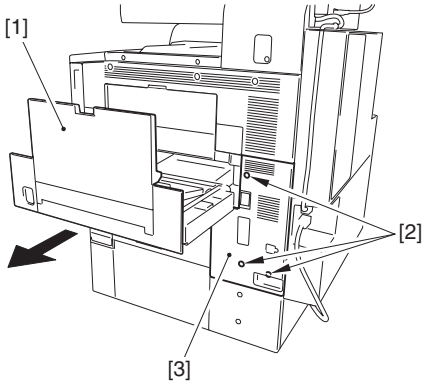

F-12-141

2) Remove the sensor flag pressure plate [2] on the front side.
   - 1 screw [1]

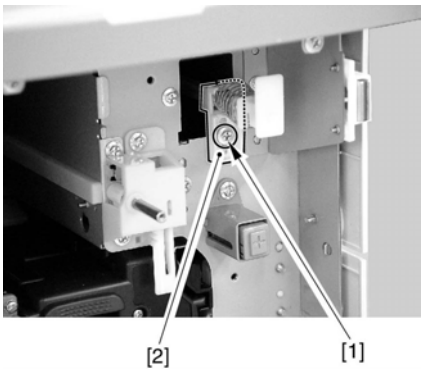

F-12-142

3) Pull the sensor mount [3]. (Sensor flag pressure plate is located from the end plate (front) to the end plate (rear))
- 2 connectors [1]
- 2 screws [2]

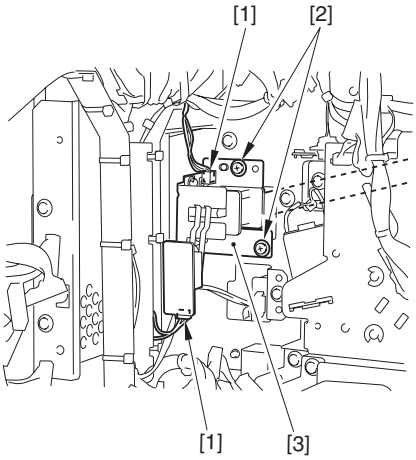

F-12-143

4) Remove the front cover open/close switch [2].
- 1 screw [1]

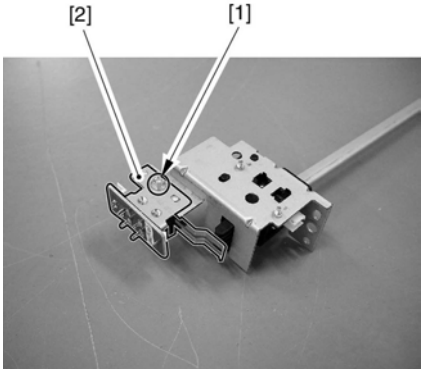

F-12-144

12.5.30 ITB Cooling Fan

12.5.30.1 Preparation for Removing the ITB Cooling Fan

CLC5151 / / / CLC4040 / / / iR C4580i / / / iR C4080i / / / / Color Image Reader-F1 / Color Image Reader-E1 / Dupiex Color Image Reader-G1 / iR C5185N / / iR C5185i PRT /

1) Remove the front cover.(page 12-14)Reference[Removing the Front Cover]
2) Remove the cleaner fan cover [2].
- 1 screw [1]

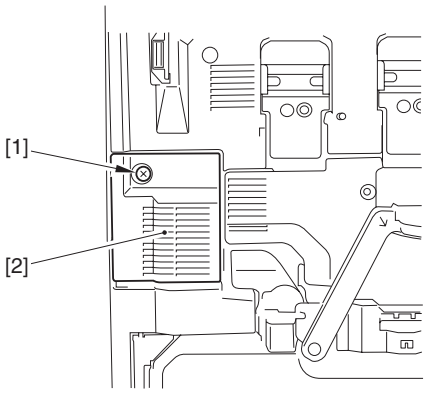

F-12-145

3) Remove the inside cover (lower side).(page 12-17)Reference[Removing the Inside Cover (Lower)]

12.5.30.2 Removing the ITB Cooling Fan

CLC5151 / / / CLC4040 / / / iR C4580i / / / iR C4080i / / / / Color Image Reader-F1 / Color Image Reader-E1 / Dupiex Color Image Reader-G1 / iR C5185N / / iR C5185i PRT /

1) From the back of lower inside cover, remove ITB fan cover.
- 2 screws [1]

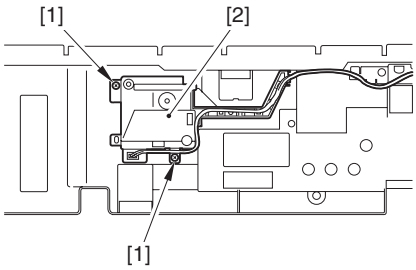

F-12-146

2) Remove ITB fan [2].
- 1 connector [1]

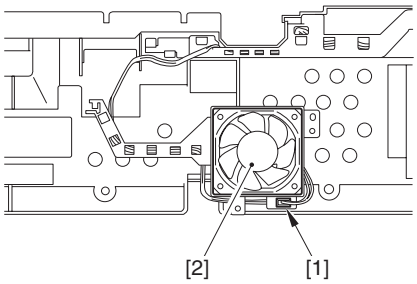

F-12-147

12.5.30.3 Removing the ITB Belt Dust Proof Filter

CLC5151 / / / CLC4040 / / / iR C4580i / / / iR C4080i / / / / Color Image Reader-F1 / Color Image Reader-E1 / Dupiex Color Image Reader-G1 / iR C5185N / / iR C5185i PRT /

1) Open the front cover.
2) Remove ITB Belt Dust Proof Filter[2].
- 1 screw [1]

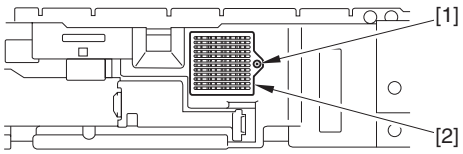

F-12-148

12.5.31 Face-down Tray Cooling Fan (rear/ front)

12.5.31.1 Preparation for Removing the Face-Down Tray Cooling Fan Unit

CLC5151 / / / CLC4040 / / / iR C4580i / / / iR C4080i / / / / Color Image Reader-F1 / Color Image Reader-E1 / Dupiex Color Image Reader-G1 / iR

C5185N / / iR C5185i PRT /

1) Remove the upper left cover.(page 12-14)Reference[Removing the Upper Left Cover]
2) Remove the delivery vertical path unit.(page 10-60)Reference[Removing the Delivery Vertical Path Unit]

12.5.31.2 Removing the Face-Down Tray Cooling Fan Unit

CLC5151 / / / CLC4040 / / / iR C4580i / / / iR C4080i / / / / Color Image Reader-F1 / Color Image Reader-E1 / Dupiex Color Image Reader-G1 / iR C5185N / / iR C5185i PRT /

1) Remove the face-down tray fan unit [3].
- 1 connector [1]
- 2 screws [2]

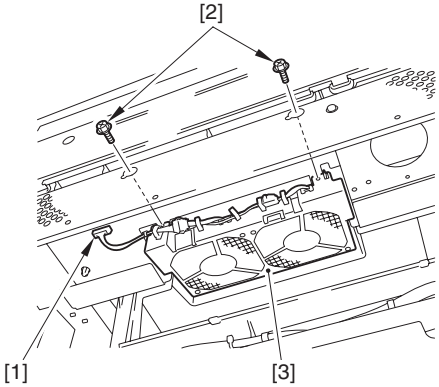

F-12-149

12.5.31.3 Preparation for Removing the Face-Down Tray Cooling Fan

CLC5151 / / / CLC4040 / / / iR C4580i / / / iR C4080i / / / / Color Image Reader-F1 / Color Image Reader-E1 / Dupiex Color Image Reader-G1 / iR C5185N / / iR C5185i PRT /

1) Remove the face-down tray cooling fan unit.(page 12-40)Reference[Removing the Face-Down Tray Cooling Fan Unit]

12.5.31.4 Removing the Face-Down Tray Cooling Fan

CLC5151 / / / CLC4040 / / / iR C4580i / / / iR C4080i / / / / Color Image Reader-F1 / Color Image Reader-E1 / Dupiex Color Image Reader-G1 / iR C5185N / / iR C5185i PRT /

There are 2 face-down tray fans side by side in the vicinity. Removing procedure is the same for both face-down tray fans.

1) Remove the face-down tray fans [5].
- 1 clamp [1]
- 1 wire saddle [2]
- 1 connector [3]
- 2 screws [4]

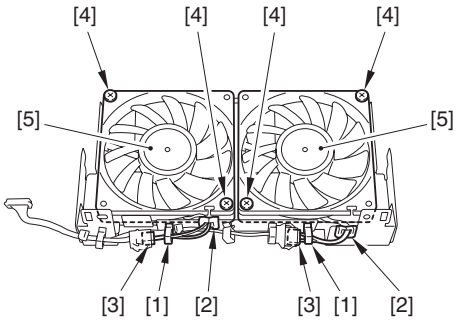

F-12-150

12.5.32 Cleaner Fan

12.5.32.1 Preparation for Removing the Cleaner Fan

CLC5151 / / / CLC4040 / / / iR C4580i / / / iR C4080i / / / / Color Image Reader-F1 / Color Image Reader-E1 / Dupiex Color Image Reader-G1 / iR C5185N / / iR C5185i PRT /

1) Remove the cleaner fan cover.
1-1) Open the front cover.
1-2) Remove the cleaner fan cover [2].
- 1 screw [1]

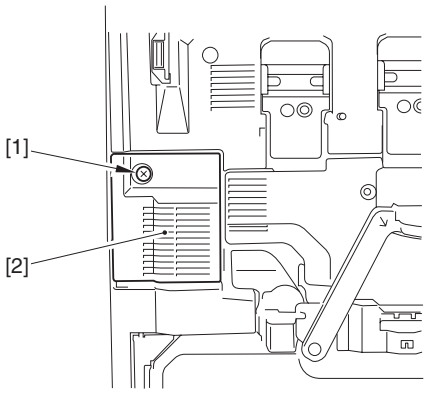

F-12-151

12.5.32.2 Removing the Cleaner Fan

CLC5151 / / / CLC4040 / / / iR C4580i / / / iR C4080i / / / / Color Image Reader-F1 / Color Image Reader-E1 / Dupiex Color Image Reader-G1 / iR C5185N / / iR C5185i PRT /

1) Remove the connector [1], and free the 3 claws; then, remove the cleaner fan [2].

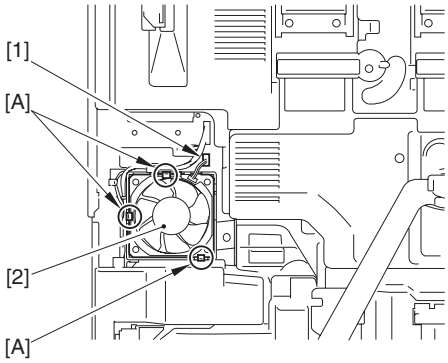

F-12-152

12.5.33 Manual Feed Cooling Fan

12.5.33.1 Preparation for Removing the Manual Feed Cooling Fan

CLC5151 / / / CLC4040 / / / iR C4580i / / / iR C4080i / / / / Color Image Reader-F1 / Color Image Reader-E1 / Dupiex Color Image Reader-G1 / iR C5185N / / iR C5185i PRT /

1) Remove the right rear cover.(page 12-14)Reference[Removing of the Right Rear Cover]
2) Remove the switch and the sheet metal around the fan.
- 5 screws [1]

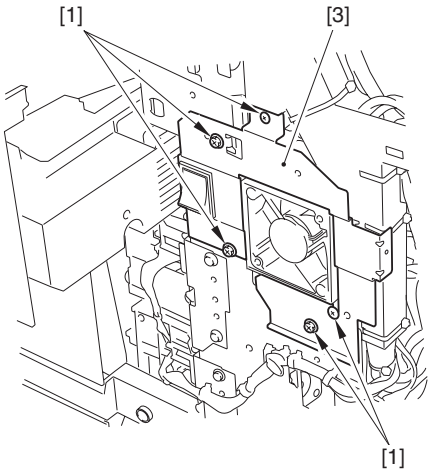

F-12-153

12.5.33.2 Removing the Manual Feed Cooling Fan

CLC5151 / / / CLC4040 / / / iR C4580i / / / iR C4080i / / / / Color Image Reader-F1 / Color Image Reader-E1 / Dupiex Color Image Reader-G1 / iR C5185N / / iR C5185i PRT /

1) Remove the manual feeder cooling fan [3].
   - 2 screws [1]
   - 1 connector [2]

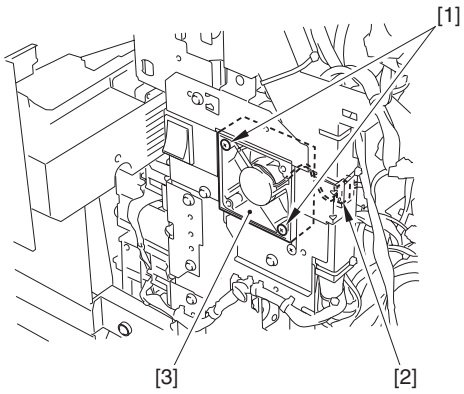

F-12-154

12.5.34 Fixing Heat Discharge Fan

12.5.34.1 Preparation for Removing the Fixing Heat Discharge Fan

CLC5151 / / / CLC4040 / / / iR C4580i / / / iR C4080i / / / / Color Image Reader-F1 / Color Image Reader-E1 / Dupiex Color Image Reader-G1 / iR C5185N / / iR C5185i PRT /

1) Remove the reader transmission cable.
2) Remove the rear fan cover.(page 12-15)Reference[Removing the Rear Fan Cover]
3) Remove the left rear cover (upper side).(page 12-15)Reference[Removing the Left Rear Cover (Upper)]
4) Remove the left rear cover (lower side).(page 12-15)Reference[Removing the Left Rear Cover (Lower)]
5) Remove the rear left cover (upper side).(page 12-17)Reference[Removing the Rear Left Cover (Upper)]

12.5.34.2 Removing the Fixing Heat Discharge Fan

CLC5151 / / / CLC4040 / / / iR C4580i / / / iR C4080i / / / / Color Image Reader-F1 / Color Image Reader-E1 / Dupiex Color Image Reader-G1 / iR C5185N / / iR C5185i PRT /

1) Remove 4 claws [A], and remove the filter unit [1].

Points to Note When Removing the Filter Unit
Take care so that the 4 claws will not break.

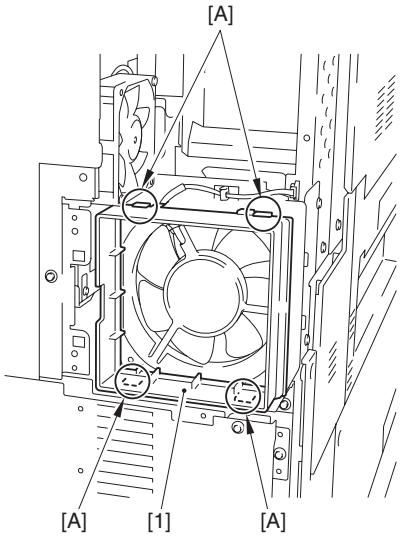

F-12-155

2) Remove the fixing heat discharge fan [3].
   - 1 connector [1]
   - 2 screws [2]

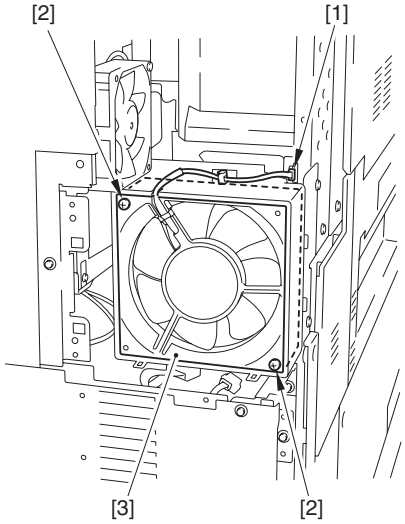

F-12-156

12.5.34.3 Preparation for Removing the Toner Filter (Fixing Heat Discharge Fan Filter)

CLC5151 / / / CLC4040 / / / iR C4580i / / / iR C4080i / / / / Color Image Reader-F1 / Color Image Reader-E1 / Dupiex Color Image Reader-G1 / iR C5185N / / iR C5185i PRT /

1) Remove the rear fan cover.(page 12-15)Reference[Removing the Rear Fan Cover]

12.5.34.4 Removing the Toner Filter (Fixing Heat Discharge Fan Filter)

CLC5151 / / / CLC4040 / / / iR C4580i / / / iR C4080i / / / / Color Image Reader-F1 / Color Image Reader-E1 / Dupiex Color Image Reader-G1 / iR C5185N / / iR C5185i PRT /

1) Remove the toner filter [1].

Points to Note When Removing the Fixing Heat Discharge Fan Filter
Remove the toner filter using a screwdriver through the cut-off found at the left of the fan filter.

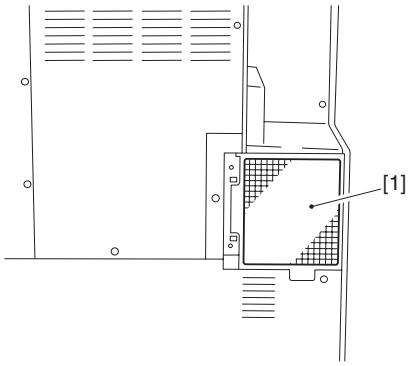

F-12-157

12.5.35 Power Supply Exhaust Fan

12.5.35.1 Preparation for Removing the Power Supply Exhaust Fan 1

CLC5151 / / / CLC4040 / / / iR C4580i / / / iR C4080i / / / / Color Image Reader-F1 / Color Image Reader-E1 / Dupiex Color Image Reader-G1 / iR C5185N / / iR C5185i PRT /

1) Remove the rear fan cover.(page 12-15)Reference[Removing the Rear Fan Cover]
2) Remove the rear lower cover.(page 12-16)Reference[Removing the Rear Lower Cover]
3) Remove the IH power supply unit.(page 12-21)Reference[Removing the IH Power Supply Unit]
4) Remove the DC power supply unit.(page 12-21)Reference[Removing the DC Power Supply Unit]

12.5.35.2 Removing the Power Supply Exhaust Fan 1

CLC5151 / / / CLC4040 / / / iR C4580i / / / iR C4080i / / / / Color Image Reader-F1 / Color Image Reader-E1 / Dupiex Color Image Reader-G1 / iR C5185N / / iR C5185i PRT /

1) Remove the power supply exhaust fan cover [2].
   - 1 screw [1]

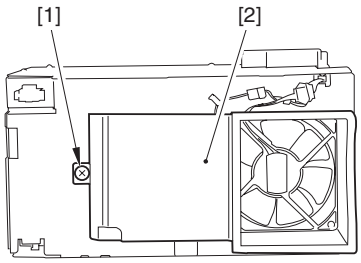

F-12-158

2) Remove the power supply exhaust fan 1 [3].
   - 1 connector [1]
   - 2 screws [2]

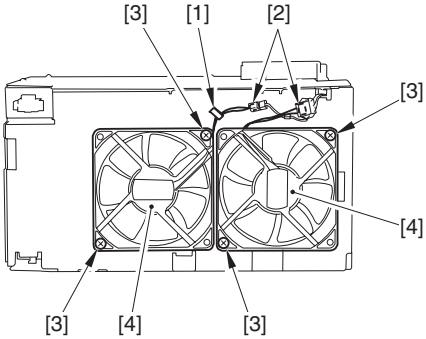

F-12-159

12.5.35.3 Preparation for Removing the Power Supply Exhaust Fan 2

CLC5151 / / / CLC4040 / / / iR C4580i / / / iR C4080i / / / / Color Image Reader-F1 / Color Image Reader-E1 / Dupiex Color Image Reader-G1 / iR C5185N / / iR C5185i PRT /

1) Remove the rear fan cover.(page 12-15)Reference[Removing the Rear Fan Cover]
2) Remove the rear lower cover.(page 12-16)Reference[Removing the Rear Lower Cover]
3) Remove the IH power supply unit.(page 12-21)Reference[Removing the IH Power Supply Unit]
4) Remove the DC power supply unit.(page 12-21)Reference[Removing the DC Power Supply Unit]

12.5.35.4 Removing the Power Supply Exhaust Fan 2

CLC5151 / / / CLC4040 / / / iR C4580i / / / iR C4080i / / / / Color Image Reader-F1 / Color Image Reader-E1 / Dupiex Color Image Reader-G1 / iR C5185N / / iR C5185i PRT /

1) Remove the power supply exhaust fan cover [2].
   - 1 screw [1]

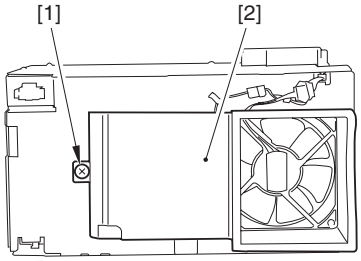

F-12-160

2) Remove the power supply exhaust fan 2 [4].
   - 1 clamp [1]
   - 1 connector [2]
   - 2 screws [3]

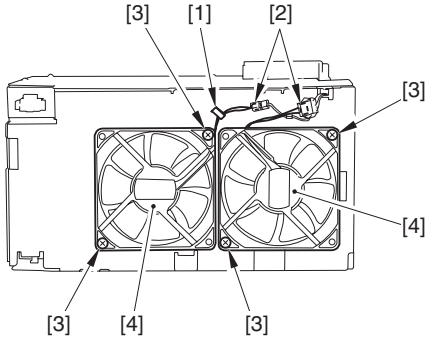

F-12-161

12.5.36 IH Power Supply Cooling Fan

12.5.36.1 Preparation for Removing the IH Power Supply Cooling Fan

CLC5151 / / / CLC4040 / / / iR C4580i / / / iR C4080i / / / / Color Image Reader-F1 / Color Image Reader-E1 / Dupiex Color Image Reader-G1 / iR C5185N / / iR C5185i PRT /

1) Remove IH power supply unit.(page 12-21)Reference[Removing the IH Power Supply Unit]

12.5.36.2 Removing the IH Power Supply Cooling Fan

CLC5151 / / / CLC4040 / / / iR C4580i / / / iR C4080i / / / / Color Image Reader-F1 / Color Image Reader-E1 / Dupiex Color Image Reader-G1 / iR C5185N / / iR C5185i PRT /

1) Remove IH power supply cooling fan [3].
   - 1 wire saddle [1]
   - 2 screws [2]

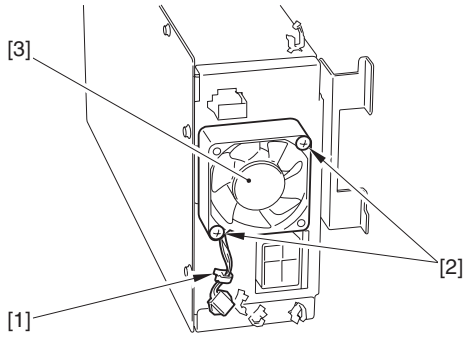

F-12-162

12.5.37 Delivery Cooling Fan

12.5.37.1 Preparation for Removing the Delivery Cooling Fan

CLC5151 / / / CLC4040 / / / iR C4580i / / / iR C4080i / / / / Color Image Reader-F1 / Color Image Reader-E1 / Dupiex Color Image Reader-G1 / iR C5185N / / iR C5185i PRT /

1) Remove the rear fan cover.(page 12-15)Reference[Removing the Rear Fan Cover]
2) Remove the rear upper cover.(page 12-16)Reference[Removing the Rear Upper Cover]
3) Remove the rear lower cover.(page 12-16)Reference[Removing the Rear Lower Cover]
4) Remove the left rear cover (lower side).(page 12-15)Reference[Removing the Left Rear Cover (Lower)]
5) Remove the secondary transfer high-voltage unit.(page 12-20)Reference[Removing the Secondary Transfer Hign-Voltage Unit]

12.5.37.2 Removing the Delivery Cooling Fan

CLC5151 / / / CLC4040 / / / iR C4580i / / / iR C4080i / / / / Color Image Reader-F1 / Color Image Reader-E1 / Dupiex Color Image Reader-G1 / iR C5185N / / iR C5185i PRT /

1) Remove the delivery cooling fan [3].
   - 1 clamp [1]
   - 2 screws [2]

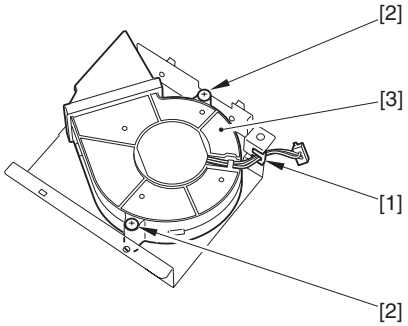

F-12-163

12.5.38 Machine Heat Discharge Fan

12.5.38.1 Preparation for Removing the Machine Heat Discharge Fan

CLC5151 / / / CLC4040 / / / iR C4580i / / / iR C4080i / / / / Color Image Reader-F1 / Color Image Reader-E1 / Dupiex Color Image Reader-G1 / iR C5185N / / iR C5185i PRT /

1) Remove the rear fan cover.(page 12-15)Reference[Removing the Rear Fan Cover]
2) Remove the rear upper cover.(page 12-16)Reference[Removing the Rear Upper Cover]
3) Remove the left rear cover (upper).(page 12-15)Reference[Removing the Left Rear Cover (Upper)]
4) Remove the rear left cover (upper).(page 12-17)Reference[Removing the Rear Left Cover (Upper)]

12.5.38.2 Removing the Machine Heat Discharge Fan

CLC5151 / / / CLC4040 / / / iR C4580i / / / iR C4080i / / / / Color Image Reader-F1 / Color Image Reader-E1 / Dupiex Color Image Reader-G1 / iR C5185N / / iR C5185i PRT /

1) Remove fan duct [2].
   - 2 screws [1]

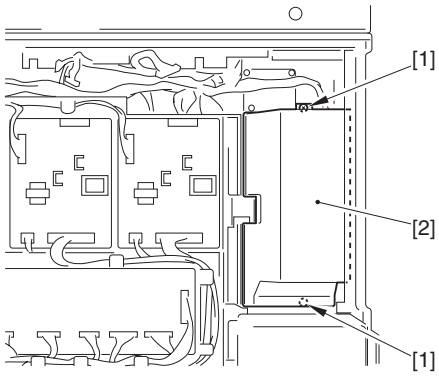

F-12-164

2) Remove the main body exhaust fan [3].
   - 1 connector [1]
   - 2 screws [2]

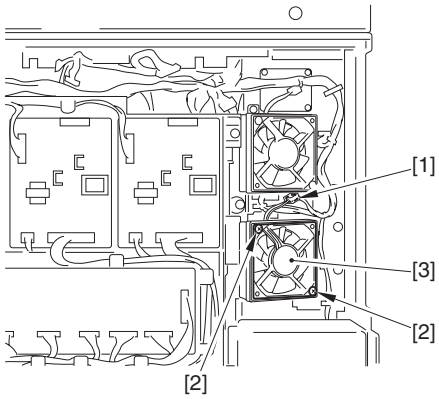

F-12-165

MEMO
The main body exhaust fan is the lower fan of the 2 located vertically.

12.5.39 Delivery Vertical Path Cooling Fan

12.5.39.1 Preparation for Removing the Delivery Vertical Path Cooling Fan

CLC5151 / / / CLC4040 / / / iR C4580i / / / iR C4080i / / / / Color Image Reader-F1 / Color Image Reader-E1 / Dupiex Color Image Reader-G1 / iR C5185N / / iR C5185i PRT /

1) Remove the upper left cover.(page 12-14)Reference[Removing the Upper Left Cover]
2) Remove the delivery vertical path cover.(page 10-61)Reference[Removing the Delivery Vertical Path Cover]
3) Remove the delivery vertical path unit.(page 10-60)Reference[Removing the Delivery Vertical Path Unit]

12.5.39.2 Removing the Delivery Vertical Path Cooling Fan

CLC5151 / / / CLC4040 / / / iR C4580i / / / iR C4080i / / / / Color Image Reader-F1 / Color Image Reader-E1 / Dupiex Color Image Reader-G1 / iR C5185N / / iR C5185i PRT /

1) Remove fan duct [2].
   - 3 screws [1]

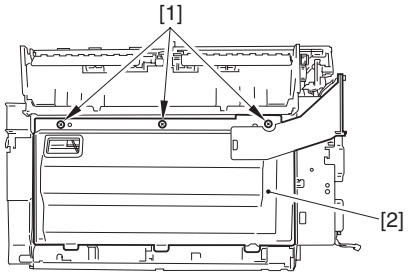

F-12-166

2) Remove the Delivery Vertical Path Cooling Fan [3].
- 1 connector [1]
- 2 screws [2]

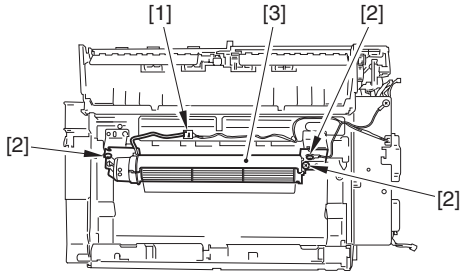

F-12-167

12.5.40 Delivery Vertical Path Exhaust Fan

12.5.40.1 Preparation for Removing the Delivery Vertical Path Exhaust Fan

CLC5151 / / / CLC4040 / / / iR C4580i / / / iR C4080i / / / / Color Image Reader-F1 / Color Image Reader-E1 / Dupiex Color Image Reader-G1 / iR C5185N / / iR C5185i PRT /

1) Remove the rear fan cover.(page 12-15)Reference[Removing the Rear Fan Cover]
2) Remove the rear upper cover.(page 12-16)Reference[Removing the Rear Upper Cover]
3) Remove the left rear cover (upper).(page 12-15)Reference[Removing the Left Rear Cover (Upper)]
4) Remove the rear left cover (upper).(page 12-17)Reference[Removing the Rear Left Cover (Upper)]

12.5.40.2 Removing the Delivery Vertical Path Exhaust Fan

CLC5151 / / / CLC4040 / / / iR C4580i / / / iR C4080i / / / / Color Image Reader-F1 / Color Image Reader-E1 / Dupiex Color Image Reader-G1 / iR C5185N / / iR C5185i PRT /

1) Remove fan duct [2].
- 2 screws [1]

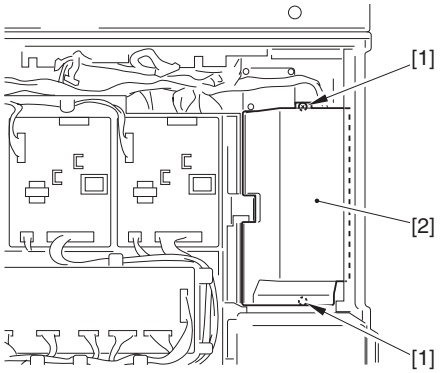

F-12-168

2) Remove the exhaust vertical path exhaust fan [3].
- 1 connector [1]
- 2 screws [2]

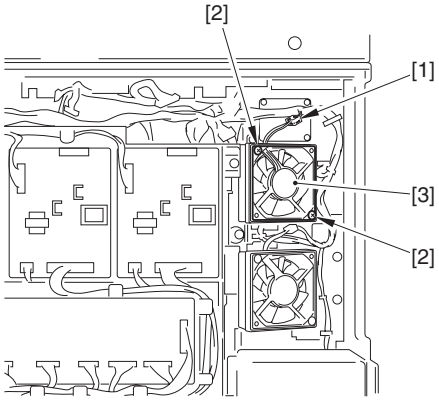

F-12-169

MEMO
The delivery vertical path exhaust fan is the upper fan of the 2 located vertically.

12.5.41 Drum Unit Drive Belt

12.5.41.1 Preparation for Removing the Drum Unit Drive Belt

CLC5151 / / / CLC4040 / / / iR C4580i / / / iR C4080i / / / / Color Image Reader-F1 / Color Image Reader-E1 / Dupiex Color Image Reader-G1 / iR C5185N / / iR C5185i PRT /

1) Remove the upper left cover.(page 12-14)Reference[Removing the Upper Left Cover]
2) Remove the lower left cover.(page 12-15)Reference[Removing the Left Lower Cover]
3) Remove the rear left cover (upper side).(page 12-17)Reference[Removing the Rear Left Cover (Upper)]
4) Remove the developing drive unit.(page 12-19)Reference[Removing the Developing Drive Unit]
5) Remove the lattice connector mount [4].
- 2 clamps [1]
- 2 screws [2]
- 6 connectors [3]

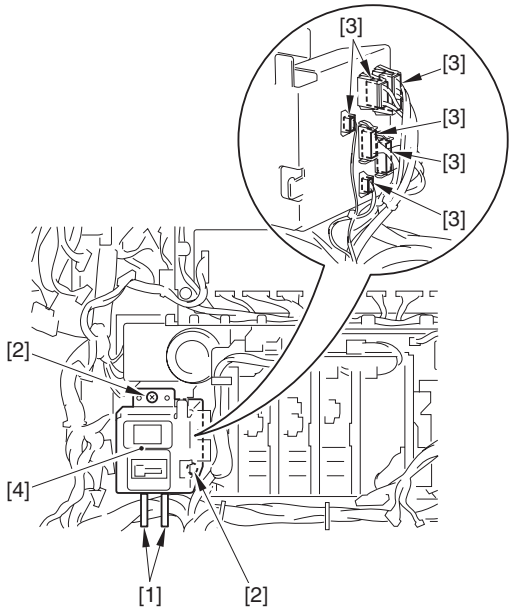

F-12-170

6) Remove the high voltage unit 2.(page 12-20)Reference[Removing the High-Voltage Unit 2]
7) Remove drum ITB motor base [3].
- 2 connectors [1]
- 3 screws [2]

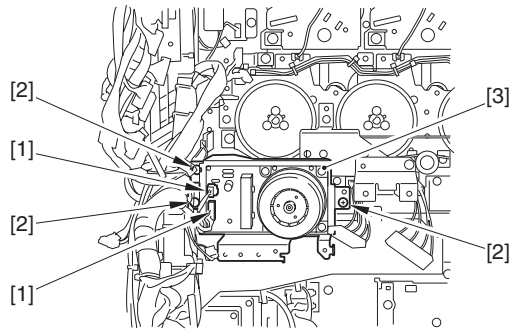

F-12-171

Points to Note When Removing the Drum ITB Motor Mounting

To remove, put your hand into the inside where you have slid out the manual feed unit; then, while holding down the swing plate [1] found to the rear of the drum drive unit, remove from the machine's rear side plate.
The drum drive unit is hooked on the protrusion from the rear side plate; lift it slightly to detach.

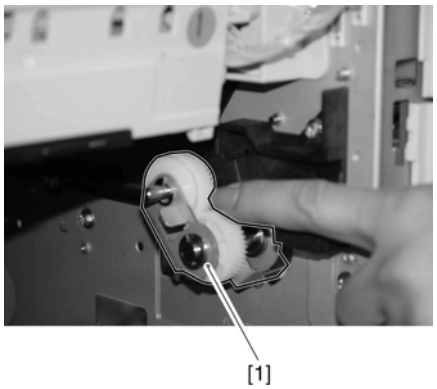

F-12-172

8) Remove the drum drive unit [3].
- 6 connectors [1]
- 7 screws [2]

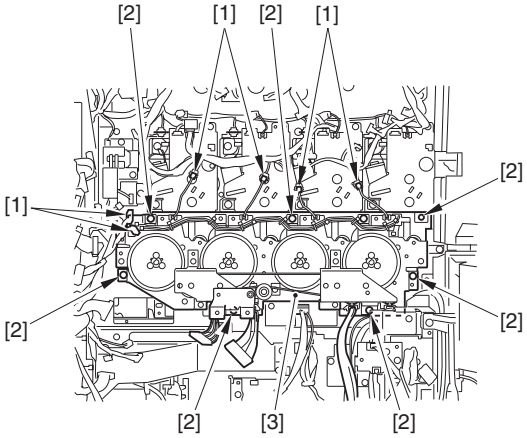

F-12-173

12.5.41.2 Removing the Drum Unit Drive Belt

CLC5151 / / / CLC4040 / / / iR C4580i / / / iR C4080i / / / / Color Image Reader-F1 / Color Image Reader-E1 / Dupiex Color Image Reader-G1 / iR C5185N / / iR C5185i PRT /

Never remove the screws [1] (identified by a red marking) used to secure the belt tension plate in place. (The plate is used to maintain a specific degree of tension on the belt.)

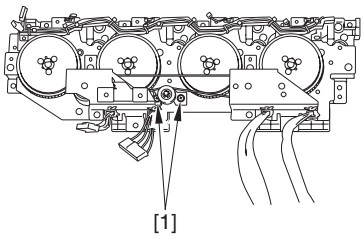

F-12-174

1) Remove the belt tension pulley cover [3] (2 positions on the right and left sides)
- 4 clamps [1]
- 4 screws [2]

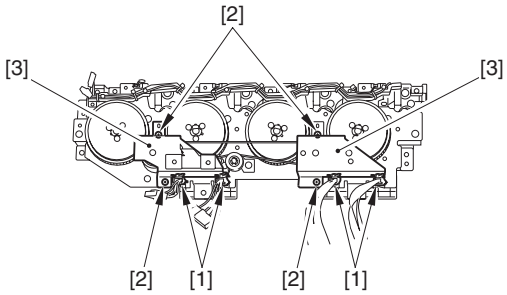

F-12-175

2) Remove the drum unit drive belt [2].
- the belt retaining roll [1] found on the right side

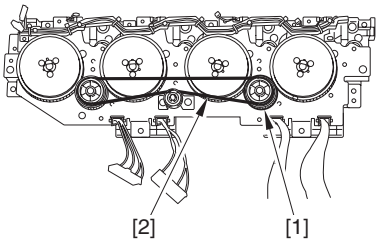

F-12-176

Chapter 13 MEAP

Contents

13.1 MEAP 13-1
13.1.1 Overview 13-1
13.1.2 Checking the Operating Environment. 13-1
13.1.3 MEAP Counter 13-3
13.1.4 Setting Up the Network 13-4
13.1.5 Construction of the MEAP Platform 13-5
13.1.6 Setting the method to login to SMS 13-5
13.1.7 Login to SMS 13-9
13.1.8 Checking Application List 13-10
13.1.9 Starting and Stopping a MEAP Application 13-11
13.1.10 Checking the Platform Information 13-12
13.1.11 MEAP Specifications 13-13
13.1.12 Checking the System Information of a MEAP Application with SMS 13-14
13.1.13 Printing the System Information of a MEAP Application 13-15
13.1.14 Reference (Application System Information) 13-16
13.1.15 Installing an Application 13-17
13.1.16 MEAP Enterprise Service Manager 13-19
13.1.17 Adding a License File 13-19
13.1.18 Disabling a License File (suspending a license) 13-21
13.1.19 Downloading/Removing an Invalidated License File 13-23
13.1.20 Reusable license 13-25
13.1.21 License for forwarding 13-26
13.1.22 Uninstalling an Application 13-28
13.1.23 Changing Login Services 13-29
13.1.24 Initializing the Password 13-33
13.1.25 Creating a Backup for MEAP Application Area, Formatting the Hard Disk, Restoring the MEAP Application Area with the Backup, Using the SST (Service Support Tool) 13-33
13.1.26 Replacing the Hard Disk Drive 13-35
13.1.27 MEAP Safe Mode 13-35
13.1.28 Setting HTTP port for MEAP application (level 2) 13-36
13.1.29 Reference material 13-39
13.1.30 Option for exclusive individual measure 13-40

13.1 MEAP

13.1.1 Overview

CLC5151 / / / CLC4040 / / / iR C4580i / / / iR C4080i / / / / Color Image Reader-F1 / Color Image Reader-E1 / Dupiex Color Image Reader-G1 / iR C5185N / / iR C5185i PRT /

The term MEAP stands for Multifunctional Embedded Application Platform, and is used to generically refer to a platform for software built into MFPs and peripheral equipment. The architecture is based on Java (J2ME, i.e., Java 2 Platform Micro Edition), and is designed to enable the execution of Java applications.
A MEAP application behaves independently from its host printer's system software, and may be installed or uninstalled using SMS (Service Management Service), which is an interface that runs as part of the browser on a PC. As long as the device supports MEAP, most MEAP applications may be added to the device in the field.

13.1.2 Checking the Operating Environment.

iR C5185N / / iR C5185i PRT /

This section lists the requirements on the operating environment for the maintenance.

Memo:
Java Script must be enabled in every environment.

Important:
For the following operations in the combined environment of Windows XP and Internet Explorer6, Java2 Runtime Environment Standard Edition 1.3.1 or later is required.
- User registration / edit in SDL
- User registration / edit in SSO local device
- Use of SSO remote login in SSO

Remote Login of Default Authentication or Simple Device Login (SDL), Remote UI, and Portal Services
Remote Login of Default Authentication or Simple Device Login (SDL), Remote UI, and Portal Services guarantee operation under the following system environment.

T-13-1

Operating System	Supported browser
Microsoft Windows 98 SE Microsoft Windows NT Workstation 4.0 SP6a	Microsoft Internet Explorer 5.01 SP2 Microsoft Internet Explorer 5.5 SP2 Microsoft Internet Explorer 6 SP1
Microsoft Windows ME	Microsoft Internet Explorer 5.5 SP2 Microsoft Internet Explorer 6 SP1
Microsoft Windows 2000 Professional SP3	Microsoft Internet Explorer 5.01 SP2 Microsoft Internet Explorer 5.5 SP2 Microsoft Internet Explorer 6 SP1
Microsoft Windows XP Professional / Home	Microsoft Internet Explorer 6 Gold Microsoft Internet Explorer 6 SP1
Mac OS 8.6 - 9.x	Microsoft Internet Explorer 5.0 - 5.1.6
Mac OS X 10 - 10.2.4	Microsoft Internet Explorer 5.2.2

Remote UI (RUI)
RUI guarantees operation under the following system environment.

T-13-2

Operating System	Supported browser
Microsoft Windows 98 SE Microsoft Windows ME Microsoft Windows NT Workstartion 4.0 Microsoft Windows 2000 Professional Microsoft Windows XP	Microsoft Internet Explorer 5.01 SP2 or later Netscape Communicator 4.6 or later
MacOS 8.6 or later	Microsoft Internet Explorer 5.0 or later

SMS
SMS guarantees operation under the following system environment.

T-13-3

Operating System	Supported browser
Microsoft Windows 98 SE	Microsoft Internet Explorer 5.5 SP2 Microsoft Internet Explorer 6 SP1
Microsoft Windows 2000 Professional	Microsoft Internet Explorer 5.5 SP2 Microsoft Internet Explorer 6 SP1
Microsoft Windows XP	Microsoft Internet Explorer 6 Microsoft Internet Explorer 6 SP1

SDL and SSO with Local Devoce Authentication (user registration/edit functions)
For user registration / edit in SDL and SSO(with Local Authentication), following system requirements must be satisfied.
System environment for administrator

T-13-4

Operating System	Supported browser
Microsoft Windows 98 SE	Microsoft Internet Explorer 5.5 SP2 Microsoft Internet Explorer 6 SP1

Operating System	Supported browser
Microsoft Windows 2000 Professional SP3	Microsoft Internet Explorer 5.5 SP2 Microsoft Internet Explorer 6 SP1
Microsoft Windows XP	Microsoft Internet Explorer 6 Microsoft Internet Explorer 6 SP1

System environment for end user

T-13-5

Operating System	Supported browser
Microsoft Windows 98 SE Microsoft Windows NT Workstation4.0	Microsoft Internet Explorer 5.0.1 SP2 Microsoft Internet Explorer 5.5 SP2 Microsoft Internet Explorer 6 SP1
Microsoft Windows ME	Microsoft Internet Explorer 5.5 SP2 Microsoft Internet Explorer 6 SP1
Microsoft Windows 2000 Professional	Microsoft Internet Explorer 5.0.1 SP2 Microsoft Internet Explorer 5.5 SP2 Microsoft Internet Explorer 6 SP1
Microsoft Windows XP Professional	Microsoft Internet Explorer 6 SP1

SSO domain authentication environment
Windows server for Security Agent to be installed
Security Agent (hereinafter SA) guarantees operation in the following system environment.

T-13-6

Hardware	Memory	256MB or more
	Hard disk	Empty capacity of 15MB or more
	CPU	Processor more than Intel Celeron 800 MHz corresponding
Software	OS	Microsoft Windows 2000 Professional SP4
		Microsoft Windows 2000 Server SP4
		Microsoft Windows XP Professional SP2
		Microsoft Windows Server 2003 SP1
		Microsoft Windows Server 2003 R2
Corresponding Active Directory		Microsoft Windows 2000 Server SP4
		Microsoft Windows Server 2003 SP1 *
		Microsoft Windows Server 2003 R2 *

* Construction of SSO domain environment by using Active Directory of Microsoft Windows Server 2003 needs SA of version 2.0.1 or newer, SSO Login application of version 3.0.0 or newer.

Combination list of the versions of SSO Login application of MEAP device and SA

T-13-7

Product Nameof MEAP Device			Version of SSO Login Application	Version of SA						
US	EU	AO		V1.1.0	V1.2.0	V1.3.0	V1.3.1	V2.0.0	V2.0.1	V3.0.1
iR5020/ iR5020i/ iR6020/ iR6020i	iR5020N/ iR5020i/ iR6020N/ iR6020i	iR5020i/ iR6020i	V1.1.0	A	A	A	A	A	A	A
iR2220i/ iR2220N/ iR3320i/ iR3320N	iR2220i/ iR2220N/ iR3320i/ iR3320N	iR2220i/ iR3320i	V1.1.0	A	A	A	A	A	A	A
iR C3220/ iR C2620	iR C3220/ iR C2620	iR C3220/ iR C2620	V1.1.1	A	A	A	A	A	A	A
iR 2270/ iR 2870/ iR 3035/ iR 3045	iR 2270 / iR 2870/ iR 3035/ iR 3045	iR 2270 /2870/3035/3045	V1.1.2	A	A	A	A	A	A	A
			V2.2.7	A	A	A	A	B	B	B
iR85+/ iR8070/ iR105+/ iR9070	iR85+/ iR8070/ iR105+/ iR9070	iR85+/ iR8070/ iR105+/ iR9070	V1.1.3	A	A	A	A	A	A	A
			V2.2.7	A	A	A	A	B	B	B
iR 5570/ iR 6570	iR 5570 / 6570	iR 5570 / 6570	V2.0.0, V2.2.9	A	A	A	A	B	B	B
iR C3170U/ iR C3170i	iR 3170C/ iR 3170Ci/ iR C2570/ iR C2570i	iR C3170/ iR C3170i/ iR C2570/ iR C2570i	V2.2.6	A	A	A	A	B	B	B
iR C5870U/ iR C6870U	iR 5870C/ iR 5870Ci/ iR 6870C/ iR 6870Ci	iR C5870/ iR C5870i/ iR C6870/ iR C6870i	V2.4.0	A	A	A	A	B	B	B
iR7086/ iR7095/ iR7095 Printer/ iR7105	iR7086/ iR7095/ iR7095 P/ iR7105	iR7086/ iR7095/ iR7095 P/ iR7105	V2.5.0	A	A	A	A	B	B	B
iR C5180i/ iR C4580i/ iR C4080i	iR C4080/ iR C4080N/ iR C4580/ iR C4580N/ iR C5180/ iR C5180N	iR C4080/ iR C4080N/ iR C4580/ iR C4580N/ iR C5180/ iR C5180N	V3.0.0	A	A	A	A	B	C	C

Product Nameof MEAP Device			Version of SSO Login Application	Version of SA						
US	EU	AO		V1.1.0	V1.2.0	V1.3.0	V1.3.1	V2.0.0	V2.0.1	V3.0.1
imagePRESS C1	imagePRESS C1	imagePRESS C1	V3.1.0	A	A	A	A	B	C	C
iR C2880/ iR C3380	iR C2880 / C3380	iR C2880 / C3380	V3.2.0	A	A	A	A	B	C	C
iR3025/ iR3030/ iR3035/ iR3045	iR3025/ iR3030/ iR3035/ iR3045	iR3025/ iR3030/ iR3035/ iR3045	V3.4.1	A	A	A	A	B	C	C
iR 5055/ iR 5065/ iR 5075	iR 5055/ iR 5065/ iR 5075	iR 5055/ iR 5065/ iR 5075	V3.5.0	A	A	A	A	B	C	C
iR C5185	iR C5185	iR C5185	V3.4.1	A	A	A	A	B	C	C

A = SSO basic function support
B = SSO basic function + Multi domain function + LLS cache function support
C = SSO basic function + Multi domain function + LLS cache function support + Server 2003 Active Directory support

Memo:
-It must improve in the version of SSO Login application and version of SA when you want to use the function B or C.
-The right of access to the domain controller and the right of access to the Windows 2003 DNS are necessary, when the domain authentication is used with SSO.

Important:
-The device using SSO authentication and the Windows server on which Security Agent is installed must exists in the same domain.
-In the case that Security Agent has been installed in Windows XP Professional SP2, Windows Server 2003 SP1/Server 2003 R2 and Windows Firewall is set enabled, Security Agent (SA.exe) needs to be added as an exceptional program of Windows Firewall. If not being designated a directory of installation, SA.exe is stored in the following directory. C:\Program Files\Canon\SSOPackage\SecurityAgent
-In the case that Active Directory has been constructed in Windows Server 2003 SP1/Server 2003 R2 and Windows Firewall is set enabled, TCP port '5678' used by Security Agent needs to be added in Windows Firewall.

Browser
The following combinations of operations are guaranteed for the access from Web browser to MEAP device.

T-13-8

OS	Supported Browser
Microsoft Windows 98SE Microsoft Windows NT Workstation 4.0 SP6a	Microsoft Internet Explorer 5.01 SP2, Microsoft Internet Explorer 5.5 SP2, Microsoft Internet Explorer 6 SP1
Microsoft Windows ME	Microsoft Internet Explorer 5.5 SP2, Microsoft Internet Explorer 6 SP1
Microsoft Windows 2000 Professional SP3	Microsoft Internet Explorer 5.01 SP3, Microsoft Internet Explorer 5.5 SP2, Microsoft Internet Explorer 6 SP1,
Microsoft Windows XP Professional	Microsoft Internet Explorer 6 SP1,

13.1.3 MEAP Counter

CLC5151 / / / CLC4040 / / / iR C4580i / / / iR C4080i / / / / Color Image Reader-F1 / Color Image Reader-E1 / Dupiex Color Image Reader-G1 / iR C5185N / / iR C5185i PRT /

In addition to the commonly found print counters, a device that supports MEAP is equipped with a counter mechanism used to keep track of which functions are used as well as how often they are used for individual MEAP applications that are installed. The MEAP counter readings may be checked by making the following selections on the device control panel: Counter Check Key>MEAP Counter Check. A device may possess the following MEAP counters, and which counter to use and, therefore, to display all depend on the application in question.
A counter reading may be of a type that is forced to increase as a job is expected or of a type that is increased when the application sends instructions; or, it may be of a type that increases independently of the host device, thus increasing solely in response to the application being run; specifics are as follows:

T-13-9

Type	Count item
forced	total
	total (black-and-white 1)
	total (black-and-while large)
	scan (total 1)
	black-and-white scan (total 1)
in response to instructions from application	black-and-white scan 1
	black-and-white scan 2
	black-and-white scan 3
	black-and-white scan 4
application-independent	free 1
	free 2
	free 3
	free 4
	free 5
	free 6
	free 7
	free 8
	free 9
	free 10

Type	Count item
	free 11
	free 12

MEMO:
forced: the device forces the counter to increase its reading in response to execution of a job.
in response to instructions from application: the counter increases its reading only in response to instructions from the application.
application independent: the counter operates according to the specifications of the application.

13.1.4 Setting Up the Network

iR C5185N / / iR C5185i PRT /

To allow a MEAP device to accept accesses through the network, for example you operate a device with SMS, the On option must be selected on Use HTTP screen. The option is selected by default. The setting can be changed on the control panel of the MEAP device.

1) Make the following selections: **Ad Func** button > **System Settings** button> **Down-arrow** button.

Memo:
If the System manager ID and system password have already been assigned, ID Entry dialog appears after System Settings button is pressed. Enter the system manager ID and the password, and click ID key to go into System Management Mode.

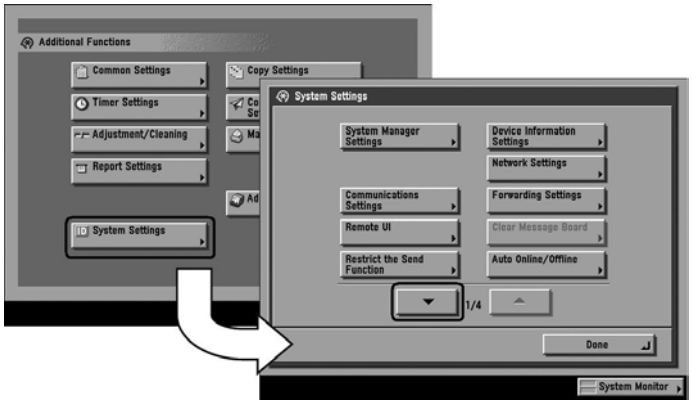

F-13-1

2) Make the following selections: **MEAP Settings** button > **Use HTTP** button> On button > **OK** button .

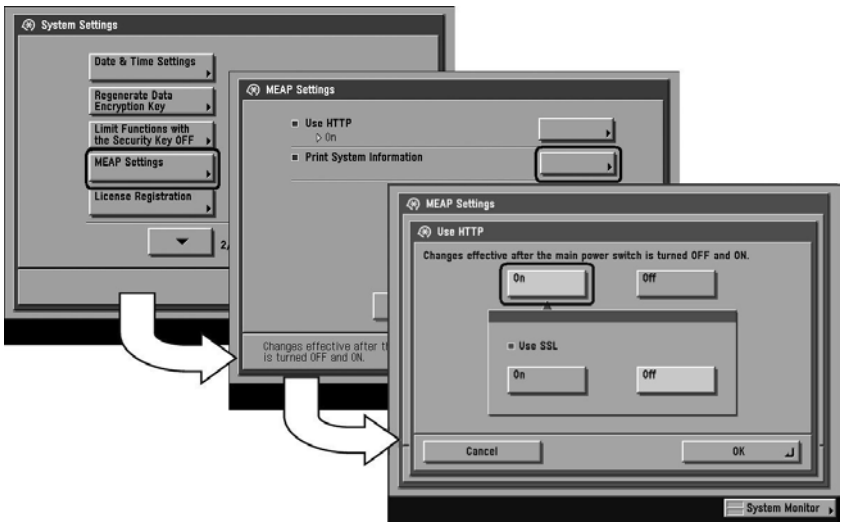

F-13-2

Memo:
When using SSL, set [Use SSL] ON.
(This setting is also applied to the SSL setting of RUI. Same is true in the case of setting SSL ON on the side of RUI.)

Setting [Use SSL] ON displays the message dialogue 'Changes effective after the main power switch is turned OFF and ON' . Press [OK].

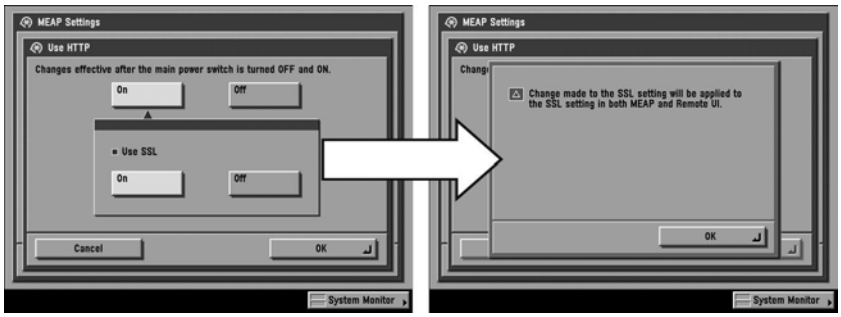

F-13-3

3) Press Done button as many times as necessary until the Basic screen appears.
4) Turn off the device's main power; wait for 10 sec, and then turn the power back on.

- The setting [Use HTTP] is not actually enabled/disabled until you have turned off and then on the device's main power switch.
- You cannot make a connection through a proxy server. If a proxy server is in use, enter the IP address of the MEAP device in the Exceptions field for the browser. Open Internet Options dialog of Internet Explorer and select Connections tab, LAN Settings button, Use a proxy server option, and Advanced button of Proxy server group. Proxy Settings dialog will opens. The Exceptions field is in the dialog. As network settings vary among environments, consult the network administrator.
- If Cookie and JavaScript are not enabled in the Web browser, you will not be able to use SMS.
- To type text using the Web browser, use the characters compatible with the MEAP device's touch panel display. The MEAP device may not properly recognize some characters.
- When [se SSL] is made available, it is necessary to set the key and the certificate necessary for the SSL communication. Set the key and the certificate by SSL with [Certificate Settings] that exists in [System Settings] > [Network Settings] > [TCP/IP Settings] on the iR device.

13.1.5 Construction of the MEAP Platform

CLC5151 / / / CLC4040 / / / iR C4580i / / / iR C4080i / / / / Color Image Reader-F1 / Color Image Reader-E1 / Dupiex Color Image Reader-G1 / iR C5185N / / iR C5185i PRT /

In addition to the installation of the system software, language file, and RUI, a printer equipped with MEAP functions calls for the installation of MEAP content, which offers functions (system services) needed to run MEAP applications and class libraries needed by the MEAP applications to control the device.
It is important that the version of the system software be fully compatible with the version of the MEAP content, calling for special care. (In the case of a mismatch, the device will not be able to run the MEAP application.) For version information, refer to the Service Information bulletin that is released in conjunction with the system software.

The following shows the components of a MEAP application:

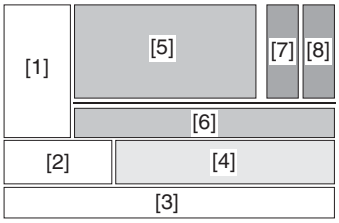

F-13-4

[1] User Interface Control Bock
installed as part of the system software
[2] Device Control Block
installed as part of the system software
[3] Operating System
installed as part of the system software
[4] Java VM
installed as part of the system software
[5] MEAP System Services (includes SDL/SSO)
installed as part of MEAP content
[6] Device Control Class Library
installed as part of MEAP content
[7] internally developed application
[8] externally developed application

13.1.6 Setting the method to login to SMS

iR C5185N / / iR C5185i PRT /

SMS Installer Service, which is used to login SMS includes Password Authentication and Remote Login Service Authentication (henceforce: RLS Authentication). Password Authentication is an authentication method only by password. RLS Authentication is an authentication method using SDL / SSO by ID and password. Either or both of the authentication methods can be enabled by changing the setting.

Memo:
If Default Authentication is selected as the device authentication method, 'RLS Authentication' is not selectable as SMS Login method. Also, if 'RLS Authentication' is selected, the device authentication method (Default Authentication, SDL, SSO) cannot be changed.

Setting of login method to SMS (Start/Stop) must be made after logging-in by the other login method. In other words, setting for Start/Stop of Password Authentication is made after logging-in with RLS Authentication, and setting for Start/Stop of RLS Authentication is made after logging-in with Password Authentication.

The table below shows the setting methods for each combination of login method and Start/Stop.

T-13-10

	Start RLS Authentication	Stop RLS Authentication
Start Password Authentication	Login available with either method	Login available only with Password Authentication
Stop Password Authentication	Login available only with RLS Authentication	Setting unavailable

When only RLS Authentication is enabled, there may be a case you cannot login to device for the following reasons.
- Authentication server down
- Disconnection with authentication server due to network failure

In these cases, boot the device as MEAP SAFE mode from device service mode.
By booting the device as MEAP SAFE mode, login to SMS becomes available as Default Authentication is enabled. After login to SMS, set RLS Authentication as Started, return the device to normal mode, and then login by RLS Authentication.

Setting for login by Password Authentication

1) In order to make a setting for login by Password Authentication, you need to login by RLS Authentication. Therefore, login by RLS Authentication.

Login screen (In case authentication method is SSO)

F-13-5

2) Select 'System Management' tab > 'Utility' tab > 'Application Management Function' tab.

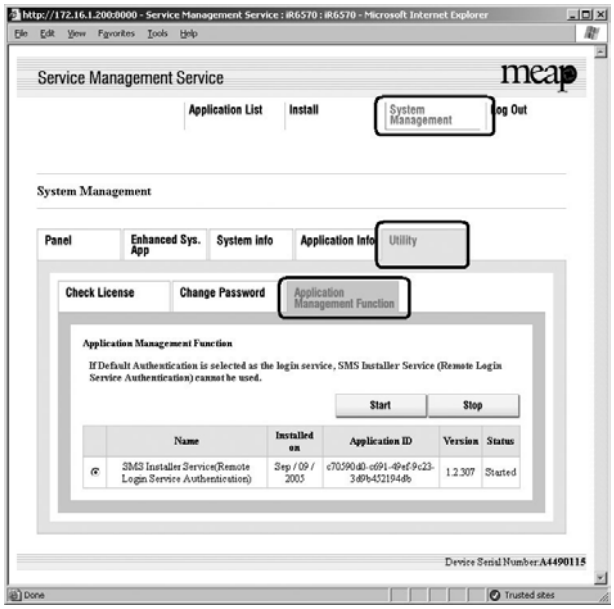

F-13-6

3) In order to enable login by Password Authentication, tick SMS Installer Service (Password Authentication) radio button and then click [Start]. On the other hand, in order to disable login by Password Authentication, clear the tick of SMS Installer Service (Password Authentication) radio button and click [Stop].

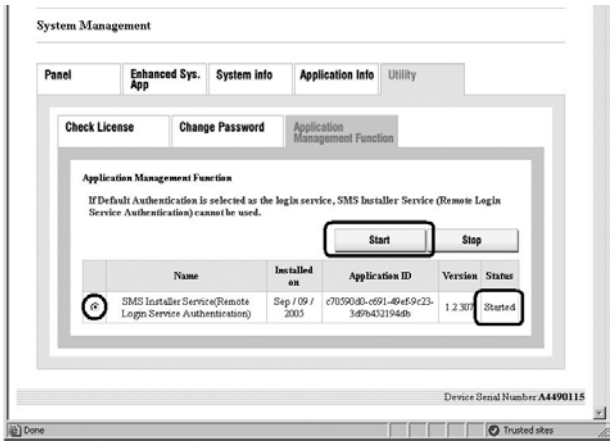

F-13-7

4) Logout once and login again to check to see that the setting is applied properly. In case the setting is changed from 'Stop' to 'Start', login screen that was not seen before is displayed. In case the setting is changed from 'Start' to 'Stop', access to login screen leads to the screen below and login becomes unavailable.

Login error screen

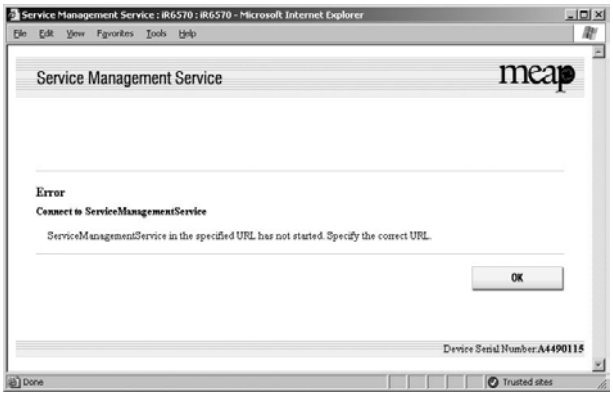

F-13-8

Setting for login by RLS Authentication
1) In order to make a setting for Login by RLS Authentication, you need to Login by Password Authentication.

Login screen by Password Authentication

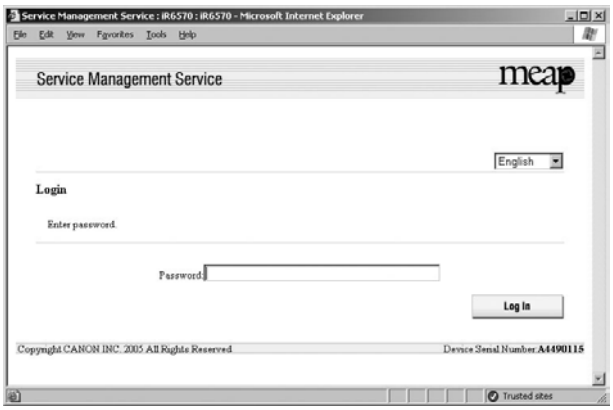

F-13-9

2) Select 'System Management' tab > 'Utility' tab > 'Application Management Function' tab.

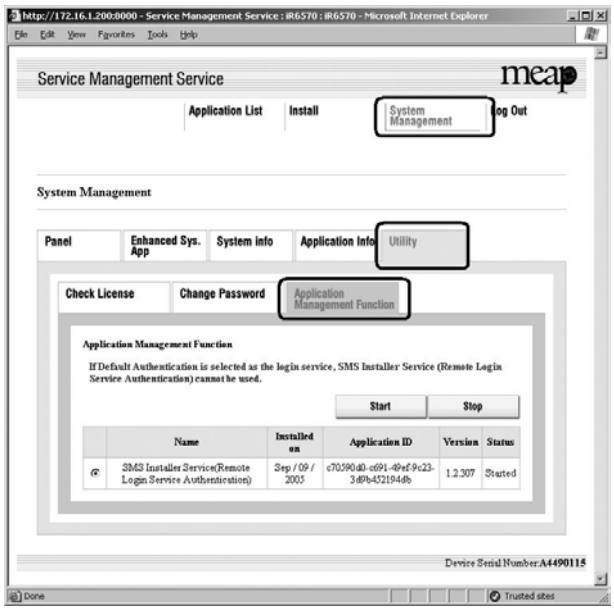

F-13-10

3) In order to enable Login by RLS Authentication, tick SMS Installer Service (Remote Login Service Authentication) radio button and then click [Start]. On the other hand, in order to disable login by RLS Authentication, clear the tick of SMS Installer Service (Remote Login Service Authentication) radio button and click [Stop].

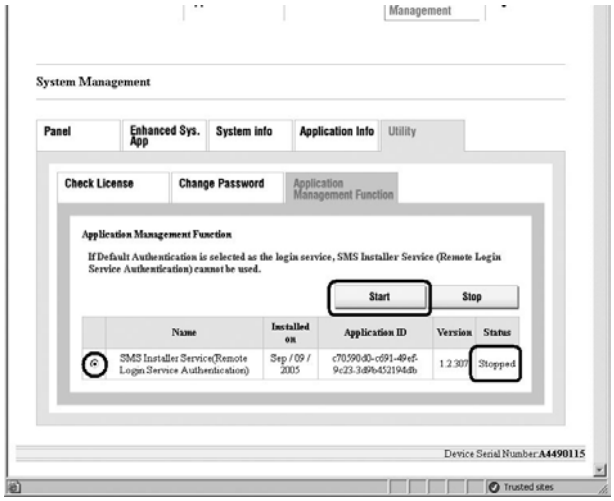

F-13-11

4) Logout once and login again to check to see that the setting is applied properly. In case the setting is changed from 'Stop' to 'Start', login screen that was not seen before is displayed. In case the setting is changed from 'Start' to 'Stop', access to login screen leads to the screen below and Login becomes unavailable.

Login error screen

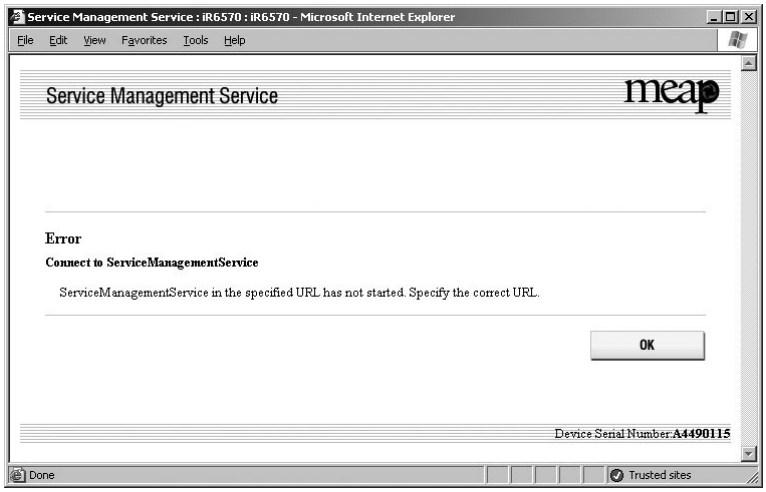

F-13-12

13.1.7 Login to SMS

iR C5185N / / iR C5185i PRT /

Login by Password Authentication

1) Access SMS from the browser of the PC connected to the network on which the MEAP device operates.
URL: http://<MEAP Device IP address>:8000/sms/
Ex.)http://172.16.188.240:8000/sms/

Memo:
- The default password is "MeapSmsLogin." (The password is case-sensitive.)
- When you want to change the display original language, change in the box in the right of the screen. This setting is not affect by the setting of the language of the device.

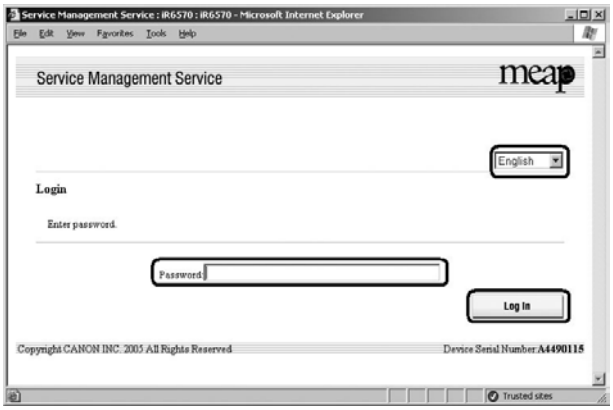

F-13-13

2) The following screen appears if the password has been changed by the user's system administrator. If so, check with the system administrator for the new password. Keep in mind that there is no special password offered for service work.

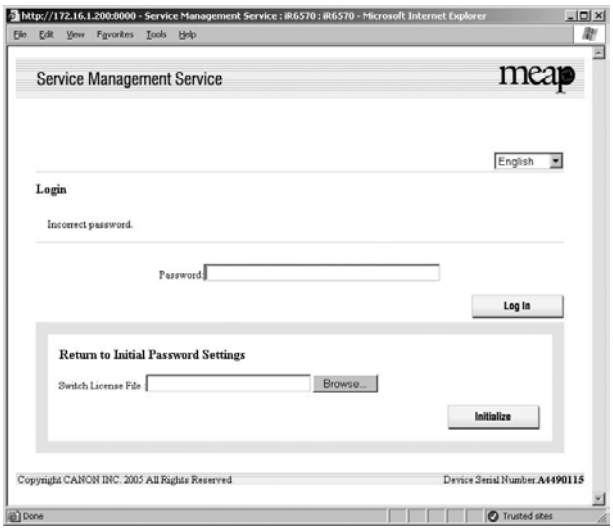

F-13-14

Login by RLS Authentication

1) Access SMS by RLS Authentication from the PC browser on the same network as the MEAP device.
URL: http://<IP address of MEAP device>:8000/sms/rls/
Ex.) http://172.16.188.240:8000/sms/rls

Memo:
- In case the device authentication method is SSO and login to domain, enter User Name, Password, and Login Destination registered in Active Directory, and click 'Log in'.
- In case the device authentication method is SDL or SSO and login to 'this device', enter User Name and Password registered in the device and click 'Log in'.

In the case the device authentication method is SSO

F-13-15

In the case the device authentication method is SDL

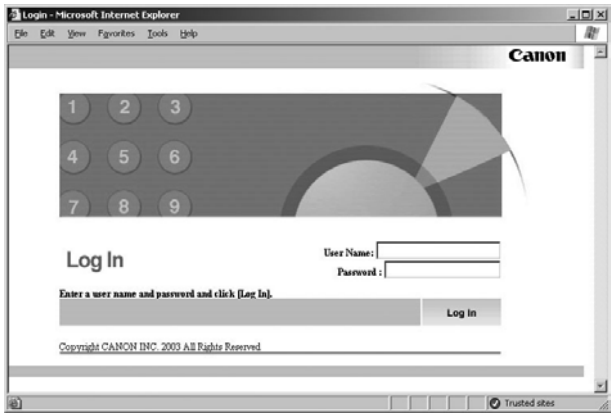

F-13-16

13.1.8 Checking Application List

iR C5185N / / iR C5185i PRT /

The page of **Application List** is designed to show resources arranged according to applications. The page gives you a good idea of how much of the device's memory is being used by the applications (both in absolute and relative terms) as well as how much memory still remains. Check this page before adding an application.

The information is collected from the manifest (headers) - in other words, the size of a resource represents the size as it is declared by the application in question, not necessarily the size of resources actually used by the application. The items of information include the following:
- hard disk
- memory
- thread
- socket
- file descriptor

You will not be able to install an application if the size of the remaining memory falls short of the size declared by the application. Moreover, the specifications have been designed so that an application will not be able to start up if there is a shortage of memory for any of the foregoing items (i.e., memory, thread, socket, file descriptor). To find out if there is enough memory, go through the following steps:

1) Log in to SMS.

2) Click Application List tab.

3) Check the displayed information:

a. Information on Applications
- Name (of the application)
- Installation (date)
- Application ID
- Status
- License
- Resources Used

b. Resource Information
- Amount Used
- Remaining
- Percent Used

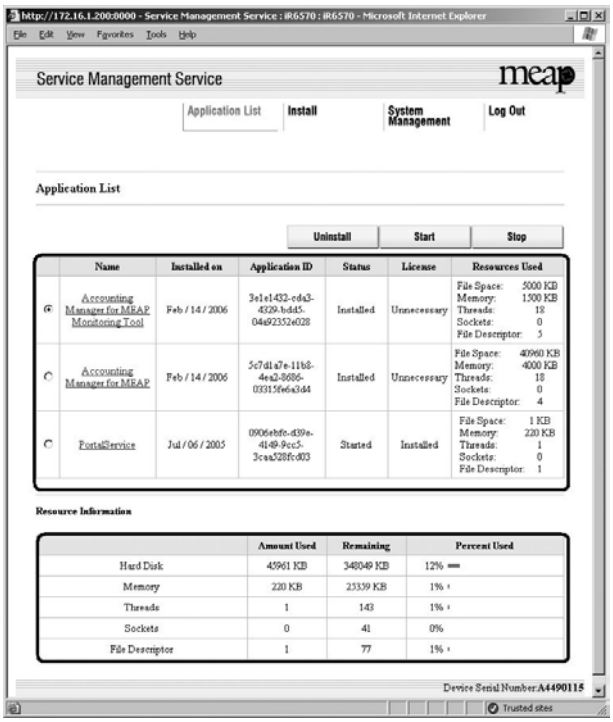

F-13-17

13.1.9 Starting and Stopping a MEAP Application

iR C5185N / / iR C5185i PRT /

1) Log in to the SMS.

2) Click 'Application List'.

3) Click the radio button of the MEAP application in question, and click 'Start' or 'Stop'.

F-13-18

4) Check to see that the status of the MEAP application in question is either "Started" or "Stopped."

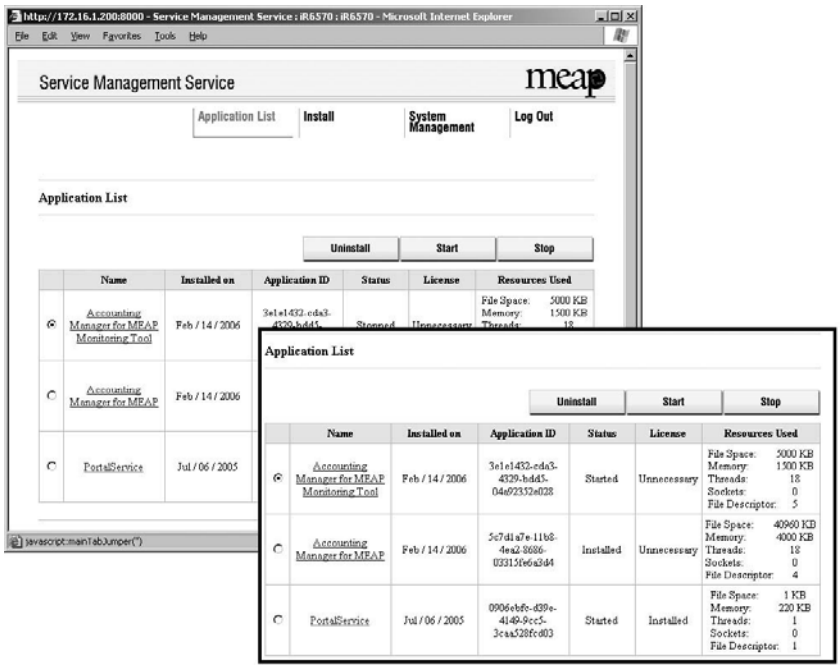

F-13-19

13.1.10 Checking the Platform Information

iR C5185N / / iR C5185i PRT /

You can check the versions of MEAP Contents, MEAP Specifications, and Java Virtual Machine of the device.

Some applications may not be installed to some MEAP devices of specific specifications. (See 'MEAP Specifications').

1) Log in to SMS.

2) Click **System Management** tab.

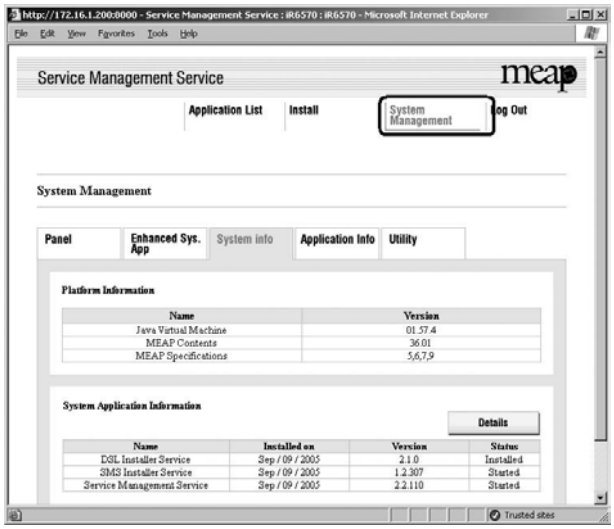

F-13-20

3) Click **System Info** tab.

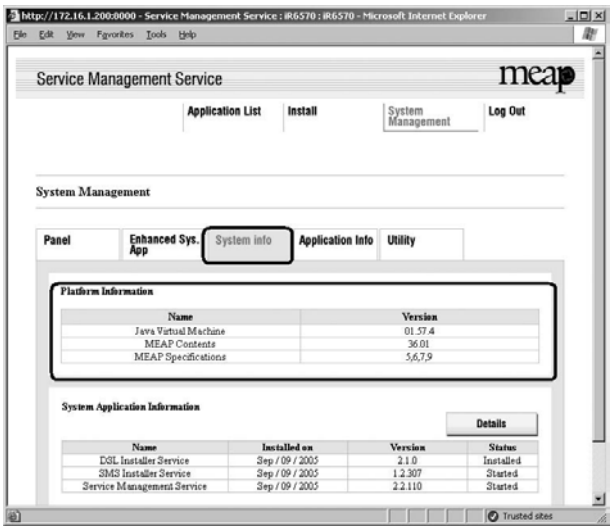

F-13-21

13.1.11 MEAP Specifications

iR C5185N / / iR C5185i PRT /

What is MEAP Specifications (MEAP Spec Version)?
MEAP Specifications is one of the information required to judge whether MEAP applications can be operated or not. With MEAP Specifications, you can prevent an application that uses a specific function of device from being installed onto the device that does not have the function.

About Name
MEAP Specification is shown as 'MEAP Specifications' in the screen to check the version on the side of device that supports MEAP (counter confirmation button) and MEAP platform (SMS). On the other hand, in the manifest file of MEAP application, it is shown as 'MeapSpecVersion' (described in the same way in the SDK document)
(Note) 'MEAP Specifications' hereafter in this document.

Mechanism
MEAP platform judges whether MEAP applications can be operated on it using on the 2 information below:
- Device Specification ID
- MEAP Specifications

Device Specification ID shows information such as the original functions of MFP (including print, scan, and copy), and one that differs by model such as maximum copy number, thus each model has a different ID. (It is easy to determine the IDs for this reason.) MEAP application declares 1 or more Device Specification ID required for its execution. Declaration of multiple Device Specification IDs means that the application is operable in all the models declared. Upon installation of MEAP application in (using) SMS or MEAP Enterprise Service Manager, matching of Device Specification ID is executed on the side of MEAP platform machine. The machine which doesn't support the ID declared by the application rejects installation of such an application.

Meanwhile, MEAP Specifications shows other information than defined by Device Specification ID above, including network and security. Thus each model does not always have the same version.

MEAP application declares 1 or more MEAP Specifications required for its execution. Declaration of multiple Device Specification IDs means that the application is operable in all the environments declared. Upon installation of MEAP application in SMS or MEAP Enterprise Service Manager, matching of MEAP Specifications is executed on the side of MEAP platform machine. The machine which doesn't support the version declared by the application rejects installation of such an application.

MEAP Spec Version for each model

T-13-11

Product Name	USA	EUR	OCE	SPL	KOR	Initial MEAPSpecVer	Change information
iR 6020	Y	Y	Y	Y	-		
iR 5020	Y	Y	Y	Y	-		
iR 3320	Y	Y	Y	Y	-		
iR 2220	Y	Y	Y	Y	-		
iR C3220	Y	Y	Y	Y	-	1, 2, 3	
iR C2620	Y	Y	Y	Y	-	1, 2, 3	
iR 4570	Y	Y	Y	Y	Y	5	5, 6, 7 (System v30.xx later)
iR 2870	Y	Y	Y	Y	Y	5	5, 6, 7 (System v30.xx later)
iR 2270	Y	Y	Y	Y	-	5	5, 6, 7 (System v30.xx later)
iR 3570	Y	Y	Y	Y	Y	5	5, 6, 7 (System v30.xx later)
iR85+	Y	Y	Y	-	-		
iR 8070	Y	Y	Y	Y	-	5	5, 6, 7 (System v10.xx later)
iR 105+	Y	Y	Y	Y	-	5	5, 6, 7 (System v10.xx later)
iR 9070	Y	Y	Y	Y	-	5	5, 6, 7 (System v10.xx later)
iR 6570	Y	Y	Y	Y	Y	5, 6	5, 6, 7, 9 (System v20.xx later)
iR 5570	Y	Y	Y	Y	Y	5, 6	5, 6, 7, 9 (System v20.xx later)
iR C3170	Y	Y	Y	Y	Y	5, 6, 7	
iR C2570	-	Y	Y	Y	Y	5, 6, 7	

Product Name	USA	EUR	OCE	SPL	KOR	Initial MEAPSpecVer	Change information
iR 7105	Y	Y	Y	Y	Y	5, 6, 7	
iR 7095	Y	Y	Y	Y	Y	5, 6, 7	
iR 7086	Y	Y	Y	Y	-	5, 6, 7	
iR 7095P	Y	Y	Y	Y	-	5, 6, 7	
iR C6870	Y	Y	Y	Y	Y	5, 6, 7	
iR C5870	Y	Y	Y	Y	-	5, 6, 7	
iR C5180	Y	-	Y	Y	Y	5, 6, 7, 9, 10, 11	5, 6, 7, 9, 10, 11, 13, 14, 15 (System v50.xx later)
CLC5151	-	Y	-	-	-		5, 6, 7, 9, 10, 11, 13, 14, 15 (System v50.xx later)
iR C4580	Y	-	Y	Y	Y	5, 6, 7, 9, 10, 11	5, 6, 7, 9, 10, 11, 13, 14, 15 (System v50.xx later)
CLC4040	-	Y	-	-	-		5, 6, 7, 9, 10, 11, 13, 14, 15 (System v50.xx later)
iR C4080	Y	Y	Y	-	-		5, 6, 7, 9, 10, 11, 13, 14, 15 (System v50.xx later)
iR C5185						5, 6, 7, 9, 10, 11, 13, 14, 15	
imagePRESS C1	Y	Y	Y	Y	Y	5, 6, 7, 9, 10, 11	
iR C3380	Y	Y	Y	Y	Y	5, 6, 7, 9, 10, 11, 13	
iR C2880	Y	Y	Y	Y	Y	5, 6, 7, 9, 10, 11, 13	
iR 3025	Y	Y	Y	Y	-	5, 6, 7, 9, 10, 11, 13	
iR 3045	Y	Y	Y	Y	Y	5, 6, 7, 9, 10, 11, 13	
iR 3035	Y	Y	Y	Y	Y	5, 6, 7, 9, 10, 11, 13	
iR 3030	Y	Y	Y	Y	Y	5, 6, 7, 9, 10, 11, 13	
iR 5055	Y	Y	Y	Y	Y	5, 6, 7, 9, 10, 11, 13	
iR 5065	Y	Y	Y	Y	Y	5, 6, 7, 9, 10, 11, 13	
iR 5075	Y	Y	Y	Y	Y	5, 6, 7, 9, 10, 11, 13	

* Due to the change in I/F specifications, these models support '5' only.

MEAP Spec Version T-13-12

MEAP Spec Version	Description
1	MEAP basic function
2	MEAP Spec Version 1 function and SSL/TSL + Proxy
3	[Reserved]
5	MEAP Spec Version 1 function and CPCA V2 + ERS (Error Recovery Service) + New SSL/TSL
6	[Reserved]
7	MEAP Spec Version 5 function and Compact PDF + OCR PDF(Text Searchable) + USB-Host(Buffering of Interrupt Transfer)
9	[Reserved]
10	MEAP Spec Version 5 function and USB-Host(Exception + ClearFeature + SetFeature + HotPlug) + WINS address acquisition using MIBAgent + TimerService + SSL client authentication
11	MEAP Spec Version 5 function and AMS
13	MEAP Spec Version 5 function and J2ME1.1 Support + Encrypted PDF + Trace and smooth PDF + CTK2.0
14	Device signature PDF
15	IMI + ERS (API addition for IMI)

13.1.12 Checking the System Information of a MEAP Application with SMS

iR C5185N / / iR C5185i PRT /

1) Log in to SMS.

2) Click **System Management** tab.

3) On System Management screen, click **System Info** tab.

4) Click **Details** button.

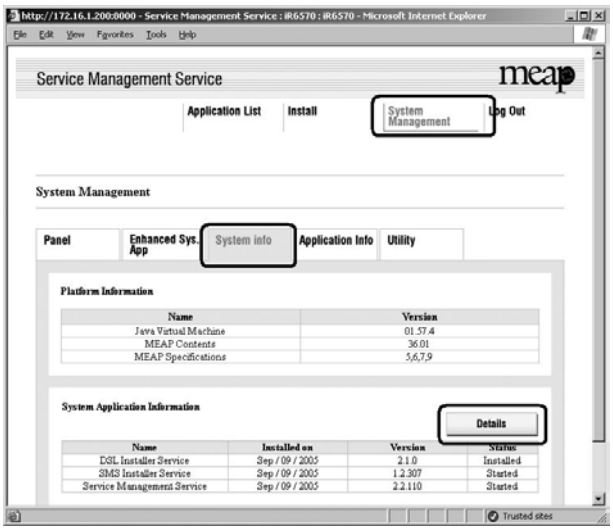

F-13-22

5) When the following status information of MEAP applications (including the system application) appears in a different window, copy and paste all information to create an attachment (text information) for preparing a problem report. You can also use this function whenever you want to check the status of any particular application.

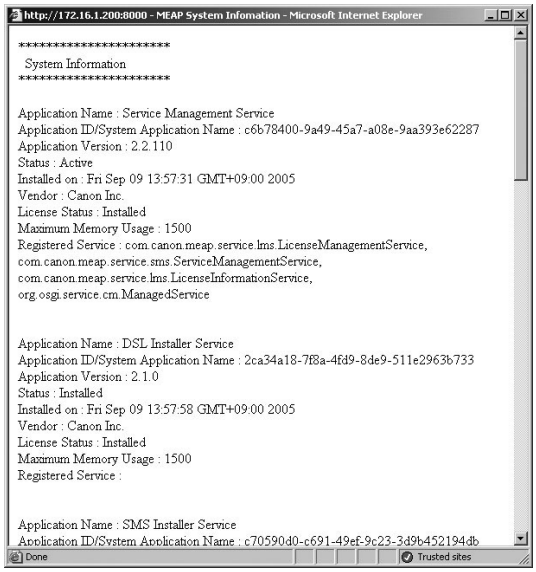

F-13-23

13.1.13 Printing the System Information of a MEAP Application

iR C5185N / / iR C5185i PRT /

1) Make the following selections: **Additional Functions** button > **System Settings** button> the **down-arrow** button.

Memo:
If the System manager ID and system password have already been assigned, ID Entry dialog appears after System Settings button is pressed. Enter the system manager ID and the password, and click ID key.

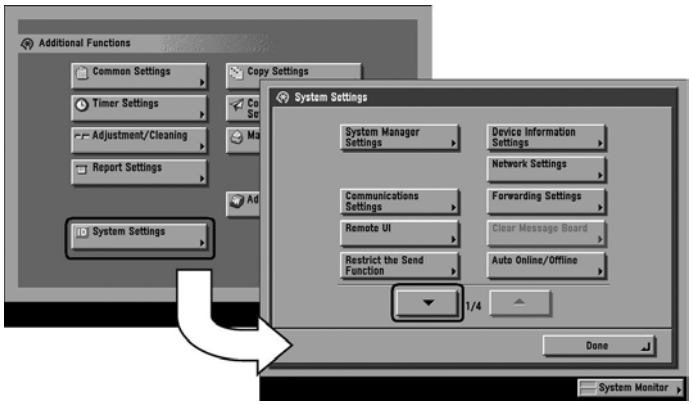

F-13-24

2) Make the following selections: **MEAP Settings** button > **Print System Information** button >**Yes** button.

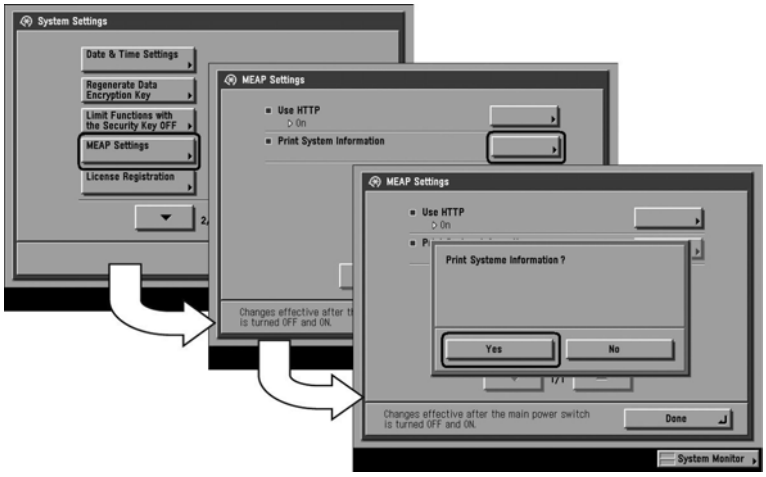

F-13-25

3) Press **Done** button as many times as necessary until the Basic screen appears.
4) Turn off the MEAP device's main power; wait for 10 sec, and then turn the power back on.

Important:
The previous version of printing function for MEAP application status information (system information) was depended on PDL. However, current version of function is not dependent on PDL. So even device for which PDL is not available can print it. (Since iRC3220)

13.1.14 Reference (Application System Information)

iR C5185N / / iR C5185i PRT /

You can check all applications installed to the device at a glance with the MEAP application status information and, thus, it is important for you to provide it when you are reporting a problem.
The following items of information will be indicated or printed for individual applications:

Memo:
The system information shown on the screen and the system information printed in the MEAP device's user mode are exactly the same.

Application System Information T-13-13

```
Application Name: C-Cabinet Gateway for MEAP
Application ID/System Application Name: 03a46668-63e4-4636-9cbb-492b6cef05d5
Application Version: 1.0.0
Status: Resolved
Installed on: Tue Oct 21 14:00:11 GMT+09:00 2003
Vendor : Canon Inc.
License Status : Installed
Maximum Memory Usage : 1024
Registered Service :
```

Application Name
It is the name (bundle-name) declared in a statement within the application program. It may not necessarily be identical to the name of the program.

Application ID/System Application Name
In the case of a system application, it will be the file name. If a general application, it is the application ID (application-ID) declared in a statement within the application program. Within the device, the applications are set apart by means of their application IDs.

Application Version
It is the version of the application (bundle-version) declared in a statement within the application program.

Status
It indicates the status of the application in question; specifically,
Installed: the application has been installed.
Active: the application is being in use.
Resolved: the application is at rest.

Installed On
It indicates the date on which the application was installed.

Vendor
It is the name of the vendor that developed the application, and is the name (bundle-vendor) declared in a statement within the application program.

License Status
It indicates the status of the license; specifically,
None: no license is needed.
Not Installed: no license has been installed.
Installed: the appropriate license has been installed.
Invalid: the license has been invalidated.
Overlimt: the license has been used beyond its permitted limit.

License Expires After
It indicates the date after which the license expires. If the status of the license is 'none', this item will not be printed.

License Upper Limit
It indicates the limit imposed on individual counter readings. If the status of the license is 'none', this item will not be printed.

Counter Value
It is the current counter reading of a specific counter. If the status of the license is 'none', this item will not be printed.

Maximum Memory Usage
It indicates the maximum amount of memory that the application uses. It is the amount (maximum memory usage) declared in a statement within the application program, and is expressed in kilobytes.

Registered Service
It is a list of services that have been registered by the application with the MEAP framework. Some services may not have printable data.

13.1.15 Installing an Application

iR C5185N / / iR C5185i PRT /

Important:
- To install an application, the user needs to use the following URL when accessing the license control system to obtain a license file. In doing so, he/she needs to register the license access number of the application and the serial number of the device.
http://www.canon.com/meap/
-Maximum 20 applications can be installed (In iR5160/iR6060/iR2250/iR2850/iR3350, one is the portal service already installed at the time of shipment from the factory)
-The following are the resource amounts assured for each device in the operation of one MEAP application. These values are for reference purpose only, therefore the unused resource of SMS needs to be checked at the time of installation of MEAP application.
The displayed values of SMS resource may be larger than the followings since the actual values vary according to the log-in service (authentication function) selected by users and the configuration (future models).

T-13-14

Product Name		HDD	Memory	Thread	Socket	File Description
iR5020/iR6020/iR2220/iR3320		300MB	20MB	128	48	42
iRC2620/iRC3220		400MB	20MB	128	48	42
iR2270/iR2870/iR3570/iR4570/iR85/iR8070/iR6570/iR5570		400MB	20MB	128	48	42
iRC3170/iRC2570		400MB	20MB	128	48	42
iR7086/iR7095/iR7105		400MB	20MB	128	48	42
iRC4080/iRC4580/iRC5180	Initial MEAP Spec Ver	1024MB	20MB	128	48	42
	Change Information	1024MB	30MB	128	128	128
imagePRESS C1		1024MB	20MB	128	48	42
iRC2880/iRC3380		1024MB	20MB	128	48	42
iR3025/iR3030/iR3035/iR3045		400MB	20/30MB*	128	48	42
iR5055/iR5065/iR5075		1024MB	20MB	128	48	42
iR5185		1024MB	30MB	128	128	128

*20MB for 512MB model, 30MB for 768MB model.
- As for memory, check the available resource when starting up the application. For other resources other than memory, check them when installing.
- Some applications call for a specific set of conditions for installation. For details, see the User's Guide that comes with the individual applications.

1) Long on to SMS.

2) Click **Install** tab.

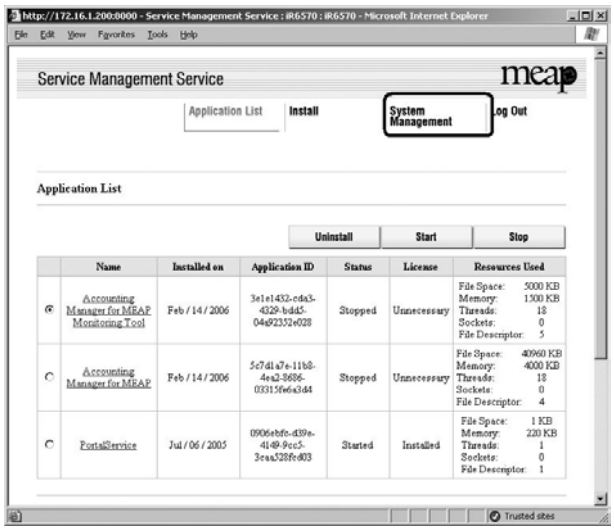

F-13-26

3) Check that **Install Application/License** page appears.
4) Click **Browse** button, and select the application file and the license file of the application; then, click **OK** button.

Memo:
Application File: identified by the extension "jar".
License File: identified by the extension "lic".

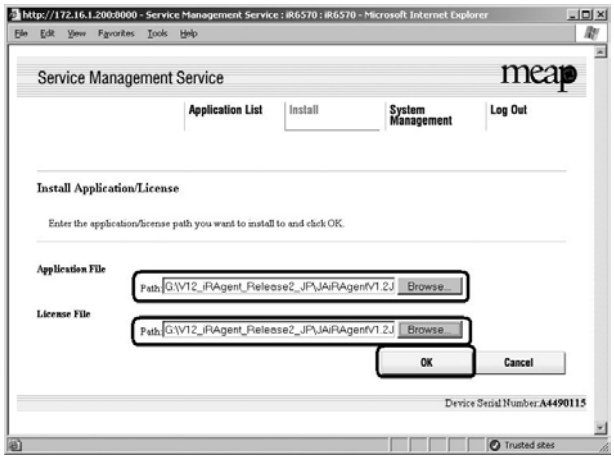

F-13-27

5) See the message "Installing...Please wait a moment."

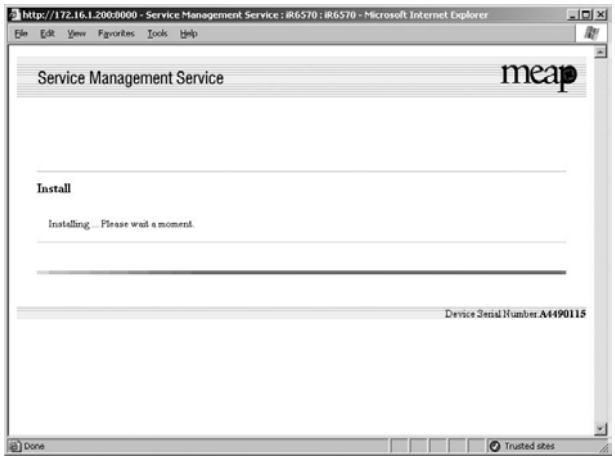

F-13-28

Important:
- You cannot install only the license.

- You will not be able to install the application without using the appropriate license. Be sure to select its license file.

- If you are adding a license to an existing application, see 1.3.10 Adding a License File.

- If you are updating an existing application, stop the application; then, install the new application or its license file. You will not be able to update an application while it is running.

6) Check the contents of the **Confirm** page; then, click **OK** button.

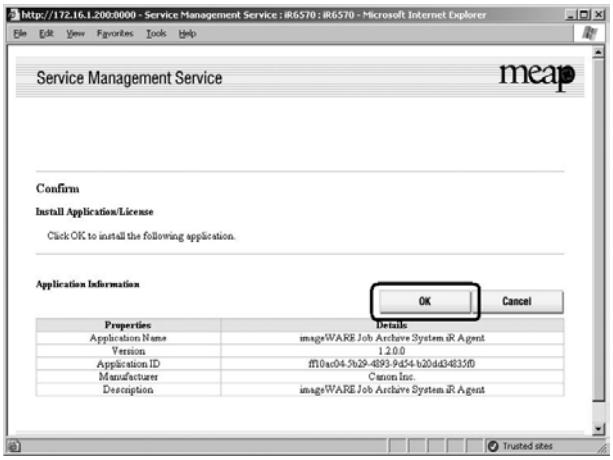

F-13-29

7) Some applications show a screen to indicate the terms of agreement. Read the terms, and click **OK**.
8) Check the message "Installing...Please wait a moment." appears, beginning the installation.
9) Check **Application List** page appears when the installation is completed.

Important:
To use the application that you have just installed, you must make sure that the application status is Started.

13.1.16 MEAP Enterprise Service Manager

iR C5185N / / iR C5185i PRT /

Outline
MEAP Enterprise Service Manager is the PC application utility to perform batch installation, unistallation and management of MEAP application and license files required for installation of applications, on several MEAP-available devices on network.
The main targets are system administrators in big companies and CANON service engineers (end users of devices do not use).
It is used when customized applications delivered to a certain company needs to be managed collectively.
Previous SMS can manage only one device at a time. This utility reduces the management cost of devices and TCO.

Major functions
Discovery of devices available for MEAP
Discovery of devices available for MEAP on network
Storage of the serial number list of discovered device
Installation of application and license file
Management of application (starting / stopping)
Uninstallation of application
Others

System configuration
MEAP Enterprise Service Manager (MEAP ESM) functions in combination with DIS (DSL Installer Service) installed on the MEAP platform side of the device. This system can be used only for MEAP-available device with appropriate DIS installed.

(*) When using this system on the firmware for version upgrading on October 2003 or older, version upgrading of the system software on the field device is necessary.

The versions available for ESM are as follows:
iR5160 / iR6020: System v54.02 or newer, MEAP Contents v53.07 or newer
iR2220 / iR3320: System v33.01 or newer, MEAP Contents v33.02 or newer
Other products: Available from the initial version

When installing MEAP Enterprise Service Manager (MEAP ESM) of master CD on PC, Microsoft '.NET Framework' v1.0 or v1.1 is necessary. The user should download it from the Web site of Microsoft.

13.1.17 Adding a License File

iR C5185N / / iR C5185i PRT /

1) Log on to SMS.
2) On **Application List**, click the name of the application to which you want to add a license file.

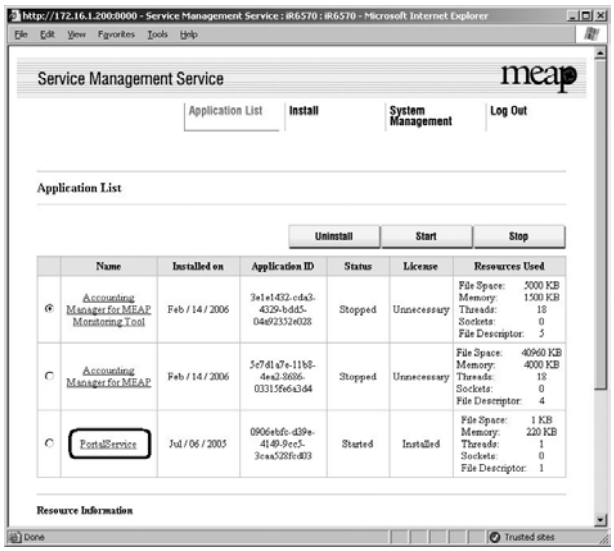

F-13-30

3) Check appears.
4) On Application/License Information page, click **License Management** button.

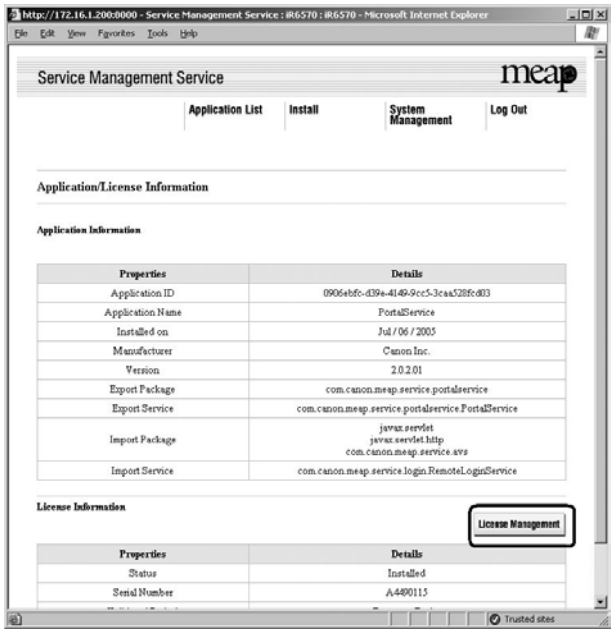

F-13-31

5) Click **Browse** button, and select the license file you want to install.

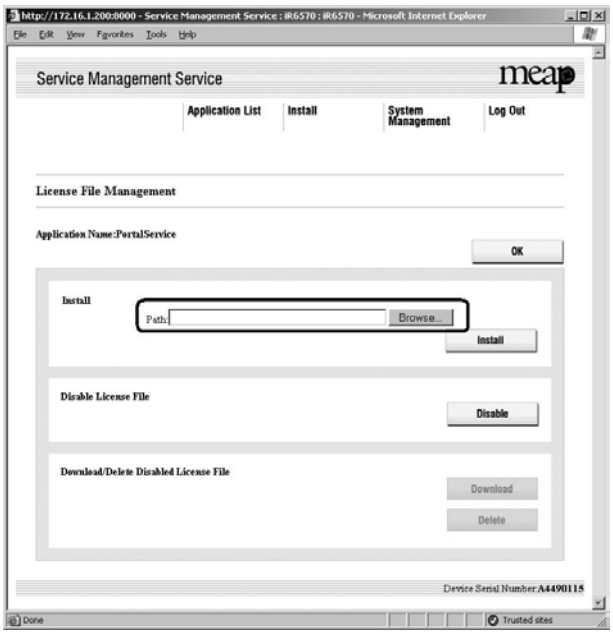

F-13-32

6) Click **Install** button.

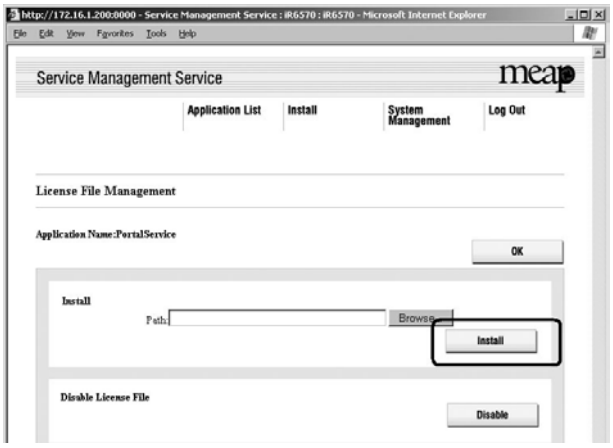

F-13-33

7) Check the content of the confirmation page, and click **OK** button.

13.1.18 Disabling a License File (suspending a license)

iR C5185N / / iR C5185i PRT /

Important:
- To invalidate (or suspend) a license, you must first stop the application in question.
- Once suspended, the status of the license will be 'Not Installed', and its application will no longer be available for use.
- You can later restore a suspended license file as long as you are doing so on the same iR, the device with the same device serial number.
- When replacing the device due to lease up or trouble, use the license for forwarding (See 'License for forwarding').

1) Stop the application you want to uninstall on **Application List** page.

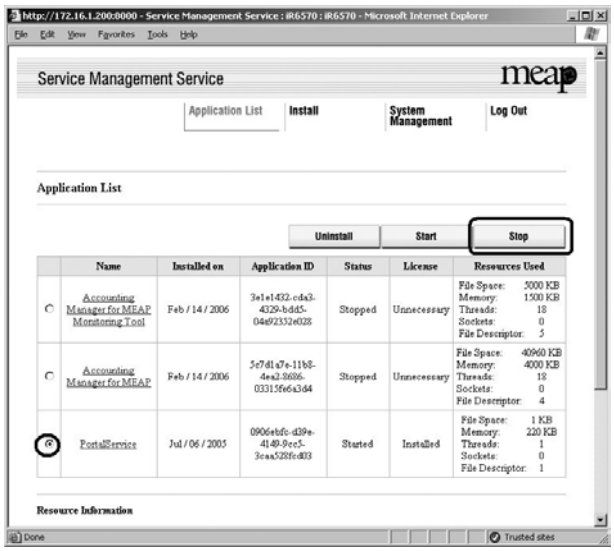

F-13-34

2) Click the name of the application that you want to disable.

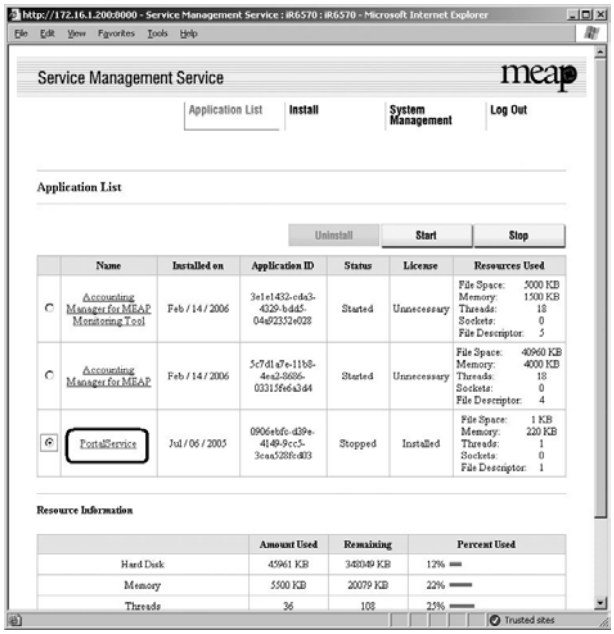

F-13-35

3) License File Management page appears. On Application/License Information page, click **License Management** button.

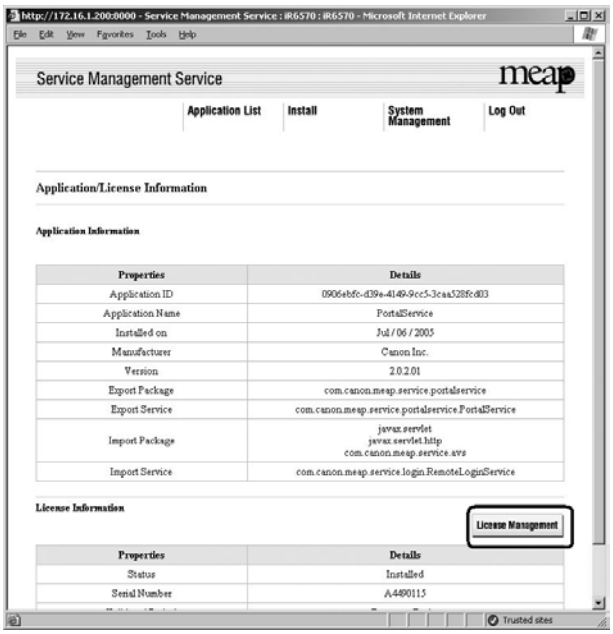

F-13-36

4) Click **Disable** button.

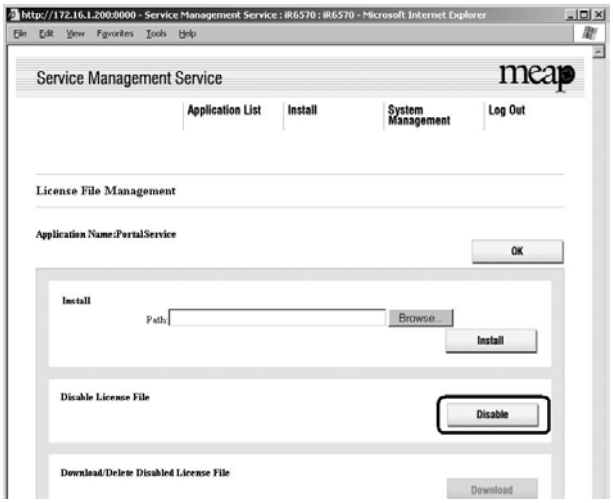

F-13-37

5) Click **OK**.

13.1.19 Downloading/Removing an Invalidated License File

iR C5185N / / iR C5185i PRT /

You must remove the invalidated license file before uninstalling an application. If re-installation is a possibility, you may download the license file to a PC for storage. To download or delete a license file, first disable it.

Important:
- Once you have removed an invalidated license file, you will no longer be able to download it form the MEAP device.

1) Login to SMS.

2) **Application List** page appears.

3) On **Application List page**, click the name of the application you want.

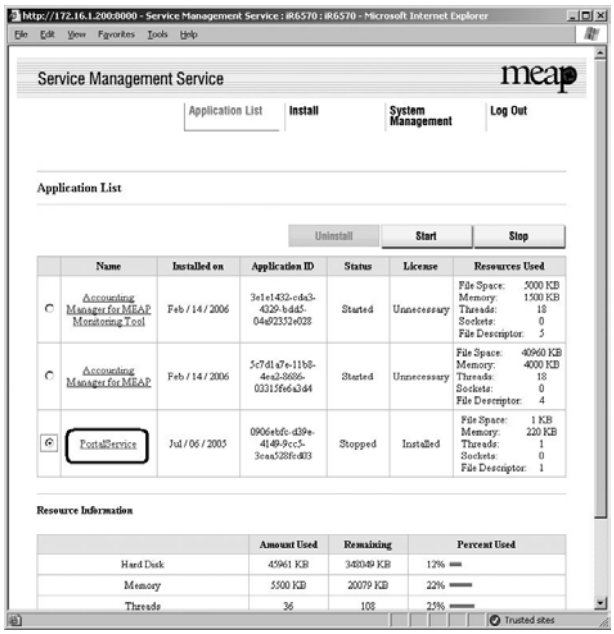

F-13-38

4) Check Application/License Information page appears.

5) On Application/License Information page, click **License Management** button.

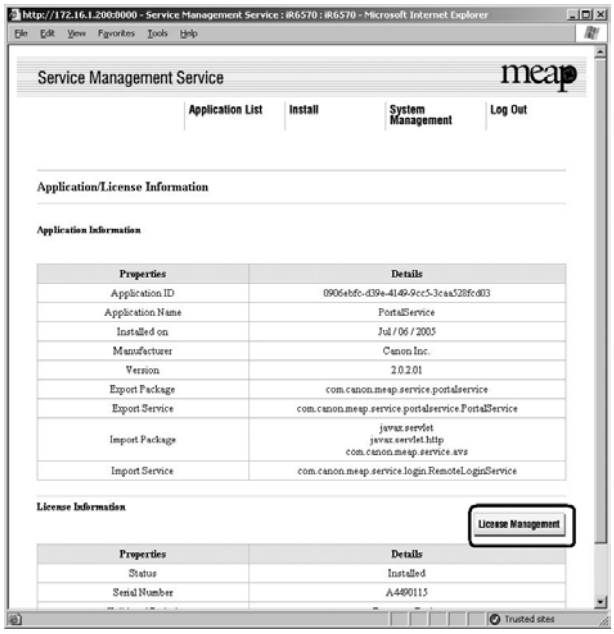

F-13-39

6) License File Management page appears. To download, click **Download** button.

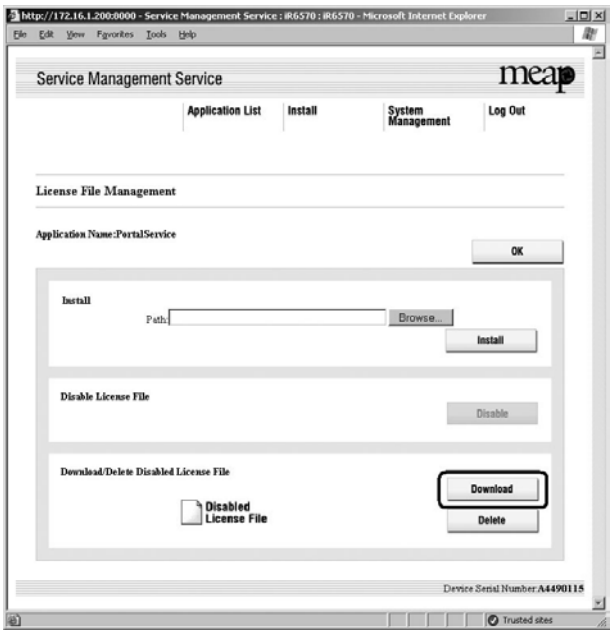

F-13-40

7) When you have selected **Download** button, specify where you want to store the file by following the instructions on the screen.
8) To delete, click **Delete** button.

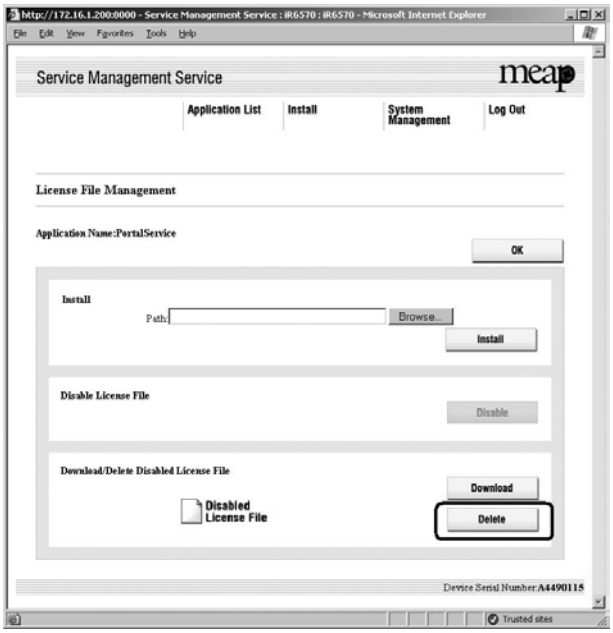

F-13-41

9) Check the confirmation page appears.

10) Click **OK** button.

Important:
- Without the license file, an application cannot be reinstalled even to the MEAP device that the application had been installed last time. Download and save the license file before deleting the application.

13.1.20 Reusable license

iR C5185N / / iR C5185i PRT /

Reinstallation was not able to perform for all license files. When reinstalling, Disable License file should be downloaded (see 'Disabling a License File' and 'Downloading / Removing an Invalidated License File' in this manual) or a license for reinstallation should be obtained from LMS, before reinstallation.
This specification aims to prevent misuse of applications.
To increase convenience of users, only application with unlimited validity date and application counter (e.g. Portal Service, SDL, SSO) has been made to be able to install as many times as needed by the same license file. This kind of license is called 'Reusable license'.

Memo:
For devices for System version of 33.01, 54.02 (iR 2220 series / iR5020 series) or older, version upgrading is required. It is already installed in the model with iR C3220 or newer.

13.1.21 License for forwarding

iR C5185N / / iR C5185i PRT /

When the device is replaced due to lease up or trouble, it is possible to continue using the current license information of MEAP application by forwarding it to a new device. The license is forwarded by CE because the hidden page of SMS is used.
1) Log in to SMS, stop the application to be forwarded (see 'Starting and Stopping a MEAP Application' in this manual).

F-13-42

2) Move to the download page of license forwarded for the device as sender (http:// IP address of device: 8000/sms/ForwardLicense).

F-13-43

3) Specify the application to be forwarded.

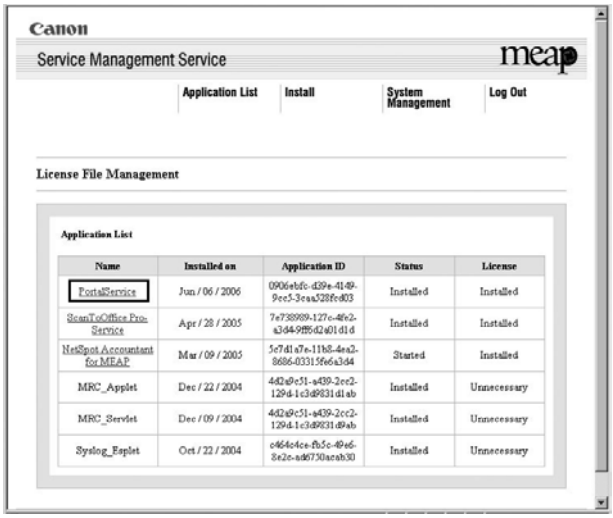

F-13-44

4) Click 'Disable' at Create Transfer License File.

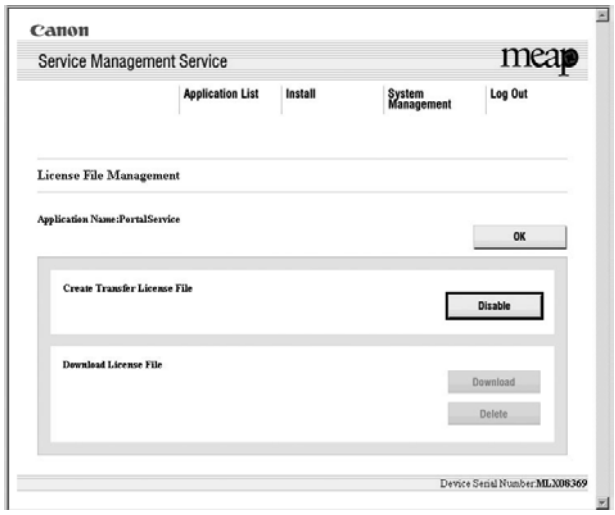

F-13-45

5) The screen to check invalidation of the license is displayed. Click 'OK',

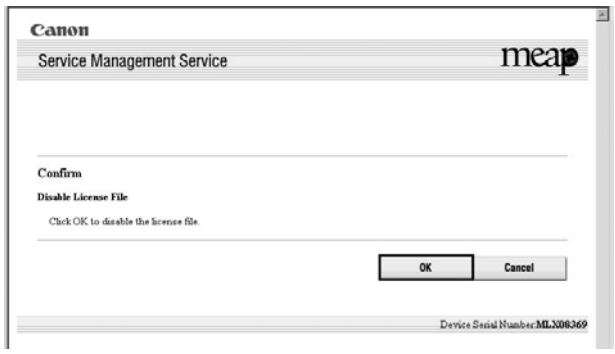

F-13-46

6) Icon of license file for forwarding is displayed in the box of license file downloading. Click 'Download'.

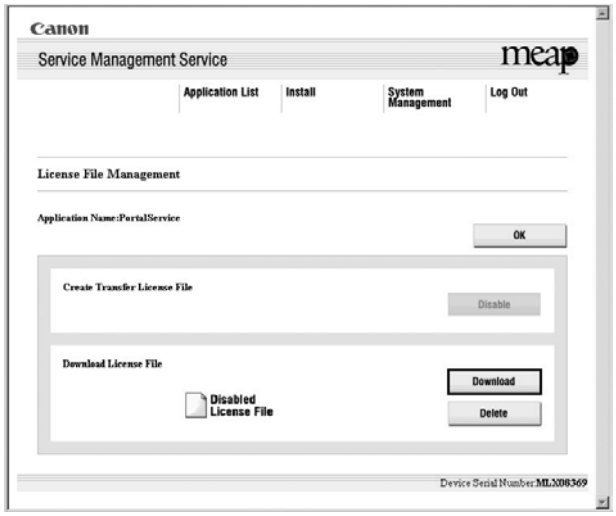

F-13-47

7) The dialogue 'File Download' is displayed. Click 'Save'.

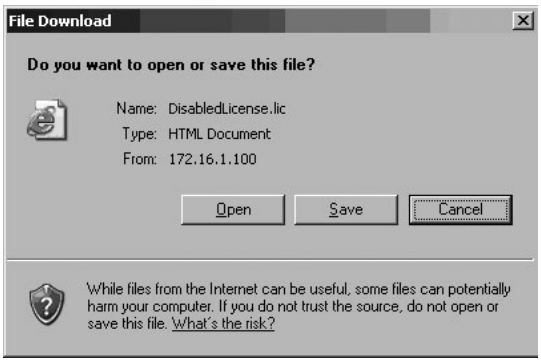

F-13-48

8) Specify the download destination, click 'Save'.

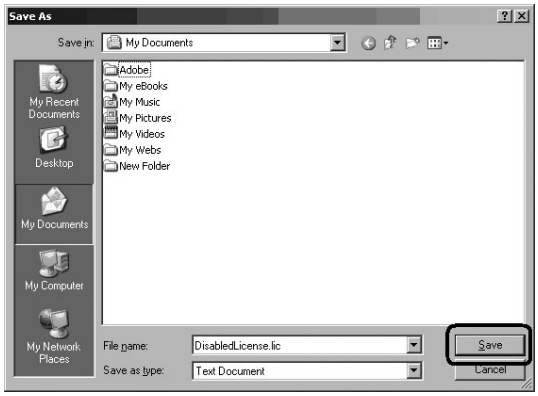

F-13-49

9) After downloading the license file for forwarding, click 'Delete' to display the confirmation screen and click 'OK' to delete the file (in consideration of breakage of license for forwarding, deleting disabled license can be executed after all steps have been completed).

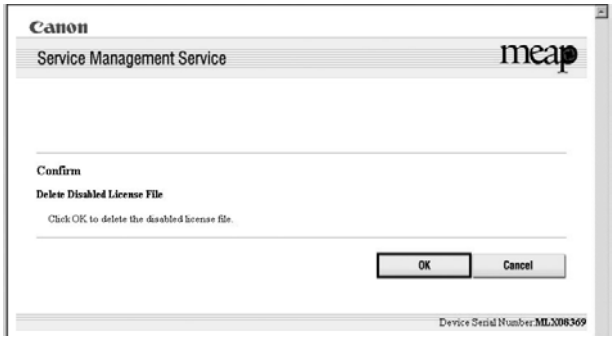

F-13-50

10) Log out of SMS.
11) Ask the sales company to issue a license for forwarding.

Memo:
When requesting issuance of license for forwarding, inform the sales company of the name of product name and serial No. of the device as sender, and of the name of product name and serial No. of the forwarding destination.

12) Install application using the license for forwarding issued by the sales company.

13.1.22 Uninstalling an Application

iR C5185N / / iR C5185i PRT /

1) Log on to SMS, and click 'Application List' tab.

2) Check 'Application List' page appears.

3) On the application list, select the radio button of the application you want to uninstall, and click 'Uninstall' button.

Memo:
Dimmed Uninstall button shows that the selected application cannot be removed.

F-13-51

4) Check the screen to make sure that what is shown is the application you want to uninstall; then, click **OK** button.
In response, the system runs an uninstall sessions.

Important:
- The status of the license must be 'Not Installed' or 'Unnecessary' for its application to be uninstalled. As necessary, go to License File Management page, and disable the license file before starting to remove it.
- A license file may be invalidated only when its application is not active.
- If the application you are uninstalling is associated with another application, a message will appear to indicate that the package exported by the application will no loner be available. Uninstalling such an application may also disable its associated applications.

13.1.23 Changing Login Services

iR C5185N / / iR C5185i PRT /

Login Service Overview
The login service is used to authenticate users who logs in to a MEAP device. You can change login services or uninstall them using System Management site.

At time of shipment, the login service offers the following 3 modes of authentication:

- Default authentication
- SDL (Simple Device Login)
- SSO (Single Sign-On)

Important:
- To set SDL, the registered information in SDL and the registered user data (Department ID and Password) in Department ID Management of the machine have to match.
- To set up SDL or SSO, Department ID Management must be set to Off in advance. To use SDL and Department ID Management simultaneously, set Department ID Management to On after switching the login service to SDL.
- If SSO is set as the login service, NetSpot Accountant is necessary for using Department ID Management.
- If SSO is set, you cannot use an optional card reader.
- To set to SSO, first adjust the current time for the PC where Active Directory is running, the iR, and the PC where users log on. If there is more than a 30-minute difference among them, an error occurs at logon.
- If SSO or SDL is set as login service, it takes time until the iR is ready to start up.
- When the SEND function is used in the environment of SDL and SSO, it is necessary to set each user's mail address to transmit E-mail. When the mail address is not set, E-mail cannot be transmitted. However, when i-Fax is transmitted, the mail address set to the device is used.

Outline of Default Authentication
In this mode of authentication, you will be using Department ID Management or you will not be using any authentication mechanism. If you enable the Department ID Management in the MEAP device's Additional Functions mode, the user can use the device only when he/she enters an ID number (a 7-character ID and password) that has been registered from the device's touch panel display or through Remote UI.

Outline of SDL (Simple Device Login)
In this mode of authentication, you will be operating on a MEAP device on its own. You will store user information to the MEAP device's memory by accessing the device through a Web browser. SDL offers the following functions:

a. it brings up the Login screen on the MEAP device's touch panel display for user authentication.
b. it brings up the Login page when you access the MEAP device from Web browser to manage the numbers of printed and scanned sheets for each department ID working with the department ID management function. it operates in conjunction with the group ID control mechanisms to keep track of the number of print pages or scan pages according to group IDs.
c. it enables register/editing of user authentication information through a Web browser.

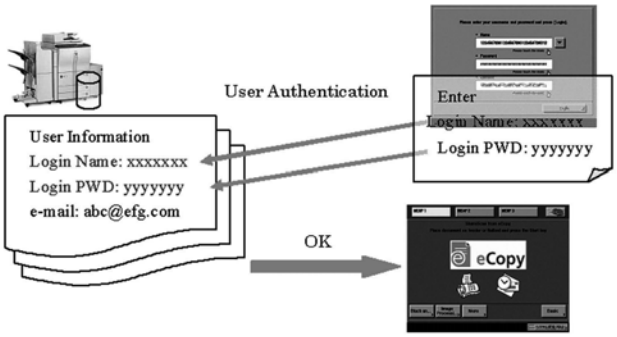

F-13-52

Outline of SSO (Single Sign-On)
This is the log-in service that can be operated on the domain of Active Directory environment network or at iR device. The following are the user authentication systems.
- Domain Authentication
- Local Device Authentication
- Domain Authentication + Local Device Authentication

- The three user authentication systems can be changed at Web browser (See 'Setting the User Authentication System' on MEAP Administrator Guide).
- The default setting is 'Domain Authentication + Local Device Authentication'. To increase security, set 'Domain Authentication' as user authentication system or change the user name and password of the administrator of Local Device Authentication from the default ones, just after starting to use SSO.

Domain Anthentication
This is the authentication of the domains on network simultaneously with log-in to iR device, in combination with the domain controller on Active Directory environment network. It authenticates up to four domain users (multi domain) with trusts as well as the domain with iR device installed. Users select the domain name of log-in destination when they log in.
Optional NetSpot Accountant or imageWARE Accounting Manager enables analysis / management of the usage of iR device.

Local Device Anthentication
This is the user authentication used for only iR device itself. The users to be authenticated is registered / managed by the database of iR device. The method of registration / management is the same as the one for SDL. The log-in destination is [this device].

Domain Authentication + Local Device Anthentication
This is the user authentication system with the functions of both 'Domain Authentication' and 'Local Device Authentication'. Domain Authentication is useful to authenticate the users registered / managed by Active Directory, and Local Device Authentication is for authentication of the temporary users being not able to be added to Active Directory. In the case that any trouble of domain controller or Security Agent occurs, using Local Device Authentication enables emergency action until recovery.
In the following example, Domain A user with iR installed and Domain B having trusts with Domain A, and also the users registered in iR device itself can be authenticated. Users select the login destination (domain name or [This Device]) when they log in.

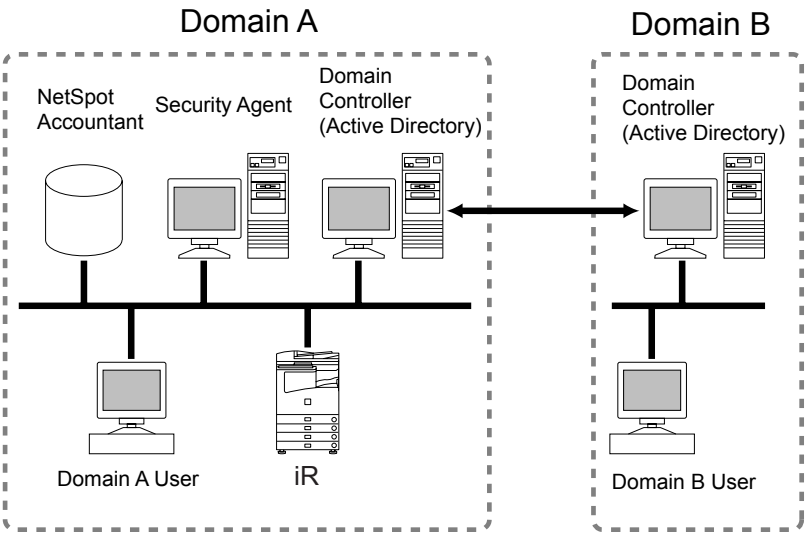

F-13-53

- Optional NetSpot Accountant or imageWARE Accounting Manager is necessary to use Domain Authentication and department ID management simultaneously. When Domain Authentication is set without combination with NetSpot Accountant or imageWARE Accounting Manager, log-in is impossible.

Therefore, department ID management should not be 'ON'. If department ID management is set to 'ON' while using Domain Authentication and log-in becomes impossible, change the log-in service to Default Authentication and turn department ID management to [OFF].
- For combination with NSA / iWAM, it is necessary to set the user with administrative privilege of the domain on the SA service account.
- When the print count and scan count for each department ID needs to be managed in conjunction with Local Device Authentication and department ID management, turn department ID management to [ON]. To use simultaneously Local Device Authentication and department ID management, the information registered with Local Device Authentication should be matched with the user information of department ID management (department ID and password).
- The user information registered by SDL and the one by Local Device Authentication are managed separately in the iR device. The user information registered in one system is not reflected to the other.
- The card reader for optional control card cannot be used for Local Device Authentication. When using the card reader for control card, set SDL.
- Security Agent is necessary only for Domain Authentication.
- Security Agent should be installed on the computer in the domain with iR device installed.
- Installation of Security Agent is included in MEAP Administrator CD-ROM.

Operating Environment
The operation is guaranteed for SDL or SSO if the system environment is in keeping with the following requirements:

SDL (registering/editing user information)
a. Operating System and Supported Browsers

T-13-15

Operating System	Supported browser
Windows 98 SE	Microsoft Internet Explorer 5.5 SP2 Microsoft Internet Explorer 6 SP1
Windows 2000 Professional SP3	Microsoft Internet Explorer 5.5 SP2 Microsoft Internet Explorer 6 SP1
Windows XP	Microsoft Internet Explorer 6 Microsoft Internet Explorer 6 SP1

Important:
- If you use Internet Explorer 6 on Windows XP, you will need Java 2 Runtime Environment Standard Edition 1.3.1.

SSO
To use SSO, you must have a Widows server to which Active Directory has been installed as well as Security Agent.

1) PC for hosting Security Agent
a. Supported OS

T-13-16

Operating System
Microsoft Windows 2000 Professional
Microsoft Windows 2000 Server
Microsoft Windows XP Professional
Microsoft Windows Server 2003

When using SA on WindowXP SP2, it is necessary to exclude Security Agent from the targets of firewall at the setting of the firewall.

b. Others
Access right to Windows 2000 domain Name System (DNS)Access right to domain controller

For combination with NetSpot Accountant / iW Accounting Manager, and department ID management is turned on to use it, it is necessary to set the user with administrative privilege of the domain on the SA service account.

2) Client PC (if access from Web browser to MEAP device is desired)
a. Operating System and Supported Browsers

T-13-17

Operating System	Supported Browsers
Windows 98 SE Windows NT Workstation 4.0 SP6a	Microsoft Internet Explorer 5.01 SP2 Microsoft Internet Explorer 5.5 SP2 Microsoft Internet Explorer 6 SP1
Windows ME	Microsoft Internet Explorer 5.5 SP2 Microsoft Internet Explorer 6 SP1
Windows 2000 Professional SP3	Microsoft Internet Explorer 5.01 SP3 Microsoft Internet Explorer 5.5 SP2 Microsoft Internet Explorer 6 SP1
Windows XP Professional	Microsoft Internet Explorer 6 SP1

b. Others
Access right to Windows 2000 Domain Name System (DNS)
Access right to Domain Controller Client

Steps to Change Login Services

1) Make the following selections: **System Management > Enhanced Sys. App.**

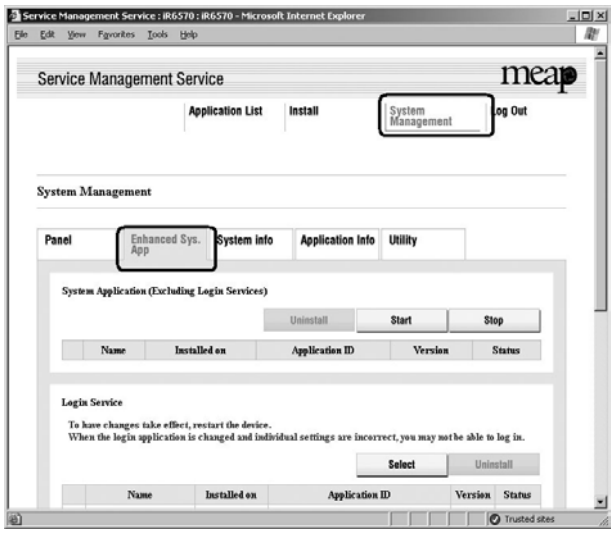

F-13-54

2) A page will appear showing the various selections you can make for the login service. Select the radio button of the login service mode you want to use; then, click **Select** button.

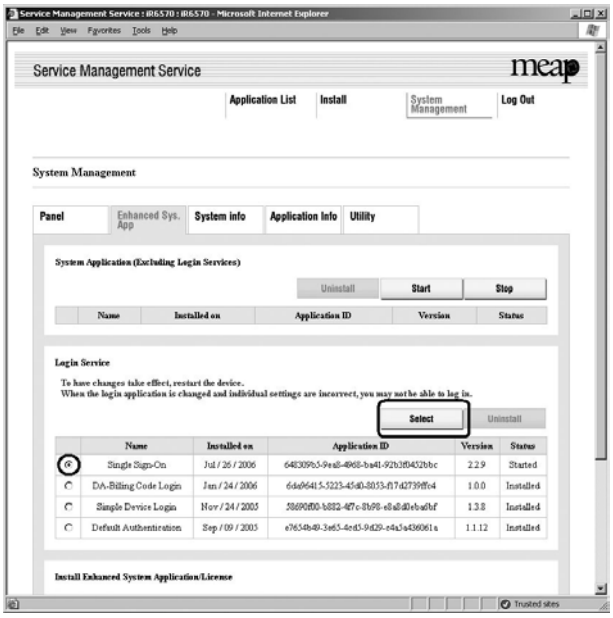

F-13-55

3) When login service application you have selected turns to **Start after Restart**, turn off the device's main power, and turn it back on after 10 seconds.

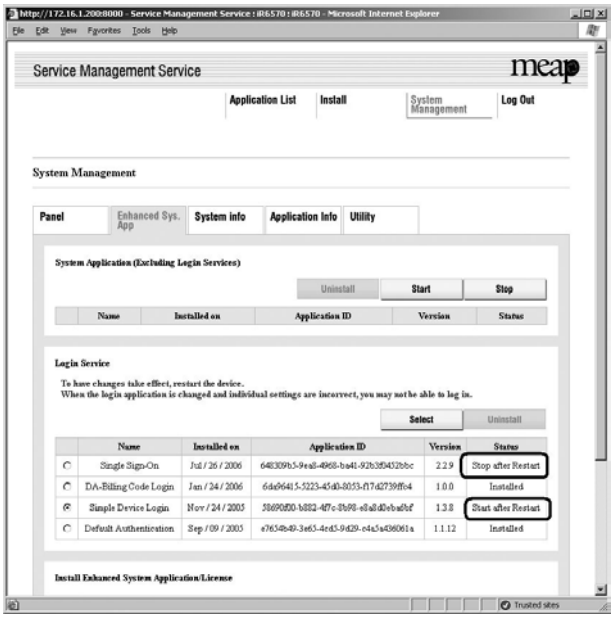

F-13-56

13.1.24 Initializing the Password

iR C5185N / / iR C5185i PRT /

1) Get the switch license for initializing the password.
Request the support of the regional headquarters of the Canon for switch license for initializing the password presenting the device serial number.

2) Click **Login** button leaving **Password** field blank or entering incorrect password. The Return to install Password Settings area appears. Click **Browse** button and select the switch license file prepared in advance.

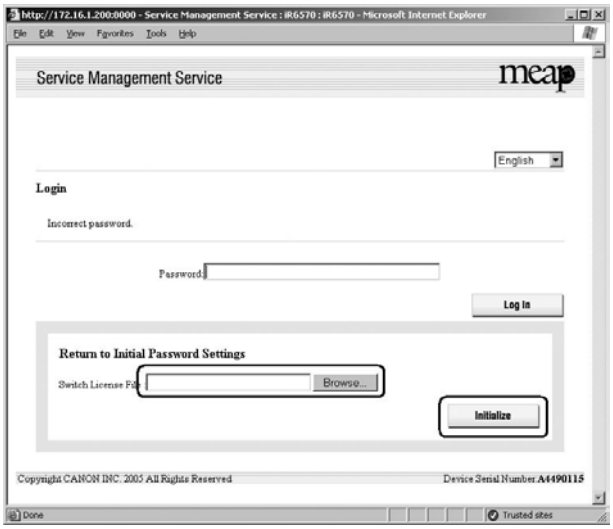

F-13-57

3) When you click **Initialize** button, the confirmation message appears. Click **OK** button. Then Login page opens. Enter the default password 'MeapSmsLogin' to log in. The password is case-sensitive.

If you click **Cancel** button, the Login page opens without initializing the password.

13.1.25 Creating a Backup for MEAP Application Area, Formatting the Hard Disk, Restoring the MEAP Application Area with the Backup, Using the SST (Service Support Tool)

iR C5185N / / iR C5185i PRT /

You can back up the area of the HDD where MEAP applications reside to a PC, as when you want to format the HDD. MEAP devices use a license-based mechanism to control applications so that formatting the HDD will necessarily delete the jar files and application data, requiring you to not only reinstall them but also make necessary settings. (Doing so consists in obtaining special license files for reinstallation and downloading user data/settings, increasing your work load.)

If you use the SST's backup function, you will be able to temporarily put aside the area of MEAP applications, thus being free of the foregoing extra work. This function, however, is limited to a specific MEAP device (serial number), and cannot be used for illegal copying of applications.

You must not perform any other work (including checking operation) until the HDD has been backed up. This arrangement is to prevent a mismatch of MEAP counter readings and the HDD contents, and any fault in operation arising as the result of failure to observe this will not be covered by the guarantee of operation.

Memo:
The application that is installed with a reusable license can be reinstalled by using the same license.

The following list shows the details of area that SST backs up;
Jar files of MEAP applications
Settings set with MEAP applications.
Note that SST does not back up images in Mailboxes that MEAP applications use.
User information data registered with SDL

Requirements for Backup Using the SST
The following conditions must be met for use of the function:

1) Device Firmware Version

T-13-18

	Boot ROM	System	SST
iR2220 Series iR2250 Series	24.42 later	33.01 later	Since Ver 1.81
iR5020 Series iR5160 Series	24.42 later	54.02 later	Since Ver 1.81
Devices ither than those listed the above.	Already supported since the 1st version.	Already supported since the 1st version.	The version supporting the corresponding devices.

2) SST Version
Version 1.81 or later. An earlier version will not permit the use of the function. If needed, upgrade the SST.

3) Space for backup

To back up the HDD of the iR, the PC must have approx 300 MB of free space at maximum.

Making a Backup and Formatting Hard Disk Drive with Service Support Tool

1) If SDL or SSO is used for the login service, switch to default authentication before backing up the user information. Although SST will back up SDL user information, it is recommended to export the user information just in case. For SDL user information backup, go to User Management page of Simple Device Login site and export the data. (The SDL login page opens with the URL **"http://<device IP address>:8000/sdl/"**).

If a hard disk of a system that uses SDL or SSO is formatted without changing the login service to the default authentication, the error message "The login service must be set again with SMS" appears and the system cannot start up when you attempt to restart the system after formatting. If this problem occurs, change the login service to SDL or SSO with SMS. If you cannot access to SMS since you do not have the IP address of the device, start the system with FIXIP mode - hold down the numeric keys 1 and 7 and turn the power switch on. The IP address "172.16.1.100" will be automatically assigned for the device. Then log in to SMS specifying the address.

---

2) While holding down the 2 and 8 buttons, start up the device in download mode.
As in the case of Sramimg.bin, the function is available only when the device is in Download Mode.

3) Connect the PC to the device and start the Service Support Tool.

4) In Download/Upload session of SST, select the appropriate device model, System in the tree view, and take necessary steps to connect to the device.

5) Click Upload the Backup Data button.

6) Click the option "Meapback.bin" from **Name** list of **Backup Data Available for Selection**, and click **Start Storing** button.

Selecting Meapback.bin

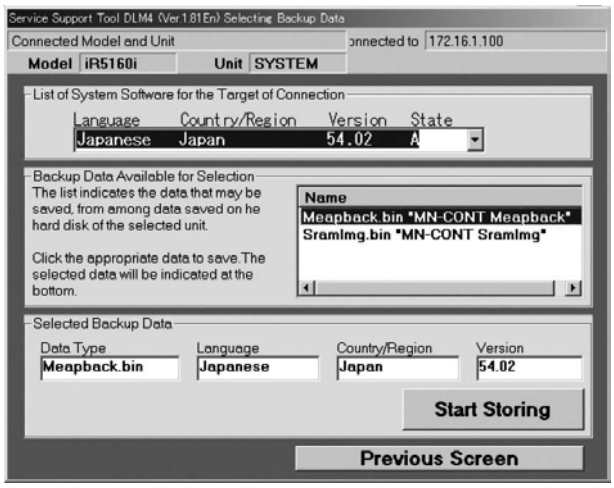

F-13-58

7) When the data has been generated, enter an appropriate name in **File name** field and click **Save** button; then, click **OK** button to end the backup session.

8) In **Selecting Model/Unit** screen, select **HDFormat** and start formatting. All the partitions in the hard disk drive will be formatted.

Restoring the Backup Data
1) After formatting the hard disk drive with SST, install the System, MEAP Contents, Language, and Remote UI files.

2) To restore the backup "Meapback.bin," click **Download the Backup Data** button.

3) Select the backup data file and click **Start Writing** button to download the backup data. Note that SST cannot restore backup data created with a different version.

Selecting Backup Data

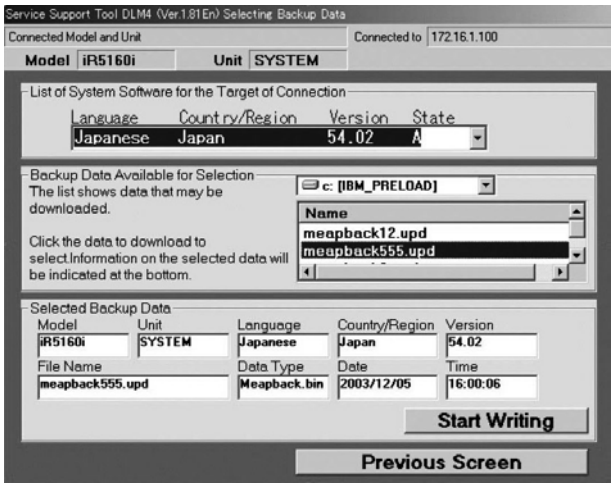

F-13-59

4) When the screen with OK button appears, the restoration of backup data finishes. Click **OK** button.

5) Reboot the main power and access the device with SMS and check that the MEAP applications are restored.

6) Restore non-MEAP backup data and settings that are saved before formatting the hard disk drive. The SDL user information is included in the backup data. You do not have to restore it.

13.1.26 Replacing the Hard Disk Drive

iR C5185N / / iR C5185i PRT /

If you must replace the hard disk drive because of a fault, all MEAP application files stored on it will also be lost, requiring you to re-install the applications and their license files in addition to performing the normal work associated with the replacement of the hard disk.

Like other counter information, MEAP counter information will remain after replacement. Reinstallation of MEAP applications calls for special license files designed to continue with the current counter readings, thus enabling the use of the applications until the date of their expiration. These special licenses are service tools, and are not offered to general users.

If you cannot make a backup of the license files as hard disk suffers a fault, contact the support staff of the regional headquarters of Canon telling the device serial number and the names of MEAP applications installed to the device to obtain the necessary special license files.

In the support departments of regional headquarters of Canon, all license files of the applications that have been issued are filed according to device serial numbers, enabling you to obtain a series of license files through a single screen as long as you can identify the serial number of the device in question.

The following shows the steps to follow after you have obtained a special license from the support staff of the regional headquarters of Canon.

1) Copy the set of special license files on the PC you are using for service work.
Register the following with the Service Support Tool (SST): system file, language file, remote UI file, hard disk drive format file, MEAP contents file. (Be sure to pay attention to the version compatibility of individual files.)

2) Have the new hard disk drive at hand and replace it on site.
While holding down the 2 and 8 keys at the same time, turn on the main power so that the machine will start up in download mode. The IP address 172.16.1.100 will automatically be used, which enables you to download files in high speed through a network.)

3) Using the SST, format the new HDD, and install the System, MEAP Contents, Language, and Remote UI files.

4) When the device has started normally, obtain the jar files of the MEAP applications from the user, and install them using the license files of the applications in the same way as you would when installing them for the first time.

5) As necessary, make login service selections and import user information.

Memo:
If you format the hard disk without uninstalling MEAP applications, always reinstall the applications previously installed. Unless reinstalling them, lots for the MEAP counters the applications use will not be released. The message "The number of applications that can be installed has exceeded the limit. Try to install this application after uninstalling other applications." may appear and the device does not accept to install new application. To install new applications, once reinstall the applications installed before formatting and uninstall unnecessary applications.

13.1.27 MEAP Safe Mode

iR C5185N / / iR C5185i PRT /

Use safe mode if you need to start up the system without worrying about extra applications. It will start up only those system software files (including SMS) that normally start up as default files while preventing MEAP applications and the like from starting up.

When you have made changes and turned off and then on the device, the control panel will indicate 'MPSF' in its lower right corner. The MEAP applications that may have been active before you shut down the equipment will not start up on their own. Make use of safe mode when restoring the system software as when MEAP applications or services cause a fault as the result of a conflict or wrong sequence of registration/use. You can access to SMS in this condition so that you can take necessary measures, for example, you can stop application that may cause the trouble.

If default authentication has been selected, the mode of authentication remains valid; otherwise, the message "The login service must be set again with SMS" appears. Change the login service as necessary.

Starting in Safe Mode
1) Start the device in service mode: click **Ad Func** key, press 2 and 8 buttons at the same time, and then click **Ad Func** key once again so that the service mode screen appears.

2) Press **COPIER** button.

3) Press **OPTION** button.

4) Press **USER.**

5) Press the right-arrow button.

6) Press **MEAPSAF**E.

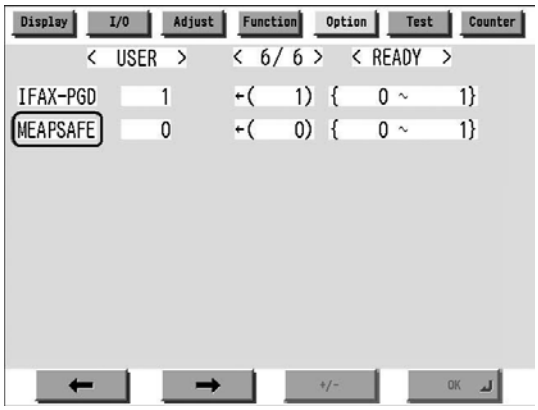

F-13-60

7) Press the 1 key on the control panel keypad to change the setting to '1'; then, click **OK** button.

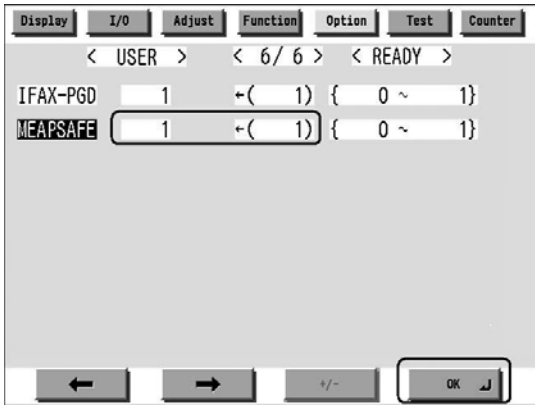

F-13-61

8) Check that the notation 'MPSF' has appeared in the lower right corner of the screen; then, turn off and then on the main power.

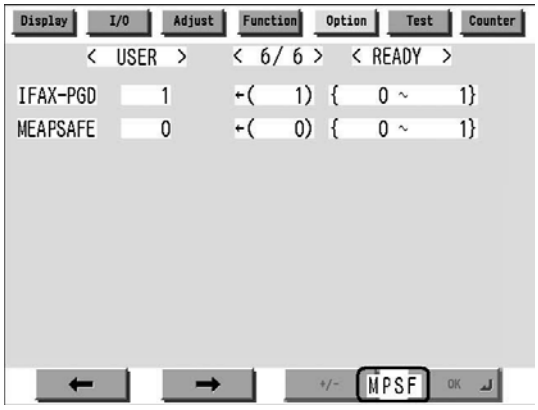

F-13-62

If you want to end safe mode, repeat the steps but change '1' to '0' in step -7 and turn off and then on the main power.

13.1.28 Setting HTTP port for MEAP application (level 2)

iR C5185N / / iR C5185i PRT /

For the ports in which the MEAP application uses, the default is 8000 for the port on HTTP server, and 8443 for the port on HTTPS server. In the case that these ports have already used by the customer who is to introduce this application, the MEAP application cannot use the HTTP (or HTTPS) server(s).
By changing the following ports to use, however, the MEAP application can be used as well as the existing system.

HTTP server
Setting value is 0 through 65535 [the value at factory shipment/after clearing RAM: 8000]

HTTPS server
Setting value is 0 through 65535 [the value at factory shipment/after clearing RAM: 8443]

Memo:
-As for port on HTTPS server, it only applies to the device that supports SSL function.
-Make sure not to use 1 through 1023 other than 80 (HTTP) as a port for MEAP. Because the ports in this range are used by general servers, there is a possibility that the ports in this range will be duplicated in the future.

<Setting Procedure of Port on HTTP server>
1) Startup [SERVICE MODE] (After pressing [USER MODE] button of MEAP device, press [2] button and [8] button at the same time on control panel. Then by

pressing [USER MODE] button again, [SERVICE MODE] screen is displayed).
2) Startup level 2 of [SERVICE MODE] (After starting up [SERVICE MODE] in step 1, press [USER MODE] button again. Then, by pressing [2] button on control panel, the screen is displayed.
3) Press [COPIER] button.
4) Press [Option] button.
5) Press [BODY] button.
6) Press [<-] button.
7) Press [MEAP-PN] button.

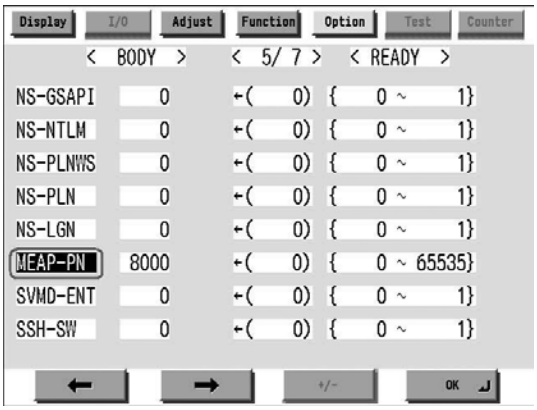

F-13-63

8) Press the port number to specify on the control panel (the numerical value input in the field is displayed), and press [OK] button.

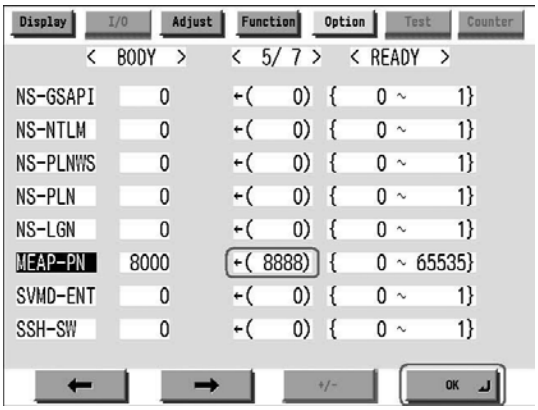

F-13-64

9) Check to see that it is reflected in setting field, and turn off the main power, and then, turn on the main power.

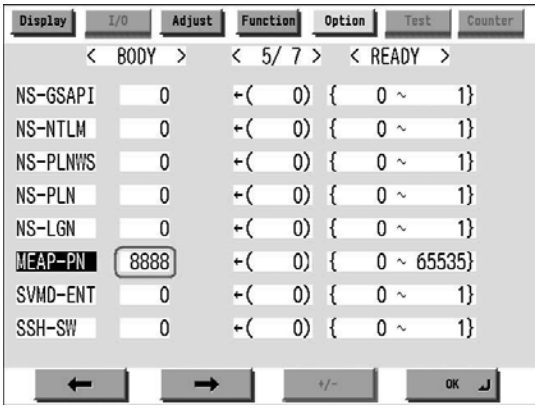

F-13-65

<Setting Procedure of port on HTTPS server>
1) Startup [SERVICE MODE] (After pressing [USER MODE] button of MEAP device, press [2] button and [8] button at the same time on control panel. Then by pressing [USER MODE] button again, [SERVICE MODE] screen is displayed).
2) Startup level 2 of [SERVICE MODE] (After starting up [SERVICE MODE] in step 1, press [USER MODE] button again. Then, by pressing [2] button on control panel, the screen is displayed.
3) Press [COPIER] button.
4) Press [Option] button.
5) Press [BODY] button.
6) Press [<-] button.
7) Press [MEAP-SSL] button.

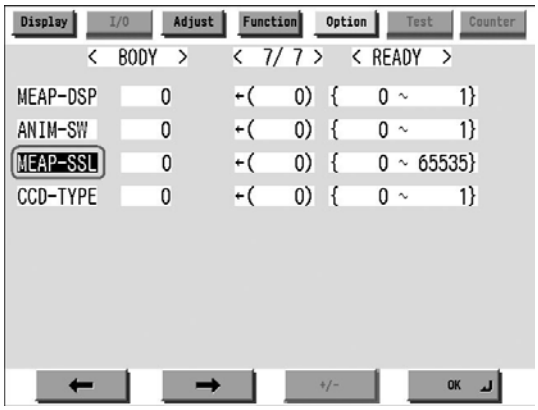

F-13-66

8) Press the port number to specify on the control panel (the numerical value input in the field is displayed), and press [OK] button.

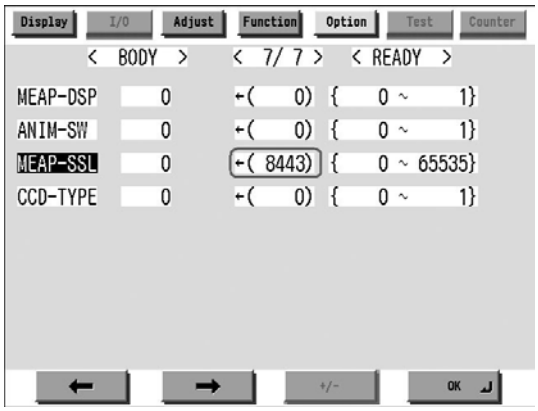

F-13-67

9) Check to see that it is reflected in setting field, and turn off the main power, and then, turn on the main power.

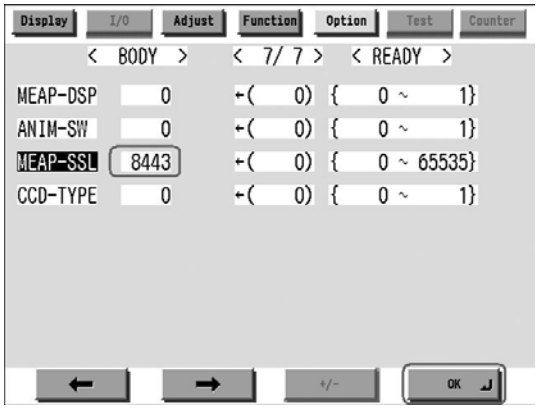

F-13-68

13.1.29 Reference material

iR C5185N / / iR C5185i PRT /

Glossary

T-13-19

Terms & Acronyms	Definitions and Explanations
Applet	Applet Type Application. A Type of MEAP application that is designed to display user interface on device control panel.
Application	A software unit that provides a solution to users.
Application ID	A unique identifier assigned to each application. Used for indicating memory usage of the application in the MEAP system.
ASP	Application Service Provider. A business to provide the application service on Internet.
AVS	Applet Viewer Service. One of the MEAP system services that shows the user interface of the current applet type service on the console.
Code Sign	To attach Digital Signature to software code. MEAP has the mechanism to reject MEAP application without Code Sign for security reason.
CPCA	Common Peripheral Controlling Architecture. CPCA defines an object model of peripheral deices. A client can control a device by creating or modifying objects in the device.
CPCA Java CL	CPCA Java Class Library. A Java class library, which is used to control a device.
Default Authentication - Department ID Management	The login service used when the department ID control is used but other authentication controls are not used. When the Department ID control is turned on, the login dialog prompts the users to enter the department ID and password. The dialog appears the initial screen of both the control panel on the MEAP device and Remote UI
Device Specification ID	ID assigned for each device model. It shows the usage of functions that are equipped by MFP, as well as CPCA API specification and version numbers that is necessary for acquiring the values such as maximum number of copies, etc.
DIS	Dynamic Service Loading Installer Service. Receives data from the DSL on the MEAP platform. Enables an application to install to two or more devices.
DSL	Dynamic Service Loading. While the SMS installs a license file and application to one device, the DSL can install them to two or more devices. It consists of MEAP ESM and the DIS.
Esplet	Esplet Type Application. A type of MEAP application that does not have a user interface on the device console or on the web browser. The term of "Esplet" is a coinage by Canon inspired from Applet, Servlet, and "Espresso".
File descriptor	With a file descriptor, an OS identifies the files that a program accesses. The file descriptor includes information such as file name and size as well as the identifier. An OS determines files to operate with the identifier.
iR Native Application	The functionalities that existing imageRUNNER has such as Copy, Universal Send and Mailbox.
ISV	Independent Software Vender. Software manufacturer who develops and/or sells applications and tools but does not entire computer systems. Refers application developer in this document.
J2ME	Java 2 Platform Micro Edition. One of Java Platforms licensed by Sun Microsystems, Inc. It is applied for MEAP. Other devices such as cellular phones and PDA.
Java	A programming language developed by Sun Microsystems, in the U. S. A. Low dependent on models and OSes and runs on various platforms. Taking advantage of this feature, many applications that runs on web servers uses Java. The MEAP platform uses J2ME - a type of Java.
Java Script	A script language developed by Netscape Communications, in the U.S. A., runs on web browsers such as Netscape Navigator and Internet Explorer. Allows web designers to create interactive pages with HTML files such as animated buttons and display of timetables.
Java VM	JAVA Virtual Machine. The Java byte code interpreter. The Virtual Machine acts as an interpreter for processing the byte code using the native instruction set.
License Access Number	A number issued for accessing license file. The Licensing server requires entries of application ID, expiration date/times information, and the number of access numbers, to issue license access numbers.
License File	A software manufacture of a MEAP application provides the users with the license files. Specifies the terms of agreement that a user concludes with the manufacturer. Required for installing a MEAP application.
Login Service	Manages user information of MEAP device. Authenticates users with user names and passwords. Three login services are available for MEAP device - Default Authentication, which provides department ID control, SDL (Simple Device Login) and SSO (Single Sign-On).
MEAP	Multifunctional Embedded Application Platform. Provides an environment for executing application programs on a peripheral device. Uses the Java platform (J2ME - Java 2 platform Micro Edition) to run Java application for MEAP.
MEAP AMS	MEAP Application Management System. The license issuing server that issues "License File" necessary for MEAP applications to be installed onto MEAP device. Also used for issuing the "License Access Number".
MEAP Application	Runs on MEAP platform. Consists of application files (*.jar) and the license file (*.lic).
MEAP Contents	Required to install an MEAP application to a MEAP device.
MEAP ESM	MEAP Enterprise Service Manager. One of software programs composing the DSL, to be installed on a PC in a Windows environment. Works as the interface with the DSL.
MEAP Specifications	MEAP Spec Version, the term used for the SDK. The version number that shows the APIs of the MEAP platform other than CPCA, such as network and security. The version number is not assigned for each device model.
MEAP device	imageRUNNER (iR) device that has MEAP Platform incorporated.
MFP	Multi Function Peripheral. Peripheral device that supports more than one function, such as digital copier, printer, scanner, and fax.
OSGi	Open Service Gateway Initiative. See "**http://www.osgi.org/**".
Portal Service	The service displayed on a Web browser by inputting the address "**http://<device IP address>:8000/**" or "**http://<device IP address>/**" A portal to access a MEAP device from a Web browser.
Proxy Server	Provides functions to store data fetched from remote servers. When a user request to display a web page that has been displayed and stored in the proxy, the proxy server read the stored data but does not access the remote server where the original page is present, for efficient access services. When a proxy server receives a URL from a PC, it searches the file in the cache and sends it to the PC if the requested file is found. If the requested file is not stored in the cache, it accesses the remote server of the URL to acquire the file and, at the same time, stores the acquired file in the cache so that the proxy server can quickly send the file at the next request.

Detail of License File

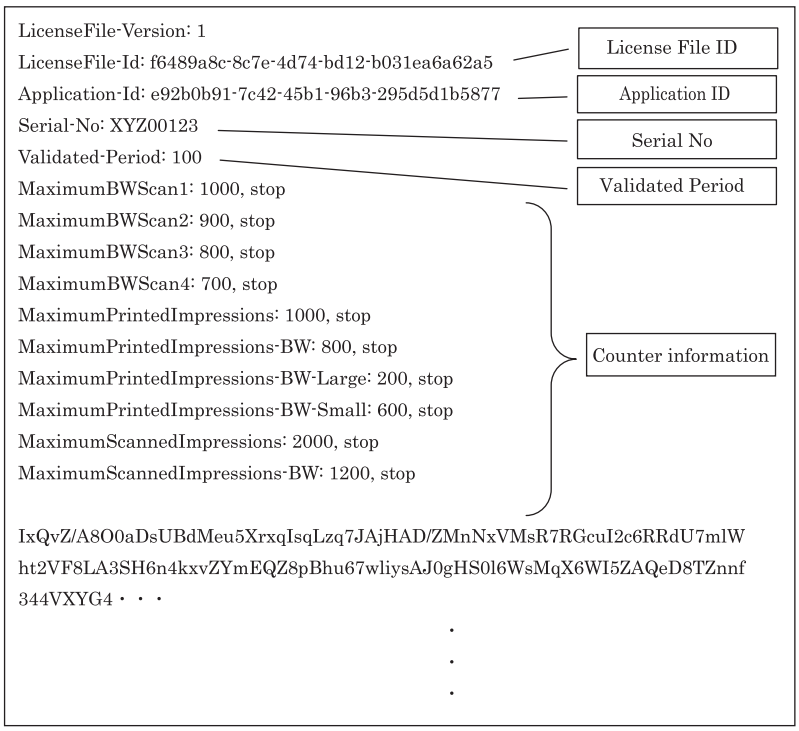

F-13-69

13.1.30 Option for exclusive individual measure

iR C5185N / / iR C5185i PRT /

-Display Setting of Copy Tab
Make a setting as to whether to display/hide the copy screen (copy tab) on the control panel. This is the specification for users who want to customize hiding it on control panel.

Default value
1: display

Setting range, item
0: hide 1: display

Setting Procedure
1) Startup [SERVICE MODE] (After pressing [USER MODE] button of MEAP device, press [2] button and [8] button at the same time on control panel. Then by pressing [USER MODE] button again, [SERVICE MODE] screen is displayed).
2) Press [COPIER] button.
3) Press [Option] button.
4) Press [BODY] button.
5) Press [<-]or[->] (arrow) button.
6) Press [UI-COPY] button.
7) Press either 0 (hide) or 1 (display) on control panel (the numerical value input in the field is displayed), and press [OK] button.
8) Check to see that it is reflected in setting field, and turn off the main power, and then, turn on the main power.

-Error at starting up the MEAP application/Setting to hide JAM screen (level 2)
In the case that operation is restricted by MEAP application, hide the warning screen of error/JAM (such as JAM screen, door opening, no-toner). In the case that these errors occur, there will be a display indicating 'call the service personnel' etc.

Memo:
Part of the warning screens is displayed if shifting to the device screen.
- As for the screens for jam and no-toner, the warning screen (animation) can be displayed by pressing the followings: [Device Screen] > [Recovery Procedure]
- As for the screen for door opening, the warning screen cannot be displayed because there is no display for [[Device Screen] > [Recovery Procedure]

Default value
1: No activation of warning display

Setting range, item
0: display warning screen 1: hide warning screen

Setting Procedure
1) Startup [SERVICE MODE] (After pressing [USER MODE] button of MEAP device, press [2] button and [8] button at the same time on control panel. Then by pressing [USER MODE] button again, [SERVICE MODE] screen is displayed).
2) Startup level 2 of [SERVICE MODE] (After starting up [SERVICE MODE] in step 1, press [USER MODE] button again. Then, by pressing [2] button on control panel, the screen is displayed.
3) Press [COPIER] button.
4) Press [Option] button.
5) Press [BODY] button.
6) Press [<-]or[->] button.
7) Press [ANIM-SW] button.
8) Press either 0 (display warning screen) or 1 (hide warning screen) on control panel (the numerical value input in the field is displayed), and press [OK] button.

9) Check to see that it is reflected in setting field, and turn off the main power, and then, turn on the main power.

-Setting of Screen Transition from MEAP Screen to the Standard Screen
In the case that the operation is restricted by MEAP application, make a setting to hide Native applications such as Copy/Send/Box. With this setting, disable screen transition with => key.

Default value
0: OFF (transit to Native screen)

Setting range, item
0: OFF (transit to Native screen) 1: ON (No-transition to Native screen)

Setting Procedure
1) Startup [SERVICE MODE] (After pressing [USER MODE] button of MEAP device, press [2] button and [8] button at the same time on control panel. Then, by pressing [USER MODE] button again, [SERVICE MODE] screen is displayed).
2) Startup level 2 of [SERVICE MODE] (After starting up [SERVICE MODE] in step 1, press [USER MODE] button again. Then, by pressing [2] button on control panel, the screen is displayed.
3) Press [COPIER] button.
4) Press [Option] button.
5) Press [BODY] button.
6) Press [<-] (arrow) button.
7) Press [ANIM-DSP] button.
8) Press either 0 (transit to Native screen) or 1 (no-transition to Native screen) on control panel (the numerical value input in the field is displayed), and press [OK] button.
9) Check to see that it is reflected in setting field, and turn off the main power, and then, turn on the main power.

Chapter 14 RDS

Contents

14.1 RDS 14-1
14.1.1 Application operation mode 14-1
14.1.2 Service Center URL and Port Specification 14-1
14.1.3 Communication test 14-1
14.1.4 Communication log 14-1
14.1.5 Detailed Communication log 14-1
14.1.6 SOAP communication function 14-1
14.1.7 Resend at SOAP transmission error 14-2
14.1.8 e-RDS setting screen 14-2
14.1.9 Sleep operation 14-4
14.1.10 Network Setting (Maintenance) 14-4
14.1.11 e-RDS Setting (Maintenance) 14-4
14.1.12 Trouble shoot 14-5
14.1.13 Error message 14-5

14.1 RDS

14.1.1 Application operation mode

CLC5151 / / / CLC4040 / / iR C4580i / / iR C4080i / / / / iR C5185N / / iR C5185i PRT /

Serviceman selects the operation mode of OFF/ON by the setting in e-RDS setting screen of the service mode. (Menu Screen: E-RDS)
- OFF (default): e-RDS doesn't operate.
- ON: e-RDS operates every function.

14.1.2 Service Center URL and Port Specification

CLC5151 / / / CLC4040 / / iR C4580i / / iR C4080i / / / / iR C5185N / / iR C5185i PRT /

The URL and the port number of the equipment information destination can be specified as follows.
- Default (specified beforehand)
- Specified by the service mode. (Menu Screen: RGW-ADR, RGW-PORT)

14.1.3 Communication test

CLC5151 / / / CLC4040 / / iR C4580i / / iR C4080i / / / / iR C5185N / / iR C5185i PRT /

Serviceman can distinguish the communication status with the UGW by executing the communication test in the service mode (Menu Screen: COM-TEST), and referring to the communication log
Error information is displayed in the latest communication log at communication error.

14.1.4 Communication log

CLC5151 / / / CLC4040 / / iR C4580i / / iR C4080i / / / / iR C5185N / / iR C5185i PRT /

The list of the log of the communication error (proxy server error etc.)(For 30) can be displayed in display panel in the service mode. (Menu Screen: COM-LOG)

14.1.5 Detailed Communication log

CLC5151 / / / CLC4040 / / iR C4580i / / iR C4080i / / / / iR C5185N / / iR C5185i PRT /

Detailed information of the error in the communication log can be displayed in display panel. (Log List Screen: Each error)

14.1.6 SOAP communication function

CLC5151 / / / CLC4040 / / iR C4580i / / iR C4080i / / / / iR C5185N / / iR C5185i PRT /

The following processing is achieved by the SOAP communication (SSL client communication).
e-RDS does the host authentication by using the CA*1 certificate of the VeriSign Co..
When the host certificate or the CA certificate is expired, e-RDS doesn't connect to UGW.
*1: CA: Certificate Authority: Organization that issues electronic certificate used by electronic commerce etc

(1) Communication test:
- Do the communication test

(2) Regularly collect the following data, and transmit it.
- Copy Counter
- Service mode counter
- Parts counter
- Mode Counter
- ROM version
- Scheduling information
- Application log

(3) When jam or alarm/service call error is detected from the device, e-RDS transmits to UGW.
- Transmission of alert code(Counter information is transmitted at the same time.)

When the state of the device changes, e-RDS sends the alert code list.
The main alert codes used are Toner LOW/OUT, Jam, and Door open.
When recovering from an error, e-RDS transmits data that shows the recovering from an error again.
- Transmission of Jam log (Counter information is transmitted at the same time.)
- Transmission of Alarm log (Counter information is transmitted at the same time.)
- Transmission of Service Call (Error code) log (Counter information is transmitted at the same time.)

(4) Change of the device scheduling information
- Scheduling information can be changed by the instruction from UGW.

List of Transmissions:

Content of transmission	Transmission timing
Communication test	When Service mode of device is executed
Copy counter collection/transmission	Every 6 hours
Service mode counter collection/transmission	Every 6 hours
Mode counter collection/transmission	Every 6 hours
Parts counter collection/transmission	Every 6 hours
ROM version transmission	Every 6 hours
Application log	When the log file size exceeds 10kbytes

Content of transmission	Transmission timing
Transmission of alert code	When the state of the device is changed.
Jam	When Jam occurs
Alarm	When Alarm occurs
Error	When Error occurs
Confirmation whether there is processing that e-RDS executes	Every 6 hours

14.1.7 Resend at SOAP transmission error

CLC5151 / / / CLC4040 / / iR C4580i / / iR C4080i / / / / iR C5185N / / iR C5185i PRT /

When SOAP send error is generated by the trouble on UGW side etc. at the transmission of an alert code, the latest three batches of data that failed in the transmission are stored in HDD, and e-RDS resends it at prescribed intervals.

14.1.8 e-RDS setting screen

CLC5151 / / / CLC4040 / / iR C4580i / / iR C4080i / / / / iR C5185N / / iR C5185i PRT /

The e-RDS setting screen is in the service mode screen.
When the tab above is selected on any e-RDS setting screen, it changes to the mid item screen. Moreover, it returns to previous screen when reset key is pressed.

Menu Screen

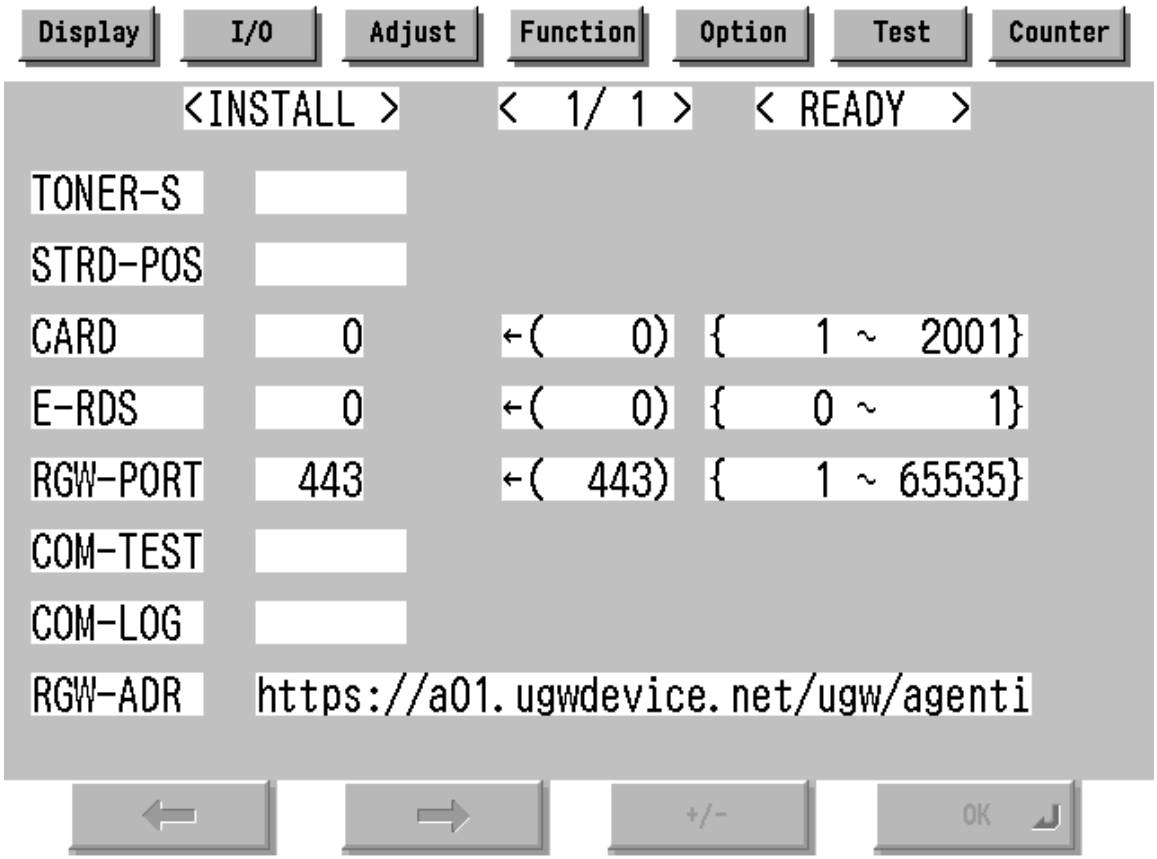

F-14-1

Setting screen of e-RDS. The form and the initial value of each setting item are as follows.

Item(meaning)	Explanation
E-RDS (Embedded-RDS)	Turning OFF/ON e-RDS. 0:OFF / 1:ON Counter information and error information are transmitted to the host at ON. Initial value: 0: OFF
RGW-ADR (RDS-Gateway ADDRESS)	URL of the host (When the input area is selected (touched), shift to the keyboard screen) Initial value: URL of an actual host. Length: 129 characters (NULL is contained)
RGW-PORT (RDS-Gateway PORT)	Port Number of the host Initial value: 443 Range of available number: 1-65535
COM-TEST (Communication Test)	Execution of Communication test Communication test starts when you select (touch) this and press the [OK] key. e-RDS tries the connection with the host, and displays the result by "OK!" or "NG!". (NG: No Good, the communication test is failed)

Item(meaning)	Explanation
COM-LOG (Communication Log)	The result of communication test When this is selected (touched), and the blank rectangle on right side is selected, it switches to "Log list screen".

Log list screen

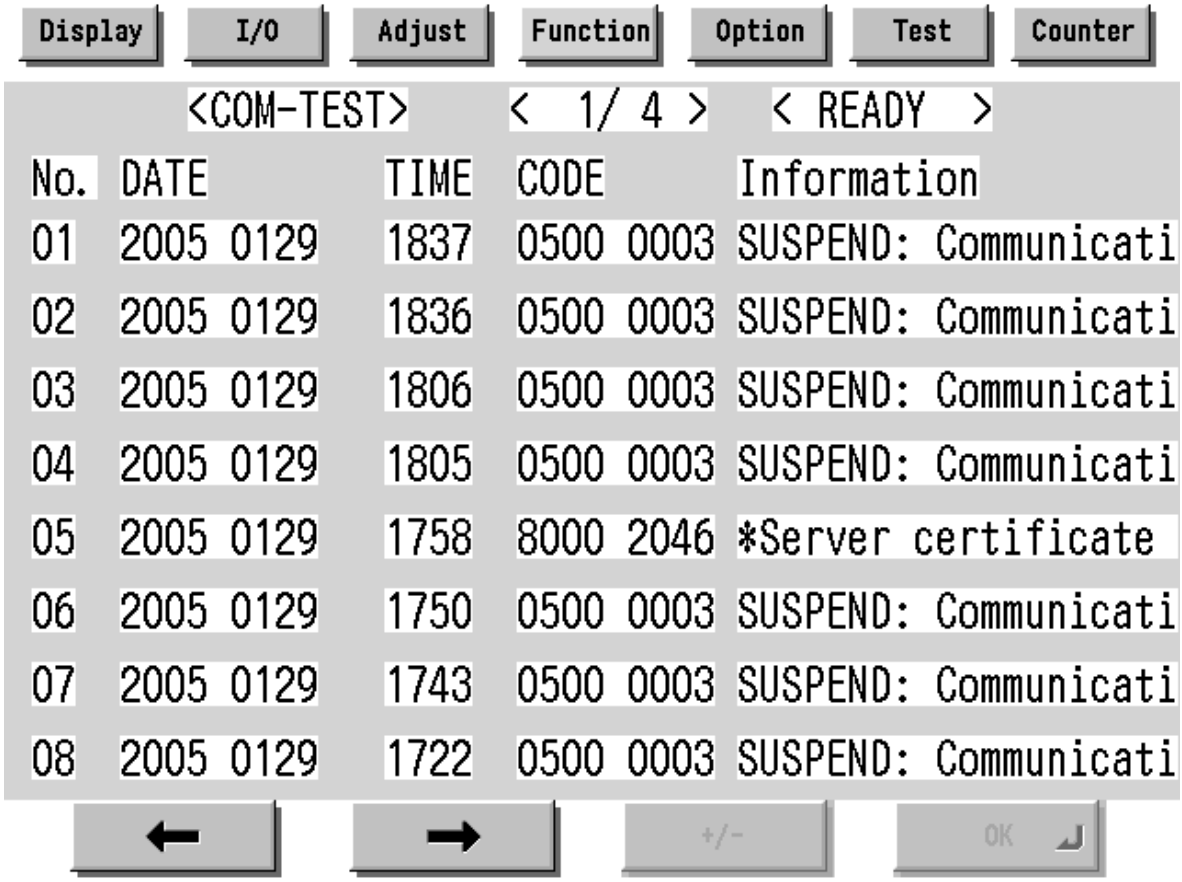

F-14-2

History list of communication test error (error generation date, error code and error information) is displayed.
When the each line is selected (touched), it shifts to "Log detailed screen".
It shifts to "Menu screen" by the [Function] > [INSTALL].
The list screen changes by a right arrow or a left arrow.
Maximum log number: 30
Notes: Only the first part of error information is displayed.

Log detailed screen

F-14-3

Detailed information of individual communication test error is displayed.
Refer to the displayed message to "Error message list".
It shifts to "Log list screen" by the [OK] button pressing.
Maximum length of error information: 128 characters (not include NULL)

14.1.9 Sleep operation

CLC5151 / / / CLC4040 / / iR C4580i / / iR C4080i / / / / iR C5185N / / iR C5185i PRT /

When there is a method that should be transmitted while e-RDS is operating (ON), e-RDS wakes from the state of sleep and begins transmitting.

14.1.10 Network Setting (Maintenance)

CLC5151 / / / CLC4040 / / iR C4580i / / iR C4080i / / / / iR C5185N / / iR C5185i PRT /

You should do the network setting of Device appropriately before the e-RDS setting.
A. Display the Additional Functions screen.
- Press [Additional Functions (*)] key.
- Input ID code.

B. Display the TCP/IP Settings screen.
- Select (touch) [System Settings] > [Network Settings] > [TCP/IP Settings] on the Touch Panel Display.

C. Setting of items related to IP address
- Select (touch) [IP Address Settings] => IP Address Settings screen is displayed.
- Set each items such as IP Address, Subnet Mask, Gateway Addresses, and DHCP, etc.
- Return to the TCP/IP Settings screen by pushing the [OK] button after the setting ends.

D. DNS Settings
- Select (touch) [DNS Settings] => DNS Settings screen is displayed.
- Set necessary items.
- Return to the TCP/IP Settings screen by pushing the [OK] button after the setting ends.

E. Proxy Settings
- Select (touch) [Proxy Settings] (Press Down arrow button until [Proxy Settings] is displayed on the TCP/IP Settings screen.) => Proxy Settings screen is displayed.
- Set necessary items.
- Return to the TCP/IP Settings screen by pushing the [OK] button after the setting ends.

F. Display the normal screen.
- Press [Additional Functions (*)] key pressing or press [Done] button to a necessary frequency.

14.1.11 e-RDS Setting (Maintenance)

CLC5151 / / / CLC4040 / / iR C4580i / / iR C4080i / / / / iR C5185N / / iR C5185i PRT /

A. Display the Menu screen of e-RDS from the service mode.
A-1. Shift to the service mode
- Press [Additional Functions (*)] key.
- Press 2 and 8 of the numeric keys at the same time.
- Press [Additional Functions (*)] key. => SERVICE MODE LEVEL1

A-2. Initialize e-RDS
- Select (touch) [COPIER] > [Function] > [CLEAR] > [ERDS-DAT] on the Touch Panel Display.

A-3. Display Menu screen of e-RDS
- Select (touch) [COPIER] > [Function] > [INSTALL] => Menu screen

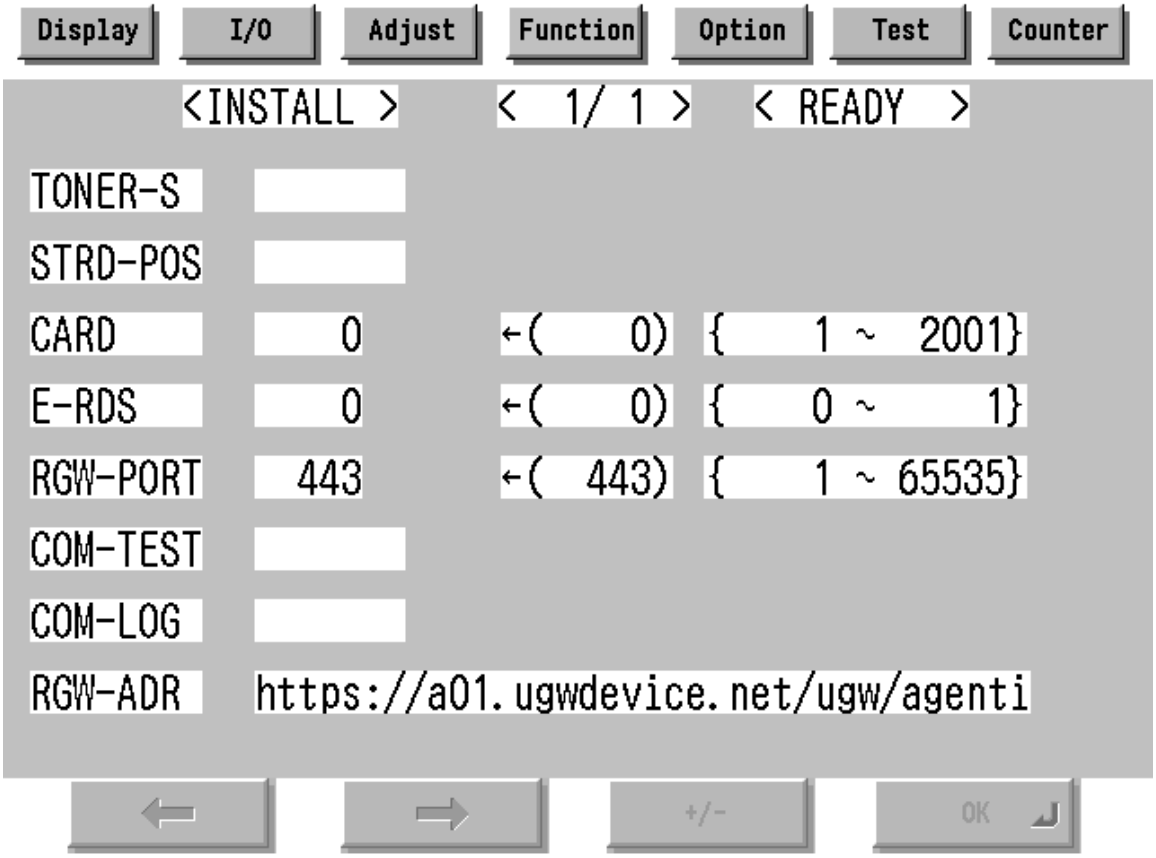

F-14-4

B. Set 1 in [E-RDS].
C. Input the URL of UGW in [RGW-ADR]. (Select the input area to shift to the keyboard screen, and Input URL.)
D. Input the port number of UGW in [RGW-PORT].
E. Select [COM-TEST] and push [OK] button to start the communication test with UGW.
F. While the result is "NG!", repeat to correct the setting and try [COM-TEST] until the result becomes "OK!". You need checking the setting of the network of the device and the connection of the network if necessary.

Notes: In the environment with the proxy server, you should set the proxy server. Refer to the proxy setting in the network guide of the device for details.

14.1.12 Trouble shoot

CLC5151 / / / CLC4040 / / iR C4580i / / iR C4080i / / / / iR C5185N / / iR C5185i PRT /

1-1
Q. There is no setting item.
A. Confirm the network setting.
Confirm the model

1-2
Q. The communication test fails.
A. Confirm the firmware version.
Confirm the network setting.
Confirm the communication test result.

14.1.13 Error message

CLC5151 / / / CLC4040 / / iR C4580i / / iR C4080i / / / / iR C5185N / / iR C5185i PRT /

Error information displayed in "Log list screen" or "Log detailed screen" is as follows.

Notes: Only the first part of error information is displayed in "Log list screen". Maximum length of error information in "Log detailed screen": 128 characters (not include NULL)

When the communication test is not completed end e-RDS is 1 (ON), following string is displayed:
"SUSPEND: Communication test is not performed."

Moreover, when it fails in the event waiting in the device and either of a Jam notification, an Alarm notification, and a Service call notification or an Alert notification is specified, following string is displayed.

"Event Registration is Failed."

In other cases error information is displayed in the form of the following.

"[*] [Error string]: [Method name] [Server side detailed error]"

The enclosed character string by [] is replaced as follows.

[*]:
*(asterisk) is added to the head of the string only at the communication test.

[Error string]:
As for number 1 and 2 of the following Error string lists, only the Error string is displayed. Besides, it is displayed as "[*] [Error string]: [Method name] [Server side detailed error]". ([Server side detailed error] might not go out.)

	Error string	Cause	Counter Measure
1	SUSPEND: Communication test is not performed	The e-RDS is started (the device is rebooted) when e-RDS is ON and communication test isn't done.	Complete the communication test.
2	Event Registration is Failed.	The device failed event processing.	Turn OFF/ON of the device main switch. Or, replace the system software of the device (upgrade).
3	URL Scheme error (not https)	The header of registered URL of UGW is not https.	Change the header on URL of UGW to https
4	Server connection error	Communication failure of TCP/IP occurred. Or IP address of the device isn't set.	Check the network connection.
5	URL server specified is illegal	Illegal URL (other than UGW) is specified.	Correct URL.
6	Proxy connection error	The e-RDS cannot connect it with the proxy server.	Check and correct the proxy server address etc.
7	Proxy authentication error	The e-RDS fails the authentication to proxy.	Check and correct username and password to log in proxy.
8	Server certificate error	- The certificate is not installed in The device. - The certificate that The user is using is not registered in The device or The server.	Register the root certificate in the device or register the VeriSign certificate in the server.
9	Server certificate expired	- Expired certificate is registered in the device or the server. - The date of the device is outside the time limit of the certificate.	- Register the root certificate in expiration date in the device or register the VeriSign certificate in the server. - Set an accurate date to the device.
10	Unknown error	Other communication error occurs.	After waiting for a while, try again.
11	Server response error (NULL)	UGW returns the error but communication to UGW is succeeded. If (NULL) is displayed after the message, the error occurs in the HTTPS communication.	After waiting for a while, try again.
12	Server response error (Hexadecimal)	UGW returns the error but communication to UGW is succeeded. (Hexadecimal) displayed after the message is error code that UGW returns. [server side detailed error] is added at the end of error information only at this error.	After waiting for a while, try again.
13	Device internal error	Device internal error such as the memory cannot be taken occurs.	Turn OFF/ON of the device main switch. Or, replace the system software of the device (upgrade).
14	Server schedule is invalid	The schedule setting value given by UGW is found faulty at the time of communication test.	Report the detailed information of error occurrence to the support department. After the remedy by UGW, retry the communication test.
15	Server response time out	There was no reply from UGW in predetermined time. (The congestion of the network etc.) It is the timeout at HTTPS level.	After waiting for a while, try again.
16	Service not found	The URL of UGW is illegal, and UGW is inaccessible.	Check and correct the URL of UGW.
17	E-RDS switch is set OFF	You execute the communication test while the E-RDS switch is OFF.	Turn ON E-RDS switch, and execute the communication test.
18	Server schedule is not exist	The e-RDS receives empty schedule data from UGW.	Check setting file. (Call the help desk of UGW.)
19	Network is not ready, try later	You execute the communication when the connection to the network has not been established. (The network connection might not be established from the start-up of the device for 60 seconds.)	Confirm that the network connection has been established. Moreover, execute again after enough waiting.
20	URL error	Illegal URL (Syntax error etc.)	Correct URL.

[Method name]:

T-14-1

	Method name	Meaning
1	postServiceModeCount	Account counter acquisition phase
2	postModeCount	Mode counter acquisition phase
3	postPartsCount	Parts counter acquisition phase
4	postFirmwareInfo	ROM version acquisition phase
5	getOperationList	Check/acquisition phase whether the information file for me is in UGW.
6	postOperationOutcome	
7	postConfiguration	Phase in which E-RDS configuration is transmitted to UGW
8	postGlobalClickCount	Counter acquisition phase
9	postJamLog	Jam notification acquisition phase
10	postServiceCallLog	Error notification acquisition phase
11	postAlert	Alert notification acquisition phase
12	postDebugLog	Log acquisition phase
13	getConfiguration	Information acquisition phase (Schedule transmission etc.)
14	communicationTest	Communication test phase

[Server side detailed error]:
Detailed error information returned from UGW is displayed for "Server response error".
However, only the first 128 characters are displayed by the entire error information.
Nothing is displayed here at other errors.

Chapter 15 Maintenance and Inspection

Contents

15.1 Periodically Replaced Parts 15-1
15.1.1 Periodically Replaced Parts 15-1
15.1.2 Reader Unit 15-1
15.1.3 Printer Unit 15-1
15.2 Durables and Consumables 15-1
15.2.1 Outline 15-1
15.2.2 Reader Unit 15-1
15.2.3 Printer Unit 15-2
15.3 Scheduled Servicing Basic Procedure 15-2
15.3.1 Scheduled Servicing Basic Procedure 15-2
15.3.2 Scheduled Servicing (Reader Unit) 15-3
15.3.3 Scheduled Servicing (Printer Unit) 15-4

15.1 Periodically Replaced Parts

15.1.1 Periodically Replaced Parts

CLC5151 / / / CLC4040 / / / iR C4580i / / / iR C4080i / / / / Color Image Reader-F1 / Color Image Reader-E1 / Dupiex Color Image Reader-G1 / iR C5185N / / iR C5185i PRT /

Some parts of the machine must be periodically replaced to ensure a specific level of product performance (i.e., they may not show wear but can significantly affect the machine performance once they fail). If possible, schedule any periodical replacement so that it coincides with scheduled servicing.

The guide to periodical replacement is subject to change according to the site of installation and habits of use.

15.1.2 Reader Unit

CLC5151 / / / CLC4040 / / iR C4580i / / iR C4080i / / / / Color Image Reader-F1 / Color Image Reader-E1 / Dupiex Color Image Reader-G1 / iR C5185N / / iR C5185i PRT /

The reader unit does not have parts that require periodical replacement.

15.1.3 Printer Unit

CLC5151 / / / CLC4040 / / iR C4580i / / iR C4080i / / / / iR C5185N / / iR C5185i PRT /

T-15-1

As of January 2007

No.	Part Name	Part No.	Quantity	Estimated Life	Remarks
[1]	Toner filter	FC7-4195	1	500,000 prints	
[2]	ITB Belt Dust Proof Filter	FL2-5780	1	500,000 prints	

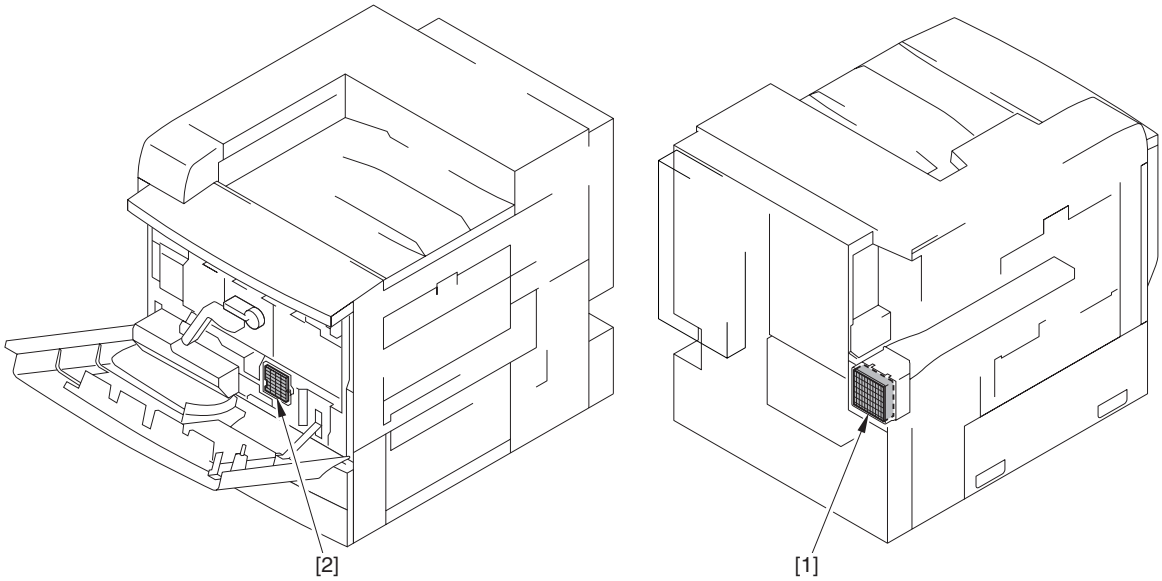

F-15-1

MEMO:
The estimated life is in terms of the median value found in the evaluation data. The parts number, further, is subject to change to reflect design changes.

15.2 Durables and Consumables

15.2.1 Outline

CLC5151 / / / CLC4040 / / iR C4580i / / iR C4080i / / / / Color Image Reader-F1 / Color Image Reader-E1 / Dupiex Color Image Reader-G1 / iR C5185N / / iR C5185i PRT /

Some parts of the machine may require replacement once or more over the life of the product because of deterioration or damage. Replace them as needed by referring to the guide.
Find Out When to Replace
Use the following service mode to find out when it is best to replace a specific durable part.
- Copier
  COPIER>COUNTER>DRBL-1
- Option
  COPIER>COUNTER>DRBL-2

15.2.2 Reader Unit

CLC5151 / / / CLC4040 / / iR C4580i / / iR C4080i / / / / Color Image Reader-F1 / Color Image Reader-E1 / Dupiex Color Image Reader-G1 / iR C5185N / / iR C5185i PRT /

The reader unit does not have parts that are designated as "durables."

15.2.3 Printer Unit

CLC5151 / / / CLC4040 / / iR C4580i / / iR C4080i / / / / iR C5185N / / iR C5185i PRT /

T-15-2

					As of January 2006
No.	**Parts Name**	**Parts Number**	**Quantity**	**Replacement Timing**	
1	Waste Toner Box	FM2-5383	1	50,000	Average Monthly CV is more than 5000 prints at 5% image ratio and 10 to 60% color image ratio. *This value may be lower if Average Monthly CV is less than 5000 prints or excessively high.
2	Intermediate Transfer Belt	FC7-0091	1	300,000	
3	Drive Roller	FC7-2747	1	300,000	
4	Primary Transfer Roller	FC7-4811	4	300,000	
5	Secondary Transfer Roller	FB6-2934	1	300,000	
6	Secondary Transfer (Outside) Roller Unit	FM2-7475	1	300,000	
7	Intermediate Transfer Cleaning Unit	FG6-8989	1	100,000	
8	Feeding Roller (Each Cassette)	FC6-7083	2	120,000	
9	Separation Roller (Each Cassette)	FC6-6661	2	120,000	
10	Feeding Roller (Manual Feed)	FB1-8581	1	120,000	
11	Separation Roller (Manual Feed)	FB5-0873	1	120,000	
12	Fixing Unit(100V)	FM3-0690	1	300,000	
	Fixing Unit(120V)	FM3-0691	1	300,000	
	Fixing Unit(230V)	FM3-0692	1	300,000	

MEMO:
The estimated life is in terms of the median value found in the evaluation data. The parts number, further, is subject to change to reflect design changes.

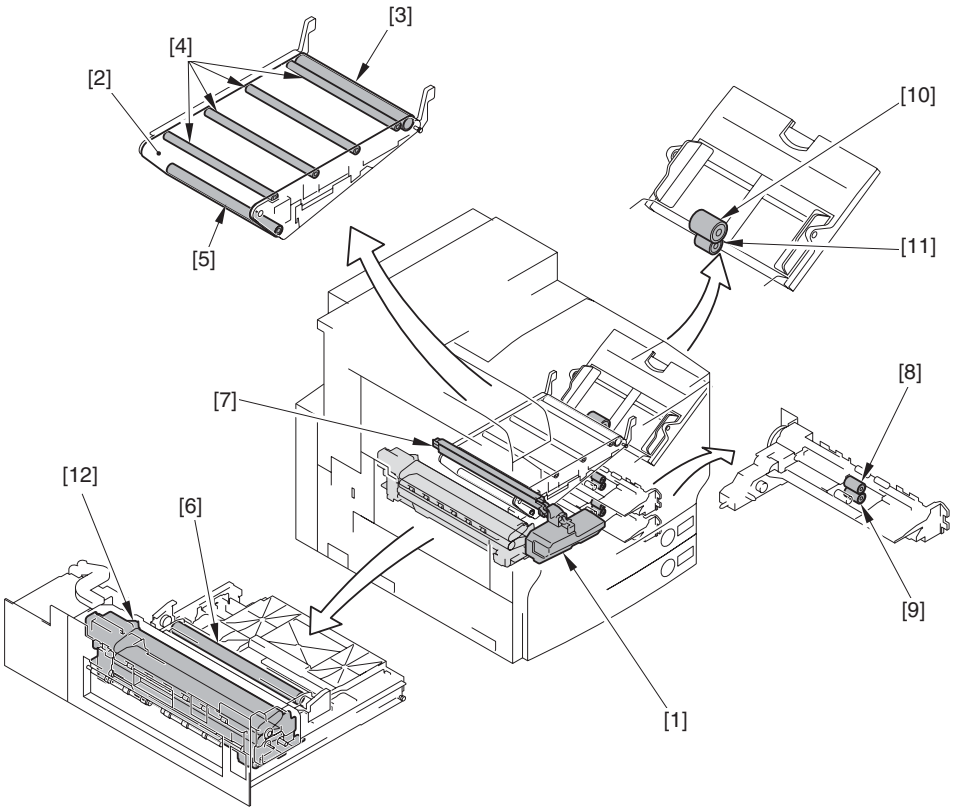

F-15-2

15.3 Scheduled Servicing Basic Procedure

15.3.1 Scheduled Servicing Basic Procedure

CLC5151 / / / CLC4040 / / / iR C4580i / / / iR C4080i / / / / Color Image Reader-F1 / Color Image Reader-E1 / Dupiex Color Image Reader-G1 / iR C5185N / / iR C5185i PRT /

- As a rule, provide scheduled servicing every 40,000 prints.
- Before paying a scheduled visit, check the Service Record, and take any parts likely to need replacement.
- If the machine's power plug remains connected to a wall outlet for a long time in a site where there is much dust, moisture, or oil smoke, it can collect these elements and trigger insulation failure or fires. Be sure to disconnect the power plug periodically and clean the plug and the area around it with a dry cloth.

Steps
1) Report to the person in charge.
Check the general condition.
2) Record the counter reading.
Check the faulty prints.
3) Make test prints.
(1) Toner density standards
(2) Soiled background;
(3) Character definition
(4) Margin
(5) Fixing: Faulty registration, soiled back
(6) Margin standards
(Single-side print)
Left edge (horizontal scanning): 2.0 mm -/+ 1.5 mm
Leading edge (vertical scanning): 2.5 mm -/+ 1.5 mm
(Both-side print)
Left edge (horizontal scanning): 2.0 mm -/+ 1.5 mm
Leading edge (vertical scanning): 2.5 mm -/+ 2.0 mm
4) Waste Toner Colleting Container
If the waste toner collecting container is more than half full, dispose of the toner in a plastic bag; or, replace the toner collecting container itself.

- Be sure to observe all rules and regulations of the governing community when disposing of waste toner.
- Do not dispose of waste toner into fire. (It may explode, causing a significant hazard.)

5) Clean the copyboard glass and the reader glass.
6) Make test copies.
7) Make sample copies.
8) Operation check of the leakage breaker
Press the test switch of the leakage breaker with the power switch 'On', and check to see that the leakage breaker normally operates (the breaker switch tilts to the side of Off and cuts the power).
If the leakage breaker does not normally operate, replace the leakage breaker and implement the check again.
<Recovery procedure>
After checking the operation, turn 'Off' the main power switch, turn 'On' the breaker switch and then turn 'On' the main power switch.
9) Organize the sample copy, clean and clear up the area around the machine.
10) Record the final counter.
11) Fill in the service book and make a report to the person in charge. Write the history of operation check for the leakage breaker in the service book.

15.3.2 Scheduled Servicing (Reader Unit)

CLC5151 / / / CLC4040 / / iR C4580i / / iR C4080i / / / / Color Image Reader-F1 / Color Image Reader-E1 / Dupiex Color Image Reader-G1 / iR C5185N / / iR C5185i PRT /

Do not use solvents or oils that are not indicated herein.

T-15-3

Unit name	Location	Cleaning	Remarks
Optical path	Scanner rail	clean	if dirt is appreciable
	Copyboard glassÅiInside and outside sideÅj	clean	if dirt is appreciable
	No. 1 through No. 3 mirrors	clean	if dirt is appreciable
	Original reflecting plate	clean	if dirt is appreciable
	Original size sensor	clean	if dirt is appreciable
	Lens	clean	if dirt is appreciable
	ADF reader glassÅiInside and outside sideÅj	clean	if dirt is appreciable

Points to Note About Scheduled Servicing
Unless otherwise specifically mentioned, use lint-free paper and alcohol for cleaning.

- If you used solvent for cleaning, be sure that the solvent has completely dried before mounting the part back to the machine.
- Unless specifically mentioned, do not use a wet (moist) cloth for cleaning.
- See to it that scheduled servicing and replacement are conducted as indicated.

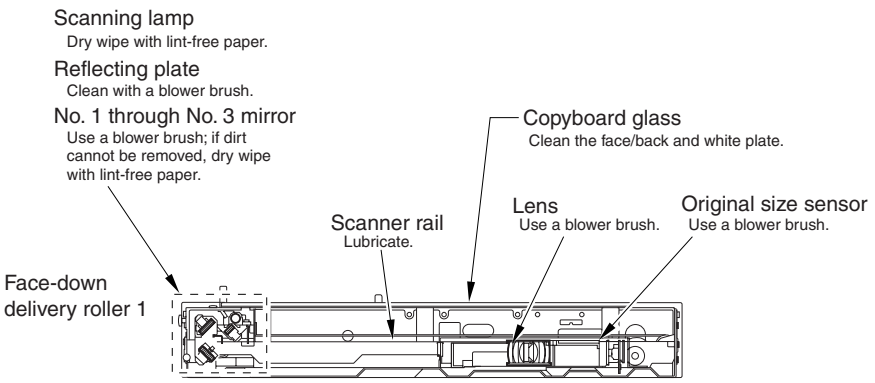

Note: Unless otherwise indicated and for guides coming into contact with paper, use lint-free paper and alcohol.

F-15-3

15.3.3 Scheduled Servicing (Printer Unit)

CLC5151 / / / CLC4040 / / iR C4580i / / iR C4080i / / / / iR C5185N / / iR C5185i PRT /

Do not use solvents or oils that are not indicated herein.

T-15-4

Unit name	Location	Maintenance intervals every 40,000	150,000	Other	Remarks
Delivery unit	Internal delivery roller			clean	if dirt is appreciable
	External delivery roller			clean	if dirt is appreciable
Duplex feed unit	Duplex roller 1			clean	if dirt is appreciable
	Duplex roller 2			clean	if dirt is appreciable
	Duplex roller 3			clean	if dirt is appreciable
	Duplex roller 4			clean	if dirt is appreciable
Delivery vertical path unit	Reversing roller	clean			
	Face-down delivery roller 1	clean			
	Face-down delivery roller 2	clean			
Fixing unit	Fixing inlet guide			clean	if dirt is appreciable
	Fixing inlet roll			clean	if dirt is appreciable
	Delivery upper guide			clean	if dirt is appreciable
	Delivery lower guide			clean	if dirt is appreciable
Manual feed registration unit	Pre-registration roller			clean	if dirt is appreciable
	Registration upper roller			clean	if dirt is appreciable
	Registration lower roller			clean	if dirt is appreciable
	Pickup vertical path roller			clean	if dirt is appreciable
Intermediate transfer unit	Drive roller		clean		or, when replacing the intermediate transfer belt
	Tension roller		clean		or, when replacing the intermediate transfer belt
	Secondary transfer internal roller		clean		or, when replacing the intermediate transfer belt
	Internal transfer belt (inside)		clean		or, when replacing the intermediate transfer belt
Secondary transfer unit	Secondary transfer rear guide			clean	if dirt is appreciable

Points to Note About Scheduled Servicing
Unless otherwise specifically mentioned, use lint-free paper and alcohol for cleaning.

- If you used solvent for cleaning, be sure that the solvent has completely dried before mounting the part back to the machine.
- Unless specifically mentioned, do not use a wet (moist) cloth for cleaning.
- See to it that scheduled servicing and replacement are conducted as indicated.

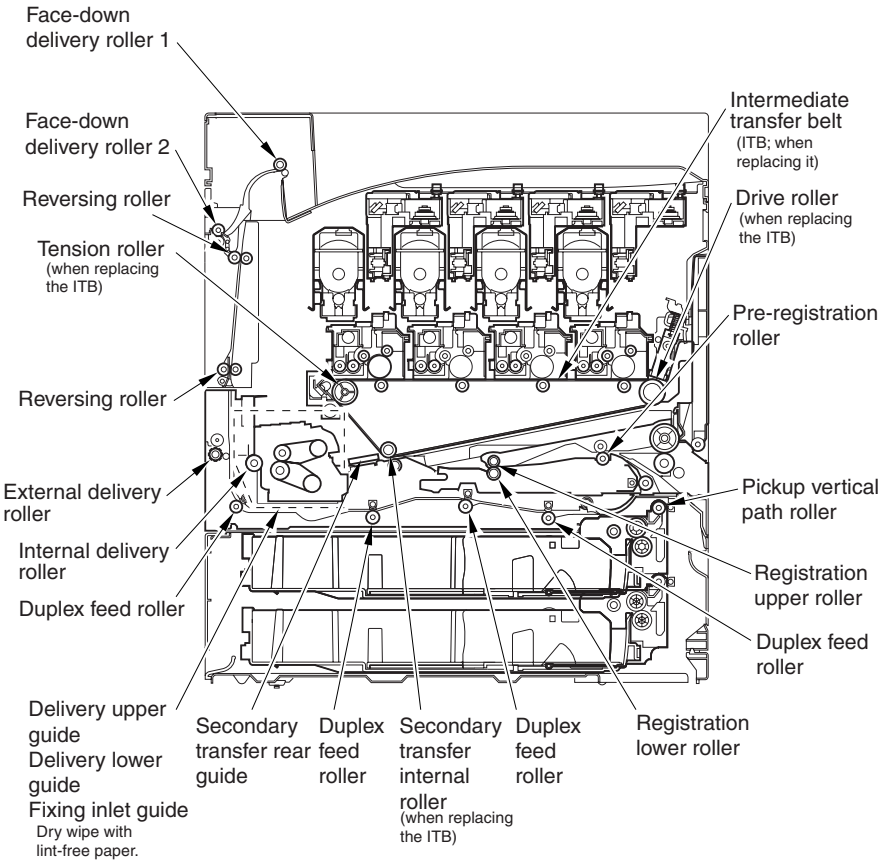

Note: Unless otherwise indicated and for guides coming into contact with paper, use lint-free paper and alcohol.

F-15-4

Chapter 16 Standards and Adjustments

Contents

16.1 Image Adjustments 16-1
16.1.1 Standards for Image Position 16-1
16.1.2 Checking the Image Position 16-1
16.1.3 Adjusting the Left/Right Margin (Cassette) 16-1
16.1.4 Adjusting the Left/Right Margin (Manual Feed Tray) 16-2
16.1.5 Adjusting the Left/Right Margin (Side Paper Deck) 16-2
16.2 Scanning System 16-2
16.2.1 After Replacing the CCD Unit 16-2
16.2.2 After Replacing the Scanning Lanp 16-3
16.2.3 After Replacing the Copyboard Glass 16-3
16.2.4 After Replacing the Reader Controller PCB or Initializing the RAM 16-3
16.2.5 After Replacing the CCD Unit 16-4
16.2.6 Treatment for ADF Replacement 16-4
16.2.7 After Replacing the Reader Controller PCB 16-5
16.3 Laser Exposure System 16-6
16.3.1 Laser Exposure System 16-6
16.4 Image Formation System 16-6
16.4.1 Laser maker identification 16-6
16.4.2 After Replacing the Transfer Unit 16-6
16.4.3 After Replacing the Pattern Reading Unit 16-6
16.4.4 Adjustments of Tilt in Intermediate Transfer Unit Rail 16-6
16.5 Fixing System 16-8
16.5.1 Treatment after Replacement of Fixing Unit 16-8
16.6 Electrical Components 16-8
16.6.1 After Replacing the Reader Controller PCB or Initializing the RAM 16-8
16.6.2 After Replacing the Reader Controller PCB 16-10
16.6.3 Replacing DC Controller PCB 1（IMG） 16-10
16.6.4 Replacing Main Controller PCB 16-11
16.6.5 When Replacing the SRAM PCB 16-11
16.6.6 When Replacing the HDD 16-11
16.6.7 When Replacing the Power Supply PCB 16-11
16.7 Pickup/Feeding System 16-11
16.7.1 Adjusting the Horizontal Registration When Replacing the Pickup Cassette 16-11
16.7.2 Adjusting the Horizontal Registration When Replacing the Duplex Unit 16-12

16.1 Image Adjustments

16.1.1 Standards for Image Position

CLC5151 / / / CLC4040 / / iR C4580i / / iR C4080i / / / / iR C5185N / / iR C5185i PRT /

The standards for the image margin/non-image width of prints made at 100% are as follows:

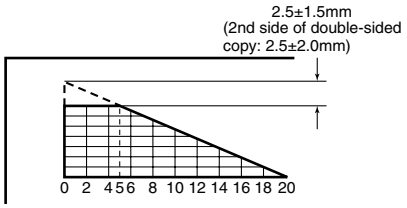

F-16-1

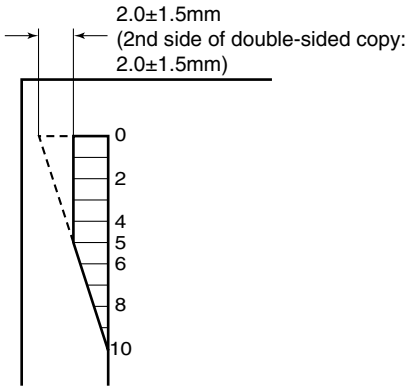

F-16-2

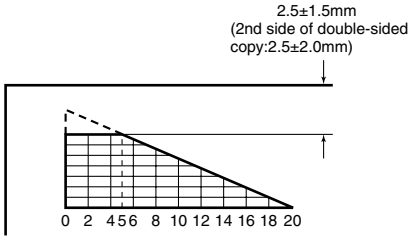

F-16-3

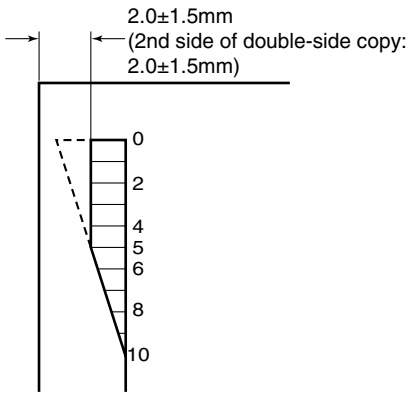

F-16-4

16.1.2 Checking the Image Position

CLC5151 / / / CLC4040 / / iR C4580i / / iR C4080i / / / / iR C5185N / / iR C5185i PRT /

Make 10 prints each using the following as the source of paper, and check that the image margin and non-image width are as indicated:
- individual cassettes
- manual feed tray
- side paper deck
- duplex unit

If not, perform the following:
1) left/right image margin adjustment (horizontal registration adjustment)
2) leading edge image margin adjustment (registration adjustment)
3) left-right non-image width adjustment (CCD read start cell position adjustment)
4) leading edge non-image width adjustment (scanner image leading edge position adjustment)

Adjusting the Image Leading Edge Margin
1) Select the following in service mode, and see that the image margin is as indicated: COPIER>ADJUST>FEED-ADJ>REGIST.

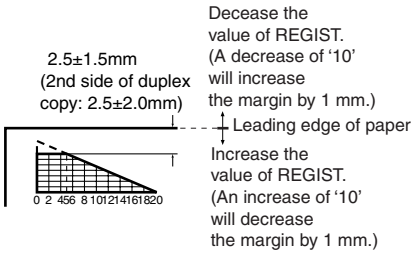

F-16-5

Adjusting the Left/Right Non-Image Width
1) Select the following in service mode, and see that the non-image width is as indicated: COPIER>ADJUST>ADJ-XY>ADJ-Y.

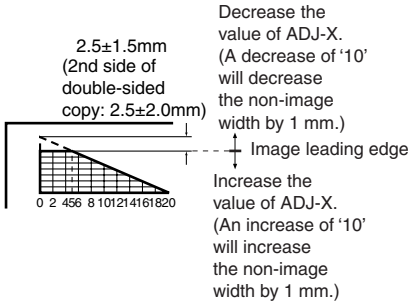

F-16-6

Adjusting the Leading Edge Non-Image Width
1) Select the following in service mode, and see that the non-image width is as indicated: COPIER>ADJUST>ADJ-XY>ADJ-X.

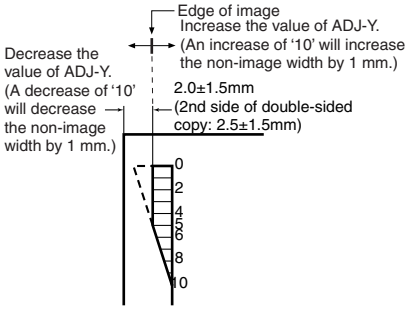

F-16-7

16.1.3 Adjusting the Left/Right Margin (Cassette)

CLC5151 / / / CLC4040 / / iR C4580i / / iR C4080i / / / / iR C5185N / / iR C5185i PRT /

1) Slide out the cassette 1/2, and open the pickup vertical path cover.
2) Remove the 2 screws [1], and remove the right front cover [2].

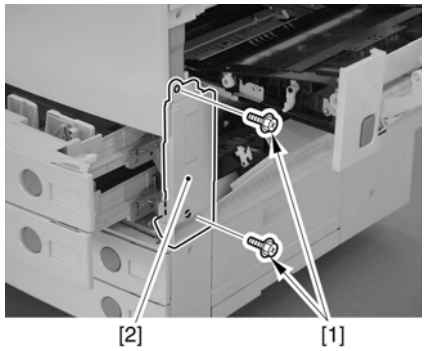

F-16-8

3) Remove the grip [1] found at the right front. (If only the cassette 2.)

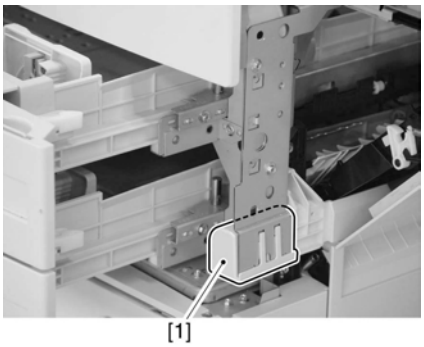

F-16-9

4) Insert a screwdriver through the hole in the right front stay, and loosen the screw [1] to adjust the position of the adjusting plate [2].

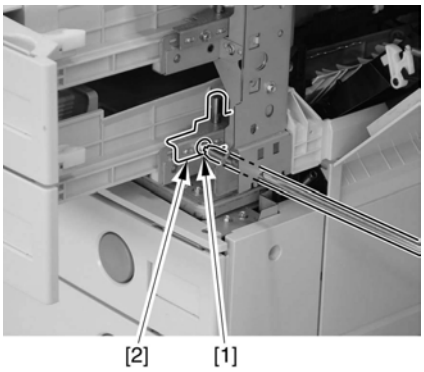

F-16-10

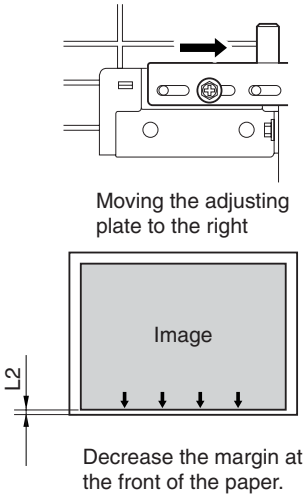

F-16-11

- For output from each cassette, check that the margin (L1) along the leading edge is 2.5±1.5 mm; if not, make the following adjustments:

1) Select the following in service mode: COPIER>ADJUST>FEED-ADJ>REGIST.
2) Change the setting to adjust.
(A change of '1' will cause a move of 0.1 mm, and a higher value will move the image toward the leading edge.)

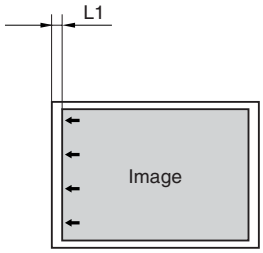

Increasing the value of FEED-ADJ will move the image toward the leading edge of the paper.

F-16-12

- Adjusting the Image Area (non-image width)

1) Select the following in service mode: COPIER>ADJUST>BLANK>BLANK-T/L/B/R.
2) Change the setting to adjust.
(An increase by '24'increases the non-image width by about 1mm, with the range of settings being between 0 and 100.)

16.1.4 Adjusting the Left/Right Margin (Manual Feed Tray)

CLC5151 / / / CLC4040 / / iR C4580i / / iR C4080i / / / / iR C5185N / / iR C5185i PRT /

Loosen the 2 screws [1], and move the position of the slide guide [2] to adjust.

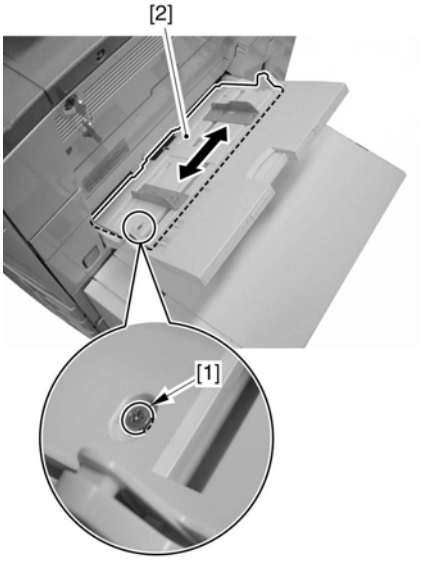

F-16-13

16.1.5 Adjusting the Left/Right Margin (Side Paper Deck)

CLC5151 / / / CLC4040 / / iR C4580i / / iR C4080i / / / / iR C5185N / / iR C5185i PRT /

1) Slide out the compartment, and adjust the position of the latch plate [1] of the compartment opening solenoid (SL102) using the 2 screws. (When doing so, refer to the index [3] on the latch plate.)

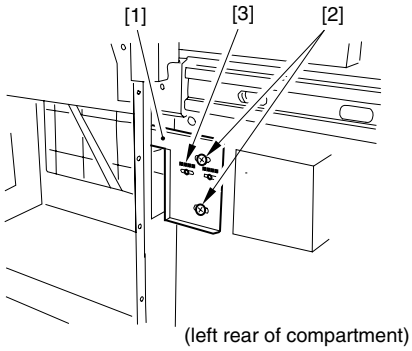

F-16-14

16.2 Scanning System

16.2.1 After Replacing the CCD Unit

CLC5151 / / / CLC4040 / / / iR C4580i / / / iR C4080i / / / / Color Image Reader-F1 / Color Image Reader-E1 / Dupiex Color Image Reader-G1

If you have replaced the CCD unit, be sure to enter the settings indicated on the label attached to the CCD unit:

COPIER>ADJUST>CCD>CCDU-RG
(to enter the correction value for CCD-dependent RG color displacement in sub scanning direction)
COPIER>ADJUST>CCD>CCDU-GB
(to enter the correction value for CCD-dependent GB color displacement in sub scanning direction)

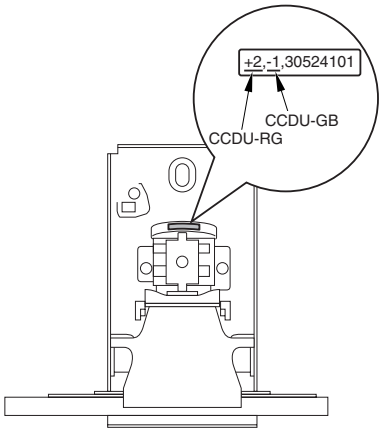

F-16-15

Moreover, be sure to update the settings indicated on the service label attached behind the reader unit front cover with the settings indicated on the label attached to the CCD unit.

16.2.2 After Replacing the Scanning Lanp

Dupiex Color Image Reader-G1 / iR C5185N / / iR C5185i PRT /

Execute COPIER > FUNCTION > MISC-R > 1PCLBRST.

16.2.3 After Replacing the Copyboard Glass

CLC5151 / / / CLC4040 / / / iR C4580i / / / iR C4080i / / / / Color Image Reader-F1 / Color Image Reader-E1 / Dupiex Color Image Reader-G1

If you have replaced the copyboard glass, be sure to enter the bar code value indicated in the upper right of the copyboard glass using the following service mode items:
COPIER>ADJUST>CCD>W-PLT-X
COPIER>ADJUST>CCD>W-PLT-Y
COPIER>ADJUST>CCD>W-PLT-Z
(to enter the standard white plate white level data X, Y, Z)

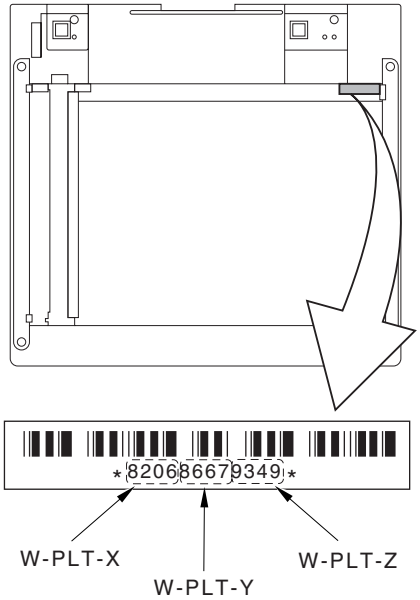

F-16-16

16.2.4 After Replacing the Reader Controller PCB or Initializing the RAM

CLC5151 / / / CLC4040 / / / iR C4580i / / / iR C4080i / / / / Color Image Reader-F1 / Color Image Reader-E1 / Dupiex Color Image Reader-G1

-Be sure to generate the latest P-PRINT printout before replacing the reader controller PCB.
-If you are initializing the RAM of the reader controller without replacing the PCB, using the SST to upload the backup data of the reader controller. Then, after initializing the RAM, download the data to eliminate the need for the following adjustments:

1. Reader Unit-Related Adjustments

1) Using the SST, download the latest version of the system software (R-CON).
2) Select the following in service mode, and press the OK key to initialize the RAM: COPIER>FUNCTION>CLEAR>R-CON. Thereafter, turn off and then on the main power.
3) Enter the settings for the following items in service mode:
   (1) standard white plate white level data
   COPIER>ADJUST>CCD>W-PLT-X,Y,Z

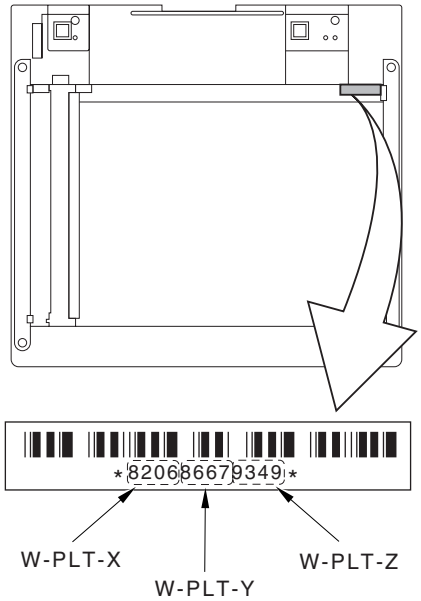

F-16-17

   (2) service label settings (label attached behind reader unit front cover)
      (a) image read start position adjustment (x direction; for fixed reading)
      COPIER>ADJUST>ADJ-XY>ADJ-X
      (b) image read start position adjustment (Y direction; fixed reading)
      COPIER>ADJUST>ADJ-XY>ADJ-Y
      (c) shading position adjustment (for fixed reading)
      COPIER>ADJUST>ADJ-XY>ADJ-S
      (d) feeder mode main scanning position adjustment
      COPIER>ADJUST>ADJ-XY>ADJ-Y-DF
      (e) ADF stream reading CCD read position adjustment
      COPIER>ADJUST>ADJ-XY>STRD-POS
      (f) CCD unit-dependent RB/GB sub scanning direction color displacement correction value
      COPIER>ADJUST>CCD>CCDU-RG/GB
      (g) CCD unit-dependent RG/GB sub scanning direction color displacement value at shipment
      COPIER>ADJUST>CCD>FCCDU-RG/GB
      (h) auto gradation adjustment target value
      COPIER>ADJUST>PASCAL>OFST-P-Y,M,C,K

2. ADF-Related Adjustments

The machine uses the RAM on its reader controller to store ADF-related service data; as such, you must make the appropriate adjustments for the ADF whenever you have replaced the reader controller or initialized the RAM.

1) Enter the settings indicated on the P-PRINT printout you have previously generated for the following items:
   (1) original stop position adjustment
   FEEDER>ADJSUT>DOCST
   (2) original feed speed (magnification) adjustment
   FEEDER>ADUST>LA-SPEED
2) Make adjustments using the following items:
   (1) ADF sensor sensitivity adjustment
   FEEDER>FUNCTION>SENS-INT
   (2) tray width adjustment
      (a) AB system: FEEDER>FUNCTION>TRY-A4 and FEEDER>FUNCTION>TRY-A5R
      (b) inch system: FEEDER>FUNCTION>TRY-LTR and FEEDER>FUNCTION>TRY-LTRR
   (3) white level adjustment
   COPIER>FUNCTION>CCD>DF-WLVL1
   COPIER>FUNCTION>CCD>DF-WLVL2

When done, store the P-PRINT printout you have previously generated in the service book case[1], disposing of the older printout, if any.

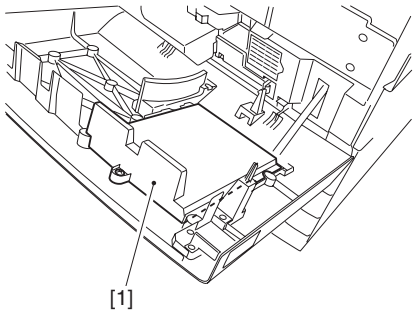

F-16-18

(4) Adjustment of ADF stream reading (Make this adjustment only for the machine with ADF attached.)
1) Make a sheet of paper [1] for adjustment of the scanning position using the paper (white paper) used by users, following the procedures shown below.
step1: Make a sheet of paper with the width of 40mm or wider and height of 50mm or higher.
Tolerance with the width of 14mm: + or - 0.3
step2: Draw a straight line at the position more than 15mm away from the right edge of the paper made in step1 with a (black) pencil.
Right angle accuracy: Not required (Right angle accuracy does not affect the adjustment accuracy.)
step3: Draw a straight line at the position 14mm away from the line drawn in Procedure step2 to the left direction (tolerance: + or - 0.3) with a (black) pencil.

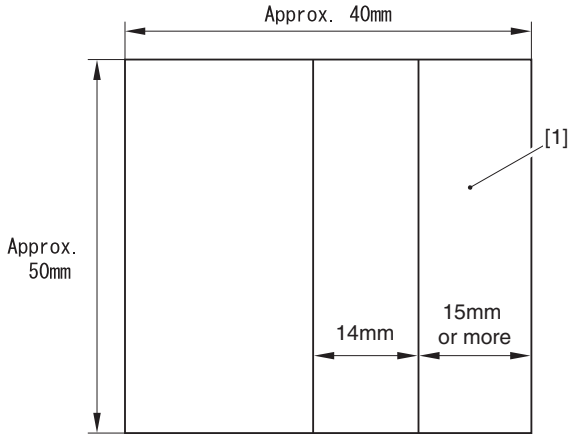

F-16-19

2) Adjust the line [1] to the line between the sheet [2] and the mold [3], and fix the paper at one position with the cellophane tape [4].
Accuracy of attaching the measurement sheet: + or - 0.3mm

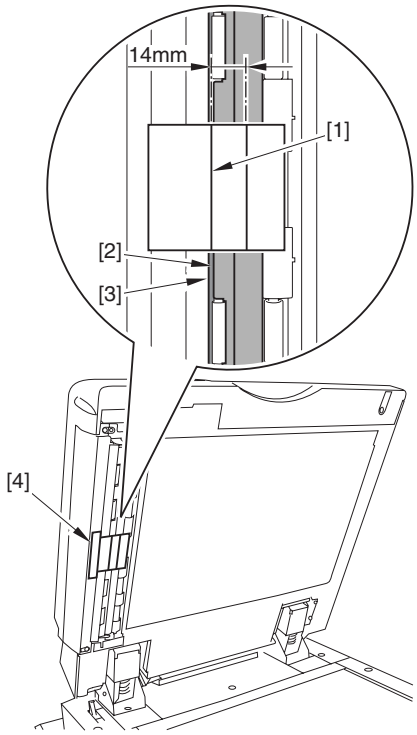

F-16-20

3) Execute the Service Mode (COPIER>FUNCTION>INSTALL>STPD-POS).

16.2.5 After Replacing the CCD Unit

Dupiex Color Image Reader-G1 / iR C5185N / / iR C5185i PRT /

1) Enter each correction value indicated on the service label contained in the CCD unit.
   Correction value for color displacement in a sub scanning direction between RG, which depends on CCD
      COPIER > ADJUST > CCD > CCDU-RG
   Correction value for color displacement in a sub scanning direction between GB, which depends on CCD
      COPIER > ADJUST > CCD > CCDU-GB

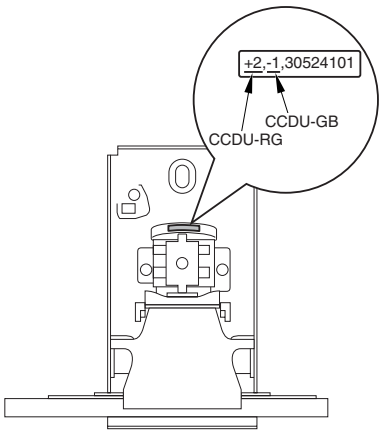

F-16-21

   Adjustment of density correction values
      COPIER > ADJUST > CCD > DFCH2R2
      COPIER > ADJUST > CCD > DFCH2R10
      COPIER > ADJUST > CCD > DFCH2B2
      COPIER > ADJUST > CCD > DFCH2B10
      COPIER > ADJUST > CCD > DFCH2G2
      COPIER > ADJUST > CCD > DFCH2G10
2) Execute COPIER > FUNCTION > DF-LNR.
3) Set "COPIER > ADJUST >CCD > CCD-CHNG" to 1.
4) Attach the label contained in service parts to an appropriate position inside of the reader front cover.
5) Execute COPIER > FUNCTION > MISC-R > 1PCLBRST.

16.2.6 Treatment for ADF Replacement

CLC5151 / / / CLC4040 / / / iR C4580i / / / iR C4080i / / / / Color Image Reader-F1 / Color Image Reader-E1 / Dupiex Color Image Reader-G1 / iR C5185N / / iR C5185i PRT /

When the ADF is replaced or removed from the main unit, make adjustments as shown below after making basic adjustments for the ADF.
1)Å@Make a sheet of paper [1] for adjustment of the scanning position using the paper (white paper) used by users, following the procedures shown below.
á@Å@Make a sheet of paper with the width of 40mm or wider and height of 50mm or higher.
Tolerance with the width of 14mm: + or - 0.3
áAÅ@Draw a straight line at the position more than 15mm away from the right edge of the paper made in Procedure á@ with a (black) pencil.
Right angle accuracy: Not required (Right angle accuracy does not affect the adjustment accuracy.)
áBÅ@Draw a straight line at the position 14mm away from the line drawn in Procedure áA to the left direction (tolerance: + or - 0.3) with a (black) pencil.

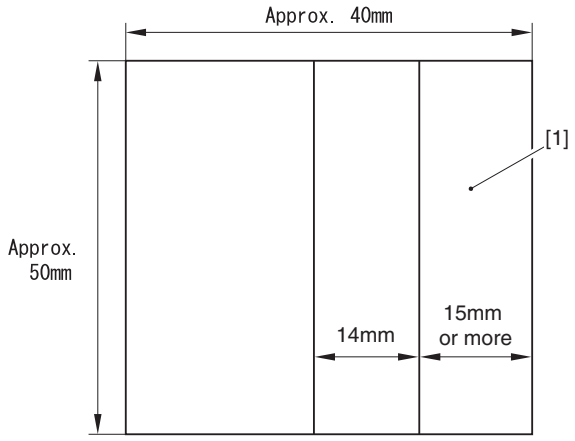

F-16-22

2)Å@Adjust the line [1] to the line between the sheet [2] and the mold [3], and fix the paper at one position with the cellophane tape [4].
Accuracy of attaching the measurement sheet: + or - 0.3mm

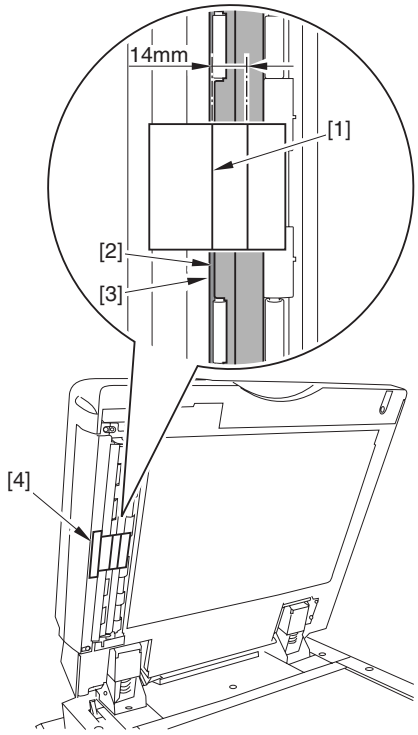

F-16-23

3)Execute the Service Mode (COPIER>FUNCTION>INSTALL>STPD-POS).

16.2.7 After Replacing the Reader Controller PCB

Dupiex Color Image Reader-G1 / iR C5185N / / iR C5185i PRT /

Be sure to print out the latest P-PRINT before replacing the reader controller PCB.

<When executing "RAM Clear" to the reader controller instead of replacing the PCB>
Upload the R-CON backup data using SST and download the data after executing "RAM Clear". In this case, it is not necessary to make adjustments explained below.

1) Download the latest system software (R-CON) using SST.
2) Select "COPIER > FUNCTION > CLEAR > R-CON" in the service mode and press the OK key to execute "RAM Clear". Then, turn off/on the main power.
3) Check the value specified in COPIER>ADJUST>CCD>CCD-CHNG for P-PRINT.
   - When 0 is specified, go to Procedure 4). (Enter the MTF value.)
   - When 1 is specified, go to Procedure 6). (Do not enter the MTF value.)
4) Enter each correction value indicated on the service label (attached inside of the reader front cover).
   a. MTF values
      COPIER > ADJUST > CCD > MTMF2-M1 to M9
      COPIER > ADJUST > CCD > MTMF2-S1 to S9

      After entry of the values, execute COPIER > FUNCTION > MTF-CLC.
   b. Correction values for color displacement in a sub scanning direction between RG and GB, which depends on CCD specified at factory setting
      COPIER > ADJUST > CCD > FCCDU-RG
      COPIER > ADJUST > CCD > FCCDU-GB
5) Enter each correction value indicated on the service label (attached inside of the reader front cover).
   a-1. Adjustment of the image scanning start position (X direction) (at copyboard reading)
      COPIER > ADJUST > ADJ-XY > ADJ-X
   a-2. Adjustment of the image scanning start position (Y direction) (at copyboard reading)
      COPIER > ADJUST > ADJ-XY > ADJ-Y
   a-3. Adjustment of the optical shading measurement position (at copyboard reading)
      COPIER > ADJUST > ADJ-XY > ADJ-S
   a-4. Adjustment of the feeder mode position in a main scanning direction
      COPIER > ADJUST > ADJ-XY > ADJ-Y-DF
   a-5. Adjustment of the CCD scanning position at ADF stream reading
      COPIER > ADJUST > ADJ-XY > STRD-POS
   a-6. White level data of the standard white plate
      COPIER > ADJUST > CCD > W-PLT-X
      COPIER > ADJUST > CCD > W-PLT-Y
      COPIER > ADJUST > CCD > W-PLT-Z
   a-7. Correction value for color displacement in a sub scanning direction between RG and GB, which depends on CCD
      COPIER > ADJUST > CCD > CCDU-RG
      COPIER > ADJUST > CCD > CCDU-GB
   a-8. Entry of the shading target value (R/G/B) for ADF reading (at a normal document scanning position)
      COPIER > ADJUST > CCD > DFTAR-R
      COPIER > ADJUST > CCD > DFTAR-G
      COPIER > ADJUST > CCD > DFTAR-B
   a-9. Adjustment of density correction values
      COPIER > ADJUST > CCD > DFCH2R2
      COPIER > ADJUST > CCD > DFCH2R10
      COPIER > ADJUST > CCD > DFCH2B2
      COPIER > ADJUST > CCD > DFCH2B10
      COPIER > ADJUST > CCD > DFCH2G2
      COPIER > ADJUST > CCD > DFCH2G10
   a-10. Target value for automatic gradation correction
      COPIER > ADJUST > PASCAL > OFSE-P-Y
      COPIER > ADJUST > PASCAL > OFSE-P-M
      COPIER > ADJUST > PASCAL > OFSE-P-C
      COPIER > ADJUST > PASCAL > OFSE-P-K

      After entry of the values, execute COPIER > FUNCTION > DF-LNR.

This machine stores ADF-related service data in the RAM of the reader controller.
It is necessary to make an adjustment for ADF when replacing the reader controller and executing "RAM Clear".

   b. Adjustment of the image scanning start position (X direction) (at stream reading)
      FEEDER > ADJSUT > DOCST
   c. Adjustment of the document feed speed (magnification)
      FEEDER > ADUST > LA-SPEED

6) Make adjustments using the following items.
   a. Adjustment of sensitivity of each ADF sensor
      FEEDER > FUNCTION > SENS-INT
   b. Adjustment of the tray width
      For AB-size group
         FEEDER > FUNCTION > TRY-A4
         FEEDER > FUNCTION > TRY-A5R
      For INCH-size group
         FEEDER > FUNCTION > TRY-LTR

FEEDER > FUNCTION > TRY-LTRR
c. Adjustment of the ADF white level
COPIER > FUNCTION > CCD > DF-WLVL1
COPIER > FUNCTION > CCD > DF-WLVL2

Be sure to make adjustment of the white plate data before making adjustment of the ADF white level.

After these adjustments are completed, store the previously-printed P-PRINT in the service book case, and abandon the past P-PRINT.

16.3 Laser Exposure System

16.3.1 Laser Exposure System

CLC5151 / / / CLC4040 / / iR C4580i / / iR C4080i / / / / Color Image Reader-F1 / Color Image Reader-E1 / Dupiex Color Image Reader-G1 / iR C5185N / / iR C5185i PRT /

When replacing the laser unit, enter the values indicated in the label attached on the upper surface of the new laser unit to the following Service Mode items.
Laser maker identification
[1] COPIER > ADJUST > LASER > LA-MK-Y/M/C/K
Laser magnification
[2] COPIER > ADJUST > LASER > LDADJ1-Y/M/C/K
[3] COPIER > ADJUST > LASER > LDADJ2-Y/M/C/K
[4] COPIER > ADJUST > LASER > LDADJ3-Y/M/C/K
Laser phase difference
[5] COPIER > ADJUST > LASER > LDADJ4-Y/M/C/K
[6] COPIER > ADJUST > LASER > LDADJ4-Y/M/C/K
[7] COPIER > ADJUST > LASER > LDADJ4-Y/M/C/K

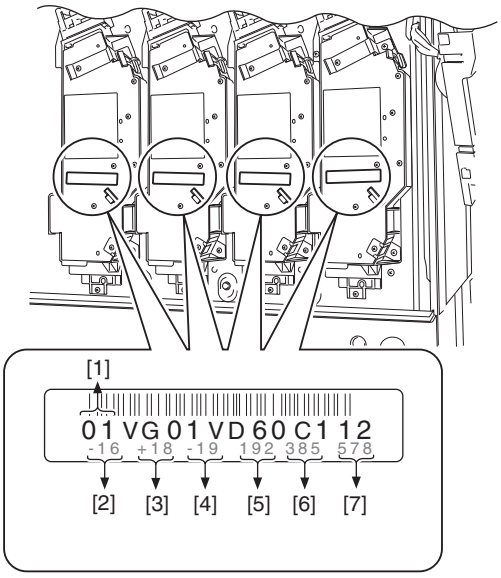

F-16-24

16.4 Image Formation System

16.4.1 Laser maker identification

CLC5151 / / / CLC4040 / / iR C4580i / / iR C4080i / / / / iR C5185N / / iR C5185i PRT /

There is no particular work to perform after replacing the drum unit.

16.4.2 After Replacing the Transfer Unit

CLC5151 / / / CLC4040 / / iR C4580i / / iR C4080i / / / / iR C5185N / / iR C5185i PRT /

There is no particular work to perform after replacing the transfer unit (intermediate transfer unit, secondary transfer unit).

16.4.3 After Replacing the Pattern Reading Unit

CLC5151 / / / CLC4040 / / iR C4580i / / iR C4080i / / / / iR C5185N / / iR C5185i PRT /

When replacing the pattern reader unit, input the value 'a' [2] (4 digits) described on the label [1] on the upper side of the new pattern reader unit.

Adjustment of P wave and S wave of the patch sensor
COPIER > ADJUST > DENS > P-ALPHA

16.4.4 Adjustments of Tilt in Intermediate Transfer Unit Rail

CLC5151 / / / CLC4040 / / iR C4580i / / iR C4080i / / / / iR C5185N / / iR C5185i PRT /

In this machine, displacement of the intermediate transfer belt to one side infrequently causes a tear in the belt.
In the machine where a tear occurs in the intermediate transfer belt, a rail supporting the intermediate transfer unit may be tilted.
In such a case, adjust the position of the rail supporting the intermediate transfer unit so that the heights of the rear and front sides become the same.
Adjustment procedures are shown below.
1. Replace the torn belt with a new one.

* Refer to the procedures of removing the intermediate transfer belt for details.
2. After replacing the intermediate transfer belt, follow the procedure shown below to make an adjustment so that the distance [C] between the edge [A] of the intermediate transfer belt and the ITB member [B] is 14mm.

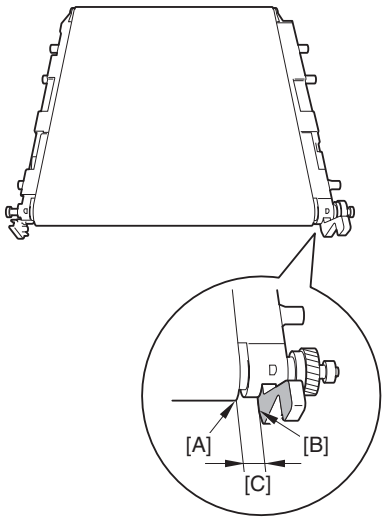

F-16-25

When the distance [C] is larger than 14mm:
Lift the handle [1] on the rear side and rotate the gear [2] in the direction shown by an arrow. The belt moves to the rear side.

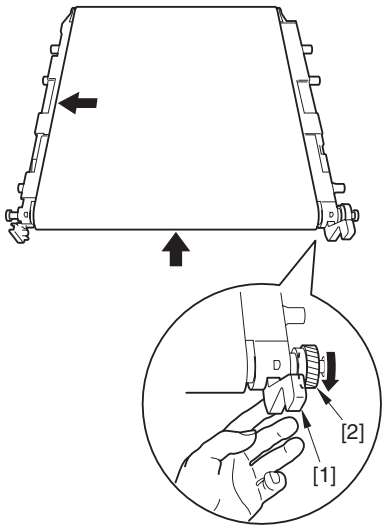

F-16-26

When the distance [C] is smaller than 14mm:
Lift the member [1] on the front side and rotate the gear [2] in the direction shown by an arrow. The belt moves to the front side.

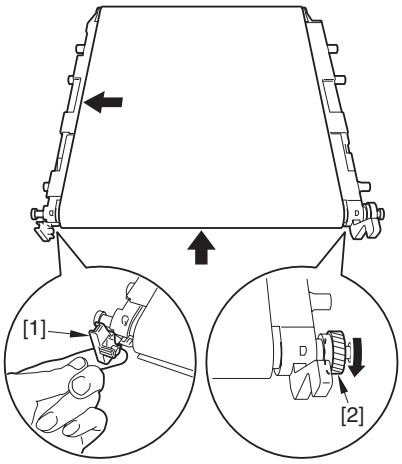

F-16-27

3. Attach the intermediate transfer unit to the machine again, following the reverse procedures.
4. Turn on the main power switch.
5. Execute "User Mode > Adjustment / Cleaning > Main Unit Cleaning".
6. After executing cleaning, remove the intermediate transfer unit again, and measure the distance [C] between the edge [A] and the ITB member [B]. When the distance [C] is larger or smaller than 14mm, make an adjustment following the procedures shown below.
* Be sure to keep the intermediate transfer unit detached during the work.
6-1) Remove the one screw [1] and the two bins [2], and detach the front cover [3].
6-2) Release the intermediate transfer unit release lever, and remove the waste toner bottle [2].

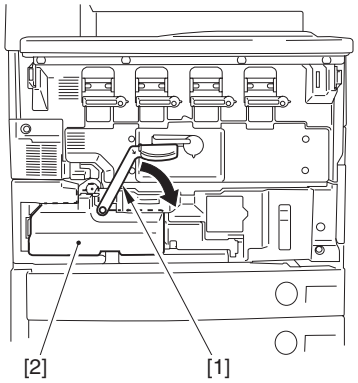

F-16-28

6-3) Detach the fan cover [2] with the one screw [1].

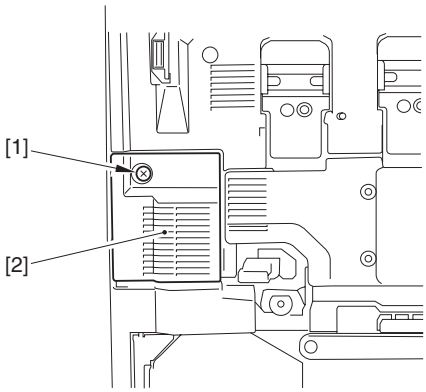

F-16-29

6-4) Remove the one screw [1] and detach the intermediate transfer unit release lever [2].

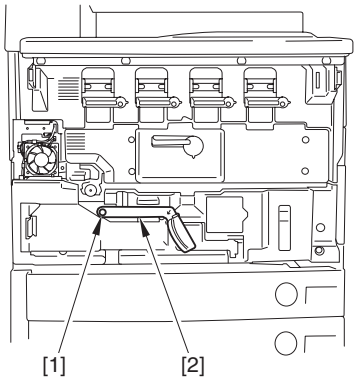

F-16-30

6-5) Remove the connector [1] and the four screws [2], and detach the inner cover [3].
6-6) Loosen the two bind screws [1].

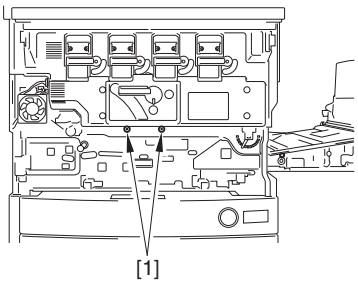

F-16-31

6-7) Release the open/close lever [1] and open the drum unit cover [2].

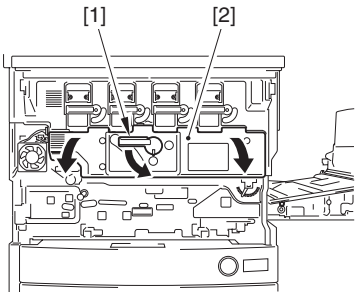

F-16-32

6-8) Loosen the one bind screw [1].
6-9) Loosen the two RS screws [1].

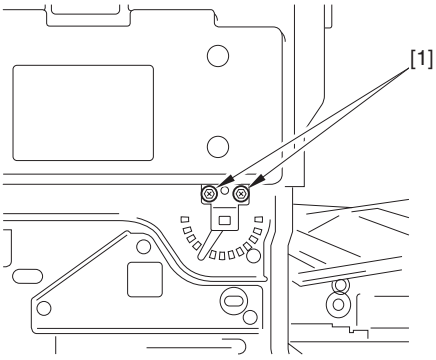

F-16-33

6-10)
When the distance [C] is larger than 14mm:
Displace the intermediate transfer rail adjustment lever in the left direction.
Be sure to displace the adjustment lever with the scales.

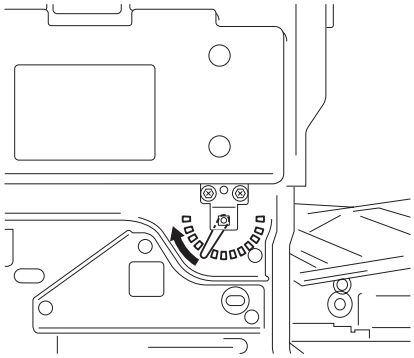

F-16-34

When the distance [C] is smaller than 14mm:
Displace the ITB rail adjustment lever in the right direction.
Be sure to displace the adjustment lever by one scale.

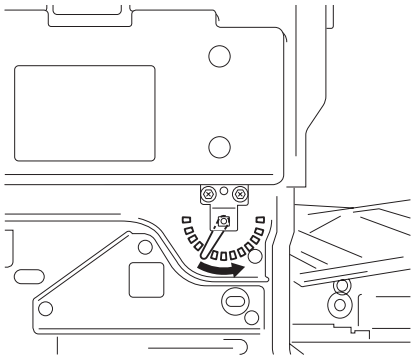

F-16-35

9) Repeat the procedures from 2) to 6), and set the ITB rail adjustment lever to the position where the displacement is minimized.

16.5 Fixing System

16.5.1 Treatment after Replacement of Fixing Unit

CLC5151 / / / CLC4040 / / iR C4580i / / iR C4080i / / / / iR C5185N / / iR C5185i PRT /

Å@Points to Note when Replacing or Discarding Fixing Unit
The heat pipe is used at the upper belt of the fixing unit in order to equalize the heat of the rear front direction. The heat pipe is enclosing a little amount of liquid in vacuum in an airtight container. Thus, do not throw the heat pipe in the fire because it will burst.
When discarding the fixing unit, be sure to shred.

1. 1. Applying Grease to Fixing Drive Unit / Belt Displacement Control Motor Unit
When replacing the fixing unit, apply the super lube grease (standard tool: parts number FY9-6005-000, tube) to the specified parts of eh fixing drive unit and the belt displacement control motor unit.

Points to Note when Applying Grease
Do not apply the grease to the unspecified parts of the gear. It may cause the trouble.

a. Applying Grease to Fixing Drive Unit
The application parts and the amount of grease are as follows.
-To the center [A] of the gear [1], apply about 2 soybeans size of grease.
-To the edge [B] of the gear [1], apply about a soybean size of grease.

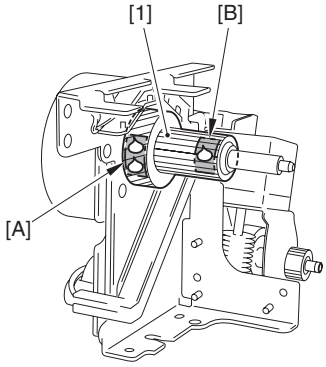

F-16-36

b. Applying Grease to Belt Displacement Control Motor Unit
The application parts and the amount of grease are as follows.
-To the edge [A] of the gear [1], apply about a soybean size of grease.
-To the center [B] of the gear [2] (inner side of the plate [3]), apply about a soybean size of grease.
-To the edge [C] of the gear [2], apply about a soybean size of grease.
-To the each side of the edge [D] [E] of the gear [4], apply about a soybean size of grease.

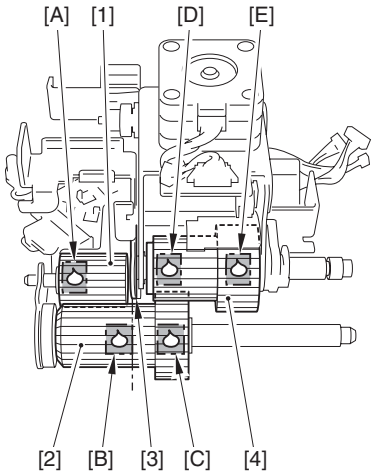

F-16-37

2. Executing Service Mode after Fixing Unit Replacement
When replacing the fixing unit, be sure to execute the following operation with the service mode.
-Clear the fixing delivery counter.
COPIER > COUNTER > DRBL-1 > FX-BLT-U
-Execute the fixing belt and pressure belt HP search operation.
COPIER > FUNCTION > FIXING > FX-UHP-S
COPIER > FUNCTION > FIXING > FX-LHP-S

Points to Note When Replacing Fixing Unit
By executing the service mode, the alarm code is closed and the total rotation time is cleared. Thus, this mode must be executed when replacing the fixing unit.
If the mode is not executed, the following symptoms will occur.
-The alarm code is not closed.
06-0002: Fixing unit life alarm (Caused by the belt displacement)
06-0004: Fixing unit life alarm (Caused by the torque up)
-Although the total rotation time of the replaced fixing assemble does not reach to the message threshold, the machine wrongly recognize that it reaches to the threshold and displays the message.
Be sure not to execute the mode except at the installation and the fixing unit replacement. If not, an error message may not be displayed when the fixing unit reaches to its life.

16.6 Electrical Components

16.6.1 After Replacing the Reader Controller PCB or Initializing the RAM

CLC5151 / / / CLC4040 / / iR C4580i / / iR C4080i / / / / iR C5185N / / iR C5185i PRT /

-Be sure to generate the latest P-PRINT printout before replacing the reader controller PCB.
-If you are initializing the RAM of the reader controller without replacing the PCB, using the SST to upload the backup data of the reader controller. Then, after initializing the RAM, download the data to eliminate the need for the following adjustments:

1. Reader Unit-Related Adjustments

1) Using the SST, download the latest version of the system software (R-CON).
2) Select the following in service mode, and press the OK key to initialize the RAM: COPIER>FUNCTION>CLEAR>R-CON. Thereafter, turn off and then on the main power.
3) Enter the settings for the following items in service mode:
   (1) standard white plate white level data
   COPIER>ADJUST>CCD>W-PLT-X,Y,Z

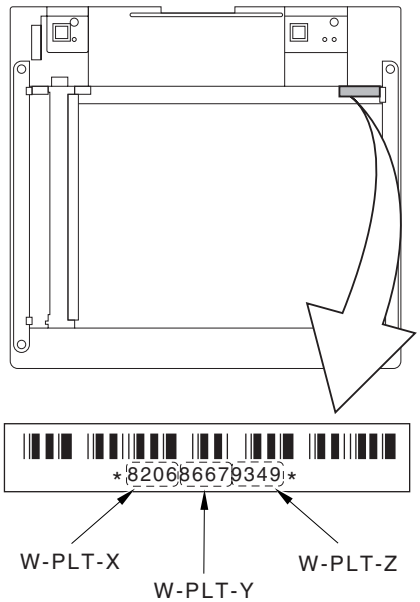

F-16-38

   (2) service label settings (label attached behind reader unit front cover)
   (a) image read start position adjustment (x direction; for fixed reading)
   COPIER>ADJUST>ADJ-XY>ADJ-X
   (b) image read start position adjustment (Y direction; fixed reading)
   COPIER>ADJUST>ADJ-XY>ADJ-Y
   (c) shading position adjustment (for fixed reading)
   COPIER>ADJUST>ADJ-XY>ADJ-S
   (d) feeder mode main scanning position adjustment
   COPIER>ADJUST>ADJ-XY>ADJ-Y-DF
   (e) ADF stream reading CCD read position adjustment
   COPIER>ADJUST>ADJ-XY>STRD-POS
   (f) CCD unit-dependent RB/GB sub scanning direction color displacement correction value
   COPIER>ADJUST>CCD>CCDU-RG/GB
   (g) CCD unit-dependent RG/GB sub scanning direction color displacement value at shipment
   COPIER>ADJUST>CCD>FCCDU-RG/GB
   (h) auto gradation adjustment target value
   COPIER>ADJUST>PASCAL>OFST-P-Y,M,C,K

2. ADF-Related Adjustments

The machine uses the RAM on its reader controller to store ADF-related service data; as such, you must make the appropriate adjustments for the ADF whenever you have replaced the reader controller or initialized the RAM.

1) Enter the settings indicated on the P-PRINT printout you have previously generated for the following items:
   (1) original stop position adjustment
   FEEDER>ADJSUT>DOCST
   (2) original feed speed (magnification) adjustment
   FEEDER>ADUST>LA-SPEED
2) Make adjustments using the following items:
   (1) ADF sensor sensitivity adjustment
   FEEDER>FUNCTION>SENS-INT
   (2) tray width adjustment
   (a) AB system: FEEDER>FUNCTION>TRY-A4 and FEEDER>FUNCTION>TRY-A5R
   (b) inch system: FEEDER>FUNCTION>TRY-LTR and FEEDER>FUNCTION>TRY-LTRR
   (3) white level adjustment
   COPIER>FUNCTION>CCD>DF-WLVL1
   COPIER>FUNCTION>CCD>DF-WLVL2

When done, store the P-PRINT printout you have previously generated in the service book case[1], disposing of the older printout, if any.

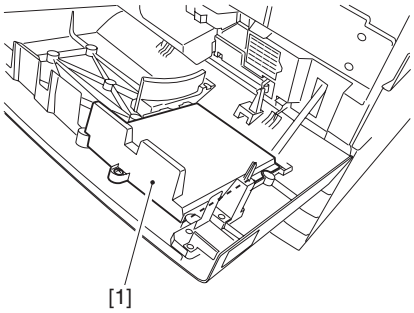

F-16-39

(4) Adjustment of ADF stream reading (Make this adjustment only for the machine with ADF attached.)
1) Make a sheet of paper [1] for adjustment of the scanning position using the paper (white paper) used by users, following the procedures shown below.
step1: Make a sheet of paper with the width of 40mm or wider and height of 50mm or higher.
Tolerance with the width of 14mm: + or - 0.3
step2: Draw a straight line at the position more than 15mm away from the right edge of the paper made in step1 with a (black) pencil.
Right angle accuracy: Not required (Right angle accuracy does not affect the adjustment accuracy.)
step3: Draw a straight line at the position 14mm away from the line drawn in Procedure step2 to the left direction (tolerance: + or - 0.3) with a (black) pencil.

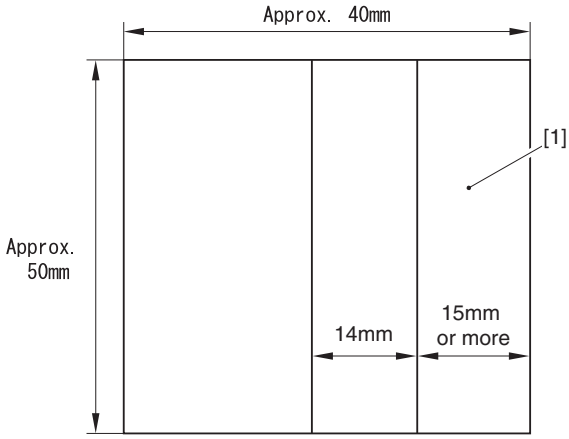

F-16-40

2) Adjust the line [1] to the line between the sheet [2] and the mold [3], and fix the paper at one position with the cellophane tape [4].
Accuracy of attaching the measurement sheet: + or - 0.3mm

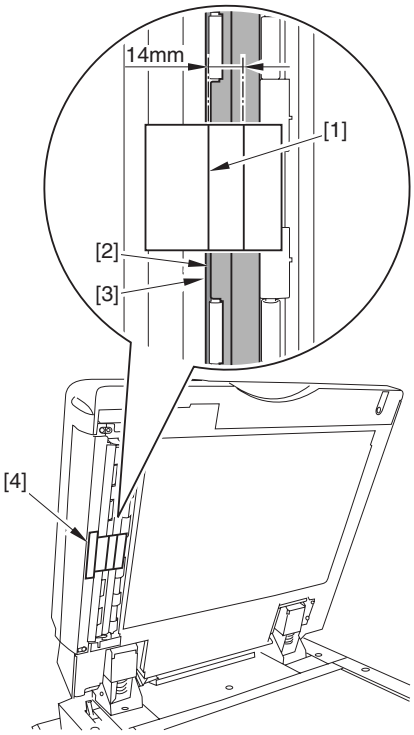

F-16-41

3) Execute the Service Mode (COPIER>FUNCTION>INSTALL>STPD-POS).

16.6.2 After Replacing the Reader Controller PCB

Dupiex Color Image Reader-G1 / iR C5185N / / iR C5185i PRT /

Be sure to print out the latest P-PRINT before replacing the reader controller PCB.
<When executing "RAM Clear" to the reader controller instead of replacing the PCB>
Upload the R-CON backup data using SST and download the data after executing "RAM Clear". In this case, it is not necessary to make adjustments explained below.

1) Download the latest system software (R-CON) using SST.
2) Select "COPIER > FUNCTION > CLEAR > R-CON" in the service mode and press the OK key to execute "RAM Clear". Then, turn off/on the main power.
3) Check the value specified in COPIER>ADJUST>CCD>CCD-CHNG for P-PRINT.
   - When 0 is specified, go to Procedure 4). (Enter the MTF value.)
   - When 1 is specified, go to Procedure 6). (Do not enter the MTF value.)
4) Enter each correction value indicated on the service label (attached inside of the reader front cover).
   a. MTF values
      COPIER > ADJUST > CCD > MTMF2-M1 to M9
      COPIER > ADJUST > CCD > MTMF2-S1 to S9

      After entry of the values, execute COPIER > FUNCTION > MTF-CLC.
   b. Correction values for color displacement in a sub scanning direction between RG and GB, which depends on CCD specified at factory setting
      COPIER > ADJUST > CCD > FCCDU-RG
      COPIER > ADJUST > CCD > FCCDU-GB
5) Enter each correction value indicated on the service label (attached inside of the reader front cover).
   a-1. Adjustment of the image scanning start position (X direction) (at copyboard reading)
      COPIER > ADJUST > ADJ-XY > ADJ-X
   a-2. Adjustment of the image scanning start position (Y direction) (at copyboard reading)
      COPIER > ADJUST > ADJ-XY > ADJ-Y
   a-3. Adjustment of the optical shading measurement position (at copyboard reading)
      COPIER > ADJUST > ADJ-XY > ADJ-S
   a-4. Adjustment of the feeder mode position in a main scanning direction
      COPIER > ADJUST > ADJ-XY > ADJ-Y-DF
   a-5. Adjustment of the CCD scanning position at ADF stream reading
      COPIER > ADJUST > ADJ-XY > STRD-POS
   a-6. White level data of the standard white plate
      COPIER > ADJUST > CCD > W-PLT-X
      COPIER > ADJUST > CCD > W-PLT-Y
      COPIER > ADJUST > CCD > W-PLT-Z
   a-7. Correction value for color displacement in a sub scanning direction between RG and GB, which depends on CCD
      COPIER > ADJUST > CCD > CCDU-RG
      COPIER > ADJUST > CCD > CCDU-GB
   a-8. Entry of the shading target value (R/G/B) for ADF reading (at a normal document scanning position)
      COPIER > ADJUST > CCD > DFTAR-R
      COPIER > ADJUST > CCD > DFTAR-G
      COPIER > ADJUST > CCD > DFTAR-B
   a-9. Adjustment of density correction values
      COPIER > ADJUST > CCD > DFCH2R2
      COPIER > ADJUST > CCD > DFCH2R10
      COPIER > ADJUST > CCD > DFCH2B2
      COPIER > ADJUST > CCD > DFCH2B10
      COPIER > ADJUST > CCD > DFCH2G2
      COPIER > ADJUST > CCD > DFCH2G10
   a-10. Target value for automatic gradation correction
      COPIER > ADJUST > PASCAL > OFSE-P-Y
      COPIER > ADJUST > PASCAL > OFSE-P-M
      COPIER > ADJUST > PASCAL > OFSE-P-C
      COPIER > ADJUST > PASCAL > OFSE-P-K

      After entry of the values, execute COPIER > FUNCTION > DF-LNR.

This machine stores ADF-related service data in the RAM of the reader controller.
It is necessary to make an adjustment for ADF when replacing the reader controller and executing "RAM Clear".

   b. Adjustment of the image scanning start position (X direction) (at stream reading)
      FEEDER > ADJSUT > DOCST
   c. Adjustment of the document feed speed (magnification)
      FEEDER > ADUST > LA-SPEED

6) Make adjustments using the following items.
   a. Adjustment of sensitivity of each ADF sensor
      FEEDER > FUNCTION > SENS-INT
   b. Adjustment of the tray width
      For AB-size group
         FEEDER > FUNCTION > TRY-A4
         FEEDER > FUNCTION > TRY-A5R
      For INCH-size group
         FEEDER > FUNCTION > TRY-LTR
         FEEDER > FUNCTION > TRY-LTRR
   c. Adjustment of the ADF white level
      COPIER > FUNCTION > CCD > DF-WLVL1
      COPIER > FUNCTION > CCD > DF-WLVL2

Be sure to make adjustment of the white plate data before making adjustment of the ADF white level.

After these adjustments are completed, store the previously-printed P-PRINT in the service book case, and abandon the past P-PRINT.

16.6.3 Replacing DC Controller PCB 1ÅilMGÅj

CLC5151 / / / CLC4040 / / iR C4580i / / iR C4080i / / / / iR C5185N / / iR C5185i PRT /

1)After replacing the DC controller PCB, clear the memory of the DC controller PCB with the following service mode.
COPIER > FUNCTION > CLEAR > DC-CON
   COPIER>FUNCTION>CLEAR>DC-CON
2) Enter the value written on the service label from the following service mode.
   Laser Main Scanning Writ Start Position Adjustment
   COPIER > ADJUST > LASER > PVE-OFST

Laser Maker Identification
COPIER > ADJUST > LASER > LA-MK-Y/M/C/K
Laser Magnification
COPIER > ADJUST > LASER > LDADJ1-Y/M/C/K
   Å@LDADJ2-Y/M/C/K
  Å@Å@Å@LDADJ3-Y/M/C/K
Laser Phase Difference
COPIER > ADJUST > LASER > LDADJ4-Y/M/C/K
  Å@Å@Å@LDADJ5-Y/M/C/K
  Å@Å@Å@LDADJ6-Y/M/C/K
Patch Constants Adjustment
COPIER > OPTION > BODY > P-ALPHA
Write Start Position Adjustment (Margin along leading edge of image)
COPIER > ADJUST > FEED-ADJ > REGIST
   Duplexing Side Registration Adjustment
   COPIER > ADJUST > FEED-ADJ > ADJ-REFE

Duplexing Write Start Position Adjustment
COPIER > ADJUST > FEED-ADJ > REGIST2
Adjustment of Paper Width Standard Value of Manual Feed Tray
COPIER > ADJUST > CST-ADJ > MF-A4R
COPIER > ADJUST > CST-ADJ > MF-A6R
COPIER > ADJUST > CST-ADJ > MF-A4
Adjusting the paper width standard value of the manual feed tray.
Adjust the P wave and S wave ratio of the SALT sensor
COPIER > ADJUST > DENS > P-ALPHA

3)Turn OFF/ON the main power switch.

16.6.4 Replacing Main Controller PCB

CLC5151 / / / CLC4040 / / iR C4580i / / iR C4080i / / / / iR C5185N / / iR C5185i PRT /

Upload each setting/registration data stored in SRAM of the main controller PCB onto the PC by using SST. See the chapter 'Version Upgrading' for its operation procedure.
After mounting the main controller PCB (main), mount each PCB that is removed before the replacement.
[1] Main Controller PCB (Sub R-A)
[2] Main Controller PCB (Sub PDEM-EF-A)
[3] Main Controller PCB (Sub SJ-A)
[4] Main Controller PCB (Sub LAN-bar-A)
[5] Storage of program for BOOT ROM BOOT
[6] SRAM PCB
[7] DDR-SDRAM
[8] Main Controller PCB (Sub RB-A)
[9] HDD

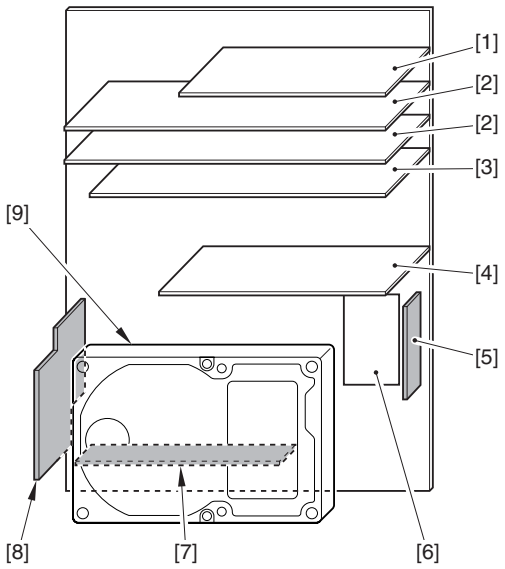

F-16-42

16.6.5 When Replacing the SRAM PCB

CLC5151 / / / CLC4040 / / iR C4580i / / iR C4080i / / / / iR C5185N / / iR C5185i PRT /

When the SRAM PCB is replaced, all data in its memory will be lost (file-related, user mode-related, service mode-related, history-related files). There will be no error operation, and initialization will take place automatically.
If you pull out the SRAM PCB from machine B and mount it to machine A, the PCB will be initialized and be rendered useless for machine A or B. Take full care.

1) When you turn on the power after replacing the SRAM PCB, the machine will perform automatic initialization and will indicate a message on its panel to the effect that you are to turn off and then on the power switch found on its right side. Follow the message and turn off and then on the machine.
2) Using service mode, initialize the RAM.
COPIER>FUNCTION>CLEAR>MN-CON

Before starting the work, be sure to inform the user that all image data stored in the Box will be lost and obtain his/her consent.

16.6.6 When Replacing the HDD

CLC5151 / / / CLC4040 / / iR C4580i / / iR C4080i / / / / iR C5185N / / iR C5185i PRT /

1. If NetSpot Accountant (NSA) Is Not Used
1) Formatting the HDD
While holding down the 2 and 8 keys on the control panel, turn on the power to start up. Using the HD formatting function of the SST, format all partitions.
2) Downloading the Software
Using the SST, download the following: System, Language, RUI, MEAP-CONT (Meap content), SDICT (OCR dictionary), KEY (key/certificate for encrypted communication), TTS (audio dictionary).
2. If NetSpot Accountant (NSA) Is Used Together with a Card Reader
The card ID used by the NSA resides on the HDD. If you have replaced the HDD, therefore, you will have to newly download the card data from NSA to enable the statistical operations of NSA. After going through steps 1) and 2) above, perform the following:
1) Set the following in service mode:
Select the following : COPIER >FUNCTION >INSTALL >CARD; then, enter the number of the first card, and press [OK].
(For instance, if cards No. 1 through No. 1000 are used for group control, enter '1')
2) Turn off and then on the machine; when the machine has started up, perform the following in user mode:
Select the following : user mode >system control settings >group ID control >count control; then, check that IDs from 00000001 through 00001000 have been prepared.
Select the following : user mode >system control settings >network settings >TCP/IP settings >IP address; then, set up 'IP address' 'gateway address' and 'subnet mask'
Select the following : user mode >system administrator setup; then, fill in 'system control group ID' and 'system control ID No.' thereafter, turn off and then on the machine.
If you leave out 'system control group ID' and 'system control ID No.' the service engineer will not be able to 'register card to device' as part of setup work for NSA.
3) With the machine in standby state, download the card ID to be used from NSA.
4) When the card data has been downloaded from NSA, check that the ID data has correctly been downloaded on the screen brought up by making the following selections:
user mode>system control settings>group ID control
(Only the downloaded ID data must be indicated.)
5) Make copies using a user card registered with NSA, and check that statistical operations are made for the device in question.

16.6.7 When Replacing the Power Supply PCB

CLC5151 / / / CLC4040 / / iR C4580i / / iR C4080i / / / / iR C5185N / / iR C5185i PRT /

There is no particular work to perform after replacing the power supply PCB.

16.7 Pickup/Feeding System

16.7.1 Adjusting the Horizontal Registration When Replacing the Pickup Cassette

CLC5151 / / / CLC4040 / / iR C4580i / / iR C4080i / / / / iR C5185N / / iR C5185i PRT /

Make a test copy of the A3 Test Chart, and check that the margin on the front side of the image is correct (L2 = 2.0 ±1.5 mm); otherwise, go through the following steps to adjust, starting with the 1st side and then the 2nd side:

1. Adjusting the Horizontal Registration on the 1st Side
1) Slide out the manual feed unit and the cassette 1/2; then, open the pickup vertical path cover.
2) Remove the 2 screws [1], and remove the front right cover [2].

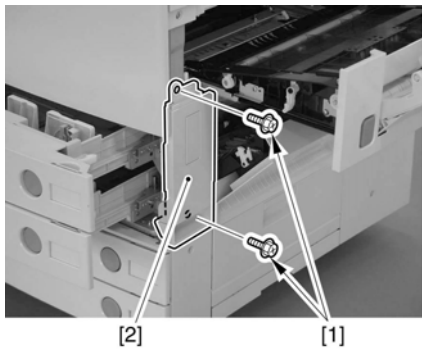

F-16-43

- Adjusting the Cassette 1 Side
3) Insert a screwdriver through the hole in the front right stay, and loosen the screw [1] to adjust the position of the adjusting plate [2].

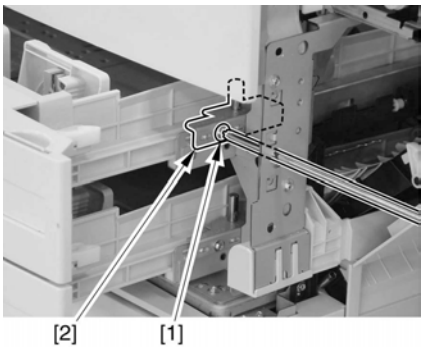

F-16-44

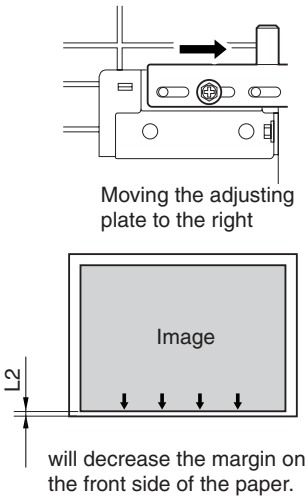

F-16-45

- Adjusting the Cassette 2 Side

3) Remove the grip [1] from the front right.

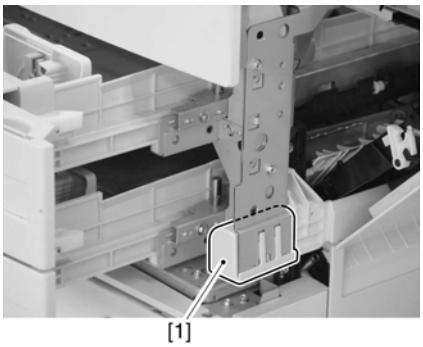

F-16-46

4) Insert a screwdriver through the hole in the front right stay, and loosen the screw [1] to adjust the position of the adjusting plate [2].

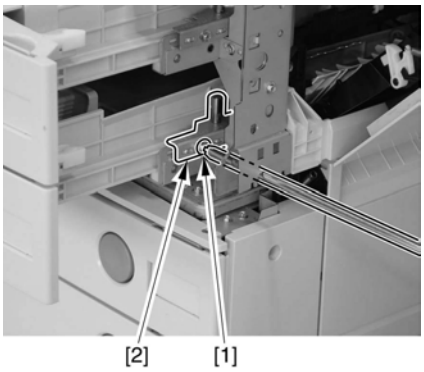

F-16-47

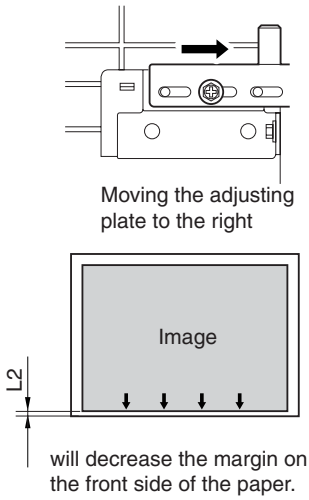

F-16-48

2. Adjusting the Horizontal Registration on the 2nd Side

Use the following service mode to adjust:
COPIER>ADJUST>FEED-ADJ>ADJ-REFE

16.7.2 Adjusting the Horizontal Registration When Replacing the Duplex Unit

CLC5151 / / / CLC4040 / / iR C4580i / / iR C4080i / / / / iR C5185N / / iR C5185i PRT /

After replacing the horizontal registration motor, horizontal registration sensor, duplex unit, and fixing delivery unit, follow the adjustment showing below.
COPIER>ADJUST>FEED>ADJ>ADJ-REFE

Chapter 17 Correcting Faulty Images

Contents

17.1 Outline of Electrical Components 17-1
17.1.1 Clutch/Solenoid 17-1
17.1.1.1 Reader Unit 17-1
17.1.1.2 Printer Unit 17-1
17.1.2 Motor 17-1
17.1.2.1 Reader Unit 17-1
17.1.2.2 Printer Unit 17-2
17.1.3 Fan 17-3
17.1.3.1 Reader Unit 17-3
17.1.3.2 Printer Unit 17-3
17.1.4 Sensor 17-4
17.1.4.1 Reader Unit 17-4
17.1.4.2 Printer Unit 17-4
17.1.5 Switch 17-6
17.1.5.1 Reader Unit 17-6
17.1.5.2 Printer Unit 17-6
17.1.6 Lamps, Heaters, and Others 17-7
17.1.6.1 Reader Unit 17-7
17.1.6.2 Printer Unit 17-7
17.1.7 PCBs 17-8
17.1.7.1 Reader Unit 17-8
17.1.7.2 Printer Unit 17-9
17.1.8 Connectors 17-11
17.1.8.1 List of connector 17-11
17.1.8.2 List of connector 17-20

17.1 Outline of Electrical Components

17.1.1 Clutch/Solenoid

17.1.1.1 Reader Unit

CLC5151 / / / CLC4040 / / / iR C4580i / / / iR C4080i / / / / Color Image Reader-F1 / Color Image Reader-E1 / Dupiex Color Image Reader-G1 / iR C5185N / / iR C5185i PRT /

The reader unit has no clutch or solenoid.

17.1.1.2 Printer Unit

CLC5151 / / / CLC4040 / / / iR C4580i / / / iR C4080i / / / / Color Image Reader-F1 / Color Image Reader-E1 / Dupiex Color Image Reader-G1 / iR C5185N / / iR C5185i PRT /

T-17-1

Notation	Name	Description	Parts No.	PART-CHK	Jack No.
					DCON1
CL1	duplex registration clutch	matches the position of images on double-sided prints.	FH6-1986	CL > 1	J119
CL2	duplex pickup clutch	controls the timing of pickup for double-sided printing.	FH6-5052	CL > 2	J119
SL1	manual feed pickup solenoid	controls the timing of pickup for the manual feed block.	FK2-0115	SL > 1	J120
SL2	delivery path switching solenoid 1	switches over positions of the delivery tray.	FH6-5056	SL > 2	J717A
SL3	cassette 1 pickup solenoid	controls the timing of pickup from the cassette 1.	FK2-0408	SL > 3	J117A
SL4	cassette 2 pickup solenoid	controls the timing of pickup from the cassette 2.	FK2-0408	SL > 4	J117B
SL5	delivery path switching solenoid 2	switches over the paths in the delivery/feeder unit.	FG6-9061	SL > 5	J119

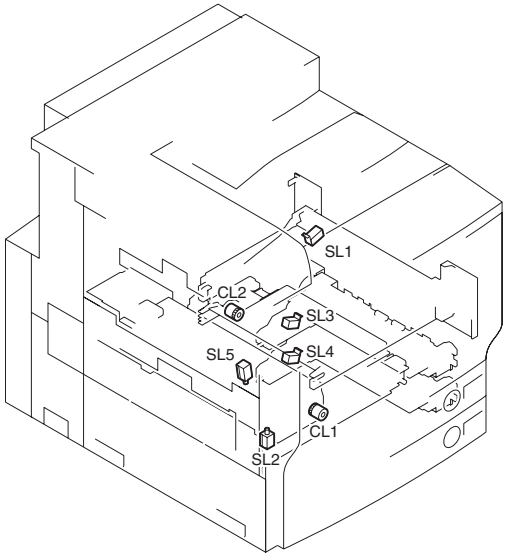

F-17-1

17.1.2 Motor

17.1.2.1 Reader Unit

CLC5151 / / / CLC4040 / / / iR C4580i / / / iR C4080i / / / / Color Image Reader-F1 / Color Image Reader-E1 / Dupiex Color Image Reader-G1 / iR C5185N / / iR C5185i PRT /

T-17-2

Notation	Name	Description	Parts No.	PART-CHK	Jack No.
M 1	scanner motor	drives the scanner system	FK2-0237	-	Interface PCB-J306*1
					Reader Contoller PCB-J306*2

*1 Color Image Reader-G1
*2 Color Image Reader-E/F1

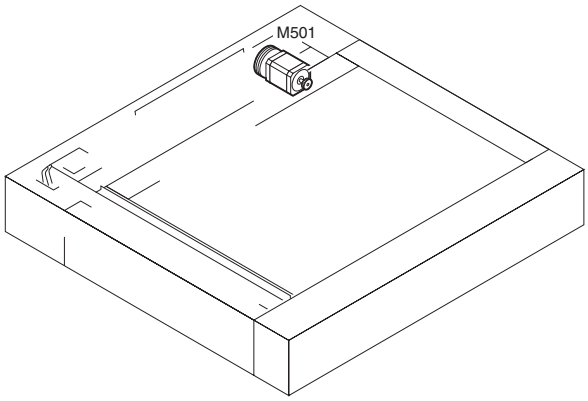

F-17-2

17.1.2.2 Printer Unit

CLC5151 / / / CLC4040 / / / iR C4580i / / / iR C4080i / / / / Color Image Reader-F1 / Color Image Reader-E1 / Dupiex Color Image Reader-G1 / iR C5185N / / iR C5185i PRT /

T-17-3

Notation	Name	Description	Parts No.	PART-CHK	Jack No.	
					PCB	No.
M1	drum ITB motor	drives the drum/intermediate transfer unit.	FK2-2511	MTR > 1	DCON2	J118B
M2	laser scanner motor (Y)	drives the laser scanner (Y).	FK2-2144	-	DCON1	J211A
M3	laser scanner motor (M)	drives the laser scanner (M).	FK2-2144	-	DCON1	J211A
M4	laser scanner motor (C)	drives the laser scanner (C).	FK2-2144	-	DCON1	J211B
M5	laser scanner motor (Bk)	drives the laser scanner (Bk).	FK2-2144	-	DCON1	J211B
M6	cassette 1 pickup motor	drives the pickup unit 1.	FK2-2515	MTR > 6	DCON2	J118B
M7	cassette 2 pickup motor	drives the pickup unit 2.	FK2-2515	MTR > 7	DCON2	J118A
M8	pre-registration motor	drives the registration roller.	FK2-2519	MTR > 12	DCON2	J120A
M9	registration motor	drives the pre-registration roller.	FK2-2516	MTR > 11	DCON2	J120B
M10	delivery vertical path motor	drives the delivery vertical path roller 2.	FK2-2515	MTR > 13	relay PCB	J720B
M11	face-down delivery motor	drives the delivery vertical path roller 1.	FK2-2520	MTR > 14	relay PCB	J707
M12	developing motor (Y)	drives the developing unit (Y).	FK2-2518	MTR > 18	relay PCB	J710A
M13	developing motor (M)	drives the developing unit (M).	FK2-2518	MTR > 19	relay PCB	J710A
M14	developing motor (C)	drives the developing unit (C).	FK2-2518	MTR > 20	relay PCB	J710B
M15	developing motor (Bk)	drives the developing unit (Bk).	FK2-2518	MTR > 21	relay PCB	J710B
M16	image slope correction motor (Y)	corrects image slope (Y).	RH7-1501	-	DCON2	J102A
M17	image slope correction motor (M)	corrects image slope (M).	RH7-1501	-	DCON2	J102A
M18	image slope correction motor (C)	corrects image slope (C).	RH7-1501	-	DCON2	J102B
M19	image slope correction motor (Bk)	corrects image slope (Bk).	RH7-1501	-	DCON2	J102B
M20	toner container motor (Y)	stirs toner inside the toner container (Y).	FK2-2525	MTR > 2	relay PCB	J706
M21	toner container motor (M)	stirs toner inside the toner container (M).	FK2-2525	MTR > 3	relay PCB	J706
M22	toner container motor (C)	stirs toner inside the toner container (C).	FK2-2525	MTR > 4	relay PCB	J706
M23	toner container motor (Bk)	stirs toner inside the toner container (Bk).	FK2-2525	MTR > 5	relay PCB	J706
M24	fixing drive motor	drives the fixing unit.	FK2-2514	-	DCON2	J109B
M25	horizontal registration motor	matches the horizontal registration position for paper.	FK2-0144	MTR > 16	DCON2	J119B
M26	duplex feeder motor	moves paper to the duplex unit.	FK2-2520	MTR > 17	DCON2	J119B
M27	fixing pressure release motor	increases or releases a pressure of the pressure belt unit.	FK2-2522	-	relay PCB	J117
M28	fixing belt displacement control motor	controls displacement of the fixing belt.	FK2-2523	-	relay PCB	J117
M29	pressure belt displacement control motor	controls displacement of the pressure belt.	FK2-2523	-	relay PCB	J721B

*DCON1 : DC controller PCB 1 (IMG)
DCON2 : DC controller PCB 2 (MAISY)

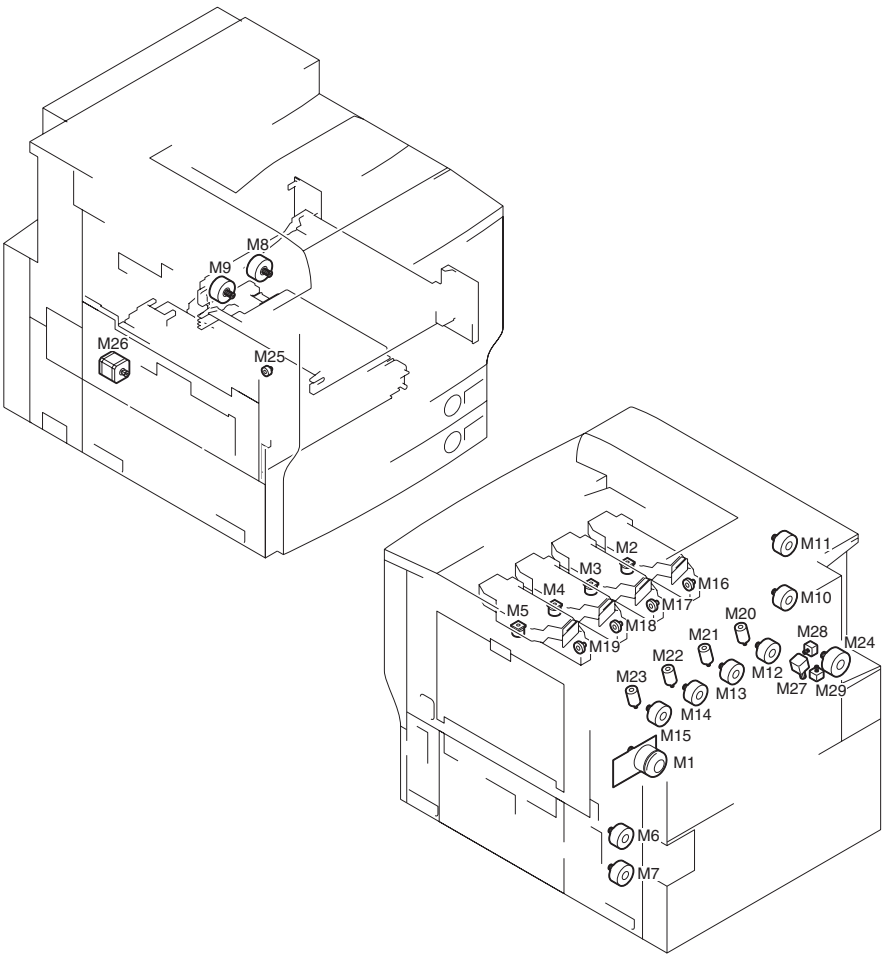

F-17-3

17.1.3 Fan

17.1.3.1 Reader Unit

CLC5151 / / / CLC4040 / / / iR C4580i / / / iR C4080i / / / / Color Image Reader-F1 / Color Image Reader-E1 / Dupiex Color Image Reader-G1 / iR C5185N / / iR C5185i PRT /

T-17-4

Notation	Name	Description	Parts No.	PART-CHK	Jack No.
FM1	reader cooling fan	cools the interior of the reader.	FK2-0626	-	J306

17.1.3.2 Printer Unit

CLC5151 / / / CLC4040 / / / iR C4580i / / / iR C4080i / / / / Color Image Reader-F1 / Color Image Reader-E1 / Dupiex Color Image Reader-G1 / iR C5185N / / iR C5185i PRT /

T-17-5

Notation	Name	Description	Parts No.	PART-CHK	Jack No.	
					PCB	No.
FM1	power supply exhaust fan 1	exhausts heat from the power supply.	FK2-0360	FAN > 1	relay PCB	J627
FM2	fixing heat discharge fan	discharges heat from the fixing unit.	FK2-2528	FAN > 2	relay PCB	J712
FM3	machine heat discharge fan	discharges heat from inside the machine.	FH9-1979	FAN > 3	relay PCB	J712
FM4	cleaner fan	limits overheating inside the machine.	FK2-2530	FAN > 4	relay PCB	J717A
FM5	delivery cooling fan	cools paper for delivery.	FK2-0124	FAN > 5	relay PCB	J712
FM6	manual feed cooling fan	cools paper for manual feeding.	FK2-2530	FAN > 6	DCON2	J118A
FM7	controller fan	cools the inside of the controller box.	FK2-2529	-	MNCOM	J1007
FM8	delivery vertical path cooling fan	cools the IH power supply assembly.	FH6-1984	FAN > 7	relay PCB	J707
FM9	IH power supply cooling fan	exhaust heat from the power supply assembly.	FK2-2530	-	DCON2	J118B
FM10	power supply exhaust fan 2	cools the intermediate transfer unit.	FK2-0360	FAN > 1	relay PCB	J627
FM11	ITB power supply cooling fan.	cools paper for delivery.	FK2-2530	FAN > 8	relay PCB	J717B
FM12	face-down tray cooling fan (front)	cools paper for delivery.	FK2-2527	FAN > 10	relay PCB	J718
FM13	vertical path delivery exhaust fan	exhaust heat from the interior of the main body.	FH9-1979	FAN > 9	relay PCB	J715
FM14	face-down tray cooling fan (rear)	cools paper for delivery.	FK2-2527	FAN > 10	relay PCB	J718

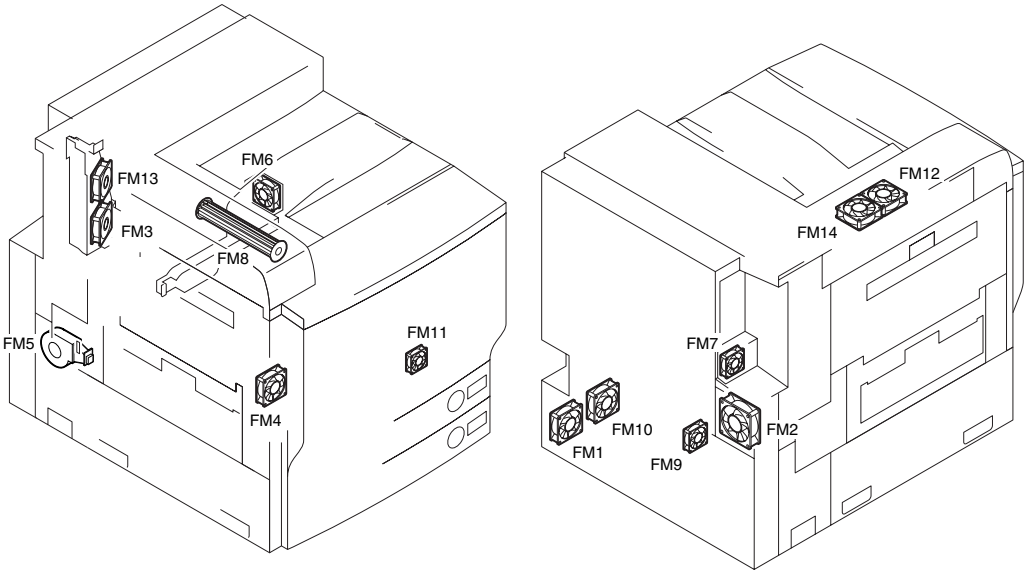

F-17-4

17.1.4 Sensor

17.1.4.1 Reader Unit

CLC5151 / / / CLC4040 / / / iR C4580i / / / iR C4080i / / / / Color Image Reader-F1 / Color Image Reader-E1 / Dupiex Color Image Reader-G1 / iR C5185N / / iR C5185i PRT /

T-17-6

Notation	Name	Description	Parts No.	Jack No.	
				I/F-BOARD	RCON
PS501	scanner HP sensor	detects the home position of the scanner.	FK2-0149	J310/J308	J202
PS502	ADF open / close senor 1	detects the state (open / closed) of the ADF.	FK2-0149	J310/J307	J203
PS503	ADF open / close sensor 2	detects and screens detection timing of the original size recognition.	FK2-0149	J310/J308	J202

*RCON : reader controller PCB
I/F-BOARD : interface PCB

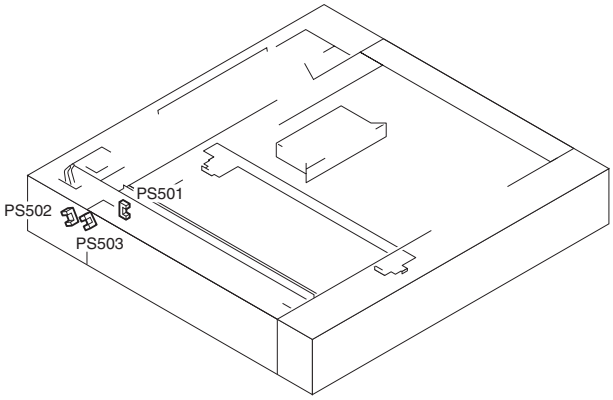

F-17-5

17.1.4.2 Printer Unit

CLC5151 / / / CLC4040 / / / iR C4580i / / / iR C4080i / / / / Color Image Reader-F1 / Color Image Reader-E1 / Dupiex Color Image Reader-G1 / iR C5185N / / iR C5185i PRT /

T-17-7

Notation	Name	Description	Parts No.	I/O	Jack No.	
					PCB	No.
PS1	toner feedscrew rotation sensor (Y)	detects the rotation of the feedscrew inside the toner container (Y).	FH7-7312	-	relay PCB	J708
PS2	toner feedscrew rotation sensor (M)	detects the rotation of the feedscrew inside the toner container (M).	FH7-7312	-	relay PCB	J708
PS3	toner feedscrew rotation sensor (C)	detects the rotation of the feedscrew inside the toner container (C).	FH7-7312	-	relay PCB	J708
PS4	toner feedscrew rotation sensor (Bk)	detects the rotation of the feedscrew inside the toner container (Bk).	FH7-7312	-	relay PCB	J708
PS5	fixing feeder unit open/closed Sensor	detects the sate (open/closed) of the fixing feeder unit.	FH7-7312	P005-4	relay PCB	J717A

Notation	Name	Description	Parts No.	I/O	Jack No.	
					PCB	No.
PS6	face-down delivery sensor 2	detects the passage of paper in the face-down delivery assembly.	FH7-7312	P007-8	relay PCB	J716
PS7	cassette 1 paper sensor	detects the presence/absence of power inside the cassette 1.	FH7-7312	P001-12	DCON2	J117A
PS8	center delivery tray full sensors	detects the state (full of paper) inside the face-down delivery assembly.	FH7-7312	P005-9	relay PCB	J716
PS9	manual feed last paper sensor	detects paper in the manual feed unit.	FH7-7312	P001-15	DCON2	J120A
PS10	manual feed paper sensor	detects paper in the manual feed unit.	FH7-7312	P001-14	DCON2	J120A
PS11	pickup vertical path cover open/closed sensor	detects the state (open/closed) of the pickup vertical path cover.	FH7-7312	P005-10	DCON2	J120A
PS12	face-down delivery sensor 1	detects face-down delivery.	FH7-7312	P007-5	relay PCB	J716
PS13	delivery vertical path cover open/closed sensor	detects the state (open/closed) of the delivery vertical path cover.	FH7-7312	P005-7	relay PCB	J716
PS14	cassette 1 paper level sensor (A)	detects the level of paper inside the cassette 1 (A).	FH7-7312	P001-8	DCON2	J117A
PS15	cassette 1 paper level sensor (B)	detects the level of paper inside the cassette 1 (B).	FH7-7312	P001-9	DCON2	J117A
PS16	cassette 1 retry paper sensor	detects paper retry operation for the cassette 1.	FH7-7312	P007-1	DCON2	J117A
PS17	cassette 2 retry paper sensor	detects paper retry operation for the cassette 2.	FH7-7312	P007-0	DCON2	J117B
PS18	cassette 2 paper level sensor (B)	detects the level of paper inside the cassette 2 (B).	FH7-7312	P001-11	DCON2	J117B
PS19	cassette 2 paper sensor	detects the presence/absence of paper inside the cassette 2.	FH7-7312	P001-13	DCON2	J117B
PS20	cassette 2 paper level sensor (A)	detects the level of paper inside the cassette 2 (A).	FH7-7312	P001-10	DCON2	J117B
PS21	duplex registration sensor	detects double-sided registration.	FH7-7312	P007-6	DCON2	J119A
PS22	duplex horizontal registration Sensor	detects the position of paper in sub scanning direction.	FH7-7312	P007-9	DCON2	J119B
PS23	front cover open/closed sensor	detects the state (open/closed) of the front cover.	FH7-7312	P005-11	DCON2	J118A
PS24	duplex pickup sensor	detects pickup from the duplex unit.	FH7-7312	P007-7	DCON2	J119A
PS25	fixing delivery sensor	detects delivery in the fixing unit.	FH7-7312	P007-4	relay PCB	J721A
PS26	registration sensor	detects paper before registration.	FH7-7312	P007-2	DCON2	J120B
PS27	fixing inlet sensor	detects movement of paper to the fixing unit.	FH7-7312	P007-3	relay PCB	J720B
PS28	manual feed unit open/closed Sensor	detects the state (open/closed) of the manual feed unit.	FH7-7312	P005-8	DCON2	J118A
PS29	fixing seizure sensor	detects fixing unit seizure.	FH7-7312	-	relay PCB	J721B
PS30	pressure belt HP sensor	detects pressure belt HP.	FH7-7312	-	relay PCB	J721B
PS31	fixing belt HP sensor	detects fixing belt HP.	FH7-7312	-	relay PCB	J720B
PS33	fixing belt position sensor 1	detects fixing belt displacement 1.	FH7-7312	-	relay PCB	J720A
PS34	fixing belt position sensor 2	detects fixing belt displacement 2.	FH7-7312	-	relay PCB	J720A
PS35	fixing belt position sensor 3	detects fixing belt displacement 3.	FH7-7312	-	relay PCB	J720A
PS36	pressure belt position sensor 1	detects pressure belt displacement 1.	FH7-7312	-	relay PCB	J721A
PS37	pressure belt position sensor 2	detects pressure belt displacement 2.	FH7-7312	-	relay PCB	J721A
PS38	pressure belt position sensor 3	detects pressure belt displacement 3.	FH7-7312	-	relay PCB	J721A
PS46	fixing pressure release HP sensor	detects pressure belt pressure.	FH7-7312	-	DCON2	J108B
PS47	fixing loop sensor	detects fixing loop.	FH7-7312	-	DCON2	J119B
PS50	Fixing feed unit open / close sensor	detects if the fixing feed unit is open or closed.	FH7-7312	-	relay PCB	J719
VR1	slide resistor	detects the width of paper for manual feed.	FH7-7600	-	DCON2	J120A
OHP1	transparency sensor (front)	detects a transparency.	RH7-7129	P007-10	DCON2	J120B
OHP2	transparency sensor (rear)	detects a transparency.	RH7-7129	P007-11	DCON2	J120B
EV1	environment sensor	environment sensor	FH7-7602	-	DCON2	J112A
TH1	fixing main thermistor	detects temperature of the central part of the fixing belt.	FK2-2539	-	DCON2	J108A
TH2	fixing sub thermistor 1	detects temperature of the fixing belt edge (front).	FK2-2539	-	DCON2	J108A
TH3	fixing sub thermistor 2	detects temperature of the fixing belt edge (rear).	FK2-2539	-	DCON2	J108A
TH4	pressure main thermistor 1	detects temperature of the central part of the pressure belt.	FK2-2537	-	DCON2	J108B
TH5	pressure sub thermistor 1	detects temperature of the pressure belt edge (front).	FK2-2538	-	DCON2	J108B
TH6	pressure sub thermistor 2	detects temperature of the pressure belt edge (rear).	FK2-2538	-	DCON2	J108B
TP1	fixing thermal switch	detects temperature of the central part of the fixing belt.	FK2-2506	-	DCON2	J108A
TP2	pressure thermal switch	detects temperature of the center of the pressure belt.	FK2-2507	-	DCON2	J108B
TPS1	SALT sensor	stabilizes development characteristics (SALT).	FK2-2510	-	DCON2	J112A
TS1	ATR sensor (Y)	executes automatic toner density correction (ATR; Y).	MG4-0246	-	DCON2	J110
TS2	ATR sensor (M)	executes automatic toner density correction (ATR; M).	MG4-0246	-	DCON2	J110
TS3	ATR sensor (C)	executes automatic toner density correction (ATR; C).	MG4-0246	-	DCON2	J110
TS4	ATR sensor (Bk)	executes automatic toner density correction (ATR; Bk).	MG4-0246	-	DCON2	J110

*DCON2 : DC controller PCB 2 (MAICY)

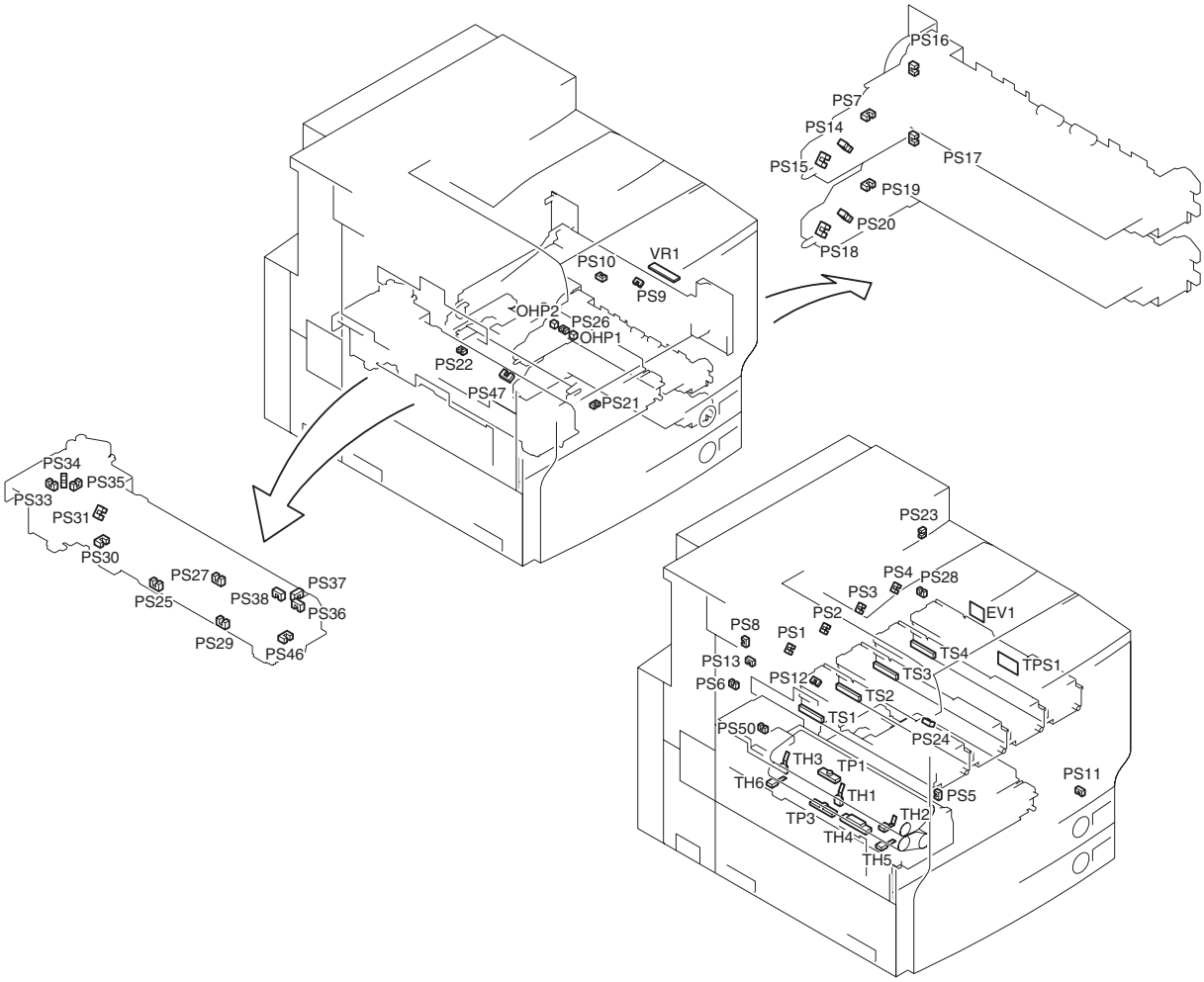

F-17-6

17.1.5 Switch

17.1.5.1 Reader Unit

CLC5151 / / / CLC4040 / / / iR C4580i / / / iR C4080i / / / / Color Image Reader-F1 / Color Image Reader-E1 / Dupiex Color Image Reader-G1 / iR C5185N / / iR C5185i PRT /

The reader unit does not have switches.

17.1.5.2 Printer Unit

CLC5151 / / / CLC4040 / / / iR C4580i / / / iR C4080i / / / / Color Image Reader-F1 / Color Image Reader-E1 / Dupiex Color Image Reader-G1 / iR C5185N / / iR C5185i PRT /

T-17-8

Notation	Name	Description	Parts No.	Jack No.	
				PCB	No.
SW1	main power switch	turns on/off the main power.	FK2-2509	AC driver PCB	J5
SW2	cassette 1 size detecting switch	detects the size of paper inside the cassette 1.	WC2-5332	DCON2	J113B
SW3	cassette 2 size detecting switch	detects the size of paper inside the cassette 2.	WC2-5332	DCON2	J113B
MSW1	front cover open/closed detection switch 1	detects the state (open/closed) of the front Cover.	RH7-6037	relay PCB	J624
MSW2	front cover open/closed detection switch 2	detects the state (open/closed) of the front Cover.	RH7-6037		
MSW3	manual feed unit open/closed detection switch 1	detects the state (open/closed) of the manual feed unit.	RH7-6037		
MSW4	manual feed unit open/closed detection switch 2	detects the state (open/closed) of the manual feed unit.	RH7-6037		
MSW5	fixing feeding unit open/closed detection switch 1	detects the state (open/closed) of the fixing feeder unit.	RH7-6037		
MSW6	fixing feeding unit open/closed detection switch 2	detects the state (open/closed) of the fixing feeder unit.	RH7-6037		

*DCON2 : DC controller PCB 2 (MAICY)

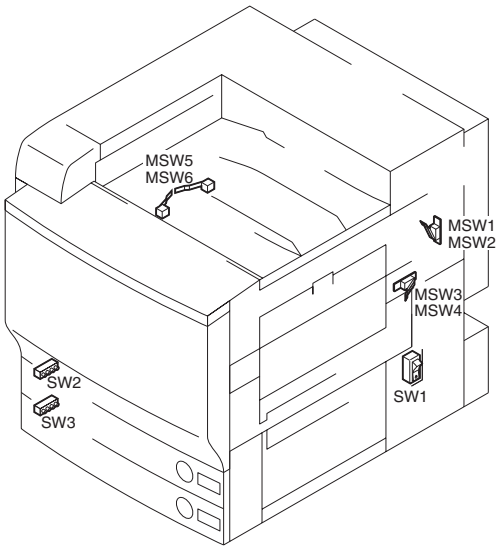

F-17-7

17.1.6 Lamps, Heaters, and Others

17.1.6.1 Reader Unit

CLC5151 / / / CLC4040 / / / iR C4580i / / / iR C4080i / / / / Color Image Reader-F1 / Color Image Reader-E1 / Dupiex Color Image Reader-G1 / iR C5185N / / iR C5185i PRT /

T-17-9

Notation	Name	Description	Parts No.	Jack No.	
				inverter PCB	No.
LA1	scanning lamp	illuminates an original.	FK2-2291	J602< J601<	J206
H1	reader (condensation prevention) heater 1	prevents condensation on a mirror.	FK2-0227 (100V) FK2-0229 (230V)	J2301M< J651A<	J631A
H2	reader (condensation prevention) heater 1	prevents condensation on a lens.	FK2-0226 (100V) FK2-0228 (230V)	J2301M< J651A<	J631A

17.1.6.2 Printer Unit

CLC5151 / / / CLC4040 / / / iR C4580i / / / iR C4080i / / / / Color Image Reader-F1 / Color Image Reader-E1 / Dupiex Color Image Reader-G1 / iR C5185N / / iR C5185i PRT /

T-17-10

Notation	Name	Description	Parts No.	E Code	Jack No.
H1	pressure heater	controls pressure heater temperature.	FK2-2531 (100V) FK2-2532 (120V) FK2-2533 (230V)	E001, E002, E003, E004	AC driver PCB : J4 / J11 > relay PCB : J628
IH	IH heater unit	controls fixing belt temperature.		E001, E002, E003, E004	IH power supply PCB : J310 / J301 > relay PCB : J623
ELCB1	leakage breaker	leakage breaker	FH7-7626 (iR C4580/3880 (100/120V)) FK2-0014 (iR C5180 (100/120V)) FH7-7625 (230V)		AC driver PCB : J2
PLG1	power cord	power cord			AC driver PCB : J2

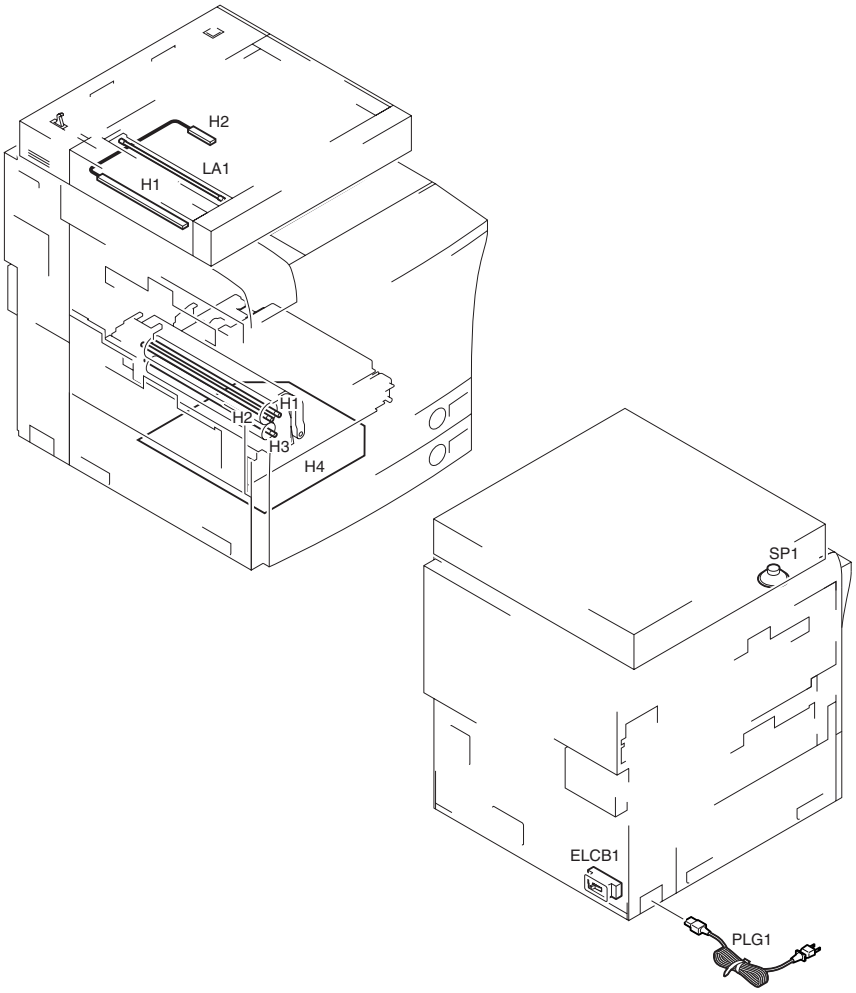

F-17-8

17.1.7 PCBs

17.1.7.1 Reader Unit

CLC5151 / / / CLC4040 / / / iR C4580i / / / iR C4080i / / / / Color Image Reader-F1 / Color Image Reader-E1 / Dupiex Color Image Reader-G1 / iR C5185N / / iR C5185i PRT /

ÅEColor Image Reader-E1/F1ÇÃèÍçá

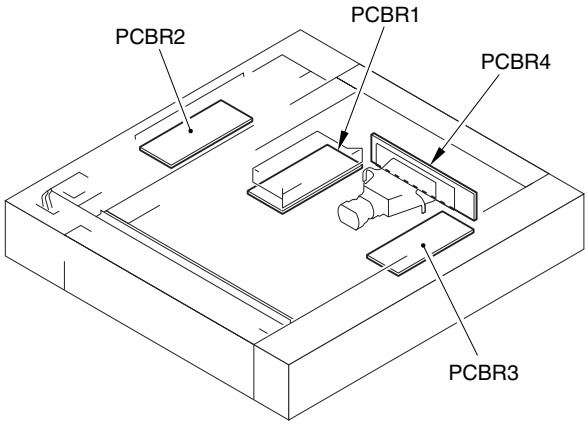

F-17-9

T-17-11

Notation	Name	Parts No.	Description
PCBR1	Reader controller PCB	FM2-6801	controls the reader unit/ADF.
PCBR2	Interface PCB	FM2-6802	communicates image information read by the reader unit to the printer unit.
PCBR3	Inverter PCB	FK2-0225	controls the scanning lamp.
PCBR4	CCD/AP PCB	FM2-6803	drives the CCD/processes analog images.

- In the case of Controller Image Reader G1

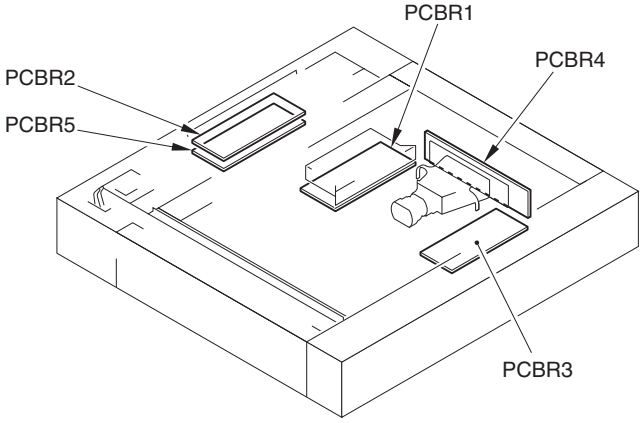

F-17-10

T-17-12

Notation	Name	Parts No.	Description
PCBR1	Reader controller PCB	FM3-0475	Controls the reader unit/ADF.
PCBR2	Interface PCB	FM3-0471	Communicates image information read by the reader unit to the printer unit.
PCBR3	Inverter PCB	FK2-0225	Controls the scanning lamp.
PCBR4	CCD/AP PCB	FM2-6803	Drives the CCD/processes analog images.
PCBR5	Memory PCB	FM3-0474	Delivers and receives the data between the main controller and the reader controller/ADF.

17.1.7.2 Printer Unit

CLC5151 / / / CLC4040 / / / iR C4580i / / / iR C4080i / / / / Color Image Reader-F1 / Color Image Reader-E1 / Dupiex Color Image Reader-G1 / iR C5185N / / iR C5185i PRT /

T-17-13

Notation	Name	Parts No.	Description
PCB1	DC controller PCB 1 (IMG)	FM2-6297 (iRC5180) /FM2-7157 (iRC4580/3880)	laser system control
PCB2	DC controller PCB 2 (MAICY)	FM2-6298(100/120V) FM3-0268 (230V)	printer unit control / optional power supply control
PCB3	relay PCB	FM2-6299	printer unit load system control
PCB4	Laser driver PCB (Y)	FM2-5406 (LASER UNIT)	controls the drive of the laser unit (Y).
PCB5	Laser driver PCB (M)		controls the drive of the laser unit (M).
PCB6	Laser driver PCB (C)		controls the drive of the laser unit (C).
PCB7	Laser driver PCB (Bk)		controls the drive of the laser unit (Bk).
PCB8	BD detection PCB (Y)	FM2-5406 (LASER UNIT)	detects the laser beam (Y).
PCB9	BD detection PCB (M)		detects the laser beam (M).
PCB10	BD detection PCB (C)		detects the laser beam (C).
PCB11	BD detection PCB (Bk)		detects the laser beam (Bk).
PCB12	Waste toner detection PCB (light-emitting)	FG3-2374	detects the level of toner inside the waste toner container.
PCB13	Waste toner detection PCB (light-receiving)	FG3-2375	detects the level of toner inside the waste toner container.
PCB14 + PCB15	Auto registration sensor F (light-emitting) detection PCB	FG3-2315	reads the image position correction pattern.
	Auto registration sensor F (light-receiving) detection PCB		reads the image position correction pattern.
PCB16 + PCB17	Auto registration sensor R (light-emitting) detection PCB	FG3-2315	reads the image position correction pattern.
	Auto registration sensor R (light-receiving) detection PCB		reads the image position correction pattern.
PCB18	Microswitch PCB	FG6-9015	detects the state (open/closed) of the manual feed unit.
PCB19	Microswitch PCB	FG6-9015	detects the state (open/closed) of the front cover.
PCB20	Main power supply PCB (13V / 24V)	FM2-6309 (100V/120V) FM2-6310 (230V)	transforms power supply to 13V / 24V.
PCB21	All-night power supply PCB (3.3V)	FK2-0101 (100V/120V) FK2-0111 (230V)	transforms power supply (all-night) to 3.3V.
PCB22	DC / DC converter PCB (38V) 1	FM2-6300	transforms power supply to 38V (for the drum ITB motor).
PCB23	DC / DC converter PCB (38V) 2	FM2-6300	transforms power supply to 38V (for the fixing motor).
PCB24	DC / DC converter PCB (3.3V / 5V / 12V)	FM2-6049	transforms power supply to 3.3V / 5V / 12V.

Notation	Name	Parts No.	Description
PCB25	Relay PCB	FM2-6309 (100V/120V) FM2-6310 (230V)	transforms power supply to 3.3V / 5V / 13V.
PCB26	AC driver PCB	FM2-6301 (100V/120V) FM2-6302 (230V)	AC drive
PCB27	IH power supply PCB	FM2-6313 (100V/120V) FM2-6314 (230V)	transforms IH power supply.
PCB28	HV1 PCB	FG6-9673 (UNIT)	executes charging/development.
PCB29	HV2 PCB		executes primary transfer.
PCB30	HV1-SUB PCB		detects charging AC current; controls developing AC output; distributes signals; assists upstream mechanisms, assists downstream mechanisms.
PCB31	HV2-SUB PCB		power input.
PCB32	HV3 PCB	FG6-9674	executes secondary transfer.
PCB33	HV4 PCB	FG6-9673 (UNIT)	assists upstream mechanisms (sends to HV1).
PCB34	Heater control PCB	FM2-7168	controls the main heater.
PCB35	Main controller PCB (main)	FM2-6807(iRC5180/4580) FM2-6843 (iRC3880)	System control, memory control, and printer output image processing control
PCB36	Main controller PCB (sub LAN-bar-C)	FM2-6851	LAN connection, HDD controller, HDD power supply
PCB37	Main controller PCB (sub SJ-A)	FM2-6852	Scanner interface, scanner image processing (resolution conversion, image rotation, compression/decompression)
	Main controller PCB (sub S-JJ)	FM2-9252	
PCB38 + PCB40	Main controller PCB (sub PDRM-EF-A) (Main controller PCB (sub PDRM-A)+Main controller PCB (sub EF-A)	FM2-7429	Main controller PCB (sub PDRM-A): printer basic image processing (background removal, color space conversion, (RGB to CMYK), F-value, color balance adjustment), correction of misalignment among the 4 drums. Main controller PCB (sub EF-A): gradation conversion, screen processing, generating from REOS600dpi image data to 1200dpi image data, high-image-quality-capable SST (AST).
PCB39 + PCB41	Main controller PCB (sub PDRM-EF-A) (Main controller PCB (sub PDRM-A)+Main controller PCB (sub EF-A)	FM2-7429	
PCB42	Control panel CPU PCB	FG3-3965	controls the control panel.
PCB43	Control panel KEY PCB	FG6-8937	controls the input from the keypad.
PCB44	Control panel inverter PCB	FG3-2376	controls the backlight of the LCD.
PCB45	Main controller PCB (sub R-A) /Main controller PCB (sub RO-B)	FM2-5901 /FM2-7430	color space changes, electric sorting rotation, digitalization, resolution changes.
PCB46	Main controller PCB (sub RB-A)	FM2-6810	converts image data of a 1200 dpi resolution into image data of an equivalent of a 600 dpi resolution, which contains an equivalent of 1200 dpi character spacing information.
PCB47	SRAM PCB	FM2-6040	management of image data saved on the HDD, saves service mode setting data and user mode setting data.
PCB48	I.T.B. SUB PCB ASSEMBLY(Operation support PCB)	FM3-0261	Supports the ITB motor drive.

*1 Other than iR C5185
*2 iR C5185
*3 This part is only equipped in the machines produced during initial period and it is included in the relay PCB (service parts) in the machines produced after the middle term of the mass production.

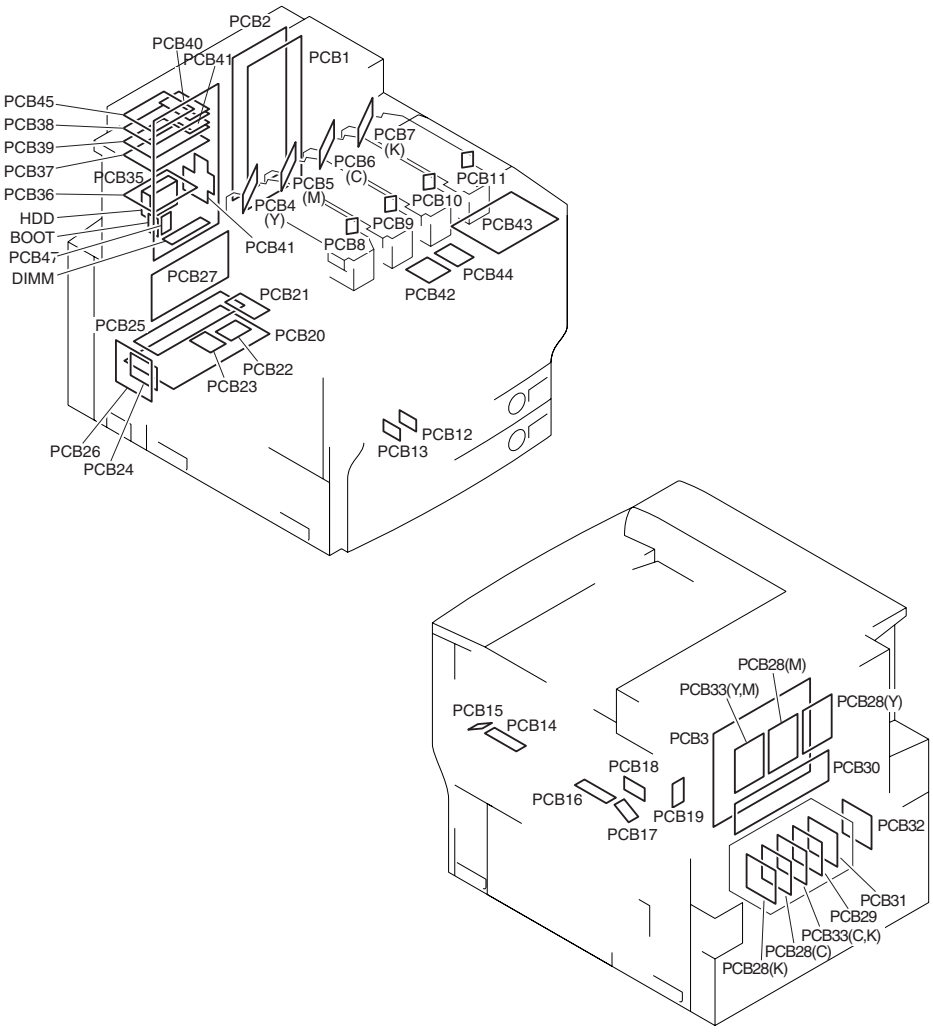

F-17-11

17.1.8 Connectors

17.1.8.1 List of connector

CLC5151 / / / CLC4040 / / iR C4580i / / iR C4080i / / / / Color Image Reader-F1 / Color Image Reader-E1 / Dupiex Color Image Reader-G1 / iR C5185N / / iR C5185i PRT /

Reader

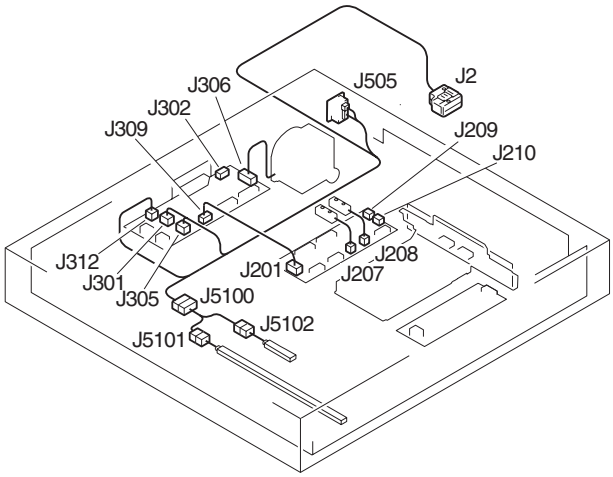

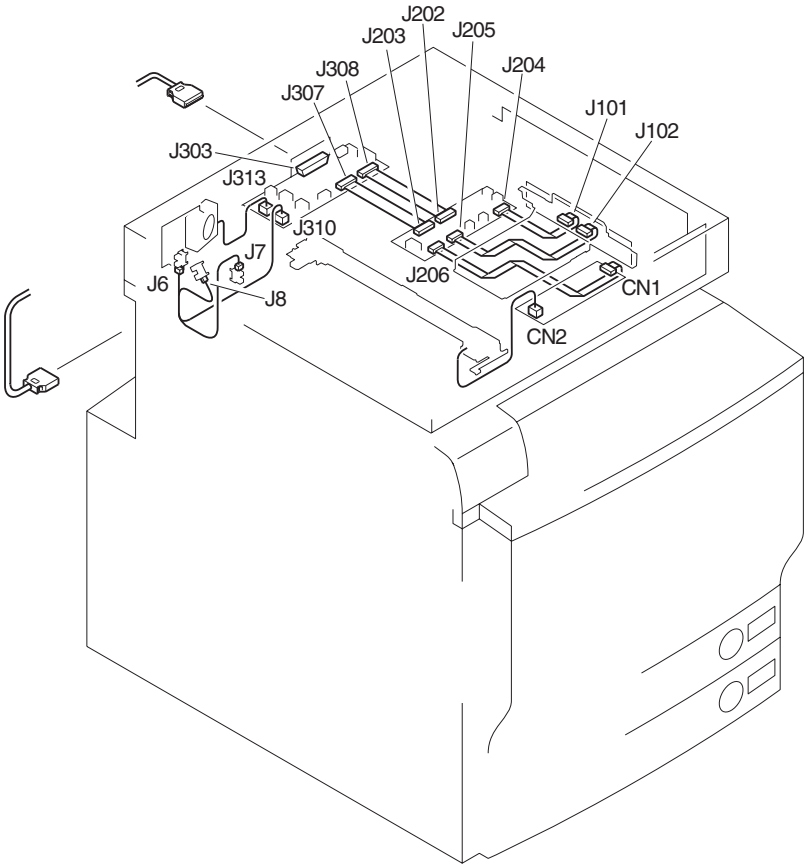

F-17-12

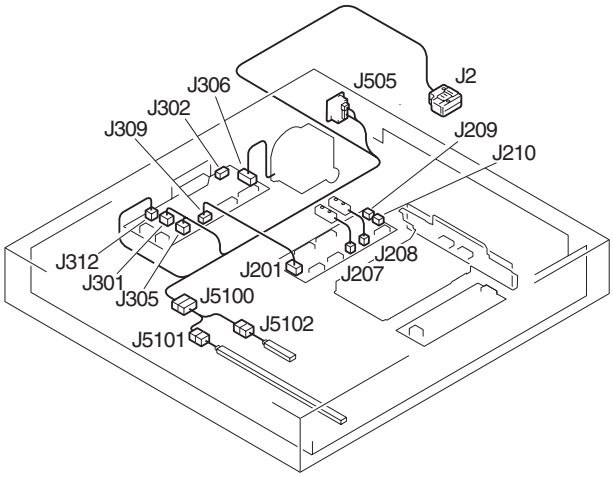
J2
J505
J306
J302
J309
J209
J210
J312
J301
J305
J201
J207
J208
J5100
J5102
J5101

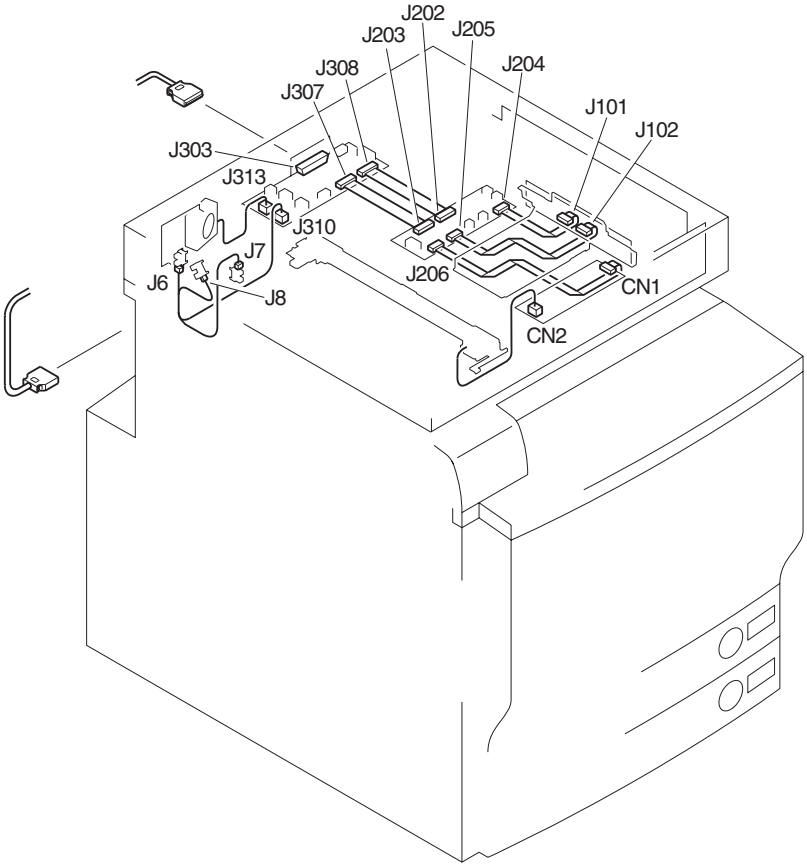
J202
J203
J205
J308
J204
J307
J101
J102
J303
J313
J310
J7
J6
J8
J206
CN1
CN2

F-17-13

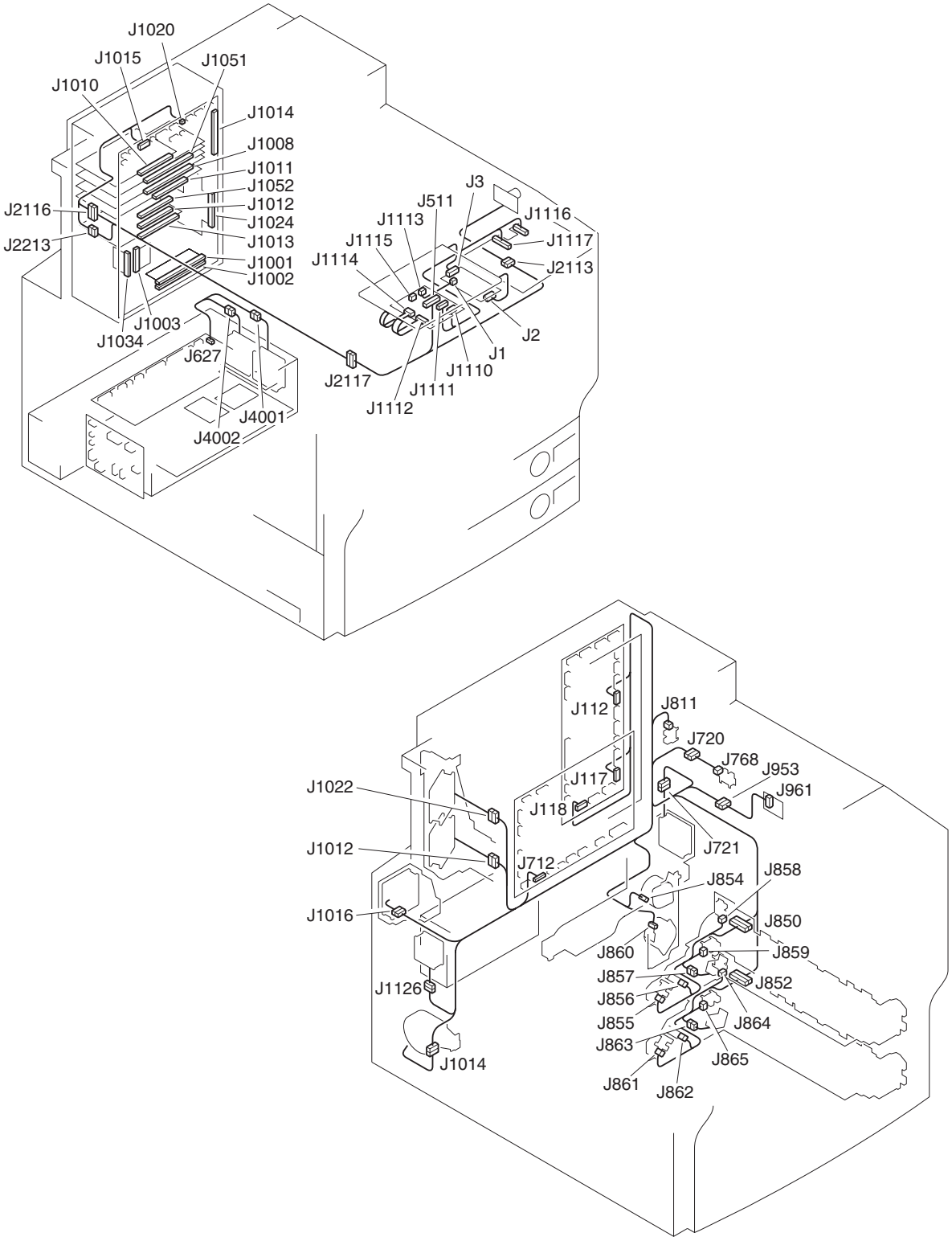
J1020
J1015
J1051
J1010
J1014
J1008
J1011
J1052
J1012
J1024
J1013
J1001
J1002
J2116
J2213
J1003
J1034
J627
J4001
J4002
J3
J511
J1113
J1115
J1114
J1116
J1117
J2113
J2
J1
J1110
J1111
J1112
J2117
J112
J811
J720
J768
J953
J961
J117
J118
J1022
J1012
J1016
J1126
J1014
J712
J721
J854
J858
J850
J860
J859
J857
J852
J856
J855
J864
J863
J865
J861
J862

F-17-14

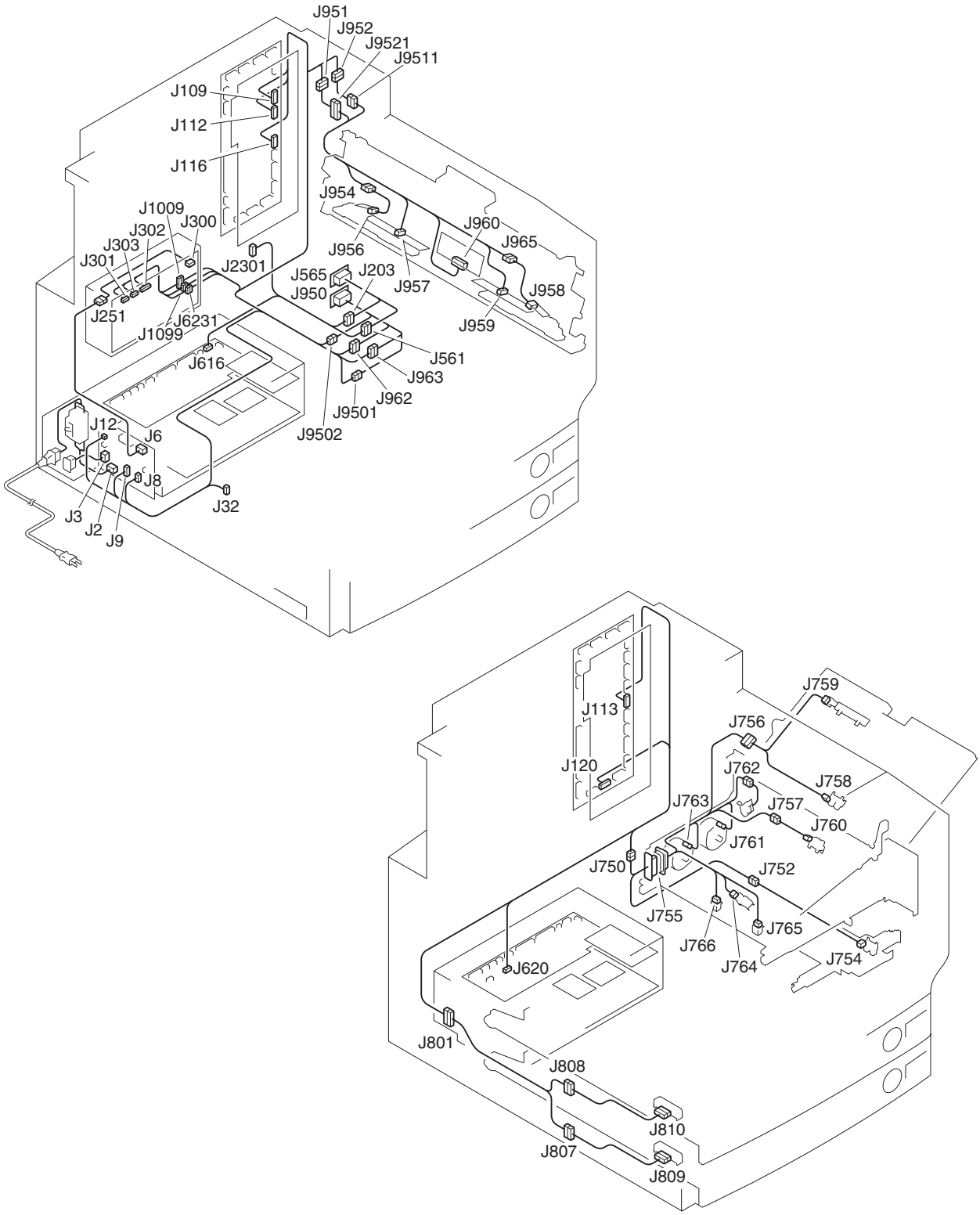
J951
J952
J9521
J9511
J109
J112
J116
J954
J1009
J300
J302
J303
J301
J2301
J956
J960
J965
J565
J203
J950
J957
J958
J251
J6231
J1099
J959
J616
J561
J963
J962
J9501
J12
J6
J9502
J8
J32
J3
J2
J9
J759
J113
J756
J120
J762
J758
J763
J757
J760
J761
J750
J752
J755
J765
J766
J764
J754
J620
J801
J808
J810
J807
J809

F-17-15

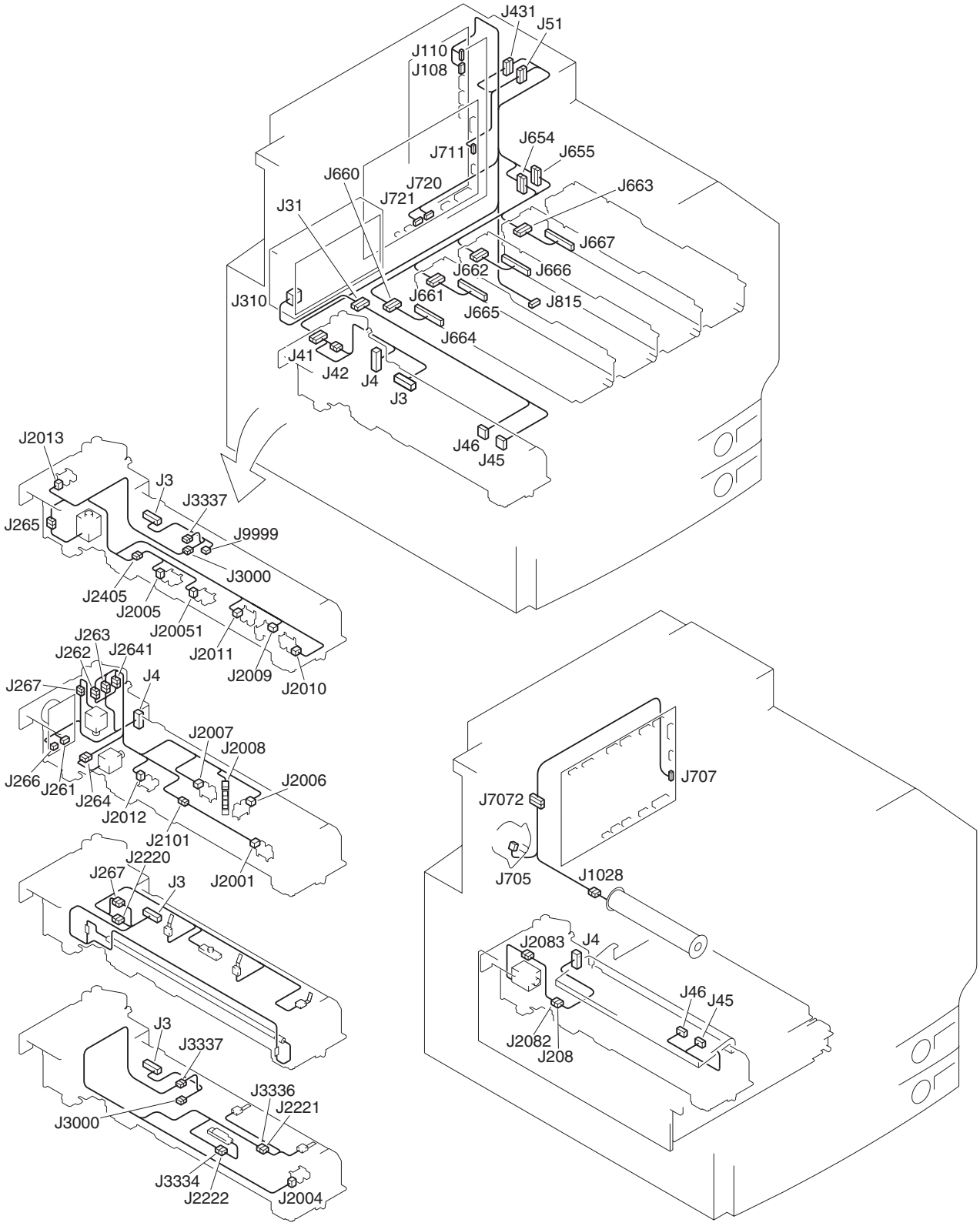
J431
J51
J110
J108
J654
J655
J711
J660
J720
J721
J663
J31
J667
J662
J666
J661
J815
J310
J665
J664
J41
J42
J4
J3
J46
J45
J2013
J3
J3337
J265
J9999
J3000
J2405
J2005
J20051
J2011
J263
J262
J2641
J2009
J2010
J267
J4
J2007
J2008
J266
J261
J264
J2006
J2012
J2101
J2220
J267
J3
J2001
J3
J3337
J3336
J2221
J3000
J3334
J2222
J2004
J707
J7072
J705
J1028
J2083
J4
J46
J45
J2082
J208

F-17-16

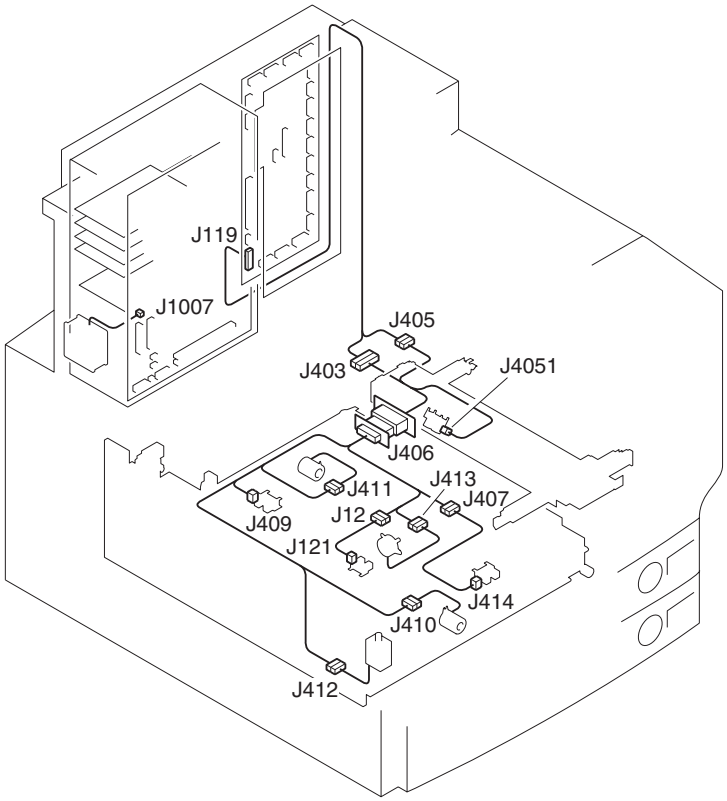
J119
J1007
J405
J403
J4051
J406
J413
J411
J407
J409
J12
J121
J414
J410
J412

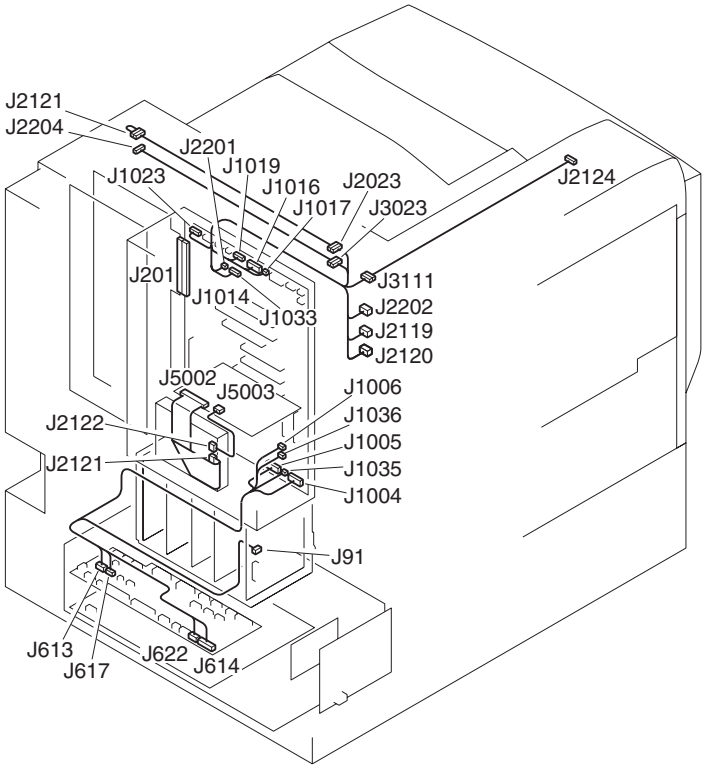
J2121
J2204
J2201
J1019
J1023
J1016
J2023
J2124
J1017
J3023
J201
J3111
J1014
J2202
J1033
J2119
J2120
J5002
J5003
J1006
J1036
J2122
J1005
J2121
J1035
J1004
J91
J613
J617
J622
J614

F-17-17

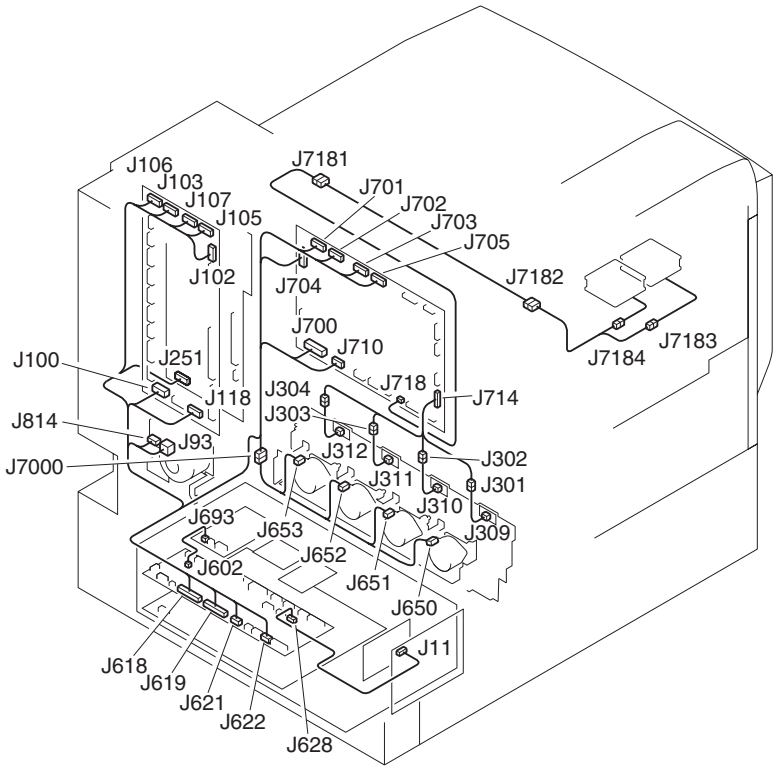
J106
J103
J107
J105
J102
J7181
J701
J702
J703
J705
J704
J7182
J700
J710
J7183
J7184
J100
J251
J118
J718
J714
J304
J303
J814
J93
J312
J302
J7000
J311
J301
J310
J693
J653
J309
J652
J602
J651
J650
J11
J618
J619
J621
J622
J628

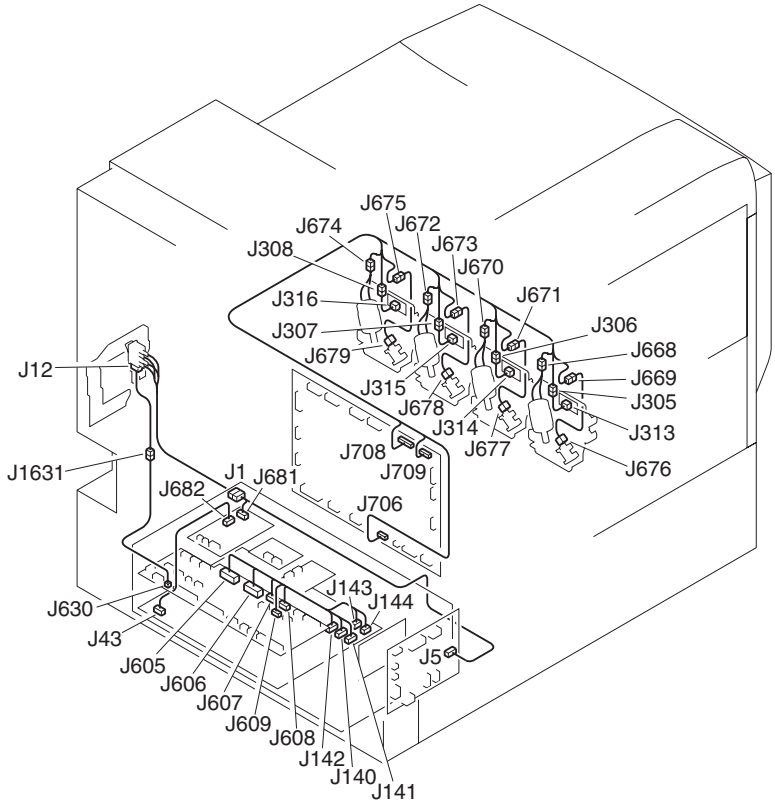
J675
J674
J672
J673
J308
J670
J316
J671
J307
J306
J679
J668
J12
J669
J315
J305
J678
J314
J313
J677
J708
J676
J709
J1631
J1
J681
J682
J706
J143
J144
J630
J43
J5
J605
J606
J607
J609
J608
J142
J140
J141

F-17-18

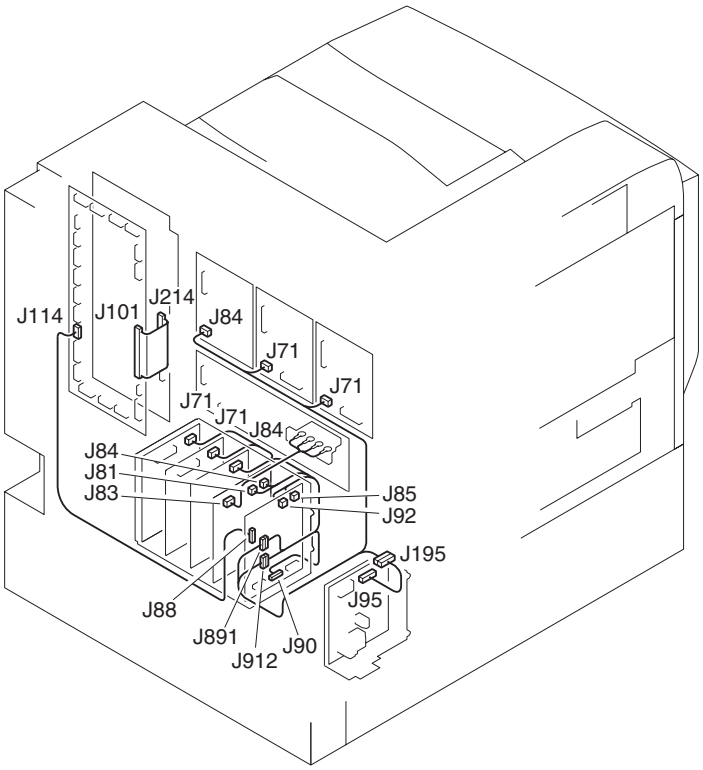
J114
J101
J214
J84
J71
J71
J71
J71
J84
J84
J81
J83
J85
J92
J195
J95
J88
J891
J912
J90

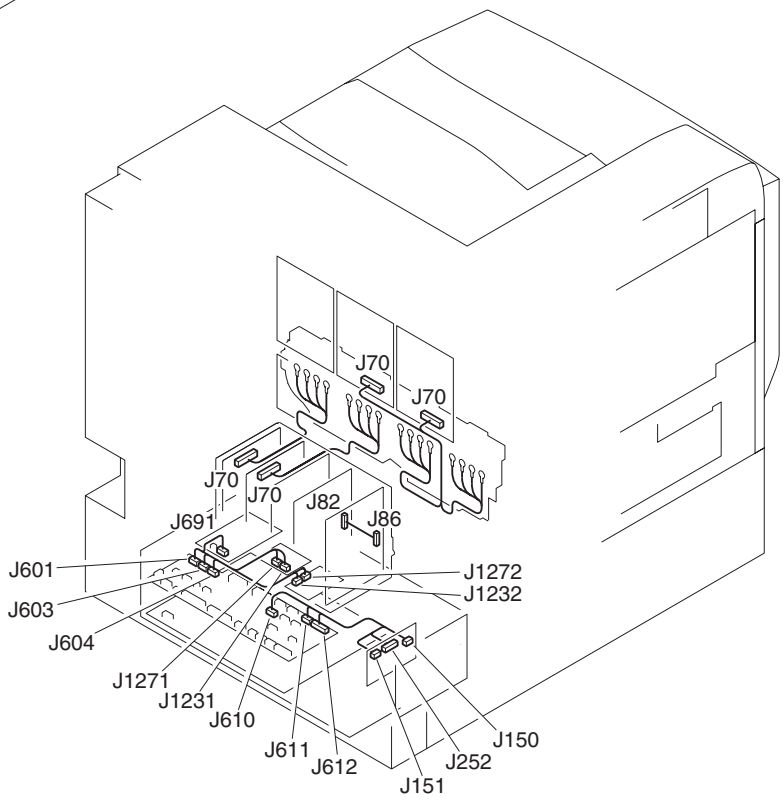
J70
J70
J70
J70
J691
J82
J86
J601
J603
J604
J1272
J1232
J1271
J1231
J610
J611
J612
J150
J252
J151

F-17-19

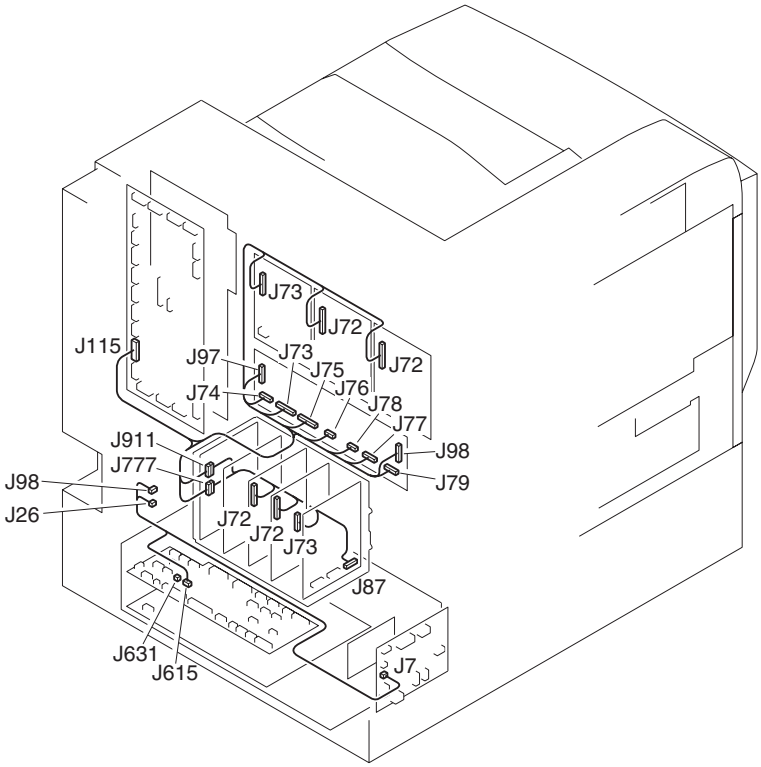

F-17-20

17.1.8.2 List of connector

Dupiex Color Image Reader-G1 / iR C5185N / / iR C5185i PRT /

Reader

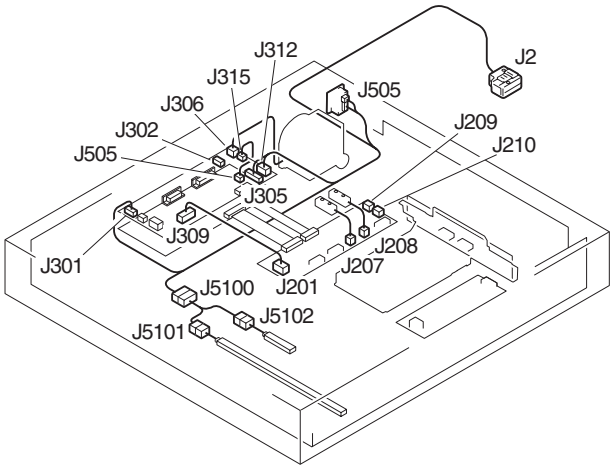

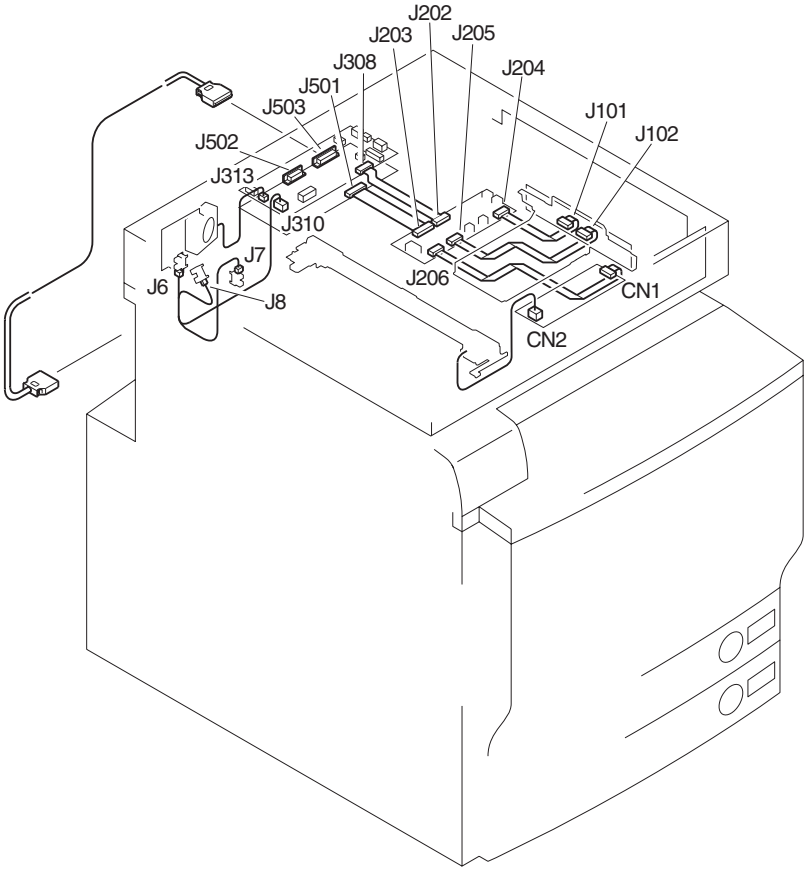

F-17-21

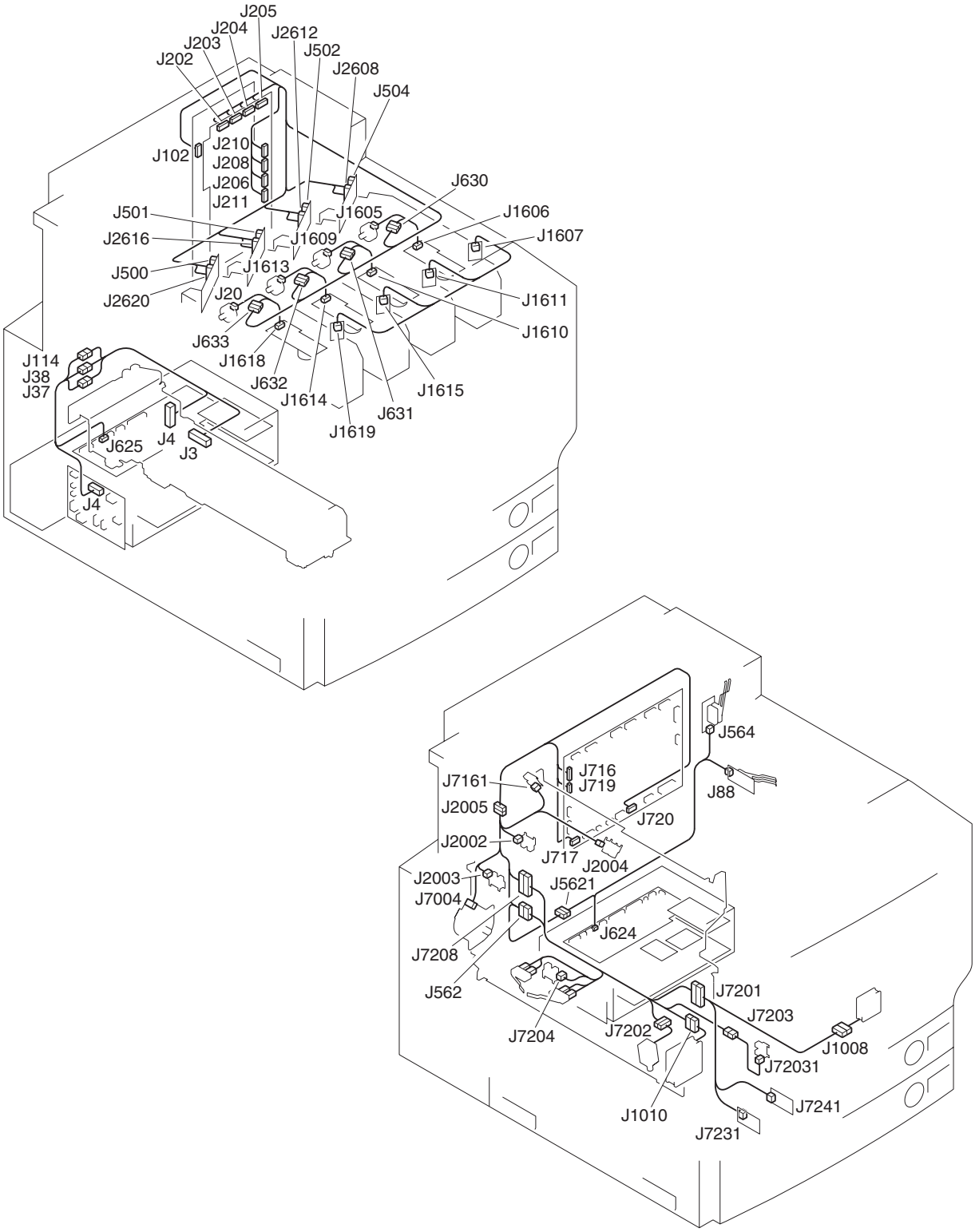
J205
J204
J2612
J203
J502
J202
J2608
J504
J210
J102
J208
J206
J630
J211
J501
J1605
J1606
J2616
J1609
J1607
J500
J1613
J20
J2620
J1611
J633
J1610
J114
J1618
J38
J632
J1615
J37
J1614
J631
J1619
J625
J4
J3
J4
J564
J716
J7161
J719
J88
J2005
J720
J2002
J717
J2004
J2003
J5621
J7004
J624
J7208
J562
J7201
J7203
J7204
J7202
J1008
J72031
J7241
J1010
J7231

F-17-22

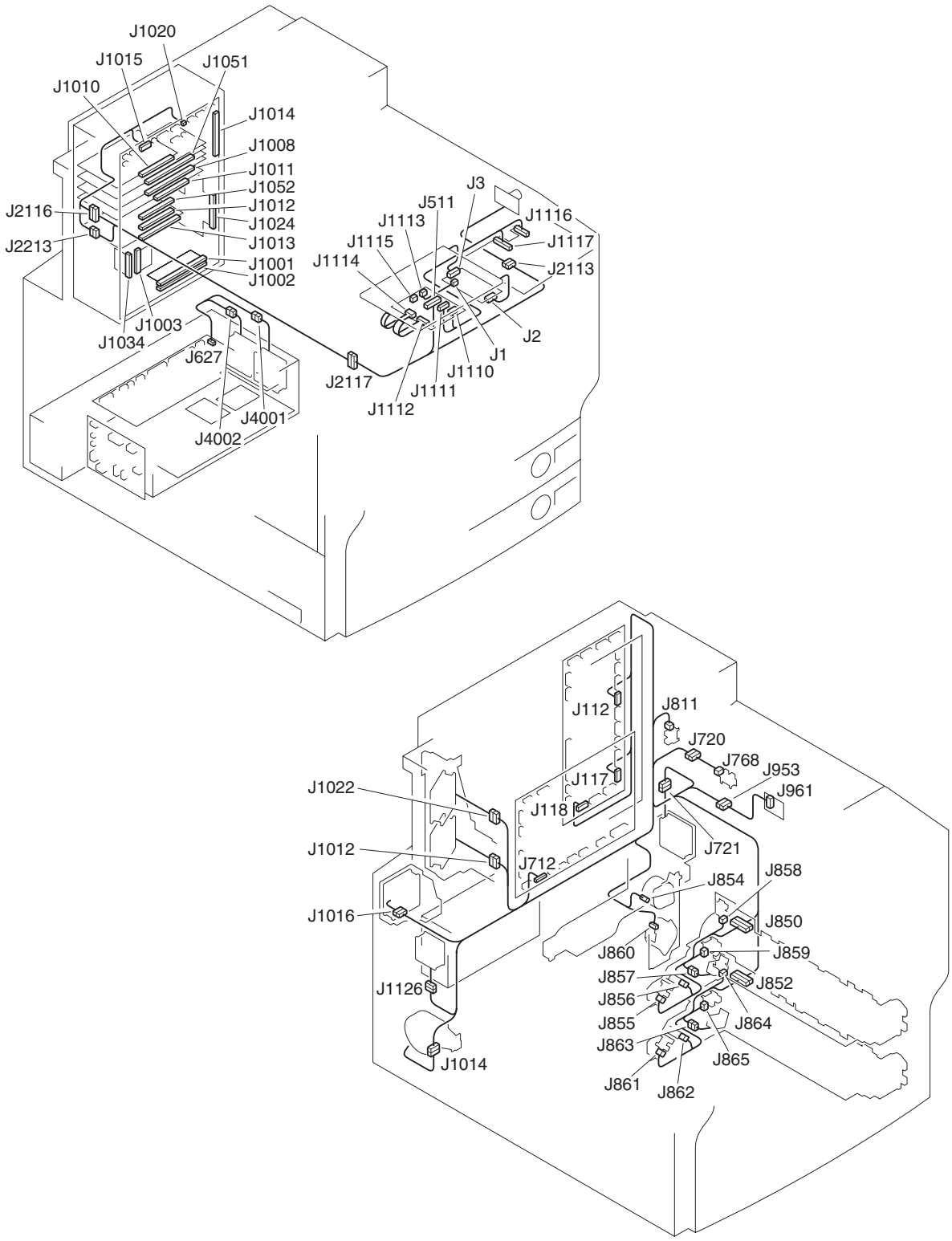
J1020
J1015
J1051
J1010
J1014
J1008
J1011
J1052
J1012
J1024
J1013
J1001
J1002
J2116
J2213
J1003
J1034
J627
J4001
J4002
J3
J511
J1113
J1115
J1114
J1116
J1117
J2113
J2
J1
J1110
J1111
J1112
J2117
J112
J811
J720
J768
J953
J961
J117
J118
J1022
J1012
J1016
J712
J721
J854
J858
J850
J860
J859
J857
J852
J856
J855
J864
J863
J865
J861
J862
J1126
J1014

F-17-23

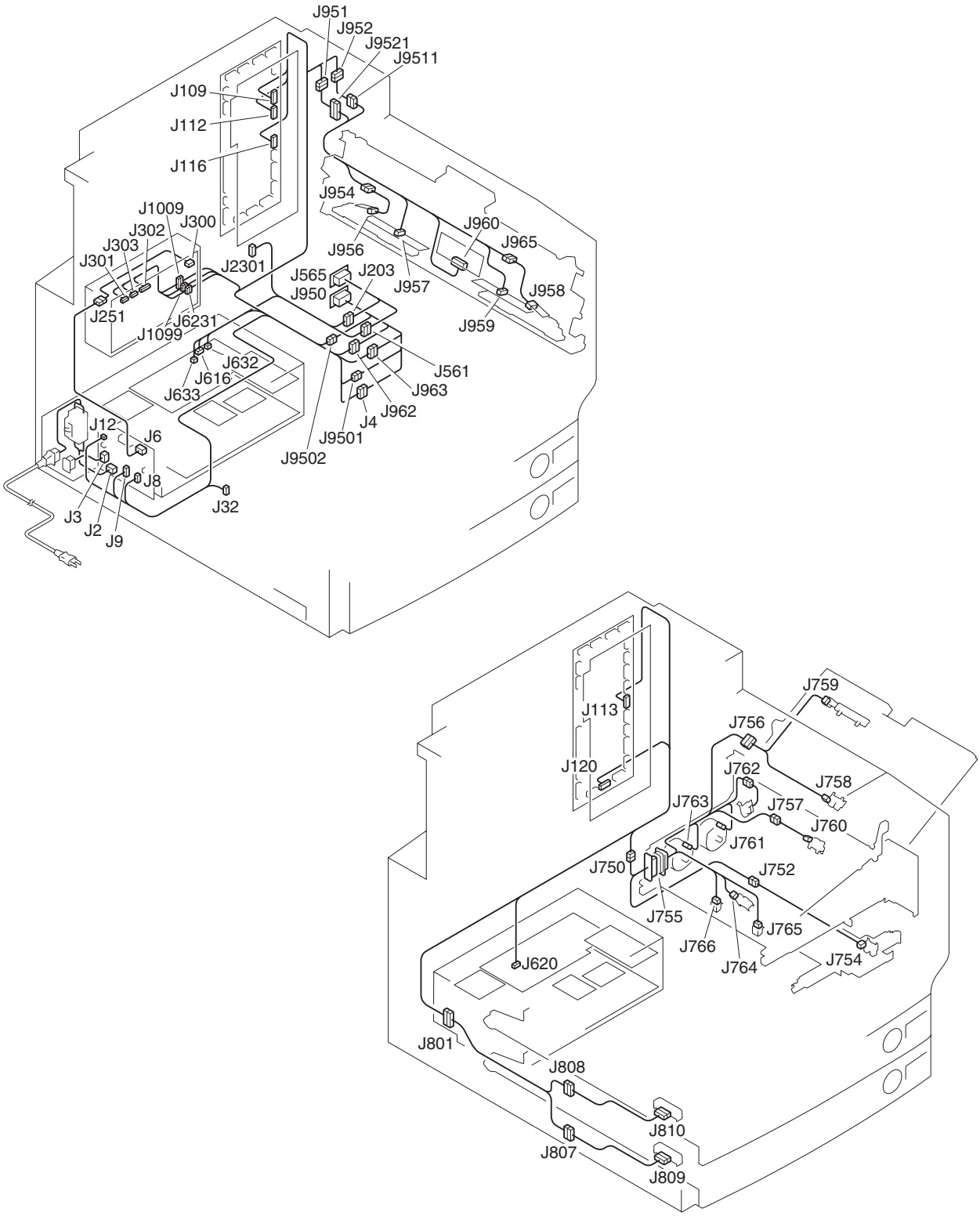
J951
J952
J9521
J9511
J109
J112
J116
J954
J1009
J300
J302
J303
J301
J2301
J960
J965
J956
J565
J203
J950
J957
J958
J251
J6231
J1099
J959
J632
J616
J633
J561
J963
J962
J4
J12
J6
J9501
J9502
J8
J32
J3
J2
J9
J759
J113
J756
J120
J762
J758
J763
J757
J760
J761
J750
J752
J755
J765
J766
J764
J754
J620
J801
J808
J810
J807
J809

F-17-24

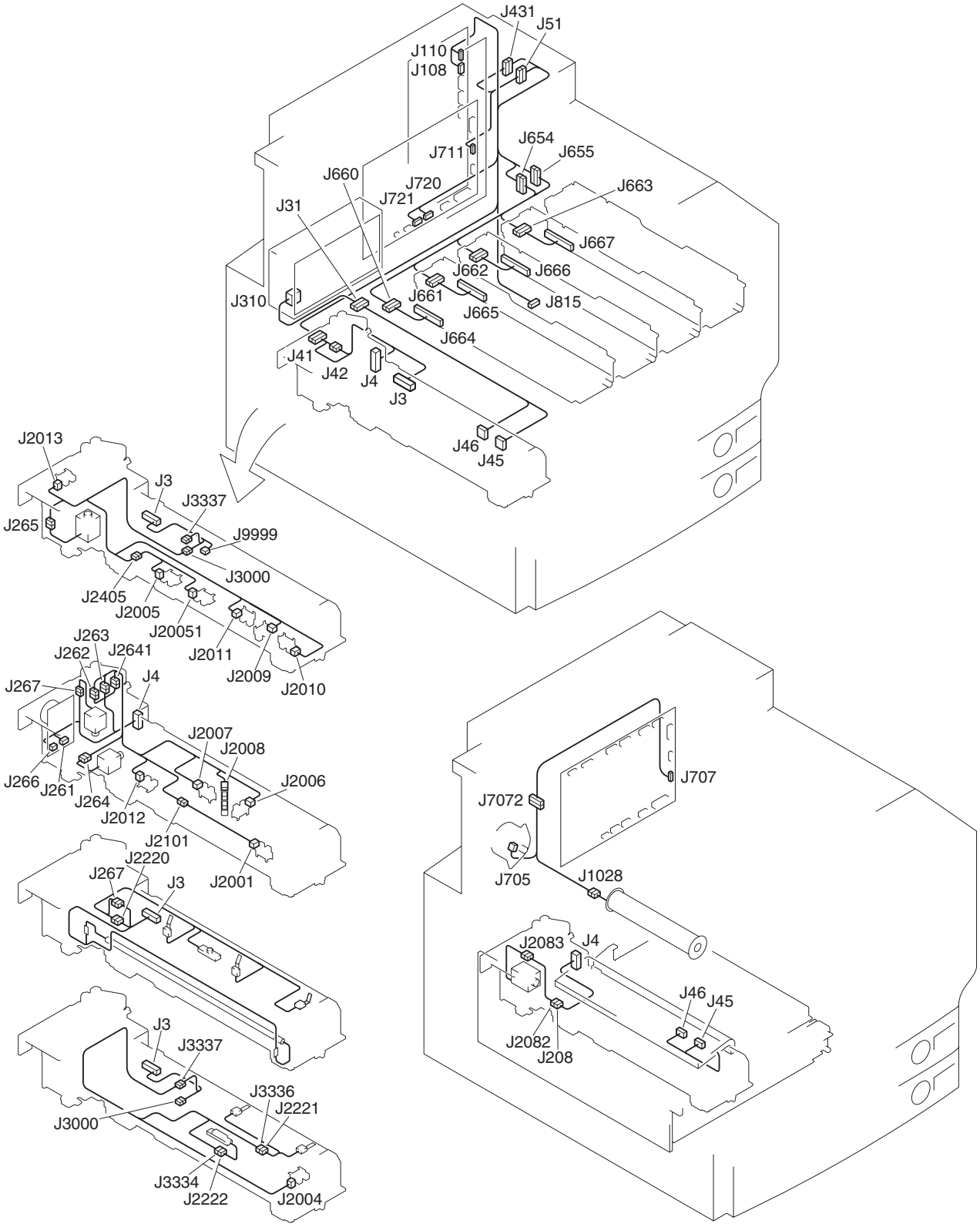
J431
J51
J110
J108
J654
J655
J711
J660
J720
J721
J663
J31
J667
J662
J666
J661
J815
J310
J665
J664
J41
J42
J4
J3
J46
J45
J2013
J3
J3337
J265
J9999
J3000
J2405
J2005
J20051
J263
J262
J2641
J2011
J2009
J2010
J267
J4
J2007
J2008
J266
J261
J264
J2006
J2012
J2101
J2001
J2220
J267
J3
J3
J3337
J3336
J2221
J3000
J3334
J2222
J2004
J707
J7072
J705
J1028
J2083
J4
J46
J45
J2082
J208

F-17-25

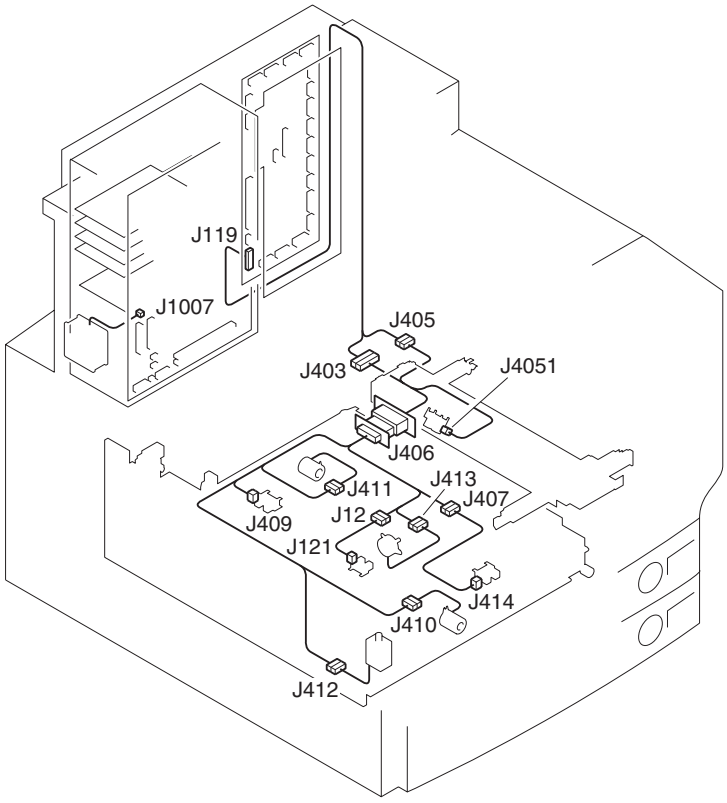
J119
J1007
J405
J403
J4051
J406
J411
J413
J407
J409
J12
J121
J414
J410
J412

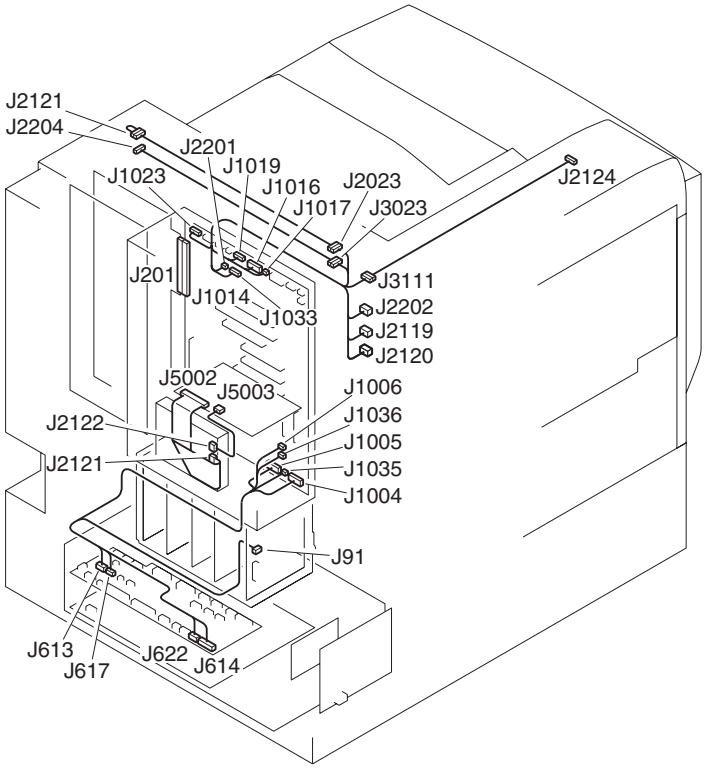
J2121
J2204
J2201
J1019
J1023
J1016
J2023
J2124
J1017
J3023
J201
J3111
J1014
J2202
J1033
J2119
J2120
J5002
J5003
J1006
J1036
J2122
J1005
J2121
J1035
J1004
J91
J613
J622
J614
J617

F-17-26

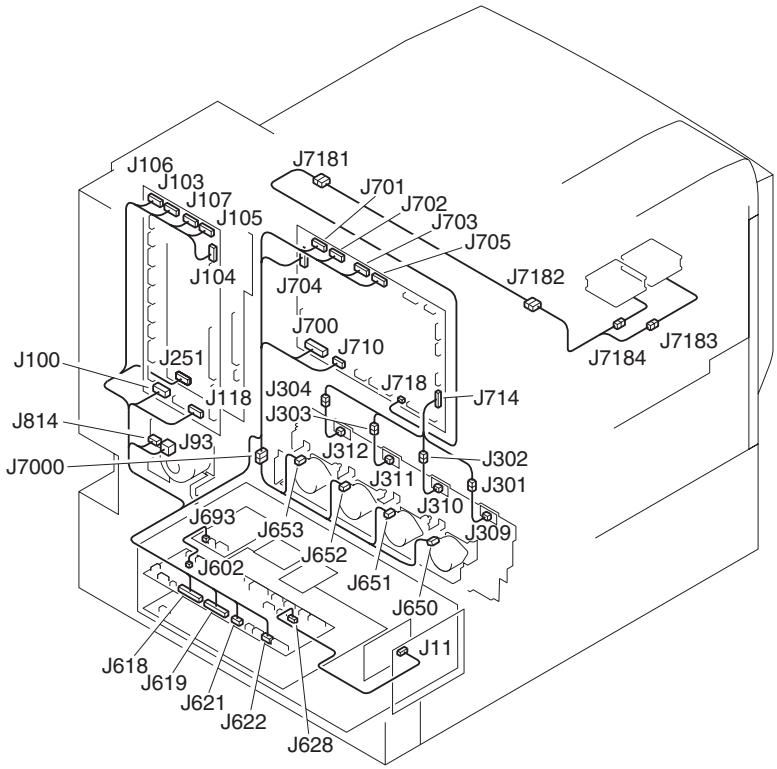
J106
J103
J107
J105
J104
J7181
J701
J702
J703
J705
J704
J7182
J700
J710
J7183
J7184
J100
J251
J118
J718
J714
J304
J303
J814
J93
J7000
J312
J302
J311
J301
J310
J309
J693
J653
J652
J602
J651
J650
J11
J618
J619
J621
J622
J628

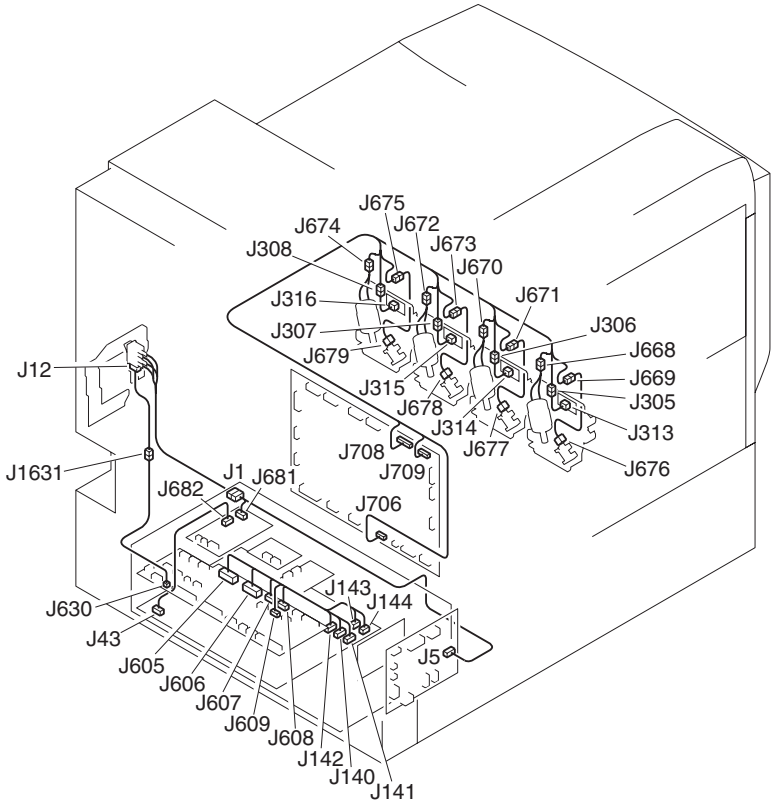
J675
J674
J672
J673
J308
J670
J316
J671
J307
J306
J679
J668
J12
J669
J315
J305
J678
J314
J313
J708
J677
J676
J1631
J1
J681
J709
J682
J706
J143
J144
J630
J43
J5
J605
J606
J607
J609
J608
J142
J140
J141

F-17-27

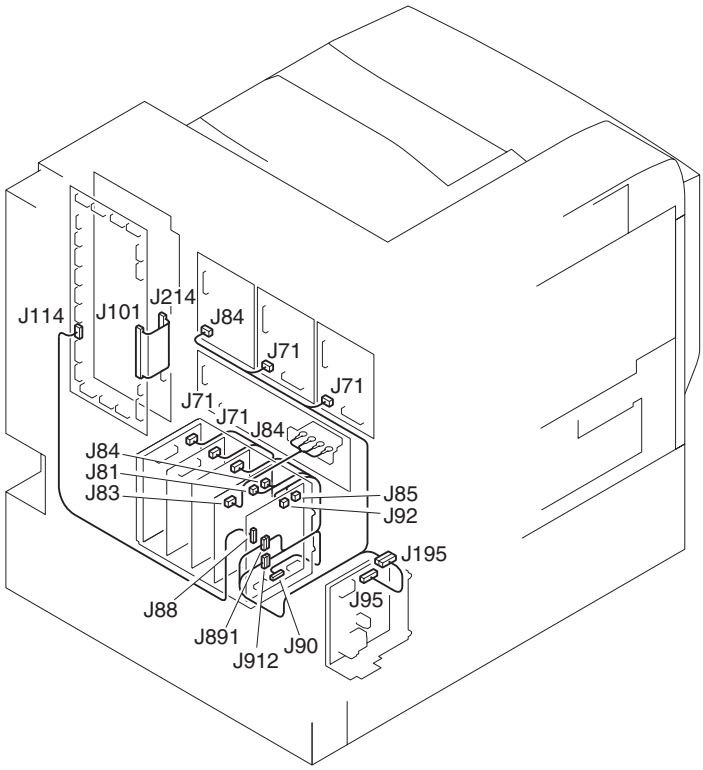
J114
J101
J214
J84
J71
J71
J71
J71
J84
J84
J81
J83
J85
J92
J195
J95
J88
J891
J912
J90

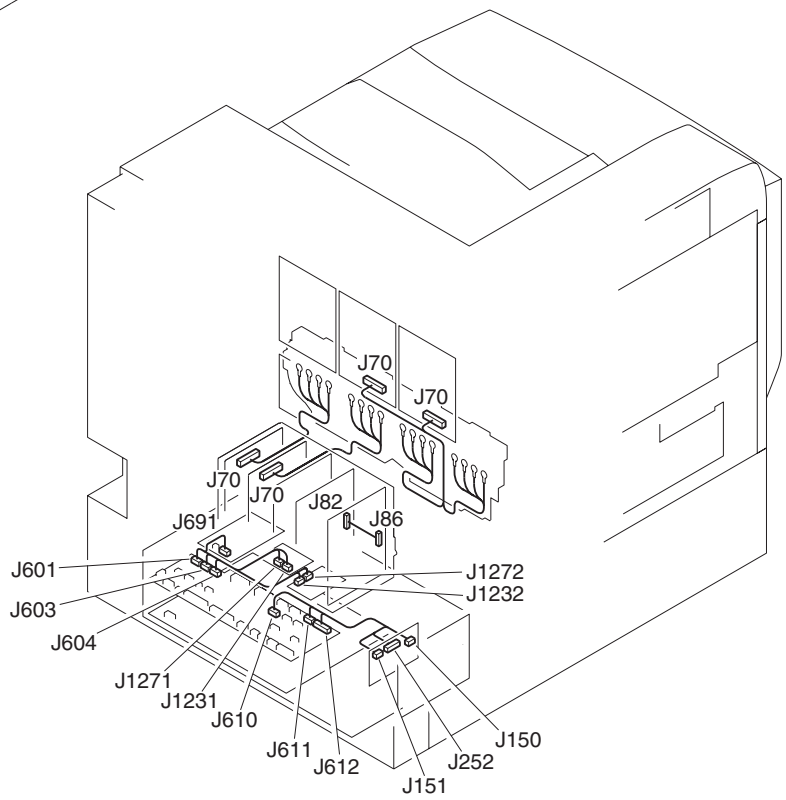
J70
J70
J70
J70
J82
J86
J691
J601
J603
J604
J1272
J1232
J1271
J1231
J610
J611
J612
J150
J252
J151

F-17-28

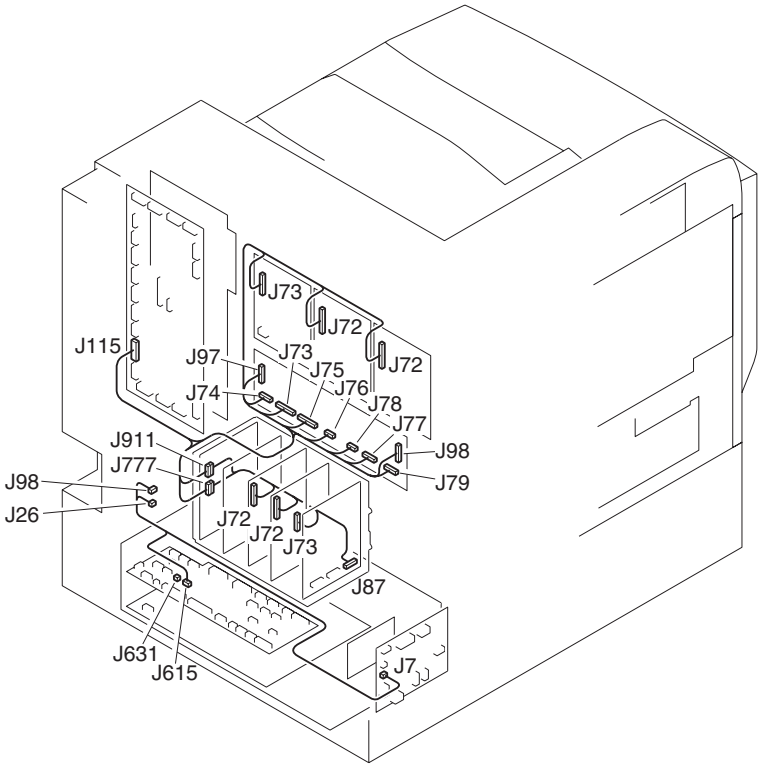
J73
J72
J115
J97
J73
J75
J72
J74
J76
J78
J77
J911
J98
J777
J79
J98
J26
J72
J72
J73
J87
J631
J615
J7

F-17-29

Chapter 18 Self Diagnosis

Contents

18.1 Error Code Details 18-1
18.1.1 Table of error code details 18-1

18.1 Error Code Details

18.1.1 Table of error code details

CLC5151 / / / CLC4040 / / / iR C4580i / / / iR C4080i / / / / Color Image Reader-F1 / Color Image Reader-E1 / Dupiex Color Image Reader-G1 / iR C5185N / / iR C5185i PRT /

*1 Only for Color Image Reader-G1
*2 Contact the person in charge
*3 Only for iR C5185 series
*4 Finisher-W1/W2
*5 Finisher-W2
*6 Finisher-X1
*7 Puncher Unit-AH1/AG1/AJ1/AK1

T-18-1

Displayed code	Detection timing	Remedial action
E000	Insufficient temperature rise of fixing unit when power is turned ON	
0001	When the temperature of the fixing belt main thermistor failed to reach 50 deg C within 120 sec. after the fixing belt temperature regulation has started	Check for broken or disconnected heater wires. Checking Disconnection of the Connector in the Thermistor Wiring. Replace the fixing belt unit. Replace the fixer. Replace the IH power supply PCB and AC driver PCB. Replace the DC controller PCB 2 (MAISY). In the service mode, clear the error by selecting COPIER > FUNCTION > CLEAR > ERR.
0101	When the temperature of the pressure belt main thermistor failed to reach 50 deg C within 120 sec. after the pressure belt temperature regulation has started	Check for broken or disconnected heater wires. Replace the fixing belt unit. Checking Disconnection of the Connector in the Thermistor Wiring. Replace the fixer and AC driver PCB. Replace the DC controller PCB 2 (MAISY). In the service mode, clear the error by selecting COPIER > FUNCTION > CLEAR > ERR.
E001	Abnormally high temperature rise of fixing unit (circuit trouble)	
0001	When the fixing belt main thermistor has detected a high temperature (ASIC detection)	Check the connection of the connector in the thermistor wiring (wire-pinching, disconnection). Replace the fixing unit. Replace the IH unit, halogen heater, fixer and AC driver PCB. Replace the DC controller PCB 2 (MAISY). In the service mode, clear the error by selecting COPIER > FUNCTION > CLEAR > ERR.
0002	When fixing sub-thermistor 1 has detected a high temperature (ASIC detection)	
0003	When fixing sub-thermistor 2 has detected a high temperature (ASIC detection)	
0101	When pressure main thermistor has detected a high temperature (ASIC detection)	
0102	When pressure sub-thermistor 1 has detected a high temperature (ASIC detection)	
0103	When pressure sub-thermistor 2 has detected a high temperature (ASIC detection)	
E002	Insufficient temperature rise of fixing unit	
0002	When the fixing main thermistor fails to reach 80 deg C within the prescribed period of time after reaching 50 deg C during warm-up	Replace the fixing belt unit. Replace the fixer and AC driver PCB. Replace the DC controller PCB 2 (MAISY). In the service mode, clear the error by selecting COPIER > FUNCTION > CLEAR > ERR.
0003	When the fixing main thermistor fails to reach 110 deg C within the prescribed period of time after reaching 80 deg C during warm-up	
0004	When the fixing main thermistor fails to reach 130 deg C within the prescribed period of time after reaching 110 deg C during warm-up	
0005	When the fixing main thermistor fails to reach 150 deg C within the prescribed period of time after reaching 130 deg C during warm-up	
0006	When the fixing main thermistor fails to reach 170 deg C within the prescribed period of time after reaching 150 deg C during warm-up	
0101	When the pressure main thermistor fails to reach 80 deg C within the prescribed period of time after reaching 50 deg C during warm-up	
0102	When the pressure main thermistor fails to reach 100 deg C within the prescribed period of time after reaching 80 deg C during warm-up	
E003	Fixing unit low temperature trouble	
0001	When the fixing main thermistor has detected a temperature below 130 deg C for the prescribed period of time after standby	Checking Disconnection of the Connector in the Thermistor Wiring. Replace the fixing belt unit. Replace the fixer and AC driver PCB. Replace the DC controller PCB 2 (MAISY). In the service mode, clear the error by selecting COPIER > FUNCTION > CLEAR > ERR.
0002	When the pressure main thermistor has detected a temperature below 50 deg C for the prescribed period of time after standby	
E004	Fixing unit protection circuit trouble	
0101	When there is a short-circuit detection error in the halogen heater (ASIC detection)	Check the connection of the J114 jack of the AC driver PCB, and replace the AC driver PCB (triac short). Replace the Pressure heater. Replace the Fixing unit. Replace the DC controller PCB 2 (MAISY).
0201	When the difference in temperature between the front and back of the fixing belt is higher than the rating	Replace the fixing belt unit. Replace the DC controller PCB 2 (MAISY).
0202	When the difference in temperature between the center and front of the fixing belt is higher than the rating	
0203	When the difference in temperature between the center and back of the fixing belt is higher than the rating	
0204	When the difference in temperature between the front and back of the pressure belt is higher than the rating	
0205	Thermistor temperature difference error (combination unknown)	

Displayed code	Detection timing	Remedial action
0301	When an overcurrent has been detected in the IH power supply PCB	Replace the IH power supply PCB. Replace the fixing belt unit.
0401	13 V trouble error	Check the connection of the connectors of the relay PCB, the IH power supply, the fixing thermoswitch, and replace the fixing unit (fixing thermoswitch OFF), the relay PCB, and the IH power PCB (blowout of the FU261). In the service mode, clear the error by selecting COPIER > FUNCTION > CLEAR > ERR.
0501	Fixing main thermistor or fixing sub-thermistor 1 or 2 connection error	Check the connections of the fixing belt unit connectors. Replace the fixing belt unit.
0502	Pressure main thermistor or pressure sub-thermistor 1 or 2 connection error	Check the connections of the pressure belt unit connectors. Replace the pressure belt unit.
0601	IH power supply ID error	Check the connection of the connectors of the IH power supply PCB J1009, the DC controller PCB 2 (MAISY) J109, and the relay PCB connector. In the case of not being locked after turning ON the motor
0701	Relay OFF status error	Replace the relay PCB.
E007	Fixing belt or pressure belt deviation trouble	
0001	Fixing belt deviation trouble (trouble in top belt displacement or in belt deviation sensor)	Replace the fixing unit.
0002	Pressure belt deviation trouble (trouble in bottom belt push-off or in belt deviation sensor)	Replace the fixing unit.
0101	Fixing belt home position detection error	Replace the fixing belt HP sensor. Replace the fixing deviation control motor, DC controller PCB 2 (MAISY) and fixing unit.
0102	Pressure belt home position detection error	Replace the pressure belt HP sensor. Replace the pressure deviation control motor, DC controller PCB 2 (MAISY) and fixing unit.
0201	Error of temporary prevention mode for full displacement of belt (When a belt was displaced to the front side and could not move to the center, the displacement of the belt was not eliminated within one minute in the belt displacement temporary prevention mode.)Error of temporary prevention mode for full displacement of belt (When a belt was displaced to the front side and could not move to the center, the displacement of the belt was not eliminated within one minute in the belt displacement temporary prevention mode.)	Replace the fixing unit.
0211	Error of temporary prevention of full displacement of belt (When a belt was displaced to the rear side and could not move to the center, the displacement of the belt was not eliminated within one minute in the belt displacement temporary prevention mode.)	Replace the fixing unit.
9901	Abnormal displacement of the fixing belt (Full displacement of the upper belt, or abnormal condition of the belt displacement sensor)	Checking and replacing the fixing belt position sensor unit, replacing the fixing unit.
9902	Abnormal displacement of the pressure belt (Full displacement of the lower belt, or abnormal condition of the belt displacement sensor)	Replace the fixing unit.
9991	Top belt deviation control timeout error	Occurs when operation was not performed normally when COPIER > FUNCTION > FIXING > FX-UHP-S was executed.
9992	Bottom belt deviation control timeout error	Occurs when operation was not performed normally when COPIER > FUNCTION > FIXING > FX-LHP-S was executed.
E008	Fixing unit end-of-life detection error	
0001	Fixing unit end-of-life detection error	Occurs when the fixing unit end-of-life is detected or when the belt push-off temporary escape mode was executed but normal operation was not restored.
E009	Pressure belt pressure release error	
0500	Pressure belt unit pressure release HP search error	Replace the fixing pressure release HP sensor. Replace the fixing pressure motor. Replace the DC controller PCB 2 (MAISY).
0501	Pressure belt unit pressure release timeout error	Replace the fixing pressure release HP sensor. Replace the fixing pressure motor. Replace the DC controller PCB 2 (MAISY).
0502	Pressure belt unit pressure timeout error	Replace the fixing pressure release HP sensor. Replace the fixing pressure motor. Replace the DC controller PCB 2 (MAISY).
E012	Drum ITB motor trouble	
0001	Drum ITB motor fails to run.	Replace the drumITB moter. Replace the DC controller PCB 2 (MAISY). Replace the DCDC converterÅi38VÅj.
0002	Drum ITB motor runs but then stops running.	
0003	When the drum ITB motor fails to stop	
E014	Fixing motor error	
0001	Drum Unit / Faulty Connection of the Toner Receptacle	Replace the fixing motor, DC controller PCB 2 (MAISY), and DC/DC PCB (for fixing) 2 (38V).
0002	When the lock was disengaged after the motor was locked	
E020	Drum/developer-related trouble	
	Concerning the first two digits of the details code in xx12 to xxD0 Å@xx=01: Y Å@xx=02: M Å@xx=03: C Å@xx=04: Bk	
xx20	ATR sensor trouble or a broken/disconnected wire. The drum unit is not installed properly or there is trouble in the unit.	Replace the drum unit (check its connections).
xx24	SALT sensor trouble or a broken/disconnected wire. There is trouble in the drum unit.	Replace the SALT sensor (clean it). Check the drum unit connections. Replace the drum unit.
xx25	SALT sensor trouble or a broken/disconnected wire. There is trouble in the drum unit. Deterioration in ITB.	Replace the SALT sensor (clean the sensor window). Replace the drum unit (check its connections). Replace the ITB (clean it).

Displayed code	Detection timing	Remedial action
xx30	ATR sensor trouble or a broken/disconnected wire. Incorrect setting of ATR sensor operation values. The drum unit is not installed properly or there is trouble in the unit.	Replace the drum unit (check its connections).
xx34	Sample images drawn by ATR control are not created. SALT sensor trouble or a broken/disconnected wire. There is trouble in the drum unit. Deterioration in ITB.	Replace the SALT sensor (clean the sensor window). Replace the drum unit (check its connections). Replace the ITB (clean it).
xx35	SALT sensor trouble or a broken/disconnected wire	Replace the SALT sensor (clean it).
xx40	Incorrect setting of ATR sensor operation values. ATR sensor trouble or a broken/disconnected wire. The drum unit is not installed properly (the copier cannot detect the drum unit) or there is trouble in the unit.	Replace the SALT sensor (clean it). Replace the drum unit (check its connections).
xx50	Incorrect developer density operation value which was set when the new drum unit was installed	Replace the drum unit (check its connections).
xx60	Incorrect developer density target value which was set when the new drum unit was installed (value is extremely low)	Replace the drum unit (check its connections).
xx70	Incorrect developer density target value which was set when the new drum unit was installed (value is extremely low)	Replace the drum unit (check its connections).
xx80	Density value is extremely high for the ITB surface reflectivity when the new drum unit was installed. SALT sensor trouble.	Replace the SALT sensor (clean the sensor window). Replace the drum unit (check its connections). Replace the ITB (clean it).
xx81	Density value is extremely low for the ITB surface reflectivity when the new drum unit was installed. SALT sensor trouble. Dirty ITB.	Replace the SALT sensor (clean the sensor window). Replace the drum unit (check its connections). Replace the ITB (clean it).
xx83	Trouble in detected ITB surface reflectivity rate (value is extremely high)	Replace the ITB (clean it).
xxA0	Measured value of the detected developer density is extremely low. Trouble in the ATR sensor. Trouble in the drum unit.	Replace the drum unit (check its connections).
xxB0	T/D ratio has dropped due to the drum unit end-of-life. Broken or disconnected wire in the ATR sensor.	Replace the drum unit (check its connections).
xxB2	T/D ratio is extremely high compared with when the new drum unit was installed.	Replace the drum unit (check its connections).
xxC0	Trouble in the supply of the toner from the toner cartridge to the developer. Too much toner is supplied to the developer. Broken or disconnected wire in the ATR sensor.	Replace the drum unit (check its connections).
xxD0	No toner is supplied from the toner cartridge to the developer. TCRG motor fails to run. An empty cartridge is being used. The toner supply port of the drum unit is damaged. Broken or disconnected wire in the ATR sensor.	Replace the toner cartridge motor. Replace the drum unit (check its connections).
E032	NE controller counter operation failure	
0001	When the counter function of the NE controller does not work	Check the cable connections.
E110	Polygon error 1st line: Always 0 2nd line: Station where the error occurred (1: Y, 2: M, 3: C, 4: K) 3rd line: Main unit status when the error occurred (0: Activating, 1: Correcting the image position, 2: Changing the speed, 3: Operating steadily) 4th line: Polygon control status (0: Suspension, 1: FG rotation, 2: BD control 1, 3: BD control 2, 4: BD control 3, 5: BD control 4, 6: Phase locked)	
05xx	An error simultaneously occurred to all colors. It may be caused by the system higher than the power system.	(1)Check whether the harness is not removed. (2)Replace the power unit. (3)Replace the DC controller PCB 1 (IMG). (4)Replace the harness. (5)Replace the scanner unit.
0xx1	The polygon motor stopped, or polygon does not reach the specified number of rotations.	(1)Check whether the harness is not removed. (2)Replace the scanner unit. (3)Replace the harness. (4)Replace the DC controller PCB 1 (IMG). (5)Replace the power unit.
0xx2	A BD signal has never been detected. (It may be caused by damage to the laser PCB/BD sensor or removal of the harness.)	(1)Check whether the harness is not removed. (2)Replace the scanner unit. (3)Replace the harness. (4)Replace the DC controller PCB 1 (IMG). (5)Replace the power unit.
0xx3	Detection cannot be performed after a BD signal was detected once. (It may be caused by an error in the control system.)	(1)Check whether the harness is not removed. (2)Replace the DC controller PCB 1 (IMG). (3)Replace the scanner unit. (4)Replace the harness. (5)Replace the power unit.
0xx4	Polygonal control is not transferred appropriately.	(1)Check whether the harness is not removed. (2)Replace the DC controller PCB 1 (IMG). (3)Replace the scanner unit. (4)Replace the harness. (5)Replace the power unit.
0xx5	The phase is under control.	(1)Check whether the harness is not removed. (2)Replace the scanner unit. (3)Replace the power unit. (4)Replace the harness. (5)Replace the DC controller PCB 1 (IMG).
0xx6	An error occurred after "motor locked" was detected once.	(1)Check whether the harness is not removed. (2)Replace the scanner unit. (3)Replace the power unit. (4)Replace the harness. (5)Replace the DC controller PCB 1 (IMG).
E193		
0001	Initializing error of the image ASIC on the DC controller PCB 2 (IMG)	Replace the DC controller PCB 2 (IMG).

Displayed code	Detection timing	Remedial action
E194		
9990	An abnormal value is detected during image position correction (color displacement correction).	Replace the DC controller PCB 2 (IMG).
E202	1st mirror stand HP detection trouble	
0001	The 1st mirror stand fails to move tTransparency even when it retracts.	Replace the optical system HP sensor, optical system motor and reader controller PCB.
0002	The 1st mirror stand fails to move from HP even when it advances.	Replace the optical system HP sensor, optical system motor and reader controller PCB.
0101 *1	Backside reading glass (CIS) HP error The HP cannot be detected in the detection (outward) of the HP position of the backside reading glass (CIS).	- Replace the CIS glass shift HP sensor (PI13). - Replace the CIS glass shift motor (M6). - Replace the ADF controller PCB.
0102 *1	Backside reading glass (CIS) HP error The HP cannot be detected in the detection (homeward) of the HP position of the backside reading glass (CIS).	- Replace the CIS glass shift HP sensor (PI13). - Replace the CIS glass shift motor (M6). - Replace the ADF controller PCB.
E225	Exposure lamp lighting trouble	
0001	Light quantity of the exposure lamp has dropped.	Clean the white plate. Replace the exposure lamp.
0101 *1	The light volume of the scanning lamp (backside) has decreased.	- Check the connection of the flat cable between the CIS unit and ADF controller. - Clean the white plate (CIS glass). - Replace the CIS unit. - Replace the ADF controller PCB.
E227	Reader unit power supply error	
0001	When the 24 V port is OFF when the power is turned ON.	Disconnect and re-connect the power connector. Replace the power supply.
0002	When the 24 V port is OFF when a job is started.	
0003	When the 24 V port is OFF when a job is finished.	
0004	When the 24 V port is OFF during load drive.	
0101 *1	The 24V port is turned off at power-on.	- Check the connection of the DDIS cable between the interface PCB and ADF controller PCB. - Replace the interface PCB. - Replace the ADF controller PCB.
0102 *1	The 24V port is turned off at job start.	
0103 *1	The 24V port is turned off at job completion.	
E240	Error in communication between main controller and DC controller	
0000	Serial communication error	Check the connector connections. Check the DC controller PCB (MAISY). Replace the No.1 main controller circuit.
0002	When the response from the DC controller does not arrive within the prescribed period of time during printing	
E246	Error related to counter memory	*2
E247	Error related to counter memory	*2
E248	Defective EEPROM on reader controller PCB	
0000	SRAM PCB check error (at activation)	Check the connection of the SRAM PCB. Replace the SRAM PCB.
0001	Error when the power of the reader controller EEPROM is turned ON	Replace the reader controller PCB.
0002	Error when data is written into the reader controller EEPROM	
0003	Reader controller EEPROM check error or error when data is read after it was written	
0101 *1	Error of the EEPROM of the ADF controller PCB at power-on (24V OFF)	Replace the ADF controller PCB.
0102 *1	Error of the EEPROM of the ADF driver PCB at job start (24V OFF)	
0103 *1	Error of the EEPROM of the ADF driver PCB at job completion (24V OFF)	
E315	Image data trouble	
000e	Damaged data (trouble in memory or HDD) Software decoding error	Replace the image memory (SDRAM) or HDD.
E350	Soft ID board error	*2
E351	Main controller PCB error	
0000	When a communication error has occurred in the main controller PCB at startup	Check the connections between the main controller PCB and main controller PCB (sub). Replace the main controller PCB. Replace the main controller PCB (sub).
E354	Error of the serial PCB	*2
E355	Error of the serial PCB	*2
E400	Feeder communication error	
0001	Checksum error	Check the connections between the ADF controller PCB and main controller PCB (sub). Replace the ADF controller PCB. Replace the main controller PCB (sub).
0002	Reception status error	
0003	Reception interrupt error	
0100 *1	Communication error between the ADF controller PCB and interface PCB	- Check the connection of the DDIS cable between the memory PCB and ADF controller PCB. - Replace the memory PCB. - Replace the ADF controller PCB.
E413	Pressure motor trouble	
0001	Pressure HP sensor OPEN	Replace the pressure motor.
0002	Pressure HP sensor CLOSE	
E423*1	SDRAM error of the interface board	

Displayed code	Detection timing	Remedial action
0001	SDRAM access error	Check the connection of the SDRAM on the memory PCB.
0002	Mismatch error between the SDRAM writing data and reading data	
0003	Lack of SDRAM capacity	- Check the connection of the SDRAM on the memory PCB. - Connect an appropriate SDRAM.
E490	Wrong model error	
0001	When the feeder of another model has been detected	Connect the feeder for this unit.
E500*4	Finisher communication error	
0001	When trouble in the prescribed number of times or in the prescribed period of time has been detected during communication between the copier itself and finisher	Check the connections between the DC controller PCB and finisher controller PCB. Replace the finisher controller PCB. Replace the DC controller PCB.
E503	Saddle communication error	
0002 *5	When communication with the saddle stitcher is interrupted	- Check the connections between the saddle stitcher controller PCB and finisher controller PCB. - Replace the saddle stitcher controller PCB and finisher controller PCB.
0003 *7	In case of losing communication with the puncher	- Check the connection between the puncher controller PCB and the finisher controller PCB. - Replace the puncher controller PCB/finisher controller PCB.
E505	Finisher backup memory error	
0001 *4/6	When the checksum value calculated by the CPU differs from the checksum values of the data held inside the RAM	Replace the finisher controller PCB.
0002 *6/7	When the verify processing is not completed even after 2000 ms have elapsed during data writing	
E514*4	Bundling (forward rotation direction) error	
8001	When the trailing edge fails to leave the trailing edge assist home position even when the trailing edge assist motor has been driven for 3 sec.	Replace the trailing edge assist motor (M109) and trailing edge assist home position sensor (PI109).
8002	When the trailing edge fails to return to the trailing edge assist home position even when the trailing edge assist motor has been driven for 3 sec.	
E519*4	Error in gear change	
8001	In case that the gear does not move out from the gear change HP even driving the gear change motor with 387-pulse.	Replace the gear change motor (M110) and the gear change HP sensor (PI117).
8002	In case that the gear does not return to the gear change HP even driving the gear change motor with 387-pulse.	
E520*6	Offset error	
8001	When the offset HP sensor fails to turn ON even though the offset motor was driven for 1000 ms toward the HP sensor approach side while the motor was running	- Check the offset HP sensor connectors. - Check the offset motor connectors. - Replace the offset HP sensor. - Replace the offset motor. - Replace the finisher controller PCB.
8002	When the offset HP sensor fails to turn OFF even though the offset motor was driven for 1000 ms toward the HP sensor escape side while the motor was running	
E530*4	Alignment error	
8001	When the alignment plate fails to leave the alignment plate front home position sensor position even when the alignment plate front motor was driven for 4 sec.	Replace the alignment plate front motor (M103) and alignment plate front home position sensor (PI106).
8002	When the alignment plate fails to return to the alignment plate front home position sensor position even when the alignment plate front motor was driven for 4 sec.	
E531*4/6	Stapler error	
8001	When the stapler unit failed to leave the stapler home position even though 400 ms elapsed since the stapler operation started	- Check the stapler unit connectors. - Replace the stapler unit. - Replace the finisher controller PCB.
8002	When the stapler unit left the stapler home position but then failed to reach the stapler home position even though 400 ms elapsed since the stapler operation started. When the unit failed to reach the stapler home position within 400 ms even after operation in the reverse direction.	
E532*4	Stapler movement error	
8001	When the stapler fails to leave the stapler movement home position even though the stapler movement motor was driven for 5 sec.	Replace the stapler movement motor (M105) and stapler movement home position sensor (PI110).
8002	- When the stapler fails to return to the stapler movement home position even though the stapler movement motor was driven for 20 sec. - When the stapler was not at the home position and the stapler alignment interference sensor was actuated	
E535*4	Oscillation error	
8001	When the stapler fails to leave the oscillation home position even though the oscillator motor was driven for 3 sec.	Replace the oscillator motor (M106) and oscillation home position sensor (PI105).
8002	Occurs when the oscillation guide close switch fails to be set to ON even when the oscillator motor is run in the reverse direction for 1 sec.	
E537*4	Front alignment error	
8001	When the alignment plate fails to leave the alignment plate back home position sensor position even though the alignment plate back motor was driven for 4 sec.	Replace the alignment plate back motor (M104) and alignment plate back home position sensor (PI107).
8002	When the alignment plate fails to return to the alignment plate back home position sensor position even though the alignment plate back motor was driven for 4 sec.	
E540	Tray up/down error	

Displayed code	Detection timing	Remedial action
8001 *6	When the sheet level could not be detected even though the standard tray was operated	- Check the standard tray HP sensor connectors. - Check the standard tray clock sensor connectors. - Check the standard tray shift motor connectors. - Replace the standard tray HP sensor. - Replace the standard tray clock sensor. - Replace the standard tray shift motor. - Replace the finisher controller PCB.
8003 *6	When the sensor is not reached even after 3000 ms when the standard tray was operated	- Check the standard tray HP sensor connectors. - Check the standard tray clock sensor connectors. - Check the standard tray shift motor connectors. - Replace the standard tray HP sensor. - Replace the standard tray clock sensor. - Replace the standard tray shift motor. - Replace the finisher controller PCB.
8005 *6	When the encoder clock signal of the standard tray is not detected for 2 or more times even after 300 ms when the standard tray was operated	
8001 *4	- When the tray fails to return to the home position even when the 1st tray shift motor has been driven for 20 sec. - When the tray fails to move to another area even when the 1st tray shift motor has been driven for 4 sec.	- Check the 1st tray shift area sensor connectors. - Replace the 1st tray shift area sensor. - Replace the 1st tray shift motor (M107).
8002 *4	When a danger area is reached before the sheet level is detected by the 1st tray sheet level detection sensor during the sheet level detection operation - When a discontinuous area was detected during the tray operation	
8003 *4	When the input of the clock signal could not be detected within 0.2 sec. during the operation of the 1st tray shift motor	
8004 *4	When the input of the clock signal could not be detected within 0.2 sec. during the operation of the 1st tray shift motor	
8005 *4	When the lock detection signal was set to OFF 150 ms after the lock detection signal was set to ON	
8006 *4	When the lock detection signal could not be set to ON within 1 sec. after the start of the 1st tray shift motor drive	
8007 *4	When the lock detection signal fails to go OFF when the 1st tray shift motor is stopped	
E542*4	Tray shift error	
8001	- When the tray fails to return to the home position even when the 2nd tray shift motor has been driven for 20 sec. - When the tray fails to move to another area even when the 2nd tray shift motor has been driven for 4 sec.	- Check the 2nd tray shift area sensor board connectors. - Replace the 2nd tray shift area sensor board. - Replace the 2nd tray shift motor (M108).
8002	- When the upper limit area is reached before the sheet level is detected by the 2nd tray sheet level detection sensor 1 during a sheet level detection operation - When a discontinuous area was detected during the tray operation - When the fact that the area ahead of the 2nd tray sheet level detection sensor 2 has been reached is detected before the sheet level is detected by the 2nd tray sheet level detection sensor 2 during an escape operation	
8004	When the input of the clock signal could not be detected within 0.2 sec. while the 2nd tray shift motor was running	
8005	When the lock detection signal was set to OFF 150 ms after the lock detection signal was set to ON	
8006	When the lock detection signal could not be set to ON within 1 sec. after the 2nd tray shift motor started driving	
8007	When the lock detection signal fails to go OFF when the 2nd tray shift motor is stopped	
E575*6		
8001	When the binding motor was driven for 2000 ms in the binding direction (HP sensor approach direction) during a binding motor operation but the binding HP sensor failed to turn ON	- Check the binding HP sensor connectors. - Check the binding motor connectors. - Check the binding HP sensor connectors. - Replace the binding motor. - Replace the finisher controller PCB.
8002	When the binding motor was driven for 2000 ms in the HP sensor escape direction during a binding motor operation but the binding HP sensor failed to turn OFF	
E584*4	Error in shutter HP	
8001	It does not get out from the shutter HP when the stack edging motor is activated for 3 sec.	-Check the connector of the shutter HP sensor -Check the connector of the shutter open/closed clutch -Check the connector of the stack edging lower roller clutch -Check the connector of the stack edging motor -Replace the shutter HP sensor -Replace the shutter open/closed clutch -Replace the stack edging lower roller clutch -Replace the stack edging motor -Replace the finisher controller PCB
8002	It does not return from the shutter HP when the stack edging motor is activated for 3 sec.	
E586*6	Tray unit trouble	
0001	- When the tray safety switch is actuated during a tray operation (up or down) - When the tray was operated with the finger pinching prevention switch actuated	- Check the tray shift motor connectors. - Check the tray safety switch connectors. - Replace the tray shift motor. - Replace the finisher controller PCB.
E590*7		
8001	When the puncher cannot detect the punch home position sensor even when the punch motor is driven for 200 ms	- Check the punch home position sensor (P163) and punch motor clock sensor (P162) connectors. - Replace the punch home position sensor (P163) and punch motor clock sensor (P162) connectors. - Replace the punch motor (M61).
8002	When the puncher cannot detect the punch home position sensor after motor drive has stopped during the initial operation of the punch motor	

Displayed code	Detection timing	Remedial action
E591*7		
8001	When the light sensing voltage is less than 3.0 V even though the light-emitting duty ratio of the waste full detection sensor has been set to more than 66%	- Check the waste full detection sensor (LED6, PTR6) connectors. - Replace the waste full detection sensors (LED6, PTR6).
8002	When the light sensing voltage is more than 2.0 V even though the light-emitting duty ratio of the waste full detection sensor has been set to 0%	
E592*7	Sheet trailing edge, side registration sensor error	
8001	When the light sensing voltage is less than 2.5 V even though the light-emitting duty ratio of the sheet trailing edge sensor has been set to more than 66%	- Check the sheet trailing edge sensor (LED5, PTR5) and side registration sensor (LED1-4, PTR1-4) connectors. - Replace the sheet trailing edge sensor (LED5, PTR5) and side registration sensors (LED1-4, PTR1-4).
8002	When the light sensing voltage is more than 2.0 V even though the light-emitting duty ratio of the sheet trailing edge sensor has been set to 0%	
8003	When the light sensing voltage is less than 2.5 V even though the light-emitting duty ratio of side registration sensor 1 (LED1, PTR1) has been set to more than 66%	
8004	When the light sensing voltage is more than 2.0 V even though the light-emitting duty ratio of side registration sensor 1 (LED1, PTR1) has been set to 0%	
8005	When the light sensing voltage is less than 2.5 V even though the light-emitting duty ratio of side registration sensor 2 (LED2, PTR2) has been set to more than 66%	
8006	When the light sensing voltage is more than 2.0 V even though the light-emitting duty ratio of side registration sensor 2 (LED2, PTR2) has been set to 0%	
8007	When the light sensing voltage is less than 2.5 V even though the light-emitting duty ratio of side registration sensor 3 (LED3, PTR3) has been set to more than 66%	
8008	When the light sensing voltage is more than 2.0 V even though the light-emitting duty ratio of side registration sensor 3 (LED3, PTR3) has been set to 0%	
8009	When the light sensing voltage is less than 2.5 V even though the light-emitting duty ratio of side registration sensor 4 (LED4, PTR4) has been set to more than 66%	
800A	When the light sensing voltage is more than 2.0 V even though the light-emitting duty ratio of side registration sensor 4 (LED4, PTR4) has been set to 0%	
E593*7	Side registration initializing error	
8001	When the side registration fails to leave the side registration home position sensor position even when the punch slide unit is moved 9 mm during the initial operation of the side registration motor	- Check the side registration home position sensor (P161) connectors. - Replace the side registration home position sensor (P161). - Replace the side registration motor (M62).
8002	When the side registration fails to return to the side registration home position sensor position even when the punch slide unit is moved 37 mm during the initial operation of the side registration motor	
E5F0*5	Saddle sheet positioning error	
8001	When the sheet positioning plate home position sensor fails to turn ON even when the sheet positioning plate motor is driven by 1500 pulses	- Check the sheet positioning plate home position sensor (P17) connectors. - Replace the sheet positioning plate home position sensor (P17). - Replace the sheet positioning plate motor (M4).
8002	When the sheet positioning plate home position sensor fails to turn OFF even when the sheet positioning plate motor is driven by 300 pulses	
E5F1*5	Saddle sheet creasing error	
8001	When the number of detection pulses of the sheet creasing motor clock sensor has dropped below the prescribed number	- Check the sheet creasing motor clock sensor (P14) and sheet creasing home position sensor (P121) connectors. - Replace the sheet creasing motor clock sensor (P14) and sheet creasing home position sensor (P121). - Replace the sheet creasing motor (M2).
8002	When the sheet creasing home position sensor status fails to change even when the sheet creasing motor is driven for 3 sec.	When the sheet creasing home position sensor status fails to change even when the sheet creasing motor is driven for 3 sec.
E5F2*5	Saddle guide error	
8001	When the guide home position sensor fails to turn ON even when the guide motor is driven by 700 pulses	- Check the guide home position sensor (P113) connectors. - Replace the guide home position sensor (P113). - Replace the guide motor (M3).
8002	When the guide home position sensor fails to turn OFF even when the guide motor is driven by 1 sec.	
E5F3*5	Saddle alignment error	
8001	When the alignment plate home position sensor fails to turn ON even when the alignment motor is driven for 0.5 sec. (or driven for 1.67 sec. during the initial operation)	- Check the alignment plate home position sensor (P15S) connectors. - Replace the alignment plate home position sensor (P15S). - Replace the alignment motor (M5S).
8002	When the alignment plate home position sensor fails to turn OFF even when the alignment motor is driven for 1 sec.	
E5F4*5	Saddle rear stapler error	
8001	When the stitch operation home position sensor fails to turn OFF even when the stitch motor (rear) has been run in the forward direction for at least 0.5 sec.	- Check the stitch operation home position sensor (rear, MS5S) connectors. - Replace the stitch operation home position sensor (rear, MS5S). - Replace the stitch motor (rear, M6S).
8002	When the stitch operation home position sensor fails to turn ON even when the stitch motor (rear) has been run in the reverse direction for at least 0.5 sec.	
E5F5*5	Saddle front stapler error	

Displayed code	Detection timing	Remedial action
8001	When the stitch operation home position sensor fails to turn OFF even when the stitch motor (front) has been run in the forward direction for at least 0.5 sec.	- Check the stitch operation home position sensor (front, MS7S) connectors. - Replace the stitch operation home position sensor (front, MS7S). - Replace the stitch motor (front, M7S).
8002	When the stitch operation home position sensor fails to turn ON even when the stitch motor (front) has been run in the reverse direction for at least 0.5 sec.	
E5F6*5	Saddle sheet push plate stapler error	
8001	When the sheet push plate home position sensor fails to turn ON even when the sheet push plate motor has been run for at least 0.3 sec.	- Check the sheet push plate home position sensor (P114S) connectors. - Replace the sheet push plate home position sensor (P114S). - Replace the sheet push plate motor (M8S).
8002	When the sheet push plate home position sensor fails to turn OFF even when the sheet push plate motor has been run for at least 80 ms	
8003	When the sheet push plate edge position sensor fails to turn OFF even when the sheet push plate motor has been run for at least 80 ms	
8004	When the number of pulses detected by the sheet push plate motor clock sensor has dropped below the prescribed number	
8005	When the sheet push plate edge position sensor fails to turn ON even when the sheet push plate motor has been run for at least 0.3 sec.	
E5F9*5	Saddle switch error	
8001	When the entrance door switch is in the open status even when all the covers are closed	- Check the entrance door switch (MSW1),front cover close detection switch (MSW101). - Replace the entrance door switch (MSW1), front cover close detection switch (MSW101).
8003	When the front cover close detection door switch is in the open status even when all the covers are closed	
E602	Hard disk trouble	Refer to "E602 details."
E604	Defective or insufficient image memory (SDRAM)	
0000	When the amount of memory required for the model has not been recognized	Increase the amount of the SDRAM memory.
0001	When the memory for the MEAP applications is insufficient	
0002	Memory greater than 1.5GB is installed as image memory (at activation).	Decrease memory to 1.5GB or less.
0512	When the memory is defective or insufficient (512 MB required)	Increase the amount of the SDRAM memory.
0758	When the memory is defective or insufficient (768 MB required)	
1024	When the memory is defective or insufficient (1024 MB required)	
1536	When the memory is defective or insufficient (1536 MB is required)	
E609	Hard disk trouble	
0008	When the HDD fails to reach the prescribed temperature within the prescribed period of time when it is started up	Replace with an HDD which is guaranteed to operate at low temperatures.
0009	When the HDD fails to reach the prescribed temperature when its operation is restored from the sleep mode	Replace with an HDD which is guaranteed to operate at low temperatures.
E610	Hard disk encryption key failure	
0001	When there is no encryption board	Install the encryption board.
0002	Defective or insufficient memory	Increase the amount of memory.
0101	When the initialization of the area of the memory where the key is stored has failed	Turn the main power supply OFF and back ON. Replace the main controller PCB.
0102	When initialization of the encoding area has failed	Turn the main power supply OFF and back ON. Replace the encryption board.
0201	Error in encoding area	
0202	Error in encoding area	
0301	When the preparation of the encryption key has failed	
0302	When an encryption key failure has been detected	Turn the main power supply OFF and back ON. Replace the main controller PCB.
0303	When an encryption key failure has been detected	The HDD is initialized by this error.
0401	When an error has been detected in the coding	Turn the main power supply OFF and back ON. Replace the encryption board.
0402	When an error has been detected in the decoding	
E611	Rebooting repeat error due to SRAM failure, etc.	
0000	Rebooting error when the SRAM data has been destroyed, the job information saved in the SRAM can no longer be read or when rebooting is otherwise repeated when the power is shut off and restored	- Clear the SRAM. - Clear the power shutdown guaranteed jobs.
E674	FAX board communication trouble	
0001	When an error in communication between the FAX board and main controller PCB has been detected for the prescribed number of times	Check the FAX board and main controller PCB connections. Replace the FAX board. Replace the main controller PCB.
0002	When an error in communication between the FAX board and main controller PCB has been detected for the prescribed number of times	
0004	When trouble was detected while the modem IC was being accessed	
0008	When trouble was detected while the port IC was being accessed	
000C	When trouble was detected while the modem IC and port IC were being accessed	
0010	When trouble has been detected when the timer device was opened	Replace the main controller PCB.
0011	When trouble has been detected when the timer device was started up	
E677	External controller trouble	
0003	External controller trouble	Check the cable connections. Re-install the external controller system.
	When trouble was detected during the configuration check conducted when the external controller was started up	
0010	When the controller of another model has been connected	Connect to the controller which supports this unit. Re-install the external controller system.

Displayed code	Detection timing	Remedial action
0080	When trouble has occurred in communication with the printer after the external controller started up normally	Check the cable connections. Re-install the external controller system.
E710	IPC initializing error	
0001	When the ready status fails to be established within 3 sec. after the IPC chip started up	Check the cable connections.
E711	IPC communication error	
0001	When error occurrence was set 4 or more times in the error register of the IPC chip within 1.5 sec.	Check the cable connections. Replace the ADF controller PCB. Replace the reader controller PCB.
E712	ADF/reader communication error	
0000	When communication between the reader and ADF was interrupted and 5 or more sec. have elapsed without communication having been restored	Check the connector connections between the reader and ADF.
E713	Finisher/printer communication error	
0004	When communication between the finisher and copier was interrupted	Check the cable connections. Replace the finisher controller PCB. Replace the DC controller PCB.
E716	Cassette pedestal/printer communication error	
0000	A data communication error occurred. An error occurred in the DC controller/cassette pedestal controller PCB. (There is no meaning in the detailed error code.)	Check the cable connections. Replace the pedestal PCB. Replace the DC controller PCB.
E717	Error in communication with NE controller	
0001	When the NE controller which was connected before the power was turned OFF could not be recognized when the power was turned back ON	Check the cable connections.
0002	When the IPC has a broken or disconnected wire or when an error has occurred where IPC communication cannot be recovered	In the service mode, clear the error by selecting COPIER > FUNCTION > CLEAR > ERR.
E719	Error in communication with coin vendor/card reader	
0001	When the coin vendor which was connected before the power was turned OFF could not be recognized when the power was turned back ON	Check the cable connections.
0002	- When a wire in the IPC cable connected with the coin vendor is broken or disconnected or when an error has occurred where IPC communication cannot be recovered - When a broken or disconnected wire in the sheet feed/delivery signal line was detected - When an illegal connection has been detected (when Tx and Rx of IPC have been short-circuited)	In the service mode, clear the error by selecting COPIER > FUNCTION > CLEAR > ERR.
0003	An error occurred in communication with the coin vendor while obtaining unit cost at activation.	
0011	When the card reader which was connected before the power was turned OFF could not be recognized when the power was turned back ON	
0012	When a wire in the IPC cable connected with the card reader is broken or disconnected or when an error has occurred where IPC communication cannot be recovered	
E730	PDL error	
1001	PDL software trouble	Reset the PDL. Turn the main power OFF and back ON.
	Initializing error at job startup	
100A	PDL software trouble	
	When an initializing failure or other system error has occurred while a job was being processed	
9004	OPEN interface communication error	Turn the main power OFF and back ON. Check the OPEN interface board and cable connections. Replace the external controller. Replace the OPEN interface board. Replace the main controller PCB.
	Trouble in PAI communication with external controller	
9005	When trouble in the connection of the video cable with the external controller has been detected	
A006	PDL communication error	Reset the PDL. Turn the main power OFF and back ON. Check the UFR board connections. Re-install the system. Replace the main controller PCB. Format the whole system, and re-install.
	When the PDL does not respond	
A007	Mismatch of PDL version	Reset the PDL. Turn the main power OFF and back ON. Format the whole system, and re-install.
	When the version of the main unit's control software unit and version of the PDL control software unit do not match during startup	
B013	Trouble in PDL built-in font	Turn the main power OFF and back ON. Re-install the system. Format the whole system, and re-install.
	When the font data is damaged at startup	
C000	Initializing error	Format the whole system, and re-install. Replace the main controller PCB.
C001	HDD access error	Format the whole system, and re-install. Replace the HDD. Replace the main controller PCB.
E731	UFR PCB error	
3000	When the UFR PCB cannot be recognized at startup	Check the UFR PCB connections*. Replace the UFR PCB*. Replace the main controller PCB.
3001	When the UFR PCB cannot be initialized at startup	
3002	When the Rambus cannot be initialized	
3015	When the image data do not reach the chip on the main controller PCB (main)	Turn the main power OFF and back ON. Replace the UFR PCB*. Replace the main controller PCB.
E732	Reader communication error	
0001	DDI-S communication error	Check the connections between the reader controller PCB and main controller PCB. Check the power supply of the reader.

Displayed code	Detection timing	Remedial action
8888*2	The scanner model is different.	Check the scanner model and "COPIER>OPTION>BODY>SCANTYPE". 0 should be set for Image Reader E1/F1. 1 should be set for Image Reader G1.
9999	When scanner is detected for the first time from printer model (Not displayed in user screen. Displayed only in Service Mode > DISPLAY > ERR)	Turn the main power OFF and back ON.
E733	Printer communication error	
0000	When the printer cannot be detected at startup	Check the connections between the DC controller PCB and main controller PCB. Check the power supply of the printer.
0001	DDI-P communication error	
E740	Ethernet board trouble	
0002	When an illegal MAC address was detected at startup	Replace the Ethernet board*. Replace the main controller PCB (sub: LAN-bar)**.
0003	When an illegal network ID was detected at startup	
E743*1	DDI communication error	
0000	A communication error between the main controller PCB and reader controller PCB was detected by the reader controller PCB.	- Check the connection of the DDIS cable. - Replace the reader controller PCB. - Replace the main controller PCB.
E744	Language file/BootROM error	
0001	When the language version on the HDD and the bootable version do not match	Upgrade the language file version.
0002	When the size of the language on the HDD is too large	
0003	When the language which is described in Config.txt on the HDD and which is to be selected cannot be found	
	When it is not possible to switch to the language on the HDD	
0004	When it is not possible to switch to the language on the HDD	
1000	When the BootROM of a different model has been connected	Replace the BootROM.
1001	When the system and BootROM versions do not match	Replace the BootROM. Upgrade the system version.
2000	When an illegal engine ID has been detected	Re-install the system.
4000	When an illegal DC controller PCB has been detected	Upgrade the DC controller PCB version.
E746	An error occurred in the connection to the main controller PCB (main).	
0011*1	The voice board and voice recognition board recognized (connected) both of them.	Connect an appropriate board (voice board or voice recognition board).
E747	Error in the main controller PCB	
0000-1217	An error occurred in the main controller PCB (Main).	Turn the main power OFF/ON. Replace the main controller PCB (Main).
2000-3D00	An error occurred in communication with the main controller PCB (Sub PDRM-EF-A).	Remove and insert or replace the main controller PCB (Sub PDRM-EF-A). Replace the main controller PCB (Main).
3F00-3F07	It was detected that the main controller PCB (Sub PDRM-EF-A) was not attached.	Remove and insert or replace the main controller PCB (Sub PDRM-EF-A).
4000-5D00	An error occurred in communication with the main controller PCB (Sub PDRM-EF-A).	Remove and insert or replace the main controller PCB (Sub PDRM-EF-A). Replace the main controller PCB (Main).
5F00-5F07	It was detected that the main controller PCB (Sub PDRM-EF-A) was not attached.	Remove and insert or replace the main controller PCB (Sub PDRM-EF-A).
6000-7D00	An error occurred in communication with the main controller PCB (Sub R).	Remove and insert or replace the main controller PCB (Main).
7F00	It was detected that the main controller PCB (Sub R) was not attached.	Remove and insert or replace the main controller PCB (Sub R).
8000-9C00	An error occurred in communication with the OPEN interface PCB.	Remove and insert or replace the OPEN interface PCB. Replace the main controller PCB (Main).
9F00	It was detected that the main controller PCB (Sub OPEN) was not attached.	Remove and insert or replace the main controller PCB (Sub O-A/B).
A000-BC00	An error occurred in communication with the OPEN interface PCB.	Remove and insert or replace the OPEN interface PCB. Replace the main controller PCB (Main).
BF00	It was detected that the main controller PCB (Sub OPEN) was not attached.	Remove and insert or replace the main controller PCB (Sub O-A/B).
C000-DC00	An error occurred in communication with the main controller PCB (Sub SJ-A).	Remove and insert or replace the main controller PCB (Sub SJ-A). Replace the main controller PCB (Main).
DF00, DF01	It was detected that the main controller PCB (Sub SJ-A) was not attached.	Remove and insert or replace the main controller PCB (Sub SJ-A).
FF00	Invalid main controller PCB (Sub SJ-A/PDRM-EF-A/R) or OPEN interface PCB was detected.	Replace the main controller PCB (Sub SJ-A/PDRM-EF-A/R) or OPEN interface PCB supported by this machine.
EXXX	An unexpected interrupt was made from the ASIC.	Turn the main power OFF/ON. Replace the main controller PCB (Main).
E748	Error of the main controller PCB	
4000	No ASIC of each main controller PCB (Sub SJ-A/PE/R) or OPEN interface PCB cannot be detected.	Remove and insert each main controller PCB (Sub SJ-A/PDRM-EF-A/R). Clean the terminal. Replace the PCB. Remove and insert the OPEN interface PCB. Clean the terminal. Replace the PCB. Replace the main controller PCB (Main)
4010	A failure of each main controller PCB (Sub SJ-A/PE/R) or OPEN interface PCB was detected.	Remove and insert each main controller PCB (Sub SJ-A/PDRM-EF-A/R). Clean the terminal. Replace the PCB. Remove and insert the OPEN interface PCB. Clean the terminal. Replace the PCB. Replace the main controller PCB (Main).
4020	It was detected that an invalid board was connected to the PCI expansion slot.	Attach a PCI expansion board (encryption board or voice board) supported by this machine.
4021	/SERROR signal of the PCI was detected. (Address parity error, etc.)	Remove and insert the PCI expansion board. Clean the terminal. Replace the board. Replace the main controller PCB (Main).

Displayed code	Detection timing	Remedial action
4030	HDD controller access error	Replace the main controller PCB (Sub LAN-bar-C). Replace the main controller PCB (Main).
4031	HDD access error	Check whether the aluminum tape is adhered in the HDD. Remove and insert the main controller PCB (Sub LAN-bar-C). Replace the HDD. Replace the main controller PCB. Replace the main controller PCB (Sub LAN-bar-C).
4040	An error occurred during access to each main controller PCB (Sub SJ/PDRM-EF/R) or OPEN interface PCB.	Remove and insert each board and connector. Replace the main board.
4042	SDRAM size erro	Remove and insert, replace, or expand the SDRAM. Replace the main controller PCB (Main).
4043	MAC address read error	Replace the main controller PCB (Sub LAN-bar-C). Replace the main controller PCB (Main).
4050	LAN controller access error	Replace the main controller PCB (Sub LAN-bar-C). Replace the main controller PCB (Main).
4150	Exhaustion of the battery for SRAM/RTC backup was detected.	Turn the main power OFF/ON. Replace the SRAM PCB.
4160	FAX I/F controller access error	Replace the main controller PCB (Main).
4190	IPC communication I/F controller (card reader, coin robo) access error	Replace the main controller PCB (Sub LAN-bar-C). Replace the main controller PCB (Main).
4210	Error during access to the ASIC for I/O or an interrupt processing	Replace the main controller PCB (Main).
4220	SDRAM (position of the slot: upper level) read error	Remove and insert or replace the SDRAM.
4221	SDRAM (position of the slot: lower level) read error	Remove and insert or replace the SDRAM.
4230	LCD controller access error	Replace the main controller PCB (Main).
4260	Write error at BootROM version update	Replace the BootROM.
4311	Error in detection of the main controller PCB (Sub RB-A)	Check the existence of the main controller PCB (Sub RB-A). Remove and insert or replace the main controller PCB (Sub RB-A).
48XX	CPU lock was detected at activation.	Remove and insert the main controller PCB (Sub RB-A). Remove and insert the DDR-SDRAM. Replace the controller PCB (Main). When any of 4883, 4831, 4837, 4838, 4894, or 4854 occurred, perform the measures shown above after performing the following measures.
4883	The CPU path was locked at activation when initialization was performed for the main controller PCB (Sub RB-A) board.	Remove and insert the RB board. --> Replace the RB board. --> Replace the main board.
4831 4837 4838 4894	CPU was locked at activation when ASIC initialization was performed for each main controller PCB (Sub SJ/PE/R).	Remove and insert each main controller PCB (Sub SJ-A/PE/R). Clean the terminal. Replace the controller.
4854	CPU was locked at activation when ASIC initialization was performed for each main controller PCB (Sub LAN-bar).	Remove and insert each main controller PCB (Sub LAN-bar). Clean the terminal. Replace the controller.
4901	Emergency night power-off for 3.3V was detected during operation.	Check the connection in the octopus wiring of AC100V. Replace the controller power PCB. Replace the main controller PCB (Main). Check the power environment at the site.
4910	A board different from the main controller PCB for the machine was detected.	Replace the main controller PCB.
E749	Reboot instruction for changes in the product configuration	
0001	Reboot instruction for changes in the PDL configuration	Turn the main power OFF/ON for recovery.
0003	Boot instruction for changes in the mAccele configuration	Turn the main power OFF/ON for recovery.
E751	Abnormal condition of the drum unit/toner bottle "X" in the following errors shows "X=1: Reading" and "X=2: Writing". "x" shows colors [Y=1, M=2, C=3, K=4].	
00Xx	Abnormal connection of the drum unit (Abnormal condition on the printer side)	Check the connection of the drum unit. / Replace the drum unit.
01Xx	Write error of the built-in memory in the drum unit	Check the connection of the drum unit. / Replace the drum unit.
02Xx	Data error of the built-in memory in the drum unit	Check the connection of the drum unit. / Replace the drum unit.
04Xx	CRC mismatch error in the drum unit	Check the connection of the drum unit. / Replace the drum unit.
05Xx	Drum unit communication error	Check the connection of the drum unit. / Replace the drum unit.
10Xx	Abnormal connection of the toner bottle (Abnormal condition on the printer side)	Check the connection of the toner bottle. / Replace the toner bottle.
11Xx	Write error of the built-in memory in the toner bottle	Check the connection of the toner bottle. / Replace the toner bottle.
12Xx	Data error of the built-in memory in the toner bottle	Check the connection of the toner bottle. / Replace the toner bottle.
14Xx	CRC mismatch error in the toner bottle	Check the connection of the toner bottle. / Replace the toner bottle.
15Xx	Toner bottle communication error	Check the connection of the toner bottle. / Replace the toner bottle.
9000	"24V down" was detected during communication with the drum unit or toner container. (The color cannot be identified.)	Check the power supply output of 24V series on the main power supply PCB.
E804	Controller fan error	
0000	Stop of the power fan was detected.	Check the connection of the power fan. Replace the power fan.
0004	Stop of the controller fan was detected.	Check the connection of the controller fan. Replace the controller fan.
E805	Fan error	
0000	Stop of the fixing exhaust fan was detected.	Check the connection of the fixing exhaust fan. Replace the fixing exhaust fan.
0001	Stop of the cleaner fan was detected.	Check the connection of the cleaner fan. Replace the cleaner fan.
0003	Stop of the IH power fan was detected.	Check the connection of the IH power fan. Replace the IH power fan.

Chapter 19 Service Mode

Contents

19.1 Outline....19-1
19.1.1 Construction of Service Mode....19-1
19.1.2 Entering or Selecting Service Modes....19-1
19.1.3 Exiting Service Modes....19-2
19.1.4 Back-up of Service Mode....19-2
19.1.5 Initial Screen....19-3
19.1.6 Main/Intermediate Item Screen....19-4
19.1.7 Sub- Item Screen....19-4
19.2 DISPLAY (Status Display Mode)....19-5
19.2.1 COPIER....19-5
19.2.1.1 COPIER Table....19-5
19.2.2 FEEDER....19-11
19.2.2.1 FEEDER Table....19-11
19.3 I/O (I/O Display Mode)....19-12
19.3.1 Overview....19-12
19.3.2 DC-CON....19-12
19.3.3 R-CON....19-18
19.3.4 FEEDER....19-20
19.3.5 SORTER....19-22
19.3.6 MN-CONT....19-29
19.4 ADJUST (Adjustment Mode)....19-30
19.4.1 COPIER....19-30
19.4.1.1 COPIER Table....19-30
19.4.2 FEEDER....19-43
19.4.2.1 FEEDER Table....19-43
19.5 FUNCTION (Operation/Inspection Mode)....19-43
19.5.1 COPIER....19-43
19.5.1.1 COPIER Table....19-43
19.5.2 FEEDER....19-51
19.5.2.1 FEEDER Table....19-51
19.6 OPTION (Machine Settings Mode)....19-53
19.6.1 COPIER....19-53
19.6.1.1 COPIER Table....19-53
19.6.2 FEEDER....19-85
19.6.2.1 FEEDER Table....19-85
19.6.3 SORTER....19-85
19.6.3.1 SORTER Table....19-85
19.6.4 BOARD....19-86
19.6.4.1 BOARD Table....19-86
19.7 TEST (Test Print Mode)....19-86
19.7.1 COPIER....19-86
19.7.1.1 COPIER Table....19-86
19.8 COUNTER (Counter Mode)....19-88
19.8.1 COPIER....19-88
19.8.1.1 COPIER Table....19-88

19.1 Outline

19.1.1 Construction of Service Mode

CLC5151 / / / CLC4040 / / / iR C4580i / / / iR C4080i / / / / Color Image Reader-F1 / Color Image Reader-E1 / Dupiex Color Image Reader-G1 / iR C5185N / / iR C5185i PRT /

The machine's service mode has a 3-layer screen construction: Initial screen, Level 1/2 screen, and Level 3 screen.
Its mode items are grouped into those used in regular maintenance work (Level 1 items) and those used in response to faults (Level 2 items).

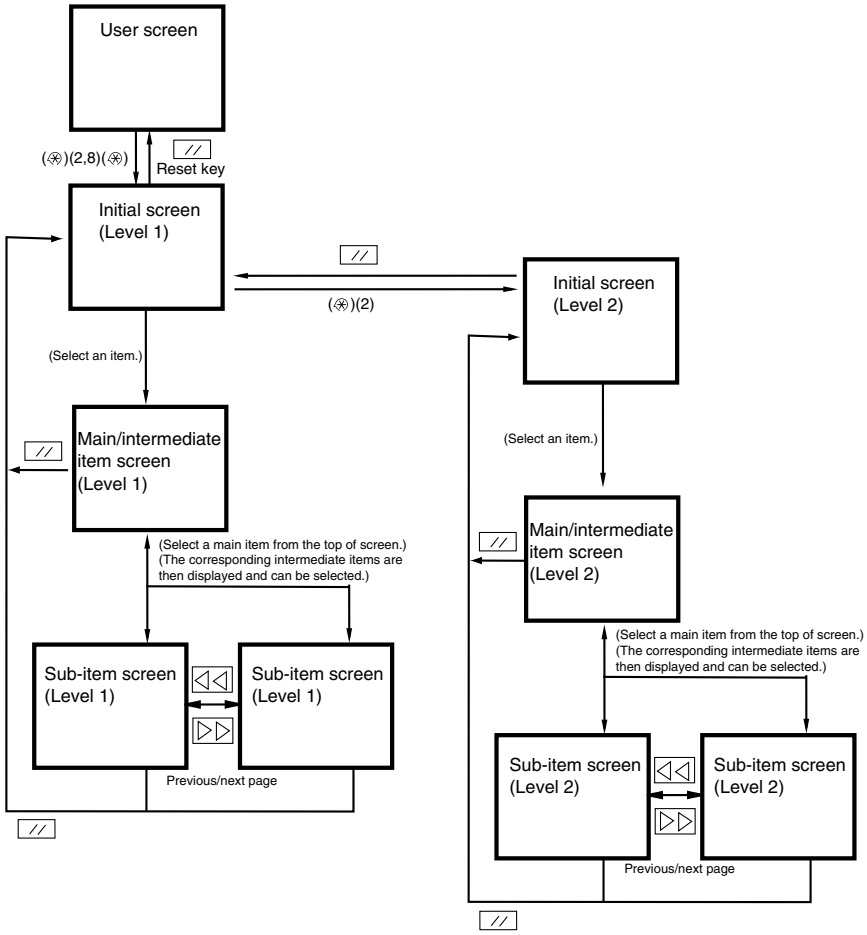

F-19-1

The machine's service mode is divided into the following 7 types:

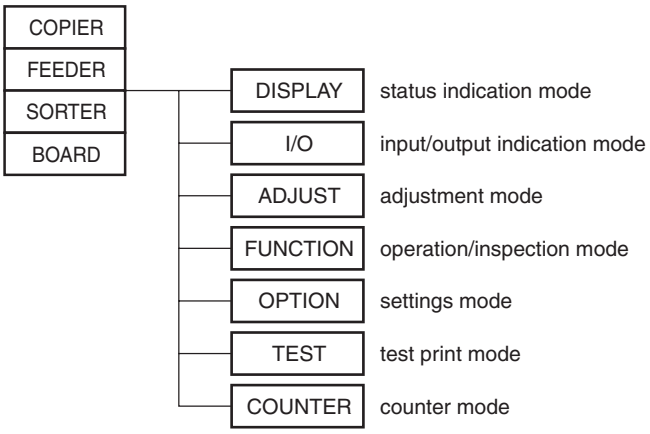

F-19-2

19.1.2 Entering or Selecting Service Modes

CLC5151 / / / CLC4040 / / iR C4580i / / iR C4080i / / / / Color Image Reader-F1 / Color Image Reader-E1 / Dupiex Color Image Reader-G1 / iR C5185N / / iR C5185i PRT /

If you want to execute a machine operation using a service mode item, be sure to disconnect all cables from an external controller or a network before starting service mode. Particularly, if you are using a FUNCTION (operation/inspection) mode item, the arrival of a print job from an external source can cause the machine to malfunction, leading to damage.

1) Press the asterisk key "✱" on the control panel.
2) Press the 2 and 8 keys of the keypad at the same time.

3) Press the asterisk key "✱" on the control panel.
In response to the foregoing key operations, the machine will bring up the following Initial screen:

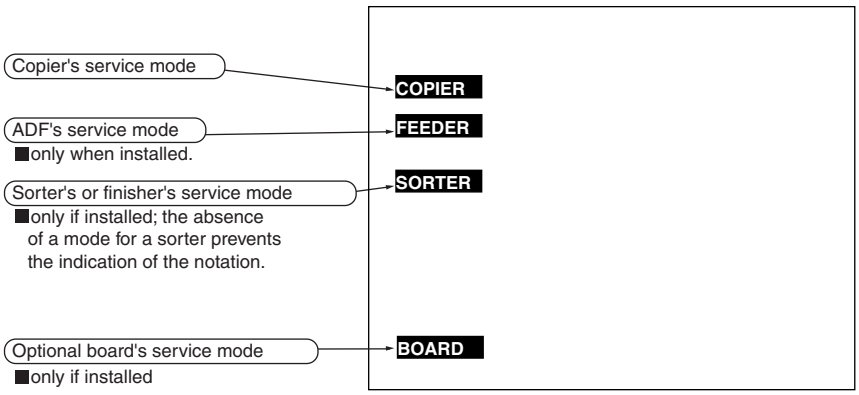

F-19-3

19.1.3 Exiting Service Modes

CLC5151 / / / CLC4040 / / iR C4580i / / iR C4080i / / / / Color Image Reader-F1 / Color Image Reader-E1 / Dupiex Color Image Reader-G1 / iR C5185N / / iR C5185i PRT /

A press on the Reset key will bring back the Service Mode Initial screen.
Another press on the Reset key will end service mode, and bring back the User screen (standard screen).

⚠
If you used service mode (ADJUST, FUNCTION, OPTION), be sure to turn off and then on the main power switch after ending service mode.

19.1.4 Back-up of Service Mode

CLC5151 / / / CLC4040 / / iR C4580i / / iR C4080i / / / / Color Image Reader-F1 / Color Image Reader-E1 / Dupiex Color Image Reader-G1 / iR C5185N / / iR C5185i PRT /

At time of shipment from the factory, all machines are adjusted individually, and adjustment values are recorded in their respective service labels.
If you have replaced the reader controller PCB or the DC controller PCB, or if you have initialized the RAM, the adjustment values (for ADJUST and OPTION) will return to their default settings. If there has been any change in a service mode item, be sure to update its setting indicated on the service label. As necessary, make use of the space in the service label (as when recording an item not found on the label).

- Service Label for the Reader Controller PCB (behind the left cover [1] of the reader unit)

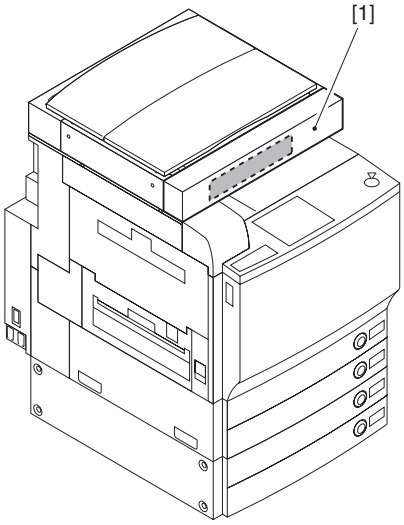

F-19-4

MEMO

The service label of Color image Reader G1 has the description of ■ [1] or □ [2] at the head of the service item. The following are the meanings of them.

■: Items to reenter at the time of replacing the CCD unit (Enter the value on the label included in the service parts CCD unit)

□: Items to reenter at the time of replacing the CIS unit (Enter the value on the label included in the service parts CIS unit)

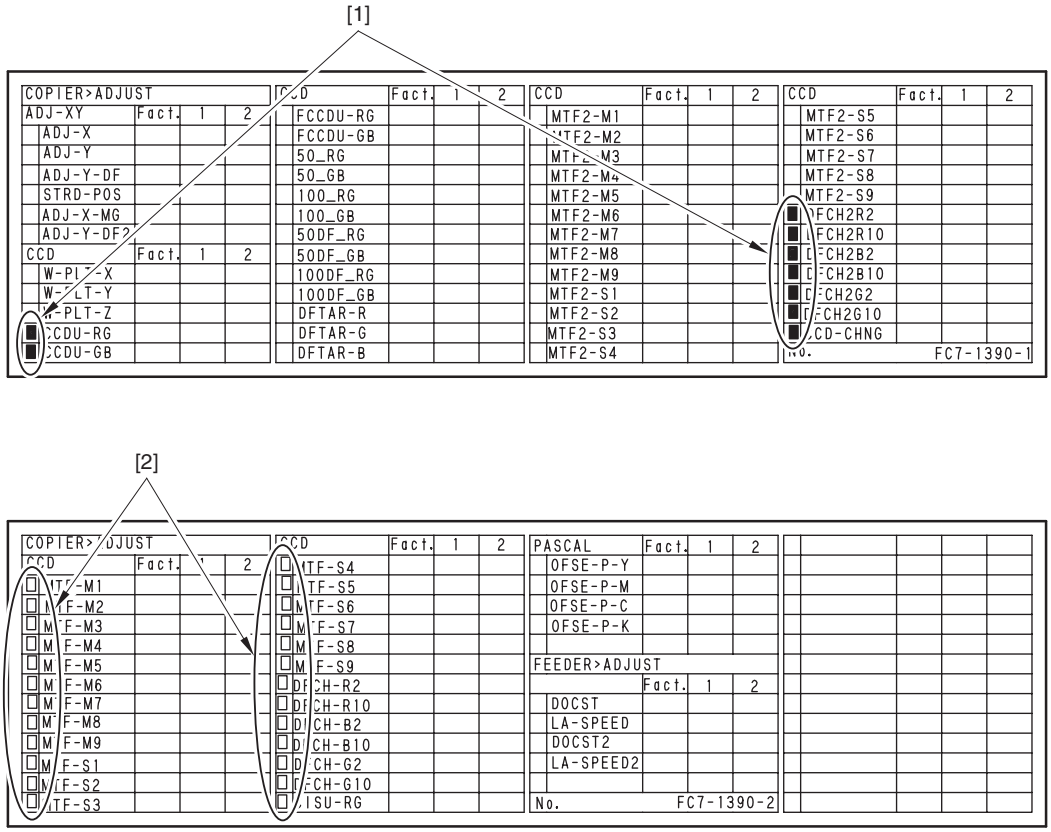

F-19-5

- Service Label for the Main Controller PCB/DC controller PCB (behind the front cover of the printer unit)

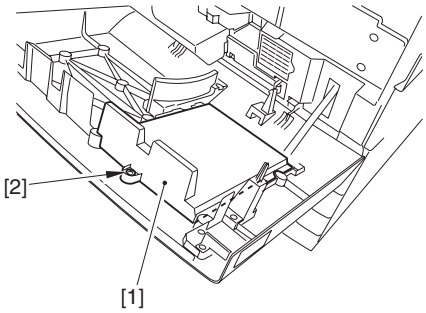

F-19-6

19.1.5 Initial Screen

CLC5151 / / / CLC4040 / / iR C4580i / / iR C4080i / / / / iR C5185N / / iR C5185i PRT /

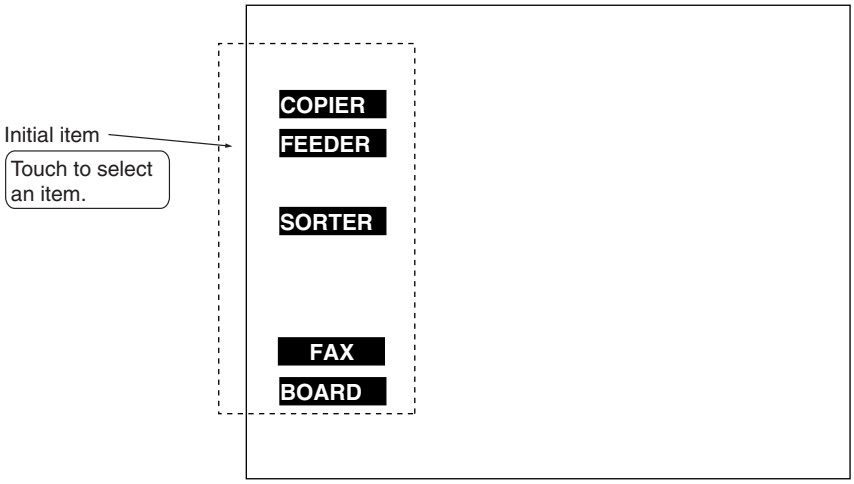

F-19-7

19.1.6 Main/Intermediate Item Screen

CLC5151 / / / CLC4040 / / iR C4580i / / iR C4080i / / / / Color Image Reader-F1 / Color Image Reader-E1 / Dupiex Color Image Reader-G1 / iR C5185N / / iR C5185i PRT /

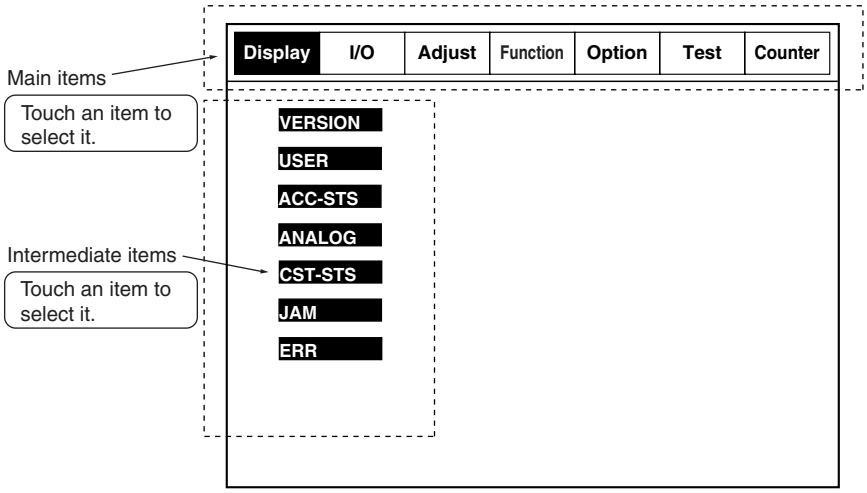

F-19-8

19.1.7 Sub- Item Screen

CLC5151 / / / CLC4040 / / iR C4580i / / iR C4080i / / / / Color Image Reader-F1 / Color Image Reader-E1 / Dupiex Color Image Reader-G1 / iR C5185N / / iR C5185i PRT /

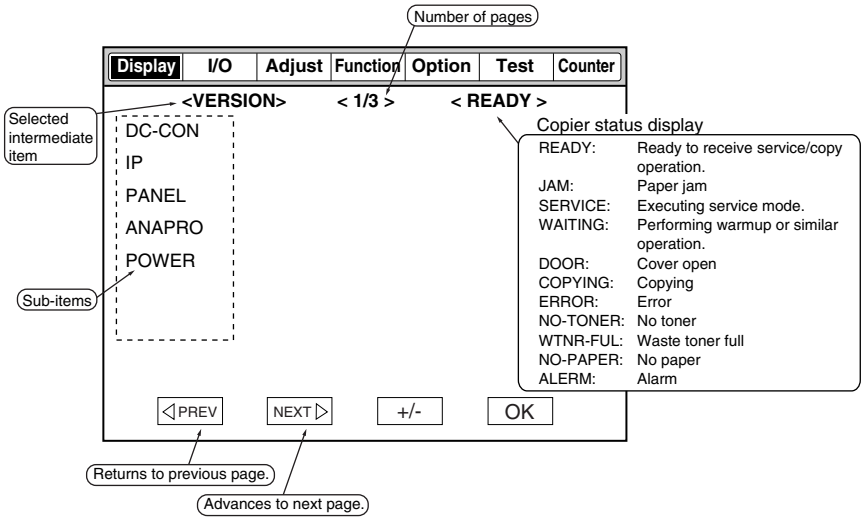

F-19-9

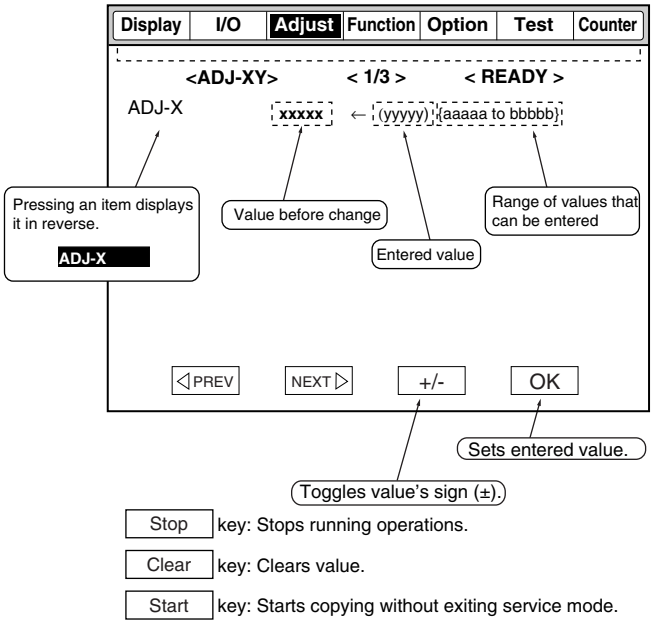

F-19-10

19.2 DISPLAY (Status Display Mode)

19.2.1 COPIER

19.2.1.1 COPIER Table

CLC5151 / / / CLC4040 / / iR C4580i / / iR C4080i / / / / Color Image Reader-F1 / Color Image Reader-E1 / Dupiex Color Image Reader-G1 / iR C5185N / / iR C5185i PRT /

1. VERSION
*1 For iR C5185 only

T-19-1

COPIER>DISPLAY>VERSION		
Sub item	**Description**	**level.**
Use it to check the ROM version of individual PCBs (host machine and accessories). - for example, in <R-CON XX.YY>, XX indicates the version and YY indicates R&D number. - if no PCB is connected, the indication will be <--.-->.		
DC-CON	ROM version of DC controller PCB.	1
R-CON	ROM version of reader controller PCB.	1
PANEL	ROM version of control panel CPU PCB.	1
ECO	ROM version of ECO PCB.	1
FEEDER	ROM version of DADF controller PCB.	1
SORTER	ROM version of finisher controller PCB.	1
FAX	ROM version of fax board.	1
NIB	Network software version.	1
PS/PCL	UFR board (PS/PCL function) version.	1
SDL-STCH	ROM version of saddle stitcher controller PCB.	1
OP-CON	ROM version of cassette pedestal controller PCB.	1
MN-CONT	System software version of main controller PCB.	1
RUI	Remote UI version.	1
PUNCH	Punch unit version	1
LANG-EN	English language file version.	1
LANG-FR	French language file version.	1
LANG-DE	German language file version.	1
LANG-IT	Italian language file version.	1
LANG-JP	Japanese language file version.	1
GDI-UFR	UFR board (GDI-UFR function) version.	1
MEAP	Use it to indicate the version of MEAP content.	1
OCR-CN	OCR version for Chinese (simplified)	1
OCR-JP	OCR version for Japanese	1
OCR-KR	OCR version for Korean	1
OCR-TW	OCR version for Chinese (traditional)	1
BOOTROM	BOOT-ROM version	1
TTS-JA	Voice dictionary version for Japanese	1
TTS-EN	Voice dictionary version for English	1

COPIER>DISPLAY>VERSION		
Sub item	**Description**	**level.**
WEB-BRWS	Web browser version	1
HELP	Simple NAVI version	1
WEBDAV	WebDAV version	1
TIMESTMP	TIMESTMP version	1
ASR-JA	Version of the Japanese voice recognition dictionary	1
ASR-EN	Version of the English voice recognition dictionary	1
ECO2*1	ROM version of the ECO PCB for double-sided simultaneous reading	1
LANG-CS	Use it to check the version of the Czech language file.	2
LANG-DA	Use it to check the version of the Danish language file.	2
LANG-EL	Use it to check the version f the Greek language file.	2
LANG-ES	Use it to check the version of the Spanish language file.	2
LANG-ET	Use it to check the version of the Estonian language file.	2
LANG-FI	Use it to check the version of the Finnish language file.	2
LANG-HU	Use it to check the version of the Hungarian language file.	2
LANG-KO	Use it to check the version of the Korean language file.	2
LANG-NL	Use it to check the version of the Dutch language file.	2
LANG-NO	Use it to check the version of the Norwegian language file.	2
LANG-PL	Use it to check the version of the Polish language file.	2
LANG-PT	Use it to check the version of the Portuguese language file.	2
LANG-RU	Use it to check the version of the Russian langue file.	2
LANG-SL	Use it to check the version of the Slovenian language file.	2
LANG-SV	Use it to check the version of the Swedish language file.	2
LANG-TW	Use it to check the version of the Chinese language file (traditional text).	2
LANG-ZH	Use it to check the version of the Chinese language file (simplified text).	2
ECO-ID	Use it to check the ECO-ID number	2
LANG-BU	Use it to check the version of the Bulgarian language file.	2
LANG-CR	Use it to check the version of the Croatian language file.	2
LANG-RM	Use it to check the version of the Romanian language file.	2
LANG-SK	Use it to check the version of the Slovakian language file.	2
LANG-TK	Use it to check the version of the Turkish language file.	2
LANG-CA	Catalan language file version	2
MEDIA-JA	Version of the paper brand information in Japanese	2
MEDIA-EN	Version of the paper brand information in English	2
MEDIA-DE	Version of the paper brand information in German	2
MEDIA-IT	Version of the paper brand information in Italian	2
MEDIA-FR	Version of the paper brand information in French	2
MEDIA-ZH	Version of the paper brand information in Chinese (simplified Chinese)	2
MEDIA-SK	Version of the paper brand information in Slovak	2
MEDIA-TK	Version of the paper brand information in Turkish	2
MEDIA-CS	Version of the paper brand information in Czechoslovak	2
MEDIA-EL	Version of the paper brand information in Greek	2
MEDIA-ES	Version of the paper brand information in Spanish	2
MEDIA-ET	Version of the paper brand information in Estonian	2
MEDIA-FI	Version of the paper brand information in Finnish	2
MEDIA-HU	Version of the paper brand information in Hungarian	2
MEDIA-KO	Version of the paper brand information in Korean	2
MEDIA-NL	Version of the paper brand information in Dutch	2
MEDIA-NO	Version of the paper brand information in Norwegian	2
MEDIA-PL	Version of the paper brand information in Polish	2
MEDIA-PT	Version of the paper brand information in Portuguese	2
MEDIA-RU	Version of the paper brand information in Russian	2
MEDIA-SL	Version of the paper brand information in Slovene	2
MEDIA-SV	Version of the paper brand information in Swedish	2
MEDIA-TW	Version of the paper brand information in Chinese (traditional Chinese)	2
MEDIA-BU	Version of the paper brand information in Bulgarian	2
MEDIA-CR	Version of the paper brand information in Croatian	2
MEDIA-RM	Version of the paper brand information in Romanian	2
MEDIA-CA	Version of the paper brand information in Catalan	2

2. ACC-STS

T-19-2

COPIER>DISPLAY>ACC-STS		
Sub item	**Description**	**level.**
FEEDER	Displays whether DADF is connected. 0: Not connected 1: Connected	1
SORTER	Displays whether finisher is connected. 0: Not connected 1: Finisher M1 or N1 connected 2: Saddle finisher N2 connected	1
DECK	Displays whether paper deck is connected. 0: Not connected 1: Connected	1
CARD	Displays whether card reader is connected. 0: Not connected 1: Connected	1
RAM	Displays memory capacity of memory mounted on main controller PCB. 512 MB, 768 MB	1
COINROBO	Displays whether coin vendor is connected. 0: Not connected 1: Connected	1
NIB	Displays whether network board is connected. 0: Not connected, 1: Ethernet board connected, 2: Token ring board connected, 3: Ethernet board and token ring board connected	1
NETWARE	Displays whether NetWare firmware is installed. 0: Not installed 1: Installed	1
SEND	Indicates whether SEND function is appended. 0: No SEND function 1: SEND function	1
PDL-FNC1	Display of Enabled PDL (1)	1
PDL-FNC2	Display of Enabled PDL (2)	1
HDD	Display of HDD model name	1
PCI1	Display of PCI1 board name	1
PCI2	Display of PCI2 board name	1
PCI3	Display of PCI3 board name	1
USBH-SPD	Display of USB device connection speed	2

3. ANALOG

T-19-3

COPIER>DISPLAY>ANALOG		
Sub item	**Description**	**level.**
TEMP	Copier's internal temperature (environment sensor) in deg C	1
HUM	Copier's internal humidity (environment sensor) in %RH	1
ABS-HUM	Amount of moisture (environment sensor) in grams	1
FIX-UC	Fixing upper roller center temperature (main themistor detection temperature) unit: deg C	1
FIX-UE	Fixing upper roller end temperature (main themistor detection temperature) unit: deg C	1
FIX-LC	Fixing lower roller center temperature unit: deg C	1
FIX-LE	Fixing lower roller end temperature unit: deg C	1
FIX-LE2	Pressure belt (lower belt) temperature (rear side of the end)	1
FIX-UE2	Fixing belt (upper belt) temperature (rear side of the end)	1

4. CST-STS

T-19-4

COPIER>DISPLAY>CST-STS		
Sub item	**Description**	**level.**
WIDTH-MF	Use it to check the width of paper in the manual feed tray (in mm).	2

5. JAM

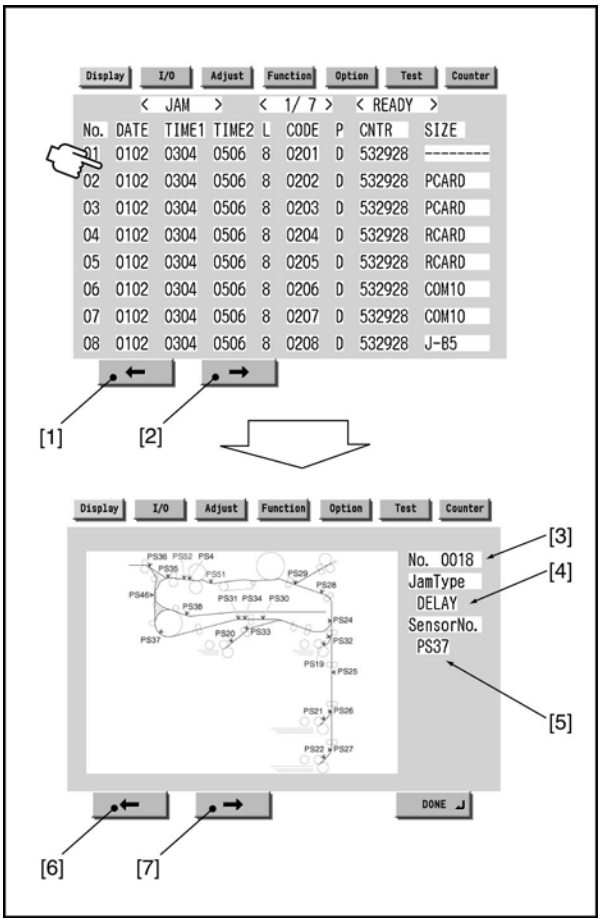

F-19-11

Touch the appropriate notation for details.
[1] To go to the previous page.
[2] To go to the next page.
[3] To find out the order of jams.
[4] To find out the type of jam.
[5] To find the sensor in question.
[6] To go to the previous Jam screen.
[7] To go to the next Jam screen.

<No.> Indicates the order of jams; 1 through 50 (the higher the number, the older the jam).
<DATE> indicates the date of occurrence of the jam in question.
<TIME1> indicates the time of occurrence of the jam in question.
<TIME2> indicates the time of jam recovery.
<L> indicates the location of the jam in question; 0 to 2 (0: copier; 1: feeder; 2: finisher).
<CODE> indicates the jam code in question.
<P> indicates the source of paper.
1: cassette 1
2: cassette 2
3: cassette 3
4: cassette 4
5: side paper deck
6: manual feed tray
7: duplexing assembly
<CNTR> indicates the reading of the soft counter used for the source of paper.
<SIZE> indicates the size of paper.

<ERR>

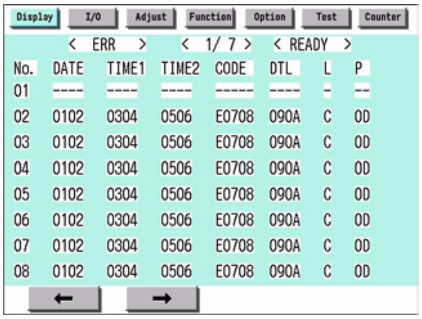

F-19-12

<No.> indicates how recent the error in question is.
1 to 50 (the higher the number, the older the error)

<DATE> indicates the date of occurrence of the error in question.
<TIME1> indicates the time of occurrence of the error in question.
<TIME2> indicates he error recovery time.
<CODE> indicates the error code in question.
<DTL> indicates the detail code of the error in question. (if none, '0000')
<L> indicates the location of the error in question.
0: main controller
1: DADF
2: finisher
3: not used
4: reader unit
5: printer unit
6: PDL board
7: fax board
<P> not used

7. CCD

T-19-5

COPIER>DISPLAY>CCD		
Sub item	**Description**	**level.**
TARGET-B	Use it to check the shading target value for B.	2
TARGET-G	Use it to check the shading target value for G.	2
TARGET-R	Use it to check the shading target value for R.	2
GAIN-OB	Use it to indicate the gain level adjustment value (for color) of odd-numbered blue bits of the CCD.	2
GAIN-OG	Use it to indicate the gain level adjustment value (for color) of odd-numbered green bits of the CCD.	2
GAIN-OR	Use it to indicate the gain level adjustment (for color) of odd-numbered red bits of the CCD.	2
GAIN-EB	Use it to indicate the gain level adjustment value (for color) of even-numbered blue bits of the CCD.	2
GAIN-EG	Use it to indicate the gain level adjustment (for color) of even-numbered green bits of the CCD.	2
GAIN-ER	Use it to indicate the gain level adjustment value (for color) of even-numbered red bits of the CCD.	2

8. DPOT

Displaying Photosensitive Drum Surface Potential Control Data

T-19-6

COPIER>DISPLAY>DPOT		
Sub item	**Description**	**level.**
MEMO: For items other than DPOT-K, displaying value at the time of the latest potential control.		
2TR-PPR	Use it to check the output value of the paper separation voltage of the secondary transfer DC voltage generated last. Appropriate values 400 to 3700V	2
2TR-BASE	Use it to check the output value of the reference voltage of the secondary transfer DC voltage generated last. Appropriate values 600 to 5700V	2
1TR-DC-Y	Use it to check the output value of the primary transfer DC voltage (Y) generated last. Appropriate values 0 to 1000V	2
1TR-DC-M	Use it to check the output value of the primary transfer DC voltage (M) generated last. Appropriate values 0 to 1000V	2
1TR-DC-C	Use it to check the output value of the primary transfer DC voltage (C) generated last. Appropriate values 0 to 1000V	2
1TR-DC-K	Use it to check the output value of the primary transfer DC voltage (K) generated last. Appropriate values 0 to 1000V	2
CHG-AC-Y	output value of primary charge AC voltage (Y) output last Appropriate values 1.3kV to 1.9kV	2
CHG-AC-M	output value of primary charge AC voltage (M) output last) Appropriate values 1.3kV to 1.9kV	2
CHG-AC-C	output value of primary charge AC voltage (C) output last) Appropriate values 1.3kV to 1.9kV	2
CHG-AC-K	output value of primary charge AC voltage (Bk) output last) Appropriate values 1.3kV to 1.9kV	2

9. DENS

T-19-7

COPIER>DISPLAY>DENS		
Sub item	**Description**	**level.**
DENS-Y/M/C/K	Calculated value of developer concentration (indicated as % off target value) Appropriate values -2.0 to 2.0% Note Value is updated when toner is supplied after main power switch ON.	1
WINDOW-Y/M/C/K	SALT sensor window dirt coefficient (Y/M/C/Bk). The smaller the value, the dirtier the sensor window. Appropriate values 50 or higher Note Value is updated when ATR control operation is performed after main power switch ON.	1
SGNL-Y/M/C/K	Measured value of developer concentration (Y/M/C/Bk) Measured when each job is received. Appropriate values 16 to 192 Note Value is updated when toner is supplied after main power switch ON.	1
DENS-S-Y/M/C/K	Use it to check the density value (Y/M/C/Bk) detected of the sample image formed at time of ATR control. Appropriate values 129 to 767	2

COPIER>DISPLAY>DENS		
Sub item	**Description**	**level.**
D-Y/M/C/K-TRGT	target value (Y/M/C/Bk) of developer concentration Appropriate values 107 to 217	2
DEV-DC-Y/M/C/K	Use it to check the output value of the developing DC voltage (Y/M/C/Bk) generated last. Appropriate values to 552	2
CHG-DC-Y/M/C/K	Use it to check the output value of the primary DC voltage (Y/M/C/Bk) generated last. Appropriate values to 701	2
D-CRNT-P/S	Uses it to indicate the value (P wave/S wave) measured of the dark current at time of ATR control. Appropriate values P wave:24 to 84 S wave:73 to 251	2
P-SENS-P/S	detected light quantity value (P wave/S wave) of backing (ITB) during ATR control Appropriate values P wave:252 to 734 S wave:None(Because it is calculating)	2

10. FIXING

T-19-8

COPIER>DISPLAY>FIXING		
Sub item	**Description**	**level.**
FX-UHP	Indicates the displacement control auto home position center position (upper belt)	1
FX-LHP	Indicates the displacement control auto home position center position (lower belt)	1
FX-MTR2	Displays the current value (latest) of the fixing motor measured before. Unit is ampere (A) 0.00 to 2.40 (unit: A) Use this as a reference value of duration.	2

11. MISC

T-19-9

COPIER>DISPLAY>MISC		
Sub item	**Description**	**level.**
ENV-TR	printer internal environment display 1: Low humidity environment (5.8 g or less moisture) 2: Normal humidity environment (5.9 to 17.3 g moisture) 3: High humidity environment (17.4 g or more moisture)	1
Y/M/C/K-DRM-LF	Drum unit life (Y/M/C/Bk) Expresses how much of life has expired (as percentage). Appropriate values 0 to 100 (%) Note 0% when new drum unit is inserted.	1

12. ALARM-1

T-19-10

COPIER>DISPLAY>ALARM-1		
Sub item	**Description**	**level.**
IMG-DT-Y/M/C/K	- indicates the average of image ratios for copy/print jobs indicates the average image ratio (color ratio) within the drum unit	1
LST-DY-Y/M/C/K	Indicates the image duty (Y/M/C/Bk) output lastly within the range of 0~100%.	2

13. ALARM-2

a. Displays alarm data

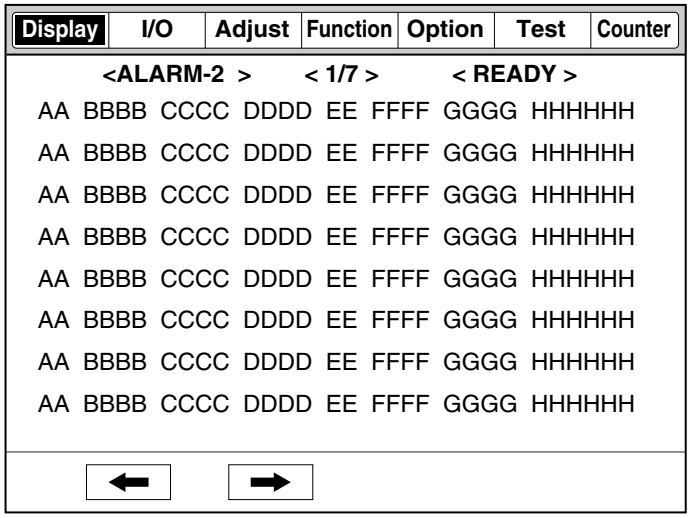

F-19-13

b. Alarm Data Display

AA	Alarm sequence number 1 to 50 (the larger the number, the older the error)
BBBB	Date of alarm
CCCC	Time of alarm
DDDD	Time alarm was restored
EE	Alarm location code (as will hereinafter be described in detail)
FFFF	Alarm code (as will hereinafter be described in detail)
GGGG	Alarm detail code (as will hereinafter be described in detail)
HHHHHH	Total counter value when alarm is generated

c. Alarm Code Detail

14. ENVRNT

Reference: Displaying Environment Logs
Use it to indicate logs of changes that may have taken place for [machine inside temperature (deg C)/humidity (%)/fixing roller surface (middle) temperature (deg C)] collected from the monitor output of the fixing thermistor (main) and the environment sensor.
Remarks
The intervals of data collection may be set in service mode: COPIER>OPTION>BODY>ENVP-IN.

a. Environment Log Screen

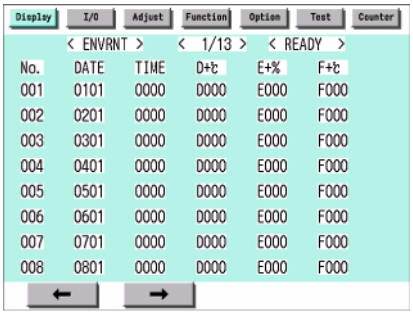

F-19-14

b. Environment Log Display

No.	number of a data piece (higher the number, older the data piece)
DATE	date of data collection
TIME	time of data collection
D + deg C	machine inside temperature
E+%	machine inside humidity
F + deg C	fixing roller surface (middle) temperature

19.2.2 FEEDER

19.2.2.1 FEEDER Table

CLC5151 / / / CLC4040 / / / iR C4580i / / / iR C4080i / / / / Color Image Reader-F1 / Color Image Reader-E1 / Dupiex Color Image Reader-G1 / iR C5185N / / iR C5185i PRT /

T-19-11

FEEDER>DISPLAY		
Sub item	**Description**	**level.**
FEEDSIZE	Displays the document size detected by the ADF. Note Displays the document size as a paper size such as A4 or LTR. For paper names, see COPIER > OPTION > CST > CST-U1, CST-U2.	1
TRY-WIDE	Indicates the length of the original width detection slide (paper width detention; 0.1 mm). Indicates the length of the slide used to detect the width of the original in the DF's original pickup tray (distance between 2 points).	1
SPSN-LMN	Use it to indicate the manual adjustment value (light-emission voltage) of the post-separation sensor. Optimum range: 179 or less	1
SPSN-RCV	Use it to indicate the manual adjustment value (light reception voltage) of the post-separation sensor. Optimum range paper present: 100 or less paper absent: 250 or more	1
RDSN-LMN	Use it to indicate manual adjustment value (light emission voltage of the reader sensor. Optimum range: 179 or less	1
RDSN-RCV	Use it to indicate the manual adjustment value (light reception voltage) of the read sensor. Optimum range paper present: 100 or less paper absent: 250 or more	1
DRSN-LMN	Intensity of Light Emitted by the Delivery Reversal Sensor The manually adjusted value (emission voltage) of the delivery reversal sensor will be indicated. Optimum range: 179 or less	1

FEEDER>DISPLAY		
Sub item	**Description**	**level.**
DRSN-RCV	Intensity of Light received by the Delivery Reversal Sensor The intensity of light received by the delivery reversal sensor after manual adjustment will be indicated Optimum range paper present: 100 or less paper absent: 250 or more	1

19.3 I/O (I/O Display Mode)

19.3.1 Overview

CLC5151 / / / CLC4040 / / / iR C4580i / / / iR C4080i / / / / Color Image Reader-F1 / Color Image Reader-E1 / Dupiex Color Image Reader-G1 / iR C5185N / / iR C5185i PRT /

The following appears in response to COPIER>I/O; descriptions of the items (limited to those needed in the field) area given on the pages that follow:

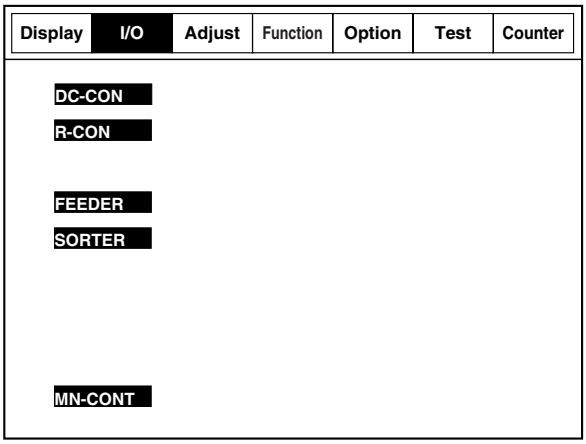

F-19-15

1. Guide to the Screen

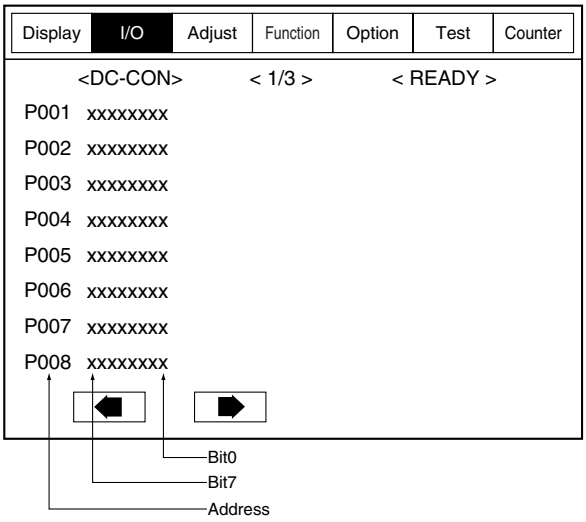

F-19-16

19.3.2 DC-CON

CLC5151 / / / CLC4040 / / / iR C4580i / / / iR C4080i / / / / Color Image Reader-F1 / Color Image Reader-E1 / Dupiex Color Image Reader-G1 / iR C5185N / / iR C5185i PRT /

T-19-12

Address	Bit	Symbol	Display	Remarks
P001	0	SW2	Cassette 1 size detection 0	4 bits enable 16 types of size detection (see Table T05-401- 01).
(input)				
	1	SW2	Cassette 1 size detection 1	
	2	SW2	Cassette 1 size detection 2	
	3	SW2	Cassette 1 size detection 3	
	4	SW3	Cassette 2 size detection 0	Size detection 0 to 3 enable 16 settings (see Table T05-401-01).

Address	Bit	Symbol	Display	Remarks
	5	SW3	Cassette 2 size detection 1	
	6	SW3	Cassette 2 size detection 2	
	7	SW3	Cassette 2 size detection 3	
	8	PS14	Cassette 1 remaining volume sensor A	1: Remaining volume is roughly half or less
	9	PS15	Cassette 1 remaining volume sensor B	1: Remaining volume is roughly 50 sheets or less
	10	PS20	Cassette 2 remaining volume sensor A	1: Remaining volume is roughly half or less
	11	PS18	Cassette 2 remaining volume sensor B	1: Remaining volume is roughly 50 sheets or less
	12	PS7	Cassette 1 paper sensor	1:ON
	13	PS19	Cassette 2 paper sensor	1:ON
	14	PS10	Manual paper feed paper sensor	1:ON
	15	PS9	Manual paper feed last paper sensor	1:ON

T-19-13

		4-ream actuator			
		Inner			Front
	Cassette paper size	Bit3	Bit2	Bit1	Bit0
1	STMT R	0	1	1	1
2	LTR	1	0	1	1
3	LTR R	0	1	0	1
4	LGL	1	0	1	0
5	11x17	1	1	0	1
6	A5 R	0	1	1	0
7	A4	0	0	1	1
8	A4 R	1	0	0	1
9	A3	0	1	0	0
10	B5	0	0	1	0
11	B5 R	0	0	0	1
12	B4	0	0	0	0
13	12x18	1	0	0	0
14	U1	1	1	0	0
15	U2	1	1	1	0
16	No cassette	1	1	1	1
0:		Actuator pressed			

T-19-14

Address	Bit	Symbol	Display	Remarks
P002	0		Developing bias mode (Y)	0: Rectangular wave
(output)	1		Developing bias mode (M)	0: Rectangular wave
	2		Developing bias mode (C)	0: Rectangular wave
	3		Developing bias mode (K)	0: Rectangular wave
	4		For R&D	
	5		For R&D	
	6	FM6	Manual feed cooling fan (half-speed)	1: Half speed
	7		For R&D	
	8		High-pressure remote	0: High pressure ON permitted
	9		For R&D	
	10		For R&D	
	11	M1	Drum ITB motor operation direction	0: Forward
	12	M1	Drum ITB motor	0:ON
	13		For R&D	
	14		For R&D	
	15	FM1	Power cooling fan half-speed	0: Half-speed
P003	0	SL3	Cassette 1 paper feed solenoid	1:ON
(output)	1	SL4	Cassette 2 paper feed solenoid	1:ON
	2	SL1	Manual paper feed unit paper feed solenoid	1:ON
	3	SL2	Paper delivery path switching solenoid 1	0: Back side paper delivery 1: Front side paper delivery
	4		For R&D	
	5		For R&D	
	6	FM9	IH power supply fan (FM9), normal speed	1: Normal speed
	7	FM9	IH power supply fan (FM9), half speed	1: Half speed
	8		Transparency detection LED	1:ON
	9		For R&D	
	10		Deck heater ON	

Address	Bit	Symbol	Display	Remarks
	11		For R&D	
	12		For R&D	
	13		For R&D	
	14	FM2	Fixing exhaust fan (FM2) (10V)	1: 10V drive
	15		For R&D	
P004	0		For R&D	
(input)	1		For R&D	
	2		For R&D	
	3		For R&D	
	4		For R&D	
	5		For R&D	
	6		For R&D	
	7		For R&D	
	8	M24	Fixing motor FG signal	0: Rotating
	9		Two-sided PCB connection	0: Connected
	10		For R&D	
	11		For R&D	
	12	FM6	Manual feed cooling fan lock detection	0: Running, 1: Stopped
	13	FM2	Power cooling fan lock detection	0: Running, 1: Stopped
	14	FM9	Cleaner fan lock detection	0: Running, 1: Stopped
	15		For R&D	
P005	0		For R&D	
(input)	1		For R&D	
	2		Cassette pedestal connection	0: Connected
	3		Cassette pedestal power ready	0: Ready
	4	PS5	Fixing/feeding unit open/close detection	1: Close
	5	H1	Fixing heater, enable	0: Enable
	6		DCON fan lock detection	0: Rotating 1: At stop state
	7	PS13	Upper left cover detection	0: Open 1: Close
	8	PS28	Manual feed unit OPEN/CLOSED detection	1: CLOSED
	9	PS8	Center paper delivery tray full sensor	1: Full
	10	PS11	Paper feed vertical path cover OPEN/CLOSED sensor	1: CLOSED
	11	PS23	Front cover OPEN/CLOSED sensor	1: CLOSED
	12		For R&D	
	13	M1	Drum ITB motor lock detection	0: Running
	14		TRIAC short detection	0: Error
	15		Fixing unit high temperature detection	1: Error
P006	0		ACC power supply On	0: ON
(output)	1		For R&D	
	2		For R&D	
	3		For R&D	
	4		24-V ON	0:ON
	5		Secondary transfer positive/negative switching	0: Positive output, 1: Negative output
	6		Drum unit operation signal	1:ON
	7		Cassette heater (for cassette 1/2) ON	0: Heater ON, 1: Heater OFF
	8		For R&D	
	9		For R&D	
	10		For R&D	
	11		For R&D	
	12		For R&D	
	13		For R&D	
	14		For R&D	
	15		For R&D	
P007	0	PS16	Cassette 2 retry paper sensor	1:ON
(input)	1	PS17	Cassette 1 retry paper sensor	1:ON
	2	PS26	Resist sensor	1:ON
	3	PS27	Fixing inlet sensor	1:ON
	4	PS25	Fixing paper delivery sensor	1:ON
	5	PS12	Face-down paper delivery sensor 1	1:ON
	6	PS21	Two-sided resist sensor	1:ON
	7	PS24	Two-sided paper feed sensor	1:ON
	8	PS6	Face-down paper delivery sensor 2	1:ON
	9	PS22	Two-sided horizontal resist sensor	1:ON
	10	OHP1	Transparency sensor (front)	1:ON

Address	Bit	Symbol	Display	Remarks
	11	OHP2	Transparency sensor (inner)	1:ON
	12		Belt full displacement error	1: Error
	13	PS50	Fixing/feeding half-closed detection	0: Open 1: Close
	14		For R&D	
	15		For R&D	
P008	0	M10	Paper delivery vertical path motor current switching 0	See separate Table T05-401-08.
(output)	1	M10	Paper delivery vertical path motor current switching 1	
	2	M11	Face-down paper delivery motor current switching 0	See separate Table T05-401-08.
	3	M11	Face-down paper delivery motor current switching 1	
	4	FM6	Manual feed cooling fan	1:ON
	5		For R&D	
	6		For R&D	
	7	FM1	Power cooling fan	0:ON
	8	OHP1	Transparency sensor (front) gain switching	1: Gain large, 0: Gain small
	9	OHP2	Transparency sensor (inner) gain switching	1: Gain large, 0: Gain small
	10		For R&D	
	11		For R&D	
	12		For R&D	
	13		For R&D	
	14		For R&D	
	15		For R&D	
P009	0	CL1	Two-sided resist clutch	1: ON two-sided
(input/output)	1	CL2	Two-sided paper feed clutch	1: ON two-sided
	2	SL2	Paper delivery path switching solenoid 2	1:ON
	3		For R&D	
	4		For R&D	
	5		For R&D	
	6		Horizontal registration voltage down	1: Voltage down two-sided
	7		Horizontal registration excitation	0: Excitation ON (voltage down status)
	8		For R&D	
	9		For R&D	
	10		For R&D	
	11		For R&D	
	12		For R&D	
	13		For R&D	
	14		For R&D	
	15	PS29	Fixing wrapping detection	0: Error
P010 to P018	0 to 7		For R&D	
(for R&D)				
P019	0	SW51	Cassette 3 size detection 0	Size detection 0 to 3 enable 16 settings (see Table T05-401-01).
(input)	1	SW51	Cassette 3 size detection 1	
	2	SW51	Cassette 3 size detection 2	
	3	SW51	Cassette 3 size detection 3	
	4	SW52	Cassette size detection 0	Size detection 0 to 3 enable 16 settings (see Table T05-401-01).
	5	SW52	Cassette 4 size detection 1	
	6	SW52	Cassette 4 size detection 2	
	7	SW52	Cassette 4 size detection 3	
P020	0	PS14	Cassette 3 remaining volume detection A	1: Remaining volume is roughly half or less
(input)	1	PS15	Cassette 3 remaining volume detection B	1: Remaining volume is roughly 50 sheets or less
	2	PS14	Cassette 4 remaining volume detection A	1: Remaining volume is roughly half or less
	3	PS15	Cassette 4 remaining volume detection B	1: Remaining volume is roughly 50 sheets or less
	4	PS59	Right cover OPEN/CLOSED detection	1: CLOSED
	5	PS5D	Deck attachment	0: Deck released from copier
	6	PS8D	Deck paper volume sensor top	0: No paper
	7		Deck connection signal detection	1: Connected
P021	0		Deck LED switch	0: LED switch pressed
(input)	1	PS4D	Deck lifter sensor	1: Lifter at paper feed position
	2		Deck lifter motor error detection	0: Lifter error detected
	3	PS3D	Deck lifter upper limit sensor	1: Lifter has reached upper limit
	4	PS7D	Deck paper volume sensor bottom	0: No paper
	5	PS6D	Deck paper feed sensor	1: Paper
	6	SW2D	Deck lifter lower limit sensor	1: Lifter has reached lower limit

Address	Bit	Symbol	Display	Remarks
	7	PS9D	Deck open sensor	0: Storage compartment is open
P022	0	SL51	Paper feed 3 solenoid	1:ON
(output)	1	SL52	Paper feed 4 solenoid	1:ON
	2	CL2D	Deck paper feed clutch	1:ON
	3	SL1D	Deck paper feed solenoid	1:ON
	4	M2D	Deck lifter motor	0: Lifter motor ON
	5	M2D	Deck lifter motor DOWN	1: Lift DOWN, 0: Lift UP
	6	SL2D	Deck paper compartment OPEN SL	1: SL ON
	7		Deck paper compartment button LED	1: LED lit
P023 to P025	0	M51	Cassette 3 pickup motor phase A output	
	1	M51	Cassette 3 pickup motor phase A* output	
	2	M51	Cassette 3 pickup motor phase B output	
	3	M51	Cassette 3 pickup motor phase B* output	
	4	M52	Cassette 4 pickup motor phase A output	
	5	M52	Cassette 4 pickup motor phase A* output	
	6	M52	Cassette 4 pickup motor phase B output	
	7	M52	Cassette 4 pickup motor phase B* output	
P024	0	M51	Cassette 3 pickup motor phase A output	
	1	M51	Cassette 3 pickup motor phase A* output	
	2	M51	Cassette 3 pickup motor phase B output	
	3	M51	Cassette 3 pickup motor phase B* output	
	4	M52	Cassette 4 pickup motor phase A output	
	5	M52	Cassette 4 pickup motor phase A* output	
	6	M52	Cassette 4 pickup motor phase B output	
	7	M52	Cassette 4 pickup motor phase B* output	
P025	0 to 7		For R&D	
P026	0		For R&D	
(input/output)	1		For R&D	
	2		For R&D	
	3		Cassette heater (for cassette 3/4) ON	0: Heater ON, 1: Heater OFF
	4		For R&D	
	5		For R&D	
	6		For R&D	
	7		For R&D	
P027	0		For R&D	
	1	M1D	Side deck pickup motor phase A output	
	2	M1D	Side deck pickup motor phase A* output	
	3	M1D	Side deck pickup motor phase B output	
	4	M1D	Side deck pickup motor phase B* output	
	5		For R&D	
	6	M1D	Deck motor current switching signal 0	See Table T05-401-09.
	7	M1D	Deck motor current switching signal 1	See Table T05-401-09.
P028	0		Cassette 3 paper feed current switching signal 0	See pulse motor current setting table (Table T05-401-08).
	1		Cassette 3 paper feed current switching signal 1	
	2		Cassette 4 paper feed current switching signal 0	See pulse motor current setting table (Table T05-401-08).
	3		Cassette 4 paper feed current switching signal 1	
	4		For R&D	
	5		For R&D	
	6		For R&D	
	7		For R&D	
P029	0	PS53	Cassette 3 retry sensor	1: Paper
(input/output)	1	PS57	Cassette 4 retry sensor	1: Paper
	2	PS2D	Deck no paper detection	1: Paper
	3	PS1D	Deck outlet paper sensor	1: Paper
	4	PS54	Cassette 3 paper detection	1: Paper
	5	PS58	Cassette 4 paper detection	1: Paper
	6		Pedestal model detection	1: Plain pedestal, 0: Cassette pedestal
	7	CL1D	Deck conveyor CL	1: CL ON
P30	0	FM2	Fixing exhaust fan full-speed	1: Full speed
(input/output)	1	FM2	Fixing exhaust fan half-speed	1: Half speed
	2	FM13	Vertical path delivery exhaust fan full-speed	1: Full speed
	3	FM13	Vertical path delivery exhaust fan half-speed	1: Half speed

Address	Bit	Symbol	Display	Remarks
	4	FM5	Delivery cooling fan full-speed	1: Full speed
	5	FM5	Delivery cooling fan half-speed	1: Half speed
	6		Waste toner LEDON	1: ON
	7	M11/12/13/ 14/15	Motor standby	1: Motor ON
	8	PS36	Pressure belt position sensor 1	
	9	PS37	Pressure belt position sensor 2	
	10	PS38	Pressure belt position sensor 3	
	11	PS33	Fixing belt position sensor 1	
	12	PS34	Fixing belt position sensor 2	
	13	PS35	Fixing belt position sensor 3	
	14		Toner container motor voltage switching	0: 24V (iR C5180/5185), 1: 18V (iR C4580/3880)
	15	FM12, 14	Face-down tray cooling fan front	0: Operating, 1: Stop
P31	0	FM4	Error in cleaner fan	0: Operating, 1: Stop
(input/output)	1	FM8	Error in delivery vertical path cooling	0: Operating, 1: Stop
	2	FM3	Error in host machine exhaust fan	0: Operating, 1: Stop
	3	FM2	Error in fixing exhaust fan	0: Operating, 1: Stop
	4	FM13	Error in vertical path delivery exhaust fan	0: Operating, 1: Stop
	5	FM5	Delivery cooling fan full-speed	0: Operating, 1: Stop
	6	FM11	ITB cooling power supply fan half-speed	1: Full speed
	7	FM11	ITB cooling power supply fan full-speed	1: Half speed
	8	-	Not in use	
	9	-	Not in use	
	10	FM4	Cleaner fan half-speed	0: Full speed
	11	FM4	Cleaner fan full-speed	0: Half speed
	12	FM8	Delivery vertical path cooling half-speed	1: Full speed
	13	FM8	Delivery vertical path cooling full-speed	1: Half speed
	14	FM3	Host machine exhaust fan full-speed	1: Full speed
	15	FM3	Host machine exhaust fan half-speed	1: Half speed
P32	0	TH1, TH3	Error in detection of temperature difference between fixing main thermistor and fixing sub thermistor 2	0: ERR
(input/output)	1	TH1, TH2	Error in detection of temperature difference between fixing main thermistor and fixing sub thermistor 1	0: ERR
	2	TH2, TH3	Error in detection of temperature difference between fixing sub thermistor 1 and fixing sub thermistor 2	0: ERR
	3	TH5, TH6	Detection of temperature difference of pressure thermistor	0: ERR
	4	FM11	Error in ITB cooling power supply fan	0: Operating, 1: Stop
	5	-	Not in use	
	6		Pressure thermistor connector signal	0: ERR, 1: CNCT
	7		Fixing thermistor connector signal	0: ERR, 1: CNCT
	8	FM14	Face-down tray cooling fan full-speed	1: Half speed
	9	FM14	Face-down tray cooling fan half-speed	1: Full speed
	10	-	Not in use	
	11	-	Not in use	
	12	-	Not in use	
	13	-	Not in use	
	14	-	Not in use	
	15	-	Not in use	
P33	0		Detection of overheating	1: ERR
(input/output)	1		Detection of temperature difference	1: ERR
	2		13V monitor signal	1: ERR, 0: ON
	3	PS30	Detection of fixing belt HP	1: ERR
	4	PS31	Detection of pressure belt HP	1: ERR
	5	-	Not in use	
	6	MSW1 to 4	Detection of door close	1: Close
	7	PS50, 5	Detection of fixing feeding unit close	1: Close
	8	TH1	Detection of high-temperature of fixing main thermistor	1: ERR
	9	TH2	Detection of high-temperature of fixing sub main thermistor 1	1: ERR
	10	TH3	Detection of high-temperature of fixing sub main thermistor 2	1: ERR
	11	TH5	Detection of high-temperature of pressure sub main thermistor 1	1: ERR
	12	TH6	Detection of high-temperature of pressure sub main thermistor 2	1: ERR
	13		Detection of triac short-circuit	0: ERR
	14	-	Not in use	

Address	Bit	Symbol	Display	Remarks
	15	-	Not in use	
P34	0	M24	Detection of fixing drive motor lock	0: Lock
(input/output)	1	-	Not in use	
	2		For R&D	
	3	PS47	Fixing arch sensor	
	4	-	Not in use	
	5	PS46	Fixing pressure release HP sensor	
	6	-	Not in use	
	7	-	Not in use	
	8	-	Not in use	
	9	-	Not in use	
	10	-	Not in use	
	11	-	Not in use	
	12	-	Not in use	
	13	-	Not in use	
	14	-	Not in use	
	15	-	Not in use	

T-19-15

0	1	Pulse motor current setting
0	0	100%
1	0	70%
0	1	31%
1	1	0%

T-19-16

0	1	Paper deck pulse motor current setting
0	0	100%
1	0	70%
0	1	50%
1	1	35%

19.3.3 R-CON

CLC5151 / / / CLC4040 / / / iR C4580i / / / iR C4080i / / / / Color Image Reader-F1 / Color Image Reader-E1 / Dupiex Color Image Reader-G1 / iR C5185N / / iR C5185i PRT /

- Color Image Reader-E1/F1

T-19-17

Indication	bit	Symbol	Item	Remarks
P001	0		delivery reversal motor CLK	
	1		DDIS IF (OPTO0-)	0: operation prohibited
	2		DDIS IF (SPRDY)	0: operation permitted
	3		DDIS IF (OPTI0)	0: active
	4	M1	ADF pickup motor CLK	
	5	FM1	Reader Cooling fan power ON signal	1: ON
	6	M2	ADF read motor CLK	
	7		size senor ON	1: ON
P002	0	M4	ADF shift motor CLK	
	1		24V power supply monitor	0: normal
	2-3		not used	
	4	M1	Reader scanner motor CLK	
	5		13V power supply monitor	0: normal
	6		Use it to switch between notations to suit the local needs.	0: others (OEM) 1: Canon
	7		DDIS IF (SCPRDY)	0: operation ready
P003	0		DDIS serial communication (TxD)	-
	1		ADF serial communication (TxD)	-
	2		DDIS serial communication (RxD)	-
	3		ADF serial communication (RxD)	-
	4		LED control	1: ON
	5		ADF serial communication (SCK)	-
	6-7		not used	

Indication	bit	Symbol	Item	Remarks
P004	0		original size detection 0	0: original present
	1		original size detection 1	0: original present
	2		original size detection 2	0: original present
	3		original size detection 3	0: original present
	4		DF connection detection	-
	5		DDIS IF (SRTS)	0: reception ready
	6		scanner motor Vref output	-
	7		not used	-
P005	0		PC connection IF (TxD)	-
	1		PC connecting IF (RxD)	-
	2		fan lock detection signal	0: enabled
	3		DDIS IF (SCTS)	0: reception ready
	4-7		not used	
P006	0		not used	-
	1		PCB check terminal	1: normal
	2		DDIS IF (OPTI1)	0: active
	3		DDIS IF (OPTO1)	0: active
	4		ADF sensor interrupt input	0: active
	5	PS502	copyboard open/closed sensor interrupt input 0	1: copyboard cover closed
	6		HP sensor interrupt input	1: HP
	7		not used	-
P007	0		address bus 16	-
	1		address bus 17	-
	2		address bus 18	-
	3-4		not used	-
	5		ADF pickup motor lock interrupt input	
	6		ADF pickup motor lock interrupt input	
	7		ADF delivery reversal motor lock interrupt input	
P008	0		lamp ON signal	1: on
	1		CCD drive ON signal	1: on
	2		wait signal	0: wait
	3		L light signal	0: active
	4		H light signal	0: active
	5		read signal	0: active
	6		ADF serial communication (LOAD)	0: enabled
	7		CPU clock output	-
P009	0		not used	
	1		shading RAM chip select	0: selected
	2		work RAM chip select	0: selected
	3		ASIC registration chip select	0: selected
	4		ROM chip select	0: selected
	5-7		not used	

- Color Image Reader-G1

T-19-18

Indication	bit	Symbol	Item	Remarks
P001	0		Delivery reversal motor CLK	
	1		DDIS IF (SLIVEWAKE)	0: Operation prohibited
	2		DDIS IF (SPRDY)	0: Operation permitted
	3		Not used	-
	4	M1	ADF pick-up motor CLK	
	5	FM1	Reader cooling fan power-on signal	1: ON
	6	M2	ADF read motor CLK	
	7		Document size sensor ON	1: ON
P002	0	M5	Registration motor CLK 2	
	1		24V power monitoring	0: Normal
	2	PI6	Color open/close sensor	1: Closed
	3	PS502	Pressure plate	1: Closed
	4	M1	Reader optical motor CLK	
	5		13V power monitoring	0: Normal
	6		Backside image completion signal	0: Image completed
	7		DDIS IF (SCPRDY)	0: Operation permitted

P003	0		DDIS serial communication (TxD)	-
	1		ADF serial communication (TxD)	-
	2		DDIS serial communication (RxD)	-
	3		ADF serial communication (RxD)	-
	4		LED control	1: ON
	5		ADF serial communication (SCK)	-
	6-7		Not used	-
P004	0		Document size detection 0	0: Document exists
	1		Document size detection 1	0: Document exists
	2		Document size detection 2	0: Document exists
	3		Document size detection 3	0: Document exists
	4		Not use	-
	5		DDIS IF (SRTS)	0: Receivable
	6		Optical motor Vref output	-
	7		Not use	-
P005	0		PC connection IF (TxD)	-
	1		PC connection IF (RxD)	-
	2	FM1	Reader fan lock detection signal	0: Lock detected
	3		DDIS IF (SCTS)	0: Receivable
	4-7		Not use	-
P006	0		Not use	-
	1		Terminal for board check	1: Normal
	2		DDIS IF (OPTI1)	0: Active
	3		DDIS IF (OPTO1)	0: Active
	4		ADF sensor interrupt input	
	5	M5	Input for registration motor clock 2	1: Copyboard closed
	6		Input for HP sensor interrupt	1: HP
	7	PI11	Read sensor 2	-
P007	0		Address bus 16	-
	1		Address bus 17	-
	2		Address bus 18	-
	3-4		Not use	-
	5		Input for ADF pick-up motor lock interrupt	
	6		Input for ADF read motor clock interrupt	
	7		Input for ADF delivery reversal motor lock interrupt	
P008	0		Not use	
	1		CCD driver ON signal	1: ON
	2		Wait signal	0: Wait
	3		L write signal	0: Active
	4		H write signal	0: Active
	5		Read signal	0: Active
	6		ADF serial communication (LOAD)	0: Enable
	7		CPU clock output	-
P009	0		Not use	-
	1		Shading RAM chip selection	0: Selection
	2		Work RAM chip selection	0: Selection
	3		ASIC resistor chip selection	0: Selection
	4		ROM chip selection	0: Selection
	5-7		Not use	-

19.3.4 FEEDER

CLC5151 / / / CLC4040 / / / iR C4580i / / / iR C4080i / / / / Color Image Reader-F1 / Color Image Reader-E1 / Dupiex Color Image Reader-G1 / iR C5185N / / iR C5185i PRT /

- Color Image Reader-E1/F1

T-19-19

Address	bit	Symbol	Indication	Remarks
P001	0	PI8	read sensor	0: paper present
	1	PI1	registration sensor	1: paper present
	2	PI9	delivery reversal sensor	0: paper present
	3	PI6	ADF open/closed sensor	0: ADF open
	4-7		not used	

Address	bit	Symbol	Indication	Remarks
P002	0		delivery reversal motor current setting 1	
	1		delivery reversal motor current setting 2	
	2		release motor current setting 1	
	3		release motor current setting 2	
	4	SL1	stamp solenoid drive	1: ON
	5	CL1	clutch drive	1: ON
	6	LED	original detection LED	1: ON
	7	FM1	fan motor drive	1: ON
P003	0		pickup motor current setting CUT	
	1		read motor current setting CUT	
	2		shift motor current setting	
	3		read motor mode setting	
	4		read motor current setting 1	
	5		read motor current setting 2	
	6		pickup motor current setting 1	
	7		pickup motor current setting 2	
P004	0	PS502	feeder cover open/closed sensor	0: feeder cover open
	1-6		not used	
	7		stamp	0: stamp present
P005	0		not used	
	1	PI2	release HP sensor	1: released
	2	PI9	delivery reversal sensor	0: paper present
	3	PI7	post-separation sensor	0: paper present
	4	PI4	LGL sensor	1: paper present
	5	PI3	A4R/LTRR identification sensor	1: AB
	6		not used	
	7	PI5	original placement sensor	0: paper present
P006	0-7		for R&D	
P007	0-7		for R&D	
P008	0-7		for R&D	
P009	0-7		for R&D	
P010	0-7		for R&D	
P011	0-7		for R&D	

- Color Image Reader-G1

T-19-20

Address	bit	Symbol	Indication	Remarks
P001	0	PCB3	Read sensor PCB	0: Paper exists
	1	PI1	Registration sensor	0: Paper exists
	2	PCB4	Delivery reversal sensor PCB	0: Paper exists
	3	PI12	Registration sensor 2	0: Paper exists
	4-7	-	Not used	
P002	0	M3	Delivery/reversal motor CUT	0: Delivery direction
	1	M3	Delivery/reversal motor CWB	0: At operation
	2	M1	Pick-up motor CUT	0: Delivery direction
	3	M1	Pick-up motor CWB	0: At operation
	4	M5	Registration motor 2 CUT	0: At operation
	5	M5	Registration motor 2 CWB	0: Delivery direction
	6	M2	For R&D (Read motor CUT)	0: W1-2 phaseÅiUsual operationÅjÅA1: 2W1-2ÅiFor R&DÅj
	7	M2	Read motor MODE	0: At operation
P003	0	CL1	Pick-up clutch ON signal	0: ON
	1	SL1	Stamp solenoid ON signal	0: ON
	2	FM1/FM5	Read motor cooling fan,Delivery motor/registration motor cooling fan	0: ON
	3	FM2/FM3	CIS unit cooling fan (front)/CIS unit cooling fan (rear)	0: ON
	4	-	Not used	
	5	-	Not used	
	6	PCB5	Document set LED	0: Display ON
	7	-	Not used	
P004	0	PI7	Size sensor 1	0: Paper exists
	1	PI8	Size sensor 2	0: Paper exists
	2	PI9	Size sensor 3	0: Paper exists
	3	PI10	Size sensor 4	0: Paper exists
	4	PCB2	Post-separation sensor PCB	0: Paper exists
	5	PI1	Registration sensor	0: Paper exists
	6	FM1/FM5	Read motor cooling fan,Delivery motor/registration motor cooling fan alarm	0: Alarm
	7	-	Not used	
P005	0	PI3	A4/LTR sensor	0: A4R
	1	PI4	LTR-R/LGL sensor	0: LGLÅiLargeÅj
	2	PI5	Document sensor	0: Paper exists
	3	PI6	Cover open/close sensor	0: Closed
	4	FM3	CIS unit cooling fan (rear) alarm	0: Alarm
	5	-	Not used	
	6	FM2	CIS unit cooling fan (front)/CIS unit cooling fan (front) alarm	0: Alarm
	7		Stamp detection	0: Stamp attached
P006	0		24V detection	0: Detection
	1	PCB4	Delivery/reversal sensor PCB	0: Paper exists
	2	PI2	Separation HP sensor	1: ON (protection against light)
	3	PI12	Registration sensor 2	0: Paper exists
	4	PCB3	Read sensor PCB	0: Paper exists
	5	PI11	Read sensor 2	0: Paper exists
	6	PI13	CIS glass shift HP sensor	0: HP
	7	-	Not used	
P007	0-7		Analog input for Post-separation sensor PCB	
P008	0-7		Analog input for read sensor PCB	
P009	0-7		Analog input for delivery/reversal sensor PCB	
P010	0-7		Analog input for document width volume	
P011	0-7		Analog input for post-separation sensor PCB	
P012	0-7		Analog input for read sensor PCB	

19.3.5 SORTER

CLC5151 / / / CLC4040 / / iR C4580i / / iR C4080i / / / / Color Image Reader-F1 / Color Image Reader-E1 / Dupiex Color Image Reader-G1 / iR C5185N / / iR C5185i PRT /

<Finisher X1>

T-19-21

address	bit	Symbol	description	remarks
P001	7		not used	
	6	SL1	gripper solenoid drive signal	1: drive
	5	-	stapler HP detection	0: detection
	4	M5	offset motor operation permission signal	1: drive
	3	M5	offset motor / phase B	1:ON
	2	M5	offset motor phase B	1:ON
	1	M5	offset motor / phase A	1:ON
	0	M5	offset motor phase A	1:ON
P002	7			
	6	M3	feed motor current switch signal	0:ON
	5	M3	feed motor phase A (interrupting input) IRQ5	1:ON
	4	M2	main tray motor operation permission signal	0:ON
	3	M2	main tray motor rotation mode (CCW)	1: negative rotation
	2	M2	main tray motor rotation mode (CW)	1: positive rotation
	1		(writing built-in flash)	1: writing
	0		(writing built-in flash)	1: writing
P003	7		not used	
	6	SR5	main tray lower limit detection	0: detection
	5		not used	
	4		not used	
	3		not used	
	2		not used	
	1	SR3	main tray paper detection	1: detection
	0	SR4	main tray loading volume (300 sheets) detection	1: detection
P004	7		staple motor operation permission signal	
	6	M1	staple motor rotation mode (CCW)	1: negative rotation
	5	M1	staple motor rotation mode (CW)	1: positive rotation
	4		not used	
	3	SL2	offset solenoid drive signal	1: drive
	2		not used	
	1		not used	
	0		not used	
P005	7	-	stapler READY signal	1: detection
	6	-	staple detection	1: detection
	5		not used	
	4		not used	
	3		not used	
	2		not used	
	1		not used	
	0		not used	
P006	7		not used	
	6		not used	
	5		not used	
	4		not used	
	3		not used	
	2	SR8	stack delivery motor operation permission signal	1:ON
	1	SR8	stack delivery motor Phase B	1:ON
	0	SR8	stack delivery motor Phase A	1:ON
P007	7		not used	
	6	M3	feed motor operation permission signal	0:ON
	5	M3	feed motor current switch 3	1:ON
	4	M3	feed motor current switch 2	1:ON
	3	M3	feed motor current switch 1	1:ON
	2	M3	feed motor current switch 0	1:ON
	1	M3	feed motor phase B	1:ON
	0	M3	feed motor phase B	1:ON
P008	7		not used	
	6		not used	
	5		not used	
	4	SR6	stack tray paper surface detection	1: detection
	3	SR7	processing tray paper presence detection	1: detection
	2	SR8	stack delivery HP detection	1: detection
	1	SR1	offset HP detection	1: detection
	0	SR2	inlet sensor	1: detection

address	bit	Symbol	description	remarks
P009	7		not used	
	6		not used	
	5		not used	
	4		not used	
	3		not used	
	2		not used	
	1		not used	
	0		not used	
P010	7		not used	
	6		not used	
	5		not used	
	4		not used	
	3		not used	
	2		not used	
	1		not used	
	0	M2	main tray motor clock signal IRQ6	0:ON
P011	7		not used	
	6		not used	
	5		not used	
	4		DIP_SW4	
	3		DIP_SW3	
	2		DIP_SW2	
	1		DIP_SW1	
	0		PUSH_SW	
P012	7		not used	
	6		not used	
	5		not used	
	4		not used	
	3		EEPROM_DI	
	2		EEPROM_DO	
	1		EEPROM_SK	
	0		EEPROM_CS	
P013	7		not used	
	6		not used	
	5		24V power ON	
	4	SW2	finger safety SW	1: detection
	3	SW1	joint open detection	1: detection
	2		not used	
	1		not used	
	0		finisher pilot LED	

<Finisher W1/W2>

T-19-22

Address	bit	Symbol	Description	Remarks
P001	0		inlet feed motor phase A signal	
	1		inlet feed motor phase B signal	
	2		inlet feed motor phase A* signal	
	3		inlet feed motor phase B* signal	
	4		escape feed motor phase A signal	
	5		escape feed motor phase B signal	
	6		escape feed motor phase A* signal	
	7		escape feed motor phase B* signal	
P002	0		punch feed motor phase A signal	
	1		punch feed motor phase B signal	
	2		punch feed motor phase A* signal	
	3		punch feed motor phase B* signal	
	4		tray motor CLK signal	
	5	M106	swing locking motor current switchover I0	0ÅFON
	6		swing locking motor phase A signal	
	7		swing locking motor phase B signal	

Address	bit	Symbol	Description	Remarks
P003	0		TxD for external source	
	1		TxD for write	
	2		RxD for external	
	3		RxD for write	
	4	-	punch connection detection	0: connected
	5		OUT for punch communication	
	6-7		not used	
P004	0-1		not used	
	2	-	saddle connection detection	0: connected
	3		upper tray FG (IRQ3*)	
	4	PI105	swing lock HP sensor	1: HP
	5		not used	
	6	PI102	front cover open/closed sensor	0: open
	7		not used	
P005	0		TxD for punch communication	
	1		RxD punch for punch communication	
	2		IN for punch communication (IRQ2*)	
	3-7		not used	
P006	1	M108	lower tray motor LOCK	0: locked
	2		not used	
	3	M108	lower tray motor ON	0: ON
	4		not used	
	5		motor standby signal	
	6-7		not used	
P007	0-7		not used	
P008	0	-	lower tray area sensor 1 (Tray 2 shift area sensor PCB)	0: detected
	1	-	lower tray area sensor 2(Tray 2 shift area sensor PCB)	0: detected
	2	-	lower tray area sensor 3(Tray 2 shift area sensor PCB)	0: detected
	3		not used	
	4		punch feed motor CLK (IRQ4*)	
	5		lower tray FG (IRQ5*)	
	6		inlet feed motor lock input (IRQ6*)	
	7		stack edging motor clock input (IRQ7*)	
P009	0		not used	
	1	PI115	lower tray paper surface sensor	0: paper present
	2	PI120	1700-sheet paper surface sensor	0: paper present
	3	NSW103	upper tray interlock	1: error
	4	-	upper tray area sensor 1(Tray 1 shift area sensor PCB)	0: detected
	5	-	upper tray area sensor 2(Tray 1 shift area sensor PCB)	0: detected
	6	-	upper tray area sensor 3(Tray 1 shift area sensor PCB)	0: detected
	7		not used	
P010	0	M113	inlet feed motor current switch I1	0ÅFON
	1	M113	inlet feed motor current switch I0	0ÅFON
	2	M63	punch feed motor current switch I1	0ÅFON
	3	M63	punch feed motor current switch I0	0ÅFON
	4	M63	punch feed motor standby	0ÅFON
	5	M112	escape feed motor I0	0ÅFON
	6	M112	escape feed motor I1	0ÅFON
	7	M112	escape feed motor standby	0ÅFON
P011	0	M107	upper tray motor CW/CCW	1: CCW/0: CW
	1	M107	upper tray motor ON	0: ON
	2	M107	upper tray motor LOCK	0: locked
	3		solenoid ON signal	
	4-5		not used	
	6	M108	lower tray motor CW/CCW	1: CCW/0: CW
	7	PI104	delivery path sensor	1: paper present
P012	0	SL101	inlet roller shift solenoid	1ÅFON
	1	SL102	buffer roller shift solenoid	1ÅFON
	2		expansion IO chip select signal (CS2*)	
	3		IPC chip select (CS3*)	
	4-7		not used	
P013	0-3		not used	
	4	SL105	escape flapper solenoid ON signal	1: ON
	5		EEPROM output signal	
	6		EEPROM enable signal	
	7		EEPROMCLK	

Address	bit	Symbol	Description	Remarks
P014	0		EEPROM input signal	
	1	PI106	aligning plate FHP sensor	1: HP
	2	PI107	aligning plate RHP sensor	1: HP
	3	PI108	handling tray paper sensor	1: paper present
	4	PI109	trailing edge assist HP sensor	1: HP
	5		for machine download	
	6-7		not used	
P015	0		aligning plate R motor phase A signal	
	1		aligning plate R motor phase B signal	
	2	M104	aligning pate R motor current switch I0	0: ON
	3-7		not used	
P016	0		aligning plate F motor phase A signal	
	1		aligning plate F motor phase B signal	
	2	M103	aligning plate F motor current switch I0	0: ON
	3-7		not used	
P017	0		trailing edge assist motor phase A signal	
	1		trailing edge assist motor phase B signal	
	2	M109	trailing edge assist motor current switch I0	0: ON
	3	M109	trailing edge assist motor current switch I1	0: ON
	4	M109	trailing edge assist motor standby signal	0: ON
	5-7		not used	
P018	0	M111	stapler shift motor standby signal	0: ON
	1	M111	stapler motor direction switch CCW	1: ON
	2	M111	stapler motor direction switch CW	1: ON
	3		not used	
	4		stapler shift motor phase A signal	
	5		stapler shift motor phase B signal	
	6-7		not used	
P019	0	PI118	escape tray path sensor	1: paper present
	1	PI119	escape tray full sensor	1: full
	2	-	stapler HP detection	1: HP
	3	-	stapler READY	
	4	-	stapler LS	1: staple present
	5	PI121	escape feed upper cover sensor	1: close
	6	PI110	stapler shift HP sensor	1: HP
	7	PI116	stapler alignment interference sensor	1: interference
P020	0	M105	stapler shift motor current switch I0	0: ON
	1	M105	stapler shift motor current switch I1	0: ON
	2	SL103	No. 1 delivery motor shift solenoid	1: ON
	3	SL104	buffer trailing edge retaining solenoid	1: ON
	4	CL102	stack edging lower roller clutch	1: ON
	5	CL101	shutter open/close clutch	1: ON
	6	M102	stack edging motor current switch I1	0: ON
	7	M102	stack edging motor current switch I0	0: ON
P021	0		stack feeding motor phase A signal	
	1		stack edging motor phase B signal	
	2		stack feeding motor phase A* signal	
	3		stack edging motor phase B* signal	
	4	PI114	upper tray paper surface sensor	1: paper present
	5	NSW104	stapler interlock	1: open
	6	PI113	shutter HP sensor	1: HP
	7	NSW102	swing guide interlock	1: open
P022	0		DIPSW_8	
	1		DIPSW_7	
	2		DIPSW_6	
	3		DIPSW_5	
	4		DIPSW_4	
	5		DIPSW_3	
	6		DIPSW_2	
	7		DIPSW_1	

Address	bit	Symbol	Description	Remarks
P023	0		PUSHSWÇP	
	1		PUSHSWÇQ	
	2		PUSHSW	
	3	PI111	upper tray paper sensor	0: paper present
	4	PI112	lower tray paper sensor	0: paper present
	5		24V detection	
	6	NSW101	front cover interlock	1: open
	7		not used	
P024	0		not used	
	1		LED1	
	2		LED2	
	3		LED3	
	4		X4-POWER-ON signal	
	5-7		not used	
P025	0		saddle guide motor phase A signal	
	1		saddle guide motor phase B signal	
	2	M3	saddle guide motor current switch I0	0: ON
	3	M1	saddle feed motor current switch I0	0: ON
	4		saddle feed motor phase A signal	
	5		saddle feed motor phase B signal	
	6		saddle feed motor phase A* signal	
	7		saddle feed motor phase B* signal	
P026	0		saddle alignment motor phase A signal	
	1		saddle alignment motor phase B signal	
	2	M5	saddle alignment motor current switch I0	0: ON
	3	M8	saddle paper positioning motor current switch I0	0: ON
	4		saddle paper positioning motor phase A signal	
	5		saddle paper position motor phase B signal	
	6		solenoid PWM	
	7		saddle folding motor PWM	
P027	0-7		not used	
P028	0		saddle front stapling current detection	
	1		saddle rear stapling current detection	
	2	MSW3	saddle delivery door connection detection	1: detected
	3-5		not used	
	6	-	saddle stapler unit connection detection	1: detected
	7		not used	
P029	0	SW4	saddle rear staple detecting switch	0: detected
	1	SW6	saddle front staple detecting switch	0: detected
	2		saddle front stapler CCW	
	3	M105	stapler feed motor standby	0: ON
	4-7		not used	
P030	0-1		not used	
	2	M2	saddle folding motor FWD (CW)	1: ON
	3	M2	saddle folding motor RV (CCW)	1: ON
	4		saddle folding CLK sensor (IRQ0*)	
	5		saddle butting CLK sensor (IRQ1*)	
	6	SW5	saddle rear stapler HP sensor (IRQ2*)	1: HP
	7	SW7	saddle front stapler HP sensor (IRQ3*)	1: HP
P031	0	PI21	saddle position HP sensor	0ÅFHP
	1	PI13	saddle guide HP sensor	1ÅFHP
	2	PI9	inlet cover sensor	1ÅFdetected
	3	-	saddle stapler unit sensor	0: detected
	4	PI14	saddle butting HP sensor (IRQ4*)	1: HP
	5	PI15	saddle butting TOP sensor (IRQ5*)	1: butting position
	6	PI16	trimmer IN (IRQ6*)	0: ON
	7		saddle feed motor CLK (IRQ7*)	
P032	0	PI6	saddle tray paper sensor	0: paper present
	1	PI8	positioning plate paper sensor	0: paper present
	2	PI12	saddle crescent roller sensor	0: HP
	3	PI11	saddle delivery sensor	0: paper present
	4	PI18	saddle trailing edge sensor 1	1: detected
	5	PI19	saddle trailing edge sensor 2	1: detected
	6	PI20	saddle trailing edge sensor 3	1: detected
	7	PI17	saddle path sensor	1: detected

Address	bit	Symbol	Description	Remarks
P033	0	M8	saddle butting motor EN	1: ON
	1	M8	saddle butting motor FWD (CW)	1: ON
	2	M8	saddle butting motor RV (CCW)	1: ON
	3	PI4	saddle folding HP sensor	0: HP
	4		not used	
	5	PI11	saddle delivery sensor	0: paper present
	6	PI5	saddle aligning plate HP sensor	0: HP
	7		not used	
P034	0	SL5	saddle inlet solenoid	1: ON
	1	SL1	saddle No. 1 flapper solenoid	1: ON
	2	SL2	saddle No. 2 flapper solenoid	1: ON
	3	SL4	saddle pickup solenoid	1: ON
	4-6		not used	
	7	PI22	saddle inlet sensor	1: detected
P035	0	M6	saddle rear stapler CW (CW)	0: ON
	1	M6	saddle rear stapler CCW (CCW)	0: ON
	2	M7	saddle front stapler CW (CW)	0: ON
	3		chip select (CS1*)	
	4-7		not used	
P036	0		DIPSW_1	
	1		DIPSW_2	
	2		DIPSW_3	
	3		DIPSW_4	
	4		DIPSW_5	
	5		DIPSW_6	
	6		DIPSW_7	
	7		DIPSW_8	
P037	0		not used	
	1		PUSHSW1	
	2		5V detection signal	
	3		24V detection signal	
	4		for revision control	
	5		for revision control	
	6		for revision control	
	7		for revision control	
P038	0		download ON signal	
	1-3		not used	
	4		LED3	
	5		LED2	
	6		LED1	
	7		power-on signal	
P039	0		DIPSW1	
	1		DIPSW2	
	2		DIPSW3	
	3		not used	
	4		PCH-OUT	
	5	-	trailing edge sensor	1: ON
	6		punch encoder lock	
	7	PI63	punch HP sensor	0: detected
P040	0		PCH-IN	
	1		RxD	
	2		TxD	
	3-7		not used	
P041	0		EEPROM-IN	
	1		EEPROM-OUT	
	2		EEPROM-CLK	
	3		EEPROM-CS	
	4	PI61	horizontal registration HP sensor	1ÅFON
	5	M62	horizontal registration motor STB	0ÅFON
	6	M61	punch motor CCW	0ÅFON
	7	M61	punch motor CW	0ÅFON
P042	0-3		not used	
	4		DIPSW4	
	5	M62	horizontal registration motor CUR	0ÅFON
	6		PWM	
	7		not used	

Address	bit	Symbol	Description	Remarks
P043	0		LED1	
	1		horizontal registration motor INA	
	2		horizontal registration motor INB	
	3		LED2	
	4	PI101	front cover sensor	0: close
	5		BOOTMODE	
	6		PUSHSW2	
	7		PUSHSW1	
P044	0-4		not used	
	5	PI121	upper cover sensor	1: open
	6-7		not used	
P045	ADDRA		not used	
P046	ADDRB		not used	
P047	AD0		trailing edge sensor	
P048	AD1		B5R sensor	
P049	AD2		A4R sensor	
P050	AD3		B4 sensor	
P051	AD6		dust sensor	
P052	AD7		A3 sensor	

19.3.6 MN-CONT

CLC5151 / / / CLC4040 / / iR C4580i / / iR C4080i / / / / Color Image Reader-F1 / Color Image Reader-E1 / Dupiex Color Image Reader-G1 / iR C5185N / / iR C5185i PRT /

T-19-23

Address	Bit	Symbol	Sign	Remarks
P001	0		I/O port for general-purpose (P1-board)	
	1		I/O port for general-purpose (S-board)	
	2		I/O port for general-purpose (R-board)	
	3		I/O port for general-purpose (P0-board)	
	4		Test packet issuance request to the image processing ASIC	
	5		DDI-P POWER signal	L:ON
	6		Delivery count (Control card, Coin machine)	H:At delivery
	7		Pick-up count (Control card, Coin machine)	H:At pick-up
P002	0		CPU reset cancel signal	
	1		Image processing ASIC reset signal	
	2		DDI-P CTS signal (Printer -> Controller)	
	3		DDI-P RTS signal (Controller -> Printer)	
	4		DDI-P Power Ready signal (Controller -> Printer)	
	5		DDI-P Power Ready signal (Printer -> Controller)	
	6		Copy allowing signal (Control card)	
	7		Copy allowing signal (Coin machine)	
P003	0	FM7	Controller cooling fan ON signal	1:ON 0:OFF
	1	-	USB host Power (5V) control signal	1:ON 0:OFF
	2		PCI Serror interruption clear	
	3		FAX reset signal	
	4		for R&D	
	5		for R&D	
	6		for R&D	
	7		for R&D	
P004	0		for R&D	
	1	-	FAX board connection detection	0: Unconnected 1: Connected
	2	-	FAX board connection detection	0: Unconnected 1: Connected
	3	-	FAX board connection detection	0: Unconnected 1: Connected
	4	-	Control panel connection check	0: Connected 1: Unconnected
	5		DIMM judgment	
	6		DIMM judgment	
	7		DIMM judgment	
P005	0		Open Interface Power Ready signal	
	1		Watch dog function	
	2		Watch dog interruption clear	
	3		DDI-S Livewake signal	
	4		DDI-S Download signal	
	5		DDI-P Livewake signal	
	6		DDI-P Download signal	
	7		for R&D	

Address	Bit	Symbol	Sign	Remarks
P006	0		Main controller PCB version	
	1		Main controller PCB version	
	2		Main controller PCB version	
	3		Main controller PCB version	
	4		Coin machine controller Power Ready signal	
	5		Coin machine Power Ready signal	
	6		Coin machine Communication Ready signal	
	7		for R&D	
P007	0		not used	
	1		not used	
	2		Power control signal	
	3-6		not used	
	7	-	Modem board detection signal	0: Connected 1: Unconnected
P008	0		FRAM CLK	
	1		FRAM DATA	
	2		FRAM WP	
	3-7		not used	
P009	0		SPD CLK	
	1		SPD DT	
	2-7		not used	
	5	-	Emergency night power source (13V) ON signal	0:OFF 1:ON
	6	-	Emergency night power source switching signal	0: High efficiency 1: Standard
	7	-	Emergency night power source (24V) ON signal	0:OFF 1:ON
P010	0	-	LCD Backlit switch control signal	0:ON 1:OFF
	1		not used	
	2		SDRAM structure detection	
	3		SDRAM structure detection	
	4		Watch dog timer CLK	
	5		Emergency night power source reset signal	
	6,7		not used	
P011	0-7		not used	
P012	0-7		not used	
P013	0-7		not used	
P014	0-7		not used	
P015	0-7		not used	
P016	0-7		not used	

19.4 ADJUST (Adjustment Mode)

19.4.1 COPIER

19.4.1.1 COPIER Table

CLC5151 / / / CLC4040 / / iR C4580i / / iR C4080i / / / / Color Image Reader-F1 / Color Image Reader-E1 / Dupiex Color Image Reader-G1 / iR C5185N / / iR C5185i PRT /

1. ADJ-XY
Adjust the scanner image leading edge position
*1 For iR C5185 only

T-19-24

COPIER>ADJUST>ADJ-XY		
Sub item	**Description**	**level.**
ADJ-X	Use it to adjust the scanner image leading edge position (i.e., image read start position in sub scanning direction). Method of adjustment - if the non-image width is larger than indicated, decrease the setting. - if an area outside the original is copied, increase the setting. - an increase by '1' will move the image read start position toward the trailing edge by 0.1 mm (i.e., move the image read area toward the trailing edge). - if you have initialized the RAM of the reader controller PCB or replaced the reader controller PCB, enter the value indicated on the service label. Range of Adjustment 1 to 100 [Factory default/After RAM clear: 20(iRC5185:18)] **Attention** If you have changed the setting, be sure to record the new setting on the service label.	1

COPIER>ADJUST>ADJ-XY		
Sub item	**Description**	**level.**
ADJ-Y	Use it to adjust the read start cell position of the CCD (i.e., image read start position in main scanning direction). Method of Adjustment - if the non-image width is larger than indicated, decrease the setting. - if an area outside the original is copied, increase the setting. - an increase by '1' will move the image read start position toward the front by 0.1 mm (i.e., move the image read area toward the front). - if you have initialized the RAM on the reader controller PCB or replaced the reader controller PCB, enter the value indicated on the service label. Range of Adjustment 47 to 131 (iRC5185:36 to 236)[Factory default/After RAM clear: 90(iRC5185:136)] **Attention** If you have changed the setting, be sure to record the new setting on the service label.	1
ADJ-S	Use it when entering the adjustment value for the scanner shading measurement position. Method of Adjustment - a decrease by '1' will move the shading measurement position toward the leading edge by 0.1 mm. - if you have initialized the RAM on the reader controller PCB or replaced the reader controller PCB, enter the value indicated on the service label. Range of Adjustment 40 to 60 [Factory default/After RAM clear: 50] **Attention** If you have changed the setting, be sure to record the new setting on the service label. (Not used for iRC5185) ÅECOPIER>FUNCTION>CCD>SH-PS-ST	1
ADJ-Y-DF	Use it to adjust the main scanning points for DF SRAM reading mode. Method of Adjustment - an increase by '1' will move the image read start position to the front by 0.1 mm. - if you have initialized the RAM on the reader controller PCB or replaced the reader controller PCB, enter the value indicated on the service label. Range of Adjustment 21 to 106(iRC5185:2 to 202) [Factory default/After RAM clear: 53(iRC5185:102)] **Attention** If you have changed the setting, be sure to record the new setting on the service label.	1
STRD-POS	Use it to adjust the CCD read position for DF stream reading mode. Method of Adjustment - an increase by '1' will move the image read position to the left by 1 mm. - if you have initialized the RAM on the reader controller PCB or replaced the reader controller PCB, enter the value indicated on the service label. Range of Adjustment 1 to 200 [Factory default/After RAM clear: 110] **Attention** If you have changed the setting, be sure to record the new setting on the service label.	1
ADJ-X-MG*1	Fine adjustment of magnification for the sub scanning direction at copyboard reading by the reader Compare the document and output paper and make a fine adjustment. - Increase the value when the size of the output paper is small. - Decrease the value when the size of the output paper is large. Setting range: -56 to 220 [Factory setting value / Value after RAM clear: 0] **Attention** Since this mode is used to adjust the position of an image for copy operation, this may affect an image for SEND operation.	1
ADJY-DF2*1	Adjustment of the backside position for the main scanning direction at one-path double-sided mode by ADF Setting range: 56 to 210 [Factory setting value / Value after RAM clear: 120] Method of Adjustment Set this mode when replacing the reader controller PCB. Adjustment is not basically required for other cases than the above.	1

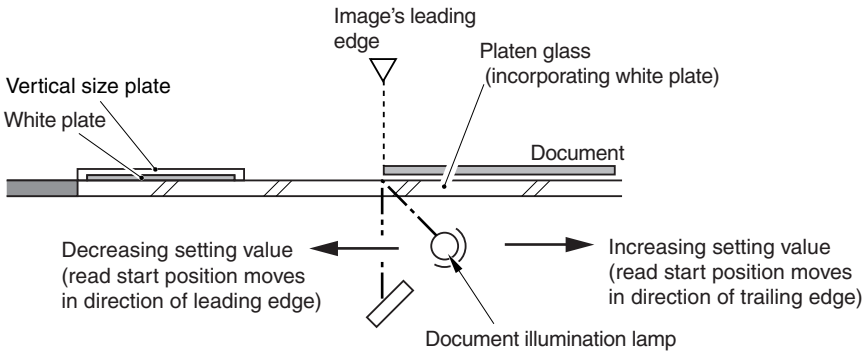

F-19-17

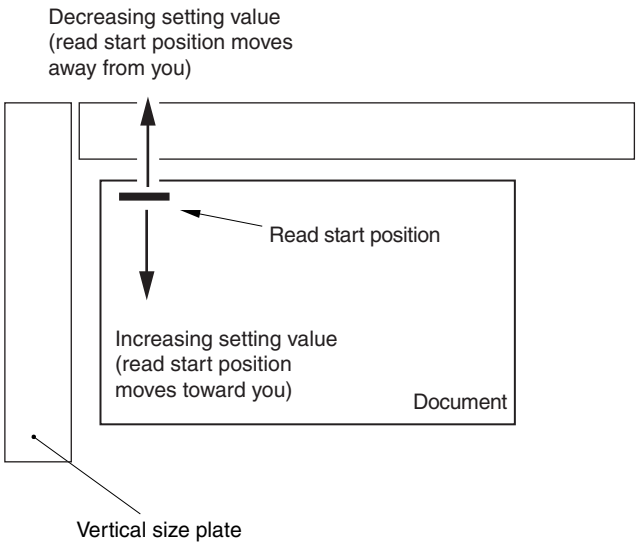

F-19-18

2. CCD
*1 For iRC5185 only
*2 No value can be entered for iRC5185. Recalculation is performed based on the setting values of "COPIER>ADJUST>CCD>DF-LNRCCD-RG/GB" and "FC-CDU-RG/GB"

T-19-25

COPIER>ADJUST>CCD		
Sub item	**Description**	**level.**
W-PLT-X/Y/Z	Use it when entering the white label data indicated on the standard white plate. Method of Adjustment - if you have initialized the RAM on the reader controller PCB or replaced the reader controller PCB, enter the value indicated on the service label. - if you have replaced the copyboard glass, enter the value indicated on the copyboard glass. (See the figure below) Range of Adjustment: 1 to 9999 [Factory default/After RAM clear: W-PLT-X=8271: W-PLT-Y=8735: W-PLT-Z=9418] **Attention** If you have changed the setting, be sure to record the new setting on the service label.	1
CCDU-RG	Use it to correct color displacement in sub scanning direction between RG associated with the CCD unit. Method of Adjustment - if you have initialized the RAM on the reader controller or replaced the reader controller PCB, enter the value indicated on the service label. Range of Adjustment: -9 to 9 [Factory default/After RAM clear: 0] **Attention** If you have changed the setting, be sure to record the new setting on the service label.	1
CCDU-GB	Use it to correct color displacement in sub scanning direction between GB associated with the CCD unit. Method of Adjustment - if you have initialized the RAM on the reader controller or replaced the reader controller PCB, enter the value indicated on the service label. Range of Adjustment: -9 to 9 [Factory default/After RAM clear: 0]	1
FCCDU-RG	Use it to correct color displacement in sub scanning direction between R and G associated with the CCD unit at time of shipment. Method of Adjustment - if you have initialized the RAM on the reader controller PCB or replaced the reader controller PCB, enter the value indicated on the service label. Range of Adjustment: -9 to 9 [Factory default/After RAM clear: 0] **Attention** If you have changed the setting, be sure to record the new setting on the service label.	1
FCCDU-GB	Use it to correct color displacement in sub scanning direction between GB associated with the CCD unit at time of shipment. Method of Adjustment - if you have initialized the RAM on the reader controller PCB or replaced the reader controller PCB, enter the value indicated on the service label. Range of Adjustment: -9 to 9 [Factory default/After RAM clear: 0] **Attention** If you have changed the setting, be sure to record the new setting on the service label.	1
50-RG*2	Use it to indicate the degree of offset (color displacement; RG) for book mode at 50% reading. Method of Adjustment - if you have initialized the RAM on the rear controller or replaced the reader controller PCB, enter the value indicated on the service label. Range of Adjustment: -256 to 256 [Factory default/After RAM clear: 0] **Attention** If you have changed the setting, be sure to record the new setting on the service label.	1

COPIER>ADJUST>CCD		
Sub item	**Description**	**level.**
50-GB*2	Use it to indicate the degree of offset (color displacement; GB) for book mode at 50% reading. Method of Adjustment - if you have initialized the RAM on the reader controller PCB or replaced the reader controller PCB, enter the value indicated on the service label. Range of Adjustment: -256 to 256 [Factory default/After RAM clear: 0] **Attention** If you have changed the setting, be sure to record the new setting on the service label.	1
100-RG*2	Use it to indicate the degree of offset (color displacement; RG) for book mode at 100% reading. Method of Adjustment - if you have initialized the RAM on the reader controller PCB or replaced the reader controller PCB, enter the value indicated on the service label. Range of Adjustment: -256 to 256 [Factory default/After RAM clear: 0] **Attention** If you have changed the setting, be sure to record the new setting on the service label.	1
100-GB*2	Use it to indicate the degree of offset (color displacement; GB) for book mode at 100% reading. Method of Adjustment - if you have initialized the RAM on the reader controller PCB or replaced the reader controller PCB, enter the value indicated on the service label. Range of Adjustment: -256 to 256 [Factory default/After RAM clear: 0] **Attention** If you have changed the setting, be sure to record the new setting on the service label.	1
50DF-RG*2	Use it to indicate the degree of offset (color displacement RG) for ADF mode at 50% reading. Method of Adjustment - if you have initialized the RAM on the reader controller PCB or replaced the reader controller PCB, enter the value indicated on the service label. Range of Adjustment: -256 to 256 [Factory default/After RAM clear: 0] **Attention** If you have changed the setting, be sure to record the new setting on the service label.	1
50DF-GB*2	Use it to indicate the degree of offset (color displacement; GB) for ADF mode at 50% reading. Method of Adjustment - if you have initialized the RAM on the reader controller PCB or replaced the reader controller PCB, enter the value indicated on the service label. Range of Adjustment: -256 to 256 [Factory default/After RAM clear: 0] **Attention** If you have changed the setting, be sure to record the new setting on the service label.	1
100DF-RG*2	Use it to indicate the degree of offset (color displacement; RG) for ADF mode at 100% reading. Method of Adjustment - if you have initialized the RAM on the reader controller PCB or replaced the reader controller PCB, enter the value indicated on the service label. Range of Adjustment: -256 to 256 [Factory default/After RAM clear: 0] **Attention** If you have changed the setting, be sure to record the new setting on the service label.	1
100DF-GB*2	Use it to indicate the degree of offset (color displacement; GB) for ADF mode at 100% reading. Method of Adjustment - if you have initialized the RAM on the reader controller PCB or replaced the reader controller PCB, enter the value indicated on the service label. Range of Adjustment: -256 to 256 [Factory default/After RAM clear: 0] **Attention** If you have changed the setting, be sure to record the new setting on the service label.	1
DFTAR-R	Use it when entering the shading target value (red) for use when the DF is used (i.e., normal original read position). Method of Adjustment - COPIER>FUNCTION>CC>WLVL1/DF-WLVL2 if the image has a fault when the foregoing service mode item has been executed (e.g., as caused by soiling of the chart), enter the factory measurement using this mode item. - if you have initialize the RAM on the reader controller PCB or replaced the reader controller PCB, enter the value indicated on the service label. Range of Adjustment: 1 to 2047 [Factory default/After RAM clear: 1159] **Attention** If you have changed the setting, be sure to record the new setting on the service label.	1
DFTAR-G	Use it when entering the shading target (green) for the DF (normal original reading position). Method of Adjustment - COPIER>FUNCTION>CD>DF-WLVL1/DF-WLVL2 if the image starts to develop a fault after executing the foregoing service mode item (e.g., as caused by soiling of the chart), enter the factory measurement using this mode. - if you have initialized the RAM on the reader controller PCB or replaced the reader controller PCB, enter the value indicated on the service label. Range of Adjustment: 1 to 2047 [Factory default/After RAM clear: 1189] **Attention** If you have changed the setting, be sure to record the new setting on the service label.	1

COPIER>ADJUST>CCD		
Sub item	**Description**	**level.**
DFTAR-B	Use it to enter the shading target value (blue) for the DF (normal original read position). Method of Adjustment - COPIER>FUNCTION>CCD>DF-WLVL1/DF-WLVL2 if the image starts to develop a fault after executing the foregoing service mode item, enter the factory measurement using this mode item. - if you have initialized the RAM on the reader controller PCB or replaced the reader controller PCB, enter the value indicated on the service label. Range of Adjustment: 1 to 2047 [Factory default/After RAM clear: 1209] Attention If you have changed the setting, be sure to record the new setting on the service label.	1
MTF2-M1 to 9*1	Setting value of MTF for the main scanning direction at front side reading M1: Front side for Red, M2: Center for Red, M3: Rear side for Red M4: Front side for Green, M5: Center for Green, M6: Rear side for Green M7: Front side for Blue, M8: Center for Blue, M9: Rear side for Blue Range of Adjustment: 20 to 80%, incremented by 1% (Default: 50) Method of Adjustment Enter the service label value to this mode when replacing the reader controller PCB / executing RCON clear. The MTF filter coefficient to be set for ASIC of the machine is recalculated based on the entered value. This value does not need to be set in cases other than replacement of the reader controller PCB / execution of RCON clear. [Factory setting value: MTF value set for each machine]	1
MTF2-S1 to 9*1	Setting value of MTF for the sub scanning direction at front side reading S1: Front side for Red, S2: Center for Red, S3: Rear side for Red S4: Front side for Green, S5: Center for Green, S6: Rear side for Green S7: Front side for Blue, S8: Center for Blue, S9: Rear side for Blue Range of Adjustment: 20 to 80%, incremented by 1% (Default: 50) Method of Adjustment Enter the service label value to this mode when replacing the reader controller PCB / executing RCON clear. The MTF filter coefficient to be set for ASIC of the machine is recalculated based on the entered value. This value does not need to be set in cases other than replacement of the reader controller PCB / execution of RCON clear. [Factory setting value: MTF value set for each machine]	1
DFCH2R2 DFCH2R10 DFCH2B2 DFCH2B10 DFCH2G2 DFCH2G10 *1	Setting of the linearity characteristic data value of the CCD DF composite chart (No.2 or No.10) data (Red/Blue/Green) DFCH2xy x: R=Red, B=Blue, G=Green y: 2=Chart No. 2, 10=Chart No. 10 Since ADF of E232/E307, which provides double-sided simultaneous reading mode, uses different reading sensors (CIS/CCD) for front and backside, there may be density difference between the images on front and backside. To minimize the density difference between front and backside, the machine reads the linearity characteristic data value of the DF composite chart No. 2 data (Red) and sets a standard value for the front side reading sensor (CCD sensor). Range of Adjustment: 1 to 255 (Default: 200) Method of Adjustment DFCH2R2/DFCH2B2/DFCH2G2: 1 to 2550 (Default: 200) DFCH2R10/DFCH2B10/DFCH2G10: 0 to 2550 (Default: 10) [When replacing the reader controller PCB] When replacing the reader controller PCB, enter the data indicated on the service label to this mode and execute FUNCTION>CCD>DF-LNR to recalculate the gain offset value for matching colors on front and backside. [When replacing the CCD unit] When replacing the CCD unit, enter the value indicated on the label contained in the CCD unit and this data and execute FUNCTION>CCD>DF-LNR to recalculate the gain offset value for matching colors on front and backside. Update the service label value. [Factory setting value: MTF value set for each machine]	1
CCD-CHNG*1	Set this mode when CCD replacement is completed. Range of Adjustment: 0 to 1 (Default: 0) Method of Adjustment Set "1" when replacing the CCD unit. [Factory setting value: 0]	1
MTF-M1 to 9*1	Setting value of MTF for the main scanning direction at front side reading for CIS M1: Front side for Red, M2: Center for Red, M3: Rear side for Red M4: Front side for Green, M5: Center for Green, M6: Rear side for Green M7: Front side for Blue, M8: Center for Blue, M9: Rear side for Blue Range of Adjustment: 20 to 80%, incremented by 1% (Default: 50) Method of Adjustment Enter the service label value to this mode when replacing the ADF controller PCB / executing RCON clear. The MTF filter coefficient to be set for ASIC of the machine is recalculated based on the entered value. This value does not need to be set in cases other than replacement of the ADF controller PCB / execution of RCON clear. [Factory setting value: MTF value set for each machine]	1
MTF-S1 to 9*1	Setting value of MTF for the sub scanning direction at front side reading for CIS S1: Front side for Red, S2: Center for Red, S3: Rear side for Red S4: Front side for Green, S5: Center for Green, S6: Rear side for Green S7: Front side for Blue, S8: Center for Blue, S9: Rear side for Blue Range of Adjustment: 20 to 80%, incremented by 1% (Default: 50) Method of Adjustment Enter the service label value to this mode when replacing the ADF controller PCB / executing RCON clear. The MTF filter coefficient to be set for ASIC of the machine is recalculated based on the entered value. This value does not need to be set in cases other than replacement of the ADF controller PCB / execution of RCON clear. [Factory setting value: MTF value set for each machine]	1

COPIER>ADJUST>CCD		
Sub item	**Description**	**level.**
DFCH-R2 DFCH-R10 DFCH-B2 DFCH-B10 DFCH-G2 DFCH-G10*1	Setting of the linearity characteristic data value of the CIS DF composite chart (No.2 or No.10) data (Red/Blue/Green) DFCH2xy x: R=Red, B=Blue, G=Green y: 2=Chart No. 2, 10=Chart No. 10 Since ADF of E232/E307, which provides double-sided simultaneous reading mode, uses different reading sensors (CIS/CCD) for front and backside, there may be density difference between the images on front and backside. To minimize the density difference between front and backside, the machine reads the linearity characteristic data value of the DF composite chart No. 2 data (Red) and sets a standard value for the front side reading sensor (CIS sensor). Range of Adjustment: DFCH2R2/DFCH2B2/DFCH2G2: 1 to 2550 (Default: 200) DFCH2R10/DFCH2B10/DFCH2G10: 0 to 2550 (Default: 10) Method of Adjustment [When replacing the ADF controller PCB/executing DF-RCON clear] When replacing the ADF controller PCB/executing DF-RCON clear, enter the data indicated on the service label to this mode and execute FUNCTION>CCD>DF-LNR to recalculate the gain offset value for matching colors on front and backside. [When replacing the CIS unit] When replacing the CIS unit, enter the value indicated on the label contained in the CIS unit to this mode and execute FUNCTION>CCD>DF-LNR to recalculate the gain offset value for matching colors on front and backside. Update the service label value. [Factory setting value: The value read by DIANA is going to be set. Adjusted for each CIS]	1
CISU-RG*1	Enter a color displacement correction value for the sub scanning direction (between RG when performing scanning that depends on the CIS unit and lens, and calculate a color displacement correction value for each color (50DF-RG/50DF-GB/100DF-RG/100DF-GB) for the CIS unit. Range of Adjustment: -150 to 150 (Default: 0) Method of Adjustment [When replacing the ADF controller PCB/executing DF-RCON clear] Enter the value indicated on the service label. [When replacing the CIS unit] Enter the color displacement data indicated on the CIS unit and update the service label. [Factory setting value: Factory adjustment value]	1
100DF2GB*1	Reading of the image on the backside in one-path double-sided mode is performed by CIS, and color displacement correction for the image is performed in line with the method of CCD. This mode only displays values. Range of Adjustment: None Method of Adjustment After the value is calculated separately, use this mode to check a color displacement value for the backside.	2
100DF2RG*1	Reading of the image on the backside in one-path double-sided mode is performed by CIS, and color displacement correction for the image is performed in line with the method of CCD. This mode only displays values. Range of Adjustment: None Method of Adjustment After the value is calculated separately, use this mode to check a color displacement value for the backside.	2
50DF2-GB*1	Reading of the image on the backside in one-path double-sided mode is performed by CIS, and color displacement correction for the image is performed in line with the method of CCD. This mode only displays values. Range of Adjustment: None Method of Adjustment After the value is calculated separately, use this mode to check a color displacement value for the backside.	2
50DF2-RG*1	Reading of the image on the backside for in one-path double-sided mode is performed by CIS, and color displacement correction for the image is performed in line with the method of CCD. This mode only displays values. Range of Adjustment: None Method of Adjustment After the value is calculated separately, use this mode to check a color displacement value for the backside.	2

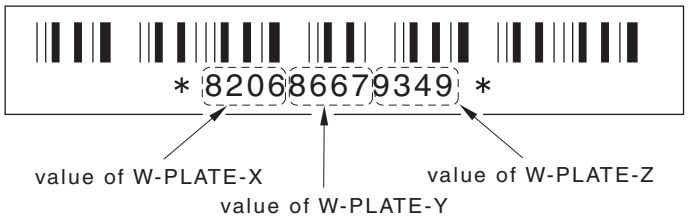

F-19-19

3. LASER

Laser Output Adjustment

T-19-26

COPIER>ADJUST>LASER		
***If you replaced the laser scaner unit, enter the value on the laser scaner unit.**		
Sub item	**Description**	**level.**
PVE-OFST	Used to enter the adjusted value of the laser irradiation position. Adjustment method - If you have cleared the DC controller PCB's RAM or replaced the DC controller PCB, enter the value on the service label. Adjustment range -25 to 25 [Factory default/After RAM clear: 0] **Reference:** This item is to enable input of the factory-adjusted value, and should not be adjusted in the market.	1
LDADJ1-Y*	A-B laser reproduction ratio (Y) B laser reproduction adjustment value (Y) based on the A laser reproduction ratio of the laser scanner unit Unless an appropriate value is entered here, reproduction ratios of the laser A and B become different, resulting in exposed images of different reproduction ratios. Setting range: -512 ~ 511 [Factory default value /post-RAM clear value: 0]	1

COPIER>ADJUST>LASER		
***If you replaced the laser scaner unit, enter the value on the laser scaner unit.**		
Sub item	**Description**	**level.**
LDADJ2-Y*	A-C laser reproduction ratio (Y) C laser reproduction adjustment value (Y) based on the A laser reproduction ratio of the laser scanner unit Unless an appropriate value is entered here, reproduction ratios of the laser A and C become different, resulting in exposed images of different reproduction ratios. Setting range: -512 ~ 511 [Factory default value /post-RAM clear value: 0]	1
LDADJ3-Y*	A-D laser reproduction ratio (Y) D laser reproduction adjustment value (Y) based on the A laser reproduction ratio of the laser scanner unit Unless an appropriate value is entered here, reproduction ratios the laser of A and D become different, resulting in exposed images of different reproduction ratios. Setting range: -512 ~ 511 [Factory default value /post-RAM clear value: 0]	1
LDADJ4-Y*	A-B laser phase difference (Y) A-B inter-laser phase difference (exposure start timing) adjustment value (Y) of the laser scanner unit Unless an appropriate value is entered here, A and B laser phases (exposure starting position) become different, resulting in faulty exposed image Setting range: 0 ~ 1023 [Factory default value /post-RAM clear value: 0]	1
LDADJ5-Y*	A-C laser phase difference (Y) A-C inter-laser phase difference (exposure start timing) adjustment value (Y) of the laser scanner unit Unless an appropriate value is entered here, A and C laser phases (exposure starting position) become different, resulting in faulty exposed image Setting range: 0 ~ 1023 [Factory default value /post-RAM clear value: 0]	1
LDADJ6-Y*	A-D laser phase difference (Y) A-D inter-laser phase difference (exposure start timing) adjustment value (Y) of the laser scanner unit Unless an appropriate value is entered here, A and D laser phases (exposure starting position) become different, resulting in faulty exposed image Setting range: 0 ~ 1023 [Factory default value /post-RAM clear value: 0]	1
LDADJ1-M*	A-B laser reproduction ratio (M) B laser reproduction adjustment value (M) based on the A laser reproduction ratio of the laser scanner unit Unless an appropriate value is entered here, reproduction ratios of the laser A and B become different, resulting in exposed images of different reproduction ratios. Setting range: -512 ~ 511 [Factory default value /post-RAM clear value: 0]	1
LDADJ2-M*	A-C laser reproduction ratio (M) C laser reproduction adjustment value (M) based on the A laser reproduction ratio of the laser scanner unit Unless an appropriate value is entered here, reproduction ratios of the laser A and C become different, resulting in exposed images of different reproduction ratios. Setting range: -512 ~ 511 [Factory default value /post-RAM clear value: 0]	1
LDADJ3-M*	A-D laser reproduction ratio (M) D laser reproduction adjustment value (M) based on the A laser reproduction ratio of the laser scanner unit Unless an appropriate value is entered here, reproduction ratios of the laser A and D become different, resulting in exposed images of different reproduction ratios. Setting range: -512 ~ 511 [Factory default value /post-RAM clear value: 0]	1
LDADJ4-M*	A-B laser phase difference (M) A-B inter-laser phase difference (exposure start timing) adjustment value (M) of the laser scanner unit Unless an appropriate value is entered here, A and B laser phases (exposure starting position) become different, resulting in faulty exposed image Setting range: 0 ~ 1023 [Factory default value /post-RAM clear value: 0]	1
LDADJ5-M*	A-C laser phase difference (M) A-C inter-laser phase difference (exposure start timing) adjustment value (M) of the laser scanner unit Unless an appropriate value is entered here, A and C laser phases (exposure starting position) become different, resulting in faulty exposed image Setting range: 0 ~ 1023 [Factory default value /post-RAM clear value: 0]	1
LDADJ6-M*	A-D laser phase difference (M) A-D inter-laser phase difference (exposure start timing) adjustment value (M) of the laser scanner unit Unless an appropriate value is entered here, A and D laser phases (exposure starting position) become different, resulting in faulty exposed image Setting range: 0 ~ 1023 [Factory default value /post-RAM clear value: 0]	1
LDADJ1-C*	A-B laser reproduction ratio (C) B laser reproduction adjustment value (C) based on the A laser reproduction ratio of the laser scanner unit Unless an appropriate value is entered here, reproduction ratios of the laser A and B become different, resulting in exposed images of different reproduction ratios. Setting range: -512 ~ 511 [Factory default value /post-RAM clear value: 0]	1
LDADJ2-C*	A-C laser reproduction ratio (C) C laser reproduction adjustment value (C) based on the A laser reproduction ratio of the laser scanner unit Unless an appropriate value is entered here, reproduction ratios of the laser A and C become different, resulting in exposed images of different reproduction ratios. Setting range: -512 ~ 511 [Factory default value /post-RAM clear value: 0]	1

COPIER>ADJUST>LASER		
***If you replaced the laser scaner unit, enter the value on the laser scaner unit.**		
Sub item	**Description**	**level.**
LDADJ3-C*	A-D laser reproduction ratio (C) D laser reproduction adjustment value (C) based on the A laser reproduction ratio of the laser scanner unit Unless an appropriate value is entered here, reproduction ratios of the laser A and D become different, resulting in exposed images of different reproduction ratios. Setting range: -512 ~ 511 [Factory default value /post-RAM clear value: 0]	1
LDADJ4-C*	A-B laser phase difference (C) A-B inter-laser phase difference (exposure start timing) adjustment value (C) of the laser scanner unit Unless an appropriate value is entered here, A and B laser phases (exposure starting position) become different, resulting in faulty exposed image Setting range: 0 ~ 1023 [Factory default value /post-RAM clear value: 0]	1
LDADJ5-C*	A-C laser phase difference (C) A-C inter-laser phase difference (exposure start timing) adjustment value (C) of the laser scanner unit Unless an appropriate value is entered here, A and C laser phases (exposure starting position) become different, resulting in faulty exposed image Setting range: 0 ~ 1023 [Factory default value /post-RAM clear value: 0]	1
LDADJ6-C*	A-D laser phase difference (C) A-D inter-laser phase difference (exposure start timing) adjustment value (C) of the laser scanner unit Unless an appropriate value is entered here, A and D laser phases (exposure starting position) become different, resulting in faulty exposed image Setting range: 0 ~ 1023 [Factory default value /post-RAM clear value: 0]	1
LDADJ1-K*	A-B laser reproduction ratio (Bk) B laser reproduction adjustment value (Bk) based on the A laser reproduction ratio of the laser scanner unit Unless an appropriate value is entered here, reproduction ratios of the laser A and B become different, resulting in exposed images of different reproduction ratios. Setting range: -512 ~ 511 [Factory default value /post-RAM clear value: 0]	1
LDADJ2-K*	A-C laser reproduction ratio (Bk) C laser reproduction adjustment value (Bk) based on the A laser reproduction ratio of the laser scanner unit Unless an appropriate value is entered here, reproduction ratios of the laser A and C become different, resulting in exposed images of different reproduction ratios. Setting range: -512 ~ 511 [Factory default value /post-RAM clear value: 0]	1
LDADJ3-K*	A-D laser reproduction ratio (Bk) D laser reproduction adjustment value (Bk) based on the A laser reproduction ratio of the laser scanner unit Unless an appropriate value is entered here, reproduction ratios of the laser A and D become different, resulting in exposed images of different reproduction ratios. Setting range: -512 ~ 511 [Factory default value /post-RAM clear value: 0]	1
LDADJ4-K*	A-B laser phase difference (Bk) A-B inter-laser phase difference (exposure start timing) adjustment value (Bk) of the laser scanner unit Unless an appropriate value is entered here, A and B laser phases (exposure starting position) become different, resulting in faulty exposed image Setting range: 0 ~ 1023 [Factory default value /post-RAM clear value: 0]	1
LDADJ5-K*	A-C laser phase difference (Bk) A-C inter-laser phase difference (exposure start timing) adjustment value (Bk) of the laser scanner unit Unless an appropriate value is entered here, A and C laser phases (exposure starting position) become different, resulting in faulty exposed image Setting range: 0 ~ 1023 [Factory default value /post-RAM clear value: 0]	1
LDADJ6-K*	A-D laser phase difference (Bk) A-D inter-laser phase difference (exposure start timing) adjustment value (Bk) of the laser scanner unit Unless an appropriate value is entered here, A and D laser phases (exposure starting position) become different, resulting in faulty exposed image Setting range: 0 ~ 1023 [Factory default value /post-RAM clear value: 0]	1
LA-MK-Y*	Laser manufacturer identification (Y) Identify the scanner unit manufacturer (Y) Setting range: 0 ~ 7 [Factory default value / post-RAM clear value: 0]	1
LA-MK-M*	Laser manufacturer identification (M) Identify the scanner unit manufacturer (M) Setting range: 0 ~ 7 [Factory default value / post-RAM clear value: 0] P1-19	1
LA-MK-C*	Laser manufacturer identification (C) Identify the scanner unit manufacturer (C) Setting range: 0 ~ 7 [Factory default value / post-RAM clear value: 0]	1
LA-MK-K*	Laser manufacturer identification (Bk) Identify the scanner unit manufacturer (Bk) Setting range: 0 ~ 7 [Factory default value / post-RAM clear value: 0]	1

4. DENS
Concentration of developer in developer unit.

T-19-27

COPIER>ADJUST>DENS		
Sub item	**Description**	**level.**
T-SPLY-Y	Adjusting the amount of toner supply (Y color) Adjustment method - Enter a value of the service label when RAM of the DC controller PCB has been cleared/the DC controller has been replaced. Adjustment range -3 to 5 [Factory default/After RAM clear: 0]	2
T-SPLY-M	Adjusting the amount of toner supply (M color) Adjustment method - Enter a value of the service label when RAM of the DC controller PCB has been cleared/the DC controller has been replaced. Adjustment range -3 to 5 [Factory default/After RAM clear: 0]	2
T-SPLY-C	Adjusting the amount of toner supply (C color) Adjustment method - Enter a value of the service label when RAM of the DC controller PCB has been cleared/the DC controller has been replaced. Adjustment range -3 to 5 [Factory default/After RAM clear: 0]	2
T-SPLY-K	Adjusting the amount of toner supply (K color) Adjustment method - Enter a value of the service label when RAM of the DC controller PCB has been cleared/the DC controller has been replaced. Adjustment range -3 to 5 [Factory default/After RAM clear: 0]	2
DMAX-Y/M/C/K	Y/M/C/K colour density control target offset adjustment Adjustment method Sets offset value for Y/M/C/K colour density control target in 2D-MAX control. Setting range: -30 to 30 [Factory settings and after RAM clear: 0]	2
P-ALPHA	Patch detection sensor P wave and S wave ratio: a Adjusts a, the patch detection sensor P wave and S wave ratio. When replacing the pattern reader unit, input the value on the label on the pattern reader unit. Setting range: 512 to 2047 [Factory settings and after RAM clear: 1200]	1
P-K-Y	Patch density conversion coefficient: k (Y) Adjusts k, the Y colour patch density conversion coefficient Setting range: 0 to 2047 [Factory settings and after RAM clear: 500]	2
P-K-M	Patch density conversion coefficient: k (M) Adjusts k, the M colour patch density conversion coefficient Setting range: 0 to 2047 [Factory settings and after RAM clear: 500]	2
P-K-C	Patch density conversion coefficient: k (C) Adjusts k, the C colour patch density conversion coefficient Setting range: 0 to 2047 [Factory settings and after RAM clear: 450]	2
P-K-K	Patch density conversion coefficient: k (Bk) Adjusts k, the Bk colour patch density conversion coefficient Setting range: 0 to 2047 [Factory settings and after RAM clear: 1]	2

5. BLANK

Adjustment for the leading edge of image/margin of the rear end

T-19-28

COPIER>ADJUST>BLANK		
Sub item	**Description**	**level.**
BLANK-T	Used to enter adjusted value of image blank width (leading edge). Adjustment method - If you have cleared the main controller PCB's RAM or replaced the SRAM PCB, enter the value on the service label. Adjustment range 0 to 1000 [Factory default/After RAM clear: +59]	1
BLANK-L	Used to enter adjusted value of image blank width (left edge). Adjustment method - If you have cleared the main controller PCB's RAM or replaced the SRAM PCB, enter the value on the service label. Adjustment range 0 to 1000 [Factory default/After RAM clear: +47]	1
BLANK-R	Used to enter adjusted value of image blank width (right edge). Adjustment method - If you have cleared the main controller PCB's RAM or replaced the SRAM PCB, enter the value on the service label. Adjustment range 0 to 1000 [Factory default/After RAM clear: +47]	1
BLANK-B	Used to enter adjusted value of image blank width (trailing edge). Adjustment method - If you have cleared the main controller PCB's RAM or replaced the SRAM PCB, enter the value on the service label. Adjustment range 0 to 1000 [Factory default/After RAM clear: +59]	1

6. V-CONT

Potential Control System Adjustment

T-19-29

COPIER>ADJUST>V-CONT		
Sub item	**Description**	**level.**
VCONT-Y/M/C/K	- VCONT-Y/M/C/K (Used to adjust electric potential for image contrast.) Adjustment range: -30 to 30 (10 V units) [Factory default/After RAM clear: 0] The larger the setting value, the higher the density. Whenever possible, avoid using this setting during normal operation.	2

COPIER>ADJUST>V-CONT		
Sub item	**Description**	**level.**
VBACK-Y/M/C/K	- VBACK-Y/M/C/K (Used to adjust electric potential for removing image fog.) Adjustment range: Y/M -6 to 12 (5 V units) [Factory default/After RAM clear: 0] C/K -12 to 6 (5 V units) [Factory default/After RAM clear: 0] The larger the setting value, the more fog is reduced. Whenever possible, avoid using this setting during normal operation.	2
VD-LIM-Y	Adjusting the upper limit of charge DC. Adjustment range: -10 to 0 (1 step: 25V) [Factory default/After RAM clear: 0] Change a setting value when either of the following faulty images occurs. - Color blanking in the highlight area (especially on low-density image) - Fogging (when making a large number of low-density image copies)	2
VD-LIM-M	Adjusting the upper limit of chargeDC. Adjustment range: -10 to 0 (1 step: 25V) [Factory default/After RAM clear: 0] Change a setting value when either of the following faulty images occurs. - Color blanking in the highlight area (especially on low-density image) - Fogging (when making a large number of low-density image copies)	2
VD-LIM-C	Adjusting the upper limit of charge DC. Adjustment range: -10 to 0 (1 step: 25V) [Factory default/After RAM clear: 0] Change a setting value when either of the following faulty images occurs. - Color blanking in the highlight area (especially on low-density image) - Fogging (when making a large number of low-density image copies)	2
VD-LIM-K	Adjusting the upper limit of charge DC. Adjustment range: -10 to 0 (1 step: 25V) [Factory default/After RAM clear: 0] Change a setting value when either of the following faulty images occurs. - Color blanking in the highlight area (especially on low-density image) - Fogging (when making a large number of low-density image copies)	2

7. PASCAL

Adjustment for auto gradation correction control

T-19-30

COPIER>ADJUST>PASCAL		
Sub item	**Description**	**level.**
OFST-P-Y/M/C/K	Use it to apply offset adjustment on the test print reading signal (Y) for PASCAL control at time of auto gradation correction (full). Method of Adjustment - a higher setting will make the image darker after auto gradation correction (full). Range of Adjustment: -128 to +128 [Factory default/After RAM clear: 0]	1

8. COLOR

Adjustment for color balance

T-19-31

COPIER>ADJUST>COLOR		
Sub item	**Description**	**level.**
ADJ-Y/M/C/K	Adjustment of color balance in Y/M/C/K provided for users When the output density varies due to the machine difference, change the default value of color balance. Adjustment range: -8 to +8 Method of Adjustment Increase the value to increase density. Decrease the value to decrease density. [Factory setting value / Value after execution of RAM clear: 0]	1
OFST-Y/M/C/K	Adjustment of bright section density and color balance in Y Adjustment range: -32 to +32 Method of Adjustment When the document base cannot be read correctly, offset the color balance in the bright section. Increase the value to increase density. Decrease the value to decrease density. When removal of the base was not performed correctly and the image looks like a fogging image, decrease the value until the fogging image disappears. [Factory setting value / Value after execution of RAM clear: 0]	1
LD-OFS-Y/M/C/K	- LD-OFS-Y/M/C/K (Used to adjust low-density color balance.) Whenever possible, avoid using this setting during normal operation.	2
MD-OFS-/Y/M/C/K	- MD-OFS-Y/M/C/K (Used to adjust medium-density color balance.) Whenever possible, avoid using this setting during normal operation. (Recommended setting value: -1)	2
HD-OFS-Y/M/C/K	- HD-OFS-Y/M/C/K (Used to adjust high-density color balance.) Whenever possible, avoid using this setting during normal operation. (Recommended setting value: -2)	2

9. HV-PRI

Primary Charging Assembly Output Adjustment

T-19-32

COPIER>ADJUST>HV-PRI		
Sub item	**Description**	**level.**
LSUB-Y/M/C/KDC	- LSUB-Y/M/C/KDC (Used to turn ON/OFF of DC bias offset for the downstream auxiliary brush.) Whenever possible, avoid using this setting during normal operation.	2
USUB-Y/M/C/KAC	- USUB-Y/M/C/KAC (Used to adjust upstream auxiliary brush charge voltage.) Whenever possible, avoid using this setting during normal operation.	2
DIS-TGY/M/C/K	- DIS-TGY/M/C/K (Used to adjust the offset to the target current used in discharge current control (normal paper).) Whenever possible, avoid using this setting during normal operation.	2
DIS-TGY2/M2/C2/K2	- DIS-TGY2/M2/C2/K2 (Used to adjust the offset to the target current used in discharge current control (card/special paper/transparencies).) Whenever possible, avoid using this setting during normal operation.	2

10. HV-TR

Transfer Charging Assembly / Pre-Transfer Charging Assembly Output Adjustment

The adjusted offset doesn't become valid unless all of the following 6 items are entered: 2TR-TGT, 2TR-SHR, TR-PPR, TR-ENV, TR-CLR and TRDUP.

The settings entered for all 6 items make up a single pattern. 8 patterns can be stored in memory.

T-19-33

COPIER>ADJUST>HV-TR		
Sub item	**Description**	**level.**
2TR-TGT1/2/3/4/5/6/7/8	- 2TR-TGT1/2/3/4/5/6/7/8 (Used to adjust the offset to the secondary transfer target current.) Adjustment range: -5 to +5 (2 µA units) [Factory default/After RAM clear: 0] Increasing the setting value: Effective for images with toner spatter/water droplets. Decreasing the setting value: Effective for images with white marks, white blotches, rough-textured half-tones.	2
2TR-SHR1/2/3/4/5/6/7/8	- 2TR-SHR1/2/3/4/5/6/7/8 (Used to adjust the offset to the secondary transfer paper-portion voltage.) Adjustment range: -5 to +5 (100 V units) [Factory default/After RAM clear: 0] Increasing the setting value: Effective for images with toner spatter/water droplets. Decreasing the setting value: Effective for images with white marks, white blotches, rough-textured half-tones.	2
TR-PPR1/2/3/4/5/6/7/8	- TR-PPR1/2/3/4/5/6/7/8 (paper type item for secondary transfer offset adjustment) 1: Plain [Factory default/After RAM clear: 1) 2: Recycled 3: Bond 4: Tracing Paper 5: Heavy1 6: Heavy2 7: Special paper 1 (including labels) 8: Glossy paper 9: Special paper 2 (including Japanese paper) 10: Postcards/envelopes 11: Transparencies (color) 12: Transparencies (monochrome)	2
TR-ENV1/2/3/4/5/6/7/8	- TR-ENV1/2/3/4/5/6/7/8 (environmental item for secondary transfer offset adjustment) Enter value of COPIER > DISPLAY > MISC > ENV-TR. 1: Low-humidity environment [Factory default/After RAM clear: 1] 2: Normal-humidity environment 3: High-humidity environment	2
TR-CLR1/2/3/4/5/6/7/8	- TR-CLR1/2/3/4/5/6/7/8 (color mode item for secondary transfer offset adjustment) 1: Full-color mode [Factory default/After RAM clear: 1] 2: Monochrome mode	2
TR-DUP1/2/3/4/5/6/7/8	- TR-DUP1/2/3/4/5/6/7/8 (one/two-sided item for secondary transfer offset adjustment) 1: One-sided [Factory default/After RAM clear: 1] 2: Automatic two-sided 3: Manual feed two-sided	2
1TR-TGY	Adjusting target current offset of primary transfer ATVC (Y) Adjustment range: -5 to 5 (unit: 0.5 uA) (default: 0) It is enabled when COPIER>OPTION>BODY>PTATVCSW = 1 (primary ATVC control is enabled). Change a setting value when any of the following faulty images occurs. - Mottle marks/Mark of the auxiliary brush due to remaining transfer toner (when color density of the brush mark is high)/ Transfer ghost: Primary transfer current is low. -> Change a setting value to the '+' direction. - Fogging due to re-transfer/Mark of the auxiliary brush due to remaining re-transfer toner (when color density of the former station is higher than that of the brush mark): Primary transfer current is high -> Change a setting value to the '-' direction.	2
1TR-TGM	Adjusting target current offset of primary transfer ATVC (M) Adjustment range: -5 to 5 (unit: 0.5 uA) (default: 0) It is enabled when COPIER>OPTION>BODY>PTATVCSW = 1 (primary ATVC control is enabled). Change a setting value when any of the following faulty images occurs. - Mottle marks/Mark of the auxiliary brush due to remaining transfer toner (when color density of the brush mark is high)/ Transfer ghost: Primary transfer current is low. -> Change a setting value to the '+' direction. - Fogging due to re-transfer/Mark of the auxiliary brush due to remaining re-transfer toner (when color density of the former station is higher than that of the brush mark): Primary transfer current is high -> Change a setting value to the '-' direction.	2
1TR-TGC	Adjusting target current offset of primary transfer ATVC (C) Adjustment range: -5 to 5 (unit: 0.5 uA) (default: 0) It is enabled when COPIER>OPTION>BODY>PTATVCSW = 1 (primary ATVC control is enabled). Change a setting value when any of the following faulty images occurs. - Mottle marks/Mark of the auxiliary brush due to remaining transfer toner (when color density of the brush mark is high)/ Transfer ghost: Primary transfer current is low. -> Change a setting value to the '+' direction. - Fogging due to re-transfer/Mark of the auxiliary brush due to remaining re-transfer toner (when color density of the former station is higher than that of the brush mark): Primary transfer current is high -> Change a setting value to the '-' direction.	2
1TR-TGK1	Adjusting target current offset of primary transfer ATVC (K: Black (monochrome) mode) Adjustment range: -5 to 5 (unit: 0.5 uA) (default: 0) It is enabled when COPIER>OPTION>BODY>PTATVCSW = 1 (primary ATVC control is enabled). Change a setting value when any of the following faulty images occurs. - Mottle marks/Mark of the auxiliary brush due to remaining transfer toner (when color density of the brush mark is high)/ Transfer ghost: Primary transfer current is low. -> Change a setting value to the '+' direction. - Fogging due to re-transfer/Mark of the auxiliary brush due to remaining re-transfer toner (when color density of the former station is higher than that of the brush mark): Primary transfer current is high -> Change a setting value to the '-' direction.	2
1TR-TGK4	Adjusting target current offset of primary transfer ATVC (K: 4C mode) Adjustment range: -5 to 5 (unit: 0.5 uA) (default: 0) It is enabled when COPIER>OPTION>BODY>PTATVCSW = 1 (primary ATVC control is enabled). Change a setting value when any of the following faulty images occurs. - Mottle marks/Mark of the auxiliary brush due to remaining transfer toner (when color density of the brush mark is high)/ Transfer ghost: Primary transfer current is low. -> Change a setting value to the '+' direction. - Fogging due to re-transfer/Mark of the auxiliary brush due to remaining re-transfer toner (when color density of the former station is higher than that of the brush mark): Primary transfer current is high -> Change a setting value to the '-' direction.	2

11. FEED-ADJ

*2: Only for machines other than iR C5185

T-19-34

COPIER>ADJUST>FEED-ADJ		
Sub item	**Description**	**level.**
ADJ-REFE	Used to adjust the horizontal registration during re-feed. Adjustment method - Increasing the value by 1 moves the image 0.1 mm away from you. - If you have cleared the DC controller PCB's RAM or replaced the DC controller PCB, enter the value on the service label. Adjustment range - 100 to 100 (0.1 mm units) [Factory default/After RAM clear: 0]	1
REG-NORM	Registration clutch ON timing (plain paper) Adjusts the margin on the leading edge (0.1mm scale) by adjusting the timing to turn ON the registration clutch for plain paper. Setting Range: 50 ~ -50 [Factory default value / post-RAM clear value: -20]	1
REG-THCK	Registration clutch ON timing (thick paper) Adjusts the margin on the leading edge (0.1mm scale) by adjusting the timing to turn ON the registration clutch for thick paper. Setting Range: 50 ~ -50 [Factory default value / post-RAM clear value: -20]	1
REG-OHT	Registration clutch ON timing (OHT) Adjustment of the OHT registration clutch ON timing allows adjustment of the leading edge margin (unit: 0.1mm). Setting range: -50 to 50 [Factory settings and after RAM clear: -20]	1
REG-DUP1	Second page registration clutch ON timing (plain paper) Adjustment of the plain paper second page registration clutch ON timing allows adjustment of the second page leading edge margin (unit: 0.1mm). Setting range: -50 to 50 [Factory settings and after RAM clear: -10]	1
REG-DUP2	Second page registration clutch ON timing (thick paper) Adjustment of the thick paper second page registration clutch ON timing allows adjustment of the second page leading edge margin (unit: 0.1mm). Setting range: -50 to 50 [Factory settings and after RAM clear: -10]	1
LP-FEED1	Pre-registration loop adjustment during CST pickup (plain paper) Adjusts pre-registration loop adjustment during plain paper CST pickup in increments of 0.5mm. Adjustment method Moving the setting in the plus direction in increments of 0.5mm increases the pre-registration curl. Moving the setting in the minus direction in increments of 0.5mm decreases the pre-registration curl. Setting range: -50 to 50 [Factory settings and after RAM clear: 0]	1
LP-FEED2	Pre-registration loop adjustment during CST pickup (thick paper and OHT) Adjusts pre-registration loop adjustment during thick paper and OHT CST pickup in increments of 0.5mm. Adjustment method Moving the setting in the plus direction in increments of 0.5mm increases the pre-registration curl. Moving the setting in the minus direction in increments of 0.5mm decreases the pre-registration curl. Setting range: -50 to 50 [Factory settings and after RAM clear: 0]	1
LP-MULT1	Pre-registration loop adjustment during multi-pickup (plain paper) Adjusts pre-registration loop adjustment during plain paper multi-pickup in increments of 0.5mm. Adjustment method Moving the setting in the plus direction in increments of 0.5mm increases the pre-registration curl. Moving the setting in the minus direction in increments of 0.5mm decreases the pre-registration curl. Setting range: -50 to 50 [Factory settings and after RAM clear: 0]	1
LP-MULT2	Pre-registration loop adjustment during multi-pickup (thick paper and OHT) Adjusts pre-registration loop adjustment during thick paper and OHT multi-pickup in increments of 0.5mm. Adjustment method Moving the setting in the plus direction in increments of 0.5mm increases the pre-registration curl. Moving the setting in the minus direction in increments of 0.5mm decreases the pre-registration curl. Setting range: -50 to 50 [Factory settings and after RAM clear: 0]	1
LP-DUP1	Pre-registration loop adjustment during duplex-pickup (plain paper) Adjusts pre-registration loop adjustment during plain paper duplex pickup in increments of 0.5mm. Adjustment method Moving the setting in the plus direction in increments of 0.5mm increases the pre-registration curl. Moving the setting in the minus direction in increments of 0.5mm decreases the pre-registration curl. Setting range: -50 to 50 [Factory settings and after RAM clear: 0]	1
LP-DUP2	Pre-registration loop adjustment during duplex-pickup (thick paper and OHT) Adjusts pre-registration loop adjustment during thick paper and OHT duplex pickup in increments of 0.5mm. Adjustment method Moving the setting in the plus direction in increments of 0.5mm increases the pre-registration curl. Moving the setting in the minus direction in increments of 0.5mm decreases the pre-registration curl. Setting range: -50 to 50 [Factory settings and after RAM clear: 0]	1

12. CST-ADJ

T-19-35

COPIER>ADJUST>CST-ADJ		
Sub item	**Description**	**level.**
MF-A4R	Used to enter the basic value for the manual feed tray's paper width (A4R). Adjustment method - If you have cleared the DC controller PCB's RAM or replaced the DC controller PCB, enter the value on the service label. - When replacing the paper width detection VR or registering a new value, perform the following service mode: FUNCTION>CST. Adjustment range 0 to 255 [Factory default/After RAM clear: 141]	1
MF-A6R	Used to enter the basic value for the manual feed tray's paper width (A6R). Adjustment method - If you have cleared the DC controller PCB's RAM or replaced the DC controller PCB, enter the value on the service label. - When replacing the paper width detection VR or registering a new value, perform the following service mode: FUNCTION>CST. Adjustment range 0 to 255 [Factory default/After RAM clear: 235]	1
MF-A4	Used to enter the basic value for the manual feed tray's paper width (A4). Adjustment method - If you have cleared the DC controller PCB'sRAM or replaced the DC controller PCB, enter the value on the service label. - When replacing the paper width detection VR or registering a new value, perform the following service mode: FUNCTION>CST. Adjustment range 0 to 255 [Factory default/After RAM clear: 26]	1

13. FIXING

T-19-36

COPIER>ADJUST>FIXING		
Sub item	**Description**	**level.**
FX-MTR1	Fixer motor initial current display Setting range: 0 to 240	2

14. MISC

T-19-37

COPIER>ADJUST>MISC		
Sub item	**Description**	**level.**
SEG-ADJ	Used to adjust the text and photo separation level for text/photo/map mode. Adjustment method - To make documents more easily recognized as photo documents, increase the setting value. - To make documents more easily recognized as text documents, decrease the setting value. Adjustment range -4to 4 (Value at time of factory shipment/value after RAM clear: 0)	1
K-ADJ	Used to adjust the black recognition level during black text processing. Adjustment method - To make text more easily recognized as black, increase the setting value. Adjustment range -3to 3 (Value at time of factory shipment/value after RAM clear: 0)	1
ACS-ADJ	Used to adjust the color recognition level during ACS mode. Adjustment method To make documents more easily recognized as black and white documents, increase the setting value. - To make documents more easily recognized as color documents, decrease the setting value. Adjustment range -3to 3 (Value at time of factory shipment/value after RAM clear: 0)	1
SEG-ADJ3*1	Adjustment of the separation level of the character and photo in the character/photo/map mode on the backside in one-path double-sided mode For the backside in one-path double-sided mode (SEG-ADJ adjustment for the backside) Method of Adjustment - To make it easier to recognize the photo: Increase the value. - To make it easier to recognize the character: Decrease the value. Adjustment range: -4 to 4 [Factory setting value / Value after execution of RAM clear: 0]	1
K-ADJ3*1	Adjustment of the black color recognition level at black character processing on the backside in one-path double-sided mode For the backside in one-path double-sided mode (K-ADJ adjustment for the backside) Method of Adjustment To make it easier to recognize the black color: Increase the value. Adjustment range: -3 to 3 [Factory setting value / Value after execution of RAM clear: 0]	1
ACS-ADJ3*1	Adjustment of the color recognition level in the ACS mode on the backside in one-path double-sided mode For the backside in one-path double-sided mode (ACS-ADJ adjustment for the backside) Method of Adjustment - To make it easier to recognize black and white: Increase the value. - To make it easier to recognize color: Decrease the value. Adjustment range: -3 to 3 [Factory setting value / Value after execution of RAM clear: 0]	1
ACS-EN	- ACS-EN (Used to adjust ACS recognition zone.) Increasing the setting value expands the recognition zone.	2
ACS-CNT	- ACS-CNT (Used to adjust color recognition pixel count zone during ACS recognition.) Increasing the setting value expands the recognition zone.	2
ACS-EN2	ACS judgement area adjustment (with DF stream reading) Adjustment method Increasing the setting value increases the judgement range. Setting range: -2 to 2 [Factory settings and after RAM clear: 1]	2

COPIER>ADJUST>MISC		
Sub item	**Description**	**level.**
ACS-CNT2	Colour judgement pixel count area adjustment in ACS judgement (with DF stream reading) Adjustment method Increasing the setting value increases the judgement range. Setting range: -2 to 2 [Factory settings and after RAM clear: 0]	2
REOS-PG	REOS processing coefficient selection in 1200 dpi Setting range: 0 to 4 [Factory settings and after RAM clear: 0]	2
ACS-EN3*1	ACS-EN2 Adjustment of ACS recognition field (at DF stream reading) Method of Adjustment Increase the value to expand the recognition field. Adjustment range: -2 to 2 [Factory setting value / Value after execution of RAM clear: 0]	2
ACS-CNT3*1	Adjustment of the field of counting chromatic color recognition pixels for ACS recognition on the backside in one-path double-sided mode (at DF stream reading) Method of Adjustment Increase the value to expand the recognition field on the backside in one-path double-sided mode. Adjustment range: -2 to 2 [Factory setting value / Value after execution of RAM clear: 0]	2

19.4.2 FEEDER

19.4.2.1 FEEDER Table

CLC5151 / / / CLC4040 / / / iR C4580i / / / iR C4080i / / / / Color Image Reader-F1 / Color Image Reader-E1 / Dupiex Color Image Reader-G1 / iR C5185N / / iR C5185i PRT /

T-19-38

FEEDER>ADJUST		
Sub item	**Description**	**level.**
DOCST	Adjustment of the margin on the leading edge at ADF pick-up (pick-up from the document tray) Adjustment range: -50 to 50 (Unit: 0.337mm, iR C5185: 0.1mm) Increase the value to decrease the margin on the leading edge. Decrease the value to increase the margin on the leading edge. [Factory setting value / Value after execution of RAM clear: 0]	1
LA-SPEED	Adjusting the document feeding speed at the time of stream reading from the feeder The speed becomes faster (image is reduced) by increasing setting value. Range of adjustment: -30 to 30 (unit: 0.1%) [Factory default/After RAM clear:0]	1
DOCST2*1	Adjustment of the timing of sending the signal of the leading edge of an image on the backside of the feeder at double-sided simultaneous reading Use this mode to adjust the timing of sending the signal of the leading edge of an image on the backside of the feeder at double-sided simultaneous reading. Setting range: -50 to +50 (Unit: 0.1mm) Method of Adjustment When replacing the reader controller PCB, etc./executing RCON clear, enter the value indicated on the service label. When displacement of the image position, etc. has occurred on the backside in one-path double-sided mode, enter the adjustment value while checking the image. Increase the value to increase the margin on the leading edge. Decrease the value to decrease the margin on the leading edge. [Factory setting value / Value after execution of RAM clear: 0]	1
LA-SPD2*1	Adjustment of magnification for the sub scanning direction to perform stream reading on the backside of the feeder at double-sided simultaneous reading A fine adjustment of the feeder delivery speed is made on the front side. Since the image on the backside is output from memory, magnification for the sub scanning direction can be adjusted by making a fine adjustment of the interval of image signals for the sub scanning direction when the image is written into memory. -120 to +120, iR C5185: -20 to +20 (Default: 0) (Unit: 0.1%) Method of Adjustment When replacing the reader controller PCB/executing RCON clear, enter the value indicated on the service label. When an abnormal image (enlarged or shrunk image, etc.) has occurred on the backside in one-path double-sided mode, make this adjustment while checking the image. [Factory setting value / Factory adjustment value (value indicated on the service label)]	1

19.5 FUNCTION (Operation/Inspection Mode)

19.5.1 COPIER

19.5.1.1 COPIER Table

CLC5151 / / / CLC4040 / / / iR C4580i / / / iR C4080i / / / / Color Image Reader-F1 / Color Image Reader-E1 / Dupiex Color Image Reader-G1 / iR C5185N / / iR C5185i PRT /

1. INSTALL
*1 Not displayed in service mode.

T-19-39

COPIER>FUNCTION>INSTALL		
Sub item	**Description**	**level.**
STRD-POS	Automatic detection of CCD scanning position in DF stream reading	1

COPIER>FUNCTION>INSTALL		
Sub item	**Description**	**level.**
CARD	Used to make card reader installation settings. Setting values 1 to 2001 [Factory default/After RAM clear: 1] Operation method Enter the number of cards to use. (You can use up to 1,000 cards from the entered number.) Initialize the card management information. - Initialize the card name (department ID) (from the entered number). - Initialize the card's password.	1
DRY-RT	Eliminates condensation during installation. Note: This item is used to eliminate condensation generated in the copier immediately after installation. When the copier has detected that the drum units and toner containers are out, the ITB is forced to idle to raise the temperature at points of condensation with fixing temperature regulation left ON, evaporating the moisture. Operation method 1) Turn the main power switch OFF, and remove the drum unit and toner container for each color. 2) Replace the transfer cleaning unit with a dummy transfer cleaning unit (since the cleaning plate may be damaged otherwise). 3) Turn the main power switch ON. 4) Select this item, and press the OK key. 5) Wait for the operation to stop automatically. (The operation may take between 6 and 180 minutes depending on the environment.) 6) 'OK' is displayed when the operation completes normally. 7) Insert the drum units, toner containers and transfer cleaning unit, and check the image with half-tones.	1
KEY	Used to set management key function recognition. Setting values 0: Don't recognize management key function (value at time of factory shipment). 1: Recognize management key function. Operation method 1) Select COPIER > INSTALL > KEY, then enter '1' 2) Turn the main power switch OFF/ON (the management key function is now recognized).	1
E-RDS	E-RDS settings Setting values 0: Not in use 1: In use [Factory settings and after RAM clear: 0]	1
RGW-PORT	Specify port number of sales company server used in E-RDS Setting range: 1 to 65535 [Factory settings and after RAM clear:]	1
COM-TEST	Check connection with sales company server used in E-RDS Checks sales company server connection. Judges whether connection can be made and displays the results as OK or FAIL.	1
COM-LOG	Display detailed results of communication test with sales company server used in E-RDS Displays information on any errors that have occurred in connection with sales company server.	1
RGW-ADR	Specify URL of sales company server used in E-RDS Sets sales company server URL.	1
CNT-DATE *1	Set timing of counter transmission to server Sets time and date for start of transmission of counter information to server, via E-RDS third party extension function. Setting range: YYYYMMDDHHMM (YYYY: year, MM: month, DD: date, HH: hours, MM: minutes) [Factory settings and after RAM clear::000000000000] Note This item is only displayed when the E-RDS third party extension function is enabled.Set timing of counter transmission to server Sets time and date for start of transmission of counter information to server, via E-RDS third party extension function. Setting range: YYYYMMDDHHMM (YYYY: year, MM: month, DD: date, HH: hours, MM: minutes) [Factory settings and after RAM clear:: 000000000000] Note This item is only displayed when the E-RDS third party extension function is enabled.	1
CNT-INTV *1	Set interval of counter transmission to server Sets transmission intervals for transmission of counter information to server, via E-RDS third party extension function.	1

2. CCD

T-19-40

COPIER>FUNCTION>CCD		
Sub item	**Description**	**level.**
DF-WLVL1/2	Use it to adjust the ADF white level. Method of Operation 1) Place the type of original most often used by the user on the copyboard glass, and perform the following service mode item: COPIER>FUNCTION>CCD>DF-WLVL1. (In response, the machine will read the white level for book mode, checking the transmission quality of the glass for book mode). 2) Place the type of original most often used by the user in the DF, and perform the following service mode item: COPIER>FUNCTION>CCD>DF-WLVL2. (In response, the machine will read the white level for DF mode (stream reading mode), checking the transmission quality of the reading glass by reading both sides of the original.) face reading: computes DFTAR-R/G/B back reading: computes DFTAR2-R/G/B Be sure to execute this item in combination with item 2.	1
DF-LNR*1	Start of calculation of the gain offset value for matching the front and backside density based on the data read from the DF composite chart (No. 2 and No. 10) By setting the data read from the DF composite chart No. 2 and No. 10 to "ADJUST>CCD>DFCH_XX" to match the front and backside density and executing this mode, linearity characteristics are calculated and the setting value is determined. Adjustment method Execute this mode when replacing the reader controller PCB. Execute this mode every time when the linearity characteristic data (data information of No.2/No.10) due to replacement of the CIS unit or CCD unit. The data of No.2/No.10 is accompanied with each CCD/CIS unit.	1

COPIER>FUNCTION>CCD		
Sub item	**Description**	**level.**
MTF-CLC*1	Calculation of the MTF filter count set for ASIC based on the MTF value Calculate the MTF filter count that is actually set for ASIC based on the MTF value of CCD/CIS specified in "COPIER>ADJUST>CCD>MTF_M1-9, MTF_S1-9, MTF2_M1-9, MTF2_S1-9". Adjustment method Use this mode when replacing the CCD unit, CIS unit, ADF controller PCB (executing DF-RCON clear), or reader controller PCB (executing RCON clear). Refer to explanation about maintenance adjustment for details.	1

3. LASER

T-19-41

COPIER>FUNCTION>LASER		
Sub item	**Description**	**level.**
LD-ADJ-Y/M/C	Making the tilt correction motor return to the initial position automatically. Operating Instructions 1) Select this mode. 2) Press the OK key. - The operation starts. It automatically stops when it is completed. Reference: The tilt correction motor may get locked when the tilt amount in the horizontal scanning direction exceeds the expected range, and consequently color displacement cannot be corrected even though automatic registration is conducted. When this symptom occurs, use this mode to make the tilt correction motor return to the center position automatically. (If you try to do this operation manually by opening the scanner unit, you may touch the lens. For this reason, be sure to do it by the automatic operation.) This Service Mode is used to correct the tilt of Y, M, and C against BK, which is used as a reference, when the tilt is large (when the horizontal lines are higher at the right).	2

4. CST

T-19-42

COPIER>FUNCTION>CST		
Sub item	**Description**	**level.**
MF-A4R, MF-A6R, MF-A4	Registers basic value of manual feeder's (DADF's) paper width. A4R width: 210mm, A6R width: 105mm, A4 width: 297mm - Once registered, the basic value can be fine-tuned by performing COPIER> ADJUST > CST-ADJ > MF-A4R, MF-A6R or MF-A4. Operation method 1) Place A4R size paper in the manual feeder, and set the size guide to the A4R width. 2) In this service mode, select 'MF-A4R' to display the item in reverse. Press the OK key to perform automatic adjustment and register the value. 3) Repeat Steps 1) and 2) to register the basic values for the A6R and A4 sizes.	1

5. CLEANING

T-19-43

COPIER>FUNCTION>CLEANING		
Sub item	**Descripti**	**level.**
TBLT-CLN	Cleans intermediate transfer belt. Image imperfections are improved by removing impurities adhering to the intermediate transfer belt (such as fingerprints, grease and paper dust). Operation method 1) Press 'TBLT-CLN' to display the item in reverse and select it. 2) Press the OK key. The cleaning operation lasts about 80 seconds, then ends automatically.	1
FDRL-CLN	Used when cleaning face-down paper delivery roller 1/2. Operation method 1) Select this item, then press the OK key to start the rollers operating. 2) While both rollers are operating, press against each with a cloth soaked in alcohol to clean it. 3) Press the stop key to stop the rollers.	1
RVRL-CLN	Used when cleaning reverse roller. Operation method 1) Open the paper delivery cover. 2) Select this item and press the OK key to start the roller operating. 3) While the roller is operating, press against it with a cloth soaked in alcohol to clean it. 4) Press the stop key to stop the roller.	1
DEVL-CLN	Cleans inside developer unit. Image imperfections are improved by forcibly consuming toner that has been over-agitated (toner with improper charge) by the toner agitation screw. Operation method 1) Select this item and press the OK key. 2) The cleaning operation lasts about 160 seconds, then ends automatically.	1

6. FIXING

T-19-44

COPIER>FUNCTION>FIXING		
Sub item	**Description**	**level.**
NIP-CHK	not use	1
FX-UHP-S	Fixing belt (upper belt) displacement control auto home position search Forces fixing belt (upper belt) displacement control and detects belt position detection sensor switching time. From that time, the home position displacement table is used to change the home position.	1
FX-LHP-S	Pressure belt (lower belt) displacement control auto home position search Pressure fixing belt (lower belt) displacement control and detects belt position detection sensor switching time. From that time, the home position displacement table is used to change the home position.	1

COPIER>FUNCTION>FIXING		
Sub item	**Description**	**level.**
MTR-CHK1	Measures the initial current value of the fixing motor. Use this value when replacing the unit on needed basis.	2
MTR-CHK2	Measures the current value of the fixing motor. Use this at fixing assembly trouble. Checks the value of [COPIER > DISPLAY > FIXING > FX-MTR2]	2

7. PANEL

T-19-45

COPIER>FUNCTION>PANEL		
Sub item	**Description**	**level.**
LCD-CHK	Used to check missing dots in LCD. Operation method 1) Select this item, then press the OK key to start the operation. The touch panel's front surface should light repeatedly in the sequence: white, black, red, green and blue. (Check that it does.) 2) Press the stop key (the clear key on printer models) to end the operation.	1
LED-CHK	Used to check that operation panel's LEDs light. Operation method 1) Select this item, then press the OK key to start the operation. The LEDs light sequentially. 2) Press LED-OFF to end the operation.	1
LED-OFF	Used in checking that operation panel's LEDs light. Operation method 1) Selecting this item stops the LED-CHK operation.	1
KEY-CHK	Used to check key input. Operation method 1) Select "KEY-CHK" to display the number/name of the entered key. 2) Press the key to check. If the key is normal, the text for it appears in the touch panel (see separate table) . 3) Select "KEY-CHK" again to exit the key input check operation.	1
TOUCHCHK	Used to adjust coordinate positions of analog touch panel. Operation method - Used to align the touch panel touch position with the LCD coordinate position. - Perform this service mode item if you have replaced the LCD unit. 1) Select "TOUCHCHK" to display the item in reverse, then press the OK key. 2) "+" appears on the touch panel at 9 positions sequentially. After you press each position, adjustment is complete.	1

T-19-46

Input key numbers, names

Ke	Screen display
0 to 9, #, *	0 to 9, #, *
Reset	RESET
Stop	STOP
User mode	USER
Start	START
Power save	STAND BY
Clear	CLEAR
Secret code	ID
Help	?
Counter check	BILL

8. PART-CHK

T-19-47

COPIER>FUNCTION>PART-CHK		
Sub item	**Description**	**level.**
CL	Used to specify clutch for operation check. (Range: 1 to 10, 5 and above are reserved.) Operation method 1) Select this item. 2) Enter the desired clutch code on the numeric keypad. 1: Two-sided registration clutch CL1 2: Two-sided paper feed clutch CL2 3: Conveyor clutch CL1 (paper deck) 4: Paper feed clutch CL2 (paper deck) 3) Press the OK key. 4) Press CL-ON, and check the operation.	1
CL-ON	Used to start clutch operation check. Operation method 1) Select this item, and press the OK key. The clutch turns ON/OFF in the pattern below. 0.5 second ON -> 10 seconds OFF -> 0.5 second ON -> 10 seconds OFF -> 0.5 second ON -> OFF	1

COPIER>FUNCTION>PART-CHK		
Sub item	**Description**	**level.**
FAN	Specify fan checking the operation. Setting range: 1 to 10 (7 or above are reserves) Operation method 1)Select the item. 2)Enter the fan code with the numeric keypad. 1: Power supply exhaust fan 1 (FM1), Power supply exhaust fan 2 (FM10) 2: Fixing exhaust fan (FM2) 3: Machine exhaust fan (FM3) 4: Cleaner fan (FM4) 5: Delivery cooling fan (FM5) 6: Manual feed cooling fan (FM6) 7: Delivery vertical path cooling fan (FM8) 8: ITB cooling power supply fan (FM11) 9: Vertical path delivery exhaust fan (FM13) 10: Face-down tray cooling fan (FM12) 3)Press [OK]. 4)Check the operation by pressing [FAN-ON].	1
FAN-ON	Start the fan operation. Operations of the power supply fan, fixing fan, and cleaner fan 1)Select the item, and press [OK] so the next operation is executed. ON for 10 sec with normal speed > ON for 10 sec with half speed > Standby state Operations of the machine exhaust fan, delivery cooling fan, manual feed cooling fan, delivery vertical path cooling fan, ITB cooling power supply fan, vertical path delivery exhaust fan, and face-down tray cooling fan 1) Select the item, and press [OK] so the next operation is executed. ON for 10 sec with normal speed > Standby state Operation of controller fan 1)Select the item, and press [OK] so the next operation is executed. Check the operation.	1
MTR	Specify motor checking the operation. Setting range: 1 to 25 (22 or above are reserves) Operation method 1)Select the item. 2)Enter the motor code with the numeric keypad. 1: Drum ITB motor (M1) 2: Toner container motor (Y) (M20) 3: Toner container motor (M) (M21) 4: Toner container motor (C) (M22) 5: Toner container motor (Bk) (M23) 6: Cassette 1 pickup motor (M6) 7: Cassette 2 pickup motor (M7) 8: Cassette 3 pickup motor (M51) 9: Cassette 4 pickup motor (M52) 10: Paper deck main motor (M1D) (Paper deck) 11: Pre-registration motor (M8) 12: Registration motor (M9) 13: Delivery vertical path motor (M10) 14: Face-down delivery motor (M11) 15: Reserve 16: Horizontal registration motor (M25) 17: Duplexing feed motor (M26) 18: Developing motor (Y) (M12) 19: Developing motor (M) (M13) 20: Developing motor (C) (M14) 21: Developing motor (Bk) (M15) 3)Press [OK]. 4)Check the operation by pressing [MTR-ON].	1
MTR-ON	Start the motor operation. Operation method Toner container motor (Y/M/C/K): 1)Remove the toner container, and close the front cover. 2)Select the item, and press [OK]. ON for 10 sec > OFF Horizontal registration motor: 1)Select the item, and press [OK]. Start the HP search operation > After the completion of operation, automatically terminated Motors other than toner container motor (Y/M/C/K) and horizontal registration motor: 1)Select the item, and press [OK]. ON for 10 sec > OFF	1
SL	Used to specify solenoid for operation check. (Range: 1 to 15; 10 and above are reserved.) Operation method 1) Select this item. 2) Enter the desired solenoid code on the numeric keypad. 1: Manual paper feed solenoid SL1 2: Paper delivery path switching solenoid 1 SL2 3: Cassette 1 paper feed solenoid SL3 4: Cassette 2 paper feed solenoid SL4 5: Cassette 3 paper feed solenoid SL51 6: Cassette 4 paper feed solenoid SL52 7: Paper delivery path switching solenoid 2 SL5 8: Paper deck paper feed solenoid SL1D 9: Paper container OPEN solenoid SL2D 3) Press the OK key. 4) Press SL-ON, and check the operation.	1

COPIER>FUNCTION>PART-CHK		
Sub item	**Description**	**level.**
SL-ON	Starts solenoid operation. Operation method 1) Select this item, and press the OK key. The solenoid turns ON/OFF in the pattern below. 0.5 second ON -> 10 seconds OFF -> 0.5 second ON -> 10 seconds OFF -> 0.5 second ON -> OFF	1

9. CLEAR

T-19-48

COPIER>FUNCTION>CLEAR		
Sub item	**Description**	**level.**
ERR	Clears error codes. (Cleared error codes: E000, E001, E002, E003) Operation method 1) Select this item, and press the OK key. 2) Turn the main power OFF/ON.	1
DC-CON	Clears DC controller PCB's RAM. The RAM is cleared after the main power switch is turned OFF/ON. Operation method 1) Select COPIER > FUNCTION > MISC-P > P-PRINT to print out the service mode setting values. 2) Select this item, then press the OK key. 3) Turn the main power OFF/ON. 4) Enter the data printed by the P-PRINT operation as needed.	1
R-CON	Use it to reset the RAM on the reader controller PCB. Method of Operation The RAM will not be cleared until the main power switch has been turned off and then on again. 2) Select the item, and press the OK key. 3) Turn off and then on the main power. 4) As necessary, enter the settings printed out using 'PRINT'.	1
JAM-HIST	Clears reader controller PCB's RAM. The RAM is cleared after the main power switch is turned OFF/ON. Operation method 1) Select COPIER > FUNCTION > MISC-P > P-PRINT to print out the service mode setting values. 2) Select this item, then press the OK key. 3) Turn the main power OFF/ON. 4) Enter the data printed by the P-PRINT operation as needed.	1
ERR-HIST	Clears error code history. The error code history is cleared after the main power switch is turned OFF/ON. Operation method 1) Select this item, then press the OK key. 2) Turn the main power OFF/ON.	1
PWD-CLR	Clears "System administrator" password set in user mode. The password value is cleared after the main power switch is turned OFF/ON. Operation method 1) Select this item, then press the OK key. 2) Turn the main power OFF/ON.	1
ADRS-BK	Clears address book data. The address book data is cleared after the main power switch is turned OFF/ON. Operation method 1) Select this item, then press the OK key. 2) Turn the main power OFF/ON.	1
CNT-MCON	Clears service counters maintained by main controller PCB (main). (See the COUNTER mode items for the counters cleared.) The counter values are cleared after the main power switch is turned OFF/ON. Operation method 1) Select this item, then press the OK key. 2) Turn the main power OFF/ON.	1
CNT-DCON	Clears following service counters maintained by DC controller PCB: - COPIER>COUNTER>DRBL-2>SORT - COPIER>COUNTER>DRBL-2>FIN-STPR - COPIER>COUNTER>DRBL-2>FIN-PDDL - COPIER>COUNTER>DRBL-2>SADDLE - COPIER>COUNTER>DRBL-2>SDL-STPL The counter values are cleared after the main power switch is turned OFF/ON. Operation method 1) Select this item, then press the OK key. 2) Turn the main power OFF/ON.	1

COPIER>FUNCTION>CLEAR		
Sub item	**Description**	**level.**
OPTION	Restores OPTION service mode setting values to default values (RAM clear values). ⚠ The setting values are cleared after the main power switch is turned OFF/ON. Note The cleared data is the data in the main controller, DC controller and reader controller. Operation method 1) Select COPIER > FUNCTION > MISC-P > P-PRINT to print out the service mode setting values. 2) Select this item, then press the OK key. 3) Turn the main power OFF/ON.	1
MMI	Clears following user mode setting values: - Backup data for copy operation panel (user-set values) - Common settings backup data (user-set values) - Backup data (except fax data) (user-set values) ⚠ The setting values are cleared after the main power switch is turned OFF/ON. Operation method 1) Select this item, then press the OK key. 2) Turn the main power OFF/ON.	1
MN-CON	Clears RAM on main controller PCB's SRAM board. ⚠ - The RAM is cleared after the OK key is pressed. - Performing this item initializes all the data on the SRAM board. In other words, file management information for the hard disk is initialized, and image data on the hard disk can no longer be read. Before performing this item, explain to the user that all images in the BOX will be lost, and receive permission to perform. Operation method 1) Select COPIER > FUNCTION > MISC-P > P-PRINT to print out the service mode setting values. 2) Select this item, then press the OK key.	1
CARD	Clears card ID (department) data. ⚠ The card ID data is cleared after the main power switch is turned OFF/ON. Operation method 1) Select this item, then press the OK key. 2) Turn the main power OFF/ON.	1
LANG-ERR	Clear language related error. This item enables recovery when a language related error code is generated after switching from the default language. (Returns to default language after recovery.)	1
ERDS-DAT	Embedded-RDS SRAM data clear SCM data in the embedded-RDS SRAM are restored to the factory settings.	1
DF-RCON*1	Initialization of the backup data (EEPROM) of DF-RCON board Clear and initialize the value of the EEPROM, which is installed in DF-RCON and used to store backup data.	1
SND-STUP	- use it to initialize the transmission read settings After changing service mode settings (pressing the OK key), turn off and then on the power to initialize the backup data of the transmission read settings. Otherwise, after you have changed the display language, the language used before the change would remain. Be sure to perform this mode item if you have switched the language.	2
CA-KEY	CA authentication and key deleted together. When the serviceman needs to replace or dispose of the device, the CA authentication and key can be deleted together.	2
KEY-CLR	HDD encoding board code key clear The HDD encoding board (security kit) code key is cleared to allow replacement. When this item is selected and OK pressed, the code key is cleared. Then, when the main power supply is turned OFF/ ON, the encoding board installation processing activates. If installation processing is carried out, a new code key is generated. Caution! If this operation is carried out, all data on the HDD will be rendered useless. The main power supply is switched OFF/ ON after this operation in order to format the HDD.	2

10. MISC-R

T-19-49

COPIER>FUNCTION>MISC-R		
Sub item	**Description**	**level.**
SCANLAMP	Use it to check the activation of the scanning lamp. Method of Operation 1) Select the item. 2) Press the OK key so that the scanning lamp will go on and remain on for 3 sec.	1
1PSCLB-A*1	Color difference correction for double-sided scanning (front side) Correct the color difference between the front and backside for a one-path double-sided machine. Calculate the color difference correction value for double-sided scanning with the result of "1PSCLB_B". Method of Adjustment When there is a significant color difference in double-sided scanning due to variations or durability change of the light source of the lamp, correct the color difference by executing 1PSCLB_A and 1PSCLB_B continuously. Print one sheet of PG in the setting of "TYPE: 47, TXPH: 0, THRU: 0" by "COPIER>TEST>PG", and set the printout (front side up) on the DF so that the cyan image [1] is placed on the rear left side. Then, execute 1PSCLB_A. When the result is NG, check the front/back/upper side/lower side of the document and set it on the DF again. Then, repeat the procedure until the result becomes OK.	1

COPIER>FUNCTION>MISC-R		
Sub item	**Description**	**level.**
1PSCLB-B*1	Color difference correction for double-sided scanning (backside) Correct the color difference between the front and backside for a one-path double-sided machine. Calculate the color difference correction value for double-sided scanning with the result of "1PSCLB_B". Method of Adjustment When there is a significant color difference in double-sided scanning due to variations or durability change of the light source of the lamp, correct the color difference by executing 1PSCLB_A and 1PSCLB_B continuously. When OK is displayed after execution of "COPIER>FUNCTION>MISC-R>1PSCLB_A", set the document used for 1PSCLB_A (backside up) on the DF so that the cyan image[1] is placed on the rear right side without turning the power OFF/ON, and execute 1PSCLB_B.	1
1PCLBRST*1	Reset of the function of color difference correction for double-sided scanning Reset the value adjusted by 1PSCLB_A and 1PSCLB_B to the factory setting value. Method of Adjustment - Execute this mode when the adjustment made by 1PSCLB_A and 1PSCLB_B is not preferable and it is necessary to reset the value. - Execute this mode when replacing parts related to the reader/DF (CIS unit, CIS glass, CCD unit, lamp, etc.).	1

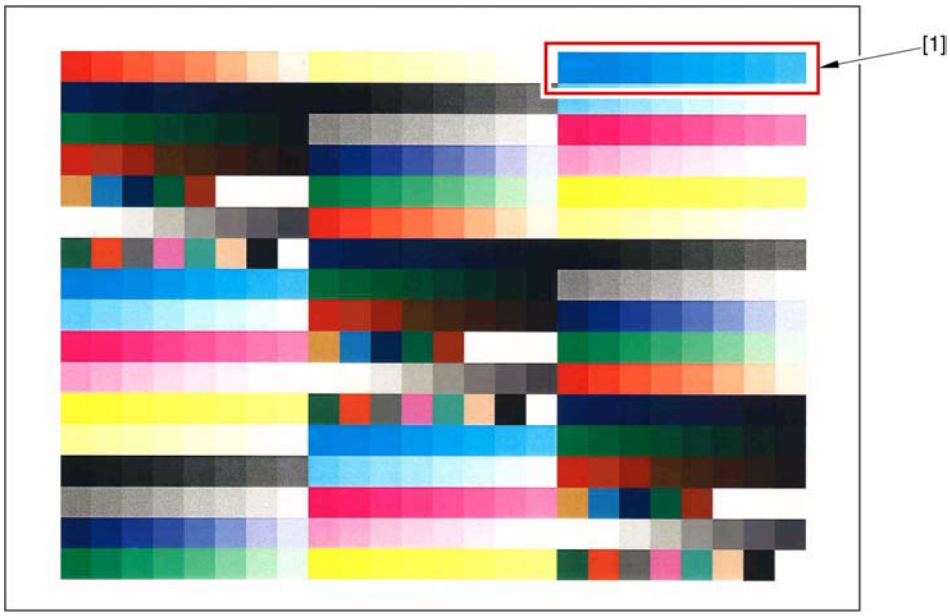

F-19-20

11. MISC-P

T-19-50

COPIER>FUNCTION>MISC-P		
Sub item	**Description**	**level.**
P-PRINT	Prints service mode setting values. Operation method 1) Select this item. 2) Press the OK key to print the setting values. **Reference:** Printing takes about 15 seconds to start.	1
KEY-HIST	- KEY-HIST (Prints the operation panel's key input history.) 1) Select this item. 2) Press the OK key to start printing.	1
HIST-PRT	- HIST-PRT (Prints the jam history and error history.) 1) Select this item. 2) Press the OK key to start printing.	1
USER-PRT	Prints user mode list. Operation method 1) Select this item. 2) Press the OK key to print the list. **Reference:** Printing takes about 3 seconds to start.	1
LBL-PRNT	Prints service label. Operation method 1) Place A4/LTR paper in the manual feed tray. 2) Select this item. 3) Press the OK key to print the label. **Reference:** Printing takes about 15 seconds to start.	1
D-PRINT	Printing out service mode (DISPLAY) Procedure 1) Select this mode. 2) Press OK to print out. **Reference:** Only DISPLAY items are printed out. (Items of P-PRINT/LBL-PRINT/HIST-PRINT and ALARM are excluded.)	1

COPIER>FUNCTION>MISC-P		
Sub item	**Description**	**level.**
ENV-PRT	Outputting logs of inside machine temperature and humidity/fixing roller surface temperature Procedure 1) Select this mode. 2) Press OK to output logs of inside machine temperature and humidity/fixing roller surface temperature. **Reference:** This mode is to output logs of [inside temperature(deg C)/humidity(%)/fixing roller surface (center) temperature (deg C)] variations using signals of the attached temperature/humidity (environmental) sensor and fixing thermistor (main). (Max. 100 records)	1
PJH-P-1	Prints print job history with detailed information (for 100 jobs). Prints print job history with detailed information for last 100 jobs stored in copier main unit.	1
PJH-P-2	Prints print job history with detailed information (for all jobs). Prints print job history with detailed information for all jobs stored in copier main unit.	1
TRS-DATA	- TRS-DATA (Moves the data received in memory to the BOX.) 1) Select this item. 2) Press the OK key to start printing.	2

12. SYSTEM

T-19-51

COPIER>FUNCTION>SYSTEM		
Sub item	**Description**	**level.**
DOWNLOAD	Switches to download mode. Operation method 1) Select this item. 2) Press OK to enter download mode and have the copier wait for commands (wait for connection). ("STNDBY" is now displayed, next to the DOWNLOAD sub-items.) 3) Use the service support tool to start downloading. ("CONNECTED"is displayed during communication with the PC.) 4) When communication ends, "HOLD"is displayed. (The power can be turned off when "HOLD"is displayed.)	1
CHK-TYPE	Used to specify partition number when performing HD-CHECK or HD-CLEAR. Operation method 1) Select this item. 2) Use the numeric keypad to select the desired partition number. 0: Check and restore all bad sectors on hard disk 1: Image storage area 2: General-purpose file storage area 3: PDL file storage area 4: Firmware storage area - General-purpose files include user-set data, log data, PDL spool data, and management information for image data. 3) Press the OK key.	1
HD-CHECK	Use it to check the entire HD and perform recovery. Operation method set '0' to the following: COPIER>FUNCTION>SYSTEM>CHK-TYPE 1) Select this item. 2) Press the OK key.	1
HD-CLEAR	Initializes partition specified by CHK-TYPE item. ⚠ - The following must be kept in mind and the user must be properly informed of the fact when using CHECK-TYPE: 0: entire HDD -> no operation occurs (to initialize, use the SST) 1: image storage area -> removes image data 2: general-purpose file area (user settings data, various log data, PDL spool data, image data control information) -> initializes files 3: PDL-related file storage area -> removes font data, requiring re-installation 4: firmware, address book, filter storage area -> no operation occurs (to initialize, use the SST) Operation method 1) Select this item. 2) Press the OK key. ⚠ If you perform <HD-CLEAR> after selecting 1 (image storage area) or 3 (PDL file storage area) for the <CHK-TYPE> item, the initialization process is performed after the power is turned OFF/ON. The initialization process takes about 5 minutes. A progress bar slowly advances to indicate the progress during this time. Never turn the power OFF during this time.	1
DEBUG-1	Specify timing with which log types and logs are to be stored on HDD. Specifies timing with which log types and logs are to be stored on HDD. Setting range 0: Saves PLOG when Reboot/Exception is detected. 1: Saves PLOG when Reboot/Exception/Encode is detected. 2: Saves SUBLOG when Reboot/Exception/Encode is detected. 3: Saves SUBLOG in overwrite mode when Reboot/Exception/Encode is detected. [Factory settings and after RAM clear: 0] Note: When 0 or 1 is set, the saved PLOG can be printed out with the sequence COPIER>FUNCTION>SYSTEM>DEBUG-2. When 2 or 3 is set, the saved SUBLOG cannot be printed out. (Upload from SST.)	2
DEBUG-2	Prints out logs saved on HDD. When 0 or 1 is set in the sequence COPIER>FUNCTION>SYSTEM>DEBUG-1, the saved PLOG is printed out. Note: When 2 or 3 is set in the sequence COPIER>FUNCTION>SYSTEM>DEBUG-1, the saved SUBLOG is not printed out. Up to around 20 sheets of A4 can be printed out.	2

19.5.2 FEEDER

19.5.2.1 FEEDER Table

CLC5151 / / / CLC4040 / / / iR C4580i / / / iR C4080i / / / / Color Image Reader-F1 / Color Image Reader-E1 / Dupiex Color Image Reader-G1 / iR C5185N / / iR C5185i PRT /

T-19-52

FEEDER>FUNCTION		
Sub item	**Description**	**level.**
SENS-INT	Use it to adjust the sensitivity of the individual sensors of the feeder. Select the item, and press the OK key to start feeder sensor initialization, turning the screen indication to 'ACT'. The operation will end automatically, turning the indication to 'OK'.	1
MTR-CHK	Execution of single unit check for the ADF motor, etc. Operation method 1) Press MTR-CHK. (It becomes highlighted.) 2) Enter a number associated with the part using numeric keys. 3) Press the OK key. 4) Press MTR-ON and check the operation. Setting range For Color Image Reader-F1 (DADF-M1) 0: Pick-up motor 1: Delivery motor 2: Delivery reversal motor 3: Pressure motor For Color Image Reader-G1 (DADF-T1) 0: Pick-up motor 1: Delivery motor 2: Delivery reversal motor 3: Pressure motor 4: Registration motor 2 5: CIS glass shift motor [Factory setting value / Value after execution of RAM clear: 0]	1
TRY-A4	Use it to execute automatic adjustment (A4 Width) for DF original paper width detection.	1
TRY-A5R	Use it to execute automatic adjustment (A5R width) for DF original paper width detection.	1
TRY-LTR	Use it to execute automatic adjustment (LTR width) for DF original paper width detection.	1
TRY-LTRR	Use it to execute automatic adjustment (LTR-R width) for DF original paper width detention.	1
FEED-CHK	Use it to check paper movement in the ADF on its own. Operation 1) Press [FEED-CHK] to highlight. 2) Enter the number of the component using the keypad. 3) Press the OK key. 4) Press [FEED-ON] to start checking the operation. Feed Mode 0: single-sided operation 1: double-side operation 2: single-sided operation w/ stamp 3: double-sided operation w/ stamp [Factory default/After RAM clear: 0]	1
CL-CHK	Use it to check the DF fan on its own. 0:DF fan Method of Operation 1)Press [FAN-CHK] (to highlight). 2)Enter the code of the part you want to check using the keypad. 3)Press the OK key. 4)Press [FAN-ON] to start checking the operation.	1
CL-ON	Use it to start the operation of the selected clutch. Press [CL-ON] and then press the OK key to start the operation of the clutch. Another press on the key will stop the operation. (The operation will stop in 200 msec; however, unless you press the OK key once again, the indication will not change to 'STOP.)	1
FAN-CHK	Single unit check for the DF cooling fan Operation method 1) Press FAN-CHK. (It becomes highlighted.) 2) Enter a number associated with the part using numeric keys. 3) Press the OK key. 4) Press FAN-ON and check the operation. For Color Image Reader-F1 (DADF-M1) 0: ADF cooling fan For Color Image Reader-G1 (DADF-T1) 0: ADF cooling fan 1: CIS fan [Factory setting value / Value after execution of RAM clear: 0]	1
FAN-ON	Use it to start the operation of the selected fan. Method of Operation Press [FAN-ON], and press the OK key to start the operation of the fan. Another press on the OK key will stop the operation. (The operation will automatically stop in 5 sec; hover, unless you press the OK key once again, the indication will not turn 'STOP'.)	1

FEEDER>FUNCTION		
Sub item	**Description**	**level.**
SL-CHK	Use it to check the ADF solenoid on its own. Operation 1) Press [SL-CHK] to highlight 2) Enter the number of the component using the keypad. 3) Press the OK key. 4) Press [SL-ON] to start checking the operation. Number of Component 0: lock solenoid 1: stamp solenoid [Factory default/After RAM clear: 0]	1
SL-ON	Use it to start the operation of the selected solenoid. Operation The operation varies from model to model. 1) Press [SL] to highlight; then, press the OK key to start motor operation. 2) Press the OK key once again to stop the ongoing operation. (The operation will stop automatically in 5 sec; however, the indication will not change to [STOP] unless the OK key is pressed once again.)	1
MTR-ON	Use it to start motor operation. Operation The operation varies from model to model. 1) Press [MTR-ON] to highlight; then, press the OK key to start motor operation. 2) Press the OK key once again to stop the motor. (The operation will stop automatically in 5 sec; however, the indication will not change to [STOP] unless the OK key is pressed once again.)	1
ROLL-CLN	Use it to clean the ADF roller. In this mode item, the roller is rotated by the work of its motor; it is cleaned by lint-free paper (moistened with alcohol) forced against it while it rotates. Operation 1) Press [ROLL-CLN] to highlight. 2) While the roller is rotating, clean it by forcing lint-free paper (moistened with alcohol) against it. 3) Press [ROLL-CLN] to highlight, and press the OK key to stop the rotation of the roller.	1
FEED-ON	Use it to check the movement of paper in the ADF on its own. Operation 1) Press [FEED-ON], and then press the OK key so that the ADF starts to move paper according to the operation mode selected using [FEED-CHK].	1

19.6 OPTION (Machine Settings Mode)

19.6.1 COPIER

19.6.1.1 COPIER Table

CLC5151 / / / CLC4040 / / / iR C4580i / / / iR C4080i / / / / Color Image Reader-F1 / Color Image Reader-E1 / Dupiex Color Image Reader-G1 / iR C5185N / / iR C5185i PRT /

1. BODY
*2 Does not operate in printer model.
Select Machine Specification Concerning the Machine Body

T-19-53

COPIER>OPTION>BODY		
Sub item		
MODEL-SZ	Used to select standard variable magnification display and ADF document size detection. The setting value takes effect after the main power switch is turned OFF/ON. Setting values 0: AB (6R5E) 1: INCH (5R4E) 2: A (3R3E) 3: AB/INCH (6R5E)	**1**
PASCAL	Used to select whether to use the contrast electric potential calculated by automatic gradation compensation (full compensation) control, and the gradation compensation data. - For printer models, you must always make this setting value 0 at time of installation. - The setting value takes effect after the power switch is turned OFF/ON. Setting values 0: Don't use 1: Use [Factory default/After RAM clear]	1
DLIFE-SW	Used to select light-sensitive drum life display. Reference: Use this item to select whether to display drum unit remaining service life. Setting values 0: Don't display [Factory default/After RAM clear] 1: Display (Drum unit life is displayed by selecting "System status"> "Consumable part display"in the user screen.)	1

COPIER>OPTION>BODY		
CONFIG	Used to select from among multiple sets of firmware stored on the hard disk, to switch the copier's country, language, manufacturer and paper size system. The setting value takes effect after the main power switch is turned OFF/ON. Operation method 1) Enter the service modes, and select COPIER > OPTION > BODY > CONFIG. 2) Select the item to switch, and press the + or -key. 3) Each time you press the + or -key, the setting for the selected item changes. 4) When you have displayed the desired setting for each item, press the OK key. 5) Turn the main power switch OFF/ON. Setting values XXYYZZAA XX: Country (Example: JP -> Japan) YY: Language (Example: ja -> Japanese) ZZ: Manufacturer (Example: 00 -> CANON) AA: Paper size system (Example: 00 -> AB system)	1
TEMP-TBL	Change of the fixing control temperature table Setting Value 0: use normal control temperature table 1: use the control temperature table that is approximately 10 deg C high 2: use the control temperature table that is approximately 5 deg C high 3: use the control temperature table that is approximately 5 deg C low 4: use the control temperature table that is approximately 10 deg C low [Factory default setting/the value after clearing RAM: 0]	1
W/SCNR	For copy models, sets whether scanner is present. The setting value takes effect after the main power switch is turned OFF/ON. Setting values 0: Printer model 1: Model with scanner Reference The setting will automatically change to '1' upon detection of the presence of a scanner (printer model).	1
RUI-DSP	Used to select copy function in remote UI. 0: Display copy the screen in remote UI[Factory default/After RAM clear] 1: Don't display copy screen in remote UI	1
ADJ-LVL	Sets execution mode for image stabilization control performed after preset number of sheets. Sets execution mode (adjustment set data) for forward/reverse operation of copy or print jobs and image stabilization control done between sheets. Reference: Changing the setting of this item lets you shorten the execution time for image stabilization control, a process performed after a preset number of sheets since the previous adjustment, or in a set time interval. Setting values 0: Implemented at both initial and last rotation 1: Implemented only at last rotation 2: Not implemented If you select "1: Compression mode 1" ,the density fluctuation will be greater than if you select "0: Normal mode" If you select "2: Compression mode 2" , you must perform the following item in the user mode: Adjustment/cleaning > automatic gradation compensation (full compensation).	1
INTROT-1	Sets the execution interval (number of sheets) for image stabilization control (adjustment set 1) during forward/reverse operation. Sets the interval in which automatic adjustment control (adjustment set 1) is performed during forward/reverse operation of copy or print jobs. Reference: If this item is set to a larger value than the setting value for image stablization control (adjustment set 2) (COPIER > OPTION > BODY > INTROT-2), the setting value for this item is invalid. When the adjustment set 2 (INTROT-2) process is performed, the adjustment set 1 (INTROT-1) process is considered to have been performed. The count is reset in the following cases: - When the number of sheets reaches the specified value - When an image stablization control process including the control items performed by this item is performed Increasing the interval in which the control process is performed may adversely affect the density fluctuation. When the setting value for the COPIER >OPTION > BODY > ADJ-LVL item is 2, the setting for this item is invalid. Setting values 50 to 1000 (Value at time of factory shipment/value after RAM clear: 100)	1
INTROT-2	Sets the execution interval (number of sheets) for image stabilization control (adjustment set 2) during forward/reverse operation. Sets the interval in which automatic adjustment control (adjustment set 2) is performed during forward/reverse operation of copy or print jobs. Reference: If this item is set to a smaller value than the setting value for image stablization control (adjustment set 1) (COPIER > OPTION > BODY > INTROT-1), the setting value for this item is invalid. The count is reset in the following cases: - When the number of sheets reaches the specified value - When an image stablization control process including the control items performed by this item is performed Increasing the interval in which the control process is performed may adversely affect the density fluctuation. When the setting value for the COPIER > OPTION > BODY > ADJ-LVL item is 2, the setting for this item is invalid. Setting values 50 to 1000 [Factory default/After RAM clear: 500]	1
INTROT-T	Sets the execution interval (time) for image stabilization control during standby. Sets the interval in which image stabilization control is performed during standby. The control process is performed after the preset amount of time has elapsed since the last job was performed. Reference: The time count starts after the last job has finished. The time is reset in the following cases: - When the time reaches the specified value - When a job is received before the time has reached the specified value To turn image stabilization control during standby ON/OFF, select: COPIER > OPTION > BOD > AUTO-DH Setting values 1 to 10 (hours) [Factory default/After RAM clear: 2]	1

COPIER>OPTION>BODY		
DEVL-PTH	Sets threshold value (number of sheets) for starting toner forcible consumption sequence. Use this item when copying/printing consecutive images with low color ratios. Operation method If the density drops below the set threshold value when copying/printing method consecutive low-color-ratio images, once the set number of sheets has been exceeded, the toner forcible consumption sequence is started during the job. Setting values 0: Don't perform sequence 1: About 30 sheets 2: About 100 sheets 3: About 200 sheets 4: About 500 sheets [Factory default/After RAM clear: 3]	1
AUTO-DH	Turns image stabilization control OFF/ON during standby. Used to turn OFF/ON the image stabilization control operation started by fluctuation in environment during standby, or started after the copier has been idle for an extended period. Operation method Downtime not intended by the user (when the copier starts up by itself) can be eliminated by turning OFF the image stabilization control operation that starts automatically due to environmental fluctuation during standby or when the copier is idle for an extended period. Setting values 0: Automatic start OFF (prohibit operation) 1: Automatic start ON (permit operation) Reference: The trigger time setting (in hours) is set by the following service mode item: COPIER > OPTION > BODY > INTROT-T If you enter a setting value of 0 (OFF), the user will have to monitor the output image to determine when to perform the following item in the user mode: Adjustment/cleaning > automatic gradation compensation (full compensation). Other image stabilization control processes are performed independently of this setting.	1
DFDST-L1	A higher setting will increase the level of dust detection (i.e., the machine will be more sensitive in detecting dust, which if left behind will cause thin lines in the images). settings range 0 to 255 [Factory default/After RAM clear: 200]	1
DFDST-L2	A higher setting will increase the level of dust detection (i.e., the machine will be more sensitive in detecting dust, which if left behind will cause thin lines in the images). settings range 0 to 255 [Factory default/After RAM clear: 200]	1
ENVP-INT	Setting log correction interval of inner machine temperature/humidity/fixing temperature Setting log collection interval to COPIER>FUNCTION>MISC-P>ENV-PRT and COPIER>DISPLAY>ENVRNT Settings 0 to 480 <min> [Factory default/After RAM clear: 60] Reference Log is not collected when '0' is set.	1
BLNK-THP	Switches leading edge margin for paper thicker than thick 1, 2. (Colour only.) This paper leading edge lateral stripe countermeasure. Setting values 0: Default margin 1: Leading edge margin centre value made 7 mm. [Factory settings and after RAM clear: 0]	1
FX-SPD2	Speed adjustment of the fixing roller The bigger the setting value, the faster the fixing roller speed (1 unit: 0.8%) By setting this item, the rotating speed of the delivery vertical path motor is automatically faster (the same ratio as the fixing roller). Setting range: -5 to 5 [Factory default setting/ the value after clearing RAM: 0]	1
CNTR-DSP	Selecting screen in response to the external controller Settings 0: The external controllericon is displayed on the control panel of the copier[Factory default/After RAM clear] (When the color image server is connected.) 1: The control panel of the copier becomes nondisplay mode (When the control panel-mounted external controller is connected.)	1
BASE-SW	Use it when trouble attributable to MEAP application occurs. By setting to '0', the operation of MEAP application can be controlled. settings 0: off (base model); 1: on (full model) [Default] MEMO: The change only from '1' to '0' is possible.	1
SC-L-CNT	Switch settings for paper size Large/ Small threshold in scanner counter Sets whether to count B4 size are Large or Small. Setting range 0: B4 size is counted as Small size paper. 1: B4 size is counted as Large size paper. Reference value 0 Note If 1 is set, so that B4 size is counted as large size paper, LTR size will be counted as Small size paper.	1
REPORT-Z	Report print attribute flag function control Switches attribute flags added to report prints. Setting values 0: PDL text mode 1: PDL photograph mode 2: SCAN text mode 3: SCAN photograph mode [Factory settings and after RAM clear: 0]	1

COPIER>OPTION>BODY		
IFXEML-Z	Colour iFAX, E-Mail Rx print attribute flag function control Switches attribute flags added to colour iFAX, E-Mail Rx prints. Setting values 0: PDL text mode 1: PDL photograph mode 2: SCAN text mode 4: SCAN photograph mode [Factory settings and after RAM clear: 0]	1
BMLNKS-Z	BMLinks Rx print attribute flag function control Switches attribute flags added to colour BMLinks Rx prints. Setting values 0: SCAN photograph mode 1: PDL photograph mode 2: SCAN text mode 3: PDL text mode [Factory settings and after RAM clear: 0]	1
DNSTRANS	Switching the priority of DNS transfer Determine the priority of protocol (IPv4/IPv6) used for DNS inquiry based on the DNStrans value. Setting range 0: ipv4, 1: ipv6 Method of Adjustment When DNS query is first executed for IPv6 in the environment where both IPv6 and IPv4 are used and the DNS server only supports IPv4, timeout occurs and it takes time. In such a case, execute this mode to set priority to IPv4.	1
FAXADCHK	Setting the number of times for checking FAX address entry (This is provided for Mizuho Bank.) Specify "N times" for setting the number of times to check FAX address entry. Setting range 0-9 (Default: 2) Perform checking of address entry for multiple times to prevent a mistake in FAX address entry. Actual number of times for checking FAX address entry can be specified. [Factory setting value / Value after execution of RAM clear: 2]	1
FCID-SW	Switching the forcible ID printing function (This is provided for Mizuho Bank.) Add a function to forcibly print ID information in which an authentication ID is converted a little bit like a function of expanding the number of copies. Adjustment range 0: Perform the function, 1: Do not perform the function [Factory setting value / Value after execution of RAM clear: 0]	1
DRY-CISU	Switching the mode of drying the glass on the CIS unit for condensation When moisture is applied to the glass surface on the CIS unit, which reads the backside, caused by condensation, an abnormal image or E225-0101 may occur. Therefore, use this service mode to select a mode to activate the machine while drying moisture applied to the glass surface on the CIS unit. 0: Normal activation mode 1: Activation while taking measures for condensation Usage When an abnormal image or E225-0101 occurs in the CIS unit caused by condensation, set "1" to this service mode and turn the power OFF/ON. The machine activates while the lamp on the CIS unit lights up for a specified period (30 seconds) so that moisture is dried immediately after the power is turned on. Be sure to close the ADF before executing this mode. If it is open, the lamp on the CIS unit does not light up and moisture cannot be dried. [Factory setting value / Value after execution of RAM clear: 0]	1
CCD-LUT2*1	Set whether or not to use the value adjusted in "COPIER>FUNCTION>CCD>LUT-ADJ3". Setting value 0: Use the calculation value. 1: Use the default value instead of the calculation value. Usage When a failure occurred to an image caused by the difference in the height of the chips occurred at backside (CIS) scanning, execute "FUNCTION>CCD>LUT-ADJ3" and make judgment of whether or not to use the calculated correction data while checking the image. [Factory setting value / Value after the execution of RAM Clear: 0]	1
MXSPDSEL*1	Set whether or not to use the value adjusted in "COPIER>FUNCTION>CCD>LUT-ADJ3". Setting value 0: Use the calculation value. 1: Use the default value instead of the calculation value. Usage When a failure occurred to an image caused by the difference in the height of the chips occurred at backside (CIS) scanning, execute "FUNCTION>CCD>LUT-ADJ3" and make judgment of whether or not to use the calculated correction data while checking the image. [Factory setting value / Value after the execution of RAM Clear: 0]	1
DELV-THY	Switch toner ejection threshold value Sets threshold value of mean image ratio for forced toner ejection sequence. Setting range: 1 to 5(%) [Factory settings and after RAM clear: 2]	2
SCANSLCT	Enable/disable the function used to compute the area of scanning based on the selected paper size. settings 0: OFF (area determined based on original detection) 1: ON (area determined based on paper size) at time of shipment/upon RAM initialization: 0	2
SENS-CNF	Use it to set the original sensor. Settings 0: AB configuration 1: inch configuration [Factory default/After RAM clear: 0]	2
RAW-DATA	Sets whether to print out raw received data. 0: Normal operation [Factory default/After RAM clear] 1: Print out raw received data	2
RMT-LANG	Used to select language of remote UI used from Web. Select language code with + and - keys.	2

COPIER>OPTION>BODY		
IFAX-LIM	Used to select whether number of output lines will be restricted when largevolume data is received by IFAX. 0: No restriction 1 to 999 [Factory default/After RAM clear: 500]	2
TC-REF	Used to turn ON/OFF environmental compensation on ATR sensor output Normally, the ATR sensor output value used is the value compensated for the environment. 0: Environmental compensation OFF 1: Environmental compensation ON [Factory default/After RAM clear] If fogging occurs in a low-humidity environment, set this item to 0.	2
SMTPTXPN	Used to change SMTP send port number. 0 to 65535 (increments of 1) [Factory default/After RAM clear: 25]	2
SMTPRXPN	Used to change SMTP receive port number. 0 to 65535 (increments of 1) [Factory default/After RAM clear: 25]	2
POP3PN	Used to change POP receive port number. 0 to 65535 (increments of 1) [Factory default/After RAM clear: 110]	2
ORG-LGL	Use it to set a special paper size not recognized by the DF size detection mechanism. settings 0: LEGAL 1: FOOLSCAP 2: A-FOOLSCAP 3: FORIO 4: G-LEGAL 5: OFFICIO 6: E-OFFICIO 7: A-OFFICIO 8: B-OFFICIO 9: A-LEAGAL 10: M-OFFICIO at time of shipment/upon RAM initialization: 0	2
ORG-LTR	Used to set special paper size not compatible with DF size recognition. 0: LTR [Factory default/After RAM clear] 1: G-LTR 2: A-LTR 3: EXECTIVE	2
ORG-B5	Sets special paper sizes that cannot be detected in ADF. Setting values 0: B5 1: K-LEGAL [Factory settings and after RAM clear: 0]	2
UI-COPY	Use it to select whether to display the copy screen in the control panel. Setting value 0: Do not display the copy screen. 1: Display the copy screen. [Factory default/After RAM clear: 1]	2
UI-BOX	Use it to enable/disable the display of the box screen on the control panel. 0: do not display 1: display 2: do not display (however, permit storage of PDF job in box) [Factory default/After RAM clear:1]	2
UI-SEND	Used to select whether to display operation panel send screen. 0: Don't display 1: Display [Factory default/After RAM clear]	2
UI-FAX	Used to select whether to display operation panel fax screen. 0: Don't display 1: Display [Factory default/After RAM clear]	2
Y-PTN	Used to eliminate 100 mm horizontal lines. 0: Don't imprint Y dot patterns on intermediate transfer belt. 1: Imprint Y dot patterns on intermediate transfer belt (only when reading color documents; Factory default/After RAM clear). 2: Imprint more Y dot patterns on intermediate transfer belt than when value of 1 is set. K dot patterns are imprinted on intermediate transfer belt during monochrome document reading only when value of 2 is set.	2
NEGA-GST	Additional Setting to the Sequence of Preconditioning Exposure (except laser) 0: OFF 1: ON (preconditioning exposure during initial rotations only) 2: ON (Preconditioning exposure during initial rotations and paper interval) [Factory default/After RAM clear] Reference Problem occurring when "2" is selected: - Lower Productivity (=> delay by 2 or 3 seconds)	2
SCR-SLCT	Used to select half-tone process for photographic printing paper/photo mode. 0: Use error diffusion method 1: Use low-line-count screen [Factory default/After RAM clear] 2: Use high-line-count screen	2
TMC-SLCT	Used to select coefficient used in error diffusion process. 0: Low granularity/low dot stability for Y/M/C/Bk 1: Y/M/C -> Low granularity, low dot stability, Bk -> high granularity, low dot stability [Factory default/After RAM clear] 2: High granularity/low dot stability for Y/M/C/Bk	2
CAL-SW	Used to switch condition for performing calibration control. Whenever possible, avoid using this setting during normal operation.	2
CLN-PTH	Sets threshold value (number of sheets) for starting drum cleaning sequence. Whenever possible, avoid using this setting during normal operation.	2
CLN-VTH	Sets threshold value (image density) for starting drum cleaning sequence. Whenever possible, avoid using this setting during normal operation.	2
FTPTXPN	Used to specify port (FTP) number to send to. 0 to 65535 (16-bit value) [Factory default/After RAM clear: 21]	2

COPIER>OPTION>BODY		
PRNT-ORD	Used to switch order of output to side tray. Whenever possible, avoid using this setting during normal operation.	2
INTPPR-1	Sets interval (number of sheets) for performing image stabilization control (adjustment set 1) between sheets. 0.50 to 1000 [Factory default/After RAM clear: 100]	2
PRN-FLG	Used to select area flag for PDL images. Whenever possible, avoid using this setting during normal operation.	2
SCN-FLG	Used to select area flag for copy images. Whenever possible, avoid using this setting during normal operation.	2
T-LW-LVL	Used to switch timing for display of remaining toner volume warning message. Whenever possible, avoid using this setting during normal operation.	2
DVTGT-Y/M/C/K	developer concentration target value offsets Whenever possible, avoid using these settings during normal operation.	2
NWERR-SW	Used to select whether to display network error messages. 0: Don't display 1: Display [Factory default/After RAM clear]	2
FX-SPD	Speed adjustment of the fixing roller The bigger the setting value, the faster the fixing roller speed (1 unit: 0.8%) By setting this item, the rotating speed of the delivery vertical path motor is automatically faster (the same ratio as the fixing roller). Setting range: -5 to 5 [Factory default setting/ the value after clearing RAM: 0] 0: Normal operation 1: At the point where the paper passes over the secondary transfer roller, the next image is started to be created.	2
EX-PS-SP	Used to adjust paper delivery vertical path motor speed. -2 to 2 [Factory default/After RAM clear: 0]	2
FX-N-ROT	Used to turn fixing motor idle after warmup ON/OFF. 0: ON (idle) [Factory default/After RAM clear] 1: OFF (don't idle) Setting this value to 1 increases the amount of paper curl, and reduces the capacity for the load on the paper delivery tray.	2
FX-SUB	Sets the fixing sub-heater's lighting ratio. 0: Normal [Factory default/After RAM clear] 1: Level 1 2: Level 2 Increasing this setting value decreases the lighting ratio (shortens the lighting time).	2
SLV-UP	Used to increase developing cylinder operation speed. Use when image fault ‘developing assembly uneven screw pitch’ occurs. 0: Normal [Factory default/After RAM clear] 1: Operate developing cylinder at 110% of normal speed. 2: Operate developing cylinder at 120% of normal speed. 3: Operate developing cylinder at 120% of normal speed and expand interval between sheets as well. Setting this value to 3 decreases productivity(Decrease productivity to approximately 3/4.).	2
STS-PORT	Use it to turn off/on the T.O.T (TUIF over TCP/IP) sync type command communication port. Turns on/off the inquiry/response (sync) type command communication port for TUIF over TCP/IP. settings 0: off (default); 1: on For service NAVI, set the value as '1' when connecting the PC and main body by crossing cable. MEMO: T.O.T (TUIF over TCP/IP) Communication protocol between embedded application presentation (UI) and applications within the device including COPY/ SEND/BOX etc., (Canon original protocol)	2
CMD-PORT	Use it to turn on/off the T.O.T (TUIF over TCP/IP) async type status communication port. Turns on/off the inquiry/response (sync) type status communication port for TUF over TCP/IP. settings 0: off (default); 1: on For service NAVI, set the value as '1' when connecting the PC and main body by crossing cable. MEMO: T.O.T (TUIF over TCP/IP) Communication protocol between embedded application presentation (UI) and applications within the device including COPY/ SEND/BOX etc., (Canon original protocol)	2
BK-4CSW	Used to select color mode used in photo mode. 0: OFF (Use monochrome mode when reading monochrome documents in printed photo or photographic printing paper photo mode.) 1: ON (Use simple color mode when reading monochrome documents in printed photo or photographic printing paper photo mode.) Instead of creating monochrome images in 4 colors, simple color mode applies only a very small amount of Y/M/C toner to the ITB.	2
MODELSZ2	Global Support for Copyboard Original Size Detection (mix of AB/Inch) When the setting is '1' , the machine will support global mode (AB/Inch) regardless of the setting of the swing flag MODEL-SZ (AB, Inch). Settings 0: normal 1: AB/inch mix detection at time of shipment/upon RAM initialization: 0	2

COPIER>OPTION>BODY		
SZDT-SW	Use it to enable/disable the switch-over from CCD size detection to photo size detection for copyboard original size detection. Settings 0: Size detection by CCD (Default) ; 1: Size detection by photo sensor [Factory default/After RAM clear: 0] - This is for individual user (glare protection), not used normally. - When the value is set as '1', original size detection at open/close of the pressure plate is not performed. For detection of the original size (without lightning the scanning lamp), original size sensor (photo sensor) is required.	2
LST-TNSW	use it to enable/disable the toner forced consumption sequence for last rotation 0: OFF 1: ON [Factory default/After RAM clear] Reference: negative effects of '0' If the original has a low color ratio, the output image may appear coarse or may have different hues.	2
OHP-PTH	use it to set the number of copies to be used for ITB cleaning sequence, occurring following the passage of a transparency Setting values: 15 [Factory default/After RAM clear] Settings: 0 to 100 Reference: if Type E transparencies are used in a high humidity environment, '2' is recommended	2
DEVL-FAN	Used to switch the paper feeding speed when using the delivery vertical path. Whenever possible, avoid using this setting during normal operation.use it to enable/disable the delivery cooling fan (FM5) 0: disable regardless of paper type [Factory default/After RAM clear] 1: enable only if plain paper Reference: if any of the following occurs, '1' is recommended - traces of the FU/FD switching flapper (when FD delivery is used for an image with a high color ratio at the trailing edge; on a simplex model) - traces of the FU/FD switching flapper (when FD delivery is used for an image with a high color ratio at the trailing edge; on a simplex model) - poor stacking in FU delivery (duplex model only) - dropouts on the trailing edge of a 2nd side in the morning (after being left alone for a long time; high humidity environment only)	2
UISW-DSP	switch appearing on the User screen use it to enable/disable the indication of the switch used to switch between Standard Setup screen and Simplified setup screen (e.g., for self-copy shop) 0: disable indication of switch [Factory default/After RAM clear] 1: enable indication of switch Reference: a model supporting a coin vendor mechanism may come equipped with functions equivalent to those of a limited function model /standard model	2
CLR-SHFT	use it to correct color displacement on heavy paper 0: Normal operation 1: At the point where the paper passes over the secondary transfer roller, the next image is started to be created. Reference: negative effects of '1' - the productivity for heavy paper will drop (to about 1/3)	2
ITB-CLN	use it to implement a remedy for uneven density in horizontal direction (dropout) 0: disable remedy 1: enable remedy [Factory default/After RAM clear]	2
NS-CMD5	Use it to set CRAM-MD5 authentication under SMTP authentication. setting 0: dependent on SMTP server 1: disable	2
NS-GSAPI	Use it to set GSSAPI authentication under SMTP authentication. setting 0: dependent on SMTP server 1: disable	2
NS-NTLM	Use it to set NTLM authentication under SMTP authentication. setting 0: dependent on SMTP server 1: disable it	2
NS-PLNWS	Use it to set PLAIN LOGIN authentication under SMTP authentication. <environment in which communication packets are subjected to coding> setting 0: dependent on SMTP server 1: disable	2
NS-PLN	Use it to set PLAIN LOGIN under SMTP authentication. <environment in which communication packages are not subjected to coding> setting 0: dependent on SMTP server 1: disable	2
NS-LGN	Use it to set LOGIN authentication under SMTP authentication. setting 0: dependent on SMTP server 1: disable	2
MEAP-PN	Setting the port No. of HTTP server used for MEAP application Settings 0 to 65535 [Factory default/After RAM clear: 8000] Referemnce: Do not use 1 to 1023 excepting 80 (HTTP) if specifying the port No. of HTTP server as MEAP port. (Because standard servers use numbers in this range.)	2
TMIC-BK	Use it to set the correction along the trailing edge for BkLUT and BkLUT for PDL (Tmic). Settings 0: PDL BK_LUT end correction ON; copy Bk_LUT end correction OFF 1: PDL BK_LUT end correction OFF; copy Bk_LUT end correction OFF 2: PDL BK_LUT end correction ON; copy Bk_LUT end correction ON (default) 3: PDL BK_LUT end correction OFF; copy Bk_LUT end correction ON [Factory default/After RAM clear: 2]	2

COPIER>OPTION>BODY		
SVMD-ENT	Switching the method of entering the Service Mode. Setting Values 0: [User Mode key] -> Press [2] and [8] simultaneously -> [User Mode key] [Factory default/After RAM clear] 1: [User Mode key] -> Press [4] and [9] simultaneously -> [User Mode key] Reference Information Support for Siemens	2
DH-MODE	Patch Data (high density side) Used in D-half Except in Full Correction Change the default setting so that the readout collected from D-half at time of full correction will be substituted for the patch on the high density side at time of D-half (other than in full correction). Settings 0: use patch image read data of full correction (at time of shipment/upon RAM initialization) 1: do not use patch image read data of full correction [Factory default/After RAM clear: 0]	2
LSUB-DWY	Switching DC bias voltage of the lower auxiliary brush Settings: 0: Bias is standard 1: Bias is reduced [Factory default/After RAM clear: 0] Increasing DC bias of the lower auxiliary brush has the effect of retaining/charging remaining transfer toner. (Countermeasures against fogged image) However, faulty image such as mark of the auxiliary brush and filming may occur as a result. Set this mode to '1' if such faulty image occurs.	2
LSUB-DWM	Switching DC bias voltage of the lower auxiliary brush Settings: 0: Bias is standard 1: Bias is reduced [Factory default/After RAM clear: 0] Increasing DC bias of the lower auxiliary brush has the effect of retaining/charging remaining transfer toner. (Countermeasures against fogged image) However, faulty image such as mark of the auxiliary brush and filming may occur as a result. Set this mode to '1' if such faulty image occurs.	2
LSUB-DWC	Switching DC bias voltage of the lower auxiliary brush Settings: 0: Bias is standard 1: Bias is reduced [Factory default/After RAM clear: 0] Increasing DC bias of the lower auxiliary brush has the effect of retaining/charging remaining transfer toner. (Countermeasures against fogged image) However, faulty image such as mark of the auxiliary brush and filming may occur as a result. Set this mode to '1' if such faulty image occurs.	2
BKTC-DWN	Countermeasures against fogged image due to Bk supply Settings: 0: OFF 1: ON [Factory default/After RAM clear: 0] Set this mode to [1 (countermeasures: ON)] when fogged image due to Bk supply occurs.	2
SSH-SW	SSH server ON/OFF Settings 0: Sever is not started up [Factory default/After RAM clear: 0] 1: Server is started up The following modes also become ON when COPIER>OPTION>BODY>DA-CNCT is set to '1'. COPIER>OPTION>BODY>CMD-PORT COPIER>OPTION>BODY>SSH-SW COPIER>OPTION>BODY>DA-PORT	2
RMT-LGIN	ON/OFF setting of remote login operation to SSH server Settings 0: Remote login operation to SSH server is disabled [Factory default/After RAM clear] 1: Remote login operation to SSH server is enabled	2
RE-PKEY	ON/OFF setting of SSH server key reproduction Settings 0: SSH server key is not reproduced. [Factory default/After RAM clear] 1: SSH server key is reproduced. This mode is enabled only when COPIER>OPTION>BODY>SSH-SW is set to '1'.	2
U-NAME	Use it to set a user name required to connect to the SSH server. Sets a login user name required to connect to the SSH server. Only one user can login the server. Setting range 8 characters maximum (English one byte characters) [Factory default/After RAM clear: gN3Fp2A] - Do not change this setting because this is for future expansion. - This is valid only when "1 (ON)" is set to <SSH-SW>.	2
U-PASWD	Use it to set a password of the user required to connect to the SSH server. Sets a password of the login user required to connect to the SSH server. Setting range 8 characters maximum (English one byte characters) [Factory default/After RAM clear: Vs8DuwJ] - Do not change this setting because this is for future expansion. - This is valid only when "1 (ON)" is set to <SSH-SW>. - The password is left hidden on the screen.	2
FXERRLVL	Not used	

COPIER>OPTION>BODY		
DA-PORT	Setting port for communication with DA Settings 0: Close [Factory default/After RAM clear:0] 1: Open The following modes also become ON when COPIER>OPTION>BODY>DA-CNCT is set to '1'. COPIER>OPTION>BODY>STS-PORT COPIER>OPTION>BODY>CMD-PORT COPIER>OPTION>BODY>SSH-SW COPIER>OPTION>BODY>DA-PORT	2
DA-CNCT	Setting connection to DA Settings 1: DA is used 2: DA is not used [Factory default/After RAM clear:0] The following modes also become ON when COPIER>OPTION>BODY>DA-CNCT is set to '1'. COPIER>OPTION>BODY>STS-PORT COPIER>OPTION>BODY>CMD-PORT COPIER>OPTION>BODY>SSH-SW COPIER>OPTION>BODY>DA-PORT MEMO: This is used only inside Japan, not outside Japan.	2
FXMSG-SW	Use it to enable/disable the message that prompts replacement of the fixing assembly. Use it to enable/disable the message on the control panel indication the need for the replacement of the fixing assembly. Normally, the setting is enabled; however, you can disable the message if there is no need for replacement (so that the user will not feel unnecessarily concerned and place a service call). If replacement is necessary, be sure to replace it and enable the setting. Settings 0: do not indicate 1: indicate a time of shipment/upon RAM initialization: 1	2
CHNG-STS	Use it to set the T.O.T (TUIF over TCP/IP) status connection port number. Changes the port number for status connection in a TUIF over TCP/IP environment. This is used for changing the port No. in service NAVI. settings 1 to 65535 (default: 20010) MEMO: T.O.T (TUIF over TCP/IP) Communication protocol between embedded application presentation (UI) and applications within the device including COPY/SEND/BOX etc., (Canon original protocol)	
CHNG-CMD	Use it to set the T.O.T (TUIF over TCP/IP) command connection port number. Use it to set the port number for the command connection in an TUIF over TCP/IP environment. This is used for changing the port No. in service NAVI. settings 1 to 65535 (default: 20000) MEMO: T.O.T (TUIF over TCP/IP) Communication protocol between embedded application presentation (UI) and applications within the device including COPY/SEND/BOX etc., (Canon original protocol)	2
MEAP-DSP	Use it to prohibit a switch-over from the MEAP screen to the standard screen (COPY/SEND/BOX screen etc.,). settings 0: off (shift to standard screen; default); 1: on (do not shift to atandard screen) MEMO: Although setting the value as '1' in COPIER > OPTION > BODY > MEAP-DSP, at the occurrence of error/jam/alarm, the display transits to the standard screen for showing a warning.	2
ANIM-SW	Use it to prohibit display of the Error/Jam screen while a MEAP application is in operation. Although setting the value as '1' in COPIER > OPTION > BODY > MEAP-DSP, at the occurrence of error/jam/alarm, the display transits to the standard screen for showing a warning. When setting this value as '1', at the occurrence of error/jam/alarm, - Display transition to the standard screen is prohibited. - Warning is displayed on the MEAP screen to urge the user to contact servicing. settings 0: off (display warning screen; default); 1: on (do not display warning screen)	2
HDD-TMP	Use it to set a level of temperature to serve as a reference for detecting a low temperature error. The new setting will not be valid until the power switch has been turned off and then on again. Settings 0 to 30 deg C [Factory default/After RAM clear: 2]	2
HDD-TIM	Use it to set the time interval allowed before a low temperature error is identified The new setting will not be valid until the power switch has been turned off and then on again. Settings 0 to 200 min [Factory default/After RAM clear: 10]	2
HDD-SW	Use it to enable/disable E code indication of a low temperature error The new setting will not be valid until the power switch has been turned off and then on again Settings 0: do not indicate 1: indicate [Factory default/After RAM clear: 0]	2

COPIER>OPTION>BODY		
DV-RT-LG	Switching the developing assembly idle rotation time of first thing in the morning Settings 0: 1 minute 1: 2 minutes [Factory default/After RAM clear: 0] Default of idle rotation time is 1 minute since iR C3200/iR C3220 Dcon V12.1 to prolong life of the process cartridge. However, use this mode to set 2 minutes if any trouble (faulty image etc.) occurs due to reduction of the time.	2
MEAP-SSL	Use it to set an HTTPS port for MEAP. Sets a port for the HTTPS server to use SSL in the MEAP HTTP. Setting range 1 to 65535 [Factory default/After RAM clear: 8443]	2
DH-TMG	Setting up a threshold for the accumulated number of outputs for the Dhalf control sequence operation trigger. Control If the fixing unit is lower than a specified temperature when the machine is turned on or recovered from the sleep mode, use this mode to make automatic full adjustments during initial multiple rotations. At this time, the Dhalf control is performed only if the number of outputs accumulated since the last Dhalf control exceeds the value specified in this Service Mode. Changing the timing of or canceling the Dhalf control (according to the number of accumulated outputs) by using this mode can reduce the downtime in the morning. (A measure for a complaint about the downtime in the morning) Meanwhile, there is a possibility that gray scale (half-tone image) might be degraded when the Dhalf control is cancelled. With regard to the accumulated number of outputs, a small-size copy is regarded as 1 count, and a large-size copy is regarded as 2 counts. When the Dhalf control is performed first thing in the morning or from the User Mode (quick correction, full correction), the accumulated number of outputs is reset. Settings 1 to 5000 [Initial setting upon shipment/value after RAM clear: 1000]	2
MIX-FLG	Use it to select an image field flag (for image synthesis). Selects the image processing method which is performed when a combined image cannot be compressed at a certain compression ratio on the main controller side. Setting value 0: Image processing equivalent to the PDL character mode 1: Image processing equivalent to the PDL photo mode 2: Image processing equivalent to the SCAN character mode 3: Image processing equivalent to the SCAN photo mode [Factory default/After RAM clear: 0]	2
KSIZE-SW *2	Paper size (K size) switch for China This switch allows iR series scanner controllers to support K size paper detection and display. When the switch is set to ON = 1 for MODEL-SZ = (AB type) destinations, the operation switches to allow K size paper recognition and detection to be performed with document detection, paper selection screen and APS type, etc. The following types of K size paper are available. - 8K: 270mm x 390 mm - 16K: 270mm x 195 mm Setting values 0: OFF (K size paper not handled) 1: ON (K size paper handled) [Factory settings and after RAM clear: 0]	2
LPD-PORT	Toggle switch to turn Rx transfer (PDF Tx) reduction transmission ON/ OFF. Images received in FAX, IFAX modes are converted to PDF and then reduced for transmission as email or for file transmission. Setting range 1 to 65535 [Factory settings and after RAM clear: 515]	2
ORG-A4R	Sets special paper sizes in ADF. Sets special paper sizes that cannot be detected in the ADF. Setting values 0: A4R 1: FOLIO-R [Factory settings and after RAM clear: 0]	2
PDF-RDCT	Switches to reduction transmission for reception transfer (PDF transmission). Images received in FAX, IFAX modes are converted to PDF and then reduced for transmission as email or for file transmission. Setting values 0: Image not converted to PDF and reduced for reception transfer. 1: Image converted to PDF and reduced for reception transfer. [Factory settings and after RAM clear: 0]	2
REDU-CNT	Switching control for density adjustment method Controls whether to perform density adjustment, in consideration of the amount of toner deposit.	2
REBOOTSW	Reboot switch for E240 error Sets whether to reboot automatically when an E240 error occurs. Setting values 0: Automatic reboot when E240 occurs. 1: No automatic reboot when E240 occurs. [Factory settings and after RAM clear: 0] How to use: There have been complaints from the field that, if the unit reboots automatically when E240 occurs, PDL jobs are lost. This item has been added in order to enable selection of whether to reboot automatically or not.	2
VP-ART	This mode enables line art processing to be changed. The line art outline processing in scalable PDF is changed. Setting range 0 to 99 Increase value:: Outline is made smoother. Decrease value:: Outline is made rougher. [Factory settings and after RAM clear: 1]	2

COPIER>OPTION>BODY		
VP-TXT	This mode enables text vectorisation processing to be changed. The text vectorisation processing in scalable PDF is changed. Setting range 0 to 99 Increase value:: Outline is made smoother. Decrease value:: Outline is made rougher. [Factory settings and after RAM clear: 1]	2
UI-PRINT	Control panel print job screen display restriction Switches between display and non display of control panel print job screen. (Some users with customized control panels prefer not to display this screen.) Setting values 0: No display 1: Display [Factory settings and after RAM clear: 1] Note: Here, 'print job' refers to a new screen loaded from E307G. In order to enhance the convenience of print related functions, screens that used to be treated as job status screens in the conventional system status have been upgraded to tab screens.	2
WUEV-SW	Sleep notification switch Sets whether to notify the DS application on the network when the copier main unit enters or recovers from sleep mode. Setting values 0: Send sleep notification. 1: Do not send sleep notification. [Factory settings and after RAM clear: 0]	2
WUEV-INT	Sets sleep notification interval. Sets interval at which sleep notification is sent. Setting range 0-65535 (Sec.) [Factory settings and after RAM clear: 600]	2
WUEV-POT	Sets sleep notification port number. Sets the PC port number to which sleep notification is to be sent. Setting range 1 to 65535 (Sec.) [Factory settings and after RAM clear: 11427]	2
WUEV-RTR	Sets sleep notification range. Sets the number of routers via which sleep notification may be sent. Setting range 1 to 255 [Factory settings and after RAM clear: 3]	2
SJB-UNW	Secure print job storage number (number of reserved jobs) switch Toggles secure print job storage number (number of reserved jobs) upper limit between 50 and 90. Setting range 0:50 1:90 [Factory settings and after RAM clear: 0]	2
UI-RSCAN	Control panel remote scan screen restriction Switches between display and non display of control panel remote scan screen. (Some users with customized control panels prefer not to display this screen.) Setting values 0: No display 1: Display [Factory settings and after RAM clear: 1]	2
UI-HOLD	Restriction of displaying the Hold Job screen on the control panel Set whether or not to display the Hold Job screen on the control panel. (This is provided for users who want to hide the screen on the control panel.) Setting value 0: Do not display the screen. 1: Display the screen. [Factory setting value / Value after execution of RAM clear: 1]	2
UI-EPRNT	Control panel extension print screen display restriction Switches between display and non display of control panel extension print screen (EFI print screen). (Some users with customized control panels prefer not to display this screen.) Setting values 0: No display 1: Display [Factory settings and after RAM clear: 1]	2
UI-WEB	Control panel web browser screen display restriction Switches between display and non display of control panel web browser screen. (Some users with customized control panels prefer not to display this screen.) Setting values 0: No display 1: Display [Factory settings and after RAM clear: 1]	2

COPIER>OPTION>BODY		
WEBV-SW	Control panel hold job screen display restriction Switches between display and non display of control panel hold job screen. (Some users with customized control panels prefer not to display this screen.) Setting values 0: No display 1: Display [Factory settings and after RAM clear: 1]	2
PASCL-TY	Sets paper to be used with PASCAL (reader/ printer). Sets type of paper to be used with PASCAL (reader/ printer). Setting values (differs by region) (differs by region) 1: CLC-SK 80 g (for regions other than USA/ EU, mainly Japan) 2: Hammermill 105 g (for USA) 3: Neusiedler 100 g (for UK) [Factory settings and after RAM clear: 1 (differs by region)]	2
CARD-RNG	Sets number of card groups (no. of cards) that can be used. Sets the number of card groups (no. of cards) that can be used with a card reader. Setting range 1-1000 [Factory settings and after RAM clear: 1000] Set the card starting number in COPIER> FUNCTION> INSTALL> CARD, then, in this mode, set the number of card groups (no. of cards) that can be used with a card reader.	2
WUEN-LIV	Sets start time after sleep notification from network. Sets time in seconds till the copier main unit next enters sleep mode after sleep mode is initiated by the network, irrespective of a new job. Setting range 10-600 (Sec.) Factory settings and after RAM clear: 15]	2
FXLP1-SW	Loop control OFF (normal speed) Sets loop control OFF when normal speed is being used. Set ‘1’ when image fault ‘the center of the image scraped‘ and/or ‘the rear end of the paper scraped’ occurs. Setting values 0: Loop control ON 1: Loop control OFF [Factory settings and after RAM clear: 0]	2
FX-SPD3	Speed change (OHP, glossy paper) Changes TBF speed for OHP and glossy paper. Setting range: -5 to 5 [Factory settings and after RAM clear: 0]	2
FX-LOOP1	TBF loop control and trailing edge OFF timing (normal speed) Changes the timing of TBF loop control and trailing edge OFF, when normal speed is being used. Setting range: -5 to 5 [Factory settings and after RAM clear: 0]	2
FX-LOOP2	TBF loop control and trailing edge OFF timing (half speed) Changes the timing of TBF loop control and trailing edge OFF, when half speed is being used. Set ‘1’ when the image fault ‘the center of the image scraped’ and/or ‘the rear end of the paper scraped’ occurs at half-speed printing. Setting range: -5 to 5 [Factory settings and after RAM clear:0]	2
FX-LOOP3	TBF loop control and trailing edge OFF timing (OHP, glossy paper) Changes the timing of TBF loop control and trailing edge OFF, when OHP or glossy paper is being used. Setting range: -5 to 5 [Factory settings and after RAM clear: 0]	2
FXLP2-SW	Loop control OFF (half speed) Sets loop control OFF when half speed is being used. Setting values 0: Loop control ON 1: Loop control OFF [Factory settings and after RAM clear: 0]	2
FXLP3-SW	Loop control OFF (OHP, glossy paper) Sets loop control OFF when OHP or glossy paper is being used. Setting values 0: Loop control ON 1: Loop control OFF [Factory settings and after RAM clear:0]	2
FX-U-STB	Changes fixer belt standby temperature adjustment. Setting values 0: default 1: -5 deg C 2: -10 deg C 3: -15 deg C 4: -20 deg C [Factory settings and after RAM clear: 0]	2

COPIER>OPTION>BODY		
FX-L-STB	Changes pressure belt standby temperature adjustment. Setting values 0: default 1: -5 deg C 2: -10 deg C 3: -15 deg C 4: -20 deg C [Factory settings and after RAM clear: 0]	2
COMP-PRT	Composite print operation control (image processing memory allocation control) When a count of 2 or more prints are to be made in page print/ set print/ stamp/ date print/ book binding/ watermark print (composite print), depending on the memory model (optional configuration) and document size, the memory allocation method is set to 'print priority' for image processing purposes. This means there is not enough memory for image processing for Scan, Send Tx (excluding FAX) and PDL entry, and these operations must wait until printing is finished. In this case, all memory is allocated equally to all jobs so that the operations can be carried out (each a little at a time) without waiting until printing is finished. Setting values 0: Print priority 1: Equal allocation [Factory settings and after RAM clear: 0]	2
FCLR-OFF	Set whether or not to prohibit full color print When this switch is set to "1 (ON)", prohibit selection of "Full Color" provided in the color selection pull down menu for copy operation. (The "Full Color" menu is displayed in half tone.) 0: Do not prohibit selection. 1: Prohibit selection. [Factory setting value / Value after execution of RAM clear: 0]	2
FX-ST-SP	Fixing unit idling speed in standby. Sets the fixing unit idling speed in standby. Setting values 0: 32 mm/s 1: 50 mm/s 2: 70 mm/s [Factory settings and after RAM clear: 0]	2
FIX-RT-T	Change intermission interval in standby Sets rotation stop interval in standby. Setting range: 0 to 300 (in units of 10 sec.) [Factory settings and after RAM clear: 0]	2
DELV-THC	Switch toner ejection threshold value (C) Sets threshold value of mean image ratio for forced toner ejection sequence. Setting range: 1 to 5(%) [Factory settings and after RAM clear: 2]	2
DELV-THM	Switch toner ejection threshold value (M) Sets threshold value of mean image ratio for forced toner ejection sequence. Setting range: 1 to 5(%) [Factory settings and after RAM clear: 2]	2
DELV-THK	Switch toner ejection threshold value (Bk) Sets threshold value of mean image ratio for forced toner ejection sequence. Setting range: 1 to 5(%) [Factory settings and after RAM clear: 2]	2
FX-EX-TM	Extend warm-up time Sets warm-up time. Setting values 0: default 1: 1 min. extension 2: 2 min extension [Factory settings and after RAM clear: 0]	2
FAN-SLP	Switch fan sequence when entering sleep mode. Setting range 0: Sequence uses environment sensor temperature reading. 1: Sequence does not use environment sensor temperature reading. [Factory settings and after RAM clear: 0]	2
AST-SEL	Change advanced smoothing range Used when adjustments to advanced smoothing effect are felt necessary. If the smoothing effect is felt to be too strong, even though 'Soft' is selected in the advanced smoothing UI, set this item to '0'. If the smoothing effect is felt to be too weak, even though 'Strong' is selected in the advanced smoothing UI, set this item to '3'. Setting range: 0 to 3 [Factory settings and after RAM clear: 2]	2
REGM-SEL	Change fine line density correction range Used when adjustments to fine line density for lines and characters in 1200 dpi printing are felt necessary. If lines and characters are felt to be too faint, even though '+2' is set in the fine line density UI, increase the plus setting of this item. If lines and characters are felt to be too dark, even though '-2' is set in the fine line density UI, increase the minus setting of this item. Setting range: 0 to 4 [Factory settings and after RAM clear: 2]	2
SLV-UP-H	Increase the rotation speed of the developing cylinder at half speed. Use this mode when "uneven screw pitch" occurs. Setting value 0: Normal 1: Rotate the developing cylinder at 120% of normal speed. 2: Rotate the developing cylinder at 150% of normal speed. 3: Rotate the developing cylinder at 150% of normal speed and increase the paper interval. [Factory setting value / Value after the execution of RAM Clear: 0] When the value is set to "3", productivity decreases. (Productivity is decreased to approximately 3/4.)	2

COPIER>OPTION>BODY		
DWNSQ-FU	Decrease throughput (for FU, normal speed, duplex, colour jobs) This setting changes the throughput for FU, normal speed, duplex and colour jobs. Setting values 0: Ordinary productivity 1: 32 cpm 2: 12 cpm [Factory settings and after RAM clear: 0]	2
DWNSQ-FJ	Decrease throughput (for FJ, normal speed, duplex, colour jobs) This setting changes the throughput for FJ, normal speed, duplex and colour jobs. Setting values 0: Normal productivity 1: 32 cpm 2: 12 cpm [Factory settings and after RAM clear: 0]	2
FXLP-DWN	Modify the arching level before fixing Modify the S-arching level between the secondary transfer to fixing at plain-paper printing. When the center of the image scraped occurs at plain-paper printing, set 1 at this mode. Setting value 0: Level of modifying arching 1 1: Level of modifying arching 2 2: Level of modifying arching 3 Factory settings and after RAM clear: 0] Make the following settings at this mode. - Set 4 by COPIER>OPTION>BODY>FX-LOOP1. - Set 1 by COPIER>OPTION>BODY>FXLP1-SW.	2
DELV-FN2	Change the control of delivery cooling fan at 2-side, large size printing Change the operation of the delivery cooling fan at 2-side, large size paper printing If curl is produced at 2-side, large-size paper printing, set 1 or 2. When 2-side printing on a large-size paper left in place of high temperature and humidity causes bounding of the rear end, set 0 or 1. Setting value 0: Stop 1: Half speed 2: Full speed Factory settings and after RAM clear: 0]	2
PRES-ADJ	Pressure control for fixing assembly Modify the pressure pulse to reduce the pressure when pressuring the belt. Set 1 at this mode when scrape on the image center occurs. Setting value 0: Normal 1: Decrease Factory settings and after RAM clear:0]	2
USB-RCNT	Setting of automatic connection when disconnecting the USB device Setting value 0: Perform automatic connection. 1: Do not perform automatic connection. Method of Adjustment [Under checking] This is provided as measures to solve the problems when disconnecting a Felica card reader manufactured by SAXA Inc. [Factory setting value / Value after execution of RAM clear: 0]	2
DWNSQ-DU	Not Use	2
FIX-RT-D	Proportion of the rotation time for setting the intermittent time for idling of the fixing assembly Set the proportion of the rotation time during intermittent time for idling of the fixing assembly placed in the standby status. Increase the setting value to increase the rotation time during intermittent time for idling (to shorten the suspension time). Decrease the setting value to prolong the life of the fixing assembly. Unit: 10% This mode is valid only when values other than 0 are set to "COPIER/OPTION/BODY/FIX-RT-T". Setting value: 1 to 9 Method of Adjustment When the machine is frequently placed in the standby status and is not often used for copy or print operation, set an intermittent time for idling of the fixing assembly to decrease the proportion of rotation time using this service mode. [Value after execution of RAM clear: 5]	2
FXMTR-SW	Not Use	2
DELV-FN3	Change the movement of the delivery cooling fan when printing thick paper as double sided. Specified value 0: Full-speed 1: Stop Adjustment method When the image fault due to condensation on ITB appears, set [1]. When printing on both-sides at low-temperature environment, condensation appears on ITB and that leads to transfer fault.[The value after clearing RAM: 0]	2
FS-FN-D	Adjustment of the threshold for switching the rotation speed of the fixing exhaust fan at double-sided printing Adjust the threshold of the environment temperature used to switch the rotation speed of the fixing exhaust fan at double-sided printing. The setting value is an offset value. This mode is provided as measures for complaints about noise of the fixing exhaust fan. Unit: C Setting range: -3 to 3 Method of Adjustment When the temperature of the room where the machine is installed is not 30C, set the difference to 30C in this service mode to adjust the switching of the rotation speed of the fixing exhaust fan. Ex) When the room temperature is 27C, set "30-27=3" in this service mode. Ex) When the room temperature is 28C, set "30-28=2" in this service mode. [Value after execution of RAM clear: 0]	2

COPIER>OPTION>BODY		
FS-FN-S	Adjustment of the threshold for switching the rotation speed of the fixing exhaust fan at one-sided printing Adjust the threshold of the environment temperature used to switch the rotation speed of the fixing exhaust fan at one-sided printing. The setting value is an offset value. This mode is provided as measures for complaints about noise of the fixing exhaust fan. Unit: C Setting range: -3 to 3 Method of Adjustment When the temperature of the room where the machine is installed is not 30C, set the difference to 30C in this service mode to adjust the switching of the rotation speed of the fixing exhaust fan. Ex) When the room temperature is 27C, set "30-27=3" in this service mode. Ex) When the room temperature is 28C, set "30-28=2" in this service mode. [Value after execution of RAM clear: 0]	2
MIBCOUNT	Charging counter MIB switch Change the scope range of the charging counter MIB. Setting range 0: Display all charging counter MIB information. 1: Display all charging counter MIB information that is displayed in LUI. 2: Do not display charging counter MIB information. Method of Adjustment When the charging counter MIB is not disclosed, request a serviceman to change the counter value. [Value after execution of RAM clear: 0]	2
TD-DWN-Y/M/C/K	Decreasing the T/D ratio when using old toner of yellow/magenta/cyan/black color Correct the T/D ratio of one-year-old toner cartridges to an optimum value. Setting range: 0 to 10 (Default: 0) When a two-year-old or older cartridge is used, the machine attempts to increase the T/D ratio to compensate for decreases in tribo caused by deterioration, and fogging sometimes occurs. In such a case, set any number in 1 through 10 to this mode to eliminate fogging. When a larger value is set, a higher effect is expected. In this service mode, the number of days elapsed from the manufacturing date is calculated based on the date specified in the toner cartridge and controller. Therefore, a correct date should be set to the controller. If an incorrect date is set, it may cause a trouble in an image output.	

2. USER

T-19-54

COPIER>OPTION>USER		
Specification selection related to user mode		
Sub item	**Description**	**level.**
COPY-LIM	Used to change upper limit value setting for number of sheets to copy. Setting values 1 to 999 sheets [Factory default/After RAM clear: 999]	1
SLEEP	Used to turn sleep function ON/OFF. Setting values 0: OFF 1: ON [Factory default/After RAM clear] Reference: The sleep function is set by the timer setting in the "User mode"	1
COUNTER 1	Sets user mode screen software counter 1. Setting values 101: Total 1 (Value at time of factory shipment/value after RAM clear: 1. Fixed value that can't be changed.)	1
COUNTER 2	Used to change the counter type display for the operation panel's software counter 2, to meet user or dealer requirements. Reference: Lets you change the counter data to meet user or dealer requirements. Setting values 0 to 999 [Factory default/After RAM clear: 108]	1
COUNTER 3	Used to change the counter type display for the operation panel's software counter 3, to meet user or dealer requirements. Reference: Lets you change the counter data to meet user or dealer requirements. Setting values 0 to 999 [Factory default/After RAM clear: 232]	1
COUNTER 4	Used to change the counter type display for the operation panel's software counter 4, to meet user or dealer requirements. Reference: Lets you change the counter data to meet user or dealer requirements. Setting values 0 to 999 [Factory default/After RAM clear: 324]	1
COUNTER 5	Used to change the counter type display for the operation panel's software counter 5, to meet user or dealer requirements. Reference: Lets you change the counter data to meet user or dealer requirements. Setting values 0 to 999 [Factory default/After RAM clear: 000]	1
COUNTER 6	Used to change the counter type display for the operation panel's software counter 6, to meet user or dealer requirements. Reference: Lets you change the counter data to meet user or dealer requirements. Setting values 0 to 999 [Factory default/After RAM clear: 000]	1
CONTROL	Used to initialize the transmission reading setting. Setting values When connecting with the account-managing device (e.g., coin vendor, non-Canon control card), it switches over the count pulse (on/off) in the account-managing device. 0: Not restricted [Factory default/After RAM clear] 1: Restricted When charging against PDL prints, set '1'.	1
B4-L-CNT	Used to select whether to count B4 size paper as large size or small size for software counters 1 to 6. Setting values 0: Small size [Factory default/After RAM clear] 1: Large size	1
COPY-JOB	Prohibits copy job reservations when card reader and coin vendor are in use. Setting values 0: Copy job reservations [Factory default/After RAM clear] 1: No copy job reservations	1

COPIER>OPTION>USER		
Specification selection related to user mode		
TAB-ROT	Rotates landscape images on PDL tab paper 180 degrees. Setting values 0: Don't rotate [Factory default/After RAM clear] 1: Rotate	1
PR-PSESW	Print pause function switch display selection Sets whether to display the print pause switch on the user screen. Setting values 0: No display 1: Display [Factory settings and after RAM clear: 0]	1
IDPRN-SW	Used to switch type of count-up job for department management counter. Setting values 0: BoxPrint, ReportPrint, SendLocalPrint and PDLPrint are counted as PRINT categories [Factory default/After RAM clear] 1: Only PDLPrint is counted as a PRINT category	1
CPRT-DSP	Used to select whether to display count print button in sales counter check screen. Setting values 0: Don't display (This setting is only for stores that request it.) 1: Display (Count print function can be used.) [Factory default/After RAM clear]	1
CNT-SW	Used it to select charge counters and default display items (100-V model only) Settings 0:counter 1-101 total 1 counter2-total(black-and-white1): 108 counter3-copy(full color + mono color/1): 232 counter4-print(full color + mono color/1): 324 1:counter1-total2: 102 counter2-copy(full color + mono color/2): 231 counter3-totalA(full color + mono color/2): 148 counter4-copy(black-and-white2): 222 counter5-totalA(black-and-white2): 133 2:(setting0 and mono color Version) counter1-total1: 101 counter2-total(black-and-white1): 108 counter3-copy(full color + mono color/1): 232 counter4-print(full color + mono color/1): 324 counter5-total(mono color/1): 118 3:counter1-total1: 101 counter2-total(full color + mono color/small): 123 counter3-total(full color + mono color/large): 122 counter4-total(black-and-white/small): 113 counter5-total(black-and-white/large): 112 counter6-scan(total1): 501 4:(setting3 and mono color Version) counter1-total1: 101 counter2-total(full color + mono color/small): 122 counter3-total(full color + mono color/large): 122 counter4-total(black-and-white/small): 113 counter5-total(black-and-white/large): 112 counter6-total(mono color): 111 counter7-total(mono color/large): 110 counter8-scan(total1): 501 [at time of shipment/upon RAM initialization]	1
BCNT-AST	Used to select a job type with which to count BOX print from ASSIST. Setting values 0: Count as PDL print [Factory default/After RAM clear] 1: Count as Copy print	1
DFLT-CPY	Sets default COPY colour mode. Setting values 0: AUTO/ACS/Driver setting 1: Full colour 2: Black and white JPN [Factory settings and after RAM clear: 0] USA [Factory settings and after RAM clear: 0] EUR [Factory settings and after RAM clear: 2 (CLC models: 0)] Other than the above: [Factory settings and after RAM clear: 2]	1
DFLT-BOX	Sets BOX default mode Setting range 0: AUTO/ACS/Driver settings 1: Full colour 2: Black and white JPN [Factory settings and after RAM clear:: 0] USA [Factory settings and after RAM clear:: 0] EUR [Factory settings and after RAM clear:: 0 (iR models: 2)] Other than the above: [Factory settings and after RAM clear: 2]	1
DOC-REM	Sets document removal message. Setting range 0: No display 1: Display [Factory settings and after RAM clear: 0]	1
COUNTER7	Selects type of counter to be displayed in user mode counter 7. Enter values to make setting. The setting will be for the seventh counter displayed in the user mode counter confirmation. [Factory settings and after RAM clear: 0 (No setting)]	1

COPIER>OPTION>USER		
Specification selection related to user mode		
COUNTER8	Selects type of counter to be displayed in user mode counter 8. Enter values to make setting. The setting will be for the eighth counter displayed in the user mode counter confirmation. [Factory settings and after RAM clear: 0 (No setting)]	1
LDAP-SW	Sets LDAP search conditions. Sets conditions to be matched when searching from email addresses and fax numbers from the LDAP server. Setting values 0: 'includes' 1: 'does not include' 2: 'is equal to' 3: 'is not equal to' 4: 'begins with' 5: 'ends with' [Factory settings and after RAM clear: 4]	1
FROM-OF	Sets whether to delete 'from' address when sending mail. Setting values 0: Do not delete 'from' address. 1: Delete 'from'. [Factory settings and after RAM clear: 0]	1
SPEAKER	Sets text-to-speech (user mode) 'Speaker/ Headphones' button display. Setting values 0: Do not display 'Speaker/ Headphones' button. 1: Display 'Speaker/ Headphones' button. [Factory settings and after RAM clear:: 0]	1
FILE-OF	Sets file address transmission prohibition. This setting prohibits transmission to a file address by prohibiting file address entry into the address book. Setting values 0: Do not prohibit transmission to file address. 1: Prohibit transmission to file address. [Factory settings and after RAM clear: 0]	1
MAIL-OF	Sets email address transmission prohibition. This setting prohibits transmission to an email address by prohibiting email address entry into the address book. Setting values 0: Do not prohibit transmission to email address. 1: Prohibit transmission to email address. [Factory settings and after RAM clear: 0]	1
IFAX-OF	Sets IFAX address transmission prohibition. This setting prohibits transmission to an IFAX address by prohibiting IFAX address entry into the address book. Setting values 0: Do not prohibit transmission to IFAX address. 1: Prohibit transmission to IFAX address. [Factory settings and after RAM clear: 0]	1
LDAP-DEF	Switches LDAP search condition defaults. Sets default search attributes when LDAP detailed search is selected. Setting values 0: 'Name' 1: 'Email' 2: 'Fax' 3: 'Organisation' 4: 'Unit' 5: User setting 1 6: User setting 2 [Factory settings and after RAM clear: 0]	1
SIZE-DET	Sets document size detection function ON/ OFF. When the pressure plate opens and closes, there is no light flashing, so extraneous light can be cut out. Setting values 0: OFF 1: ON [Factory settings and after RAM clear: 1] 2	2
DATE-DSP	Used to switch date display. 0: 'YYMM/DD 1: DD/MM'YY 2: MM/DD/YY	2
MB-CCV	Used to select whether to restrict mailbox control card users. 0: Don't restrict 1: Restrict	2
TRY-STP	Used to set mode in which output stops when tray is full. 0: Normal mode (Interrupted when finisher tray is full.) 1: Interrupted only by height detection	2
MF-LG-ST	Sets long length mode key. Setting values 0: Normal setting 1: Display long length key in mode screen. [Factory settings and after RAM clear: 0]	2
CNT-DISP	Used to select whether to display serial number when counter check key is pressed. 0: Display serial number. 1: Don't display serial number.	2
OP-SZ-DT	Used to turn document size detection when pressure plate is open ON/OFF. 0: Enter document size in control panel. 1: Detect document when start key is turned ON with pressure plate open.	2
NW-SCAN	Used to select whether to permit network scan function 0: Don't permit 1: Permit (Invalid when UFR board or open interface board isn't connected.)	2

COPIER>OPTION>USER		
Specification selection related to user mode		
HDCR-DSP	Used to turn off display of user mode hard disk clear mode and switch clear operations. 0: Don't display and don't clear 1: Clear once with zeroes 2: Clear once with random data 3: Clear 3 times with random data (mode displayed for settings 1 to 3) MEMO: function for HDD initialization This is the function to clear the data on HDD completely by overwriting the 0 (null) data and random data to file data area at the moment of deleting files logically (timing for deleting the administrative information data) in HDD.	2
JOB-INVL	Used to set job interval during interrupt. 0: Standard setting (Output next job continuously during interrupt copy job.) 1: Start output of next job after last sheet of interrupt copy job has been delivered. 2: Start output of next job after last sheet of any job has been delivered.	2
LGSW-DSP	Used to select whether to display "Log display ON/OFF setting" on user mode screen. 0: Don't display "Log display ON/OFF setting" 1: Display "Log display ON/OFF setting"	2
P-CRG-LF	Used to select operation performed when drum unit has reached end of service life. 0: Don't stop 1: Stop	2
PCL-COPY	Used to set compatible mode for "COPIES" PCL command. 0: Perform control on each page individually, according to value of COPIES command specified for each page. [Factory default/After RAM clear] 1: Compatible (other controller) mode (not in use) 2: Reserved	2
PRJOB-CP	Setting for count pulse (on/off) at receipt print/report print. When using account-managing device (e.g., coin vendor, non-Canon control card), it switches over (on/off) the count pulse notice for every page at receipt print/report print. 0: disable generation of count pulse [Factory default/After RAM clear] 1: enable generation of count pulse Reference: use it to apply or not apply a count pulse notification to the control guard for each page	2
DPT-ID-7	Registering a department ID and inputting a 7-digit code for authentication. Setting Values 0: As before [Factory default/After RAM clear] 1: Inputting a 7-digit code Reference Infomation Support for Siemens	2
RUI-RJT	Disconnecting the HTTP port when three authentication failures from RUI are recognized. Setting Values 0: Invalid [Factory default/After RAM clear] 1: Valid Reference Information Support for Siemens	2
SND-RATE	Sets compression rate when compression rate in SEND is selected 'High'. Setting values 0: Compression rate 1/16 1: Compression rate 1/20 2: Compression rate 1/24 [Factory settings and after RAM clear: 0]	2
CTM-S06	Setting password deletion from the export file of file transmission address Settings 0: Password is not deleted from the export file [Factory default/After RAM clear] 1: Password is deleted from the export file	2
FREG-SW	Switching display/nondisplay of a free register area of SEND MEAP counter Settings 0: Nondisplay [Factory default/After RAM clear] 1: Display MEMO: - This is not used at normal servicing because it is for trouble analysis. - Obey the instruction by the quality support section for usage.	2
IFAX-SZL	Switching transmission size limitation during IFAX transmission (Only when bypassing server) Settings 0: Transmission size limitation is enabled (via/bypassing server) 1: Transmission size limitation is disabled (bypassing server only) [Factory default/After RAM clear] In the case of setting '0', - as for upper limit value, set it in transmission data size by selecting the following: additional functions mode>System Settings>Communications Settings>E-mail/I-Fax Settings>Maximum Data Size For Setting - if sending data that the size exceeds the upper limit value, it will be #830 error.	2
IFAX-PGD	Permitting the divided transmission per page (only when the upper limit of the transmission data size is exceeded). Settings 0: Not permit the divided transmission per page upon transmission in the IFAX Simple mode. [Factory default/After RAM clear] 1: Permits the divided transmission per page upon transmission in the IFAX Simple mode. When setting '1', in the case of exporting the address book data from remote UI, the password of file server is hidden from the exported file (to avoid leakage of information).	2
MEAPSAFE	Switching over to the MEAP safe mode. Settings 0: Normal mode [Factory default/After RAM clear] 1: Safe mode Safe mode works to stop the added MEAP application, and to startup the only system application that was activated at initial state to start up the system safely. Set '1' to startup in safe mode in the case of system recovery processing when MEAP platform does not startup normally because of resource competition among MEAP applications, or the order to register/use the service. "MPSF" is indicated in the control panel screen when in safe mode.	2

COPIER>OPTION>USER		
Specification selection related to user mode		
TRAY-FLL	Setting the timing to issue an output-tray-full warning. Settings 0: Issues an output-tray-full warning when all the delivery trays become full. [Factory default/After RAM clear] 1: Issues an output-tray-full warning when all the specified trays become full.	2
PRNT-POS	Toggle switch to pause or not pause all subsequent print jobs once a job has been cancelled because of an error In DL printing, sets whether to pause all print jobs once a job has been cancelled for a machine error other than a service call (#037, etc.). Setting values 0: No pause 1: Pause all jobs [Factory settings and after RAM clear: 0]	2
AFN-PSWD	Limiting access to the User Mode. Settings 0: Normal mode (Enters the User Mode without asking a password) [Factory default/After RAM clear] 1: Enters the User Mode after a password matches.	2
PTJAM-RC	PDL jam recovery switch Sets whether to perform recovery print when there is a jam in a PDL job. Setting values 0: OFF (No recovery) 1: ON (Recovery) [Factory settings and after RAM clear: 1]	2
SLP-SLCT	Use it to set the switch designed to switch between existing network-based applications. A certain packet needs to be received as a condition for the machine to recover from sleep mode via network. Because the existing network system applications (e.g., Net Spot Accountant, image WARE) do not send such packet, the machine fails to recover via network if it's shifted to sleep mode 3. When setting '1', the machine able to recover from sleep mode via network because it does not shift to sleep mode 3 (1wsleep), resulting the trade-off with the increase of consuming electricity. settings 0: do not use (default); 1: use MEMO: This is not used at normal servicing.	2
PS-MODE	Selecting compatibility mode when using PS (image processing, print specification) This is the mode to simulate REPLACE to hold compatibility for image processing and print specification. settings 0: no use of PS compatibility mode (default) 1: image processing equivalent of iR2220/2800/3300 series (compatibility with existing machines) 2: image processing equivalent of iR105 (compatibility with existing machine) 3: backup 4: landscape image and portrait image can be duplexed printing using Canon controller. This is the compatible mode with non-Canon controller. 5 through 65535: backup When the setting value is '1', the output will be equivalent to that of iR2200 / 2800 / 3300 series. Whereas when the setting value is '2', the output will be equivalent to that of iR105 series.	2
CNCT-RLZ	Use it to enable/disable the connection serialization function. Connection serialize function works to secure job grouping function of imageWARE Output Manager Select Edition V1.0. Because MFP (such as iR machine) is able to gain multiple connections, the job grouping function is secured by setting not to receive multiple connections at host machine side. If setting '1', it is able to avoid rearrangement of jobs that the machine does not execute job reception by other connections until the job data reception of a certain connection completes. settings 0: off (default) ; 1: on MEMO: Connection - connection established among multiple hosts (e.g., PC) via network Job grouping function - imageWARE Output Manager Select Edition V1.0 to work not to let a job interruption from other PC by group job (sending multiple jobs for 1 session when sending jobs)	2
2C-CT-SW	Colour counter (restricted to two colour mode) switch In 2 colour mode, switches the incremental counter between full colour and mono-colour. Setting values 0: Mono-colour counter 1: Full colour counter [Factory settings and after RAM clear: 1]	2
JA-FUNC	Job archive function ON/OFF When ON, the job archive function is activated. *The settings cannot be changed in service mode, but only referenced. Settings can only be made from a job archive-enabled MEAP programme. Setting values 0: OFF 1: ON [Factory settings and after RAM clear: 0]	2

COPIER>OPTION>USER		
Specification selection related to user mode		
JA-JOB	Designates job archive jobs. When the job archive function is activated, the job archive operates when a job is run, in accordance with the job type designation. *The settings cannot be changed in service mode, but only referenced. Settings can only be made from a job archive-enabled MEAP programme. Setting values 0: None 3: FAX/IFAX only 0xFFFFFFFF: all jobs [Factory settings and after RAM clear: 0]	2
JA-RESTR	Job archive restriction settings When the job archive function is activated, spec. restrictions are applied against those functions for what spec. restrictions are set. *The settings cannot be changed in service mode, but only referenced. Settings can only be made from a job archive-enabled MEAP programme. Setting values 0, 1 32 spec. restrictions by bit setting. Bit0: Image file acquisition function (0: OFF, 1: ON) Bit1: Form registration merge function (0: OFF, 1: ON) Bit2: Document edit function (0: OFF, 1: ON) Other bits are not set, but will be added as and when needed. (4 byte needed) [Factory settings and after RAM clear: 0]	2
DOM-ADD	Sets domain complement for transmission destination when sending email. Sets whether to complement the domain (e.g. @canon.co.jp) programmed in the user mode to the entered account when transmitting email. Setting values 0: Do not complement Tx destination domain. 1: Complement Tx destination domain. [Factory settings and after RAM clear: 0]	2
JA-DPI	Specifies job archive record resolution. For jobs other than PC-FAX, FAX Rx, IFAX Rx, etc., the resolution is converted to the programmed resolution and an archive image is recorded. *The settings cannot be changed in service mode, but only referenced. Settings can only be made from a job archive-enabled MEAP programme. Setting values 0 : No not convert resolution. 1: 100 x 100 dpi 2: 200 x 200 dpi 3: 300 x 300 dpi [Factory settings and after RAM clear: 3]	2
JA-COMPR	Specifies job archive record compression rate. For jobs other than PC-FAX, FAX Rx, IFAX Rx, etc., the compression rate is converted to the programmed compression rate and an archive image is recorded. Setting values 0: Do not convert compression rate (use same compression table as original image). 1: 1/4 compression 2: 1/8 compression 3: 1/16 compression 4: 1/32 compression 5: 1/64 compression [Factory settings and after RAM clear: 3]	2
N-MAILOF	Switches new email destination prohibition ON/OFF. Sets whether to prohibit new email destinations (selection is disabled). Setting values 0: Do not prohibit 1: Prohibit [Factory settings and after RAM clear: 0]	2
N-FAXOF	Switches new FAX destination prohibition ON/OFF. Sets whether to prohibit new FAX destinations (selection is disabled). Setting values 0: Do not prohibit 1: Prohibit [Factory settings and after RAM clear: 0]	2
N-IFAXOF	Switches new IFAX destination prohibition ON/OFF. Sets whether to prohibit new IFAX destinations (selection is disabled). Setting values 0: Do not prohibit 1: Prohibit [Factory settings and after RAM clear: 0]	2
N-FILEOF	Switches new FILE destination prohibition ON/OFF. Sets whether to prohibit new FILE destinations (selection is disabled). Setting values 0: Do not prohibit 1: Prohibit [Factory settings and after RAM clear: 0]	2
TNRB-SW	Toner bottle counter display switch Sets whether to display the toner bottle counter in the counter confirmation screen. 0: Do not display 1: Display [Factory settings and after RAM clear: 0]	2

The numbers entered for software counters are classified as follows:

100 to 199: Total　　500 to 599: Scans

200 to 299: Copies	600 to 699: Box prints
300 to 399: Prints	700 to 799: Received prints
400 to 499: Copies + prints	800 to 899: Report prints

- Meanings of symbols in tables -
- yes: Valid counter for copier
- 4C: Full-color
- Mono: Monocolor (Y, M, C/R, G, B/retro-style monochrome)
- Bk: Black only
- L: Large size (paper larger than B4 size)
- S: Small size (B4 size and smaller paper)
- 1, 2 in "Counter description" Numbers of large size paper counts
  You can have B4 and larger paper sizes counted as large sizes by selecting the COPIER > OPTION > USER > B4_L_CNT service mode item.
- Copies: Local copies + remote copies
- Copies A: Local copies + remote copies + box prints
- Prints: PDL prints + report prints + box prints
- Prints A: PDL prints + report prints
- Scans: Black and white scans + color scans

T-19-55

Compatibility	No.	Counter description
	000	No display
yes	101	Total 1
yes	102	Total 2
yes	103	Total (large)
yes	104	Total (small)
yes	105	Total (full-color 1)
yes	106	Total (full-color 2)
yes	108	Total (black and white 1)
yes	109	Total (black and white 2)
yes	110	Total (monocolor/large)
yes	111	Total (monocolor/small)
yes	112	Total (black and white/large)
yes	113	Total (black and white/small)
yes	114	Total 1 (two-sided)
yes	115	Total 2 (two-sided)
yes	116	Large (two-sided)
yes	117	Small (two-sided)
yes	118	Total (monocolor 1)
yes	119	Total (monocolor 2)
yes	120	Total (full-color/large)
yes	121	Total (full-color/small)
yes	122	Total (full-color + monocolor/large)
yes	123	Total (full-color + monocolor/small)
yes	124	Total (full-color + monocolor 2)
yes	125	Total (full-color + monocolor 1)
yes	201	Copies (total 1)
yes	202	Copies (total 2)
yes	203	Copies (large)
yes	204	Copies (small)
yes	205	Copies A (total 1)
yes	206	Copies A (total 2)
yes	207	Copies A (large)
yes	208	Copies A (small)
yes	209	Local copies (total 1)
yes	210	Local copies (total 2)
yes	211	Local copies (large)
yes	212	Local copies (small)
yes	213	Remote copies (total 1)
yes	214	Remote copies (total 2)
yes	215	Remote copies (large)
yes	216	Remote copies (small)
yes	217	Copies (full-color 1)
yes	218	Copies (full-color 2)
yes	219	Copies (monocolor 1)
yes	220	Copies (monocolor 2)
yes	221	Copies (black and white 1)
yes	222	Copies (black and white 2)
yes	223	Copies (full-color/large)
yes	224	Copies (full-color/small)
yes	225	Copies (monocolor/large)
yes	226	Copies (monocolor/small)

Compatibility	No.	Counter description
yes	227	Copies (black and white/large)
yes	228	Copies (black and white/small)
yes	229	Copies (full-color + monocolor/large)
yes	230	Copies (full-color + monocolor/small)
yes	231	Copies (full-color + monocolor/2)
yes	232	Copies (full-color + monocolor/1)
yes	233	Copies (full-color/large/two-sided)
yes	234	Copies (full-color/small/two-sided)
yes	235	Copies (monocolor/large/two-sided)
yes	236	Copies (monocolor/small/two-sided)
yes	237	Copies (black and white/large/two-sided)
yes	238	Copies (black and white/small/two-sided)
yes	245	Copies A (full-color 1)
yes	246	Copies A (full-color 2)
yes	247	Copies A (monocolor 1)
yes	248	Copies A (monocolor 2)
yes	249	Copies A (black and white 1)
yes	250	Copies A (black and white 2)
yes	251	Copies A (full-color/large)
yes	252	Copies A (full-color/small)
yes	253	Copies A (monocolor/large)
yes	254	Copies A (monocolor/small)
yes	255	Copies A (black and white/large)
yes	256	Copies A (black and white/small)
yes	257	Copies A (full-color + mono-color/large)
yes	258	Copies A (full-color + mono-color/small)
yes	259	Copies A (full-color + mono-color 2)
yes	260	Copies A (full-color + mono-color 1)
yes	261	Copies A (full-color/large/two-sided)
yes	262	Copies A (full-color/small/two-sided)
yes	263	Copies A (monocolor/large/two-sided)
yes	264	Copies A (monocolor/small/two-sided)
yes	265	Copies A (black and white/large/two-sided)
yes	266	Copies A (black and white/small/two-sided)
yes	273	Local copies (full-color 1)
yes	274	Local copies (full-color 2)
yes	275	Local copies (monocolor 1)
yes	276	Local copies (monocolor 2)
yes	277	Local copies (black and white 1)
yes	278	Local copies (black and white 2)
yes	279	Local copies (full-color/large)
yes	280	Local copies (full-color/small)
yes	281	Local copies (monocolor/large)
yes	282	Local copies (monocolor/small)
yes	283	Local copies (black and white/large)
yes	284	Local copies (black and white/small)
yes	285	Local copies (full-color + mono-color/large)
yes	286	Local copies (full-color + mono-color/large)
yes	287	Local copies (full-color + mono-color 2)
yes	288	Local copies (full-color + mono-color 1)
yes	289	Local copies (full-color/large/two-sided)
yes	290	Local copies (full-color/small/two-sided)
yes	291	Local copies (monocolor/large/two-sided)
yes	292	Local copies (monocolor/small/two-sided)
yes	293	Local copies (black and white/large/two-sided)
yes	294	Local copies (black and white/small/two-sided)
yes	002	Remote copies (full-color 1)
yes	003	Remote copies (full-color 2)
yes	004	Remote copies (monocolor 1)
yes	005	Remote copies (monocolor 2)
yes	006	Remote copies (black and white 1)
yes	007	Remote copies (black and white 2)
yes	008	Remote copies (full-color/large)
yes	009	Remote copies (full-color/small)
yes	010	Remote copies (monocolor/large)
yes	011	Remote copies (monocolor/small)

Compatibility	No.	Counter description
yes	012	Remote copies (black and white/large)
yes	013	Remote copies (black and white/small)
yes	014	Remote copies (full-color + monocolor/large)
yes	015	Remote copies (full-color + monocolor/small)
yes	016	Remote copies (full-color + monocolor 2)
yes	017	Remote copies (full-color + monocolor 1)
yes	018	Remote copies (full-color/large/two-sided)
yes	019	Remote copies (full-color/small/two-sided)
yes	020	Remote copies (monocolor/large/two-sided)
yes	021	Remote copies (monocolor/small/two-sided)
yes	022	Remote copies (black and white/large/two-sided)
yes	023	Remote copies (black and white/small/two-sided)
yes	301	Prints (total 1)
yes	302	Prints (total 2)
yes	303	Prints (large)
yes	304	Prints (small)
yes	305	Prints A (total 1)
yes	306	Prints A (total 2)
yes	307	Prints A (large)
yes	308	Prints A (small)
yes	309	Prints (full-color 1)
yes	310	Prints (full-color 2)
yes	311	Prints (monocolor 1)
yes	312	Prints (monocolor 2)
yes	313	Prints (black and white 1)
yes	314	Prints (black and white 2)
yes	315	Prints (full-color/large)
yes	316	Prints (full-color/small)
yes	317	Prints (monocolor/large)
yes	318	Prints (monocolor/small)
yes	319	Prints (black and white/large)
yes	320	Prints (black and white/small)
yes	321	Prints (full-color + monocolor/large)
yes	322	Prints (full-color + monocolor/small)
yes	323	Prints (full-color + monocolor/2)
yes	324	Prints (full-color + monocolor/1)
yes	325	Prints (full-color/large/two-sided)
yes	326	Prints (full-color/small/two-sided)
yes	327	Prints (monocolor/large/two-sided)
yes	328	Prints (monocolor/small/two-sided)
yes	329	Prints (black and white/large/two-sided)
yes	330	Prints (black and white/small/two-sided)
yes	331	PDL prints (total 1)
yes	332	PDL prints (total 2)
yes	333	PDL prints (large)
yes	334	PDL prints (small)
yes	335	PDL prints (full-color 1)
yes	336	PDL prints (full-color 2)
yes	339	PDL prints (black and white 1)
yes	340	PDL prints (black and white 2)
yes	341	PDL prints (full-color/large)
yes	342	PDL prints (full-color/small)
yes	345	PDL prints (black and white/large)
yes	346	PDL prints (black and white/small)
yes	351	PDL prints (full-color/large/two-sided)
yes	352	PDL prints (full-color/small/two-sided)
yes	355	PDL prints (black and white/large/two-sided)
yes	356	PDL prints (black and white/small/two-sided)
yes	401	Copies + prints (full-color/large)
yes	402	Copies + prints (full-color/small)
yes	403	Copies + prints (black and white/large)
yes	404	Copies + prints (black and white/small)
yes	405	Copies + prints (black and white 2)
yes	406	Copies + prints (black and white 1)
yes	407	Copies + prints (full-color + monocolor/large)
yes	408	Copies + prints (full-color + monocolor/small)

Compatibility	No.	Counter description
yes	409	Copies + prints (full-color + monocolor/2)
yes	410	Copies + prints (full-color + monocolor/1)
yes	411	Copies + prints (large)
yes	412	Copies + prints (small)
yes	413	Copies + prints (2)
yes	414	Copies + prints (1)
yes	415	Copies + prints (monocolor/large)
yes	416	Copies + prints (monocolor/small)
yes	417	Copies + prints (full-color/large/two-sided)
yes	418	Copies + prints (full-color/small/two-sided)
yes	419	Copies + prints (monocolor/large/two-sided)
yes	420	Copies + prints (monocolor/small/two-sided)
yes	421	Copies + prints (black and white/large/two-sided)
yes	422	Copies + prints (black and white/small/two-sided)
yes	501	Scans (total 1)
-	502	Scans (total 2)
-	503	Scans (large)
-	504	Scans (small)
yes	505	Black and white scans (total 1)
-	506	Black and white scans (total 2)
-	507	Black and white scans (large)
-	508	Black and white scans (small)
yes	509	Color scans (total 1)
-	510	Color scans (total 2)
-	511	Color scans (large)
-	512	Color scans (small)
yes	601	Box prints (total 1)
yes	602	Box prints (total 2)
yes	603	Box prints (large)
yes	604	Box prints (small)
yes	605	Box prints (full-color 1)
yes	606	Box prints (full-color 2)
yes	607	Box prints (monocolor 1)
yes	608	Box prints (monocolor 2)
yes	609	Box prints (black and white 1)
yes	610	Box prints (black and white 2)
yes	611	Box prints (full-color/large)
yes	612	Box prints (full-color/small)
yes	613	Box prints (monocolor/large)
yes	614	Box prints (monocolor/small)
yes	615	Box prints (black and white/large)
yes	616	Box prints (black and white/small)
yes	617	Box prints (full-color + monocolor/large)
yes	618	Box prints (full-color + monocolor/small)
yes	619	Box prints (full-color + monocolor 2)
yes	620	Box prints (full-color + monocolor 1)
yes	621	Box prints (full-color/large/two-sided)
yes	622	Box prints (full-color/small/two-sided)
yes	623	Box prints (monocolor/large/two-sided)
yes	624	Box prints (monocolor/small/two-sided)
yes	625	Box prints (black and white/large/two-sided)
yes	626	Box prints (black and white/small/two-sided)
yes	701	Received prints (total 1)
yes	702	Received prints (total 2)
yes	703	Received prints (large)
yes	704	Received prints (small)
-	705	Received prints (full-color 1)
-	706	Received prints (full-color 2)
-	707	Received prints (gray scale 1)
-	708	Received prints (gray scale 2)
yes	709	eceived prints (black and white 1)
yes	710	Received prints (black and white 2)
-	711	Received prints (full-color/large)
-	712	Received prints (full-color/small)
-	713	Received prints (gray scale/large)
-	714	Received prints (gray scale/small)

Compatibility	No.	Counter description
yes	715	Received prints (black and white/large)
yes	716	Received prints (black and white/small)
-	717	Received prints (full-color + gray scale/large)
-	718	Received prints (full-color + gray scale/small)
-	719	Received prints (full-color + gray scale 2)
-	720	Received prints (full-color + gray scale 1)
-	721	Received prints (full-color/large/two-sided)
-	722	Received prints (full-color/small/two-sided)
-	723	Received prints (gray scale/large/two-sided)
-	724	Received prints (gray scale/small/two-sided)
yes	725	Received prints (black and white/large/two-sided)
yes	726	Received prints (black and white/small/two-sided)
yes	801	Report prints (total 1)
yes	802	Report prints (total 2)
yes	803	Report prints (large)
yes	804	Report prints (small)
-	805	Report prints (full-color 1)
-	806	Report prints (full-color 2)
-	807	Report prints (gray scale 1)
-	808	Report prints (gray scale 2)
yes	809	Report prints (black and white 1)
yes	810	Report prints (black and white 2)
-	811	Report prints (full-color/large)
-	812	Report prints (full-color/small)
-	813	Report prints (gray scale/large)
-	814	Report prints (gray scale/small)
yes	815	Report prints (black and white/large)
yes	816	Report prints (black and white/small)
-	817	Report prints (full-color + gray scale/large)
-	818	Report prints (full-color + gray scale/small)
-	819	Report prints (full-color + gray scale 2)
-	820	Report prints (full-color + gray scale 1)
-	821	Report prints (full-color/large/two-sided)
-	822	Report prints (full-color/small/two-sided)
-	823	Report prints (gray scale/large/two-sided)
-	824	Report prints (gray scale/small/two-sided)
yes	825	Report prints (black and white/large/two-sided)
yes	826	Report prints (black and white/small/two-sided)
-	901	Copy scan total 1 (color)
-	902	Copy scan total 1 (black and white)
-	903	Copy scan total 2 (color)
-	904	Copy scan total 2 (black and white)
-	905	Copy scan total 3 (color)
-	906	Copy scan total 3 (black and white)
-	907	Copy scan total 4 (color)
-	908	Copy scan total 4 (black and white)
-	909	Local copy scans (color)
-	910	Local copy scans (black and white)
-	911	Remote copy scans (color)
-	912	Remote copy scans (black and white)
-	913	Sent scan total 1 (color)
-	914	Sent scan total 1 (black and white)
yes	915	Sent scan total 2 (color)
yes	916	Sent scan total 2 (black and white)
yes	917	Sent scan total 3 (color)
yes	918	Sent scan total 3 (black and white)
-	919	Sent scan total 4 (color)
-	920	Sent scan total 4 (black and white)
yes	921	Sent scan total 5 (color)
yes	922	Sent scan total 5 (black and white)
yes	929	Sent scan total 6 (color)
yes	930	Sent scan total 6 (black and white)
-	931	Sent scan total 7 (color)
-	932	Sent scan total 7 (black and white)
-	933	Sent scan total 8 (color)
-	934	Sent scan total 8 (black and white)

Compatibility	No.	Counter description
-	935	Universal sent scan total (color)
-	936	Universal sent scan total (black and white)
yes	937	Box scans (color)
yes	938	Box scans (black and white)
yes	939	Remote scans (color)
yes	940	Remote scans (black and white)
-	941	Sent scans/faxes (color)
-	942	Sent scans/faxes (black and white)
-	943	Sent scans/I faxes (color)
-	944	Sent scans/I faxes (black and white)
yes	945	Sent scans/e-mails (color)
yes	946	Sent scans/e-mails (black and white)
-	947	Sent scans/FTP (color)
-	948	Sent scans/FTP (black and white)
-	949	Sent scans/SMB (color)
-	950	Sent scans/SMB (black and white)
-	951	Sent scans/IPX (color)
-	952	Sent scans/IPX (black and white)
-	953	Sent scans/databases (color)
-	954	Sent scans/databases (black and white)
-	955	Sent scans/local prints (color)
-	956	Sent scans/local prints (black and white)
-	957	Sent scans/box (color)
-	958	Sent scans/box (black and white)

3. CST

T-19-56

COPIER>OPTION>CST		
Sub item	**Description**	**level.**
U1-NAME	Used to turn paper name display when U1 paper size group is detected ON/OFF. 0: Display "U1" on touch panel (default). 1: Display paper name set by "CST-U1" service mode item.	2
U2-NAME	Used to turn paper name display when U2 paper size group is detected ON/OFF. 0: Display "U2" on touch panel (default). 1: Display paper name set by "CST-U2" service mode item.	2
CST-U1/U2	Used to specify paper name used by U1/U2 paper size group. 24: FOOLSCAP (CST-U2: Default) 25: Australian FOOLSCAP 26: OFFICIO 27: Ecuador OFFICIO 28: Bolivia OFFICIO 29: Argentine LETTER 30: Argentine LETTER-R 31: Government LETTER 32: Government LETTER-R 34: Government LEGAL 35: FOLIO 36: Argentine OFFICIO 37: Mexico OFFICIO 38: EXECTIVE (CST-U1: Default)	2

4. ACC

T-19-57

COPIER>OPTION>ACC		
Sub item	**Description**	**level.**
COIN	Coin vendor switch Sets whether to enter coin vendor management mode. Setting values 0: Coin vendor not in use (control card can be used, no tariff applied) 1: Coin vendor (tariff applied) 2: Remote counter (tariff applied) 3: DA tariff [Factory settings and after RAM clear: 0] Caution! When the setting values are set to '3' (DA tariff), the following items will be changed also. [Service mode] - COPIER>OPTION>USER>CONTROL: 1 - COPIER>OPTION>USER>AFN-PSWD: 1 - COPIER>OPTION>BODY>UI-BOX: 0 - COPIER>OPTION>BODY>UI-SEND: 0 - COPIER>OPTION>BODY>UI-FAX: 0 - COPIER>OPTION>BODY>UI-EXT: 0 - COPIER>OPTION>BODY>DA-CNCT: 1 [User mode > system management settings] - Extension settings > Extension function priority: ON - Network settings > Email/IFAX > SMTP Rx: OFF - Network settings > Email/IFAX > POP3 Rx: OFF - Network settings > SMB settings > use SMB printing: O - Network settings > TCP/IP settings > use IPP printing: O - Network settings > TCP/IP settings > IP address range settings > print permitted address ON/OFF: ON - Network settings > TCP/IP settings > use FTP printing: OFF	1
DK-P	Used to set paper size used by paper deck (option). Setting values 0: A4 [Factory default/After RAM clear] 1: B5 2: LTR	1
CARD-SW	Used to select UI screen when coin vendor is supported. Setting values 0: Coin [Factory default/After RAM clear] 1: Card 2: Coin + card	1
USB-MSK	Limiting the number of USB-HOST channels on the models with the USB-HOST installed. Setting values 0 to 2 The relevant channels of the USB-HOST are masked (deactivated). (e.g.) When there are two channels of CH0 and CH1, 0: Not mask any channel. 1: Masks CH1. 2: Reserved	1
SC-TYPE	Used to switch type of coin vendor-compatible model Whenever possible, avoid using this setting during normal operation.	2
CC-SPSW	use it to enable/disable support of the switch in relation to the support level of the control guard I/F 0: do not support [Factory default/After RAM clear] 1: support (priority on speed) 2: support (priority on upper limit on number of prints) **Reference:** negative effects of '1' - the machine may fail to use an accurate stop based on the upper limit negative effects of '2' - some source of power (pickup assembly) may suffer a drop in productivity	2
UNIT-PRC	Unit price setting for coin vendors Sets unit price for coin vendors. Setting values 0: yen 1: euro 2: pound 3: Swiss franc 4: dollar [Factory settings and after RAM clear: 0]	2
DA-PUCT	Pickup/ delivery notification setting for charged output This mode prevents prints from being output for free if some kind of network trouble interferes with the pickup/ delivery notification (if Ack is not returned after DA) by continuing to output the notification. Setting values 2 to 10 [Factory settings and after RAM clear: 6] E.g. If the value is 5, if Ack is not returned after DA, 5 sheets will be picked up. -> If iR-DA communication is disrupted for some reason, the device will still operate for 5 sheets (printed out without charging). If the setting values are too low, the demerit is that engine performance will suffer. And, depending on the model, the reference value can be changed (because of the relationship with engine speed). - When the setting values are low, the number of sheets that can be output without reducing the tariff becomes lower. Engine performance may suffer. - When the setting values are high, the number of sheets that can be output without reducing the tariff increases. Engine performance does not suffer.	2

5. INT-FACE

T-19-58

COPIER>OPTION>INT-FACE		
Sub item	**Description**	**level.**
IMG-CONT	Used to set connection to PS print server unit. Setting values 0: Normal mode (no PS print server unit) [Factory default] 1: Not used 2: Not used 3: PS print server unit 4: Not used 5: Not used ⚠ When 1 is selected as the setting value, the following user mode items are restored to their initial values: - System management settings > Network settings > TCP/IP settings > IP address settings > IP address - System management settings > Network settings > TCP/IP settings > IP address settings > Sub-net mask - System management settings > Network settings > TCP/IP settings > IP address settings > Gateway address - System management settings > Network settings > Ethernet driver settings > Communication method - System management settings > Network settings > Ethernet driver settings > Ethernet type - System management settings > Network settings > Startup time - Common specifications settings The following user mode settings are turned OFF: - System management settings > Network settings > TCP/IP settings > IP address setting > DHCP use - System management settings > Network settings > TCP/IP settings > IP address settings > RARP use - System management settings > Network settings > TCP/IP settings > IP address settings > BOOTP use - System management settings > Network settings > Ethernet driver settings > Automatic detection - System management settings > Network settings > Spool function use When 3 or 4 is selected as the setting value, the following settings are turned OFF in addition to the items above. - System management settings > Network settings > TCP/IP settings > RAW setting - System management settings > Network settings > TCP/IP settings > LPD setting - System management settings > Network settings > TCP/IP settings > IPP printing - System management settings > Network settings > SMB setting The items above are not restored when the setting value is returned to "0: Normal mode", so must be set again as needed.	1
AP-OPT	Used to set whether printing from application PrintMe in PS print server unit is possible. 0: Printing permitted for all department IDs [Factory default/After RAM clear] 1: Printing refused (printing is only possible for specified department ID).	2
AP-ACCNT	Used to set (CPCA) department ID for printing (print jobs) from application PrintMe in PS print server unit. 0 to 9999999 [Factory default/After RAM clear: 0]	2
AP-CODE	Use it to set a path for printing from an external controller (CPCA). Setting: 0 [Factory default/After RAM clear] Setting range: 0 to 9999	2
NWCT-TM	Sets the time limit for maintaining the network connection ('KeepAlive' setting). Sets the length of time that the PC application and the iR device can be kept connected (KeepAlive) via the network. Main PC applications (envisaged): network printing application, email function, remote copy printer function, MEAP network applications, etc. Setting range: 1 to 5 (min.) [Factory settings and after RAM clear: 5]	2

6. LCNS-TR

*1 Not displayed in service mode.

T-19-59

COPIER>OPTION>LCNS-TR		
Sub item	**Description**	**level.**
ST-SEND	Use it to select whether to display the installation status of the SEND function when the transfer function is set invalid. Setting value 0: SEND function not available (not installed) 1: SEND function available (installed) [Factory default/After RAM clear]	2
TR-SEND	Use it to obtain the transfer license key for the SEND function when the transfer function is set invalid. Obtains the transfer license key to use the SEND function in other MFP machine.	2
OF-SEND *1	Use it to select whether to use the SEND function when the transfer function is set invalid. Setting value 0: Do not use SEND function. 1: Use SEND function. [Factory default/After RAM clear]	2
ST-ENPDF	Use it to display the installation status of the SEND encryption PDF transmission function when the transfer function is set invalid. Setting value 0: SEND encryption PDF transmission function not available (not installed) 1: SEND encryption PDF transmission function available (installed) [Factory default/After RAM clear: 0]	2

COPIER>OPTION>LCNS-TR		
Sub item	**Description**	**level.**
TR-ENPDF	Use it to obtain the transfer license key for the SEND encryption PDF transmission function when the transfer function is set invalid. Obtains the transfer license key to use the SEND encryption PDF transmission function in other MFP machine.	2
OF-ENPDF *1	Use it to select whether to use the SEND encryption PDF transmission function when the transfer function is set invalid. Setting value 0: Do not use SEND encryption PDF transmission function. 1: Use SEND encryption PDF transmission function. [Factory default/After RAM clear: 0]	2
ST-SPDF	Use it to select whether to display the installation status of the SEND searchable PDF transmission function when the transfer function is set invalid. Setting value 0: SEND searchable PDF transmission function not available (not installed) 1: SEND searchable PDF transmission function available (installed) [Factory default/After RAM clear: 0]	2
TR-SPDF	Use it to obtain the transfer license key for the SEND searchable PDF transmission function when the transfer function is set invalid. Obtains the transfer license key to use the SEND searchable PDF transmission function in other MFP machine.	2
OF-SPDF *1	Use it to select whether to use the SEND searchable PDF transmission function when the transfer function is set invalid. Setting value 0: Do not use SEND searchable PDF transmission function. 1: Use SEND searchable PDF transmission function. [Factory default/After RAM clear: 0]	2
ST-EXPDF	Use it to display the installation status of the PDF expansion kit (encryption PDF + searchable PDF) when the transfer function is set invalid. Setting value 0: PDF expansion kit not available (not installed) 1: PDF expansion kit available (installed) [Factory default/After RAM clear: 0]	2
TR-EXPDF	Use it to obtain the transfer license key for the PDF expansion kit (encryption PDF + searchable PDF) when the transfer function is set invalid. Obtains the transfer license key to use the PDF expansion kit (encryption PDF + searchable PDF) in other MFP machine.	2
OF-EXPDF *1	Use it to select whether to use the PDF expansion kit (encryption PDF + searchable PDF) when the transfer function is set invalid. Setting value 0: Do not use PDF expansion kit. 1: Use PDF expansion kit. [Factory default/After RAM clear: 0]	2
ST-PDFDR	Use it to display the installation status of the PDF Direct when the transfer function is set invalid. Setting value 0: PDF Direct not available (not installed) 1: PDF Direct available (installed) [Factory default/After RAM clear: 0]	2
TR-PDFDR	Use it to obtain the transfer license key for the PDF Direct when the transfer function is set invalid. Obtains the transfer license key to use the PDF Direct in other MFP machine.	2
OF-PDFDR *1	Use it to select whether to use the PDF Direct when the transfer function is set invalid. Setting value 0: Do not use PDF Direct. 1: Use PDF Direct. [Factory default/After RAM clear: 0]	2
ST-SCR	Use it to display the installation status of the encryption secure print when the transfer function is set invalid. Setting value 0: Encryption secure print not available (not installed) 1: Encryption secure print available (installed) [Factory default/After RAM clear: 0]	2
TR-SCR	Use it to obtain the transfer license key for the encryption secure print when the transfer function is set invalid. Obtains the transfer license key to use the encryption secure print in other MFP machine.	2
OF-SCR *1	Use it to select whether to use the encryption secure print when the transfer function is set invalid. Setting value 0: Do not use encryption secure print. 1: Use encryption secure print. [Factory default/After RAM clear: 0]	2
ST-HDCLR	Use it to display the installation status of the HDD encryption / HDD complete deletion when the transfer function is set invalid. Setting value 0: HDD encryption / HDD complete deletion not available (not installed) 1: HDD encryption / HDD complete deletion available (installed) [Factory default/After RAM clear: 0]	2
TR-HDCLR	Use it to obtain the transfer license key for the HDD encryption / HDD complete deletion when the transfer function is set invalid. Obtains the transfer license key to use the HDD encryption / HDD complete deletion in other MFP machine.	2
OF-HDCLR *1	Use it to select whether to use the HDD encryption / HDD complete deletion when the transfer function is set invalid. Setting value 0: Do not use HDD encryption / HDD complete deletion. 1: Use HDD encryption / HDD complete deletion. [Factory default/After RAM clear: 0]	2
ST-BRDIM	[Factory default/After RAM clear: Setting value 0: BarDIMM not available (not installed) 1: BarDIMM available (installed) [Factory default/After RAM clear: 0]	2
TR-BRDIM	Use it to obtain the transfer license key for BarDIMM when the transfer function is set invalid. Obtains the transfer license key to use BarDIMM in other MFP machine.	2

COPIER>OPTION>LCNS-TR		
Sub item	**Description**	**level.**
OF-BRDIM *1	Use it to select whether to use BarDIMM when the transfer function is set invalid. Setting value 0: Do not use BarDIMM. 1: Use BarDIMM. [Factory default/After RAM clear: 0]	2
ST-VNC	Use it to display the VNC installation status when the transfer function is set invalid. Setting value 0: VNC not available (not installed) 1: VNC available (installed) [Factory default/After RAM clear: 0]	2
TR-VNC	Use it to obtain the transfer license key for VNC when the transfer function is set invalid. Obtains the transfer license key to use VNC in other MFP machine.	2
OF-VNC *1	Use it to select whether to use VNC when the transfer function is set invalid. Setting value 0: Do not use VNC. 1: Use VNC. [Factory default/After RAM clear: 0]	2
ST-WEB	Use it to display the installation status of the WEB browser when the transfer function is set invalid. Setting value 0: WEB browser not available (not installed) 1: WEB browser available (installed) [Factory default/After RAM clear: 0]	2
TR-WEB	Use it to obtain the transfer license key for the WEB browser when the transfer function is set invalid. Obtains the transfer license key to use the WEB browser in other MFP machine.	2
OF-WEB *1	Use it to select whether to use the WEB browser when the transfer function is set invalid. Setting value 0: Do not use WEB browser. 1: Use WEB browser. [Factory default/After RAM clear: 0]	2
ST-HRPDF	Use it to display the installation status of the high-compression PDF when the transfer function is set invalid. Setting value 0: High-compression PDF not available (not installed) 1: High-compression PDF available (installed) [Factory default/After RAM clear: 0]	2
TR-HRPDF	Use it to obtain the transfer license key for the high-compression PDF when the transfer function is set invalid. Obtains the transfer license key to use the high-compression PDF in other MFP machine.	2
OF-HRPDF *1	Use it to select whether to use the high-compression PDF when the transfer function is set invalid. Setting value 0: Do not use high-compression PDF. 1: Use high-compression PDF. [Factory default/After RAM clear: 0]	2
ST-TRSND	Display of installation status of test SEND function in transfer invalidation Displays installation status of test SEND function. Setting values 0: No (not installed) 1: Yes (installed) [Factory settings and after RAM clear: 0]	2
TR-TRSND	Test SEND function transfer licence key acquisition in transfer invalidation Acquires transfer licence key to allow test SEND function to be used with another MFP.	2
OF-TRSND *1	Test SEND function ON/ OFF in transfer invalidation. Switches test SEND function ON/ OFF. Setting values 0: OFF 1: ON [Factory settings and after RAM clear: 0]	2
ST-WTMRK	Display of installation status of main unit watermark function in transfer invalidation. Displays installation status of main unit watermark function. Setting values 0: No (not installed) 1: Yes (installed) [Factory settings and after RAM clear: 0]	2
TR-WTMRK	Main unit watermark function transfer licence key acquisition in transfer invalidation Acquires transfer licence key to allow main unit watermark function to be used with another MFP.	2
OF-WTMRK *1	Main unit watermark function ON/ OFF in transfer invalidation. Switches main unit watermark function ON/ OFF. Setting values 0: OFF 1: ON [Factory settings and after RAM clear: 0]	2
ST-TSPDF	Display of installation status of time stamped PDF transmission function in transfer invalidation. Displays installation status of time stamped PDF transmission function. Setting values 0: No (not installed) 1: Yes (installed) [Factory settings and after RAM clear: 0]	2
TR-TSPDF	Time stamped PDF transmission function transfer licence key acquisition in transfer invalidation Acquires transfer licence key to allow time stamped PDF transmission function to be used with another MFP.	2

COPIER>OPTION>LCNS-TR		
Sub item	**Description**	**level.**
OF-TSPDF *1	Time stamped PDF transmission function ON/ OFF in transfer invalidation. Switches time stamped PDF transmission function ON/ OFF. Setting values 0: OFF 1: ON [Factory settings and after RAM clear: 0]	2
ST-USPDF	Display of installation status of user signature attached PDF transmission function in transfer invalidation. Displays installation status of user signature attached PDF transmission function. Setting values 0: No (not installed) 1: Yes (installed) [Factory settings and after RAM clear: 0]	2
TR-USPDF	User signature attached PDF transmission function transfer licence key acquisition in transfer invalidation Acquires transfer licence key to allow user signature attached PDF transmission function to be used with another MFP.	2
OF-USPDF *1	User signature attached PDF transmission function ON/ OFF in transfer invalidation. Switches user signature attached PDF transmission function ON/ OFF. Setting values 0: OFF 1: ON [Factory settings and after RAM clear: 0]	2
ST-DVPDF	Display of installation status of device signature attached PDF transmission function in transfer invalidation. Displays installation status of device signature attached PDF transmission function. Setting values 0: No (not installed) 1: Yes (installed) [Factory settings and after RAM clear: 0]	2
TR-DVPDF	Device signature attached PDF transmission function transfer licence key acquisition in transfer invalidation Acquires transfer licence key to allow device signature attached PDF transmission function to be used with another MFP.	2
OF-DVPDF *1	Device signature attached PDF transmission function ON/ OFF in transfer invalidation. Switches device signature attached PDF transmission function ON/ OFF. Setting values 0: OFF 1: ON [Factory settings and after RAM clear: 0]	2
ST-SCPDF	Display of installation status of scalable PDF transmission function in transfer invalidation. Displays installation status of scalable PDF transmission function. Setting values 0: No (not installed) 1: Yes (installed) [Factory settings and after RAM clear: 0]	2
TR-SCPDF	Scalable PDF transmission function transfer licence key acquisition in transfer invalidation Acquires transfer licence key to allow scalable PDF transmission function to be used with another MFP.	2
OF-SCPDF *1	Scalable PDF transmission function ON/ OFF in transfer invalidation. Switches scalable PDF transmission function ON/ OFF. Setting values 0: OFF 1: ON [Factory settings and after RAM clear: 0]	2
ST-AMS	Display of installation status of ACQ in transfer invalidation. Displays installation status of ACQ. Setting values 0: No (not installed) 1: Yes (installed) [Factory settings and after RAM clear: 0]	2
TR-AMS	ACQ transfer licence key acquisition in transfer invalidation Acquires transfer licence key to allow ACQ to be used with another MFP.	2
OF-AMS *1	ACQ ON/ OFF in transfer invalidation. Switches ACQ ON/ OFF. Setting values 0: OFF 1: ON [Factory settings and after RAM clear: 0]	2
ST-ERDS	Display of installation status of ERDS 3rd party extension function in transfer invalidation. Displays installation status of ERDS 3rd party extension function (which sends tariff counter to 3rd party tariff server). Setting range 0: No (not installed) 1: Yes (installed) Reference value 0	2
TR-ERDS	ERDS 3rd party extension function transfer licence key acquisition in transfer invalidation Acquires transfer licence key to allow ERDS 3rd party extension function (which sends tariff counter to 3rd party tariff server) to be used with another MFP. Reference value Transfer licence key: 24 digits	2
OF-ERDS *1	ERDS 3rd party extension function ON/ OFF in transfer invalidation. Switches ERDS 3rd party extension function (which sends tariff counter to 3rd party tariff server) ON/ OFF. Setting values 0:OFF 1:ON Reference value 0	2

COPIER>OPTION>LCNS-TR		
Sub item	**Description**	**level.**
ST-PS	Display of installation status of PS in transfer invalidation. Displays installation status of PS. Setting values 0: No (not installed) 1: Yes (installed) Reference value 0	2
TR-PS	PS transfer licence key acquisition in transfer invalidation Acquires transfer licence key to allow PS to be used with another MFP.	2
OF-PS *1	PS ON/ OFF in transfer invalidation. Switches PS ON/ OFF. Setting values 0: OFF 1: ON Reference value 0	2
ST-PCL	Display of installation status of PCL in transfer invalidation. Displays installation status of PCL. Setting range 0: No (not installed) 1: Yes (installed) Reference value 0	2
TR-PCL	PCL transfer licence key acquisition in transfer invalidation Acquires transfer licence key to allow PCL to be used with another MFP. Reference value Transfer licence key: 24 digits	2
ST-PSLI5	Display of installation status of PS, LIPS4 and LIPS LX in transfer invalidation. Displays installation status of compound option made up of PS, LIPS4 and LIPS LX (overseas name: UFR II). Setting range 0: No (not installed) 1: Yes (installed) Reference value 0	2
TR-PSLI5	PS, LIPS4 and LIPS LX transfer licence key acquisition in transfer invalidation Acquires transfer licence key to allow compound option made up of PS, LIPS4 and LIPS LX (overseas name: UFR II) to be used with another MFP. Reference value Transfer licence key: 24 digits	2
ST-LIPS5	Display of installation status of LIPS LX and LIPS4 in transfer invalidation. Displays installation status of compound option made up of LIPS LX (overseas name: UFR II) and LIPS4. Setting range 0: No (not installed) 1: Yes (installed) Reference value 0	2
TR-LIPS5	LIPS LX and LIPS4 transfer licence key acquisition in transfer invalidation Acquires transfer licence key to allow compound option made up of LIPS LX (overseas name: UFR II) and LIPS4 to be used with another MFP. Reference value Transfer licence key: 24 digits	2
ST-LIPS4	Display of installation status of LIPS4 in transfer invalidation. Displays installation status of LIPS4. Setting range 0: No (not installed) 1: Yes (installed) Reference value 0	2
TR-LIPS4	LIPS4 transfer licence key acquisition in transfer invalidation Acquires transfer licence key to allow LIPS4 to be used with another MFP. Reference value Transfer licence key: 24 digits	2
ST-PSPCL	Display of installation status of PC and PCL in transfer invalidation. Displays installation status of compound option made up of PC and PCL. Setting range 0: No (not installed) 1: Yes (installed) Reference value 0	2
TR-PSPCL	PS and PCL transfer licence key acquisition in transfer invalidation Acquires transfer licence key to allow compound option made up of PS and PCL to be used with another MFP. Reference value Transfer licence key: 24 digits	2
ST-PCLUF	Display of installation status of PC and UFR in transfer invalidation. Displays installation status of compound option made up of PC and UFR. Setting range 0: No (not installed) 1: Yes (installed) Reference value 0	2
TR-PCLUF	PC and UFR transfer licence key acquisition in transfer invalidation Acquires transfer licence key to allow compound option made up of PC and UFR to be used with another MFP. Reference value Transfer licence key: 24 digits	2

COPIER>OPTION>LCNS-TR		
Sub item	**Description**	**level.**
ST-PSLIP	PC and UFR transfer licence key acquisition in transfer invalidation Acquires transfer licence key to allow compound option made up of PC and UFR to be used with another MFP. Reference value Transfer licence key: 24 digits	2
TR-PSLIP	PS and LIPS transfer licence key acquisition in transfer invalidation Acquires transfer licence key to allow compound option made up of PS and LIPS to be used with another MFP. Reference value Transfer licence key: 24 digits	2
ST-PSPCU	Display of installation status of PS, PCL and UFR in transfer invalidation. Displays installation status of compound option made up of PS, PCL and UFR. Setting range 0: No (not installed) 1: Yes (installed) Reference value 0	2
TR-PSPCU	PS, PCL and UFR transfer licence key acquisition in transfer invalidation Acquires transfer licence key to allow compound option made up of PS, PCL and UFR to be used with another MFP. Reference value Transfer licence key: 24 digits	2
ST-LXUFR	Display of installation status of LIPS LX (overseas name: UFR II) in transfer invalidation. Displays installation status of LIPS LX (overseas name: UFR II). Setting range 0: No (not installed) 1: Yes (installed) Reference value 0	2
TR-LXUFR	LIPS LX (overseas name: UFR II) transfer licence key acquisition in transfer invalidation Acquires transfer licence key to allow LIPS LX (overseas name: UFR II) to be used with another MFP. Reference value Transfer licence key: 24 digits	2

19.6.2 FEEDER

19.6.2.1 FEEDER Table

CLC5151 / / / CLC4040 / / / iR C4580i / / / iR C4080i / / / / Color Image Reader-F1 / Color Image Reader-E1 / Dupiex Color Image Reader-G1 / iR C5185N / / iR C5185i PRT /

T-19-60

FEEDER>OPTION		
Sub item	**Description**	**level.**
LS-DBL	Use it to enable/disable ADF high-speed duplex mode. Settings 0: on (execute high-speed duplex mode; normal, default) 1: off (do not execute high-speed duplex mode; use low-speed duplex mode) [Factory default/After RAM clear: 0]	1
STAMP-SW	Use it to specify the presence/absence of the stamp. This mode item indicates the presence/absence of the stamp, and is designed for use by the service person. Settings 0:stamp absent 1:stamp present [Factory default/After RAM clear: 0]	1

19.6.3 SORTER

19.6.3.1 SORTER Table

CLC5151 / / / CLC4040 / / / iR C4580i / / / iR C4080i / / / / Color Image Reader-F1 / Color Image Reader-E1 / Dupiex Color Image Reader-G1 / iR C5185N / / iR C5185i PRT /

T-19-61

SORTER>OPTION		
Sub item	**Description**	**level.**
MD-SPRTN	Finisher function restriction setting Setting values 0: Normal 1: Reduced operation [Factory settings and after RAM clear: 0]	1

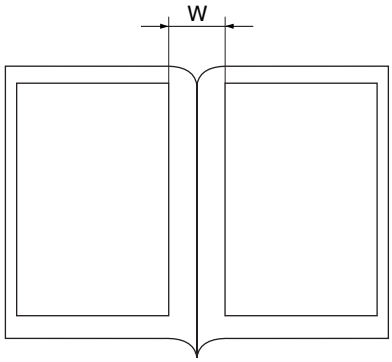

F-19-21

19.6.4 BOARD

19.6.4.1 BOARD Table

CLC5151 / / / CLC4040 / / / iR C4580i / / / iR C4080i / / / / Color Image Reader-F1 / Color Image Reader-E1 / Dupiex Color Image Reader-G1 / iR C5185N / / iR C5185i PRT /

T-19-62

BOARD>OPTION		
Sub item	**Description**	**level.**
SURF-OFF	UFR Board function release Setting values 0: Even with no UFR board, device operates as copy model, without E code display. 1: UFR board identification check performed. With no UFR board, E code is displayed.	1
MENU-1 to 4	Displays printer setting menu levels 1 to 4. Setting values 0: No display 1: Display [Factory settings and after RAM clear: 0]	2
TR-DSP	Toggles between display/ non display of toner reduction function switch. Should be avoided where possible during normal operation.	2

19.7 TEST (Test Print Mode)

19.7.1 COPIER

19.7.1.1 COPIER Table

CLC5151 / / / CLC4040 / / / iR C4580i / / / iR C4080i / / / / Color Image Reader-F1 / Color Image Reader-E1 / Dupiex Color Image Reader-G1 / iR C5185N / / iR C5185i PRT /

1. PG

T-19-63

COPIER>TEST>PG		
Sub item	**Description**	**level.**
TYPE	Performs test print when test print type number is entered and start key is turned ON. (This setting must always be restored to 0 after making test print.) Setting values 0: Normal print, 0 to 100 [Factory default/After RAM clear: 0]	1
TXPH	Used to set image mode during test print output. Setting value 0: Error diffusion 1: Screen with small line number [133 to 190 lines] 2: Screen with large line number [200 to 268 lines] 3: Screen for COPY [around 220 lines] 4: Screen for REOS [no screen structure] 5: Error diffusion[w/ end correction] 6: Screen with large line number[w/ end correction] [Factory default/After RAM clear: 0]	1
THRU	Used to select whether to use image compensation table during test print output. Setting values 0: ON (Use) 1: OFF (Don't use) [Factory default/After RAM clear: 0]	1
DENS-Y/M/C/K	Used to adjust density of each color for test prints (TYPE = 5). Setting values 0 to 255: Increasing the value increases the density. [Factory default/After RAM clear: 128]	1

COPIER>TEST>PG		
Sub item	**Description**	**level.**
COLOR-Y/M/C/K	Used to set output of each color for each TYPE. For example, to set single-color M output, set "COLOR-M = 1", and make the other settings 0 (only single colors can be output). Setting values 0: Don't output 1: Output [Factory default/After RAM clear: 1]	1
F/M-SW	Set it to switch over full color and mono color during PG output. Settings 0: full color output 1: mono color output [Factory default/After RAM clear: 0]	1
PG-PICK	Used to select output level during test print output. Setting values 1: Cassette 1 2: Cassette 2 3: Cassette 3 4: Cassette 4 5: Side deck 6: Manual feed 7: Not used 8: Not used [Factory default/After RAM clear: 1]	1
2-SIDE	Use it to set the output mode for test printing. Settings 0: single-sided (at time of shipment/upon RAM initialization) 1: double-sided [Factory default/After RAM clear: 0]	1
PG-QTY	Use it to set the output mode for test printing. Use it to set the copy count of test printing. 1 to 999 [Factory default/After RAM clear: 1]	1

Type of test print for each number entered for PG > TYPE

T-19-64

Entered number	Description
0	Image from CCD (normal print)
1	For development
2	For development
3	For development
4	16 gradations
5	Full-sheet half tones
6	Grid
7	For development
8	For development
9	For development
10	MCYBk horizontal stripes
11	For development
12	YMCBk 64 gradations
13	For development
14	Full-color 16 gradations
15 to 100	For development

2. NETWORK

T-19-65

COPIER>TEST>NETWORK		
Sub item	**Description**	**level.**
PING	Checks connection between copier and network (during TCP/IP connection only). Use this item when checking the connection to the network at time of installation or when there is a network connection problem.	1
IPV6-ADR	Destination address of PING (IPv6) Set the destination address of PING issued in "COPIER>TEST>NETWORK>PING-IP6". IPv6 address Hexadecimal characters (0-9, a-f) and separators (:)(.), 39 characters at maximum It should be a consistent character string as an address of IPv6. Usage PING is issued to check continuity in the network in the IPv6 environment. Set the destination address of IPv6 in this mode.	1
PING-IP6	Issue of PING to the specified IPv6 address Issue PING to the address specified from MFP to check continuity in the network in the IPv6 environment.	1
BML-DISP	Switching display of the screen in response to support for BMlinks Settings 0: Normal system status screen [Factory default/After RAM clear] 1: Screen of device display only	2

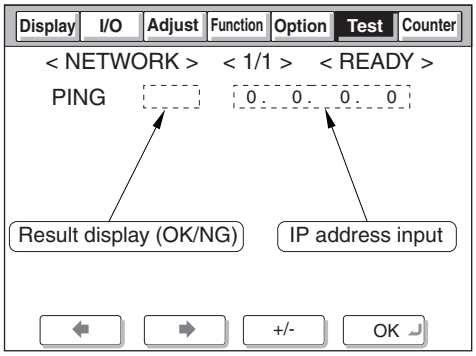

F-19-22

Operation method 1) Turn the main power switch OFF.

2) Connect the network cable to the copier and turn the main power switch ON.

3) Tell the user's system administrator that copier installation is complete, and have them him/her the network settings.

4) Ask the system administrator to allow you to perform a network connection check, and check the address of the remote host (IP address of the PC terminal in the user network) to send the PING.

5) Select the COPIER > TEST > NETWORK > PING service mode item, enter the IP address checked in Step 4 on the operation panel's numeric keypad, and press the OK key.

- If the copier is connected to the network normally, "OK" is displayed (and the procedure is finished).

- If "NG" is displayed, first check the connection of the network cable. If the connection is normal, go to Step 6. If there is a problem with the network cable's connection, redo the connection and redo Step 5.

6) Select the COPIER > TEST > NETWORK > PING service mode item, enter the loop back address* (127.0.0.1), and press the OK key followed by the start key.

- If "NG" is displayed, there is a problem with the local TCP/IP settings. Go back to Step 3 and check the settings again.

- If "OK" is displayed, there is no problem with the local TCP/IP settings. However, there could be a problem with the network interface board (NIC) connection or the NIC itself. Go to Step 7 to check the NIC.

*The loop back address returns the signal in front of the NIC, enabling checking of the local TCP/IP settings.

7) Select the COPIER > TEST > NETWORK > PING service mode item, enter the local host address (local IP address), then press the OK key.

- If "OG" is displayed, there could be a problem with the NIC connection or the NIC itself. In this case, check the NIC connection or replace the NIC.

- If "OK" is displayed, there is no problem with the local network settings or NIC.

In this case, the problem may be with the user's network environment. Explain the situation to the system administrator, and ask them to deal with it.

19.8 COUNTER (Counter Mode)

19.8.1 COPIER

19.8.1.1 COPIER Table

CLC5151 / / / CLC4040 / / / iR C4580i / / / iR C4080i / / / / Color Image Reader-F1 / Color Image Reader-E1 / Dupiex Color Image Reader-G1 / iR C5185N / / iR C5185i PRT /

The COPIER/COUNTER screen is shown below. The items are described starting on the next page.

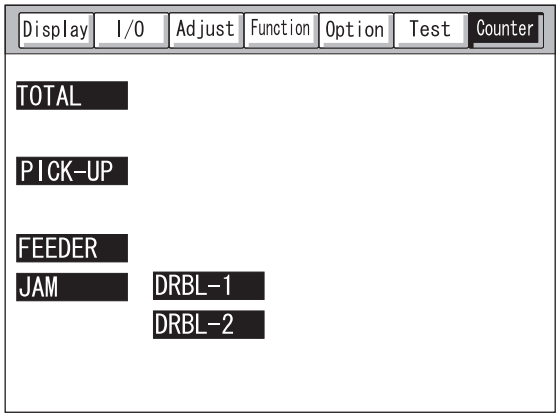

F-19-23

Clearing counter values
1) Select the item to clear, displaying it in reverse.
2) Press the clear key on the operation panel.
- The counter is cleared, resetting it to "00000000".

Small size and large size in this mode
- TOTAL/PICKUP/FEEDER/JAM
Large (L) size: Paper larger than A4, LTR size
Small (S) size: A4, LTR size and smaller paper

- DRBL-1/DRBL-2 (PD-PU-RL, C3-PU-RL, C4-PU-RL)
  Large (L) size: Paper longer than 324 mm in the feed direction
  Small (S) size: Paper 324 mm or shorter in the feed direction

- DRBL-2 (DF-PU-RL, DF-SP-PD, DF-F-BLT, DF-SP-RL)
  Large (L) size: Paper longer than the LTR length (216 mm) in the feed direction
  Small (S) size: Paper of the LTR length (216 mm) or shorter in the feed direction

Reading counters for consumable parts/parts needing periodic replacement
The copier has special counters (DRBL-1/DRBL-2) that can be used to provide a guideline for when to replace consumable parts or parts needing periodic replacement.
Small size sheets are counted in increments of 1, large size sheets are counted in increments of 2.

<Example>

TR-BELT	/	**00000201**	/	**00240000**	/	**0%**	**!!**	**000082**
[1]		[2]		[3]		[4]	[5]	[6]

[1]: Displays the part name. In this example, the intermediate transfer belt unit.
[2]: Displays the counter value (actual number of sheets used). The value is cleared by pressing the clear key when the part is replaced.
[3]: Displays the limit value (number of sheets as guideline for replacement). You can select the item and change the value with the numeric keypad. After changing the value, press the OK key.
[4]: Displays the ratio of the counter value to the limit value.
[5]: When the ratio is between 90% and 100%, a single exclamation mark (!) is displayed.
When the ratio is over 100%, two exclamation marks (!!) appear. In the example above, no exclamation marks would appear.
[6]: Displays the predicted number of days until replacement. The example above shows 82 days.

1. TOTAL

T-19-66

COPIER>COUNTER>TOTAL		
Sub item	**Description**	**level.**
SERVICE1	Service total counter 1 Incremented when paper is delivered outside the printer. (Incremented for both large and small size sheets.) Returns to "00000000" after reaching "99999999".	1
SERVICE2	Service total counter 2 Incremented when paper is delivered outside the printer. (Incremented by 2 for large size sheets, and by 1 for small size sheets.) Returns to "00000000" after reaching "99999999".	1
COPY	Total copies counter Incremented when a copy operation is performed and paper is delivered outside the printer. Returns to "00000000" after reaching "99999999".	1
PDL-PRT	PDL print counter Incremented along with the billing counter during PDL printing, when paper is delivered outside the copier and two-sided paper is loaded. Blank sheets are not counted. Incremented by 1 for both large and small size sheets. Returns to "00000000" after reaching "99999999".	1
FAX-PRT	Fax received print counter Incremented along with the billing counter when a fax is received, when a print is delivered outside the copier and two-sided paper is loaded. Blank sheets are not counted. Incremented by 1 for both large and small size sheets. Can be cleared. Returns to "00000000" after reaching "99999999".	1
BOX-PRT	Box print counter Incremented along with the billing counter when a box print is made, when paper is delivered outside the copier and two-sided paper is loaded. Blank sheets are not counted. Incremented by 1 for both large and small size sheets. Can be cleared. Returns to "00000000" after reaching "99999999".	1
RPT-PRT	Report print counter Incremented along with the billing counter when a report print is made, when paper is delivered outside the copier and two-sided paper is loaded. Blank sheets are not counted. Incremented by 1 for both large and small size sheets. Can be cleared. Returns to "00000000" after reaching "99999999".	1
2-SIDE	Two-sided copy/print counter Incremented along with the billing counter when a two-sided copy/print is made, when paper is delivered outside the copier and two-sided paper is loaded. Blank sheets are not counted. Incremented by 1 for both large and small size sheets. Can be cleared. Returns to "00000000" after reaching "99999999".	1
SCAN	Scan counter Incremented along with the billing counter when a scan is made, when reading finishes. Incremented by 1 for both large and small size sheets. Can be cleared. Returns to "00000000" after reaching "99999999".	1

2. PICK-UP

T-19-67

COPIER>COUNTER>PICK-UP		
Sub item	**Description**	**level.**
C1	Cassette 1 paper feed total counter Displays number of sheets fed from cassette 1. Returns to "00000000" after reaching "99999999".	1
C2	Cassette 2 paper feed total counter Displays number of sheets fed from cassette 2. Returns to "00000000" after reaching "99999999".	1
C3	Cassette 3 paper feed total counter Displays number of sheets fed from cassette 3 (top level of cassette pedestal). Returns to "00000000" after reaching "99999999".	1

COPIER>COUNTER>PICK-UP		
Sub item	**Description**	**level.**
C4	Cassette 4 paper feed total counter Displays number of sheets fed from cassette 4 (bottom level of cassette pedestal). Returns to "00000000" after reaching "99999999".	1
MF	Manual paper feed total counter Displays number of sheets fed from manual paper feed unit. Returns to "00000000" after reaching "99999999".	1
DK	Deck paper feed total counter Displays number of sheets fed from deck paper feed unit. Returns to "00000000" after reaching "99999999".	1
2-SIDE	Two-sided paper feed total counter Displays number of two-sided sheets fed. Returns to "00000000" after reaching "99999999".	1

3. FEEDER

T-19-68

COPIER>COUNTER>FEEDER		
Sub item	**Description**	**level.**
FEED	ADF document feed total counter	1
DFOP-CNT	ADF hinge open/close count display Counts how many times ADF is opened/closed.	1

4. JAM

T-19-69

COPIER>COUNTER>JAM		
Sub item	**Description**	**level.**
TOTAL	Total jam counter for copier	1
FEEDER	Total jam counter for feeder	1
SORTER	Total jam counter for finisher	1
2-SIDE	Jam counter for two-sided unit	1
MF	Jam counter for multi-feeder	1
C1	Jam counter for cassette 1	1
C2	Jam counter for cassette 2	1
C3	Jam counter for cassette 3	1
C4	Jam counter for cassette 4	1
DK	Jam counter for side paper deck	1

5. DRBL-1

T-19-70

COPIER>COUNTER>DRBL-1		
Sub item	**Description**	**level.**
T-CLN-BD	Number of sheets that have passed through transfer cleaning unit (count value is stored in controller).	1
TR-BLT	Number of sheets that have passed through intermediate transfer belt unit (count value is stored in controller).	1
TR-ROLL	Number of sheets that have passed through primary transfer roller (count value is stored in controller).	1
2TR-ROLL	Number of sheets that have passed through secondary transfer outer roller (count value is stored in controller).	1
2TR-INRL	Number of sheets that have passed through secondary transfer internal roller (count value is stored in controller).	1
C1-SP-RL	Cassette 1 separation roller no. of sheets fed	1
C1-FD-RL	Cassette 1 separation roller no. of sheets fedCassette 1 separation roller no. of sheets fed	1
C2-SP-RL	Cassette 1 separation roller no. of sheets fedCassette 2 separation roller no. of sheets fedCassette 1 separation roller no. of sheets fed	1
C2-FD-RL	Cassette 1 separation roller no. of sheets fedCassette 2 separation roller no. of sheets fedCassette 2 separation roller no. of sheets fedCassette 1 separation roller no. of sheets fed	1
M-SP-RL	Manual feed tray separation roller no. of sheets fed	1
M-FD-RL	Manual feed transport roller no. of sheets fed	1
WST-TNR	2 Waste toner counter When waste toner is removed, this counter is cleared.	1
TN-FIL1	Toner filter (FM1) fan drive sheet count	1
FX-BLT-U	Fixing unit fed sheet count	1

6. DRBL-2

T-19-71

COPIER>COUNTER>DRBL-2		
Sub item	**Description**	**level.**
DF-PU-RL	Number of sheets that have passed through ADF paper feed roller. (count retained by controller PCB)	1
DF-SP-PL	ADF separation roller no. of sheets fed	1
DF-SP-PD	Number of sheets that have passed through ADF separation pad. (count retained by controller PCB)	1
DF-FD-RL	DF Separation plate separation sheet count Single side: Scanned document each sheet +1 Duplex: Scanned document each sheet + 3 (front, back, idle feed) No distinction between large and small.	1
DF-SP-RL	Number of sheets that have passed through ADF separation roller. (count retained by controller PCB)	1

COPIER>COUNTER>DRBL-2		
Sub item	**Description**	**level.**
LNT-TAP1	for the dust collecting tape A, indicates the number of sheets that have passed. (count retained by controller PCB)	1
LNT-TAP2	for the dust collecting tape B, indicates the number of sheets that have passed. (count retained by controller PCB)	1
LNT-TAP3	for the dust-collecting tape C, indicates the number of sheets that have passed. (count retained by controller PCB)	1
LNT-TAP4	for the dust-collecting tape D, indicates the number of sheets that have passed. (count retained by controller PCB)	1
LNT-TAP5	for the dust-collecting tape D, indicates the number of sheets that have passed. (count retained by controller PCB)	1
STAMP	Stamp operation count	1
PF-PU-RL	for the paper deck pickup roller, indicates the number of sheets that have passed. (count retained by controller PCB)	1
PD-SP-RL	for the paper deck separation roller, indicates the number of sets that have passed. (count retained by controller PCB)	1
PD-FD-RL	for the paper deck feed roller, indicates the number of sheets that have passed. (count retained by controller PCB)	1
C3-SP-RL	Count 3 separation roller no. of sheets fed	1
C3-FD-RL	Count 3 separation roller no. of sheets fed	1
C4-SP-RL	Count 4 separation roller no. of sheets fed	1
C4-FD-RL	Count 4 separation roller no. of sheets fed	1
FIN-STPR	Number of staple operations.	1
SDL-STPL	Number of saddle staple operations. Incremented by 1 even for L-size sheets.	1
FN-BFFRL	for the buffer roller, indicates the number of times it has gone on. (count retained by DC controller PCB)	1
DL-STC-L	Paper eject static eliminator brush (L) sheet count	1
DL-STC-R	Paper eject static eliminator brush (R) sheet count	1
ENT-STC	Entrance static eliminator brush sheet count	1
CENT-STC	Swing guide static eliminator brush (R) sheet count	1
BACK-ROL	Reverse roller static eliminator brush (R) sheet count	1
FIN-STP2	Finisher-SA1 stapler operation count	1

Chapter 20 Upgrading

Contents

20.1 Outline 20-1
20.1.1 Function/ Operation Overview 20-1
20.1.2 Points to Note at Downloading 20-4
20.2 Making Preparations 20-4
20.2.1 Registration of System Software (System CD to SST) 20-4
20.2.2 Registration of System Software (SST to USB memory) 20-6
20.2.3 Connection (At Using SST) 20-8
20.2.4 Connection (At Using USB Memory) 20-9
20.3 Formatting the HDD 20-9
20.3.1 Formatting All Partitions 20-9
20.3.2 Formatting Selected Partitions 20-10
20.3.3 Formatting the Partitions 20-11
20.4 Downloading System Software 20-12
20.4.1 Batch Downloading 20-12
20.4.1.1 Overview 20-12
20.4.1.2 Procedure for Downloading 20-12
20.4.2 Downloading the System Software (Single) 20-15
20.4.2.1 Downloading Procedure 20-15
20.5 Uploading and Downloading Backup Data 20-18
20.5.1 Outline 20-18
20.5.2 Uploading Procedure 20-18
20.5.3 Download Procedures 20-20
20.6 Version Upgrade using USB 20-21
20.6.1 Menu/Function Overview 20-21
20.6.2 Points to Note at the Time of Operation/Use 20-22
20.6.3 Download/Writing of System Software (Auto) 20-24
20.6.4 Download of System Software (Auto, or Selectable) 20-24
20.6.5 Download of System Software (Overwriting) 20-25
20.6.6 Format HDD 20-26
20.6.7 Other Functions 20-27

20.1 Outline

20.1.1 Function/ Operation Overview

CLC5151 / / / CLC4040 / / / iR C4580i / / / iR C4080i / / / / Color Image Reader-F1 / Color Image Reader-E1 / Dupiex Color Image Reader-G1 / iR C5185N / / iR C5185i PRT /

Following functions can be realized by connecting the PC (registered with SST, system software) or USB memory (registered with system) to the main body.

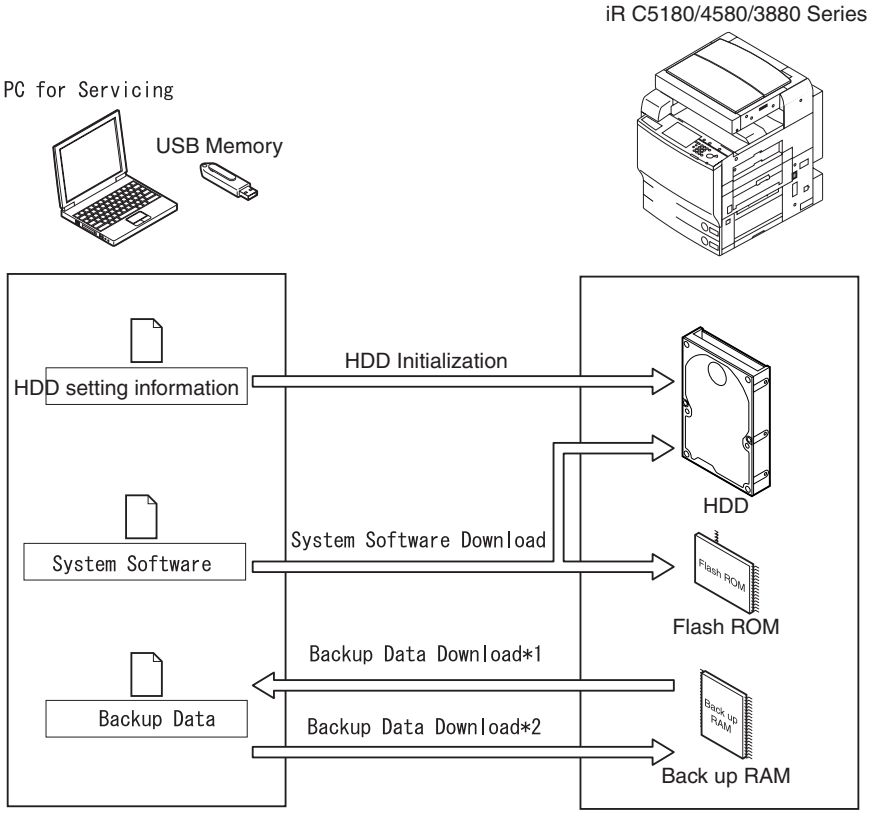

F-20-1

*1: Not applicable when using USB memory

In order to use these functions, the main body must be set to download mode.
There are 2 types of download mode.

-Safe mode (download mode A)
(Turn the main power ON by pressing '2+8')
-Normal mode (download mode B)
(Turn the main power ON by pressing '1+7' and select the following service mode: COPIER > FUNCTION > SYSTEM > DOWNLOAD)

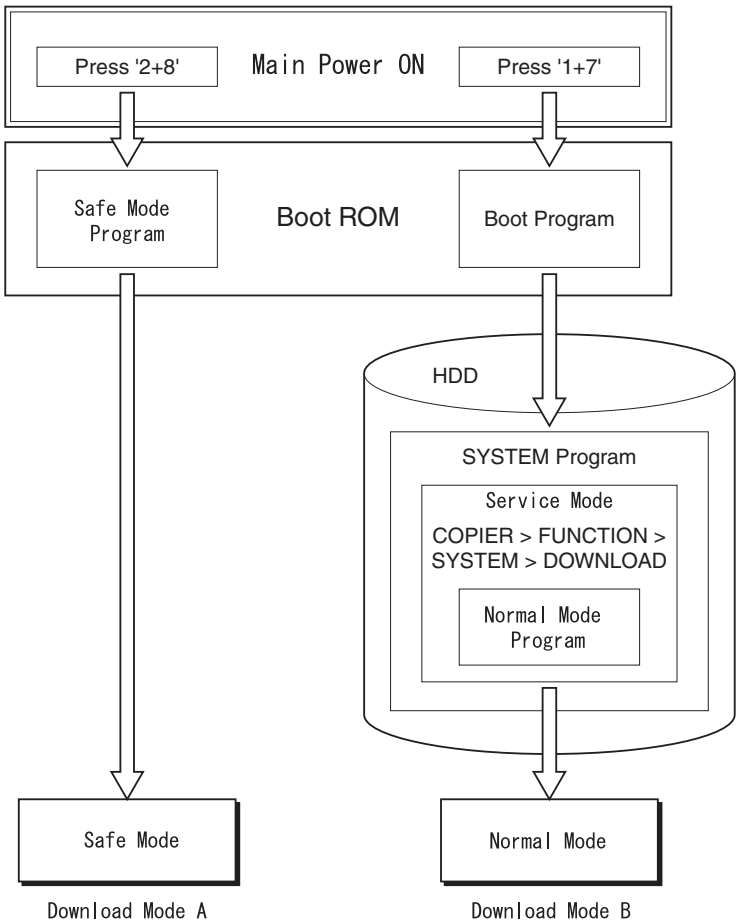

F-20-2

Safe mode can be used:
- in case the HDD is replaced.
- in case the system does not start properly.

The combinations of the download mode and function are shown below:

T-20-1

Function	Download Mode	
	Normal Mode (Download mode B)	**Safe Mode (Download mode A)**
HDD Format	- -	Total BOOTDEV
System Software Downloading *1	-System -Language -RUI -Boot -Dcon -Rcon -SDICT -MEAPCONT -KEY -TTS -BROWSER -TSTMP -MEDIA -HELP -WebDAV -G3FAX	-System -Language -RUI -Boot -Dcon -Rcon -SDICT -MEAPCONT -KEY -TTS -BROWSER -TSTMP -MEDIA -HELP -WebDAV -
Backup Data Uploading/Downloading *2	- -SramRCON -SramDCON	-Meapback - -

*1: Free selection of system software to download is not available when using USB memory.
*2: Not applicable when using USB memory.

System Software Installation
Downloaded system software is stored in the temporary storage space of the HDD. After downloading, the main power switch must be turned OFF/ON and then the main body must be re-booted. The system software saved in the temporary storage space of the HDD is written in the system area and the flash ROM. The machine starts with the downloaded system software by turning OFF/ON the main power switch.

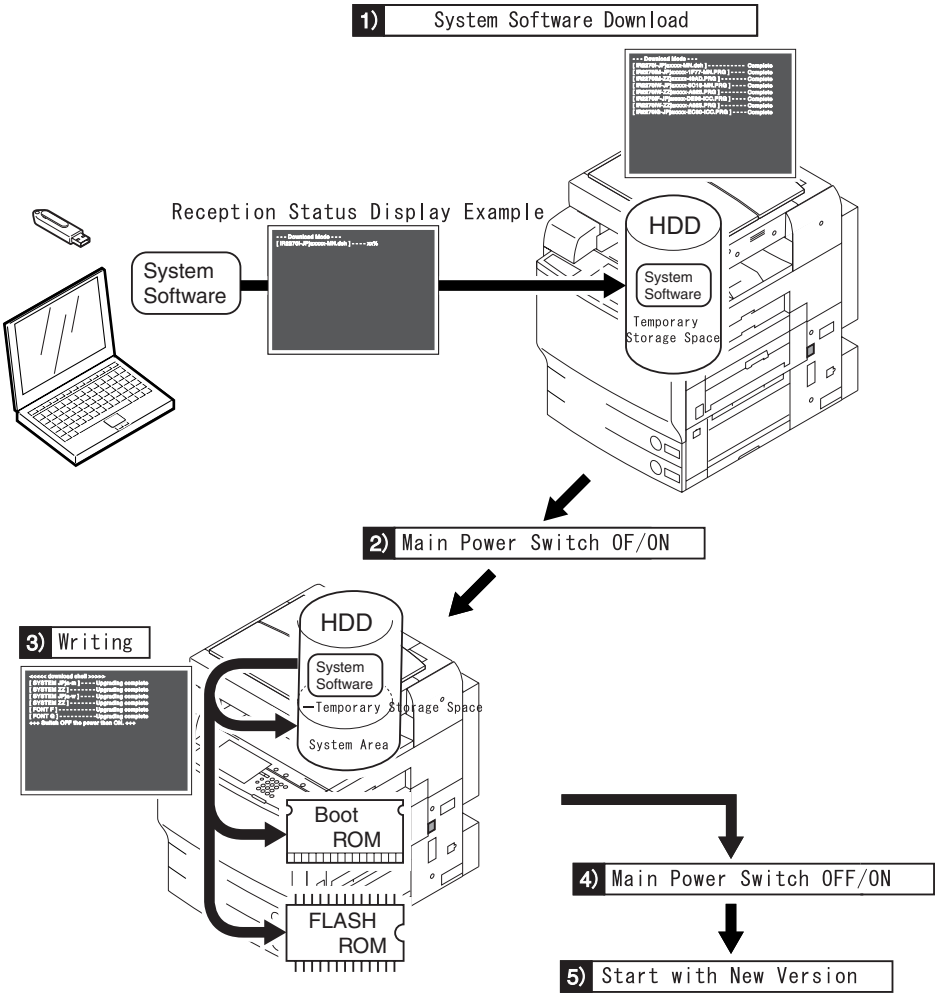

F-20-3

20.1.2 Points to Note at Downloading

CLC5151 / / / CLC4040 / / / iR C4580i / / / iR C4080i / / / / Color Image Reader-F1 / Color Image Reader-E1 / Dupiex Color Image Reader-G1 / iR C5185N / / iR C5185i PRT /

⚠ Do not turn OFF of the power supply during downloading/writing
Be sure not to turn OFF the power supply during downloading/writing of the system software, otherwise the machine may not start after turning ON the power supply. If that occurred, download the system software after formatting the HDD. As for the Boot ROM, replace the DIMM-ROM.

⚠ Downgrading of the DCON/RCON
DCON/RCON can be downloaded both from normal/safe mode, but in the case of safe mode, version information of the DCON/RCON cannot be obtained and DCON/RCON registered in the SST is always overwritten.

20.2 Making Preparations

20.2.1 Registration of System Software (System CD to SST)

CLC5151 / / / CLC4040 / / / iR C4580i / / / iR C4080i / / / / Color Image Reader-F1 / Color Image Reader-E1 / Dupiex Color Image Reader-G1 / iR C5185N / / iR C5185i PRT /

Register the system software stored in the system CD onto SST.

[Preparation]
Required Items
- PC installed with SST ver3.22 or later
- System CD for this machine

[System Procedure Registration Procedure]
1) Boot the PC.
2) Set the system CD into the PC.
3) Boot the SST.
4) Click [Register the System Software].

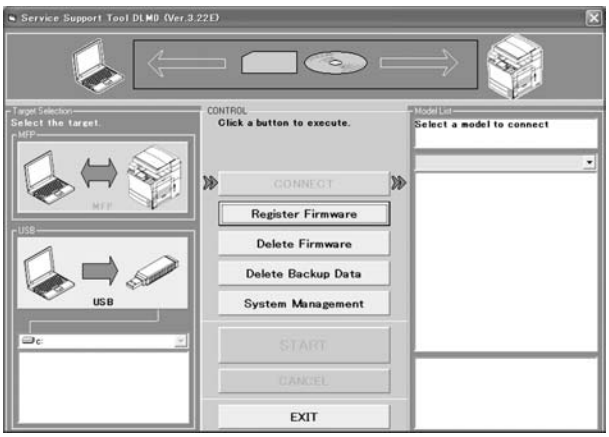

F-20-4

5) Select the system software CD drive and click [Search].

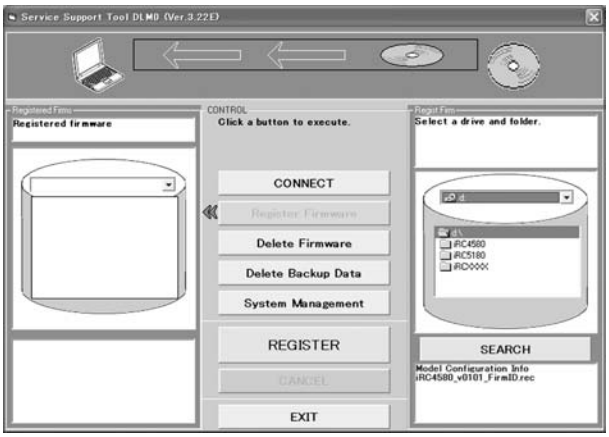

F-20-5

MEMO:
'XXXX' on the screen indicates the system software version (Same in the subsequent figures).

6) The system software list in the system CD is displayed. Remove the check of unnecessary folder or system software and then click [Register].

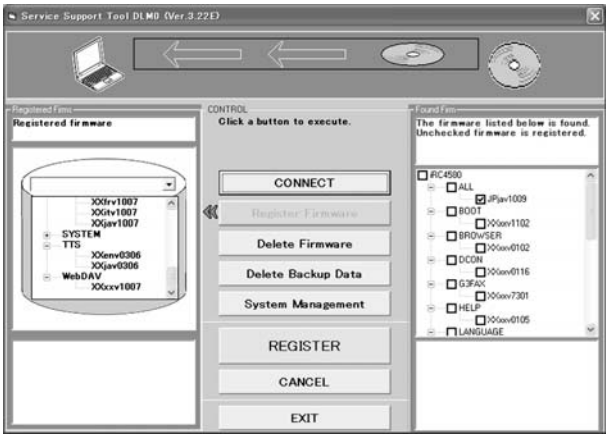

F-20-6

7) Press [OK] after the system software registration completion message is displayed.

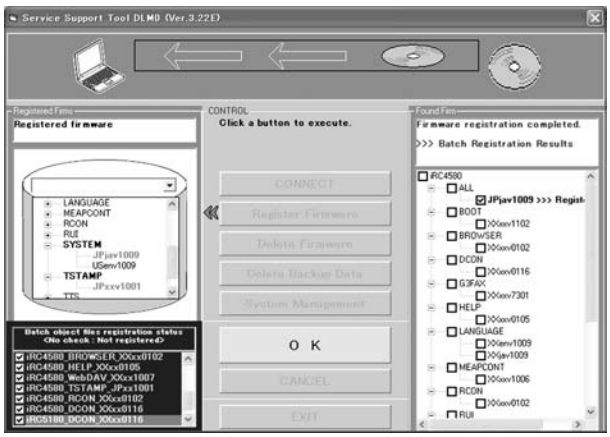

F-20-7

20.2.2 Registration of System Software (SST to USB memory)

CLC5151 / / / CLC4040 / / / iR C4580i / / / iR C4080i / / / / Color Image Reader-F1 / Color Image Reader-E1 / Dupiex Color Image Reader-G1 / iR C5185N / / iR C5185i PRT /

Register the system software registered in the SST onto USB memory.

[Preparation]
Required Items
- PC installed with SST Ver3.22 or later
- USB memory (*)

*: Required specification for USB memory

Interface	USB 1.1 or later (Recommendation: USB 2.0)
Memory	Memory 1GB or more recommended (Total size of the system software package exceeds 512MB)
Format	FAT (FAT16), FAT32 (NTFS, HFS not available) 1 partition only (multiple-partition not available)

USB memory protected by security cannot be used. Deactivate the security before use.

[System Software Registration Procedure]
1) Boot the PC
2) Connect the USB memory to the USB port of the PC.
3) Boot the SST.
4) Click the USB icon on the target selection screen.

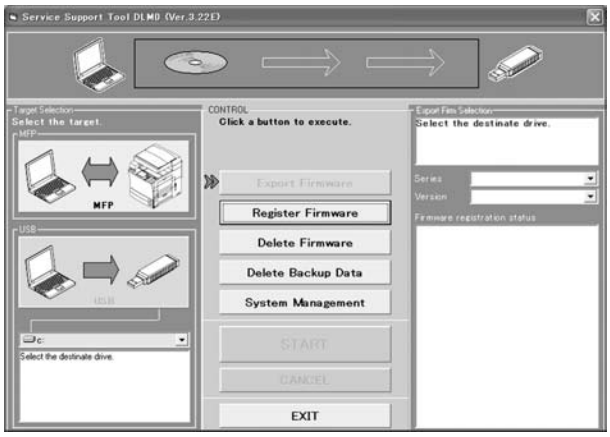

F-20-8

5) Select the drive (removable disc) connected with the USB memory.

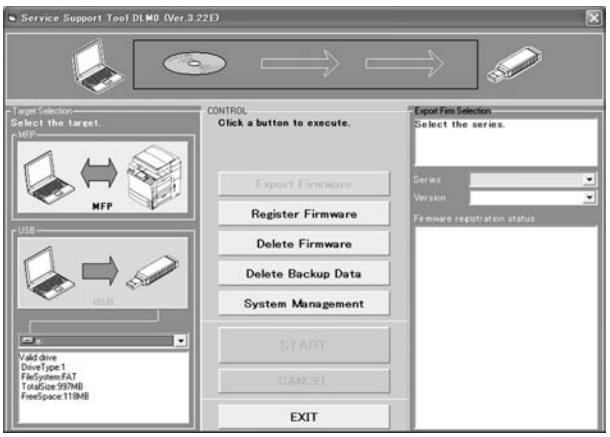

F-20-9

6) Select 'Series' and 'Version' (System).

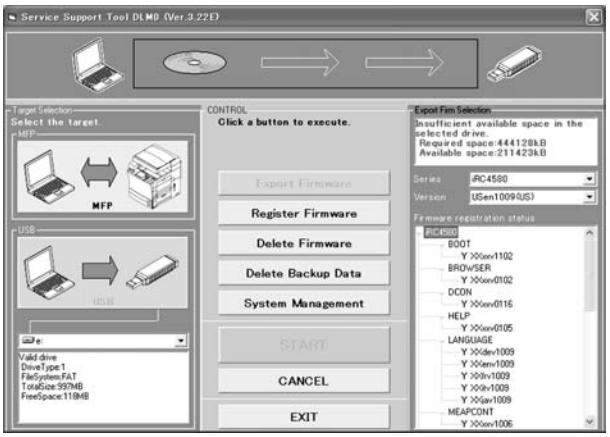

F-20-10

MEMO:
The meanings of the marks displayed on the column 'The registration status of system software' are as follows.
Y: Already registered to SST
N: Not yet registered to SST

7) Click 'Start' button. The registration to the USB memory is started.

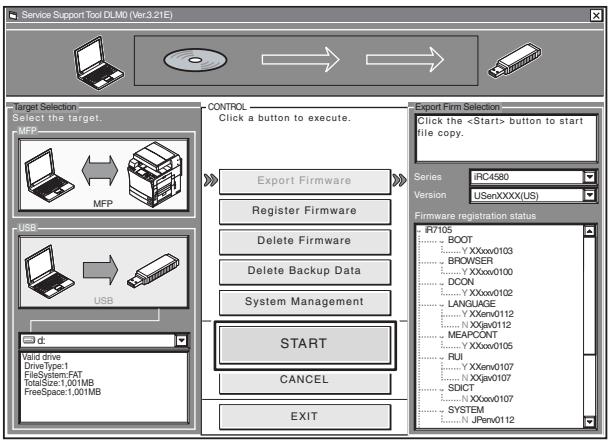

F-20-11

8) When the registration to the USB memory was completed, click 'OK' button.

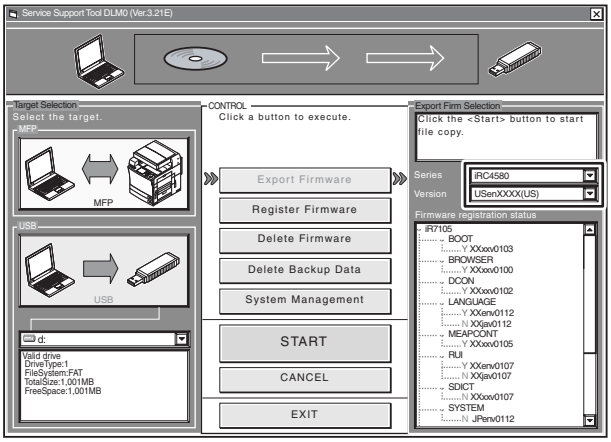

F-20-12

20.2.3 Connection (At Using SST)

CLC5151 / / / CLC4040 / / / iR C4580i / / / iR C4080i / / / / Color Image Reader-F1 / Color Image Reader-E1 / Dupiex Color Image Reader-G1 / iR C5185N / / iR C5185i PRT /

[Required items]
- PC with SST Ver. 3.22 or later installed and the system software for this machine registered.
- Twisted pair crossing cable
  10Base-T: Category 3, or Category 5 or more
  100Base-TX: Category 5 or more

[Procedure]
1) Start up PC.
2) Check the network setting for the PC.
2-1) Start command prompt. After inputting 'IPCONFIG', press the return key.
2-2) Check if the network setting displayed on the screen is same as the following setting. If not, change the network setting for the PC.
IP address: 172.16.1.160
Sub netmask: 255.255.255.0
Default gateway: Arbitrary

Do not designate the following IP address on the PC.
- 172.16.1.0
- 172.16.1.100
- 172.16.1.255

---

3) After checking if execution/memory lamp on the control panel turns off, turn OFF the main power switch of the machine body in the following procedure.

3-1) Push the control panel power switch for three seconds or more.
3-2) Implement the operation according to the shutdown instruction displayed on the control panel screen to make the main power switch ready to turn OFF.
3-3) Turn OFF the main power switch.
4) Connect the machine body to the PC with the crossing cable.

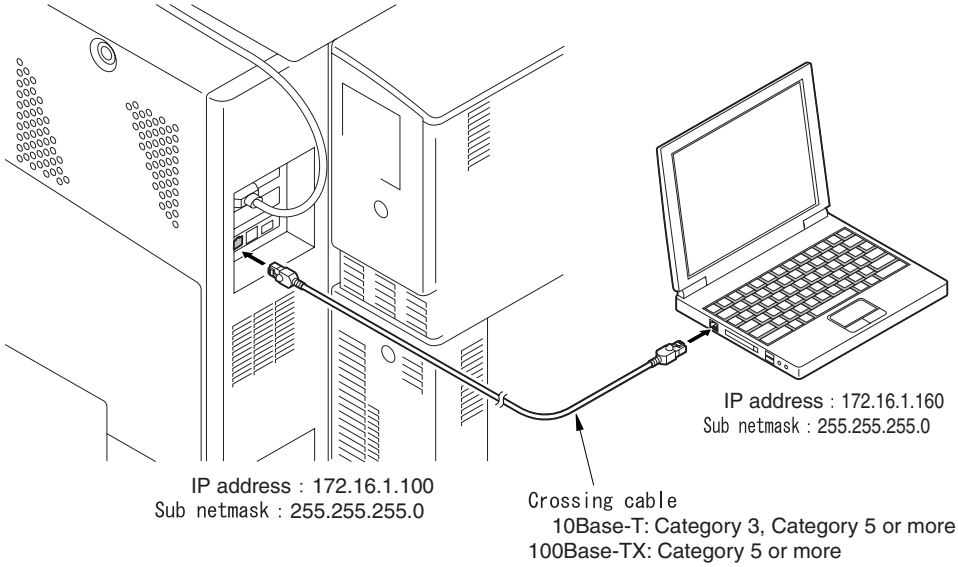

F-20-13

5) Make the machine body be on the download mode for the function to be used.
In the case of the normal mode
Press 1+7 to turn ON the main power switch.
After start up, select the service mode COPIER>FUNCTION>SYSTEM>DOWNLOAD and push [OK].
In the case of the safe mode
When pressing 2+8 to turn ON the main power switch, it starts to operate on the safe mode.

20.2.4 Connection (At Using USB Memory)

CLC5151 / / / CLC4040 / / / iR C4580i / / / iR C4080i / / / / Color Image Reader-F1 / Color Image Reader-E1 / Dupiex Color Image Reader-G1 / iR C5185N / / iR C5185i PRT /

[Required items]
USB memory with the system software for this machine installed.
[Procedure]
1) After checking if execution/memory lamp on the control panel turns off, turn OFF the main power switch as in the following procedure.
  1-1) Push the control panel power switch for three seconds or more.
1-2) Implement the shutdown sequence.
1-3) Turn OFF the main power switch.
2) Connect the USB memory [2] to the USB port [1].

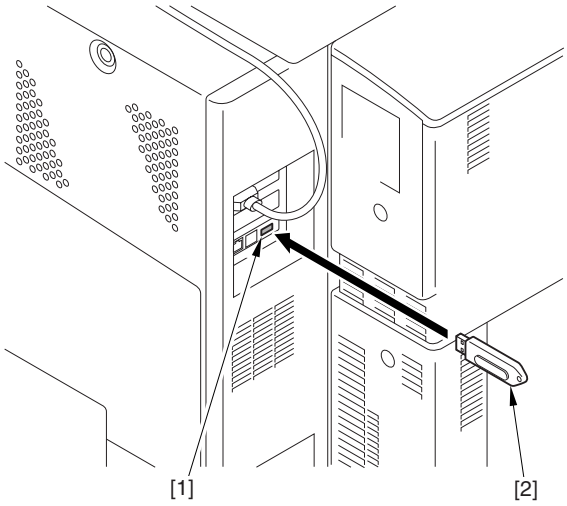

F-20-14

3) If this machine is connected with the network cable, detach it.
4) Make the machine be on the download mode for the function to be used.
  In the case of the normal mode
    Press 1+7 to turn OFF the main power switch.
    After start up, select the service mode COPIER>FUNCTION>SYSTEM>DOWNLOAD and push [OK].
  In the case of the safe mode
    When pressing 2+8 to turn ON the main power switch, it starts to operate on the safe mode.
5) When the machine recognizes the USB memory, the following messages are displayed on the screen of the control panel (Figure is for the normal mode).

```
[[[[[ download Menu (USB) ]]]]]]]]]]]
-------------------------------------
 [1]: Upgrade (Auto)
 [2]: Upgrade (w Confirmation)
 [3]: Upgrade (Overwrite all)
 [4]: Format HDD
 [5]: Backup
 [6]: Restore former version
 [7]: Clear downloaded files

 [Stop]:Shutdown
```

F-20-15

Due to the makers or the kinds, the machine may not recognize the USB memory. If the detection of the USB memory for maximum 60 seconds was tried after turning ON the main power switch but it failed, the menu screen described above is not displayed. Prepare another USB memory in such cases.

Simultaneous usage of the USB memory and SST is impossible (Because the communication to SST is not performed when the machine detected the connection of the USB memory).

20.3 Formatting the HDD

20.3.1 Formatting All Partitions

CLC5151 / / / CLC4040 / / / iR C4580i / / / iR C4080i / / / / Color Image Reader-F1 / Color Image Reader-E1 / Dupiex Color Image Reader-G1 / iR C5185N / / iR C5185i PRT /

Set partition on the inside of HDD, format (initialize) each partition so that the main controller can be used.
Necessary information for the settings of partitions is registered on the partition setting information file (On SST, 'HDFormat' on the folder 'iRCXXXX').

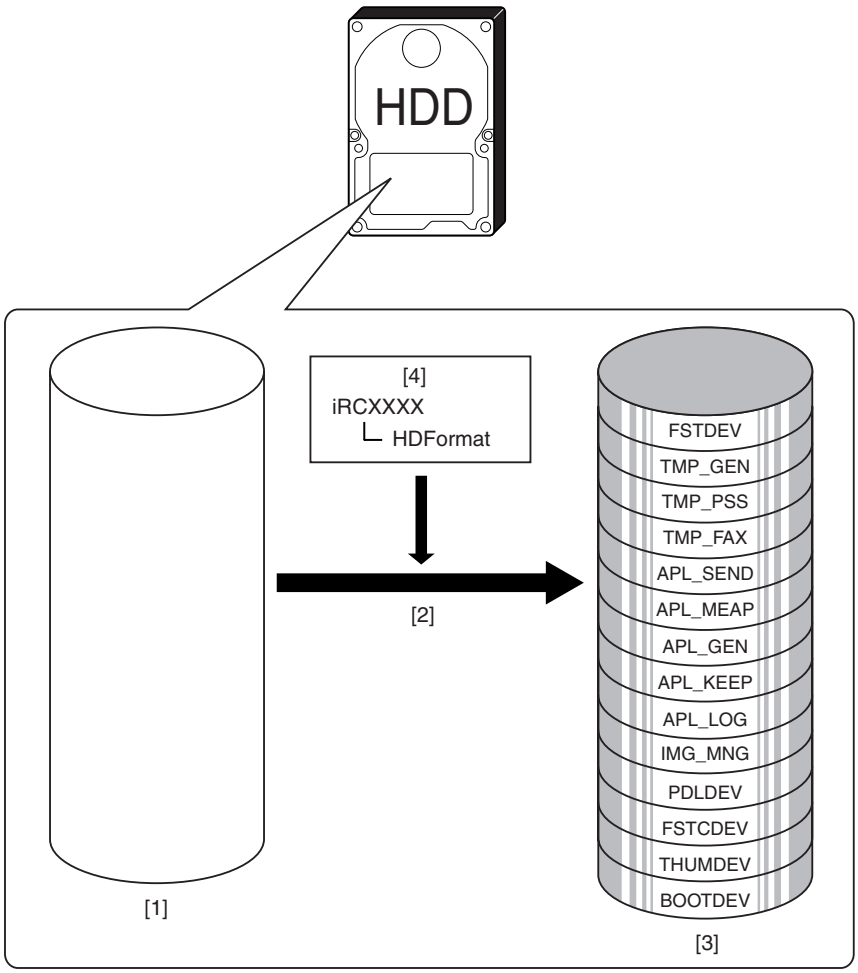

F-20-16

[1] HDD for the service parts (Partition not yet set)
[2] Format for all partitions (Available only on the safe mode)
[3] HDD after formatting
[4] Partition setting information file

20.3.2 Formatting Selected Partitions

CLC5151 / / / CLC4040 / / / iR C4580i / / / iR C4080i / / / / Color Image Reader-F1 / Color Image Reader-E1 / Dupiex Color Image Reader-G1 / iR C5185N / / iR C5185i PRT /

Format (initialize) the selected partition.

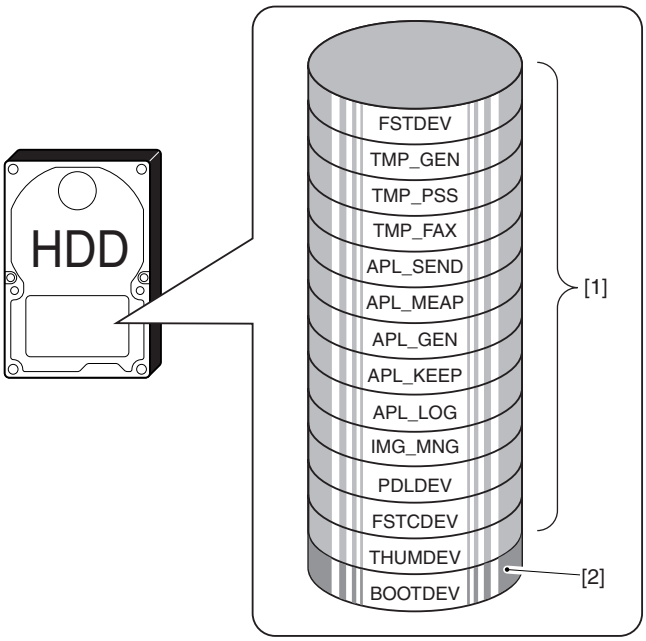

F-20-17

[1] Format impossible

[2] Format possible on the safe mode

MEMO:
Formatting per partition is possible on the service mode (COPIER>FUNCTION>SYSTEM>HD-CLEAR). For BOOTDEV, formatting is impossible on the service mode.

20.3.3 Formatting the Partitions

CLC5151 / / / CLC4040 / / / iR C4580i / / / iR C4080i / / / / Color Image Reader-F1 / Color Image Reader-E1 / Dupiex Color Image Reader-G1 / iR C5185N / / iR C5185i PRT /

1) Start up SST.
2) Select the model to be connected [1] and the information file for single download [2] ('Single'). After checking the network setting, click 'Start' button.

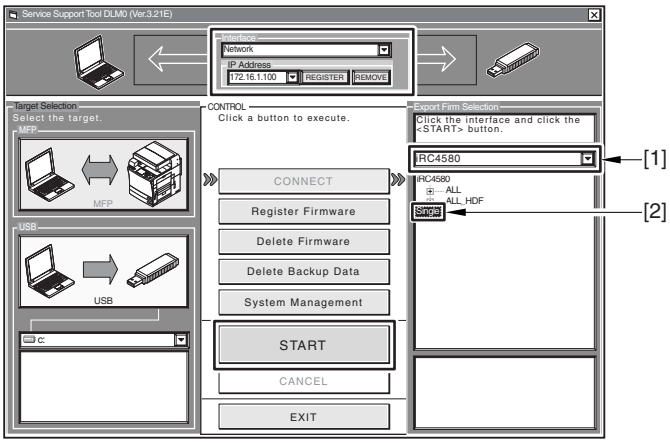

F-20-18

3) Click 'HDD format' button.

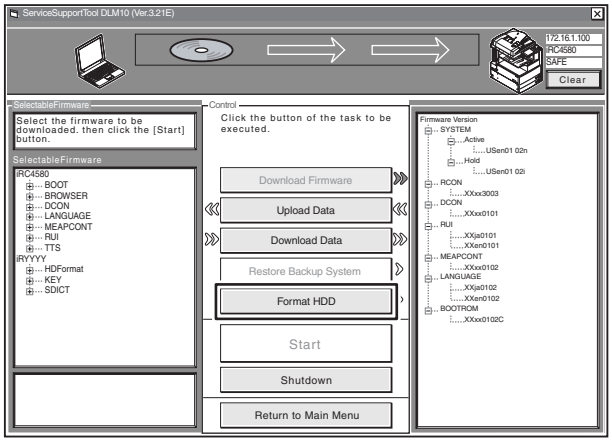

F-20-19

4) After selecting BOOTDEV partition or all partitions (ALL), click 'START' button.

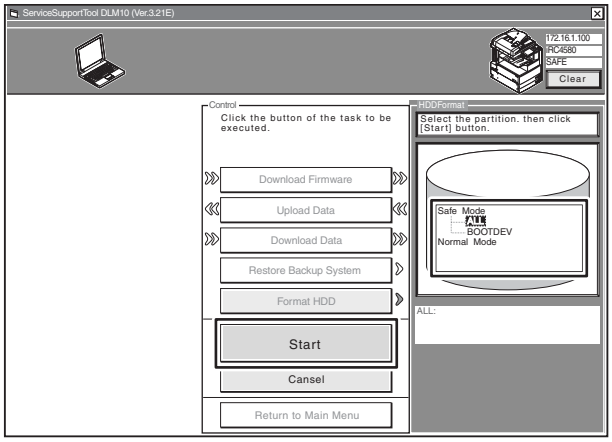

F-20-20

5) Click 'Execute formatting' button.

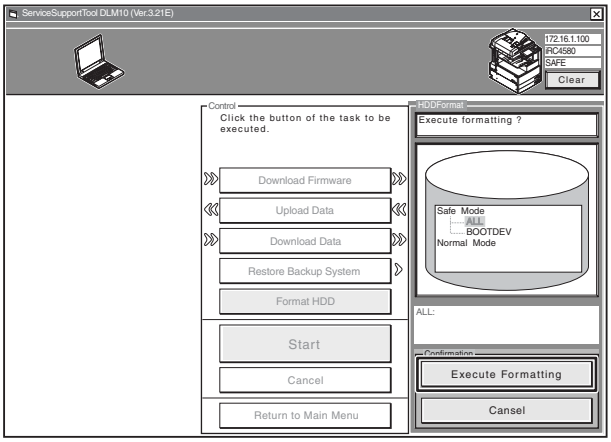

F-20-21

6) After the format is completed, click 'OK' button. Return to the menu screen.
7) Continue to download the system software.

After implementing HDD format, download the system software. Without implementing the download, E602 error occurs at the main power ON.

20.4 Downloading System Software

20.4.1 Batch Downloading

20.4.1.1 Overview

CLC5151 / / / CLC4040 / / / iR C4580i / / / iR C4080i / / / / Color Image Reader-F1 / Color Image Reader-E1 / Dupiex Color Image Reader-G1 / iR C5185N / / iR C5185i PRT /

Bulk downloading for each system software is available. The sets of the system software (combination) for bulk downloading are defined in the information file for the bulk downloading.
This file is included in the system CD, and the bulk downloading function will be effective by registering to SST.

<Information file for bulk downloading>

ALL: For downloading at the normal mode
Implement bulk downloading for all of the registered system software.
Use it at the time of version upgrading.

ALL_HDF: For downloading on the safe mode
Implement bulk loading for the registered software other than the following software.
-BOOT
-DCON
-RCON
Use it when reinstalling the system software after HDD format.
It is possible to select executing downloading for the above three system software.

20.4.1.2 Procedure for Downloading

CLC5151 / / / CLC4040 / / / iR C4580i / / / iR C4080i / / / / Color Image Reader-F1 / Color Image Reader-E1 / Dupiex Color Image Reader-G1 / iR C5185N / / iR C5185i PRT /

Here the procedure for bulk downloading on the safe mode is shown as an example.

1) Start up SST.
2) Select the model to be connected [1] and the information file for bulk downloading [2] ('ALL_HDF').

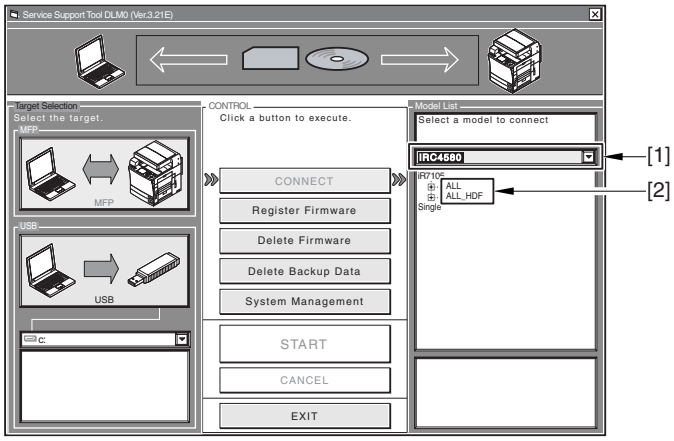

F-20-22

3) After checking the network setting, click 'Start bulk downloading' button.

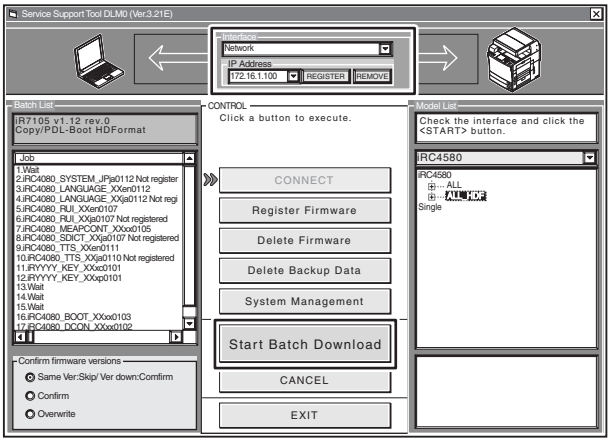

F-20-23

4) Click 'Restart' button.

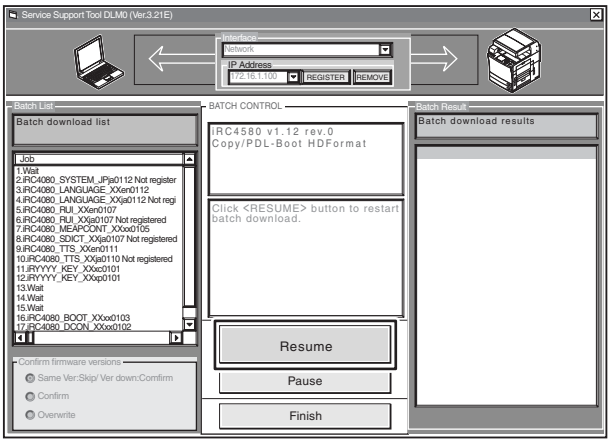

F-20-24

MEMO:
The progress of downloading can be checked on the bulk downloading list screen [1].

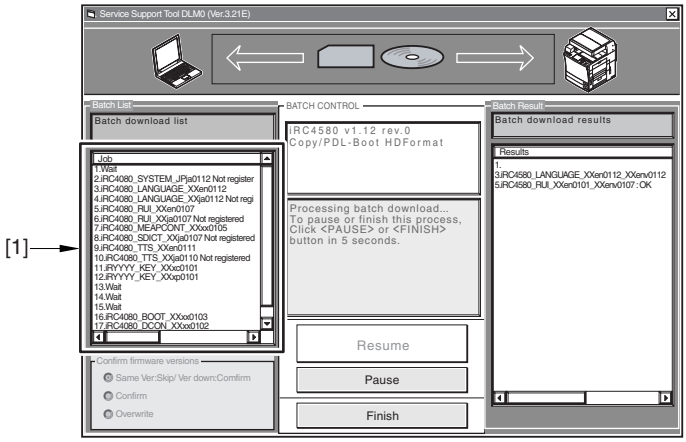

F-20-25

5) The downloading completion screen for the system software to be stored on HDD is displayed. When finishing downloading, click 'Fix cancellation' button. When continuing downloading 'BOOT', 'DCON' and 'RCON', click 'Restart' button and go to the next procedure.

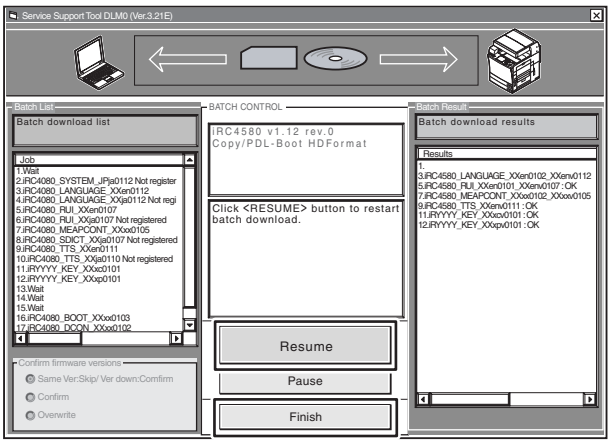

F-20-26

6) After turning OFF the main power switch of the machine body, turn it to the normal mode (After turning ON the main power switch by pressing 1+7 key simultaneously, turn it to the download mode by the service mode).
Click 'Restart' button.

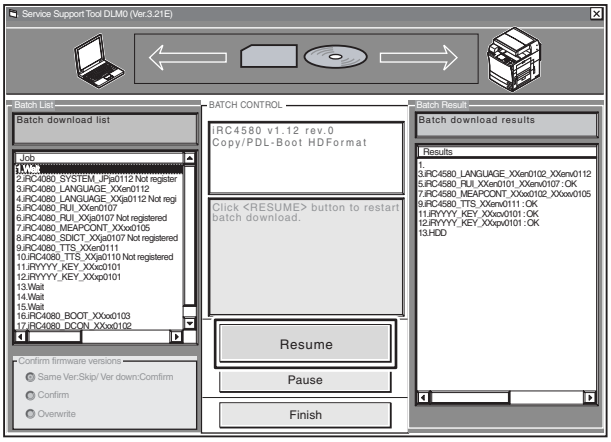

F-20-27

7) Click 'Restart' button. The downloading of 'BOOT', 'DCON' and 'RCON' is started.

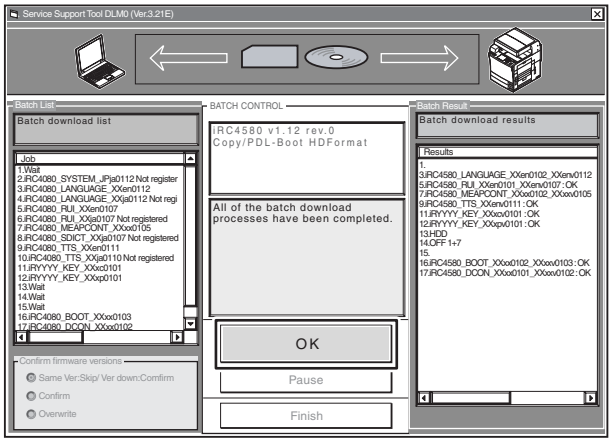

F-20-28

8) Click 'OK' button.

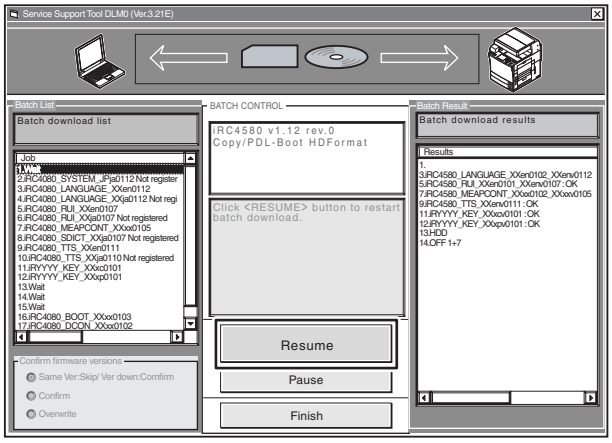

F-20-29

Prohibition of turning OFF during downloading/writing
Do not turn OFF the power of the machine during downloading or writing. It may obstruct the activation of the machine body. In such cases, download the system software after formatting HDD.

20.4.2 Downloading the System Software (Single)

20.4.2.1 Downloading Procedure

CLC5151 / / / CLC4040 / / / iR C4580i / / / iR C4080i / / / / Color Image Reader-F1 / Color Image Reader-E1 / Dupiex Color Image Reader-G1 / iR C5185N / / iR C5185i PRT /

The procedure for downloading SYSTEM is explained as an example (Same for other system software).
1) Start up STT.
2) Select the model to be connected [1] and the information file for single downloading [2] ('Single'). After checking the network setting, click ‘Start’ button.

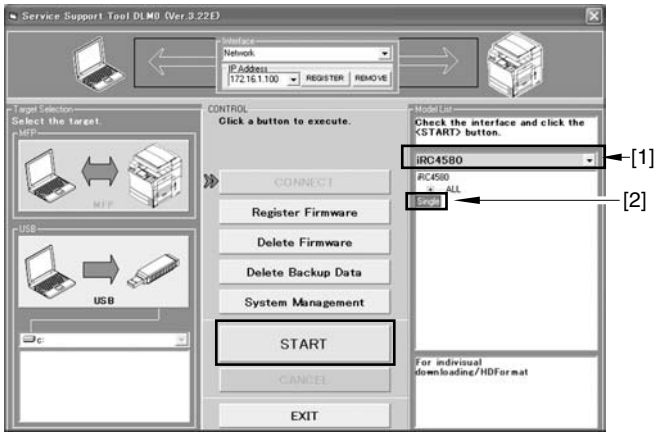

F-20-30

3) After selecting version of System to be downloaded, click 'Start' button.

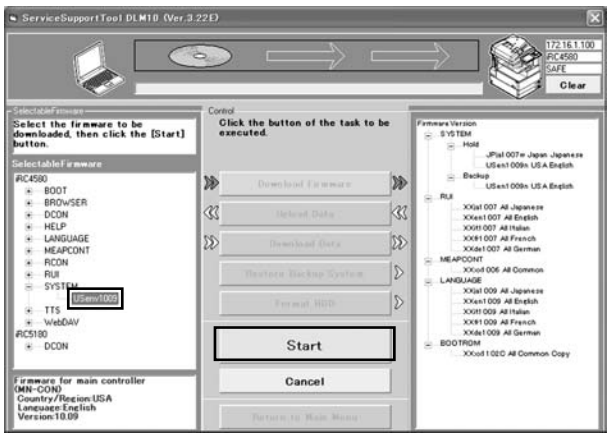

F-20-31

4) When downloading is completed, click 'OK' button. Return to the previous page.

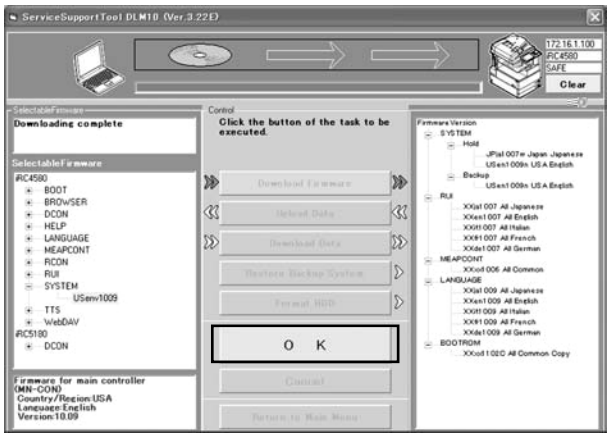

F-20-32

5) Restart the machine. The procedure differs due to download mode.

<u>In the case of the normal mode</u>
5-1) Click 'Shutdown' button.

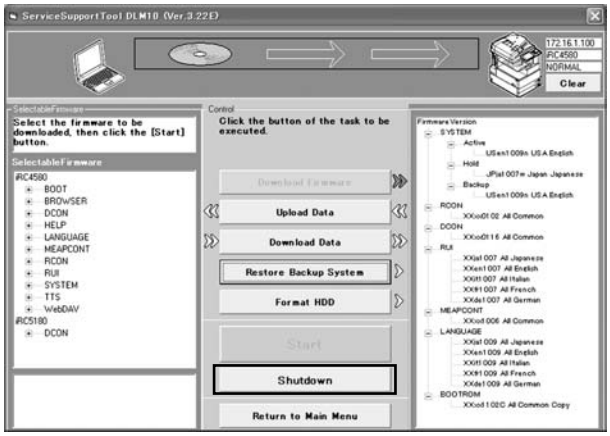

F-20-33

5-2) Click 'Start shutdown' button. The shutdown is performed.

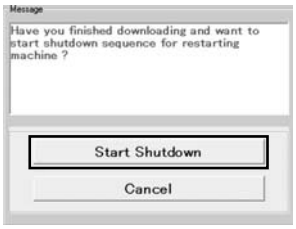

F-20-34

5-3) Click 'OK', turn OFF/ON of the main power switch of the machine.

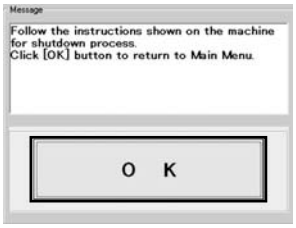

F-20-35

In the case of the safe mode
5-1) Turn OFF/ON the main power switch of the machine.

6) After restart, the downloaded system software is written on HDD or flash ROM, the status of the writing is displayed on the screen of the control panel. The message urging the power OFF/ON is displayed when the writing was completed, then turn OFF/ON the main power switch.

Prohibition of power OFF during downloading/writing
Do not turn OFF the power of the machine during downloading or writing. It may obstruct the activation of the machine body. In such cases, download the system software after implementing HDD format.

MEMO:
It is possible to clear the downloaded system software without writing into HDD or flash ROM. Before restarting the machine body when the download is completed, implement the following procedure.
1) Click 'Clear' button [1].

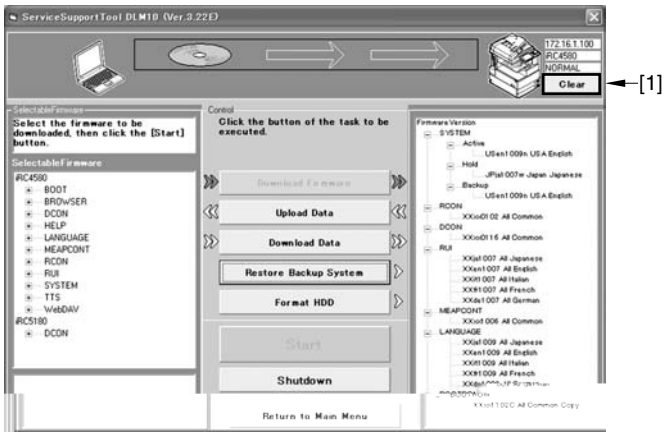

F-20-36

2) Click 'Execute clear' button. The system software stored on the temporary storage space of HDD is cleared.

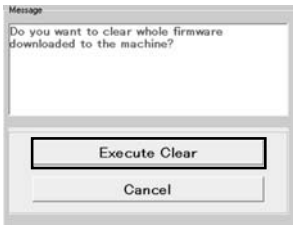

F-20-37

3) Click 'OK' button. Return to the previous page.

F-20-38

MEMO:
After connecting, the following device information [1] is displayed on the right upper area of the SST screen.
- IP address
- Product name
- Download mode

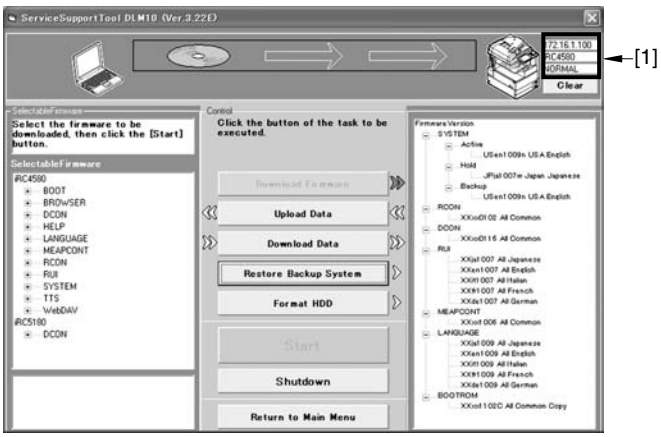

F-20-39

20.5 Uploading and Downloading Backup Data

20.5.1 Outline

CLC5151 / / / CLC4040 / / / iR C4580i / / / iR C4080i / / / / Color Image Reader-F1 / Color Image Reader-E1 / Dupiex Color Image Reader-G1 / iR C5185N / / iR C5185i PRT /

MeapBack is the MEAP application stored in HDD and its data.
SramDCON is the data stored in SRAM of the DC Controller PCB.
SramRCON is the data stored in EEPROM of the Reader Controller PCB.

Backup data	File name to be selected at download/upload
For the developmental inspection	~~Sublog.txt~~ (Do not select this file.)
MEAP application	MeapBack.bin (Possible to upload/download in the safe mode.)
For the developmental inspection	~~Sublog.txt~~ (Do not select this file.)
Reader Controller PCB Backup	SramRCON (Possible to upload/download in the normal mode.)
DC Controller PCB Backup	SramDCON (Possible to upload/download in the normal mode.)

Points to Note When Executing Meapback Upload/Download
When re-installing the System as a remedy for a trouble, upload Meapback, and then, download it after the format. By doing so, it will be possible to save the MEAP application temporary.
1) Upload Meapback
2) Execute ALL format of HDD.
3) Re-install the System and other system softwares.
When re-install the System, make sure to use the same version before the HDD format. If the version of the System differs, the uploaded Meapback cannot be downloaded.
4) Download Meapback.
The uploaded Meapback can be downloaded only to the machine, not to the other machines.

MEMO:
- In case of replacing HDD, or executing the format of ALL and APL_MEAP, upload MeapBack, and then, download it after the format. By doing so, it will be possible to save the MEAP application temporary.
- In case of replacing the Reader Controller PCB, upload the SramRCON, and then, download it after the replacement. By doing so, the setup data, like the service mode, can be taken over.
- In case of replacing the DC Controller PCB, upload the SramDCON, and then download it after the replacement. By doing so, the setup data, like the service mode, can be taken over.

20.5.2 Uploading Procedure

CLC5151 / / / CLC4040 / / / iR C4580i / / / iR C4080i / / / / Color Image Reader-F1 / Color Image Reader-E1 / Dupiex Color Image Reader-G1 / iR C5185N / / iR C5185i PRT /

- When uploading data, do not select 'SramImg.bin' and 'Sublog.txt'.
- The upload/download of SramDCON and SramRCON can be possible only in the normal mode.
- The upload/download of MeapBack can be possible only in the safe mode.

[In Case of MeapBack]

1) Activate SST.
2) Select the model to be connected [1] and the information file for individual download [2] ('Single'), and click [Start] button after checking the network settings.

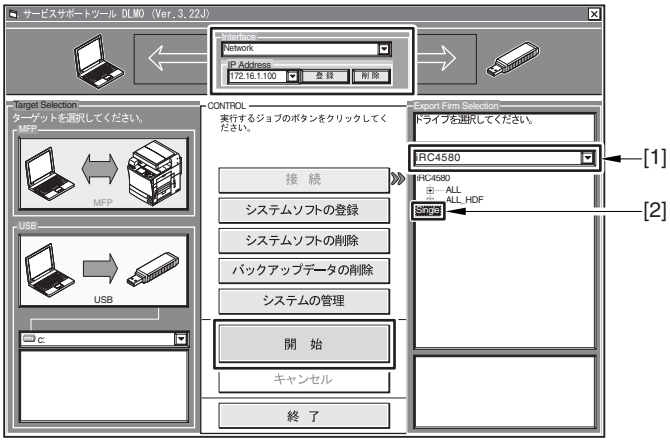

F-20-40

3) Click [Data upload] button.

F-20-41

4) Select 'MeapBack.bin' and click [Start] button.

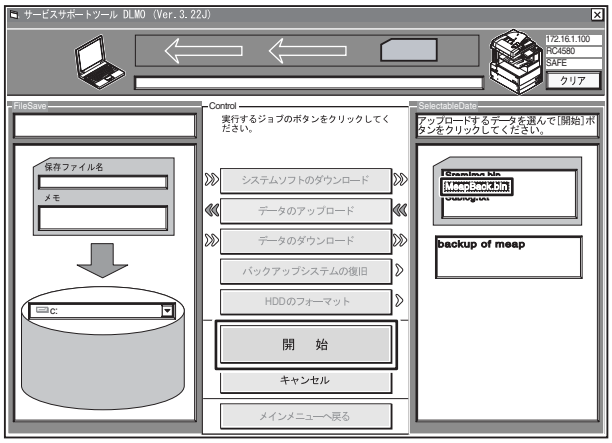

F-20-42

5) Input a file name to be saved, and click [Save] button after inputting memo, if necessary.

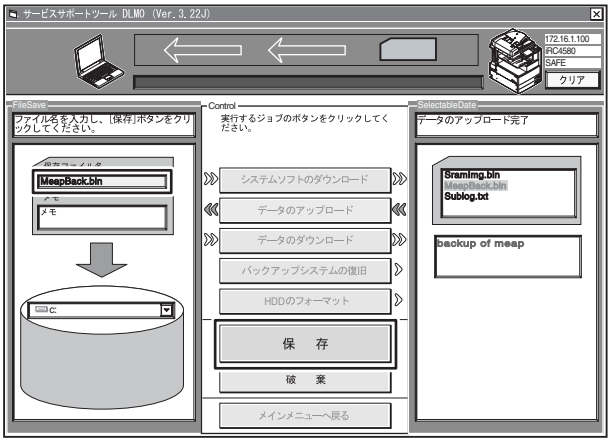

F-20-43

6) Click [OK] button.

SramRCON, SramDCON, and MeapBack can be downloaded only to the machine from which upload is performed.

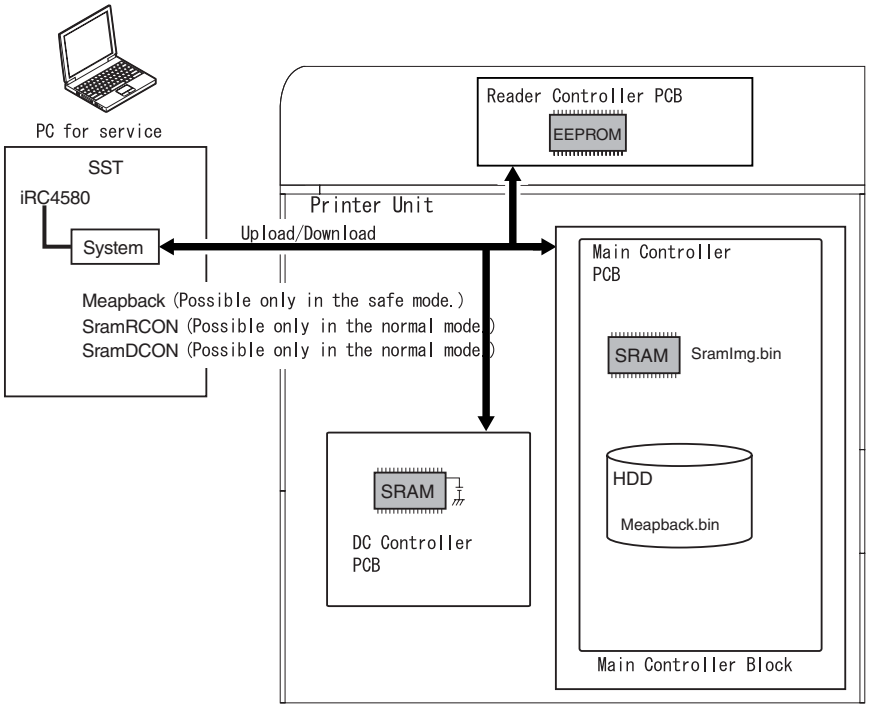

F-20-44

20.5.3 Download Procedures

CLC5151 / / / CLC4040 / / / iR C4580i / / / iR C4080i / / / / Color Image Reader-F1 / Color Image Reader-E1 / Dupiex Color Image Reader-G1 / iR C5185N / / iR C5185i PRT /

- The upload/download of SramDCON and SramRCON can be possible only in the normal mode
- The upload/download of MeapBack can be possible only in the safe mode.

[In Case of MeapBack]

1) Activate SST.
2) Select the model to be connected [1] and the information file for individual download [2] ('Single'), and click [Start] button after checking the network settings.

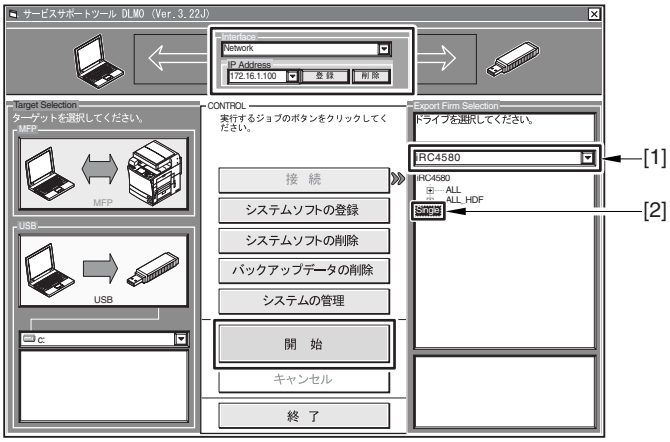

F-20-45

3) Click [Data download] button.

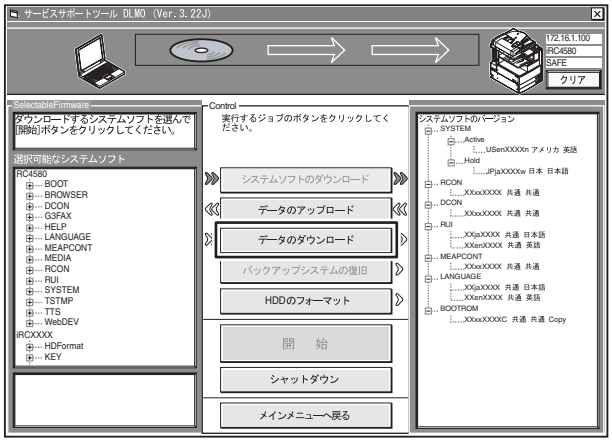

F-20-46

4) Select the data to be downloaded, and click [Start] button.

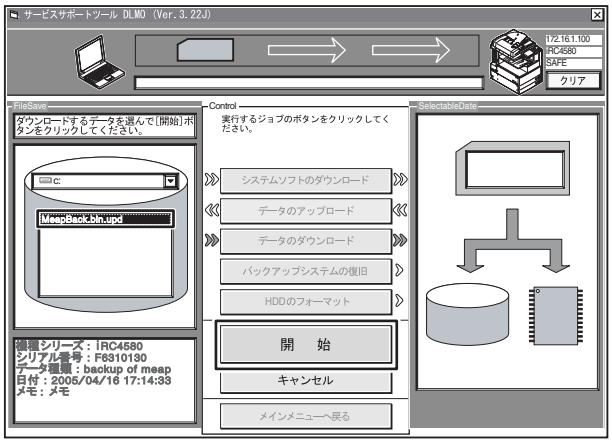

F-20-47

5) When the download is completed, click [OK] button. It returns to the previous screen.

20.6 Version Upgrade using USB

20.6.1 Menu/Function Overview

CLC5151 / / / CLC4040 / / / iR C4580i / / / iR C4080i / / / / Color Image Reader-F1 / Color Image Reader-E1 / Dupiex Color Image Reader-G1 / iR C5185N / / iR C5185i PRT /

Color Image Reader-E1

ng. It may cause the failu
due to the failure of BOO

USB memory.
annot be obtained; thus, the

safe mode)

(not after the HDD replacemen

uto)

ng OFF the Power after the Ag
oad mode, execute the HDD shut
ng off the main power switch.

```
[[[[[ download Menu (USB) ]]]]]]]]]]]
----------------------------------------
 [1]: Upgrade (Auto)
 [2]: Upgrade (w Confirmation)
 [3]: Upgrade (Overwrite all)
 [4]: Format HDD
 [5]: Backup
 [6]: Restore former version
 [7]: Clear downloaded files

 [Stop]:Shutdown

 / [Shutdown] Execute?/
 - (OK):O / (CANCEL):The other keys -
```

F-20-49

20.6.3 Download/Writing of System Software (Auto)

CLC5151 / / / CLC4040 / / / iR C4580i / / / iR C4080i / / / / Color Image Reader-F1 / Color Image Reader-E1 / Dupiex Color Image Reader-G1 / iR C5185N / / iR C5185i PRT /

[1]: Upgrade (AUTO)

Compare the system software version in HDD with its in USB memory, and download only new version in the USB memory to the temporary storage area in HDD. After the completion of download, the machine is automatically rebooted and the downloaded system software is written in the system area in HDD and Flash ROM.

<Procedure>

1) If the power of the machine is ON, turning off the main power after executing HDD shutdown processing.
2) Connect the USB memory to the USB port.
3) Get the machine into the download mode (the normal mode, or the safe mode).
4) By following the display on the control panel, press key.
   [1] -> [0]: Execution of download / Keys other than [0]: Return to the menu screen

```
[[[[[ download Menu (USB) ]]]]]]]]]]
-------------------------------------
 [1]: Upgrade (Auto)
 [2]: Upgrade (w Confirmation)
 [3]: Upgrade (Overwrite all)
 [4]: Format HDD
 [5]: Backup
 [6]: Restore former version
 [7]: Clear downloaded files

 [Stop]:Shutdown
```

F-20-50

5) The download status is displayed on the control panel during download. When download is completed, the machine is automatically rebooted, and writing to the system area of HDD or the Flash ROM is started.

Download Status Screen:

```
////Copying files from USB-dev.///
[iRC4080-XXenXXXX-5822-TTS.lst] OK.
[iRCXXXX-XXxcXXXX-1776-KEY.dsh] OK.
[iRCXXXX-XXxcXXXX-F4D1-KEY.dat] OK.
[iRCXXXX-XXxcXXXX-405C-KEY.lst] OK.
[iRCXXXX-XXxpXXXX-17AC-KEY.dsh] OK.
[iRCXXXX-XXxpXXXX-96D0-KEY.dat] OK.
[iRCXXXX-XXxpXXXX-0564-KEY.lst] OK.
[iRC4580-XXxxXXXX-5C64-DCON.ird] OK.
[iRC4580-XXxxXXXX-B1B1-DCON.prg] OK.
[iRC4580-XXxxXXXX-DCON.ift] OK.
File transfer has been completed.
```

Writing Status to HDD:

```
<<<<<<<<<<< download-shell >>>>>>>>>>>
[KEY xp]      ...Upgrading complete
[KEY xc]      ...Upgrading complete
[TTS en]      ...Writing to HDD XX%
```

F-20-51

6) Once the writing to HDD is completed, the message prompting to turn OFF/ON the power supply is displayed. After turning OFF the main power switch and removing the USB memory, turn ON the main power switch.

```
<<<<<<<<<<< download-shell >>>>>>>>>>>
[KEY xp]      ...Upgrading complete
[KEY xc]      ...Upgrading complete
[TTS en]      ...Upgrading complete
+++ Switch OFF the power then ON. +++
```

F-20-52

20.6.4 Download of System Software (Auto, or Selectable)

CLC5151 / / / CLC4040 / / / iR C4580i / / / iR C4080i / / / / Color Image Reader-F1 / Color Image Reader-E1 / Dupiex Color Image Reader-G1 / iR C5185N / / iR C5185i PRT /

[2]: Upgrade (w Confirmation)

Compare the system software version in HDD with its in USB memory, and copy only the latest version from the USB memory to the temporary storage area in HDD. In case of the same version or old version, the confirmation message is displayed on the screen and the availability of download execution can be selected. Unlike in case of Menu [1], the automatic reboot after the download is not executed. By turning OFF/ON the power supply manually, writing of the system software is executed on start-up.

<Procedure>

1) If the power of the machine is ON, turning off the main power after executing HDD shutdown processing.
2) Connect the USB memory to the USB port.
3) Get the machine into the download mode (the normal mode, or the safe mode).
4) By following the display on the control panel, press key.
   [2] -> [0]: Execution of download / Keys other than [0]: Return to the menu screen

```
[[[[[  download Menu (USB) ]]]]]]]]]]
----------------------------------------
 [1]: Upgrade (Auto)
 [2]: Upgrade (w Confirmation)
 [3]: Upgrade (Overwrite all)
 [4]: Format HDD
 [5]: Backup
 [6]: Restore former version
 [7]: Clear downloaded files

 /[2] has been selected. Execute?/
 - (OK):0 / (CANCEL):The other keys -
```

F-20-53

MEMO:
If the system software version in the USB memory is older or the same when starting the download, the message to confirm overwriting is displayed. By following the display on the control panel, press key.
[0]: Overwrite / Keys other than [0]: Not to overwrite

```
////Copying files from USB-dev.///
[Warning] Same version or old version.
----------------------------------------
[BOOT XXxx]...Same. OVERWRITE?
   -- (YES):0 /(NO):The other keys--
```

F-20-54

5) The download status is displayed on the control panel during download. When download is completed, the message prompting to press key is displayed, so press any key. In case of the normal mode, the shutdown sequence is activated.

```
////Copying files from USB-dev.///
[iRC4080-XXenXXXX-5822-TTS.lst] OK.
[iRCXXXX-XXxcXXXX-1776-KEY.dsh] OK.
[iRCXXXX-XXxcXXXX-F4D1-KEY.dat] OK.
[iRCXXXX-XXxcXXXX-405C-KEY.lst] OK.
[iRCXXXX-XXxpXXXX-17AC-KEY.dsh] OK.
[iRCXXXX-XXxpXXXX-96D0-KEY.dat] OK.
[iRCXXXX-XXxpXXXX-0564-KEY.lst] OK.
[iRC4580-XXxxXXXX-5C64-DCON.ird] OK.
[iRC4580-XXxxXXXX-B1B1-DCON.prg] OK.
[iRC4580-XXxxXXXX-DCON.ift] OK.
File transfer has been completed.

---Please hit any key---
```

F-20-55

6) When the message prompting to turn OFF the power supply, turn OFF the main power switch. Then, remove the USB memory and turning ON the main power switch.
7) After the machine is started, writing to the system area in HDD or the Flash ROM is started. Once the writing to HDD is completed, the message prompting to turn OFF/ON the power supply is displayed, so turn OFF/ON the main power switch.

```
<<<<<<<<<< download-shell >>>>>>>>>>
[KEY xp]      ...Upgrading complete
[KEY xc]      ...Upgrading complete
[TTS en]      ...Upgrading complete
+++ Switch OFF the power then ON. +++
```

F-20-56

20.6.5 Download of System Software (Overwriting)

CLC5151 / / / CLC4040 / / / iR C4580i / / / iR C4080i / / / / Color Image Reader-F1 / Color Image Reader-E1 / Dupiex Color Image Reader-G1 / iR C5185N / / iR C5185i PRT /

[3]: Upgrade (Overwrite all)
Regardless of the system software version in HDD, download the system software in the USB memory. Unlike in case of Menu [1], the automatic reboot after

the download is not executed. By turning OFF/ON the power supply manually, writing of the system software is executed on start-up.
<Procedure>

1) If the power of the machine is ON, turning off the main power after executing HDD shutdown processing.
2) Connect the USB memory to the USB port.
3) Get the machine into the download mode (the normal mode, or the safe mode).
4) By following the display on the control panel, press key.
[3] -> **[0]**: Execution of download / Keys other than [0]: Return to the menu screen

```
[[[[[  download Menu (USB) ]]]]]]]]]]]
-------------------------------------
 [1]: Upgrade (Auto)
 [2]: Upgrade (w Confirmation)
 [3]: Upgrade (Overwrite all)
 [4]: Format HDD
 [5]: Backup
 [6]: Restore former version
 [7]: Clear downloaded files

 /[3] has been selected. Execute?/
 - (OK):O / (CANCEL):The other keys -
```

F-20-57

5) The download status is displayed on the control panel during download. When download is completed, the message prompting to press key is displayed, so press any key. In case of the normal mode, the shutdown sequence is activated.

```
////Copying files from USB-dev.///
[iRC4080-XXenXXXX-5822-TTS.lst] OK.
[iRCXXXX-XXxcXXXX-1776-KEY.dsh] OK.
[iRCXXXX-XXxcXXXX-F4D1-KEY.dat] OK.
[iRCXXXX-XXxcXXXX-405C-KEY.lst] OK.
[iRCXXXX-XXxpXXXX-17AC-KEY.dsh] OK.
[iRCXXXX-XXxpXXXX-96D0-KEY.dat] OK.
[iRCXXXX-XXxpXXXX-0564-KEY.lst] OK.
[iRC4580-XXxxXXXX-5C64-DCON.ird] OK.
[iRC4580-XXxxXXXX-B1B1-DCON.prg] OK.
[iRC4580-XXxxXXXX-DCON.ift] OK.
File transfer has been completed.

---Please hit any key---
```

F-20-58

6) When the message prompting to turn OFF the power supply, turn OFF the main power switch. Then, remove the USB memory and turning ON the main power switch.
7) After the machine is started, writing to the system area in HDD or the Flash ROM is started. Once the writing to HDD is completed, the message prompting to turn OFF/ON the power supply is displayed, so turn OFF/ON the main power switch.

```
<<<<<<<<<<< download-shell >>>>>>>>>>>
[KEY xp]      ...Upgrading complete
[KEY xc]      ...Upgrading complete
[TTS en]      ...Upgrading complete
+++ Switch OFF the power then ON. +++
```

F-20-59

20.6.6 Format HDD

CLC5151 / / / CLC4040 / / / iR C4580i / / / iR C4080i / / / / Color Image Reader-F1 / Color Image Reader-E1 / Dupiex Color Image Reader-G1 / iR C5185N / / iR C5185i PRT /

⚠
This function is only available when the machine is in the safe mode.

---

[4]: Format HDD (displayed when BOOTDEV exists)
Format of BOOTDEV partition
[4]: Format HDD (ALL) (displayed when replacing to a new HDD or BOOTDEV does not exist)
Format the all partitions

<Procedure>
Procedure to clear BOOTDEV partition is shown here.

1) If the power of the machine is ON, turning off the main power after executing HDD shutdown processing.
2) Connect the USB memory to the USB port.
3) Get the machine into the download mode (the normal mode, or the safe mode).
4) By following the display on the control panel, press key.
[4] -> [0]: Go to the partition selection screen / Keys other than [0]: Return to the menu screen

```
[[[[[  download Menu (USB) ]]]]]]]]]]]
----------------------------------------
 [1]: Upgrade (Auto)
 [2]: Upgrade (w Confirmation)
 [3]: Upgrade (Overwrite all)
 [4]: Format HDD
 [5]: Backup
 [6]: Restore former version
 [7]: Clear downloaded files

 /[4] has been selected. Execute?/
 - (OK):O / (CANCEL):The other keys -
```

F-20-60

5) By following the display on the control panel, press key.
[1] -> [0]: Execution of BOOTDEV format / Keys other than [0]: Return to the menu screen
[C]: Return to the menu screen

```
[[[[[ Format HDD Manu (USB) ]]]]]]]]]]]]]
----------------------------------------
 [1]: /BOOTDEV
 [C]: Return to Main Menu

 /[1] has been selected. Execute?/
 - (OK):O / (CANCEL):The other keys -
```

F-20-61

6) Once the format is completed, the message prompting to press key is displayed. By pressing any key, it returns to the menu screen.

```
[[[[[ Format HDD Manu (USB) ]]]]]]]]]]]]]
----------------------------------------
 [1]: /BOOTDEV
 [C]: Return to Main Menu

 /[1] has been selected. Execute?/
 - (OK):O / (CANCEL):The other keys -

Formatting /BOOTDEV ... OK
///Formatting HDD ...Complete///

---Please hit any key---
```

F-20-62

7) Download the system software. For the procedure, see the Individual Download.

20.6.7 Other Functions

CLC5151 / / / CLC4040 / / / iR C4580i / / / iR C4080i / / / / Color Image Reader-F1 / Color Image Reader-E1 / Dupiex Color Image Reader-G1 / iR C5185N / / iR C5185i PRT /

[5]: Backup

This function is under the development inspection; thus, normally do not use it.

[6]: Restore former version (displayed only when the system is saved as backup)
Enabling the system that is saved as backup, and save the System that has been enabled as backup.

<Procedure>

1) If the power of the machine is ON, turning OFF the main power after executing HDD shutdown processing.
2) Connect the USB memory to the USB port.
3) Get the machine into the download mode (the normal mode, or the safe mode).
4) By following the display on the control panel, press key.
[6] -> [0]: Execution of clear / Keys other than [0]: Return to the menu screen
After the execution, the message prompting to turn OFF/ON the power supply is displayed.

```
[[[[[ download Menu (USB) ]]]]]]]]]]]
----------------------------------------
 [1]: Upgrade (Auto)
 [2]: Upgrade (w Confirmation)
 [3]: Upgrade (Overwrite all)
 [4]: Format HDD
 [5]: Backup
 [6]: Restore former version
 [7]: Clear downloaded files

 /[6] has been selected. Execute?/
 - (OK):O / (CANCEL):The other keys -
Restore former version...Complete.
+++ Switch OFF the power then ON. +++
```

F-20-63

5) Turn OFF the main power switch, and remove the USB memory. Then, turn ON the main power switch.

[7]: Clear downloaded files

Clear the system software stored in the temporary storage area in HDD. This function can be used after the system software download (Menu [2] and [3]), and when clearing the file without writing in HDD.

<Procedure>

1) After the completion of the system software with Menu [2] and [3], execute the step 2) without turning OFF/ON the power supply. If turning OFF the power supply, activate the machine in the safe mode.
2) By following the display on the control panel, press key.
   [7] [0]: Execution / Keys other than [0]: Return to the menu screen
   After the execution, it returns to the menu screen.

```
[[[[[  download Menu (USB) ]]]]]]]]]]]
----------------------------------------
 [1]: Upgrade (Auto)
 [2]: Upgrade (w Confirmation)
 [3]: Upgrade (Overwrite all)
 [4]: Format HDD
 [5]: Backup
 [6]: Restore former version
 [7]: Clear downloaded files

 /[7] has been selected. Execute?/
 - (OK):O / (CANCEL):The other keys -
```

F-20-64

[Stop]: Shutdown (displayed only when the normal mode is active)

Activate the shutdown sequence.

<Procedure>

1) By following the display on the control panel, press key.
   [Stop] -> [0]: Execution / Keys other than [0]: Return to the menu screen
   The shutdown sequence is executed and the message prompting to turn OFF/ON the power supply is displayed.

```
[[[[[ download Menu (USB) ]]]]]]]]]]]
----------------------------------------
 [1]: Upgrade (Auto)
 [2]: Upgrade (w Confirmation)
 [3]: Upgrade (Overwrite all)
 [4]: Format HDD
 [5]: Backup
 [6]: Restore former version
 [7]: Clear downloaded files

 [Stop]:Shutdown

 / [Shutdown] Execute?/
 - (OK):O / (CANCEL):The other keys -
```

F-20-65

2) Turn OFF the main power switch, and remove the USB memory.

Chapter 21 Service Tools

Contents

21.1 Service Tools.....21-1
21.1.1 Special Tools..... 21-1
21.1.2 Solvents and Oils 21-2

21.1 Service Tools

21.1.1 Special Tools

CLC5151 / / / CLC4040 / / / iR C4580i / / / iR C4080i / / / / Color Image Reader-F1 / Color Image Reader-E1 / Dupiex Color Image Reader-G1 / iR C5185N / / iR C5185i PRT /

In addition to the standard tools set, the following special tools are required when servicing the machine:

T-21-1

No.	Tool name	Tool No	Ctgr	Appearance	Remarks
1	Digital multimeter	FY9-2002	A		Used for electrical checks; for adjustment of laser power in combination with the laser power checker.
2	Cover switch	TKN-0093	A	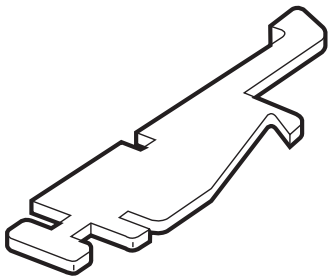	
3	Tester extension pin	FY9-3038	A	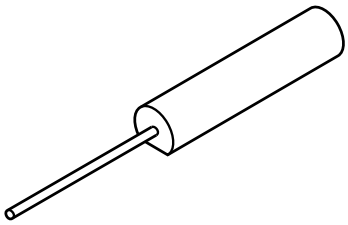	
4	Tester extension pin(L-shaped)	FY9-3039	A	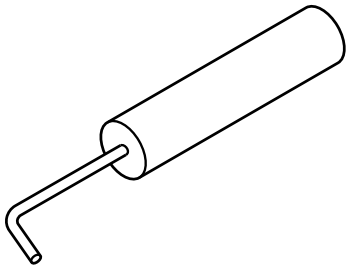	Used as a probe ex-tension when makingelectrical checks.
5	Mirror positioning tool (front, rear)	FY9-3009-040	B	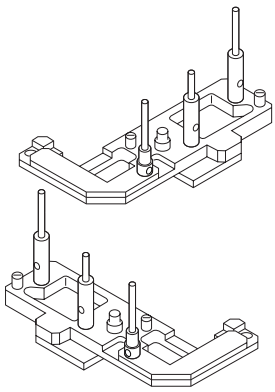	Used for positioning mirror mounts.

No.	Tool name	Tool No	Ctgr	Appearance	Remarks
8	CA1 Test Sheet	FY9-9030	A	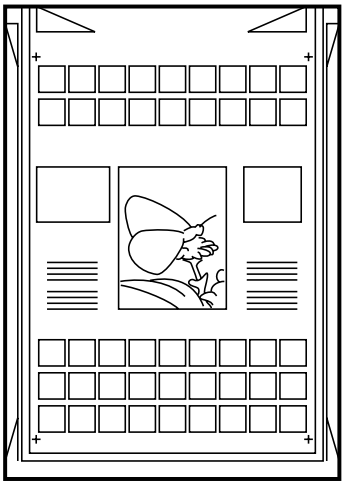	

21.1.2 Solvents and Oils

CLC5151 / / / CLC4040 / / / iR C4580i / / / iR C4080i / / / / Color Image Reader-F1 / Color Image Reader-E1 / Dupiex Color Image Reader-G1 / iR C5185N / / iR C5185i PRT /

T-21-2

No.	Name	Uses	Composition	Remarks
1	Alcohol	Cleaning; e.g., glass, plastic, rubber; external covers.	Fluoride-family hydrocarbon Alcohol Surface activating agent Water	- Do not bring near fire. - Procure locally. Substitute: IPA (isopropyl alcohol)
2	Solvent #160	Cleaning; e.g., metal; oil or toner stain.	Fluoride-family hydrocarbon Chlorine-family hydrocarbon Alcohol	- Do not bring near fire. - Procure locally Substitute: MEK
3	Heat-resisting grease	Lubrication; e.g., fixing drive areas.	Mineral oil-family lithium soap Molybdenum disulfide	- MO-138S Tool No.: CK-0427 (500 g/can)
4	Lubricating oil		Mineral oil (paraffin-family)	Tool No.: CK-0524 (100 cc)
5	Lubricating oil	Lubrication; i.e., drive areas, friction areas.	Silicone oil	Tool No.: CK-0551 (20 g)
6	Lubricating oil (EM-50L)	Lubrication; e.g., gears.	Special oil Special solid lubricating agent Lithium soap	Tool No.: HY9-0007
7	Lubricating oil	Lubrication; e.g., scanner rail	Silicone oil	Tool No.: FY9-6011 (50 cc)
8	Super lube grease	Apply to the gear of the fixing assembly	Chemical synthesis oil	-Chemical synthesis oil -Tool Number: FY9-6005 (80g)

Feb 8 2007

Canon