Service Manual

iR4570/3570, 2870/2270 Series

Canon

Jan 17 2007

Application

This manual has been issued by Canon Inc. for qualified persons to learn technical theory, installation, maintenance, and repair of products. This manual covers all localities where the products are sold. For this reason, there may be information in this manual that does not apply to your locality.

Corrections

This manual may contain technical inaccuracies or typographical errors due to improvements or changes in products. When changes occur in applicable products or in the contents of this manual, Canon will release technical information as the need arises. In the event of major changes in the contents of this manual over a long or short period, Canon will issue a new edition of this manual.

The following paragraph does not apply to any countries where such provisions are inconsistent with local law.

Trademarks

The product names and company names used in this manual are the registered trademarks of the individual companies.

Copyright

This manual is copyrighted with all rights reserved. Under the copyright laws, this manual may not be copied, reproduced or translated into another language, in whole or in part, without the written consent of Canon Inc.

COPYRIGHT © 2001 CANON INC.

Printed in Japan

Caution

Use of this manual should be strictly supervised to avoid disclosure of confidential information.

Symbols Used

This documentation uses the following symbols to indicate special information:

Symbol	Description
	Indicates an item of a non-specific nature, possibly classified as Note, Caution, or Warning.
	Indicates an item requiring care to avoid electric shocks.
	Indicates an item requiring care to avoid combustion (fire).
	Indicates an item prohibiting disassembly to avoid electric shocks or problems.
	Indicates an item requiring disconnection of the power plug from the electric outlet.
Memo	Indicates an item intended to provide notes assisting the understanding of the topic in question.
REF.	Indicates an item of reference assisting the understanding of the topic in question.
	Provides a description of a service mode.
Error	Provides a description of the nature of an error indication.

The following rules apply throughout this Service Manual:

1. Each chapter contains sections explaining the purpose of specific functions and the relationship between electrical and mechanical systems with reference to the timing of operation.
   In the diagrams, represents the path of mechanical drive; where a signal name accompanies the symbol , the arrow ⟶ indicates the direction of the electric signal.
   The expression "turn on the power" means flipping on the power switch, closing the front door, and closing the delivery unit door, which results in supplying the machine with power.
2. In the digital circuits, '1'is used to indicate that the voltage level of a given signal is "High", while '0' is used to indicate "Low".(The voltage value, however, differs from circuit to circuit.) In addition, the asterisk (*) as in "DRMD*" indicates that the DRMD signal goes on when '0'.
   In practically all cases, the internal mechanisms of a microprocessor cannot be checked in the field. Therefore, the operations of the microprocessors used in the machines are not discussed: they are explained in terms of from sensors to the input of the DC controller PCB and from the output of the DC controller PCB to the loads.

The descriptions in this Service Manual are subject to change without notice for product improvement or other purposes, and major changes will be communicated in the form of Service Information bulletins.
All service persons are expected to have a good understanding of the contents of this Service Manual and all relevant Service Information bulletins and be able to identify and isolate faults in the machine."

Contents

Chapter 1 Introduction

1.1 System Construction 1- 1
1.1.1 Overview of the System with a Delivery Accessory 1- 1
1.1.2 Overview of System Construction (output accessories) 1- 1
1.1.3 Delivery Accessory System Configuration 1 ..... 1- 1
1.1.4 Output Accessories System Configuration 1 ..... 1- 2
1.1.5 Delivery Accessory System Configuration 2 ..... 1- 3
1.1.6 Output Accessories System Configuration 2 ..... 1- 4
1.1.7 Delivery Accessory System Configuration 3 ..... 1- 4
1.1.8 Pickup/Original Handling Accessories System Configuration 1- 5
1.1.9 Input/Original Handling Accessories System Configuration 1- 6
1.1.10 Reader Heater System Configuration 1- 7
1.1.11 Cassette Heater System Configuration 1 ..... 1- 8
1.1.12 Cassette Heater System Configuration 2 ..... 1- 8
1.1.13 Side Deck Heater System Configuration 1- 9
1.1.14 Printing/Transmitting Accessories System Configuration 1- 10
1.1.15 List of Print Transmission Optional Functions 1- 10
1.1.16 Printing/Transmission Accessories System Configuration 1- 11
1.1.17 Functions of the Printing/Transmission Functions 1- 12
1.2 Product Specifications 1- 12
1.2.1 Names of Parts 1- 12
1.2.1.1 Names of Parts 1- 12
1.2.1.2 External View 1- 13
1.2.1.3 Cross-Section 1- 14
1.2.2 Using the Machine 1- 16
1.2.2.1 Turning On the Power Switch 1- 16
1.2.2.2 When Turning Off the Main Power Switch 1- 18
1.2.2.3 Points to Note About Turning Off the Main Power Switch 1- 19
1.2.2.4 Control Panel 1- 20
1.2.2.5 Control Panel 1- 20
1.2.3 User Mode Items 1- 21
1.2.3.1 Common Settings 1- 21
1.2.3.2 Common Settings 1- 23
1.2.3.3 Setting the Time 1- 25
1.2.3.4 Setting the Timer 1- 25
1.2.3.5 Adjustments and Cleaning 1- 25
1.2.3.6 Adjustment and Cleaning 1- 25
1.2.3.7 Report Output 1- 26
1.2.3.8 Printing Out a Report 1- 26
1.2.3.9 System Control Settings 1- 27
1.2.3.10 System Control Settings 1- 28
1.2.3.11 Copy Settings 1- 29
1.2.3.12 Transmission/Reception Settings 1- 29
1.2.3.13 Transmission/Reception Settings 1- 30
1.2.3.14 Box Settings 1- 31
1.2.3.15 Box Settings 1- 31
1.2.3.16 Printer Settings 1- 31
1.2.3.17 Address Book Settings 1- 32
1.2.4 Maintenance by the User 1- 33
1.2.4.1 Cleaning 1- 33
1.2.4.2 Inspection 1- 34
1.2.5 Safety 1- 35
1.2.5.1 Safety of the Laser Light 1- 35

1.2.5.2 CDRH Regulations 1- 35
1.2.5.3 Handling the Laser Unit 1- 35
1.2.5.4 Safety of Toner 1- 36
1.2.6 Product Specifications 1- 36
1.2.6.1 Product Specifications 1- 36
1.2.7 Function List 1- 37
1.2.7.1 Printing Speed 1- 37
1.2.7.2 Printing Speed 1- 38
1.2.7.3 Types of Paper 1- 39
1.2.7.4 Types of Paper 1- 39

Chapter 2 Installation

2.1 Making Pre-Checks 2- 1
2.1.1 Selecting the Site of Installation 2- 1
2.1.2 Selecting the Site of Installation 2- 2
2.1.3 Before Starting the Work (230V) 2- 3
2.1.4 Before Starting the Work (230VEUR) 2- 5
2.2 Unpacking and Installation 2- 6
2.2.1 Unpacking and Removing the Packaging Materials 2- 6
2.2.2 Installing the Toner Bottle 2- 7
2.2.3 Installing the Drum Unit 2- 8
2.2.4 Securing the Copier Main Unit 2- 10
2.2.5 Connecting the Cable 2- 11
2.2.6 Connecting the Cable 2- 11
2.2.7 Stirring Toner 2- 11
2.2.8 Setting the Cassettes 2- 11
2.2.9 APVC Correction of the Drum 2- 12
2.2.10 Adjusting the Image Position 2- 12
2.2.11 Attaching Other Parts 2- 14
2.2.12 Attaching Other Parts 2- 15
2.2.13 If Not Connected to a Network 2- 16
2.3 Checking the Connection to the Network 2- 16
2.3.1 Overview 2- 16
2.3.2 Using the PING Function 2- 16
2.3.3 Making a Check Using a Remote Host Address 2- 16
2.4 Troubleshooting the Network 2- 17
2.4.1 Overview 2- 17
2.4.2 Making a Check Using a Loopback Address 2- 17
2.4.3 Making a Check Using a Local Host Address 2- 17
2.5 Checking the Images/Operations 2- 17
2.5.1 Checking the Image Quality and Operation 2- 17
2.6 Installing the Card Reader 2- 17
2.6.1 Points to Note 2- 17
2.6.2 Checking the Contents 2- 18
2.6.3 Installation Procedure 2- 18
2.6.4 Installation in a NetSpot Accountant (NSA) Environment 2- 21
2.7 Installing the NE Controller 2- 21
2.7.1 Installing the NE Controller-A1 ..... 2- 21
2.8 Installing the Reader Heater 2- 27
2.8.1 Checking the Parts 2- 27
2.8.2 Turning Off the Host Machine 2- 27
2.8.3 Installation Procedure 2- 28
2.9 Installing the Cassette Heater 2- 29
2.9.1 Checking the Parts 2- 29
2.9.2 Checking the Parts 2- 30

2.9.3 Turning Off the Host Machine 2- 30
2.9.4 Mounting the Cassette Heater Unit 2- 30
2.9.5 Mounting the Heater PCB 2- 33
2.10 Installing the Cassette Heater for the Cassette Pedestal 2- 37
2.10.1 Checking the Parts 2- 37
2.10.2 Turning Off the Host Machine 2- 38
2.10.3 Mounting the Cassette Heater Attachment 2- 38
2.11 Installing the Deck Heater 2- 41
2.11.1 Checking the Parts to Install 2- 41
2.11.2 Turning Off the Host Machine 2- 42
2.11.3 Installation Procedure 2- 42
2.12 Installing the Voice Guidance Kit 2- 46
2.12.1 Checking Items in the Package 2- 46
2.12.2 Turning Off the Host Machine 2- 47
2.12.3 Installation Procedure 2- 48
2.12.4 A point to keep in mind at installation 2- 55
2.12.5 Checking the Contents 2- 55
2.12.6 Turning Off the Host Machine 2- 56
2.12.7 Installation Procedure 2- 57
2.13 Installing the Voice Operation Kit 2- 63
2.13.1 A point to keep in mind at installation 2- 63
2.13.2 Checking the Contents 2- 63
2.13.3 Turning Off the Host Machine 2- 64
2.13.4 Installation Procedure 2- 65

Chapter 3 Basic Operation

3.1 Construction 3- 1
3.1.1 Functional Construction 3- 1
3.1.2 Major PCB Wiring diagram 3- 1
3.2 Basic Sequence 3- 2
3.2.1 Basic Sequence of Operation at Power-On 3- 2

Chapter 4 Main Controller

4.1 Construction 4- 1
4.1.1 Construction and Mechanisms 4- 1
4.1.2 Construction and Functions 4- 1
4.2 Construction of the Electrical Circuitry 4- 2
4.2.1 Main Controller PCB 4- 2
4.2.2 Main Controller PCB 4- 3
4.2.3 HDD 4- 4
4.2.4 HDD 4- 6
4.2.5 HDD (optional) 4- 8
4.3 Start-Up Sequence 4- 10
4.3.1 Overview 4- 10
4.3.2 Start-Up Sequence 4- 11
4.4 Shut-Down Sequence 4- 12
4.4.1 Overview 4- 12
4.4.2 Overview (w/ HDD) 4- 12
4.4.3 Flow of Operation 4- 12
4.4.4 Flow of Operation (w/ HDD) 4- 12
4.5 Image Processing 4- 13
4.5.1 Overview of the Image Flow 4- 13
4.5.2 Construction of the Image Processing Module 4- 13

4.5.3 Construction of the Image Processing Module 4- 14
4.5.4 Reader Unit Input Image Processing 4- 14
4.5.5 Compressio/ Extesion/ Editing Block 4- 15
4.5.6 Compression/Expansion/Edit Block 4- 15
4.5.7 Printer unit Output Image Processing 4- 16
4.6 Flow of Image Data 4- 16
4.6.1 Flow of Image Data According to Copy Functions 4- 16
4.6.2 Flow of Image Data for the Copy Function 4- 17
4.6.3 Flow of Image Data for the Box Function 4- 17
4.6.4 Flow of Image Data for the Box Function 4- 18
4.6.5 Flow of Image Data for the SEND Function 4- 18
4.6.6 Flow of Image Data for the SEND Function 4- 19
4.6.7 Flow of Image Data for the Fax Transmission 4- 19
4.6.8 Flow of Image Data for the Fax Transmission Function 4- 20
4.6.9 Flow of Image Data for the Fax Reception Function 4- 20
4.6.10 Flow of Image Data for the Fax Reception Function 4- 21
4.6.11 Flow of Image Data for the PDL Function 4- 22
4.6.12 Flow of Image Data for the PDL Function 4- 22
4.7 Parts Replacement Procedure 4- 22
4.7.1 Main Controller PCB 4- 22
4.7.1.1 Removing the Rear Cover 4- 22
4.7.1.2 Removing the Main Controller PCB 4- 23
4.7.2 SDRAM 4- 24
4.7.2.1 Removing the Face Cover 4- 24
4.7.2.2 Removing the SDRAM 4- 25
4.7.3 Boot ROM 4- 25
4.7.3.1 Removing the Face Cover 4- 25
4.7.3.2 Removing the Boot ROM 4- 26
4.7.4 HDD 4- 26
4.7.4.1 Removing the Face Cover 4- 26
4.7.4.2 Removing the Face Cover (optional) 4- 27
4.7.4.3 Removing the Counter PCB 4- 27
4.7.4.4 Removing the Counter PCB (optional) 4- 28
4.7.4.5 Removing the HDD 4- 28
4.7.4.6 Removing the HDD (optional) 4- 28

Chapter 5 Original Exposure System

5.1 Construction 5- 1
5.1.1 Specifications, Control Mechanisms, and Functions 5- 1
5.1.2 Major Components 5- 1
5.1.3 Construction of the Control System 5- 2
5.1.4 Reader Controller PCB 5- 3
5.2 Basic Sequence 5- 4
5.2.1 Basic Sequence of Operation at Power-On 5- 4
5.2.2 Basic Sequence of Operation in Response to a Press on the Start Key (book mode; 1 original) 5- 4
5.2.3 Basic Sequence of Operation in Response to a Press on the Start Key (ADF mode; 1 original) 5- 5
5.3 Various Control 5- 6
5.3.1 Controlling the Scanner Drive System 5- 6
5.3.1.1 Outline 5- 6
5.3.1.2 Controlling the Reader Motor 5- 6
5.3.2 Contact Image Sensor (CIS) 5- 7
5.3.2.1 Outline 5- 7
5.3.2.2 Analog Control Inside the Contact Image Sensor 5- 8
5.3.3 Enlargement/Reduction 5- 9
5.3.3.1 Changing the Magnification in Main Scanning Direction 5- 9
5.3.3.2 Varying the Magnification in Sub Scanning Direction 5- 9

5.3.4 Detecting the Size of Originals 5- 9
5.3.4.1 Outline 5- 9
5.3.4.2 Outline of Size Identification 5- 10
5.3.5 Dirt Sensor Control 5- 11
5.3.5.1 Outline 5- 11
5.3.6 Image Processing 5- 13
5.3.6.1 Outline 5- 13
5.3.6.2 CCD Drive 5- 14
5.3.6.3 Gain Correction and Offset Correction of the CCD Output 5- 14
5.3.6.4 A/D Conversion of the CCD Output 5- 14
5.3.6.5 Shading Correction (outline) 5- 14
5.3.6.6 Shading Adjustment 5- 14
5.3.6.7 Shading Correction 5- 15
5.4 Parts Replacement Procedure 5- 15
5.4.1 Copyboard glass 5- 15
5.4.1.1 Removing the Copyboard Glass 5- 15
5.4.1.2 Removing the ADF Reading Glass 5- 15
5.4.2 Reader Controller PCB 5- 15
5.4.2.1 Before Replacing the Reader Controller PCB 5- 15
5.4.2.2 Removing the Reader Rear Cover 5- 16
5.4.2.3 Removing the rear cover of the machine 5- 16
5.4.2.4 Removing the flexible cable cover 5- 16
5.4.2.5 Removing the Copyboard Glass 5- 16
5.4.2.6 Removing the Reader Controller PCB 5- 17
5.4.2.7 After Replacing the Reader Controller PCB or After Initializing the RAM 5- 18
5.4.3 Scanner Motor 5- 19
5.4.3.1 Removing the Reader Rear Cover 5- 19
5.4.3.2 Removing the Scanner Motor 5- 19
5.4.4 Contact sensor 5- 19
5.4.4.1 Removing the Reader Front Cover 5- 19
5.4.4.2 Removing the Reader Rear Cover 5- 20
5.4.4.3 Removing the Copyboard Glass 5- 20
5.4.4.4 Removing the Contact Image Sensor (CIS) 5- 21
5.4.4.5 After Replacement of the CIS 5- 21
5.4.5 Copyboard Cover Open/Close Sensor 5- 22
5.4.5.1 Removing the Reader Rear Cover 5- 22
5.4.5.2 Removing the Copyboard Cover Open/Closed Sensor (front/rear) 5- 22
5.4.6 Contact Sensor HP Sensor 5- 22
5.4.6.1 Removing the Copyboard Glass 5- 22
5.4.6.2 Removing the ADF Reading Glass 5- 23
5.4.6.3 Removing the Contract Sensor Home Position Sensor 5- 23
5.4.7 Original Size Sensor 5- 23
5.4.7.1 Removing the Reader Rear Cover 5- 23
5.4.7.2 Removing the Copyboard Glass 5- 24
5.4.7.3 Removing the Original Size Sensor 5- 24
5.4.8 Reader Heater (option) 5- 25
5.4.8.1 Removing the Copyboard Glass 5- 25
5.4.8.2 Removing the Reader Heater (right) 5- 26
5.4.8.3 Removing the ADF Reading Glass 5- 26
5.4.8.4 Removing the Reader Heater (left) 5- 26

Chapter 6 Laser Exposure

6.1 Construction 6- 1
6.1.1 Specifications, Control Mechanism, and Functions 6- 1
6.1.2 Major Components 6- 1
6.1.3 Construction of the Control System 6- 1
6.2 Basic Sequence 6- 3
6.2.1 Basic Sequence 6- 3

6.3 Various Controls 6- 3
6.3.1 Controlling the Laser Activation Timing 6- 3
6.3.1.1 Turning On and off the Laser Light 6- 3
6.3.1.2 Main Scanning Synchronous Control 6- 4
6.3.2 Controlling the Intensity of Laser Light 6- 5
6.3.2.1 APC Control 6- 5
6.3.3 Controlling the Laser Scanner Motor 6- 5
6.3.3.1 Controlling the Laser Scanner Motor 6- 5
6.3.4 Controlling the Laser Shutter 6- 5
6.3.4.1 Controlling the Laser Shutter 6- 5
6.4 Parts Replacement Procedure 6- 6
6.4.1 Laser Scanner Unit 6- 6
6.4.1.1 Removing the Front Cover Unit 6- 6
6.4.1.2 Removing the Left Cover 6- 6
6.4.1.3 Removing the Laser Unit 6- 6

Chapter 7 Image Formation

7.1 Construction 7- 1
7.1.1 Specifications of the Image Formation System 7- 1
7.1.2 Major Components of the Image Formation System 7- 1
7.2 Image Formation Process 7- 2
7.2.1 Image Formation Process (outline) 7- 2
7.2.2 Image Formation Process (image formation) 7- 3
7.3 Basic Sequence 7- 3
7.3.1 Sequence of Operation (initial rotation) 7- 3
7.3.2 Sequence of Operation (initial rotation) 7- 4
7.3.3 Sequence of Operation (copying) 7- 4
7.3.4 Sequence of Operation (copying) 7- 5
7.3.5 Sequence of Operation (last rotation) 7- 5
7.3.6 Sequence of Operation (last rotation) 7- 5
7.4 Image Stabilization Control 7- 6
7.4.1 Overview 7- 6
7.4.2 APVC Control 7- 6
7.4.3 ATVC Control 7- 6
7.5 Drum Unit 7- 6
7.5.1 Charging Mechanism 7- 6
7.5.1.1 Controlling the Primary Charging Bias 7- 6
7.5.1.2 Primary Charging Roller Cleaning Mechanism 7- 7
7.6 Drum Cleaner Unit 7- 7
7.6.1 Photosensitive Drum Cleaning 7- 7
7.7 Developing Unit 7- 7
7.7.1 Controlling the Developing Bias 7- 7
7.8 Toner Container 7- 8
7.8.1 Overview 7- 8
7.8.2 Route of Toner Supply 7- 8
7.8.3 Controlling the Drive of the Toner Cartridge 7- 9
7.8.4 Toner Supply Control 7- 9
7.8.5 Recovery Sequence 7- 10
7.8.6 Toner Level Detection 7- 10
7.9 Transfer Unit 7- 10
7.9.1 Outline of the Transfer Unit 7- 10
7.9.1.1 Outline 7- 10
7.9.2 Controlling the Transfer Bias 7- 10
7.9.2.1 Transfer Roller Bias Control 7- 10
7.9.3 Cleaning 7- 11

7.9.3.1 Transfer Roller Cleaning Mechanism 7- 11
7.9.4 Separation Mechanism 7- 11
7.9.4.1 Controlling the Static Eliminator Bias 7- 11
7.10 Transfer Mechanism 7- 11
7.10.1 Transfer Guide Bias 7- 11
7.10.1.1 Transfer Guide Bias Control 7- 11
7.11 Photosensitive Drum Cleaning 7- 11
7.11.1 Outline 7- 11
7.11.2 Collection of Waste Toner 7- 11
7.11.3 Checking the Waste Toner Box 7- 11
7.12 Parts Replacement Procedure 7- 12
7.12.1 Pre-Exposure Lamp 7- 12
7.12.1.1 Removing the Front Cover Unit 7- 12
7.12.1.2 Removing the Waste Toner Case 7- 12
7.12.1.3 Removing the Toner Cartridge 7- 12
7.12.1.4 Removing the Drum Unit 7- 13
7.12.1.5 Removing the Developing Assembly 7- 13
7.12.1.6 Removing the Upper Tray 7- 14
7.12.1.7 Removing the Toner Cartridge Cover 7- 15
7.12.1.8 Removing the Pre-Exposure Lamp 7- 15
7.12.2 Drum Unit 7- 15
7.12.2.1 Removing the Front Cover Unit 7- 15
7.12.2.2 Removing the Waste Toner Case 7- 15
7.12.2.3 Removing the Drum Unit 7- 16
7.12.3 Hopper Assembly 7- 16
7.12.3.1 Removing the Front Cover Unit 7- 16
7.12.3.2 Removing the Waste Toner Case 7- 17
7.12.3.3 Removing the Toner Cartridge 7- 17
7.12.3.4 Removing the Drum Unit 7- 17
7.12.3.5 Removing the Developing Assembly 7- 18
7.12.3.6 Removing the Upper Tray 7- 19
7.12.3.7 Removing the Toner Cartridge Cover 7- 19
7.12.3.8 Removing the Pre-Exposure Lamp 7- 20
7.12.3.9 Removing the Left Cover 7- 20
7.12.3.10 Removing the Laser Unit 7- 20
7.12.3.11 Removing the Hopper Assembly 7- 21
7.12.4 Sub Hopper 7- 21
7.12.4.1 Removing the Front Cover Unit 7- 21
7.12.4.2 Removing the Waste Toner Case 7- 22
7.12.4.3 Removing the Toner Cartridge 7- 22
7.12.4.4 Removing the Drum Unit 7- 22
7.12.4.5 Removing the Developing Assembly 7- 23
7.12.4.6 Removing the Upper Tray 7- 24
7.12.4.7 Removing the Toner Cartridge Cover 7- 24
7.12.4.8 Removing the Pre-Exposure Lamp 7- 25
7.12.4.9 Removing the Left Cover 7- 25
7.12.4.10 Removing the Laser Unit 7- 25
7.12.4.11 Removing the Hopper Assembly 7- 26
7.12.4.12 Removing the Toner Feedscrew Motor 7- 26
7.12.4.13 Removing the Sub Hopper 7- 27
7.12.5 Developing Assembly 7- 28
7.12.5.1 Removing the Front Cover Unit 7- 28
7.12.5.2 Removing the Waste Toner Case 7- 28
7.12.5.3 Removing the Developing Assembly 7- 28
7.12.6 Developing Cylinder 7- 29
7.12.6.1 Detaching the Developing Cylinder 7- 29
7.12.7 Transfer Charging Roller 7- 31
7.12.7.1 Removing the Transfer Roller 7- 31
7.12.8 Waste Toner Box 7- 31
7.12.8.1 Removing the Front Cover Unit 7- 31

7.12.8.2 Removing the Waste Toner Case 7- 32
7.12.9 Toner Level Sensor 7- 32
7.12.9.1 Removing the Front Cover Unit 7- 32
7.12.9.2 Removing the Waste Toner Case 7- 32
7.12.9.3 Removing the Toner Cartridge 7- 33
7.12.9.4 Removing the Drum Unit 7- 33
7.12.9.5 Removing the Developing Assembly 7- 34
7.12.9.6 Removing the Upper Tray 7- 35
7.12.9.7 Removing the Toner Cartridge Cover 7- 35
7.12.9.8 Removing the Pre-Exposure Lamp 7- 35
7.12.9.9 Removing the Left Cover 7- 35
7.12.9.10 Removing the Laser Unit 7- 36
7.12.9.11 Removing the Hopper Assembly 7- 36
7.12.9.12 Removing the Toner Level Sensor 7- 37
7.12.10 Toner Feedscrew Motor 7- 37
7.12.10.1 Removing the Front Cover Unit 7- 37
7.12.10.2 Removing the Waste Toner Case 7- 37
7.12.10.3 Removing the Toner Cartridge 7- 38
7.12.10.4 Removing the Drum Unit 7- 38
7.12.10.5 Removing the Developing Assembly 7- 39
7.12.10.6 Removing the Upper Tray 7- 40
7.12.10.7 Removing the Toner Cartridge Cover 7- 40
7.12.10.8 Removing the Pre-Exposure Lamp 7- 40
7.12.10.9 Removing the Left Cover 7- 41
7.12.10.10 Removing the Laser Unit 7- 41
7.12.10.11 Removing the Hopper Assembly 7- 41
7.12.10.12 Removing the Toner Feedscrew Motor 7- 42
7.12.11 Static Charge Eliminator 7- 42
7.12.11.1 Removing the Static Eliminator 7- 42

Chapter 8 Pickup/Feeding System

8.1 Construction 8- 1
8.1.1 Specifications, Controls, and Functions 8- 1
8.1.2 Specifications, Controls, and Functions 8- 1
8.1.3 Division into Blocks 8- 2
8.1.4 Division into Blocks 8- 2
8.1.5 Arrangement of Rollers 8- 3
8.1.6 Arrangement of Rollers 8- 4
8.1.7 Diagram of Paper Paths (printer on its own) 8- 5
8.1.8 Paper Path (printer unit on its own) 8- 6
8.1.9 Diagram of Paper Paths (w/ copy tray) 8- 7
8.1.10 Diagram of Paper Paths (w/ 3 Way Unit-A1 /copy tray) 8- 7
8.1.11 Paper path (w/ expansion output kit, output tray) 8- 8
8.1.12 Diagram of Paper Paths (w/ Finisher-S1/copy tray) 8- 9
8.1.13 Paper Path (w/ Finer-S1, output tray) 8- 9
8.1.14 Diagram of Paper Paths (w/ Finisher-Q3/Saddle Finisher-Q4) 8- 10
8.1.15 Arrangement of Sensors 8- 11
8.1.16 Arrangement of Sensors 8- 11
8.1.17 Route of Drive 8- 12
8.1.18 Route of Drive 8- 13
8.2 Basic Sequence 8- 14
8.2.1 Basic Sequence 8- 14
8.2.2 Increase in Speed 8- 14
8.2.3 Acceleration Intervals 8- 16
8.2.4 Increase in Speed 8- 18
8.3 Detecting Jams 8- 19
8.3.1 Delay Jams 8- 19

8.3.1.1 Delay Jam Outside the Cassette Pickup Assembly 8- 19
8.3.1.2 Delay Jam in the Cassette Pickup Assembly 8- 19
8.3.2 Stationary Jams 8- 19
8.3.2.1 Common Stationary Jam 8- 19
8.3.2.2 Stationary Jam at Power-On 8- 20
8.3.3 Other Jams 8- 20
8.3.3.1 Door Open Jam 8- 20
8.4 Cassette Pick-Up Unit 8- 20
8.4.1 Overview 8- 20
8.4.2 Basic Sequence 8- 21
8.4.3 Identifying the Paper Size 8- 21
8.4.4 Setting Up the Universal Cassette 8- 23
8.4.5 Paper Level Sensor 8- 23
8.5 Manual Feed Pickup Unit 8- 25
8.5.1 Overview 8- 25
8.5.2 Basic Sequence of Operation 8- 26
8.5.3 Identifying the Paper Size 8- 26
8.5.4 Paper Retaining Mechanism 8- 27
8.6 Registration Unit 8- 28
8.6.1 Overview 8- 28
8.6.2 Checking Horizontal Registration 8- 29
8.7 Duplex Feeding Unit 8- 29
8.7.1 Overview 8- 29
8.7.2 Overview 8- 31
8.7.3 Sequence of Image Formation 8- 31
8.7.4 Sequence of Image Formation 8- 32
8.7.5 Flow of Paper (w/o/ delivery option) 8- 33
8.7.6 Flow of Paper (w/ delivery option) 8- 38
8.7.7 Flow of Paper 8- 42
8.8 Parts Replacement Procedure 8- 46
8.8.1 Pick-up Unit 1 ..... 8- 46
8.8.1.1 Removing the Right Cover (rear) 8- 46
8.8.1.2 Removing the Right Door 8- 46
8.8.1.3 Removing the Right Door 8- 47
8.8.1.4 Removing the Right Cover (lower front) 8- 47
8.8.1.5 Removing the Pickup Assembly 1 ..... 8- 47
8.8.2 Pick-up Unit 2 ..... 8- 48
8.8.2.1 Removing the Right Cover (rear) 8- 48
8.8.2.2 Removing the Right Cover (lower front) 8- 48
8.8.2.3 Removing the Pickup Assembly 2 ..... 8- 48
8.8.3 Pickup Roller 8- 48
8.8.3.1 Removing the Pickup Roller/Feed Roller/Separation Roller 8- 48
8.8.4 Sensor Mount 8- 49
8.8.4.1 Removing the Right Cover (rear) 8- 49
8.8.4.2 Removing the Right Door 8- 49
8.8.4.3 Removing the Right Door 8- 50
8.8.4.4 Removing the Right Cover (lower front) 8- 50
8.8.4.5 Removing the Pickup Assembly 1 ..... 8- 50
8.8.4.6 Removing the Pickup Assembly 2 ..... 8- 50
8.8.4.7 Removing the Sensor Mounting Plate 8- 51
8.8.4.8 Mounting the Sensor Mounting Plate 8- 51
8.8.5 Cassette Pick-up Motor 1 ..... 8- 52
8.8.5.1 Removing the Rear Cover 8- 52
8.8.5.2 Removing the Right Cover (rear) 8- 52
8.8.5.3 Removing the Pickup Motor Base 8- 52
8.8.5.4 Removing the Cassette Pickup Motor 1 ..... 8- 53
8.8.6 Cassette Pick-up Motor 2 ..... 8- 53
8.8.6.1 Removing the Rear Cover 8- 53

8.8.6.2 Removing the Right Cover (rear) 8- 53
8.8.6.3 Removing the Pickup Motor Base 8- 53
8.8.6.4 Removing the Cassette Pickup Motor 2 ..... 8- 54
8.8.7 Cassette Size Sensor 8- 54
8.8.7.1 Removing the Right Cover (rear) 8- 54
8.8.7.2 Removing the Right Door 8- 54
8.8.7.3 Removing the Right Door 8- 55
8.8.7.4 Removing the Right Cover (lower front) 8- 55
8.8.7.5 Removing the Pickup Assembly 2 ..... 8- 56
8.8.7.6 Removing the Pickup Assembly 1 ..... 8- 56
8.8.7.7 Removing the Cassette Size Sensor 8- 56
8.8.8 Cassette Retry Paper Sensor 8- 57
8.8.8.1 Removing the Right Cover (rear) 8- 57
8.8.8.2 Removing the Right Door 8- 57
8.8.8.3 Removing the Right Door 8- 58
8.8.8.4 Removing the Right Cover (lower front) 8- 58
8.8.8.5 Removing the Pickup Assembly 1 ..... 8- 59
8.8.8.6 Removing the Pickup Assembly 2 ..... 8- 59
8.8.8.7 Removing the Sensor Mounting Plate 8- 59
8.8.8.8 Removing the Cassette Retry Paper Sensor 8- 60
8.8.9 Cassette Paper Sensor 8- 60
8.8.9.1 Removing the Right Cover (rear) 8- 60
8.8.9.2 Removing the Right Door 8- 60
8.8.9.3 Removing the Right Door 8- 61
8.8.9.4 Removing the Right Cover (lower front) 8- 61
8.8.9.5 Removing the Pickup Assembly 1 ..... 8- 61
8.8.9.6 Removing the Pickup Assembly 2 ..... 8- 62
8.8.9.7 Removing the Sensor Mounting Plate 8- 62
8.8.9.8 Removing the Cassette Paper Sensor 8- 62
8.8.10 Cassette Paper Level Sensor (A/B) 8- 63
8.8.10.1 Removing the Right Cover (rear) 8- 63
8.8.10.2 Removing the Right Door 8- 63
8.8.10.3 Removing the Right Door 8- 64
8.8.10.4 Removing the Right Cover (lower front) 8- 64
8.8.10.5 Removing the Pickup Assembly 1 ..... 8- 64
8.8.10.6 Removing the Pickup Assembly 2 ..... 8- 65
8.8.10.7 Removing the Sensor Mounting Plate 8- 65
8.8.10.8 Removing the Cassette Paper Level Sensor (A/B) 8- 65
8.8.11 Slide Resistor 8- 66
8.8.11.1 Removing the Right Cover (rear) 8- 66
8.8.11.2 Removing the Right Door 8- 66
8.8.11.3 Removing the Right Door 8- 67
8.8.11.4 Removing the Manual Feed Unit 8- 67
8.8.11.5 Removing the Manual Tray Unit 8- 68
8.8.11.6 Removing the Slide Resistor 8- 68
8.8.12 Cassette Pickup Solenoid 8- 68
8.8.12.1 Removing the Right Cover (rear) 8- 68
8.8.12.2 Removing the Right Door 8- 69
8.8.12.3 Removing the Right Door 8- 69
8.8.12.4 Removing the Right Cover (lower front) 8- 70
8.8.12.5 Removing the Pickup Assembly 1 ..... 8- 70
8.8.12.6 Removing the Pickup Assembly 2 ..... 8- 70
8.8.12.7 Removing the Cassette Pickup Solenoid 8- 71
8.8.13 Cassette Size Sensor Relay PCB 8- 71
8.8.13.1 Removing the Right Cover (rear) 8- 71
8.8.13.2 Removing the Right Door 8- 71
8.8.13.3 Removing the Right Door 8- 72
8.8.13.4 Removing the Right Cover (lower front) 8- 72
8.8.13.5 Removing the Pickup Assembly 1 ..... 8- 72
8.8.13.6 Removing the Pickup Assembly 2 ..... 8- 73
8.8.13.7 Removing the Cassette Size Sensor Relay PCB 8- 73

8.8.14 Manual Tray Assembly 8- 73
8.8.14.1 Removing the Right Cover (rear) 8- 73
8.8.14.2 Removing the Right Door 8- 73
8.8.14.3 Removing the Right Door 8- 74
8.8.14.4 Removing the Manual Feed Unit 8- 75
8.8.14.5 Removing the Manual Feed Tray Assembly 8- 75
8.8.15 Manual Feed Unit 8- 76
8.8.15.1 Removing the Right Cover (rear) 8- 76
8.8.15.2 Removing the Right Door 8- 76
8.8.15.3 Removing the Right Door 8- 77
8.8.15.4 Removing the Manual Feed Unit 8- 77
8.8.16 Manual Pickup Roller 8- 78
8.8.16.1 Removing the Right Cover (rear) 8- 78
8.8.16.2 Removing the Right Door 8- 78
8.8.16.3 Removing the Right Door 8- 79
8.8.16.4 Removing the Manual Feed Unit 8- 79
8.8.16.5 Removing the Manual Feed Pickup Roller 8- 80
8.8.17 Manual Pick-up Clutch 8- 80
8.8.17.1 Removing the Right Cover (rear) 8- 80
8.8.17.2 Removing the Right Door 8- 81
8.8.17.3 Removing the Right Door 8- 81
8.8.17.4 Removing the Rear Cover 8- 82
8.8.17.5 Removing the Main Power Switch 8- 82
8.8.17.6 Removing the Manual Feed Pickup Clutch 8- 82
8.8.18 Manual Separation Pad 8- 83
8.8.18.1 Removing the Right Cover (rear) 8- 83
8.8.18.2 Removing the Right Door 8- 83
8.8.18.3 Removing the Right Door 8- 84
8.8.18.4 Removing the Manual Feed Unit 8- 84
8.8.18.5 Removing the Manual Feed Pickup Roller 8- 85
8.8.18.6 Removing the Manual Feed Separation pad 8- 85
8.8.19 Registration Clutch 8- 85
8.8.19.1 Removing the Rear Cover 8- 85
8.8.19.2 Removing the Main Drive Assembly 8- 86
8.8.19.3 Removing the Main Drive Assembly 8- 86
8.8.19.4 Removing the Registration Clutch 8- 87
8.8.20 Feeding Roller 8- 87
8.8.20.1 Removing the Pickup Roller/Feed Roller/Separation Roller 8- 87
8.8.21 Vertical Path Roller 8- 87
8.8.21.1 Removing the Right Cover (rear) 8- 87
8.8.21.2 Removing the Right Door 8- 87
8.8.21.3 Removing the Right Door 8- 88
8.8.21.4 Removing the Right Cover (lower front) 8- 89
8.8.21.5 Removing the Pickup Assembly 1 ..... 8- 89
8.8.21.6 Removing the Pickup Assembly 2 ..... 8- 89
8.8.21.7 Removing the Sensor Mounting Plate 8- 89
8.8.21.8 Removing the Vertical Path Roller 8- 90
8.8.22 Duplex Feed Roller 2 ..... 8- 90
8.8.22.1 Removing the Right Cover (rear) 8- 90
8.8.22.2 Removing the Right Door 8- 90
8.8.22.3 Removing the Right Door 8- 91
8.8.22.4 Removing the Duplex Feed Roller 2 ..... 8- 92
8.8.23 Duplex Feed Sensor 8- 92
8.8.23.1 Removing the Right Cover (rear) 8- 92
8.8.23.2 Removing the Right Door 8- 92
8.8.23.3 Removing the Right Door 8- 93
8.8.23.4 Removing the Duplex Feed Sensor 8- 94
8.8.24 Duplex Feed Clutch 8- 94
8.8.24.1 Removing the Rear Cover 8- 94
8.8.24.2 Removing the Duplex Feed Clutch 8- 94

8.8.25 Delivery Assembly 1 ..... 8- 94
8.8.25.1 Removing the Right Cover (rear) 8- 94
8.8.25.2 Removing the Front Cover Unit 8- 95
8.8.25.3 Removing the Delivery Tray 8- 95
8.8.25.4 Removing the Right Door 8- 95
8.8.25.5 Removing the Right Door 8- 96
8.8.25.6 Removing the Extension Delivery Kit 8- 96
8.8.25.7 Removing the Delivery Assembly 1 ..... 8- 97
8.8.26 Fixing/ Delivery Drive Assembly 8- 97
8.8.26.1 Removing the Right Cover (rear) 8- 97
8.8.26.2 Removing the Front Cover Unit 8- 97
8.8.26.3 Removing the Delivery Tray 8- 98
8.8.26.4 Removing the Right Door 8- 98
8.8.26.5 Removing the Right Door 8- 99
8.8.26.6 Removing the Delivery Assembly 1 ..... 8- 99
8.8.26.7 Removing the Fixing Unit 8- 99
8.8.26.8 Removing the Fixing/Delivery Drive Assembly 8- 100
8.8.27 Separation Roller 8- 100
8.8.27.1 Removing the Pickup Roller/Feed Roller/Separation Roller 8- 100

Chapter 9 Fixing System

9.1 Construction 9- 1
9.1.1 Specifications, Control Mechanisms, and Functions 9- 1
9.1.2 Major Components 9- 1
9.2 Basic Sequence 9- 1
9.2.1 Power-On Sequence 9- 1
9.2.2 Down Sequence 9- 2
9.3 Various Control Mechanisms 9- 2
9.3.1 Controlling the Speed of the Fixing Film 9- 2
9.3.1.1 Controlling the Fixing Film Speed in Response to Low Temperature 9- 2
9.3.1.2 Controlling the Fixing Film Speed 9- 2
9.3.2 Controlling the Fixing Film Temperature 9- 2
9.3.2.1 Controlling the Power Supply in Response to Low Temperature 9- 2
9.3.2.2 Controlling the Feeding in Response to Low Temperature 9- 2
9.3.2.3 Controlling the Power Supply at Start-Up 9- 2
9.3.2.4 Copying Temperature Control 9- 3
9.3.2.5 Changing the Fixing Film Control Temperature 9- 3
9.3.2.6 Temperature Control in Response to Automatic Double-Sided Copy 9- 3
9.3.2.7 Temperature Control in Response to Change of Paper Size 9- 3
9.3.3 Cleaning 9- 3
9.3.3.1 Fixing Film Cleaning 9- 3
9.3.4 Detecting the Passage of Paper 9- 4
9.3.4.1 Detecting the Passage of Paper 9- 4
9.4 Protective Functions 9- 4
9.4.1 Protective Functions 9- 4
9.4.2 Detecting an Error 9- 5
9.5 Parts Replacement Procedure 9- 5
9.5.1 Fixing Unit 9- 5
9.5.1.1 Removing the Right Cover (rear) 9- 5
9.5.1.2 Removing the Right Door 9- 5
9.5.1.3 Removing the Right Door 9- 6
9.5.1.4 Removing the Fixing Unit 9- 6
9.5.2 Pressure Roller 9- 7
9.5.2.1 Removing the inside delivery cover unit (old) 9- 7
9.5.2.2 Removing the inside delivery cover unit (new) 9- 9
9.5.2.3 Removing the Grounding Plate 9- 9
9.5.2.4 Removing the Fixing Film Cover 9- 9
9.5.2.5 Removing the Left Side Plate 9- 10

9.5.2.6 Releasing the Locking Plate 9- 11
9.5.2.7 Removing the Fixing Film Unit 9- 11
9.5.2.8 Removing the Inlet Guide 9- 12
9.5.2.9 Removing the Pressure Roller 9- 12
9.5.3 Cleaning Roller 9- 13
9.5.3.1 Removing the inside delivery cover unit (old) 9- 13
9.5.3.2 Removing the inside delivery cover unit (new) 9- 15
9.5.3.3 Removing the Cleaning Roller 9- 15
9.5.4 Fixing Film 9- 15
9.5.4.1 Removing the inside delivery cover unit (old) 9- 15
9.5.4.2 Removing the inside delivery cover unit (new) 9- 17
9.5.4.3 Removing the Grounding Plate 9- 17
9.5.4.4 Removing the Fixing Film Cover 9- 17
9.5.4.5 Removing the Left Side Plate 9- 17
9.5.4.6 Releasing the Locking Plate 9- 18
9.5.4.7 Removing the Fixing Film Unit 9- 19
9.5.5 Internal Delivery Sensor 9- 20
9.5.5.1 Removing the inside delivery cover unit (old) 9- 20
9.5.5.2 Removing the inside delivery cover unit (new) 9- 21
9.5.5.3 Removing the Grounding Plate 9- 21
9.5.5.4 Removing the Fixing Film Cover 9- 21
9.5.5.5 Removing the Left Side Plate 9- 22
9.5.5.6 Releasing the Locking Plate 9- 23
9.5.5.7 Removing the Fixing Film Unit 9- 23
9.5.5.8 Removing the Inside Delivery Sensor 9- 24
9.5.6 Fixing Film Sensor 9- 24
9.5.6.1 Removing the inside delivery cover unit (old) 9- 24
9.5.6.2 Removing the inside delivery cover unit (new) 9- 26
9.5.6.3 Removing the Grounding Plate 9- 26
9.5.6.4 Removing the Fixing Film Sensor 9- 26

Chapter 10 External and Controls

10.1 Control Panel 10- 1
10.1.1 Overview 10- 1
10.1.2 Overview 10- 1
10.1.3 LCD Indication Processing 10- 1
10.1.4 LCD Indication Processing 10- 2
10.1.5 Adjustment of the LCD Contact 10- 2
10.1.6 Adjustment of the LCD Contact 10- 2
10.1.7 Functions of the Control Panel CPU 10- 2
10.1.8 Functions of the Control Panel CPU 10- 2
10.2 Counters 10- 2
10.2.1 Overview 10- 2
10.2.2 Timing of Increasing the Count 10- 3
10.3 Fans 10- 3
10.3.1 Overview 10- 3
10.3.2 2-Speed Control 10- 3
10.3.3 Sequence of Operation 10- 4
10.4 Power Supply System 10- 4
10.4.1 Power Supply 10- 4
10.4.1.1 Route of Power Inside the Printer Unit 10- 4
10.4.1.2 Route of Power Inside the Printer Unit 10- 5
10.4.1.3 Power Supply Route in the Reader Unit 10- 6
10.4.1.4 Timing of Supply to the Reader Unit 10- 6
10.4.1.5 Connections to Various Accessories 10- 7
10.4.1.6 Connections to Various Accessories 10- 7
10.4.2 Rated Output of the DC Power Supply PCB 10- 8
10.4.2.1 Rated Output of the Printer Unit Power Supply PCB 10- 8

10.4.2.2 Rated Output of the Controller Power Supply PCB 10- 8
10.4.2.3 Rated Output of the Accessories Power Supply PCB 10- 8
10.4.2.4 Rated Output of the All-Night Power Supply PCB 10- 9
10.4.3 Protection Function 10- 9
10.4.3.1 Protective Mechanisms 10- 9
10.4.4 Backup Battery 10- 9
10.4.4.1 Backup Battery 10- 9
10.4.5 Energy-Saving Function 10- 9
10.4.5.1 Overview 10- 9
10.4.5.2 Machine as Supplied with Power 10- 10
10.4.5.3 SNMP setup 10- 10
10.4.5.4 SNMP setup (with HDD) 10- 13
10.5 Parts Replacement Procedure 10- 15
10.5.1 Main Drive Assembly 10- 15
10.5.1.1 Removing the Rear Cover 10- 15
10.5.1.2 Removing the Main Drive Assembly 10- 15
10.5.1.3 Removing the Main Drive Assembly 10- 15
10.5.2 Power Supply Unit 10- 16
10.5.2.1 Removing the Rear Cover 10- 16
10.5.2.2 Removing the Left Cover (lower) 10- 16
10.5.2.3 Removing the Accessories Power Supply PCB 10- 16
10.5.2.4 Removing the Main Power Supply 10- 17
10.5.3 Control Panel 10- 18
10.5.3.1 Removing the Control Panel 10- 18
10.5.3.2 Removing the Control Panel 10- 18
10.5.4 Control Panel LCD Unit 10- 19
10.5.4.1 Removing the Control Panel 10- 19
10.5.4.2 Removing the Control Panel Base Cover 10- 19
10.5.4.3 Removing the Control Panel Inside Frame 10- 20
10.5.4.4 Removing the Control Panel LCD 10- 20
10.5.4.5 Removing the Control Panel 10- 20
10.5.4.6 Removing the Control Panel Base Cover 10- 21
10.5.4.7 Removing the Control Panel Frame 10- 21
10.5.4.8 Removing the Control Panel LCD PCB 10- 22
10.5.5 DC Controller PCB 10- 22
10.5.5.1 Removing the Rear Cover 10- 22
10.5.5.2 Removing the DC Controller PCB 10- 22
10.5.6 Control Panel Inverter PCB 10- 23
10.5.6.1 Removing the Control Panel 10- 23
10.5.6.2 Removing the Control Panel Base Cover 10- 23
10.5.6.3 Removing the Control Panel Inverter PCB 10- 23
10.5.6.4 Removing the Control Panel 10- 23
10.5.6.5 Removing the Control Panel Base Cover 10- 24
10.5.6.6 Removing the Control Panel Frame 10- 24
10.5.6.7 Removing the Control Panel Inverter PCB 10- 25
10.5.7 Control Panel Key Switch PCB 10- 25
10.5.7.1 Removing the Control Panel 10- 25
10.5.7.2 Removing the Control Panel Base Cover 10- 26
10.5.7.3 Removing the Control Panel Frame 10- 26
10.5.7.4 Removing the Control Panel Key Switch PCB 10- 26
10.5.7.5 Removing the Control Panel 10- 26
10.5.7.6 Removing the Control Panel Base Cover 10- 27
10.5.7.7 Removing the Control Panel Frame 10- 27
10.5.7.8 Removing the Control Panel Key Switch PCB 10- 28
10.5.8 Control Panel CPU PCB 10- 28
10.5.8.1 Removing the Control Panel 10- 28
10.5.8.2 Removing the Control Panel Base Cover 10- 29
10.5.8.3 Removing the Controller Panel CPU PCB 10- 29
10.5.8.4 Removing the Control Panel 10- 29
10.5.8.5 Removing the Control Panel Base Cover 10- 30

10.5.8.6 Removing the Control Panel CPU PCB 10- 30
10.5.9 All Night Power Supply PCB 10- 30
10.5.9.1 Removing the Rear Cover 10- 30
10.5.9.2 Removing the All-Night Power Supply PCB 10- 30
10.5.10 Controller Power Supply PCB 10- 31
10.5.10.1 Removing the Rear Cover 10- 31
10.5.10.2 Removing the Left Cover (lower) 10- 31
10.5.10.3 Removing the Left Cover (Rear) 10- 31
10.5.10.4 Removing the Accessories Power Supply PCB 10- 31
10.5.10.5 Removing the Controller Power Supply PCB 10- 32
10.5.11 Option Power Supply PCB 10- 32
10.5.11.1 Removing the Rear Cover 10- 32
10.5.11.2 Removing the Left Cover (lower) 10- 32
10.5.11.3 Removing the Left Cover (Rear) 10- 32
10.5.11.4 Removing the Accessories Power Supply PCB 10- 33
10.5.12 High-Voltage PCB 10- 33
10.5.12.1 Removing the Front Cover Unit 10- 33
10.5.12.2 Removing the Waste Toner Case 10- 33
10.5.12.3 Removing the Toner Cartridge 10- 34
10.5.12.4 Removing the Drum Unit 10- 34
10.5.12.5 Removing the Developing Assembly 10- 35
10.5.12.6 Removing the Upper Tray 10- 36
10.5.12.7 Removing the Toner Cartridge Cover 10- 36
10.5.12.8 Removing the Pre-Exposure Lamp 10- 36
10.5.12.9 Removing the Left Cover 10- 36
10.5.12.10 Removing the Laser Unit 10- 37
10.5.12.11 Removing the Hopper Assembly 10- 37
10.5.12.12 Removing the Right Cover (rear) 10- 38
10.5.12.13 Removing the Right Door 10- 38
10.5.12.14 Removing the Right Door 10- 39
10.5.12.15 Removing the Right Door 10- 40
10.5.12.16 Removing the Fixing Unit 10- 40
10.5.12.17 Removing the Gear 10- 41
10.5.12.18 Removing the High-Voltage PCB 10- 41
10.5.13 Exhaust Fan 10- 42
10.5.13.1 Removing the Heat Discharge Fan 10- 42
10.5.13.2 Removing the Heat Discharge Fan 10- 43
10.5.14 Motor of Main Drive Assembly 10- 43
10.5.14.1 Removing the Rear Cover 10- 43
10.5.14.2 Removing the Main Drive Assembly 10- 43
10.5.14.3 Removing the Main Drive Motor 10- 44
10.5.14.4 Removing the Main Drive Motor 10- 44
10.5.15 Fixing Driver Motor 10- 45
10.5.15.1 Removing the Rear Cover 10- 45
10.5.15.2 Removing the DC Controller PCB 10- 45
10.5.15.3 Removing the Fixing Drive Motor 10- 45
10.5.16 Right Door 10- 46
10.5.16.1 Removing the Right Cover (rear) 10- 46
10.5.16.2 Removing the Right Door 10- 46
10.5.16.3 Removing the Right Door 10- 47
10.5.17 Circuit Braker 10- 47
10.5.17.1 Removing the Rear Cover 10- 47
10.5.17.2 Removing the Circuit Breaker 10- 47

Chapter 11 MEAP

11.1 MEAP 11- 1
11.1.1 Overview 11- 1
11.1.2 MEAP Counter 11- 1
11.1.3 Construction of the MEAP Platform 11- 1

Chapter 12 Maintenance and Inspection

12.1 Periodically Replaced Parts 12- 1
12.1.1 Overview 12- 1
12.1.2 Reader Unit 12- 1
12.1.3 Printer Unit 12- 1
12.2 Durables and Consumables 12- 1
12.2.1 Overview 12- 1
12.2.2 Reader Unit 12- 1
12.2.3 Printer Unit 12- 1
12.3 Scheduled Servicing Basic Procedure 12- 2
12.3.1 Scheduled Servicing for the Reader Unit 12- 2
12.3.2 Scheduled Servicing for the Printer Unit 12- 2
12.3.3 Scheduled Servicing Basic Procedures 12- 4
12.3.4 Points to Note About the Scheduled Servicing 12- 5
12.4 Cleaning 12- 7
12.4.1 Cleaning the Transfer/Feed Guide 12- 7
12.4.2 Cleaning the Developing Assembly Spacer, Feed Guide, Dust-Blocking Glass, and Fixing Inlet Guide 12- 7
12.4.3 Cleaning the Film Bias Static Eliminator 12- 13
12.4.4 Cleaning the Film Bias Static Eliminator 12- 19

Chapter 13 Standards and Adjustments

13.1 Image Adjustments 13- 1
13.1.1 Standards for Image Position 13- 1
13.1.2 Adjusting the Image Position 13- 1
13.1.3 Cassette 13- 2
13.1.4 Manual Feed Tray 13- 3
13.1.5 Side Paper Deck 13- 3
13.2 Scanning System 13- 4
13.2.1 After Replacement of the CIS 13- 4
13.2.2 After Replacing the Reader Controller PCB or Initializing the RAM 13- 4
13.3 Laser Exposure System 13- 4
13.3.1 After Replacing the Laser Scanner Unit 13- 4
13.4 Image Formation System 13- 4
13.4.1 After Replacing the Developing Unit 13- 4
13.4.2 After Replacing the Drum Unit (APVC correction) 13- 4
13.5 Electrical Components 13- 5
13.5.1 After Replacing the HDD 13- 5
13.5.2 After Replacing the DC Controller PCB 13- 5
13.5.3 After Replacing the Main Controller PCB 13- 5
13.5.4 After Replacing the Reader Controller PCB 13- 5
13.6 Pickup/Feeding System 13- 6
13.6.1 Adjusting the Horizontal Registration When Replacing the Cassette 13- 6
13.6.2 Adjusting the Horizontal Registration When Replacing the Duplex Unit 13- 7
13.6.3 Adjusting the Manual Feed Pickup Horizontal Registration 13- 8
13.6.4 Registering the Paper Width Basic Value 13- 8

Chapter 14 Correcting Faulty Images

14.1 Making Initial Checks 14- 1
14.1.1 Site Environment 14- 1
14.1.2 Checking the Paper 14- 1
14.1.3 Checking the Placement of Paper 14- 1
14.1.4 Checking the Durables 14- 1
14.1.5 Checking the Periodically Serviced Items 14- 1

14.1.6 Checking the Units and Functional Systems 14- 1
14.1.7 Others 14- 2
14.2 Troubleshooting 14- 2
14.2.1 Image Faults 14- 2
14.2.1.1 Blank Image 14- 2
14.2.1.2 Foggy Image 14- 2
14.2.1.3 Uneven Density 14- 4
14.2.1.4 Partially Blank/Streaked 14- 7
14.2.1.5 Smudged/Streaked 14- 13
14.2.1.6 Ghost/Memory 14- 16
14.2.1.7 Stretching/Shrinking 14- 17
14.2.2 Malfunction 14- 19
14.2.2.1 No Power 14- 19
14.2.2.2 Control Panel-Related 14- 20
14.2.2.3 Counter Malfunction 14- 21
14.2.2.4 Malfunction/Faulty Detection 14- 21
14.2.2.5 Noise 14- 22
14.2.2.6 User Warning Message 14- 23
14.2.2.7 Other Defect 14- 23
14.2.2.8 Part Breakage/Detachment 14- 25
14.2.3 Printing/scanning 14- 25
14.2.3.1 No Output 14- 25
14.2.4 Network 14- 25
14.2.4.1 Ping Failure 14- 25
14.2.4.2 Connection Problem 14- 25
14.2.5 Transmission/fax-related 14- 25
14.2.5.1 Transmission Problem 14- 25
14.2.5.2 Other Operational Defect 14- 26
14.2.6 Jam (Main Unit) 14- 26
14.2.6.1 0105 Jam Code: Occurs only at pickup from cassette 1 because right lower door sheet is faulty 14- 26
14.2.6.2 0207 Jam Code: Because solenoid (SL1) does not work on account of defective delivery controller PCB 14- 26
14.2.6.3 0207 Jam Code: Because solenoid (SL1) of 1st paper delivery flapper is mounted in wrong position. 14- 27
14.2.6.4 0B00 Jam Code: Description of this jam code 14- 27
14.2.7 Jam (FIN) 14- 27
14.2.7.1 1205 Jam Code: Finisher-Q3/Saddle Finisher-Q4 ..... 14- 27
14.2.7.2 1644 Jam Code: Occurs upon power-on or when first paper is fed in punch mode after machine's front cover is opened/closed, Finisher-S1 ..... 14- 27
14.2.8 Error Code 14- 27
14.2.8.1 E000-0001 Error Code: Because fixing heater is cracked 14- 27
14.2.8.2 E001-0000 Error Code: Because main power supply PCB is faulty 14- 28
14.2.8.3 E014-0002 Error Code/Abnormal sound from fixing assembly: Because cleaning roller mounts (front/rear) are damaged (iR4570/iR3570) 14- 28
14.2.8.4 E024-0001 Error Code: Description of this error code 14- 28
14.2.8.5 E024-0001 Error Code: Because toner stays in developing assembly toner sensor (TS1) 14- 28
14.2.8.6 E110-0001 Error Code: Because DC controller PCB is faulty 14- 28
14.2.8.7 E202-0002 Error Code: Because reader controller PCB is faulty 14- 28
14.2.8.8 E244 Error Code: Occurs when formatting service part hard disk drive (HDD) 14- 28
14.2.8.9 E261-0000 Error Code: Because main power supply PCB is faulty 14- 29
14.2.8.10 E315-000d Error Code: Because main controller PCB is faulty 14- 29
14.2.8.11 E520 Error Code: Description of this code 14- 29
14.2.8.12 E602-0001 Error Code: Progress bar stops at one-fifth point because hard disk (HDD) is faulty 14- 29
14.2.8.13 E716-0010 Error Code: Occurs when machine is equipped with 3 Way Unit-A1 ..... 14- 29
14.2.8.14 E732-0001 Error Code: Because Reader Controller PCB is faulty 14- 29
14.2.8.15 E732-0001 Error Code: Because DIMMs have poor connection 14- 29
14.2.8.16 E733-0001 Error Code is displayed at FAX reception/transmission; however it is solved by switching OFF/ON 14- 29
14.2.9 FAX # Code 14- 30
14.2.9.1 #037/##795/###796 User Error Code: Occurs when FAX Activity Report is set to be printed automatically at time of FAX reception 14- 30
14.2.10 Specifications-related FAQ 14- 30
14.2.10.1 FAQ on Main Unit Specifications 14- 30
14.2.10.2 FAQ on Send Specifications 14- 38

14.2.10.3 FAQ on G3FAX Specifications 14- 39
14.2.10.4 FAQ on I-FAX Specifications 14- 40
14.2.10.5 FAQ on Remote UI Specifications 14- 41
14.3 Outline of Electrical Components 14- 41
14.3.1 Clutch/Solenoid 14- 41
14.3.1.1 Clutches and Solenoids 14- 41
14.3.2 Motor 14- 42
14.3.2.1 Motors 14- 42
14.3.3 Fan 14- 44
14.3.3.1 Fans 14- 44
14.3.4 Sensor 14- 45
14.3.4.1 Sensors 14- 45
14.3.5 Switch 14- 48
14.3.5.1 Switches 14- 48
14.3.6 Lamps, Heaters, and Others 14- 48
14.3.6.1 Lamps, Heaters, and Others 14- 48
14.3.6.2 Lamps, Heaters, and Others 14- 50
14.3.7 PCBs 14- 51
14.3.7.1 PCBs 14- 51
14.3.7.2 PCBs 14- 53
14.3.8 Variable Resistors (VR), Light-Emitting Diodes (LED), and Check Pins by PCB 14- 55
14.3.8.1 Variable Resistors (VR), Light-Emitting Diodes, and Check Pins by PCB 14- 55
14.3.8.2 Points to Note About the Leakage Breaker 14- 55
14.3.8.3 All-Night Power Supply PCB 14- 56

Chapter 15 Self Diagnosis

15.1 Error Code Table 15- 1
15.1.1 Error Code 15- 1
15.2 Error Code Details 15- 2
15.2.1 Error Code Details 15- 2
15.2.2 E602 in Detaill 15- 7
15.2.3 Error Code DetailsÅitest for A4 sizeÅj 15- 12
15.3 Error Code (SEND) 15- 16
15.3.1 Results of Self-Diagnosis 15- 16
15.3.2 Error Codes 15- 17
15.4 Jam Code 15- 21
15.4.1 Jam Code (printer unit) 15- 21
15.4.2 Jam Code (finisher-related) 15- 21
15.4.3 Jam Code (finisher-related) 15- 22
15.4.4 Jam Code (ADF-related) 15- 22
15.5 Alarm Code 15- 23
15.5.1 Alarm Code 15- 23
15.5.2 Alarm Code 15- 23
15.6 Finisher/Saddle Finisher Error Codes 15- 24
15.6.1 Error Code in Detail (finisher, puncher) 15- 24
15.6.2 Error Code Detail (finisher, puncher) 15- 31
15.7 DADF Error Codes 15- 34
15.7.1 Error Code in Detail (DF) 15- 34

Chapter 16 Service Mode

16.1 Outline 16- 1
16.1.1 Construction of Service Mode 16- 1
16.1.2 Starting Service Mode and Making Selections 16- 1
16.1.3 Ending Service Mode 16- 2
16.1.4 Back-Up 16- 2

16.1.5 Initial Screen 16- 2
16.1.6 2nd/3rd Item Screen 16- 3
16.1.7 4th Item Screen 16- 3
16.2 DISPLAY (Status Display Mode) 16- 4
16.2.1 COPIER 16- 4
16.2.1.1 Copier List 16- 4
16.2.2 FEEDER 16- 8
16.2.2.1 Feeder List 16- 8
16.3 I/O (I/O Display Mode) 16- 8
16.3.1 Outline 16- 8
16.3.2 <DC-CON> 16- 9
16.3.3 <R-CON> 16- 10
16.3.4 <FEEDER> 16- 11
16.3.5 <SORTER> 16- 12
16.4 ADJUST (Adjustment Mode) 16- 17
16.4.1 COPIER 16- 17
16.4.1.1 Copier List 16- 17
16.4.2 FEEDER 16- 23
16.4.2.1 FEEDER List 16- 23
16.4.3 SORTER 16- 23
16.4.3.1 Sorter List 16- 23
16.5 FUNCTION (Operation/Inspection Mode) 16- 24
16.5.1 COPIER 16- 24
16.5.1.1 Copier List 16- 24
16.5.2 FEEDER 16- 30
16.5.2.1 Feeder List 16- 30
16.6 OPTION (Machine Settings Mode) 16- 31
16.6.1 COPIER 16- 31
16.6.1.1 Copier List 16- 31
16.6.2 FEEDER 16- 48
16.6.2.1 Feeder List 16- 48
16.6.3 SORTER 16- 48
16.6.3.1 Sorter List 16- 48
16.6.4 BOARD 16- 48
16.6.4.1 Board List 16- 48
16.7 TEST (Test Print Mode) 16- 49
16.7.1 COPIER 16- 49
16.7.1.1 Copier List 16- 49
16.8 COUNTER (Counter Mode) 16- 50
16.8.1 COPIER 16- 50
16.8.1.1 Copier List 16- 50

Chapter 17 Upgrading

17.1 Outline 17- 1
17.1.1 Outline of Upgrading the Machine 17- 1
17.1.2 Outline of the Service Support Tool 17- 1
17.2 Making Preparations 17- 3
17.2.1 Registering the System Software 17- 3
17.2.2 Making Connections 17- 5
17.3 Formatting the HDD 17- 7
17.3.1 Formatting All Partitions 17- 7
17.3.2 Formatting Selected Partitions 17- 8
17.3.3 Formatting Procedure 17- 9
17.4 Downloading System Software 17- 10
17.4.1 Downloading System 17- 10

17.4.1.1 Outline 17- 10
17.4.1.2 Downloading Procedure 17- 10
17.4.2 Downloading RUI, and Language 17- 13
17.4.2.1 Outline 17- 13
17.4.2.2 Downloading Procedure 17- 14
17.4.3 Downloading SDICT 17- 15
17.4.3.1 Outline 17- 15
17.4.3.2 Downloading Procedure 17- 15
17.4.4 Downloading MEAPCONT 17- 17
17.4.4.1 Outline 17- 17
17.4.4.2 Downloading Procedure 17- 17
17.4.5 Downloading KEY 17- 18
17.4.5.1 Outline 17- 18
17.4.5.2 Downloading Procedure 17- 19
17.4.6 Downloading BOOT 17- 20
17.4.6.1 Outline 17- 20
17.4.6.2 Downloading Procedure 17- 21
17.4.7 Downloading Dcon and Rcon 17- 22
17.4.7.1 Outline 17- 22
17.4.7.2 Downloading Procedure 17- 23
17.4.8 Downloading G3 FAX 17- 24
17.4.8.1 Outline 17- 24
17.4.8.2 Downloading Procedure 17- 25
17.4.9 Uploading and Downloading Backup Data 17- 26
17.4.9.1 Outline 17- 26
17.4.9.2 Uploading Procedure 17- 27
17.4.9.3 Downloading Procedur 17- 29

Chapter 18 Service Tools

18.1 Service Tools 18- 1
18.1.1 Special Tools 18- 1
18.1.2 Oils and Solvents 18- 1

Chapter 1 Introduction

Contents

1.1 System Construction 1-1
1.1.1 Overview of the System with a Delivery Accessory 1-1
1.1.2 Overview of System Construction (output accessories) 1-1
1.1.3 Delivery Accessory System Configuration 1 1-1
1.1.4 Output Accessories System Configuration 1 1-2
1.1.5 Delivery Accessory System Configuration 2 1-3
1.1.6 Output Accessories System Configuration 2 1-4
1.1.7 Delivery Accessory System Configuration 3 1-4
1.1.8 Pickup/Original Handling Accessories System Configuration 1-5
1.1.9 Input/Original Handling Accessories System Configuration 1-6
1.1.10 Reader Heater System Configuration 1-7
1.1.11 Cassette Heater System Configuration 1 1-8
1.1.12 Cassette Heater System Configuration 2 1-8
1.1.13 Side Deck Heater System Configuration 1-9
1.1.14 Printing/Transmitting Accessories System Configuration 1-10
1.1.15 List of Print Transmission Optional Functions 1-10
1.1.16 Printing/Transmission Accessories System Configuration 1-11
1.1.17 Functions of the Printing/Transmission Functions 1-12
1.2 Product Specifications 1-12
1.2.1 Names of Parts 1-12
1.2.1.1 Names of Parts 1-12
1.2.1.2 External View 1-13
1.2.1.3 Cross-Section 1-14
1.2.2 Using the Machine 1-16
1.2.2.1 Turning On the Power Switch 1-16
1.2.2.2 When Turning Off the Main Power Switch 1-18
1.2.2.3 Points to Note About Turning Off the Main Power Switch 1-19
1.2.2.4 Control Panel 1-20
1.2.2.5 Control Panel 1-20
1.2.3 User Mode Items 1-21
1.2.3.1 Common Settings 1-21
1.2.3.2 Common Settings 1-23
1.2.3.3 Setting the Time 1-25
1.2.3.4 Setting the Timer 1-25
1.2.3.5 Adjustments and Cleaning 1-25
1.2.3.6 Adjustment and Cleaning 1-25
1.2.3.7 Report Output 1-26
1.2.3.8 Printing Out a Report 1-26
1.2.3.9 System Control Settings 1-27
1.2.3.10 System Control Settings 1-28
1.2.3.11 Copy Settings 1-29
1.2.3.12 Transmission/Reception Settings 1-29
1.2.3.13 Transmission/Reception Settings 1-30
1.2.3.14 Box Settings 1-31
1.2.3.15 Box Settings 1-31
1.2.3.16 Printer Settings 1-31
1.2.3.17 Address Book Settings 1-32
1.2.4 Maintenance by the User 1-33
1.2.4.1 Cleaning 1-33
1.2.4.2 Inspection 1-34
1.2.5 Safety 1-35
1.2.5.1 Safety of the Laser Light 1-35
1.2.5.2 CDRH Regulations 1-35

1.2.5.3 Handling the Laser Unit 1-35
1.2.5.4 Safety of Toner 1-36
1.2.6 Product Specifications 1-36
1.2.6.1 Product Specifications 1-36
1.2.7 Function List 1-37
1.2.7.1 Printing Speed 1-37
1.2.7.2 Printing Speed 1-38
1.2.7.3 Types of Paper 1-39
1.2.7.4 Types of Paper 1-39

1.1 System Construction

1.1.1 Overview of the System with a Delivery Accessory

iR2270 / iR2870 / iR3570 / iR4570 / / / /

The system may include a delivery accessory that may enable any of the following three:
- if a large volume of delivery processing or multiple types of delivery processing (e.g., stapling, punching) is needed: delivery accessory system configuration 1
- if delivery processing is limited to stapling/punching: delivery accessory system configuration 2
- if delivery processing is limited to 3-way delivery: delivery accessory system configuration 3

1.1.2 Overview of System Construction (output accessories)

iR2230 / / / iR3530

The output accessories designed for the machine can broadly be divided into 2 groups:
- if the work is limited to stapling and the like, output accessories configuration 1
- if the work calls for 3-way sorting, output accessories system construction 2

1.1.3 Delivery Accessory System Configuration 1

iR2270 / iR2870 / iR3570 / iR4570 / / / /

The following shows a typical system configuration of this type:

Remarks:
The 3 Way Unit-A1 comes as standard with the following:
120V: all model
230V: iR4570, iR3570

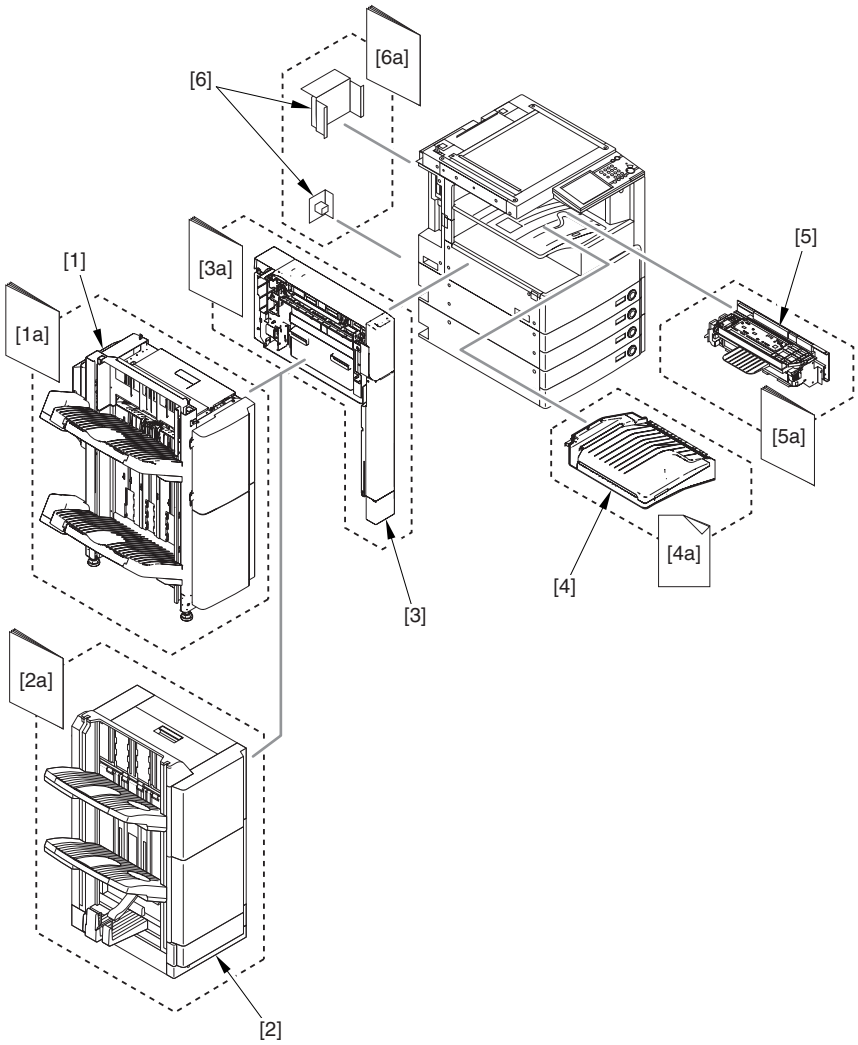

F-1-1

T-1-1

[1]Finisher-Q3	[1a]Installation Procedure - Installation of the Finisher-Q3 - Installation of the Buffer Path Unit [4]
[2]Saddle Finisher-Q4	[2a]Installation Procedure - Installation of the Finisher-Q4 - Installation of the Buffer Path Unit [4]
[3]Punch Unit-L1/M1/N1/P1	[3a]Installation Procedure - Installation of the Punch Unit-L1/M1/N1/P1

[4]Buffer Path Unit-E1	[4a]Instruction Sheet (indicating references)
[5]3 Way Unit-A1	[5a]Installation Procedure - Installation of the 3 Way Unit-A1
[6]Accessories Power Supply-P2 (needed when installing [1] through [4]; standard with 120/230V model)	[6a]Installation Procedure - Installation of the Accessories Power Supply-P2

The following shows the functions that the system will provide and the accessories that will be needed:

T-1-2

Function provided	Accessory needed
- 3-way delivery - stapling	Finisher-Q3 or Saddle Finisher-Q4 Accessories Power Supply-P2 Buffer Path Unit-E1 3 Way Unit-A1

T-1-3

Function provided	Accessory needed
- saddle binding	Saddle Finisher-Q4 Accessories Power Supply-P2 Buffer Path Unit-E1 3 Way Unit-A1

T-1-4

Function provided	Accessory needed
- punching	Finisher-Q3 or Saddle Finisher -Q4 Accessories Power Supply-P2 Buffer Path Unit-E1 3 Way Unit-A1 Punch Unit-L1/M1/N1/P1

1.1.4 Output Accessories System Configuration 1

iR2230 / / / iR3530

The configuration is as shown in the following figure:

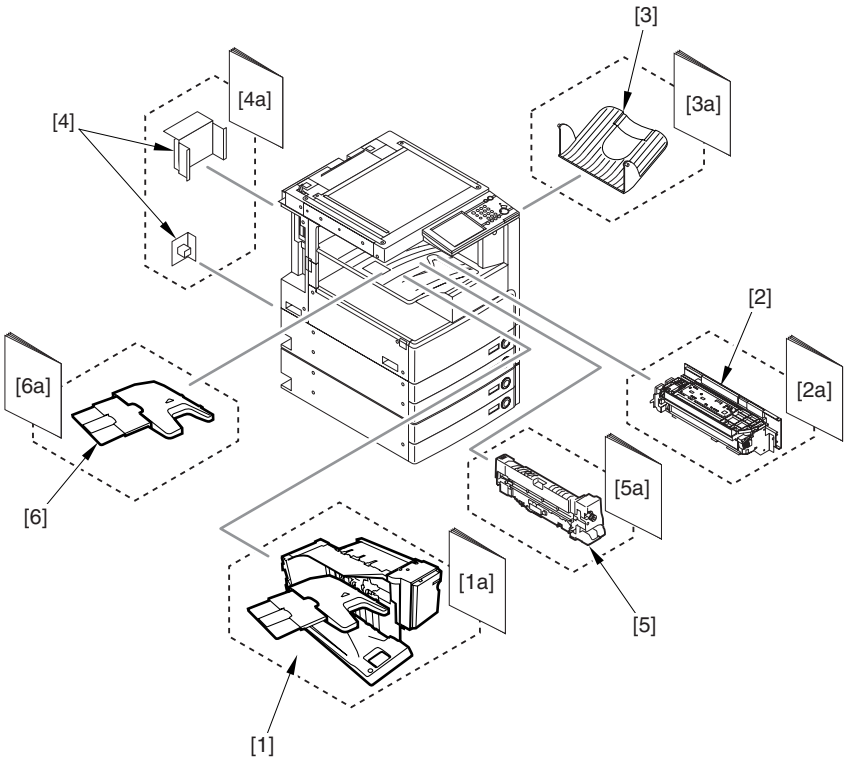

F-1-2

T-1-5

[1]Finisher-S1	[1a]Installation Procedure - installation of the Finisher-S1
[2]3Way Unit-A1	[2a]Installation Procedure - installation of the 3Way Unit-A1
[3]Output Tray-J1	[3a]Installation Procedure - installation of the Output Tray-J1
[4]Accessories Power Supply-P2 [standard with 120 or 230 V model] (It is necessary when installing [1].)	[4a]Installation Procedure - installation of the Accessories Power Supply-P2

[5]Inner Puncher Kit-Q1/R1/S1/T1	[5a]Installation Procedure - installation of the Inner Puncher Kit-Q1/R1/S1/T1
[6]Finisher Additional Tray-B1	[6a]Installation Procedure - installation of the Finisher Additional Tray-B1

The following table shows individual functions and the accessories needed:

T-1-6

Function	Accessories needed
- 2-way delivery - Stapling	Finisher-S1 Accessories Power Supply-P2 3Way Unit-A1 Output Tray-J1

T-1-7

Function	Accessories needed
- 3-way delivery - Stapling	Finisher-S1 Accessories Power Supply-P2 3Way Unit-A1 Finisher Additional Tray-B1 Output Tray-J1

T-1-8

Function	Accessories needed
- Punching	Finisher-S1 Accessories Power Supply-P2 3Way Unit-A1 Inner Puncher Kit-Q1

1.1.5 Delivery Accessory System Configuration 2

iR2270 / iR2870 / iR3570 / iR4570 / / / /

The following shows a typical system configuration of this type:

Remarks:
The 3 Way Unit-A1 comes as standard with the following models:
120V: all model
230V: iR4570, iR3570

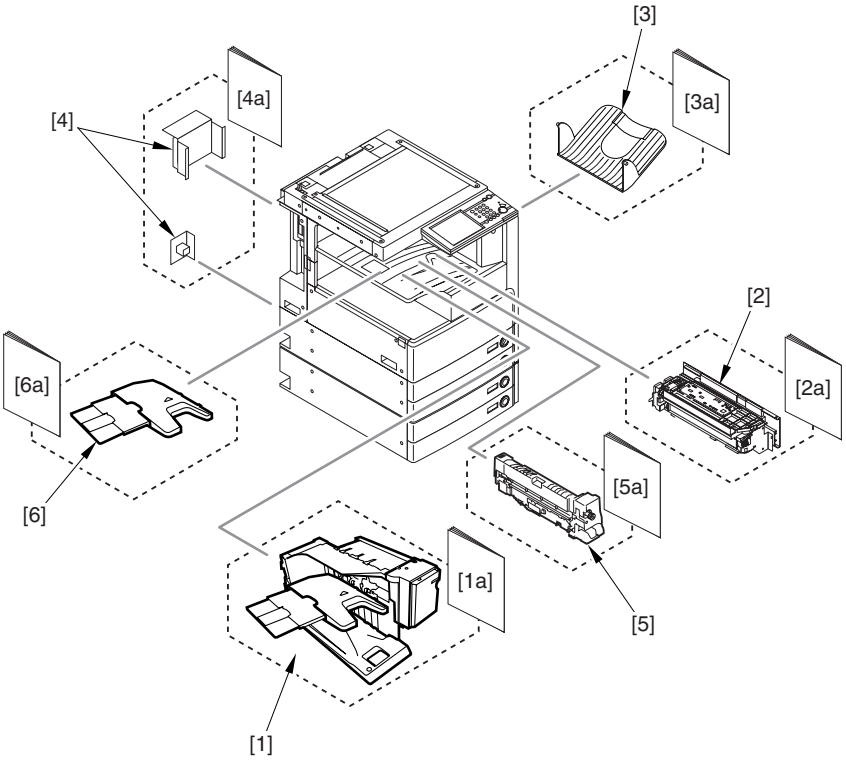

F-1-3

T-1-9

[1]Finisher-S1	[1a]Installation Procedure - Installation of the Finisher-S1
[2]3 Way Unit-A1	[2a]Installation Procedure - Installation of the 3 Way Unit-A1
[3]Copy Tray-J1	[3a]Installation Procedure - Installation of the Copy Tray-J1

[4]Accessories Power Supply-P2 (needed when installing [1]; standard with 120/230V model)	[4a]Installation Procedure - Installation of the Accessories Power Supply-P2
[5]Inner Puncher Kit-Q1/R1/S1/T1	[5a]Installation Procedure - Installation of the Inner Puncher Kit-Q1/R1/S1/T1
[6]Finisher Additional Tray-B1	[6a]Installation Procedure - Installation of the Finisher Additional Tray-B1

The following shows the functions that the system will provide and the accessories that will be needed:

T-1-10

Function provided	Accessory needed
- 2-way delivery - stapling	Finisher-S1 Accessories Power Supply-P2 3 Way Unit-A1 Copy Tray-J1

T-1-11

Function provided	Accessory needed
- 3-way delivery - stapling	Finisher-S1 Accessories Power Supply-P2 3 Way Unit-A1 Finisher Additional Tray-B1 Copy Tray-J1

T-1-12

Function provided	Accessory needed
- punching	Finisher-S1 Accessories Power Supply-P2 3 Way Unit-A1 Inner Puncher Kit-Q1/R1/S1/T1

1.1.6 Output Accessories System Configuration 2

iR2230 / / / iR3530

The configuration is as shown in the following figure:

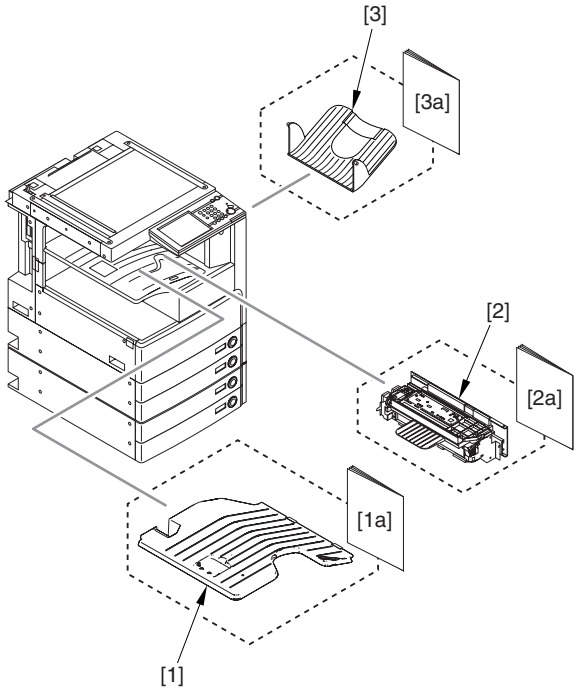

F-1-4

T-1-13

[1]Inner 2-Way Tray-D1	[1a]Installation Procedure - installation of the Inner 2-Way Tray-D1
[2]3Way Unit-A1 (powered by host; no need for Accessories Power Supply-P2)	[2a]Installation Procedure - installation of the 3Way Unit-A1
[3]Output Tray-J1	[3a]Installation Procedure - installation of the Output Tray-J1

1.1.7 Delivery Accessory System Configuration 3

iR2270 / iR2870 / iR3570 / iR4570 / / / /

The following shows a typical system configuration of this type:

Remarks:
The 3 Way Unit-A1 comes as standard with the following models:
120V: all model
230V: iR4570, iR3570

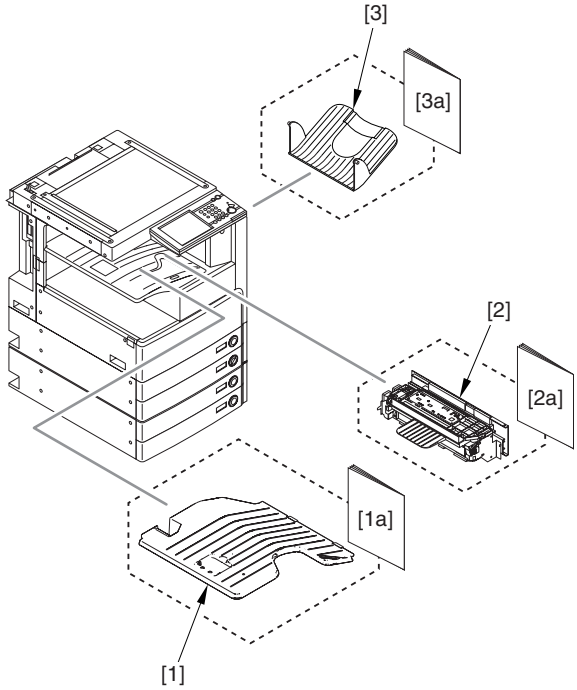

F-1-5

T-1-14

[1]Inner 2-Way Tray-D1	[1a]Installation Procedure - Installation of the Inner 2-Way Tray-D1
[2]3 Way Unit-A1 (powered by the printer unit, not requiring the Accessories Power Supply-P2)	[2a]Installation Procedure - Installation of the 3 Way Unit-A1
[3]Copy Tray-J1	[3a]Installation Procedure Installation of the Copy Tray-J1

1.1.8 Pickup/Original Handling Accessories System Configuration

iR2270 / iR2870 / iR3570 / iR4570 / / / /

The following shows a typical system configuration:

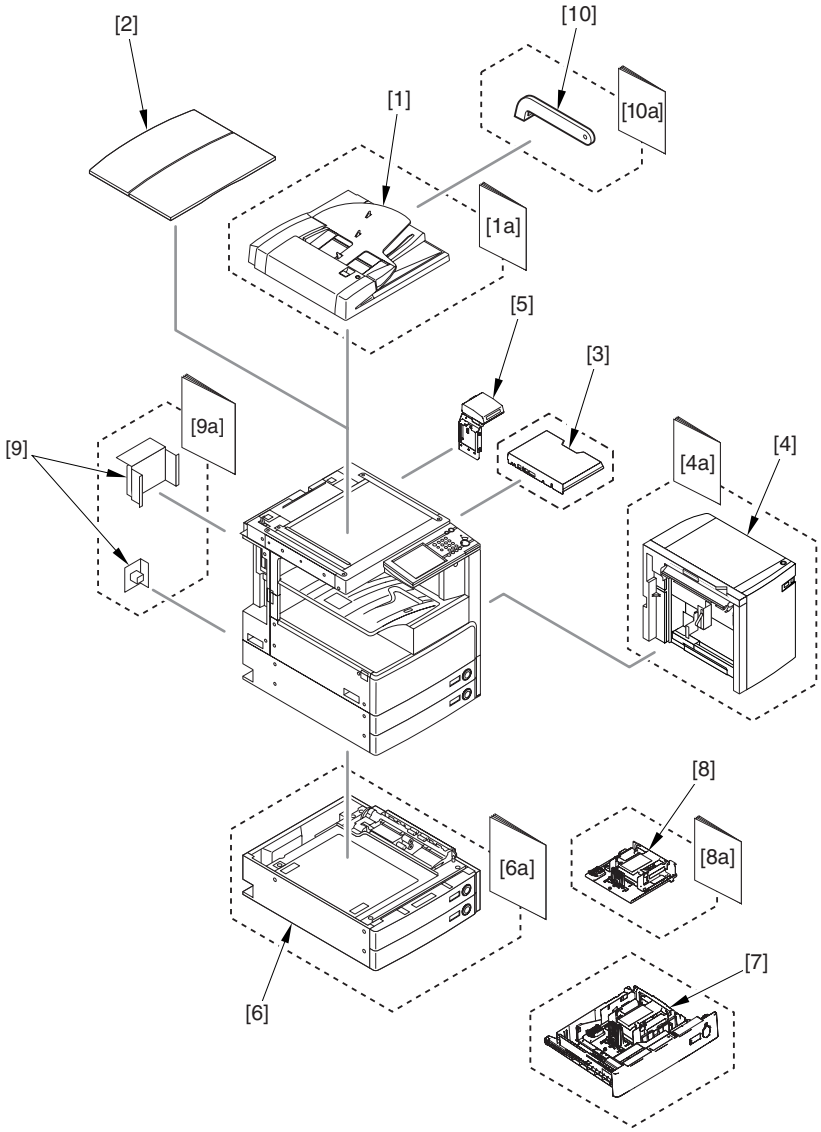

F-1-6

T-1-15

[1]DADF-N1	[1a]Installation Procedure - Installation of the DADF-N1
[2]Platen Cover Type-H	
[3]Original Holder-J1	[3a]Installation Procedure - Installation of the Original Holder-J1
[4]Side Paper Deck-Q1	[4a]Installation Procedure - Installation of the Side Paper Deck-Q1
[5]Card Reader-C1, Card Reader Mounting Kit-B1	
[6]2-Cassette Pedestal-Y2	[6a]Installation Procedure - Installation of the 2-Cassette Pedestal-Y2
[7]Envelope Cassette-C1 (100V)	
[8]Envelope Cassette Attachment-C1 (115/200V)	[8a]Installation Procedure - Installation of the Envelope Cassette Attachment-C1
[9]Accessories Power Supply-P2 (required when installing the Side Paper Deck Q1 [4]; standard with 120/230V model)	[9a]Installation Procedure - Installation of the Accessories Power Supply-P2
[10]DADF Handle-A1	[10a]Installation Procedure - Installation of the DADF Handle-A1

1.1.9 Input/Original Handling Accessories System Configuration

iR2230 / / / iR3530

The configuration is as shown in the following figure:

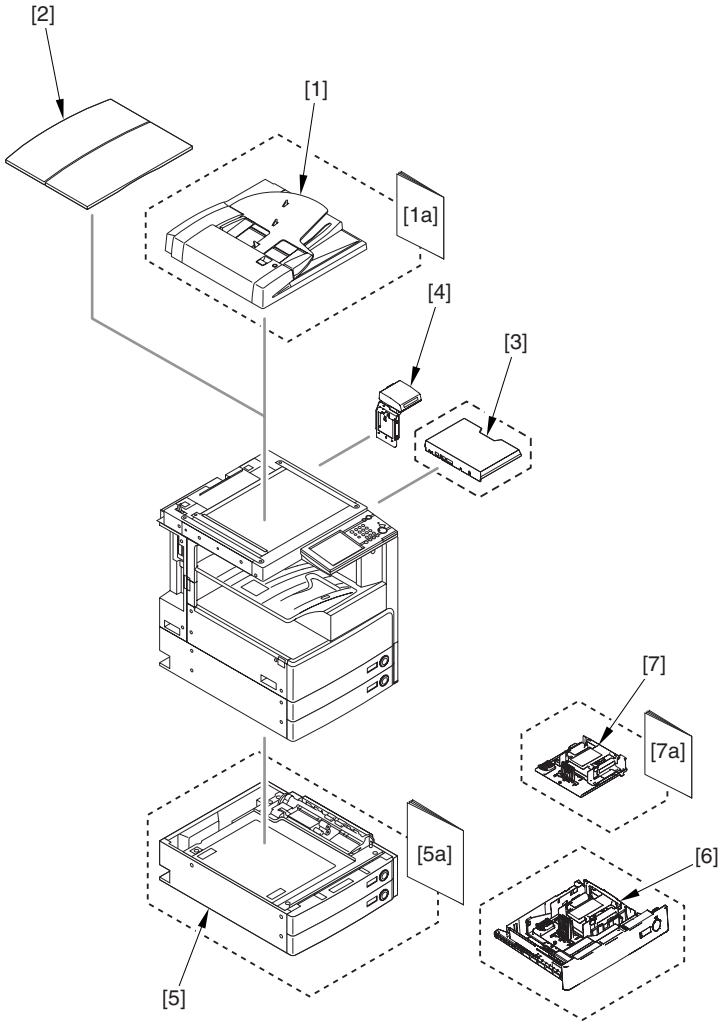

F-1-7

T-1-16

[1]DADF-N1	[1a]Installation Procedure - installation of the DADF-N1
[2]Platen Cover Type-H	
[3]Document Tray-J1	[3a]Installation Procedure - installation of the Document Tray-J1
[4]Card Reader-C1/Card Reader Mounting Kit-B1	
[5]Cassette Feeding Unit-Y2	[6a]Installation Procedure - installation of the Cassette Feeding Unit-Y2
[6]Envelope Cassette-C1 (100 V)	
[7]Envelope Cassette Attachment-C1 (115/200 V)	[8a]Installation Procedure - installation of the Envelope Cassettes Attachment-C1

1.1.10 Reader Heater System Configuration

iR2270 / iR2870 / iR3570 / iR4570 / / / /

The following shows a typical system configuration:

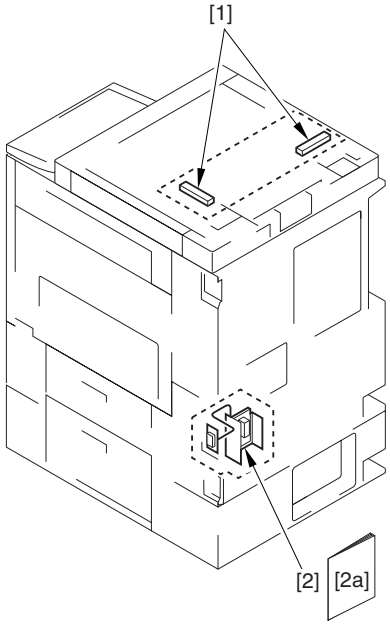

F-1-8
T-1-17

[1]Reader Heater Unit-B1
(A Heater PCB-C1 is needed for operation)

[2]Heater PCB-C1

[2a]Installation Procedure
- Installation of the Heater PCB-C1
- Installation of the Cassette Heater Unit-29
(installation to the printer unit)
- Installation of the Reader Heater Unit-B1

1.1.11 Cassette Heater System Configuration 1

iR2270 / iR2870 / iR3570 / iR4570 / / / /

The following shows a typical system configuration:

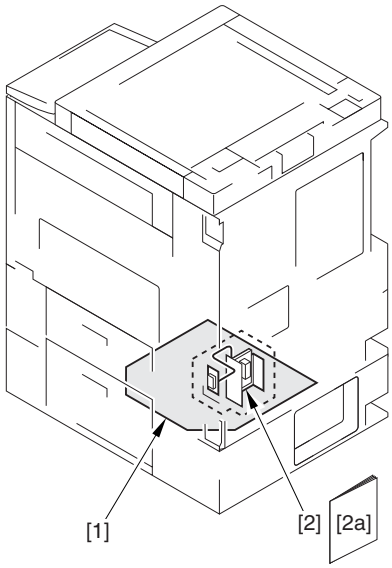

F-1-9
T-1-18

[1]Cassette Heater Unit-29
(installation to the printer unit)
(A Heater PCB-C1 is needed for operation.)

[2]Heater PCB-C1

[2a]Installation Procedure
- Installation of the Heater PCB-C1
- Installation of the Cassette Heater Unit-29
(installation to the printer unit)
- Installation to the Reader Heater Unit-B1

1.1.12 Cassette Heater System Configuration 2

iR2270 / iR2870 / iR3570 / iR4570 / / / /

The following shows a typical system configuration:

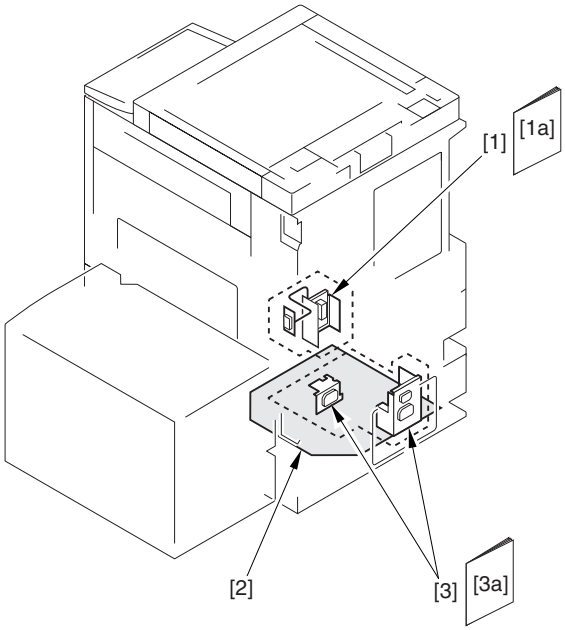

F-1-10
T-1-19

[1]Heater PCB-C1

[1a]Installation Procedure
- Installation of the Heater PCB-C1
- Installation of the Cassette Heater Unit-29
 (installation to the printer unit)
- Installation of the Reader Heater Unit-B1

[2]Cassette Heater Unit-29
(installation to the cassette pedestal)
(Its operation requires the installation of the Heater PCB-C1 and the Cassette Heater Mounting Kit-B1.)

[3]Cassette Heater Mounting Kit-B1

[3a]Installation Procedure
- Installation of the Cassette Heater Mounting Kit-B1
- Installation of the Cassette Heater Unit-25
- Installation of the Cassette Heater-29
 (installation to the cassette pedestal)

1.1.13 Side Deck Heater System Configuration

iR2270 / iR2870 / iR3570 / iR4570 / / / /

The following shows a typical System configuration:

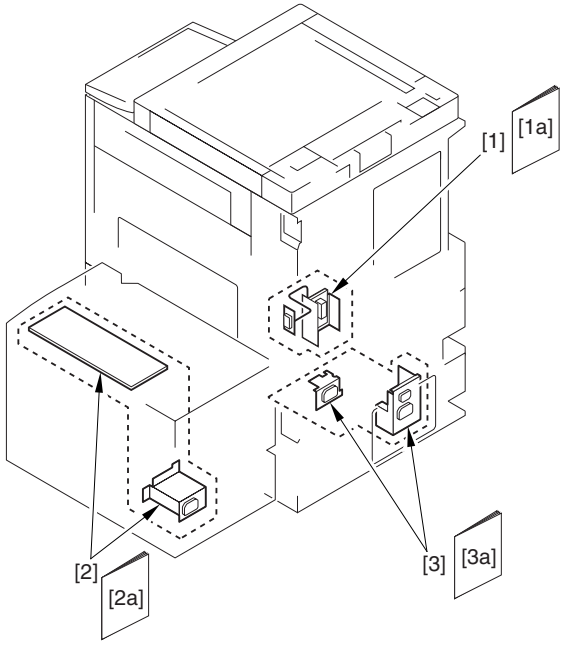

F-1-11
T-1-20

[1]Heater PCB-C1

[1a]Installation Procedure
- Installation of the Heater PCB-C1
- Installation of the Cassette Heater Unit-29
(installation to the printer unit)
- Installation of the Reader Heater Unit-B1

[2]Cassette Heater Unit-25
(Its operation requires the installation of the Heater PCB-C1 and the Cassette Heater Mounting Kit-B1.)

[2a]Installation Procedure
- Installation of the Cassette Heater Unit-29
*Not used for mounting this unit to this model.

[3]Cassette Heater Mounting Kit-B1

[3a]Installation Procedure
- Installation of the Cassette Heater Mounting Kit-B1
- Installation of the Cassette Heater Unit-25
- Installation of the Cassette Heater Unit-29
(installation to the cassette pedestal)

1.1.14 Printing/Transmitting Accessories System Configuration

iR2270 / iR2870 / iR3570 / iR4570 / / / /

The following is a diagram of the system configuration:

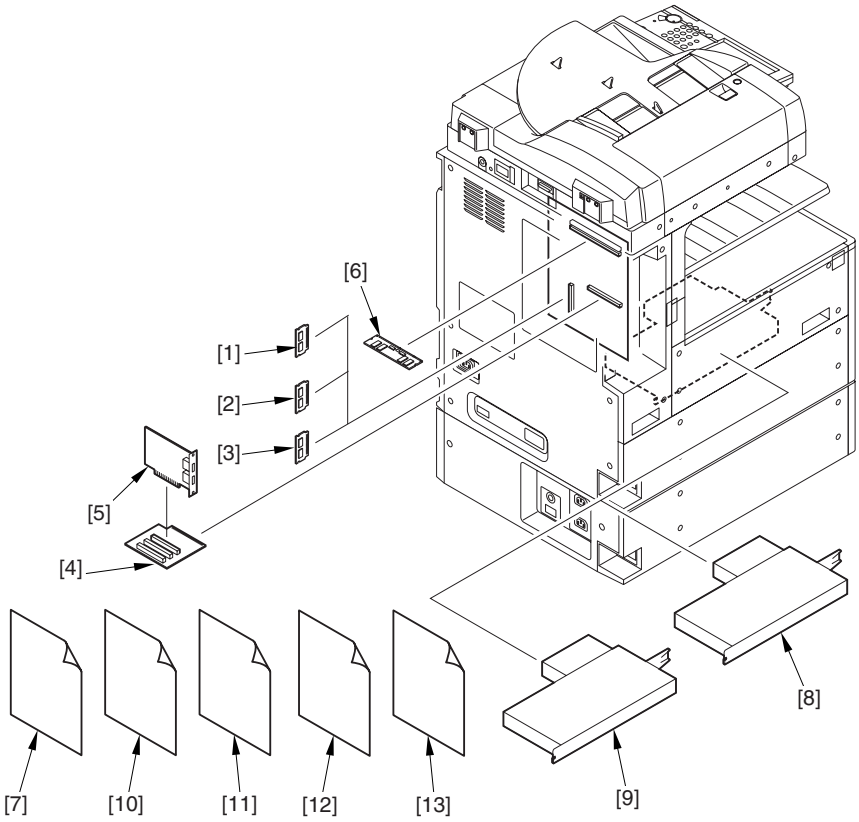

F-1-12

[1] UFR II Printer Kit-E3 (P BootROM)
[2] Printer Kit-E2 (H BootROM: for 230 V model)
[3] Multi-PDL Printer Kit-E1 (N BootROM)
[4] Expansion Bus-B1
[5] USB Application Interface Board-D1
[6] iR256MB Expansion RAM-B1 (standard with 120V model)
[7] iR Security Kit-A2 (License)
[8] Super G3 Fax Board-Q1
[9] Multi FAX Board-D1 (for 120 V model)
[10] Univrsal Send Kit -B1 (License)
[11] Universal Send PDF Enhancement Kit-B1 (License: for 120 V model)
[12] Universal Send PDF Encryption Kit-B1 (License: for 230 V model)
[13] Universal Send Searchable PDF Kit-A1 (License: for 230 V model)

1.1.15 List of Print Transmission Optional Functions

iR2270 / iR2870 / iR3570 / iR4570 / / / /

- List of Print Transmission Optional Functions (120-V model)
The following is a brief explanation of the functions expected of the accessories; for details, see the chapters that follow:

T-1-21

UFR II print function	==>	UFR II Printer Kit-E3 (P BootROM)
UFR II/PCL/PS print function	==>	Multi-PDL Printer Kit-E1 (N BootROM)
Send function	==>	Univrsal Send Kit -B1
Fax function (1-line)	==>	Super G3 Fax Board-Q1

Fax function (2-line)	==>	Multi FAX Board-D1
MEAP application USB connection function	==>	USB Application Interface Board-D1 Expansion Bus-B1
Security function (HDD initialization+ encryption)	==>	USB Application Interface Board-D1 Expansion Bus-B1 iR Security Kit-A2
Encryption PDF function + searchable PDF function	==>	Univrsal Send Kit -B1 Universal Send PDF Enhancement Kit-B1

- List of Print Transmission Optional Functions (230-V model)

The following is a brief explanation of the functions expected of the accessories; for details, see the chapters that follow:

T-1-22

UFR II print function	==>	UFR II Printer Kit-E3 (P BootROM)
UFR II/PCL print function	==>	Printer Kit-E2 (H BootROM) iR256MB Expansion RAM-B1
UFR II/PCL/PS print function	==>	Multi-PDL Printer Kit-E1 (N BootROM) iR256MB Expansion RAM-B1
Send function	==>	Univrsal Send Kit -B1
Fax function (1-line)	==>	Super G3 Fax Board-Q1
MEAP function (C boot)	==>	no need for memory expansion MEAP authentication, MEAP application operation are both possible
MEAP function (P boot)	==>	**-When you want to enable only use of MEAP authentication** no need for memory expansion If MEAP application is installed, the device will not operate (E604-0001 is displayed) **-When you want to enable use of MEAP authentication and MEAP application operation** need for iR256 MB Expansion RAM-B1 installed
MEAP function (H boot/N boot)	==>	memory expansion needed without memory expansion, the device will not operate (E744 is displayed)
MEAP application USB connection function	==>	USB Application Interface Board-D1 Expansion Bus-B1
Security function (HDD initialization+ encryption)	==>	USB Application Interface Board-D1 Expansion Bus-B1 iR Security Kit-A2 iR256MB Expansion RAM-B1
Encryption PDF function	==>	Univrsal Send Kit -B1 Universal Send PDF Encryption Kit-B1
Searchable PDF function	==>	Univrsal Send Kit -B1 Universal Send Searchable PDF Kit-A1 iR256MB Expansion RAM-B1
Encryption PDF function + Searchable PDF function	==>	Univrsal Send Kit -B1 Universal Send PDF Encryption Kit-B1 Universal Send Searchable PDF Kit-A1 iR256MB Expansion RAM-B1

1.1.16 Printing/Transmission Accessories System Configuration

iR2230 / / iR3530

The configuration is as shown in the following figure:

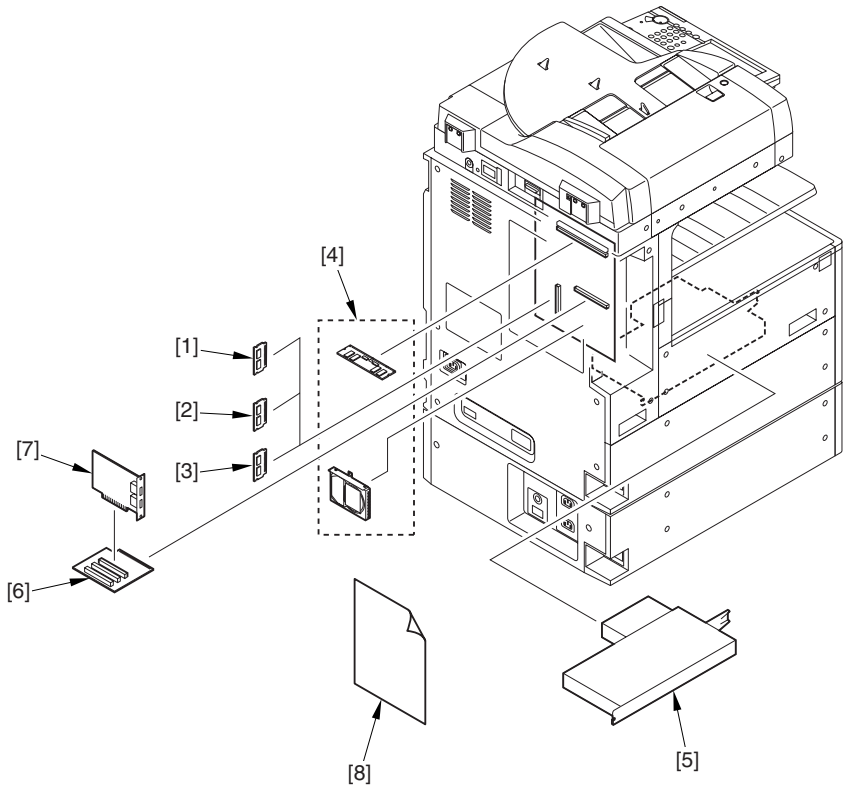

F-1-13

[1] UFR II Printer Kit-E3 (P Boot ROM)
[2] Printer Kit-E2 (H Boot ROM)
[3] Multi PDL Printer Kit-E1 (N Boot ROM)
[4] iR System Expansion Kit-A1
[5] Super G3 Fax Board-Q1
[6] PCI Bus Expansion Kit-B1
[7] Security Expansion Board (USB)-D1
[8] iR Security Kit-A2 (license certificate)

1.1.17 Functions of the Printing/Transmission Functions

iR2230 / / iR3530

- List of Print Transmission Optional Functions
The following is a brief explanation of the functions expected of the accessories; for details, see the chapters that follow:

T-1-23

UFR II print function	==>	UFR II Printer Kit-E3 (P BootROM) iR System Expansion Kit-A1
UFR II/PCL print function	==>	Printer Kit-E2 (H BootROM) iR System Expansion Kit-A1
UFR II/PCL/PS print function	==>	Multi-PDL Printer Kit-E1 (N BootROM) iR System Expansion Kit-A1
Fax function (1-line)	==>	Super G3 Fax Board-Q1 iR System Expansion Kit-A1
Security function (HDD initialization+ encryption)	==>	USB Application Interface Board-D1 Expansion Bus-B1 iR Security Kit-A2 iR System Expansion Kit-A1

1.2 Product Specifications

1.2.1 Names of Parts

1.2.1.1 Names of Parts

iR2270 / iR2870 / iR3570 / iR4570 / / / /

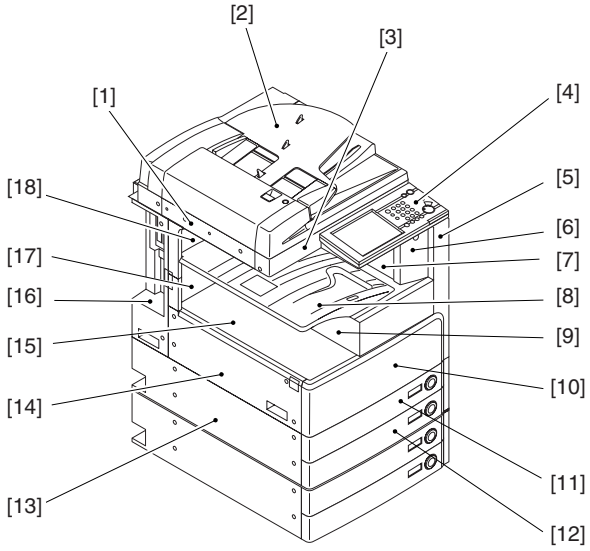

F-1-14

[1] ADF reading glass retainer
[2] DADF
[3] Reader cover (front)
[4] Control panel
[5] Support cover (right)
[6] Support cover
[7] Delivery tray right cover
[8] Delivery tray
[9] Inside right cover
[10] Front cover unit
[11] Cassette 1
[12] Cassette 2
[13] Left cover (lower)
[14] Left cover
[15] Inside base cover
[16] Left cover (rear)
[17] Delivery tray rear cover (lower)
[18] Delivery tray rear cover

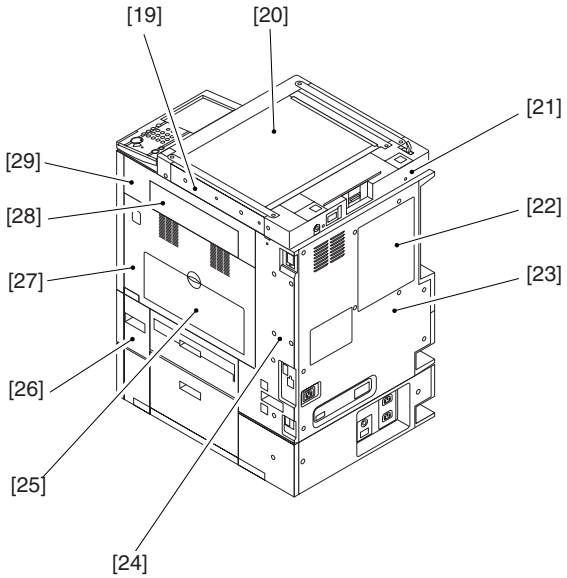

F-1-15

[19] Reader over (right)
[20] Copyboard glass
[21] Reader cover (rear)
[22] Face over (iR3570,4570)
[23] Rear cover
[24] Right cover (rear)
[25] Manual feed pickup tray
[26] Right cover (lower front)
[27] Right door unit
[28] Delivery cover
[29] Right cover (upper)

1.2.1.2 External View

iR2230 / / iR3530 /

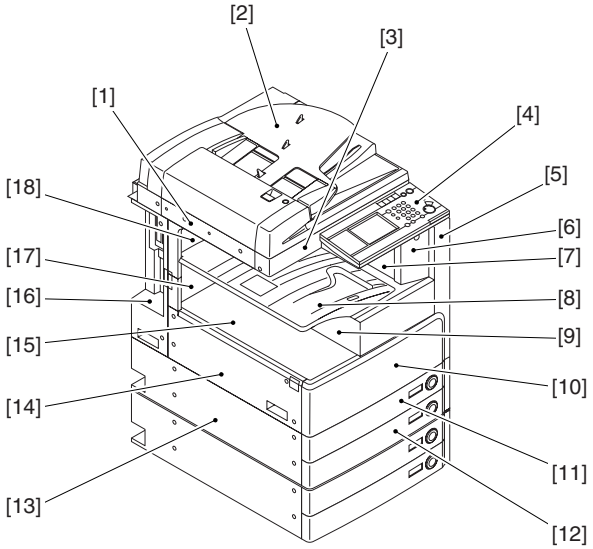

F-1-16

[1] ADF reading glass retainer
[2] DADF (optional)
[3] Reader cover (front)
[4] Control panel
[5] Support cover (right)
[6] Support cover
[7] Delivery tray right cover
[8] Delivery tray
[9] Inside right cover
[10] Front cover unit
[11] Cassette 1
[12] Cassette 2
[13] Left cover (lower)
[14] Left cover
[15] Inside base cover
[16] Left cover (rear)
[17] Output tray rear cover (lower)
[18] Output tray rear cover

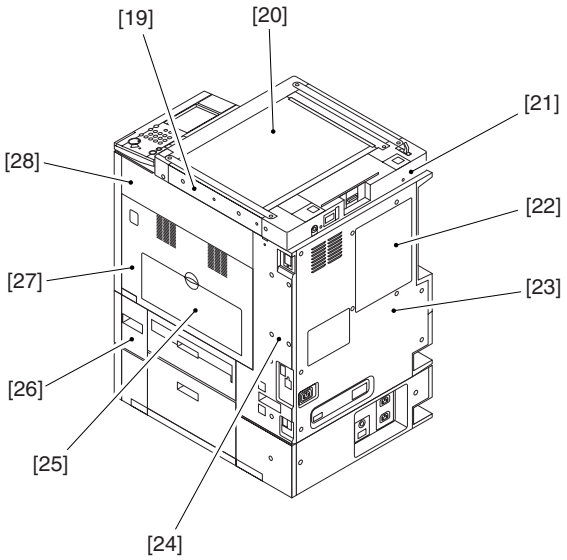

F-1-17

[19] Reader cover (right)
[20] Platen glass
[21] Reader cover (rear)
[22] Face cover
[23] Rear cover
[24] Right cover (rear)
[25] Manual feed pickup tray
[26] Right cover (lower front)
[27] Right door unit
[28] Delivery cover
[29] Right cover (upper)

1.2.1.3 Cross-Section

iR2270 / iR2870 / iR3570 / iR4570 / / / / / iR2230 / / / iR3530 /

iR2270/iR2270F/iR2870/iR2870F Model

iR2230/iR2830/iR3530/iR2280F Model

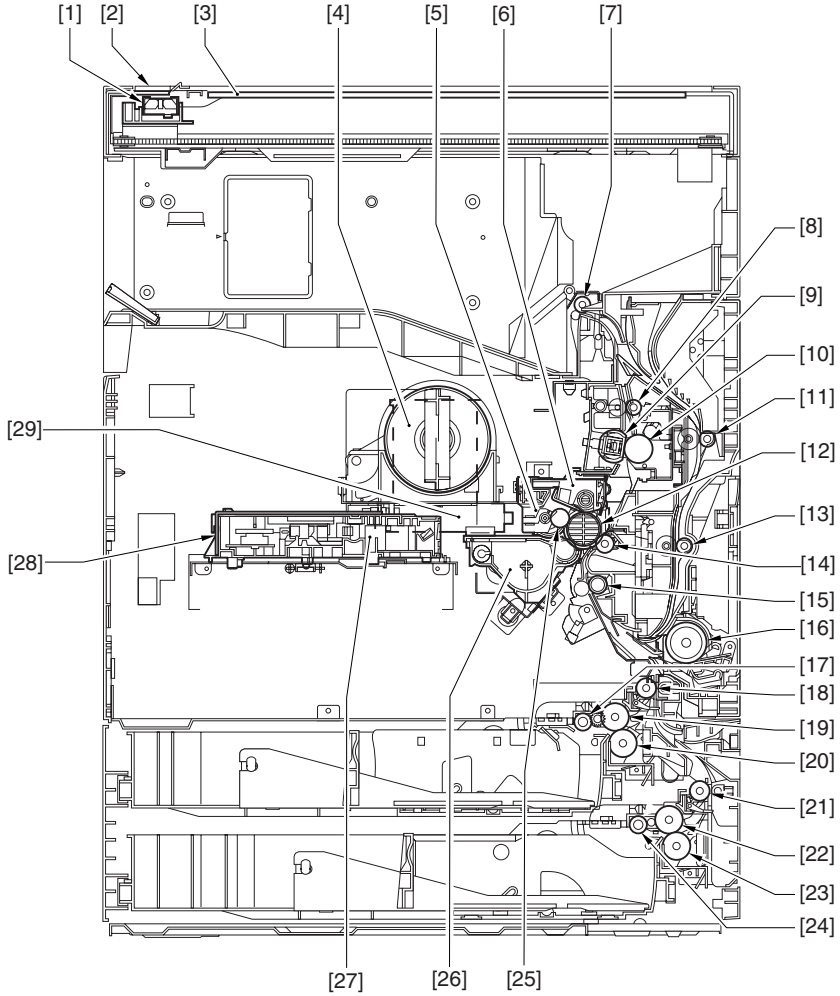

F-1-18

iR3570/iR3570F/iR4570/iR4570F Model

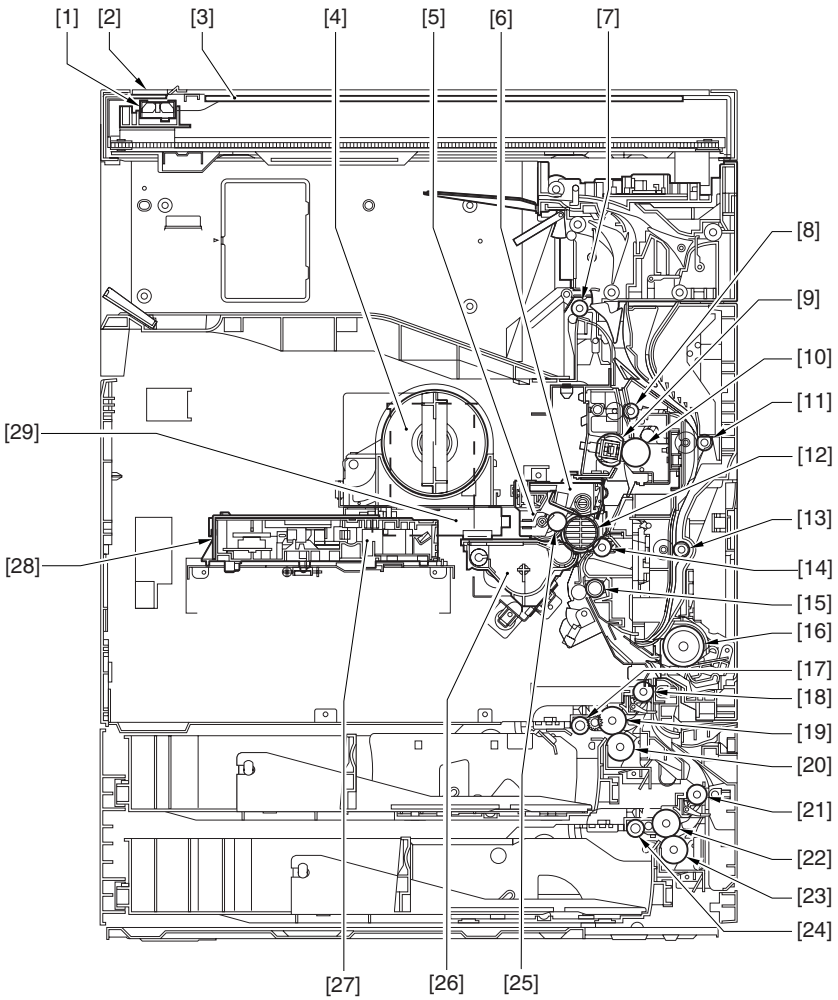

F-1-19

T-1-24

[1]	CIS unit	[16]	Manual feed pickup roller
[2]	ADF reading glass	[17]	Pickup roller (cassette 1)
[3]	Platen glass	[18]	Vertical path roller 1
[4]	Toner bottle	[19]	Feed roller (cassette 1)
[5]	Drum unit	[20]	Separation roller (cassette 1)
[6]	Drum cleaning unit	[21]	Vertical path roller 2
[7]	Delivery roller	[22]	Feed roller (cassette 2)
[8]	Fixing outlet roller	[23]	Separation roller (cassette 2)
[9]	Fixing film unit	[24]	Pickup roller (cassette 2)
[10]	Pressure roller	[25]	Primary charging roller
[11]	Duplex feed roller	[26]	Developing unit
[12]	Photosensitive drum	[27]	Laser scanner unit
[13]	Duplex feed roller 2	[28]	Dust-blocking sheet
[14]	Transfer roller	[29]	Sub hopper
[15]	Registration roller		

1.2.2 Using the Machine

1.2.2.1 Turning On the Power Switch

iR2270 / iR2870 / iR3570 / iR4570 / / / / / iR2230 / / / iR3530

The machine possesses 2 power switches: main power switch and control power switch. Normally (i.e., unless the machine is in a sleep state), the machine will be supplied with power when you turn on its main power switch.

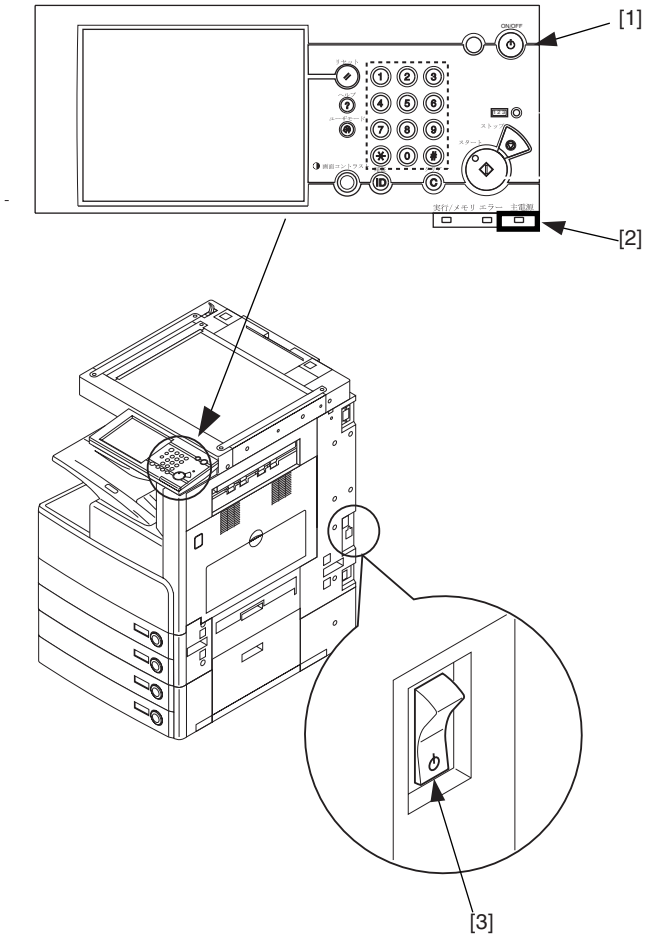

F-1-20

iR4570/3570, 2870/2270

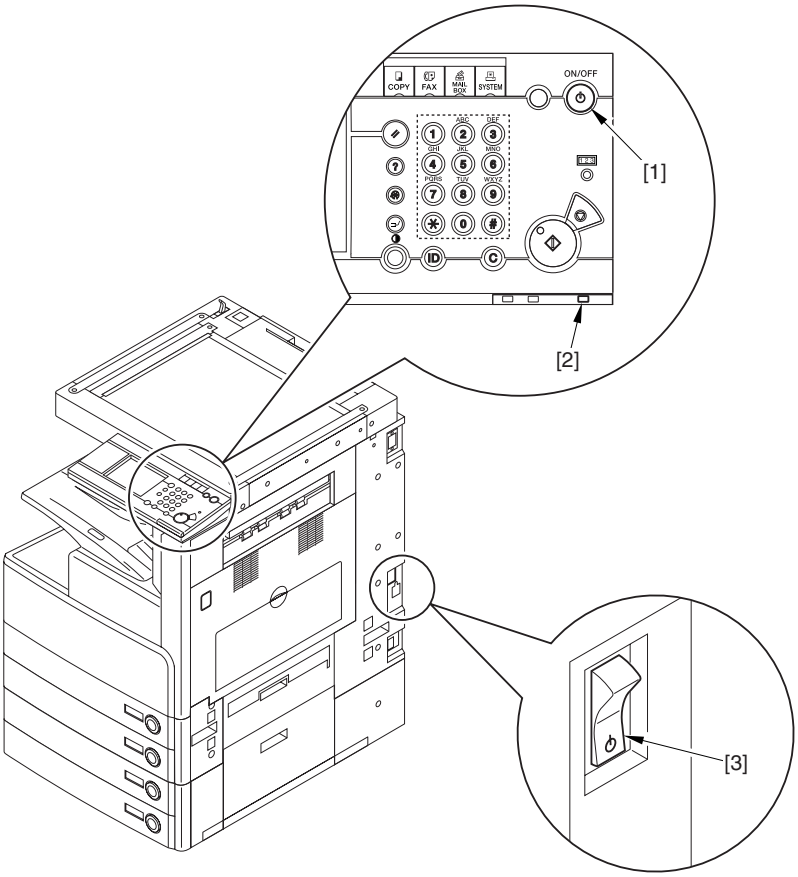

F-1-21

iR4530/3530/2830/2230

[1]Control panel power switch
[2]Main power lamp
[3]Main power switch

⚠Never turn off the main power while the display shows the progress bar, indicating that the HDD is being accessed. Otherwise, the HDD may suffer a fault (E602). This caution does not apply to models not equipped with a HDD.

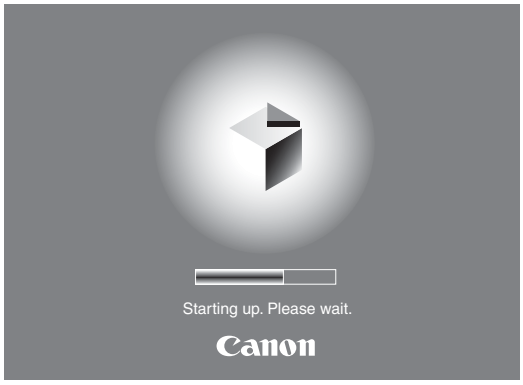

F-1-22

1.2.2.2 When Turning Off the Main Power Switch

iR2270 / iR2870 / iR3570 / iR4570 / / / / / iR2230 / / iR3530 /

Be sure always to turn off the control panel power switch before turning off the main power switch

⚠
When Using the Print Function/When Receiving or Transmitting a Fax
Before using the main power switch, check to be sure that the Execute/Memory lamp on the control panel is off. (Turning off the main power switch while an operation is under way can cause loss of data.)

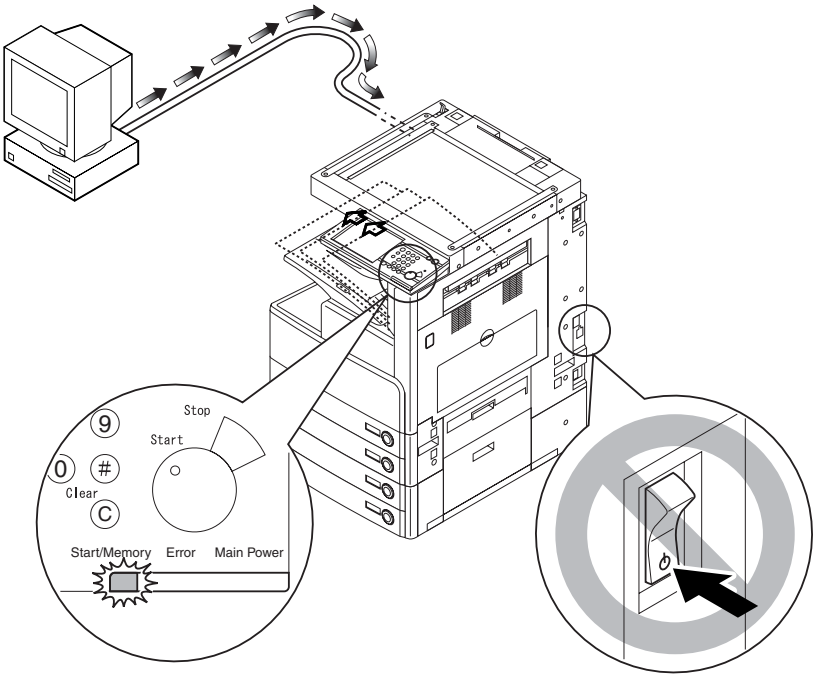

F-1-23

⚠
At Time of Downloading
Do not turn off the main power switch while downloading is under way. Otherwise, the machine may not be able to operate normally.

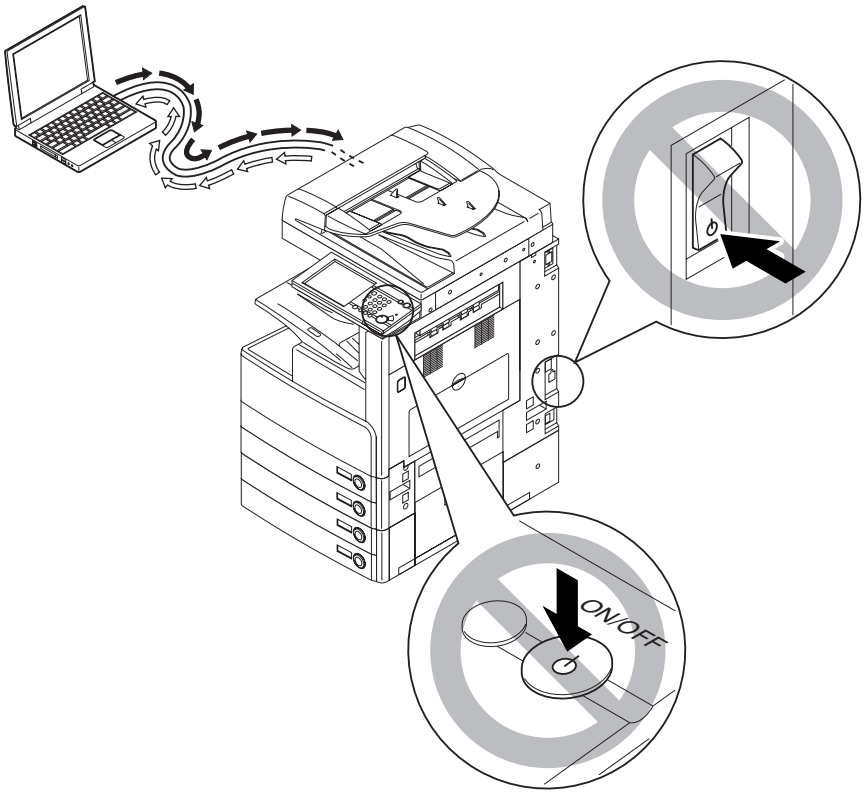

F-1-24

1.2.2.3 Points to Note About Turning Off the Main Power Switch

iR2230 / / iR3530 /

Before turning off the main power switch, you must first press the control panel power switch.

⚠When the Printer Unit Is in Operation or a Fax Is Being Received
Check to be sure that the Execute/Memory lamp on the control panel is off.
(Otherwise, the data being processed may be lost.)

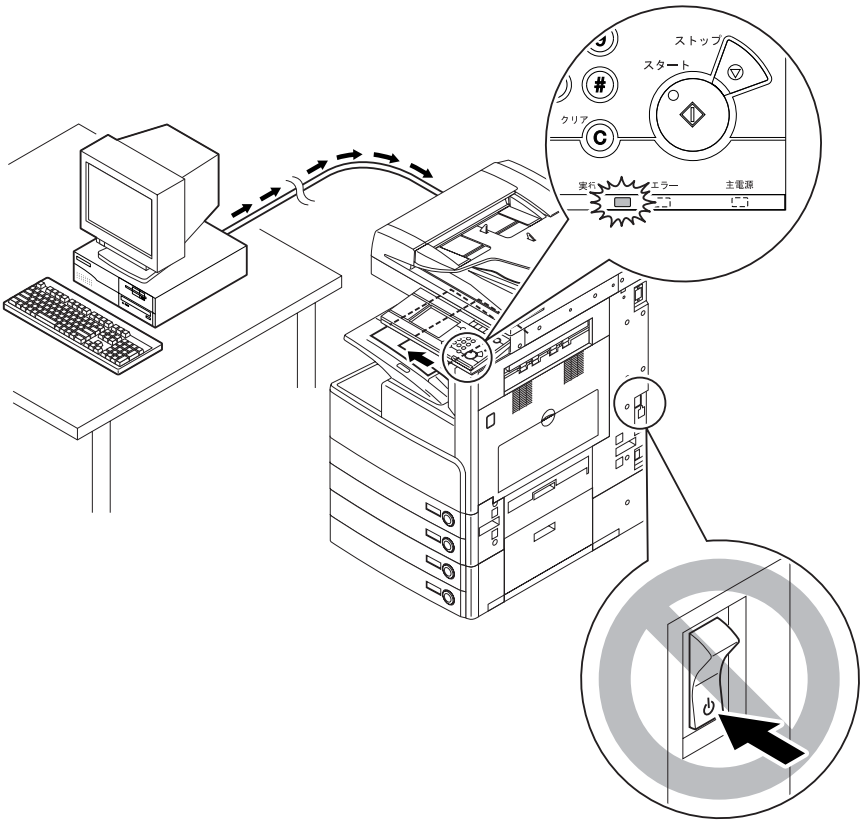

F-1-25

⚠While Downloading Is Taking Place

Do not turn off the main power switch or the control panel power switch.
(Otherwise, the machine may fail to operate.)

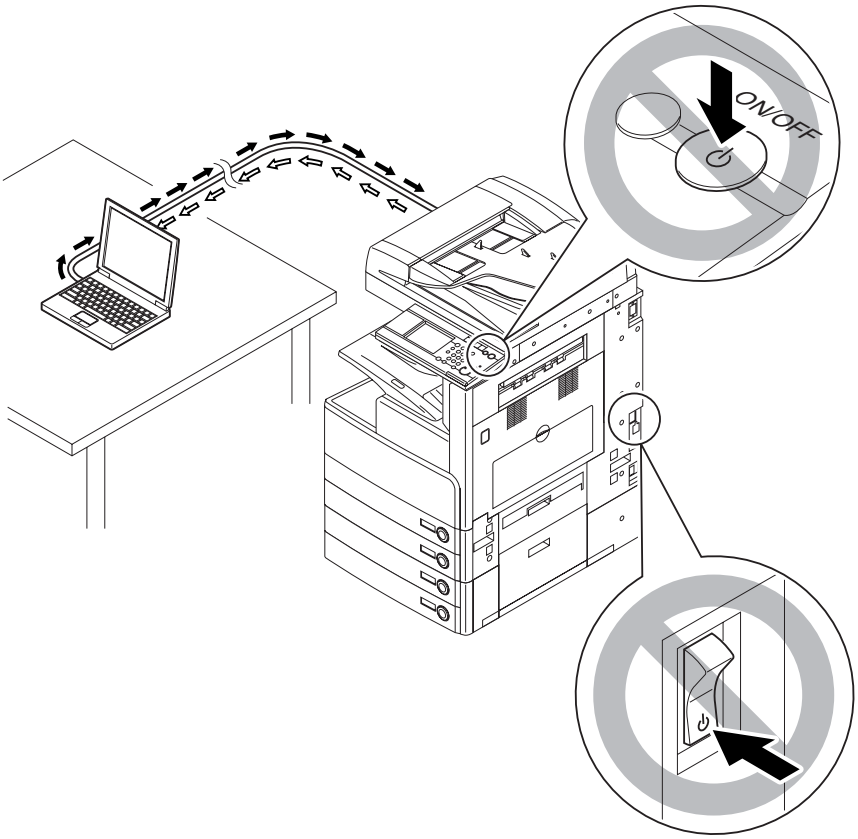

F-1-26

1.2.2.4 Control Panel

iR2270 / iR2870 / iR3570 / iR4570 / / / /

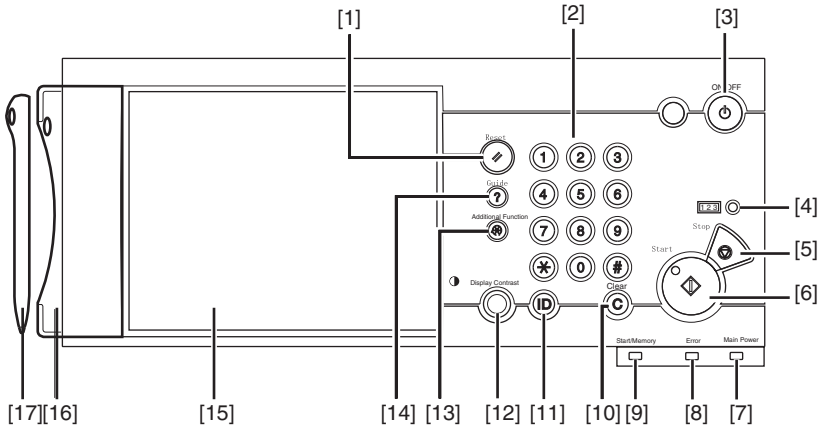

F-1-27

T-1-25

[1] Reset key	[10] Clear key
[2] Keypad	[11] ID key
[3] Control panel power switch	[12] Image contrast adjustment dial
[4] Counter Check key	[13] User Mode key
[5] Stop key	[14] Help key
[6] Start key	[15] Touch panel
[7] Main power lamp	[16] Touch pen holder
[8] Error lamp	[17] Touch pen
[9] Execute/Memory lamp	

1.2.2.5 Control Panel

iR2230 / / iR3530 /

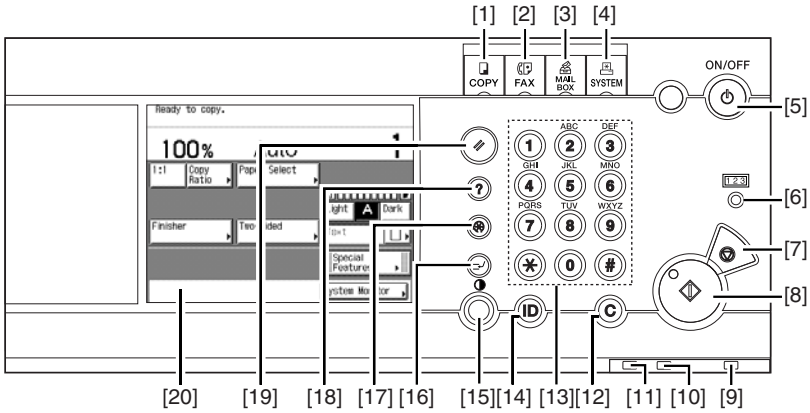

F-1-28

T-1-26

[1] Copy key	[11] Execute/Memory key
[2] Fax key	[12] Clear key
[3] Box key	[13] Keypad
[4] Extension key	[14] ID key
[5] Control panel power switch	[15] Image contrast adjustment dial
[6] Check Counter key	[16] Interrupt key
[7] Stop key	[17] User mode key
[8] Start key	[18] Help key
[9] Main power lamp	[19] Reset key
[10] Error lamp	[20] Touch panel

1.2.3 User Mode Items

1.2.3.1 Common Settings

iR2270 / iR2870 / iR3570 / iR4570 / / / /

*Factory settings.
**Indicated in the presence of a specific accessory.
***If iR4570, iR3570, iR2870, or iR2270, indicated in the presence of a specific accessory (if model F, standard).

T-1-27

Mode	Description
initial setup	select initial function: *copy/transmit/Box/MEAP
	use 'system status screen' as initial screen: ON/*OFF
	give priority to 'device' of system status screen: *ON/OFF
select post-auto reset function	*use/do not use
set order of functions	copy/transmit/Box/remote scan (or functions appearing on tab); change order by Up/Down key
	set order of function groups: group A, MEAP, group B
enable/disable buzzer	input sound: *ON/OFF
	invalid input sound: ON/*OFF
	supply alert sound: ON/*OFF
	warning sound: *ON/OFF
	job end sound: *ON/OFF
indicate paper level message	*ON/OFF
inch input	ON/*OFF (if US, *on)
enable/disable auto cassette select	copy/printer/Box, other (manual feed: ON/*OFF + cassette: *ON/OFF; manual feed not applicable to printer) consider copy/paper type: ON/*OFF (toggle)
register envelope cassette	ENV.1/ENV.2 default: env1/COM10/env2 COM10
register paper type	cassette 1/cassette 2/cassette 3/cassette 4/cassette 5 (paper deck); plain paper, recycled paper, colored paper, punched paper
power consumption at sleep	*low/high
select special tray** (w/ finisher)	- w/ No. 3 tray tray A: host middle tray tray B: No. 3 tray trayA: copy/box/printer/receive/fax/other trayB: copy/box/*printer/receive/*fax/*other fine setup for receive/fax tray A: receive/fax 1/fax 2 tray B: receive/fax 1/fax 2

Mode	Description
	- w/ inner tray tray A: host middle tray (lower) tray B: host middle tray (upper) tray A:*copy/box/printer/receive/fax/other tray B: copy/box/*printer/receive/*fax/*other fine setup for receive/fax tray A: receive, fax1, fax 2 tray B: receive/fax 1/*fax 2 - w/ inner tray + No. 3 tray tray A: host middle tray (lower) tray B: host middle tray (upper) tray C: No. 3 tray tray A: *copy*Box/printer/receive/fax/other tray B: copy/Box/*printer/receive/fax/other tray C: copy/Box/printer/receive/*fax/*other fine setup for receive/fax tray A: receive/fax 1/fax 2 tray B: receive/fax 1/fax 2 tray C: *receive/*fax 1/*fax 2 - Finisher-S1 + option tray tray A: finisher option tray tray B: finisher output tray tray A: *copy/*Box/printer/receive/fax/other tray B: copy/Box/*printer/receive/*fax/*other fine setup for receive/fax tray A: receive/fax 1/fax 2 tray B: *receive/*fax 1/fax 2 - Finisher-S1 + No. 3 tray tray A: finisher output tray tray B: No. 3 tray tray A: *copy/*Box/*printer/receive/fax/other tray B: copy/Box/printer/receive/*fax/*other fine setup for receive/fax tray A: receive/fax 1/fax 2 tray B: *receive/*fax 1/*fax 2 - Finisher-S1 + option tray + No. 3 tray tray A: finisher optional tray tray B: finisher output tray tray C: No. 3 tray tray A: *copy/*Box/printer/receive/fax/other tray B: copy/Box/*printer/receive/fax/other tray C: copy/Box/printer/receive/*fax/*other fine tune for fax/fax tray A: fax/fax 1/fax 2 tray B: receive/fax 1/fax 2 tray C: *receive/*fax 1/*fax 2 - w/ Fisher-Q3/Q4 tray A: finisher output tray (upper) tray B: finisher output tray (lower) tray C: host middle tray tray A: *copy/*Box/printer/receive/fax/other tray B: copy/Box/*printer/receive/fax/other tray C: copy/Box/printer/receive/*fax/*other fine tune for receive/fax tray A: fax/fax 1/fax 2 tray B: receive/fax 1/fax 2 tray C: *receive/*fax 1/*fax 2 - if w/o fax, 'receive/fax'>'receive' - if fax only 'receive/fax'>'fax - fine setup for receive/fax only if w/ fax - if fax is 1-line 'fax 1/fax 2'>'fax' *Finisher-S1 (w/o output option), special tray items not indicated - w/o output option tray tray A: host middle tray tray A: *copy/*Box/*printer/receive/*fax/*other (1 output target; therefore, special tray items not indicated)
assign print priority	copy: *1/2/3 printer: 1/*2/3 Box: 1/2/*3

Mode	Description
	receive/fax: 1/2/*3
	other: 1/2/*3
register form for image merge	register: original size; full merge; see-through merge (20, *50, 90%); form name (up to 24 characters); form read delete
	delete
	check copy: select source of paper: print start
	detail info: indicate detailed information, change form name
register page/stamp characters	register/edit: character string (up to 16)
	delete
set manual feed envelope type	ON/*OFF (if outside Japan, fixed to on)
register manual feed paper standard mode	ON (select paper size/select paper type)/*OFF
switch pickup method	indicate manual feed, cassettes 1 through 5 icons and paper type priority on speed/priority on print
set standard mode for local print	select paper:*auto/cassette 1 through 5 number of prints: *1 through 2000 sorter: sort/group/staple sort/*shift sort/shift group/rotation sort/rotation group/punch/Z-fold duplex: on (open to right/open to top/bottom)/*off delete file after print: ON/*OFF merge file: ON/*OFF
switch display language	ON/*OFF
reverse screen color	ON/*OFF
between-job shift**	*ON/OFF
put sheet between jobs**	On (select source of paper)/*OFF
put sheet between sets	On (No. of sets between 10 and 9999; select source of paper)/OFF
indicate print wait time	copy/Box/other (for all, ON/*OFF)
mix papers in output tray	*ON/OFF
indicate cleaning message for read area***	*ON/OFF
limit function	ON/*OFF
shutdown mode	Execute key
reset common settings	Do you want to reset?: yes/no

1.2.3.2 Common Settings

iR2230 / / iR3530 /

*Factory default.
**Indicated in the presence of appropriate accessories.

T-1-28

Mode	Description
set initial function	select initial function: *copier/transmit/box
	use Initial screen for 'system status screen': ON/*OFF
	give priority to 'device' of 'system status screen': *ON/OFF
function after auto clear	*use previous/do not use previous
enable/disable buzzer	input sound: *ON/OFF
	Input invalid sound
	supply pre-alert: ON/*OFF
	alert: *ON/OFF
	job end: *ON/OFF
inch input	ON/*OFF (if US, *ON)
enable/disable cassette auto selection	copier/printer/box/other (manual feed: ON/*OFF + individual cassettes: ON/OFF) (if printer, no manual feed), consider copy/paper type: (toggle) ON/*OFF
register envelop cassette	ENV.1/ENV.2 COM10/Monarch/DL/ISO-B5/ISO-C5/No. 4 default: Env.1 No. 4 (Japan), COM10 (outside Japan), Env.2 COM10 (both Japan and outside Japan)
register paper type	cassette 1/cassette 2/cassette 3/cassette 4/cassette 5 (paper deck): plain paper, recycled paper, colored paper, punched paper
power consumption in sleep	*low/high
select special tray** (w/ finisher)	w/ tray 3 tray A: machine middle tray tray B: tray 3 tray A: *copier/box/printer/receive/fax/other tray B: copier/box/*printer/receive/*fax/*other detail setup (receive/fax) tray A: receive/fax 1/fax 2 tray B: *receive/fax 1/fax 2

Mode	Description
	w/ Inner Tray tray A: machine middle tray (lower) tray B: machine cent tray (upper) tray A: *copier/*box/printer/receive/fax/other tray B: copier/box/*printer/receive/*fax/*other detail setup (receive/fax) tray A: receive/fax 1/fax 2 tray B: *receive/fax 1/*fax 2
	w/ inner tray + tray 3 tray A: machine middle tray (lower) tray B: machine middle tray (upper) tray C: tray 3 tray A: *copier/box/printer/receive/fax/other tray B: copier/box/*printer/receive/fax/other tray C: copier/box/printer/receive/fax*/other* detail setup (receive/fax) tray A: receive/fax 1/fax 2 tray B: receive/fax 1/fax 2 tray C: *receive/*fax 1/*fax 2
	*Fin-S1 + optional tray tray A= Fin optional tray tray B= Fin output tray tray A: *copier/*box/printer/receive/fax/other tray B: copier/box/*printer/receive/*fax/*other detail setup (receive/fax) tray A: receive/fax 1/fax 2 tray B: *receive/*fax 1/*fax 2
	Fin-S1 + tray 3 tray A= Fin output tray tray B= tray 3 tray A: *copier/*box/*printer/receive/fax/other tray B: copier/box/printer/*fax/*other detail setup (receive/fax) tray A: receive/fax 1/fax 2 tray B: *receive/*fax 1/*fax 2
	Fin-S1 + optional tray + tray 3 tray A= Fin optional tray tray B= Fin output tray tray C= tray 3 tray A: *copier/*box/printer/receive/fax/other tray B: copier/box/*printer/receive/fax/other tray C: copier/box/printer/receive/*fax/*other detail setup (receive/fax) tray A: receive/fax 1/fax 2 tray B: receive/fax 1/fax 2 tray C: *receive/*fax 1/*fax 2
	w/ Fin-Q3/Q4 tray A= Fin output tray (upper) tray B= Fin output tray (lower) tray C= machine middle tray tray A: *copier/*box/printer/receive/fax/other tray B: copier/box/*printer/receive/fax/other tray C: copier/box/printer/receive/*fax/*other detail setup (receive/fax) tray A: receive/fax 1/fax 2 tray B: receive/fax 1/fax 2 tray C: *receive/*fax 1/*fax 2
	- if w/o fax 'receive fax' -> 'receive' - if fax only 'receive/fax' -> 'fax' - detail setup (review/fax) applies if w/ fax - if single-line fax, 'fax 1/fax 2' -> 'fax' *If Fin-S1 (not equipped with an output accessory), the special tray is not indicated.
	w/ output optional tray tray A: machine middle tray tray A: *copier/*box/*printer/receive/*fax/*other (There is only one output target and, therefore, the special tray is not indicated.)
print priority	copier: *1/2/3

Mode	Description
	printer: 1/*2/3
	box: 1/2/*3
	fax/fax: 1/2/*3
	other: 1/2/*3
manual feed paper standard register mode	ON (paper size select/paper type select)/*OFF
pickup method switchover	manual feed; cassette 1 through 5 icons and paper type priority on speed/priority on print side
local print standard mode	paper select: *auto/cassette 1 through 5 number of prints: *1 to 9999 sorter: sort/group/staple sort/*shift sort/shift group/rotation sort/rotation group/ punch hole/z-fold w/o finisher, w/ inner 2-way tray: non-sort/sort*/rotation sort/group/rotation group duplex print: ON (open like book/open like calendar) *OFF delete file after printing: ON/*OFF merge file: ON/*OFF
switch display language:	ON/*OFF
reverse screen color:	ON/*OFF
indicate print wait time:	copier/box/other (for each, ON/*OFF)
mix paper in output tray**:	*ON/OFF
prompt for cleaning of reader unit***:	*ON/OFF
function limit mode:	ON/*OFF
shut-down mode:	execute key
reset common settings	Do you really want to reset?: yes/no

1.2.3.3 Setting the Time

iR2270 / iR2870 / iR3570 / iR4570 / / / /

*Factory settings.

T-1-29

Mode	Description
set time (fine)	in 1-min increments (using +/-)
set auto sleep time	10, 15, 20, 30, 40, 50 min; *1 hr; 90 min, 2, 3, 4 hr
auto reset time	0: disable; 1, *2, ..., 9 min (in 1-min increments)
set weekly timer	00:00 to 23:59 (in 1-min increments); everyday from Sun to Sat

1.2.3.4 Setting the Timer

iR2230 / / / iR3530 /

*Factory default.

T-1-30

Mode	Description
fine-tune time	set date/time (12 numerals) time zone: GMT - 12:00 ~ GMT + 12:00 - GMT + 9:00* daylight saving: ON/OFF*
auto sleep time:	10 sec; 1.2*, 10, 15, 20, 30, 40, 50 min; 1 hr; 90 min; 2, 3, 4 hr
auto clear time:	0= none; 1, *2, ..., 9 min (in 1-min increments)
set weekly timer:	between 00:00 and 23:59 from Sun to Sat (in 1-min increments)

1.2.3.5 Adjustments and Cleaning

iR2270 / iR2870 / iR3570 / iR4570 / / / /

*Factory settings.
**Indicated in the presence of a specific accessory.
***If iR4570, iR3570, iR2870, or iR2270, indicated in the presence of a specific accessory (if model F, standard).

T-1-31

Mode	Description
zoom fine adjust	XY, individually: -1.0T to +1.0% (in 0.1% increments)/*0%
center bind staple edging** (w/ saddle finisher)	Start key
center bind position change** (w/ saddle finisher)	size: A3,11x17/B4/LGL/A4R,LTRR position: -2.0 mm to +2.0 mm (in 0.35-mm increments)/*0 mm
density correction	copy/Box, transmit; 9 sets each (at time of shipment, set to '5')
page print/number of set prints adjust stamp position	X: -8 mm to +8 mm (in 1-mm increments)/*0 mm Y: -8 mm to +8 mm (in 1-mm increment)/*0 mm
clean feeder***	Start key

1.2.3.6 Adjustment and Cleaning

iR2230 / / iR3530 /

*Factory default.

***Indicated when appropriate accessories are installed.

T-1-32

Mode	Description
zoom fine-adjust	XY independent: -1.0% to +1.0% (in 0.1% increments), *0%
density correction	copier/box, transmit (each in 9 steps; at time of shipment, set to '5')
feeder cleaning***	Start key

1.2.3.7 Report Output

iR2270 / iR2870 / iR3570 / iR4570 / / / /

*Factory settings.
***If iR4570, iR3570, iR2870, or iR2270, indicated in the presence of a specific accessory (if model F, standard).

T-1-33

Mode	Description
transmit (setup)***	transmission results report: *only if error/ON/OFF
	show transmission original: *ON/OFF show transmission original for coded PDF: ON/*OFF
	communication control report
	print automatically at 100 communications:
	print at specified time: ON/*OFF
	set time: *00:00 to 23:59
	separate transmission and reception: ON/*OFF (toggle)
fax (settings)***	fax transmission result report: *only if error/ON/OFF
	show transmission report:*ON/OFF
	fax communication control report print automatically every 40 communications:
	print at specified time: ON/*OFF
	set time: *00:00 to 23:59
	separate transmission and reception: ON/*OFF (toggle)
	fax reception result report: only if error/ON/*OFF
	fax Box reception report:
list print (transmission)***	address book list: list print
	user data list: Do you want to print the user data list? yes/no
list print (fax)***	user data list: Do you want to print the user data list? yes/no
list print (network)	user list: Do you want to print the user data list? yes/no
	configuration page, font list
	PS: status print, font list
	LIPS/emulation: status print, font list, LIPS utility (status print, overlay list, overlay print, font list, micro list, form list, color sample), N201 utility (status print, overlay print), ESCP utility (status print, overlay print), i5577 utility (status print, overlay print), HP-GL utility (status print, sample print)

1.2.3.8 Printing Out a Report

iR2230 / / iR3530 /

*Factory default.
***Indicated when appropriate accessories are installed.

T-1-34

Mode	Description
transmit (specifications settings)***	transmission result report: *only when error/ON/OFF
	transmission original display: *ON/OFF transmission original display for encryption PDF: ON/*OFF
	communication control report
	print automatically every 100 communications: *ON/OFF
	print at specified time: ON/*OFF
	set time: *00:00~23:59
	separate transmit and receive: (toggle) ON/*OFF
fax (specifications settings)***	fax transmission result report: *only if error/ON/OFF
	transmission original display: *ON/OFF
	fax communication control report print automatically every 40 communications: *ON/OFF
	print at specified time: ON/*OFF
	set time: *00:00~23:59
	separate transmit and receive: (toggle) ON/*OFF
	fax receive result report: only if error/ON/*OFF
	fax box review report: *ON/OFF
list print (transmit)***	address book list: print list
	user data list: Do you want to print the user data list?: yes/no
print list (fax)***	user data list: Do you want to print the user data list?: yes/no

Mode	Description
List print (network)	user data list: Do you want to print the user data list?: yes/no
	PCL: Configuration Page,Font List
	PS: status print, font list
	LIPS/emulation: status print, font list, LIPS utility (status print, overlay list, overlay print, font list, macro list, form list, color sample), N201 utility (status print, overlay print), ESC/P utility (status print, overlay print), i5577 utility (status print, overlay print), HP-GL utility (status print, sample print)

1.2.3.9 System Control Settings

iR2270 / iR2870 / iR3570 / iR4570 / / iR2270N / / iR2870N / / iR3570N / / iR4570N / iR2230 /

*Factory settings.
**Indicated in the presence of a specific accessory.
***If iR5570, iR3570, iR2870, or iR2270, indicated in the presence of a specific accessory (if model F, standard).

T-1-35

Mode	Description
set system administrator info	system administrator group ID: 7 characters max
	system administration ID: set (7 characters)
	system administrator name: 32 bytes
	mail address: 64 bytes
	contact: 32 bytes
	comment: 32 bytes
group ID control	group ID control: ON/*OFF
	register ID No.: register, edit, delete, limit function
	count control: reset, count print, all clear
	print without known ID: *ON/OFF
	scan without known ID: *ON/OFF
set communications control	e-mail/**i-fax setup
	transmission data size upper limit: 0: none; 1 through 99 MB, *3 MB
	abbreviation name: 40 characters; *attached image
	full mode transmissions time-out: 1 to 99 hr; *24 hr
	MDN/DSN reception print: ON/*OFF
	notify always if error: *ON/OFF
	user server route: ON/*OFF
	fax setup***
	transmission start speed: *33600 bps, 14400 bps, 9600 bps, 7200 bps, 4800 bps, 2400 bps
	reception start speed: 33600 bps*, 14400 bps, 9600 bps, 7200 bps, 4800 bps, 2400 bps
	reception password: 20 characters max.
	FIS switch: ON/*OFF
	system Box setup
	system box ID No.***: 7 characters
	use fax memory reception: ON/*OFF
	use i-fax memory reception: ON/*OFF
	memory reception start time***: everyday/day of week/*none
	memory reception end time***: everyday/day of week/*none
enable/disable remote UI	*ON/OFF use SSL: ON/OFF
limit addresses***	address book ID No.: 7 characters max.
	address book access No. control: ON/*OFF
	limit new addresses: ON/*OFF
set device info	device name: 32 characters
	installation site: 32 characters
transfer setup***	reception method, conditions ON/OFF, register, register transfer without condition, e-mail priority, detail/edit, delete, list print
delete bulletin	delete
auto online/offline shift***	auto on-line shift: ON/*OFF
	auto on-line shift: ON/*OFF
	date/time setup: set (12 numeric characters) time zone: GMT - 12:00 to GMT + 12:00.GMT + *9:00 daylight saving time: ON/*OFF
register LDAP server***	register, detail/edit, delete, print list
register license	24 characters
set print	ON/*OFF group ID: ON/*OFF date: ON/*OFF character: ON/*OFF

Mode	Description
MEAP setup	use HTTP: *ON/OFF use SSL: ON/OFF
	print system info: print
set device info distribution	register recipient: auto search/register, register, detail info, delete
	auto distribution setup: everyday, day of week, *none user mode setting: ON/*OFF network setting: include, do not include group ID: ON/*OFF address book : ON/*OFF
	manual distribution setup: user mode setting: ON/*OFF network setup: include, do not include group ID: ON/*OFF address book: ON/*OFF
	user mode sync level: ON/*OFF
	recover data: user mode settings, group ID, address book
	limit reception by function: user mode setting: ON/*OFF group ID: ON/*OFF address book: ON/*OFF
	distribution/reception history: detail info

1.2.3.10 System Control Settings

iR2230 / / iR3530 /

*Factory default.
***Indicated when appropriate accessories are installed.

T-1-36

Mode	Description
set system administrator information	system administrator ID: 7 characters max.
	system administration ID: set (7 characters)
	system administrator name: 32 characters
	mail address: 64 characters
	contact: 32 characters
	comment: 32 characters
group ID control	group ID control: ON/*OFF
	register ID No.: register, edit, delete, limit function
	count control: clear, count print, all clear
	print job w/ unknown ID: *ON/OFF
	scan job w/ unknown ID: *ON/OFF
set communication control	fax setup*
	transmission start speed: *33600bps,14400bps,9600bps, 7200bps,4800bps,2400bps
	reception start speed: 33600bps*,14400bps,9600bps, 7200bps,4800bps,2400bps
	reception password: 20 characters max.
	FIS switch: ON/*OFF
	system box setup
	system box ID No.***: 7 characters
	use fax memory reception***: ON/*OFF
	use i-fax memory reception**: ON/*OFF
	Memory reception start time***: every day, day of week, *no specification
	memory reception time***: every day, day of work, *no specification
enable/disable remote UI	*ON/OFF use SSL: ON/OFF
limit target***	address book ID No.: 7 characters max.
	address book access No. control: ON/*OFF
	limit new target: ON/*OFF
set device information	device name: 32 characters
	installation site: 32 characters
transfer settings***	reception method, enable/disable condition, register, register for unconditional transfer, importance of e-mail, detail/edit, delete, list print
delete bulletin	delete
auto shift to on-line/ off-line	shift to auto on-line: ON/*OFF
	shift to auto off-line: ON/*OFF
	date/time setting: set (12 numerals) time zone: GMT - 12:00 to GMT + 12:00 - GMT + *9:00 daylight saving: ON/*OFF
register license	24 characters
set print increase:	ON/*OFF group ID: ON/*OFF date: ON/*OFF text: ON/*OFF

1.2.3.11 Copy Settings

iR2270 / iR2870 / iR3570 / iR4570 / / iR2270N / / iR2870N / / iR3570N / / iR4570N / iR2230 /

*Factory settings.
**Items indicated in the presence of a specific accessory.

T-1-37

Mode	Description
preference key 1	none, individual modes
preference key 2	none, individual modes
auto sort**	*ON/OFF
auto vertical/horizontal rotation	*ON/OFF
print photo mode	ON/*OFF
change standard mode	register/reset (at time of shipment: 1 set, auto paper, auto density, auto image quality, local printer)
reset copy settings	Do you really want to reset? yes/no (auto sort: on; face-down delivery: on; preference key: none)

1.2.3.12 Transmission/Reception Settings

iR2270 / iR2870 / iR3570 / iR4570 / / iR2270N / / iR2870N / / iR3570N / / iR4570N / iR2230 /

*Factory settings.
**Items indicated in the presence of a specific category.
***If iR4570, iR3570, iR2870, or iR2270, indicated in the pence of a specific accessory (if model F, standard).

T-1-38

Mode	Description
set common communications settings	register source name***: 01 to 99; register/edit (24 characters max.), delete
	register user abbreviation***: 24 characters max.
	permit non-ASCII code for FTP**:
	delete error file***: (*ON/OFF)
	transfer error processing (always print/save/print/*off)
	film photo mode***: OFF (ON/*OFF)
	number of retries***: *3 times (0 to 5 times)
	change standard mode for transmission function***: read mode: black-and-white machine default : *black 200 dpi/black 300 dpi/black 600 dpi/black 400 dpi (if fax only, black 200x100*/black 200x; 200/black 200x400/black 400x400) file format: *TIFF/PDF/PDF(OCR) divide by page: ON/*OFF (toggle) DONE stamp: ON/*OFF (toggle)
	register routine task button***: (register/edit, delete M1 through M9) register: Do you want to register? yes/no name: 10 characters x 2 lines (max.)
	confirm transmission of coded PDF file: (ON/*OFF)
	PDF (OCR setup)*** original orientation auto detection: (*ON/OFF) number of OCR characters for file name: (1 through *24)
	initial transmission screen***: routine task button/one-touch button/*new address
	source record***: *add/do not add display location: inside image/*outside image display target abbreviation: (*ON/OFF) telephone No. mark: *FAX/TEL communication mode: G3-G4/*G3 only
	switch character code for e-mail/i-fax transmission: *GB2312/GB18030
	reset transmission function settings: Do you want to reset? yes/no
set common reception settings***	duplex record (ON/*OFF)
	cassette selection switch A: (*ON/OFF) switch B: (*ON/OFF) switch C: (*ON/OFF) switch D: (*ON/OFF)
	image reduction image reduction: (*ON/OFF) reduction mode: *auto mode/fixed mode rate of reduction in fixed mode: E210to: 75% to 97% (in 1% increments)/*90% direction of reduction: vertical and horizontal, *vertical only
	2-on-1 record: (ON/*OFF)
	reception info record: add/*do not add
set fax basic settings	register user telephone No.***: telephone No.: 20 characters max. sub address: 19 characters max. sub address incoming: ON/*OFF source No. notice: ON-OFF/*abbreviate
	select line type***: 120V, 230V: *push tone, dial pulse, 10 PPS 100 V: *20 pps/10 pps/push tone 100V: *20pps/10pps/push tone

Mode	Description
	volume control alarm sound level: 0 to 8 (*4) 0 to 8(*4)
	off-hook alarm: (*ON*/OFF)
set fax transmission function	ECM transmission (*ON/OFF)
	set pause length: (*1 to 15 sec/4 to 11 sec/3 to 6 sec)
	auto re-dial: (*ON/OFF) number of redials: 100V: 1-15 (*2), 120V: 1-10 (*2), 230V: 1-10 (*2) intervals for redials (min): 2-99 (*2) redial at communication error: 1st page and error page/all pages/off
	communication mode: *G4-G3/G3 only
	check dial tone before transmission: (*ON/OFF)
set fax reception settings***	ECM reception: (*ON/OFF)
	select reception mode fax/tel switchover: call start time: 0 to 30 sec (*8) call length: 15 to 300 sec (*17) operation after call: end/*receive audio response: ON/*OFF auto reception modem dial-in fax/tel switchover
	incoming ring: on (number of rings: 0 to N times)/*OFF
	remote reception: on (remote reception ID: 00 to 99, 25)/*OFF
	auto reception switch-over: on (length of ring: 1 to n sec)/*OFF
	source record (G4): *add/do not add source record position: inside image/*outside image
set fax expansion line	register user telephone No.: 20 characters max.
	register user abbreviation: 24 characters max.
	select line type: *20 pps/10pps push tone
	select transmission line: line 1: *priority on transmission/prohibit transmission line 2: priority on transmission/prohibit transmission

1.2.3.13 Transmission/Reception Settings

iR2230 / / iR3530 /

*Factory default.
***Indicated when appropriate accessories are installed.

T-1-39

Mode	Description
set common settings	register sender***: 01 to 99: register/edit (24 characters max), delete
	register user abbreviation***: 24 characters max.
	permit non-ASCII code for FTP transmission***: (ON/*OFF)
	delete error file***: (*ON/OFF)
	handle transfer error file***: print always/save/print/*OFF
	print photo mode***: (ON/*OFF)
	number of retries***: (*3 (0 to 5 times))
	change transmission function standard mode*** read mode, file format, separate for page, SENT stamp
	register routine task button***: register/edit, delete (18 items)
	PDF (OCR setting)*** original rotation auto detection: (*ON/OFF) number of characters for file OCR: (1 to *24)
	initial display of transmission scan***: routine task button/one-touch button/*new address
	source record***: *keep/do not keep
	transmission function setting reset***: Do you really want to reset? yes/no
set common reception function settings***	duplex recording (ON/*OFF)
	cassette selection switch A: (*ON/OFF) switch B: (*ON/OFF) switch C: (*ON/OFF) switch D: (*ON/OFF)
	image reduction image reduction: (*ON/OFF) reduce mode: *auto mode/fixed mode fixed mode reduction rate: E210 and up: 75% to 97% (in 1% increments), *90% reduction direction: vertical and horizontal, *vertical only
	2-on-1 record: (ON/*OFF)
	reception information record: keep/*do not keep
set fax basic settings***	register user telephone No. telephone No.: 20 characters max.
	line type selection: *push (tone)/dial (pulse) 10 PPS

Mode	Description
	volume control alarm volume: 0 to 8(*4) communication volume: 0 to 8(*4)
fax transmission function setup***	ECM transmissions (*ON/OFF)
	pause length setting: (1 to 15 sec; 2 sec*)
	auto redial: (*ON/OFF)
	pre-transmission dial tone check: (*ON/OFF)
fax reception function setting***	ECM reception: (*ON/OFF)
	reception mode section fax/tel switch, auto reception*
	incoming ring: ON/*OFF
	remote reception: ON/*OFF
	auto reception switchover: ON/OFF

1.2.3.14 Box Settings

iR2270 / iR2870 / iR3570 / iR4570 / / iR2270N / / iR2870N / / iR3570N / / iR4570N / iR2230 /

*Factory settings.
*If iR4570, iR3570, iR2870, or iR2270, indicated in the presence of a specific accessory (if model F, standard).

T-1-40

Mode	Description
set up/register user box	select box: 0 to 99 register box name: 24 characters max. ID NO.: 0 to 99999999 file auto delete: 0: no, 1, 2, 3, 6, 12 hr; 1, 2, *3, 7, 30 days URL transmissions setup: select e-mail address reset
print photo mode	(ON/*OFF)
standard mode for read setup	register/reset
set/register fax box***	select box: 0-49 register box name: 24 characters max. ID No.: 0 to 9999999 URL transmission setup: select e-mail address reset

1.2.3.15 Box Settings

iR2230 / / iR3530 /

*Factory default.
***Indicated when appropriate accessories are installed.

T-1-41

Mode	Description
set/register user box	select box: 0-99 register box name: 24 characters max. ID No.: 0-9999999 file auto delete: 0: no; 1, 2, 3, 6, 12 hr; 1, 2, *3, 7, 30 days URL transmission setting: e-mail address selection reset
print photo mode	(ON/*OFF)
read setting standard mode	register/reset
set/register fax box***	register box: 0-49 register box name: 24 characters max. ID No.: 0-9999999 URL transmission setting: e-mail address selection reset

1.2.3.16 Printer Settings

iR2270 / iR2870 / iR3570 / iR4570 / / iR2270N / / iR2870N / / iR3570N / / iR4570N / iR2230 /

*Factory settings.
**Indicated in the presence of a specific accessory.

T-1-42

Mode	Description
settings	number of copies: 1 to 9999 (*1)
	duplex: duplex/*simplex
	pickup default paper size: *A4 (additional 12 possible) default paper type: plain (additional 8 possible) paper size replacement: replace/*do not replace
	adjust print super smooth: *use/do not use **toner density: 1 to 9 (*5) toner save: enable/*disable
	layout bind position: *long side/short side bind margin: -50to+50mm (*0.0) horizontal correction/vertical correction: -50to+50mm (*0.0)

Mode	Description
	auto error skip** skip/*do not skip
	secure print delete time length: *1, 2, 3, 6, 12, 24 hr
	timeout: 5 to 300 (*15 sec)/disable
	RIP: yes/*no
	sorter**: *do not use/sort/rotation sort/rotation group/shift sort/shift group/staple sort
	punch**: *disable/top/bottom/left/right
	booklet print**: *disable/open to left/open to right
	middle bind**: enable/*disable
	transparency interleaf: *disable/white sheet/printed sheet
	print in sets print in sets: enable/*disable print position: *5 locations/upper left/lower left/upper right/lower right print start character: 1 to 9999 (*1) print size: small at 12-point/medium at 24-point/large at 36-point density: 1 to 5 (*3)
	printer operating mode: *auto (additional 6 settings possible)
	priority emulation** (*none/4 additional settings possible)
	auto switchover** LIPS: *enable/disable ESC-P: *enable/disable 15577: *enable/disable HP-GL: *enable/disable
	connection recognition: *enable/disable
	printer settings rest: yes/no

1.2.3.17 Address Book Settings

iR2270 / iR2870 / iR3570 / iR4570 / / iR2270N / / iR2870N / / iR3570N / / iR4570N / iR2230 /

*Factory settings.
*If iR4570, iR3570, iR2870, or iR2270, indicated in the presence of a specific accessory (if model F, standard).

T-1-43

Mode	Description
fax (register target)	register name: 24 characters
	register name: 24 superscript characters
	telephone No.: 120 characters max. (+, pause, tone, <, >, backspace, space, ISDN sub address, F-Net, DT, R, PIN, sub settings)
	Sub Settings F code: 20 characters max. password: 20 characters max. ECM transmission: *ON/OFF transmission speed: 33600 bps*/14400bps/9600 bps/4800 bps international transmission: *domestic/international transmission (1)/international transmission (2)/international transmission (3) communication mode: G4 to G3*/G3 only
e-mail (target registration)	register name: 24 characters
	register name: 24 superscript characters
	e-mail address: 128 characters
i-fax (target registration)	register name: 24 characters
	register name: 24 superscript characters
	select mode: *Simple/Full
	i-fax address: 128 characters
	server route: ON/*OFF
	fixed sentence 1: 40 characters
	fixed sentence 2: 16 characters
	fine settings paper size: A4/LTR+ B4,A3/11x17 compression method: MH+ MR/MMR resolution: 200x100dpi,200x200dpi+200x400dpi/300x300dpi/400x400dpi/600x600dpi
file (register address)	register name: 24 characters
	register name: 24 superscript characters
	protocol: *FTP/Windows(SMB)/Netware(IPX)
	host name: 128 characters
	path to folder: 128 characters
	user name: FTP,Netware(IPX) : 24 characters Windows(SMB): 15 characters
	password: FTP,Netware(IPX): 24 characters Windows(SMB): 14 characters

Mode	Description
group (register target)	register name: 24 characters
	register name: 24 superscript characters
	address book: existing in Address Book: select fax, e-mail, i-fax, remove file system, Jet Send, Box, local printer
	stored in Box: select Box: 00- to 99
	delete
register target (server) (register target)	simplified search
	server to search: select from pull-down menu (LDAP server already registered)
	(search condition): name: 128 characters e-mail: 128 characters fax: 128 characters
	fine search
	server to search: select from pull-down menu (LDAP server already registered)
	search conditions): *name/email/fax/organization/organization-based *including next/not including next/identical to next/not identical to next/starts with next/ends with next name, organization, organization-based: 128 characters e-mail, fax: 128 characters
	(combinations of conditions): *OR/AND
	search results
	address type: all e-mail/fax
	register e-mail as i-fax: ON/*OFF (toggle)
register address book	register name: 16 characters
register one-touch button	register address/edit: register/edit, delete
	one-touch name: 12 characters long

1.2.4 Maintenance by the User

1.2.4.1 Cleaning

iR2270 / iR2870 / iR3570 / iR4570 / / iR2270N / / iR2870N / / iR3570N / / iR4570N / iR2230 / / / iR3530 /

- Copyboard Glass, Copyboard Cover (back; copyboard cover type H)
Advise the user to clean the surface of the copyboard glass and the back of the copyboard cover at least once a month.
Cleaning Procedure
Using a cloth moistened with water or solution of mild detergent, wipe the surface of the copyboard glass [1] and the back of the copyboard cover [2]; thereafter, dry wipe the surfaces with a dry, soft cloth.

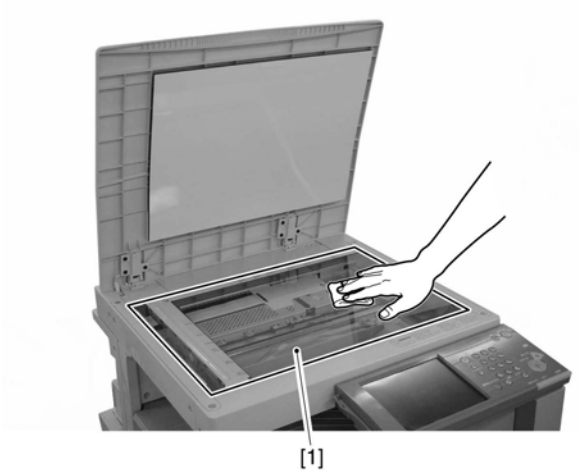

F-1-29

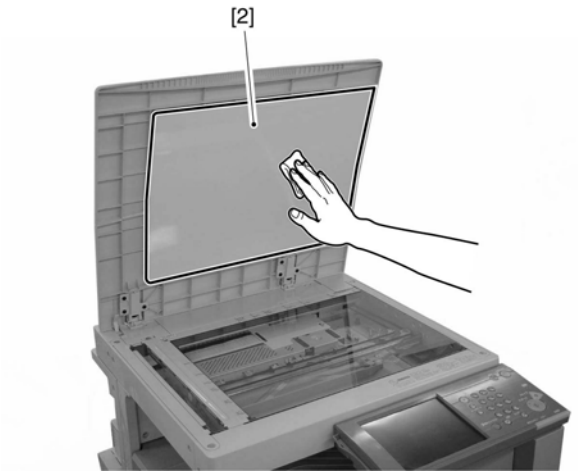

F-1-30

1.2.4.2 Inspection

iR2270 / iR2870 / iR3570 / iR4570 / / iR2270N / / iR2870N / / iR3570N / / iR4570N / iR2230 / / / iR3530 /

- Checking the Operation of the Leakage Breaker
Advise the user to check the leakage breaker once or twice a month on a regular basis. Be sure also to ask the user to keep a record of checks.
Inspection Procedure
1) Turn on the main power switch.
2) Push he test button [1] of the leakage breaker with the tip of a ball-point pen [2].
3) Check to make sure that the breaker switch shifts to the OFF side and the power is cut.

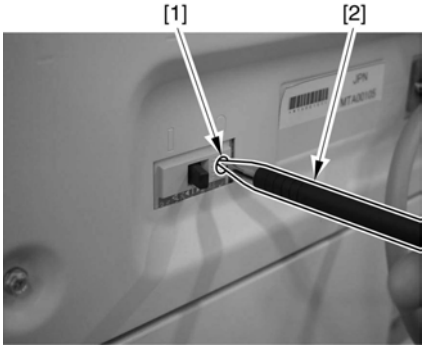

F-1-31

4) Turn off the main power switch.
5) Shift the breaker switch [1] back to the ON position.

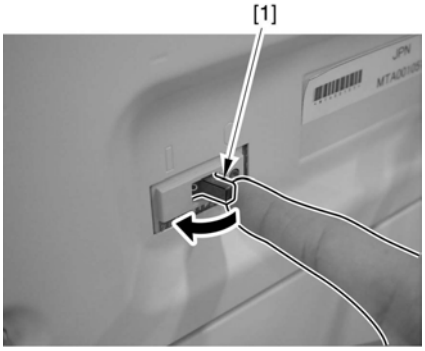

F-1-32

If the breaker switch has stopped between ON and OFF, be sure to shift it to OFF first and then back to ON.

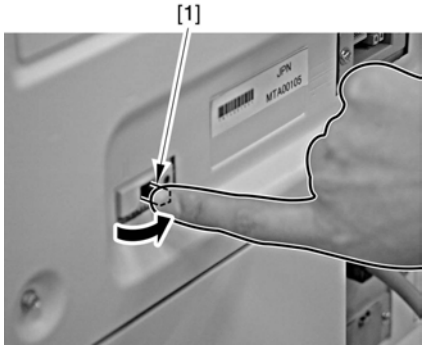

F-1-33

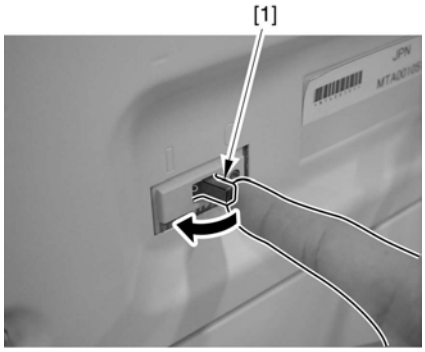

F-1-34

6) Turn on the main power switch.

1.2.5 Safety

1.2.5.1 Safety of the Laser Light

iR2270 / iR2870 / iR3570 / iR4570 / / / / / iR2230 / / iR3530 /

Laser light can prove to be hazardous to the human body. The machine's laser unit is fully enclosed in a protective housing and external covers so that its light will not escape outside as long as the machine is used normally.

1.2.5.2 CDRH Regulations

iR2270 / iR2870 / iR3570 / iR4570 / / / / / iR2230 / / iR3530 /

The Center for Devices and Radiological Health of the US Food and Drum Administration put into force regulations concerning laser products on August 2, 1976. These regulations apply to laser products manufactured on and after August 1, 1976, and the sale of laser products not certified under the regulations is banned within the Untied States. The label shown here indicates compliance with the CDRH regulations, and its attachment is required on all laser products that are sold in the United States.

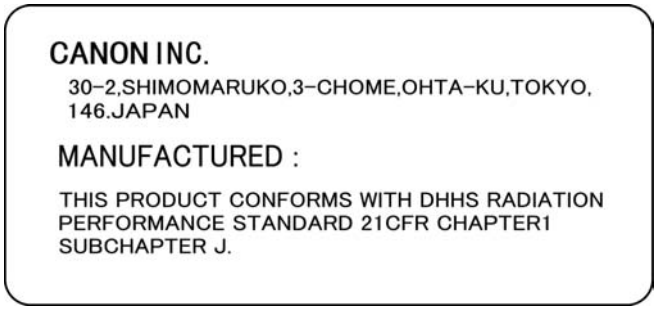

F-1-35

A different description may be used for a different product.

1.2.5.3 Handling the Laser Unit

iR2270 / iR2870 / iR3570 / iR4570 / / / / / iR2230 / / iR3530 /

If you must service the area around the machine's laser unit, be sure to take full care to avoid exposure to laser light: do not insert a tool (e.g., screwdriver or those with a high reflectance) into the laser path; also, remove watches, rings, and the like before starting the work, as they reflect laser light.
The machine's laser light is red in color, and an appropriate label ([1], [2]) is attached to all covers that can reflect laser light. Keep also in mind that the machine's laser unit cannot be adjusted in the field.

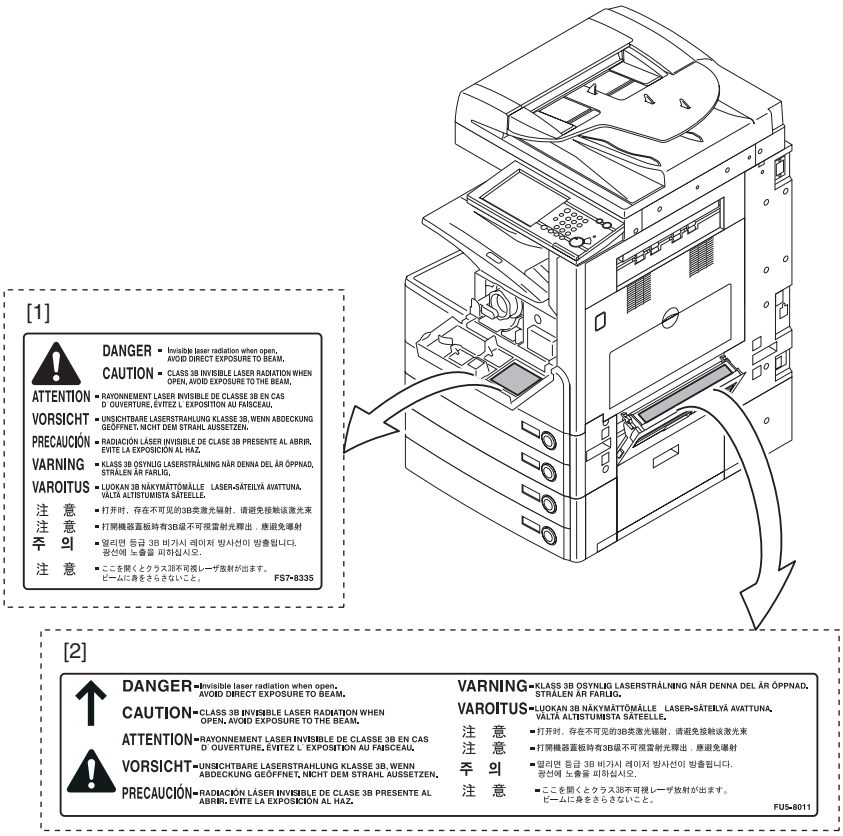

F-1-36

1.2.5.4 Safety of Toner

iR2270 / iR2870 / iR3570 / iR4570 / / / / / iR2230 / / iR3530 /

The machine's toner is a non-toxic material made of plastic, iron, and small amounts of dye.

Do not throw toner into fire. It may cause explosion.
Toner on Clothing or Skin
1. If your clothing or skin has come into contact with toner, wipe it off with tissue; then, wash it off with water.
2. Do not use warm water, which will cause the toner to jell and fuse permanently with the fibers of the cloth.
3. Do not bring toner into contact with plastic material. It tends to react easily.

1.2.6 Product Specifications

1.2.6.1 Product Specifications

iR2270 / iR2870 / iR3570 / iR4570 / / / / / iR2230 / / iR3530 /

Copyboard	stream reading, fixed reading
Body	desktop
Light source type	LED array (CIS)
Photosensitive medium	OPC drum (30-mm dia.)
Image reading method	CCD (CIS)
Reproduction method	indirect electrostatic
Exposure method	by laser light
Charging method	by AC charging roller
Development method	1-component toner projection
Transfer method	by transfer roller
Separation method	by curvature + static eliminator
Cassette pickup method	retard
Multifeeder pickup method	dual processing
Drum cleaning method	by cleaning blade
Fixing method	on-demand
Delivery method	face-down
Reproduction ratio	25% to 400%
Warm-up time	iR 2270, iR2870, iR2230, iR2830: 30 sec or less; iR 3870, iR4570, iR3530: 40 sec or less
Image margin (leading edge)	2.5 +/-1.5 mm (single-sided); 2.5 +/-2.0 mm (doubles-sided)
Image margin (trailing edge)	B4 or smaller: 2.5 +1.1, -1.7 mm; B4 or larger: 3.5 +0.6, -2.8 mm; free-side: 5.5 +1.5, -45. mm (single-sided), 0.5 mm or more (double-sided)

Image margin (left/right)	left edge: 2.5 +1.5 mm (single-sided), 2.5 mm +2.0 (double-sided); right edge: 0.5 mm or more (single-sided), 0.5 mm or more (double-sided)
Non-image width (leading edge)	2.5 +/-1.5 mm or less
Non-image width (trailing edge)	B4 or smaller: 2.5 +1.1, -1.7 mm; B4 or larger: 3.5 +0.6, -2.8 mm; free-size: 5.5 +1.5, -4.5 mm
Non-image width (left/right)	2.5 +/-1.5 mm or less
Number of gradations	256 gradations
Reading resolution	600 x 600 dpi
Copying resolution	1200 dpi (equivalent) x 600 dpi
Printing resolution	2400 dpi (equivalent) x 600 dpi
First print time	iR 2270, iR2870, iR2230, iR2830: 4.9 sec or less; iR 3870, iR4570, iR3530: 3.9 sec or less
Cassette capacity	550 sheets (80 g/m2)
Multifeeder tray capacity	50 sheets (80 g/m2)
Continuous reproduction	1 to 999
Toner level detection function	keys
Toner type	magnetic negative toner
Original type	sheet, book
Maximum original size	297 x 431.8 mm
Original size detection function	by reflection type sensor
Duplex method	without tray
Sleep mode	yes
Option	See the system configuration chart.
Operating environment (temperature range)	15 to 27.5 deg C
Operating environment (humidity range)	25% to 75%
Operating environment (atmospheric pressure)	0.6 to 1.0 atm
Noise	iR 2270, iR2870, iR2230, iR2830: standby, 40 dB; in operation, 66 dB iR 3870, iR4570, iR3530: standby, 50 dB; in operation, 71 dB
Power supply rating	100/120/230 V
Power consumption (maximum)	1350 W or less
Power consumption	iR 2270, iR2870, iR2230, iR2830: standby, 36 Wh (reference only) / continuous printing: 543 Wh (reference only) iR 3570, iR4570, iR3530: standby, 37 Wh (reference only) / continuous printing: 823 Wh (reference only)
Ozone	max.: 0.02 ppm or less; avr: 0.01 ppm or less
Dimensions	565 mm x 700 mm x 761.4 mm (WxDxH)
Weight	body: 61.6 kg; reader unit: 8.7 kg; ADF: 8.5 kg

1.2.7 Function List

1.2.7.1 Printing Speed

iR2270 / iR2870 / / / iR2230 /

Max/Min (max when the machine has fully cooled)
A value in brackets [ ] represents the iR2270/2230.

T-1-44

	Paper size	Single-sided		Auto duplexing	
		cassette feed	manual feed	cassette feed	manual feed
Plain paper	A4	28[22]	25[22]	7	7
	A5R	17/14	17/14	7	7
	B5	27[22]	25[22]	7	7
	B5R	17/14	17/14	7	7
	A4R	17/14	17/14	5	5
	B4	24/13	13	4	4
	A3	14	14	4	4
	STMTR	17/14	17/14	7	7
	LTR	28[22]	25[22]	7	7
	LTRR	17/14	17/14	5	5
	LGL	13	13	5	5
	LDR	14	14	4	4
	free	-	13	-	-

	Paper size	Single-sided		Auto duplexing	
		cassette feed	manual feed	cassette feed	manual feed
Heavy paper	A4	-	25	-	-
	A5R	-	13	-	-
	B5	-	23[22]	-	-
	B5R	-	13	-	-
	A4R	-	13	-	-
	B4	-	11	-	-
	A3	-	12	-	-
	STMTR	-	13	-	-
	LTR	-	25[22]	-	-
	LTRR	-	13	-	-
	LGL	-	11	-	-
	LDR	-	12	-	-
	Postcard	-	12/8	-	-
	free	-	11	-	-
OHP	A4	-	25[22]	-	-
	LTR	-	25[22]	-	-
Envelope	Monarch	-	10/6	-	-
	COM10	-	10/6	-	-
	ISO-B5	-	10/6	-	-
	ISO-C5	-	10/6	-	-
	DL	-	10/6	-	-
	YOGATA No.4	-	10/6	-	-

1.2.7.2 Printing Speed

iR3570 / iR4570 / / / iR3530

Max/Min (max when the machine has fully cooled)
A value in brackets [ ] represents the iR3570/3530.

T-1-45

	Paper size	Single-sided				Auto duplexing			
		cassette feed		manual feed		cassette feed		manual feed	
		1/2 dlvry	3 dlvry	1/2 dlvry	3 dlvry	1/2 dlvry	3 dlvry	1/2 dlvry	3 dlvry
Plain paper	A4	45[35]	15	25	8	22	7	12	4
	A5R	20/16	15	17/14	8	10/8	7	8/7	4
	B5	35	15	25	8	17	7	12	4
	B5R	20/16	7	17/14	4	10/8	3	8/7	2
	A4R	20/16	7	17/14	4	10/8	3	8/7	2
	B4	24/16	7	13	4	12/8	3	6	2
	A3	22	7	14	4	11	3	7	2
	STMTR	20/16	15	17/14	8	10/8	7	8/7	4
	LTR	45[35]	15	25	8	22	7	12	4
	LTRR	20/16	7	17/14	4	10/8	3	8/7	2
	LGL	16/14	7	13	4	8/7	3	6	2
	LDR	22	7	14	4	11	3	7	2
	free	-	-	13	-	-	-	-	-
Heavy paper	A4	-	-	25	-	-	-	-	-
	A5R	-	-	14	-	-	-	-	-
	B5	-	-	25	-	-	-	-	-
	B5R	-	-	14	-	-	-	-	-
	A4R	-	-	14	-	-	-	-	-
	B4	-	-	12	-	-	-	-	-
	A3	-	-	12	-	-	-	-	-
	STMTR	-	-	14	-	-	-	-	-
	LTR	-	-	25	-	-	-	-	-
	LTRR	-	-	14	-	-	-	-	-
	LGL	-	-	12	-	-	-	-	-
	LDR	-	-	12	-	-	-	-	-
	Post- card	-	-	18/10	-	-	-	-	-
	free	-	-	12	-	-	-	-	-
OHP	A4	-	-	25	-	-	-	-	-
	LTR	-	-	25	-	-	-	-	-

	Paper size	Single-sided				Auto duplexing			
		cassette feed		manual feed		cassette feed		manual feed	
		1/2 dlvry	3 dlvry	1/2 dlvry	3 dlvry	1/2 dlvry	3 dlvry	1/2 dlvry	3 dlvry
Envelope	Monarch	-	-	12/8	-	-	-	-	-
	COM10	-	-	12/8	-	-	-	-	-
	ISO-B5	-	-	12/8	-	-	-	-	-
	ISO-C5	-	-	12/8	-	-	-	-	-
	DL	-	-	12/9	-	-	-	-	-
	yogata NO.4	-	-	12/8	-	-	-	-	-

1.2.7.3 Types of Paper

iR2270 / iR2870 / iR3570 / iR4570 / / / /

T-1-46

Type		Size	Source		
			Manual feed tray	Cassette	Paper Deck-Q1
Plain paper, eco paper, recycled paper (64 to 80 SQM/g)		A3, B4, A4R, LDR, LGL, LTRR, B5, EXE, A5R, STMTR, B5R	yes	yes	no
		A4, LTR	yes	yes	yes
Special paper	Heavy paper (81 to 128 SQM/g)	A3, B4, A4R, LDR, LGL, LTRR, B5, EXE, A5R, STMTR, B5R, A4, LTR	yes	no	no
	OHP	A4, LTR	yes	no	no
	Postcard	postcard A6R modified; double-postcard A5R modified	yes	no	no
	4-plane postcard	A4 modified	yes	no	no
	Label paper	A4, A4R, LTR, LTRR	yes	no	no
	Tracing paper	A3, B4, A4	yes	no	no
	Envelope	Com10, Monarch, DL, ISO-C5ISO-B5	yes	yes *1	no

*1: It is possible when optional Envelope Attachment-C1 is attached. Envelope Attachment-C1 is attachable to cassette 1.

1.2.7.4 Types of Paper

iR2230 / / / iR3530 /

T-1-47

Type		Size	Source	
			Manual feed tray	Cassette
Plain paper, eco paper, recycled paper (64 to 80 SQM/g)		A3, B4, A4R, LDR, LGL, LTRR, B5, EXE, A5R, STMTR, B5R	yes	yes
		A4, LTR	yes	yes
Special paper	Heavy paper (81 to 128 SQM/g)	A3, B4, A4R, LDR, LGL, LTRR, B5, EXE, A5R, STMTR, B5R, A4, LTR	yes	no
	OHP	A4, LTR	yes	no
	Postcard	postcard A6R modified; double-postcard A5R modified	yes	no
	4-plane postcard	A4 modified	yes	no
	Label paper	A4, A4R, LTR, LTRR	yes	no
	Tracing paper	A3, B4, A4	yes	no
	Envelope	Com10, Monarch, DL, ISO-C5ISO-B5	yes	yes *1

*1: It is possible when optional Envelope Attachment-C1 is attached. Envelope Attachment-C1 is attachable to cassette 1.

Chapter 2 Installation

Contents

2.1 Making Pre-Checks 2-1
2.1.1 Selecting the Site of Installation 2-1
2.1.2 Selecting the Site of Installation 2-2
2.1.3 Before Starting the Work (230V) 2-3
2.1.4 Before Starting the Work (230VEUR) 2-5
2.2 Unpacking and Installation 2-6
2.2.1 Unpacking and Removing the Packaging Materials 2-6
2.2.2 Installing the Toner Bottle 2-7
2.2.3 Installing the Drum Unit 2-8
2.2.4 Securing the Copier Main Unit 2-10
2.2.5 Connecting the Cable 2-11
2.2.6 Connecting the Cable 2-11
2.2.7 Stirring Toner 2-11
2.2.8 Setting the Cassettes 2-11
2.2.9 APVC Correction of the Drum 2-12
2.2.10 Adjusting the Image Position 2-12
2.2.11 Attaching Other Parts 2-14
2.2.12 Attaching Other Parts 2-15
2.2.13 If Not Connected to a Network 2-16
2.3 Checking the Connection to the Network 2-16
2.3.1 Overview 2-16
2.3.2 Using the PING Function 2-16
2.3.3 Making a Check Using a Remote Host Address 2-16
2.4 Troubleshooting the Network 2-17
2.4.1 Overview 2-17
2.4.2 Making a Check Using a Loopback Address 2-17
2.4.3 Making a Check Using a Local Host Address 2-17
2.5 Checking the Images/Operations 2-17
2.5.1 Checking the Image Quality and Operation 2-17
2.6 Installing the Card Reader 2-17
2.6.1 Points to Note 2-17
2.6.2 Checking the Contents 2-18
2.6.3 Installation Procedure 2-18
2.6.4 Installation in a NetSpot Accountant (NSA) Environment 2-21
2.7 Installing the NE Controller 2-21
2.7.1 Installing the NE Controller-A1 2-21
2.8 Installing the Reader Heater 2-27
2.8.1 Checking the Parts 2-27
2.8.2 Turning Off the Host Machine 2-27
2.8.3 Installation Procedure 2-28
2.9 Installing the Cassette Heater 2-29
2.9.1 Checking the Parts 2-29
2.9.2 Checking the Parts 2-30
2.9.3 Turning Off the Host Machine 2-30
2.9.4 Mounting the Cassette Heater Unit 2-30
2.9.5 Mounting the Heater PCB 2-33
2.10 Installing the Cassette Heater for the Cassette Pedestal 2-37
2.10.1 Checking the Parts 2-37
2.10.2 Turning Off the Host Machine 2-38

2.10.3 Mounting the Cassette Heater Attachment 2-38
2.11 Installing the Deck Heater 2-41
2.11.1 Checking the Parts to Install 2-41
2.11.2 Turning Off the Host Machine 2-42
2.11.3 Installation Procedure 2-42
2.12 Installing the Voice Guidance Kit 2-46
2.12.1 Checking Items in the Package 2-46
2.12.2 Turning Off the Host Machine 2-47
2.12.3 Installation Procedure 2-48
2.12.4 A point to keep in mind at installation 2-55
2.12.5 Checking the Contents 2-55
2.12.6 Turning Off the Host Machine 2-56
2.12.7 Installation Procedure 2-57
2.13 Installing the Voice Operation Kit 2-63
2.13.1 A point to keep in mind at installation 2-63
2.13.2 Checking the Contents 2-63
2.13.3 Turning Off the Host Machine 2-64
2.13.4 Installation Procedure 2-65

2.1 Making Pre-Checks

2.1.1 Selecting the Site of Installation

iR2270 / iR2870 / iR3570 / iR4570 / / / /

Select the site of installation against the following requirements; if possible, visit the user's before delivery of the machine:

1) There must be a power outlet properly grounded and rated as indicated (+, -10%) for exclusive use by the machine.
2) The environment of the room must be as indicated in the following diagram, and the machine must not be installed near a water faucet, water boiler, humidifier, or refrigerator:

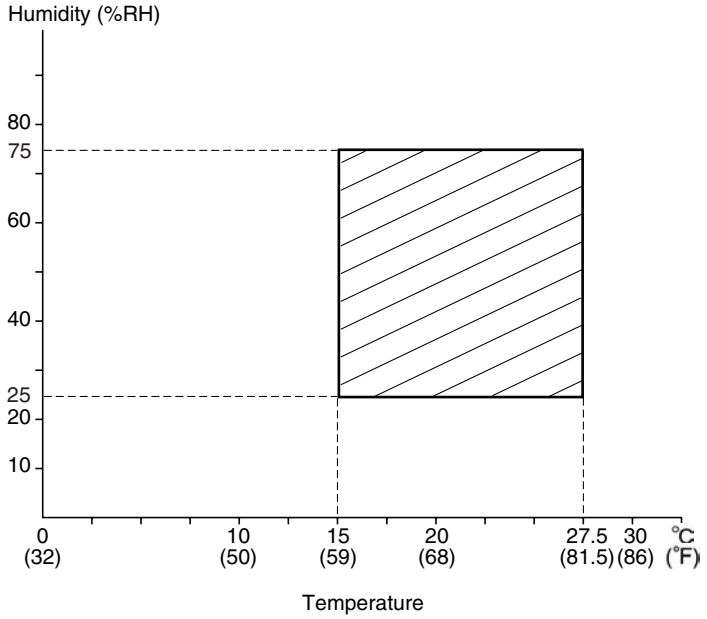

F-2-1

3) The machine must not be installed near a source of fire or in an area subject to dust or ammonium gas.
If the area is exposed to direct rays of the sun, provide curtains to the window.
4) The room must be well ventilated. (The level of ozone generated by the machine in use will not affect the individuals around it. However, some may find its odor to be unpleasant, as when working in a poorly ventilated room.)
5) The floor of the machine must be level so that the feet of the machine will remain in contact and the machine will remain level.
6) The machine must be at least 10 cm away from any wall, permitting unobstructed use.

- Without a Finisher or Side Paper Deck-P1 Installed

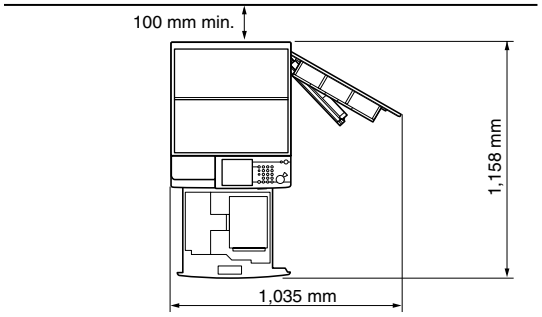

F-2-2

- With a DADF-N1, Finisher S1, and Side Paper Deck-Q1 Installed

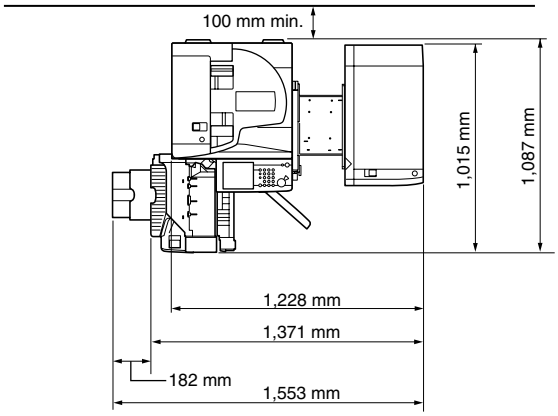

F-2-3

- With a DADF-N1, Side Paper Deck-Q1, Saddle Finisher-Q4, Buffer Path Unit-E1, and Puncher Unit-L1/M1/N1/P1 Installed

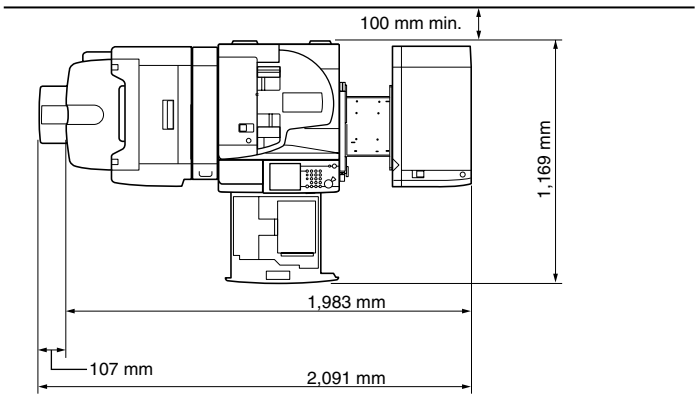

F-2-4

7) The machine must be placed in a well ventilated area. It is important to make sure, however, that the machine is not near the air vent (for suction) of the room.

2.1.2 Selecting the Site of Installation

iR2230 / / iR3530 /

Select the site of installation against the following requirements; if possible, visit the user's before delivery of the machine:
1) There must be a power outlet properly grounded and rated as indicated (+, -10%) for exclusive use by the machine.
2) The environment of the room must be as indicated in the following diagram, and the machine must not be installed near a water faucet, water boiler, humidifier, or refrigerator:

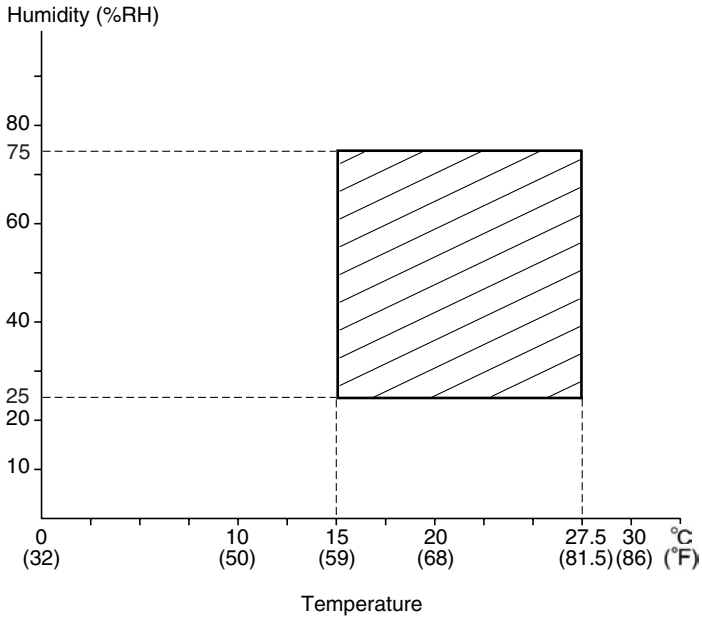

F-2-5

3) The machine must not be installed near a source of fire or in an area subject to dust or ammonium gas.
If the area is exposed to direct rays of the sun, provide curtains to the window.
4) The room must be well ventilated. (The level of ozone generated by the machine in use will not affect the individuals around it. However, some may find its odor to be unpleasant, as when working in a poorly ventilated room.)
5) The floor of the machine must be level so that the feet of the machine will remain in contact and the machine will remain level.
6) The machine must be at least 10 cm away from any wall, permitting unobstructed use.

- Without a Finisher Installed

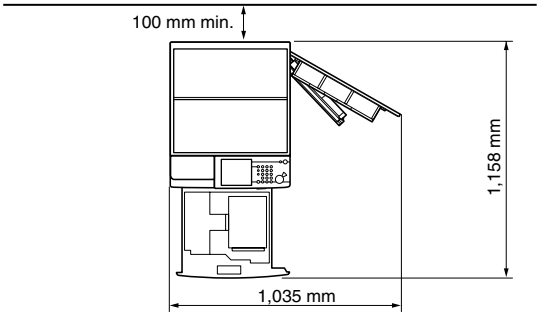

F-2-6

- With a DADF-N1 and Finisher S1 Installed

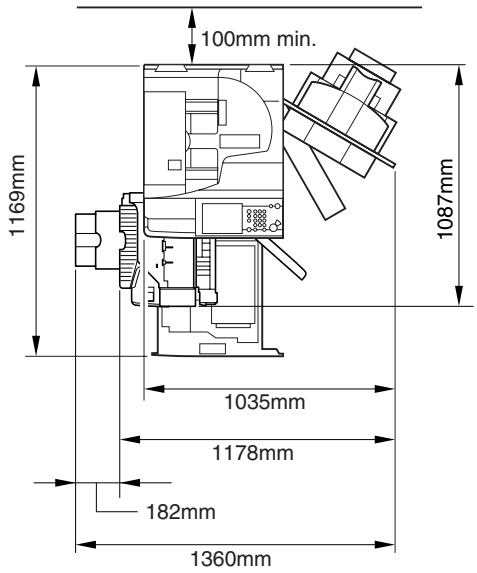

F-2-7

7) The machine must be placed in a well ventilated area. It is important to make sure, however, that the machine is not near the air vent (for suction) of the room.

2.1.3 Before Starting the Work (230V)

iR2270 / iR2870 / iR3570 / iR4570

1-1 Points to Make Before Installation
Be sure to go through the following before starting the work:
1) If you are installing the machine after moving it from a cold to warm location, be sure to leave the machine unpacked for at least 2 hours so that the machine is fully used to the site temperature, thus avoiding image faults caused by condensation. (The term "condensation" refers to the formation of droplets of water on the surface of a metal object brought in from a cold to warm place, i.e., as the result of the rapid cooling of the moisture (vapor) around the object.)
2) The machine weighs a maximum of about 80 kg(including a DADF). Be sure to work in a group of 4 persons when lifting it.

1-2 Checking the Contents
Check to be sure that none of the following contents is missing:

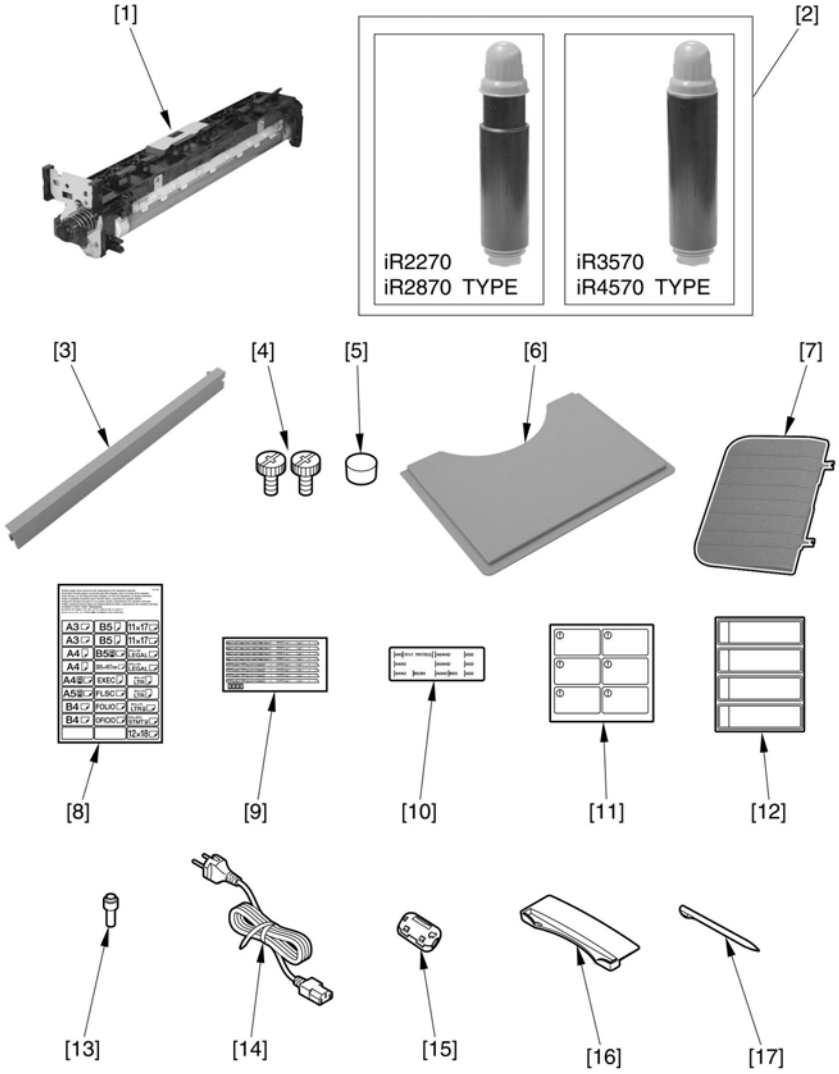

F-2-8

T-2-1

[1]	Drum unit	1pc	[10]	Size label(small) (ADF standard model only)	1pc
[2]	Toner bottle (230V CA model only)	1pc	[11]	Shut-Down Warning Label	2pc*
[3]	Lower right cover	1pc	[12]	Toner Bottle Warning Label	1pc
[4]	Adjusting screw	2pc	[13]	Stamp (DADF standard model only)	1pc
[5]	covering rubber	1pc	[14]	Power Cable	1pc
[6]	Service book case	1pc	[15]	Ferrite core	1pc
[7]	Reversing Guide(iR3570 / 4570 model only)	1pc	[16]	Touch Pen Holder	1pc
[8]	Cassette size label	1pc	[17]	Touch Pen	1pc
[9]	Dial label	1pc			

*230V CA model --- 1pc

Check the documentation and CD against the following table:

- 230V EUR model T-2-2

Operators manual: Users Guide

Operators manual CD-ROM

MEAP Admin.CD-ROM

- 230V model, 230V CA model T-2-3

Operators manual: Reference Guide

Operators manual: Copying/Mail Box Function Guide

Operators manual: Easy Operation Guide

Operators manual CD-ROM: NW/RUI Guide

MEAP Admin.CD-ROM

1-3 Names of Parts

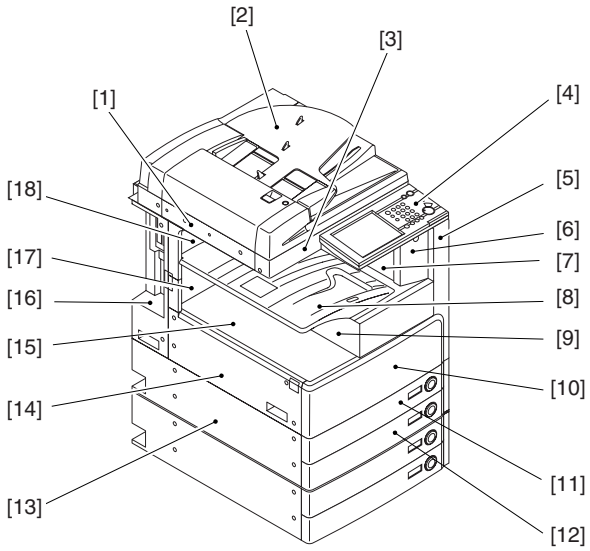

F-2-9

[1] ADF reading glass retainer
[2] DADF (Option)
[3] Reader cover (front)
[4] Control panel
[5] Support cover (right)
[6] Support cover
[7] Delivery tray right cover
[8] Delivery tray
[9] Inside right cover
[10] Front cover unit
[11] Cassette 1
[12] Cassette 2
[13] Left cover (lower)
[14] Left cover
[15] Inside base cover
[16] Left cover (rear)
[17] Delivery tray rear cover (lower)
[18] Delivery tray rear cover

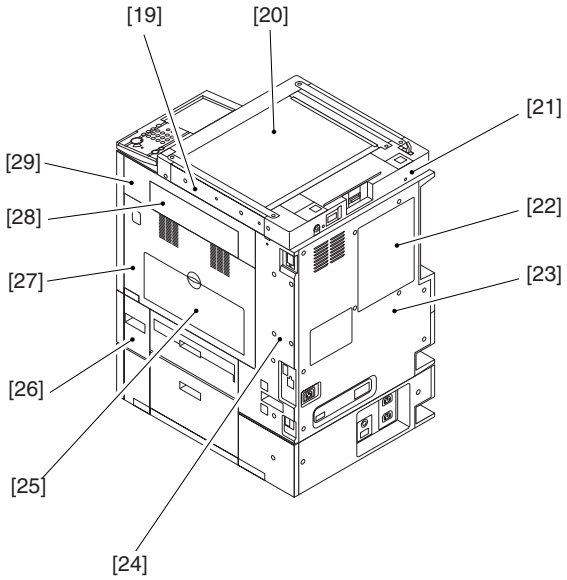

F-2-10

[19] Reader over (right)
[20] Copyboard glass
[21] Reader cover (rear)
[22] Face over
[23] Rear cover
[24] Right cover (rear)
[25] Manual feed pickup tray
[26] Right cover (lower front)
[27] Right door unit
[28] Delivery cover
[29] Right cover (upper)

2.1.4 Before Starting the Work (230VEUR)

iR2230 / iR3530

Points to Make Before Installation
Be sure to go through the following before starting the work:
1) If you are installing the machine after moving it from a cold to warm location, be sure to leave the machine unpacked for at least 2 hours so that the machine is fully used to the site temperature, thus avoiding image faults caused by condensation. (The term "condensation" refers to the formation of droplets of water on the surface of a metal object brought in from a cold to warm place, i.e., as the result of the rapid cooling of the moisture (vapor) around the object.)
2) The machine weighs about 80 kg. Be sure to work in a group of 4 persons when lifting it.

Checking the Contents

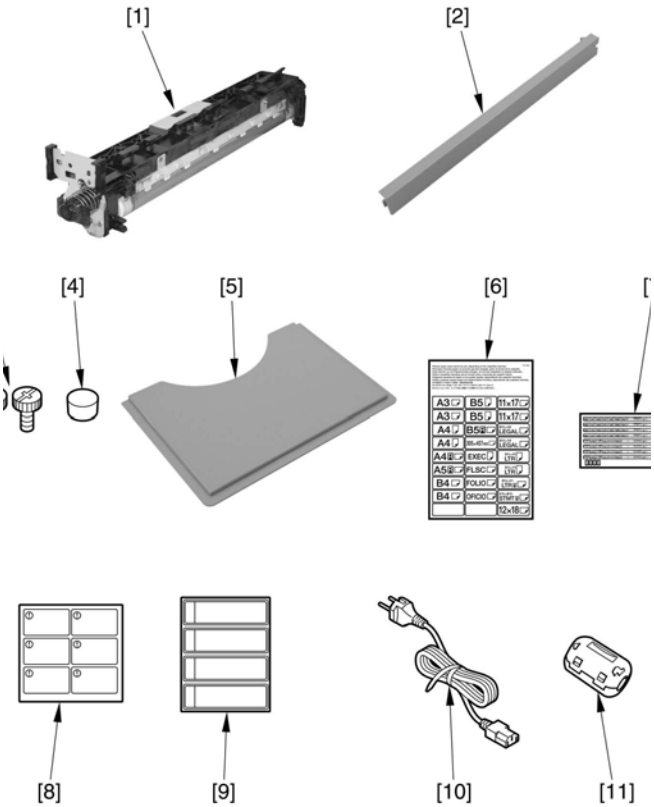

F-2-11

T-2-4

[1]	Drum unit	1	[7]	Dial label	2
[2]	Lower right cover	1	[8]	Shut-down warming label	1
[3]	Adjusting screw	2	[9]	Toner bottle warning label	1
[4]	Covering rubber	1	[10]	Power cable	1
[5]	Service book case	1	[11]	Ferrite core	1
[6]	Cassette size label	2			

Check the documentation and CD against the following table:
- 230V EUR model T-2-5

Operators manual: User's Guide

Operators manual CD-ROM

2.2 Unpacking and Installation

2.2.1 Unpacking and Removing the Packaging Materials

iR2270 / iR2870 / iR3570 / iR4570 / / iR2270N / / iR2870N / / iR3570N / / iR4570N / iR2230 / / iR3530 / / / / /

1) Unpack and remove the plastic bags.
- When installing a pedestal to the copier at the same time, unpack it in the same way.
2) When installing the copier on the 2-cassette Pedestal-Y2, open the right door [1] of the pedestal.
3) Hold the recesses [2] of the copier with 4 or more people, and place it on the pedestal.

F-2-12

The maximum weight of the copier is approx. 80kg (including the DADF), so be sure to lift it with 4 or more people.

Memo: When placing the copier on the cassette pedestal, be sure to align the two positioning pins [1] to the holes on the base plate of the copier.

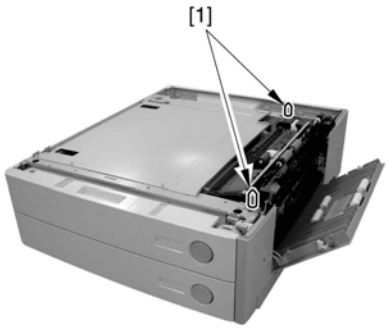

F-2-13

4) Close the right door of the pedestal (in the case of the 2-cassette Pedestal-Y2).
5) Remove the packaging tapes and materials from each unit.
   - Front door
   - Right door
   - Manual feeder unit
   - Cassettes 1 and 2
   - Inside the cassettes 1 and 2
   - DADF (In the case of the model with a DADF)
   - Platen glass
6) When installing the copier to the 2-cassette Pedestal-Y2, follow the installation procedure for the 2-cassette Pedestal-Y2.
7) Remove the optical system fixing screw [1] at the outside of the right

cover in the reader unit. (Keep the optical system fixing screw for future relocation of the copier.)

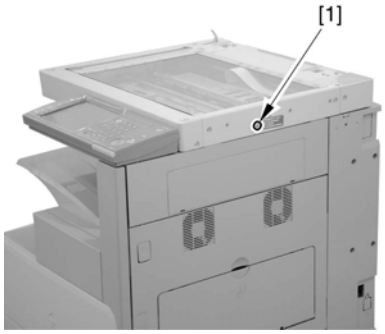

F-2-14

8) Open the right door [1].

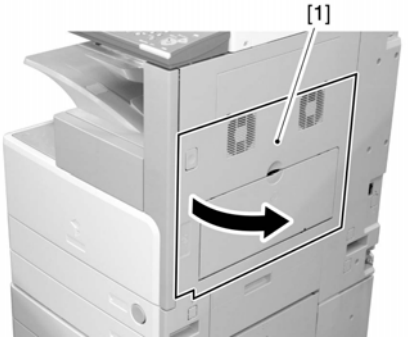

F-2-15

9) Remove the fixing assembly release cover [1].

Reference

To facilitate the work, try detaching it from the front top [2] of the fixing assembly release cover [1] in the direction of the arrow.

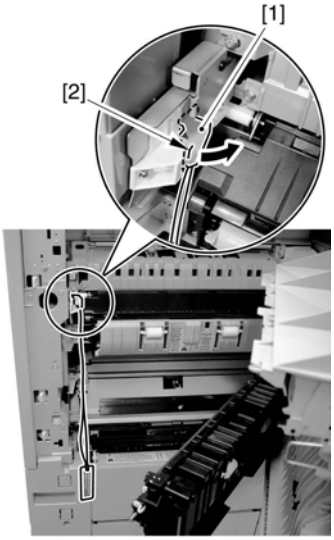

F-2-16

If you turn on the machine without detaching the fixing assembly release cover, the fixing heater can suffer damage.

10) Close the right door.

2.2.2 Installing the Toner Bottle

iR2270 / iR2870 / iR3570 / iR4570 / / iR2270N / / iR2870N / / iR3570N / / iR2230 / / iR3530 / / / / /

1) Open the front cover [1].

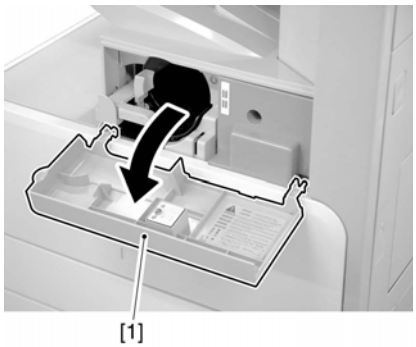

F-2-17

2) Lift the lock lever [1].

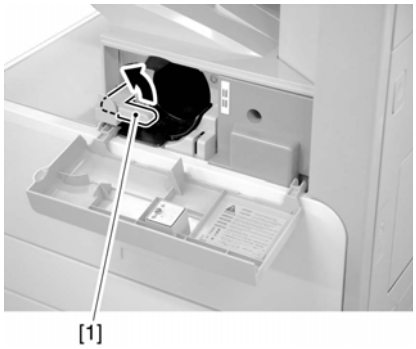

F-2-18

3) Unpack the toner bottle and remove the cap [1].

F-2-19

4) Mount the toner bottle [1] on the copier.

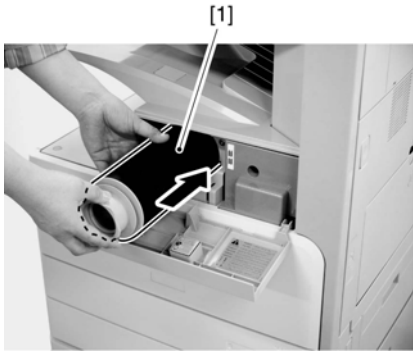

F-2-20

5) Push down the lock lever [1] so that the toner bottle is secured.

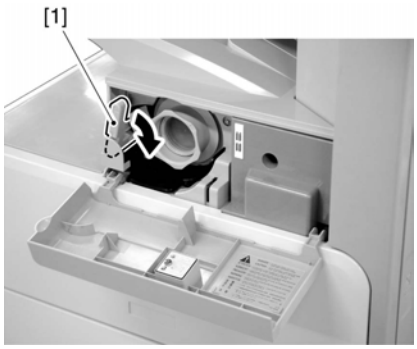

F-2-21

Be sure to shift down the locking lever until it is fully horizontal; otherwise, no supply of toner will be made.

2.2.3 Installing the Drum Unit

iR2270 / iR2870 / iR3570 / iR4570 / / iR2270N / / iR2870N / / iR3570N / / iR2230 / / iR3530 / / / /

1) Remove the two screws [1] and detach the front cover unit [2] as sliding it to the left.

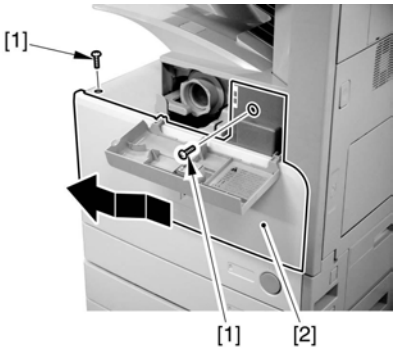

F-2-22

2) Remove the waste toner box [1].

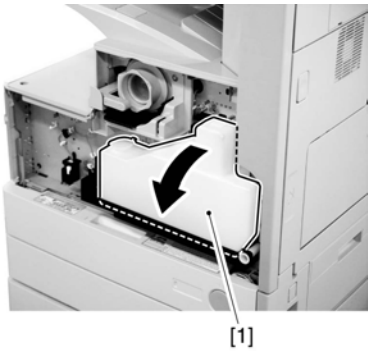

F-2-23

3) Open the right door [1].

F-2-24

4) Remove the lock screw[1] of the developing assembly pressure lever.

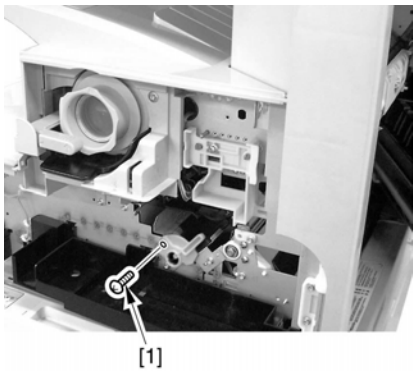

F-2-25

5) Turn the developing assembly pressure lever [1] to the left and release the pressure.

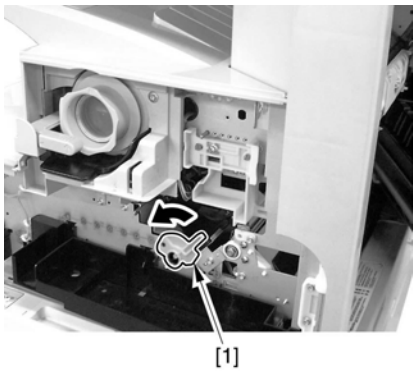

F-2-26

6) Remove the one screw [1] and take out the dummy drum [2].

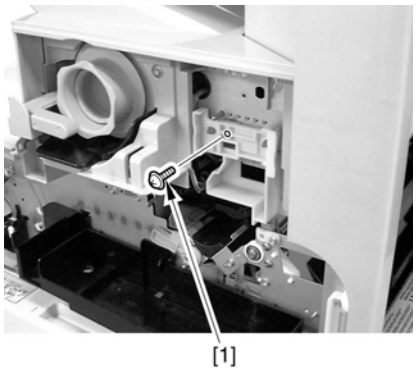

F-2-27

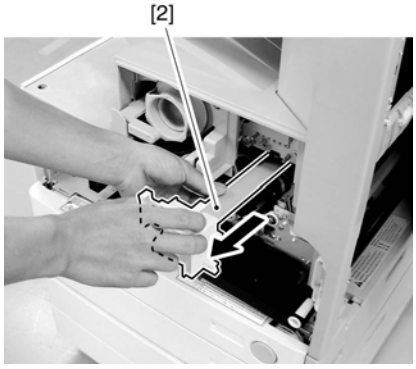

F-2-28

7) Remove the package of the drum unit, which is provided with the product, and remove the two drum pressure release blocks [1].

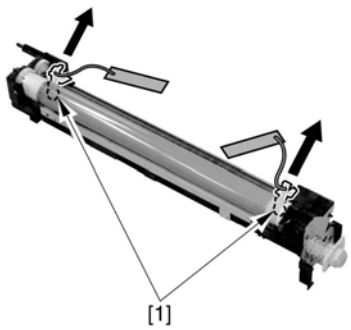

F-2-29

- Do not touch the photosensitive drum surface.
- Do not expose the photosensitive drum surface to light for a long period of time.
- Do not touch the rowel of the drum.

8) Mount the drum unit [1], which is provided with the product, to the copier.

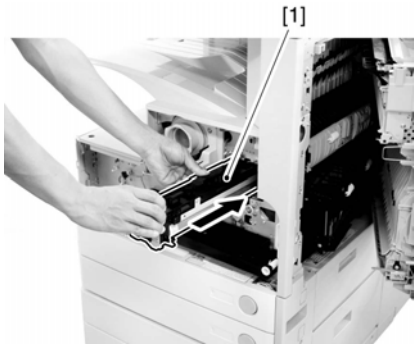

F-2-30

Be careful where you hold the drum unit.

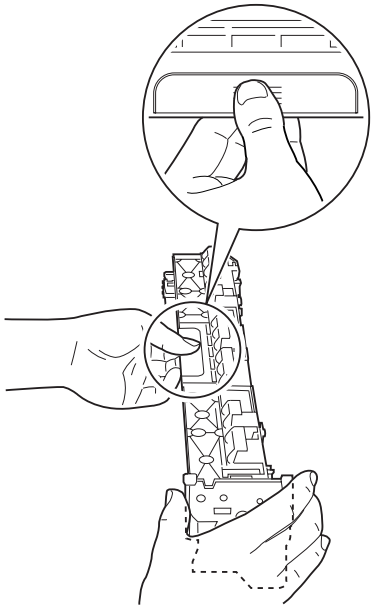

F-2-31

9) Secure the drum unit with the one screw [1] with which the dummy drum has been secured.

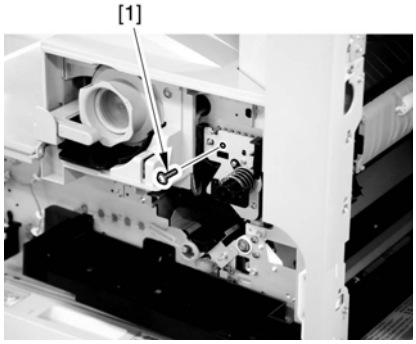

F-2-32

10) Push down the developing assembly pressure lever [1] and apply pressure.

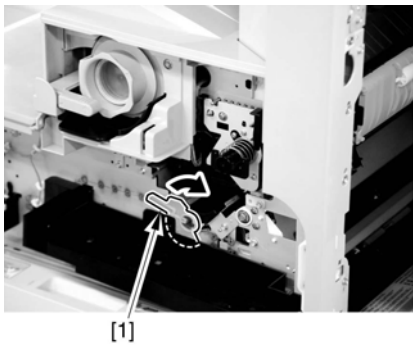

F-2-33

11) Secure the developing assembly pressure lever with the one screw [1].

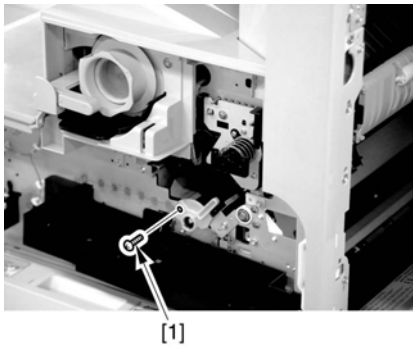

F-2-34

12) Close the right door.
13) Mount the waste toner box [1].

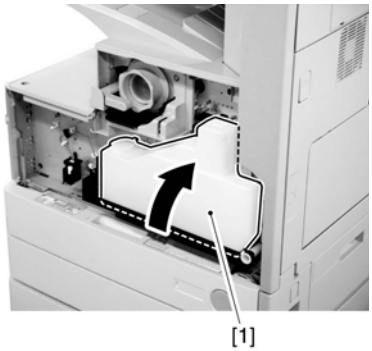

F-2-35

Point to note after attaching the waste toner receptacle
After attaching the waste toner receptacle, move the waste toner full detection lever [1] up and down to make sure that the lever is moved smoothly. Faulty detection may be resulted if the lever is caught in something and is not moved smoothly.

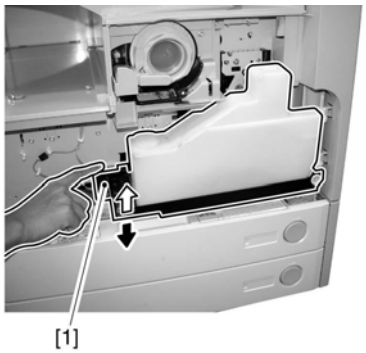

F-2-36

14) Mount the front cover unit [3] with the two screws [2] and mount the covering rubber [1], which is provided with the product.

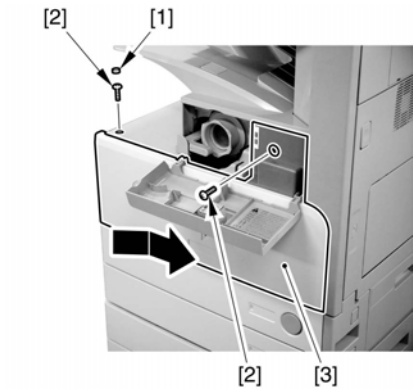

F-2-37

Reference
Mounting the Front Cover
1) Fit the 2 claws [2] of the front cover unit [1] into the claw holes [3] of the machine.

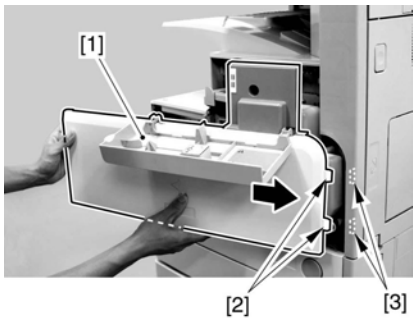

F-2-38

2) While matching the top [4] of the front cover unit against the machine, fit the lower left claw [2] of the front cover unit [1] in the claw hole [3] of the machine.

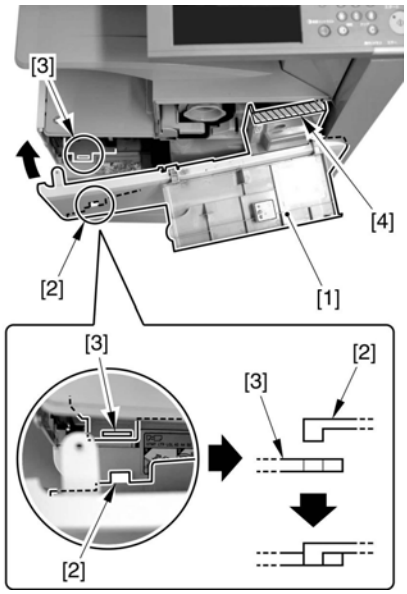

F-2-39

3) While matching the 2 claws [2] of the front cover unit [1], slide the front cover unit [1] to the right.

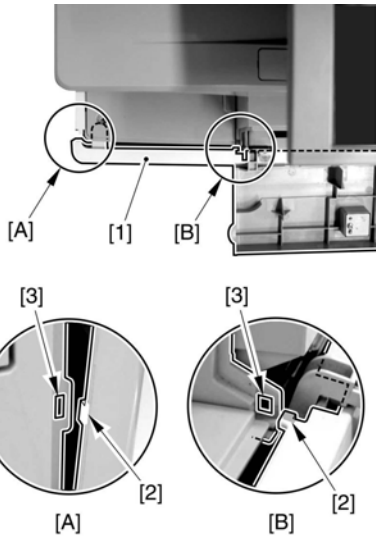

F-2-40

15) Close the front cover [1].

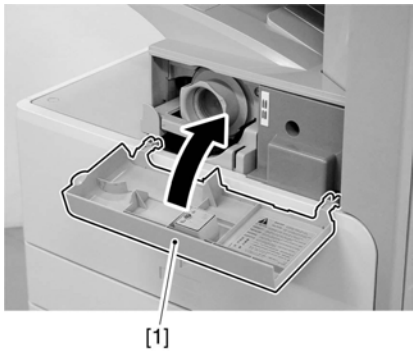

F-2-41

2.2.4 Securing the Copier Main Unit

iR2270 / iR2870 / iR3570 / iR4570 / / / / / iR2230 / / iR3530 / / / / /

- With a pedestal installed
1) Move the copier to the location where it will be installed, and then secure it with the 4 adjuster wheels of the pedestal.

- Without a pedestal installed
1) Remove the cassettes 1 and 2 and tighten the adjusting screws [1] at the base plate temporarily until the screw legs touch the bottom slightly.

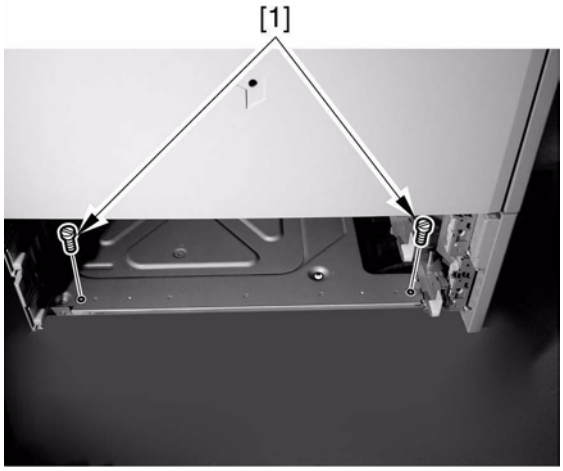

F-2-42

2) Check if the machine wobbles while it is lying on the desk or the floor, and tighten the adjusting screws if necessary.
- When it wobbles in the direction shown by the arrow A, tighten the screw at the right side in the above picture.
- When it wobbles in the direction shown by the arrow B, tighten the screw at the left side in the above picture.

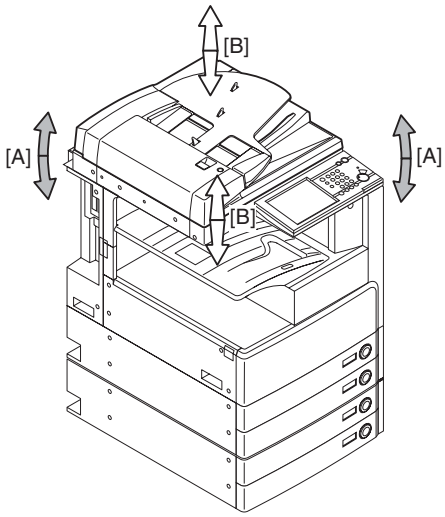

F-2-43

3) Mount the cassettes 1 and 2.

2.2.5 Connecting the Cable

iR2270 / iR2870 / iR3570 / iR4570 / / / /

1) If you are installing a cassette pedestal, remove the lattice connector cover, and fit the lattice connector [1] of the cassette pedestal to the machine.

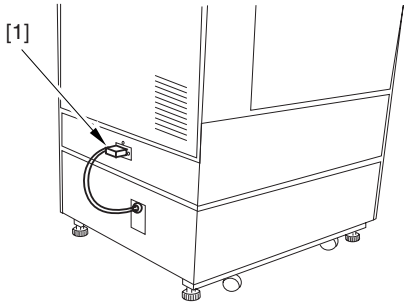

F-2-44

2) Connect the power plug to the power outlet.

⚠
1. Power supply voltage shall be +/-10% of the rating.
2. The amperage of the power supply must be as rated.
3. Before connecting the power plug, check to be sure that the main power switch is off.

3) Turn on the main power switch.
- The machine issues a message to indicate that it is loading programs.
- The machine issues a message to indicate that its printer is getting ready for a job.

⚠Turning Off the Main Power
Whenever you have to turn off the main power, be sure to go through the following to avoid damage to the hard disk:
1. Hold down the control panel power switch for 3 sec or more.
2. Go through the instructions for the shut-down sequence shown on the display so that the main power switch may be turned off.
3. Turn off the main power switch.

2.2.6 Connecting the Cable

iR2270 / iR2870 / iR3570 / iR4570 / / iR2270N / / iR2870N / / iR3570N / / iR4570N / iR2230 / / iR3530 / / / / /

1) If you are installing a cassette pedestal, remove the lattice connector cover, and fit the lattice connector [1] of the cassette pedestal to the machine.

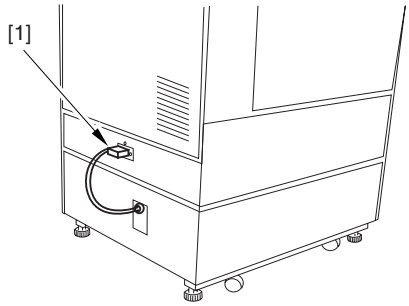

F-2-45

2) Connect the power plug to the power outlet.

⚠
1. Power supply voltage shall be +/-10% of the rating.
2. The amperage of the power supply must be as rated.
3. Before connecting the power plug, check to be sure that the main power switch is off.

3) Turn on the main power switch.
- The machine issues a message to indicate that it is loading programs.
- The machine issues a message to indicate that its printer is getting ready for a job.

⚠Turning Off the Main Power
Whenever you have to turn off the main power, be sure to go through the following to avoid damage to the hard disk:
1. Hold down the control panel power switch for 3 sec or more.
2. Go through the instructions for the shut-down sequence shown on the display so that the main power switch may be turned off.
3. Turn off the main power switch.

2.2.7 Stirring Toner

iR2270 / iR2870 / iR3570 / iR4570 / / / / / iR2230 / / iR3530 /

1) Enter the Service Mode. (Press "*" first, and "2" and "8" at the same time, and then "*.")
2) Select COPIER >FUNCTION > INSTALL> TONER-S.
3) Press the OK key.
- Toner stirring time is approx. 6 minutes. After counting up, it stops automatically.
- Make the cassette settings before toner stirring is completed. (See Setting the Cassettes.)

2.2.8 Setting the Cassettes

iR2270 / iR2870 / iR3570 / iR4570 / / / / / iR2230 / / iR3530 /

1) Press the cassette release button, and draw out the cassette to the front.
2) Check the paper series that the user is going to use, and verify whether or not the paper series selection switch [1] in the cassette matches that of the user's selection. If not, change the paper size series to the appropriate one.
3) Set the paper size selection dial [2] to the paper size of the paper to be placed.

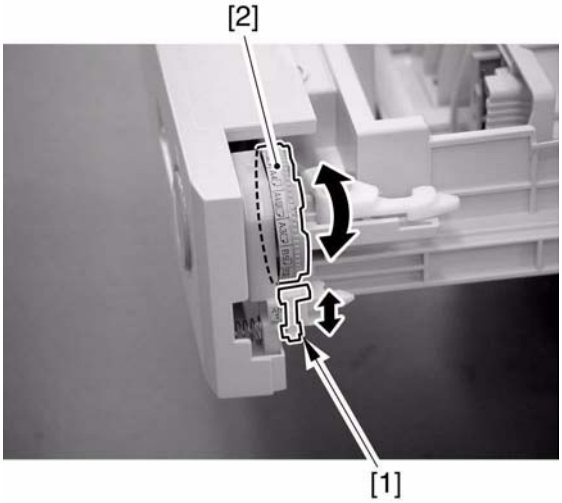

F-2-46

4) Hold the lever [1] of the side guide plate, and set the side guide plate to the appropriate size.
5) Turn the end guide plate [2] to the right and detach it. Following the instructions given on the base plate of the cassette, set the end guide plate to the appropriate size.

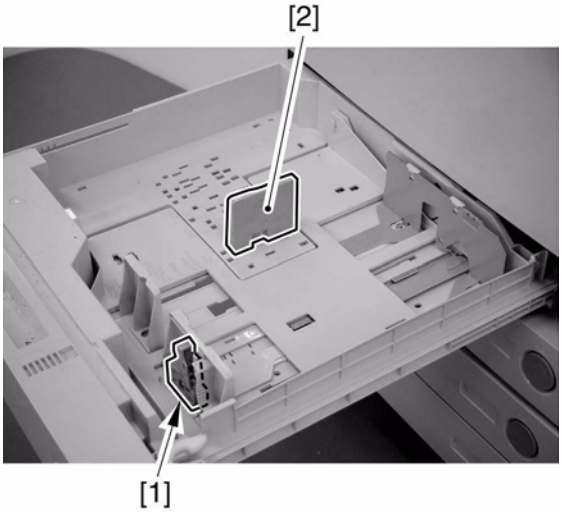

F-2-47

6) Affix the appropriate cassette size label [1] to the front side of the cassette.

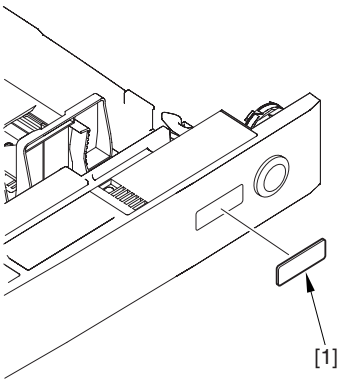

F-2-48

7) Place sheets in the cassette, and then push the cassette into the machine.
8) Do the same operation to the other cassette.
9) If a cassette pedestal is installed, make the cassette settings with performing the same operation.

2.2.9 APVC Correction of the Drum

iR2270 / iR2870 / iR3570 / iR4570 / / / / / iR2230 / / iR3530 /

1) Enter the Service Mode. (Press "*" first, and "2" and "8" at the same time, and then "*.")
2) Select COPIER >FUNCTION > DPC> D-GAMMA.
3) Press the OK key.

- Paper is fed from the cassette 1 (regardless of size of paper in the cassette).
- If there is no paper in the cassette 1, paper is fed from the lower cassette.
- That paper is delivered as it remains blank, and APVC correction is automatically completed.

4) Press the Reset key twice to exit the Service Mode.

There are cases where a small amount of toner, which is spilled inside the machine due to toner stirring, is attached to test copies (at the rear surface). It is solved after making about three test copies.

2.2.10 Adjusting the Image Position

iR2270 / iR2870 / iR3570 / iR4570 / / iR2270N / / iR2870N / / iR3570N / / iR4570N / iR2230 / / iR3530 /

- Adjusting the Margin (1st side; mechanical)

1) Using the cassettes 1 and 2 and the manual feeder as the source of paper, make copies, and check to be sure that the left margin L1 is 2.5 +/-1.5 mm.

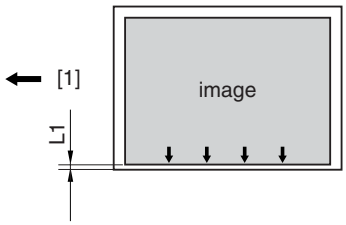

F-2-49

[1]Paper feed direction

*If the margin is not as indicated when the cassette 1 or 2 is used as the source of paper, make the following adjustments:

2) In the case of a 2-Cassette Pedestal-Y2, open its right door [1].
3) Open the lower right cover [2], and remove the 2 screws to detach the cover (lower right front).

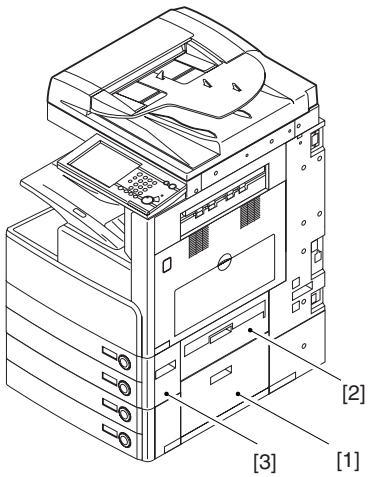

F-2-50

4) Take out the cassettes 1 and 2.
5) Check the position of the index [1] on the adjusting plate.

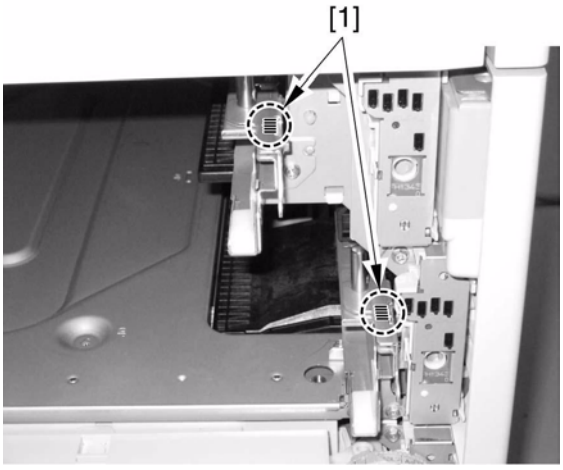

F-2-51

*Adjusting the Cassette 1
6) Remove the 2 claws [2], and detach the grip (right front) [1] in the direction of the arrow.

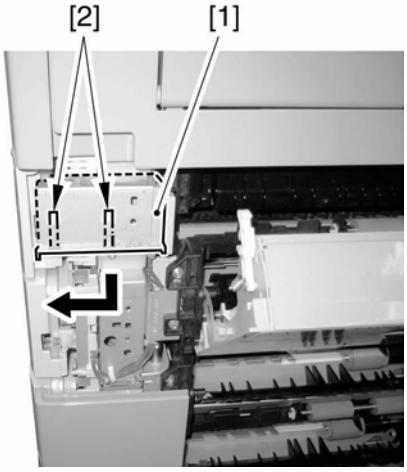

F-2-52

7) Loosen the fixing screw [2] of the adjusting plate [1].
8) While referring to the index you checked in step 5), move the adjusting plate back and forth. Moving the adjusting plate toward the rear of the machine will increase the left margin L1 of the image.

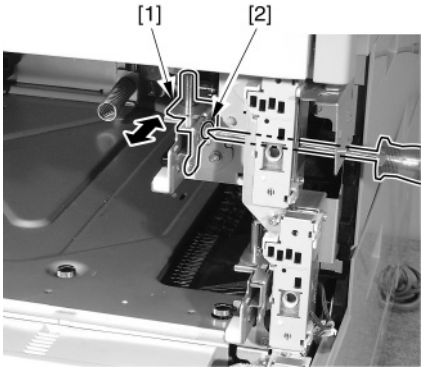

F-2-53

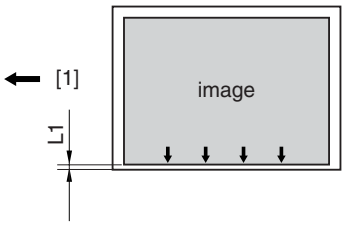

F-2-54

[1]Paper feed direction
9) Tighten the fixing screw.
10) Fit the cassette 1 back in.
11) Make a copy, and check to be sure that the left margin of the image on paper picked up from the cassette 1 is 2.5 +/-1.5 mm.
12) Fit the grip (right front) back in.
13) Attach the right cover of the machine.
*Adjusting the Cassette 2
6) Loosen the fixing screw [2] of the adjusting plate [1].
7) While referring to the index you checked in step 5), move the adjusting plate back and forth. Moving the adjusting plate toward the rear of the machine will increase the left margin L1 of the image.

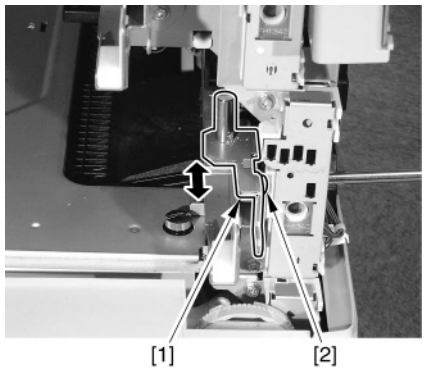

F-2-55

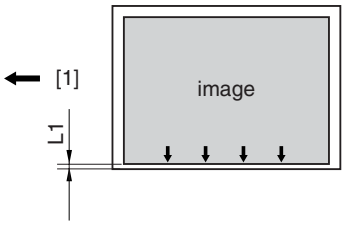

F-2-56

[1]Paper feed direction
8) Tighten the fixing screw.
9) Fit the cassette 2 back in.
10) Make a copy, and check to see that the left margin of the image on paper picked up from the cassette 2 is 2.5 +/-1.5 mm.
11) Attach the right front cover of the machine.
*If the left margin on paper picked up from the manual feeder is not as indicated, make the following adjustments:
2) Remove the paper from the manual feed tray.
3) Loosen the fixing screw [1] of the manual feed tray upper cover.
4) While referring to the index you checked in step 1), move the manual feed tray upper cover back and forth. Moving the manual feed tray upper cover toward the rear of the machine will increase the left margin of the image L1.

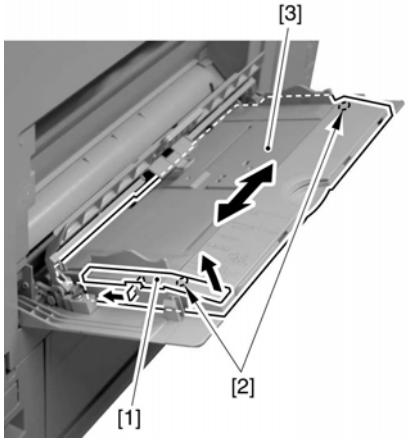

F-2-57

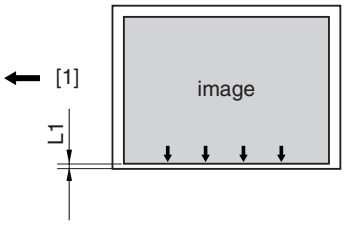

F-2-58

[1]Paper feed direction
5) Tighten the fixing screw of the manual feed tray upper cover.
6) Put paper in the manual feed tray.
7) Make a copy, and check to make user that the left margin of the image on paper picked up from the manual feed tray is 2.5 +/-1.5 mm.

- Adjusting the Margin (2nd side)
Make adjustments separately for both small paper and large paper:
small paper: A4, B5, and the like whose length in feed direction is shorter than LTR.

large paper: A3, A4R, B5R, and the like whose length in feed direction is longer than LTR.
1) Put small paper in the cassette 1 and large paper in the cassette 2.
2) Make a double-sided copy using the cassette 1, and check to be sure that the left margin L1 of the image on the 2nd side is 2.5 +/-2.0 mm.

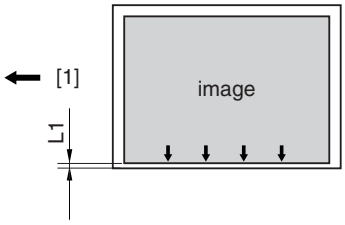

F-2-59

[1]Paper feed direction
3) If not as indicated, change the small paper 2nd side horizontal registration setting.
small paper: service mode COPIER>ADJUST>FEED-ADJ>ADJ-REF
An increase of '1' will increase the left margin of the image by 0.1 mm.
4) Enter the new value (obtained as the result of the foregoing adjustment) as the large paper 2nd side horizontal registration setting.
Large paper: service mode COPIER>ADJUST>FEED-ADJ>ADJ-RE-L.
5) Make a double-sided copy using the cassette 2, and check to make sure that the left margin of the image on the 2nd side is 2.5 +/-2.0 mm.

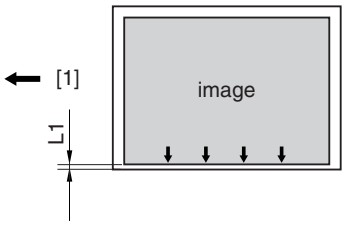

F-2-60

[1]Paper feed detection
6) If not as indicated, change the large paper 2nd side horizontal registration adjustment setting.
large paper: service mode COPIER>ADJUST>FEED-ADJ>ADJ-RE-L
An increase of '1' will increase the left margin of the image by 0.1 mm.

- Leading edge margin
Make a copy using the cassette 1, and check to be sure that the leading edge margin L1 is 2.5 +/-1.5 mm. If not, be sure to make the following adjustments
1) Make the following in service mode: COPIER >ADJUST >FEED-ADJ >REGIST.
2) Change the setting to make adjustments. (A change of '1' made to the setting will cause a move of 0.1 mm. A lower setting will move the image toward the leading edge.)

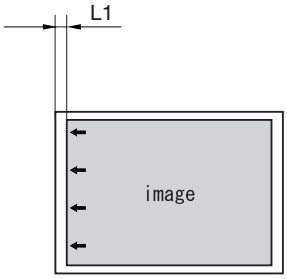

F-2-61

2.2.11 Attaching Other Parts

iR2270 / iR2870 / iR3570 / iR4570 / / / /

- Service Book Holder
1) Remove release paper of the double-sided tape on the rib of the service book folder [1], and attach the holder to the bottom plate of the pedestal.

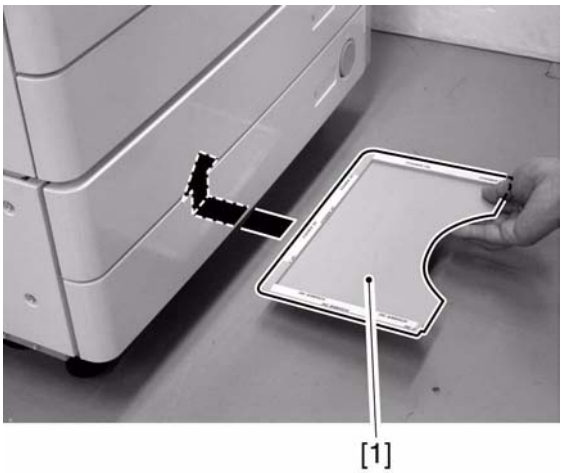

F-2-62

⚠Locations where the service book folder cannot be attached.
- Inside the machine (Inner side of the front cover)
- Locations where the louver is blocked.
- Locations where the grips are blocked.
Memo:
Attach the service book holder to the left cover of the machine if the pedestal is not installed.

- Lower right cover
1) Attach the lower right cover [1]. (Perform this step when attaching the machine to the 2-level cassette pedestal Y2 or more.)

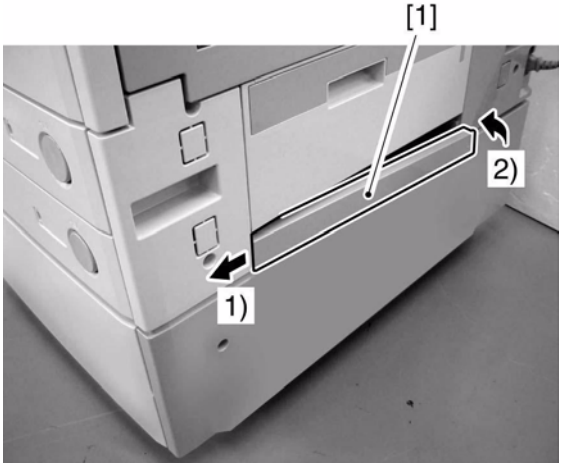

F-2-63

- Shut-Down Warning Label
1) Attach the Shut-Down warning label [1] of the appropriate language to the right cover (rear) of the machine (i.e.,. on the left inside [2] of the main power supply.).

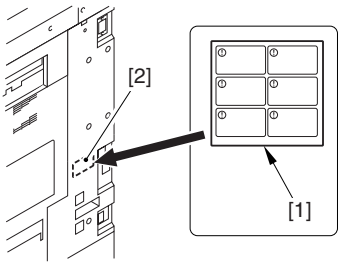

F-2-64

- Toner Bottle Warning Label
1) Open the front cover [1].

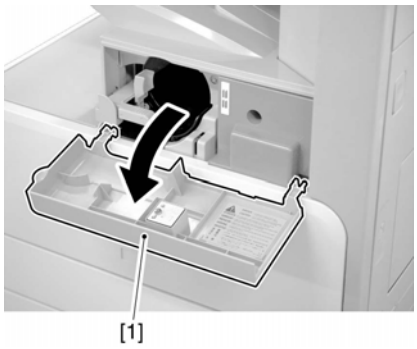

F-2-65

2) Attach the Toner Bottle warning label [1] of the appropriate language behind [2] the front cover.

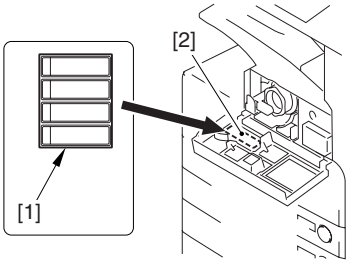

F-2-66

- Ferrite Core (230V model only)
1) Fit the ferrite core [1] to the network cable [2].

⚠Be sure to fit the ferrite core as follows to protect against noise:
- Be sure to fit it as close to the joint between the machine and the network cable as possible.
- The harness must be wound around the ferrite core once before the core is fixed in place.
- The harness is not trapped by the ferrite core.

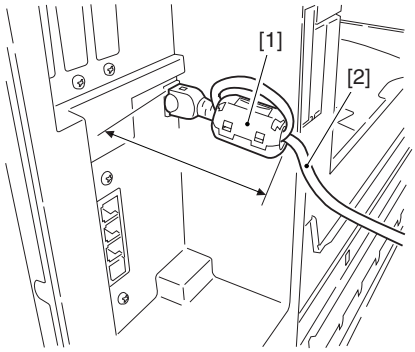

F-2-67

⚠When installing the machine newly or when replacing the harness, be sure not to leave behind the ferrite core.

- Reversing Guide (iR3570/4570 model only)
1) Fit the reversing guide [1].

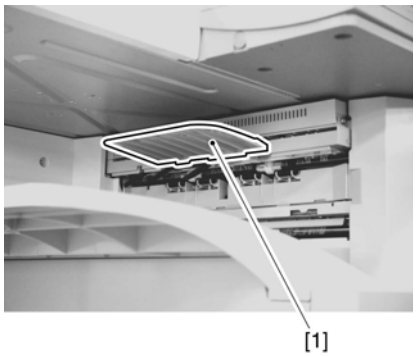

F-2-68

- Touch pen holder/touch pen

1) Peel off the backing paper, and attach the touch pen holder [1] to the control panel.
2) Put the touch pen [2] in the touch pen holder.

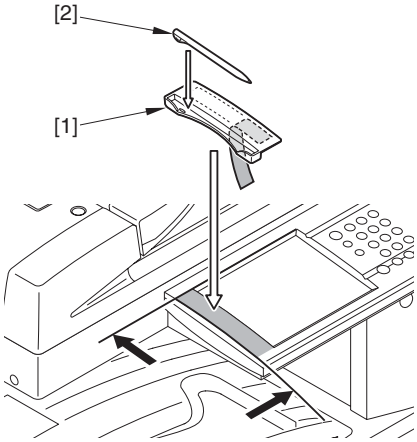

F-2-69

2.2.12 Attaching Other Parts

iR2230 / / iR3530 /

- Service Book Holder
1) Remove release paper of the double-sided tape on the rib of the service book folder [1], and attach the holder to the bottom plate of the pedestal.

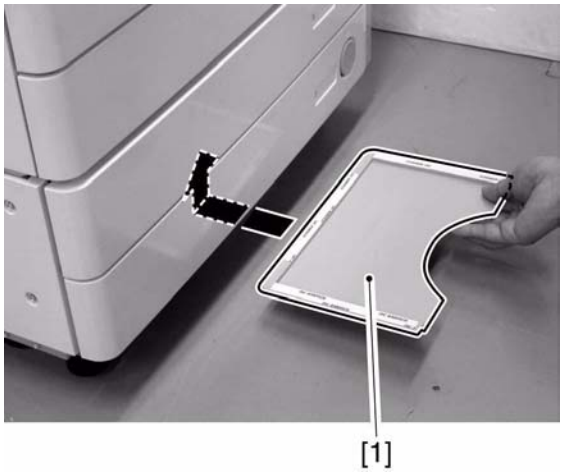

F-2-70

⚠Locations where the service book folder cannot be attached.
- Inside the machine (Inner side of the front cover)
- Locations where the louver is blocked.
- Locations where the grips are blocked.

Memo:
Attach the service book holder to the left cover of the machine if the pedestal is not installed.

- Lower right cover
1) Attach the lower right cover [1]. (Perform this step when attaching the

machine to the 2-level cassette pedestal Y2 or more.)

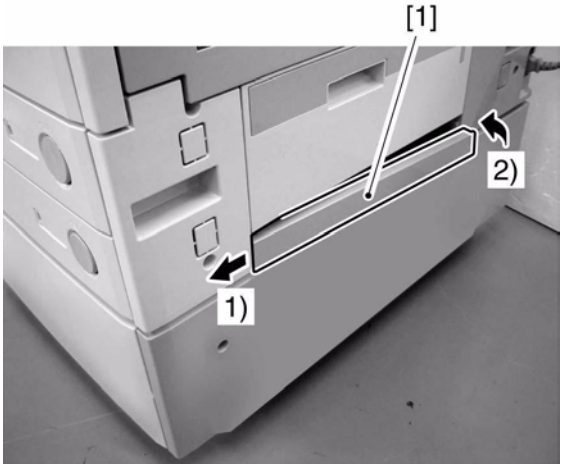

F-2-71

- Shut-Down Warning Label
1) Attach the Shut-Down warning label [1] of the appropriate language to the right cover (rear) of the machine (i.e.,. on the left inside [2] of the main power supply.).

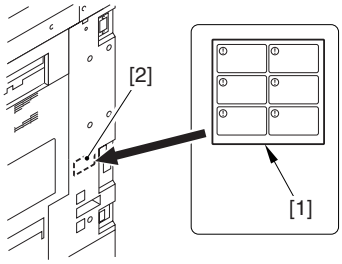

F-2-72

- Toner Bottle Warning Label
1) Open the front cover [1].

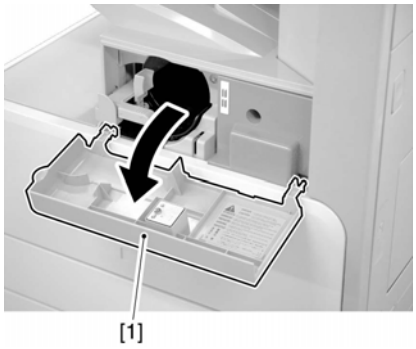

F-2-73

2) Attach the Toner Bottle warning label [1] of the appropriate language behind [2] the front cover.

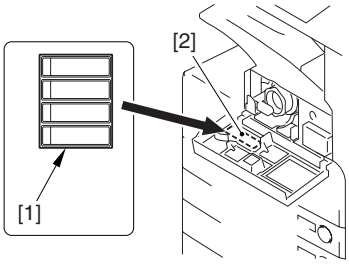

F-2-74

- Ferrite Core (230V model only)
1) Fit the ferrite core [1] to the network cable [2].

Be sure to fit the ferrite core as follows to protect against noise:
- Be sure to fit it as close to the joint between the machine and the network cable as possible.
- The harness must be wound around the ferrite core once before the core is fixed in place.
- The harness is not trapped by the ferrite core.

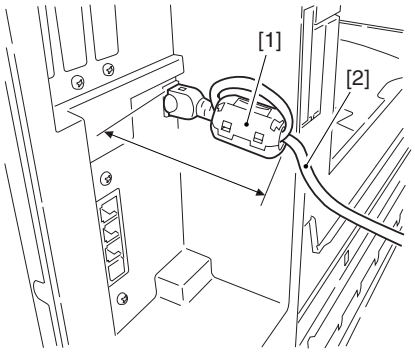

F-2-75

When installing the machine newly or when replacing the harness, be sure not to leave behind the ferrite core.

2.2.13 If Not Connected to a Network

iR2270 / iR2870 / iR3570 / iR4570 / / / / / iR2230 / / iR3530 /

Reference
If the machine is not connected to a network, its control panel will indicate the message "Check the Connection to the Network." To disable the message, turn off the following user mode item:
system setup>network>Ethernet driver setup>auto detect

2.3 Checking the Connection to the Network

2.3.1 Overview

iR2270 / iR2870 / iR3570 / iR4570 / / / / / iR2230 / / iR3530 /

The instructions that follow apply only when the machine is connected to a network.
If the user's network environment is based on TCP/IP, use the PING function to make sure that the network settings are correct.
If the user's network environment is based on IPX/SPX or AppleTalk, on the other hand, such a check need not be made.

2.3.2 Using the PING Function

iR2270 / iR2870 / iR3570 / iR4570 / / / / / iR2230 / / iR3530 /

1) Make the following selections in service mode: COPIER>TEST>NETWORK>PING.
2) Enter the correct IP address using the control panel keypad, and press the OK key.
3) Press the Start key.
- If successful, the indication will be 'OK'. If the attempt fails, however, 'NG' will be indicated.

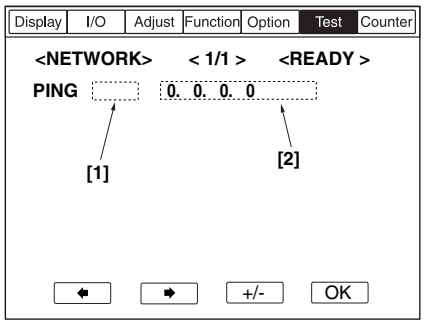

F-2-76

[1] Result (OK/NG)
[2] IP address input

2.3.3 Making a Check Using a Remote Host Address

iR2270 / iR2870 / iR3570 / iR4570 / / / / / iR2230 / / iR3530 /

You can use a remote host address in combination with the PING function to check the connection to the network.

The term "remote host address" refers to the IP address of a PC that is connected to the TCP/IP network to which the machine is connected.
1) Inform the system administrator that you will be checking the network connection using the PING function.
2) Ask the system administrator for the appropriate remote host address.
3) Enter the remote host address for PING.
4) If the result is 'OK', the connection to the network is correct.
5) If the result is 'NG', the connection to the network is not correct; start the following troubleshooting work:

2.4 Troubleshooting the Network

2.4.1 Overview

iR2270 / iR2870 / iR3570 / iR4570 / / / / / iR2230 / / iR3530 /

The instructions that follow apply only when the machine is connected to a network.
If an attempt to connect to the network fails, the following may be suspected:
a.the connection between the machine and the network is faulty.
b.the machine's TCP/IP setting is faulty.
c.the user's network is faulty.
d.the main controller PCB is faulty.
Make checks by referring to the following detailed instructions:

2.4.2 Making a Check Using a Loopback Address

iR2270 / iR2870 / iR3570 / iR4570 / / / / / iR2230 / / iR3530 /

A loopback address will return before it reaches the network controller. When you execute PING using a loopback address, you can find out whether the machine's TCP/IP setting is correct.
1) Enter the appropriate loopback address (127.0.0.1) for PING.
- If 'NG', check the machine's TCP/IP setting once again, and execute PING once again.
- If 'OK', go to the next check.

2.4.3 Making a Check Using a Local Host Address

iR2270 / iR2870 / iR3570 / iR4570 / / / / / iR2230 / / iR3530 /

A local host address is the IP address of the machine. When you execute PING using the address, it will return after it has reached the network controller so that you will be able to find out whether the network controller (main controller PCB) is free of a fault or not.
1) Enter the IP address of the machine for PING.
If 'NG' is indicated, perform the following, and execute PING once again:
- if the IP address of the machine is faulty, check to be sure that the IP address setting is correct or, as necessary, report to the system administrator to see if the IP address is valid.
- if the main controller PCB is faulty, replace the PCB.
If 'OK' is indicated, suspect a fault in the user's network environment. Report to the system administrator for appropriate remedial action.

2.5 Checking the Images/Operations

2.5.1 Checking the Image Quality and Operation

iR2270 / iR2870 / iR3570 / iR4570 / / / / / iR2230 / / iR3530 /

1) Place the Test Chart on the copyboard glass, and make copies using the individual cassettes as the source of paper; then, check the output images.
- be sure that there is no abnormal sound.
- be sure that the images are correct at all reproduction ratios.
- be sure that as many copies as specified are made normally.
2) Make settings (e.g., date, time) to suit the needs of the user.
3) Start service mode.
- press the User Mode key, press the 2 and 8 keys at the same time, press the User Mode key once again
4) Make specifications-related settings to suit the needs of the user: COPIER>OPTION>USER.
5) Make test prints by making the following selections in service mode: COPIER>FUNCTION>MISC-P>P-PRINT.
6) Put the output [1] in the Service Book case for storage.

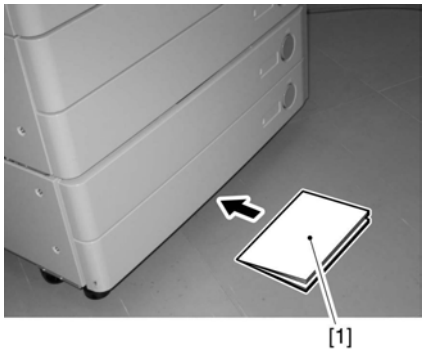

F-2-77

7) Press the Reset key twice to stop service mode.
8) Clean up the area around the machine, and fill out the form in the Service Book.

2.6 Installing the Card Reader

2.6.1 Points to Note

iR2270 / iR2870 / / iR2270N / / iR2870N / iR2230 / / iR3530 /

The card reader must be used in combination with the Card Reader Mounting Kit-B1.

2.6.2 Checking the Contents

iR2270 / iR2870 / / iR2270N / / iR2870N / iR2230 / / iR3530 /

<Card Reader-C1>

T-2-6

[1]	Card Reader-C1	1 pc.
[2]	RS tightening screw (M4x10)	1 pc.
[3]	Toothed washer	1 pc.

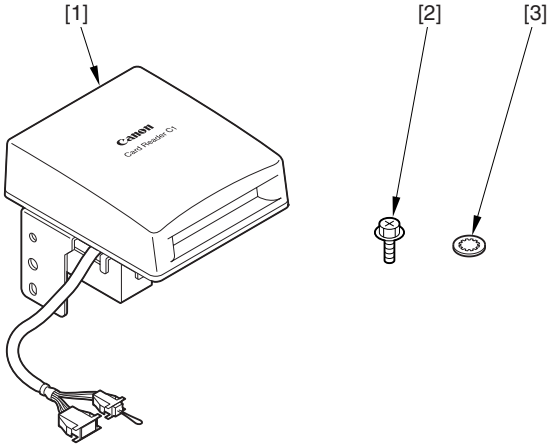

F-2-78

<Card Reader Mounting Kit-B1>

T-2-7

[1]	Card reader base	1 pc.
[2]	Relay harness	1 pc.
[3]	TP screw (M4x25)	1 pc.
[4]	TP screw (M4x8)	1 pc.
[5]	Toothed washer	2 pc.

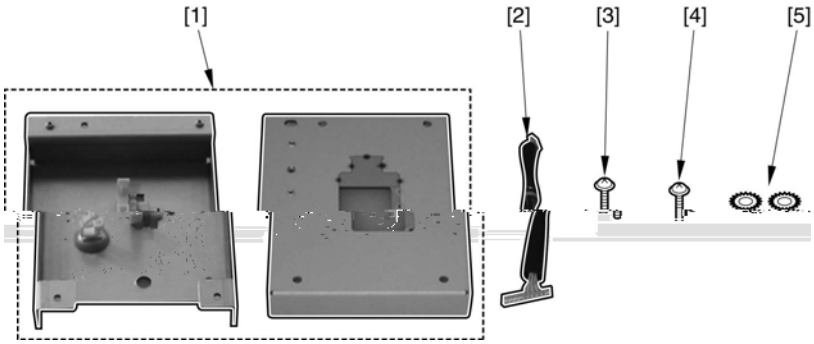

F-2-79

2.6.3 Installation Procedure

iR2270 / iR2870 / / iR2270N / / iR2870N / iR2230 / / iR3530 /

When you have installed the Card Reader-C1, make the following selections, COPIER> FUNCTION> INSTALL> CARD, and enter the card number you will be using; otherwise, the card will not be recognized upon insertion.

Be sure to go through the following steps on the host machine before starting the work:
1. Hold down the control panel power switch for 3 sec or more.
2. Go through the shutdown sequence as instructed on the screen so that you may turn off the main power switch.
3. Turn off the main power switch.
4. Disconnect the power cable (from the wall outlet).

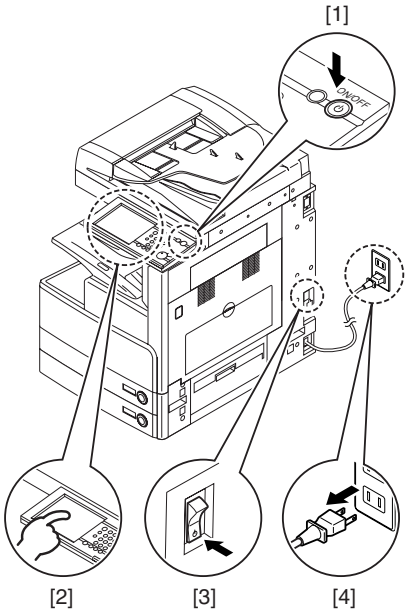

F-2-80

1) Open the pedestal right door [1]. (if equipped with a Cassette Feeding Unit-Y2)
2) Open the lower right cover [2].
3) Remove the 5 screws [3], and detach the right cover (rear) [4].

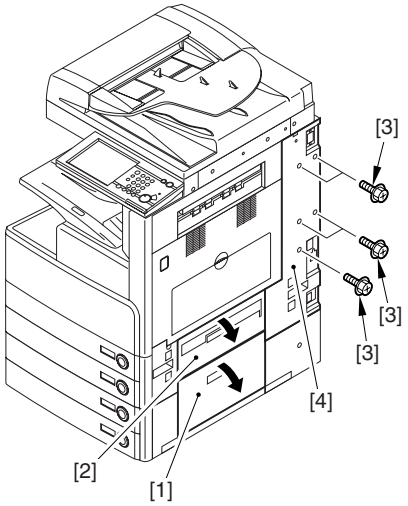

F-2-81

4) Remove the face plate [2] from the right cover (rear) [1] using nippers.

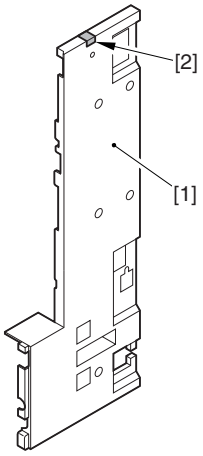

F-2-82

5) Connect the relay cable [1] to the connector of the host machine.

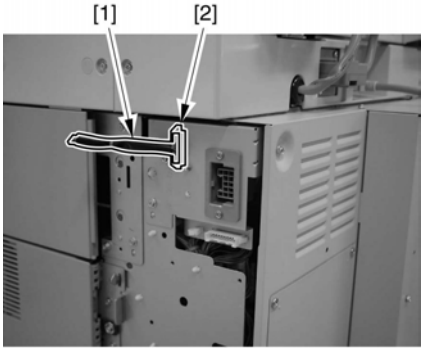

F-2-83

6) Mount the rear right cover using 4 screws.
7) Mount the card reader [1] and the card reader base [2] using the included TP screw (M4x8) [4]. Be sure to use the washer [3] when doing so.

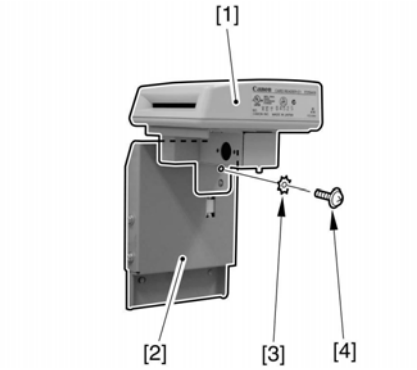

F-2-84

8) Route the relay cable [2] through the wire saddle [1].

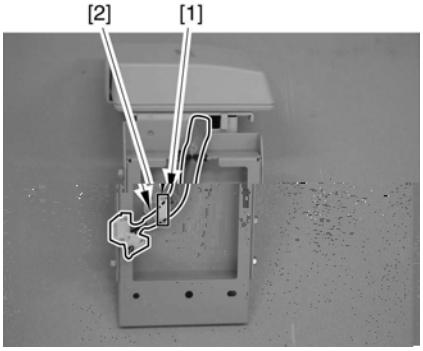

F-2-85

9) Connect the cable [1] of the machine and the relay cable [2] of the card reader.

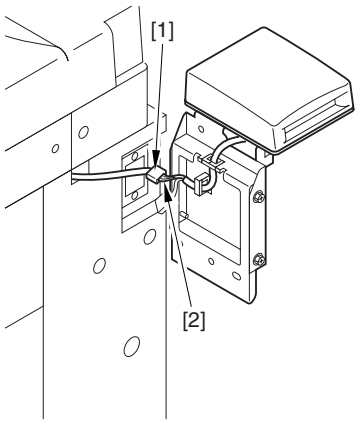

F-2-86

10) While making sure that the harness will not be trapped, mount the card reader [1] using a TP screw (4x25) [3] fitted with a washer [2].

F-2-87

11) Connect the power cable to the wall outlet, and turn on the main power switch. See that the machine is in a standby state, and start service mode.
12) Make the following selections in the machine's service mode (COPIER>FUNCTION>INSTALL>CARD); then, enter the appropriate card number (1 to 2001).
-Use the number that is the lowest of all the numbers that the user will be using.
-As many as 1000 cards may be used starting with the number entered.
13) Turn off the control panel power switch.
14) Turn off and then on the main power switch.

2.6.4 Installation in a NetSpot Accountant (NSA) Environment

iR2270 / iR2870 / / iR2270N / / iR2870N / iR2230 / / iR3530 /

1) Make the following selections in user mode: system control setup>group ID control>count control; then, see that the following numbers are available: ID00000001 to ID00001000. (If you entered '1' in service mode: COPIER>FUNCTION>INSTALL>CARD.)
2) Make the following selections in user mode: system setup>network setup>TCP/IP setup>IP address. Set the following: 'IP address', 'gateway address', 'subnet mask'.

Unless you have set 'system control group ID' and 'system control ID No.', you will not be able to execute 'register card to device' as part of NSA setup work.

3) In user mode, enter numbers of your choice for 'system control ID' and 'system control ID No.' as part of system administrator information.
4) Turn off the control panel power switch.
5) Turn off and then on the main power switch.

2.7 Installing the NE Controller

2.7.1 Installing the NE Controller-A1

iR2270 / iR2870 / iR3570 / iR4570 / / / / / iR2230 / / iR3530 /

When installing the NE Controller-A1 to its host machine, take note of the following:

1. be sure to perform the work in compliance with the laws and regulations of the country in question.
2. be sure that the host machine has properly been installed before starting the work.
3. be sure to disconnect the power plug of the host machine before starting the work.
4. be sure to identify the screws by type (length, diameter) and location.
5. be sure the settings data are ready on the PC at the service station.

1) Remove the 2 screws [2] of the top cover [1], and detach the cover.

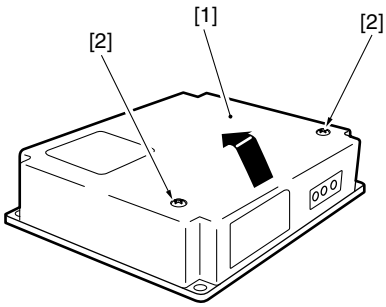

F-2-88

2) Connect the connector [1] of the power supply unit to the connector [2] as shown.

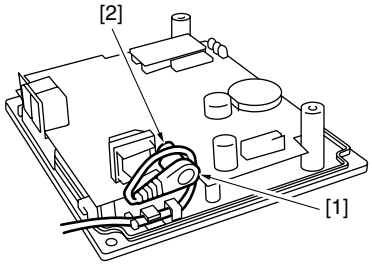

F-2-89

3) Remove the 4 screws [1], and detach the face plate [2] of the host machine's rear cover.

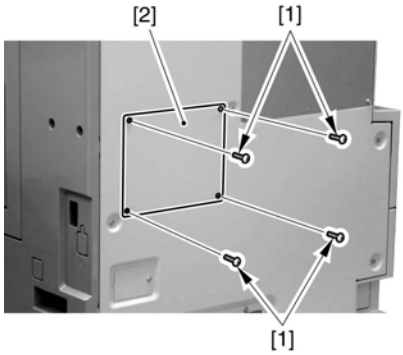

F-2-90

4) Connect the cable [1] to the connector [2] of the host machine (intended for an NE controller).

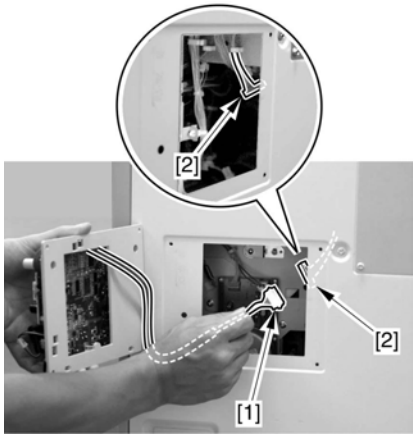

F-2-91

5) Secure the controller [1] to the host machine's rear cover using 4 screws [2].

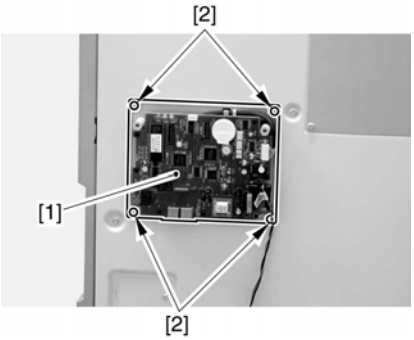

F-2-92

6) Take up the slack from the cable connecting the host machine and the controller; bundle the excess length on the controller side, and fix it in place using a harness guide [1].

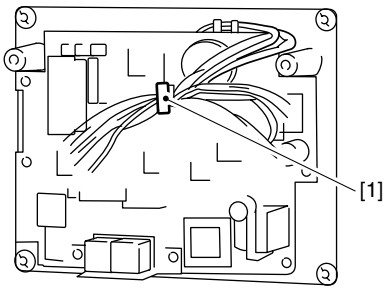

F-2-93

7) Shift bit 4 of the DIP switch [1] (SW2-4) found on the PCB of the controller to ON (so that the communication mode between the host machine and the controller will be IPC).

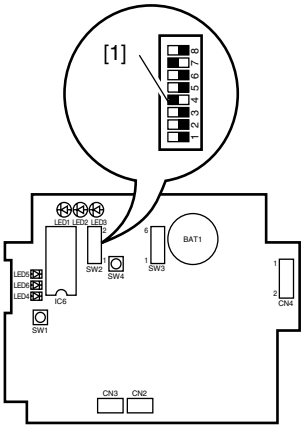

F-2-94

8) If IC6 [1] is found on the PCB, shift bit 7 of the DIP swish [2] (SW2-7) to ON; otherwise, shift bit 7 of the DIP switch [2] (SW2-7) to OFF.

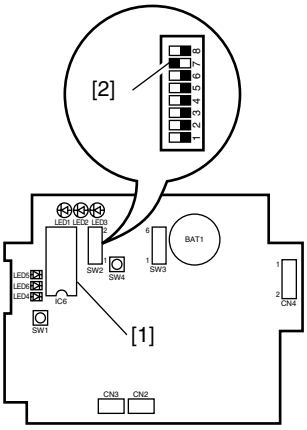

F-2-95

If IC6 [1] is not found, you need not mount any.
If you are mounting a ROM (IC6) [1] or replacing it for upgrading the connector, be sure to shift bit 7 of the DIP switch [2] (SW2-7) to ON.

9) Set the bits of the DIP switch [1] (SW3) on the PCB as indicated in the table.

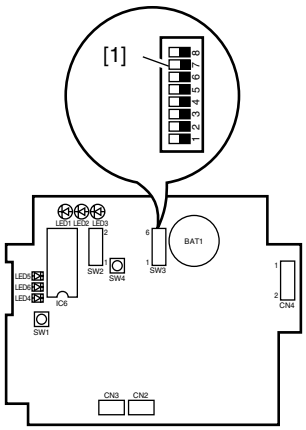

F-2-96

T-2-8

Switch notation	Setting	SW3-1	SW3-2	function
		OFF	OFF	sets the modem signal transmission level to -16 dBm.
		ON	OFF	sets the modem signal transmission level to -14 dBm.
SW3-1	see right	OFF	ON	sets the modem signal transmission level to -12 dBm.
SW3-2		ON	ON	sets the modem signal transmission level to -10 dBm.
SW3-3	OFF	keep at OFF at all times.		
SW3-4	ON	selects push pulse for controller line setting.		
	OFF	selects dial pulse for controller line setting.		
SW3-5	ON	selects 20PPS for dial pulse speed.		
	OFF	selects 10PPS for dial pulse speed.		
SW3-6	-	not used		

10) Connect the power supply unit to the power outlet, and check to see that LED1 [1] (green) on the PCB goes on.

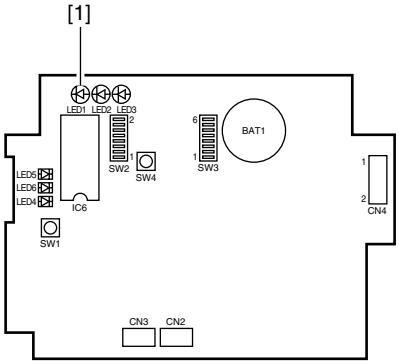

F-2-97

11) Execute RAM initialization.
Set the bits of the DIP switch [1] (SW-2) on the PC as indicated in the table; then, press the push switch [2]. A press on the push switch [2] (SW4) will causes LED5 [3] (red) to go on.

T-2-9

bits of SW2	Setting
SW2-1	OFF
SW2-2	OFF
SW2-3	ON
SW2-4	ON
SW2-5	OFF
SW2-6	OFF
SW2-7	See step 9).
SW2-8	OFF

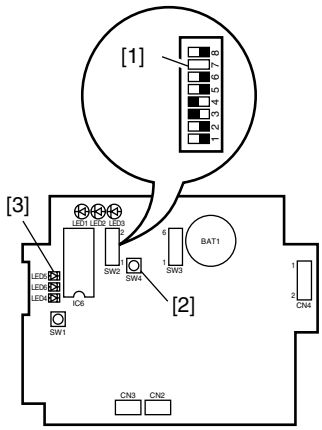

F-2-98

12) After making sure that LED5 [3] (red) has gone on, set the bits of the DIP switch [1] (SW2) on the PCB as indicated in the table; then, press the push switch [2] (SW4).
A press on the push switch [2] (SW4) will cause LED5 [3] (red) to go off, indicating that the RAM has been initialized.

T-2-10

bits of SW2	Setting
SW2-1	OFF
SW2-2	OFF
SW2-3	OFF
SW2-4	ON
SW2-5	OFF
SW2-6	ON
SW2-7	See step 9).
SW-8	OFF

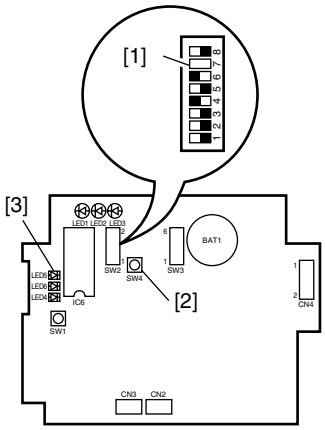

F-2-99

13) Shift bit 6 of the DIP switch [1] (SW2-6) on the PCB to OFF.

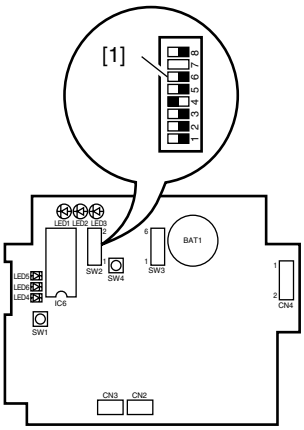

F-2-100

14) Connect the telephone line to the controller.
If you are using the controller on its own, connect the modular jack cable to the connector [1] (LINE) of the controller.
If you are using the extension function, connect the existing telephone or fax to the connector [2] (TEL), and connect the telephone line to the connector [1]

(LINE) of the controller.

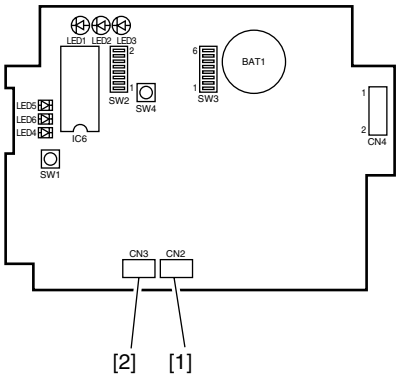

F-2-101

15) Call the service station, and ask for initial settings for the controller. (When a call comes in, LED 4 [1] (red) will start to flash.)

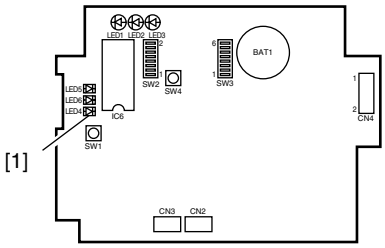

F-2-102

16) Call the service station, and check to make sure that the initial settings have correctly been made.
If failed, execute RAM initialization (steps 1) through 12)), and make initial settings once again.

Be sure to check with the service station to see that the settings are correct once again.

17) Check to find out if the controller is capable of placing a telephone call to the PC in the service station.
Press the push switch [1] (SW4) on the PCB.
A press on the push switch [1] (SW4) will cause LED6 [2] (red) to go on; when the transmission is done, LED6 [2] (red) will go off. If it has failed, LED6 [2] (red) will start to flash.
A press on the push switch [1] (SW4) while LED6 [2] is flashing will start transmission once again.
A press on the push switch [3] (SW1) while LED6 [2] is flashing will cancel the request for transmission.

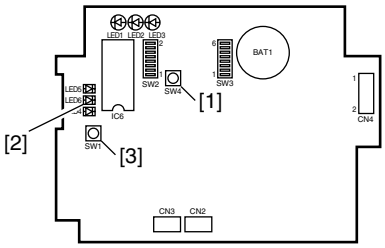

F-2-103

18) Check to make sure that the communication between the host machine and the controller is correct.
Connect the power plug of the host machine, and turn on its power switch to see that LED2 [1] (orange) flashes.

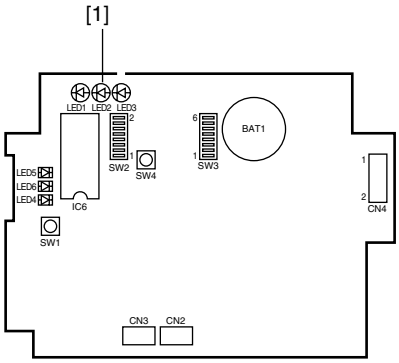

F-2-104

19) Press the Start key on the host machine, and see that LED3 [1] (pink) flashes each time paper is delivered.

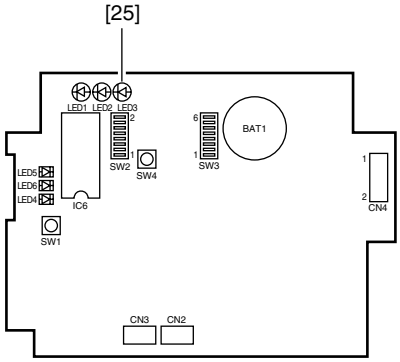

F-2-105

20) Attach the switch settings label [1] on the top cover of the controller, and record the settings of the switches.
21) Secure the top cover [2] of the controller in place using 2 screws [3]. When doing so, check to be sure that the cable of the power supply unit is held in place by the cable guide inside the controller and is not trapped by the top cover [2].

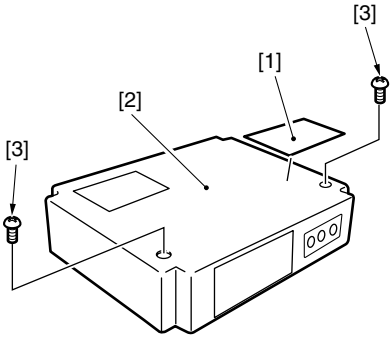

F-2-106

2.8 Installing the Reader Heater

2.8.1 Checking the Parts

iR3025 / / iR3025N / iR3030 / / iR3030N / iR3035 / / iR3035N / iR3045 / / iR3045N

Prepare the following parts because each part of the reader heater is assigned as service part.

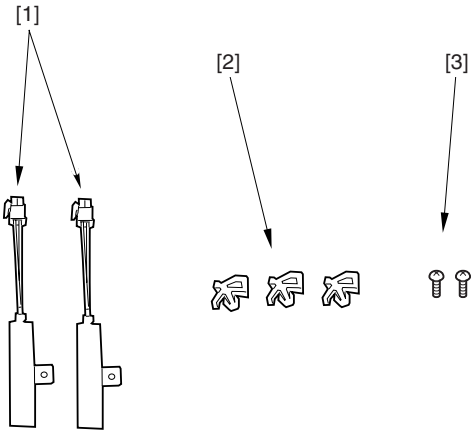

F-2-107

T-2-11

No.	Name	Part No.	Qty.
[1]	Reader Heater	FK2-0228-000	2 pc.
[2]	Clamp	WT2-0507-000	3 pc.
[3]	Screw (Binding M4X6)	XB3-6400-805	2 pc.

2.8.2 Turning Off the Host Machine

iR2270 / iR2870 / iR3570 / iR4570 / / / / / / iR3025 / / iR3025N / iR3030 / / iR3030N / iR3035 / / iR3035N / iR3045 / / iR3045N

How to Turn Off the Main Power
When turning off the main power, be sure to go through the following steps to protect the hard disk:
1) Hold down the control panel power switch for 3 sec or more.
2) Follow the instructions on the shutdown sequence screen to let the main power switch be ready to turn off.
3) Turn off the power switch.
4) Disconnect the power cables (for the power outlet).

2.8.3 Installation Procedure

iR2270 / iR2870 / iR3570 / iR4570 / / / / / / iR3025 / / iR3025N / iR3030 / / iR3030N / iR3035 / / iR3035N / iR3045 / / iR3045N

1) Open the copyboard cover/DADF.
2) Remove the 2 screws, and detach the glass retainer (right) [2].
3) Remove the copyboard glass (for copyboard cover) [3].
4) Remove the 2 screws [4], and detach the glass retainer (left) [5].
5) Remove the copyboard glass (for DADF) [6].

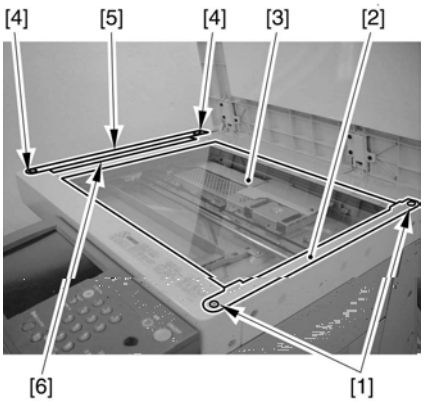

F-2-108

When removing the copyboard glass, take care not to touch the glass surface and the white plate on its back. (The presence of dirt will cause a black line in the images.)

6) Mount the clamp [1].
7) Fix the heater [3] in place using a screw [2].
8) Fit the connector [4] of the heater, and fix the harness of the heater in place using the clamp [1].

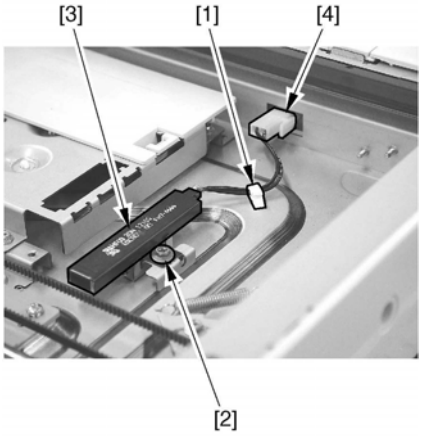

F-2-109

Points to Note When Routing the Harness
Check to see that the harness [1] is in contact with the reader base plate. If not, hold the harness [1] down with your hand to keep it in contact with the reader base plate.

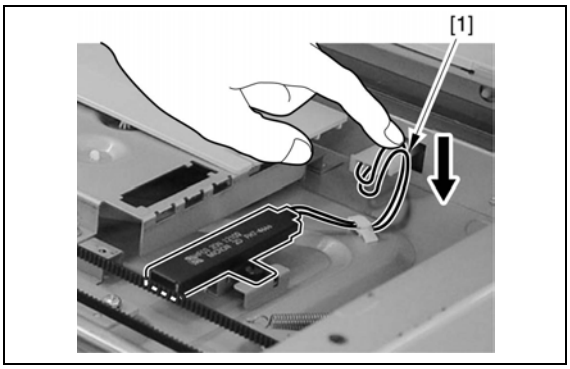

9) Pull the drive belt (front side) [1] to the right to move the contact sensor unit [2] to the center.

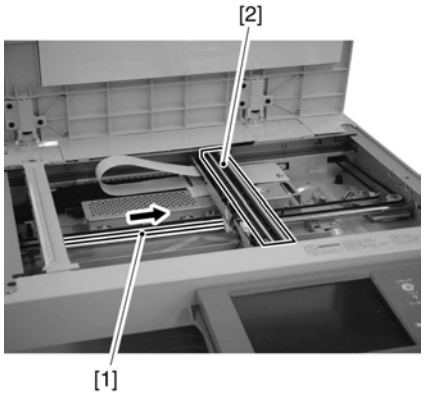

F-2-110

10) Peel off the protective sheet [1], and fit the 2 clamps [2].
(Keep the protective sheet peeled until step 12).)
11) Fix the heater [4] in place using a screw (Binding; M4X6)[[3].
12) Fit the connector [5] of the heater in place, and fit the harness of the heater to the clamp [2].

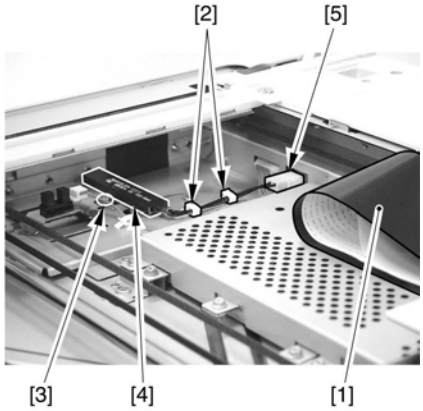

F-2-111

13) Put back the protective sheet.
14) Mount the copyboard glass (for DADF) and the copyboard glass (for copyboard cover).
15) Mount the glass retainer (let, right) using 2 screws each.
16) Connect the power cable.

2.9 Installing the Cassette Heater

2.9.1 Checking the Parts

iR3025 / / iR3025N / iR3030 / / iR3030N / iR3035 / / iR3035N / iR3045 / / iR3045N

Prepare the following parts because each part of the Cassette Heater Unit is assigned as service part.

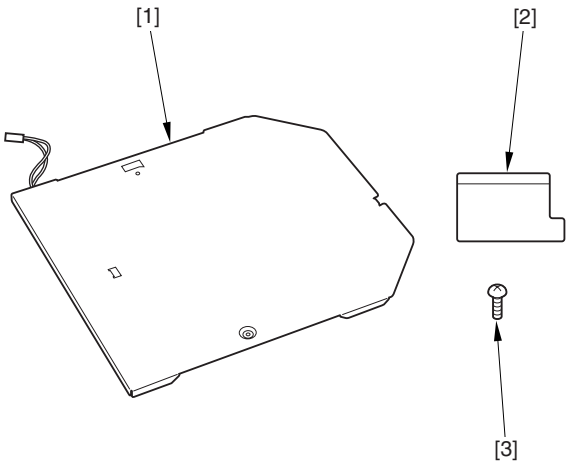

F-2-112

T-2-12

No.	Name	Part No.	Qty.
[1]	Heater Unit	FK2-0376-000	1pc
[2]	Plastic film	FC5-6899-000	1pc
[3]	Screw (binding; M4X6)	XB1-2400-607	1pc

2.9.2 Checking the Parts

iR3025 / / iR3025N / iR3030 / / iR3030N / iR3035 / / iR3035N / iR3045 / / iR3045N

Prepare the following parts because each part of the Heater PCB is assigned as service part.

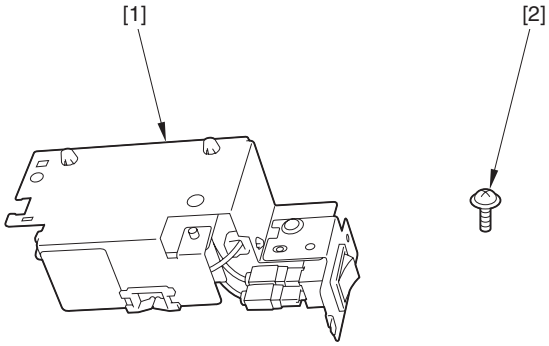

F-2-113

T-2-13

No.	Name	Part No.	Qty.
[1]	Heater PCB	FM2-2239-000	1 pc
[2]	Screw (TP; M3X6)	XB6-7300-607	1 pc

2.9.3 Turning Off the Host Machine

iR3025 / / iR3025N / iR3030 / / iR3030N / iR3035 / / iR3035N / iR3045 / / iR3045N

How to Turn Off the Main Power
When turning off the main power, be sure to go through the following steps to protect the hard disk:
1) Hold down the control panel power switch for 3 sec or more.
2) Follow the instructions on the shutdown sequence screen to let the main power switch be ready to turn off.
3) Turn off the power switch.
4) Disconnect the power cables (for the power outlet).

2.9.4 Mounting the Cassette Heater Unit

iR3025 / / iR3025N / iR3030 / / iR3030N / iR3035 / / iR3035N / iR3045 / / iR3045N

1. Mounting to the cassette of the host machine

To operate the Cassette Heater Unit, the Heater PCB needs to be mounted.

1) Pull out the cassette 1 and 2.
2) While removing the hook by inserting the part indicated as [1] from the front side of the host machine with a flat blade screwdriver, detach the connector cover [2].

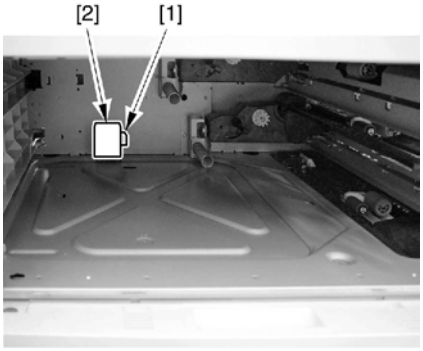

F-2-114

3) Fit the 3 hooks [2] of the heater unit [1] to the slit of the base plate to match the hole positions.

> ⚠
> In the case of mounting the heater unit, make sure to check that the 3 hooks [2] are tightly fitted and there is no jiggle.

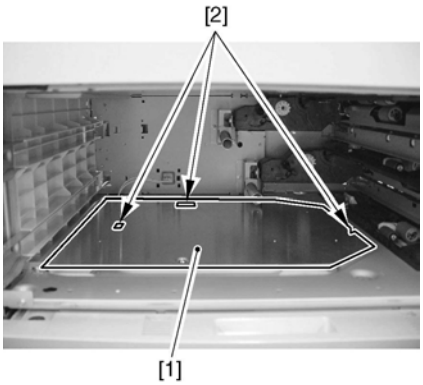

F-2-115

4) Mount the heater unit [1] with the screw (binding; M4X6) [2], and connect the connector [3].

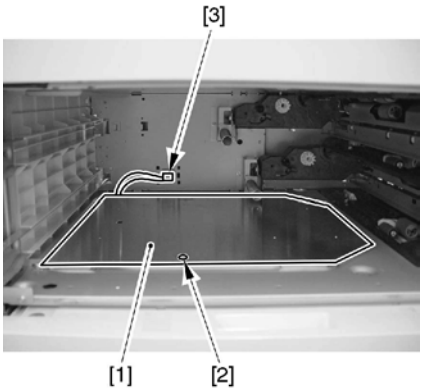

F-2-116

5) Attach the connector cover [1].
6) Attach the plastic film [2] (for protecting the AC cable) over the cable [3] to fit the end of the connector cover [A] and the end of the rear side of the host machine [B].

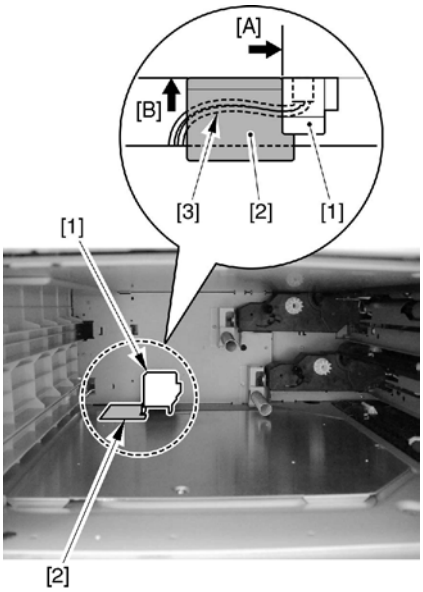

F-2-117

7) Put back the cassette 1 and 2.

2. Mounting to the cassette pedestal side

> ⚠ To operate the Cassette Heater Unit, the Heater PCB and Cassette Heater Attachment needs to be mounted.

1) Pull out the cassette 3 and 4.
2) While removing the hook by inserting the part indicated as [1] from the front side of the host machine with a flat blade screwdriver, detach the connector cover [2].

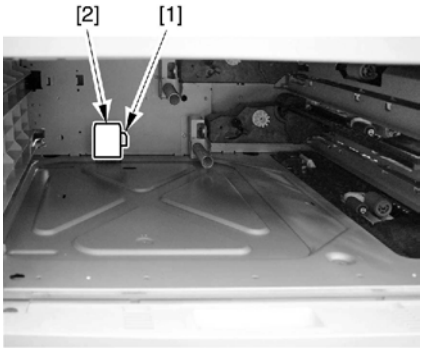

F-2-118

3) Fit the 3 hooks [2] of the heater unit [1] to the slit of the base plate to match the hole positions.

> ⚠ In the case of mounting the heater unit, make sure to check that the 3 hooks [2] are tightly fitted and there is no jiggle.

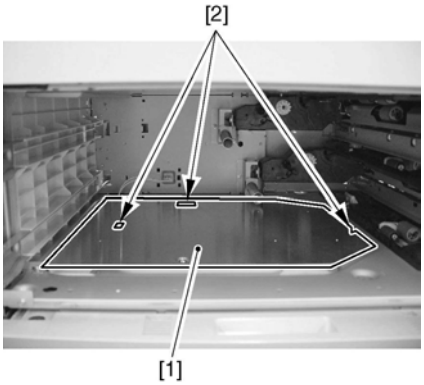

F-2-119

4) Mount the heater unit [1] with the screw (binding; M4X6) [2], and connect the connector [3].

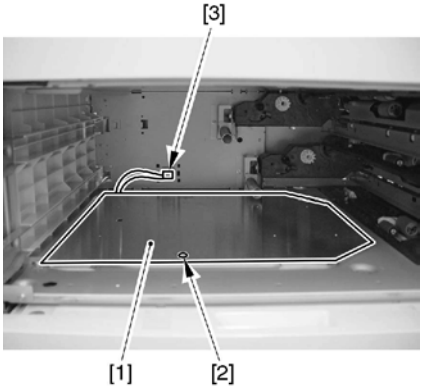

F-2-120

5) Attach the connector cover [1].
6) Attach the plastic film [2] (for protecting the AC cable) over the cable [3] to fit the end of the connector cover [A] and the end of the rear side of the host machine [B].

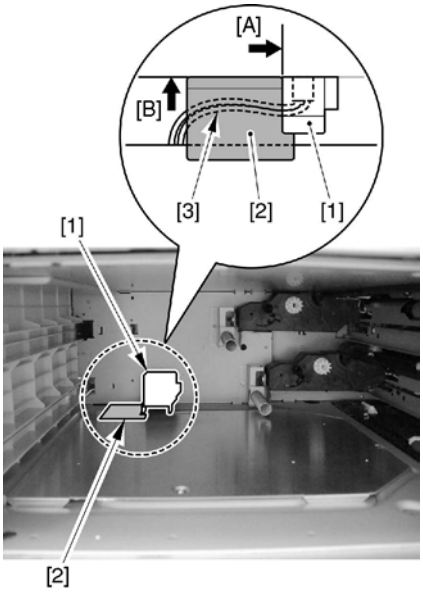

F-2-121

7) Put back the cassette 3 and 4.

2.9.5 Mounting the Heater PCB

iR3025 / / iR3025N / iR3030 / / iR3030N / iR3035 / / iR3035N / iR3045 / / iR3045N

1) Disconnect the lattice connector [1] of the cassette pedestal.

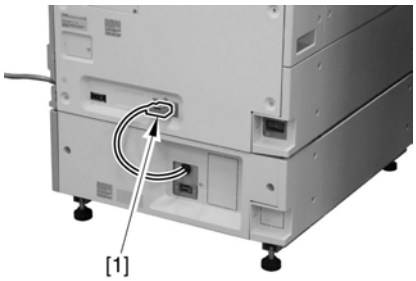

F-2-122

2) Detach the small cover [2] of the lower rear cover [1] (the detached small cover is not used).
   - 1 screw [3]
3) Detach the rear cover [1].
   - 14 screws [4]

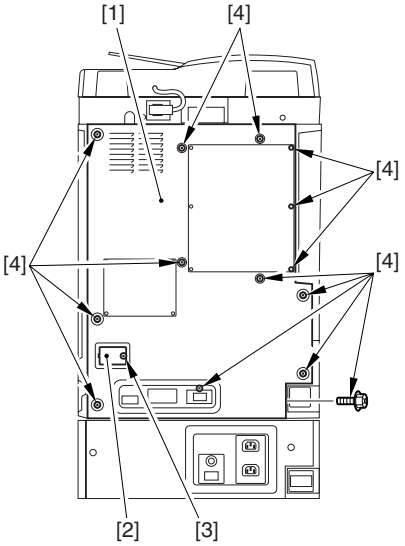

F-2-123

4) Open the cassette right upper cover [1]. If the cassette pedestal was installed, open also the cassette right lower cover [2].

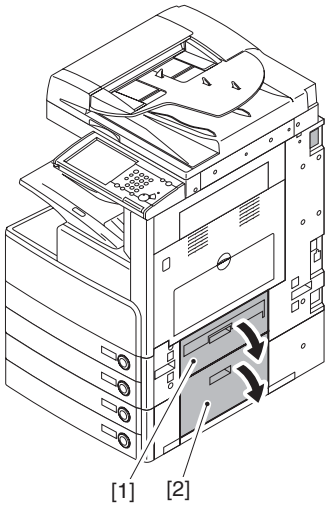

F-2-124

5) Detach the right cover (rear) [1].
- 5 screws [2]

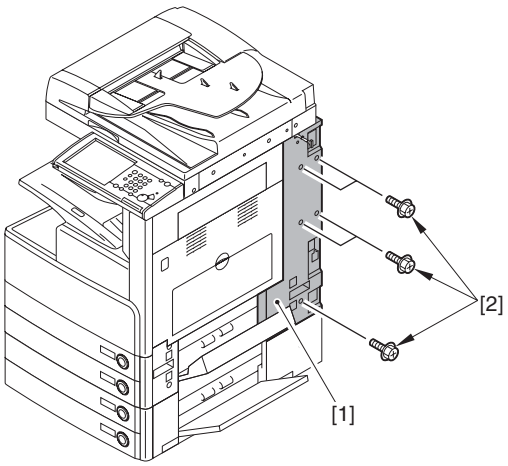

F-2-125

6) Using nippers cut off the face plate [2] of the right cover (rear) [1].

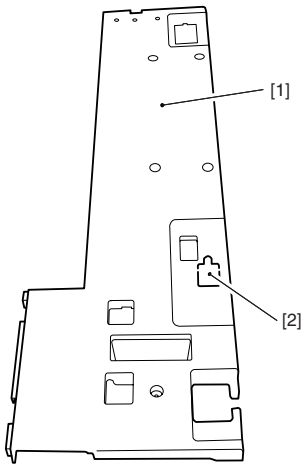

F-2-126

7) From the 2 wire saddles [1], free the harness of the AC connector [2]; then, close the wire saddles.
8) From the 2 edge saddles [3], free the harness of the AC connector [4].

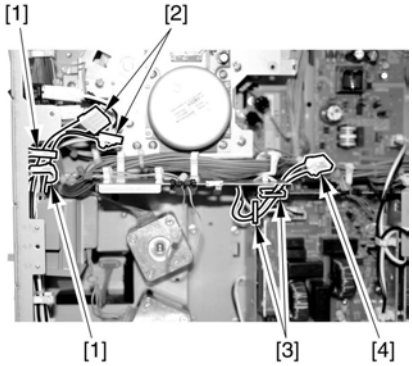

F-2-127

9) From the 2 wire saddles [1] and the edge saddle [2], free the harness of the DC connector [3].

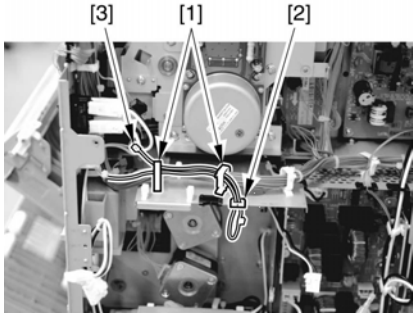

F-2-128

10) Remove the screw [1] of the heater PCB to separate the switch block [2].

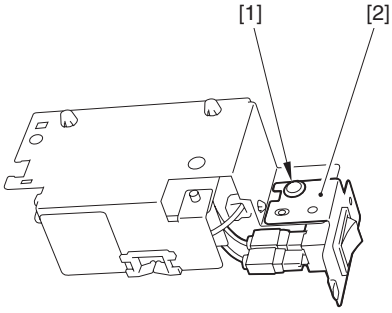

F-2-129

11) Disconnect the cable [1] of the switch block as shown.

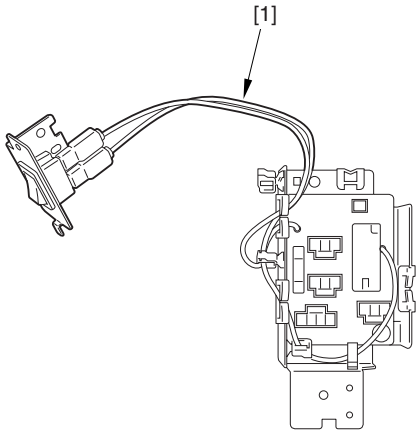

F-2-130

12) Mount the heater PCB [1].
- 1 screw [2] (the one removed in the step 10).)

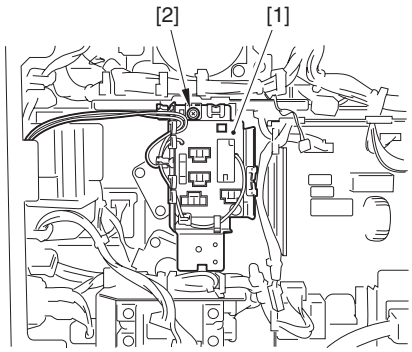

F-2-131

13) Fit the DC connector [2] to the PCB segment [1]; then, route it through the edge saddle [3].

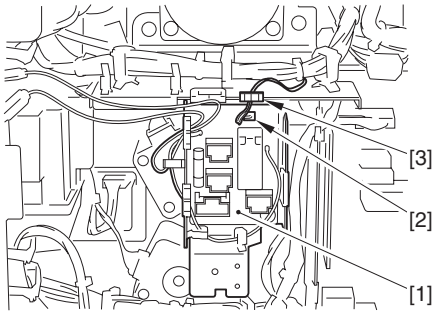

F-2-132

14) Secure the AC harness [1] of the heater with the edge saddle [2] and the 2 wire saddles [3].

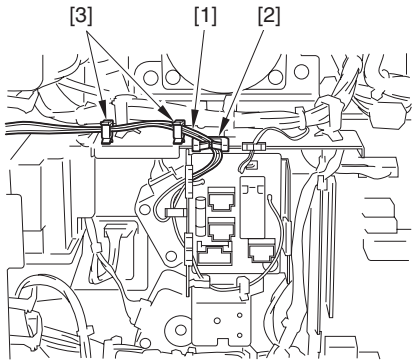

F-2-133

15) Fit the 2 AC connectors [2] to the PCB segment [1]; then, route it through the edge saddle [3].
16) Fit the AC connector [4] to the PCB segment [1]; then, route it through the edge saddle [5].

> ⚠
> When fitting the AC connector [4], do not get the cable [6] caught.

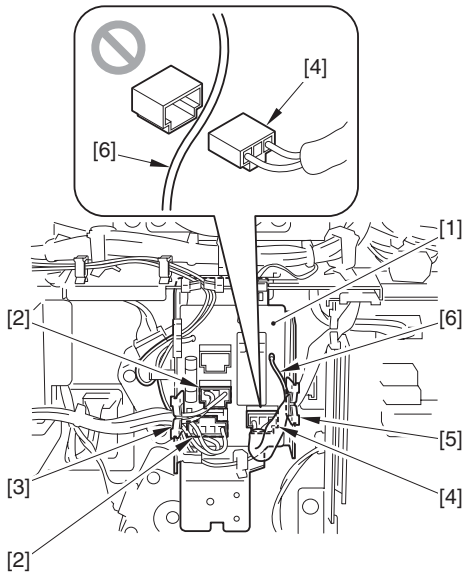

F-2-134

17) Hook the claw [1] of the switch block on the right side plate, and fix it with the screw (TP; M3X6) [2].

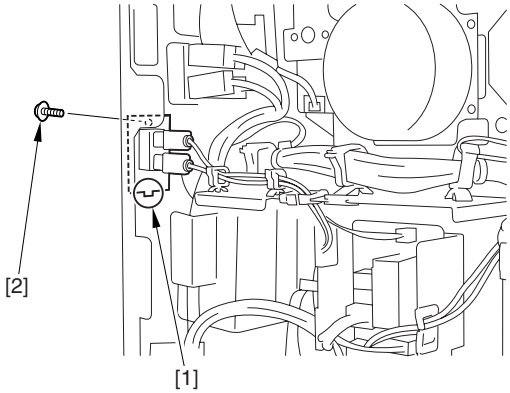

F-2-135

18) Fix the removed parts.
- right cover (rear)
- right cover
- lattice connector

19) Close the cassette upper right cover and cassette lower right cover.
20) Turn ON the heater switch.

2.10 Installing the Cassette Heater for the Cassette Pedestal

2.10.1 Checking the Parts

iR3025 / / iR3025N / iR3030 / / iR3030N / iR3035 / / iR3035N / iR3045 / / iR3045N

Prepare the following parts because each part of the Cassette Heater Attachment is assigned as service part.

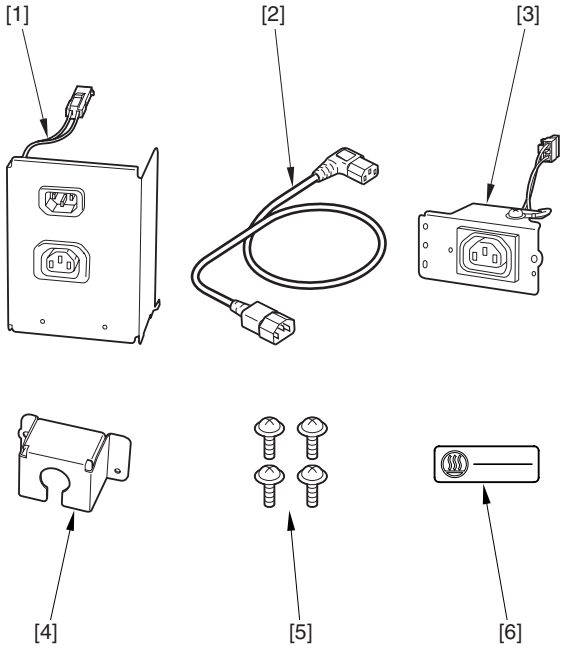

F-2-136

T-2-14

No.	Name	Part No.	Qty.
[1]	Power Code Unit	FM3-0278-000	1 pc
[2]	Power Code	FK2-4628-000	1 pc
[3]	Environment Heater Outlet	FM3-0279-000	1 pc
[4]	Retainer	FC7-7138-000	1 pc
[5]	Screw (TP; M3X6)	XB6-7300-607	4 pc
[6]	Outlet Label	FU5-8018-000	1 pc

2.10.2 Turning Off the Host Machine

iR3025 / / iR3025N / iR3030 / / iR3030N / iR3035 / / iR3035N / iR3045 / / iR3045N

How to Turn Off the Main Power
When turning off the main power, be sure to go through the following steps to protect the hard disk:
1) Hold down the control panel power switch for 3 sec or more.
2) Follow the instructions on the shutdown sequence screen to let the main power switch be ready to turn off.
3) Turn off the power switch.
4) Disconnect the power cables (for the power outlet).

2.10.3 Mounting the Cassette Heater Attachment

iR3025 / / iR3025N / iR3030 / / iR3030N / iR3035 / / iR3035N / iR3045 / / iR3045N

1) Disconnect the lattice connector [1] of the cassette pedestal.

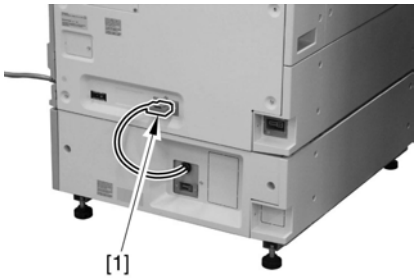

F-2-137

2) Detach the small cover [2] of the rear cover [1] (the detached small cover is not used).
- 1 screw [3]

3) Detach the rear cover [1].
- 14 screws [4]

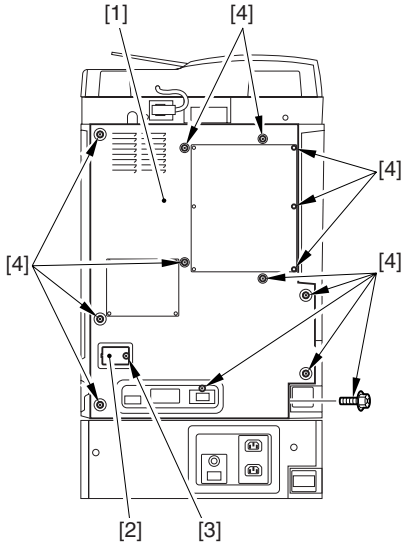

F-2-138

4) Mount the environment heater outlet [1] using a screw (TP; M3X6) [2].

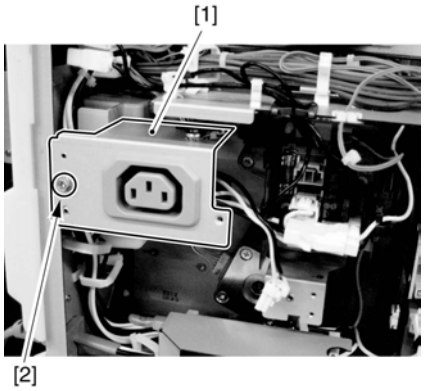

F-2-139

5) Connect the connector [1] to the heater PCB.

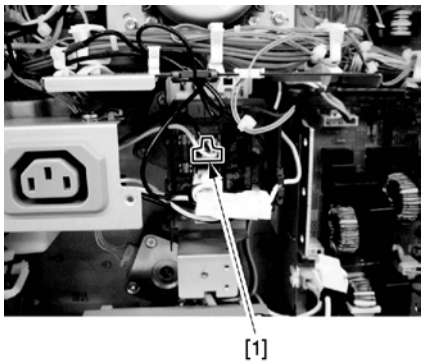

F-2-140

6) Attach the rear cover.
7) Detach the rear cover [1] of the cassette pedestal.
   - 4 screws [2]

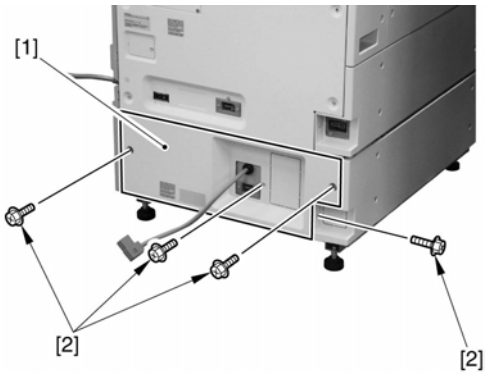

F-2-141

8) Using nippers, cut off the face plate [2] of the rear cover [1] of the cassette pedestal.

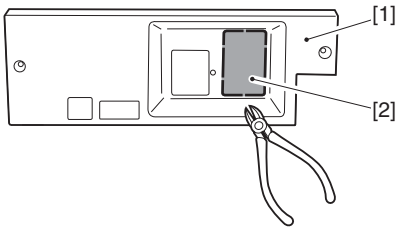

F-2-142

9) Connect the connector [1] of the power code unit, and while fitting the hooks [2] to the holes [3] found at the bottom of the cassette pedestal, attach it with 2 screws (TP; M3X6) [4].

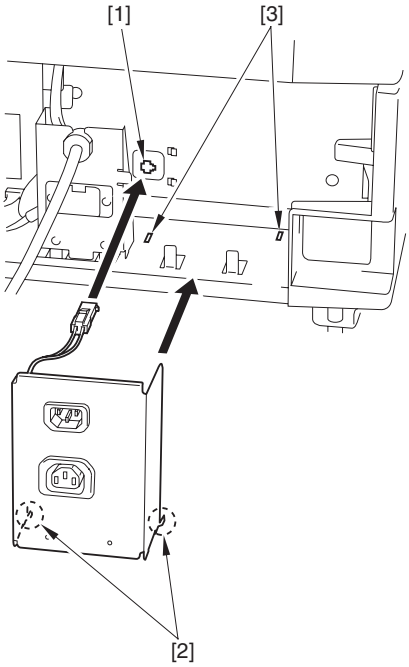

F-2-143

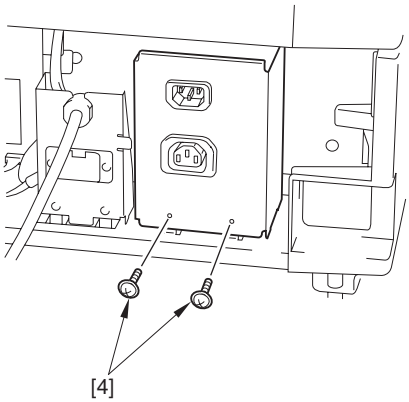

F-2-144

10) Attach the rear cover of the cassette pedestal.

11) Connect the lattice connector to the host machine.
12) Connect the power code [1] to the power code unit [2] and the environment heater outlet [3] of the host machine.
13) Attach the outlet label [4].

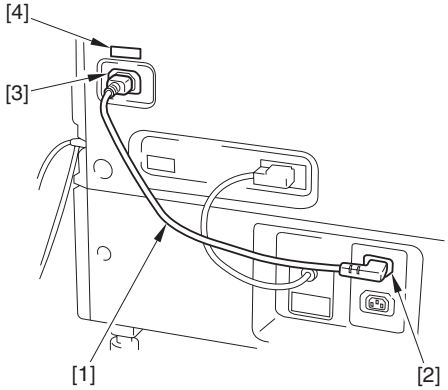

F-2-145

14) Attach the plug cover [1] on the power code [2].
- 1 screw [3] (use the screw that was removed in the step 2)
- 1 screw (TP; M3X6) [4]

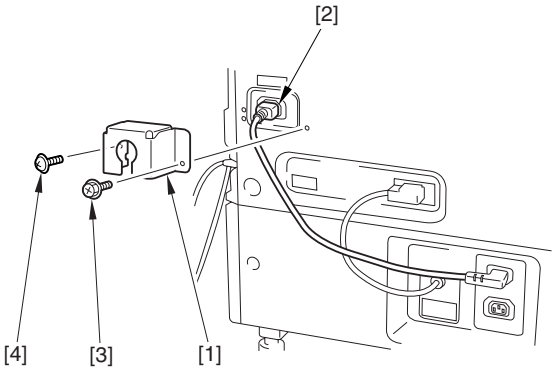

F-2-146

2.11 Installing the Deck Heater

2.11.1 Checking the Parts to Install

iR3025 / / iR3025N / iR3030 / / iR3030N / iR3035 / / iR3035N / iR3045 / / iR3045N

Every components of the cassette heater unit are supplied as service parts, so have the following parts on hand.

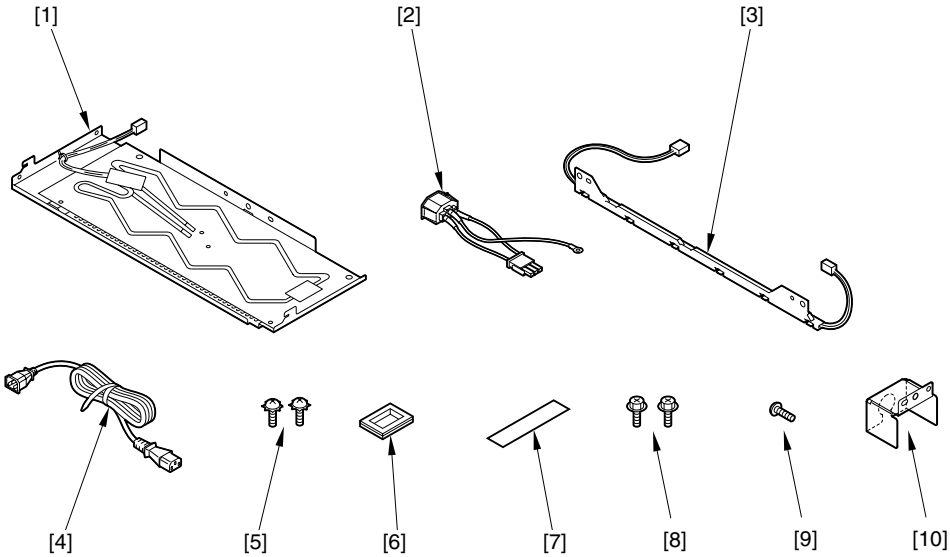

F-2-147

T-2-15

No.	Part name	Part number	QTY	No.	Part name	Part number	QTY
[1]	Heater unit	FG6-9651-000	1pc.	[6]	Cable protection bush	WT2-5098-000	1pc.
[2]	Power supply code base	FG6-1117-000	1pc.	[7]	Power supply label	FS6-8725-000	1pc.
[3]	Relay harness unit	FG6-2957-000	1pc.	[8]	RS tight screw (M4 X 8)	XA9-0628-000	2pcs.

[4]	AC cable	FK2-1777-000	1pc.	[9]	Binding screw (M4 X 4)	XB1-2400-409	1pc.
[5]	Screw (w/ washer)	XA9-0266-000	2pcs.	[10]	Plug cover	FC6-5776-000	1pc.

2.11.2 Turning Off the Host Machine

iR3025 / / iR3025N / iR3030 / / iR3030N / iR3035 / / iR3035N / iR3045 / / iR3045N

How to Turn Off the Main Power
When turning off the main power, be sure to go through the following steps to protect the hard disk:
1) Hold down the control panel power switch for 3 sec or more.
2) Follow the instructions on the shutdown sequence screen to let the main power switch be ready to turn off.
3) Turn off the power switch.
4) Disconnect the power cables (for the power outlet).

2.11.3 Installation Procedure

iR3025 / / iR3025N / iR3030 / / iR3030N / iR3035 / / iR3035N / iR3045 / / iR3045N

In order to operate the cassette heater unit, it is required to install the cassette pedestal heater kit/heater PCB.
Refer to the corresponding page for its installation procedure.

Be sure to attach after installation of the host machine and the paper deck.

1) Disconnect the cable [1] of the paper deck from the host machine.

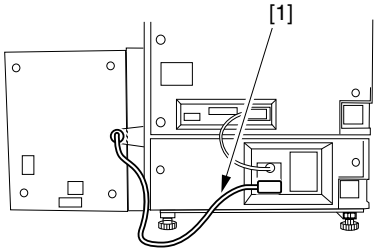

F-2-148

2) Hold down the paper deck release grip [1] to release the paper deck from the host machine. Hold down the latch plate [2] with a finger to open the compartment.

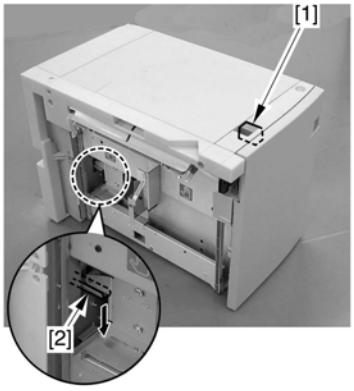

F-2-149

3) Remove the 3 screws [1], and then detach the right cover [2] of the paper deck.

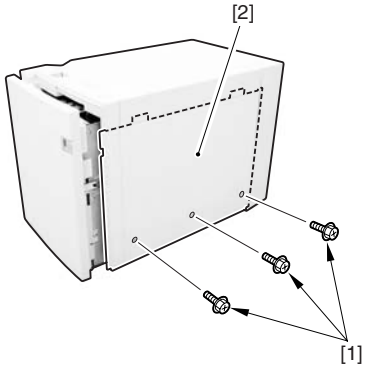

F-2-150

4) Remove the 6 screws [1], and then detach the rear cover [2] of the paper deck.

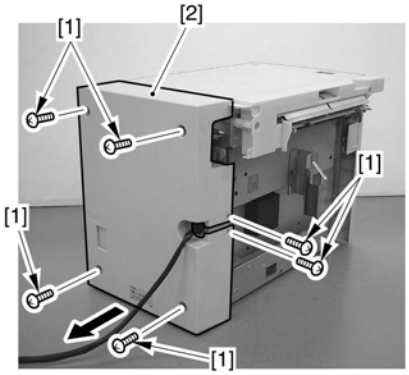

F-2-151

5) Remove the 3 screws [1], disconnect the 1 connector [2], and then detach the front cover (upper) [3].

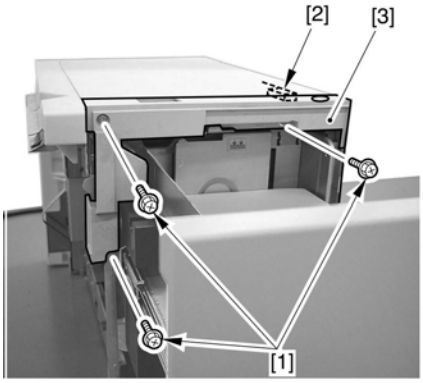

F-2-152

6) Remove the 2 screws [1], and then detach the upper cover[2].

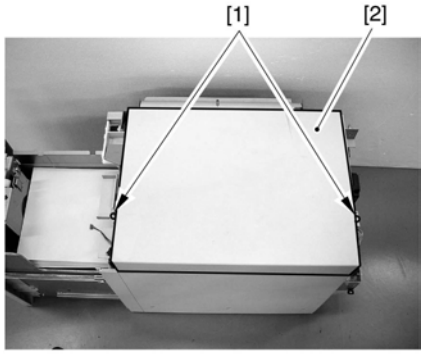

F-2-153

7) Attach the cable protective bush [1] included with the package to the hole [2] on the top board of the paper deck.

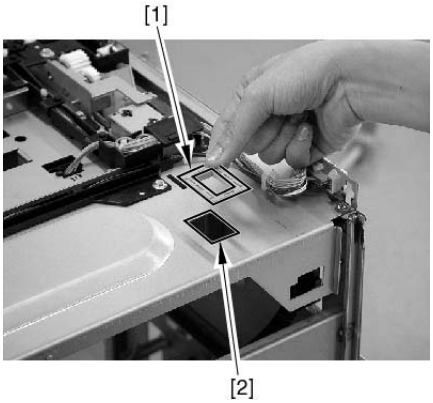

F-2-154

8) Place the heater unit [1] under the top board of the paper deck, and pull out the connector [2] from the hole [3] on the top board.
9) Hook the 2 hooks on the heater unit to the slit [4] on the top board of the paper deck, and fix it on the paper deck with the screw with washer [5].

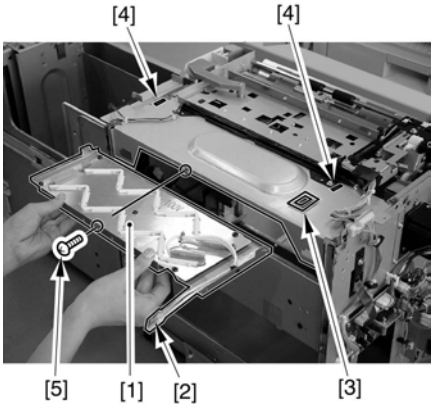

F-2-155

10) Set the connector [2] of the heater to the panel mount [1].

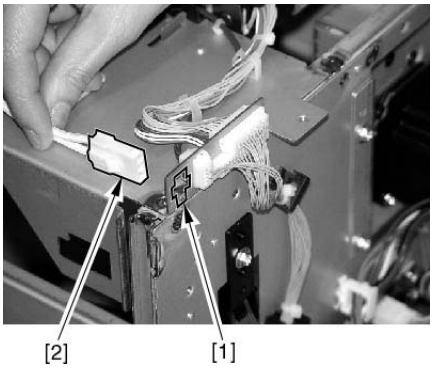

F-2-156

11) Remove the screw [2] to remove the blanking plate [1] attached on the power cord mount of the paper deck.

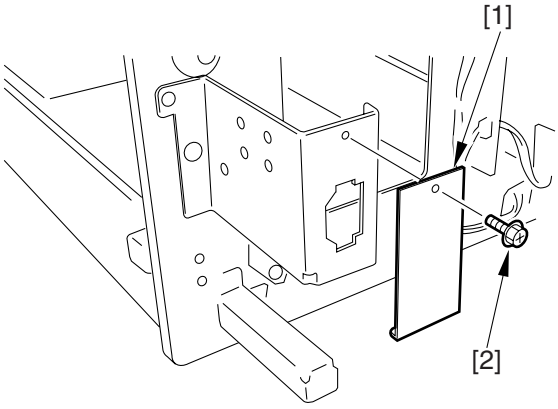

F-2-157

12) Connect the AC inlet connector [1] included with the package.
13) Attach the grounding wire [2] with the screw [3] with washer.

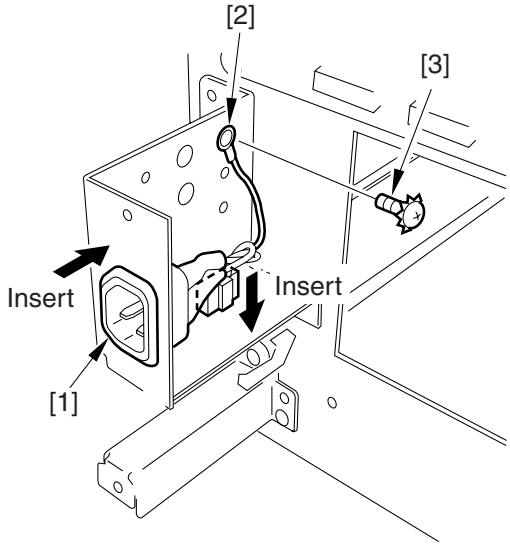

F-2-158

14) Attach the harness [1] to the rear end plate of the paper deck with the 2 screws [2] (M4X8).

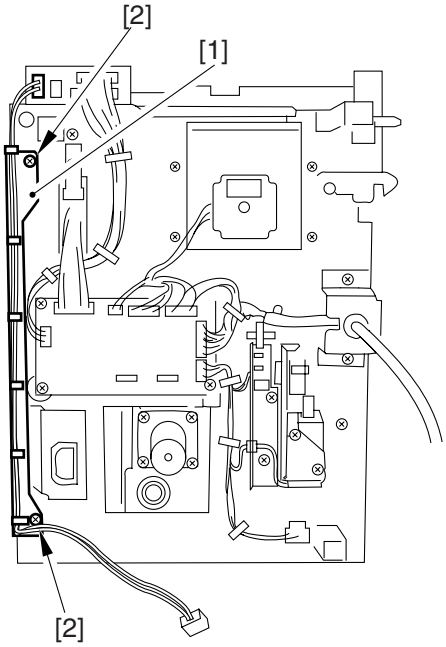

F-2-159

15) Wrap the harness [1] around the cable guide [2] on the power cord mount. (One and a half turn)

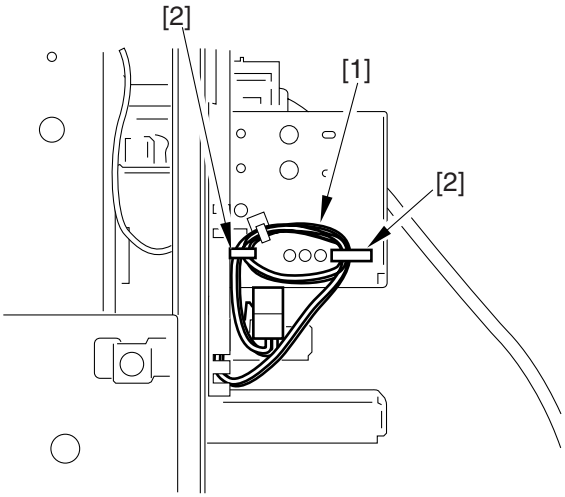

F-2-160

16) Connect each of the connectors at both ends of the harness unit to the heater connector and the AC power supply connector respectively.
17) Attach the external cover of the paper deck in the following orders.
[1] Upper cover (Make sure that the cable is not stuck in) (M4-8: 2 screws)

[2] Upper front cover (Connect the connector) (M4-8: 3 screws)
[3] Rear cover (M3-8: 2 screws, M4-8: 4 screws)
[4] Right cover (M4-8: 3 screws)
18) Slide the paper deck in the left direction and set it to the host machine.
19) Connect the paper deck connector [1] to the rear surface of the host machine.

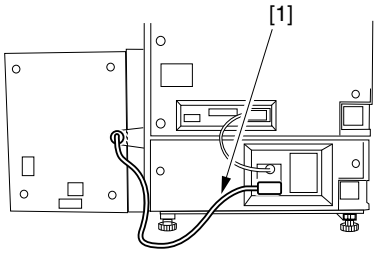

F-2-161

20) Connect one of the AC cable [1] (for the host machine outlet) to the power cord mount [2] of the heater, and the other to the cassette pedestal of the host machine.
21) Put the plug cover [3] to the AC cable connector, and fix it with the screw [4].
22) Affix the power label [5] to the rear cover of the paper deck as shown in the figure below.

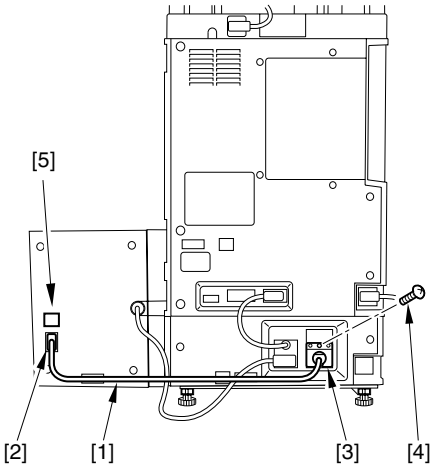

F-2-162

Be sure to tell the users not to place any things within the shaded area for not disturbing opening/closing the paper deck when connecting the power plug of the heater.

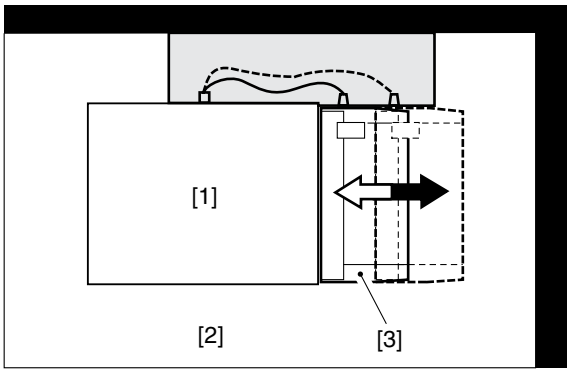

F-2-163

[1] Host machine
[2] Front side
[3] Paper deck

2.12 Installing the Voice Guidance Kit

2.12.1 Checking Items in the Package

iR2270 / iR2870 / iR3570 / iR4570 / / / / / iR2230 / / / iR3530 / / / / / / /

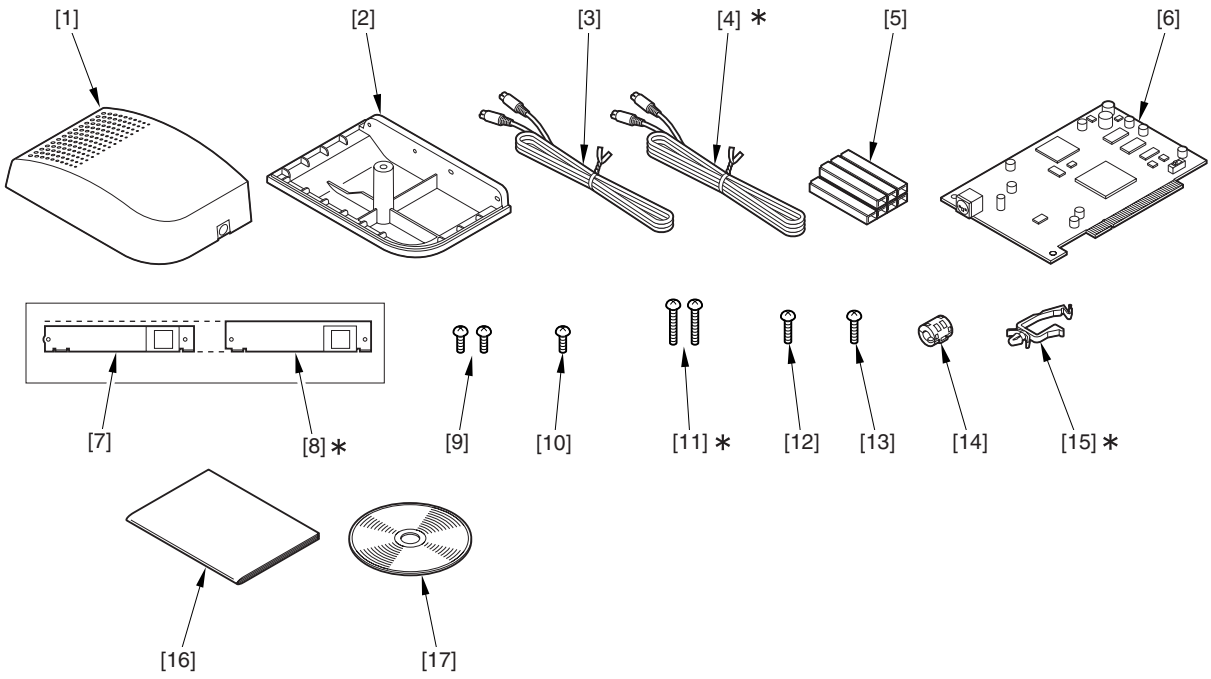

F-2-164

[1]	Speaker unit (upper)	1 pc.
[2]	Speaker unit (lower)	1 pc.
[3]	Cable (1300mm)	1 pc.
[4]*	Cable (1850mm)	1 pc.
[5]	Cord guide (5 cord guide to be used)	7 pc.
[6]	Voice Guidance Board	1 pc.
[7]	Voice Guidance Board Face Plate	1 pc.
[8]*	Voice Guidance Board Face Plate	1 pc.
[9]	Binding screw (M3X6)	2 pc.
[10]	Binding screw (M4X6)	1 pc.
[11]*	Binding screw (M4X40)	2 pc.
[12]	Binding screw (M3X16)	1 pc.
[13]	Binding screw (M4X16)	1 pc.
[14]	Ferrite core	1 pc.
[15]*	Clamp	1 pc.
[16]	Users Guide	1 pc.
[17]	User Manual CD-ROM	1 pc.
	*Not to be used for this machine	

2.12.2 Turning Off the Host Machine

iR2270 / iR2870 / iR3570 / iR4570 / / / / iR3570N / / iR2230 / / / iR3530 / / / / / / /

Turning Off the Main Power

When turning off the main power, be sure to go through the following in strict sequence to protect the machine's hard disk:
[1] Hold down on the power switch on the control panel for 3 sec or more.
[2] Operate on the touch panel according to the shut-down sequence indicated so that the main power switch may be turned off.
[3] Turn off the main power switch.
[4] Disconnect the power cable (for the power outlet).

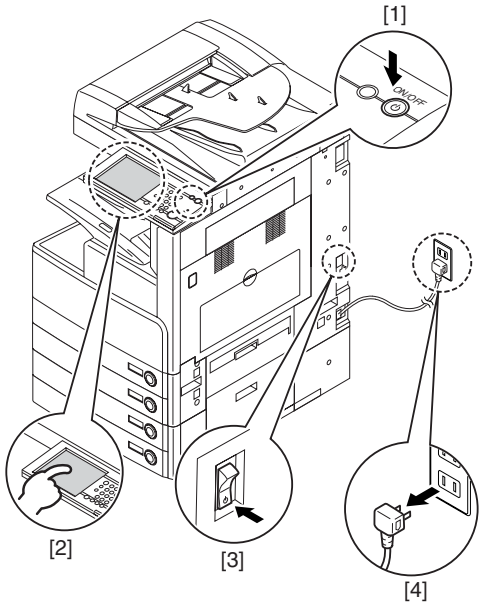

F-2-165

2.12.3 Installation Procedure

iR2270 / iR2870 / iR3570 / iR4570 / / / / / iR2230 / / / iR3530 / / / / / / /

1. A point to keep in mind at installation

Before starting to install the Voice Guidance Kit, be sure that the Expansion Bus-B1 has properly been installed.

In order for the voice board to operate normally, the version of the firmware of the host machine must be as follows:
System:Ver.31.xx or later
Voice Dict(TTS-JA/TTS-EN):Ver.01.11 or later
Before installing the Kit, be sure to check the version of the firmware of the host machine; as necessary, be sure to upgrade it using the Service Support Tool.

2. Installation Procedure
1) Remove the 4 screws [1].
2) Loosen the 2 screws [2].

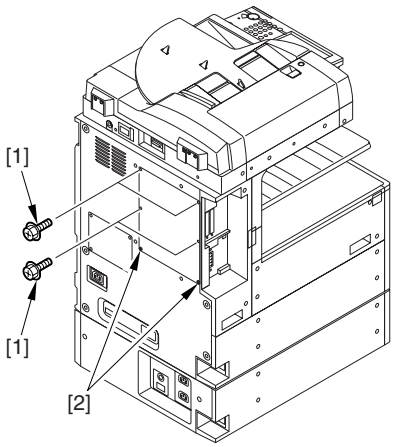

F-2-166

3) Pull off the face cover [1] in upward direction.

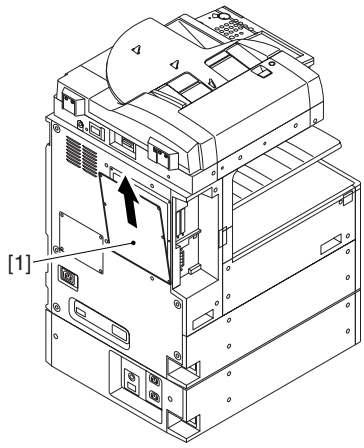

F-2-167

4) Unscrew 2 screws [1] and detach the blanking plate [2].

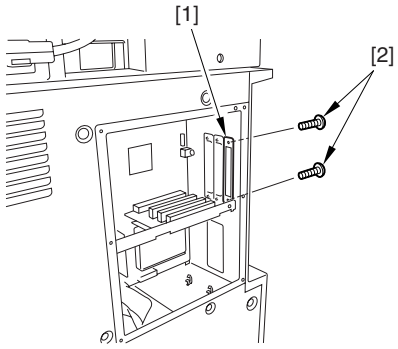

F-2-168

5) Mount the facing plate [2] to the voice board [1] by 2 binding screws (M3X6) [3].

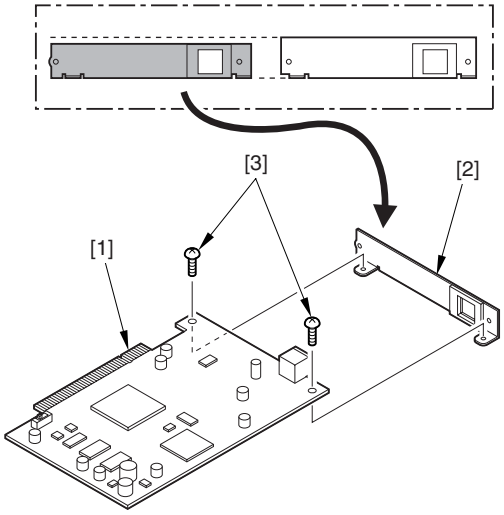

F-2-169

Checking the Position of the Slide Switch (SW1) on the Voice Guidance Board

The slide switch (SW1) on the Voice Guidance Board is provided as a means of switching frequencies (33 MHz/66 MHz) to suit the transfer speed of the PCI bus. It is important for the switch setting to suit the transfer speed so that the voice will be free of interruption. If you inadvertently moved the slide, be sure to put it back to its correct position. For the Boad, the frequency must be set to 33 MHz.

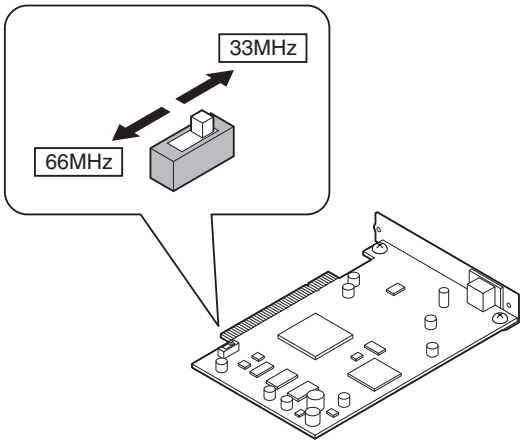

F-2-170

6) Fit the voice board [1] to the PCI Bus Expansion Kit-B1, and fix it in place using the 2 screws [2] removed in step 4).

Cautions in mounting
A voice board [1] must be mounted to a specified position.
Be sure to mount it to the slot [A] on the Expansion Bus B-1 board.
Do not mount it to the slot [B] or [C].

If other board is mounted to the slot [A] , pull the board out of the slot and mount it to other slot. Then, mount a voice board to the slot [A] .

Be sure that the PCB is perpendicular to the connector.

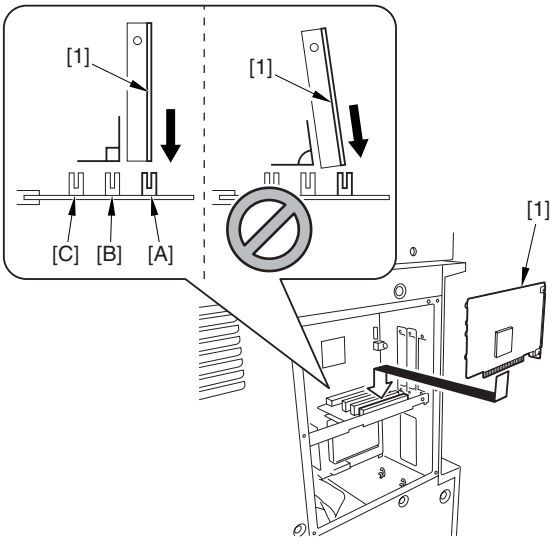

F-2-171

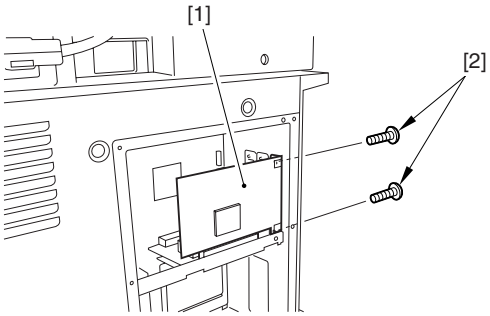

F-2-172

7) Attach the face cover.
8) Remove a screw [1] and the blanking plate [2] of the upper right cover.

MEMO:
The screws removed in the procedure are not supposed to be used.

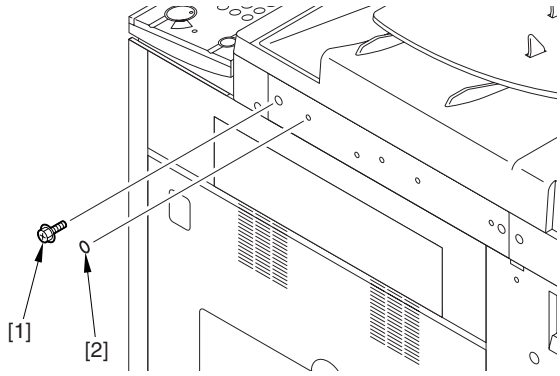

F-2-173

9) Mount the speaker unit (lower) [1] to the upper right cover of the host machine with 2 binding screws (M3X16 [2] and M4X16 [3]).

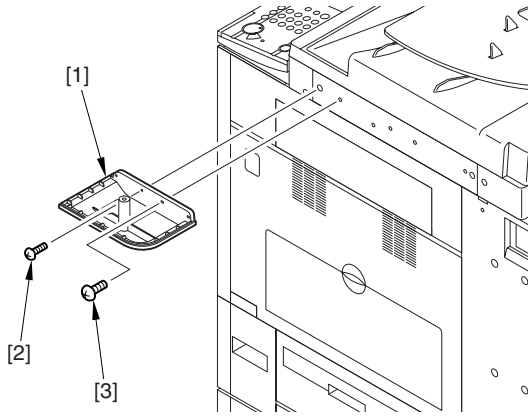

F-2-174

10) Mount the speaker unit (upper) [1] to the speaker unit (lower) mounted at step 19) and secure it with a binding screw (M4X6) [2] from under the lower unit.

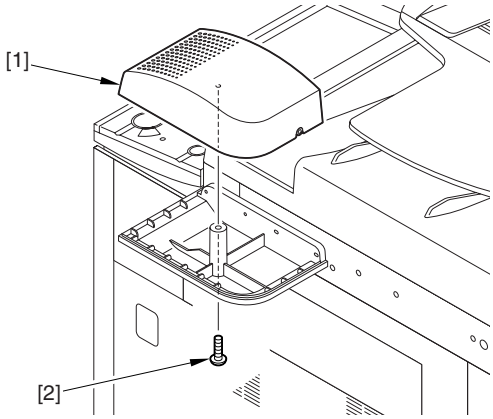

F-2-175

11) Take off the cover [1] from the code guide.

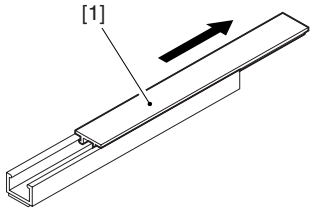

F-2-176

12) Peel off the released paper of the code guide [1] and affix it to the host machine as shown in the figure.

A: When a card reader is not mounted on the iR host machine

The right side -- 2 places

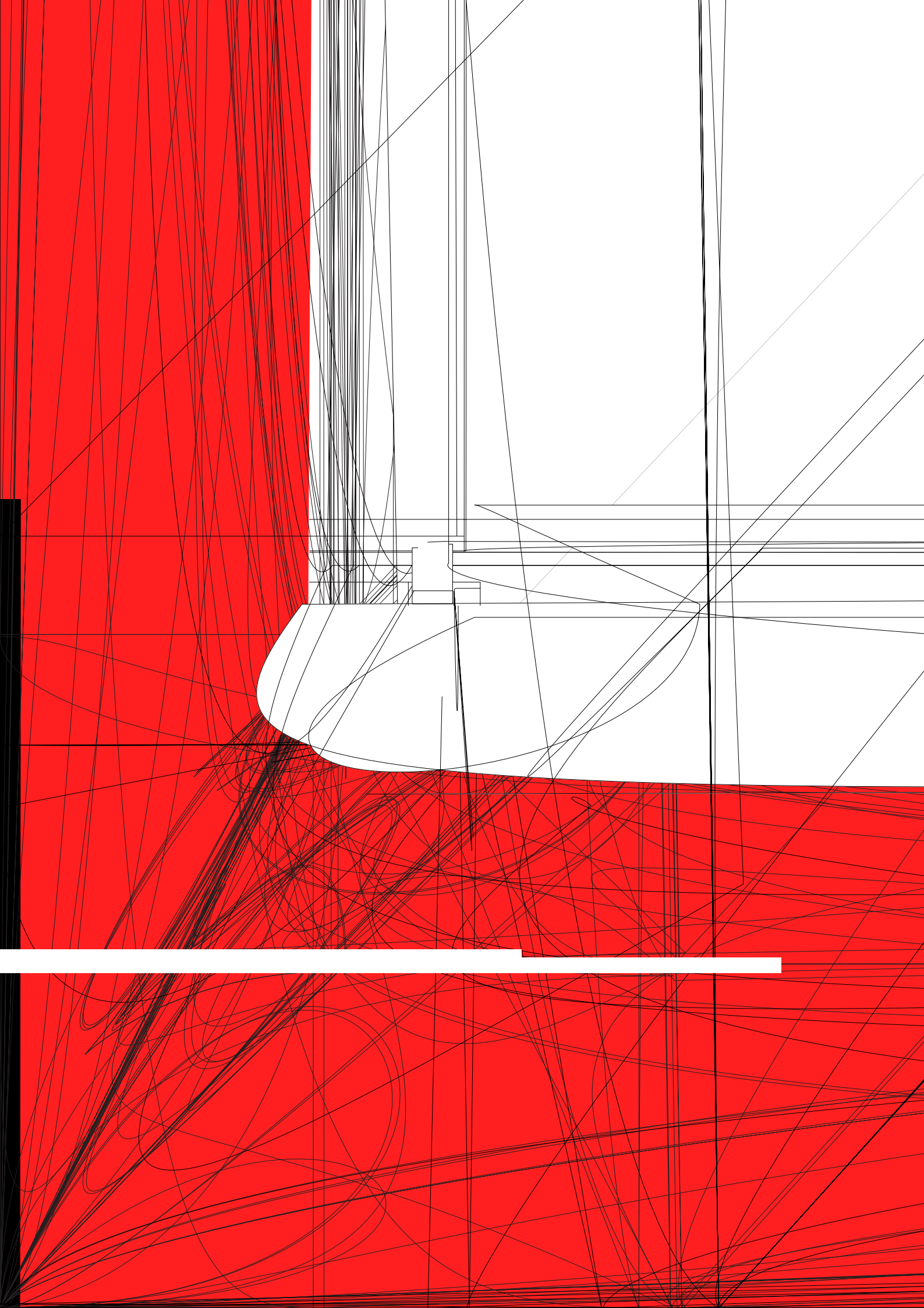

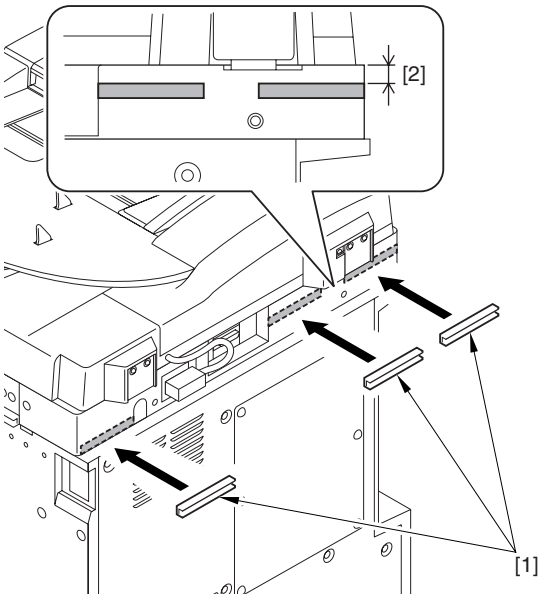

F-2-179

The length of [2] should be about 10mm.

14) Plug the cable [2] into the speaker unit [1].

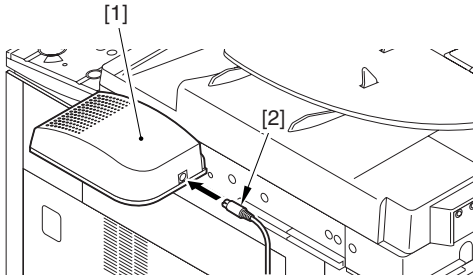

F-2-180

15) Run the cable [1] through the code guide [2] and mount the code guide cover [3].

Be sure to remove all the slack out of the cable.

A: When a card reader is not mounted on the iR host machine

The right side

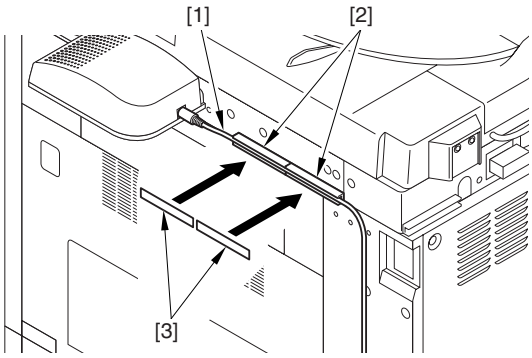

F-2-181

The rear

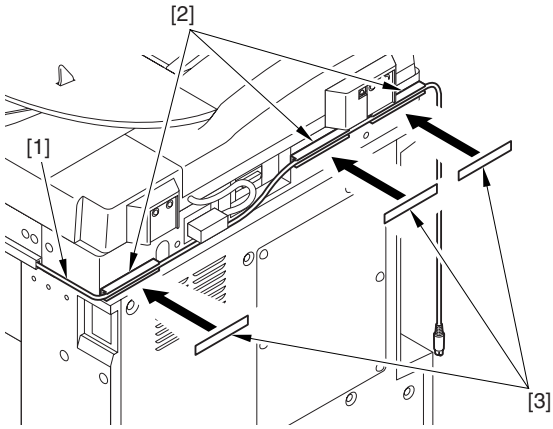

F-2-182

B: When a card reader is mounted on the iR host machine
The right side

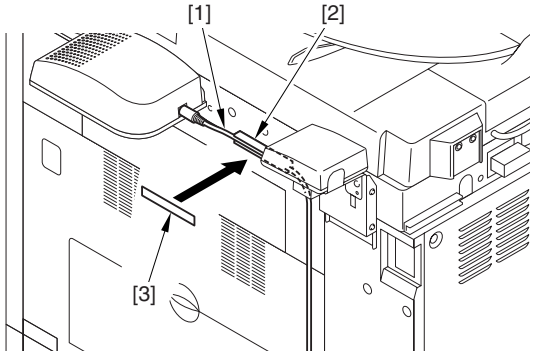

F-2-183

The rear

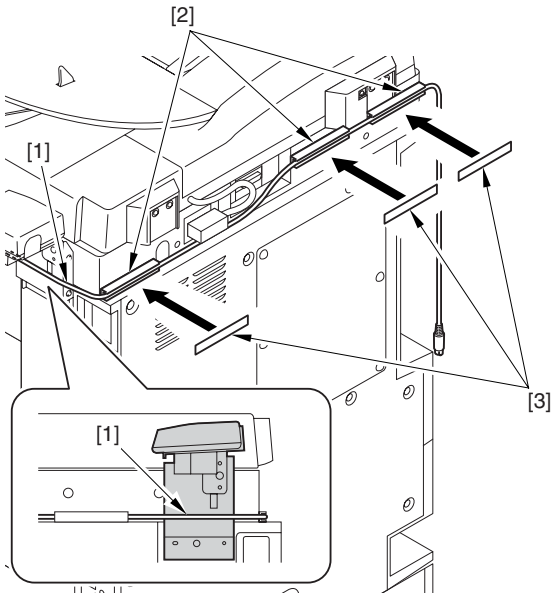

F-2-184

16) Mount the ferrite core [1] to the cable.
Ensure that the length of [2] is 50mm or shorter.

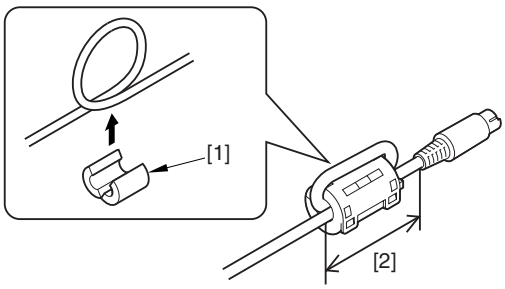

F-2-185

17) Plug the cable [1] in the terminal of voice board.

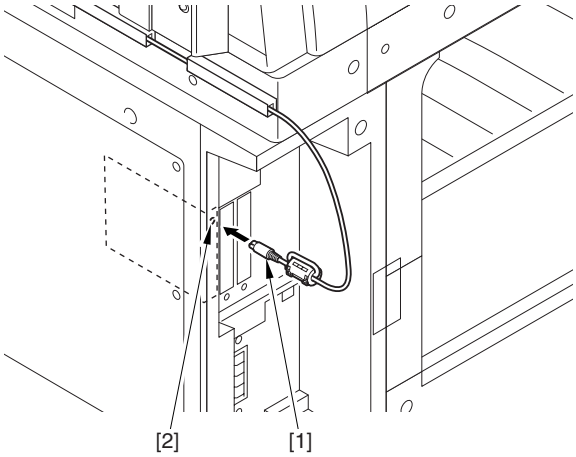

F-2-186

18) Plug the power cable (for receptacle) of the iR host machine into a receptacle.
19) Turn on the main power switch.
20) Check if the voice board has been recognized.
service mode
COPIER > DISPLAY > ACC-STS > PCI1
If 'voice guidance board' is indicated for PCI1, the board is correctly recognized by the machine.

3. Making Settings After Installation
To make use of the Voice Guidance Kit-A2 after turning on the host machine, you need to make the following settings in Additional Function:
Additional Function > System Setting > Voice Guide Manegement > Use Voice Guide.
1) Select [ON].
2) Press [OK].
default : OFF

4. Checking the Operation
- To Enable
1) Hold down the Reset key 3 sec or more.
2) See that the copy count on the screen is enclosed in red, indicating 'Voice Guidance' is ready for use.
- To Disable
1) Hold down the Reset key for 3 sec or more.

2.12.4 A point to keep in mind at installation

iR3025 / / iR3025N / iR3030 / / iR3030N / iR3035 / / iR3035N / iR3045 / / iR3045N

- In order to install this equipment, "Expansion Bus-B1" is required.
- In case of installing this equipment, "Voice Operation Kit-A1" cannot be installed.

2.12.5 Checking the Contents

iR3025 / / iR3025N / iR3030 / / iR3030N / iR3035 / / iR3035N / iR3045 / / iR3045N

<Voice Guidance Kit-B1>

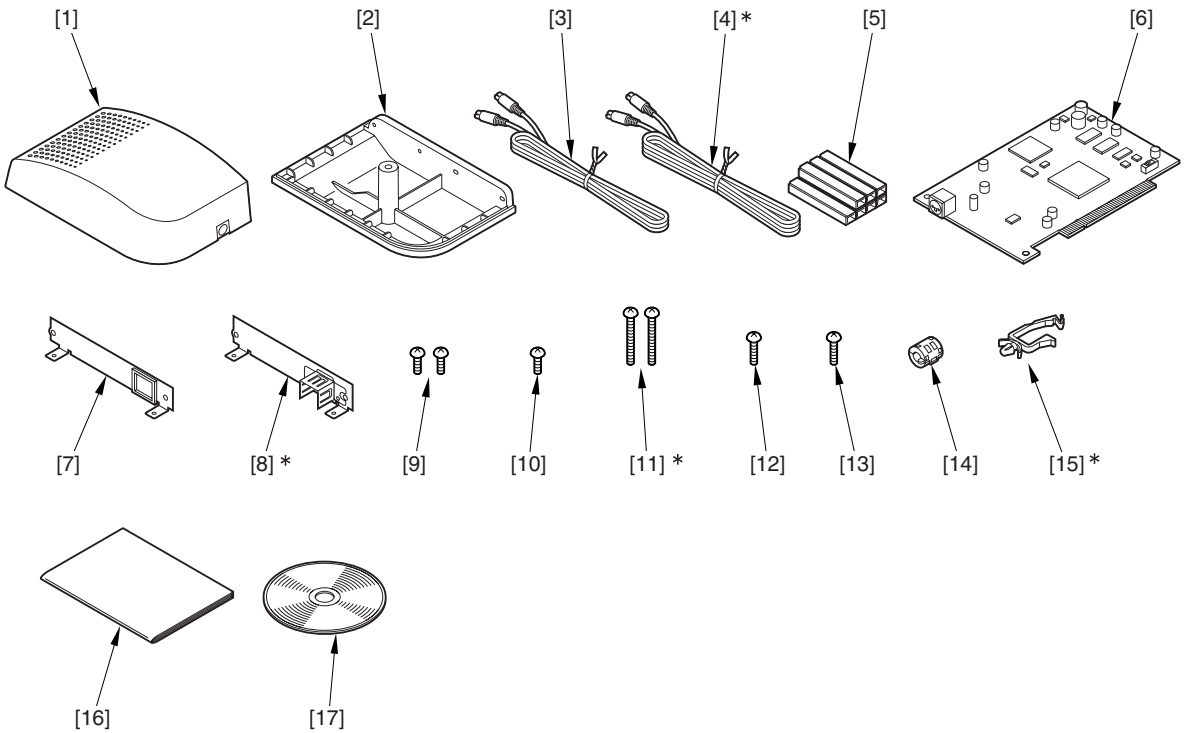

F-2-187

[1]	Speaker Unit (Upper)	1pc.	[2]	Speaker Unit (Lower)	1pc.
[3]	Cable (1300 mm)	1pc.	[4]*	Cable (1850 mm)	1pc.
[5]	Cable Guide	7pc.	[6]	Voice Board	1pc.
	(Use eithe 4 or 5 cable guide(S))				
[7]	Voice Board Face Plate	1pc.	[8]*	Voice Board Face Plate	1pc.
[9]	Screw (binding; M3X6)	2pc.	[10]	Screw (binding; M4X6)	1pc.
[11]*	Screw (binding; M4X40)	2pc.	[12]	Screw (binding; M3X16)	1pc.
[13]	Screw (binding; M4X16)	1pc.	[14]	Ferrite Core	1pc.
[15]*	Wire Saddle	1pc.	[16]	Voice Guidance Kit Users Guide	1pc.
[17]	Voice Guidance Kit Users Guide CD	1pc.	[18]	FCC/IC Sheet (Except Japan)	1pc.

* Do not use for this machine.

2.12.6 Turning Off the Host Machine

iR3025 / / iR3025N / iR3030 / / iR3030N / iR3035 / / iR3035N / iR3045 / / iR3045N

How to Turn Off the Main Power
When turning off the main power, be sure to go through the following steps to protect the hard disk:
1) Hold down the control panel power switch for 3 sec or more.
2) Follow the instructions on the shutdown sequence screen to let the main power switch be ready to turn off.
3) Turn off the power switch.
4) Disconnect the power cables (for the power outlet).

2.12.7 Installation Procedure

iR3025 / / iR3025N / iR3030 / / iR3030N / iR3035 / / iR3035N / iR3045 / / iR3045N

1. Installation Procedure

1) Detach the face cover [1] in the direction shown by the arrow.
- 4 screws [2] (to remove)
- 2 screws [3] (to loosen)

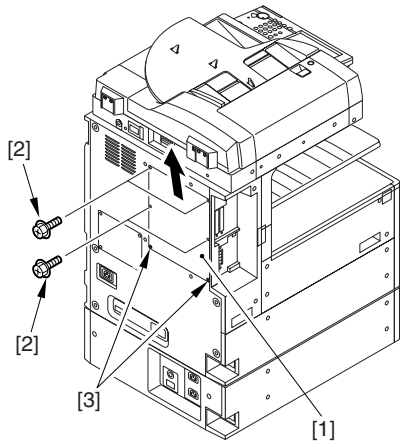

F-2-188

2) Detach the blanking plate [1] (Do not use the detached blanking plate).
- 2 screws [2]

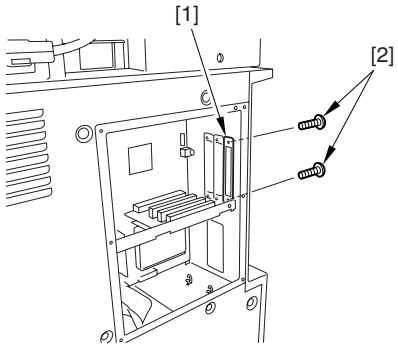

F-2-189

3) Attach the voice board face plate [2] to the voice board [1].
- 2 screws (binding; M3X6) [3]

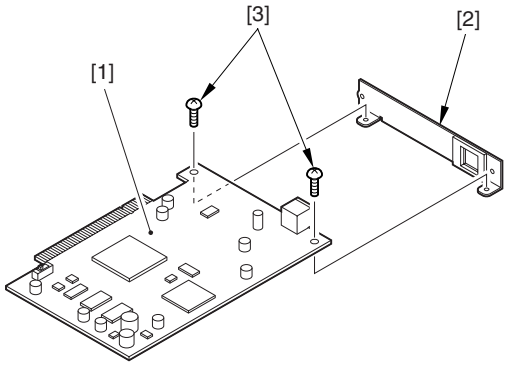

F-2-190

Checking the Position of the Slide Switch (SW1) on the Voice Guidance Board

The slide switch (SW1) on the Voice Guidance Board is provided as a means of switching frequencies (33 MHz/66 MHz) to suit the transfer speed of the PCI bus. It is important for the switch setting to suit the transfer speed so that the voice will be free of interruption. If you inadvertently moved the slide, be sure to put it back to its correct position. For the Boad, the frequency must be set to 33 MHz.

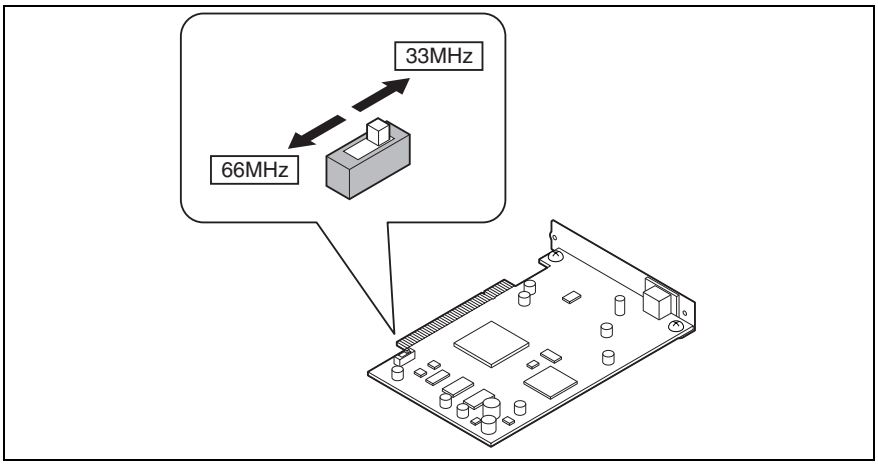

4) Fit the voice board [1] to the PCI Bus Expansion Kit-B1 [A], and fix it in place using the 2 screws [2] removed in step 2).

Cautions in mounting
Be sure that the PCB is perpendicular to the connector.

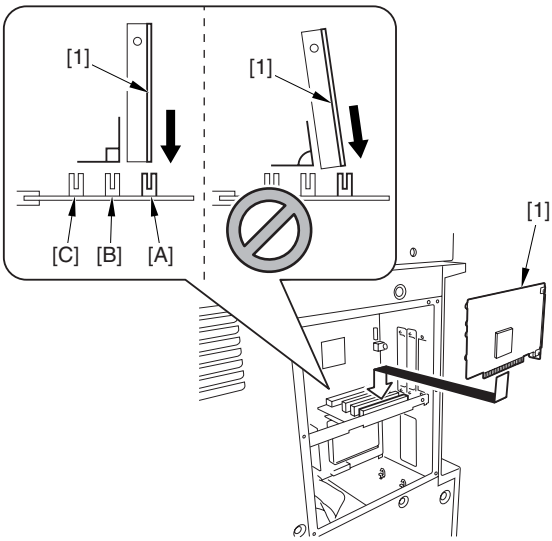

F-2-191

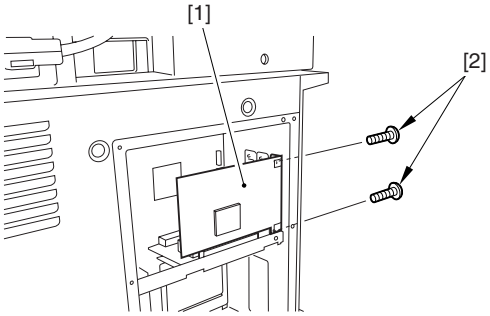

F-2-192

5) Detach the face cover.
6) Remove the screw [1] and the blanking seal [2] fixed to the right upper cover (Do not use the removed screw and blanking seal).

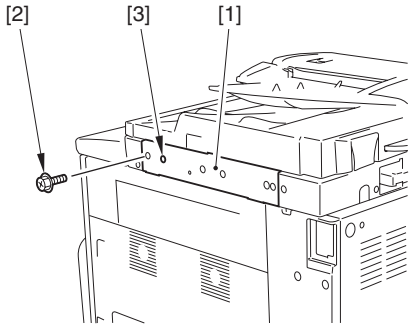

F-2-193

7) Mount the speaker unit (lower) [1].
- 1 screw (binding; M3X16) [2]
- 1 screw (binding; M4X16) [3]

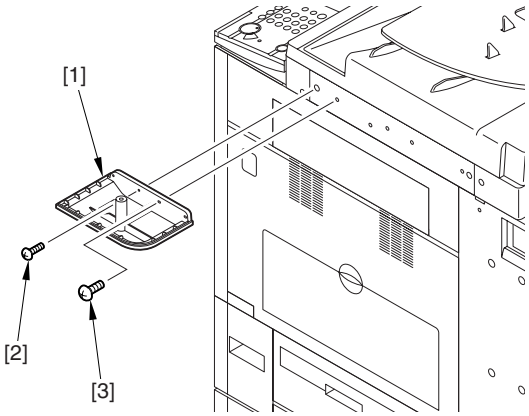

F-2-194

8) Mount the speaker unit (upper) [1] on the speaker unit (lower), fix them with a screw (binding; M4X6) [2] from beneath.

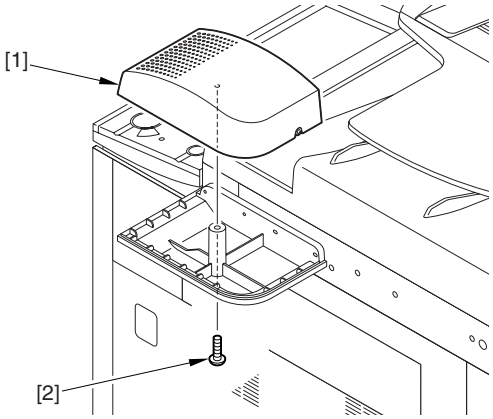

F-2-195

9) Detach the cover [1] on the cable guide.

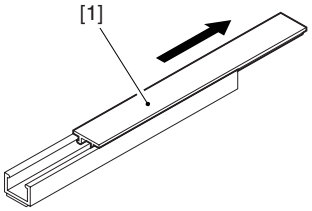

F-2-196

10) Peel off the released paper of the cable guide [1] and affix it to the host machine as shown in the figure.
A: When a card reader is not mounted on the host machine
The right side --- 2 places

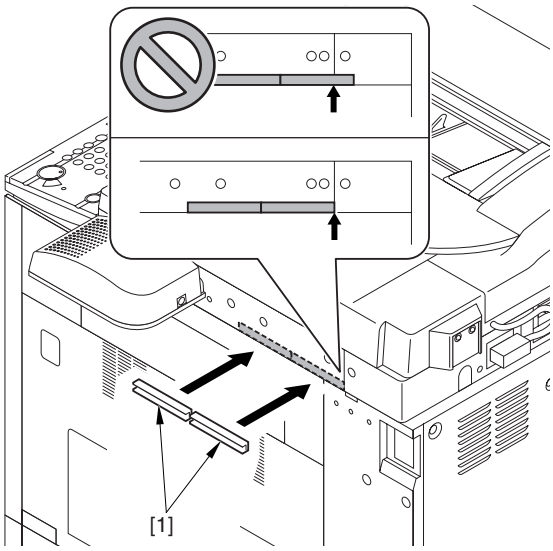

F-2-197

B: When a card reader is mounted on the host machine
The right side --- 1 place

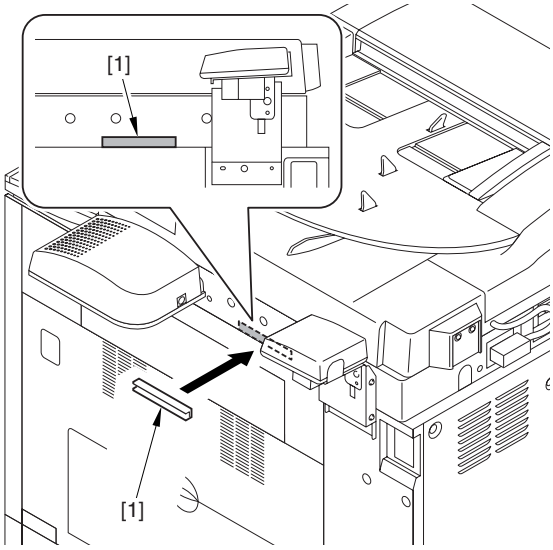

F-2-198

11) Connect the cable [2] into the speaker unit [1].

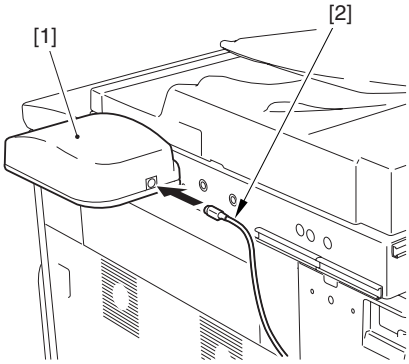

F-2-199

12) Run the cable [1] through the cable guide [2] and mount the cable guide cover [3].

> ⚠
> There should no excessive bending of the cable.

A: When a card reader is not mounted on the host machine
The right side

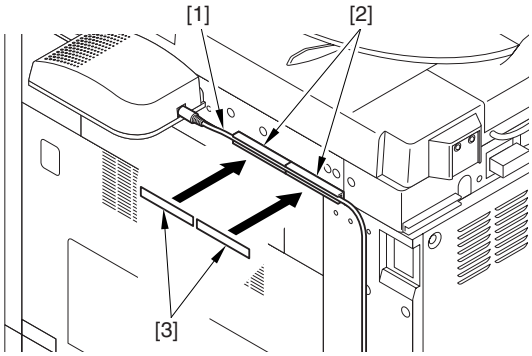

F-2-200

B: When a card reader is mounted on the host machine
The right side

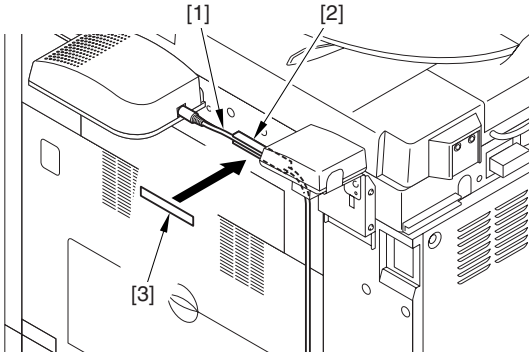

F-2-201

13) Attach the ferrite core [1] to the cable. Be sure that the length [2] is 50 mm or shorter.

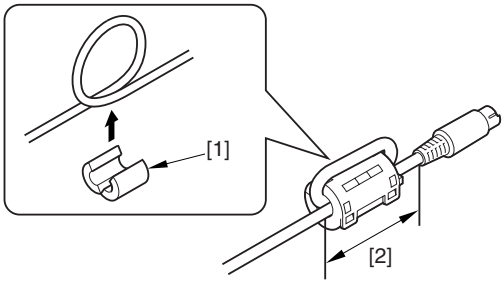

F-2-202

14) Connect the cable [1] to the terminal [2] of the voice board.

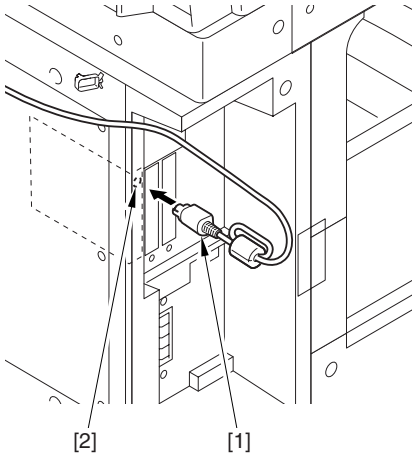

F-2-203

15) Run the cable [1] through the code guide [2] and mount the code guide cover [3].

> ⚠
> There should no excessive bending of the cable.

A: When a card reader is not mounted on the host machine
The rear

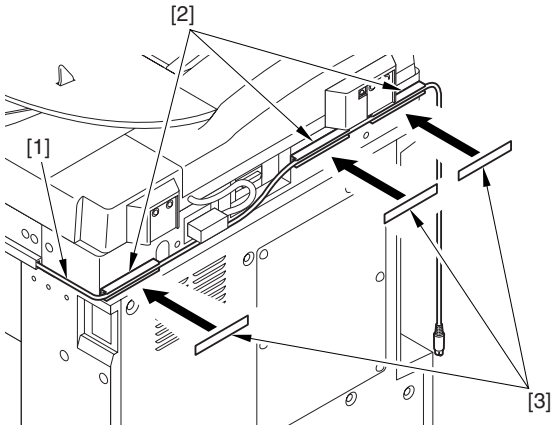

F-2-204

B: When a card reader is mounted on the host machine
The rear

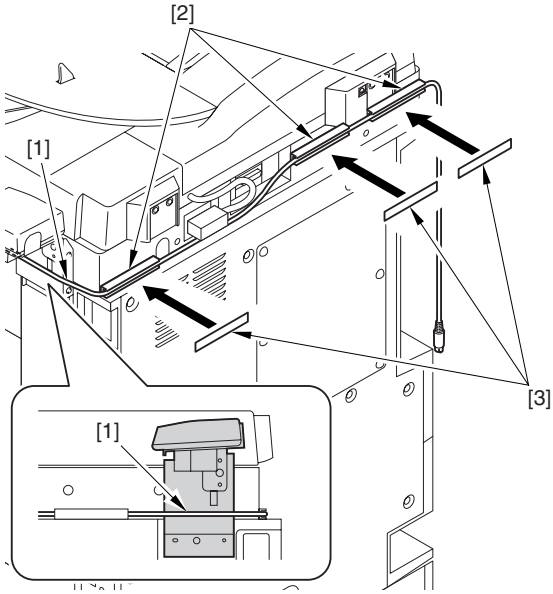

F-2-205

16) Connect the power cable to the outlet.
17) Turn ON the main power switch.
18) Check if the voice board is recognized.
Service mode
Select COPIER > DISPLAY > ACC-STS > PCI 1.
If "Voice Board" is displayed, that means that the voice board is correctly recognized.

2. Setting After Installation
To use 'voice guidance' after power-on, it is necessary to set the followings.
1) Select [Additional Function] > [System Settings] > [Voice Navigation Guide] > [Use Voice Navigation].
2) Select ON key (Default: OFF)
3) Press OK key.

3. Operation Check
<When Using the Voice Guidance>
1) Press the reset key for 3 sec or longer.
2) When the display of the number of copy is enclosed with red lines on the screen, "Voice Guidance" becomes enabled.

<When Stopping the Usage>
1) Press the reset key for 3 sec or longer.

2.13 Installing the Voice Operation Kit

2.13.1 A point to keep in mind at installation

iR3025 / / iR3025N / iR3030 / / iR3030N / iR3035 / / iR3035N / iR3045 / / iR3045N

- In order to install this equipment, "Expansion Bus-B1" is required.
- In case of installing this equipment, "Voice Guidance Kit-B1" cannot be installed.

2.13.2 Checking the Contents

iR3025 / / iR3025N / iR3030 / / iR3030N / iR3035 / / iR3035N / iR3045 / / iR3045N

<Voice Operation Kit-A1>

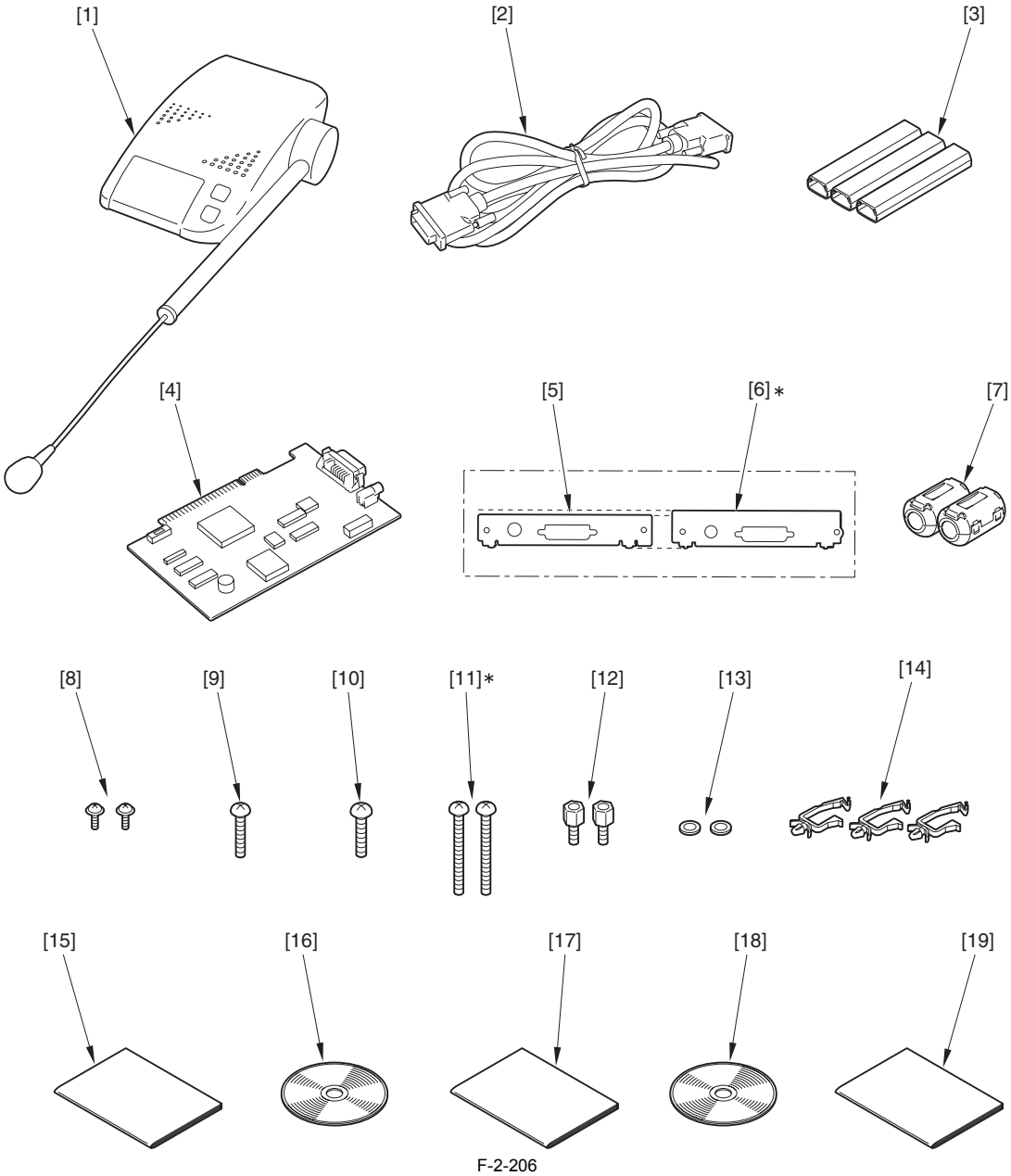

F-2-206

[1]	Speaker Unit	1pc.	[2]	Cable	1pc.
[3]	Cable Guide (Use 1pc in this machine)	3pc.	[4]	Voice Operation Board	1pc.
[5]	Board Support Plate	1pc.	[6]*	Board Support Plate	1pc.
[7]	Ferrite Core	2pc.	[8]	Screw (TP; M3X6)	2pc.
[9]	Screw (binding; M3X20)	1pc.	[10]	Screw (binding; M4X20)	1pc.
[11]*	Screw (binding; M4X40)	1pc.	[12]	Hex Screw	2pc.
[13]	Washer	2pc.	[14]	Wire Saddle	3pc.

[15]	Voice Guidance Kit Users Guide	1pc.	[16]	Voice Guidance Kit Users Guide CD	1pc.
[17]	Voice Operation Kit Users Guide	1pc.	[18]	Voice Operation Kit Users Guide CD	1pc.
[19]	Voice Operation Quick Guide	1pc.	[20]	FCC/IC Sheet	1pc.

* Do not use for this machine.

2.13.3 Turning Off the Host Machine

iR3025 / / iR3025N / iR3030 / / iR3030N / iR3035 / / iR3035N / iR3045 / / iR3045N

How to Turn Off the Main Power
When turning off the main power, be sure to go through the following steps to protect the hard disk:
1) Hold down the control panel power switch for 3 sec or more.
2) Follow the instructions on the shutdown sequence screen to let the main power switch be ready to turn off.
3) Turn off the power switch.
4) Disconnect the power cables (for the power outlet).

2.13.4 Installation Procedure

iR3025 / / iR3025N / iR3030 / / iR3030N / iR3035 / / iR3035N / iR3045 / / iR3045N

1. Installation Procedure

1) Detach the face cover [1] in the direction shown by the arrow.
- 4 screws [2] (to remove)
- 2 screws [3] (to loosen)

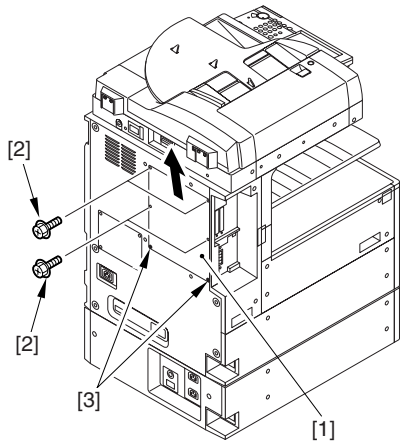

F-2-207

2) Detach the blanking plate [1] (Do not use the detached blanking plate).
- 2 screws [2]

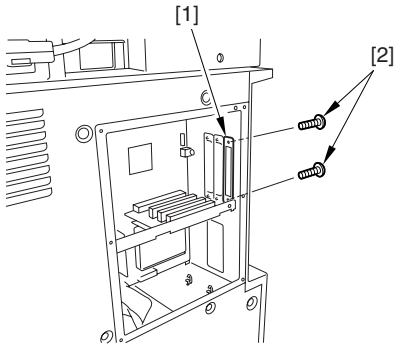

F-2-208

3) Attach the board support plate [2] to the voice operation board [1].
- 2 screws (TP; M3X6) [3]
- 2 washers [4]
- 2 hex screws [5]

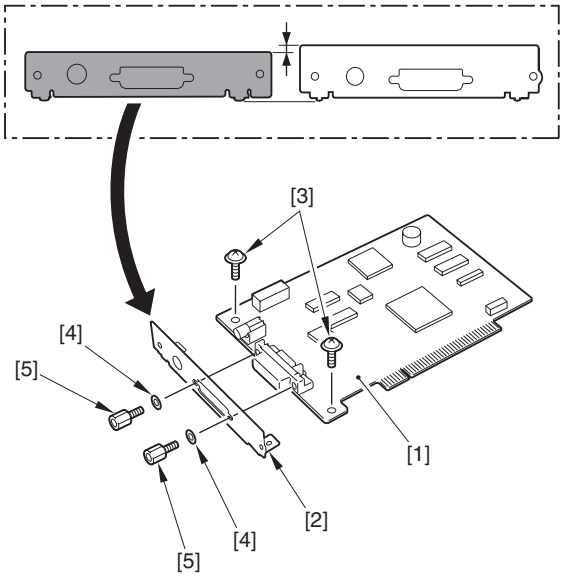

F-2-209

Checking the Position of the Slide Switch (SW1) on the Voice Guidance Board
The slide switch (SW1) on the Voice Guidance Board is provided as a means of switching frequencies (33 MHz/66 MHz) to suit the transfer speed of the PCI bus. It is important for the switch setting to suit the transfer speed so that the voice will be free of interruption. If you inadvertently moved the slide, be sure to put it back to its correct position. For the Boad, the frequency must be set to 33 MHz.

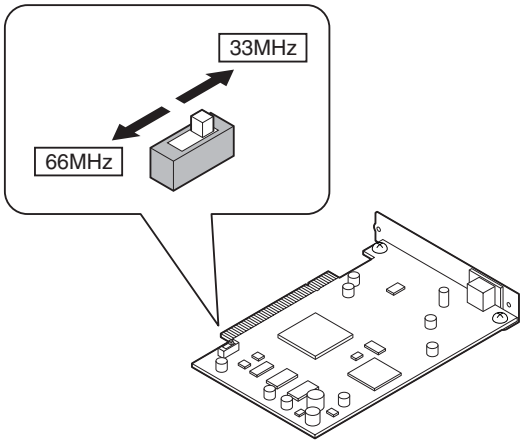

4) Fit the voice board [1] to the PCI Bus Expansion Kit-B1 [A], and fix it in place using the 2 screws [2] removed in step 2).

Cautions in mounting
Be sure that the PCB is perpendicular to the connector.

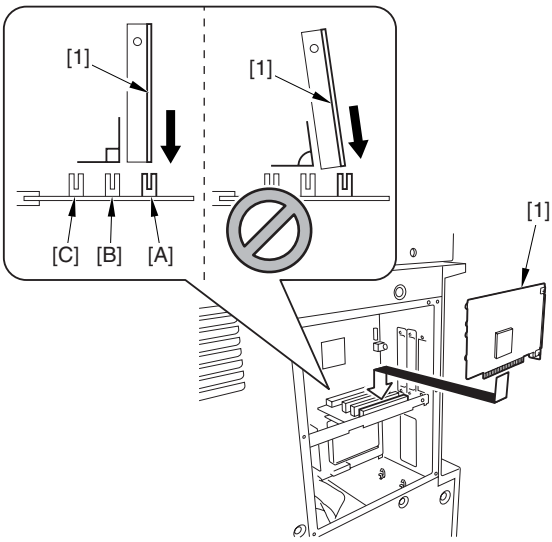

F-2-210

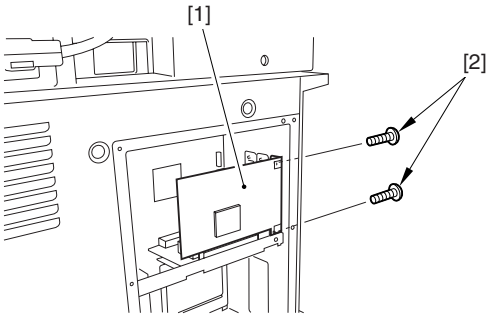

F-2-211

5) Attach the face cover.
6) Remove the screw [1] and the blanking seal [2] fixed to the right upper cover (Do not use the removed screw and blanking seal).

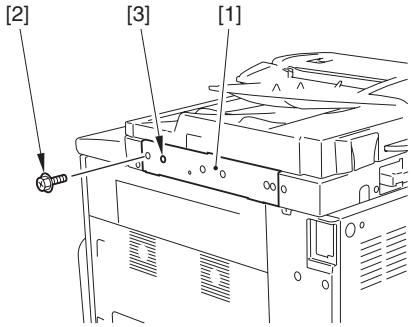

F-2-212

7) Remove the two screws [1] from the speaker unit and then remove the speaker unit (lower) [2].

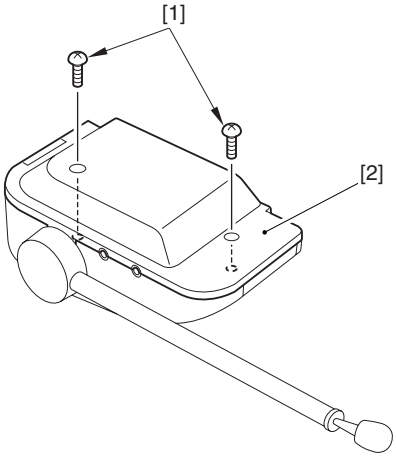

F-2-213

8) Mount the speaker unit (lower) [1].
- 1 screw (binding; M3X20) [2]
- 1 screw (binding; M4X20) [3]

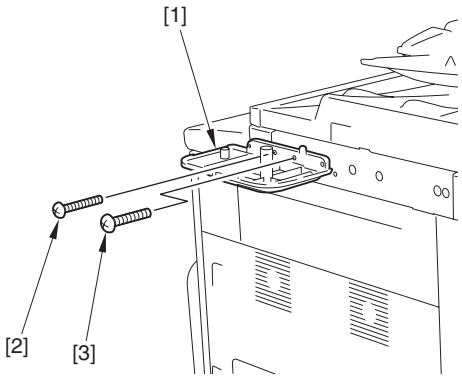

F-2-214

9) Mount the speaker unit (upper) [1] to the speaker unit (lower) using the two screws [2] that have been removed in step 7) from underneath.

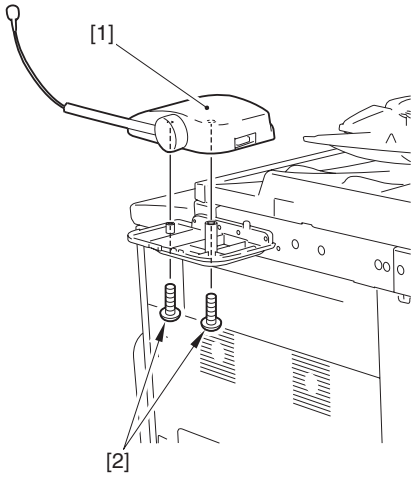

F-2-215

10) Detach the cover [1] of the cable guide.

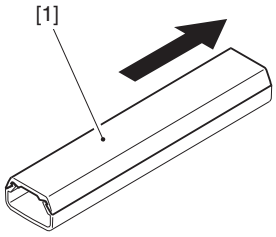

F-2-216

11) Peel off the released paper of the code guide [1] and affix it to the host machine as shown in the figure.

A: When a card reader is not mounted on the host machine

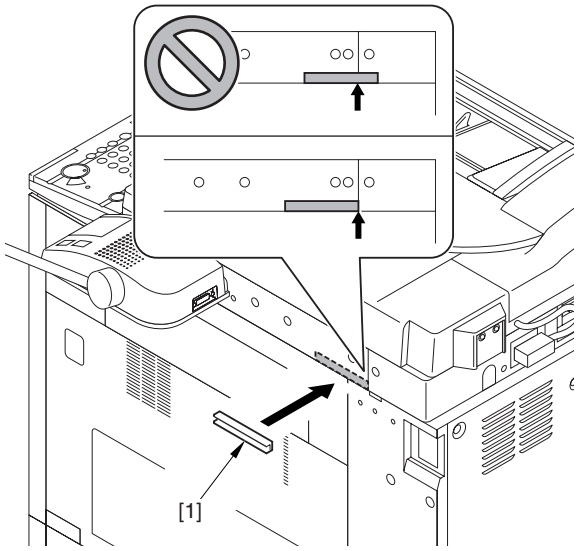

F-2-217

B: When a card reader is mounted on the host machine

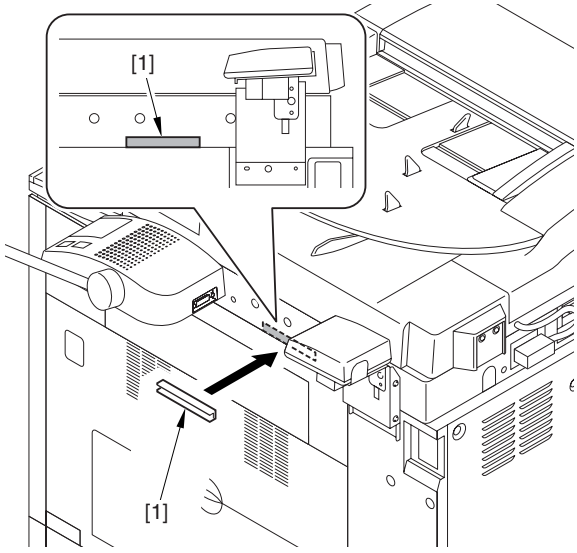

F-2-218

12) Attach the ferrite core [1] to the cable. Be sure that the length [2] is 50 mm. Fix it on the opposite side in the same procedure.

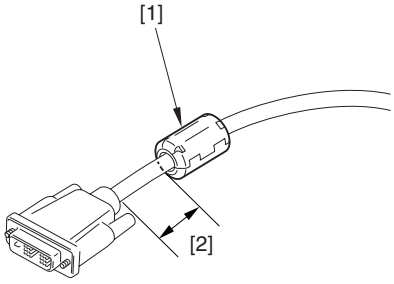

F-2-219

13) Connect the cable [2] to the speaker unit [1].

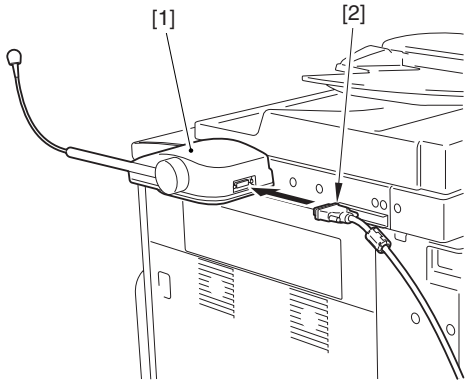

F-2-220

14) Run the cable [1] through the code guide [2] and mount the code guide cover [3].

> ⚠
> There should no excessive bending of the cable.

A: When a card reader is not mounted on the host machine

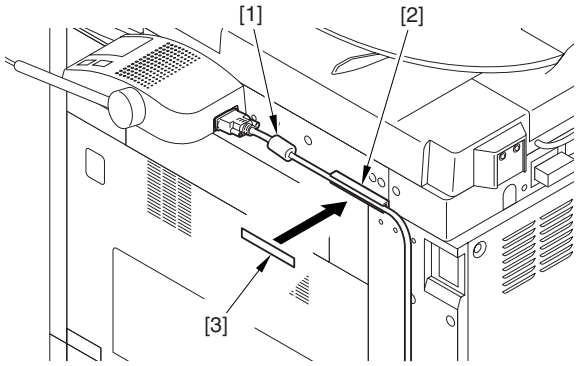

F-2-221

B: When a card reader is mounted on the host machine

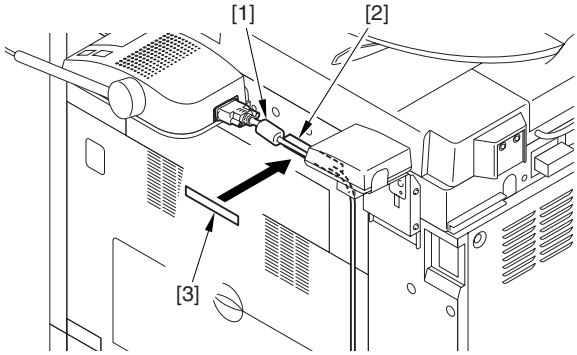

F-2-222

15) Connect another cable [1] to the terminal [2] of the voice operation board.

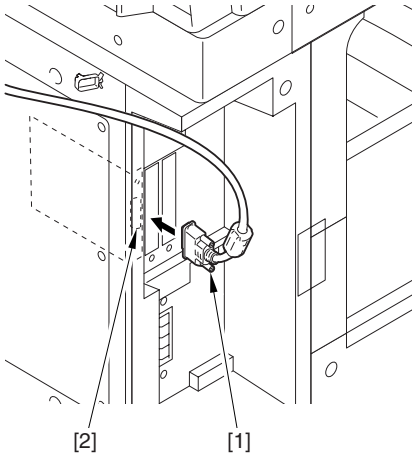

F-2-223

16) Fix the 3 wire saddles [2] with the rear cover [1].

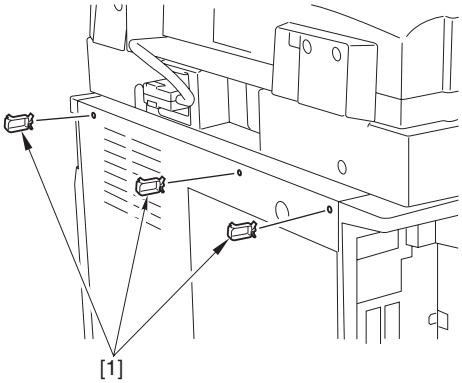

F-2-224

17) Fix it with 3 wire saddles [2] so that there is no bending of the cable [1].

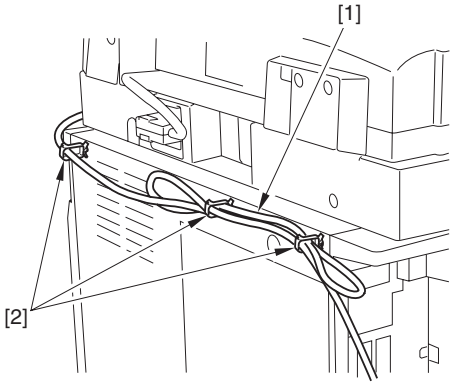

F-2-225

18) Connect the power cable to the power plug.
19) Turn ON the main power switch.
20) Check if the voice operation board is recognized.
Service mode.
Select COPIER > DISPLAY > ACC-STS > PCI 1.
If "Voice Operation" is displayed, that means that the voice operation board is correctly recognized.

2. Setting After Installation
To use 'Voice Operation Kit' after power-on, it is necessary to set the followings.
1) Select [Additional Function] > [System Settings] > [Voice Navigation Management Settings] > [Use Voice Guide].
2) Select ON key (Default: OFF)
3) Press OK key.

3. Operation Check
<When Using the Voice Operation Kit>
1) Press the reset key or the voice recognition button [1] three seconds or longer.

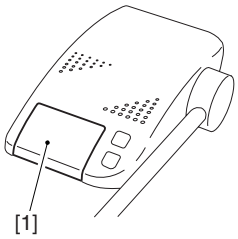

F-2-226

2) Select the voice mode type (Voice Guide + Recognition/Voice Guide/Voice Recognition) on the control panel, and press [OK].

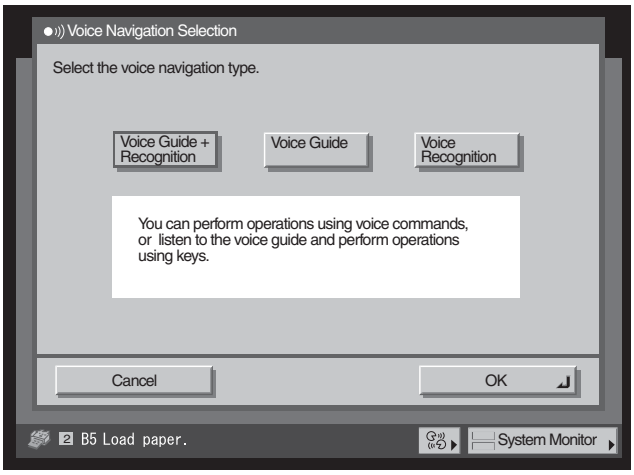

F-2-227

3) When the display of the number of copy is enclosed with red lines on the screen, "Voice Operation Kit" becomes enabled.

If 'Voice Operation Kit' does not work, check the following points.
- Is the slide switch on the voice operation board switched to 66MHz?
- TTS-JA/TTS-EN and ASR-JA/ASR-EN should be installed properly in the Service mode: COPIER > Display > VERSION.

<When Stopping the Usage>
1) Press the reset key or the voice recognition button three seconds or longer.

Chapter 3 Basic Operation

Contents

3.1 Construction 3-1
3.1.1 Functional Construction 3-1
3.1.2 Major PCB Wiring diagram 3-1
3.2 Basic Sequence 3-2
3.2.1 Basic Sequence of Operation at Power-On 3-2

3.1 Construction

3.1.1 Functional Construction

iR2270 / iR2870 / iR3570 / iR4570 / / iR2270N / / iR2870N / / iR3570N / / iR4570N / iR2230 / / iR3530 /

The machine may broadly be divided into the following functional blocks: general control system, original exposure system, reader control system, printer control system, laser exposure system, image formation system, pickup/feed system, fixing/delivery system. For detailed discussions of the individual blocks, see the chapters that follow.

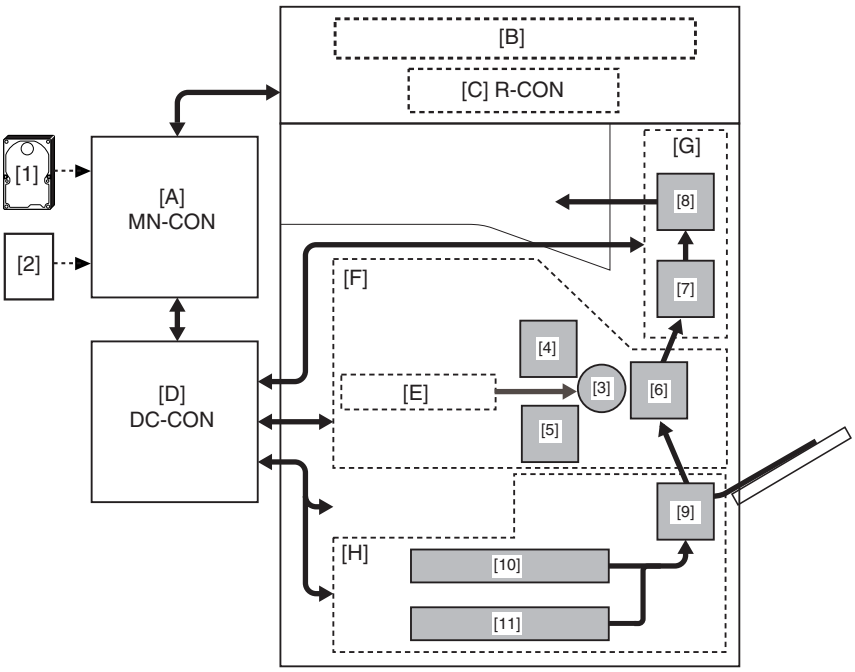

F-3-1

T-3-1

[A]	General Control System main controller PCB	[1]	HDD
[B]	Original Exposure System	[2]	accessories PCB
[C]	reader Control System reader controller PCB	[3]	photosensitive drum
[D]	Printer Control System DC controller PCB	[4]	charging
[E]	Laser Exposure System	[5]	developing
[F]	Image Formation System	[6]	transfer
[G]	Fixing/Delivery System	[7]	fixing
[H]	Pickup/Feed System	[8]	delivery/reversal/duplex assembly
		[9]	pickup control
		[10]	cassette 1
		[11]	cassette 2

3.1.2 Major PCB Wiring diagram

iR2270 / iR2870 / iR3570 / iR4570 / / iR2270N / / iR2870N / / iR3570N / / iR4570N / iR2230 / / iR3530 /

The following is a wiring diagram showing the relationship among major PCBs:

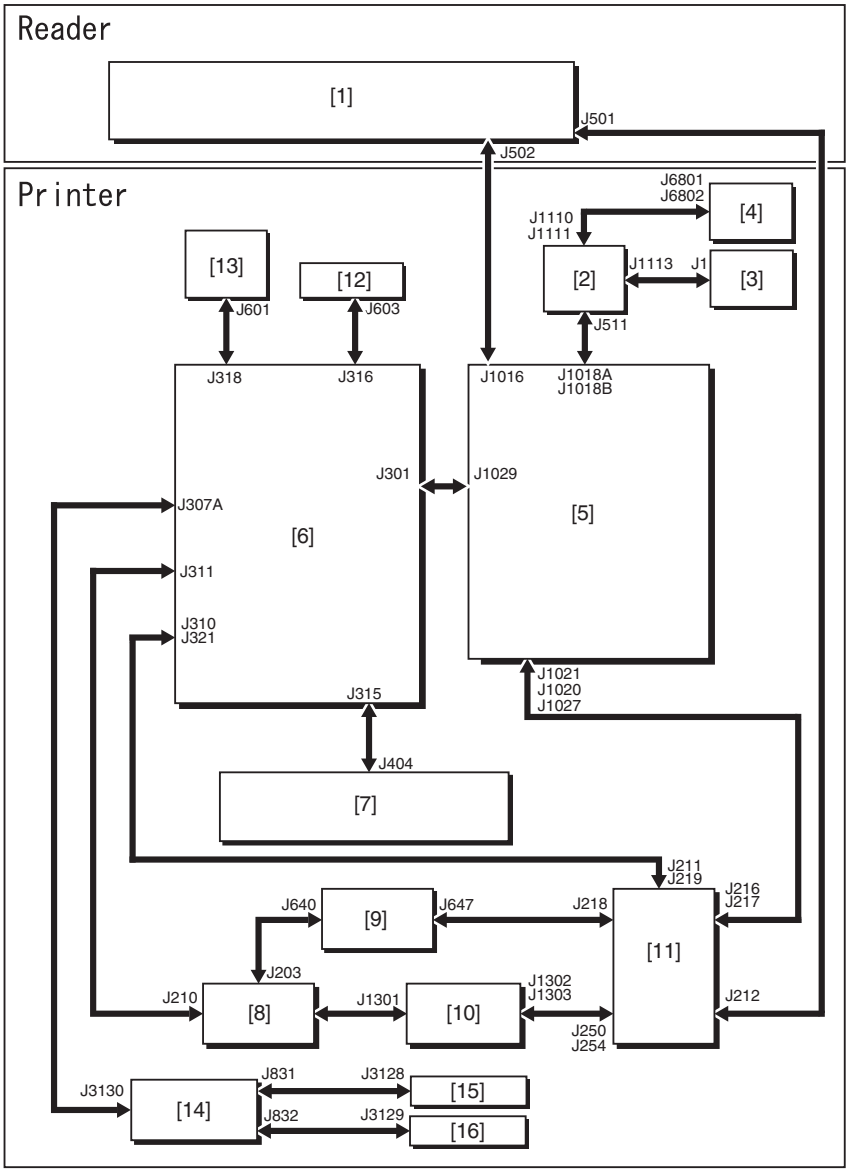

F-3-2

T-3-2

[1]	Reamer controller PCB	[9]	Accessories power supply PCB
[2]	Control panel CPU PCB	[10]	Printer power supply PCB
[3]	Control panel inverter PCB	[11]	Controller power supply PCB
[4]	Keypad PCB	[12]	BD PCB
[5]	Main controller PCB	[13]	Laser drive PCB
[6]	DC controller PCB	[14]	Cassette size relay PCB
[7]	High-voltage PCB	[15]	Upper cassette size PCB
[8]	AC drive PCB	[16]	Lower cassette size PCB

Memo:The arrows in the diagram indicate the wring between PCBs, and do not indicate the direction of individual signals.

3.2 Basic Sequence

3.2.1 Basic Sequence of Operation at Power-On

iR2270 / iR2870 / iR3570 / iR4570 / / iR2270N / / iR2870N / / iR3570N / / iR4570N / iR2230 / / iR3530 /

1. Reader Unit

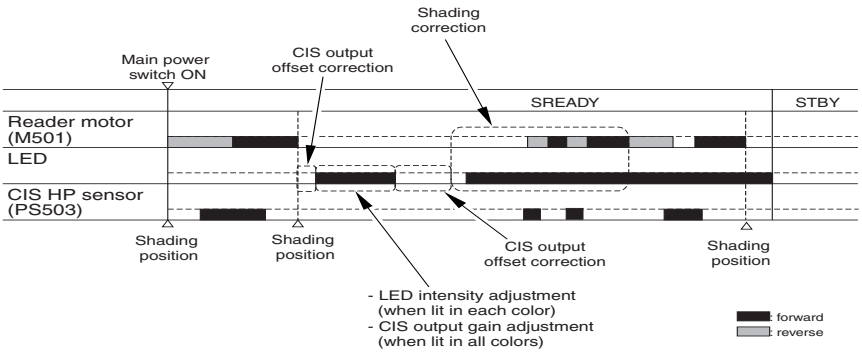

F-3-3

2. Printer Unit

If any of the cassettes (1 through 4) is in low position, the lifter is moved up until the top of the stack of sheets is detected.

Chapter 4 Main Controller

Contents

4.1 Construction 4-1
4.1.1 Construction and Mechanisms 4-1
4.1.2 Construction and Functions 4-1
4.2 Construction of the Electrical Circuitry 4-2
4.2.1 Main Controller PCB 4-2
4.2.2 Main Controller PCB 4-3
4.2.3 HDD 4-4
4.2.4 HDD 4-6
4.2.5 HDD (optional) 4-8
4.3 Start-Up Sequence 4-10
4.3.1 Overview 4-10
4.3.2 Start-Up Sequence 4-11
4.4 Shut-Down Sequence 4-12
4.4.1 Overview 4-12
4.4.2 Overview (w/ HDD) 4-12
4.4.3 Flow of Operation 4-12
4.4.4 Flow of Operation (w/ HDD) 4-12
4.5 Image Processing 4-13
4.5.1 Overview of the Image Flow 4-13
4.5.2 Construction of the Image Processing Module 4-13
4.5.3 Construction of the Image Processing Module 4-14
4.5.4 Reader Unit Input Image Processing 4-14
4.5.5 Compressio/ Extesion/ Editing Block 4-15
4.5.6 Compression/Expansion/Edit Block 4-15
4.5.7 Printer unit Output Image Processing 4-16
4.6 Flow of Image Data 4-16
4.6.1 Flow of Image Data According to Copy Functions 4-16
4.6.2 Flow of Image Data for the Copy Function 4-17
4.6.3 Flow of Image Data for the Box Function 4-17
4.6.4 Flow of Image Data for the Box Function 4-18
4.6.5 Flow of Image Data for the SEND Function 4-18
4.6.6 Flow of Image Data for the SEND Function 4-19
4.6.7 Flow of Image Data for the Fax Transmission 4-19
4.6.8 Flow of Image Data for the Fax Transmission Function 4-20
4.6.9 Flow of Image Data for the Fax Reception Function 4-20
4.6.10 Flow of Image Data for the Fax Reception Function 4-21
4.6.11 Flow of Image Data for the PDL Function 4-22
4.6.12 Flow of Image Data for the PDL Function 4-22
4.7 Parts Replacement Procedure 4-22
4.7.1 Main Controller PCB 4-22
4.7.1.1 Removing the Rear Cover 4-22
4.7.1.2 Removing the Main Controller PCB 4-23
4.7.2 SDRAM 4-24
4.7.2.1 Removing the Face Cover 4-24
4.7.2.2 Removing the SDRAM 4-25
4.7.3 Boot ROM 4-25
4.7.3.1 Removing the Face Cover 4-25
4.7.3.2 Removing the Boot ROM 4-26
4.7.4 HDD 4-26
4.7.4.1 Removing the Face Cover 4-26

4.7.4.2 Removing the Face Cover (optional) 4-27
4.7.4.3 Removing the Counter PCB 4-27
4.7.4.4 Removing the Counter PCB (optional) 4-28
4.7.4.5 Removing the HDD 4-28
4.7.4.6 Removing the HDD (optional) 4-28

4.1 Construction

4.1.1 Construction and Mechanisms

iR2270 / iR2870 / iR3570 / iR4570 / / iR2270N / / iR2870N / / iR3570N / / iR4570N / iR2230 /

The machine's main controller block consists of the following and has the following functions:

T-4-1

Item	Description
Main controller PCB	Controls system operation, memory, printer unit output, image processing, printer unit image input processing, rendering, color LCD controller, card printer unit interface, fax image processing, etc.
SRAM	Retains service mode settings (by SRAM), HDD management information
Image memory (SDRAM)	Temporarily retains image data (256 MB; 512 MB max.)
BOOTROM	Stores boot program
HDD	Stores system software, retains image data for Box/Fax function (20 GB)
USB port	USB2.0 interface
Ethernet port (10/100Bsae-T)	Ethernet interface

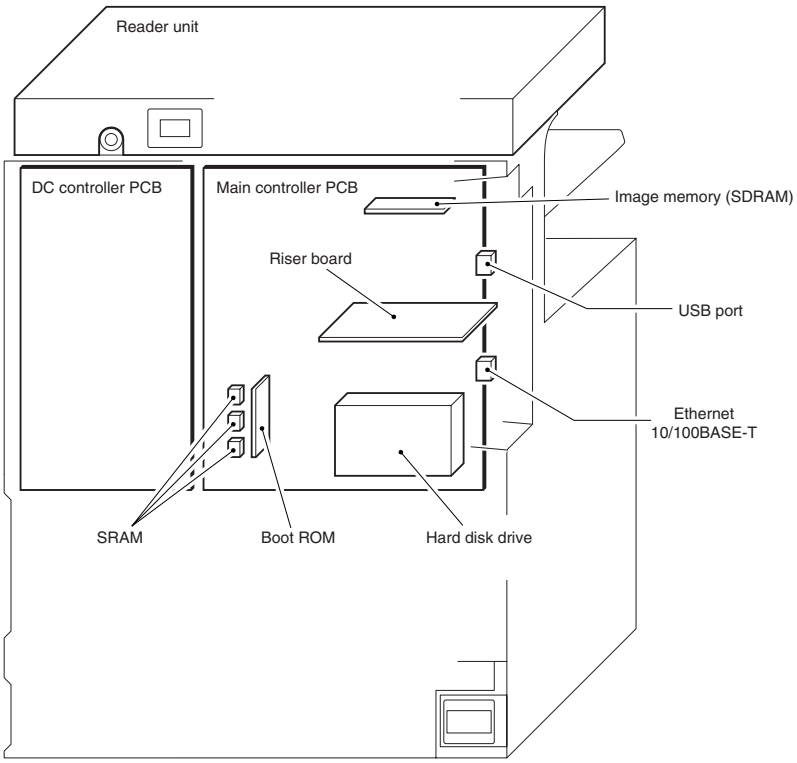

F-4-1

4.1.2 Construction and Functions

iR2230 / / iR3530 /

The machine's main controller block consists of the following components arranged as shown:

T-4-2

Item	Description
Main controller PCB	controls system; controls memory; controls printer output image processing control, reader image input processing, rendering processing; controls color LCD controller, card reader interface; controls fax image processing
SRAM	retains service mode settings and HDD management information (SRAM)
Image memory (SDRAM)	temporarily retains image data 256 MB
BOOTROM	stores boot program
HDD (optional)	stores system software stores image data for Box/Fax functions 20 GB
USB port	USB2.0 interface

Item	Description
Ethernet port (10/100 Base-T)	Ethernet interface

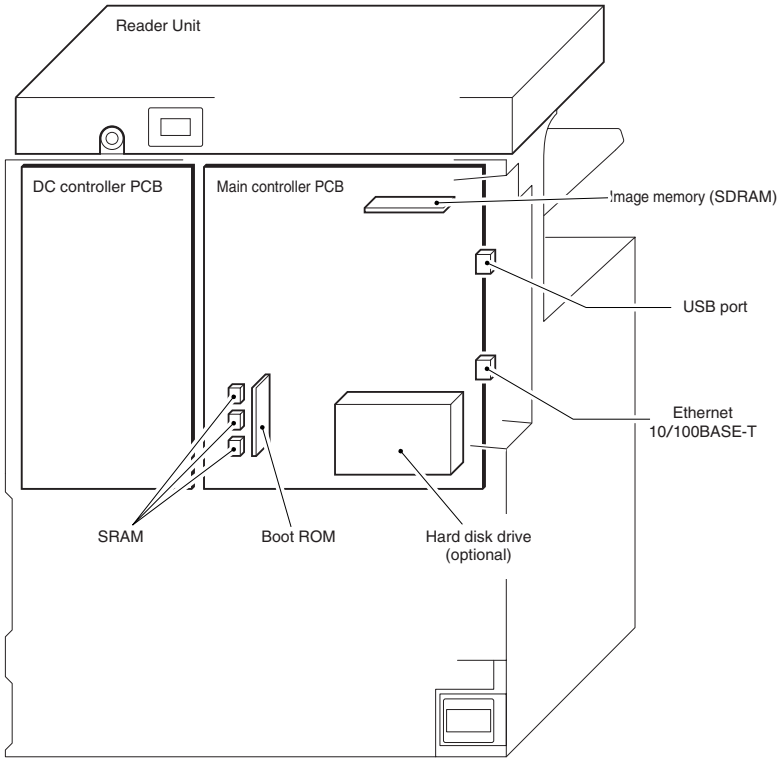

F-4-2

4.2 Construction of the Electrical Circuitry

4.2.1 Main Controller PCB

iR2270 / iR2870 / iR3570 / iR4570 / / iR2270N / / iR2870N / / iR3570N / / iR4570N / iR2230 /

The following is a diagram showing the major control mechanisms of the main controller according to connectors:

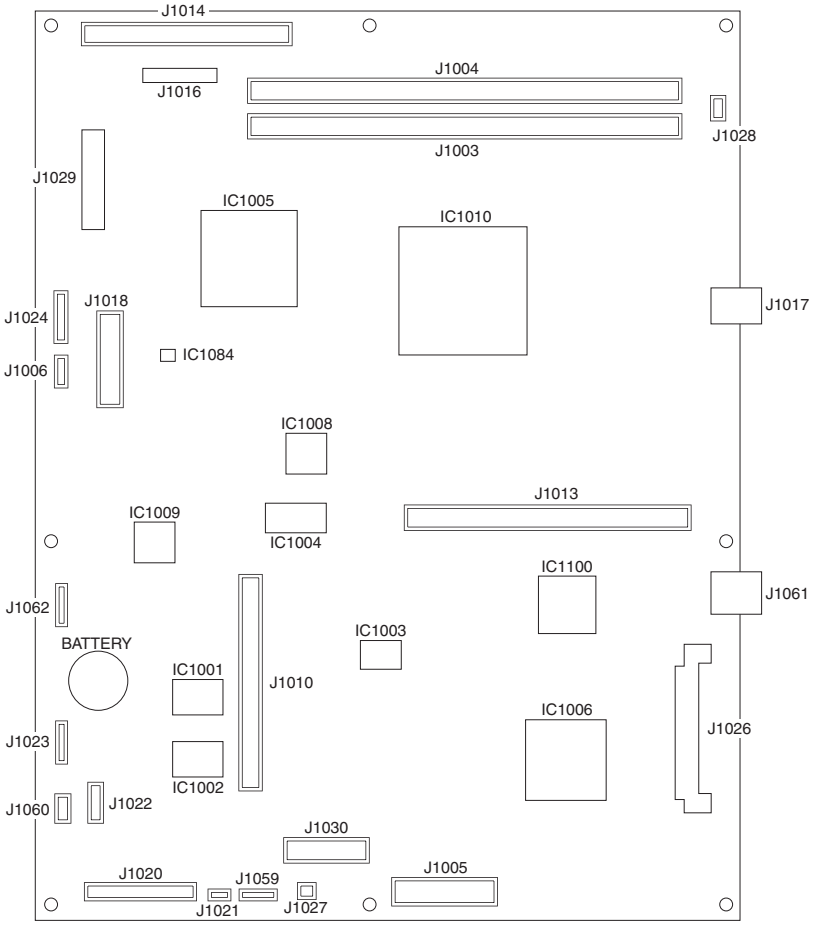

F-4-3

T-4-3

Connector	Description
J1003	SDRAM connection slot
J1004	SDRAM connection slot
J1005	Fax connector (2-port)
J1010	Boot ROM connector slot
J1013	Riser board connection slot
J1014	Scanner DDI
J1017	USB port
J1018	Control panel connector
J1020	Power supply connector
J1026	Hard disk connector
J1029	Printer DDI
J1030	Fax connector (1-port)
J1061	Ethernet port (10/100BaseT)

4.2.2 Main Controller PCB

iR2230 / / / iR3530 /

The machine's main controller PCB has the following functions (shown according to connectors):

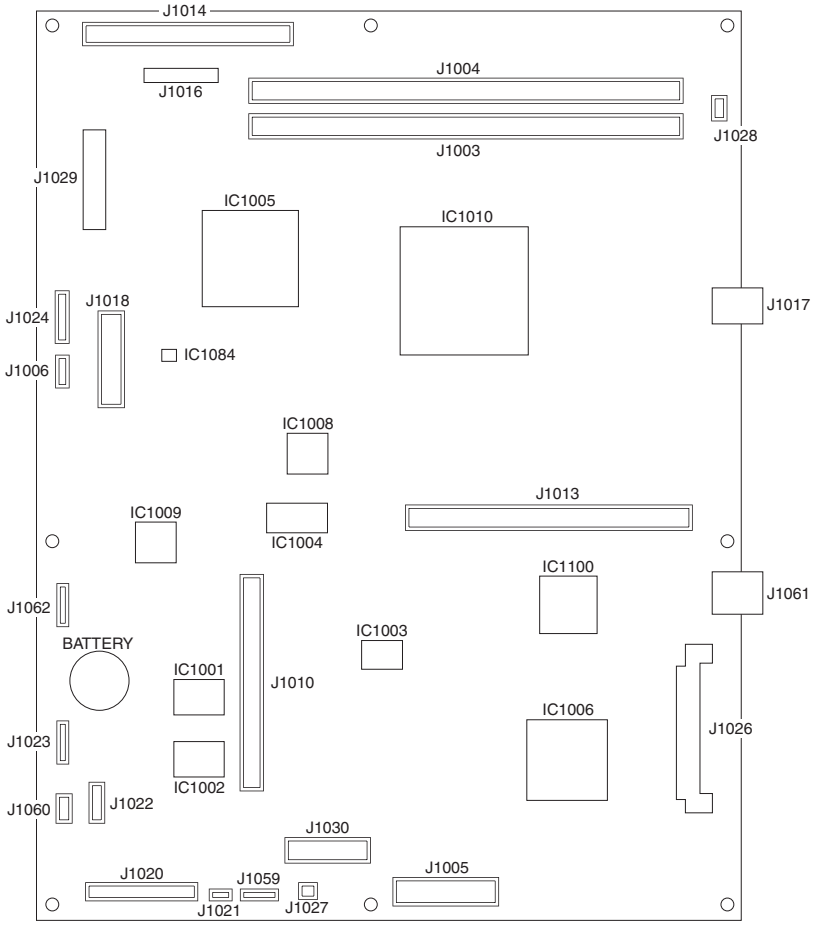

F-4-4

T-4-4

Connector	Description
J1003	SDRAM connection slot
J1004	SDRAM connection slot
J1005	fax connector (2-line; not used)
J1010	Boot ROM connection slot
J1013	Riser board connection slot
J1014	scanner DDI
J1017	USB port
J1018	control panel connector
J1020	power supply connector
J1026	hard disk connector
J1029	printer DDI
J1030	fax connector (1-line)
J1061	Ethernet pot (10/100Base-T)

4.2.3 HDD

iR3570 / iR4570 / / iR3570N / / iR4570N

The HDD is divided into 11 partitions (blocks), each assigned with specific functions.

T-4-5

Partition	Description
FSTDEV	Collects compressed image data.
TMP_GEN	Stores temporary files, log data.
TMP_PSS	PDL spool
TMP_FAX	Ensures fax reception.
APL_SEND	Stores user data (address book, transfer settings).
APL_MEAP	Stores MEAP applications.
APL_GEN	Mode memory data, standard mode data History (e.g., print job history) iFax image data Fax image data Other
IMG_MNG	Stores file management table, profile.

Partition	Description
PDL_DEV	Stores PDL font, etc.
BOOTDEV	Stores execution module, message data file, RUI content, etc.
FSTCDEV	$ (not used)

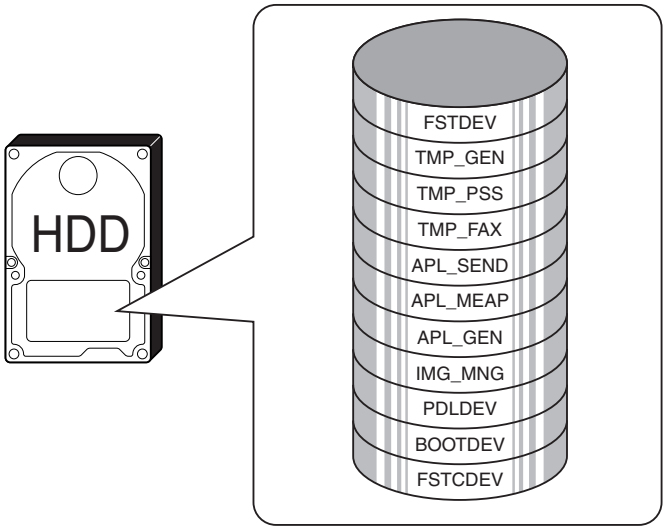

F-4-5

The following shows the construction of the machine's system software:

T-4-6

System software	Description	Location	Remarks
System	System module (controls mechanism as a whole)	HDD (BOOTDEV)	
Language	Language module (controls LCD indications)	HDD (BOOTDEV)	
RUI	Remote user interface module	HDD (BOOTDEV)	
Boot	Starts up the machine	BootROM	DIMM
G3FAX	Controls G3 Fax	G3 Fax board	DIMM 1-line
G3FAX	Controls G3 Fax	HDD (BOOTDEV)	2-line
Dcon	Controls the DC controller	DC controller PCB	Mask ROM (soldered)
Rcon	Controls the printer unit controller	Printer unit controller PCB	Flash ROM (soldered)
Meapcont	Controls MEAP applications	HDD (BOOTDEV)	

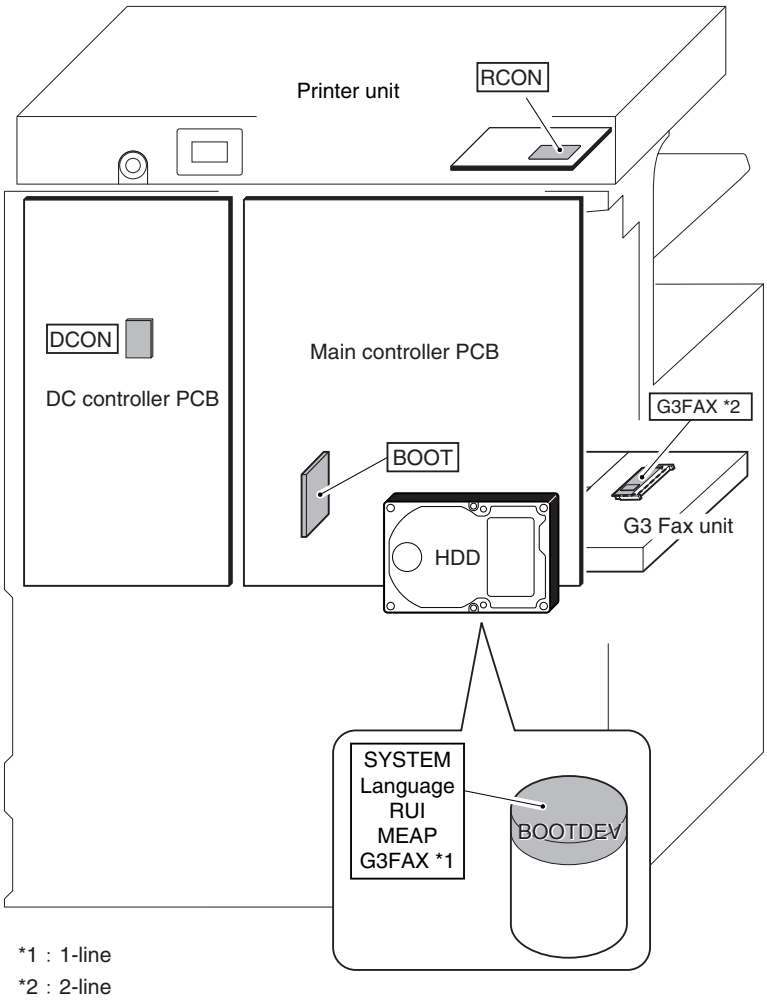

F-4-6

4.2.4 HDD

iR2270 / iR2870 / iR3570 / iR4570 / / iR2270N / / iR2870N / / iR3570N / / iR4570N / iR2230 /

The HDD is divided into 11 partitions (blocks), each assigned with specific functions.

T-4-7

Partition	Description
FSTDEV	Collects compressed image data.
TMP_GEN	Stores temporary files, log data.
TMP_PSS	PDL spool
TMP_FAX	Ensures fax reception.
APL_SEND	Stores user data (address book, transfer settings).
APL_MEAP	Stores MEAP applications.
APL_GEN	Mode memory data, standard mode data History (e.g., print job history) iFax image data Fax image data Other
IMG_MNG	Stores file management table, profile.
PDL_DEV	Stores PDL font, etc.
BOOTDEV	Stores execution module, message data file, RUI content, etc.
FSTCDEV	Chasing (not used)

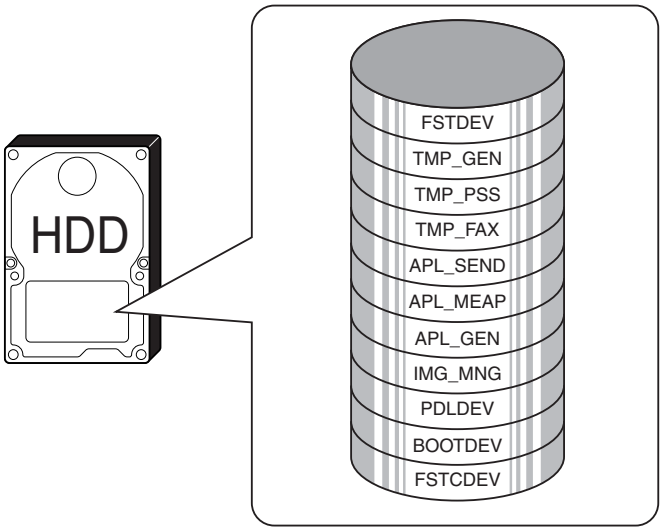

F-4-7

The following shows the construction of the machine's system software:

T-4-8

System software	Description	Location	Remarks
System	System module (controls mechanism as a whole)	HDD (BOOTDEV)	
Language	Language module (controls LCD indications)	HDD (BOOTDEV)	
RUI	Remote user interface module	HDD (BOOTDEV)	
Boot	Starts up the machine	BootROM	DIMM (FAX board)
G3FAX	Controls G3 Fax	HDD (BOOTDEV)	1-line
Dcon	Controls the DC controller	DC controller PCB	Mask ROM (soldered)
Rcon	Controls the printer unit controller	Printer unit controller PCB	Flash ROM (soldered)
Meapcont	Controls MEAP applications	HDD (BOOTDEV)	

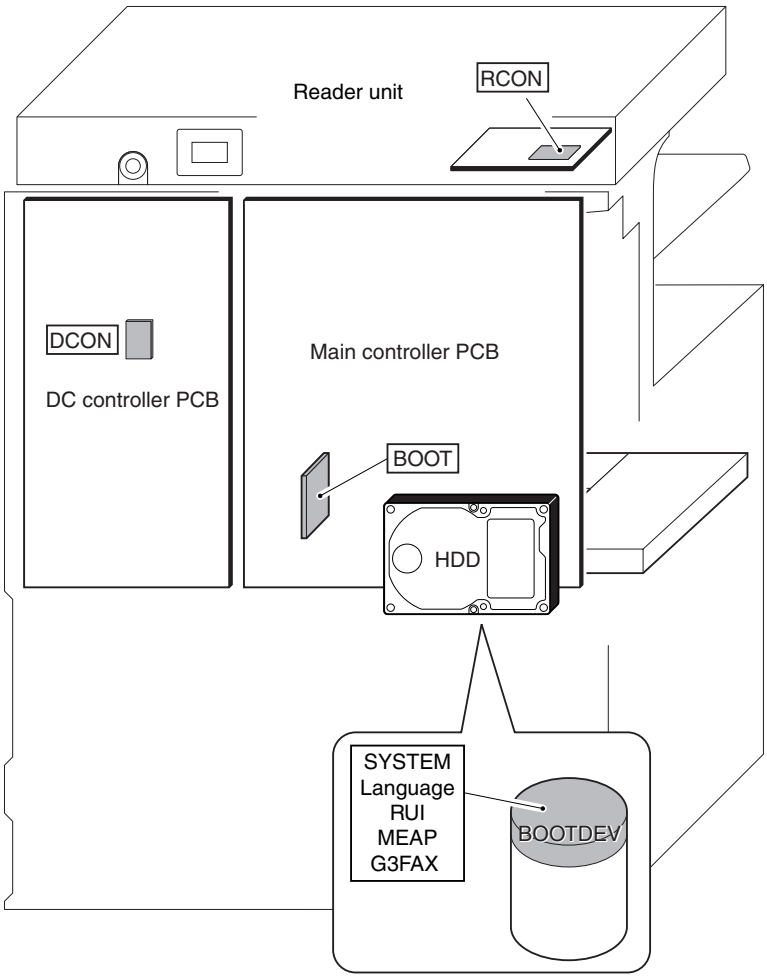

F-4-8

4.2.5 HDD (optional)

iR2230 / / iR3530 /

The HDD is divided into 11 partitions (blocks), each assigned with specific functions.

T-4-9

Partition	Description
FSTDEV	Collects compressed image data.
TMP_GEN	Stores temporary files, log data.
TMP_PSS	PDL spool
TMP_FAX	Ensures fax reception.
APL_SEND	Stores user data (address book, transfer settings).
APL_MEAP	Stores MEAP applications.
APL_GEN	Mode memory data, standard mode data History (e.g., print job history) iFax image data Fax image data Other
IMG_MNG	Stores file management table, profile.
PDL_DEV	Stores PDL font, etc.
BOOTDEV	Stores execution module, message data file, RUI content, etc.
FSTCDEV	Chasing (not used)

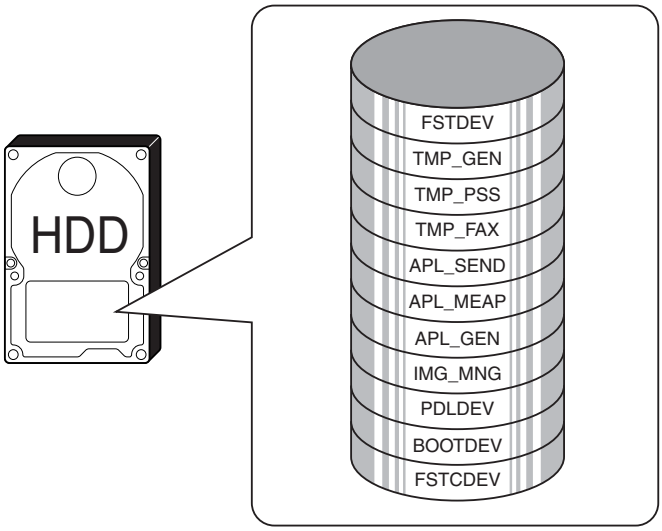

F-4-9

The following shows the construction of the machine's system software:

T-4-10

System software	Description	Location	Remarks
System	System module (controls mechanism as a whole)	HDD (BOOTDEV)	
Language	Language module (controls LCD indications)	HDD (BOOTDEV)	
RUI	Remote user interface module	HDD (BOOTDEV)	
Boot	Starts up the machine	BootROM	DIMM (FAX board)
G3FAX	Controls G3 Fax	HDD (BOOTDEV)	1-line
Dcon	Controls the DC controller	DC controller PCB	Mask ROM (soldered)
Rcon	Controls the printer unit controller	Printer unit controller PCB	Flash ROM (soldered)
Meapcont	Controls MEAP applications	HDD (BOOTDEV)	

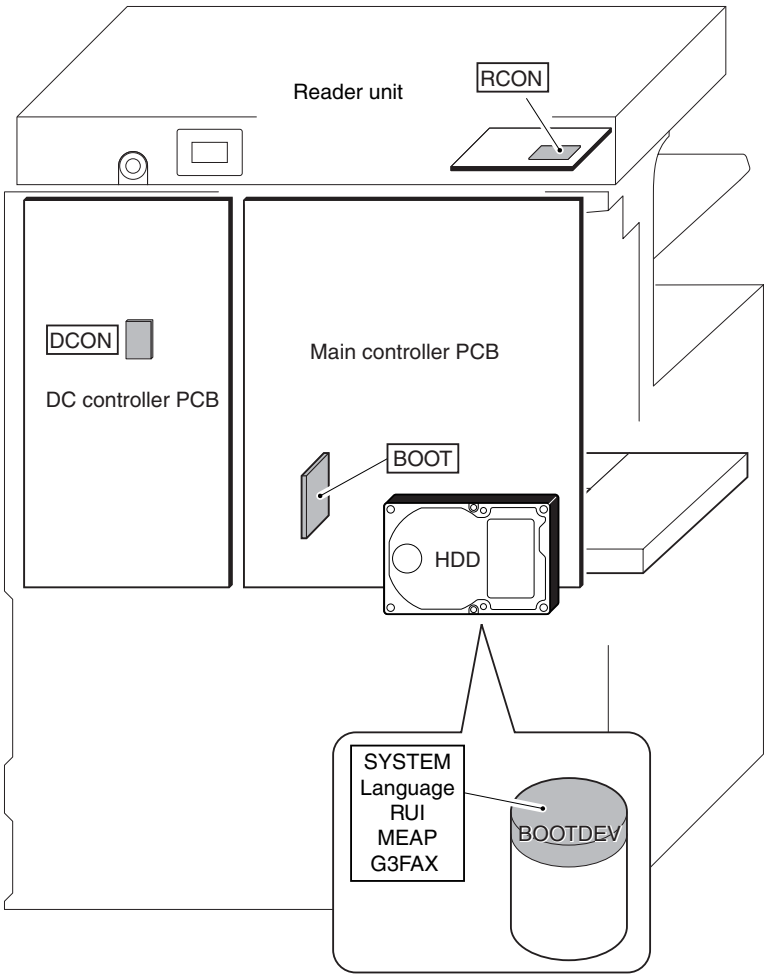

F-4-10

4.3 Start-Up Sequence

4.3.1 Overview

iR2270 / iR2870 / iR3570 / iR4570 / / iR2270N / / iR2870N / / iR3570N / / iR4570N / iR2230 /

The system software used to control the machine is stored on the HDD.
When the machine is started, the CPU on the main controller PCB reads the system software from the HDD according to the instructions of the boot ROM boot program, and writes it to the image memory (SDRAM) of the controller PCB.
While the CPU reads the system software from the HDD to the image memory (DRAM), the control panel shows the following screen, using a progress bar to indicate the progress of the start-up sequence.

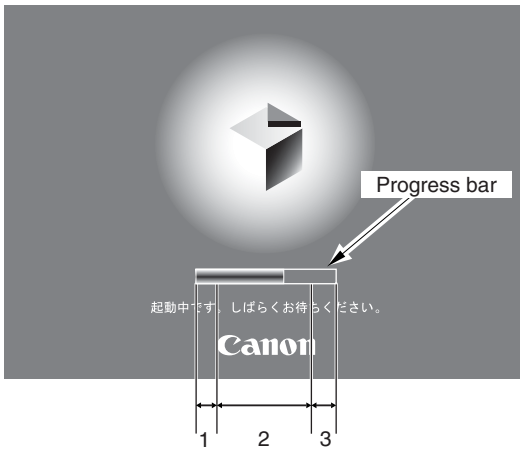

F-4-11

Do not turn off the main power while the progress bar is indicated, as access is being made to the HDD. Turning off the power can cause a fault on the HDD (identified by E602).

4.3.2 Start-Up Sequence

iR2270 / iR2870 / iR3570 / iR4570 / / iR2270N / / iR2870N / / iR3570N / / iR4570N / iR2230 / / / iR3530 /

<Boot ROM Area>
-Self Diagnosis Program (interval 1)
The self-diagnosis program is run by the CPU on the main controller PCB when the main power switch is turned on.
The program is used to check the condition of the image memory (SDRAM) and the HDD.
The machine will indicate an error code if it finds a fault while running the program.

-Boot Program (interval 2)
When the self-diagnosis program ends normally, the CPU on the main controller PCB executes the boot program.
The program is used to read the system software from the HDD to write it into the image memory (SDRAM).

<Image Memory (SDRAM) Area> (interval 3)
The system software written by the boot program initializes the various functional blocks (e.g., I/F settings of the main controller).

When all the foregoing ends normally, the machine becomes ready to accept a job
(i.e., the control panel shows the Operation screen, and the LED on the Start key changes from red to green).

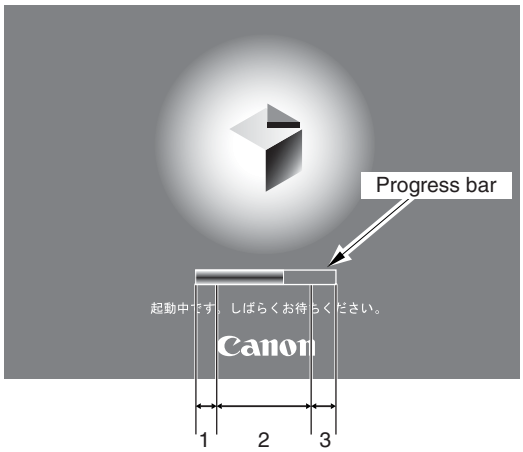

F-4-12

- While the Self-Diagnosis Program Is Being Executed

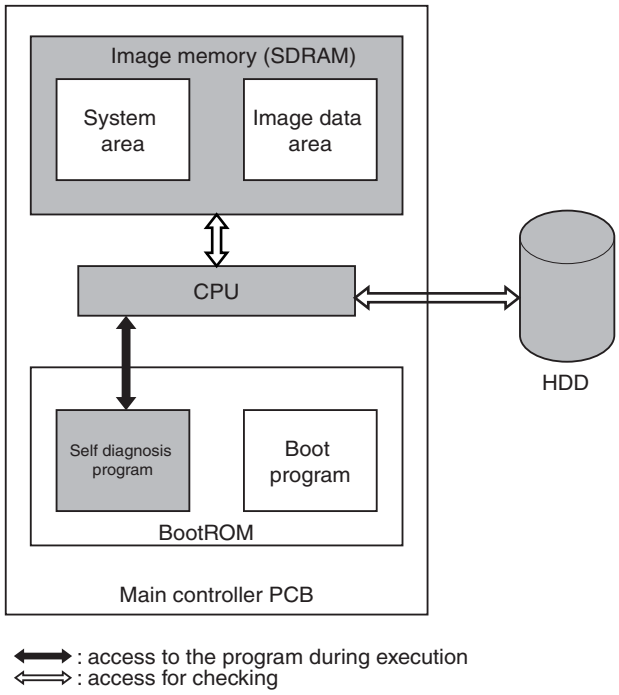

F-4-13

- While the Boot Program Is Being Run

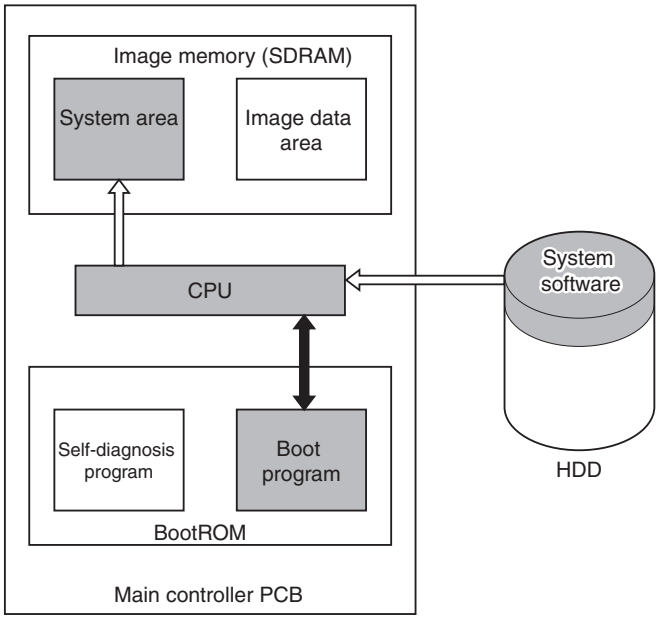

: access to the program during execution.
: flow of the system program.

F-4-14

4.4 Shut-Down Sequence

4.4.1 Overview

iR2270 / iR2870 / iR3570 / iR4570 / / iR2270N / / iR2870N / / iR3570N / / iR4570N /

If the main power switch is turned off while the machine is accessing its HDD, damage can well occur on the HDD. To avoid such damage, the machine is provided with a shut-down sequence.

4.4.2 Overview (w/ HDD)

iR2230 / / iR3530 /

If the main power switch is turned off while the machine is accessing its HDD, damage can well occur on the HDD. To avoid such damage, the machine is provided with a shut-down sequence.

4.4.3 Flow of Operation

iR2270 / iR2870 / iR3570 / iR4570 / / iR2270N / / iR2870N / / iR3570N / / iR4570N /

The following diagram shows the flow of shut-down operation:

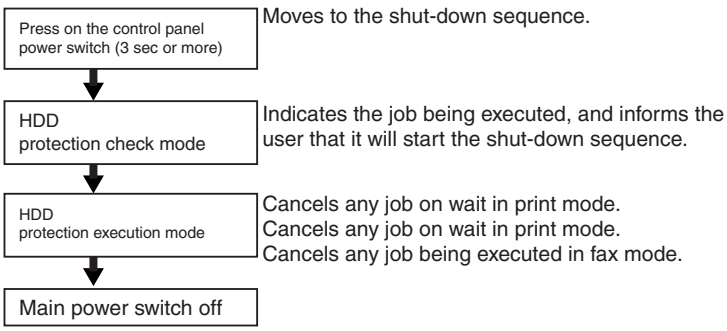

F-4-15

4.4.4 Flow of Operation (w/ HDD)

iR2230 / / iR3530 /

The following diagram shows the flow of shut-down operation:

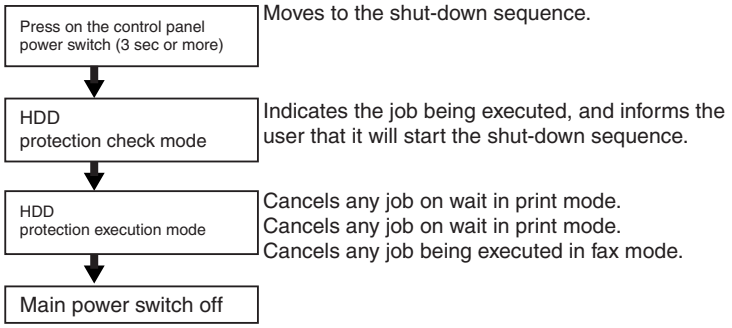

F-4-16

4.5 Image Processing

4.5.1 Overview of the Image Flow

iR2270 / iR2870 / iR3570 / iR4570 / / iR2270N / / iR2870N / / iR3570N / / iR4570N / iR2230 / /

The following shows the flow of images in relation to the machine's functions:

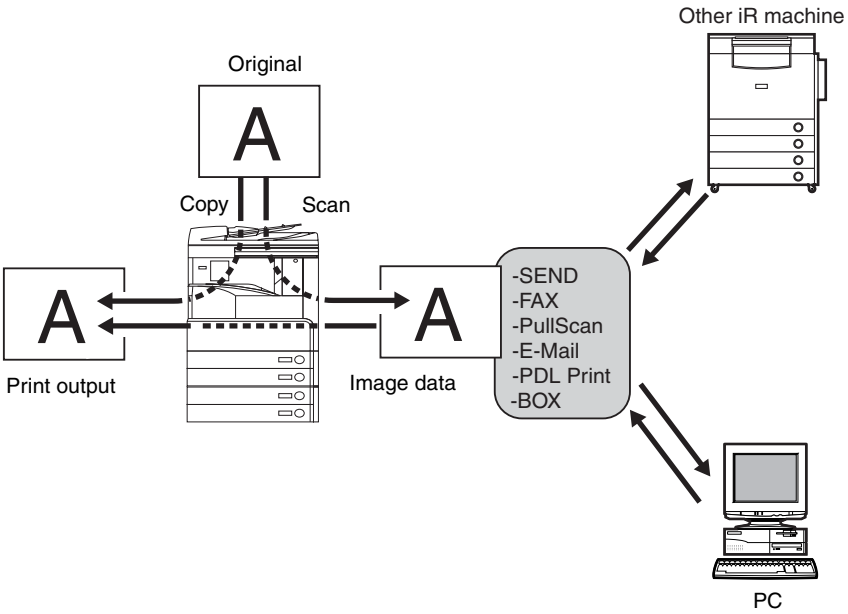

F-4-17

4.5.2 Construction of the Image Processing Module

iR2270 / iR2870 / iR3570 / iR4570 / / iR2270N / / iR2870N / / iR3570N / / iR4570N / iR2230 / /

The machine's major image processing is executed by the main controller PCB.
The following shows the construction of the modules associated with image processing:

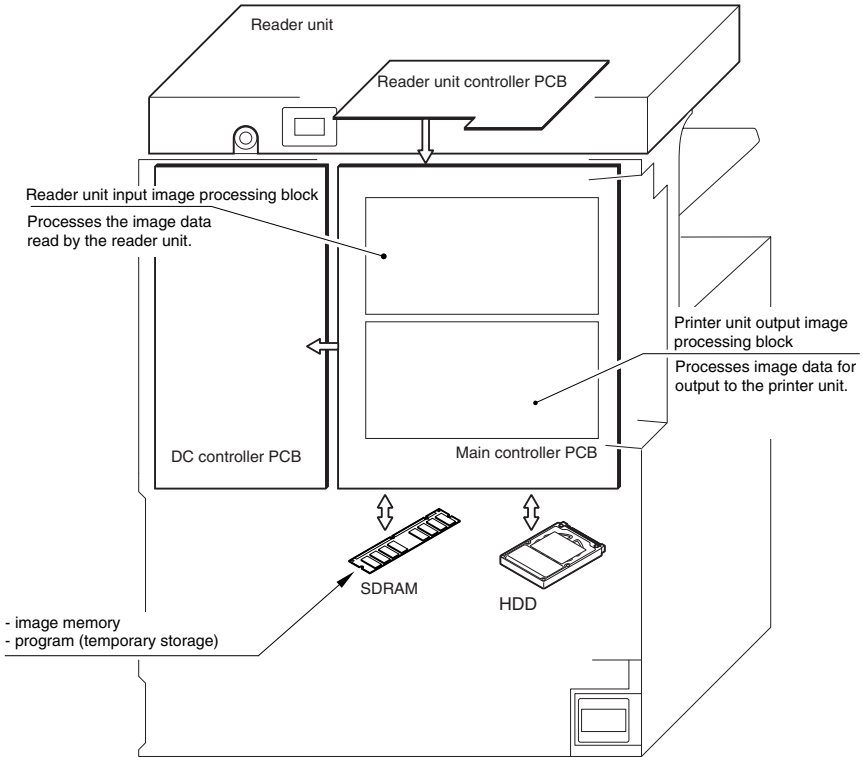

F-4-18

4.5.3 Construction of the Image Processing Module

iR2230 / / iR3530 /

Principal image processing is executed by the machine's main controller PCB.
The following shows the construction of modules associated with image processing:

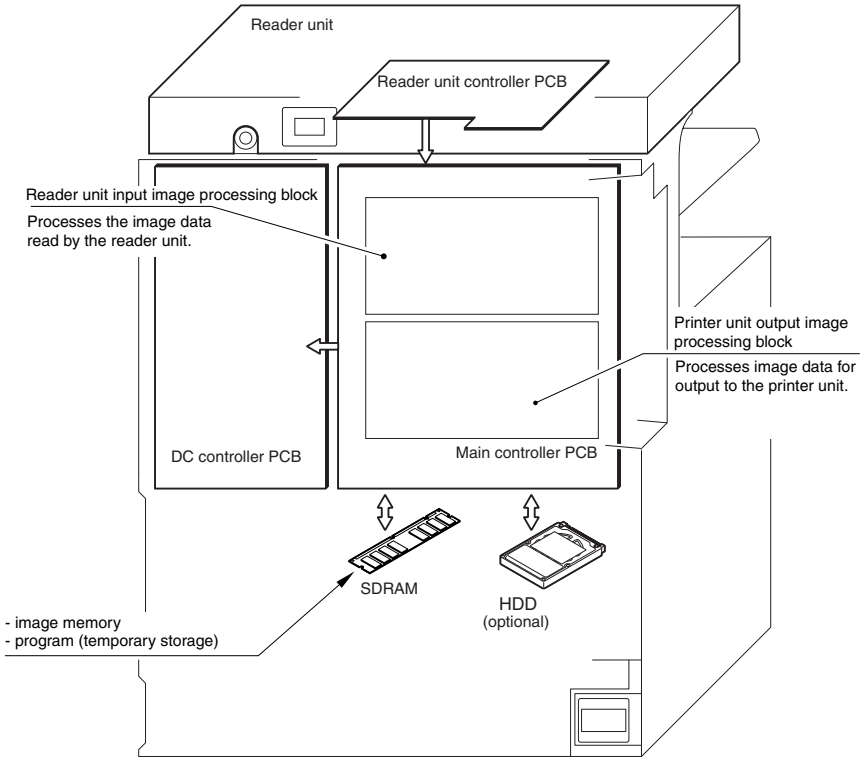

F-4-19

4.5.4 Reader Unit Input Image Processing

iR2270 / iR2870 / iR3570 / iR4570 / / iR2270N / / iR2870N / / iR3570N / / iR4570N / iR2230 / /

The image data colleted by the contact image sensor is processed by the main controller PCB.

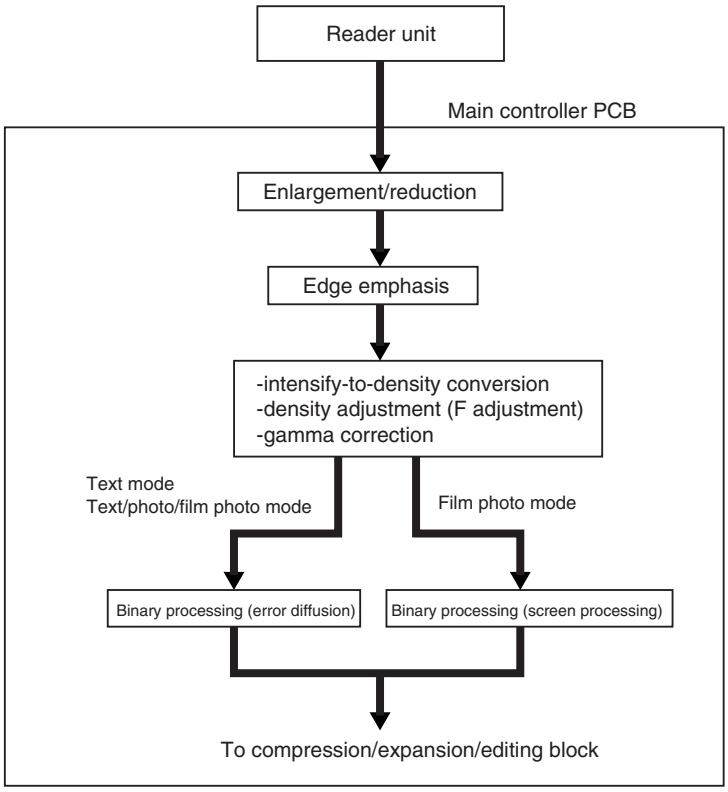

F-4-20

4.5.5 Compressio/ Extesion/ Editing Block

iR2270 / iR2870 / iR3570 / iR4570 / / iR2270N / / iR2870N / / iR3570N / / iR4570N / iR2230 / /

Here, image data is processed for compression, extension, and editing.

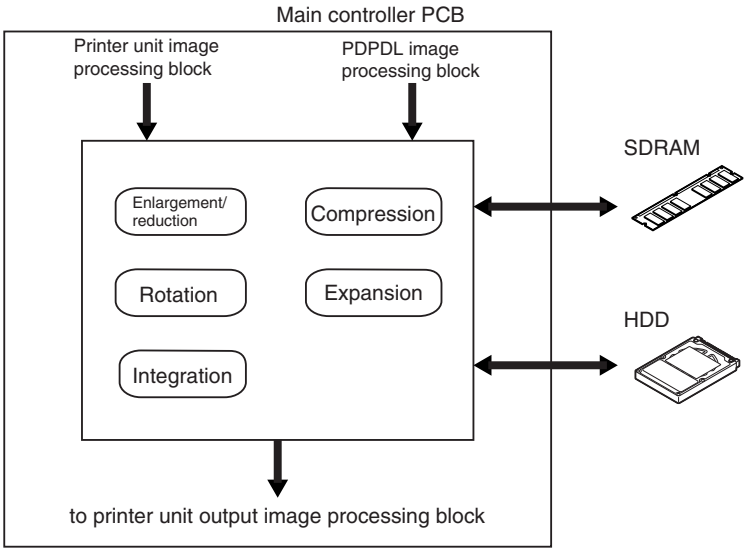

F-4-21

4.5.6 Compression/Expansion/Edit Block

iR2230 / / iR3530 /

In this block, machine executes compression, expansion, and editing tasks.

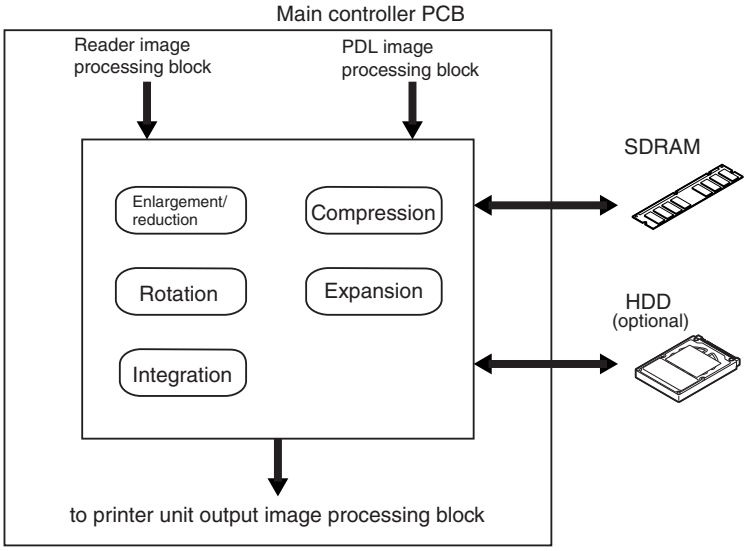

F-4-22

4.5.7 Printer unit Output Image Processing

iR2270 / iR2870 / iR3570 / iR4570 / / iR2270N / / iR2870N / / iR3570N / / iR4570N / iR2230 / /

The main controller processes the image data coming from the printer unit for output to the printer unit.

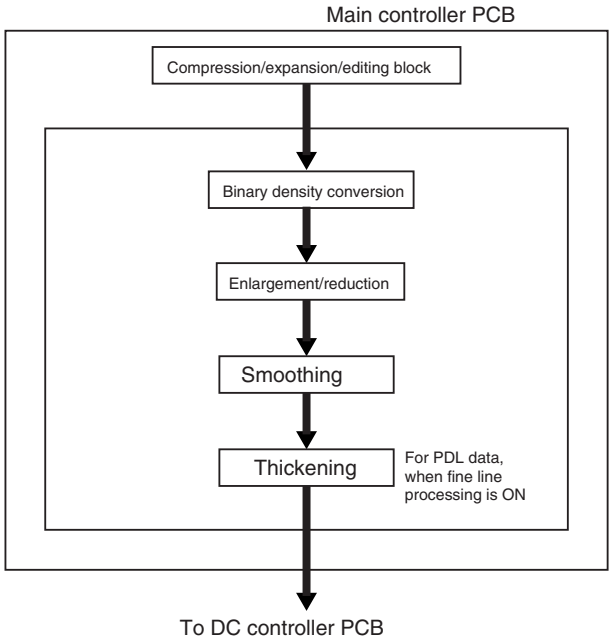

F-4-23

4.6 Flow of Image Data

4.6.1 Flow of Image Data According to Copy Functions

iR2270 / iR2870 / iR3570 / iR4570 / / iR2270N / / iR2870N / / iR3570N / / iR4570N / iR2230 / /

The following is the flow of image data when the Copy Function is in use:

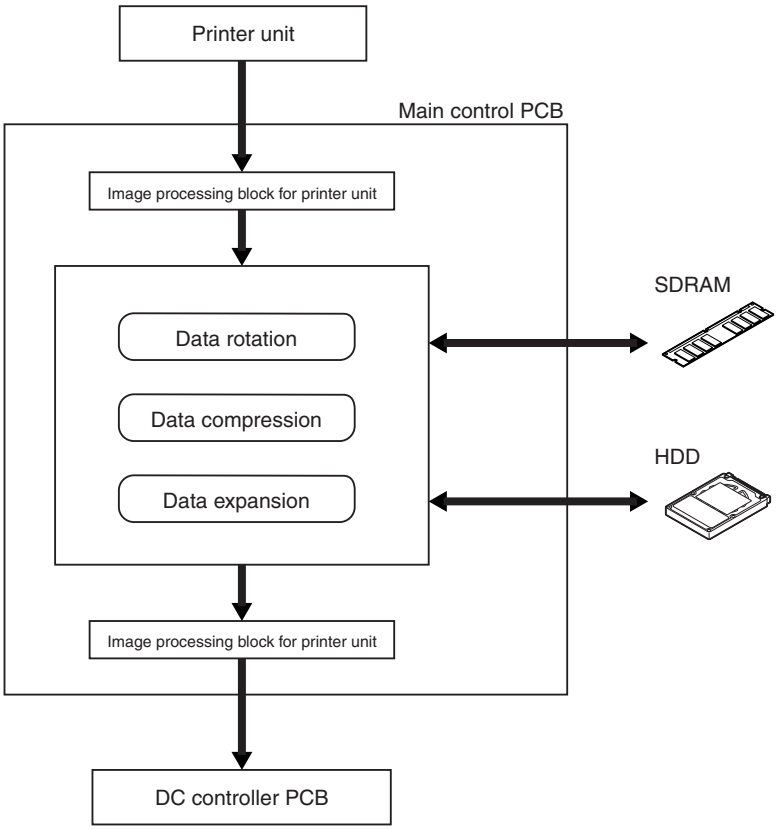

F-4-24

4.6.2 Flow of Image Data for the Copy Function

iR2230 / / iR3530 /

The following shows the flow of image data when the copy function is in use:

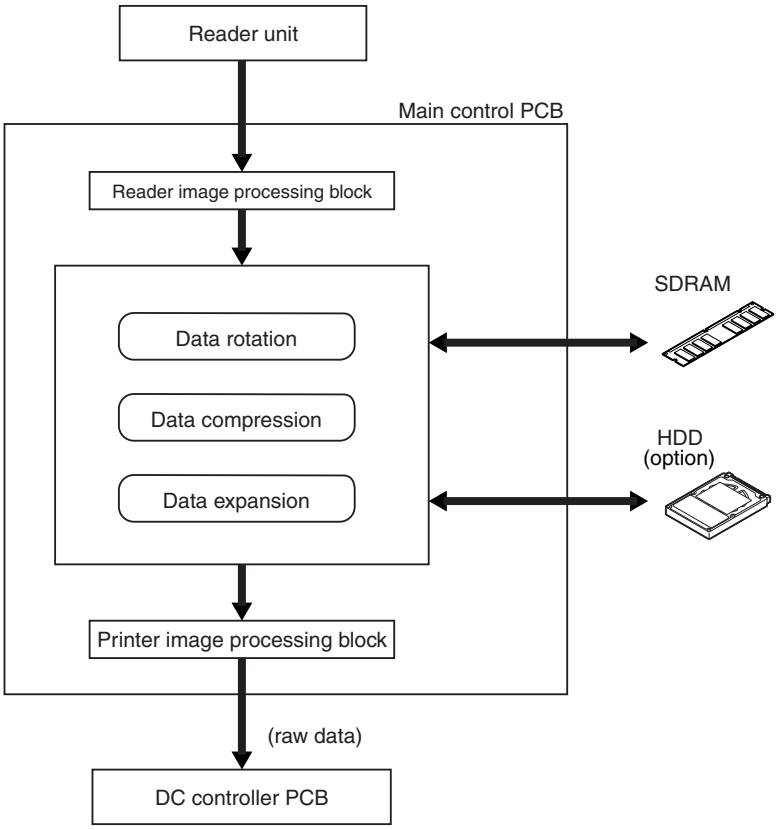

F-4-25

4.6.3 Flow of Image Data for the Box Function

iR2270 / iR2870 / iR3570 / iR4570 / / iR2270N / / iR2870N / / iR3570N / / iR4570N / iR2230 / /

The following is the flow of image data when the Box function is in use:

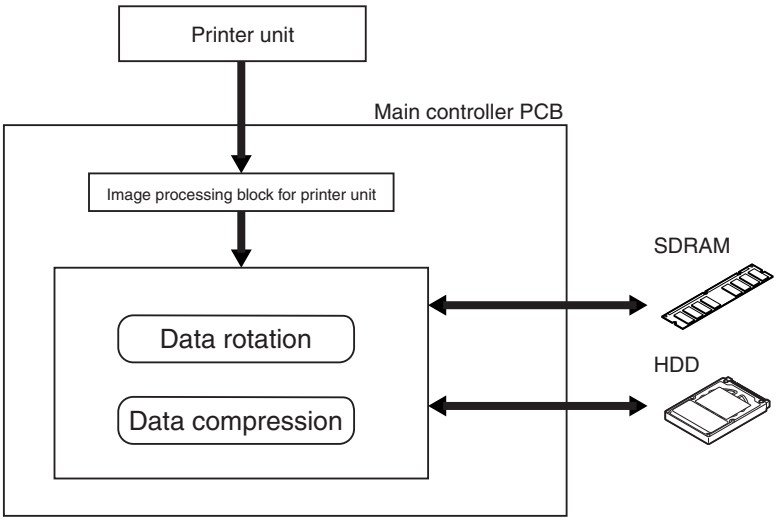

F-4-26

4.6.4 Flow of Image Data for the Box Function

iR2230 / / iR3530 /

The following shows the flow of image data when the BOX function is in use:

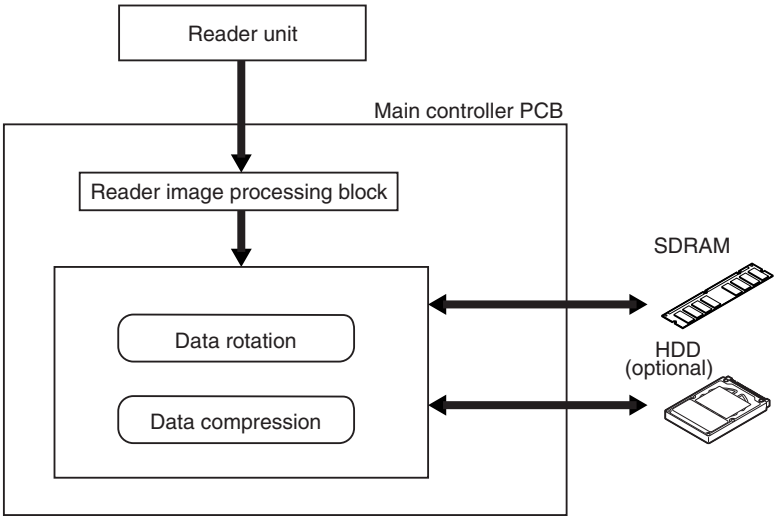

F-4-27

4.6.5 Flow of Image Data for the SEND Function

iR2270 / iR2870 / iR3570 / iR4570 / / iR2270N / / iR2870N / / iR3570N / / iR4570N / iR2230 / /

The following is the flow of image data when the SEND function is in use.

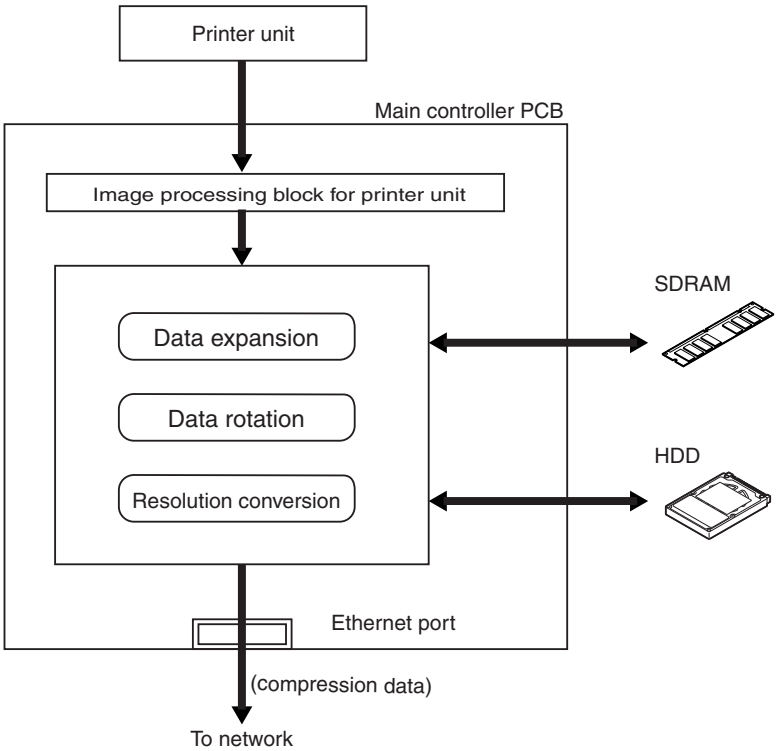

F-4-28

4.6.6 Flow of Image Data for the SEND Function

iR2230 / / iR3530 /

The following is the flow of image data when the SEND function is in use:

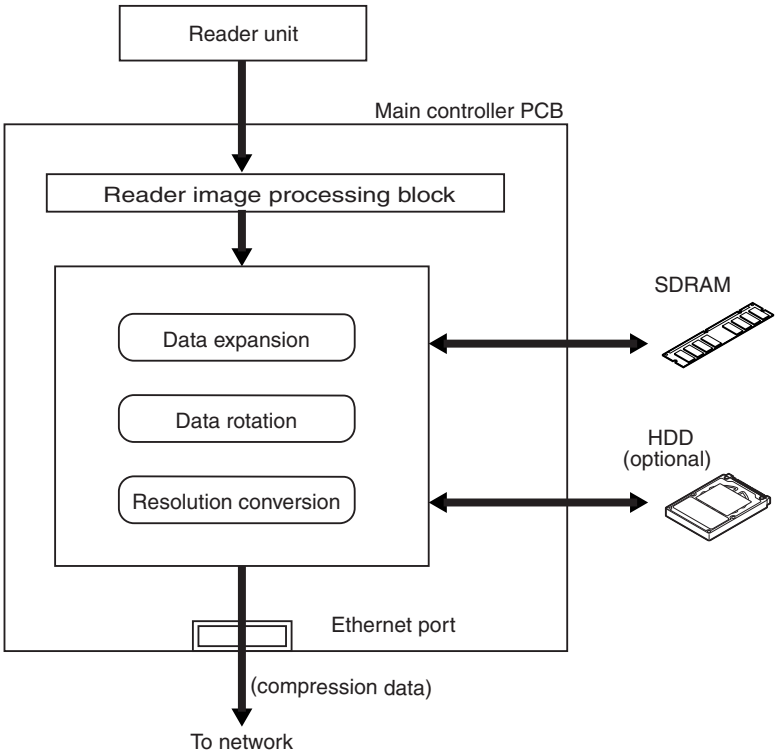

F-4-29

4.6.7 Flow of Image Data for the Fax Transmission

iR2270 / iR2870 / iR3570 / iR4570 / / iR2270N / / iR2870N / / iR3570N / / iR4570N / iR2230 / /

The following is the flow of image data when the fax transmission function is in use:

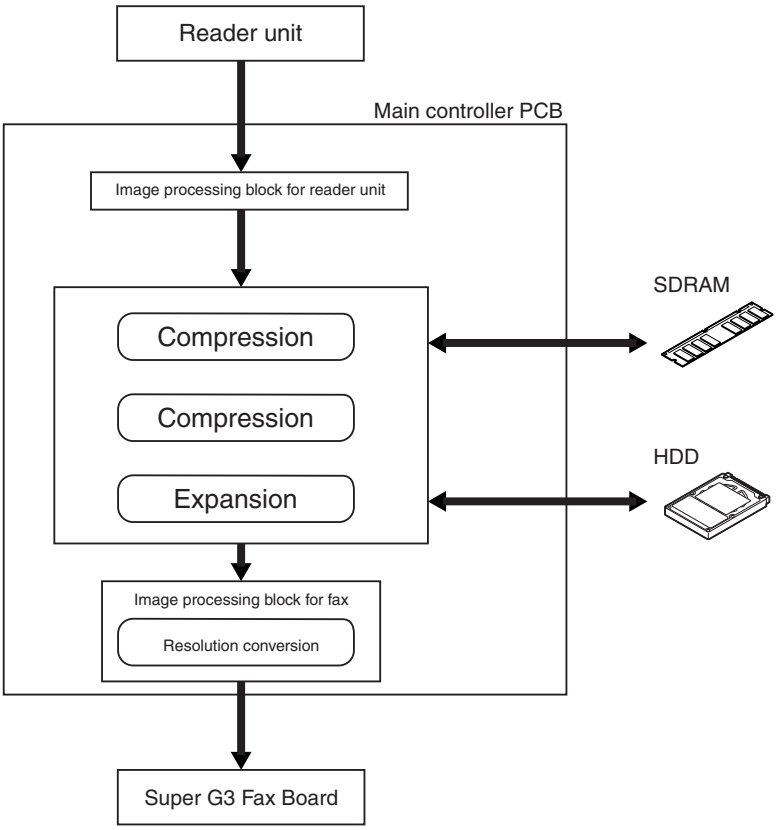

F-4-30

4.6.8 Flow of Image Data for the Fax Transmission Function

iR2230 / / iR3530 /

The following shows the flow of image data when the fax transmission function is in use:

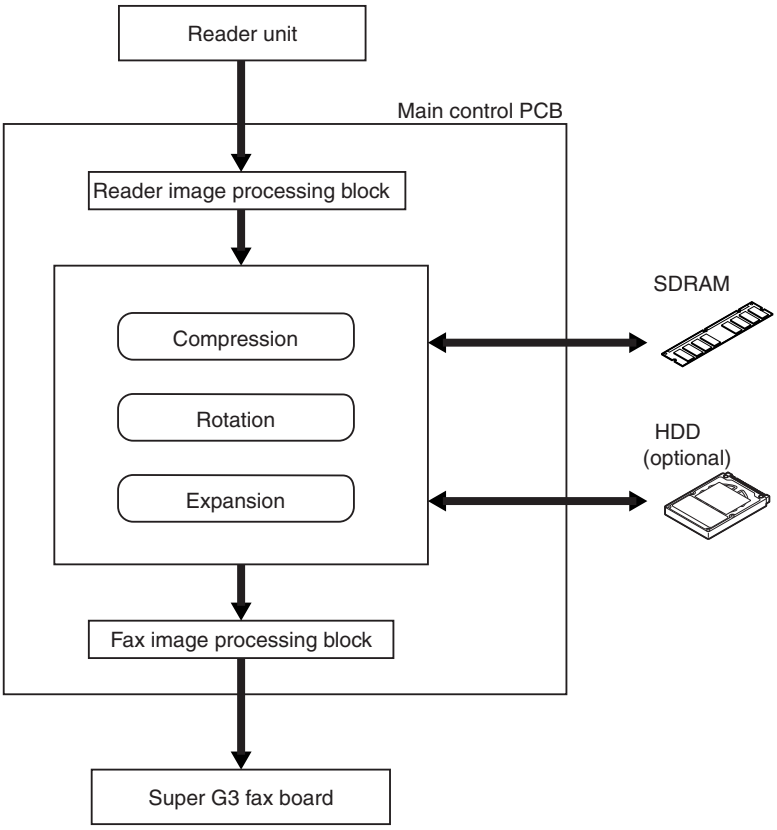

F-4-31

4.6.9 Flow of Image Data for the Fax Reception Function

iR2270 / iR2870 / iR3570 / iR4570 / / iR2270N / / iR2870N / / iR3570N / / iR4570N / iR2230 / /

The following is the flow of image data when the fax reception function is in use:

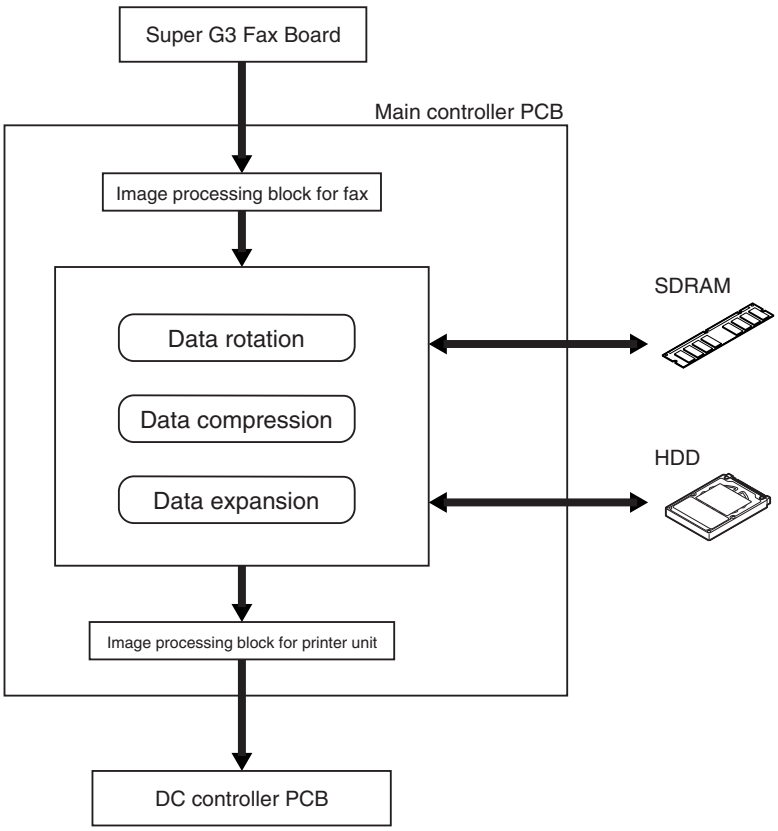

F-4-32

4.6.10 Flow of Image Data for the Fax Reception Function

iR2230 / / iR3530 /

The following shows the flow of image data when the fax reception function is in use:

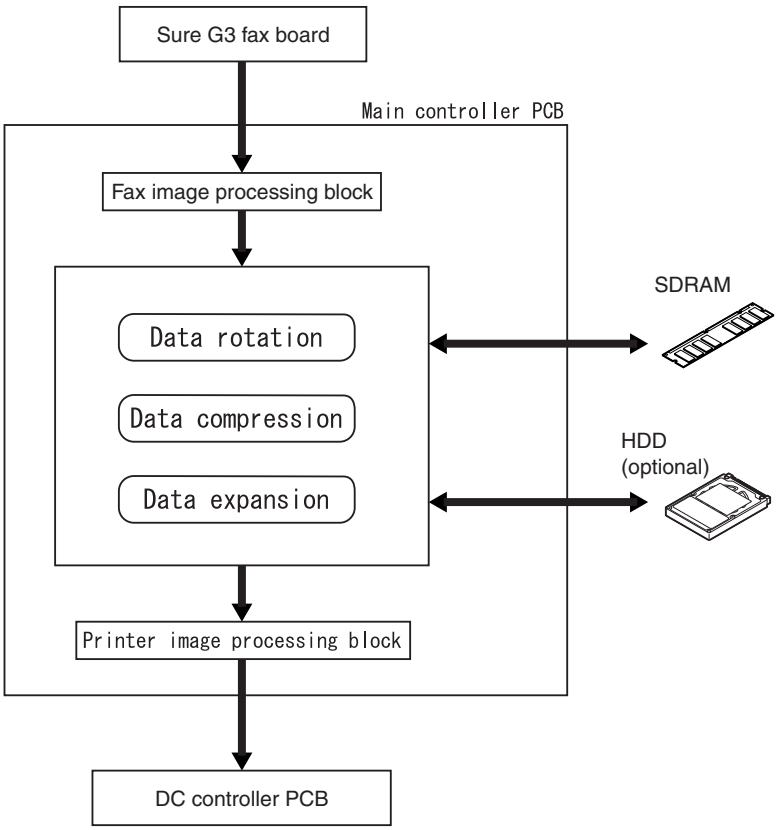

F-4-33

4.6.11 Flow of Image Data for the PDL Function

iR2270 / iR2870 / iR3570 / iR4570 / / iR2270N / / iR2870N / / iR3570N / / iR4570N / iR2230 / /

The following is the flow of image data when the PDL function is in use:

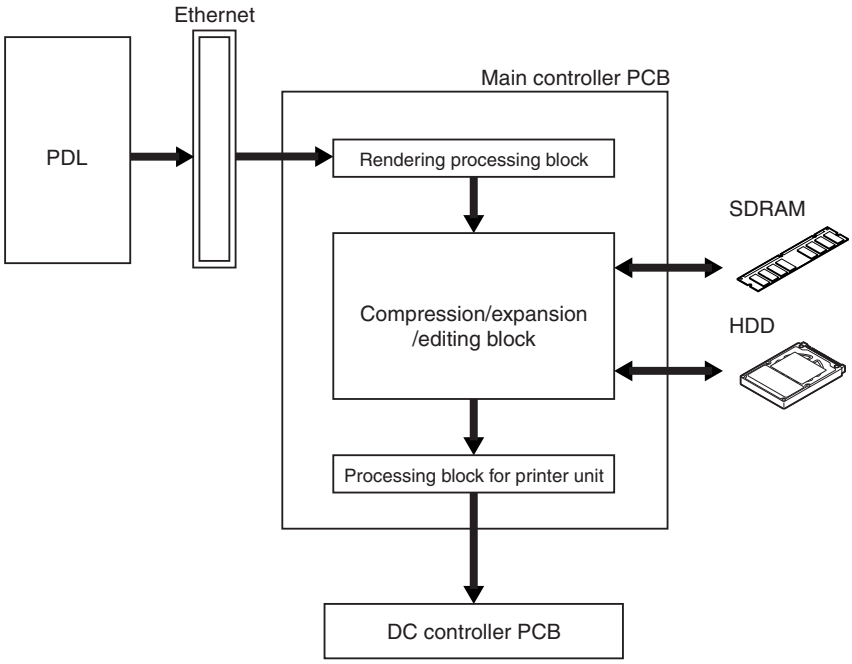

F-4-34

4.6.12 Flow of Image Data for the PDL Function

iR2230 / / iR3530 /

The following shows the flow of image data when the PDL function is in use:

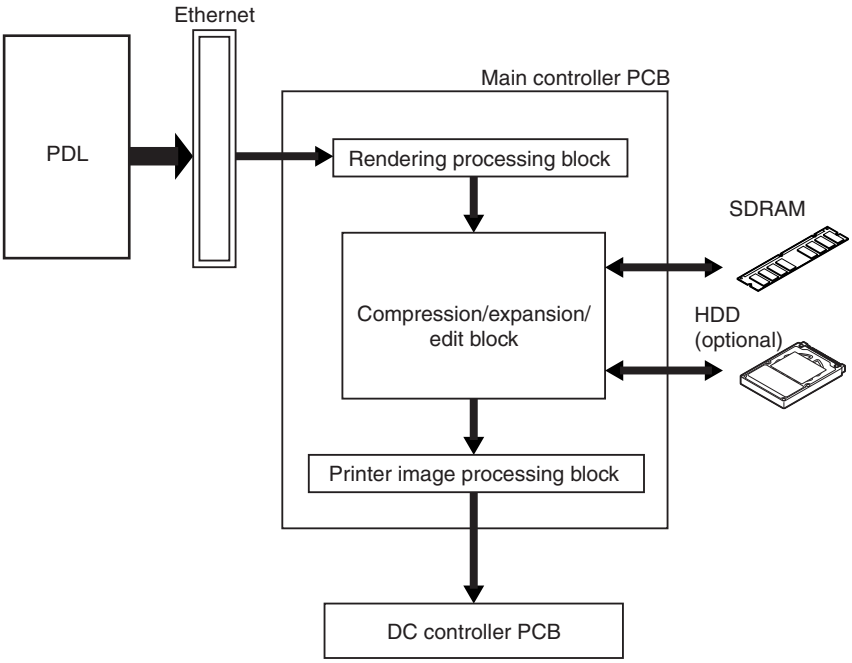

F-4-35

4.7 Parts Replacement Procedure

4.7.1 Main Controller PCB

4.7.1.1 Removing the Rear Cover

iR2270 / iR2870 / iR3570 / iR4570 / / iR2270N / / iR2870N / / iR3570N / / iR4570N / iR2230 / / / iR3530 /

1) Remove the 13 screws [1] and then the other screw [2]; then, detach the rear cover [3].

If the left cover (lower) has already been detached, the screw [3] should also have been removed.

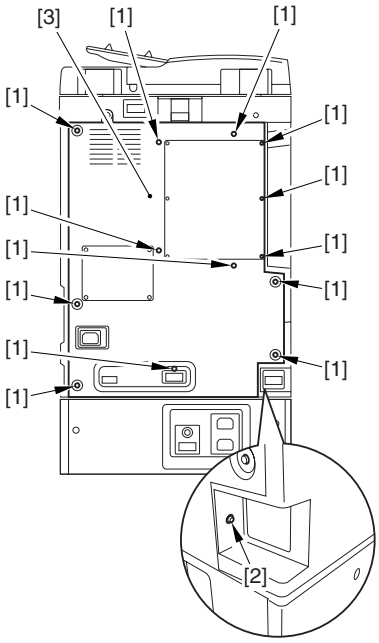

F-4-36

4.7.1.2 Removing the Main Controller PCB

iR2270 / iR2870 / iR3570 / iR4570 / / iR2270N / / iR2870N / / iR3570N / / iR4570N / iR2230 / / / iR3530 /

1) Disconnect the connector [1].

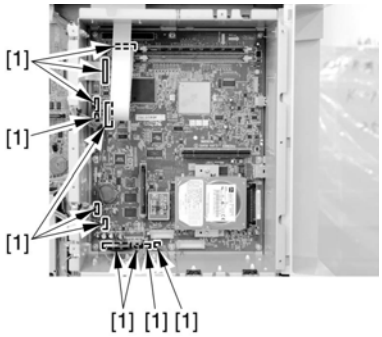

F-4-37

Freeing the Flexible Cable
To free the flexible cable [1], shift up the lock first as shown.

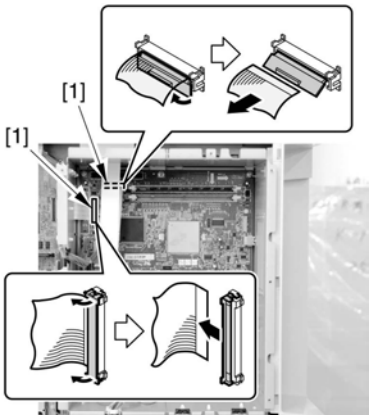

F-4-38

2) Remove the 9 screws [1], and detach the main controller PCB [2].

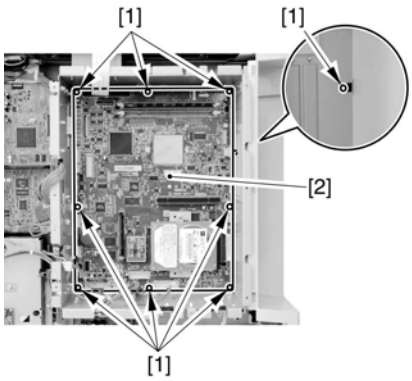

F-4-39

Points to Note When Replacing the Main Controller PCB
Remove the following components of the detached main controller PCB. Thereafter, be sure to mount them to the new main controller PCB.

[1] Boot ROM
[2] Hard disk
[3] SDRAM
[4] FRAM

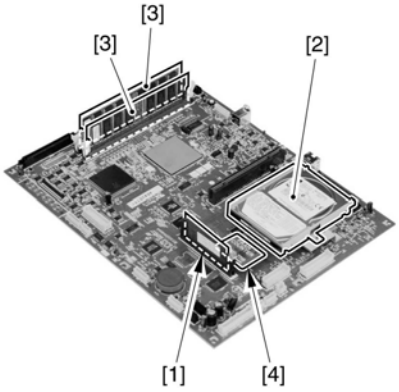

F-4-40

4.7.2 SDRAM

4.7.2.1 Removing the Face Cover

iR2270 / iR2870 / iR3570 / iR4570 / / iR2270N / / iR2870N / / iR3570N / / iR4570N / iR2230 / / / iR3530 /

1) Remove the 4 screws [1].
2) Loosen the 2 screws [2].

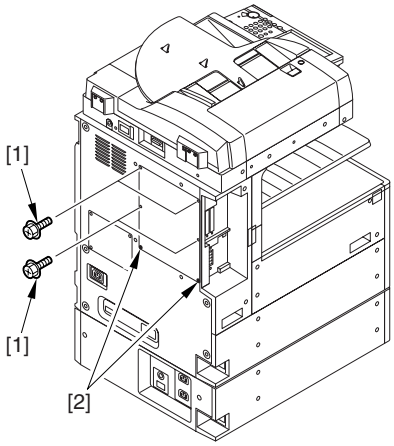

F-4-41

3) Pull off the face cover [1] in upward direction.

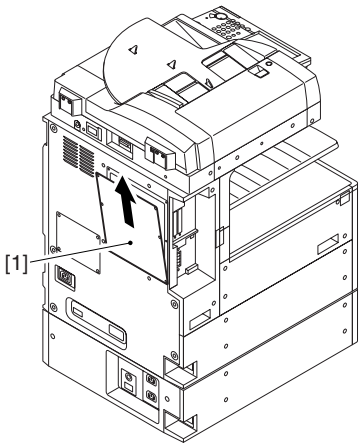

F-4-42

4.7.2.2 Removing the SDRAM

iR2270 / iR2870 / iR3570 / iR4570 / / iR2270N / / iR2870N / / iR3570N / / iR4570N / iR2230 / / / iR3530 /

1) Release the 2 locking levers [1], and detach the SDRAM [2].

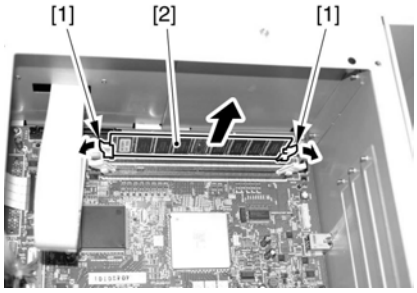

F-4-43

4.7.3 Boot ROM

4.7.3.1 Removing the Face Cover

iR2270 / iR2870 / iR3570 / iR4570 / / iR2270N / / iR2870N / / iR3570N / / iR4570N / iR2230 / / / iR3530 /

1) Remove the 4 screws [1].
2) Loosen the 2 screws [2].

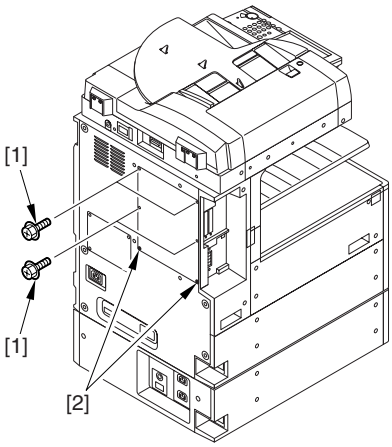

F-4-44

3) Pull off the face cover [1] in upward direction.

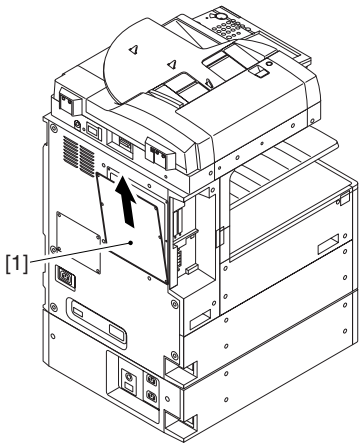

F-4-45

4.7.3.2 Removing the Boot ROM

iR2270 / iR2870 / iR3570 / iR4570 / / iR2270N / / iR2870N / / iR3570N / / iR4570N / iR2230 / / / iR3530 /

1) Push the locking lever [1], and detach the boot ROM [2].

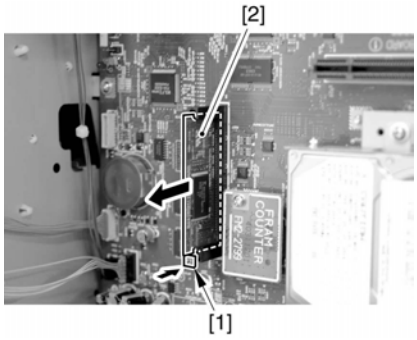

F-4-46

4.7.4 HDD

4.7.4.1 Removing the Face Cover

iR2270 / iR2870 / iR3570 / iR4570 / / iR2270N / / iR2870N / / iR3570N / / iR4570N

1) Remove the 4 screws [1].
2) Loosen the 2 screws [2].

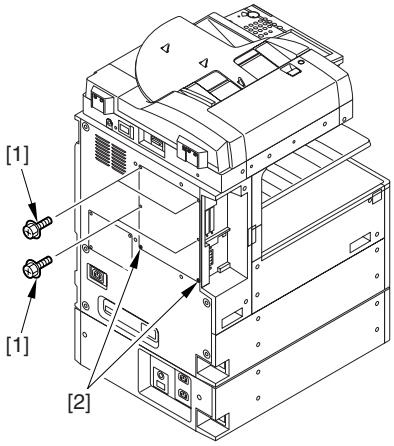

F-4-47

3) Pull off the face cover [1] in upward direction.

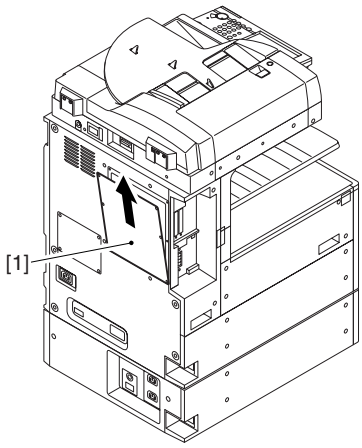

F-4-48

4.7.4.2 Removing the Face Cover (optional)

iR2230 / / iR3530 /

1) Remove the 4 screws [1].
2) Loosen the 2 screws [2].

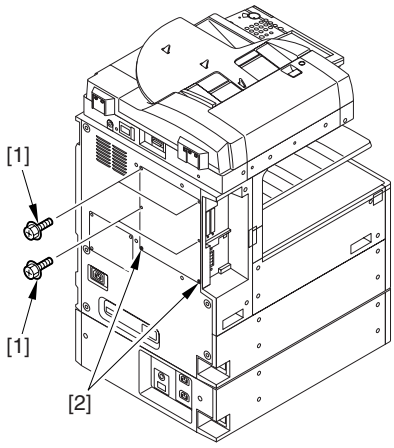

F-4-49

3) Pull off the face cover [1] in upward direction.

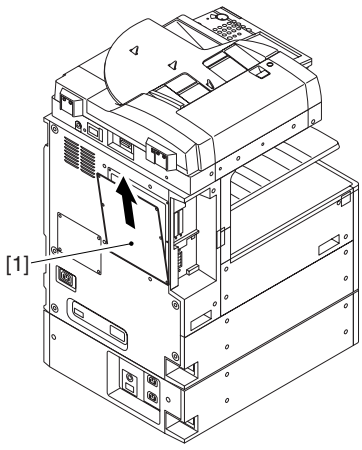

F-4-50

4.7.4.3 Removing the Counter PCB

iR2270 / iR2870 / iR3570 / iR4570 / / iR2270N / / iR2870N / / iR3570N / / iR4570N

1) Remove the screw [1], and detach the counter PCB [2].

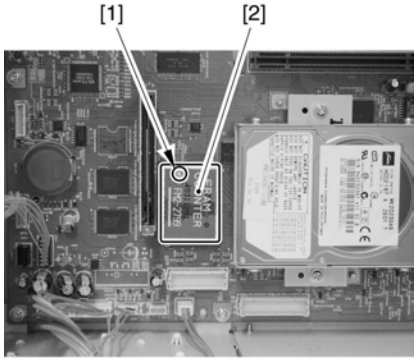

F-4-51

4.7.4.4 Removing the Counter PCB (optional)

iR2230 / / iR3530 /

1) Remove the screw [1], and detach the counter PCB [2].

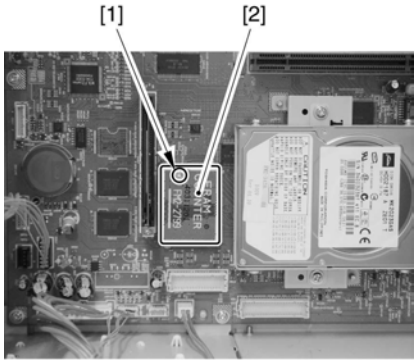

F-4-52

4.7.4.5 Removing the HDD

iR2270 / iR2870 / iR3570 / iR4570 / / iR2270N / / iR2870N / / iR3570N / / iR4570N

1) Remove the 2 screws [1], and detach the HDD [2] in the direction of the arrow.

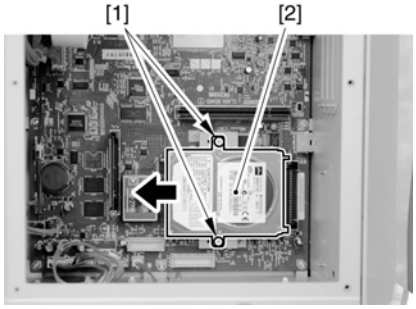

F-4-53

4.7.4.6 Removing the HDD (optional)

iR2230 / / iR3530 /

1) Remove the 2 screws [1], and detach the HDD [2] in the direction of the arrow.

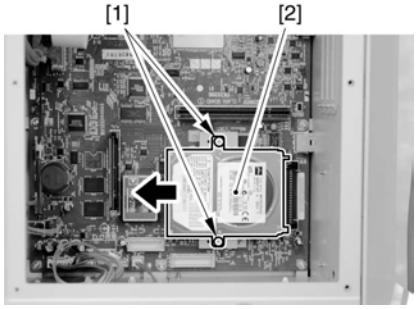

F-4-54

Chapter 5 Original Exposure System

Contents

5.1 Construction 5-1
5.1.1 Specifications, Control Mechanisms, and Functions 5-1
5.1.2 Major Components 5-1
5.1.3 Construction of the Control System 5-2
5.1.4 Reader Controller PCB 5-3
5.2 Basic Sequence 5-4
5.2.1 Basic Sequence of Operation at Power-On 5-4
5.2.2 Basic Sequence of Operation in Response to a Press on the Start Key (book mode; 1 original) 5-4
5.2.3 Basic Sequence of Operation in Response to a Press on the Start Key (ADF mode; 1 original) 5-5
5.3 Various Control 5-6
5.3.1 Controlling the Scanner Drive System 5-6
5.3.1.1 Outline 5-6
5.3.1.2 Controlling the Reader Motor 5-6
5.3.2 Contact Image Sensor (CIS) 5-7
5.3.2.1 Outline 5-7
5.3.2.2 Analog Control Inside the Contact Image Sensor 5-8
5.3.3 Enlargement/Reduction 5-9
5.3.3.1 Changing the Magnification in Main Scanning Direction 5-9
5.3.3.2 Varying the Magnification in Sub Scanning Direction 5-9
5.3.4 Detecting the Size of Originals 5-9
5.3.4.1 Outline 5-9
5.3.4.2 Outline of Size Identification 5-10
5.3.5 Dirt Sensor Control 5-11
5.3.5.1 Outline 5-11
5.3.6 Image Processing 5-13
5.3.6.1 Outline 5-13
5.3.6.2 CCD Drive 5-14
5.3.6.3 Gain Correction and Offset Correction of the CCD Output 5-14
5.3.6.4 A/D Conversion of the CCD Output 5-14
5.3.6.5 Shading Correction (outline) 5-14
5.3.6.6 Shading Adjustment 5-14
5.3.6.7 Shading Correction 5-15
5.4 Parts Replacement Procedure 5-15
5.4.1 Copyboard glass 5-15
5.4.1.1 Removing the Copyboard Glass 5-15
5.4.1.2 Removing the ADF Reading Glass 5-15
5.4.2 Reader Controller PCB 5-15
5.4.2.1 Before Replacing the Reader Controller PCB 5-15
5.4.2.2 Removing the Reader Rear Cover 5-16
5.4.2.3 Removing the rear cover of the machine 5-16
5.4.2.4 Removing the flexible cable cover 5-16
5.4.2.5 Removing the Copyboard Glass 5-16
5.4.2.6 Removing the Reader Controller PCB 5-17
5.4.2.7 After Replacing the Reader Controller PCB or After Initializing the RAM 5-18
5.4.3 Scanner Motor 5-19
5.4.3.1 Removing the Reader Rear Cover 5-19
5.4.3.2 Removing the Scanner Motor 5-19
5.4.4 Contact sensor 5-19
5.4.4.1 Removing the Reader Front Cover 5-19
5.4.4.2 Removing the Reader Rear Cover 5-20
5.4.4.3 Removing the Copyboard Glass 5-20
5.4.4.4 Removing the Contact Image Sensor (CIS) 5-21
5.4.4.5 After Replacement of the CIS 5-21

5.4.5 Copyboard Cover Open/Close Sensor 5-22
5.4.5.1 Removing the Reader Rear Cover 5-22
5.4.5.2 Removing the Copyboard Cover Open/Closed Sensor (front/rear) 5-22
5.4.6 Contact Sensor HP Sensor 5-22
5.4.6.1 Removing the Copyboard Glass 5-22
5.4.6.2 Removing the ADF Reading Glass 5-23
5.4.6.3 Removing the Contract Sensor Home Position Sensor 5-23
5.4.7 Original Size Sensor 5-23
5.4.7.1 Removing the Reader Rear Cover 5-23
5.4.7.2 Removing the Copyboard Glass 5-24
5.4.7.3 Removing the Original Size Sensor 5-24
5.4.8 Reader Heater (option) 5-25
5.4.8.1 Removing the Copyboard Glass 5-25
5.4.8.2 Removing the Reader Heater (right) 5-26
5.4.8.3 Removing the ADF Reading Glass 5-26
5.4.8.4 Removing the Reader Heater (left) 5-26

5.1 Construction

5.1.1 Specifications, Control Mechanisms, and Functions

iR2270 / iR2870 / iR3570 / iR4570 / / iR2270N / / iR2870N / / iR3570N / / iR4570N / iR2230 / / / iR3530 /

The major specifications, control mechanisms, and functions of the machine's original exposure system are as follows:

T-5-1

Item	Description
Original exposure	by LED array, indirect (LED + photoconducting body)
Original scan	in book mode: scan by moving contact image sensor (CIS)
	in ADF mode: by original stream reading with contact image sensor (CIS) fixed in position
Read resolution	600 (main scanning) x 600 (sub scanning) dpi
Gradation	256
Scanning speed (in ADF mode)	45 ipm (single-sided, A4/LTR)
Carriage position detection	by contact image sensor (CIS), HP sensor (PS503)
Magnification	25% to 400%
	Main Scanning Direction by main controller PCB (image processing)
	Sub Scanning Direction
	in book mode: by changing carriage travel speed; by processing images on reader controller PCB; by processing images on main controller PCB*1
	in ADF mode: by changing original feed speed; by image processing on reader controller PCB; by image processing on main controller PCB*1
Lens	rod lens array
CCD	number of lines: 1
	Number of pixels: Total 7488 (Number of effective pixels: 7180)
	maximum original read width: 304 mm
CIS drive control	by reader motor (M501)
Original size identification	[1]Book Mode
	in main scanning direction: by reflection type sensor (AB/Inch)
	in sub scanning direction: by reflection type sensor (AB/Inch)
	[2]ADF Mode
	width: by original width value in ADF
	length: by photo sensor in ADF
The particulars of control differ depending on the selected magnification. For details, see "Changing the Magnification."	

5.1.2 Major Components

iR2270 / iR2870 / iR3570 / iR4570 / / iR2270N / / iR2870N / / iR3570N / / iR4570N / iR2230 / / / iR3530 /

The machine's original exposure system consists of the following major components:

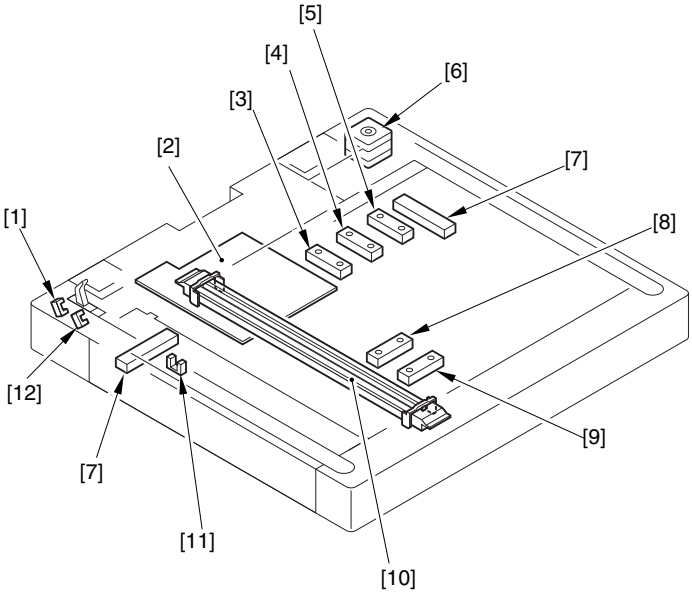

F-5-1

T-5-2

	Item	Notation	Description
[1]	Original cover open/closed sensor (rear)	PS501	photo interrupter: detects the state (open/closed) of the copyboard cover; starts original size indication when the original cover is at 25 deg.
[2]	Reader controller PCB	-	controls the drive of the reader unit, and controls image processing
[3]	Original sensor 3	PS506	helps identify original size (for all destinations)
[4]	Original sensor 4	PS507	helps identify original size (AB, Inch/AB)
[5]	Original sensor 5	PS508	helps identify original size (Inch/A)
[6]	Reader motor	M501	pulse motor: controls the drive of the carriage
[7]	Reader heater*	-	prevents condensation on the copyboard glass
[8]	Original sensor 1	PS504	helps identify original size (AB, Inch/A, Inch/AB)
[9]	Original sensor 2	PS505	helps identify original size (AB, A, Inch/AB)
[10]	Contact image sensor (CIS)	-	uses LEDs for indirect exposure (LED + photoconducting body)
[11]	CIS HP sensor	PS503	photo interrupter: detects CIS home position
[12]	Cupboard cover open/closed sensor	PS502	ends original size identification with the copyboard cover at 5 deg.

*Optional. (100/230-V model only).

5.1.3 Construction of the Control System

iR2270 / iR2870 / iR3570 / iR4570 / / iR2270N / / iR2870N / / iR3570N / / iR4570N / iR2230 / / / iR3530 /

The machine's control system is constructed as follows:

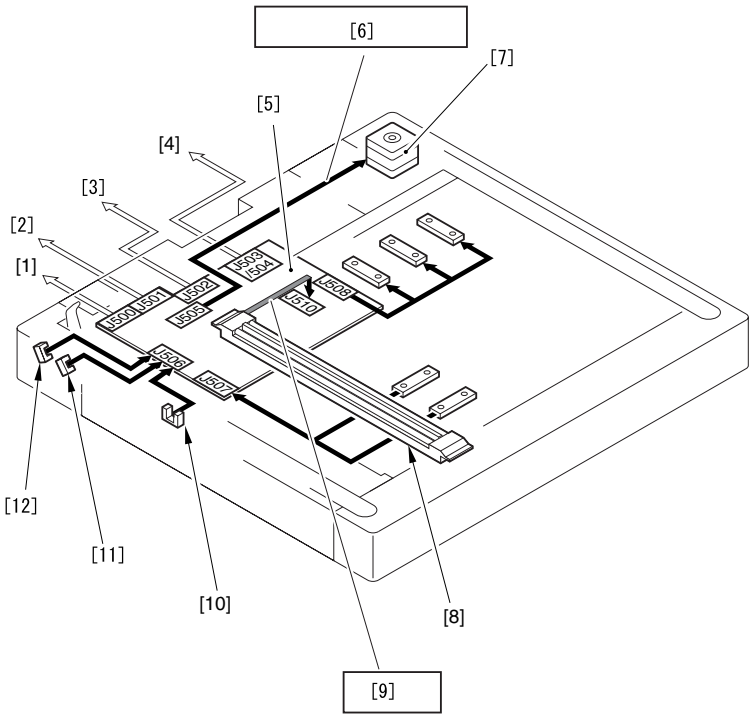

F-5-2

[1] Connection to ADF
[2] Connection to printer body
[3] Printer body (connected to main controller PCB)
[4] Connection to ADF
[5] Reader controller PCB
[6] Reader motor drive control
[7] Reader motor (M501)
[8] Contact image sensor
[9] Image signal
[10] CIS HP sensor (PS503)
[11] Copyboard cover open/closed sensor (front: PS502)
[12] Copyboard cover open/closed sensor (rear: PS503)

5.1.4 Reader Controller PCB

iR2270 / iR2870 / iR3570 / iR4570 / / iR2270N / / iR2870N / / iR3570N / / iR4570N / iR2230 / / / iR3530 /

The machine's reader controller PCB has the following functional construction:

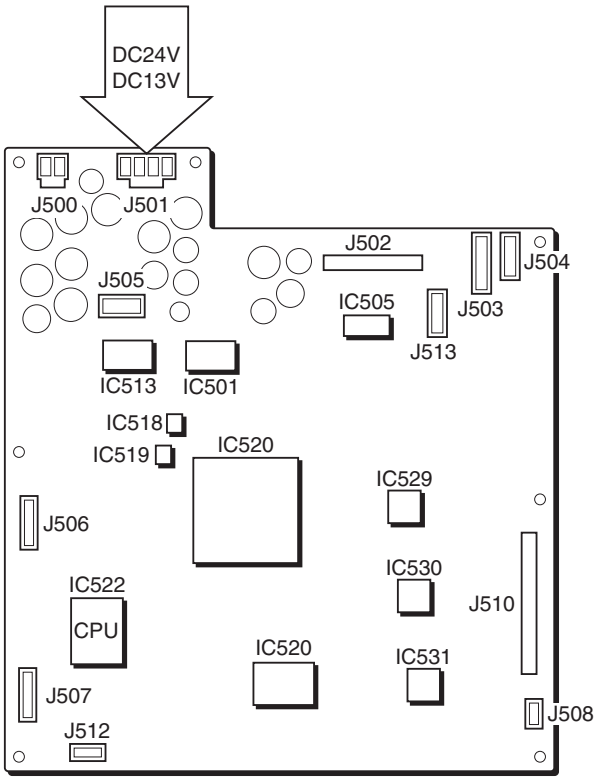

F-5-3

T-5-3

Jack No.	Description
J500	supplies power to the ADF.
J501	receives power from the machine body (printer unit).
J502	communication with the machine body (printer unit).
J503	communication with the ADF.
J504	communication with the ADF.
J505	connects to the main motor.
J506	copyboard cover open/closed sensor; connects to the CIS HP sensor
J507	connects to original sensor 1, original sensor 2.
J508	connects to original sensor 3, original sensor 4.
J510	connects to the contact image sensor (CIS).
J512	for use at factory
J513	for use at factory

5.2 Basic Sequence

5.2.1 Basic Sequence of Operation at Power-On

iR2270 / iR2870 / iR3570 / iR4570 / / iR2270N / / iR2870N / / iR3570N / / iR4570N / iR2230 / / / iR3530 /

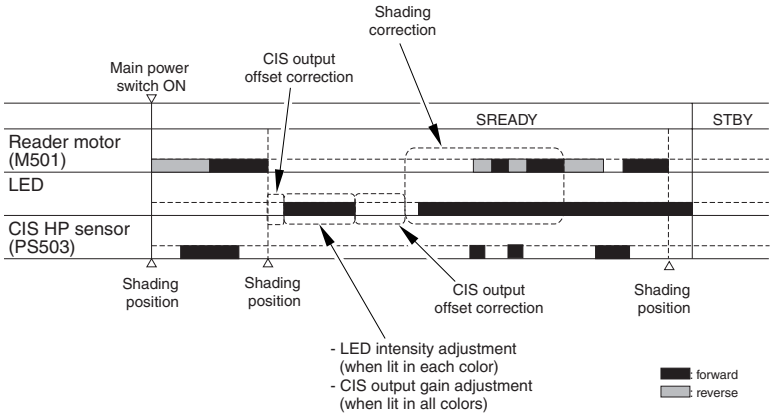

F-5-4

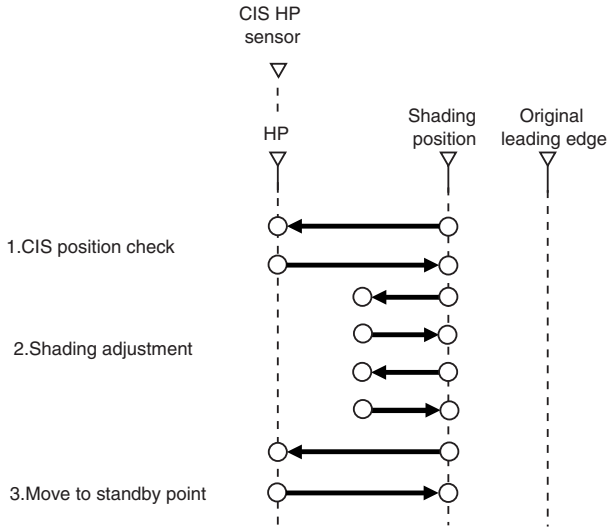

F-5-5

5.2.2 Basic Sequence of Operation in Response to a Press on the Start Key (book mode; 1 original)

iR2270 / iR2870 / iR3570 / iR4570 / / iR2270N / / iR2870N / / iR3570N / / iR4570N / iR2230 / / / iR3530 /

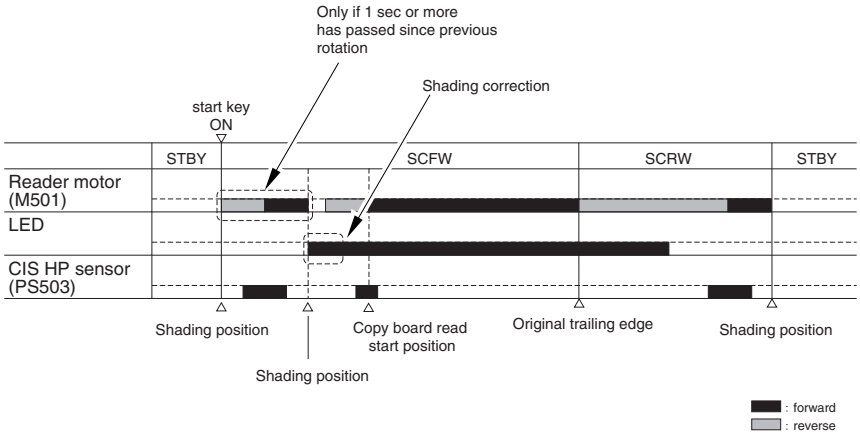

F-5-6

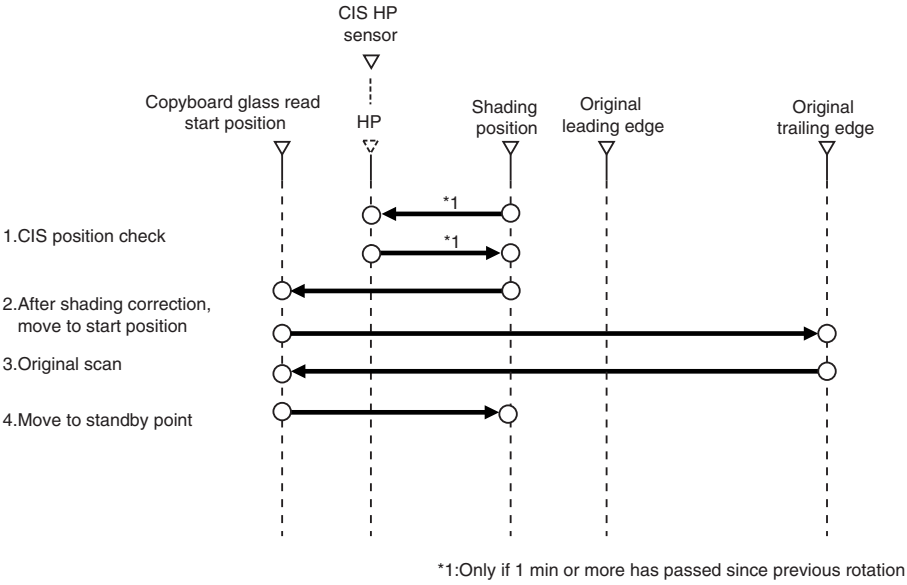

F-5-7

5.2.3 Basic Sequence of Operation in Response to a Press on the Start Key (ADF mode; 1 original)

iR2270 / iR2870 / iR3570 / iR4570 / / iR2270N / / iR2870N / / iR3570N / / iR4570N / iR2230 / / / iR3530 /

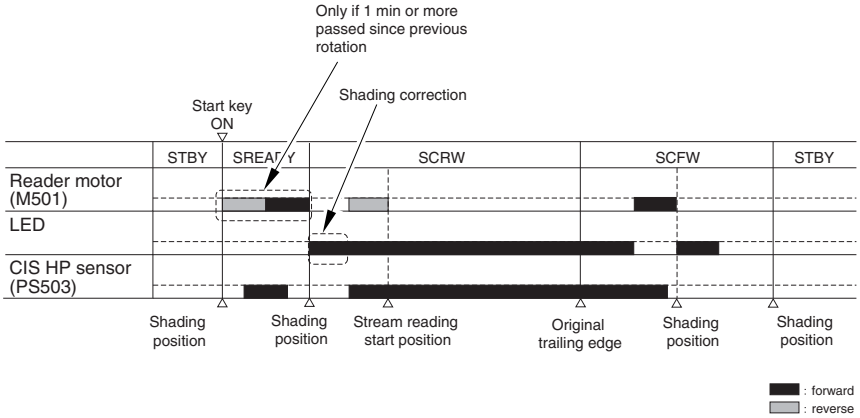

F-5-8

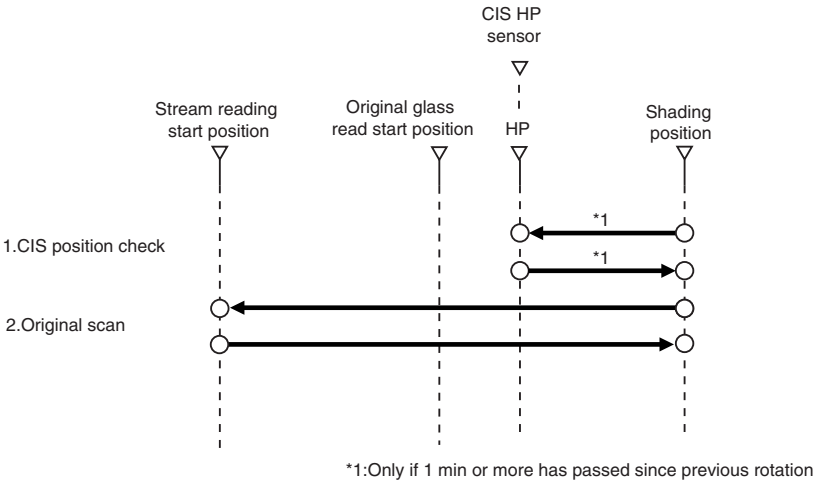

F-5-9

5.3 Various Control

5.3.1 Controlling the Scanner Drive System

5.3.1.1 Outline

iR2270 / iR2870 / iR3570 / iR4570 / / iR2270N / / iR2870N / / iR3570N / / iR4570N / iR2230 / / / iR3530 /

The machine's scanner system consists of the following components:

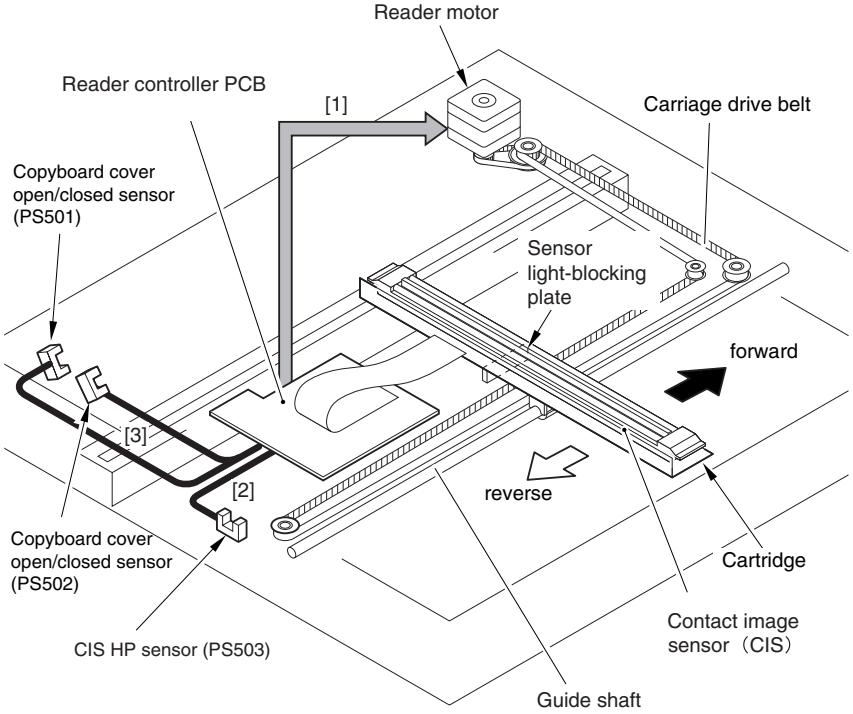

F-5-10

[1] Reader Motor (M501) Drive Signal
turns on/off the motor, and controls its direction/speed of rotation.

[2] Contact Image Sensor (CIS) HP Sensor (PS503) Detection Signal
checks if the contact image sensor (CIS) is at home position.

[3] Copyboard Cover Sensor (front, PS502; rear, PS501) Detection Signal
detects the state (open/close) of the copyboard cover.

5.3.1.2 Controlling the Reader Motor

iR2270 / iR2870 / iR3570 / iR4570 / / iR2270N / / iR2870N / / iR3570N / / iR4570N / iR2230 / / / iR3530 /

The reader motor driver turns on/off the reader motor and controls the direction/speed of its rotation according to the signals from the CPU.

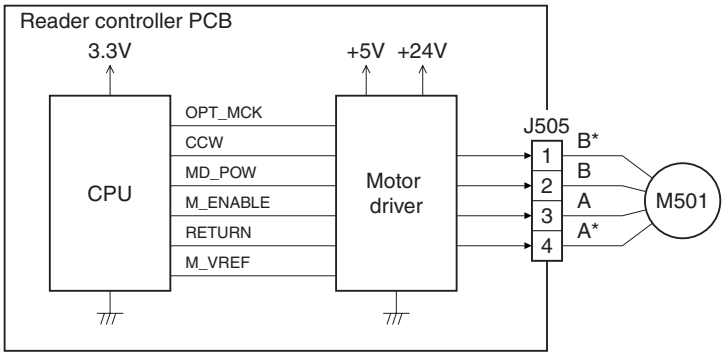

F-5-11

<Memo>
The scanning speed of this machine is as follows:
During copying (100%): 236 mm/sec
In SEND mode (600 dpi x 600 dpi):236 mm/sec

a.Forward Movement When Scanning an Image

To scan an image, the machine moves the contact image sensor (CIS) as follows by controlling the following motors:

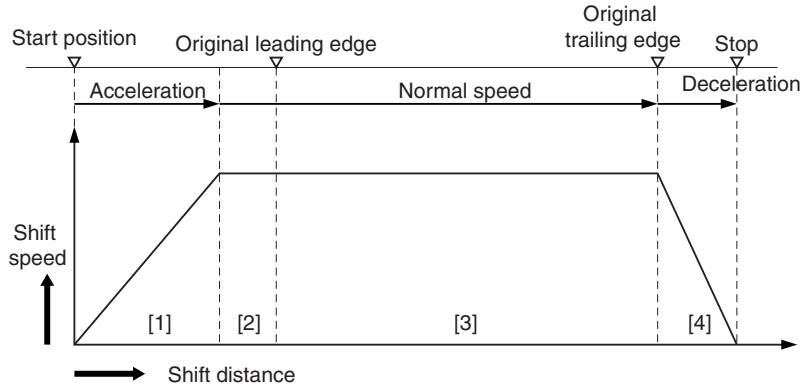

[1] used until the sensor reaches a speed suited to the selected mode.
[2] used as a margin to ensure a stable speed.
[3] used for reading the image at a specific speed.
[4] used for prompt deceleration and suspension once the image end is reached.

F-5-12

b.Reverse Movement After Scanning an Image

After scanning an image, the machine moves the contact image sensor (CIS) to shading position at a specific speed (147 mm/sec).

5.3.2 Contact Image Sensor (CIS)

5.3.2.1 Outline

iR2270 / iR2870 / iR3570 / iR4570 / / iR2270N / / iR2870N / / iR3570N / / iR4570N / iR2230 / / / iR3530 /

The machine uses a contact image sensor (CIS) to expose and read an image, and the image is read on a line-by-line basis.

T-5-4

Item	Description
LED	serves as the source of light used to expose the original.
Light guide	directs the light from LEDs to the entire length of a single image line of the original.
Rod lens array	collects light reflected by the original.
CCD array	collects the reflected light coming through the rod lens array.

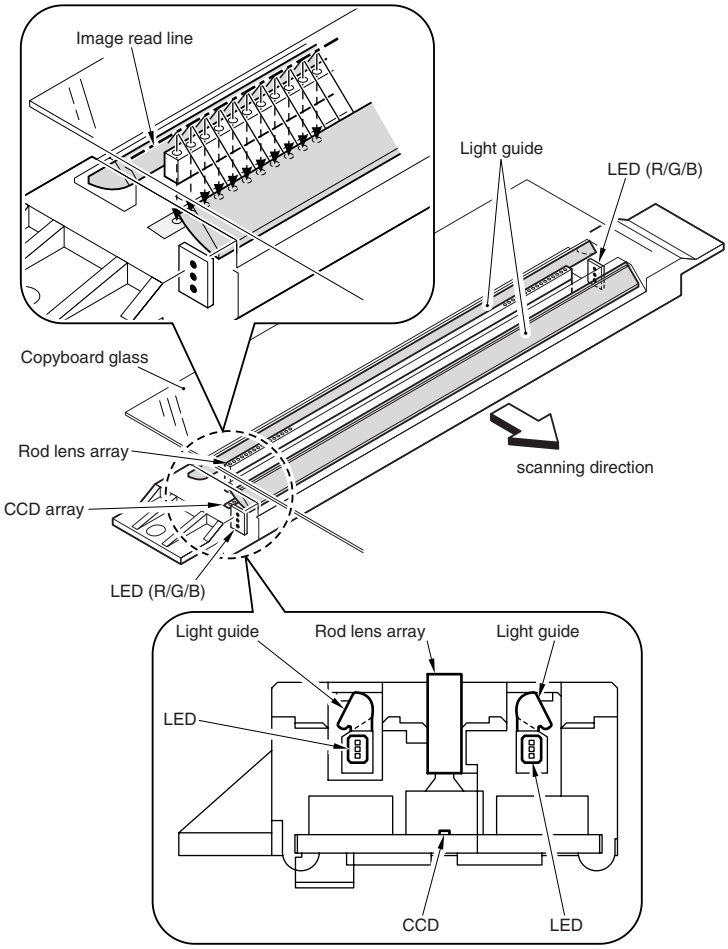

F-5-13

5.3.2.2 Analog Control Inside the Contact Image Sensor

iR2270 / iR2870 / iR3570 / iR4570 / / iR2270N / / iR2870N / / iR3570N / / iR4570N / iR2230 / / / iR3530 /

The contact image sensor (CIS) is used to control analog image processing in the following flow of work:

The light reflected by the original is collected by the rod lens array;
the light is then collected by the CCD array;
the light is converted into an electric signal by the CCD array (photo-conversion) for output.

The CCD array consists of a total of 8 channels (units). Each channel possesses its own output correction table used to process an input intensity signal for gain correction for output of an image signal.

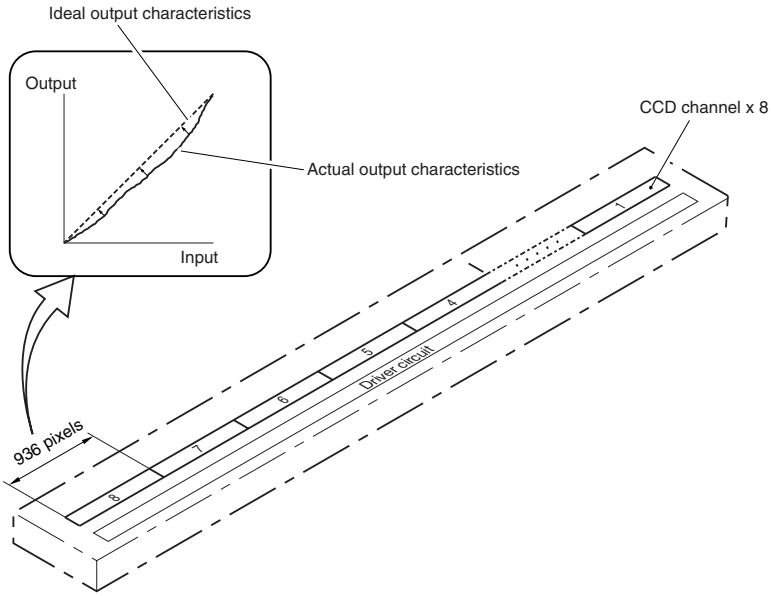

F-5-14

Be sure to correct the output among the channels using the following service mode items:
-if you have replaced the contact image sensor (CIS) and, as a result, a discrepancy occurs in the output of image density among channels; or

-if the setting of CCD-LUT is other than '0' and you have replaced the reader controller PCB.
<Service Mode>
for CIS unit gain correction data
COPIER>OPTION>BODY>CCD-LUT
for CCD gain correction

5.3.3 Enlargement/Reduction

5.3.3.1 Changing the Magnification in Main Scanning Direction

iR2270 / iR2870 / iR3570 / iR4570 / / iR2270N / / iR2870N / / iR3570N / / iR4570N / iR2230 / / / iR3530 /

In Book Mode/ADF Mode
The image is read at 100% in main scanning direction, and the magnification is varied by processing the data on the main controller PCB.

5.3.3.2 Varying the Magnification in Sub Scanning Direction

iR2270 / iR2870 / iR3570 / iR4570 / / iR2270N / / iR2870N / / iR3570N / / iR4570N / iR2230 / / / iR3530 /

To vary the magnification in sub scanning direction, the machine operates as follows depending on the selected method of reading the original and the selected rate of magnification:
1. In Book Mode
To suit the selected rate of magnification, the speed at which the original is read is varied and the data is processed by the reader controller PCB/main controller PCB.
EX: for reduction to 25%, the original is read at 236 mm/sec and the data is varied for 50% reduction by the reader controller PCB (skipping data for 1/2) and for 50% reduction by the main controller PCB (skipping data for 1/2).
EX: at 100%, the original is read at a speed of 236 mm/sec.

T-5-5

Operation	Magnification		
	25% to 49%	50% to 99%	100% to 400%
Varying the speed of reading the original (mm/sec)	236 to 120	236 to 119	236 to 59
Processing the data (digital; %) by the reader controller PCB	50	50	100
Processing the data (digital; %) by the main controller PCB	50	100	100

2. In ADF Mode
To suit the selected rate of magnification, the speed at which the original is read is varied and the data is processed by the reader controller PCB/main controller PCB.
EX: for reduction to 25%, the original is read at 236 mm/sec, and the data is processed for 50% reduction (skipping for 1/2) by the reader controller PCB and for 50% (skipping for 1/2) by the main controller PCB.
EX: for enlargement to 400%, the original is read at a speed of 118 mm/sec, and the data is processed for 200% enlargement (doubling) by the main control PCB.

T-5-6

Operation	Magnification			
	25% to 42%	43% to 84%	85% to 170%	171% to 400%
Varying the speed at which the original is read (mm/sec)	236 to 168	274 to 140	277 to 139	276 to 118
Processing the data (digital; %) by the reader controller PCB	50	50	100	100
Processing the data (digital; %) by the main controller PCB	50	100	100	200

5.3.4 Detecting the Size of Originals

5.3.4.1 Outline

iR2270 / iR2870 / iR3570 / iR4570 / / iR2270N / / iR2870N / / iR3570N / / iR4570N / iR2230 / / / iR3530 /

The machine identifies the size of the original with reference to the presence/absence of output levels of the reflecting type sensors; specifically,
-the machine identifies the absence of paper if it finds a change in the output of the reflection type sensors when the copyboard cover is closed/opened.
-the machine identifies the presence of paper if it does not find a change in the output of the reflection type sensors when the copyboard cover is closed/opened.
The machine uses the following sensors; and the sensors are arranged as shown in the following figure:
-for main scanning direction, reflection type photosensors (AB-configuration, 2 locations; Inch-configuration, 1 location).
-for sub scanning direction, reflection type photosensors (AB-configuration, 2 locations; Inch-configuration, 2 locations)

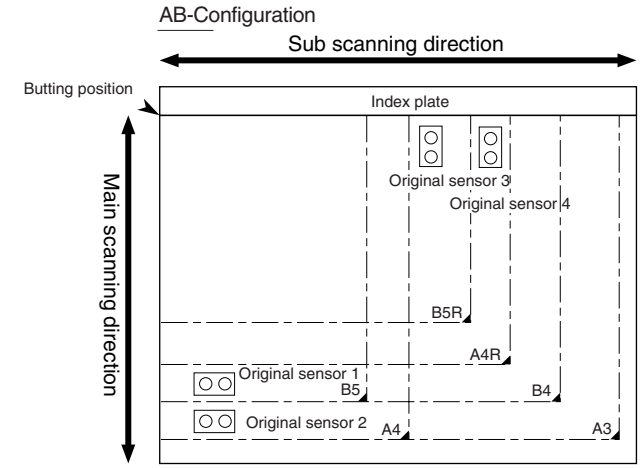

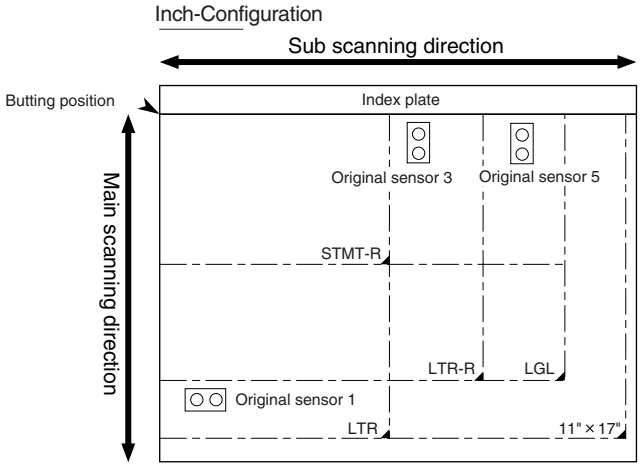

F-5-15

5.3.4.2 Outline of Size Identification

iR2270 / iR2870 / iR3570 / iR4570 / / iR2270N / / iR2870N / / iR3570N / / iR4570N / iR2230 / / / iR3530 /

-In Bk Mode
1 original (A4R), copyboard cover (copyboard cover/ADF) is closed
1. Standby State
original sensor: off

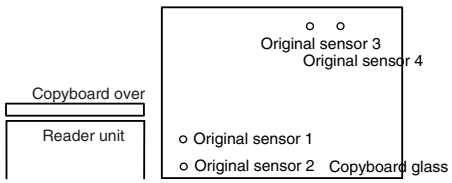

F-5-16

2. The copyboard cover is opened (with cover angle at 25 deg or more).
original sensor: off

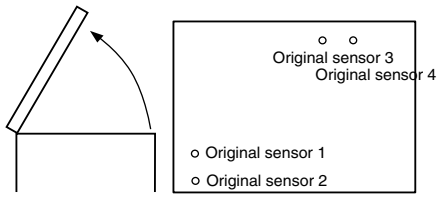

F-5-17

3. The copyboard cover is closed (with cover angle at 25 deg).
original sensor: on (original size identification processing 1)

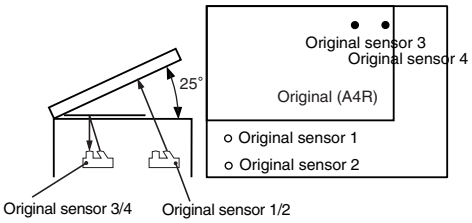

F-5-18

4. Copyboard cover is closed (with cover angle at 5 deg or more but less than 25 deg).
Original sensor: on (original size identification 2)

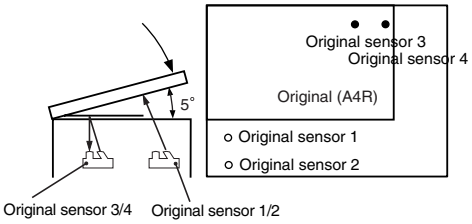

F-5-19

5. The copyboard cover is closed (5 deg or less).
size identified
original sensor: off

In identifying the size of an original, the data from original size identification processing 1 and data from original size identification processing 2 are compared, and the difference between these 2 sets of data is checked.
If any of the following is true, the output of the sensors may not show any change, preventing the machine from correctly identifying the size:
-the original is an A3 black original
-the original is a book (its thickness may not allow the copyboard cover to close fully, thus preventing the detection of a change in the sensor level).
-the copyboard cover is not closed fully (when a time-out condition occurs, there will be no detection of a change in the sensor level).

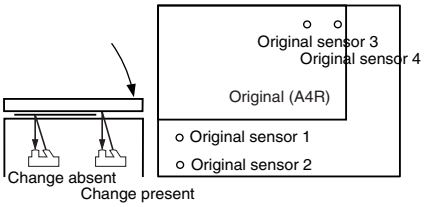

F-5-20

The machine uses the following in reference to changes occurring in the sensor output as found in original size identification processing 1 and original size identification processing 2:

AB-Configuration

Original size	Original sensor 1	Original sensor 2	Original sensor 3	Original sensor 4
A3	○	○	○	○
A4	○	○	●	●
B4	○	●	○	○
B5	●	○	○	○
A4R	●	●	○	○
B5R	●	●	○	●
No original	●	●	●	●

Inch-Configuration

Original size	Original sensor 1	Original sensor 3	Original sensor 5
11"X17"	○	○	○
LTR	○	●	●
LGL	●	○	○
LTR-R	●	○	●
No original	●	●	●

○:No original
●:change absent

F-5-21

5.3.5 Dirt Sensor Control

5.3.5.1 Outline

iR2270 / iR2870 / iR3570 / iR4570 / / iR2270N / / iR2870N / / iR3570N / / iR4570N / iR2230 / / / iR3530 /

The machine changes the original read point depending on the presence/absence of dust on the stream reading glass or the platen roller of the ADF, or it may execute image correction to prevent the dust from showing up in the output. These operations are carried out only when the ADF is in use and, in addition, is closed:

<Timing of Control>
-at the end of a job
-between sheets (for each reading of a sheet)
-at the start of a job (only when any of the following conditions is true)
1st job after power-on
dust detected at all points of detection at the end of the previous job
dust detection failed to end normally at the end of the previous job (e.g., ADF opened)

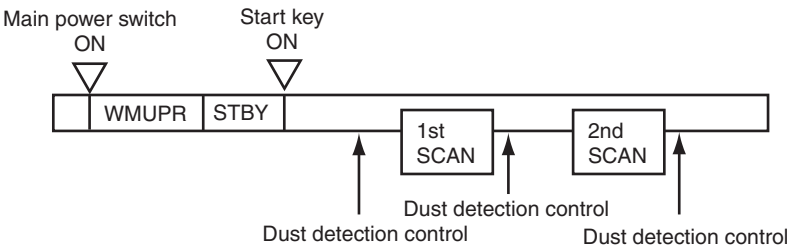

F-5-22

<Particulars of Control>
-At the End of a Job (dust detection)
The contact image sensor (CIS) checks the light reflected by the surface of the platen roller of the ADF at the read point for the presence/absence of dust. Presence of dust is detected at points A, B, and C in this order. The point where least dust is detected will be used as the read position for the next job.

The point selected here will be used as the read position for the next job.

- For control at the end of a job, if an original is placed in the ADF with dust detected at all points (A, B, C), the machine will indicate a message on its control panel to prompt cleaning of the glass surface. The Start key will remain invalid until this message is cleared.

-At the Start of a Job (dust bypass)
Presence of dust is detected at points A, B, and C in this order in the same manner as at the end of the job. Read will take place at the point where least dust is detected.

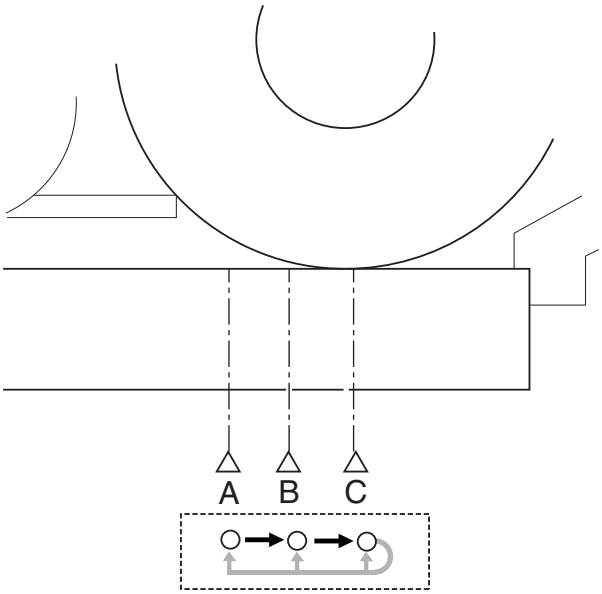

F-5-23

-Between Sheets
The machine does not move the contact image sensor (CIS) for dust detection between sheets. It reads the original using the position determined at the end or start of a job; if the presence of dust is detected, however, the machine will execute image correction.

T-5-7

Point	Discription
A	read reference position
B	about 0.5 mm from the reference position to the inner side of the roller
C	about 1.0 mm from the reference position to the inner side of the roller

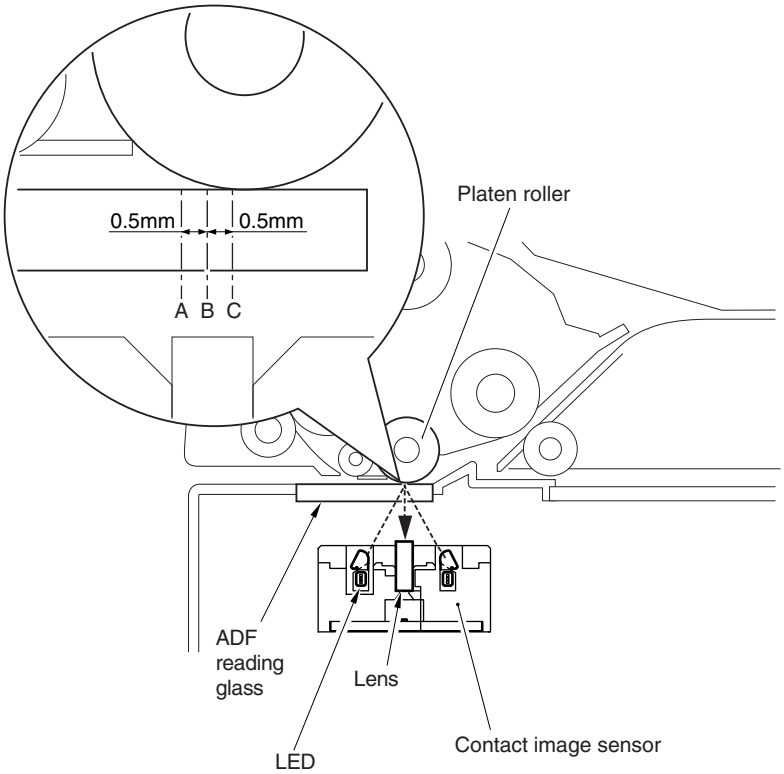

F-5-24

<Service Mode>
COPIER>OPTION>BODY>DFDST-L1 (level 1)
(used to adjust the dust detection level between sheets)
COPIER>OPTION>BODY>DFDST-L2 (level 1)
(used to adjust the dust detection level at the end of a job)

5.3.6 Image Processing

5.3.6.1 Outline

iR2270 / iR2870 / iR3570 / iR4570 / / iR2270N / / iR2870N / / iR3570N / / iR4570N / iR2230 / / / iR3530 /

The following shows the major specifications and functions of the machine's image processing system:

T-5-8

CCD	number of lines: 1 Number of pixels: Total 7488 (Number of effective pixels: 7180) size of pixel: 32 x 46.9 ym
Shading correction	shading correction: executed for each job shading adjustment: executed at power-on

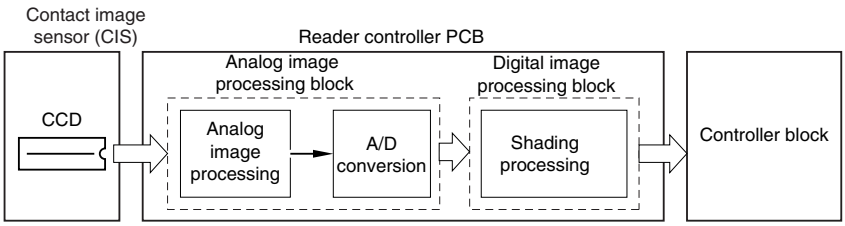

F-5-25

The following shows the functions of the PCBs used by the machine's image processing system:

T-5-9

Reader controller PCB	CCD drive, analog image processing, A/D conversion, shading correction

The machine uses the reader controller PCB to process images for every single image line; specific functions are as follows:
1) Analog Image Processing
-CCD drive
-CCD output gain correction, offset correction
-CCD output A/D conversion
2) Digital Image Processing
-shading correction

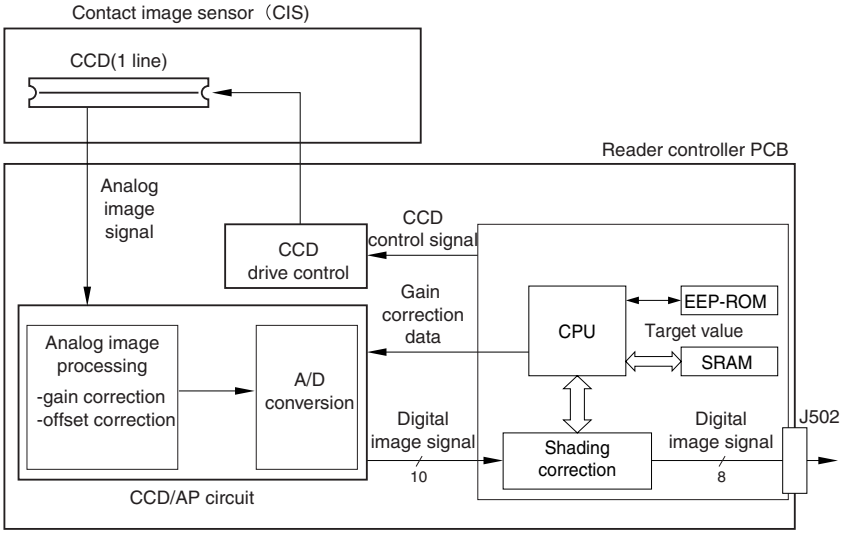

F-5-26

5.3.6.2 CCD Drive

iR2270 / iR2870 / iR3570 / iR4570 / / iR2270N / / iR2870N / / iR3570N / / iR4570N / iR2230 / / / iR3530 /

The machine's CCD sensor is a 1-line linear image sensor consisting of 7488 photocells. After completion of photoelectric conversion in the light-receiving block, the signals are output to the AP circuit in the reader controller circuit board in parallel for each channel (total eight channels) of the CCD array.

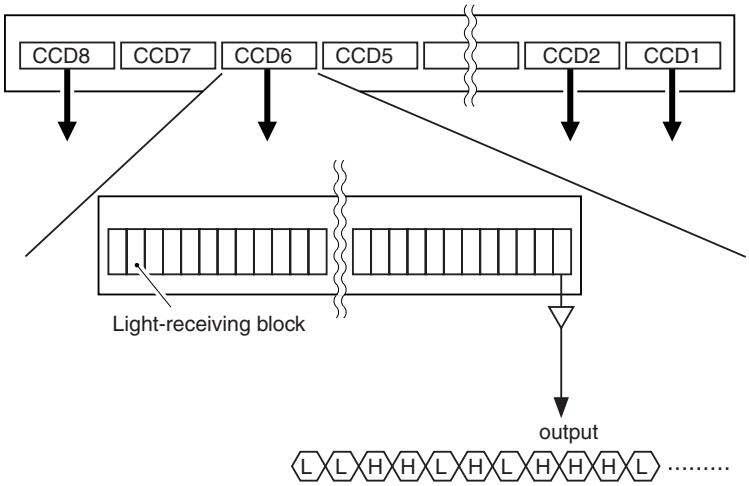

F-5-27

5.3.6.3 Gain Correction and Offset Correction of the CCD Output

iR2270 / iR2870 / iR3570 / iR4570 / / iR2270N / / iR2870N / / iR3570N / / iR4570N / iR2230 / / / iR3530 /

The analog video signal generated by the CCD is corrected so that it will have a specific level (gain correction); moreover, the output voltage occurring in the absence of incident light is also corrected so that it will have a specific level (offset correction).

5.3.6.4 A/D Conversion of the CCD Output

iR2270 / iR2870 / iR3570 / iR4570 / / iR2270N / / iR2870N / / iR3570N / / iR4570N / iR2230 / / / iR3530 /

The analog video signal is further converted into a digital signal that is suited to the voltage level of individual pixels by the A/D converter.

5.3.6.5 Shading Correction (outline)

iR2270 / iR2870 / iR3570 / iR4570 / / iR2270N / / iR2870N / / iR3570N / / iR4570N / iR2230 / / / iR3530 /

The output of the CCD is not necessarily even for the following factors even when the density of the original is uniform:

1) Variation in the Sensitivity Among Pixels of the CCD
2) Variation in the Intensity of the Rod Lens Array

The machine executes shading correction to even out the output of the CCD. Shading correction may be shading adjustment executed at power-on or shading correction executed for each job.

5.3.6.6 Shading Adjustment

iR2270 / iR2870 / iR3570 / iR4570 / / iR2270N / / iR2870N / / iR3570N / / iR4570N / iR2230 / / / iR3530 /

In this adjustment, the machine measures the density of the standard while plate, and stores the results in memory as density data. It then performs computations on the shading data, and uses the result as the target value for shading correction.

5.3.6.7 Shading Correction

iR2270 / iR2870 / iR3570 / iR4570 / / iR2270N / / iR2870N / / iR3570N / / iR4570N / iR2230 / / / iR3530 /

The machine executes this correction for every scan made in main shading unit. It measures the density of the standard white plate, and compares the result against the target value stored in the shading correction circuit; the difference between the two will be held as the shading correction value for use in correcting variation among CCD pixels when scanning the original, thus evening out the density levels of the image.

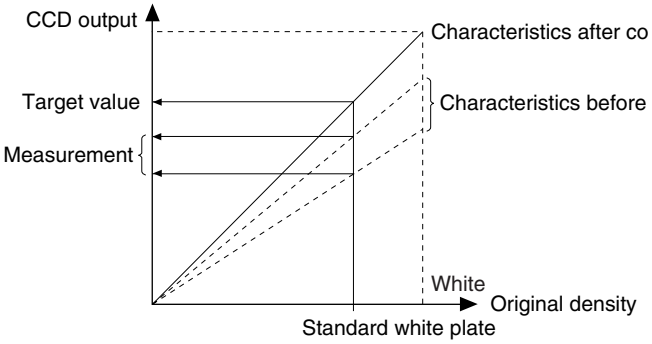

F-5-28

5.4 Parts Replacement Procedure

5.4.1 Copyboard glass

5.4.1.1 Removing the Copyboard Glass

iR2270 / iR2870 / iR3570 / iR4570 / / iR2270N / / iR2870N / / iR3570N / / iR4570N / iR2230 / / / iR3530 /

1) Open the copyboard cover (or ADF).
2) Remove the 2 screws [1], and detach the glass retainer [2]; then, detach the copyboard glass [3].

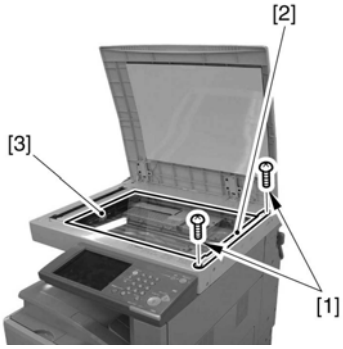

F-5-29

When removing the copyboard glass, take care not to touch the following:
- glass surface
- standard white plate

The presence of dirt can cause white/black lines in the images. If dirt is found, clean it with lint-free paper moistened with alcohol.

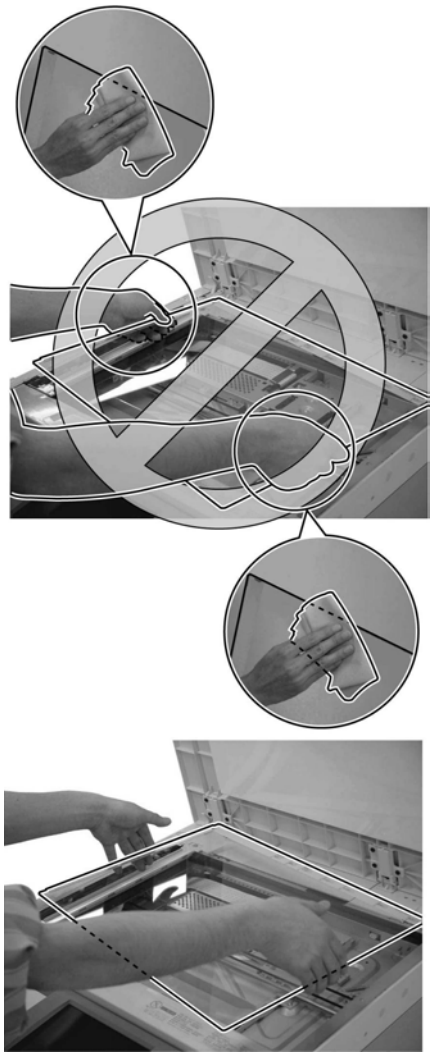

F-5-30

5.4.1.2 Removing the ADF Reading Glass

iR2270 / iR2870 / iR3570 / iR4570 / / iR2270N / / iR2870N / / iR3570N / / iR4570N / iR2230 / / / iR3530 /

1) Open the copyboard glass (or ADF).
2) Remove the 2 screws [1], and detach the glass retainer [2].
3) Remove the ADF reading glass [3].

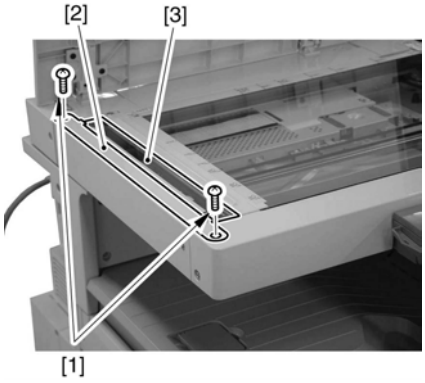

F-5-31

When removing the ADF reading glass, take care not to touch the glass surface.The presence of dirt can cause white/black lines in the images. If dirt is found, be sure to clean it using lint-free paper moistened with alcohol.

5.4.2 Reader Controller PCB

5.4.2.1 Before Replacing the Reader Controller PCB

iR2270 / iR2870 / iR3570 / iR4570 / / iR2270N / / iR2870N / / iR3570N /

/ iR4570N / iR2230 / / / iR3530 /

If an ADF is used, be sure to execute P-PRINT of service mode to obtain its printout:
COPIER>FUNCTION>MISC-P>P-PRINT

5.4.2.2 Removing the Reader Rear Cover

iR2270 / iR2870 / iR3570 / iR4570 / / iR2270N / / iR2870N / / iR3570N / / iR4570N / iR2230 / / / iR3530 /

1) Disconnect the ADF communications cable [1] (if equipped with an ADF)

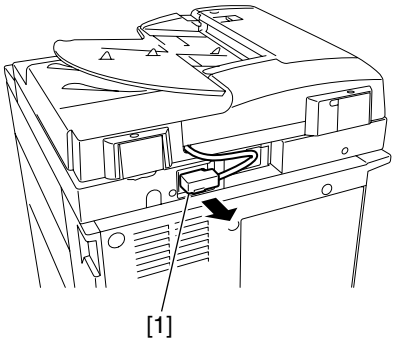

F-5-32

2) Open the copyboard cover (or the ADF).
3) Remove the 4 screws [1], and detach the reader rear cover [2].

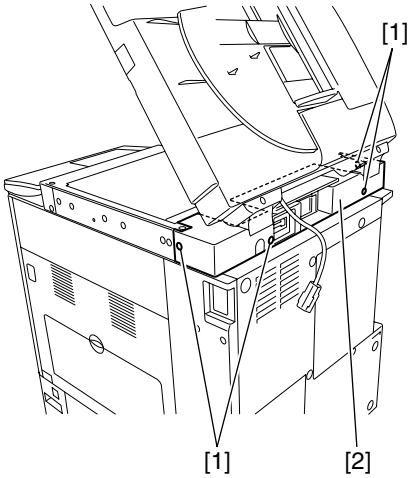

F-5-33

5.4.2.3 Removing the rear cover of the machine

iR2270 / iR2870 / iR3570 / iR4570 / / iR2270N / / iR2870N / / iR3570N / / iR4570N / iR2230 / / / iR3530 /

1) Remove the 14 screws [1], and detach the rear cover [2] of the machine.

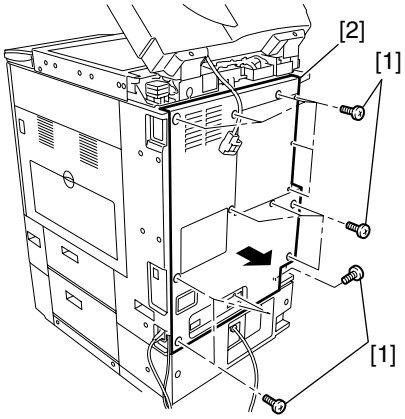

F-5-34

5.4.2.4 Removing the flexible cable cover

iR2270 / iR2870 / iR3570 / iR4570 / / iR2270N / / iR2870N / / iR3570N / / iR4570N / iR2230 / / / iR3530 /

1) Remove the 4 screws [1], and detach the flexible cable cover [2].
2) Disconnect the flexible cable [3] on the reader controller PCB.

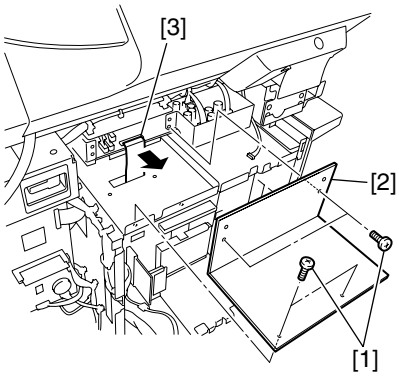

F-5-35

5.4.2.5 Removing the Copyboard Glass

iR2270 / iR2870 / iR3570 / iR4570 / / iR2270N / / iR2870N / / iR3570N / / iR4570N / iR2230 / / / iR3530 /

1) Open the copyboard cover (or ADF).
2) Remove the 2 screws [1], and detach the glass retainer [2]; then, detach the copyboard glass [3].

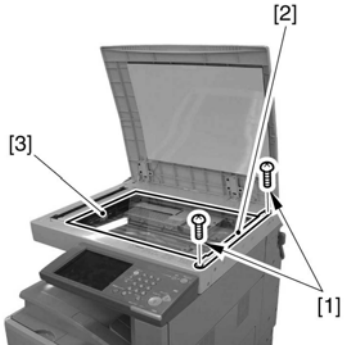

F-5-36

When removing the copyboard glass, take care not to touch the following:
- glass surface
- standard white plate

The presence of dirt can cause white/black lines in the images. If dirt is found, clean it with lint-free paper moistened with alcohol.

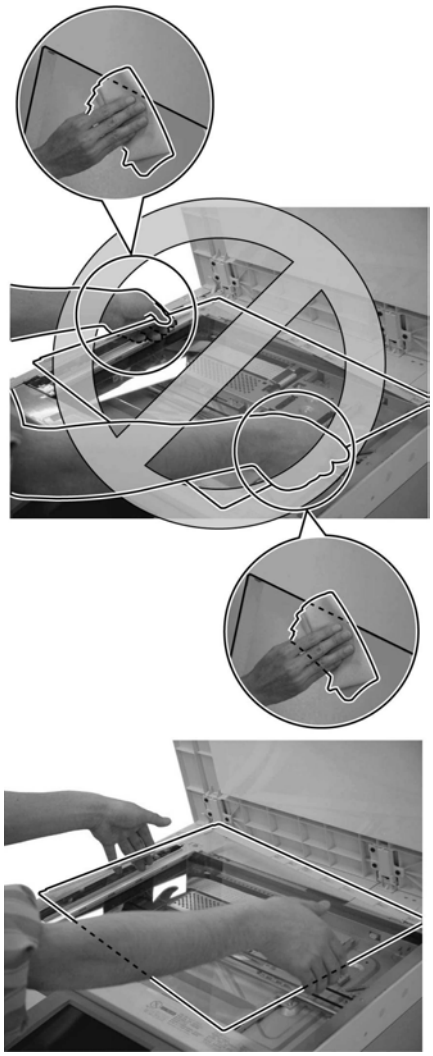

F-5-37

5.4.2.6 Removing the Reader Controller PCB

iR2270 / iR2870 / iR3570 / iR4570 / / iR2270N / / iR2870N / / iR3570N / / iR4570N / iR2230 / / / iR3530 /

1) Remove the cover [1].

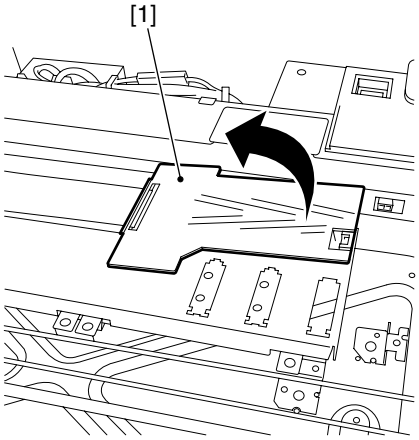

F-5-38

2) Disconnect the connector [1], and detach the flexible cable [2].

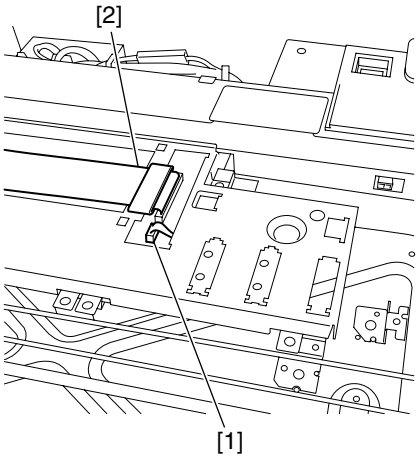

F-5-39

3) Remove the 8 screws [2], and detach the cover [3].

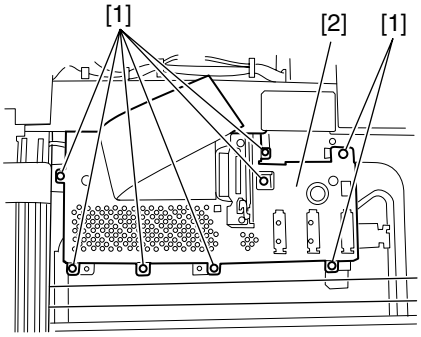

F-5-40

4) Disconnect the 2 connectors [1], and detach the 3 wire saddles [2]; then, remove the 2 screws [3].

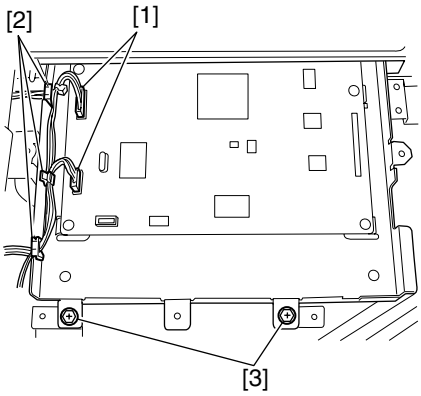

F-5-41

5) Go to the back of the machine, and free the cable from the 5 wire saddles [1]; then, disconnect the connector [2].

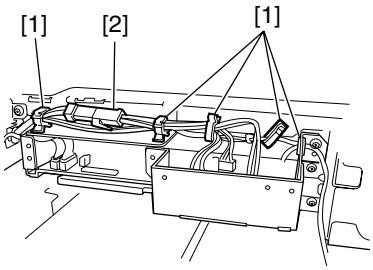

F-5-42

6) Disconnect the 3 connectors [1].

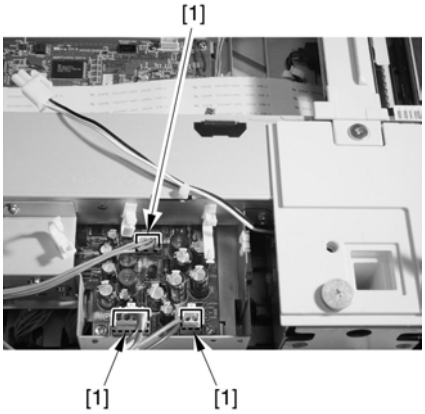

F-5-43

7) Remove the 4 screws [1], and detach the cover [2].

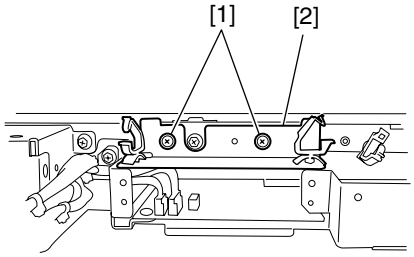

F-5-44

8) Disconnect the 2 connectors [1], and free the cable from the wire saddle [2].

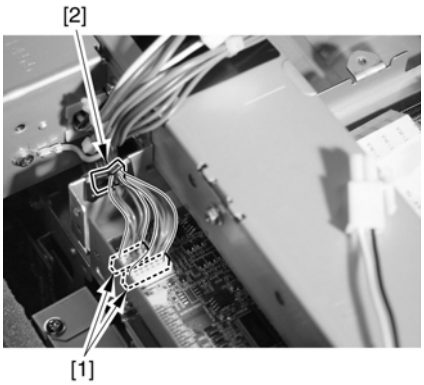

F-5-45

9) Remove the 2 screws [1], and pull out the reader controller PCB base [2].

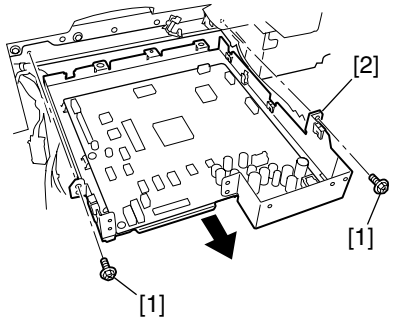

F-5-46

10) Remove the 7 screws [1], and detach the reader controller PCB [2].

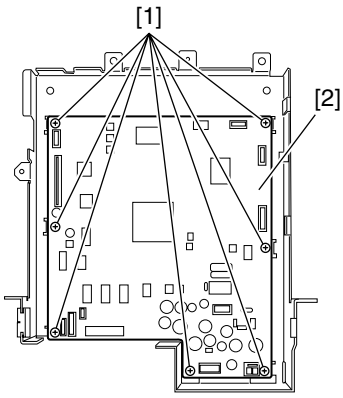

F-5-47

5.4.2.7 After Replacing the Reader Controller PCB or After Initializing the RAM

iR2270 / iR2870 / iR3570 / iR4570 / / iR2270N / / iR2870N / / iR3570N / / iR4570N / iR2230 / / / iR3530 /

- Before replacing the reader controller PCB, be sure to generate the latest P-PRINT printout.
  <if you are initializing the RAM of the reader controller without replacing the PCB>
- Using the SST, upload the reader controller backup data; after initializing the RAM, download the data, thus eliminating the need for the following adjustment.

1. Reader Unit-Related Adjustment

1) Using the SST, download the latest system software (R-CON).
2) Make the following selections in service mode: COPIER>FUNCTION>CLEAR>R-CON; then, press the OK key to initialize the RAM. Thereafter, turn off and then on the main power.
3) Enter the appropriate values using the following service mode items:
 a. service label (behind reader unit left cover) values

 a-1. CIS read position adjustment (fixed reading)
COPIER>ADJUST>ADJ-XY>ADJ-X
 a-2. main scanning direction position adjustment (fixed reading)
COPIER>ADJUST>ADJ-XY>ADJ-Y
 a-3. shading position adjustment (fixed reading)
COPIER>ADJUST>ADJ-XY>ADJ-S
 a-4. main/sub scanning direction MTF value
COPIER>ADJUST>CCD>MTF-MG

2. ADF-Related Adjustment

The machine keeps ADF-related service mode data in the RAM of the reader controller; as such, you will have to make the appropriate adjustments if you have replaced the reader controller or initialized the RAM.

1) Enter the values indicated in the P-PRINT printout you have previously generated for the following:
 a. main scanning direction position adjustment (stream reading)
 COPIER>ADJSUT>ADJ-XY>ADJ-Y-DF
 b. original stop position adjustment
 FEEDER>ADJSUT>DOCST
 c. original feed speed (magnification) adjustment
FEEDER>ADUST>LA-SPEED

2) Make adjustments using the following items:
 a. tray width adjustment
FEEDER>FUNCTION>TRY-A4
 FEEDER>FUNCTION>TRY-A5R
 FEEDER>FUNCTION>TRY-LTR
 FEEDER>FUNCTION>TRY-LTRR
 b. CIS read position adjustment (stream reading)
COPIER>FUNCTION>INSTALL>STRD-POS
 c. white level adjustment
COPIER>FUNCTION>CCD>DF-WLVL1
 COPIER>FUNCTION>CCD>DF-WLVL2

When you have finished the foregoing adjustments, put the P-PRINT printout [1] you have previously generated in the service book cassette to replace the old P-PRINT printout.

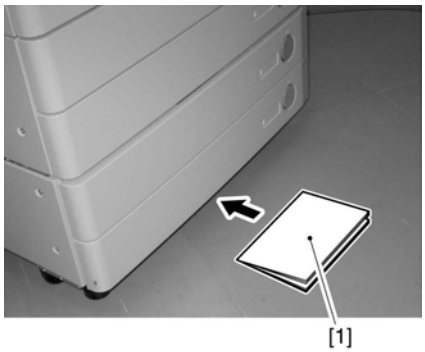

F-5-48

5.4.3 Scanner Motor

5.4.3.1 Removing the Reader Rear Cover

iR2270 / iR2870 / iR3570 / iR4570 / / iR2270N / / iR2870N / / iR3570N / / iR4570N / iR2230 / / / iR3530 /

1) Disconnect the ADF communications cable [1] (if equipped with an ADF)

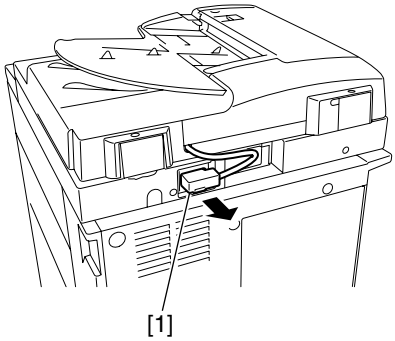

F-5-49

2) Open the copyboard cover (or the ADF).
3) Remove the 4 screws [1], and detach the reader rear cover [2].

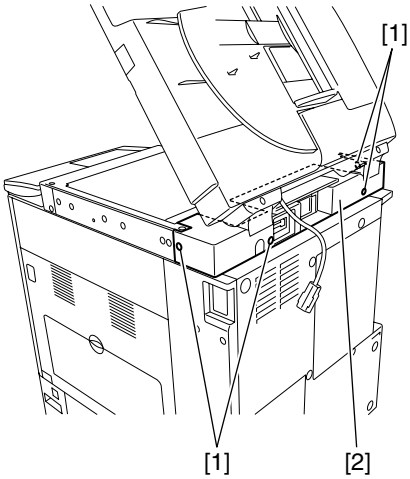

F-5-50

5.4.3.2 Removing the Scanner Motor

iR2270 / iR2870 / iR3570 / iR4570 / / iR2270N / / iR2870N / / iR3570N / / iR4570N / iR2230 / / / iR3530 /

1) Remove the 2 screws [1]; then, disconnect the connector [2], and detach the 2 wire saddles [3].

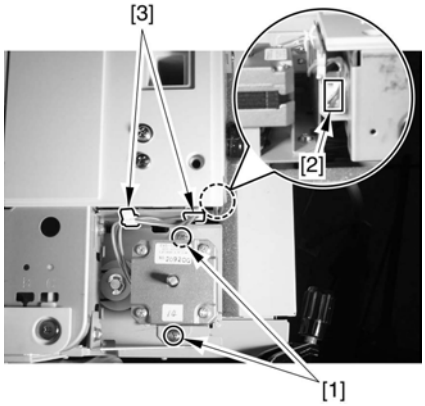

F-5-51

2) Remove the spring [1], and detach the scanner motor [2].

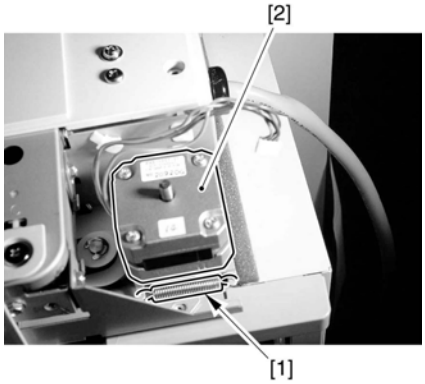

F-5-52

5.4.4 Contact sensor

5.4.4.1 Removing the Reader Front Cover

iR2270 / iR2870 / iR3570 / iR4570 / / iR2270N / / iR2870N / / iR3570N / / iR4570N / iR2230 / / / iR3530 /

1) Open the copyboard cover (or ADF).
2) Remove the 2 screws [1], and detach the copyboard glass retainer (right) [2].

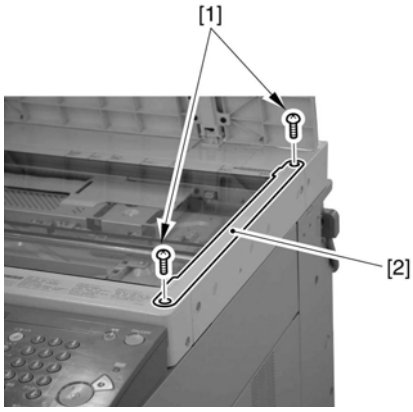

F-5-53

3) Remove the 2 screws [1], and detach the copyboard glass retainer (left) [2].

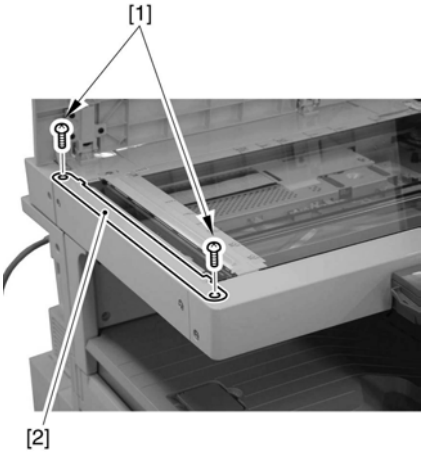

F-5-54

4) Remove the 2 screws [1], and detach the reader front cover [2].

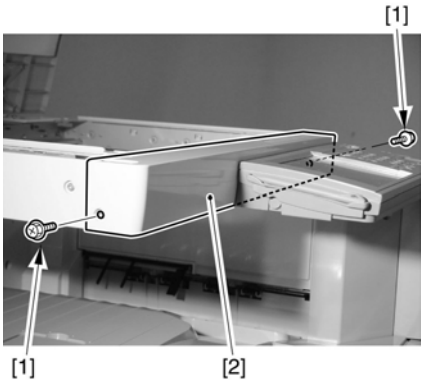

F-5-55

5.4.4.2 Removing the Reader Rear Cover

iR2270 / iR2870 / iR3570 / iR4570 / / iR2270N / / iR2870N / / iR3570N / / iR4570N / iR2230 / / / iR3530 /

1) Disconnect the ADF communications cable [1] (if equipped with an ADF)

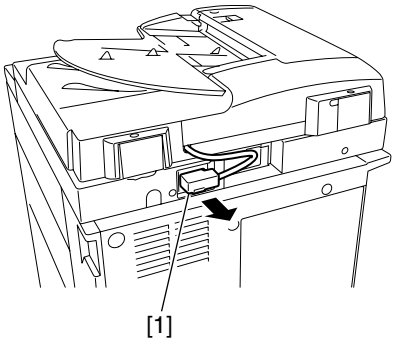

F-5-56

2) Open the copyboard cover (or the ADF).
3) Remove the 4 screws [1], and detach the reader rear cover [2].

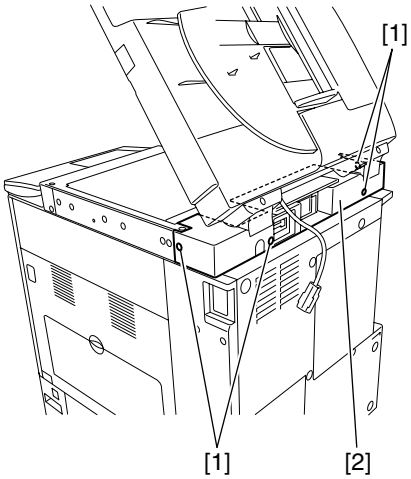

F-5-57

5.4.4.3 Removing the Copyboard Glass

iR2270 / iR2870 / iR3570 / iR4570 / / iR2270N / / iR2870N / / iR3570N / / iR4570N / iR2230 / / / iR3530 /

1) Open the copyboard cover (or ADF).
2) Remove the 2 screws [1], and detach the glass retainer [2]; then, detach the copyboard glass [3].

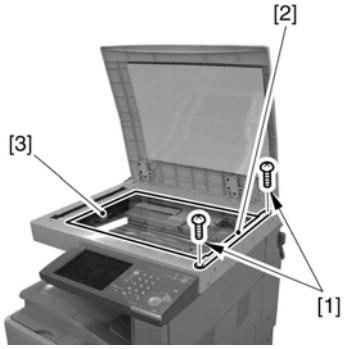

F-5-58

When removing the copyboard glass, take care not to touch the following:
- glass surface
- standard white plate

The presence of dirt can cause white/black lines in the images. If dirt is found, clean it with lint-free paper moistened with alcohol.

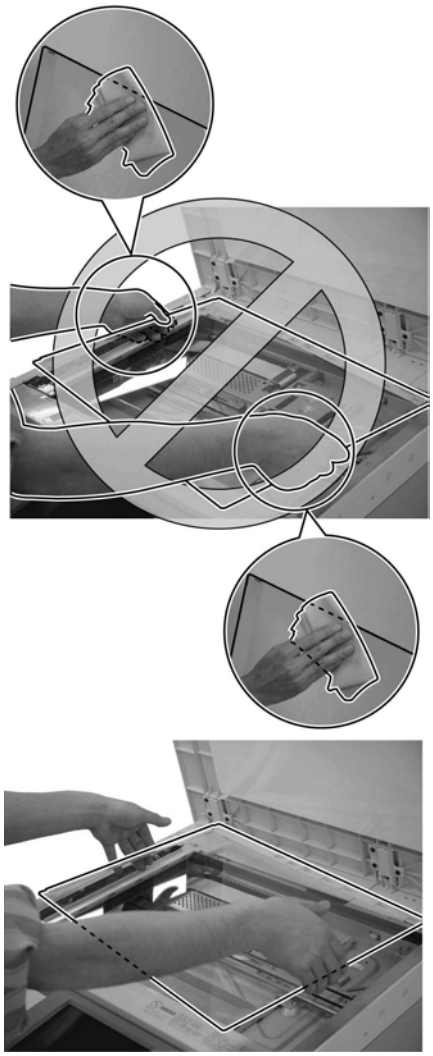

F-5-59

5.4.4.4 Removing the Contact Image Sensor (CIS)

iR2270 / iR2870 / iR3570 / iR4570 / / iR2270N / / iR2870N / / iR3570N / / iR4570N / iR2230 / / / iR3530 /

1) Pull the drive belt (front) [1] in the direction of the arrow so that the contact image sensor (CIS) [2] will move where it is shown in the figure.

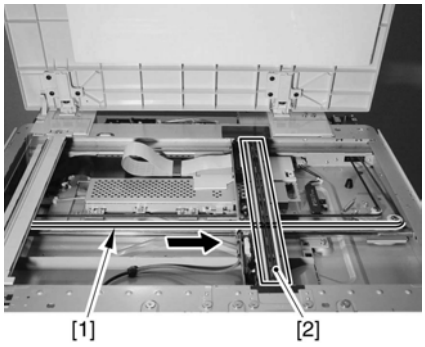

F-5-60

2) Remove the 2 screws [1], and detach the plate [2].

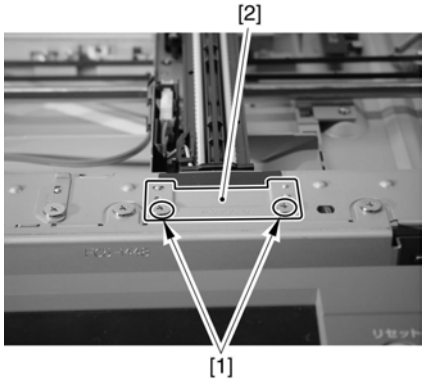

F-5-61

3) Remove the flexible cable [1], and detach the contact image sensor (CIS) [2].

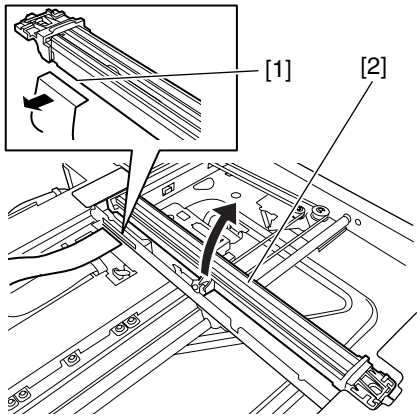

F-5-62

When detaching the contact sensor unit, take care not to touch the light guide assembly and the lens assembly.

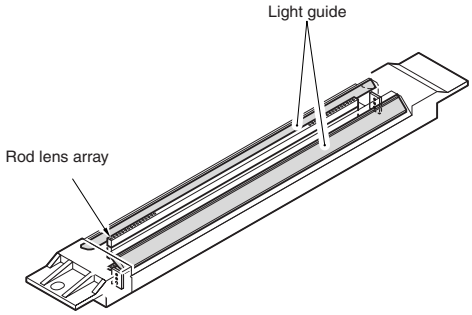

F-5-63

When mounting it, be sure to connect the flexible cable [1] before fitting the contact image sensor (CIS) [2] to the machine.

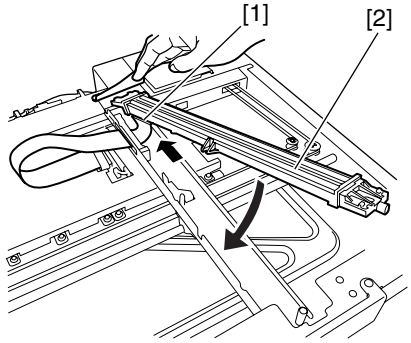

F-5-64

5.4.4.5 After Replacement of the CIS

iR2270 / iR2870 / iR3570 / iR4570 / / iR2270N / / iR2870N / / iR3570N /

/ iR4570N / iR2230 / / / iR3530 /

Be sure to enter the value indicated on the CIS label attached to the contact image sensor (CIS) using the following service mode item:

COPIER>ADJUST>CCD>MTF-MG
(main scanning direction MTR correction value)

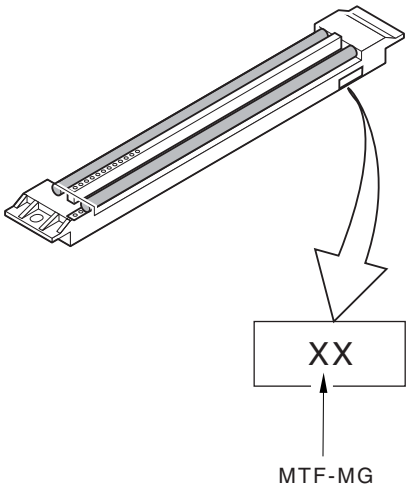

F-5-65

Be sure also to update the value indicated on the service label found behind the left cover of the reader unit so that it is identical to the value indicated on the CIS label.

Reference:
At time of shipment from the factory, no CIS label is attached.

5.4.5 Copyboard Cover Open/Close Sensor

5.4.5.1 Removing the Reader Rear Cover

iR2270 / iR2870 / iR3570 / iR4570 / / iR2270N / / iR2870N / / iR3570N / / iR4570N / iR2230 / / / iR3530 /

1) Disconnect the ADF communications cable [1] (if equipped with an ADF)

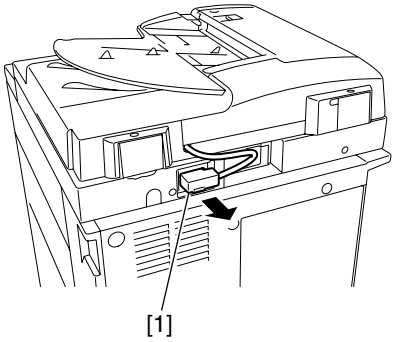

F-5-66

2) Open the copyboard cover (or the ADF).
3) Remove the 4 screws [1], and detach the reader rear cover [2].

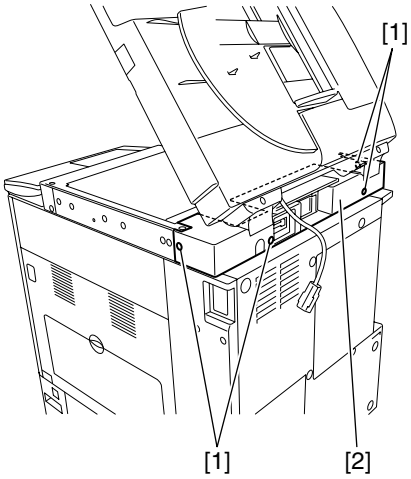

F-5-67

5.4.5.2 Removing the Copyboard Cover Open/Closed Sensor (front/rear)

iR2270 / iR2870 / iR3570 / iR4570 / / iR2270N / / iR2870N / / iR3570N / / iR4570N / iR2230 / / / iR3530 /

1) Disconnect the 2 connectors [1], and remove the screw [2]; then, detach the sensor base [3].

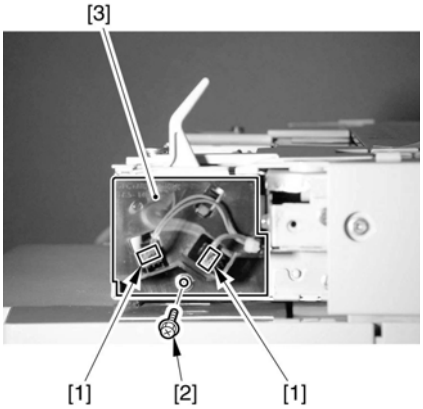

F-5-68

2) Detach the 2 sensors [1] from the sensor base.

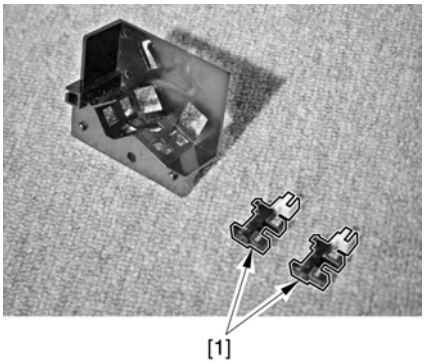

F-5-69

5.4.6 Contact Sensor HP Sensor

5.4.6.1 Removing the Copyboard Glass

iR2270 / iR2870 / iR3570 / iR4570 / / iR2270N / / iR2870N / / iR3570N / / iR4570N / iR2230 / / / iR3530 /

1) Open the copyboard cover (or ADF).
2) Remove the 2 screws [1], and detach the glass retainer [2]; then, detach the copyboard glass [3].

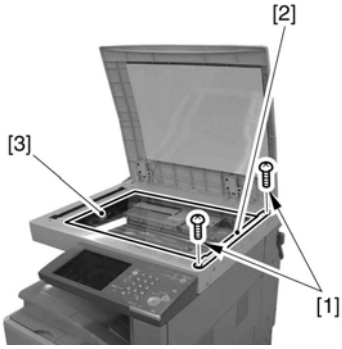

F-5-70

When removing the copyboard glass, take care not to touch the following:
- glass surface
- standard white plate

The presence of dirt can cause white/black lines in the images. If dirt is found, clean it with lint-free paper moistened with alcohol.

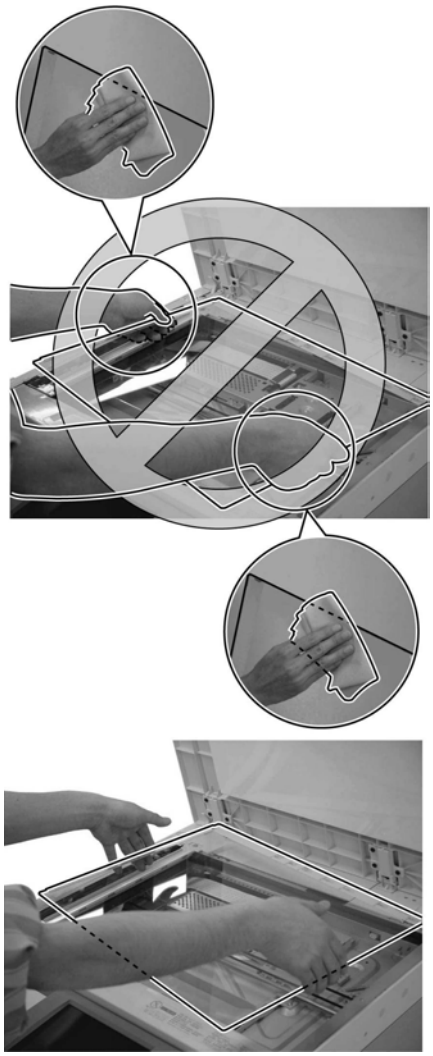

F-5-71

5.4.6.2 Removing the ADF Reading Glass

iR2270 / iR2870 / iR3570 / iR4570 / / iR2270N / / iR2870N / / iR3570N / / iR4570N / iR2230 / / / iR3530 /

1) Open the copyboard glass (or ADF).
2) Remove the 2 screws [1], and detach the glass retainer [2].
3) Remove the ADF reading glass [3].

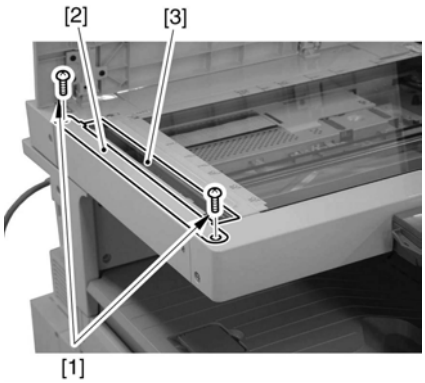

F-5-72

When removing the ADF reading glass, take care not to touch the glass surface.The presence of dirt can cause white/black lines in the images. If dirt is found, be sure to clean it using lint-free paper moistened with alcohol.

5.4.6.3 Removing the Contract Sensor Home Position Sensor

iR2270 / iR2870 / iR3570 / iR4570 / / iR2270N / / iR2870N / / iR3570N / / iR4570N / iR2230 / / / iR3530 /

1) Pull the drive belt [1] in the direction of the arrow so that the contact image sensor (CIS) [2] is where indicated in the figure.

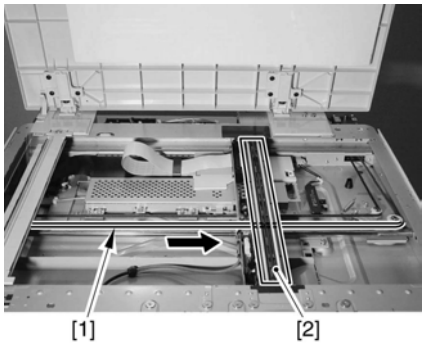

F-5-73

2) Disconnect the connector [1], and remove the CIS home position sensor [3].

When detaching the sensor, do so as if to push it under the claw [2] found at the rear.

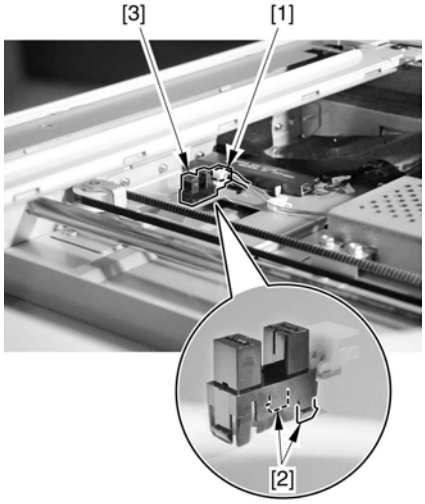

F-5-74

After replacing the sensor, pull the drive belt (rear) [1] in the direction of the arrow so that the contact image sensor (CIS) [2] is returned to the farthest left.

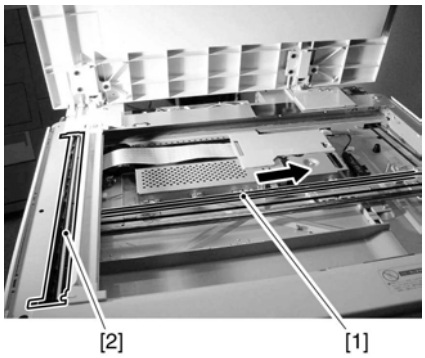

F-5-75

5.4.7 Original Size Sensor

5.4.7.1 Removing the Reader Rear Cover

iR2270 / iR2870 / iR3570 / iR4570 / / iR2270N / / iR2870N / / iR3570N / / iR4570N / iR2230 / / / iR3530 /

1) Disconnect the ADF communications cable [1] (if equipped with an ADF)

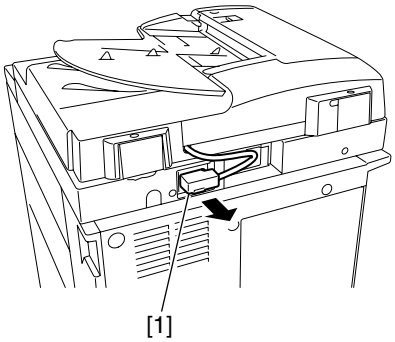

F-5-76

2) Open the copyboard cover (or the ADF).
3) Remove the 4 screws [1], and detach the reader rear cover [2].

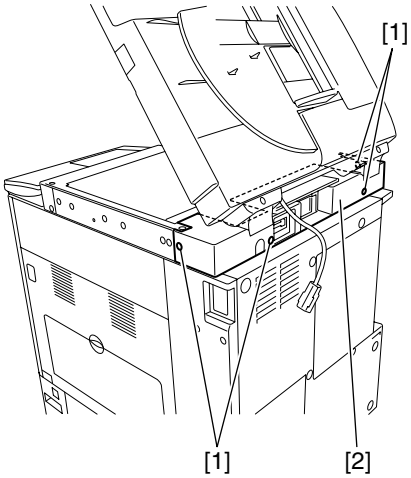

F-5-77

5.4.7.2 Removing the Copyboard Glass

iR2270 / iR2870 / iR3570 / iR4570 / / iR2270N / / iR2870N / / iR3570N / / iR4570N / iR2230 / / / iR3530 /

1) Open the copyboard cover (or ADF).
2) Remove the 2 screws [1], and detach the glass retainer [2]; then, detach the copyboard glass [3].

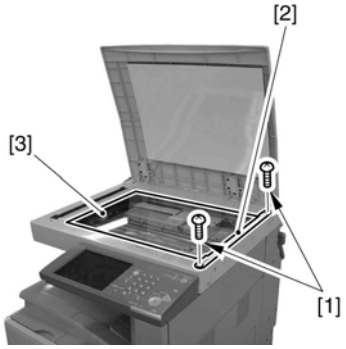

F-5-78

When removing the copyboard glass, take care not to touch the following:
- glass surface
- standard white plate

The presence of dirt can cause white/black lines in the images. If dirt is found, clean it with lint-free paper moistened with alcohol.

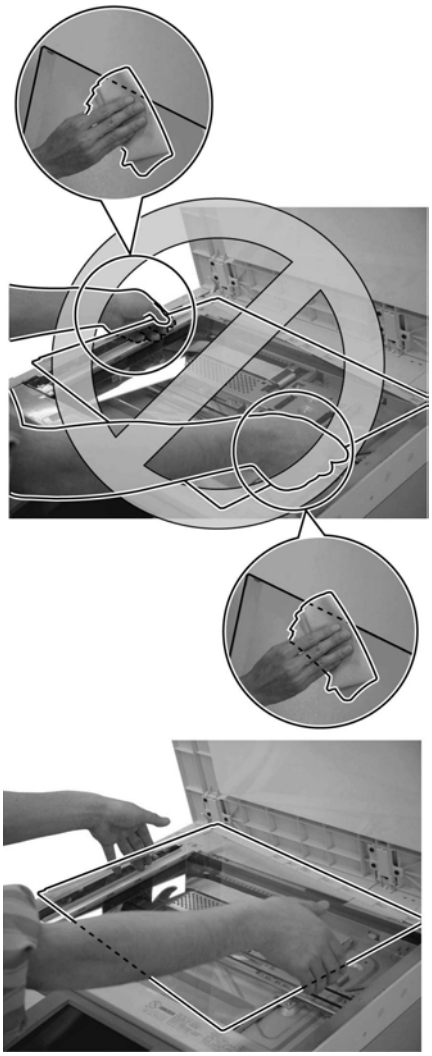

F-5-79

5.4.7.3 Removing the Original Size Sensor

iR2270 / iR2870 / iR3570 / iR4570 / / iR2270N / / iR2870N / / iR3570N / / iR4570N / iR2230 / / / iR3530 /

1) Remove the cover [1].

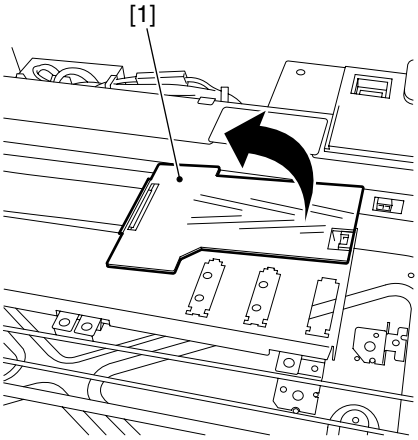

F-5-80

2) Disconnect the connector [1], and detach the flexible cable [2].

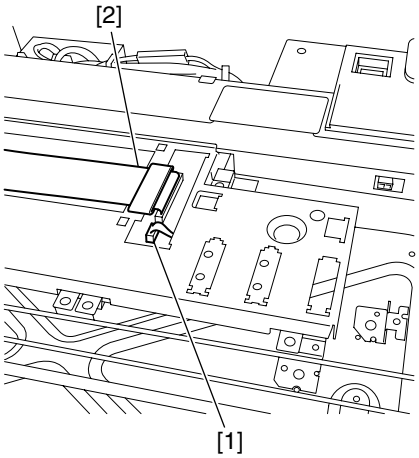

F-5-81

3) Remove the 8 screws [2], and detach the cover [3].

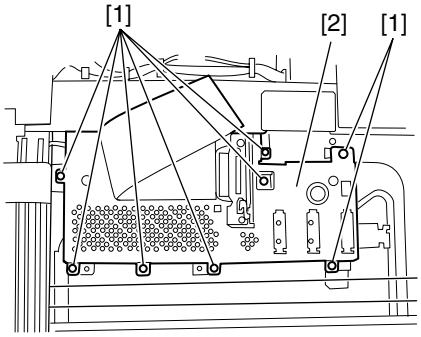

F-5-82

4) Free the hook [1], and detach the original sensor [2].

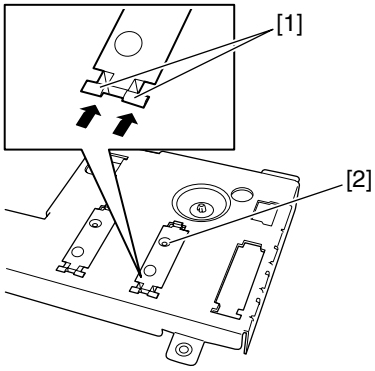

F-5-83

5) Disconnect the connector [1].
6) Remove the 2 screws [2], and detach the cover [3].
7) Free the hook [4], and detach the original size sensor [5].

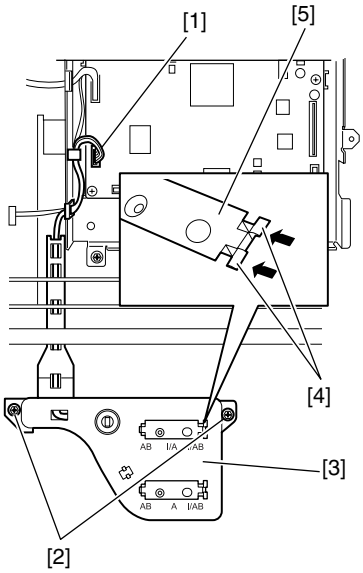

F-5-84

5.4.8 Reader Heater (option)

5.4.8.1 Removing the Copyboard Glass

iR2270 / iR2870 / iR3570 / iR4570 / / iR2270N / / iR2870N / / iR3570N / / iR4570N / iR2230 / / / iR3530

1) Open the copyboard cover (or ADF).
2) Remove the 2 screws [1], and detach the glass retainer [2]; then, detach the copyboard glass [3].

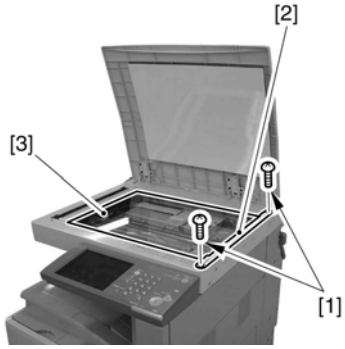

F-5-85

When removing the copyboard glass, take care not to touch the following:
- glass surface
- standard white plate

The presence of dirt can cause white/black lines in the images. If dirt is found, clean it with lint-free paper moistened with alcohol.

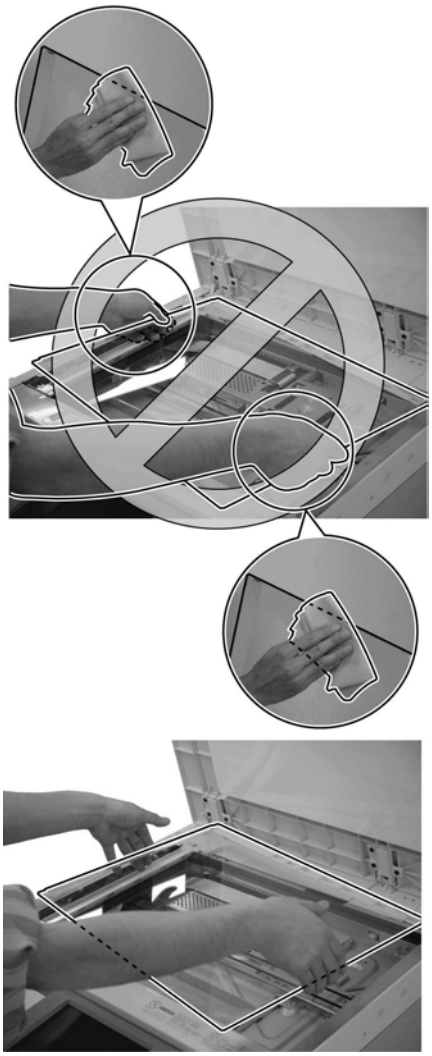

F-5-86

5.4.8.2 Removing the Reader Heater (right)

iR2270 / iR2870 / iR3570 / iR4570 / / iR2270N / / iR2870N / / iR3570N / / iR4570N / iR2230 / / / iR3530

1) Disconnect the connector [1], and free the cable from the wire saddle [2].
2) Remove the screw [3], and detach the reader heater (right) [4].

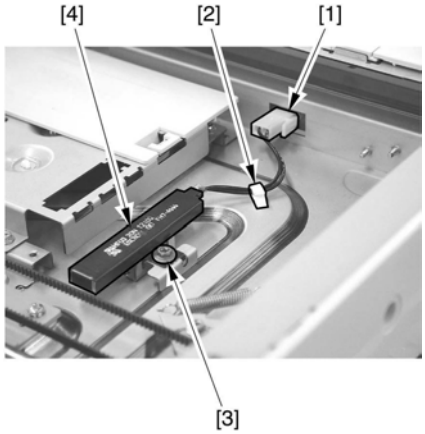

F-5-87

5.4.8.3 Removing the ADF Reading Glass

iR2270 / iR2870 / iR3570 / iR4570 / / iR2270N / / iR2870N / / iR3570N / / iR4570N / iR2230 / / / iR3530

1) Open the copyboard glass (or ADF).
2) Remove the 2 screws [1], and detach the glass retainer [2].
3) Remove the ADF reading glass [3].

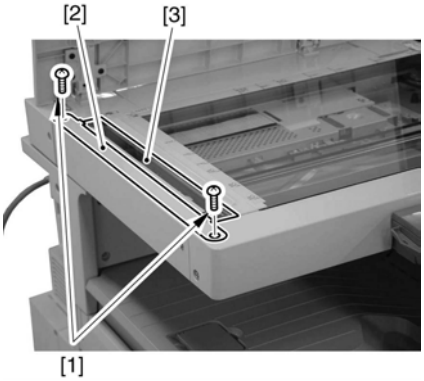

F-5-88

When removing the ADF reading glass, take care not to touch the glass surface.The presence of dirt can cause white/black lines in the images. If dirt is found, be sure to clean it using lint-free paper moistened with alcohol.

5.4.8.4 Removing the Reader Heater (left)

iR2270 / iR2870 / iR3570 / iR4570 / / iR2270N / / iR2870N / / iR3570N / / iR4570N / iR2230 / / / iR3530

1) Pull the drive belt (front) [1] in the direction of the arrow so that the contact image sensor (CIS) [2] is where it is indicated in the figure.

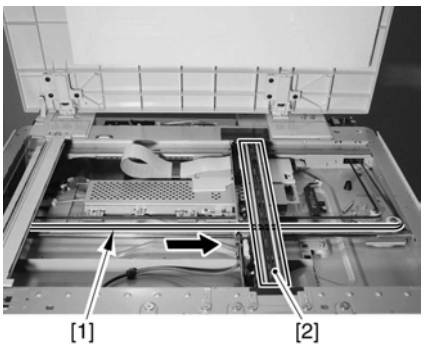

F-5-89

2) Peel the protective sheet [1], and disconnect the connector [2].
3) Free the cable from the wire saddle [3], and remove the screw [4]; then, detach the reader heater (left) [5].

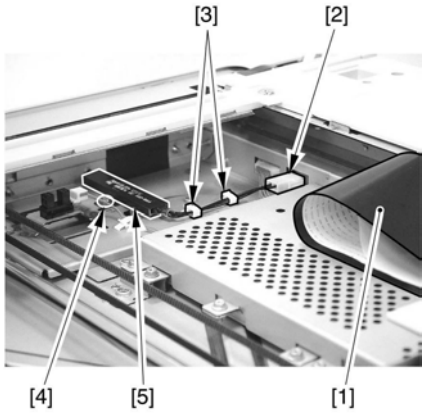

F-5-90

After replacing the reader heater, pull the drive belt (rear) [1] in the direction of the arrow so that the contact image sensor is returned to the farthest left.

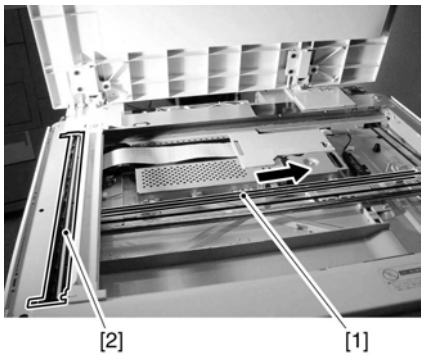

F-5-91

Chapter 6 Laser Exposure

Contents

6.1 Construction 6-1
6.1.1 Specifications, Control Mechanism, and Functions 6-1
6.1.2 Major Components 6-1
6.1.3 Construction of the Control System 6-1
6.2 Basic Sequence 6-3
6.2.1 Basic Sequence 6-3
6.3 Various Controls 6-3
6.3.1 Controlling the Laser Activation Timing 6-3
6.3.1.1 Turning On and off the Laser Light 6-3
6.3.1.2 Main Scanning Synchronous Control 6-4
6.3.2 Controlling the Intensity of Laser Light 6-5
6.3.2.1 APC Control 6-5
6.3.3 Controlling the Laser Scanner Motor 6-5
6.3.3.1 Controlling the Laser Scanner Motor 6-5
6.3.4 Controlling the Laser Shutter 6-5
6.3.4.1 Controlling the Laser Shutter 6-5
6.4 Parts Replacement Procedure 6-6
6.4.1 Laser Scanner Unit 6-6
6.4.1.1 Removing the Front Cover Unit 6-6
6.4.1.2 Removing the Left Cover 6-6
6.4.1.3 Removing the Laser Unit 6-6

6.1 Construction

6.1.1 Specifications, Control Mechanism, and Functions

iR2270 / iR2870 / iR3570 / iR4570 / iR2230 / / / iR3530 /

Laser Light

T-6-1

Number of laser beams	2
Output	5mW (iR2270/2870/2230/2830) 10mW (iR3570/4570/3530)
Wave length	785 nm - 800 nm (infrared light)

Scanner Motor

T-6-2

Type of motor	DC brushless motor
Number of revolutions	16000 rpm (approx.; single control) (iR2270/2870/2230/2830) 27000 rpm/16000 rpm (approx.; double control) (iR3570/4570/3530)
Type of bearing	Oil

Polygon Mirror

T-6-3

Number of facets	6 (40-mm dia.)

Control Mechanism

T-6-4

Synchronous control	Main scanning direction
Light intensity control	APC
Others	Laser activation/deactivation
	Laser scanner motor control
	Laser shutter control

6.1.2 Major Components

iR2270 / iR2870 / iR3570 / iR4570 / iR2230 / / / iR3530 /

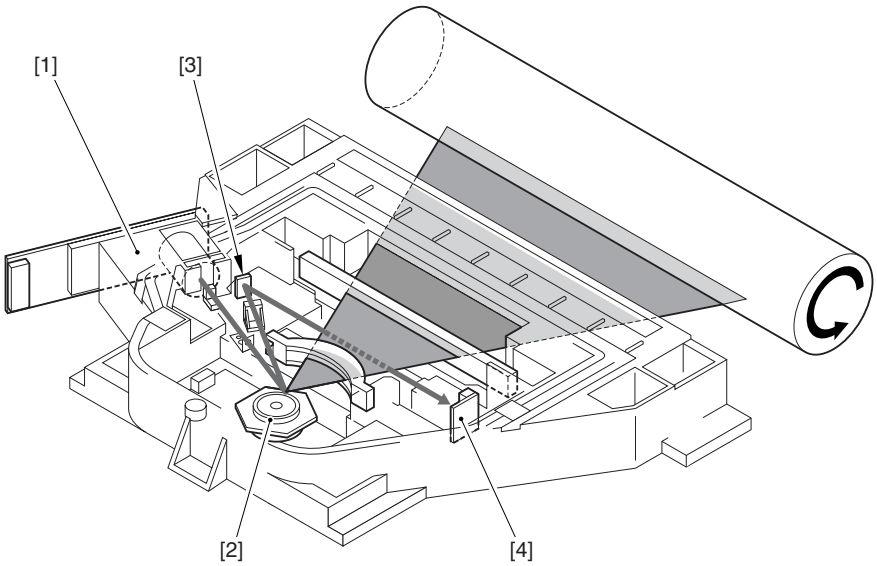

F-6-1

T-6-5

Name	Description
[1] Laser unit	Generates laser light
[2] Polygon mirror	Scans laser light in main scanning direction.
[3] BD mirror	Reflects laser light in the direction of the BD PCB.
[4] BD PCB	Generates the BD signal.

6.1.3 Construction of the Control System

iR2270 / iR2870 / iR3570 / iR4570 / iR2230 / / / iR3530 /

The laser exposure system is primarily controlled by the DC controller PCB.
iR2270/2270F/2870/2870F/2230/2230F/2830

iR2270/iR2270F/iR2870/iR2870F

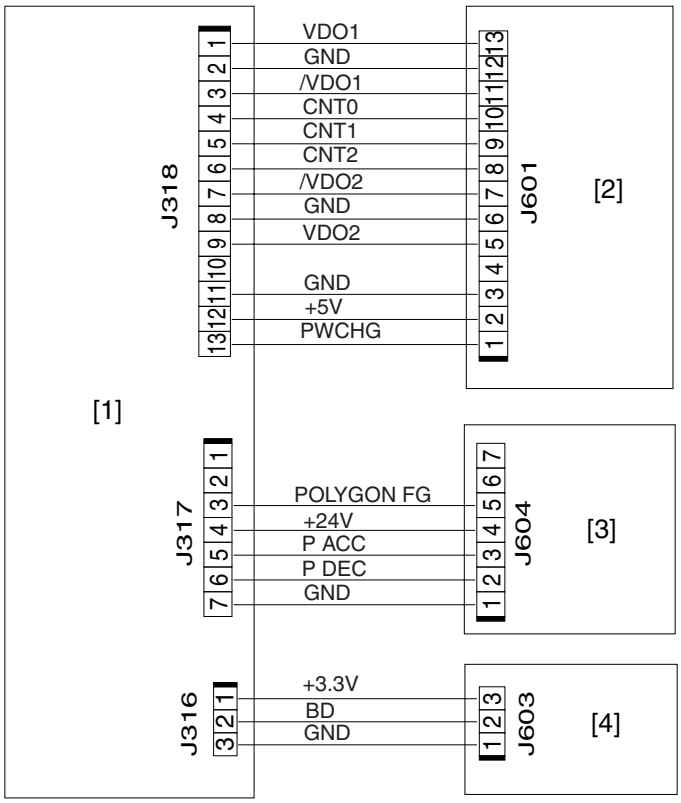

F-6-2

iR3570/3570F/4570/4570F/3530
iR3570/iR3570F/iR4570/iR4570F

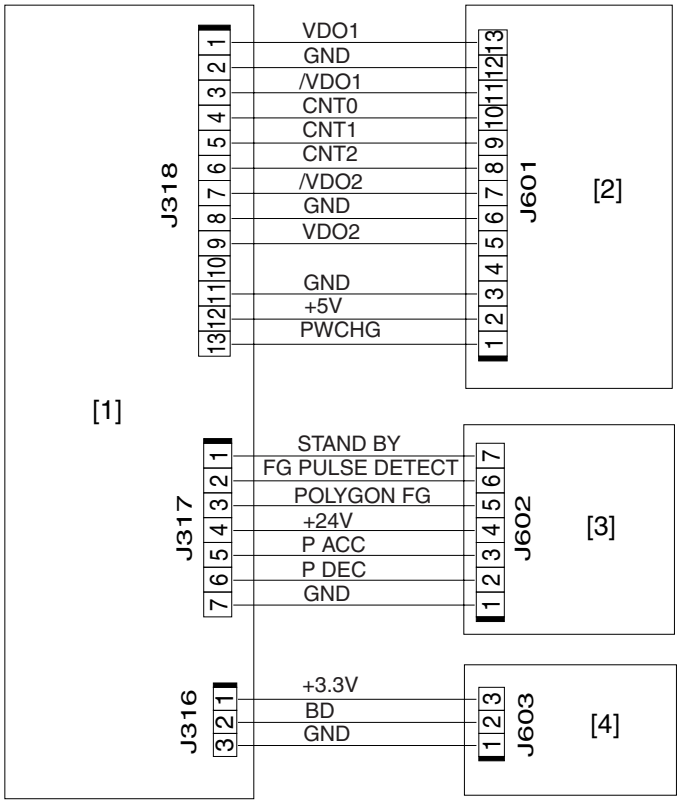

F-6-3

[1]DC controller PCB
[2]Laser driver PCB
[3]Scanner motor PCB
[4]BD PCB

T-6-6

Single	Description
VDO1	Image data single input
CNT0	Laser driver control signal
CNT1	Laser driver control signal

Single	Description
CNT2	Laser driver control signal
VDO2	Image data signal input
PWCHG	Light intensify switchover signal
FG PULSE DETECT	FG PULSE detecting signal
POLYGON FG	FG output signal
P ACC	Motor acceleration signal
P DEC	Motor deceleration signal
BD	BD output level single

6.2 Basic Sequence

6.2.1 Basic Sequence

iR2270 / iR2870 / iR3570 / iR4570 / iR2230 / / / iR3530 /

When the control panel power switch is turned on, the laser scanner starts to rotate; when the motor rotation reaches its target revolution, the machine turns on the laser unit. Thereafter, when the Start key is turned on, the machine generates the image request signal (PVREQ) on the printer side, and turns on the laser beam with reference to the generated signal.

A4, 1 Copy

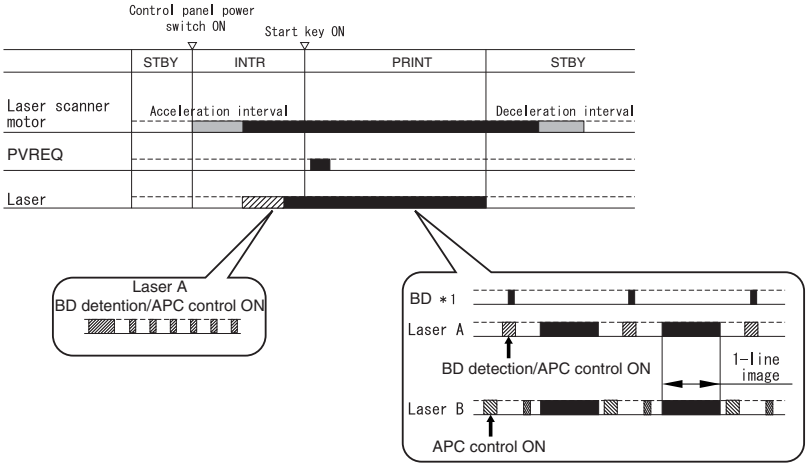

＊1: The BD signal is generated in reference to the light from laser A. The BD sensor of the BD PCB receives light from laser A but not light from laser B.

F-6-4

6.3 Various Controls

6.3.1 Controlling the Laser Activation Timing

6.3.1.1 Turning On and off the Laser Light

iR2270 / iR2870 / iR3570 / iR4570 / iR2230 / / / iR3530 /

The laser light is turned on and off according to the combination of laser control signals (CNT0/1/2) from the DC controller PCB.

T-6-7

Laser control signal			Laser status	
CNT2	CNT1	CNT0	Laser A	Laser B
0	1	0	ON (for APC control)	OFF
0	1	1	OFF	OFF
0	0	1	OFF	ON (for APC control)
0	1	1	OFF	OFF
1	1	1	Video signal input enabled	Video signal input enabled
0	1	1	OFF	OFF
0	0	1	OFF	ON (for APC control)
0	1	1	OFF	OFF

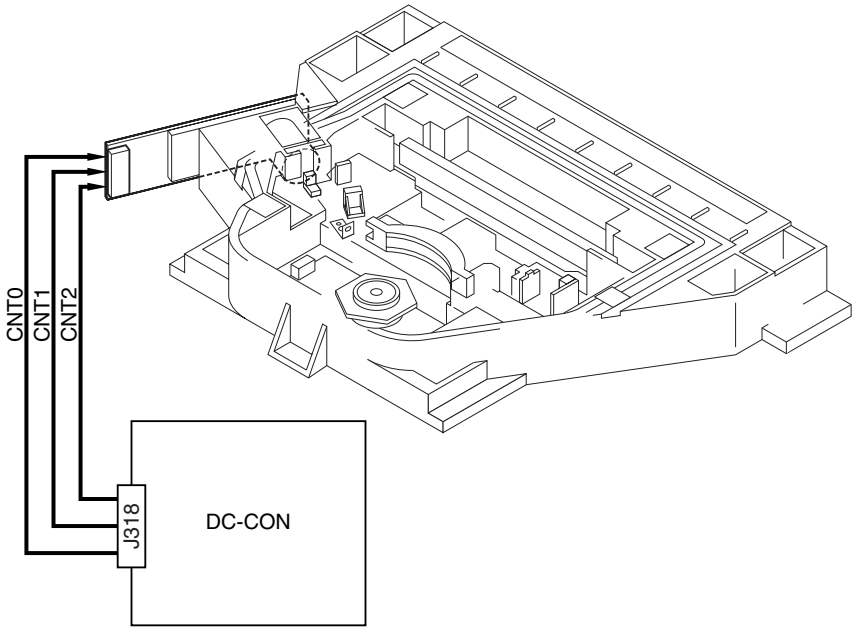

F-6-5

6.3.1.2 Main Scanning Synchronous Control

iR2270 / iR2870 / iR3570 / iR4570 / iR2230 / / / iR3530 /

The synchronous control in the main scanning direction is performed in the synch circuit based on the BD synch signal.
Using the BD signal generated based on the light from laser A, the DC controller PCB generates the BD synch signal for laser A and the BD synch signal for laser B.
The image data written to line memory is read out by the readout enable signal (RE_A, RE_B) generated based on the BD synch signal (BD_A, BD_B) for output to the laser driver PCB.

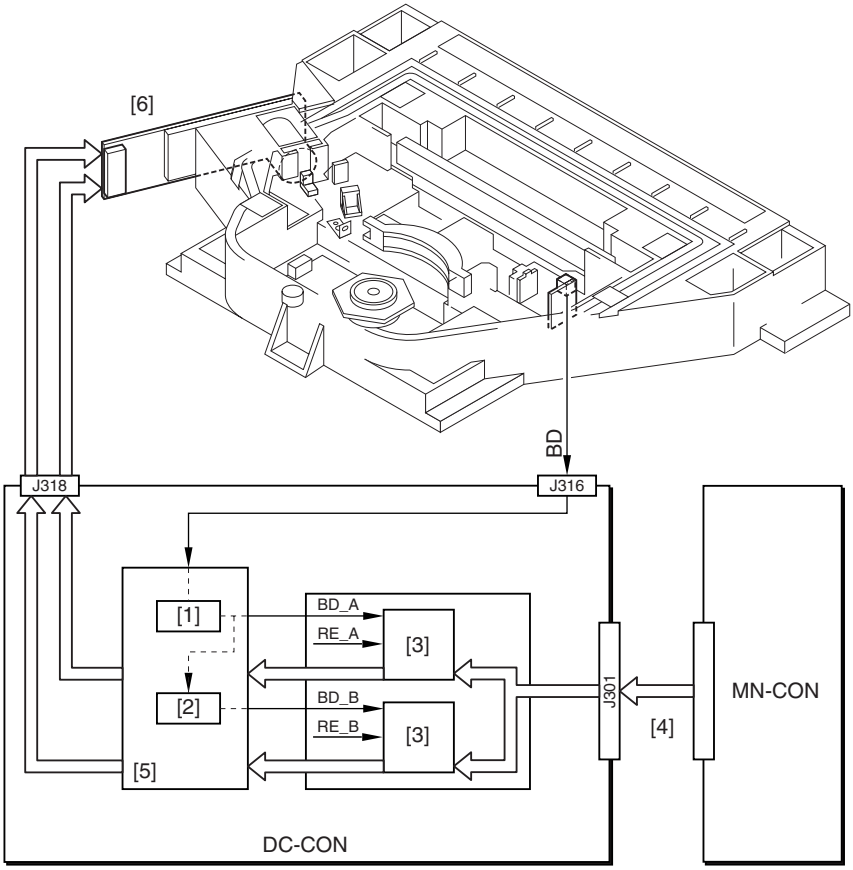

F-6-6

[1] Sync circuit
[2] Delay circuit
[3] Line memory
[4] VDO
[5] VDO signal processing block
[6] Laser driver PCB
BD_A/B : BD synch signal
RE_A/B : readout enable signal
Memo:

The BD sensor of the BD PCB receives light from laser A only, and is free of light from laser B, i.e., the BD signal is generated based on the light from laser A.

6.3.2 Controlling the Intensity of Laser Light

6.3.2.1 APC Control

iR2270 / iR2870 / iR3570 / iR4570 / iR2230 / / / iR3530 /

The laser light hitting the photodiode included in the laserdiode is monitored and is controlled so that it remains a specific level at all times.

6.3.3 Controlling the Laser Scanner Motor

6.3.3.1 Controlling the Laser Scanner Motor

iR2270 / iR2870 / iR3570 / iR4570 / iR2230 / / / iR3530 /

The laser scanner motor is controlled with reference to the laser scanner motor revolution signal (FG signal).
The revolution of the laser scanner motor is controlled by means of the acceleration signal (ACC signal) and the deceleration signal (DEC signal).

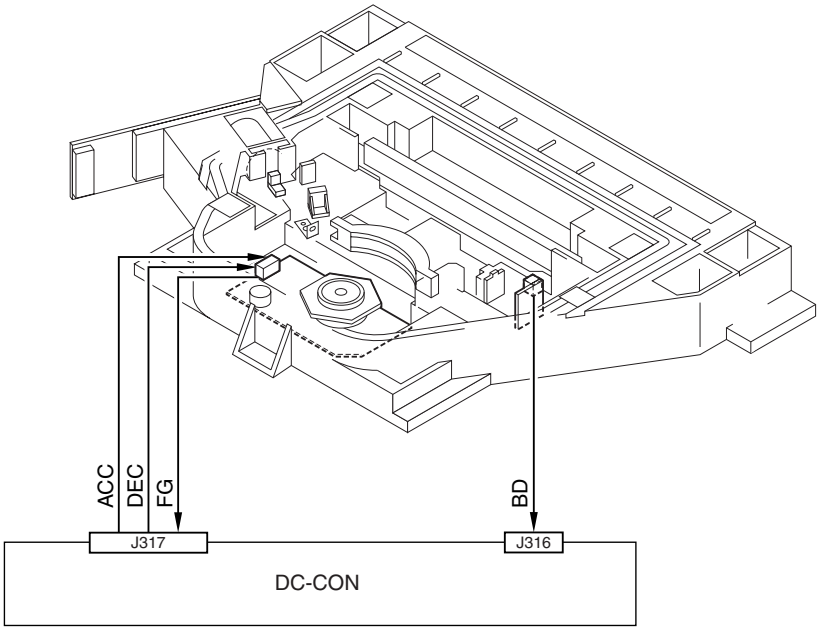

F-6-7

6.3.4 Controlling the Laser Shutter

6.3.4.1 Controlling the Laser Shutter

iR2270 / iR2870 / iR3570 / iR4570 / iR2230 / / / iR3530 /

When the right door is opened, the laser shutter link operating in conjunction with the cover causes the laser shutter to move down, thus blocking the path of the laser light. If the machine identifies the front cover or the right door as having been opened, it will turn off the laser scanner motor and the laser output.

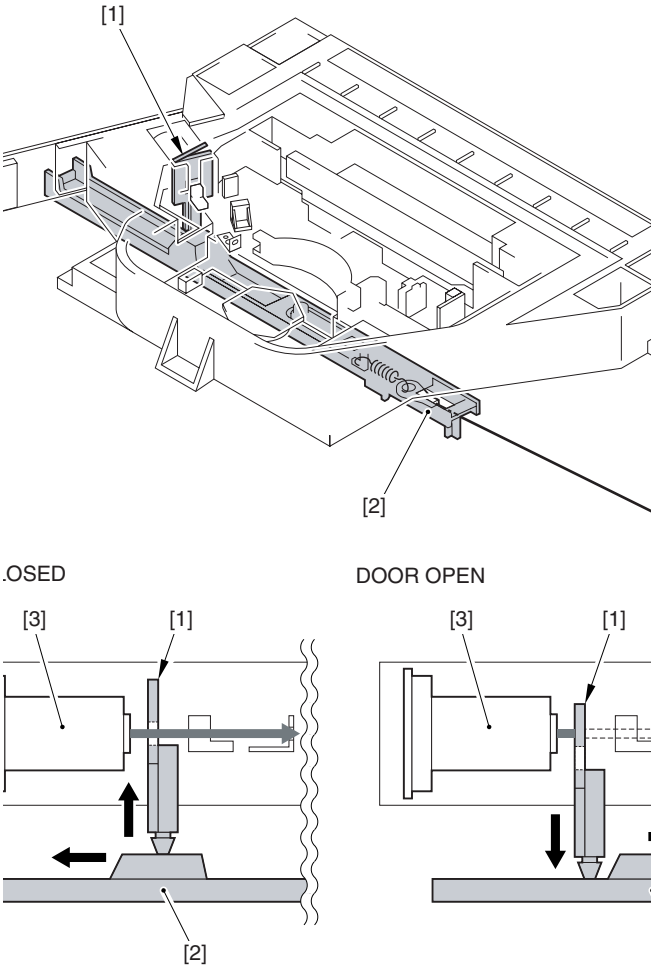

F-6-8

[1] Laser shutter
[2] Laser shutter link (operates in conjunction with front cover)
[3] Laser unit

6.4 Parts Replacement Procedure

6.4.1 Laser Scanner Unit

6.4.1.1 Removing the Front Cover Unit

iR2270 / iR2870 / iR3570 / iR4570 / / iR2270N / / iR2870N / / iR3570N / / iR4570N / iR2230 / / / iR3530 /

1) Open the front cover [1].

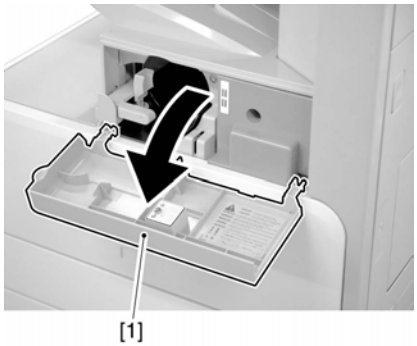

F-6-9

2) Remove the face cover rubber [1].
3) Remove the binding screw [2].
4) Remove the RS tightening screw [3].
5) Detach the front cover unit [4] by moving it in the direction of the arrow.

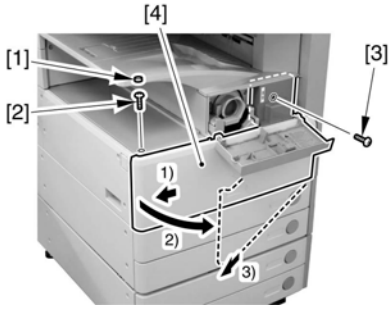

F-6-10

6.4.1.2 Removing the Left Cover

iR2270 / iR2870 / iR3570 / iR4570 / / iR2270N / / iR2870N / / iR3570N / / iR4570N / iR2230 / / / iR3530 /

1) Remove the 4 screws [1], and detach the left cover [2].

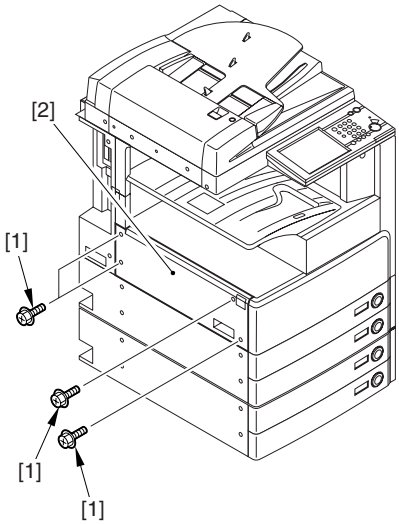

F-6-11

6.4.1.3 Removing the Laser Unit

iR2270 / iR2870 / iR3570 / iR4570 / / iR2270N / / iR2870N / / iR3570N / / iR4570N / iR2230 / / / iR3530 /

1) Open the 2 wire saddles [1], and disconnect the 2 connectors [2].

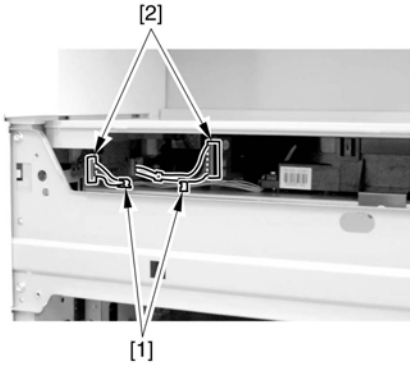

F-6-12

When you have disconnected the connector [1], be sure to take care so that it will not come into contact with the PCB that is mounted to the laser scanner unit. (The PCB is equipped with a laser intensity adjustment variable resistor. Contact with the PCB can change the adjustment setting.)
2) Open the wire saddle [1], and disconnect the connector [2].

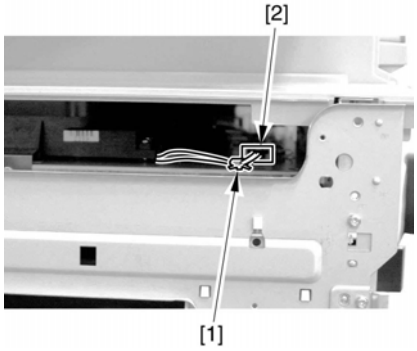

F-6-13

3) Remove the screw [1], and detach the fixing [2].

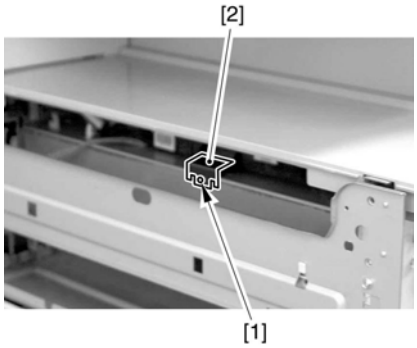

F-6-14

4) Lift the front of the laser unit [1], and slide it to the front.

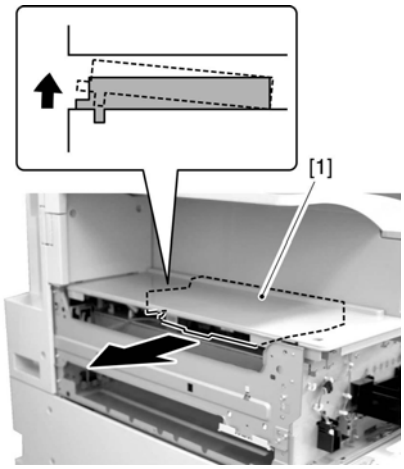

F-6-15

When sliding out the laser scanner unit, be sure to take care not to touch the PCB mounted to the laser scanner unit. (The PCB is equipped with a laser scanner intensity adjustment variable resistor, and contact with the PCB can change the adjustment setting.)

Chapter 7 Image Formation

Contents

7.1 Construction 7-1
7.1.1 Specifications of the Image Formation System 7-1
7.1.2 Major Components of the Image Formation System 7-1
7.2 Image Formation Process 7-2
7.2.1 Image Formation Process (outline) 7-2
7.2.2 Image Formation Process (image formation) 7-3
7.3 Basic Sequence 7-3
7.3.1 Sequence of Operation (initial rotation) 7-3
7.3.2 Sequence of Operation (initial rotation) 7-4
7.3.3 Sequence of Operation (copying) 7-4
7.3.4 Sequence of Operation (copying) 7-5
7.3.5 Sequence of Operation (last rotation) 7-5
7.3.6 Sequence of Operation (last rotation) 7-5
7.4 Image Stabilization Control 7-6
7.4.1 Overview 7-6
7.4.2 APVC Control 7-6
7.4.3 ATVC Control 7-6
7.5 Drum Unit 7-6
7.5.1 Charging Mechanism 7-6
7.5.1.1 Controlling the Primary Charging Bias 7-6
7.5.1.2 Primary Charging Roller Cleaning Mechanism 7-7
7.6 Drum Cleaner Unit 7-7
7.6.1 Photosensitive Drum Cleaning 7-7
7.7 Developing Unit 7-7
7.7.1 Controlling the Developing Bias 7-7
7.8 Toner Container 7-8
7.8.1 Overview 7-8
7.8.2 Route of Toner Supply 7-8
7.8.3 Controlling the Drive of the Toner Cartridge 7-9
7.8.4 Toner Supply Control 7-9
7.8.5 Recovery Sequence 7-10
7.8.6 Toner Level Detection 7-10
7.9 Transfer Unit 7-10
7.9.1 Outline of the Transfer Unit 7-10
7.9.1.1 Outline 7-10
7.9.2 Controlling the Transfer Bias 7-10
7.9.2.1 Transfer Roller Bias Control 7-10
7.9.3 Cleaning 7-11
7.9.3.1 Transfer Roller Cleaning Mechanism 7-11
7.9.4 Separation Mechanism 7-11
7.9.4.1 Controlling the Static Eliminator Bias 7-11
7.10 Transfer Mechanism 7-11
7.10.1 Transfer Guide Bias 7-11
7.10.1.1 Transfer Guide Bias Control 7-11
7.11 Photosensitive Drum Cleaning 7-11
7.11.1 Outline 7-11
7.11.2 Collection of Waste Toner 7-11
7.11.3 Checking the Waste Toner Box 7-11
7.12 Parts Replacement Procedure 7-12
7.12.1 Pre-Exposure Lamp 7-12

7.12.1.1 Removing the Front Cover Unit 7-12
7.12.1.2 Removing the Waste Toner Case 7-12
7.12.1.3 Removing the Toner Cartridge 7-12
7.12.1.4 Removing the Drum Unit 7-13
7.12.1.5 Removing the Developing Assembly 7-13
7.12.1.6 Removing the Upper Tray 7-14
7.12.1.7 Removing the Toner Cartridge Cover 7-15
7.12.1.8 Removing the Pre-Exposure Lamp 7-15
7.12.2 Drum Unit 7-15
7.12.2.1 Removing the Front Cover Unit 7-15
7.12.2.2 Removing the Waste Toner Case 7-15
7.12.2.3 Removing the Drum Unit 7-16
7.12.3 Hopper Assembly 7-16
7.12.3.1 Removing the Front Cover Unit 7-16
7.12.3.2 Removing the Waste Toner Case 7-17
7.12.3.3 Removing the Toner Cartridge 7-17
7.12.3.4 Removing the Drum Unit 7-17
7.12.3.5 Removing the Developing Assembly 7-18
7.12.3.6 Removing the Upper Tray 7-19
7.12.3.7 Removing the Toner Cartridge Cover 7-19
7.12.3.8 Removing the Pre-Exposure Lamp 7-20
7.12.3.9 Removing the Left Cover 7-20
7.12.3.10 Removing the Laser Unit 7-20
7.12.3.11 Removing the Hopper Assembly 7-21
7.12.4 Sub Hopper 7-21
7.12.4.1 Removing the Front Cover Unit 7-21
7.12.4.2 Removing the Waste Toner Case 7-22
7.12.4.3 Removing the Toner Cartridge 7-22
7.12.4.4 Removing the Drum Unit 7-22
7.12.4.5 Removing the Developing Assembly 7-23
7.12.4.6 Removing the Upper Tray 7-24
7.12.4.7 Removing the Toner Cartridge Cover 7-24
7.12.4.8 Removing the Pre-Exposure Lamp 7-25
7.12.4.9 Removing the Left Cover 7-25
7.12.4.10 Removing the Laser Unit 7-25
7.12.4.11 Removing the Hopper Assembly 7-26
7.12.4.12 Removing the Toner Feedscrew Motor 7-26
7.12.4.13 Removing the Sub Hopper 7-27
7.12.5 Developing Assembly 7-28
7.12.5.1 Removing the Front Cover Unit 7-28
7.12.5.2 Removing the Waste Toner Case 7-28
7.12.5.3 Removing the Developing Assembly 7-28
7.12.6 Developing Cylinder 7-29
7.12.6.1 Detaching the Developing Cylinder 7-29
7.12.7 Transfer Charging Roller 7-31
7.12.7.1 Removing the Transfer Roller 7-31
7.12.8 Waste Toner Box 7-31
7.12.8.1 Removing the Front Cover Unit 7-31
7.12.8.2 Removing the Waste Toner Case 7-32
7.12.9 Toner Level Sensor 7-32
7.12.9.1 Removing the Front Cover Unit 7-32
7.12.9.2 Removing the Waste Toner Case 7-32
7.12.9.3 Removing the Toner Cartridge 7-33
7.12.9.4 Removing the Drum Unit 7-33
7.12.9.5 Removing the Developing Assembly 7-34
7.12.9.6 Removing the Upper Tray 7-35
7.12.9.7 Removing the Toner Cartridge Cover 7-35
7.12.9.8 Removing the Pre-Exposure Lamp 7-35
7.12.9.9 Removing the Left Cover 7-35
7.12.9.10 Removing the Laser Unit 7-36
7.12.9.11 Removing the Hopper Assembly 7-36

7.12.9.12 Removing the Toner Level Sensor 7-37
7.12.10 Toner Feedscrew Motor 7-37
7.12.10.1 Removing the Front Cover Unit 7-37
7.12.10.2 Removing the Waste Toner Case 7-37
7.12.10.3 Removing the Toner Cartridge 7-38
7.12.10.4 Removing the Drum Unit 7-38
7.12.10.5 Removing the Developing Assembly 7-39
7.12.10.6 Removing the Upper Tray 7-40
7.12.10.7 Removing the Toner Cartridge Cover 7-40
7.12.10.8 Removing the Pre-Exposure Lamp 7-40
7.12.10.9 Removing the Left Cover 7-41
7.12.10.10 Removing the Laser Unit 7-41
7.12.10.11 Removing the Hopper Assembly 7-41
7.12.10.12 Removing the Toner Feedscrew Motor 7-42
7.12.11 Static Charge Eliminator 7-42
7.12.11.1 Removing the Static Eliminator 7-42

7.1 Construction

7.1.1 Specifications of the Image Formation System

iR2270 / iR2870 / iR3570 / iR4570 / / iR2270N / / iR2870N / / iR3570N / / iR4570N / iR2230 / / / iR3530 /

Drum Unit Specifications T-7-1

Photosensitive drum	
Drum type	OPC
Drum diameter	30 mm
Cleaning mechanism	by cleaning blade
Process speed	230 mm/sec (iR3570/4570/3530) 137 mm/sec (iR2270/2870/2230/2830)
Primary charging	
Charging method	by roller (AC + DC)
Charging roller diameter	16 mm
Cleaning mechanism	by brush roller (reciprocating mechanism)
Transfer charging	
Charging method	by roller (DC)
Charging roller diameter	16 mm

Pre-Exposure Unit Specifications T-7-2

LED	12 pc.
Timing of light emission	in response to drum rotation

Developing Unit Specifications T-7-3

Developing cylinder diameter	20 mm
Development method	by dry, single-component toner projection method (application of AC + DC)
Toner	single-component insulating magnetic toner
Toner level detection	by toner level sensor (inside sub hopper and developing assembly)

Toner Cartridge Specifications T-7-4

Toner level detection	none
Toner variable resistor	1220 g (iR3570/4570/3530) 1060 g (iR2270/2870/2230/2830)

Others T-7-5

separation method	by static eliminator + curvature
Waste toner	collection to waste toner case

7.1.2 Major Components of the Image Formation System

iR2270 / iR2870 / iR3570 / iR4570 / / iR2270N / / iR2870N / / iR3570N / / iR4570N / iR2230 / / / iR3530 /

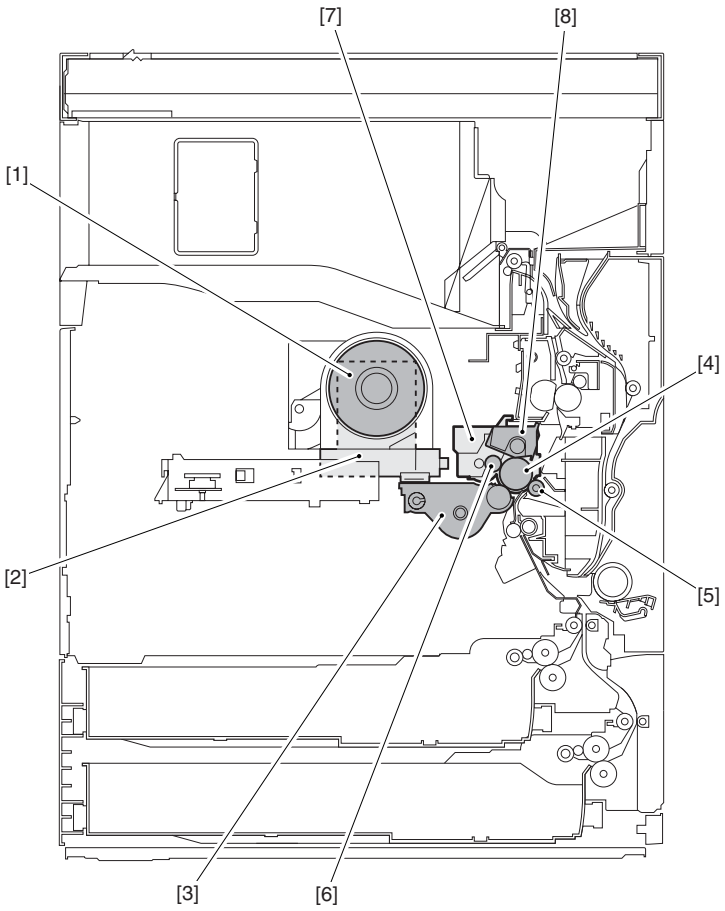

F-7-1

[1] Toner cartridge
[2] Sub hopper
[3] Developing unit
[4] Photosensitive drum
[5] Transfer roller
[6] Primary charging roller
[7] Drum unit
[8] Drum cleaning unit

7.2 Image Formation Process

7.2.1 Image Formation Process (outline)

iR2270 / iR2870 / iR3570 / iR4570 / / iR2270N / / iR2870N / / iR3570N / / iR4570N / iR2230 / / / iR3530 /

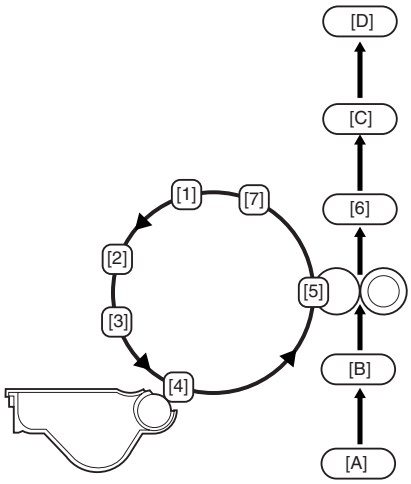

F-7-2

T-7-6

Item	Description
[1]Pre-exposure	removes residual charges from the drum.

Item	Description
[2]Primary charging	charges the surface of the photosensitive drum to a uniform negative potential.
[3]Laser exposure	forms a latent static image on the drum.
[4]Development	forms a visible image on the drum.
[5]Transfer	transfers images from the drum to paper.
[6]Separation	separates paper from the drum.
[7]Drum cleaning	removes toner from the drum.

[A]Pickup
[B]Registration
[C]Fixing
[D]Delivery

7.2.2 Image Formation Process (image formation)

iR2270 / iR2870 / iR3570 / iR4570 / / iR2270N / / iR2870N / / iR3570N / / iR4570N / iR2230 / / / iR3530 /

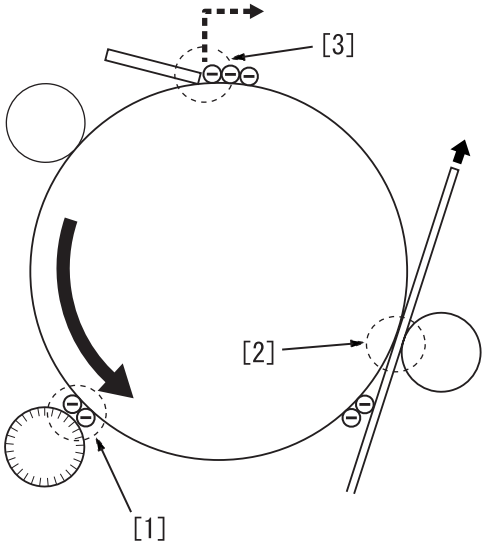

F-7-3

[1] The difference in potential between the drum surface and the developing sleeve causes toner to adhere to the latent static image on the drum, turning the image into a visible image.
[2] The bias voltage applied to the transfer roller causes the toner to move from the drum to paper.
[3] The cleaning blade in contact with the drum scrapes off the residual toner from the drum.

7.3 Basic Sequence

7.3.1 Sequence of Operation (initial rotation)

iR2270 / iR2870 / / iR2270N / / iR2870N / iR2230 / / / iR3530 /

The sequence of operation of initial rotation is as follows:
Pickup from the Cassette

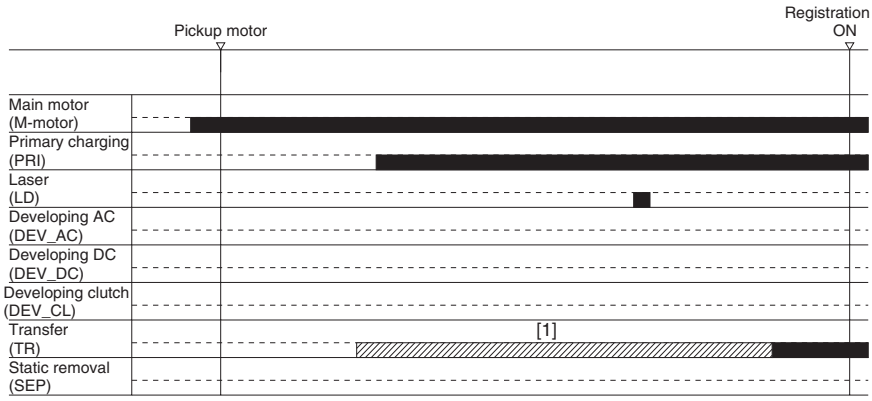

F-7-4

Pickup from the Manual Feeder

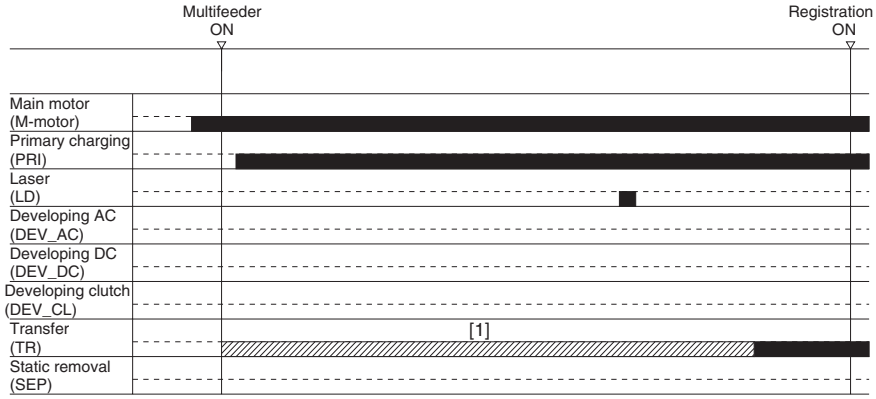

F-7-5

In [1] above, a cleaning bias (-2600 V) is applied.

7.3.2 Sequence of Operation (initial rotation)

iR3570 / iR4570 / / iR3570N / / iR4570N / iR2230 / / / iR3530 /

The following is the sequence of operation of initial rotation:
Pickup from the Cassette

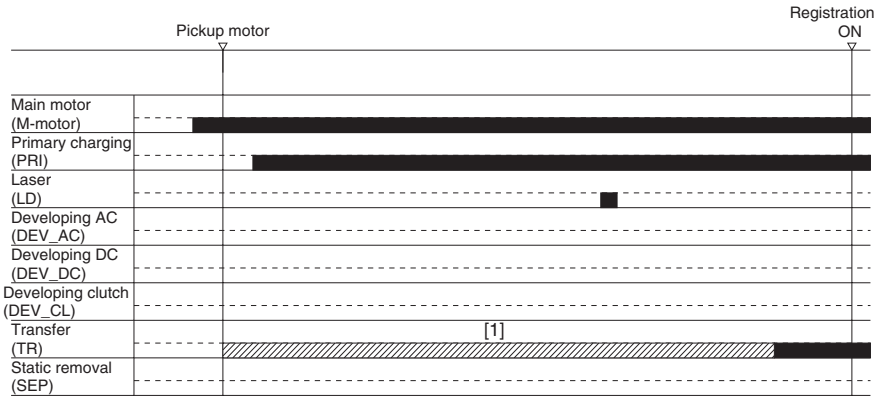

F-7-6

Pickup from the Manual Feeder

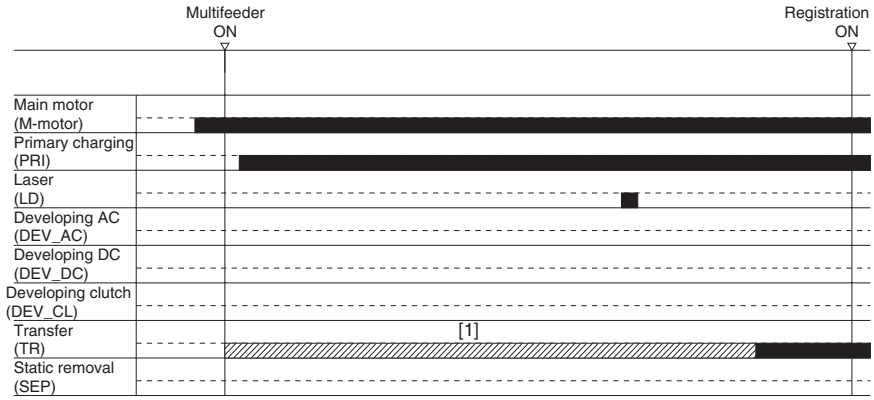

F-7-7

In [1] above, a cleaning bias (-2600 V) is applied.

7.3.3 Sequence of Operation (copying)

iR2270 / iR2870 / / iR2270N / / iR2870N / iR2230 / / / iR3530 /

The sequence of operation during copying is as follows:

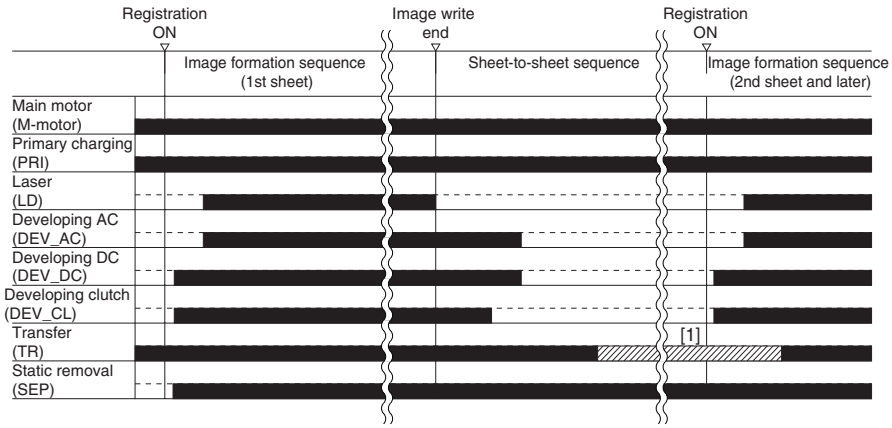

F-7-8

In [1] above, a cleaning bias (-2600 V) is applied.

7.3.4 Sequence of Operation (copying)

iR3570 / iR4570 / / iR3570N / / iR4570N / iR2230 / / / iR3530 /

The sequence of operation during copying is as follows:

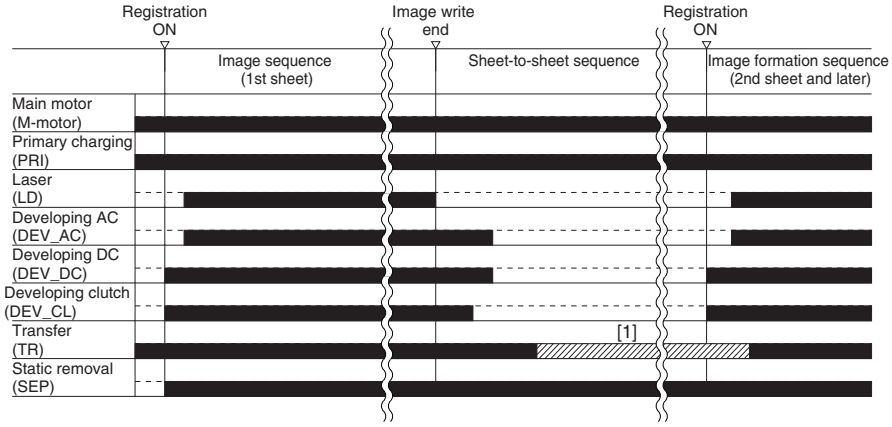

F-7-9

In [1] above, a cleaning bias (-2600 V) is applied.

7.3.5 Sequence of Operation (last rotation)

iR2270 / iR2870 / / iR2270N / / iR2870N / iR2230 / / / iR3530 /

The sequence of operation of last rotation is as follows:

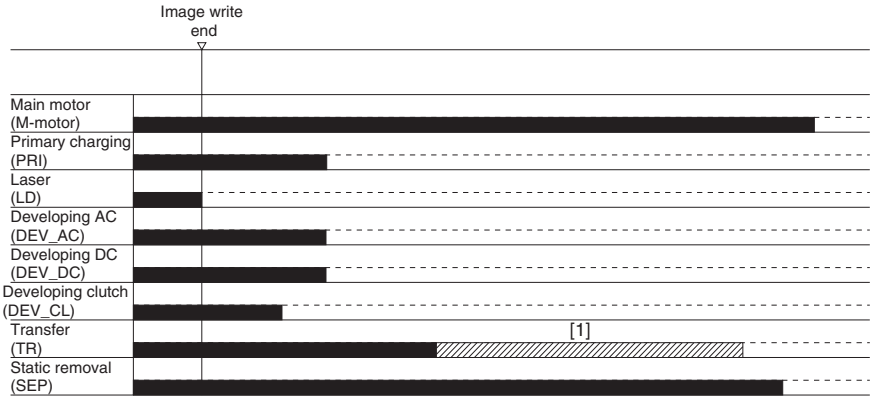

F-7-10

In [1] above, a cleaning bias (-2600 V) is applied.

7.3.6 Sequence of Operation (last rotation)

iR3570 / iR4570 / / iR3570N / / iR4570N / iR2230 / / / iR3530 /

The sequence of operation of last rotation is as follows:

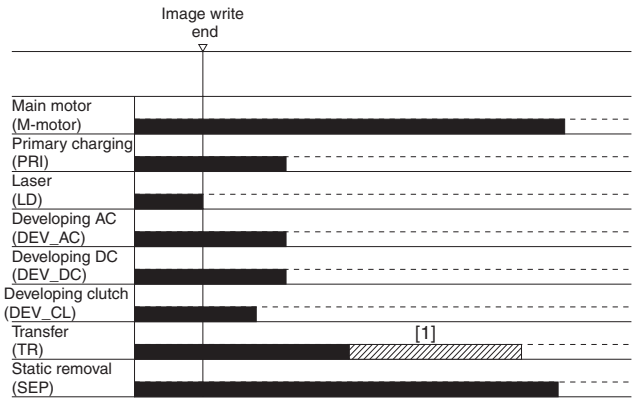

F-7-11

In [1] above, a cleaning bias (-2600 V) is applied.

7.4 Image Stabilization Control

7.4.1 Overview

iR2270 / iR2870 / iR3570 / iR4570 / / iR2270N / / iR2870N / / iR3570N / / iR4570N / iR2230 / / / iR3530 /

At times, changes in the environment or wear on the machine can cause its image output to become unstable. To make sure that its output will remain stable at all times, the machine uses the following control mechanisms:

T-7-7

[1] Drum film thickness detection control	corrects the development contrast.
[2] Developing contrast control	determines the appropriate primary charging DC bias and developing DC bias.
[3] ATVC control	corrects the transfer bias.

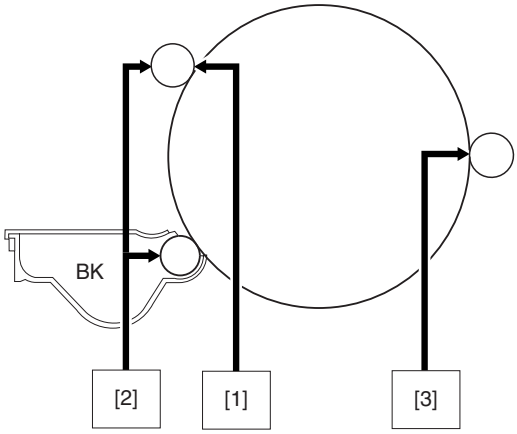

F-7-12

7.4.2 APVC Control

iR2270 / iR2870 / iR3570 / iR4570 / / iR2270N / / iR2870N / / iR3570N / / iR4570N / iR2230 / / / iR3530 /

The term APVC stands for "auto primary voltage control," and it is a mechanism used to control the primary charging application voltage (DC component) to suit the film thickness of the machine's photosensitive drum. APVC is performed every 500 sheets while the machine is in operation. It is forcibly performed when the drum unit is replaced.

7.4.3 ATVC Control

iR2270 / iR2870 / iR3570 / iR4570 / / iR2270N / / iR2870N / / iR3570N / / iR4570N / iR2230 / / / iR3530 /

The machine is provided with a constant current control mechanism that can be enabled or disabled in service mode: COPIER>OPTION>BODY>TRANS-SW.

7.5 Drum Unit

7.5.1 Charging Mechanism

7.5.1.1 Controlling the Primary Charging Bias

iR2270 / iR2870 / iR3570 / iR4570 / / iR2270N / / iR2870N / / iR3570N / / iR4570N / iR2230 / / / iR3530 /

Primary Charging Bias

T-7-8

AC bias	2700 Vp-p (max.)

DC bias	-450 V to -850 V

These AC and DC biases are applied between sheets while an image is being formed (until the end of the ongoing job).

7.5.1.2 Primary Charging Roller Cleaning Mechanism

iR2270 / iR2870 / iR3570 / iR4570 / / iR2270N / / iR2870N / / iR3570N / / iR4570N / iR2230 / / / iR3530 /

The machine uses a brush [3] to clean the primary charging roller [2], which remains in contact with the photosensitive drum [1]. The brush has a reciprocating mechanism and is driven by a cam [4], operating while the photosensitive drum is being driven.

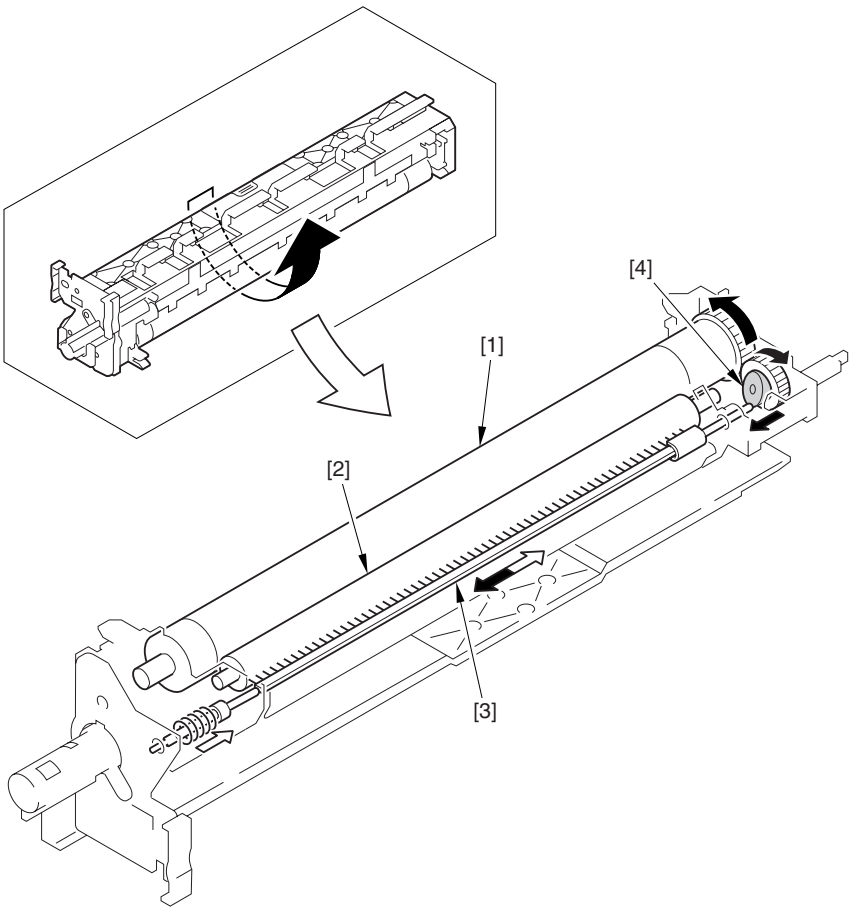

F-7-13

7.6 Drum Cleaner Unit

7.6.1 Photosensitive Drum Cleaning

iR2270 / iR2870 / iR3570 / iR4570 / / iR2270N / / iR2870N / / iR3570N / / iR4570N / iR2230 / / / iR3530 /

The cleaning blade is kept in contact with the surface of the photosensitive drum. It serves to scrape off the residual toner left behind from transfer to paper for collection in the waste toner box.

7.7 Developing Unit

7.7.1 Controlling the Developing Bias

iR2270 / iR2870 / iR3570 / iR4570 / / iR2270N / / iR2870N / / iR3570N / / iR4570N / iR2230 / / / iR3530 /

Developing Bias T-7-9

AC bias	800 Vp-p
DC bias	-450 V to -650 V

Both these AC and DC biases are applied while an image is being formed, but are not applied between sheets.

7.8 Toner Container

7.8.1 Overview

iR2270 / iR2870 / iR3570 / iR4570 / / iR2270N / / iR2870N / / iR3570N / / iR4570N / iR2230 / / / iR3530 /

The toner cartridge is constructed as shown in the following figure. The cartridge is filled with 1-component insulating magnetic toner (if iR3570/4570, 1220 g; if iR2270/2870, 1060 g). When the sub hopper requests a supply of toner, the cartridge itself rotates to feed toner. The machine's toner cartridge serves as a hopper (as it is found in past models).
iR3570 / iR4570

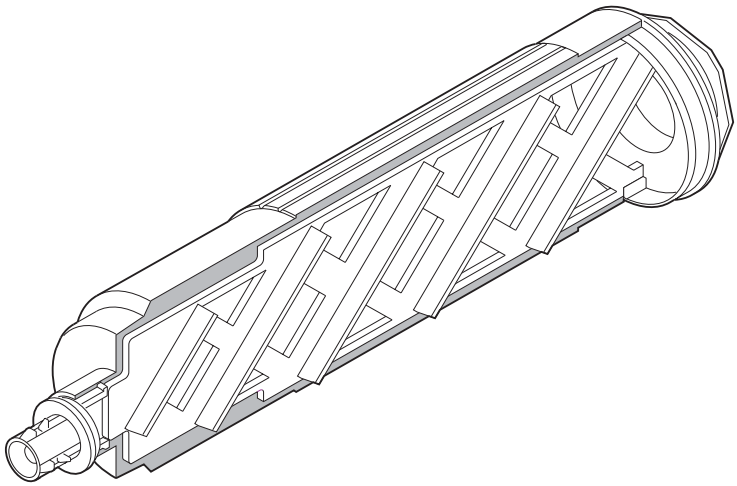

F-7-14

iR2270 / iR2870

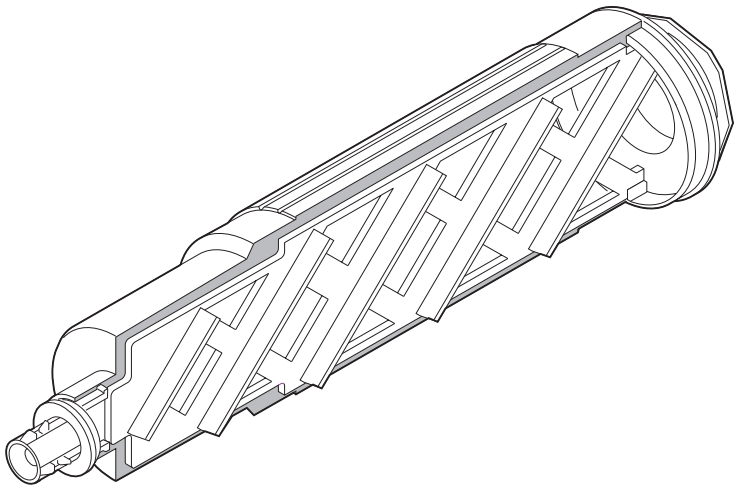

F-7-15

Points to Note on Handing the Toner Cartridge

1. Care should be taken not to bump the toner stop [1] against the covers or the like when and after removing the toner cartridge. Since the toner stop comes off easily, toner scattering may be resulted if it comes off by accident.
2. Keep the toner cartridge horizontal after removing. Since the toner stop [1] comes off easily as mentioned above, toner scattering may be resulted if the toner cartridge is placed with the toner stop side down.

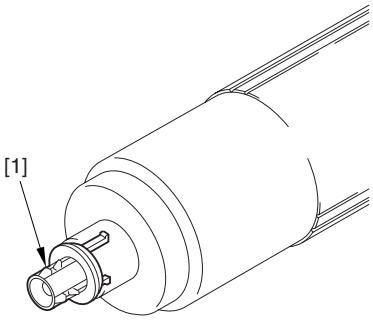

F-7-16

7.8.2 Route of Toner Supply

iR2270 / iR2870 / iR3570 / iR4570 / / iR2270N / / iR2870N / / iR3570N / / iR4570N / iR2230 / / / iR3530 /

When the user fits the toner cartridge [1] in place, toner is temporarily stored in the sub hopper [2], inside which is a sensor that makes sure that the amount of toner remains at a specific level at all times. When the developing assembly [4] requests a supply of toner, the machine rotates the feedscrew [3] to move toner from the

sub hopper to the developing assembly.
The machine's toner cartridge serves as a hopper (as found in past models).

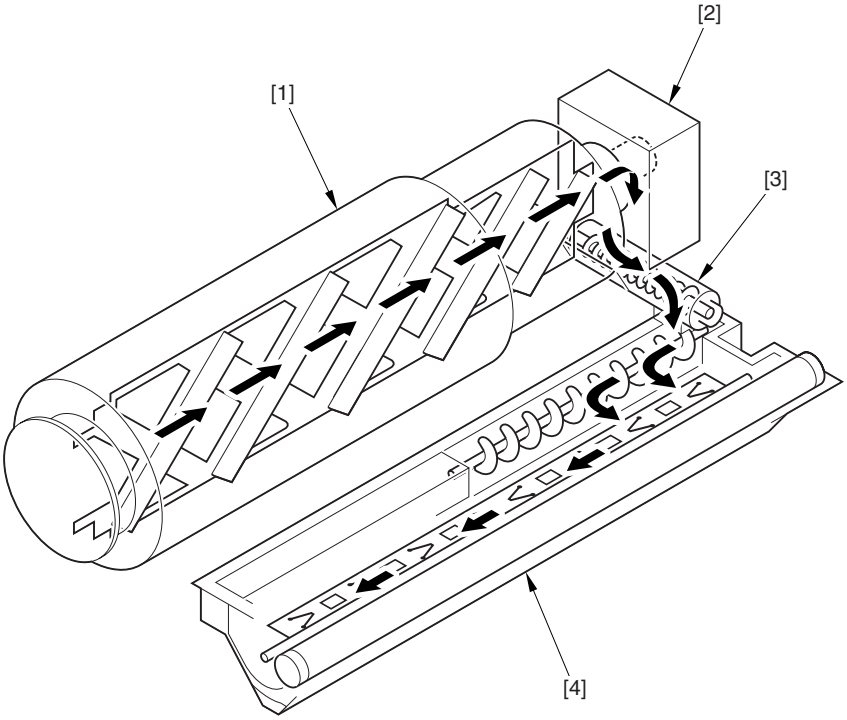

F-7-17

7.8.3 Controlling the Drive of the Toner Cartridge

iR2270 / iR2870 / iR3570 / iR4570 / / iR2270N / / iR2870N / / iR3570N / / iR4570N / iR2230 / / / iR3530 /

When a request is made for a supply of toner, the toner cartridge drive motor rotates in the direction shown in the following figure; its drive is transmitted from the drive motor to the toner cartridge, thus rotating the toner cartridge.

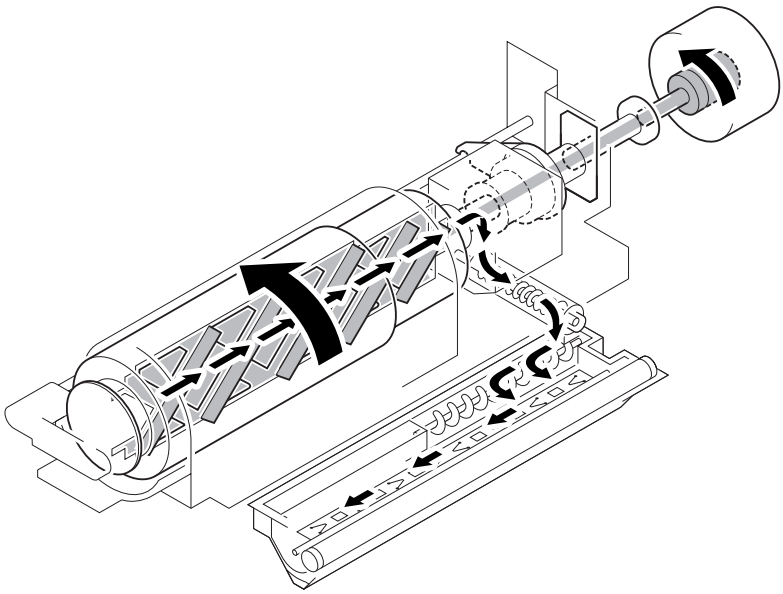

F-7-18

7.8.4 Toner Supply Control

iR2270 / iR2870 / iR3570 / iR4570 / / iR2270N / / iR2870N / / iR3570N / / iR4570N / iR2230 / / / iR3530 /

Supply of Toner from the Toner Bottle to the Sub Hopper

If the "absence of toner inside the sub hopper" is detected while the main motor is rotating, the bottle motor is rotated intermittently (on for 3 sec, off for 2 sec), and the length of time during which the absence is detected is checked using a counter that increases its count for each on-off cycle. When the count reaches 20 (about 100 sec), the machine will assume that the sub hopper has become empty, and will indicate the Add Toner message on its control panel. The counter is reset when the presence of toner inside the sub hopper is detected during any on-off cycle.

If the "absence of toner inside the developing assembly" is detected while the main motor is rotating and the developing clutch is on, the machine rotates the sub hopper feedscrew motor intermittently (on for 1 sec, off for 1 sec). The rotation is monitored by a counter that increases its count when the developing sensor state is off during a single on-off cycle; when its reading reaches 20 (about 40 sec), the machine will assume that its developing assembly is more or less empty (i.e., there is a possibility of the ongoing generating black prints if printing continues), and will issue a No Toner error, suspending image formation operation. The counter is reset when the presence of toner is detected inside the developing assembly.

E020-0000
If the absence of toner is detected by the developing assembly toner level sensor and the presence of toner is detected by the hopper toner level sensor, the route of supply from the sub hopper to the developing assembly may be clogged or the output of these toner sensors may be faulty.
This error code will be indicated when the soft counter reaches 194 (about 388 sec). The counter is designed to increase its count when the hopper sensor level is on during a single on-off cycle while toner is being supplied from the sub hopper to the developing assembly.

7.8.5 Recovery Sequence

iR2270 / iR2870 / iR3570 / iR4570 / / iR2270N / / iR2870N / / iR3570N / / iR4570N / iR2230 / / / iR3530 /

The machine is not equipped with a mechanism to detect the replacement of its toner cartridge, but is designed to execute toner recovery sequence in response to the following, assuming that the cartridge has been replaced:
1. the front cover has been opened and closed after the machine has detected the absence of toner inside the toner cartridge and the developing assembly.
2. the machine has been turned off and then on after it has detected the absence of toner inside the toner cartridge and the developing assembly.
The machine's recovery sequence is as follows:
1. the machine rotates the toner cartridge motor. (intermittently by rotating it for 3 sec and stopping it for 2 sec)
2. if the toner level sensor inside the sub hopper detects the "presence of toner," the machine stops the recovery sequence.
3. after repeating the foregoing intermittent operation 20 times and if the toner level sensor inside the sub hopper still does not detect the "presence of toner," the machine will assumes that the toner cartridge has not been replaced and cause the toner cartridge motor to stop.

7.8.6 Toner Level Detection

iR2270 / iR2870 / iR3570 / iR4570 / / iR2270N / / iR2870N / / iR3570N / / iR4570N / iR2230 / / / iR3530 /

Detecting the Level of Toner Inside the Sub Hopper
The machine checks the level of the toner sensor located inside the sub hopper every 100 msec, and will assume the presence of toner inside the sub hopper if the sensor goes on twice or more continuously (200 msec or more).
If the machine detects the absence of toner 100 times or more (10 sc or more) as the result of its check on the sensor level made every 100 msec, the machine will assume that there is no toner inside the sub hopper.
The machine executes the foregoing detection at all times regardless of the state (on or off) of the main motor and the developing clutch.
Detecting the Level of Toner Inside the Developing Assembly
1. The machine samples the output of the toner level sensor located inside the developing assembly every 100 msec (only if the developing clutch is on).
2. The machine uses a period of 1.5 sec (15 times; cumulative sampling of periods when the clutch is on) as the unit of measurement: if the presence of toner is detected 3 times or more, it will assume that there is toner inside the developing assembly; if the presence of toner is detected less than 3 times, on the other hand, it will assume that there is no toner inside the developing assembly.
However, in the case of the iR3570/iR4570 Series machines, the drive of the main motor is controlled to 2 different speeds, and the toner inside the developing assembly is driven by the main motor (using a clutch), requiring a switchover of methods of detection as follows:
Normal Speed Mode
The machine uses a period of 1.5 sec (25 times; cumulative sampling of periods when the clutch is on) as the unit of measurement: if the presence of toner is detected 3 times or more, it will assume that there is toner inside the developing assembly.
Low-Speed Mode
The machine uses a period of 2.5 sec (42 times; cumulative sampling of periods when the clutch is on) as the unit of measurement: if it detects the presence of toner 5 times or more, it will assume that there is toner inside the developing assembly.
The machine converts the number of samplings and the number of times toner detection has been executed when switching over methods of detection. (The conversion is based on the speed-to-amount relationship.)

7.9 Transfer Unit

7.9.1 Outline of the Transfer Unit

7.9.1.1 Outline

iR2270 / iR2870 / iR3570 / iR4570 / / iR2270N / / iR2870N / / iR3570N / / iR4570N / iR2230 / / / iR3530 /

The transfer unit [1] consists of the transfer roller and the static eliminator.
The transfer roller rotates in connection with the photosensitive drum.
Bias is applied to the static eliminator so that sheets can be separated from the drum.

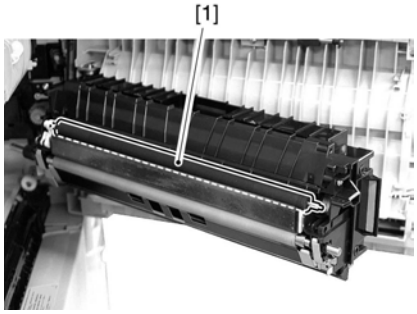

F-7-19

7.9.2 Controlling the Transfer Bias

7.9.2.1 Transfer Roller Bias Control

iR2270 / iR2870 / iR3570 / iR4570 / / iR2270N / / iR2870N / / iR3570N / / iR4570N / iR2230 / / / iR3530 /

The machine changes the output depending on the site environment (absolute moisture content), paper type, paper width, and source of paper.

Environment: 5 settings according to absolute moisture content
Paper type: plain paper, envelope, heavy paper, tracing paper, transparency, bond paper, label sheet
Paper width: size boundaries as defined by 2 points
Source of paper: if from cassette (including pedestal); if from multi-feeder, i.e., 1st side (half-speed), 2nd side (half-speed)
Transfer bias
Transfer bias: 1000 to 6000 V

Transfer bias for cleaning: -2600 V

The transfer bias is used at time of image formation, while a voltage of a specific level is applied between sheets for cleaning of the transfer roller.

7.9.3 Cleaning

7.9.3.1 Transfer Roller Cleaning Mechanism

iR2270 / iR2870 / iR3570 / iR4570 / / iR2270N / / iR2870N / / iR3570N / / iR4570N / iR2230 / / / iR3530 /

The machine uses the transfer roller cleaning mechanism to return the toner sticking to the transfer roller back to the photosensitive drum by applying a cleaning bias to the roller.
Once the toner reaches the drum, it is scraped by the photosensitive drum cleaning blade for collection in the waste toner box.

7.9.4 Separation Mechanism

7.9.4.1 Controlling the Static Eliminator Bias

iR2270 / iR2870 / iR3570 / iR4570 / / iR2270N / / iR2870N / / iR3570N / / iR4570N / iR2230 / / / iR3530 /

Static Eliminator Bias
1st side: -2300 V
2nd side: -3000 V

A DC bias is applied between sheets while an image is being formed. (It is applied until the ongoing job is over.)

7.10 Transfer Mechanism

7.10.1 Transfer Guide Bias

7.10.1.1 Transfer Guide Bias Control

iR2270 / iR2870 / iR3570 / iR4570 / / iR2270N / / iR2870N / / iR3570N / / iR4570N / iR2230 / / / iR3530 /

To prevent soiling of the transfer guide with toner or the photosensitive drum with toner images, the following transfer guide bias is applied to the transfer guide. The surface of the transfer guide is covered with an insulating sheet.
Transfer guide bias
1st side: -570 V
2nd side: -740 V

7.11 Photosensitive Drum Cleaning

7.11.1 Outline

iR2270 / iR2870 / iR3570 / iR4570 / / iR2270N / / iR2870N / / iR3570N / / iR4570N / iR2230 / / / iR3530 /

The photosensitive drum cleaning mechanism uses the photosensitive drum cleaning blade to scrape off the residual toner left behind from transfer; the toner thus collected is moved to the waste toner box.

7.11.2 Collection of Waste Toner

iR2270 / iR2870 / iR3570 / iR4570 / / iR2270N / / iR2870N / / iR3570N / / iR4570N / iR2230 / / / iR3530 /

The waste toner scraped off by the cleaning blade is moved by the waste toner feedscrew to the waste toner box found at the front of the machine. The waste toner feedscrew is operated by the drive from the drum flange.

7.11.3 Checking the Waste Toner Box

iR2270 / iR2870 / iR3570 / iR4570 / / iR2270N / / iR2870N / / iR3570N / / iR4570N / iR2230 / / / iR3530 /

To prevent leakage of waste toner from the waste toner box or to prevent overloading the waste toner feedscrew, the machine is equipped with a waste toner detection mechanism. The waste toner box can hold about 2043 cc of toner, and the machine identifies the waste toner box as being full when there is about 1766 cc of toner or when the toner comes to weigh about 1050 g.
When the weight of waste toner increases, the waste toner case itself lowers on its own, thus causing the machine to assume that the case has become full.

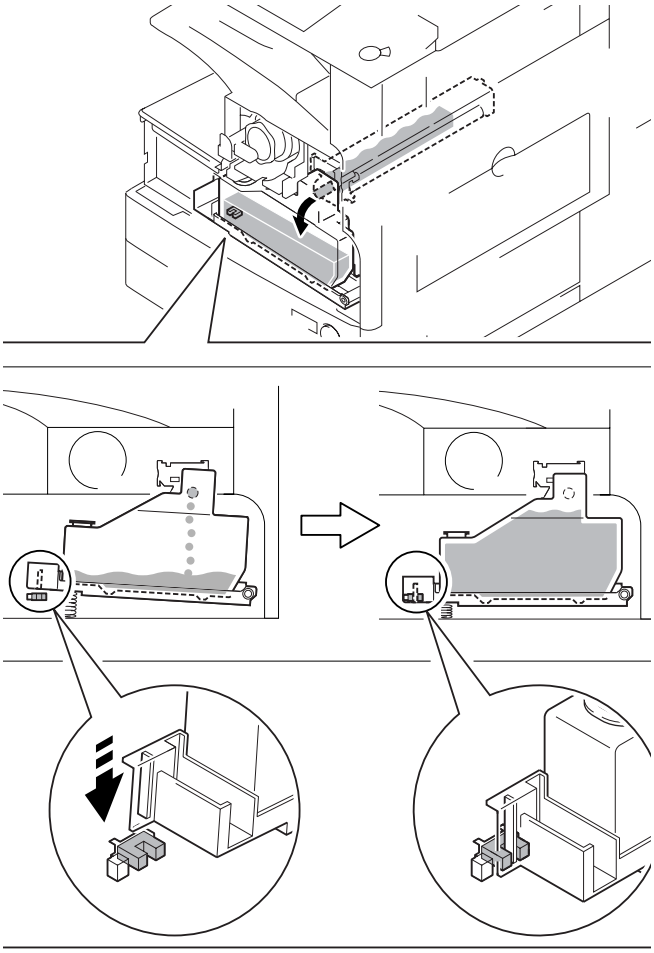

F-7-20

E190-0000
When the machine identifies the waste toner full sensor as being continuously on for 2000 sheets, it will indicate a warning; if it then detects the activation of the sensor for 100 sheets continuously, it will indicate 'E190-000'. (The count is increased coinciding with delivery.)

7.12 Parts Replacement Procedure

7.12.1 Pre-Exposure Lamp

7.12.1.1 Removing the Front Cover Unit

iR2270 / iR2870 / iR3570 / iR4570 / / iR2270N / / iR2870N / / iR3570N / / iR4570N / iR2230 / / / iR3530 /

1) Open the front cover [1].

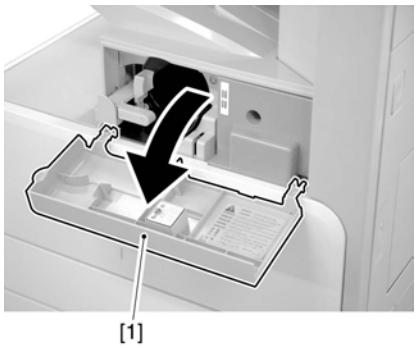

F-7-21

2) Remove the face cover rubber [1].
3) Remove the binding screw [2].
4) Remove the RS tightening screw [3].
5) Detach the front cover unit [4] by moving it in the direction of the arrow.

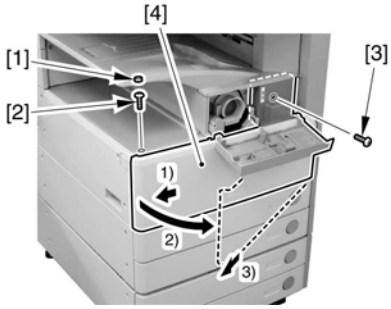

F-7-22

7.12.1.2 Removing the Waste Toner Case

iR2270 / iR2870 / iR3570 / iR4570 / / iR2270N / / iR2870N / / iR3570N / / iR4570N / iR2230 / / / iR3530 /

1) Remove the waste toner case [1].

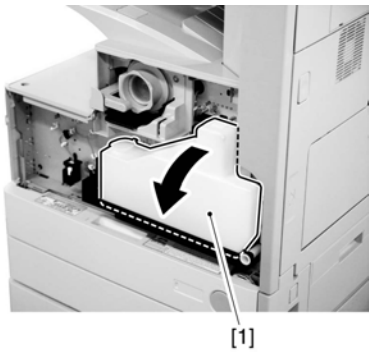

F-7-23

Point to note after attaching the waste toner receptacle
After attaching the waste toner receptacle, move the waste toner full detection lever [1] up and down to make sure that the lever is moved smoothly. Faulty detection may be resulted if the lever is caught in something and is not moved smoothly.

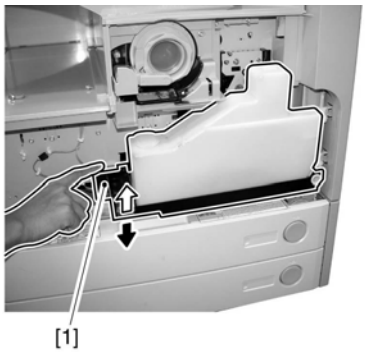

F-7-24

7.12.1.3 Removing the Toner Cartridge

iR2270 / iR2870 / iR3570 / iR4570 / / iR2270N / / iR2870N / / iR3570N / / iR4570N / iR2230 / / / iR3530 /

1) Shift up the lever [1].

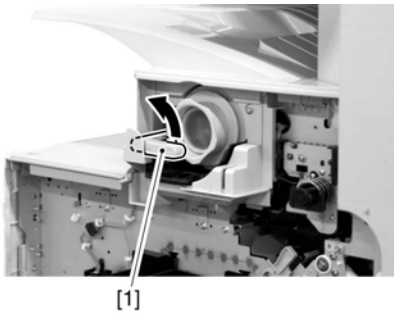

F-7-25

2) Remove the toner cartridge [1].

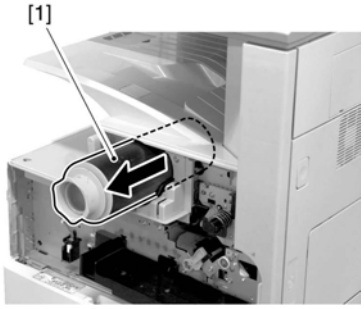

F-7-26

Points to Note on Handing the Toner Cartridge

1. Care should be taken not to bump the toner stop [1] against the covers or the like when and after removing the toner cartridge. Since the toner stop comes off easily, toner scattering may be resulted if it comes off by accident.
2. Keep the toner cartridge horizontal after removing. Since the toner stop [1] comes off easily as mentioned above, toner scattering may be resulted if the toner cartridge is placed with the toner stop side down.

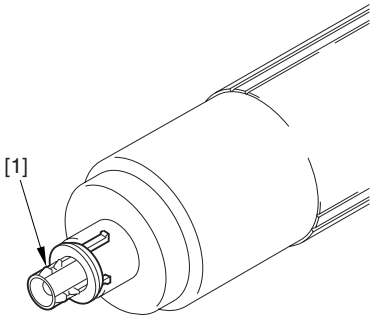

F-7-27

7.12.1.4 Removing the Drum Unit

iR2270 / iR2870 / iR3570 / iR4570 / / iR2270N / / iR2870N / / iR3570N / / iR4570N / iR2230 / / / iR3530 /

1) Open the right door [1].

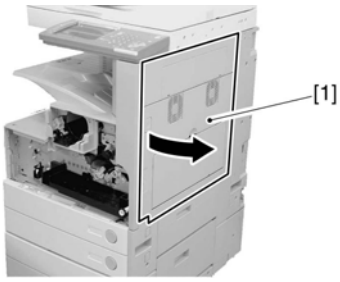

F-7-28

2) Remove the screw [1].

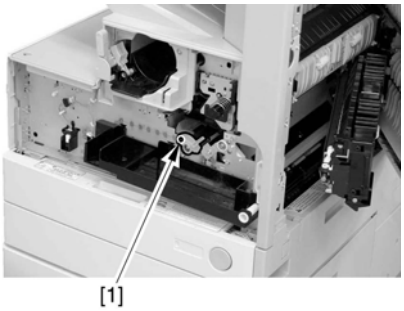

F-7-29

3) Shift the locking lever [1] to the left to release the developing assembly.

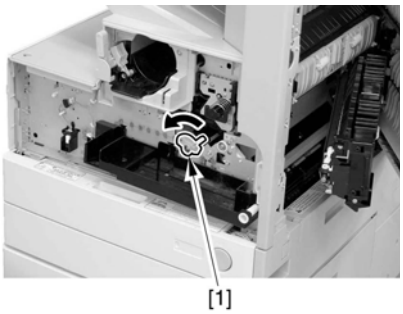

F-7-30

4) Remove the screw [1].

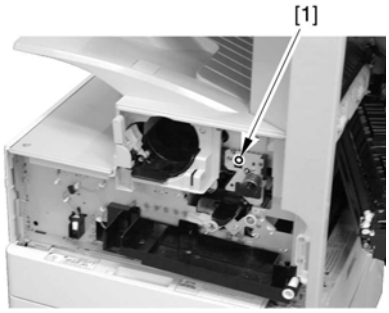

F-7-31

5) Remove the drum unit [1].

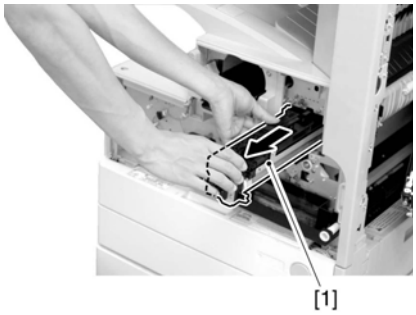

F-7-32

Be sure to hold the drum unit as shown.

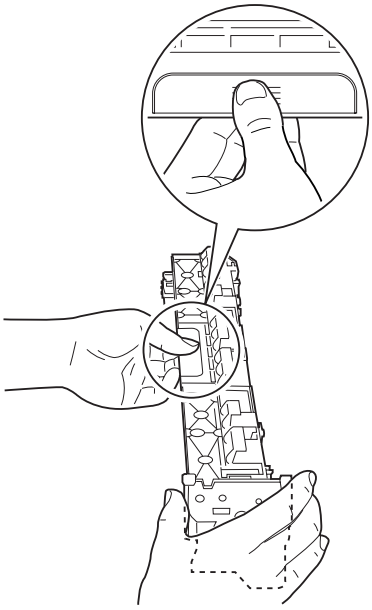

F-7-33

7.12.1.5 Removing the Developing Assembly

iR2270 / iR2870 / iR3570 / iR4570 / / iR2270N / / iR2870N / / iR3570N / / iR4570N / iR2230 / / / iR3530 /

1) Remove the screw [1].

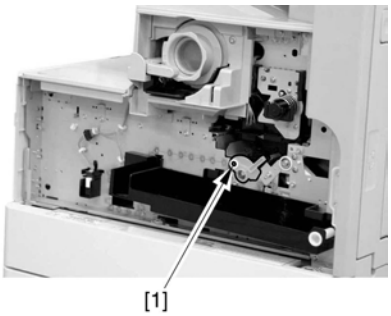

F-7-34

2) Shift the locking lever [1] to the left to release the developing assembly.

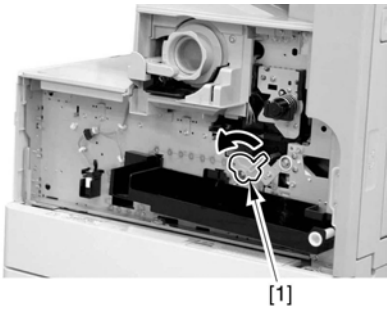

F-7-35

3) Slide the developing assembly [1] slightly to the front; then, disconnect the connector [2].

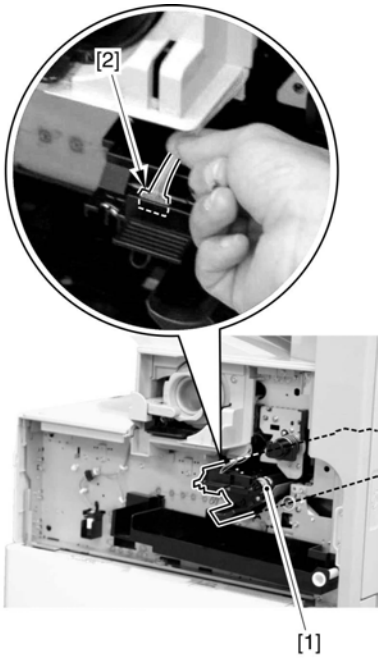

F-7-36

4) Remove the developing assembly [1].

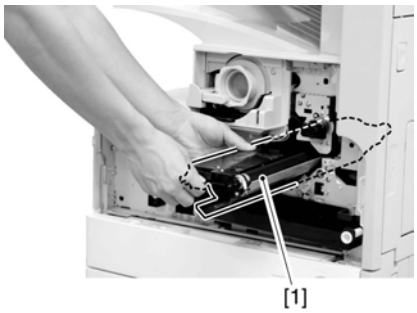

F-7-37

Be sure to hold the developing assembly as shown.

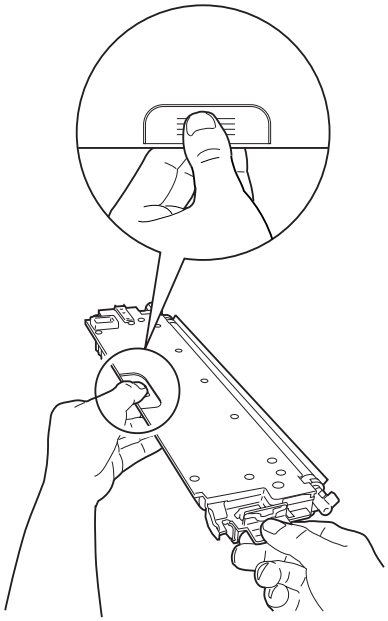

F-7-38

When fitting the developing assembly, be sure to fit the lower right segment [2] of the developing assembly [1] in the rail [3] of the machine. Thereafter, slide the developing assembly so that [A] of the developing assembly matches [B] of the rail.

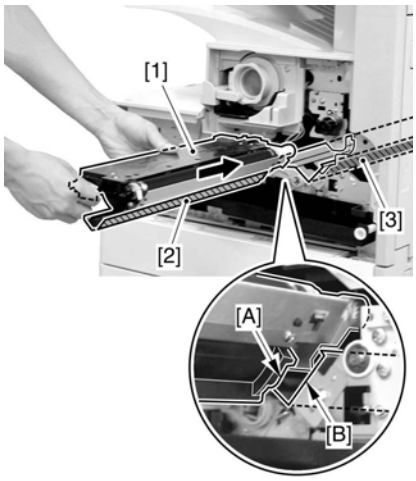

F-7-39

7.12.1.6 Removing the Upper Tray

iR2270 / iR2870 / iR3570 / iR4570 / / iR2270N / / iR2870N / / iR3570N / / iR4570N / iR2230 / / / iR3530 /

1) Remove the 2 screws [1], and detach the upper tray [2].

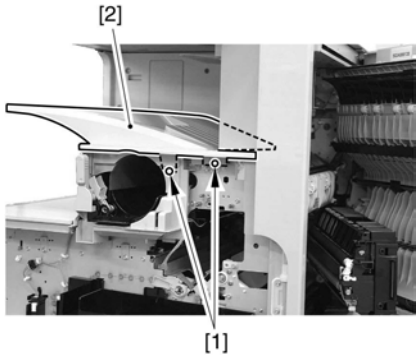

F-7-40

Reference:
Lift the front of the upper tray [1], and detach it as if to slide it toward the front.

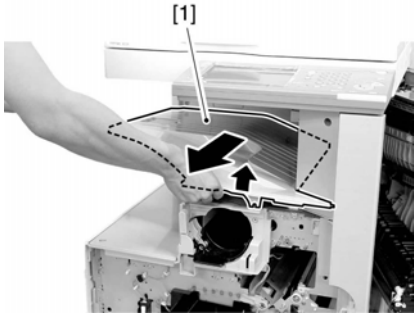

F-7-41

7.12.1.7 Removing the Toner Cartridge Cover

iR2270 / iR2870 / iR3570 / iR4570 / / iR2270N / / iR2870N / / iR3570N / / iR4570N / iR2230 / / / iR3530 /

1) Remove the 2 screws [1]; then, detach the toner bottle cover [2].

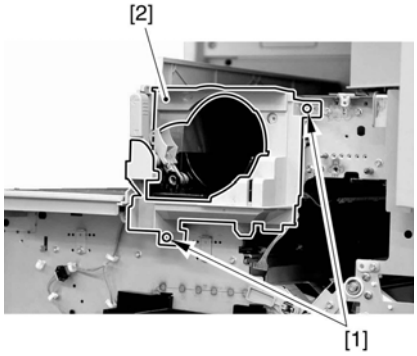

F-7-42

7.12.1.8 Removing the Pre-Exposure Lamp

iR2270 / iR2870 / iR3570 / iR4570 / / iR2270N / / iR2870N / / iR3570N / / iR4570N / iR2230 / / / iR3530 /

1) Open the 2 wire saddles [1], and disconnect the 2 relay connectors [2].

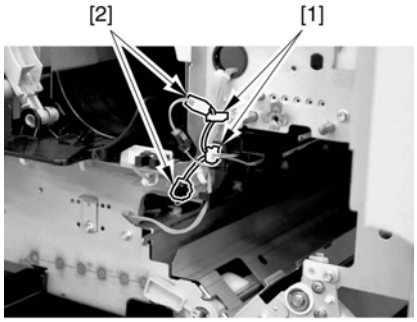

F-7-43

2) While freeing the lock [1] toward the right, detach the pre-exposure lamp [2].

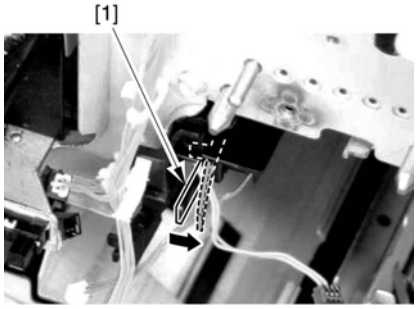

F-7-44

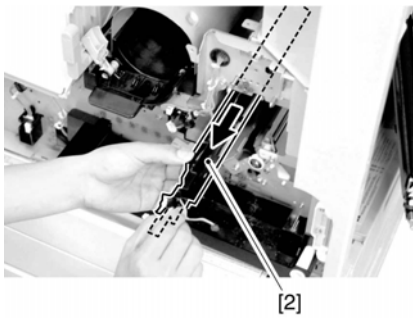

F-7-45

7.12.2 Drum Unit

7.12.2.1 Removing the Front Cover Unit

iR2270 / iR2870 / iR3570 / iR4570 / / iR2270N / / iR2870N / / iR3570N / / iR4570N / iR2230 / / / iR3530 /

1) Open the front cover [1].

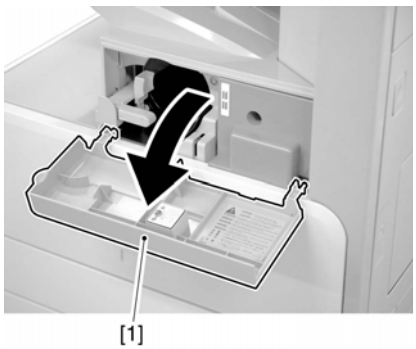

F-7-46

2) Remove the face cover rubber [1].
3) Remove the binding screw [2].
4) Remove the RS tightening screw [3].
5) Detach the front cover unit [4] by moving it in the direction of the arrow.

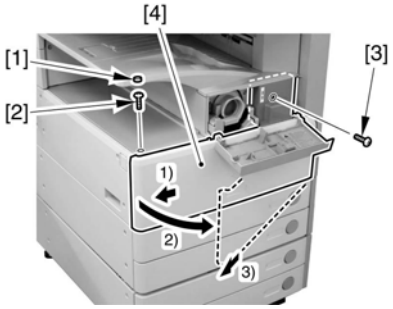

F-7-47

7.12.2.2 Removing the Waste Toner Case

iR2270 / iR2870 / iR3570 / iR4570 / / iR2270N / / iR2870N / / iR3570N / / iR4570N / iR2230 / / / iR3530 /

1) Remove the waste toner case [1].

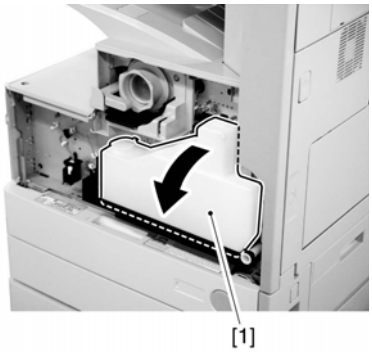

F-7-48

Point to note after attaching the waste toner receptacle
After attaching the waste toner receptacle, move the waste toner full detection lever [1] up and down to make sure that the lever is moved smoothly. Faulty detection may be resulted if the lever is caught in something and is not moved smoothly.

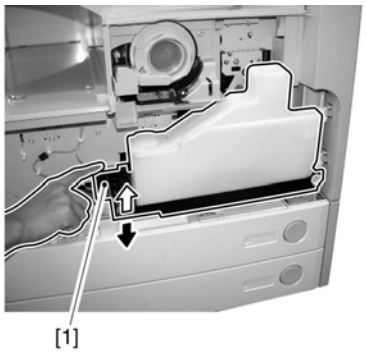

F-7-49

7.12.2.3 Removing the Drum Unit

iR2270 / iR2870 / iR3570 / iR4570 / / iR2270N / / iR2870N / / iR3570N / / iR4570N / iR2230 / / / iR3530 /

1) Open the right door [1].

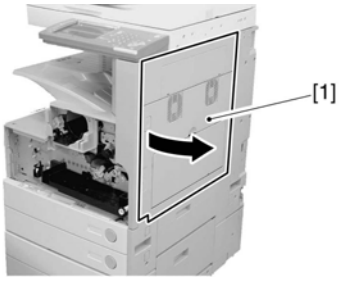

F-7-50

2) Remove the screw [1].

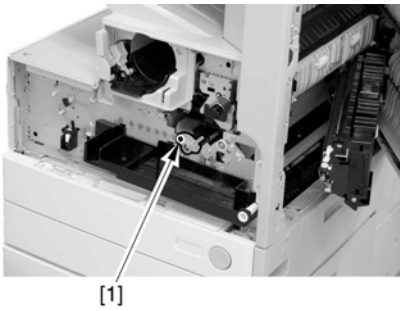

F-7-51

3) Shift the locking lever [1] to the left to release the developing assembly.

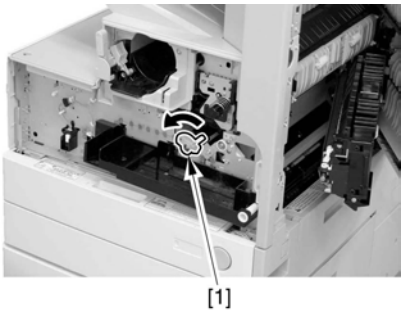

F-7-52

4) Remove the screw [1].

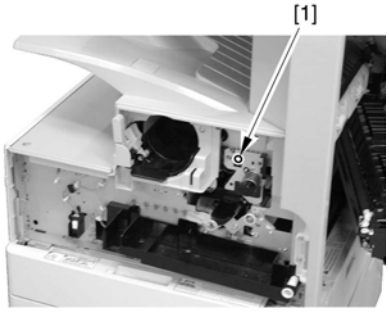

F-7-53

5) Remove the drum unit [1].

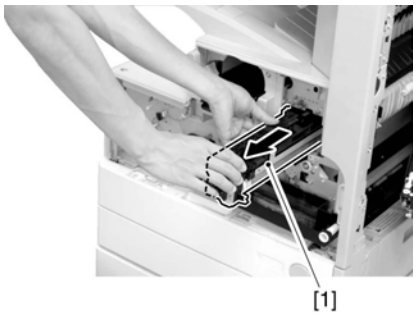

F-7-54

Be sure to hold the drum unit as shown.

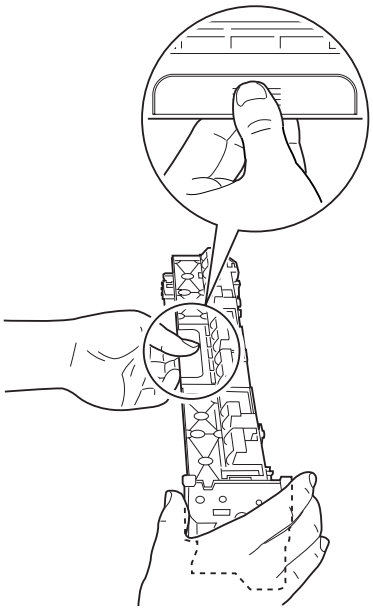

F-7-55

7.12.3 Hopper Assembly

7.12.3.1 Removing the Front Cover Unit

iR2270 / iR2870 / iR3570 / iR4570 / / iR2270N / / iR2870N / / iR3570N / / iR4570N / iR2230 / / / iR3530 /

1) Open the front cover [1].

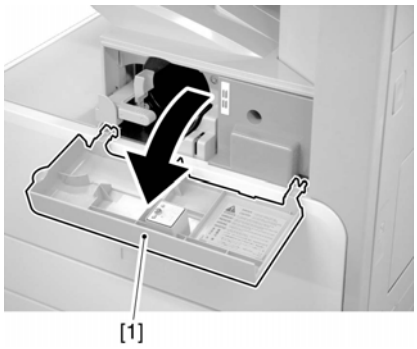

F-7-56

2) Remove the face cover rubber [1].
3) Remove the binding screw [2].
4) Remove the RS tightening screw [3].
5) Detach the front cover unit [4] by moving it in the direction of the arrow.

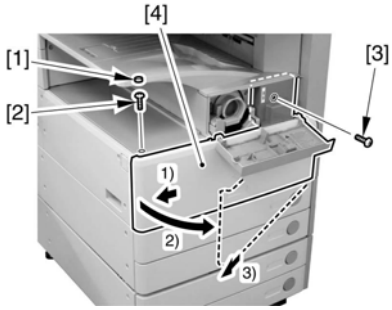

F-7-57

7.12.3.2 Removing the Waste Toner Case

iR2270 / iR2870 / iR3570 / iR4570 / / iR2270N / / iR2870N / / iR3570N / / iR4570N / iR2230 / / / iR3530 /

1) Remove the waste toner case [1].

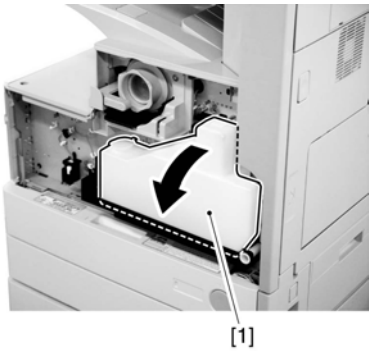

F-7-58

Point to note after attaching the waste toner receptacle
After attaching the waste toner receptacle, move the waste toner full detection lever [1] up and down to make sure that the lever is moved smoothly. Faulty detection may be resulted if the lever is caught in something and is not moved smoothly.

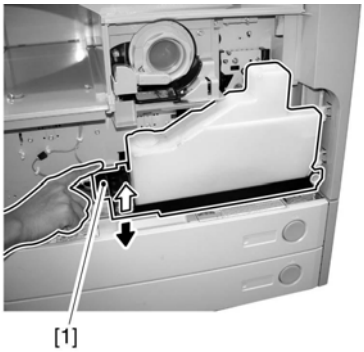

F-7-59

7.12.3.3 Removing the Toner Cartridge

iR2270 / iR2870 / iR3570 / iR4570 / / iR2270N / / iR2870N / / iR3570N / / iR4570N / iR2230 / / / iR3530 /

1) Shift up the lever [1].

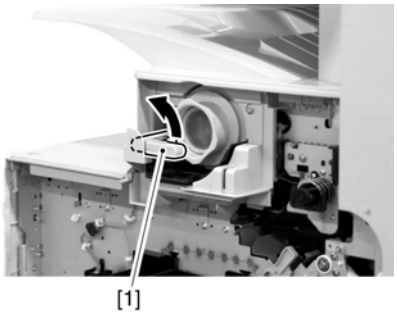

F-7-60

2) Remove the toner cartridge [1].

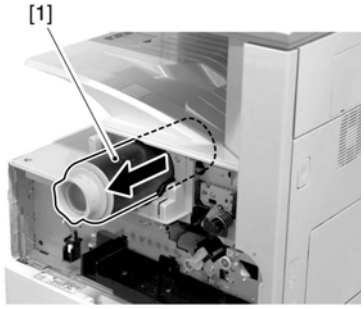

F-7-61

Points to Note on Handing the Toner Cartridge

1. Care should be taken not to bump the toner stop [1] against the covers or the like when and after removing the toner cartridge. Since the toner stop comes off easily, toner scattering may be resulted if it comes off by accident.
2. Keep the toner cartridge horizontal after removing. Since the toner stop [1] comes off easily as mentioned above, toner scattering may be resulted if the toner cartridge is placed with the toner stop side down.

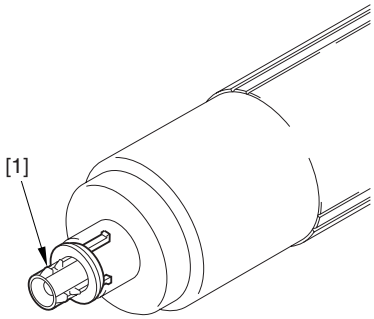

F-7-62

7.12.3.4 Removing the Drum Unit

iR2270 / iR2870 / iR3570 / iR4570 / / iR2270N / / iR2870N / / iR3570N / / iR4570N / iR2230 / / / iR3530 /

1) Open the right door [1].

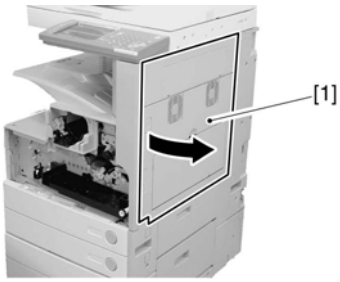

F-7-63

2) Remove the screw [1].

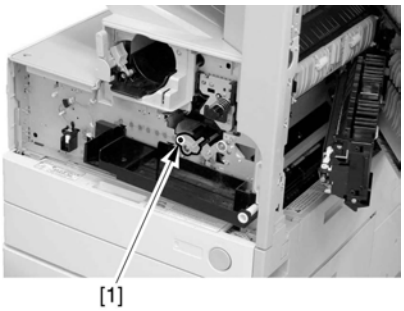

F-7-64

3) Shift the locking lever [1] to the left to release the developing assembly.

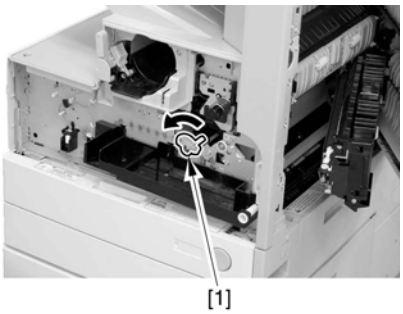

F-7-65

4) Remove the screw [1].

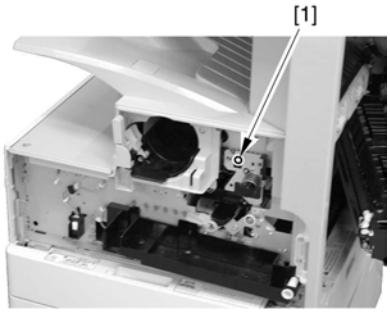

F-7-66

5) Remove the drum unit [1].

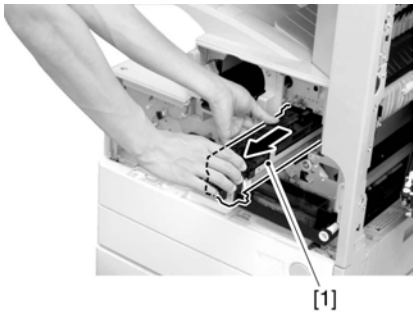

F-7-67

Be sure to hold the drum unit as shown.

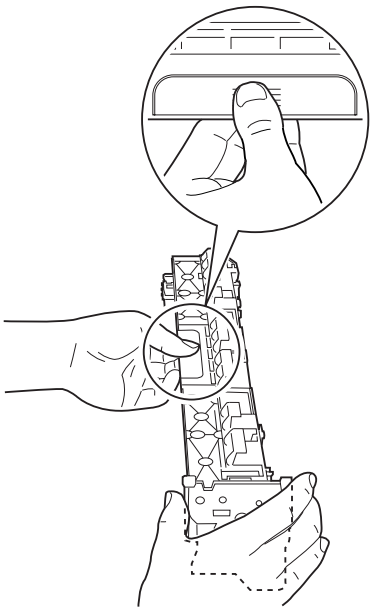

F-7-68

7.12.3.5 Removing the Developing Assembly

iR2270 / iR2870 / iR3570 / iR4570 / / iR2270N / / iR2870N / / iR3570N / / iR4570N / iR2230 / / / iR3530 /

1) Remove the screw [1].

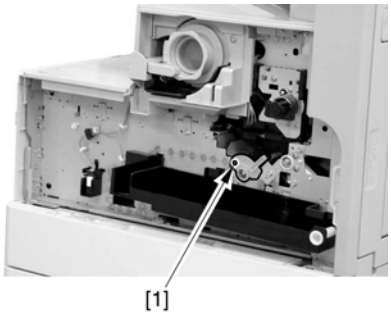

F-7-69

2) Shift the locking lever [1] to the left to release the developing assembly.

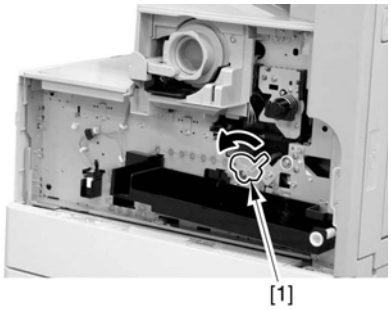

F-7-70

3) Slide the developing assembly [1] slightly to the front; then, disconnect the connector [2].

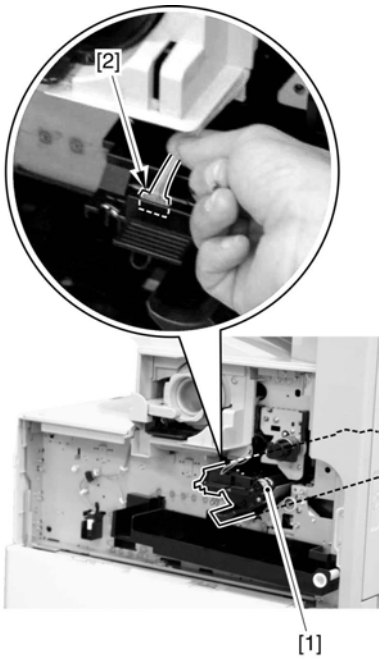

F-7-71

4) Remove the developing assembly [1].

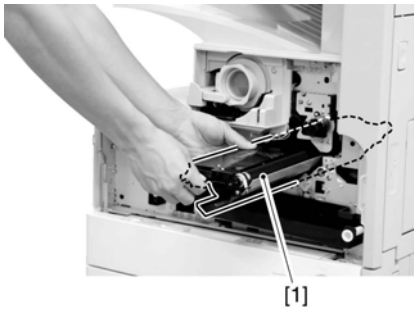

F-7-72

Be sure to hold the developing assembly as shown.

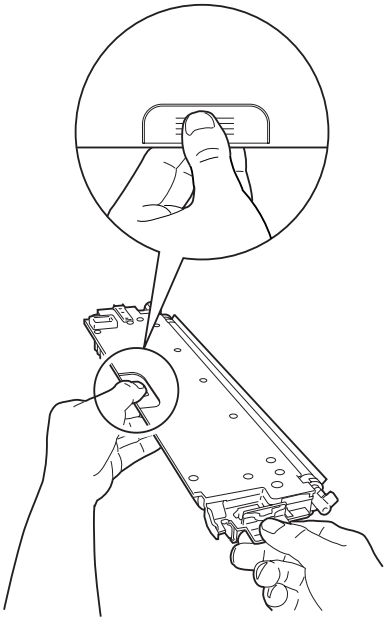

F-7-73

When fitting the developing assembly, be sure to fit the lower right segment [2] of the developing assembly [1] in the rail [3] of the machine. Thereafter, slide the developing assembly so that [A] of the developing assembly matches [B] of the rail.

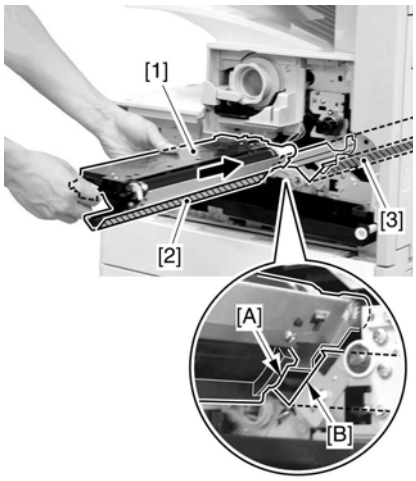

F-7-74

7.12.3.6 Removing the Upper Tray

iR2270 / iR2870 / iR3570 / iR4570 / / iR2270N / / iR2870N / / iR3570N / / iR4570N / iR2230 / / / iR3530 /

1) Remove the 2 screws [1], and detach the upper tray [2].

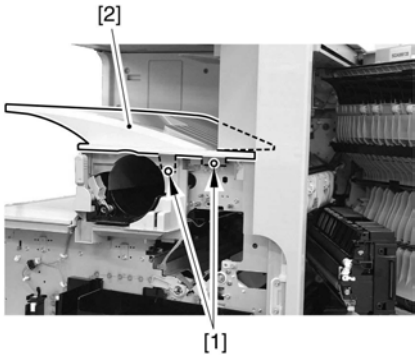

F-7-75

Reference:
Lift the front of the upper tray [1], and detach it as if to slide it toward the front.

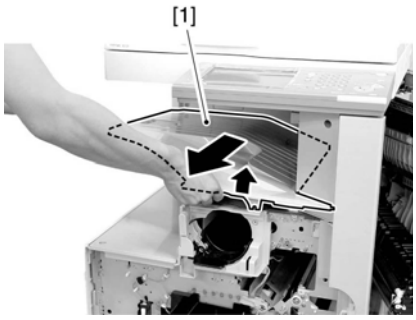

F-7-76

7.12.3.7 Removing the Toner Cartridge Cover

iR2270 / iR2870 / iR3570 / iR4570 / / iR2270N / / iR2870N / / iR3570N / / iR4570N / iR2230 / / / iR3530 /

1) Remove the 2 screws [1]; then, detach the toner bottle cover [2].

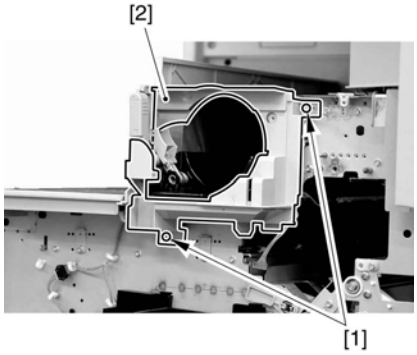

F-7-77

7.12.3.8 Removing the Pre-Exposure Lamp

iR2270 / iR2870 / iR3570 / iR4570 / / iR2270N / / iR2870N / / iR3570N / / iR4570N / iR2230 / / / iR3530 /

1) Open the 2 wire saddles [1], and disconnect the 2 relay connectors [2].

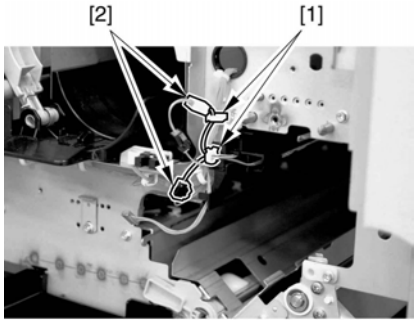

F-7-78

2) While freeing the lock [1] toward the right, detach the pre-exposure lamp [2].

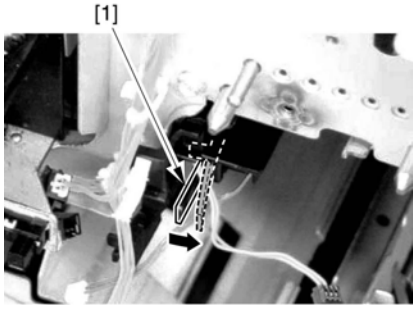

F-7-79

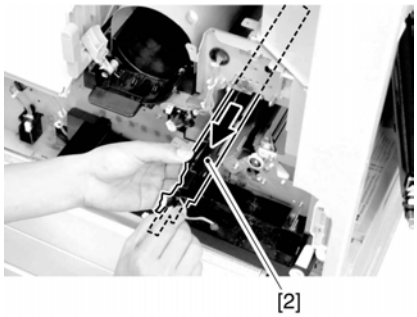

F-7-80

7.12.3.9 Removing the Left Cover

iR2270 / iR2870 / iR3570 / iR4570 / / iR2270N / / iR2870N / / iR3570N / / iR4570N / iR2230 / / / iR3530 /

1) Remove the 4 screws [1], and detach the left cover [2].

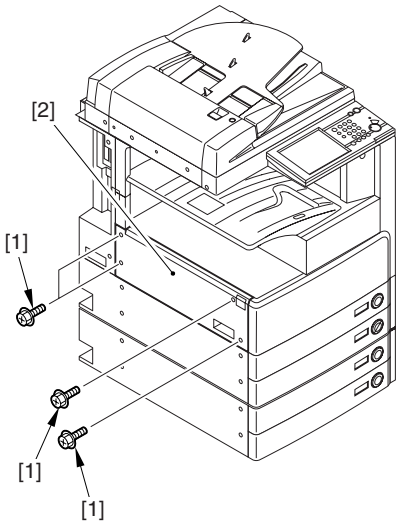

F-7-81

7.12.3.10 Removing the Laser Unit

iR2270 / iR2870 / iR3570 / iR4570 / / iR2270N / / iR2870N / / iR3570N / / iR4570N / iR2230 / / / iR3530 /

1) Open the 2 wire saddles [1], and disconnect the 2 connectors [2].

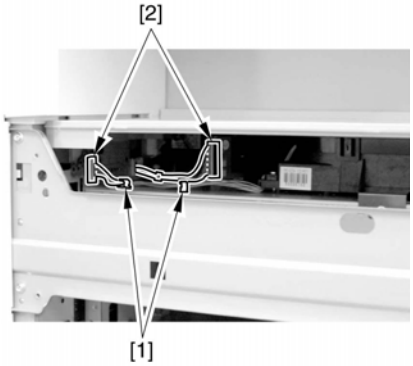

F-7-82

When you have disconnected the connector [1], be sure to take care so that it will not come into contact with the PCB that is mounted to the laser scanner unit. (The PCB is equipped with a laser intensity adjustment variable resistor. Contact with the PCB can change the adjustment setting.)

2) Open the wire saddle [1], and disconnect the connector [2].

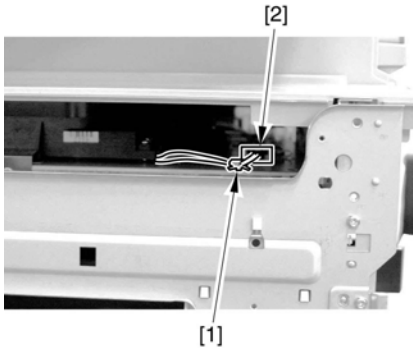

F-7-83

3) Remove the screw [1], and detach the fixing [2].

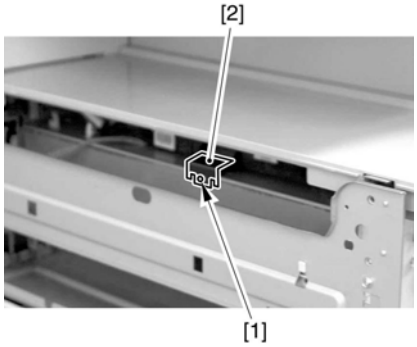

F-7-84

4) Lift the front of the laser unit [1], and slide it to the front.

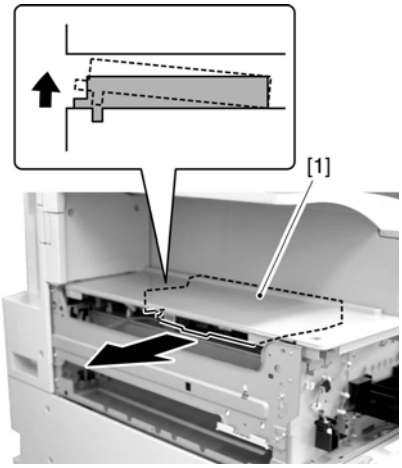

F-7-85

When sliding out the laser scanner unit, be sure to take care not to touch the PCB mounted to the laser scanner unit. (The PCB is equipped with a laser scanner intensity adjustment variable resistor, and contact with the PCB can change the adjustment setting.)

7.12.3.11 Removing the Hopper Assembly

iR2270 / iR2870 / iR3570 / iR4570 / / iR2270N / / iR2870N / / iR3570N / / iR4570N / iR2230 / / / iR3530 /

1) Remove the inside base cover [1] and the inside right color [2].

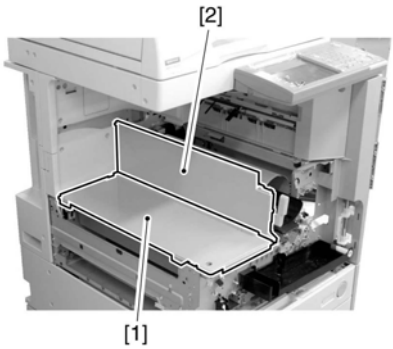

F-7-86

2) Disconnect the 3 connectors [1] found at the front and the connector [2] found at the rear.

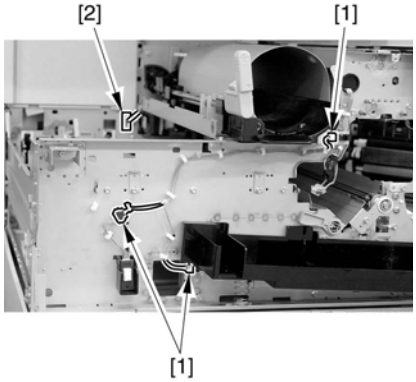

F-7-87

3) Open the 11 wire saddles [1], and pull out the harness [3] through the hole [2] in the plate.

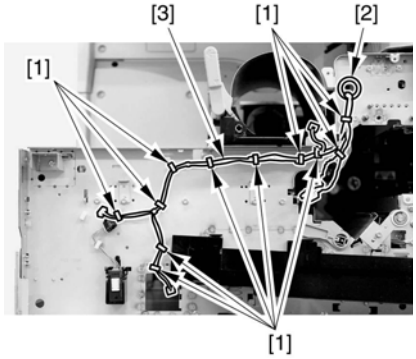

F-7-88

4) Remove the 3 screws [1], and detach the hopper assembly [2].

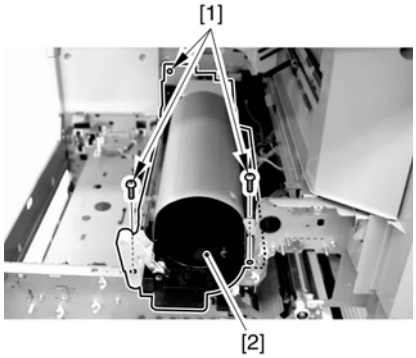

F-7-89

When fitting the hopper assembly to the machine, be sure that the connectors [1] are securely connected. If the connectors [1] are not connected, the environment heater will not be supplied with power, leading to image faults.

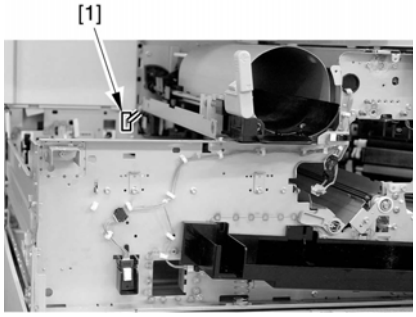

F-7-90

7.12.4 Sub Hopper

7.12.4.1 Removing the Front Cover Unit

iR2270 / iR2870 / iR3570 / iR4570 / / iR2270N / / iR2870N / / iR3570N / / iR4570N / iR2230 / / / iR3530 /

1) Open the front cover [1].

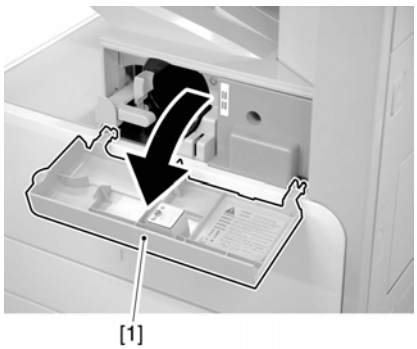

F-7-91

2) Remove the face cover rubber [1].
3) Remove the binding screw [2].
4) Remove the RS tightening screw [3].
5) Detach the front cover unit [4] by moving it in the direction of the arrow.

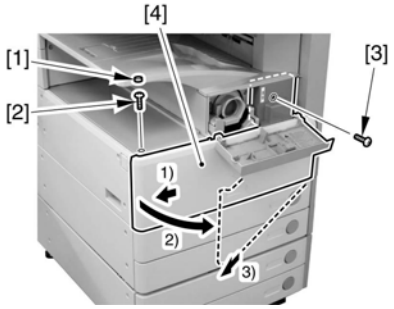

F-7-92

7.12.4.2 Removing the Waste Toner Case

iR2270 / iR2870 / iR3570 / iR4570 / / iR2270N / / iR2870N / / iR3570N / / iR4570N / iR2230 / / / iR3530 /

1) Remove the waste toner case [1].

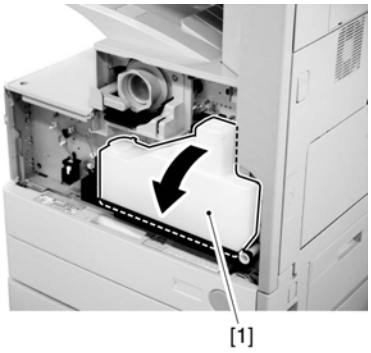

F-7-93

Point to note after attaching the waste toner receptacle
After attaching the waste toner receptacle, move the waste toner full detection lever [1] up and down to make sure that the lever is moved smoothly. Faulty detection may be resulted if the lever is caught in something and is not moved smoothly.

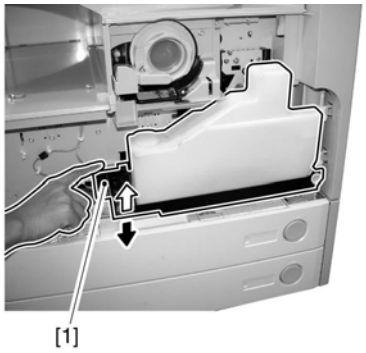

F-7-94

7.12.4.3 Removing the Toner Cartridge

iR2270 / iR2870 / iR3570 / iR4570 / / iR2270N / / iR2870N / / iR3570N / / iR4570N / iR2230 / / / iR3530 /

1) Shift up the lever [1].

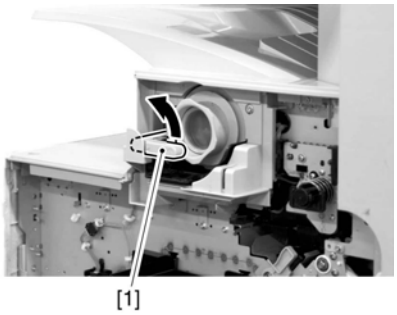

F-7-95

2) Remove the toner cartridge [1].

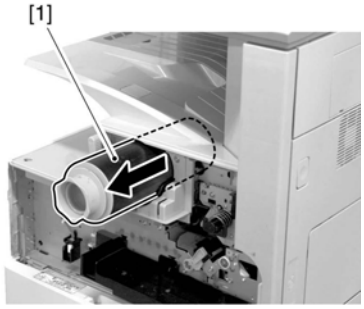

F-7-96

Points to Note on Handing the Toner Cartridge

1. Care should be taken not to bump the toner stop [1] against the covers or the like when and after removing the toner cartridge. Since the toner stop comes off easily, toner scattering may be resulted if it comes off by accident.
2. Keep the toner cartridge horizontal after removing. Since the toner stop [1] comes off easily as mentioned above, toner scattering may be resulted if the toner cartridge is placed with the toner stop side down.

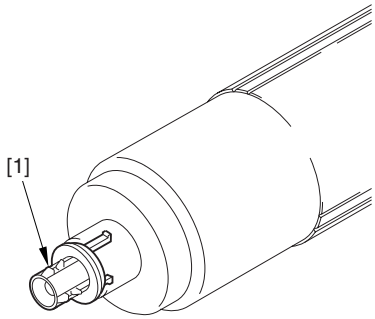

F-7-97

7.12.4.4 Removing the Drum Unit

iR2270 / iR2870 / iR3570 / iR4570 / / iR2270N / / iR2870N / / iR3570N / / iR4570N / iR2230 / / / iR3530 /

1) Open the right door [1].

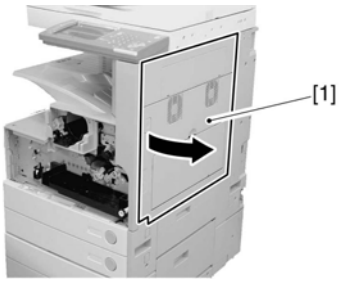

F-7-98

2) Remove the screw [1].

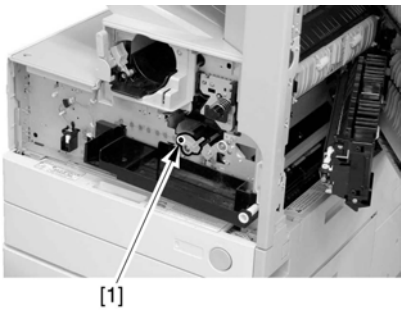

F-7-99

3) Shift the locking lever [1] to the left to release the developing assembly.

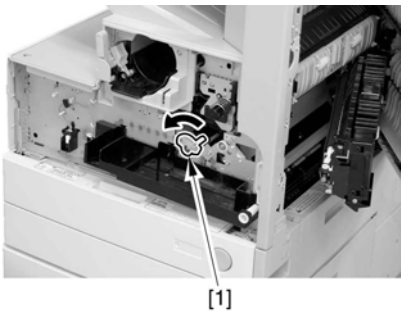

F-7-100

4) Remove the screw [1].

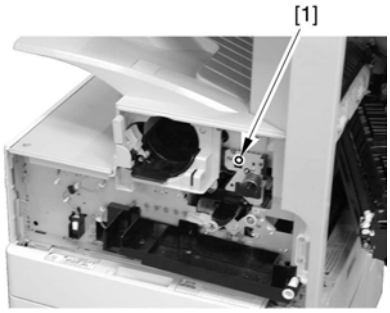

F-7-101

5) Remove the drum unit [1].

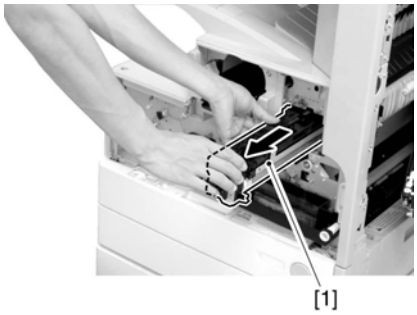

F-7-102

Be sure to hold the drum unit as shown.

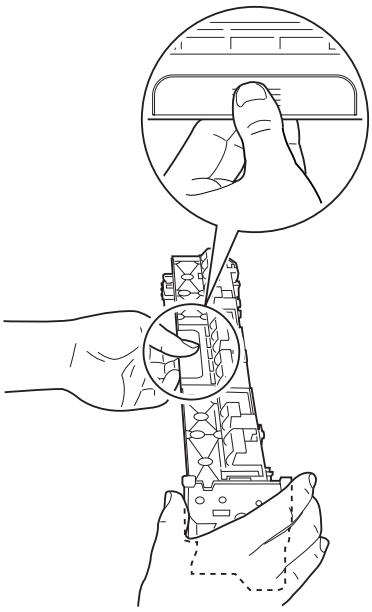

F-7-103

7.12.4.5 Removing the Developing Assembly

iR2270 / iR2870 / iR3570 / iR4570 / / iR2270N / / iR2870N / / iR3570N / / iR4570N / iR2230 / / / iR3530 /

1) Remove the screw [1].

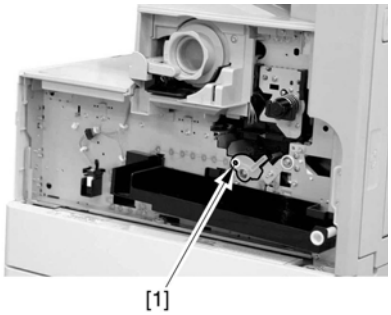

F-7-104

2) Shift the locking lever [1] to the left to release the developing assembly.

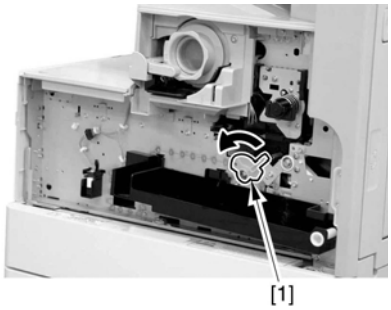

F-7-105

3) Slide the developing assembly [1] slightly to the front; then, disconnect the connector [2].

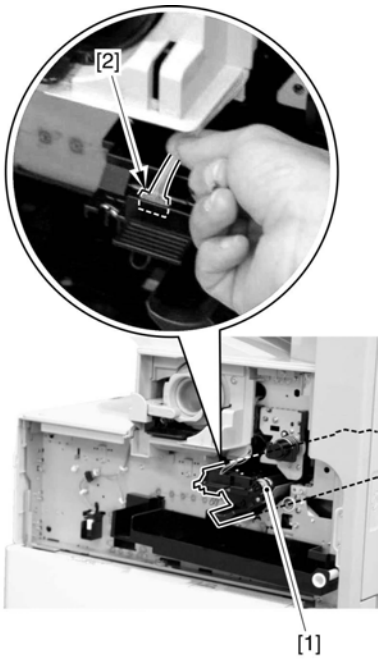

F-7-106

4) Remove the developing assembly [1].

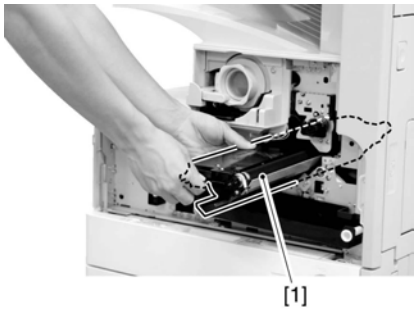

F-7-107

Be sure to hold the developing assembly as shown.

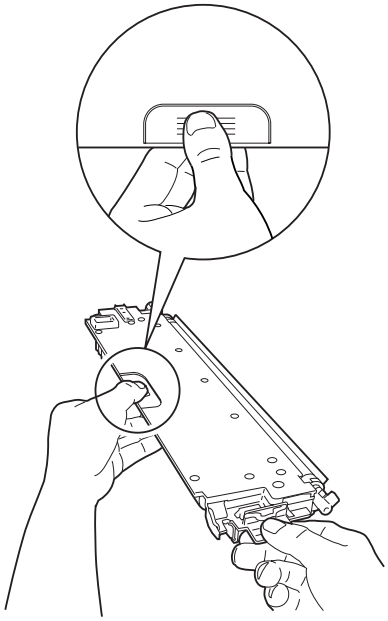

F-7-108

When fitting the developing assembly, be sure to fit the lower right segment [2] of the developing assembly [1] in the rail [3] of the machine. Thereafter, slide the developing assembly so that [A] of the developing assembly matches [B] of the rail.

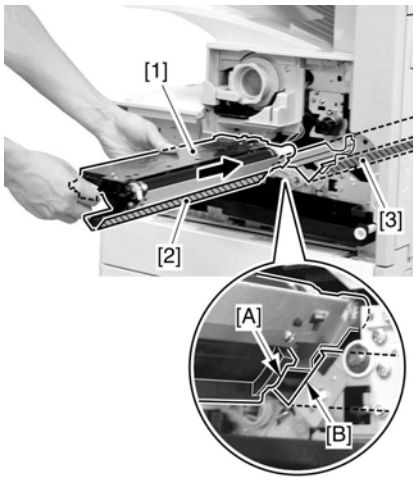

F-7-109

7.12.4.6 Removing the Upper Tray

iR2270 / iR2870 / iR3570 / iR4570 / / iR2270N / / iR2870N / / iR3570N / / iR4570N / iR2230 / / / iR3530 /

1) Remove the 2 screws [1], and detach the upper tray [2].

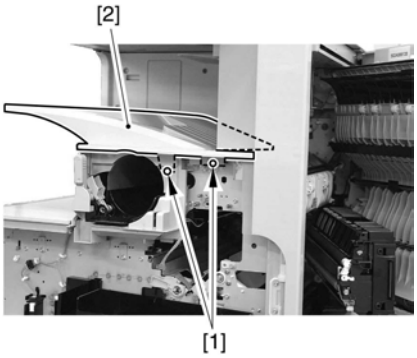

F-7-110

Reference:
Lift the front of the upper tray [1], and detach it as if to slide it toward the front.

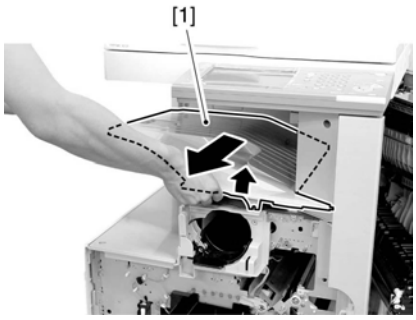

F-7-111

7.12.4.7 Removing the Toner Cartridge Cover

iR2270 / iR2870 / iR3570 / iR4570 / / iR2270N / / iR2870N / / iR3570N / / iR4570N / iR2230 / / / iR3530 /

1) Remove the 2 screws [1]; then, detach the toner bottle cover [2].

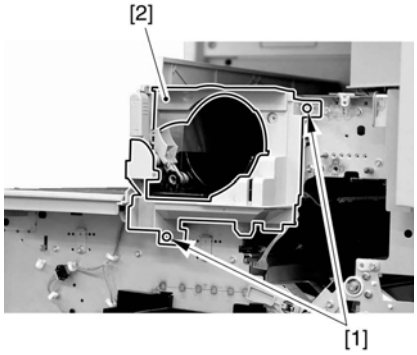

F-7-112

7.12.4.8 Removing the Pre-Exposure Lamp

iR2270 / iR2870 / iR3570 / iR4570 / / iR2270N / / iR2870N / / iR3570N / / iR4570N / iR2230 / / / iR3530 /

1) Open the 2 wire saddles [1], and disconnect the 2 relay connectors [2].

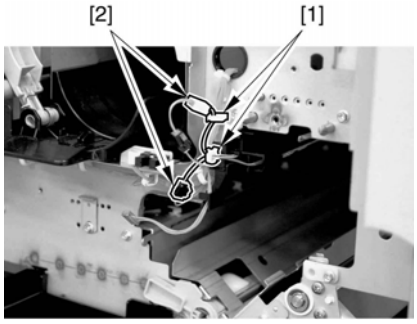

F-7-113

2) While freeing the lock [1] toward the right, detach the pre-exposure lamp [2].

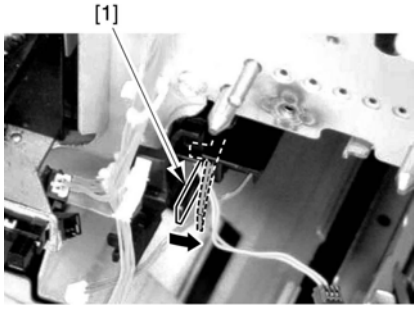

F-7-114

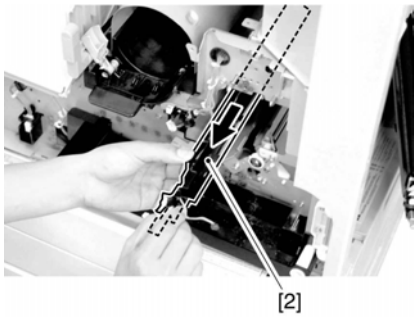

F-7-115

7.12.4.9 Removing the Left Cover

iR2270 / iR2870 / iR3570 / iR4570 / / iR2270N / / iR2870N / / iR3570N / / iR4570N / iR2230 / / / iR3530 /

1) Remove the 4 screws [1], and detach the left cover [2].

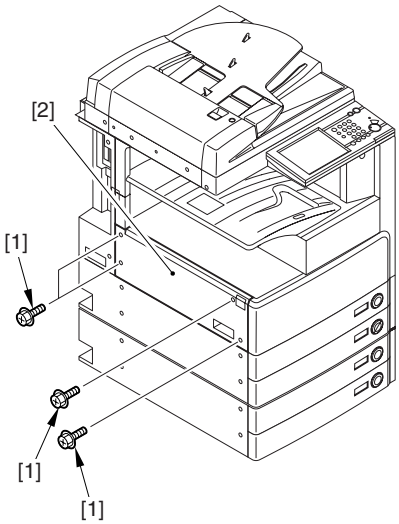

F-7-116

7.12.4.10 Removing the Laser Unit

iR2270 / iR2870 / iR3570 / iR4570 / / iR2270N / / iR2870N / / iR3570N / / iR4570N / iR2230 / / / iR3530 /

1) Open the 2 wire saddles [1], and disconnect the 2 connectors [2].

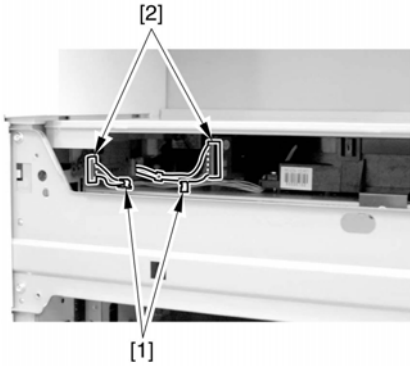

F-7-117

When you have disconnected the connector [1], be sure to take care so that it will not come into contact with the PCB that is mounted to the laser scanner unit. (The PCB is equipped with a laser intensity adjustment variable resistor. Contact with the PCB can change the adjustment setting.)

2) Open the wire saddle [1], and disconnect the connector [2].

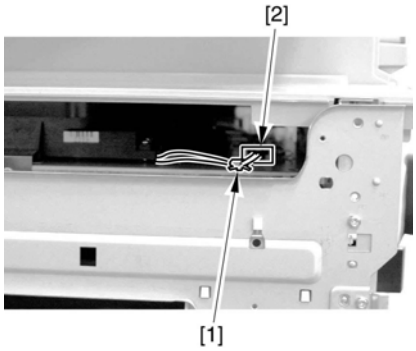

F-7-118

3) Remove the screw [1], and detach the fixing [2].

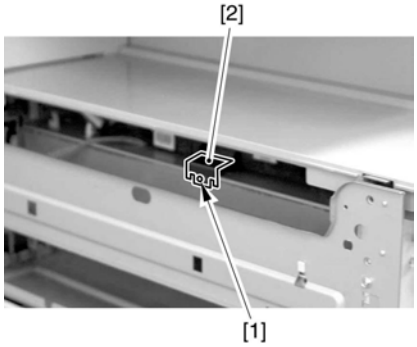

F-7-119

4) Lift the front of the laser unit [1], and slide it to the front.

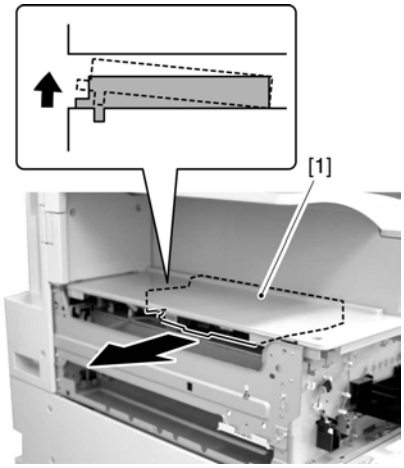

F-7-120

When sliding out the laser scanner unit, be sure to take care not to touch the PCB mounted to the laser scanner unit. (The PCB is equipped with a laser scanner intensity adjustment variable resistor, and contact with the PCB can change the adjustment setting.)

7.12.4.11 Removing the Hopper Assembly

iR2270 / iR2870 / iR3570 / iR4570 / / iR2270N / / iR2870N / / iR3570N / / iR4570N / iR2230 / / / iR3530 /

1) Remove the inside base cover [1] and the inside right color [2].

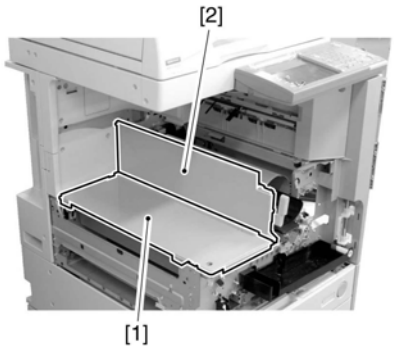

F-7-121

2) Disconnect the 3 connectors [1] found at the front and the connector [2] found at the rear.

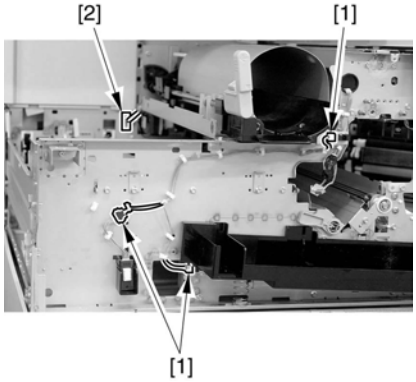

F-7-122

3) Open the 11 wire saddles [1], and pull out the harness [3] through the hole [2] in the plate.

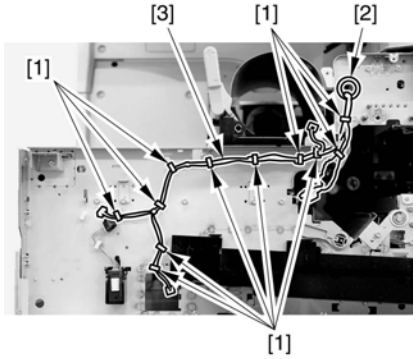

F-7-123

4) Remove the 3 screws [1], and detach the hopper assembly [2].

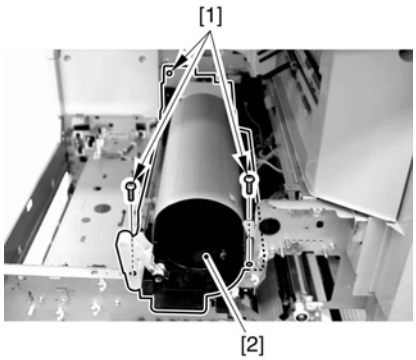

F-7-124

When fitting the hopper assembly to the machine, be sure that the connectors [1] are securely connected. If the connectors [1] are not connected, the environment heater will not be supplied with power, leading to image faults.

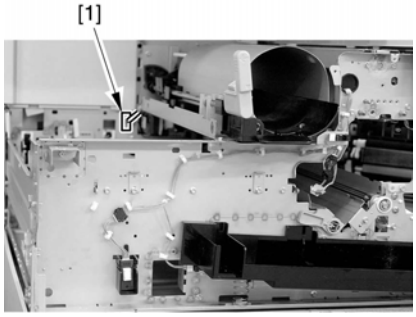

F-7-125

7.12.4.12 Removing the Toner Feedscrew Motor

iR2270 / iR2870 / iR3570 / iR4570 / / iR2270N / / iR2870N / / iR3570N / / iR4570N / iR2230 / / / iR3530 /

1) Disconnect the connector [1].

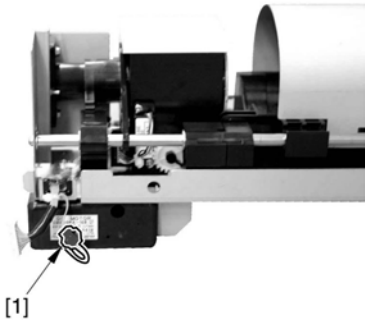

F-7-126

2) Remove the screw [1], and detach the toner feedscrew motor assembly [2].

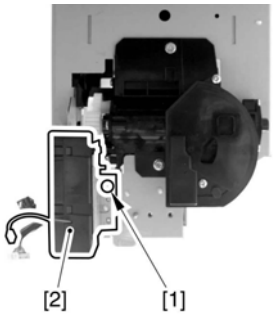

F-7-127

3) Remove the screw [1], and detach the toner feedscrew motor [3] from the base.

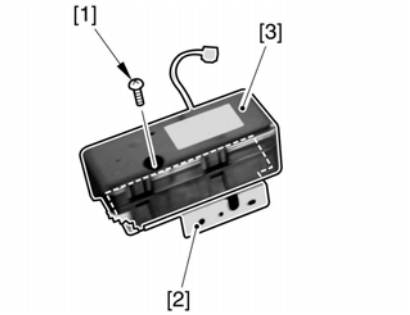

F-7-128

7.12.4.13 Removing the Sub Hopper

iR2270 / iR2870 / iR3570 / iR4570 / / iR2270N / / iR2870N / / iR3570N / / iR4570N / iR2230 / / / iR3530 /

1) Remove the 2 screws [2] from the back of the sub hopper [1].

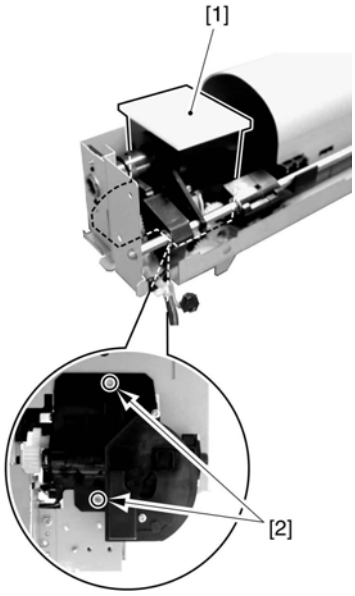

F-7-129

2) Check the phase of the gear [1] shown in the figure.

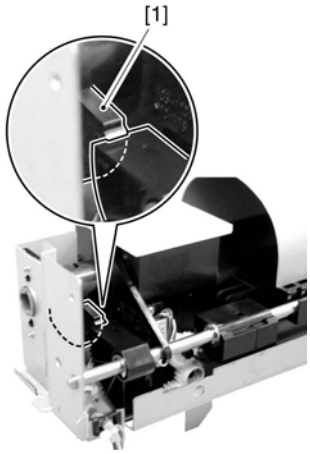

F-7-130

3) Remove the 3 screws [1].

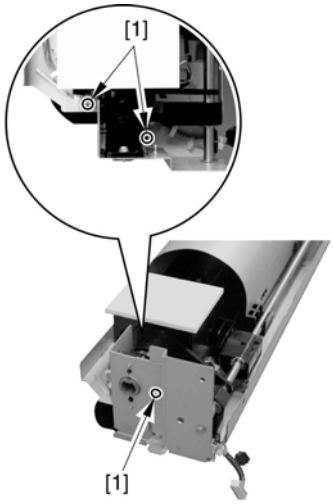

F-7-131

4) Free the cable from the edge saddle [1].

F-7-132

5) Remove the screw [1], and release the arm [2].

F-7-133

6) Remove the bushing unit [2] from the sub hopper [1].

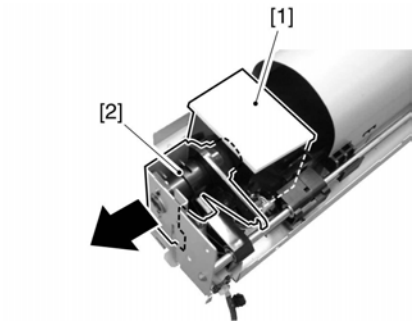

F-7-134

7) Disconnect the connector [1].

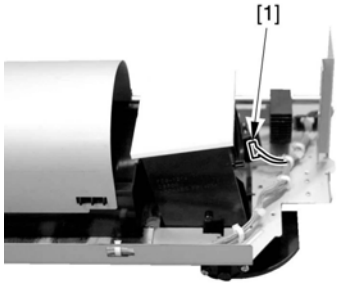

F-7-135

8) Detach the sub hopper [1] from the bottom.

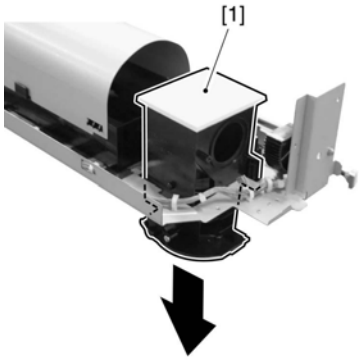

F-7-136

7.12.5 Developing Assembly

7.12.5.1 Removing the Front Cover Unit

iR2270 / iR2870 / iR3570 / iR4570 / / iR2270N / / iR2870N / / iR3570N / / iR4570N / iR2230 / / / iR3530 /

1) Open the front cover [1].

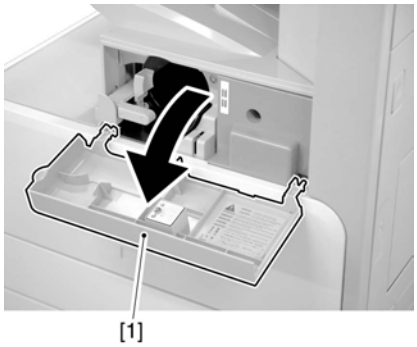

F-7-137

2) Remove the face cover rubber [1].
3) Remove the binding screw [2].
4) Remove the RS tightening screw [3].
5) Detach the front cover unit [4] by moving it in the direction of the arrow.

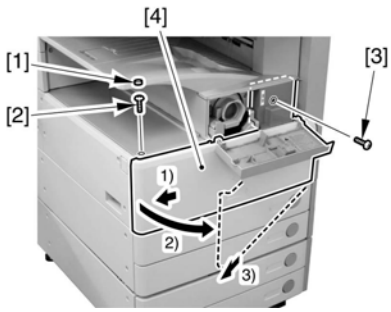

F-7-138

7.12.5.2 Removing the Waste Toner Case

iR2270 / iR2870 / iR3570 / iR4570 / / iR2270N / / iR2870N / / iR3570N / / iR4570N / iR2230 / / / iR3530 /

1) Remove the waste toner case [1].

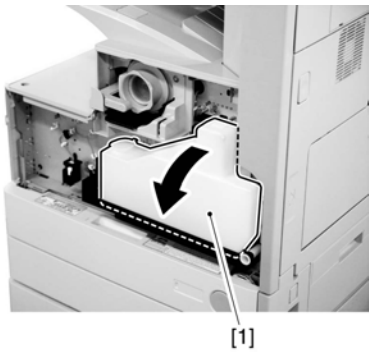

F-7-139

Point to note after attaching the waste toner receptacle
After attaching the waste toner receptacle, move the waste toner full detection lever [1] up and down to make sure that the lever is moved smoothly. Faulty detection may be resulted if the lever is caught in something and is not moved smoothly.

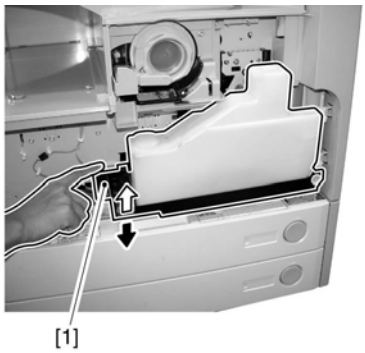

F-7-140

7.12.5.3 Removing the Developing Assembly

iR2270 / iR2870 / iR3570 / iR4570 / / iR2270N / / iR2870N / / iR3570N / / iR4570N / iR2230 / / / iR3530 /

1) Remove the screw [1].

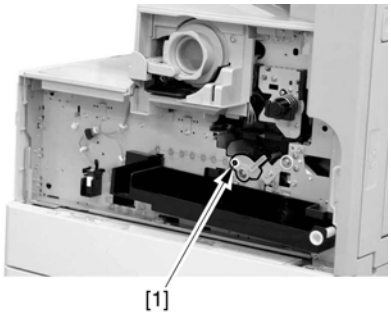

F-7-141

2) Shift the locking lever [1] to the left to release the developing assembly.

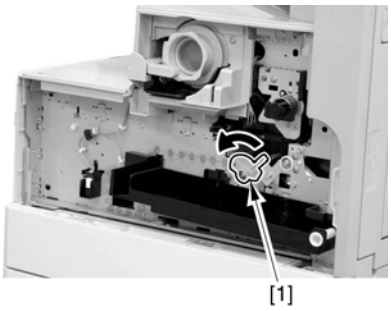

F-7-142

3) Slide the developing assembly [1] slightly to the front; then, disconnect the connector [2].

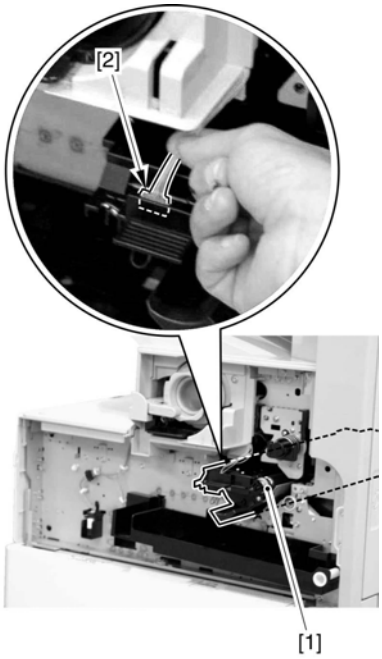

F-7-143

4) Remove the developing assembly [1].

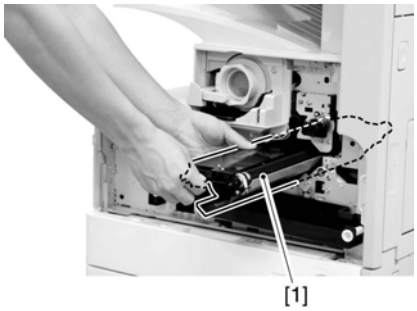

F-7-144

Be sure to hold the developing assembly as shown.

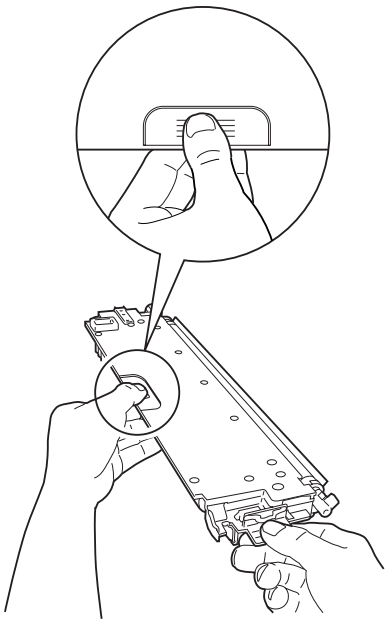

F-7-145

When fitting the developing assembly, be sure to fit the lower right segment [2] of the developing assembly [1] in the rail [3] of the machine. Thereafter, slide the developing assembly so that [A] of the developing assembly matches [B] of the rail.

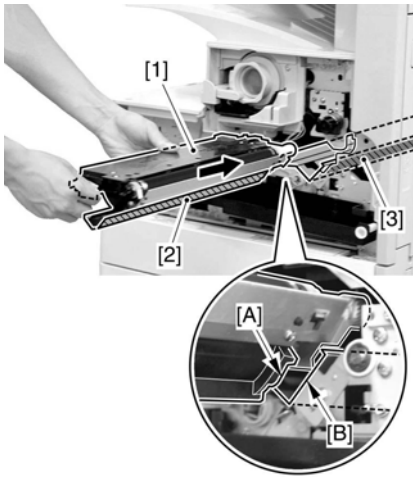

F-7-146

7.12.6 Developing Cylinder

7.12.6.1 Detaching the Developing Cylinder

iR2270 / iR2870 / iR3570 / iR4570 / / iR2270N / / iR2870N / / iR3570N / / iR4570N / iR2230 / / / iR3530 /

When you remove a developing cylinder from the developing assembly housing, be careful with the following points.

1. Lots of self-tapping screws are used in the developing unit. Be careful not to damage tapped holes by tightening self-tapping screws.
2. Remove the developing cylinder after detaching the blade unit with the developing blade.
3. Mount the developing cylinder on the developing assembly housing before attaching the blade unit.
4. Do not touch nor give a shock to the developing cylinder.

1) Unscrew 5 self-tapping screws [1] and a washer screw [2], and detach the top cover [3].

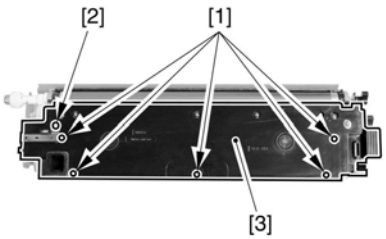

F-7-147

2) Slide out the sleeve front guide [2] in the direction of the arrow while releasing the claw [1].

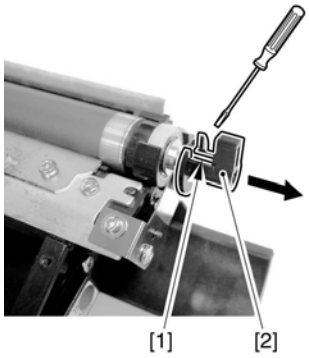

F-7-148

3) Unscrew a self-tapping screw [1] and a washer screw [2], and remove the angle
adjustment plate [3].

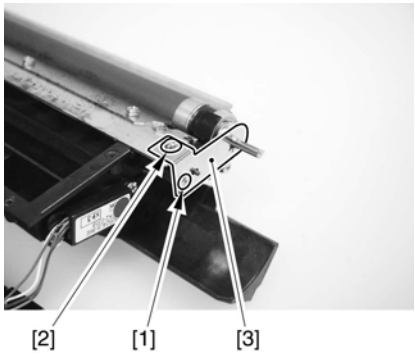

F-7-149

4) Remove the E-ring [1], a washer [2], a bearing [3], a gear [4], and a dowel pin [5].

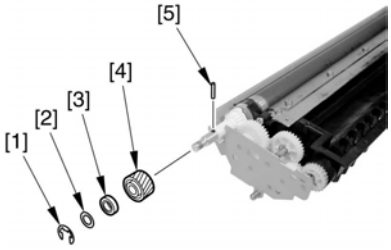

F-7-150

5) Unscrew a screw [1] and remove the gear unit [2].

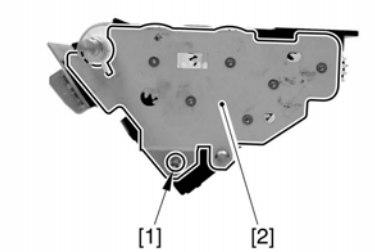

F-7-151

6) Remove a sleeve bushing [1], a gear [2], and a dowel pin [3].

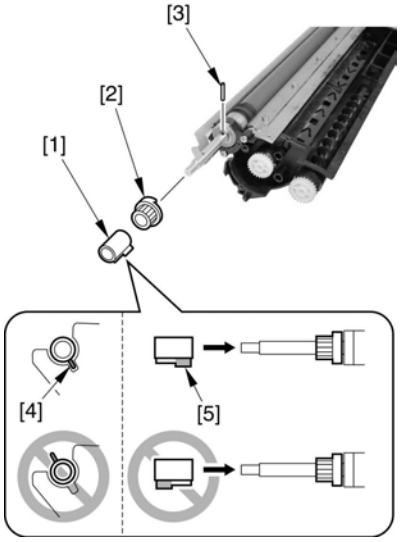

F-7-152

⚠When mounting the sleeve bushing, be careful with the following points. Match the projection [4] of the sleeve bushing to the depression of the gear unit side plate to mount. (If mounting in the wrong direction, the projection of the sleeve bushing might come into contact with the surface of the photo-sensitive drum.)
Pay attention to the mounting direction of the sleeve bushing. (Mount the sleeve bushing with longer projection on the developing cylinder. If the mounting direction is wrong, the gear unit cannot be attached.)

7) Unscrew 2 screws [1], and detach the blade unit [2].

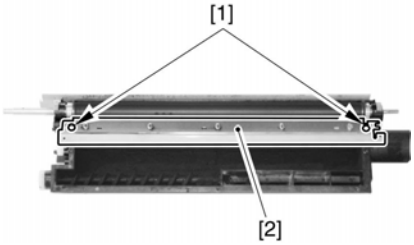

F-7-153

8) Unscrew 4 screws [1] which fix the sleeve holders (front/rear).
9) Push up the developing cylinder [2] and remove it along with a roller or others.

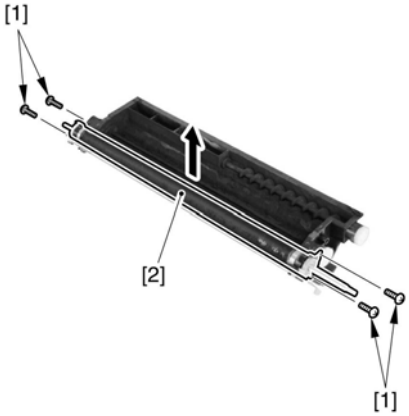

F-7-154

10) Remove a push-on roller [1], a sleeve holder [2], a bearing [3], and a sleeve holder (rear)
[3] from the developing cylinder.

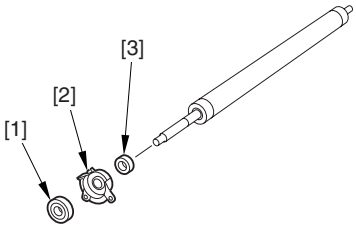

F-7-155

11) Remove a grip ring [1], a washer [2], a push-on roller [3], a sleeve holder (front) [4] and
a bearing [5] from the developing cylinder.

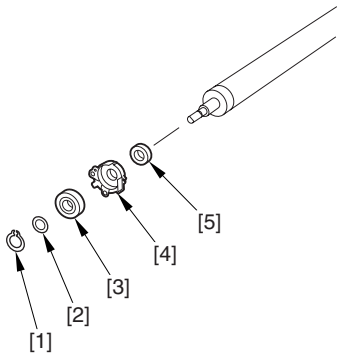

F-7-156

7.12.7 Transfer Charging Roller

7.12.7.1 Removing the Transfer Roller

iR2270 / iR2870 / iR3570 / iR4570 / / iR2270N / / iR2870N / / iR3570N / / iR4570N / iR2230 / / / iR3530 /

1) Open the right door [1].

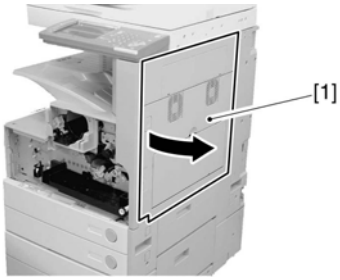

F-7-157

2) Pull off the pin [1] toward the front.

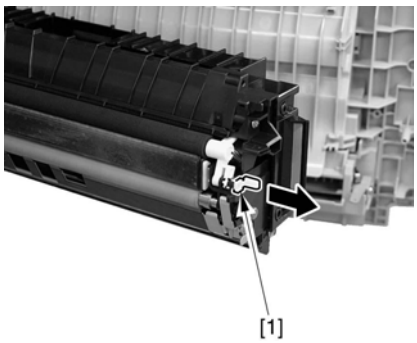

F-7-158

3) Remove the holder [1] from the front of the transfer roller.

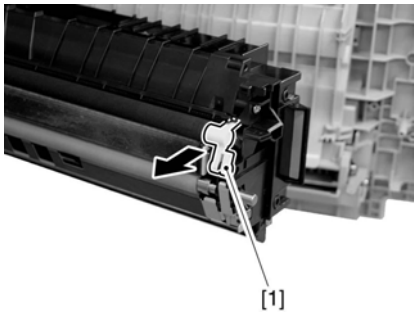

F-7-159

4) Remove the transfer roller [1] toward the front.

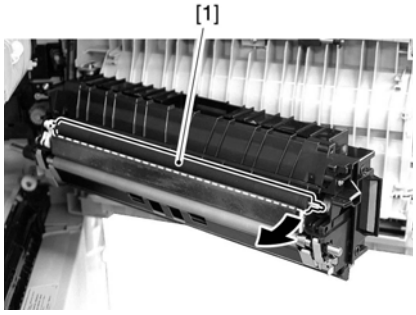

F-7-160

Points to Note When Attaching the Transfer Roller
Be sure that the top of the holder [1] is on the inside of the static eliminator [2].

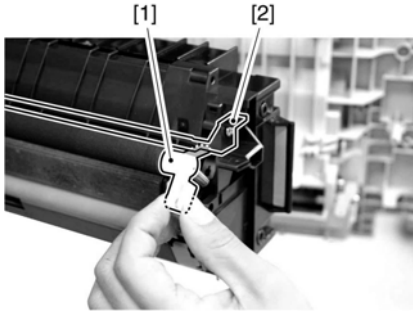

F-7-161

Be sure that the spring [1] of the holder is against the butting point [2].

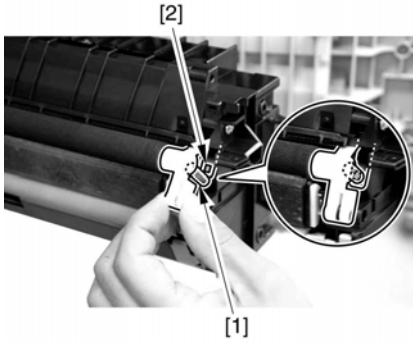

F-7-162

7.12.8 Waste Toner Box

7.12.8.1 Removing the Front Cover Unit

iR2270 / iR2870 / iR3570 / iR4570 / / iR2270N / / iR2870N / / iR3570N / / iR4570N / iR2230 / / / iR3530 /

1) Open the front cover [1].

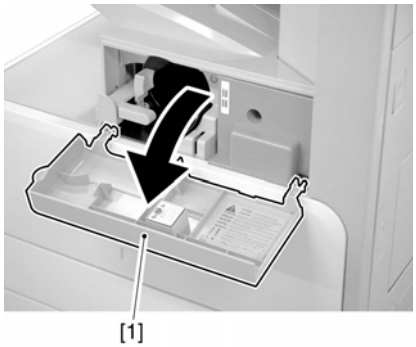

F-7-163

2) Remove the face cover rubber [1].
3) Remove the binding screw [2].
4) Remove the RS tightening screw [3].
5) Detach the front cover unit [4] by moving it in the direction of the arrow.

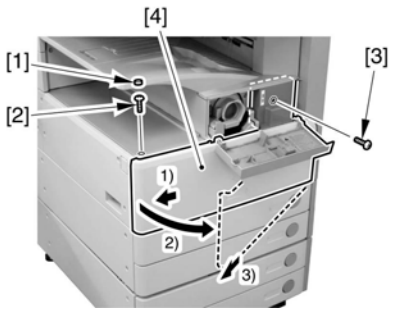

F-7-164

7.12.8.2 Removing the Waste Toner Case

iR2270 / iR2870 / iR3570 / iR4570 / / iR2270N / / iR2870N / / iR3570N / / iR4570N / iR2230 / / / iR3530 /

1) Remove the waste toner case [1].

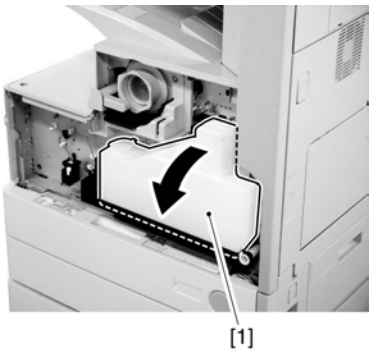

F-7-165

Point to note after attaching the waste toner receptacle
After attaching the waste toner receptacle, move the waste toner full detection lever [1] up and down to make sure that the lever is moved smoothly. Faulty detection may be resulted if the lever is caught in something and is not moved smoothly.

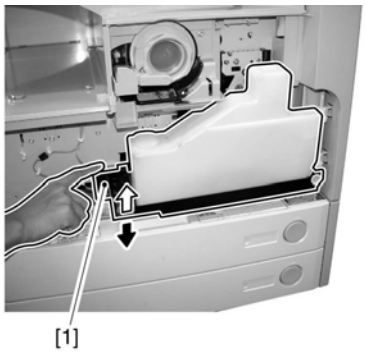

F-7-166

7.12.9 Toner Level Sensor

7.12.9.1 Removing the Front Cover Unit

iR2270 / iR2870 / iR3570 / iR4570 / / iR2270N / / iR2870N / / iR3570N / / iR4570N / iR2230 / / / iR3530 /

1) Open the front cover [1].

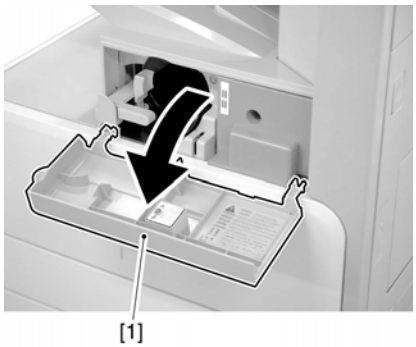

F-7-167

2) Remove the face cover rubber [1].
3) Remove the binding screw [2].
4) Remove the RS tightening screw [3].
5) Detach the front cover unit [4] by moving it in the direction of the arrow.

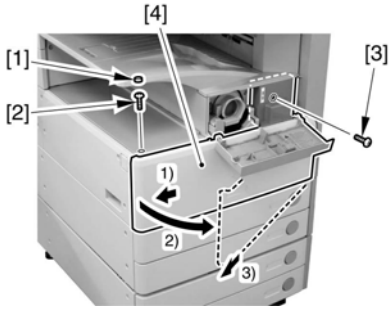

F-7-168

7.12.9.2 Removing the Waste Toner Case

iR2270 / iR2870 / iR3570 / iR4570 / / iR2270N / / iR2870N / / iR3570N / / iR4570N / iR2230 / / / iR3530 /

1) Remove the waste toner case [1].

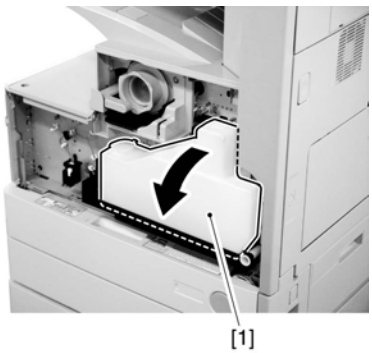

F-7-169

Point to note after attaching the waste toner receptacle
After attaching the waste toner receptacle, move the waste toner full detection lever [1] up and down to make sure that the lever is moved smoothly. Faulty detection may be resulted if the lever is caught in something and is not moved smoothly.

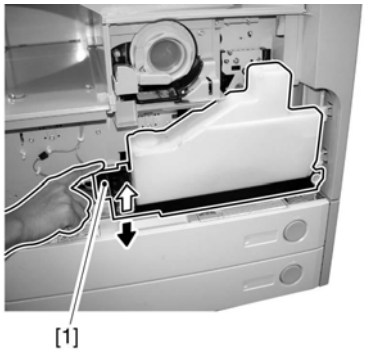

F-7-170

7.12.9.3 Removing the Toner Cartridge

iR2270 / iR2870 / iR3570 / iR4570 / / iR2270N / / iR2870N / / iR3570N / / iR4570N / iR2230 / / / iR3530 /

1) Shift up the lever [1].

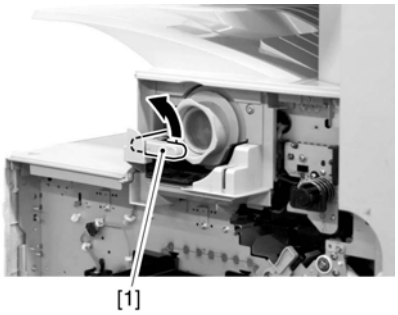

F-7-171

2) Remove the toner cartridge [1].

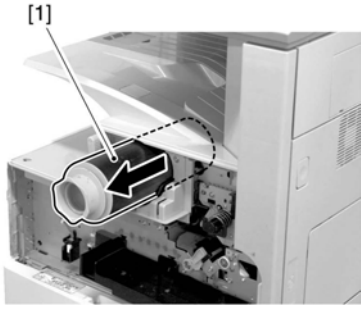

F-7-172

Points to Note on Handing the Toner Cartridge

1. Care should be taken not to bump the toner stop [1] against the covers or the like when and after removing the toner cartridge. Since the toner stop comes off easily, toner scattering may be resulted if it comes off by accident.
2. Keep the toner cartridge horizontal after removing. Since the toner stop [1] comes off easily as mentioned above, toner scattering may be resulted if the toner cartridge is placed with the toner stop side down.

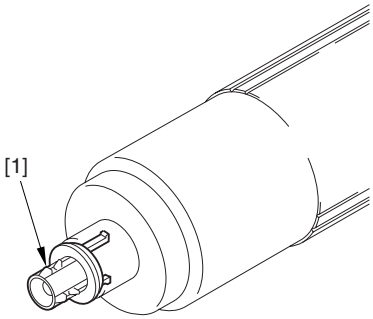

F-7-173

7.12.9.4 Removing the Drum Unit

iR2270 / iR2870 / iR3570 / iR4570 / / iR2270N / / iR2870N / / iR3570N / / iR4570N / iR2230 / / / iR3530 /

1) Open the right door [1].

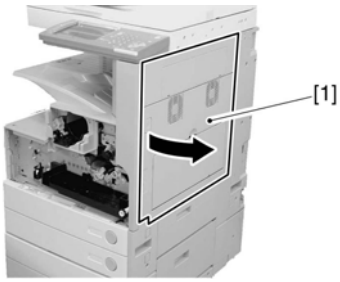

F-7-174

2) Remove the screw [1].

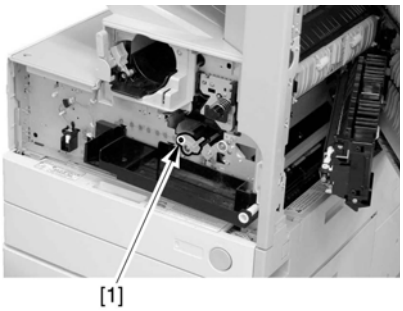

F-7-175

3) Shift the locking lever [1] to the left to release the developing assembly.

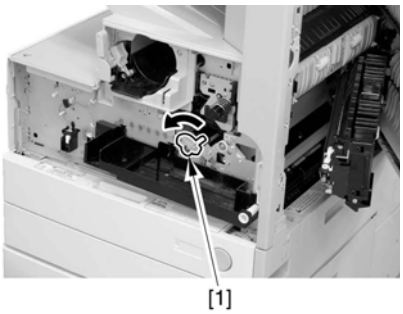

F-7-176

4) Remove the screw [1].

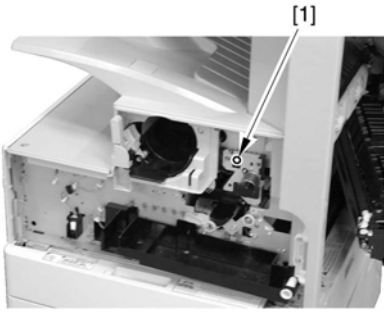

F-7-177

5) Remove the drum unit [1].

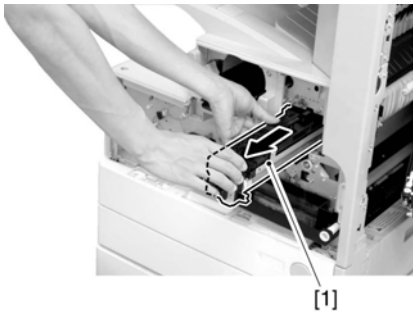

F-7-178

Be sure to hold the drum unit as shown.

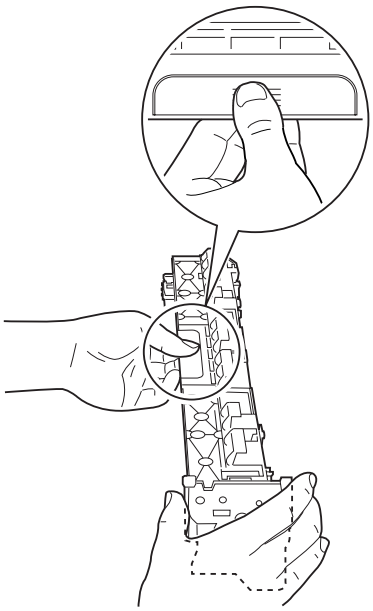

F-7-179

7.12.9.5 Removing the Developing Assembly

iR2270 / iR2870 / iR3570 / iR4570 / / iR2270N / / iR2870N / / iR3570N / / iR4570N / iR2230 / / / iR3530 /

1) Remove the screw [1].

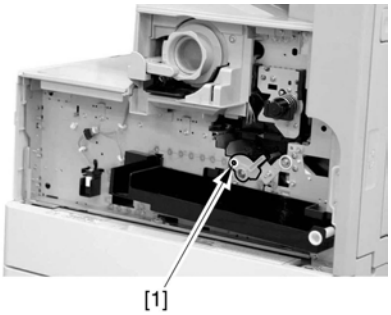

F-7-180

2) Shift the locking lever [1] to the left to release the developing assembly.

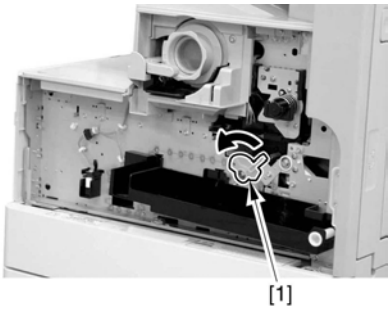

F-7-181

3) Slide the developing assembly [1] slightly to the front; then, disconnect the connector [2].

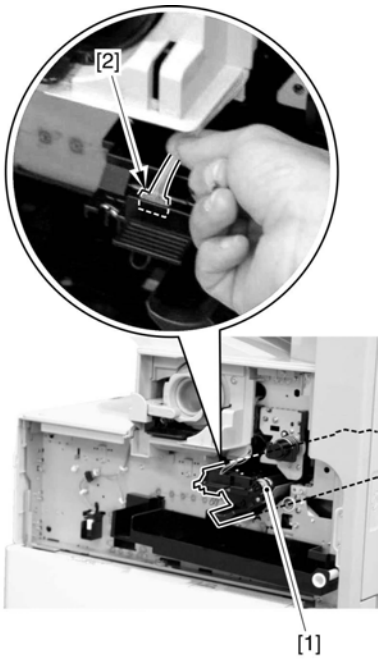

F-7-182

4) Remove the developing assembly [1].

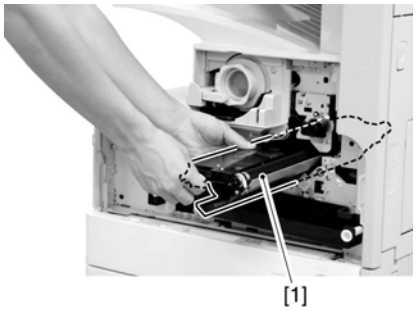

F-7-183

Be sure to hold the developing assembly as shown.

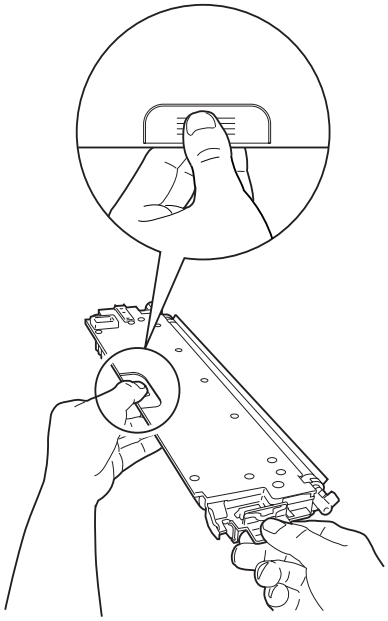

F-7-184

When fitting the developing assembly, be sure to fit the lower right segment [2] of the developing assembly [1] in the rail [3] of the machine. Thereafter, slide the developing assembly so that [A] of the developing assembly matches [B] of the rail.

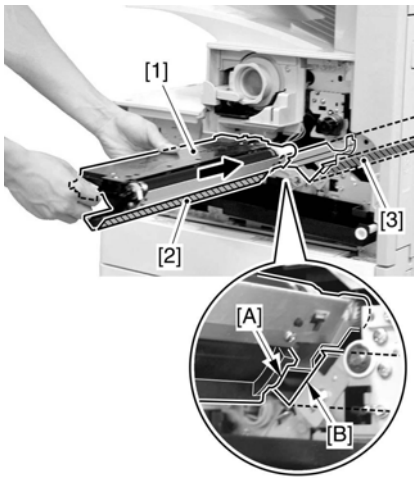

F-7-185

7.12.9.6 Removing the Upper Tray

iR2270 / iR2870 / iR3570 / iR4570 / / iR2270N / / iR2870N / / iR3570N / / iR4570N / iR2230 / / / iR3530 /

1) Remove the 2 screws [1], and detach the upper tray [2].

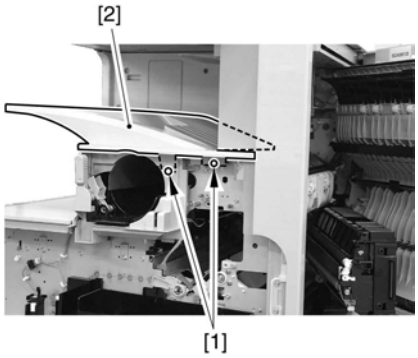

F-7-186

Reference:
Lift the front of the upper tray [1], and detach it as if to slide it toward the front.

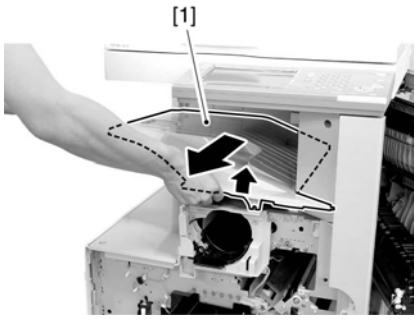

F-7-187

7.12.9.7 Removing the Toner Cartridge Cover

iR2270 / iR2870 / iR3570 / iR4570 / / iR2270N / / iR2870N / / iR3570N / / iR4570N / iR2230 / / / iR3530 /

1) Remove the 2 screws [1]; then, detach the toner bottle cover [2].

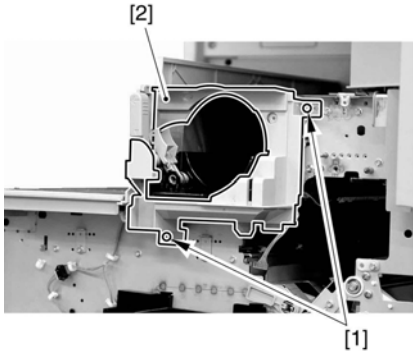

F-7-188

7.12.9.8 Removing the Pre-Exposure Lamp

iR2270 / iR2870 / iR3570 / iR4570 / / iR2270N / / iR2870N / / iR3570N / / iR4570N / iR2230 / / / iR3530 /

1) Open the 2 wire saddles [1], and disconnect the 2 relay connectors [2].

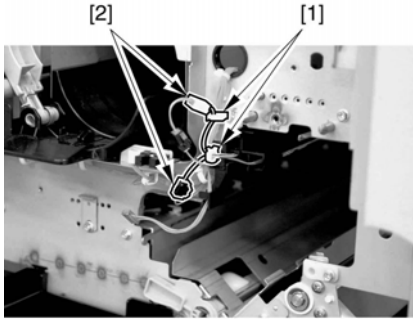

F-7-189

2) While freeing the lock [1] toward the right, detach the pre-exposure lamp [2].

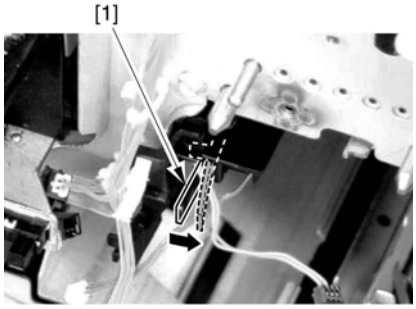

F-7-190

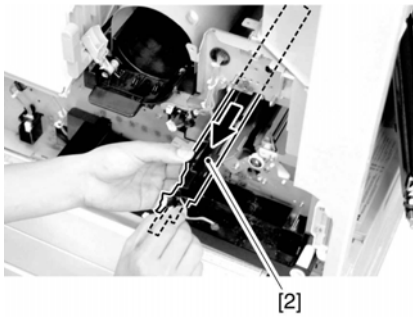

F-7-191

7.12.9.9 Removing the Left Cover

iR2270 / iR2870 / iR3570 / iR4570 / / iR2270N / / iR2870N / / iR3570N / / iR4570N / iR2230 / / / iR3530 /

1) Remove the 4 screws [1], and detach the left cover [2].

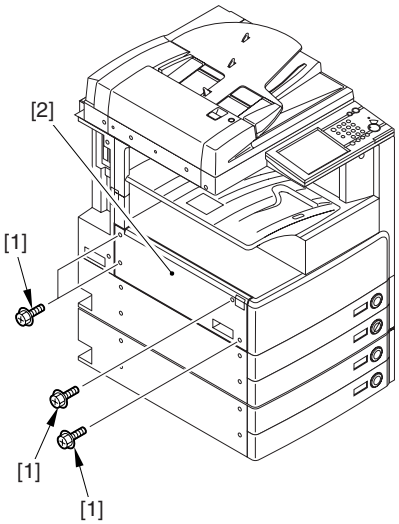

F-7-192

7.12.9.10 Removing the Laser Unit

iR2270 / iR2870 / iR3570 / iR4570 / / iR2270N / / iR2870N / / iR3570N / / iR4570N / iR2230 / / / iR3530 /

1) Open the 2 wire saddles [1], and disconnect the 2 connectors [2].

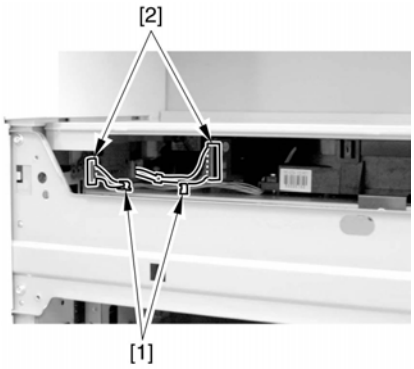

F-7-193

When you have disconnected the connector [1], be sure to take care so that it will not come into contact with the PCB that is mounted to the laser scanner unit. (The PCB is equipped with a laser intensity adjustment variable resistor. Contact with the PCB can change the adjustment setting.)

2) Open the wire saddle [1], and disconnect the connector [2].

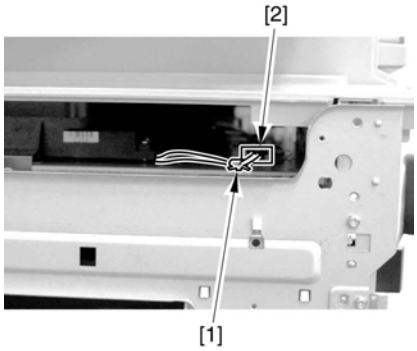

F-7-194

3) Remove the screw [1], and detach the fixing [2].

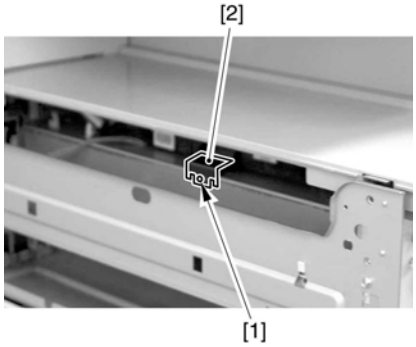

F-7-195

4) Lift the front of the laser unit [1], and slide it to the front.

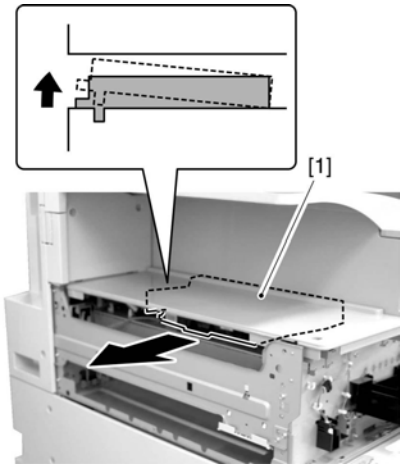

F-7-196

When sliding out the laser scanner unit, be sure to take care not to touch the PCB mounted to the laser scanner unit. (The PCB is equipped with a laser scanner intensity adjustment variable resistor, and contact with the PCB can change the adjustment setting.)

7.12.9.11 Removing the Hopper Assembly

iR2270 / iR2870 / iR3570 / iR4570 / / iR2270N / / iR2870N / / iR3570N / / iR4570N / iR2230 / / / iR3530 /

1) Remove the inside base cover [1] and the inside right color [2].

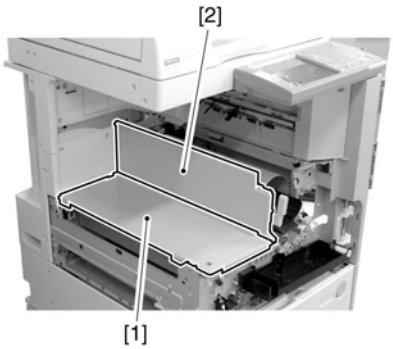

F-7-197

2) Disconnect the 3 connectors [1] found at the front and the connector [2] found at the rear.

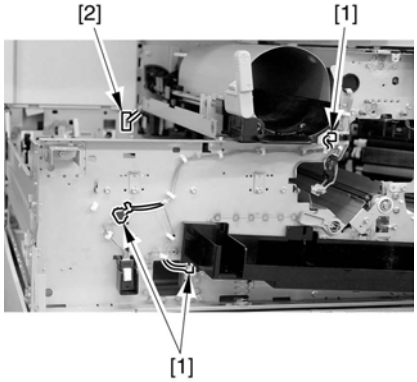

F-7-198

3) Open the 11 wire saddles [1], and pull out the harness [3] through the hole [2] in the plate.

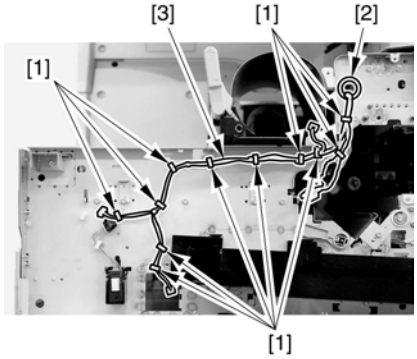

F-7-199

4) Remove the 3 screws [1], and detach the hopper assembly [2].

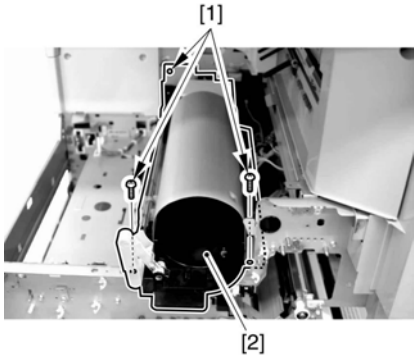

F-7-200

When fitting the hopper assembly to the machine, be sure that the connectors [1] are securely connected. If the connectors [1] are not connected, the environment heater will not be supplied with power, leading to image faults.

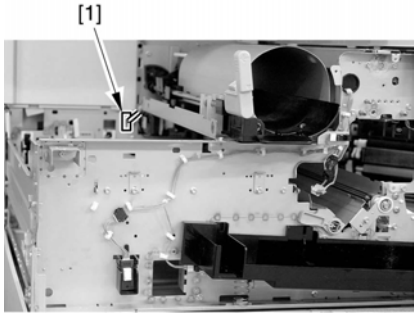

F-7-201

7.12.9.12 Removing the Toner Level Sensor

iR2270 / iR2870 / iR3570 / iR4570 / / iR2270N / / iR2870N / / iR3570N / / iR4570N / iR2230 / / / iR3530 /

1) Remove the 2 screws [1], and disconnect the connector [2]; then, detach the toner sensor [3].

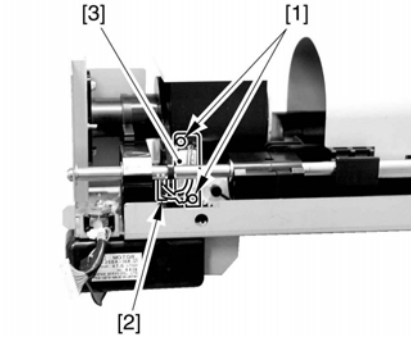

F-7-202

7.12.10 Toner Feedscrew Motor

7.12.10.1 Removing the Front Cover Unit

iR2270 / iR2870 / iR3570 / iR4570 / / iR2270N / / iR2870N / / iR3570N / / iR4570N / iR2230 / / / iR3530 /

1) Open the front cover [1].

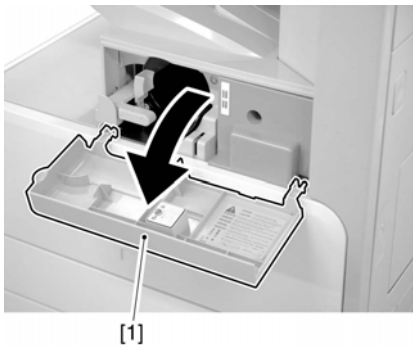

F-7-203

2) Remove the face cover rubber [1].
3) Remove the binding screw [2].
4) Remove the RS tightening screw [3].
5) Detach the front cover unit [4] by moving it in the direction of the arrow.

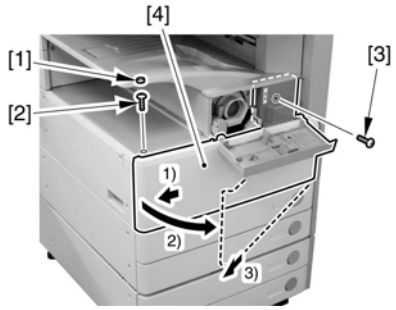

F-7-204

7.12.10.2 Removing the Waste Toner Case

iR2270 / iR2870 / iR3570 / iR4570 / / iR2270N / / iR2870N / / iR3570N / / iR4570N / iR2230 / / / iR3530 /

1) Remove the waste toner case [1].

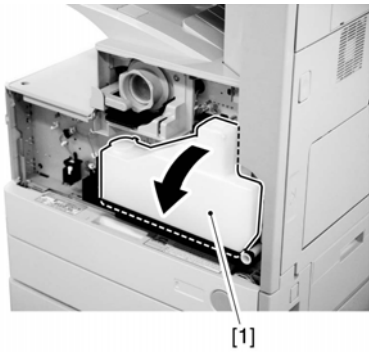

F-7-205

Point to note after attaching the waste toner receptacle
After attaching the waste toner receptacle, move the waste toner full detection lever [1] up and down to make sure that the lever is moved smoothly. Faulty detection may be resulted if the lever is caught in something and is not moved smoothly.

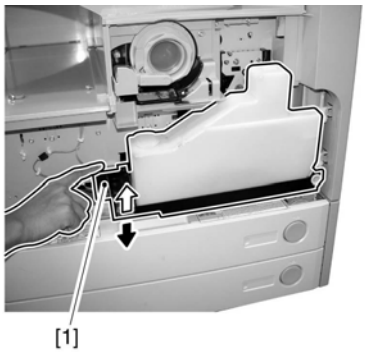

F-7-206

7.12.10.3 Removing the Toner Cartridge

iR2270 / iR2870 / iR3570 / iR4570 / / iR2270N / / iR2870N / / iR3570N / / iR4570N / iR2230 / / / iR3530 /

1) Shift up the lever [1].

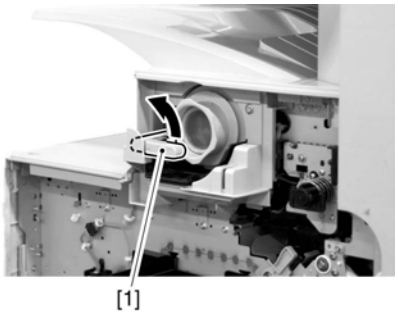

F-7-207

2) Remove the toner cartridge [1].

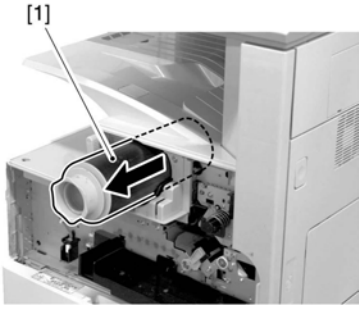

F-7-208

Points to Note on Handing the Toner Cartridge
1. Care should be taken not to bump the toner stop [1] against the covers or the like when and after removing the toner cartridge. Since the toner stop comes off easily, toner scattering may be resulted if it comes off by accident.
2. Keep the toner cartridge horizontal after removing. Since the toner stop [1] comes off easily as mentioned above, toner scattering may be resulted if the toner cartridge is placed with the toner stop side down.

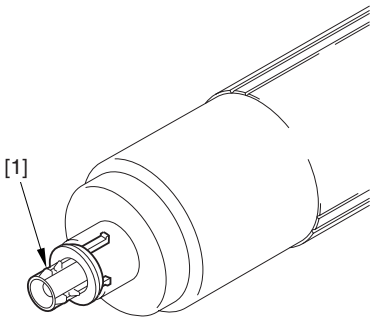

F-7-209

7.12.10.4 Removing the Drum Unit

iR2270 / iR2870 / iR3570 / iR4570 / / iR2270N / / iR2870N / / iR3570N / / iR4570N / iR2230 / / / iR3530 /

1) Open the right door [1].

F-7-210

2) Remove the screw [1].

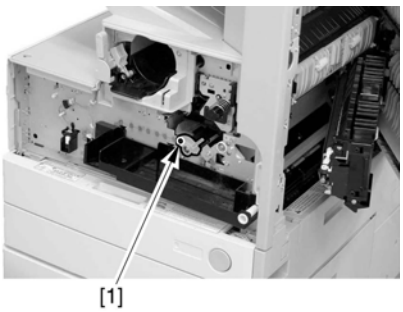

F-7-211

3) Shift the locking lever [1] to the left to release the developing assembly.

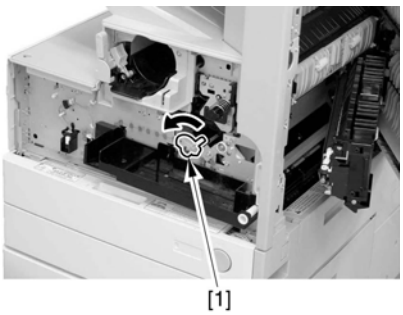

F-7-212

4) Remove the screw [1].

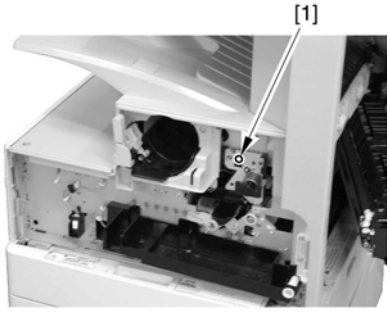

F-7-213

5) Remove the drum unit [1].

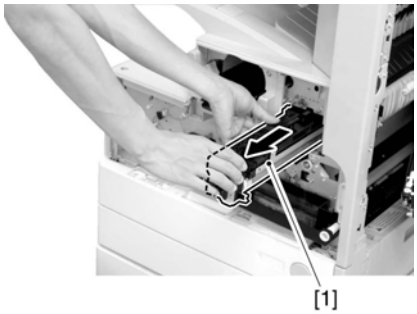

F-7-214

Be sure to hold the drum unit as shown.

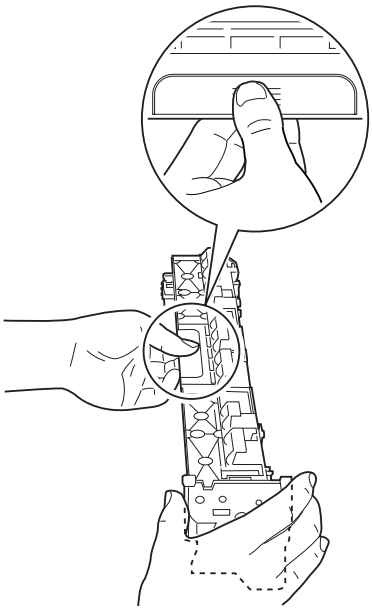

F-7-215

7.12.10.5 Removing the Developing Assembly

iR2270 / iR2870 / iR3570 / iR4570 / / iR2270N / / iR2870N / / iR3570N / / iR4570N / iR2230 / / / iR3530 /

1) Remove the screw [1].

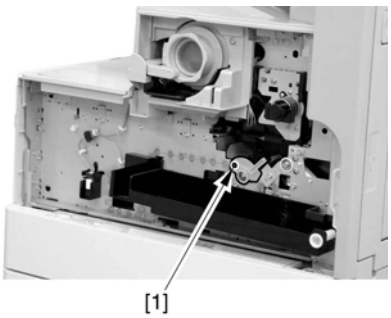

F-7-216

2) Shift the locking lever [1] to the left to release the developing assembly.

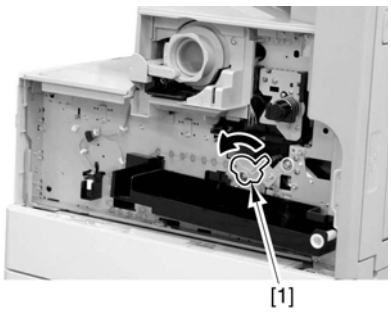

F-7-217

3) Slide the developing assembly [1] slightly to the front; then, disconnect the connector [2].

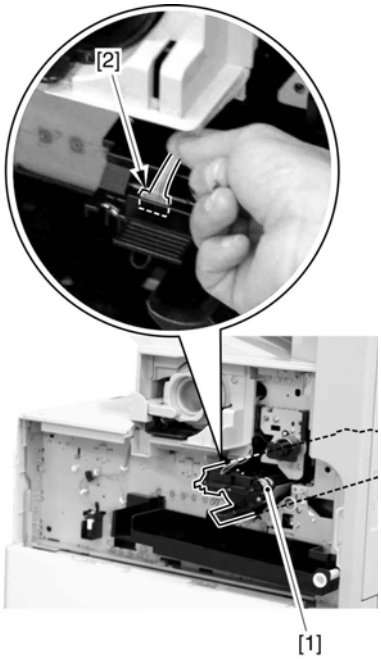

F-7-218

4) Remove the developing assembly [1].

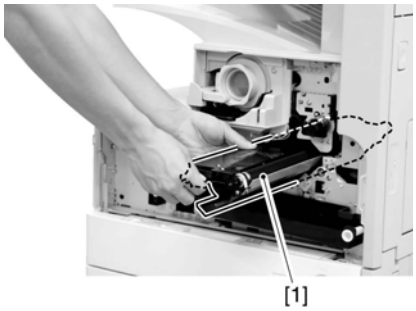

F-7-219

Be sure to hold the developing assembly as shown.

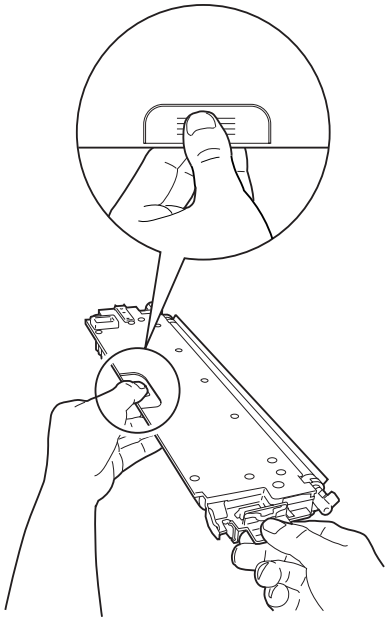

F-7-220

When fitting the developing assembly, be sure to fit the lower right segment [2] of the developing assembly [1] in the rail [3] of the machine. Thereafter, slide the developing assembly so that [A] of the developing assembly matches [B] of the rail.

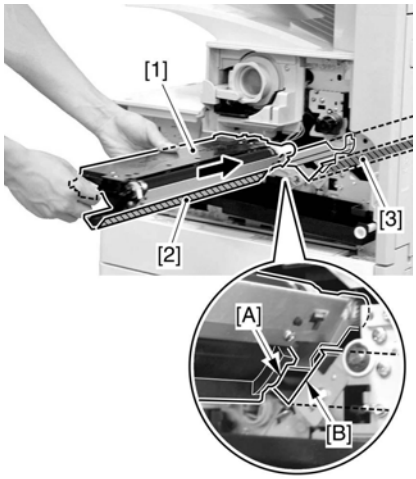

F-7-221

7.12.10.6 Removing the Upper Tray

iR2270 / iR2870 / iR3570 / iR4570 / / iR2270N / / iR2870N / / iR3570N / / iR4570N / iR2230 / / / iR3530 /

1) Remove the 2 screws [1], and detach the upper tray [2].

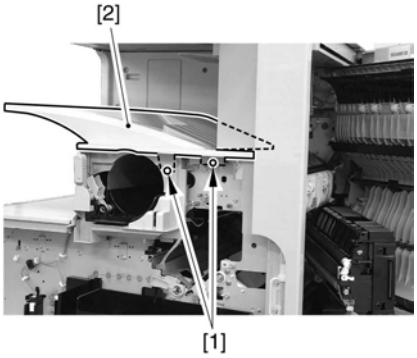

F-7-222

Reference:
Lift the front of the upper tray [1], and detach it as if to slide it toward the front.

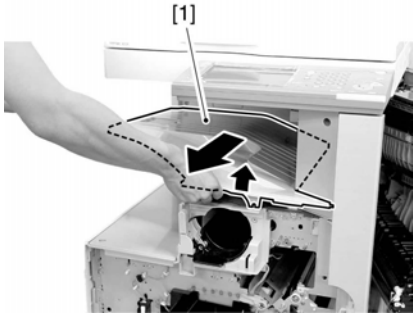

F-7-223

7.12.10.7 Removing the Toner Cartridge Cover

iR2270 / iR2870 / iR3570 / iR4570 / / iR2270N / / iR2870N / / iR3570N / / iR4570N / iR2230 / / / iR3530 /

1) Remove the 2 screws [1]; then, detach the toner bottle cover [2].

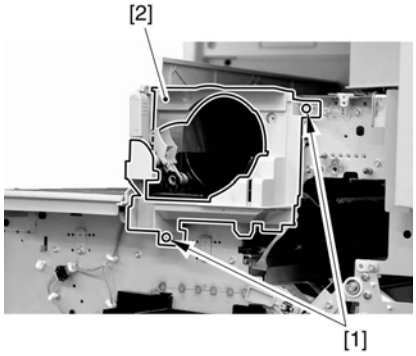

F-7-224

7.12.10.8 Removing the Pre-Exposure Lamp

iR2270 / iR2870 / iR3570 / iR4570 / / iR2270N / / iR2870N / / iR3570N / / iR4570N / iR2230 / / / iR3530 /

1) Open the 2 wire saddles [1], and disconnect the 2 relay connectors [2].

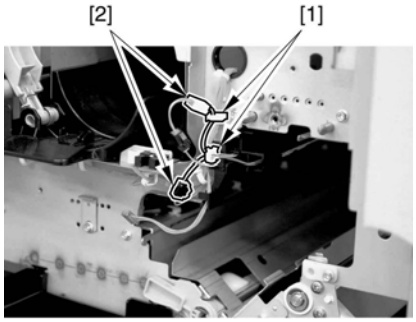

F-7-225

2) While freeing the lock [1] toward the right, detach the pre-exposure lamp [2].

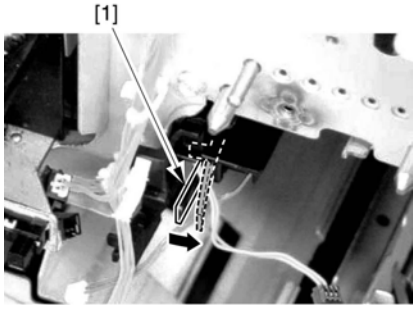

F-7-226

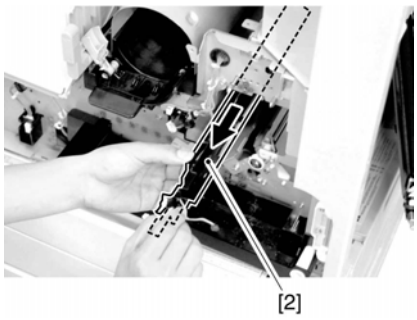

F-7-227

7.12.10.9 Removing the Left Cover

iR2270 / iR2870 / iR3570 / iR4570 / / iR2270N / / iR2870N / / iR3570N / / iR4570N / iR2230 / / / iR3530 /

1) Remove the 4 screws [1], and detach the left cover [2].

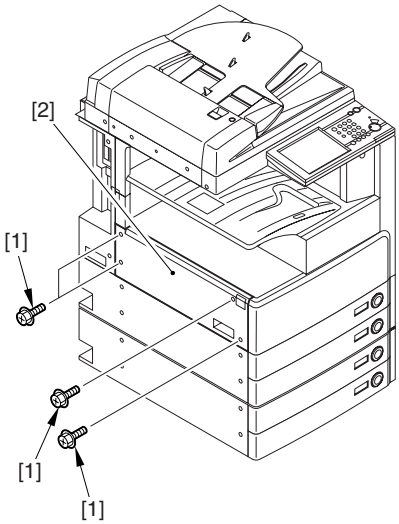

F-7-228

7.12.10.10 Removing the Laser Unit

iR2270 / iR2870 / iR3570 / iR4570 / / iR2270N / / iR2870N / / iR3570N / / iR4570N / iR2230 / / / iR3530 /

1) Open the 2 wire saddles [1], and disconnect the 2 connectors [2].

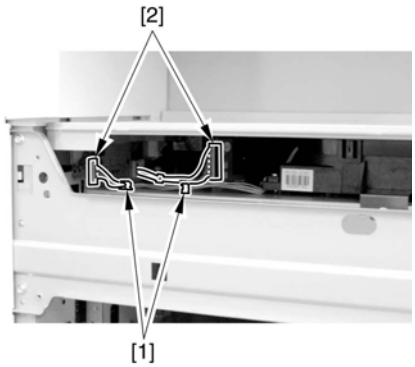

F-7-229

When you have disconnected the connector [1], be sure to take care so that it will not come into contact with the PCB that is mounted to the laser scanner unit. (The PCB is equipped with a laser intensity adjustment variable resistor. Contact with the PCB can change the adjustment setting.)

2) Open the wire saddle [1], and disconnect the connector [2].

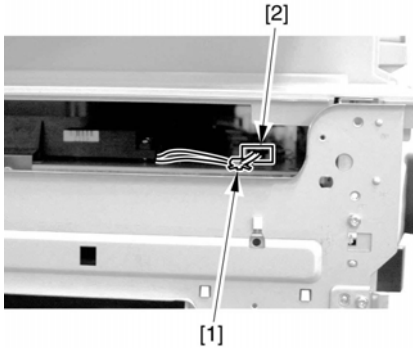

F-7-230

3) Remove the screw [1], and detach the fixing [2].

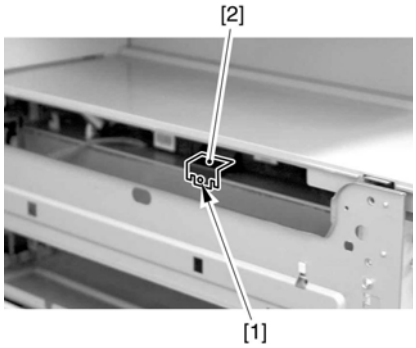

F-7-231

4) Lift the front of the laser unit [1], and slide it to the front.

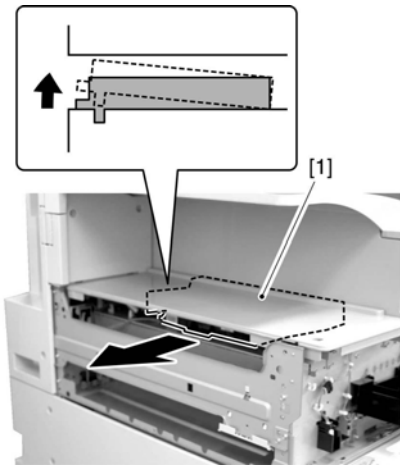

F-7-232

When sliding out the laser scanner unit, be sure to take care not to touch the PCB mounted to the laser scanner unit. (The PCB is equipped with a laser scanner intensity adjustment variable resistor, and contact with the PCB can change the adjustment setting.)

7.12.10.11 Removing the Hopper Assembly

iR2270 / iR2870 / iR3570 / iR4570 / / iR2270N / / iR2870N / / iR3570N / / iR4570N / iR2230 / / / iR3530 /

1) Remove the inside base cover [1] and the inside right color [2].

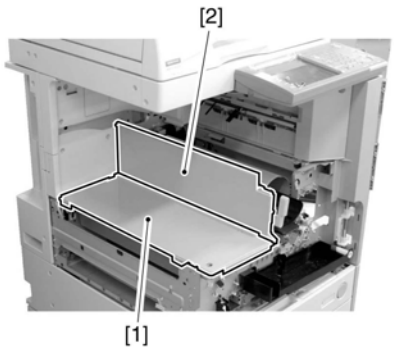

F-7-233

2) Disconnect the 3 connectors [1] found at the front and the connector [2] found at the rear.

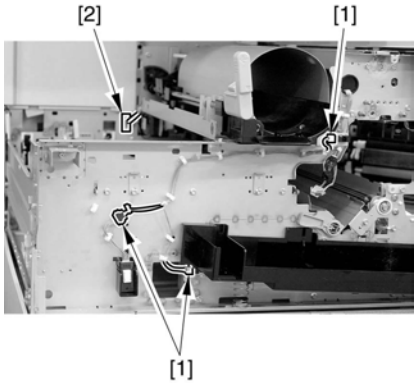

F-7-234

3) Open the 11 wire saddles [1], and pull out the harness [3] through the hole [2] in the plate.

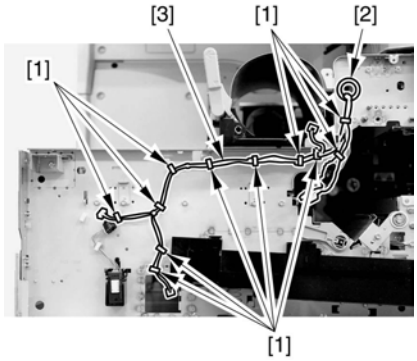

F-7-235

4) Remove the 3 screws [1], and detach the hopper assembly [2].

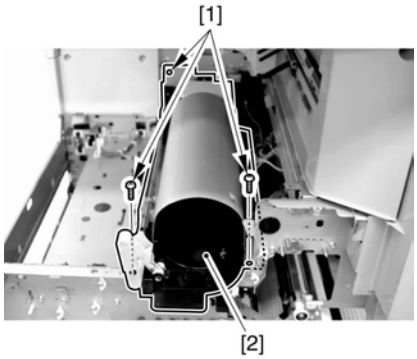

F-7-236

When fitting the hopper assembly to the machine, be sure that the connectors [1] are securely connected. If the connectors [1] are not connected, the environment heater will not be supplied with power, leading to image faults.

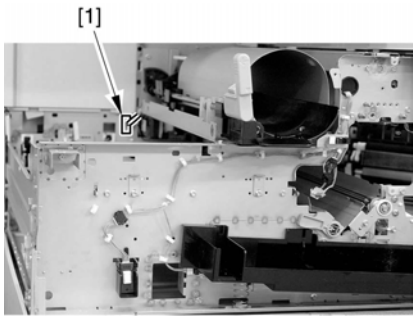

F-7-237

7.12.10.12 Removing the Toner Feedscrew Motor

iR2270 / iR2870 / iR3570 / iR4570 / / iR2270N / / iR2870N / / iR3570N / / iR4570N / iR2230 / / / iR3530 /

1) Disconnect the connector [1].

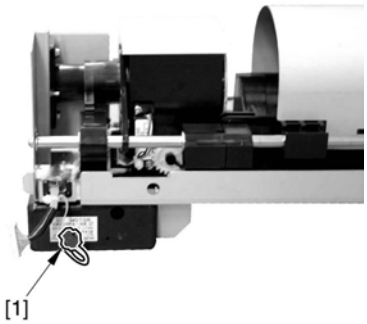

F-7-238

2) Remove the screw [1], and detach the toner feedscrew motor assembly [2].

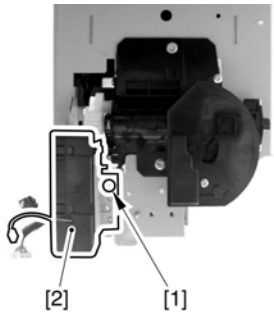

F-7-239

3) Remove the screw [1], and detach the toner feedscrew motor [3] from the base.

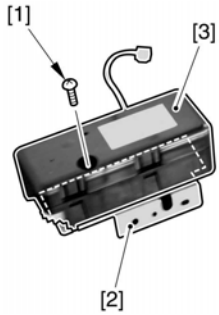

F-7-240

7.12.11 Static Charge Eliminator

7.12.11.1 Removing the Static Eliminator

iR2270 / iR2870 / iR3570 / iR4570 / / iR2270N / / iR2870N / / iR3570N / / iR4570N / iR2230 / / / iR3530 /

1) Open the right door [1].

F-7-241

2) Remove the screw [1].

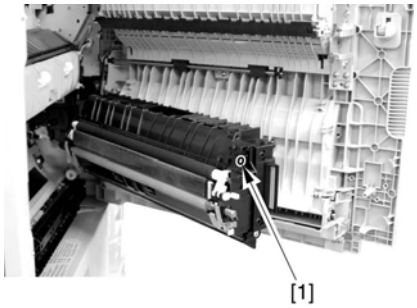

F-7-242

3) Detach the static eliminator [1] to the front.

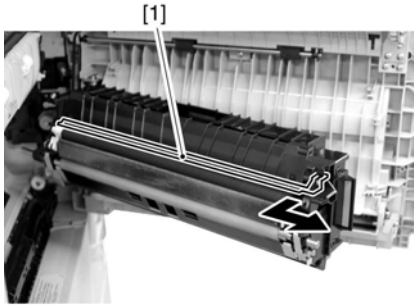

F-7-243

Chapter 8 Pickup/Feeding System

Contents

8.1 Construction 8-1
8.1.1 Specifications, Controls, and Functions 8-1
8.1.2 Specifications, Controls, and Functions 8-1
8.1.3 Division into Blocks 8-2
8.1.4 Division into Blocks 8-2
8.1.5 Arrangement of Rollers 8-3
8.1.6 Arrangement of Rollers 8-4
8.1.7 Diagram of Paper Paths (printer on its own) 8-5
8.1.8 Paper Path (printer unit on its own) 8-6
8.1.9 Diagram of Paper Paths (w/ copy tray) 8-7
8.1.10 Diagram of Paper Paths (w/ 3 Way Unit-A1 /copy tray) 8-7
8.1.11 Paper path (w/ expansion output kit, output tray) 8-8
8.1.12 Diagram of Paper Paths (w/ Finisher-S1/copy tray) 8-9
8.1.13 Paper Path (w/ Finer-S1, output tray) 8-9
8.1.14 Diagram of Paper Paths (w/ Finisher-Q3/Saddle Finisher-Q4) 8-10
8.1.15 Arrangement of Sensors 8-11
8.1.16 Arrangement of Sensors 8-11
8.1.17 Route of Drive 8-12
8.1.18 Route of Drive 8-13
8.2 Basic Sequence 8-14
8.2.1 Basic Sequence 8-14
8.2.2 Increase in Speed 8-14
8.2.3 Acceleration Intervals 8-16
8.2.4 Increase in Speed 8-18
8.3 Detecting Jams 8-19
8.3.1 Delay Jams 8-19
8.3.1.1 Delay Jam Outside the Cassette Pickup Assembly 8-19
8.3.1.2 Delay Jam in the Cassette Pickup Assembly 8-19
8.3.2 Stationary Jams 8-19
8.3.2.1 Common Stationary Jam 8-19
8.3.2.2 Stationary Jam at Power-On 8-20
8.3.3 Other Jams 8-20
8.3.3.1 Door Open Jam 8-20
8.4 Cassette Pick-Up Unit 8-20
8.4.1 Overview 8-20
8.4.2 Basic Sequence 8-21
8.4.3 Identifying the Paper Size 8-21
8.4.4 Setting Up the Universal Cassette 8-23
8.4.5 Paper Level Sensor 8-23
8.5 Manual Feed Pickup Unit 8-25
8.5.1 Overview 8-25
8.5.2 Basic Sequence of Operation 8-26
8.5.3 Identifying the Paper Size 8-26
8.5.4 Paper Retaining Mechanism 8-27
8.6 Registration Unit 8-28
8.6.1 Overview 8-28
8.6.2 Checking Horizontal Registration 8-29
8.7 Duplex Feeding Unit 8-29
8.7.1 Overview 8-29
8.7.2 Overview 8-31

8.7.3 Sequence of Image Formation 8-31
8.7.4 Sequence of Image Formation 8-32
8.7.5 Flow of Paper (w/o/ delivery option) 8-33
8.7.6 Flow of Paper (w/ delivery option) 8-38
8.7.7 Flow of Paper 8-42
8.8 Parts Replacement Procedure 8-46
8.8.1 Pick-up Unit 1 8-46
8.8.1.1 Removing the Right Cover (rear) 8-46
8.8.1.2 Removing the Right Door 8-46
8.8.1.3 Removing the Right Door 8-47
8.8.1.4 Removing the Right Cover (lower front) 8-47
8.8.1.5 Removing the Pickup Assembly 1 8-47
8.8.2 Pick-up Unit 2 8-48
8.8.2.1 Removing the Right Cover (rear) 8-48
8.8.2.2 Removing the Right Cover (lower front) 8-48
8.8.2.3 Removing the Pickup Assembly 2 8-48
8.8.3 Pickup Roller 8-48
8.8.3.1 Removing the Pickup Roller/Feed Roller/Separation Roller 8-48
8.8.4 Sensor Mount 8-49
8.8.4.1 Removing the Right Cover (rear) 8-49
8.8.4.2 Removing the Right Door 8-49
8.8.4.3 Removing the Right Door 8-50
8.8.4.4 Removing the Right Cover (lower front) 8-50
8.8.4.5 Removing the Pickup Assembly 1 8-50
8.8.4.6 Removing the Pickup Assembly 2 8-50
8.8.4.7 Removing the Sensor Mounting Plate 8-51
8.8.4.8 Mounting the Sensor Mounting Plate 8-51
8.8.5 Cassette Pick-up Motor 1 8-52
8.8.5.1 Removing the Rear Cover 8-52
8.8.5.2 Removing the Right Cover (rear) 8-52
8.8.5.3 Removing the Pickup Motor Base 8-52
8.8.5.4 Removing the Cassette Pickup Motor 1 8-53
8.8.6 Cassette Pick-up Motor 2 8-53
8.8.6.1 Removing the Rear Cover 8-53
8.8.6.2 Removing the Right Cover (rear) 8-53
8.8.6.3 Removing the Pickup Motor Base 8-53
8.8.6.4 Removing the Cassette Pickup Motor 2 8-54
8.8.7 Cassette Size Sensor 8-54
8.8.7.1 Removing the Right Cover (rear) 8-54
8.8.7.2 Removing the Right Door 8-54
8.8.7.3 Removing the Right Door 8-55
8.8.7.4 Removing the Right Cover (lower front) 8-55
8.8.7.5 Removing the Pickup Assembly 2 8-56
8.8.7.6 Removing the Pickup Assembly 1 8-56
8.8.7.7 Removing the Cassette Size Sensor 8-56
8.8.8 Cassette Retry Paper Sensor 8-57
8.8.8.1 Removing the Right Cover (rear) 8-57
8.8.8.2 Removing the Right Door 8-57
8.8.8.3 Removing the Right Door 8-58
8.8.8.4 Removing the Right Cover (lower front) 8-58
8.8.8.5 Removing the Pickup Assembly 1 8-59
8.8.8.6 Removing the Pickup Assembly 2 8-59
8.8.8.7 Removing the Sensor Mounting Plate 8-59
8.8.8.8 Removing the Cassette Retry Paper Sensor 8-60
8.8.9 Cassette Paper Sensor 8-60
8.8.9.1 Removing the Right Cover (rear) 8-60
8.8.9.2 Removing the Right Door 8-60
8.8.9.3 Removing the Right Door 8-61
8.8.9.4 Removing the Right Cover (lower front) 8-61
8.8.9.5 Removing the Pickup Assembly 1 8-61

8.8.9.6 Removing the Pickup Assembly 2 8-62
8.8.9.7 Removing the Sensor Mounting Plate 8-62
8.8.9.8 Removing the Cassette Paper Sensor 8-62
8.8.10 Cassette Paper Level Sensor (A/B) 8-63
8.8.10.1 Removing the Right Cover (rear) 8-63
8.8.10.2 Removing the Right Door 8-63
8.8.10.3 Removing the Right Door 8-64
8.8.10.4 Removing the Right Cover (lower front) 8-64
8.8.10.5 Removing the Pickup Assembly 1 8-64
8.8.10.6 Removing the Pickup Assembly 2 8-65
8.8.10.7 Removing the Sensor Mounting Plate 8-65
8.8.10.8 Removing the Cassette Paper Level Sensor (A/B) 8-65
8.8.11 Slide Resistor 8-66
8.8.11.1 Removing the Right Cover (rear) 8-66
8.8.11.2 Removing the Right Door 8-66
8.8.11.3 Removing the Right Door 8-67
8.8.11.4 Removing the Manual Feed Unit 8-67
8.8.11.5 Removing the Manual Tray Unit 8-68
8.8.11.6 Removing the Slide Resistor 8-68
8.8.12 Cassette Pickup Solenoid 8-68
8.8.12.1 Removing the Right Cover (rear) 8-68
8.8.12.2 Removing the Right Door 8-69
8.8.12.3 Removing the Right Door 8-69
8.8.12.4 Removing the Right Cover (lower front) 8-70
8.8.12.5 Removing the Pickup Assembly 1 8-70
8.8.12.6 Removing the Pickup Assembly 2 8-70
8.8.12.7 Removing the Cassette Pickup Solenoid 8-71
8.8.13 Cassette Size Sensor Relay PCB 8-71
8.8.13.1 Removing the Right Cover (rear) 8-71
8.8.13.2 Removing the Right Door 8-71
8.8.13.3 Removing the Right Door 8-72
8.8.13.4 Removing the Right Cover (lower front) 8-72
8.8.13.5 Removing the Pickup Assembly 1 8-72
8.8.13.6 Removing the Pickup Assembly 2 8-73
8.8.13.7 Removing the Cassette Size Sensor Relay PCB 8-73
8.8.14 Manual Tray Assembly 8-73
8.8.14.1 Removing the Right Cover (rear) 8-73
8.8.14.2 Removing the Right Door 8-73
8.8.14.3 Removing the Right Door 8-74
8.8.14.4 Removing the Manual Feed Unit 8-75
8.8.14.5 Removing the Manual Feed Tray Assembly 8-75
8.8.15 Manual Feed Unit 8-76
8.8.15.1 Removing the Right Cover (rear) 8-76
8.8.15.2 Removing the Right Door 8-76
8.8.15.3 Removing the Right Door 8-77
8.8.15.4 Removing the Manual Feed Unit 8-77
8.8.16 Manual Pickup Roller 8-78
8.8.16.1 Removing the Right Cover (rear) 8-78
8.8.16.2 Removing the Right Door 8-78
8.8.16.3 Removing the Right Door 8-79
8.8.16.4 Removing the Manual Feed Unit 8-79
8.8.16.5 Removing the Manual Feed Pickup Roller 8-80
8.8.17 Manual Pick-up Clutch 8-80
8.8.17.1 Removing the Right Cover (rear) 8-80
8.8.17.2 Removing the Right Door 8-81
8.8.17.3 Removing the Right Door 8-81
8.8.17.4 Removing the Rear Cover 8-82
8.8.17.5 Removing the Main Power Switch 8-82
8.8.17.6 Removing the Manual Feed Pickup Clutch 8-82
8.8.18 Manual Separation Pad 8-83
8.8.18.1 Removing the Right Cover (rear) 8-83

8.8.18.2 Removing the Right Door 8-83
8.8.18.3 Removing the Right Door 8-84
8.8.18.4 Removing the Manual Feed Unit 8-84
8.8.18.5 Removing the Manual Feed Pickup Roller 8-85
8.8.18.6 Removing the Manual Feed Separation pad 8-85
8.8.19 Registration Clutch 8-85
8.8.19.1 Removing the Rear Cover 8-85
8.8.19.2 Removing the Main Drive Assembly 8-86
8.8.19.3 Removing the Main Drive Assembly 8-86
8.8.19.4 Removing the Registration Clutch 8-87
8.8.20 Feeding Roller 8-87
8.8.20.1 Removing the Pickup Roller/Feed Roller/Separation Roller 8-87
8.8.21 Vertical Path Roller 8-87
8.8.21.1 Removing the Right Cover (rear) 8-87
8.8.21.2 Removing the Right Door 8-87
8.8.21.3 Removing the Right Door 8-88
8.8.21.4 Removing the Right Cover (lower front) 8-89
8.8.21.5 Removing the Pickup Assembly 1 8-89
8.8.21.6 Removing the Pickup Assembly 2 8-89
8.8.21.7 Removing the Sensor Mounting Plate 8-89
8.8.21.8 Removing the Vertical Path Roller 8-90
8.8.22 Duplex Feed Roller 2 8-90
8.8.22.1 Removing the Right Cover (rear) 8-90
8.8.22.2 Removing the Right Door 8-90
8.8.22.3 Removing the Right Door 8-91
8.8.22.4 Removing the Duplex Feed Roller 2 8-92
8.8.23 Duplex Feed Sensor 8-92
8.8.23.1 Removing the Right Cover (rear) 8-92
8.8.23.2 Removing the Right Door 8-92
8.8.23.3 Removing the Right Door 8-93
8.8.23.4 Removing the Duplex Feed Sensor 8-94
8.8.24 Duplex Feed Clutch 8-94
8.8.24.1 Removing the Rear Cover 8-94
8.8.24.2 Removing the Duplex Feed Clutch 8-94
8.8.25 Delivery Assembly 1 8-94
8.8.25.1 Removing the Right Cover (rear) 8-94
8.8.25.2 Removing the Front Cover Unit 8-95
8.8.25.3 Removing the Delivery Tray 8-95
8.8.25.4 Removing the Right Door 8-95
8.8.25.5 Removing the Right Door 8-96
8.8.25.6 Removing the Extension Delivery Kit 8-96
8.8.25.7 Removing the Delivery Assembly 1 8-97
8.8.26 Fixing/ Delivery Drive Assembly 8-97
8.8.26.1 Removing the Right Cover (rear) 8-97
8.8.26.2 Removing the Front Cover Unit 8-97
8.8.26.3 Removing the Delivery Tray 8-98
8.8.26.4 Removing the Right Door 8-98
8.8.26.5 Removing the Right Door 8-99
8.8.26.6 Removing the Delivery Assembly 1 8-99
8.8.26.7 Removing the Fixing Unit 8-99
8.8.26.8 Removing the Fixing/Delivery Drive Assembly 8-100
8.8.27 Separation Roller 8-100
8.8.27.1 Removing the Pickup Roller/Feed Roller/Separation Roller 8-100

8.1 Construction

8.1.1 Specifications, Controls, and Functions

iR2270 / iR2870 / iR3570 / iR4570 / / / /

The major specifications, controls, and functions of the pickup/feeding system are as follows:

T-8-1

Item	Description	-
Paper compartment	front loading	
Pickup method	cassette	separation retard
	manual feeder	separation pad
Paper reference	center	
Paper volume	cassette 1/2	550 sheets (80 g/m2)
	manual feed tray	50 sheets (80 g/m2)
Paper size	cassette 1	B4, A4, B5, LGL, LTR, EXE, A4R, B5R, LTRR, A5R. STMTR,
	cassette 2	A3, B4, A4, B5, LGL, LTR, EXE, LDR, A4R, B5R, LTRR, A5R, STMTR
	manual feed tray	A3, B4, A4, B5, LDR, LGL, LTR, A4R, B5R, LTRR, A5R, STMTR, EXE, postcard, envelope, free size
Paper weight	cassette 1/2	64 to 80 g/m2 (single-sided)
		64 to 80 g/m2 (auto double-sided)
	manual feed tray	64 to 128 g/m2 (if double-sided, manual feeding only; no auto duplexing)
Paper size switch-over	cassette 1/2	by the user
	manual feed tray	by the user
Duplexing method	through path	
	envelopes: Com10, Monarch, DL, ISO-C5, ISO-B5	
	postcard: A6R non-default, A5R non-default, A4 non-default	
Speed of process	iR2270/2870	137 mm/sec
	iR3570/4570	230mm /sec (nomal mode) 137mm /sec (low speed mode: manual feeding)
Delivery accessory	3 Way Unit-A1 (standard with iR4570/3570 model) Inner 2-Way Tray-D1 Copy Tray-J1 Finisher-S1 Buffer Path Unit-E1 Finisher-Q3 Saddle Finisher-Q4 Inner Puncher Kit-Q1/R1/S1/T1 Punch Unit-L1/M1/N1/P1	
Pickup accessory	Cassette Feeding Unit-Y2 Side Paper Deck-Q1 Envelope Cassette Attachment-C1	

8.1.2 Specifications, Controls, and Functions

iR2230 / / iR3530 /

The major specifications, controls, and functions of the pickup/feeding system are as follows:

T-8-2

Item	Description	-
Paper compartment	front loading	
Pickup method	cassette	separation retard
	manual feeder	separation pad
Paper reference	center	
Paper volume	cassette 1/2	550 sheets (80 g/m2)
	manual feed tray	50 sheets (80 g/m2)
Paper size	cassette 1	B4, A4, B5, LGL, LTR, EXE, A4R, B5R, LTRR, A5R. STMTR,
	cassette 2	A3, B4, A4, B5, LGL, LTR, EXE, LDR, A4R, B5R, LTRR, A5R, STMTR
	manual feed tray	A3, B4, A4, B5, LDR, LGL, LTR, A4R, B5R, LTRR, A5R, STMTR, EXE, postcard, envelope, free size
Paper weight	cassette 1/2	64 to 80 g/m2 (single-sided)
		64 to 80 g/m2 (auto double-sided)
	manual feed tray	64 to 128 g/m2 (if double-sided, manual feeding only; no auto duplexing)
Paper size switch-over	cassette 1/2	by the user
	manual feed tray	by the user
Duplexing method	through path	

Item	Description	-
	envelopes: Com10, Monarch, DL, ISO-C5, ISO-B5	
	postcard: A6R non-default, A5R non-default, A4 non-default	
Speed of process	iR2230/2830	137 mm/sec
	iR3530	230mm /sec (nomal mode) 137mm /sec (low speed mode: manual feeding)
Delivery accessory	3 Way Unit-A1 (standard with iR4570/3570 model) Inner 2-Way Tray-D1 Copy Tray-J1 Finisher-S1 Buffer Path Unit-E1 Inner Puncher Kit-Q1/R1/S1/T1	
Pickup accessory	Cassette Feeding Unit-Y2 Envelope Cassette Attachment-C1	

8.1.3 Division into Blocks

iR2270 / iR2870 / /

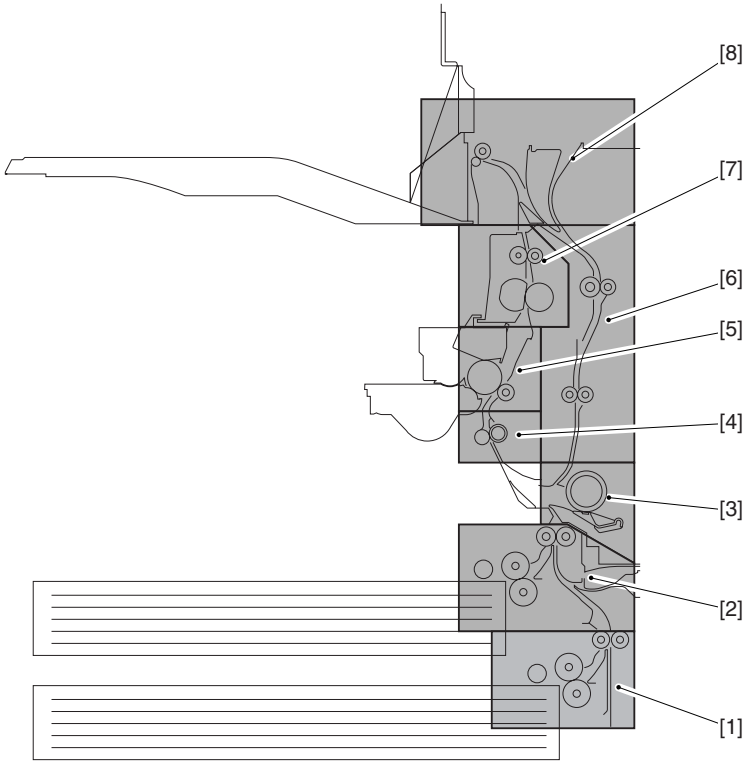

F-8-1

[1] Pickup assembly (cassette 2)
[2] Pickup assembly (cassette 1)
[3] Manual feed pickup assembly
[4] Registration roller assembly
[5] Transfer assembly
[6] Duplexing/feeding assembly
[7] Fixing assembly
[8] No.1 delivery assembly

8.1.4 Division into Blocks

iR3570 / iR4570 / /

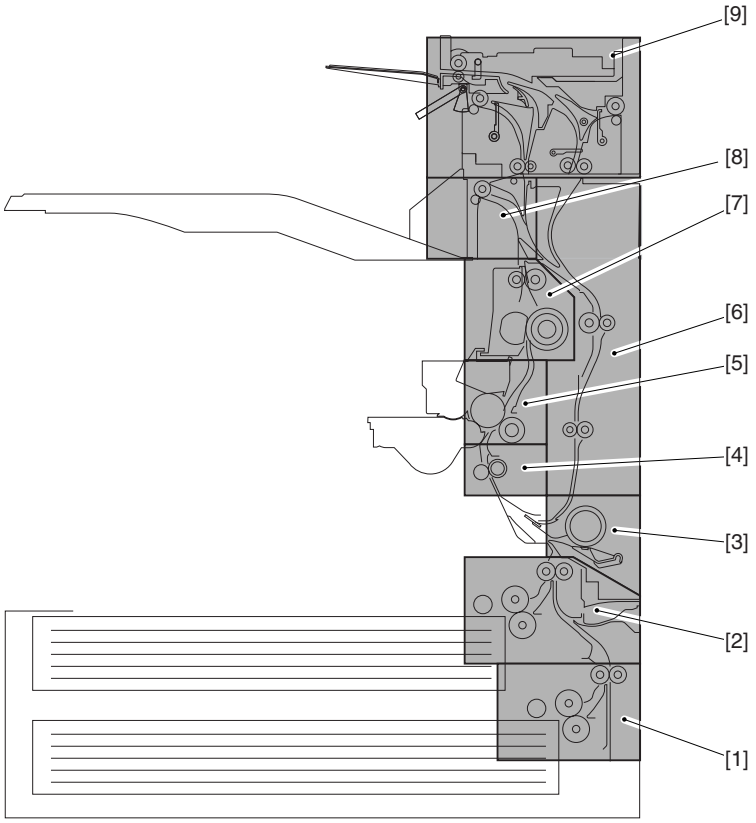

F-8-2

[1] Pickup assembly (cassette 2)
[2] Pickup assembly (cassette 1)
[3] Manual feed pickup assembly
[4] Registration roller assembly
[5] Transfer assembly
[6] Duplexing/feeding assembly
[7] Fixing assembly
[8] No.1 delivery assembly
[9] No.2/No.3 delivery assembly

8.1.5 Arrangement of Rollers

iR2270 / iR2870 / / / iR2230 / / iR3530 /

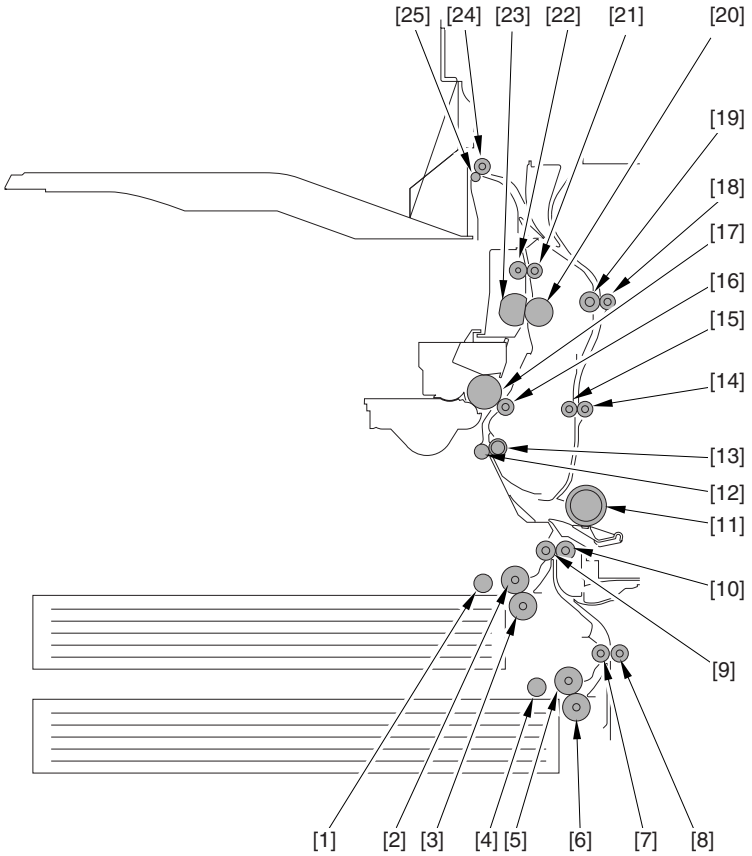

F-8-3

[1] Pickup roller (cassette 1)
[2] Feeding roller (cassette 1)
[3] Separation roller (cassette 1)
[4] Pickup roller (cassette 2)
[5] Feeding roller (cassette 2)
[6] Separation roller (cassette 2)
[7] Vertical path roller 2
[8] Vertical path slave roller 2
[9] Vertical path roller 1
[10] Vertical path slave roller 1
[11] Manual feed pickup roller
[12] Registration roller (inside)
[13] Registration roller (outside)
[14] Duplexing/feed roller 2
[15] Duplexing/feeding member 2
[16] Transfer roller
[17] Drum
[18] Duplexing/feed roller 1
[19] Duplexing/feeding member 1
[20] Pressure roller
[21] Fixing outlet roller
[22] Fixing outlet member
[23] Fixing film
[24] Delivery roller
[25] Delivery member

8.1.6 Arrangement of Rollers

iR3570 / iR4570 / /

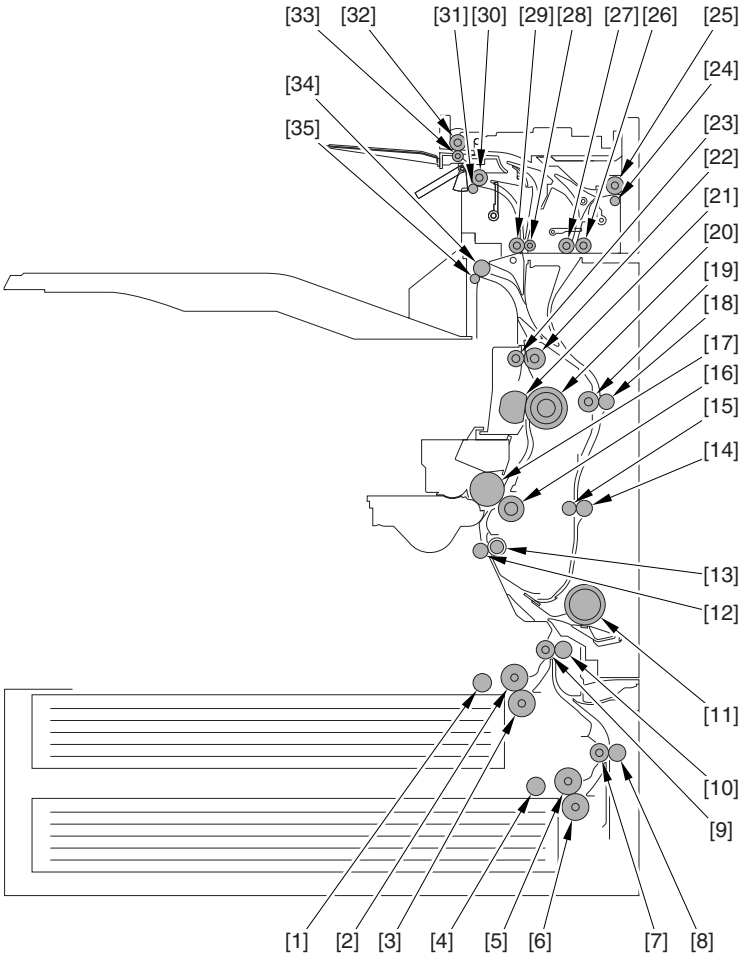

F-8-4

[1] Pickup roller (cassette 1)
[2] Feed roller (cassette 1)
[3] Separation roller (cassette 1)
[4] Pickup roller (cassette 2)
[5] Feed roller (cassette 2)
[6] Separation roller (cassette 2)
[7] Vertical path roller 2
[8] Vertical path slave roller 2
[9] Vertical path roller 1
[10] Vertical path slave roller 1
[11] Manual feed pickup roller
[12] Registration roller (inside)
[13] Registration roller (outside)
[14] Duplexing/feeding roller 2
[15] Duplexing/feeding member 2
[16] Transfer roller
[17] Drum
[18] Duplexing/feed roller 1
[19] Duplexing/feeding member 1
[20] Presser roller
[21] Fixing film
[22] Fixing outlet roller
[23] Fixing outlet roll
[24] Delivery roll (No.3 delivery assembly)
[25] Delivery roller (No.3 delivery assembly)
[26] Duplexing inlet roller
[27] Duplexing inlet member
[28] Vertical path slave roller 3
[29] Vertical path roller 3
[30] Delivery roller (No.2 delivery assembly)
[31] Delivery member (No.2 delivery assembly)
[32] Reversing roller
[33] Reversing member
[34] Delivery roller (No.1 delivery assembly)
[35] Delivery member (No.1 delivery assembly)

8.1.7 Diagram of Paper Paths (printer on its own)

iR2270 / iR2870 / /

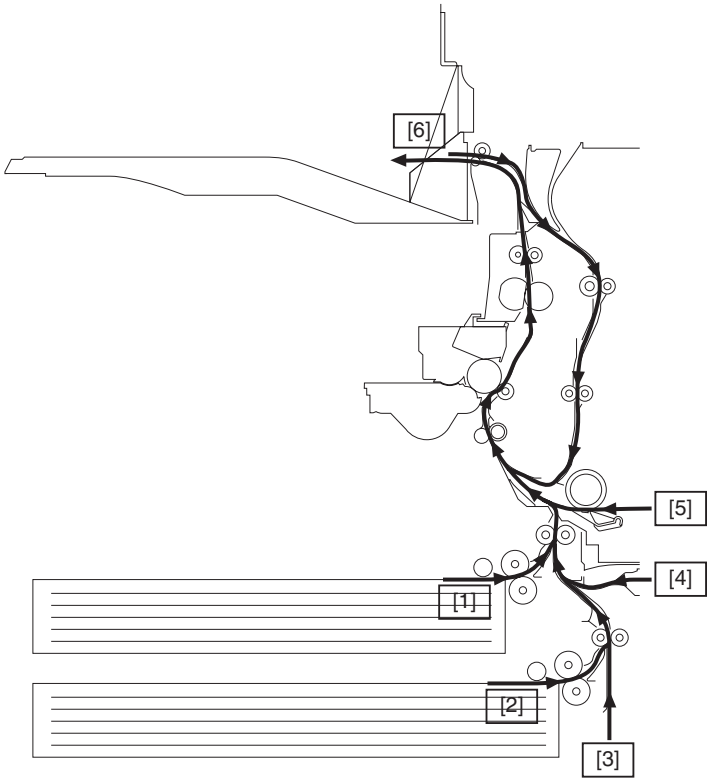

F-8-5

[1] Pickup from cassette 1
[2] Pickup from cassette 2
[3] Pickup from cassette pedestal
[4] Pickup from side paper deck
[5] Pickup from manual feeder
[6] Delivery from copy tray 1

8.1.8 Paper Path (printer unit on its own)

iR2230 / / / iR3530 /

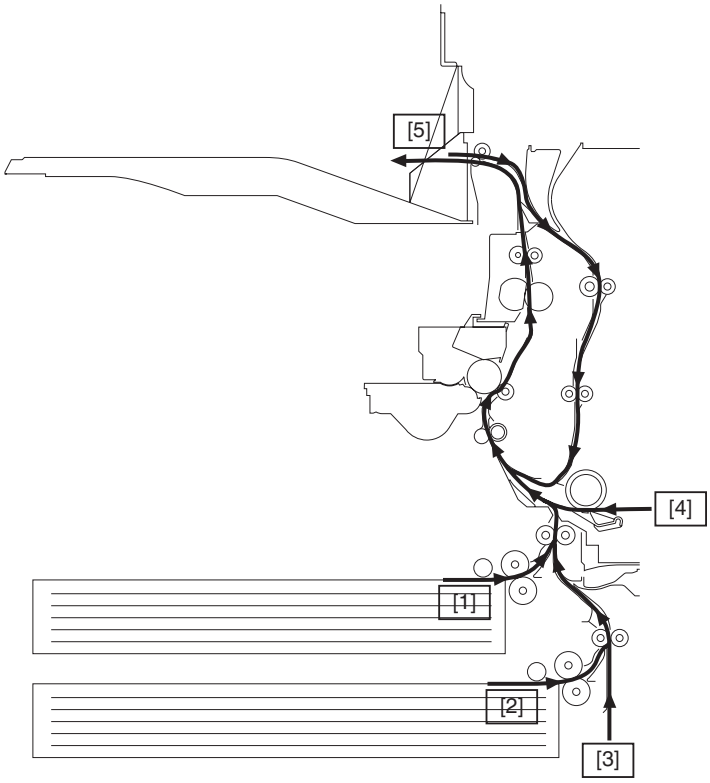

F-8-6

[1] Pickup from cassette 1
[2] Pickup from cassette 2
[3] Pickup from cassette pedestal (optional)

[4] Pickup from manual feeder
[5] Delivery to output tray 1

8.1.9 Diagram of Paper Paths (w/ copy tray)

iR3570 / iR4570 / /

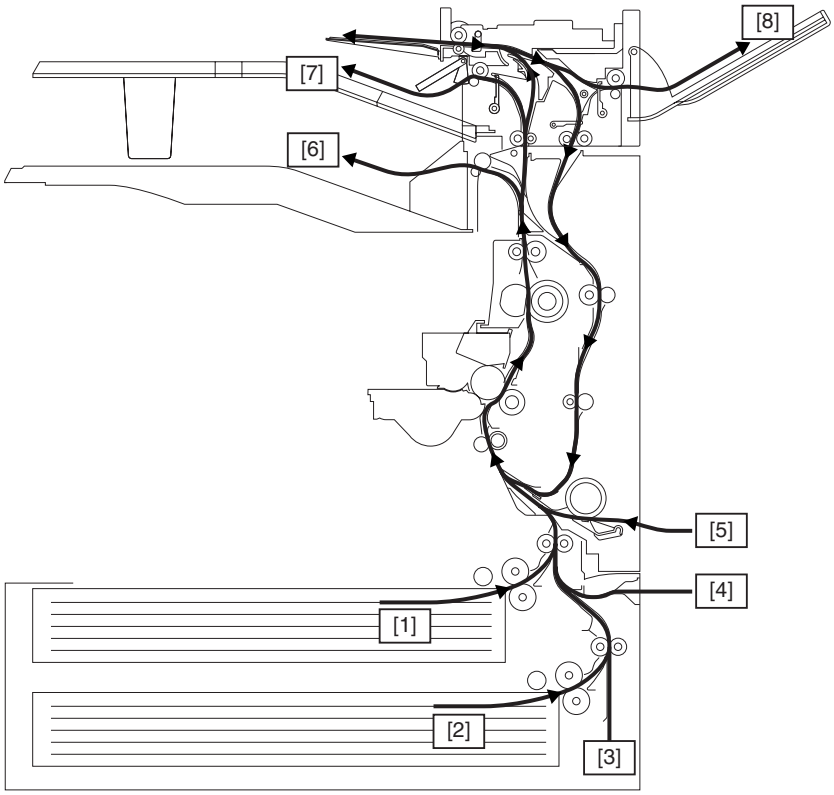

F-8-7

[1] Pickup from cassette 1
[2] Pickup from cassette 2
[3] Pickup from cassette pedestal (option)
[4] Pickup from side paper deck (option)
[5] Pickup from manual feeder
[6] Delivery to copy tray 1
[7] Delivery to copy tray 2 (option)
[8] Delivery to copy tray 3 (option)

8.1.10 Diagram of Paper Paths (w/ 3 Way Unit-A1 /copy tray)

iR2270 / iR2870 / /

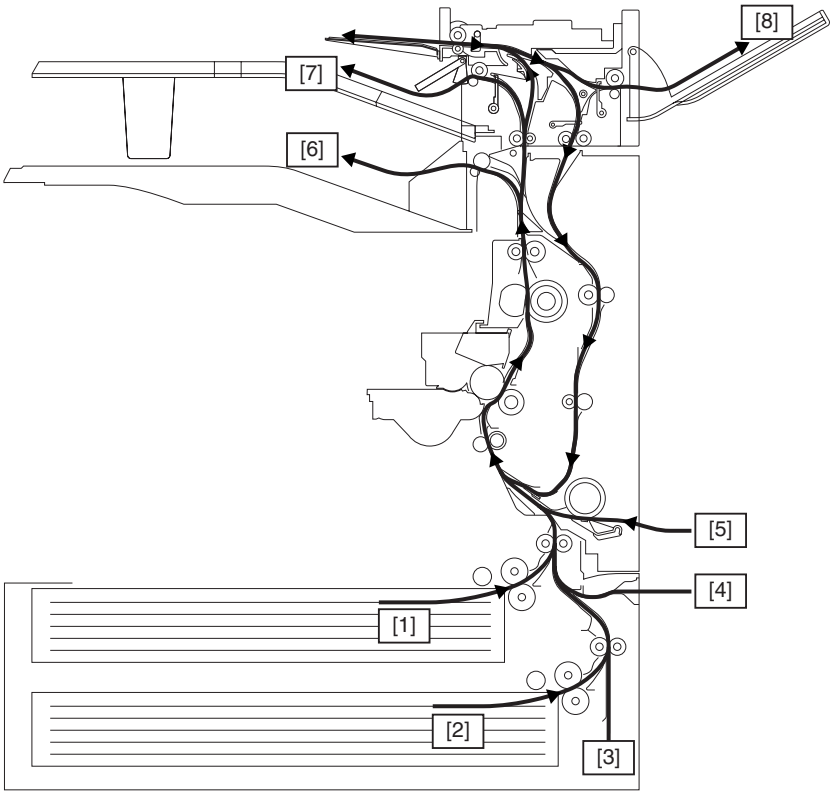

F-8-8

[1] Pickup from cassette 1
[2] Pickup from cassette 2
[3] Pickup from cassette pedestal (option)
[4] Pickup from side paper deck (option)
[5] Pickup from manual feeder
[6] Delivery to copy tray 1
[7] Delivery to copy tray 2 (option)
[8] Delivery to copy tray 3 (option)

8.1.11 Paper path (w/ expansion output kit, output tray)

iR2230 / / / iR3530 /

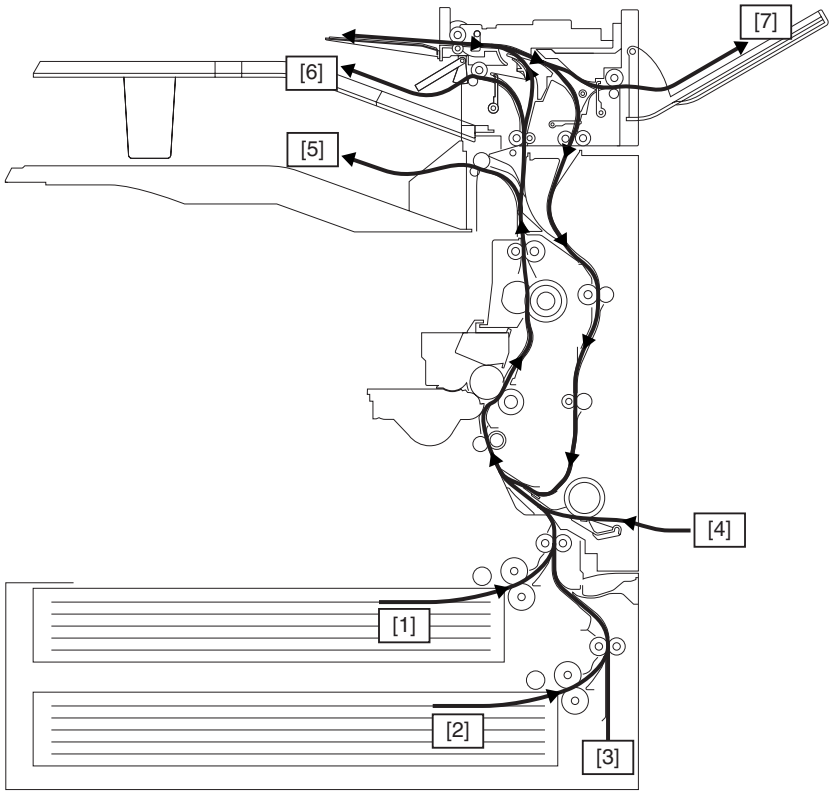

F-8-9

[1] Pickup from cassette 1
[2] Pickup from cassette 2
[3] Pickup from cassette pedestal (option)
[4] Pickup from manual feeder
[5] Delivery to output tray 1
[6] Delivery to output tray 2 (optional)
[7] Delivery to output tray 3 (optional)

8.1.12 Diagram of Paper Paths (w/ Finisher-S1/copy tray)

iR2270 / iR2870 / iR3570 / iR4570 / / / /

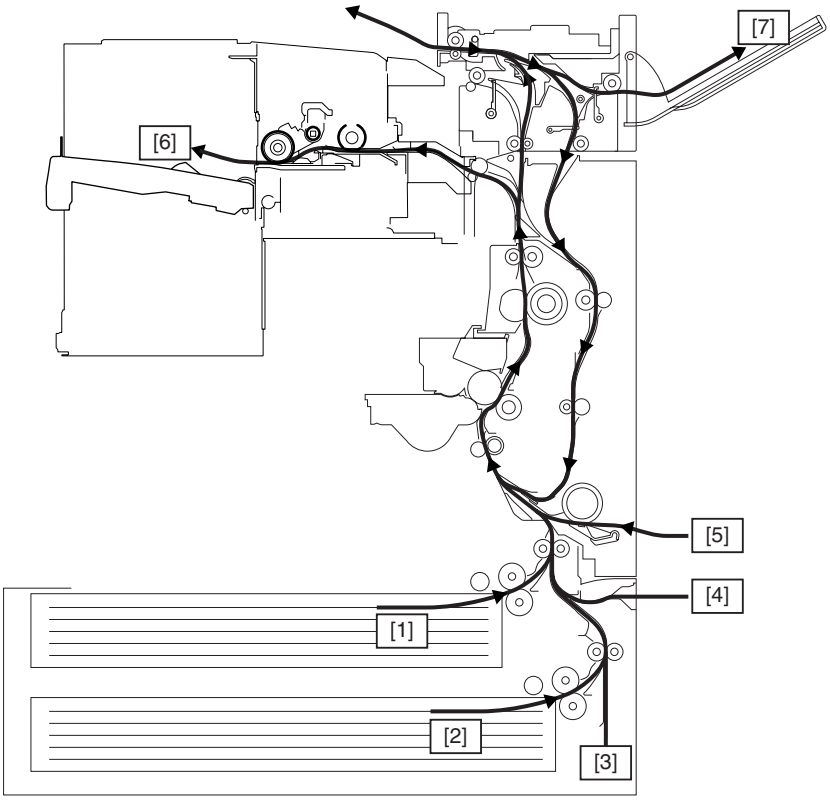

F-8-10

[1] Pickup from cassette 1
[2] Pickup from cassette 2
[3] Pickup from cassette pedestal (option)
[4] Pickup from paper deck (option)
[5] Pickup from manual feeder
[6] Delivery to Finisher-S1 (option)
[7] Delivery to copy tray 3 (option)

8.1.13 Paper Path (w/ Finer-S1, output tray)

iR2230 / / iR3530 /

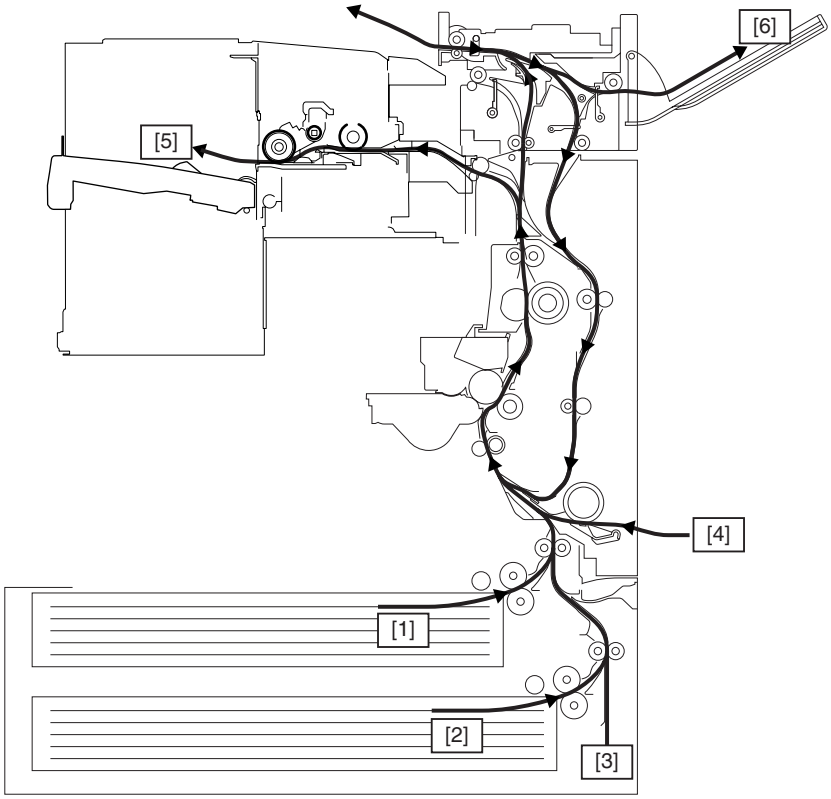

F-8-11

[1] Pickup from cassette 1
[2] Pickup from cassette 2
[3] Pickup from cassette pedestal (optional)
[4] Pickup from manual feeder
[5] Delivery to Finisher-S1 (optional)
[6] Delivery to output tray 3 (optional)

8.1.14 Diagram of Paper Paths (w/ Finisher-Q3/Saddle Finisher-Q4)

iR2270 / iR2870 / iR3570 / iR4570 / / / /

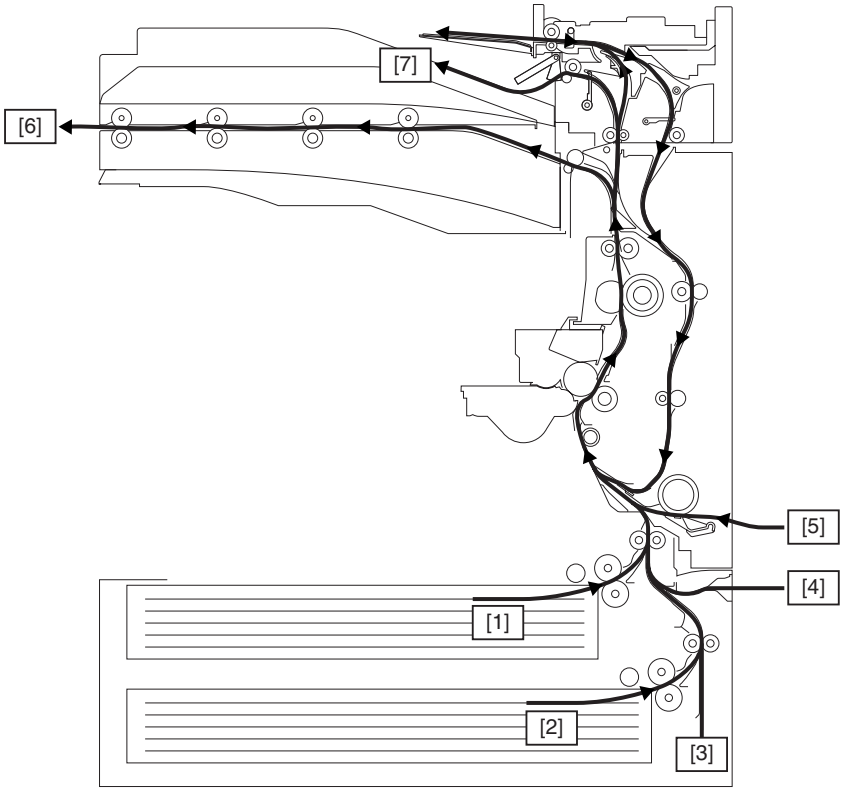

F-8-12

[1] Pickup from cassette 1
[2] Pickup from cassette 2

[3] Pickup from cassette pedestal (option)
[4] Pickup from paper deck (option)
[5] Pickup from manual feeder
[6] Delivery to Finisher-Q3/Saddle Finisher-Q4 (option)
[7] No.2 delivery assembly (option)

8.1.15 Arrangement of Sensors

iR2270 / iR2870 / / / iR2230 / / iR3530 /

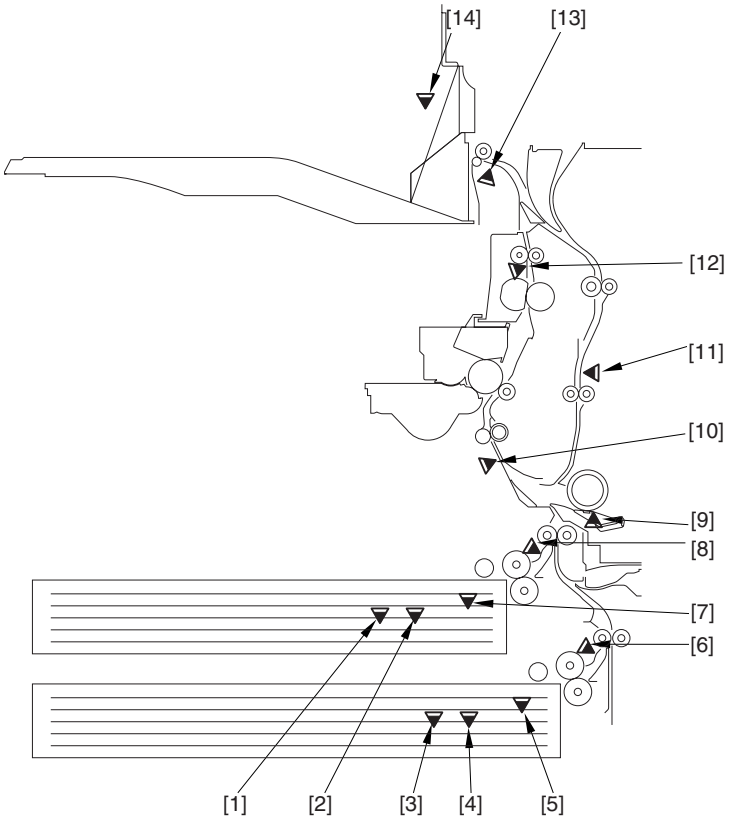

F-8-13

[1] Cassette 1 paper level sensor B (PS4)
[2] Cassette 1 paper level sensor A (PS3)
[3] Cassette 2 paper level sensor B (PS6)
[4] Cassette 2 paper level sensor A (PS5)
[5] Cassette 2 paper sensor (PS2)
[6] Cassette 2 retry sensor (PS11)
[7] Cassette 1 paper sensor (PS1)
[8] Cassette 1 retry sensor (PS10)
[9] Manual feeder paper sensor (PS7)
[10] Registration sensor (PS9)
[11] Duplexing/feed sensor (PS17)
[12] Fixing/delivery paper sensor (PS13)
[14] Delivery sensor 1 (PS14)
[15] Delivery paper full sensor 1 (PS15)

8.1.16 Arrangement of Sensors

iR3570 / iR4570 / /

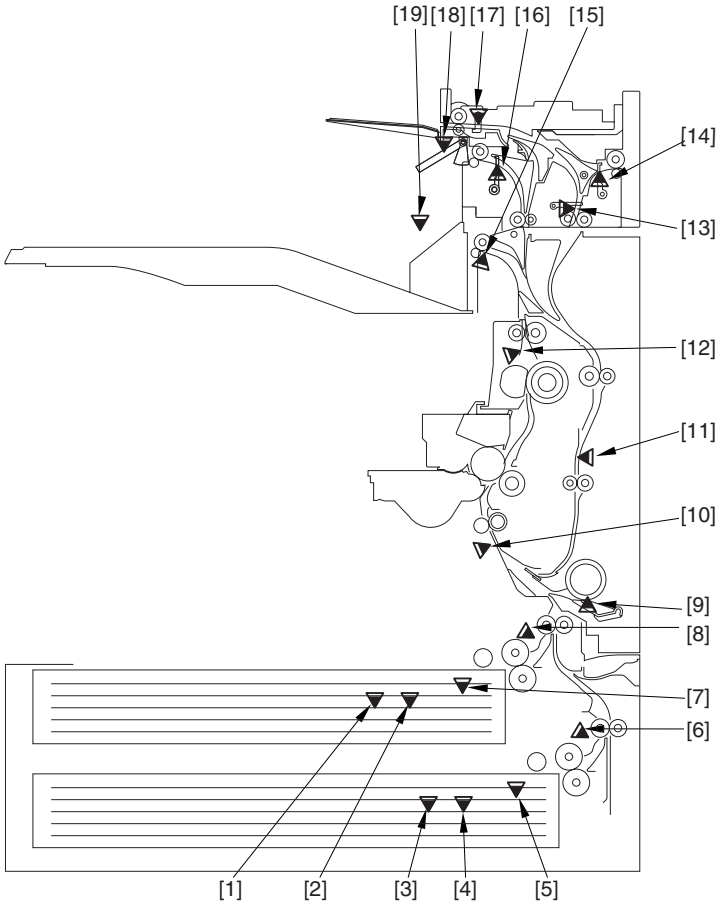

F-8-14

[1] Cassette 1 paper level sensor B (PS4)
[2] Cassette 1 paper level sensor A (PS3)
[3] Cassette 2 paper level sensor B (PS6)
[4] Cassette 2 paper level sensor A (PS5)
[5] Cassette 2 paper sensor (PS2)
[6] Cassette 2 retry sensor (PS11)
[7] Cassette 1 paper sensor (PS1)
[8] Cassette 1 retry sensor (PS10)
[9] Manual feed paper sensor (PS7)
[10] Registration sensor (PS9)
[11] Duplexing/feed sensor (PS17)
[12] Fixing/delivery sensor (PS13)
[13] Duplexing inlet sensor (PS3A)
[14] Delivery sensor 3 (PS5A)
[15] Delivery sensor 1 (PS14)
[16] Delivery sensor 2 (PS1A)
[17] Reversal sensor (PS4A)
[18] Delivery full sensor 2 (PS2A)
[19] Delivery full sensor 1 (PS15)

8.1.17 Route of Drive

iR2270 / iR2870 / /

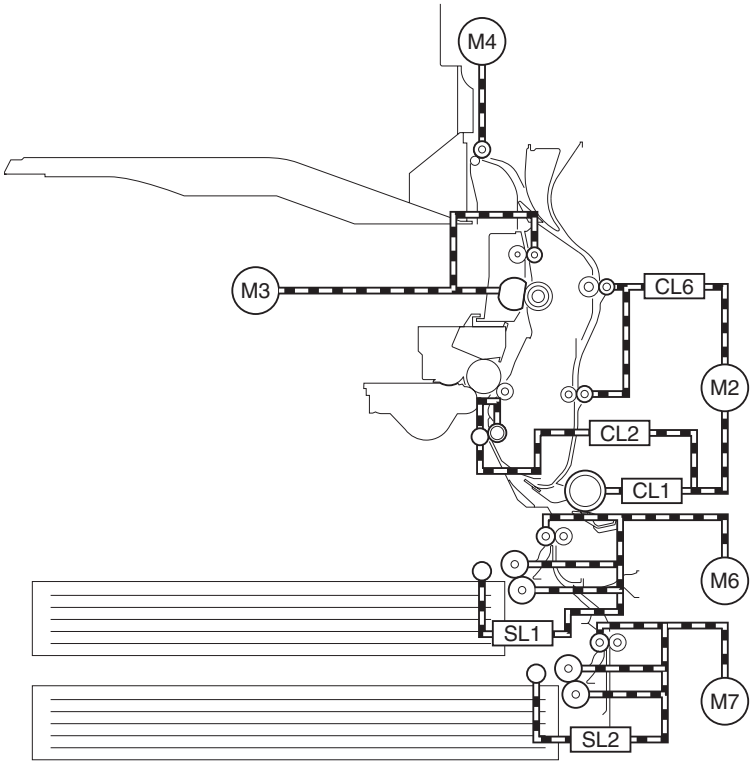

F-8-15

M2 Main motor
M3 Fixing motor
M4 No.1 delivery motor
M6 Cassette 1 pickup motor
M7 Cassette 2 pickup motor
SL1 Cassette 1 pickup solenoid
SL2 Cassette 2 pickup solenoid
CL1 Manual pickup clutch
CL2 Registration clutch
CL6 Duplexing clutch

8.1.18 Route of Drive

iR3570 / iR4570 / /

- Main Body

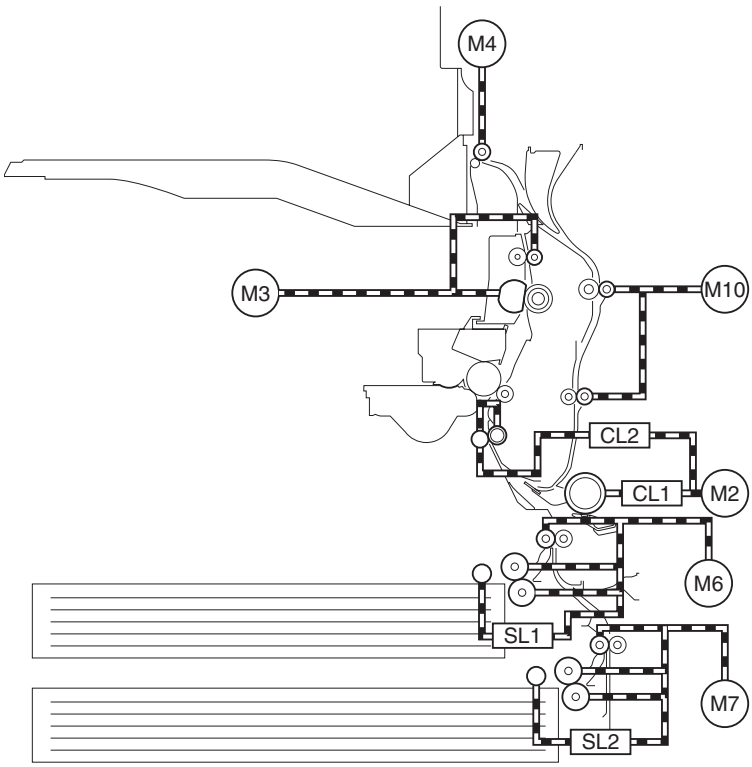

F-8-16

M2 Main motor
M3 Fixing motor
M4 No.1 delivery motor
M6 Cassette 1 pickup motor
M7 Cassette 2 pickup motor
M10 Duplexing motor
SL1 Cassette 1 pickup solenoid
SL2 Cassette 2 pickup solenoid
CL1 Manual pickup clutch
CL2 Registration clutch

- Expancion Delivery Unit

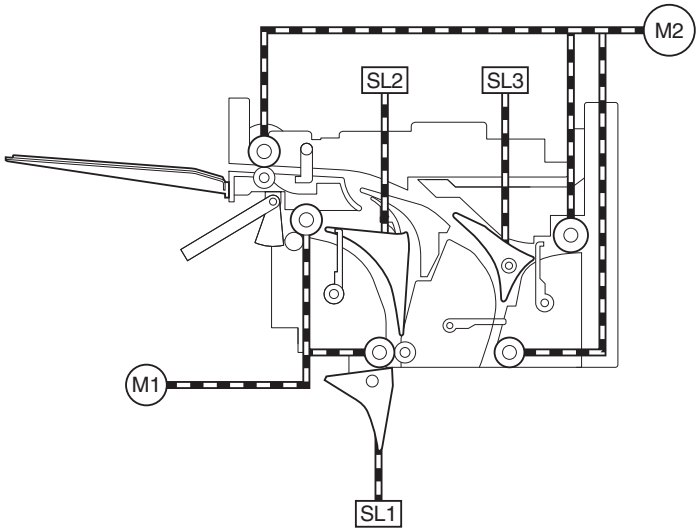

F-8-17

M1 No.2 delivery motor
M2 No.3 delivery motor
SL1 No.1 delivery solenoid
SL2 No.2 delivery solenoid
SL3 No.3 delivery solenoid

8.2 Basic Sequence

8.2.1 Basic Sequence

iR2270 / iR2870 / iR3570 / iR4570 / / / / / iR2230 / / iR3530 /

- Basic Sequence of Operation for Making 3 Prints

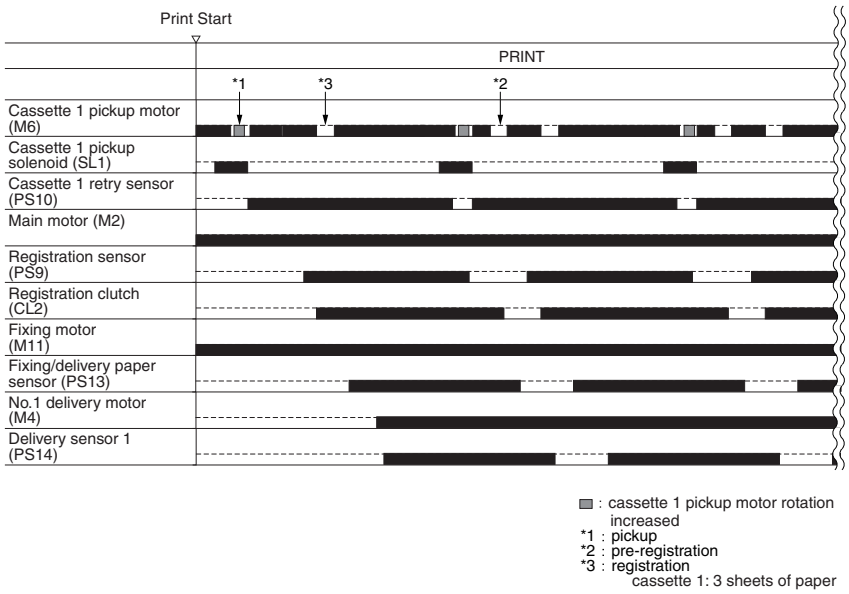

F-8-18

8.2.2 Increase in Speed

iR2270 / iR2870 / /

The machine increases the speed of moving paper over specific intervals. An overview and the associated accessories for the increase in speed are as follows:

- No Delivery Accessory

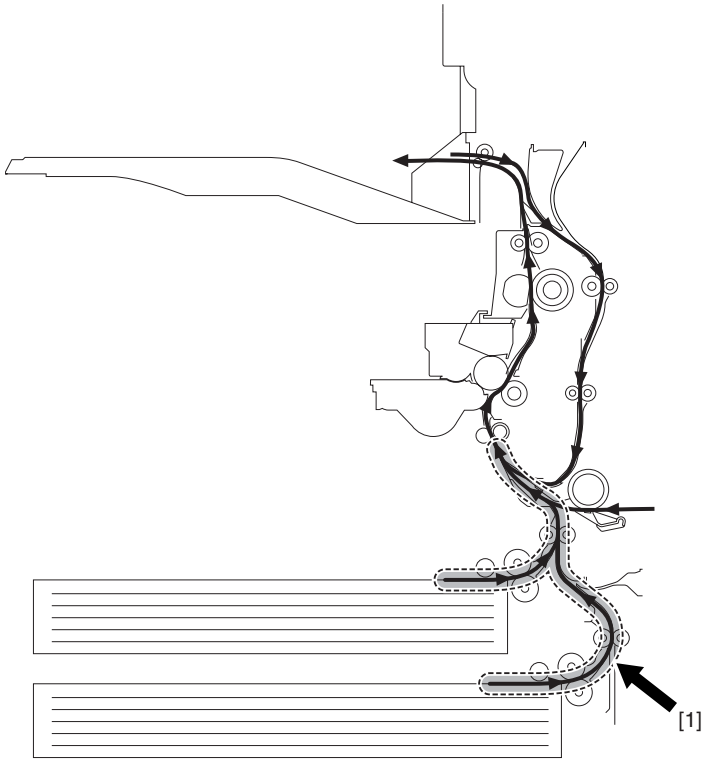

F-8-19

1. Increase in Speed for Pickup Operation
The speed is 1.5 times as high as the process speed (no increase if for manual feed pickup/in the case of the 1st sheet from cassette 1, accelerates to about twice as fast).

- Finisher-S1 in Use

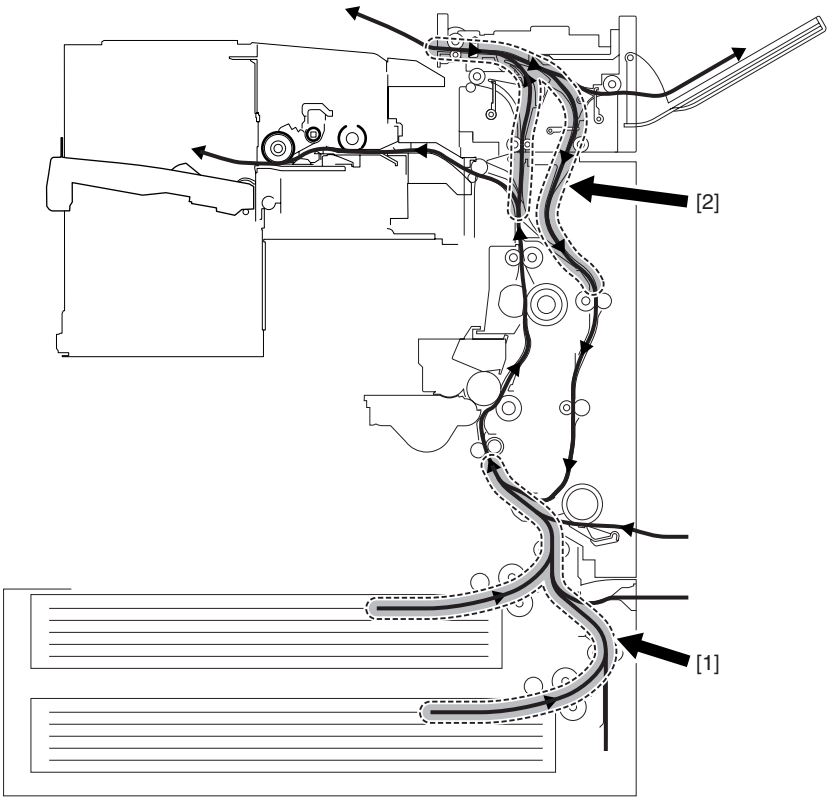

F-8-20

1. Increase in Speed for Pickup Operation
The speed is 1.5 times as high as the process speed (no increase if for manual feed pickup/in the case of the 1st sheet from cassette 1, accelerates to about twice as fast).

2. Increase in Speed for Reversal
The speed is 3.4 times as high as the process speed (no increase if for delivery to tray 3).

- Finisher-Q3/Q4 in Use

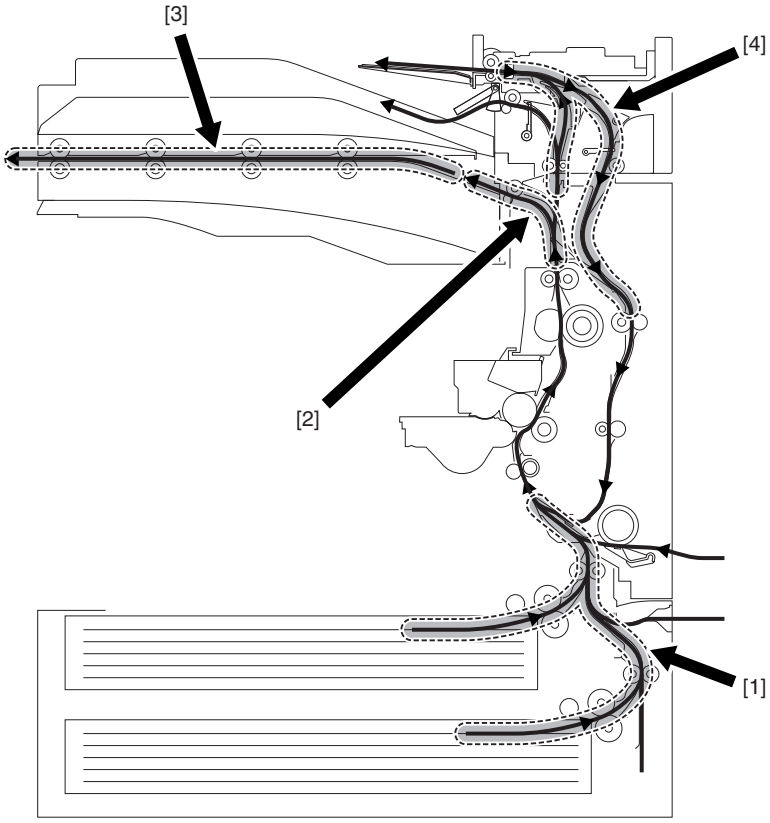

F-8-21

1. Increase in Speed for Pickup Operation
The speed is 1.5 times as high as the process speed (no increase if for manual feed pickup/in the case of the 1st sheet from cassette 1, accelerates to about twice as fast).

2. Increase in Speed After Fixing
The speed is 2.5 times as high as the process speed.

3. Increase in Speed for the Buffer Path
The speed is 2.5 times as high as the process speed (no increase if for delivery to saddle).

4. Increase in Speed for Reversal
The speed is 3.4 times as high as the process speed.

8.2.3 Acceleration Intervals

iR2230 / / iR3530 /

The machine accelerates the speed of paper movement over specific intervals.
These intervals are as shown and differ according to the presence of specific accessories:
In the Absence of an Output Accessory

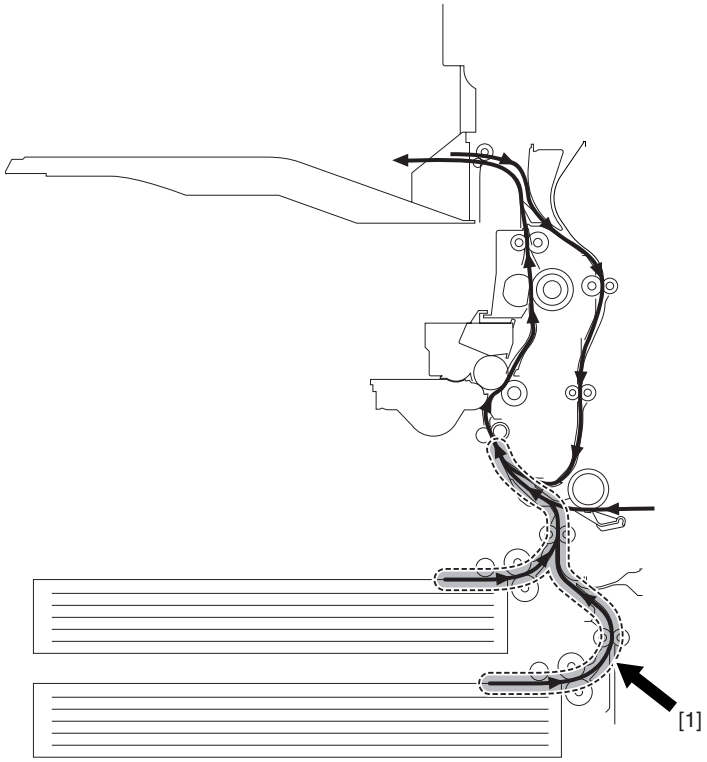

F-8-22

[1]Pickup acceleration interval
The machine accelerates the speed to about 1.5 times as high as its process speed.
(No acceleration occurs if the pickup is from the manual feeder. In the case of the 1s side of a sheet picked up from cassette 1, the movement will be about twice as fast.)

In the Presence of the Finisher-S1

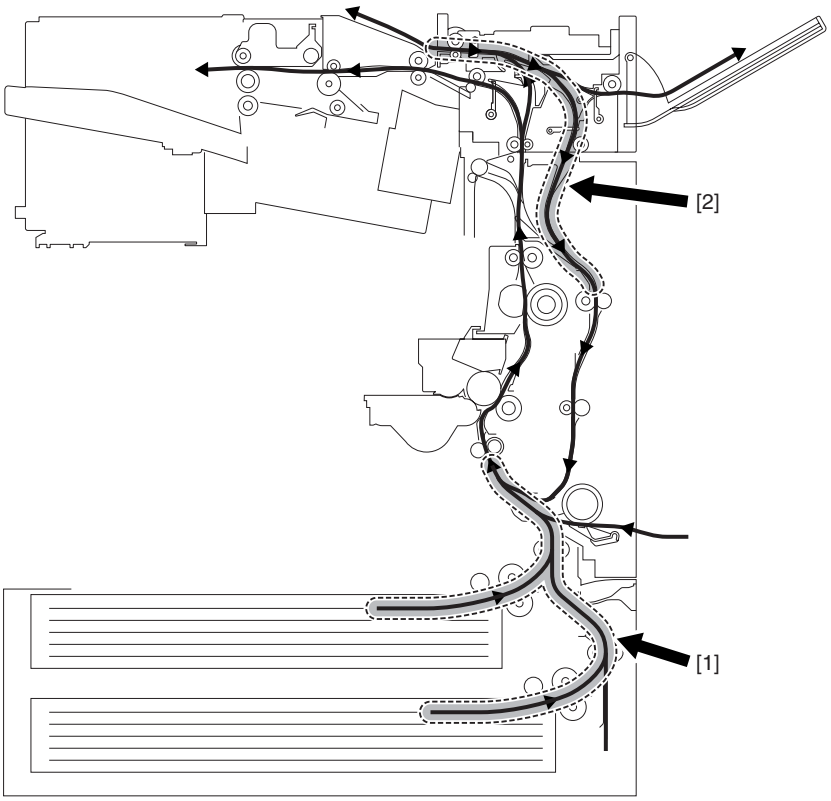

F-8-23

[1]Pickup acceleration interval
The machine accelerates the speed to about 1.5 times as high as its process speed.
(No acceleration occurs if the pickup is from the manual feeder. In the case of the 1st side of a sheet picked up from cassette 1, the movement will be about twice as fast.)
[2]Reversal acceleration interval
The machine accelerates the speed to about 3.4 times as high as its process speed. (No acceleration will occur if the delivery is to tray 3.)

8.2.4 Increase in Speed

iR3570 / iR4570 / /

The machine increases the speed of moving paper over specific intervals. An overview and the associated accessories for the increase in speed are as follows:

- Finisher-S1 in Use

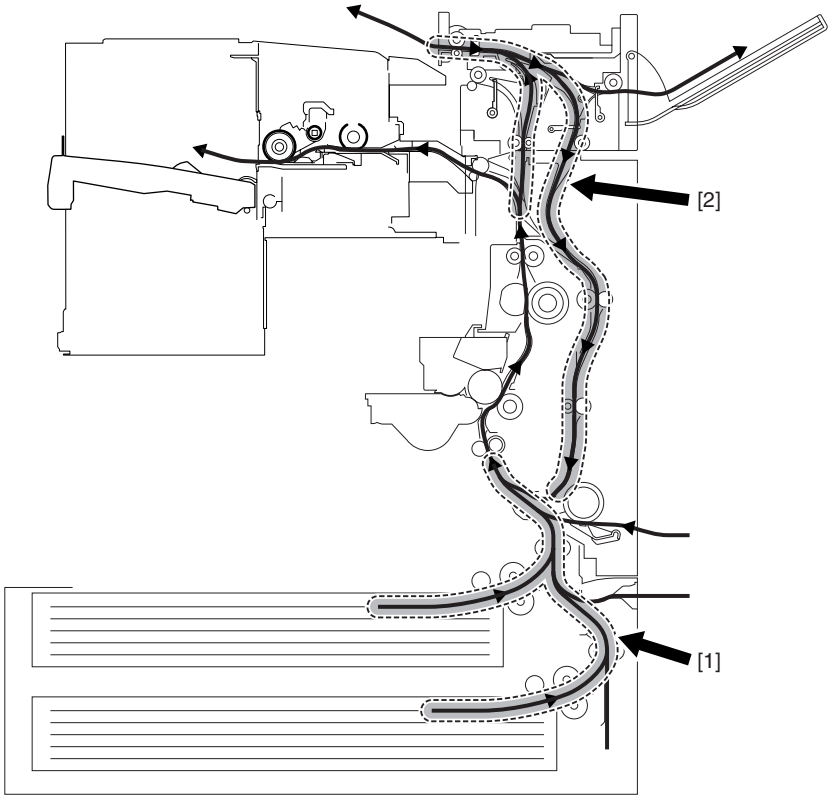

F-8-24

1. Increase in Speed for Pickup
The speed is 1.5 times as high as the process speed (in the case of manual feed, decelerates to about 0.6).
2. Increase in Speed for Reversal
The speed is 2 times as high as the process speed (no increase if for delivery to tray 3).

- Finisher-Q3/Q4 in Use

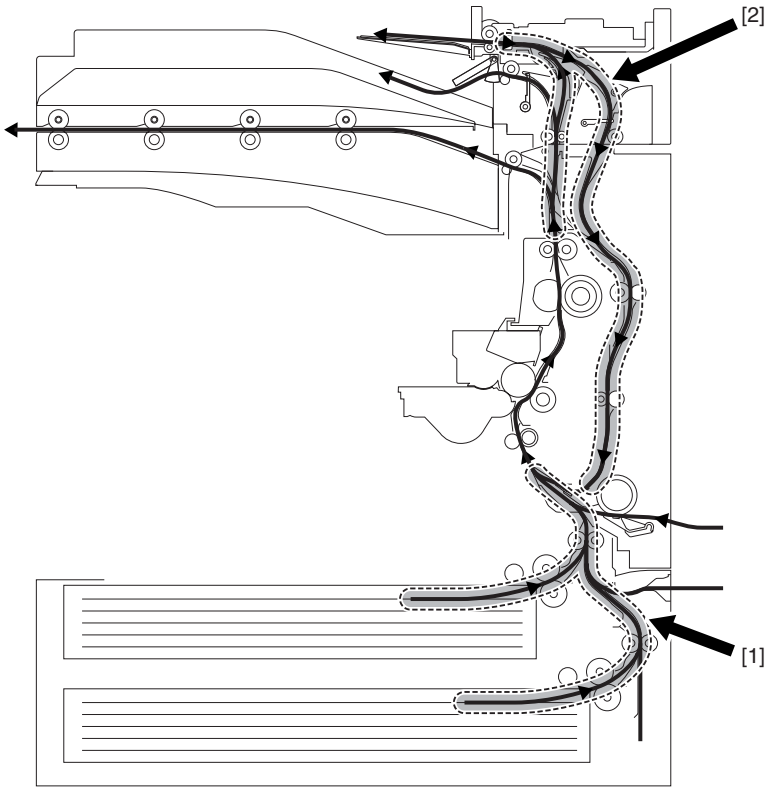

F-8-25

1. Increase in Speed for Pickup
The speed is 1.5 times as high as the process speed (in the cassette of manual feed, decelerates to about 0.6).
2. Increase in Speed for Reversal
The speed is 2 times as high as the process speed.

8.3 Detecting Jams

8.3.1 Delay Jams

8.3.1.1 Delay Jam Outside the Cassette Pickup Assembly

iR2270 / iR2870 / iR3570 / iR4570 / / / / /

A delay jam outside the cassette pickup assembly is identified as follows:
The length of time it takes for paper to move from the sensor N-1 to the delay jam sensor N is kept under control; a delay jam is identified if the delay jam sensor does not go on within a specific length of time after the sensor N has gone on.

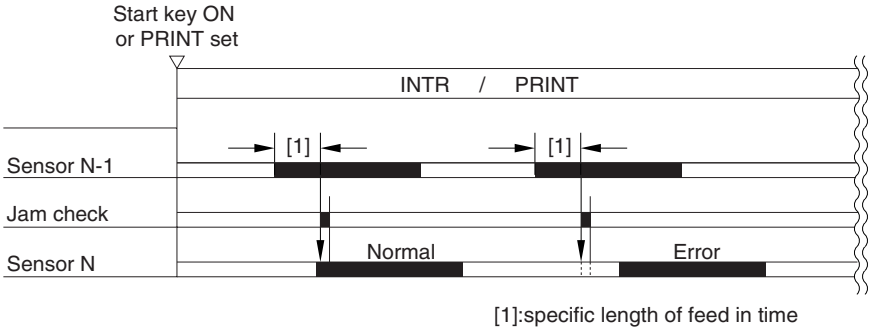

F-8-26

T-8-3

Sensor
Registration sensor (PS9)
Fixing delivery sensor (PS13)
No. 1 delivery sensor (PS14)
Duplex feed sensor (PS17)

8.3.1.2 Delay Jam in the Cassette Pickup Assembly

iR2270 / iR2870 / iR3570 / iR4570 / / / / /

The leading edge of paper does not reach the sensor after the cassette 1/2 pickup motor has started to rotate.

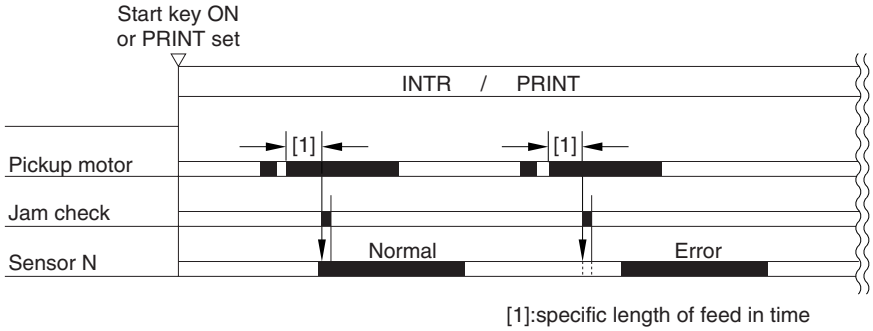

F-8-27

T-8-4

Source of paper	Motor	Sensor
Cassette 1	cassette 1 pickup motor	cassette 1 retry sensor (PS10)
Cassette 2	cassette 2 pickup motor	cassette 2 retry sensor (PS11)

8.3.2 Stationary Jams

8.3.2.1 Common Stationary Jam

iR2270 / iR2870 / iR3570 / iR4570 / / / / / iR2230 / / iR3530 /

The sensor N does not go off within a specific length of time after the sensor has gone on.

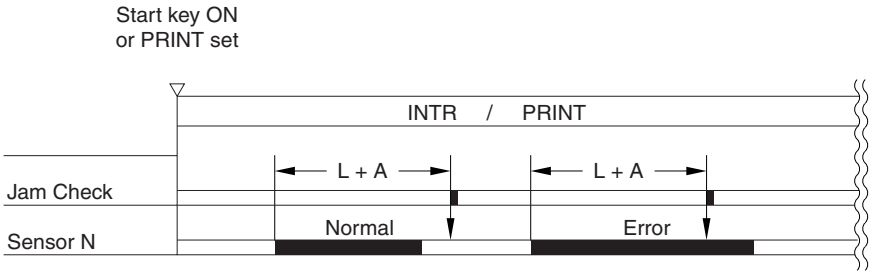

(L =paper length feed distance A = specific feed length)

F-8-28

T-8-5

Sensor
Cassette 1 retry sensor (PS10)
Cassette 2 retry sensor (PS11)
Registration sensor (PS9)
Fixing outlet sensor (PS13)
No. 1 delivery sensor (PS14)
Duplex feed sensor (PS17)

8.3.2.2 Stationary Jam at Power-On

iR2270 / iR2870 / iR3570 / iR4570 / / / / / iR2230 / / iR3530 /

The machine makes a check to see that there is no paper over the following sensors before it starts initial multiple rotation at power-on:

T-8-6

Sensor
Cassette 1 retry sensor (PS10)
Cassette 2 retry sensor (PS11)
Registration sensor (PS9)
Fixing outlet sensor (PS13)
No. 1 delivery sensor (PS14)
Duplex feed sensor (PS17)

8.3.3 Other Jams

8.3.3.1 Door Open Jam

iR2270 / iR2870 / iR3570 / iR4570 / / / / / iR2230 / / iR3530 /

A door open jam is identified when the machine detects the opening of the door while it is making copies/prints.

T-8-7

Sensor
Front cover open sensor (PS22)
Right cover open sensor (PS18)

8.4 Cassette Pick-Up Unit

8.4.1 Overview

iR2270 / iR2870 / iR3570 / iR4570 / / / / / iR2230 / / iR3530 /

The paper inside the cassette is held up by the lifter plate. When pickup takes place, the pickup roller moves down to come into contact with the surface of paper. The pickup roller is moved down when the pickup solenoid goes on.
The feed roller and the separation roller serve to make sure that a single sheet of paper is moved to the feed path, and the paper is moved as far as the registration roller by the work of the vertical path roller.
The pickup vertical path roller, pickup roller, feed roller, and separation roller are driven by the cassette pickup motor.

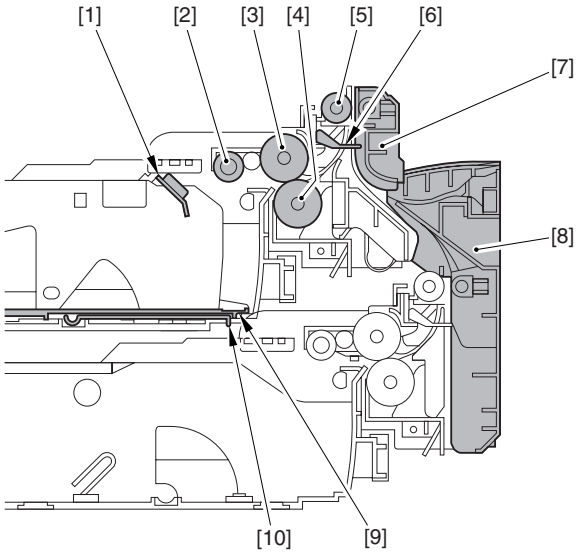

F-8-29

[1] Cassette paper sensor
[2] Pickup roller (roller A)
[3] Feed roller (roller B)
[4] Separation roller (roller C)
[5] Pickup vertical path roller
[6] Cassette retry paper sensor
[7] Vertical path guide
[8] Lower right cover
[9] Holding plate
[10] Lifter plate

8.4.2 Basic Sequence

iR2270 / iR2870 / iR3570 / iR4570 / / / / / iR2230 / / iR3530 /

- Basic Sequence of Operation for Making 3 Prints

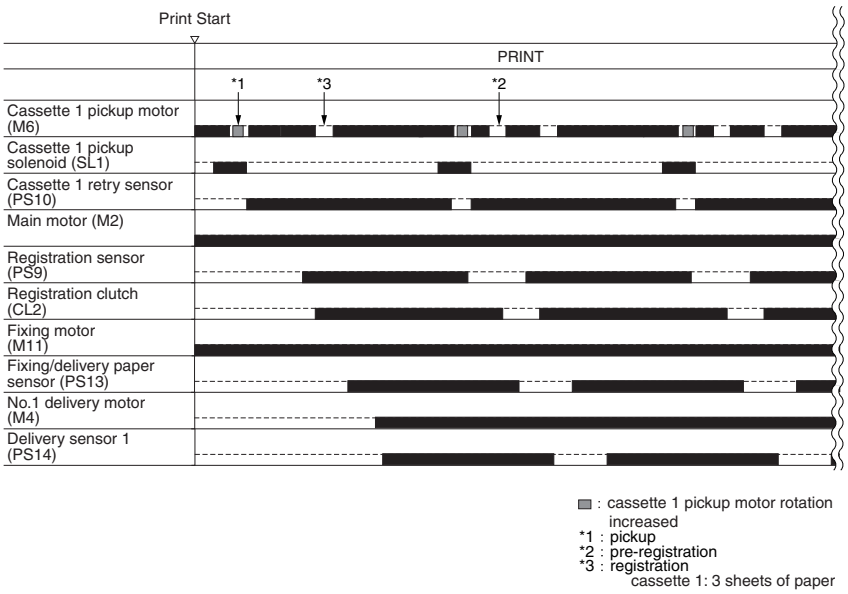

F-8-30

8.4.3 Identifying the Paper Size

iR2270 / iR2870 / iR3570 / iR4570 / / / / / iR2230 / / iR3530 /

The size of paper inside the cassette is detected by the cassette size dial, and is communicated to the cassette size detection PCB.
As may as 15 positions may be detected with reference to the combinations of on and off states of the array of 4 actuators mounted to the cassette size detection PCB on the printer side and operating in conjunction with the cassette size dial.
In the absence of a cassette, all 4 actuators are off, causing the machine to assume there is no cassette.
AB/Inch Switch
The cassette size dial is equipped with a switch operated to change between AB and Inch configurations; the cassette size detecting switch will detect the configuration as soon as a cassette is fitted in the machine.

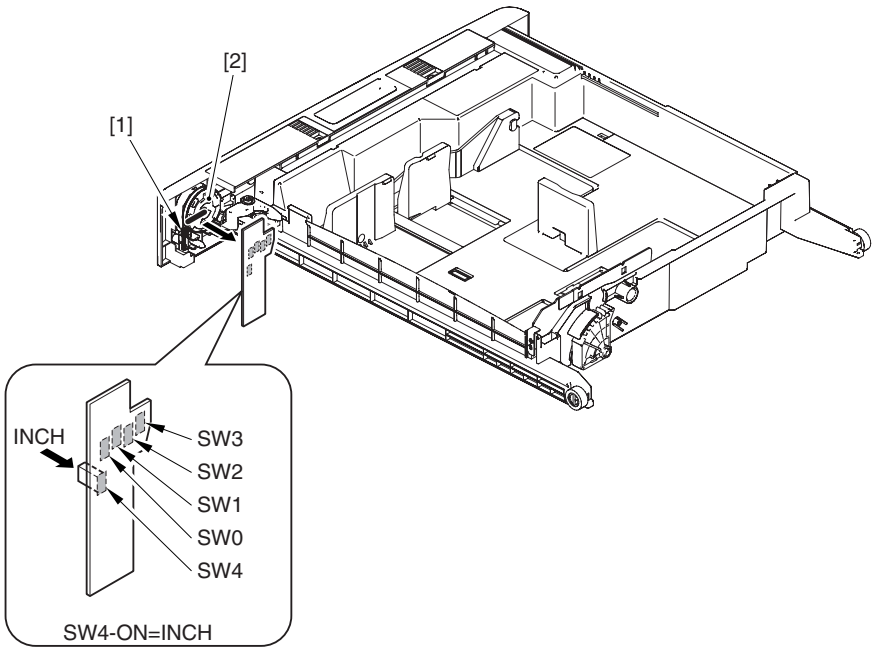

F-8-31

[1] AB/Inch switch
[2] Cassette size dial
[3] Cassette size detection PCB

T-8-8

AB-configuration

Size	SW0	SW1	SW2	SW3	SW4
(no cassette)	OFF	OFF	OFF	OFF	OFF
A5R	ON	OFF	ON	ON	OFF
A4	ON	ON	ON	ON	OFF
A4R	OFF	ON	ON	ON	OFF
A3	OFF	ON	OFF	ON	OFF
B5	ON	ON	OFF	ON	OFF
B5R	OFF	OFF	OFF	ON	OFF
B4	ON	OFF	OFF	ON	OFF
U1	OFF	ON	OFF	OFF	OFF
U2	OFF	ON	ON	OFF	OFF
Envelope	ON	OFF	ON	OFF	ON/OFF

SW4 is used to detect the state of the AB/Inch-configuration switch.
The machine will assume the absence of a cassette if it detects a combination not found in the table. At this time, it does not move up the cassette lifter.
Since the paper size is not identified, there will be no indication of a paper size on the control panel; when the cassette in question is selected, the machine will indicate a message prompting the supply of paper.
If an envelope size is detected, an envelope cassette must be fitted.

T-8-9

Inch-configuration

Size	SW0	SW1	SW2	SW3	SW4
(no cassette)	OFF	OFF	OFF	OFF	OFF
STMTR	ON	OFF	ON	ON	ON
LTR	ON	ON	ON	ON	ON
LTRR	OFF	ON	ON	ON	ON
LGL	OFF	ON	OFF	ON	ON
11X17	ON	ON	OFF	ON	ON
EXEC	OFF	OFF	OFF	ON	ON
U3	OFF	ON	OFF	OFF	ON
U4	OFF	ON	ON	OFF	ON
Envelope	ON	OFF	ON	OFF	ON/OFF

SW4 is used to detect the state of the AB/Inch-configuration switch.
The machine will assume the absence of a cassette if it detects a combination not found in the table. At this time, it does not move up the cassette lifter.
Since the paper size is not identified, there will be no indication of a paper size on the control panel; when the cassette in question is selected, the machine will indicate a message prompting the supply of paper.
If an envelope size is detected, an envelope cassette must be fitted.

8.4.4 Setting Up the Universal Cassette

iR2270 / iR2870 / iR3570 / iR4570 / / / / / iR2230 / / iR3530 /

The following are default sizes the machine will assume when U1 through U4 are detected:

T-8-10

U1	G-LTR
U2	FLSC
U3	G-LGL
U4	A-LTR

The following is a list of sizes that may be assigned in addition to default sizes in service mode:

T-8-11

Universal U1 Through U4
Size
FLSC
OFI
E-OFI
B-OFI
A-OFI
M-OFI
FOLI
A-FLS
G-LTR
G-LGL
A-LTR (LTR)
A-LTRR (LTRR)

8.4.5 Paper Level Sensor

iR2270 / iR2870 / iR3570 / iR4570 / / / / / iR2230 / / iR3530 /

The level of paper inside the cassette is checked using the following sensors:

T-8-12

	Cassette 1	Cassette 2
Paper level sensor A	PS3	PS5
Paper level sensor B	PS4	PS6
Paper sensor	PS1	PS2

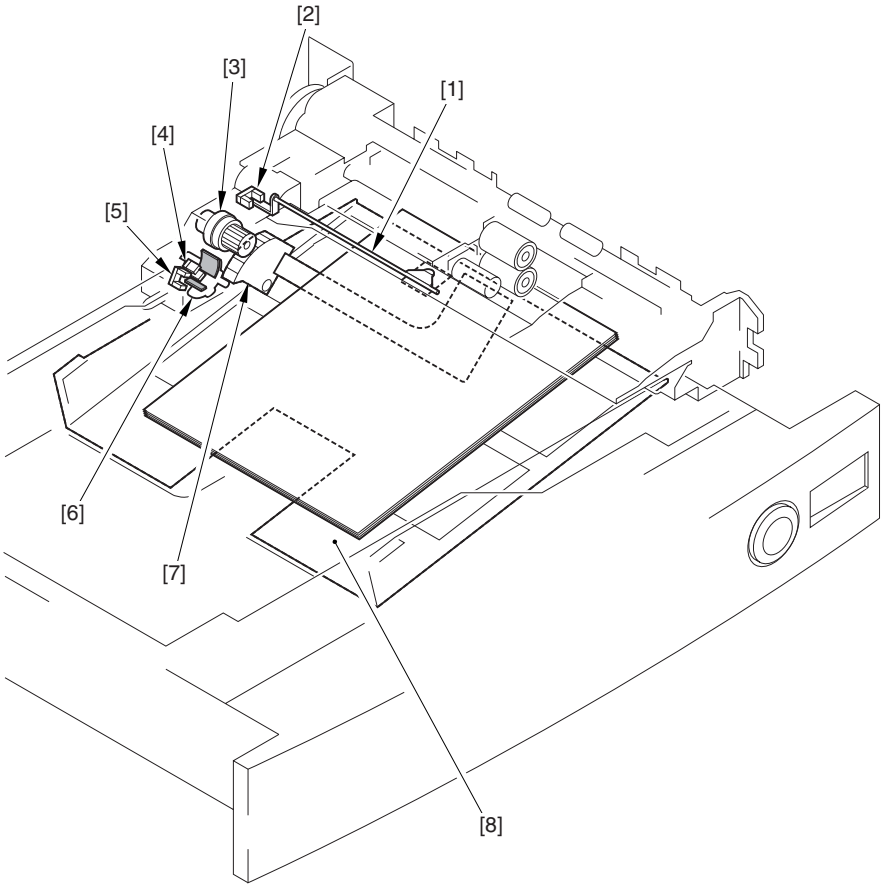

F-8-32

[1] Flag
[2] Cassette paper sensor
[3] Lifter clutch
[4] Cassette paper level sensor A
[5] Cassette paper level sensor B
[6] Paper level sensor flag
[7] Lifter gear
[8] Tray

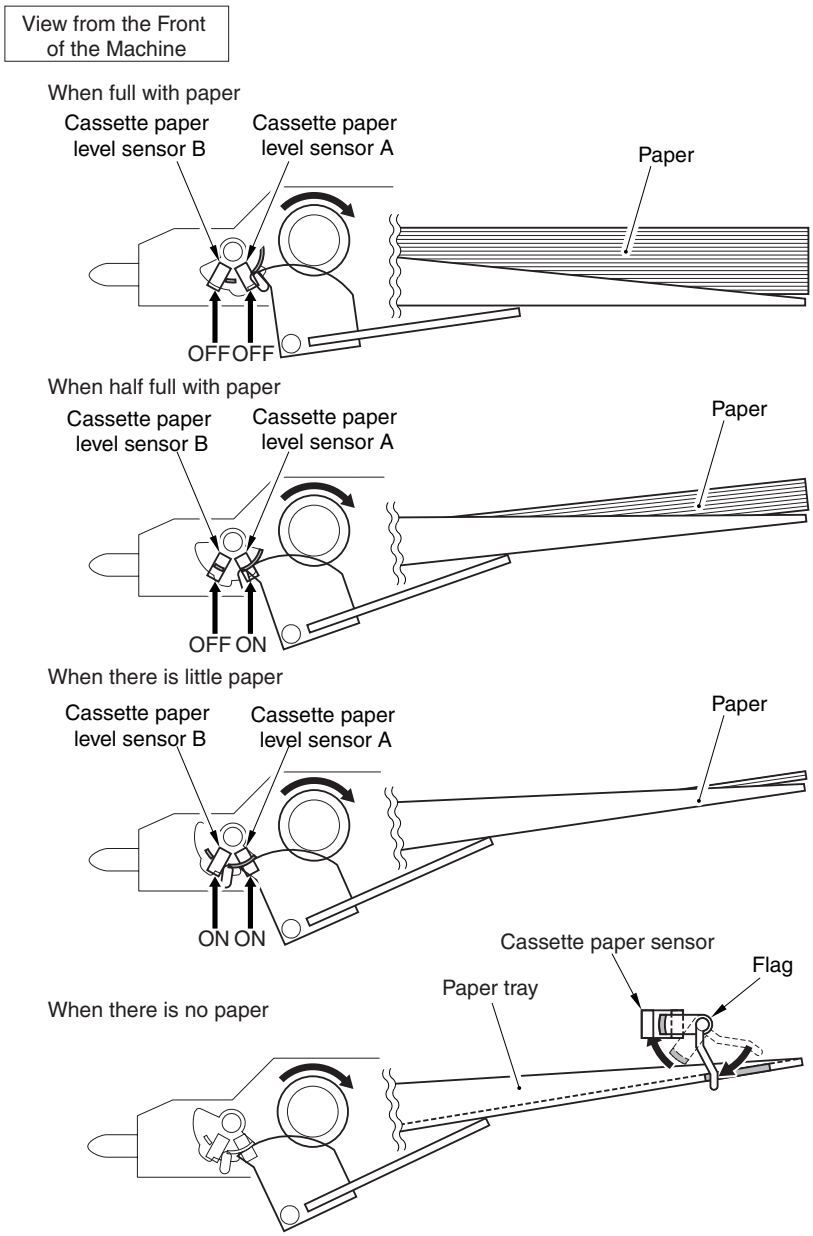

F-8-33

T-8-13

Paper level sensor A	Paper level sensor B	Paper sensor	Paper level	Control panel indication
OFF	OFF	OFF	100% to 50% of capacity	
ON	OFF	OFF	50% to 50 sheets (approx.)	
ON	ON	OFF	50 sheets or less (approx.)	
---	---	ON	No paper	

8.5 Manual Feed Pickup Unit

8.5.1 Overview

iR2270 / iR2870 / iR3570 / iR4570 / / / / / iR2230 / / iR3530 /

The paper in the tray of the manual feed pickup unit is forced against the manual feed pickup roller by the work of the pickup guide plate; the manual feed pickup roller and the separation pad serve to make sure that only a single sheet of paper is separated and moved into the machine:
(1) the pickup guide plate is locked in place at all times, and does not require drive for pickup operation.
(2) multi-pickup roller is driven by the main motor (M2) through the manual feed pickup clutch (CL1).

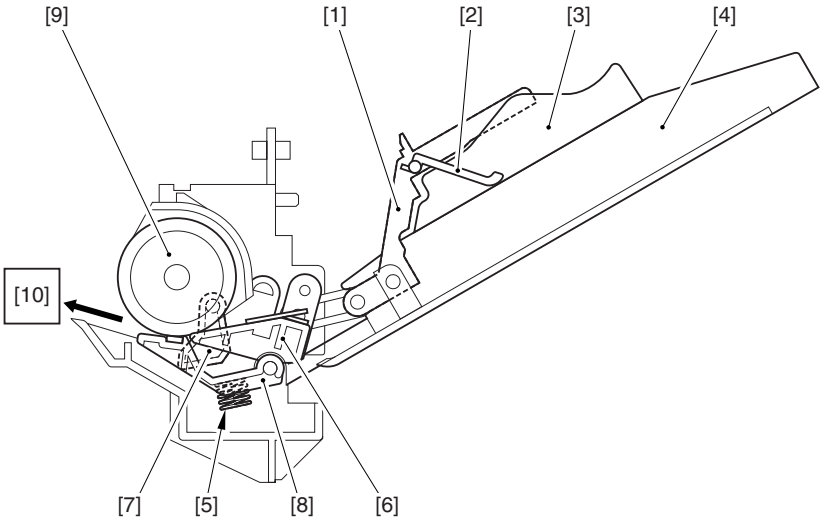

F-8-34

[1] Upper guide
[2] Stopper plate
[3] Side guide
[4] Manual feed pickup tray
[5] Pressure spring
[6] Holding plate
[7] Manual feed paper sensor flag
[8] Separation pad
[9] Manual feed pickup roller
[10] (to registration roller assembly)

REF

The machine's manual feed pickup unit is not equipped with a sensor that may detect the last sheet of paper.

8.5.2 Basic Sequence of Operation

iR2270 / iR2870 / iR3570 / iR4570 / / / / / iR2230 / / iR3530 /

The multi-pickup roller starts to rotate when the manual pickup clutch (CL1) goes on to start upper separation to pick up a single sheet of paper. When the leading edge of the sheet reaches the registration sensor (PS26) and is moved a specific distance, the manual pickup clutch goes off, causing the sheet to arch in the registration roller area.

When the registration clutch (CL2) goes on, the manual feed pickup clutch (CL1) once again goes on to pick up paper. The manual feed pickup clutch (CL1) goes off immediately before the trailing edge of paper moves past the manual feed pickup roller; thereafter, the registration roller serves to pull off the paper.

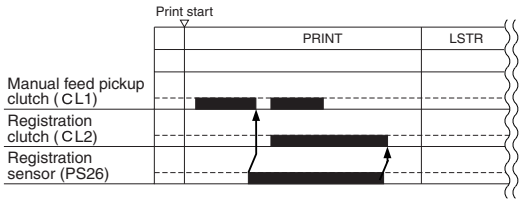

F-8-35

8.5.3 Identifying the Paper Size

iR2270 / iR2870 / iR3570 / iR4570 / / / / / iR2230 / / iR3530 /

The width of paper is detected with reference to the output of the variable resistor (SVR1), which operates in conjunction with the movement of the side guide. The side guide in the manual feed tray is set when the user moves it to place paper in the cassette.

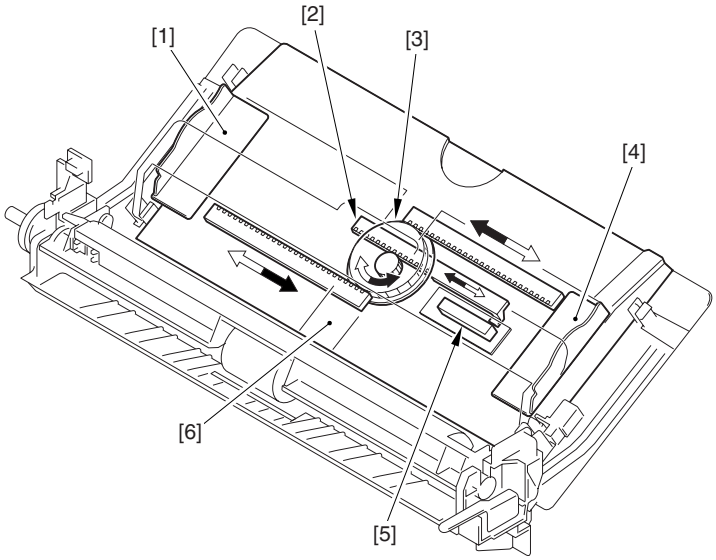

F-8-36

[1] Side guide (rear)
[2] Stop arm
[3] Center gear
[4] Side guide (front)
[5] Variable resistor (SVR1)
[6] Manual feed tray

8.5.4 Paper Retaining Mechanism

iR2270 / iR2870 / iR3570 / iR4570 / / / / / iR2230 / / iR3530 /

The holding plate of the machine's cassette is fixed in position at all times, and does not move up/down at time of pickup, and must temporarily be released when paper is set between it and the manual feed pickup roller. It is linked to the upper guide so that it opens when the user opens the guide; to prevent the user from placing paper without opening the upper guide, the guide is equipped with a stopper plate.

1. When the upper guide is closed,
   the holding plate is locked in place,
   and the stopper plate prevents the user from placing paper.

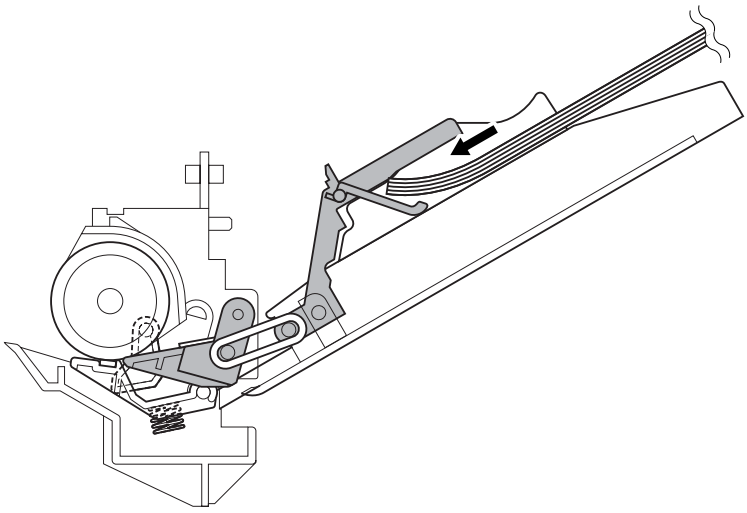

F-8-37

2. When the upper guide is open,
   the holding plate is freed,
   and the stopper plate opens, permitting the user to place paper.

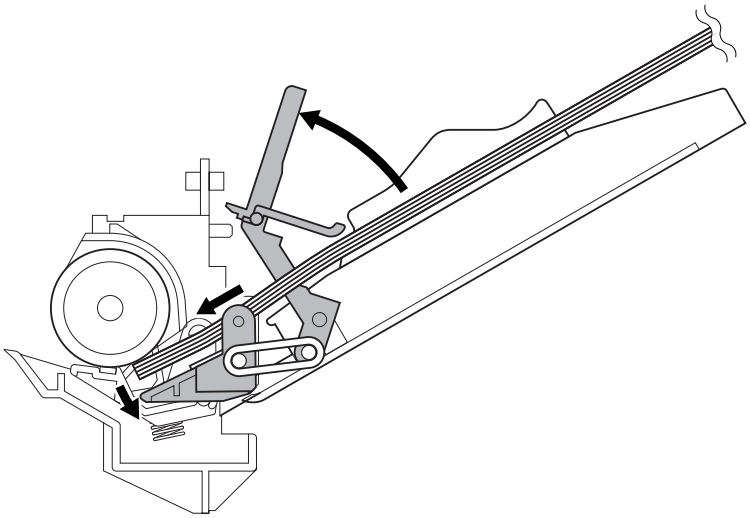

F-8-38

3. When the upper guide is closed once again,
   the holding plate becomes locked in position once again.

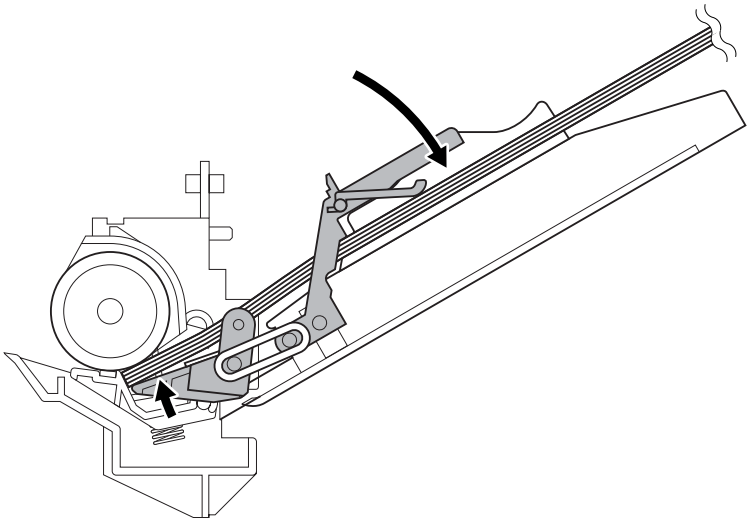

F-8-39

8.6 Registration Unit

8.6.1 Overview

iR2270 / iR2870 / iR3570 / iR4570 / / / / / iR2230 / / / iR3530 /

The registration roller is driven by the main motor (M2).
In between the registration roller and the main motor is the registration clutch (SL2), servicing to turn on and off the registration roller so that the paper will be matched in relation to the image on the drum at correct registration.

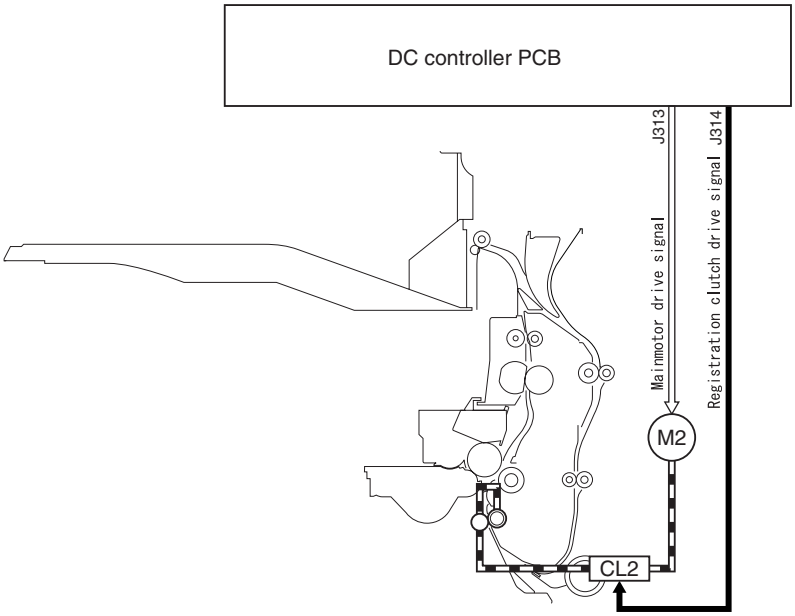

F-8-40

8.6.2 Checking Horizontal Registration

iR2270 / iR2870 / iR3570 / iR4570 / / / / / iR2230 / / / iR3530 /

The machine does not have a mechanism to check horizontal registration for both 1st and 2nd sides of a print. The point of horizontal registration for the 2nd side may be adjusted in service mode (i.e., the image write start position).

The degree of arching for registration on the 2nd side of a double-sided print must be adjusted separately from the adjustment for the 1st side to accommodate the fact that different feed paths are used up to the registration roller for 1st and 2nd sides.
Service Mode:

COPIER>ADJUST>FEED-ADJ>ADJ-REFE
Use it to adjust the horizontal registration for the 2nd side of small-size double-sided prints.

COPIER>ADJUST>FEED-ADJ>ADJ-RE-L
Use it to adjust the horizontal registration for the 2nd side of large-size double-sided prints.

COPIER>ADJUST>FEED-ADJ>LOOPREFE
Use it to adjust the degree of arching for the 2nd side of double-sided prints.

Reference:
small-size: A4, B5, and the like, whose side in paper feed direction is shorter than that of LTR.
Large-size: A3, A4R, B5R, and the like, whose side in feed direction is longer than that of LTR.
The term "2nd side of a double-sided print" as used in relation to the machine's service mode refers to the side that receives an image second in order; in other words, it corresponds to the 1st side of the original.

8.7 Duplex Feeding Unit

8.7.1 Overview

iR2270 / iR2870 / / / iR2230 / / / iR3530 /

Inside the duplexing assembly are found two sets of rollers that are driven by the main motor (M2) and the duplexing clutch (CL6).

Different sets of rollers are used to turn over the sheet for duplexing depending on whether or not the machine is equipped with a delivery accessory*:
If a delivery accessory is present, the reversing rollers are used to turn over the sheet.
If no delivery accessory is present, the delivery rollers are used to turn over the sheet.

*3 Way Unit-A1

Configuration of Components If Without a Delivery Accessory

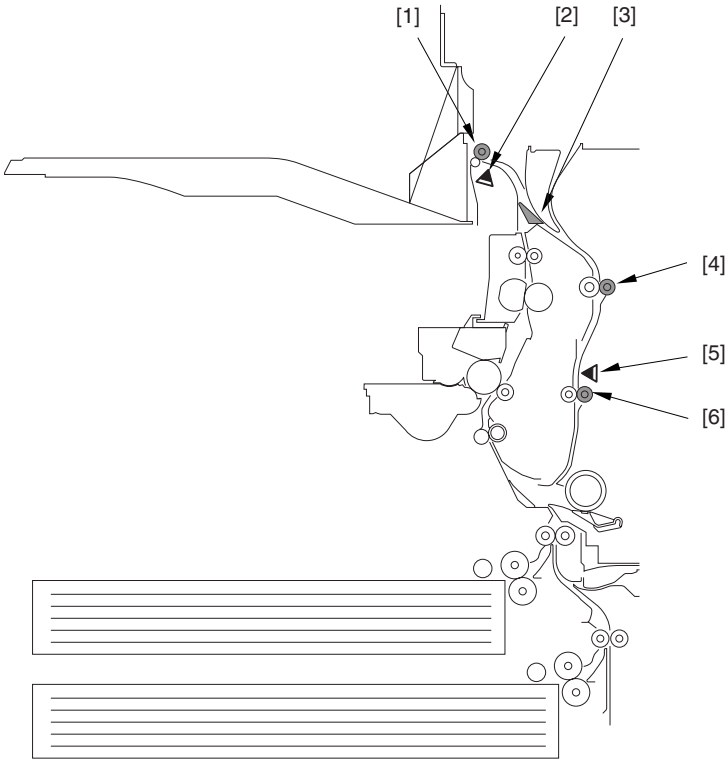

F-8-41

[1] Delivery roller
[2] Delivery sensor 1 (PS14)
[3] Reversing flapper
[4] Duplexing feeding roller 1
[5] Duplexing feed sensor (PS17)
[6] Duplexing feeding roller 1

Configuration of the Components If With a Delivery Accessory

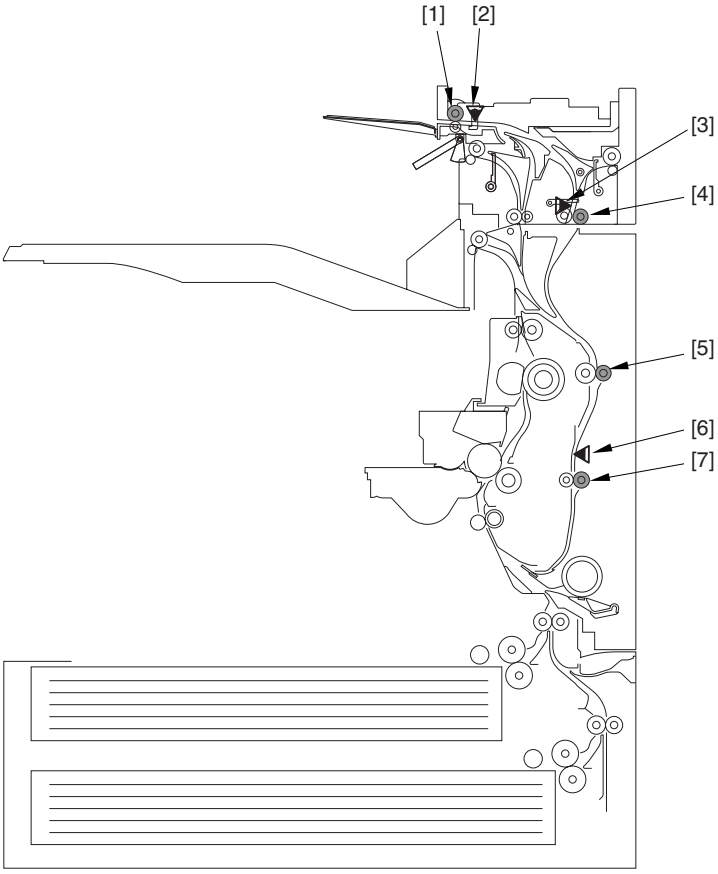

F-8-42

[1] Reversing roller
[2] Reversal sensor (PS4A)
[3] Duplexing inlet sensor (PS3A)

[4] Duplexing inlet roller
[5] Duplexing feeding roller 1
[6] Duplexing feed sensor (PS17)
[7] Duplexing feeding roller 2

8.7.2 Overview

iR3570 / iR4570 / /

Inside the duplexing assembly are 2 sets of rollers that are driven by the duplexing motor (M10).

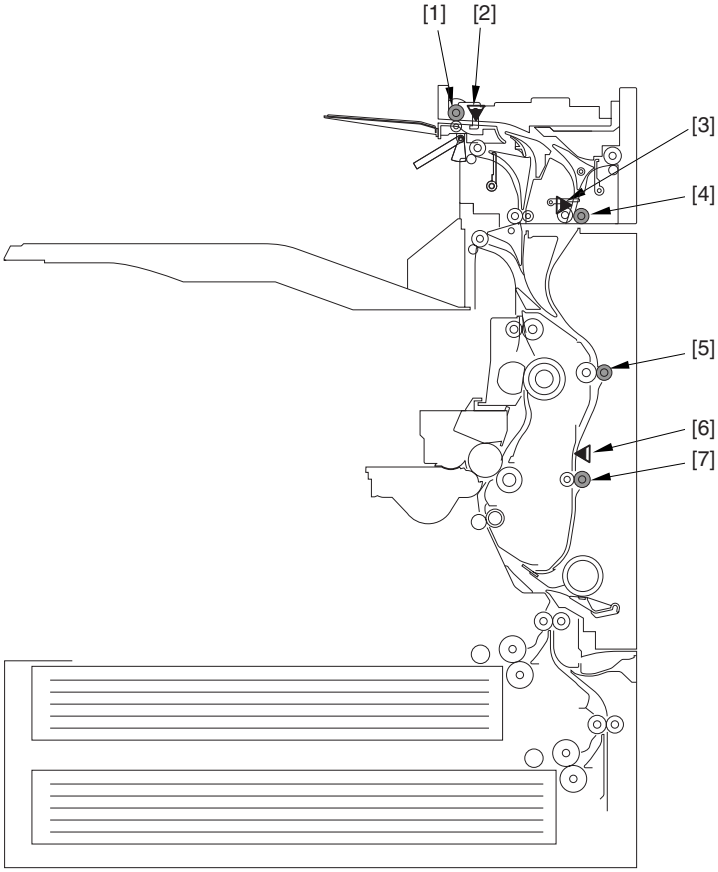

F-8-43

[1] Reversing roller
[2] Reversal sensor (PS4A)
[3] Duplexing inlet sensor (PS3A)
[4] Duplexing inlet roller
[5] Duplexing feeding roller 1
[6] Duplexing feed sensor (PS17)
[7] Duplexing feeding roller 2

8.7.3 Sequence of Image Formation

iR2270 / iR2870 / iR3570 / iR4570 / / / / / iR2230 / / / iR3530 /

The machine goes thorough the following sequence to form images when making double-sided copies/prints:

- Configuration Without an Accessory Installed

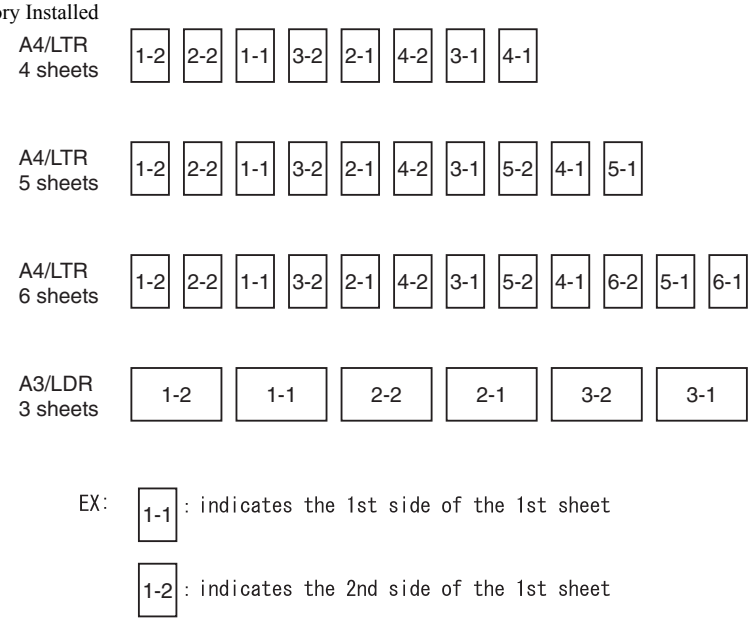

F-8-44

- Configuration with an Accessory Installed

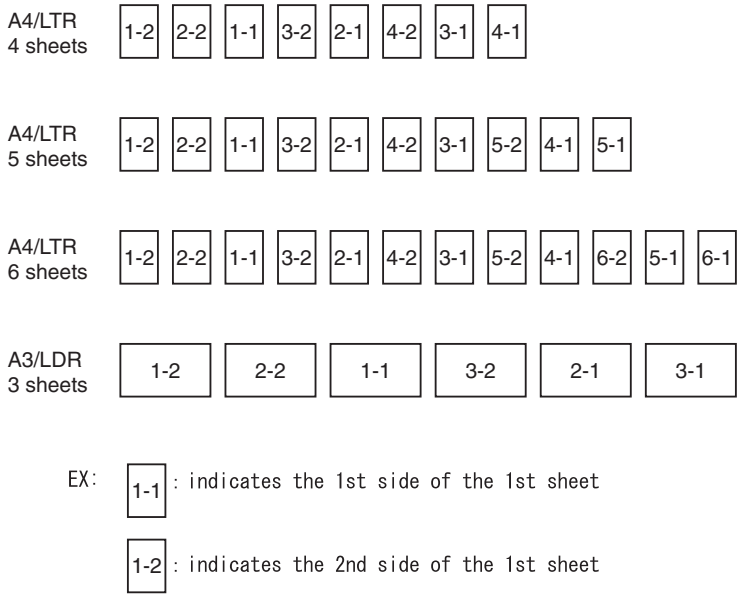

F-8-45

However, in the case of delivery to tray 3 (outside), the machine uses single-sheet circulation.

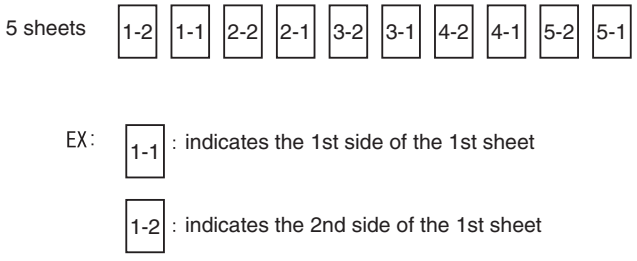

F-8-46

8.7.4 Sequence of Image Formation

iR3570 / iR4570 / /

The machine goes thorough the following sequence to form images when making double-sided copies/prints:

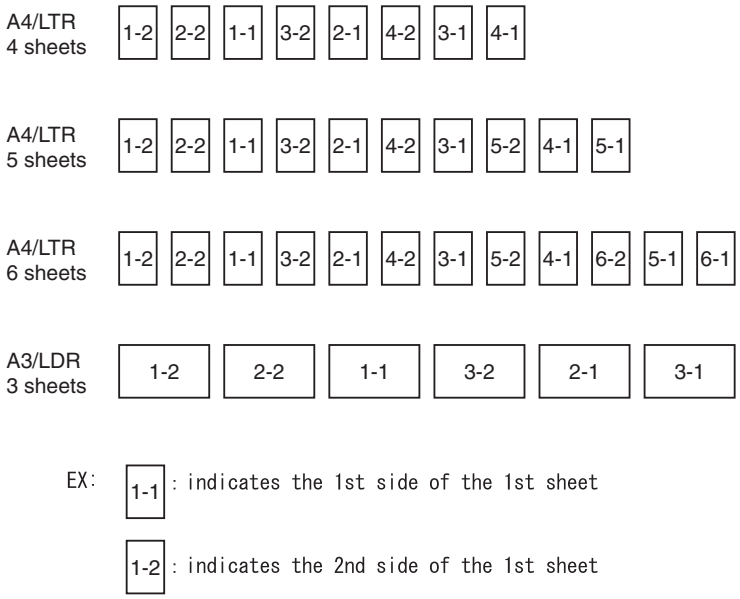

F-8-47

However, in the case of delivery to tray 3 (outside), the machine uses single-sheet circulation.

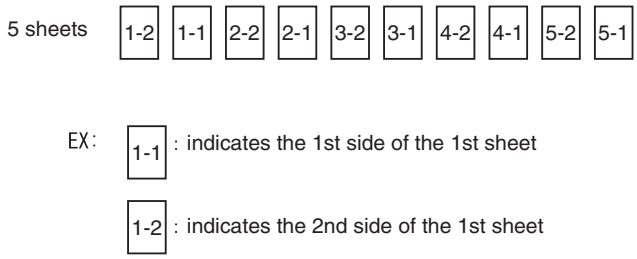

F-8-48

8.7.5 Flow of Paper (w/o/ delivery option)

iR2270 / iR2870 / / / iR2230 / / / iR3530 /

A4/LTR, 5 Sheets
A number in a circle indicates the 1st side, while a number in a square indicates the 2nd side.

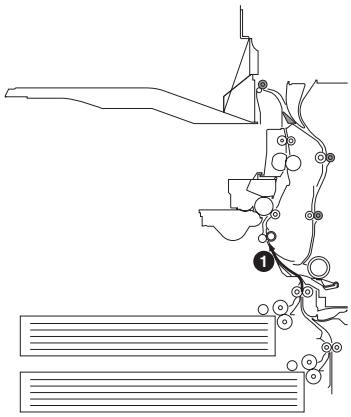

F-8-49

The 1st sheet is picked up.

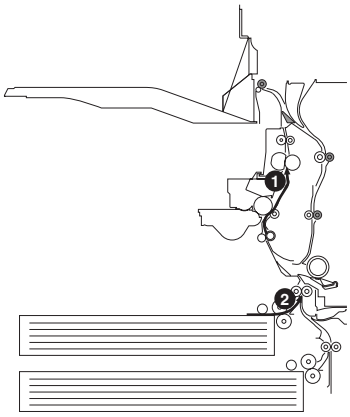

F-8-50

An image is formed for the 2nd side of the 1st sheet. The 2nd sheet is picked up.

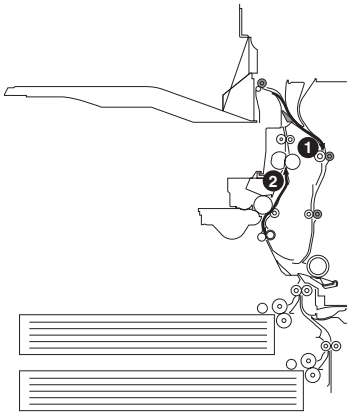

F-8-51

The 1st sheet is turned over and moved to duplexing registration. An image is formed for the 2nd side of the 2nd sheet.

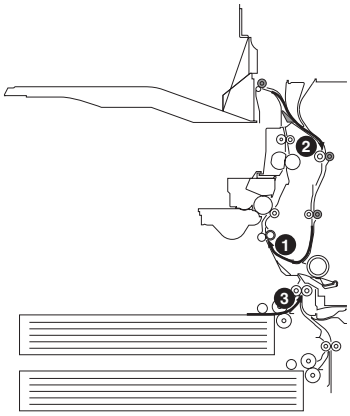

F-8-52

The 1st sheet is moved for registration once again. The 2nd sheet is turned over and moved for duplexing registration. The 3rd sheet is picked up.

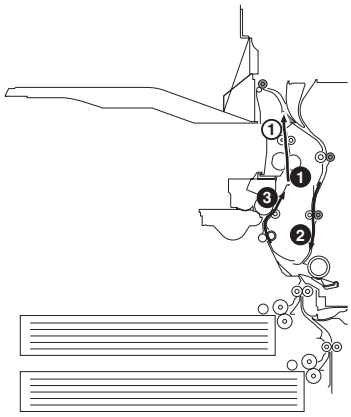

F-8-53

An image is formed for the 1st side of the 1st sheet and for the 2nd side of the 3rd sheet. The 2nd sheet is moved for duplexing.

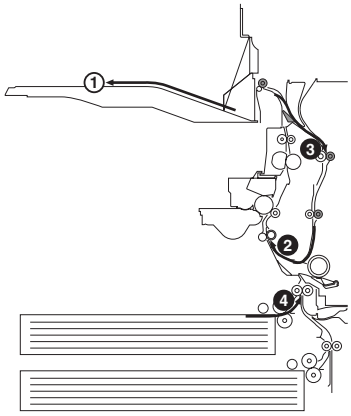

F-8-54

The 1st sheet is delivered. The 3rd sheet is turned over and moved for duplexing registration. The 2nd sheet is moved for registration once again. The 4th sheet is picked up.

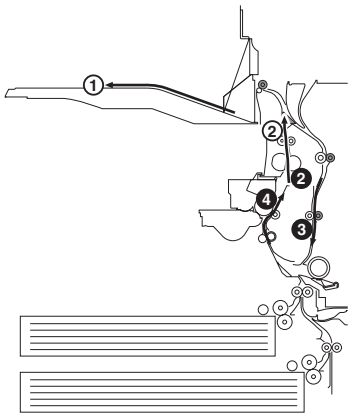

F-8-55

An image is formed for the 1st side of the 2nd sheet and for the 2nd side of the 4th sheet. The 3rd sheet is moved for duplexing.

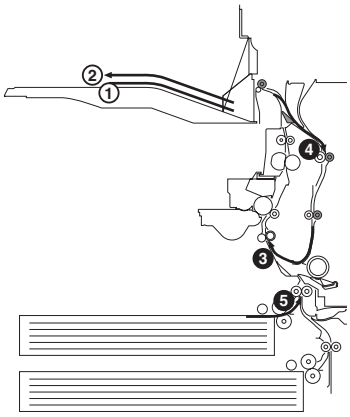

F-8-56

The 2nd sheet is delivered. The 4th sheet is reversed and is moved for duplexing registration. The 3rd sheet is picked for registration once again. The 5th sheet is picked up.

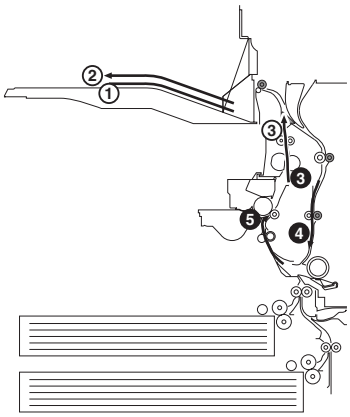

F-8-57

An image is formed for the 1st side of the 3rd sheet and for the 2nd side of the 5th sheet. The 4th sheet is moved for duplexing.

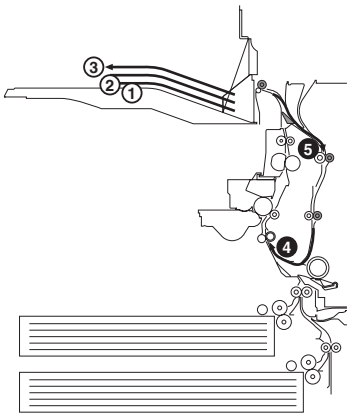

F-8-58

The 3rd sheet is delivered. The 5th sheet is turned over and moved for registration. The 4th sheet is moved for registration once again.

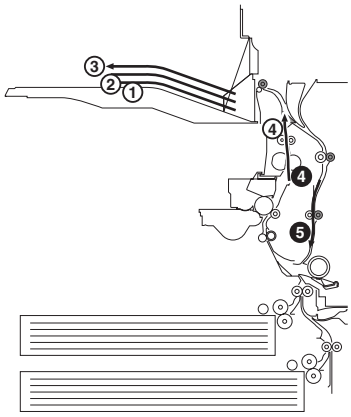

F-8-59

An image is formed for the 1st side of the 4th sheet. The 5th sheet is moved for duplexing.

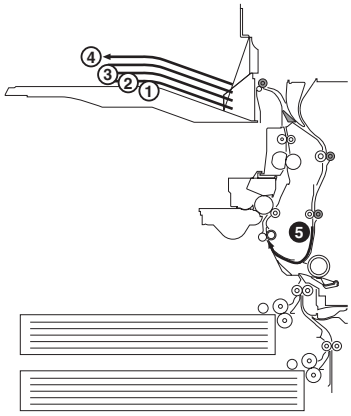

F-8-60

The 4th sheet is delivered. The 5th sheet is moved for registration once again.

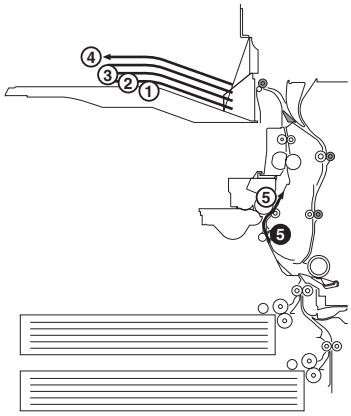

F-8-61

An image is formed for the 1st side of the 5th sheet.

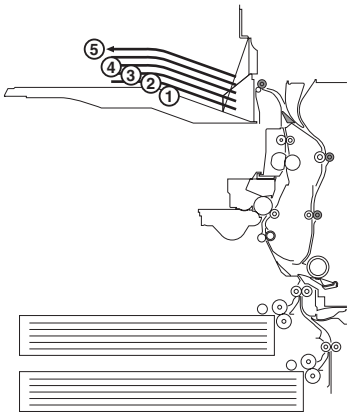

F-8-62

The 5th sheet is delivered.

8.7.6 Flow of Paper (w/ delivery option)

iR2270 / iR2870 / / / iR2230 / / / iR3530 /

A4/LTR, 5 Sheets, Delivery to Tray 1/2
A number in a circle indicates the 1st side, while a number in a square indicates the 2nd side.

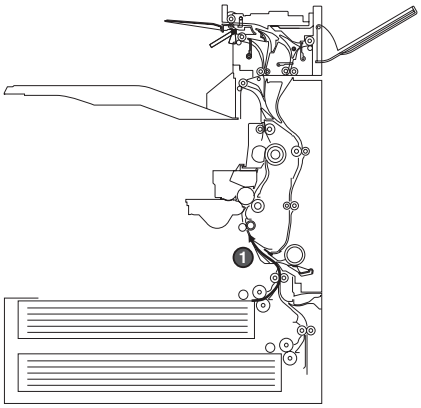

F-8-63

The 1st sheet is picked up.

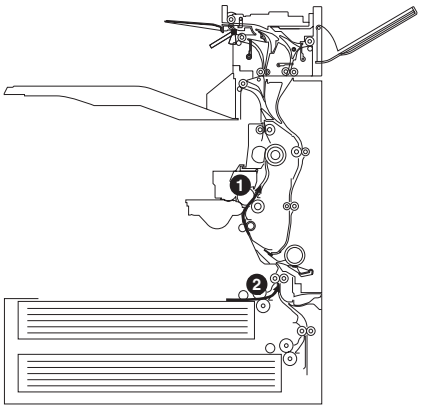

F-8-64

An image is formed for the 2nd side of the 1st sheet. The 2nd sheet is picked up.

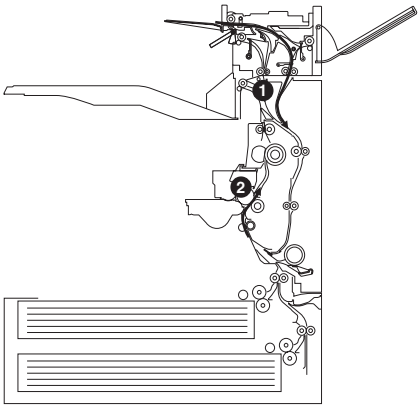

F-8-65

The 1st sheet is turned over, and is moved for duplexing registration. An image is formed for the 2nd side of the 2nd sheet.

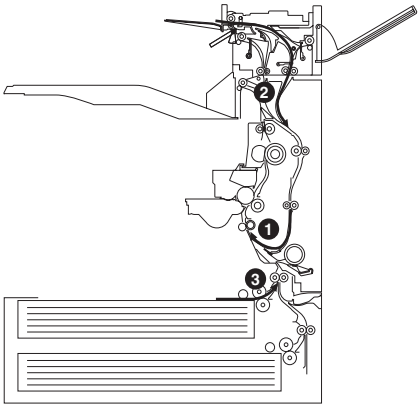

F-8-66

The 1st sheet is moved for registration once again. The 2nd sheet is turned over and moved for duplexing registration. The 3rd sheet is picked up.

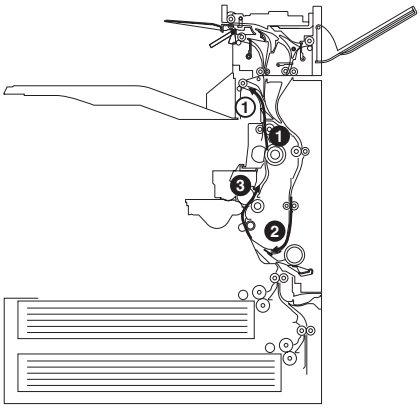

F-8-67

An image is formed for the 1st side of the 1st sheet and the 2nd side of the 3rd sheet. The 2nd sheet is moved for duplexing.

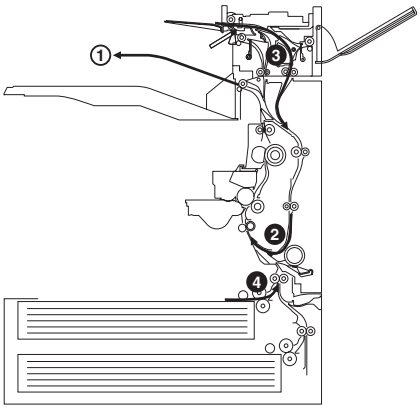

F-8-68

The 1st sheet is delivered. The 3rd sheet is turned over and is moved for duplexing registration. The 2nd sheet is moved for registration once again. The 4th sheet is picked up.

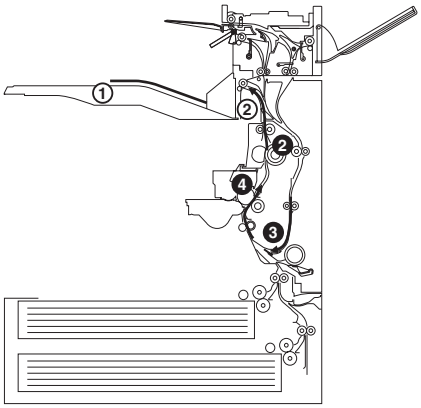

F-8-69

An image is formed for the 1st side of the 2nd sheet and for the 2nd side of the 4th sheet. The 3rd sheet is moved for duplexing.

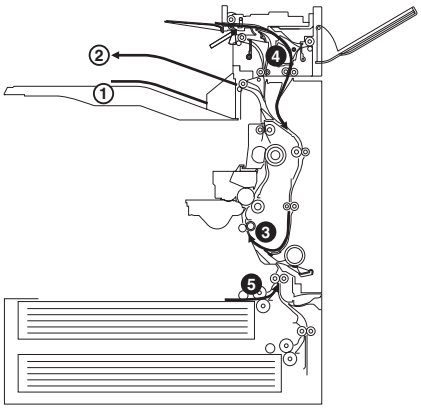

F-8-70

The 2nd sheet is delivered. The 4th sheet is turned over, and is moved for duplexing registration. The 3rd sheet is moved for registration once again. The 5th sheet is picked up.

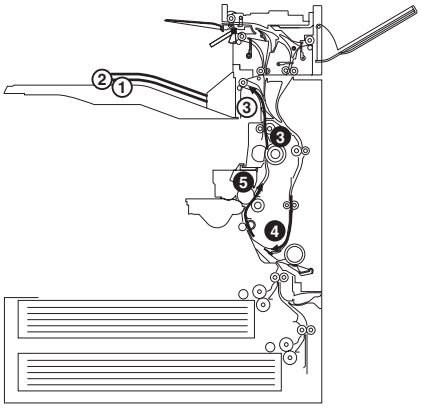

F-8-71

An image is formed for the 1st side of the 3rd sheet and for the 2nd side of the 5th sheet. The 5th sheet is moved for duplexing.

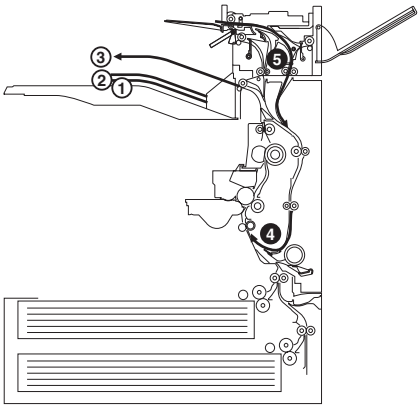

F-8-72

The 3rd sheet is delivered. The 5th sheet is turned over, and is moved for duplexing registration. The 4th sheet is moved for registration once again.

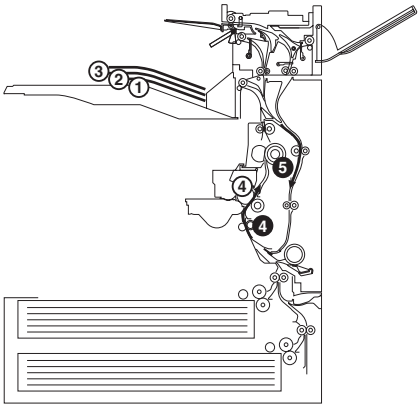

F-8-73

An image is formed for the 1st side of the 4th sheet. The 5th sheet is moved for duplexing.

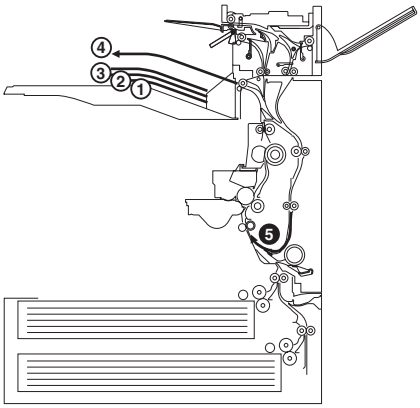

F-8-74

The 4th sheet is delivered. The 5th sheet is moved for registration once again.

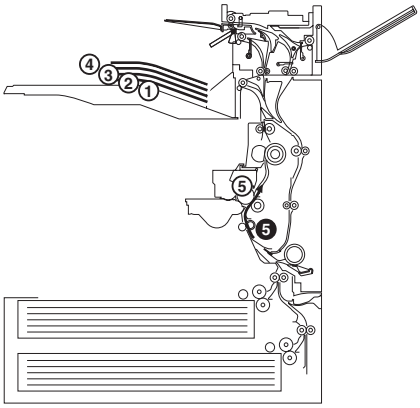

F-8-75

An image is formed for the 1st side of the 5th sheet.

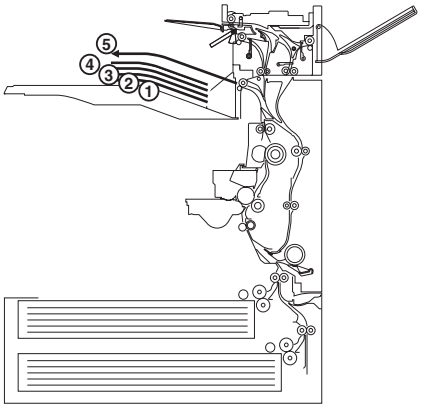

F-8-76

The 5th sheet is delivered.

8.7.7 Flow of Paper

iR3570 / iR4570 / /

A4/LTR, 5 Sheets, Delivery to Tray 1/2
A number in a circle indicates the 1st side, while a number in a square indicates the 2nd side.

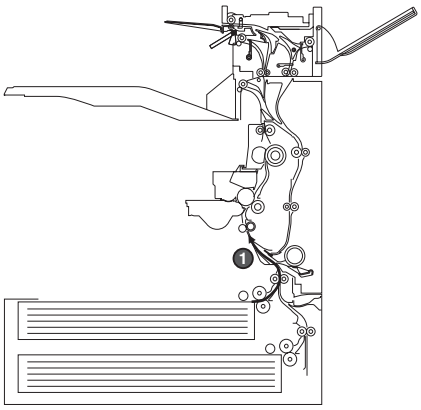

F-8-77

The 1st sheet is picked up.

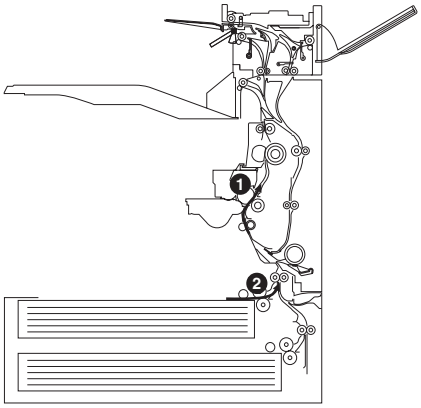

F-8-78

An image is formed for the 2nd side of the 1st sheet. The 2nd sheet is picked up.

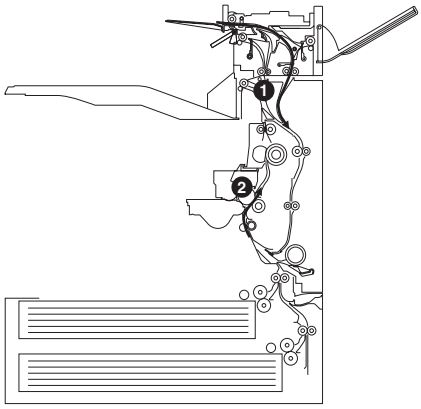

F-8-79

The 1st sheet is turned over, and is moved for duplexing registration. An image is formed for the 2nd side of the 2nd sheet.

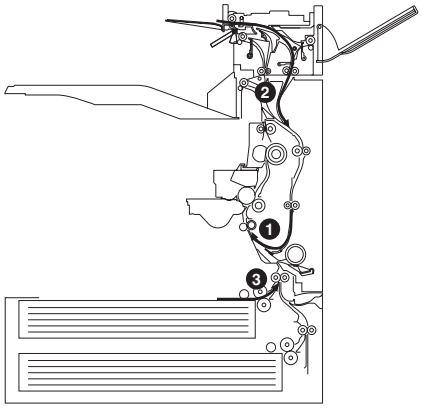

F-8-80

The 1st sheet is moved for registration once again. The 2nd sheet is turned over and moved for duplexing registration. The 3rd sheet is picked up.

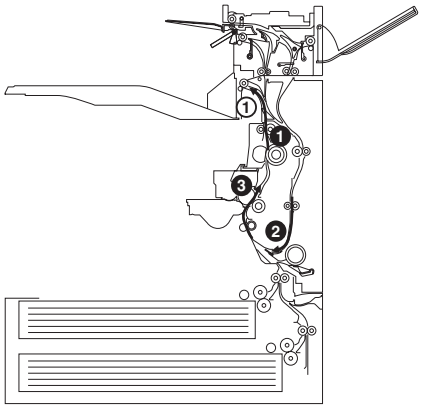

F-8-81

An image is formed for the 1st side of the 1st sheet and the 2nd side of the 3rd sheet. The 2nd sheet is moved for duplexing.

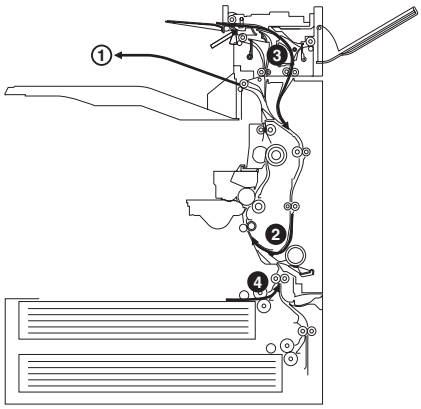

F-8-82

The 1st sheet is delivered. The 3rd sheet is turned over and is moved for duplexing registration. The 2nd sheet is moved for registration once again. The 4th sheet is picked up.

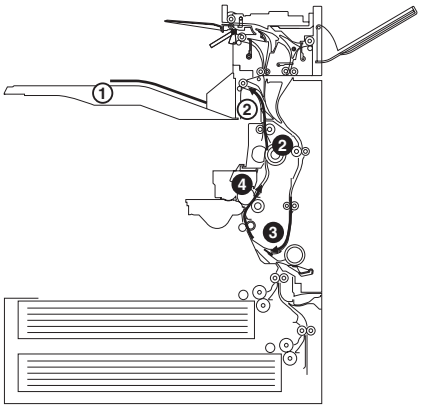

F-8-83

An image is formed for the 1st side of the 2nd sheet and for the 2nd side of the 4th sheet. The 3rd sheet is moved for duplexing.

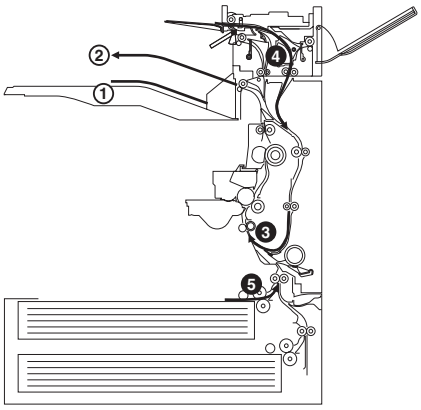

F-8-84

The 2nd sheet is delivered. The 4th sheet is turned over, and is moved for duplexing registration. The 3rd sheet is moved for registration once again. The 5th sheet is picked up.

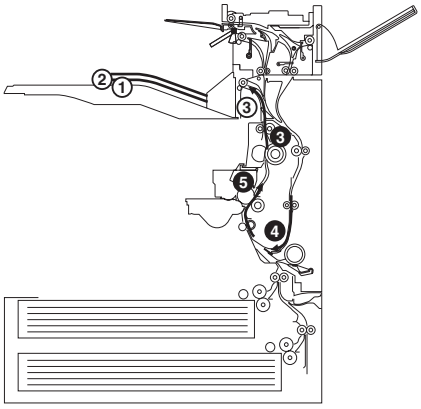

F-8-85

An image is formed for the 1st side of the 3rd sheet and for the 2nd side of the 5th sheet. The 5th sheet is moved for duplexing.

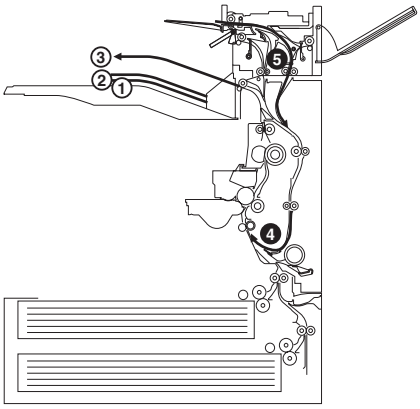

F-8-86

The 3rd sheet is delivered. The 5th sheet is turned over, and is moved for duplexing registration. The 4th sheet is moved for registration once again.

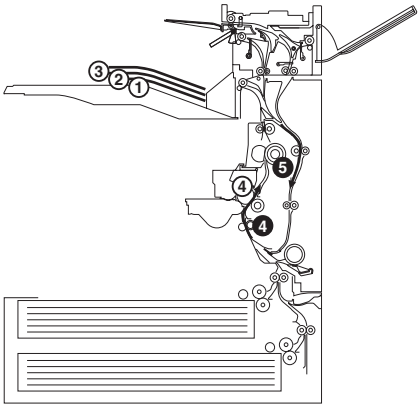

F-8-87

An image is formed for the 1st side of the 4th sheet. The 5th sheet is moved for duplexing.

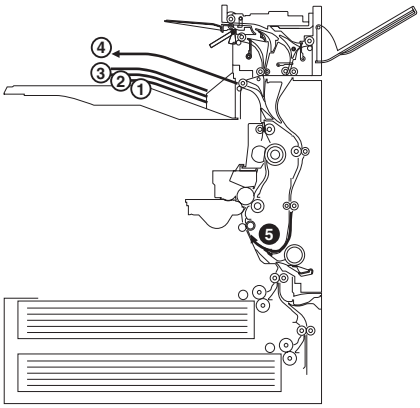

F-8-88

The 4th sheet is delivered. The 5th sheet is moved for registration once again.

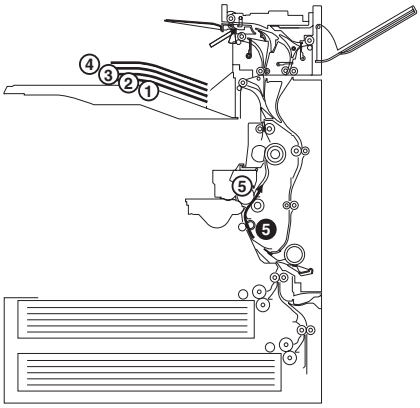

F-8-89

An image is formed for the 1st side of the 5th sheet.

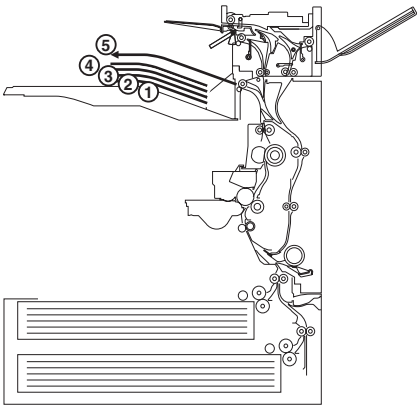

F-8-90

The 5th sheet is delivered.

8.8 Parts Replacement Procedure

8.8.1 Pick-up Unit 1

8.8.1.1 Removing the Right Cover (rear)

iR2270 / iR2870 / iR3570 / iR4570 / / iR2270N / / iR2870N / / iR3570N / / iR4570N / iR2230 / / / iR3530 /

1) Open the pedestal right door [1]. (if equipped with a 2-Cassette Pedestal-Y2)
2) Open the right lower door [2].
3) Remove the 5 screws [3], and detach the right cover (rear) [4].

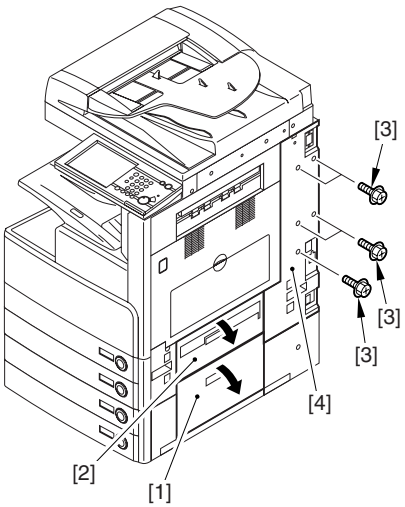

F-8-91

8.8.1.2 Removing the Right Door

iR3570 / iR4570 / / iR3570N / / iR4570N / iR2230 / / / iR3530 /

1) Open the right door.

F-8-92

2) Remove the screw [1], and detach the fixing plate [2].

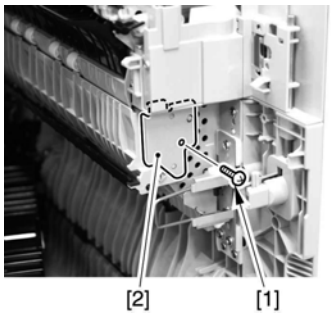

F-8-93

3) Remove the joint shaft [1], and free the extension delivery unit [2] from the right door.

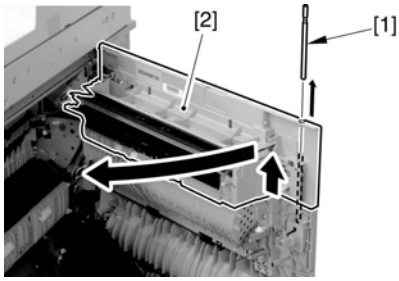

F-8-94

4) Disconnect the connector [1], and remove the reuse band [2]; then, remove the 2 screws (M4x8; RS tightening).

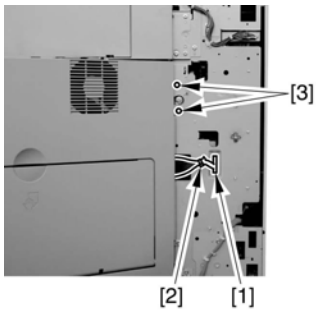

F-8-95

5) While freeing the hinge assembly [2], detach the right door.

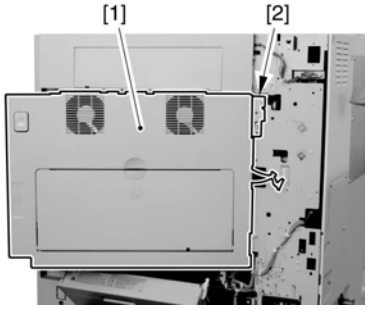

F-8-96

Attaching the Right Door

1) Match the hinge [1] found at the bottom of the right door against the lug.
2) Engage the hinge [2] found on the top of the right door with the hook found on the side plate.

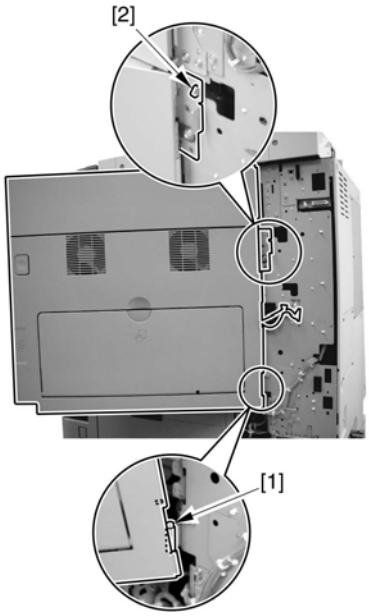

F-8-97

When tightening the 2 screws used to fix the hinge in place, be sure to close the right door first.

8.8.1.3 Removing the Right Door

iR2270 / iR2870 / / iR2270N / / iR2870N / iR2230 / / / iR3530 /

1) Open the right door.

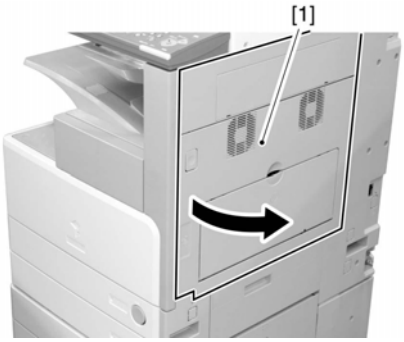

F-8-98

2) Remove the reuse band [1], and disconnect the connector [2].
3) Remove the 2 screws (M4x8; RS tightening), and detach the right door.

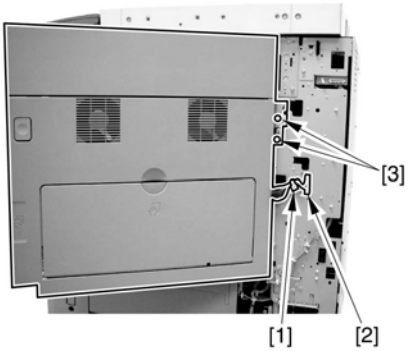

F-8-99

Attaching the Right Door

1) Match the hinge [1] found at the bottom of the right door against the lug.
2) Engage the hinge [2] found on the top of the right door with the hook found on the side plate.

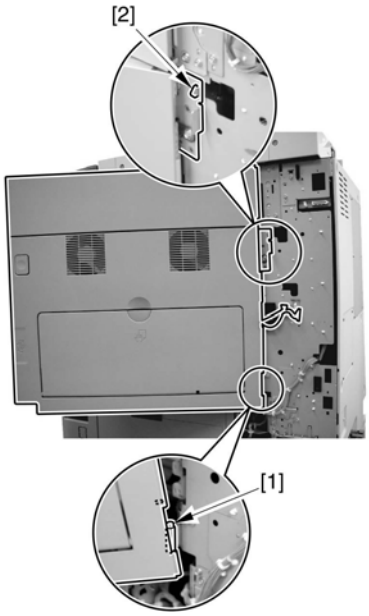

F-8-100

When tightening the 2 screws used to fix the hinge in place, be sure to close the right door first.

8.8.1.4 Removing the Right Cover (lower front)

iR2270 / iR2870 / iR3570 / iR4570 / / iR2270N / / iR2870N / / iR3570N / / iR4570N / iR2230 / / / iR3530 /

1) Open the pedestal right door [1]. (if equipped with a Cassette Feeding Unit-Y2)
2) Open the lower right door [2].
3) Remove the 2 screws [3], and detach the right cover (lower front) [4].

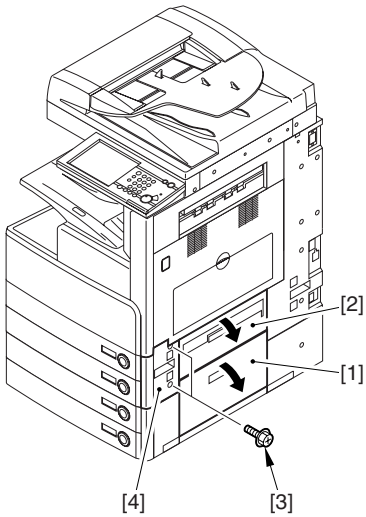

F-8-101

8.8.1.5 Removing the Pickup Assembly 1

iR2270 / iR2870 / iR3570 / iR4570 / / iR2270N / / iR2870N / / iR3570N / / iR4570N / iR2230 / / / iR3530 /

1) Slide out the cassette 1/2.
2) Disconnect the 3 connectors [1]; then, free the harness from the 2 wire saddles [2] and the 2 clamps [3].

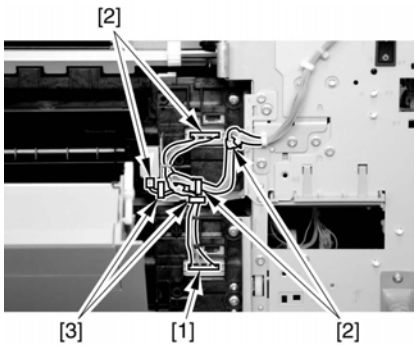

F-8-102

3) Remove the 4 screws [1], and take out the pickup unit 1 [2].

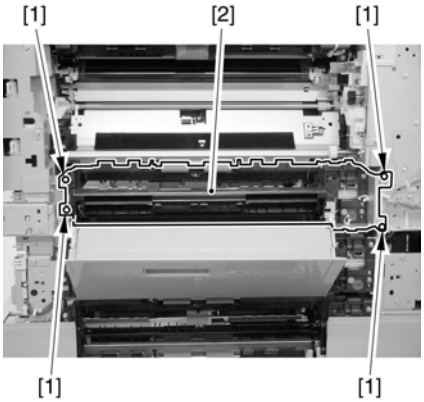

F-8-103

8.8.2 Pick-up Unit 2

8.8.2.1 Removing the Right Cover (rear)

iR2270 / iR2870 / iR3570 / iR4570 / / iR2270N / / iR2870N / / iR3570N / / iR4570N / iR2230 / / / iR3530 /

1) Open the pedestal right door [1]. (if equipped with a 2-Cassette Pedestal-Y2)
2) Open the right lower door [2].
3) Remove the 5 screws [3], and detach the right cover (rear) [4].

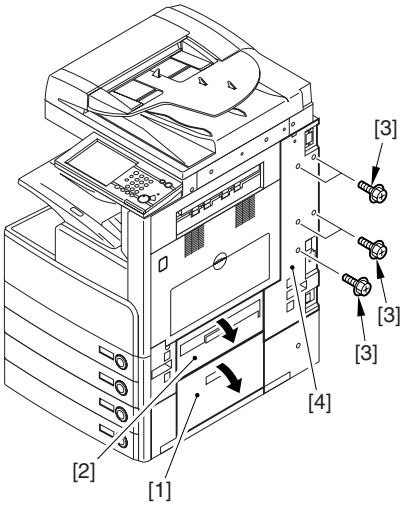

F-8-104

8.8.2.2 Removing the Right Cover (lower front)

iR2270 / iR2870 / iR3570 / iR4570 / / iR2270N / / iR2870N / / iR3570N / / iR4570N / iR2230 / / / iR3530 /

1) Open the pedestal right door [1]. (if equipped with a Cassette Feeding Unit-Y2)
2) Open the lower right door [2].
3) Remove the 2 screws [3], and detach the right cover (lower front) [4].

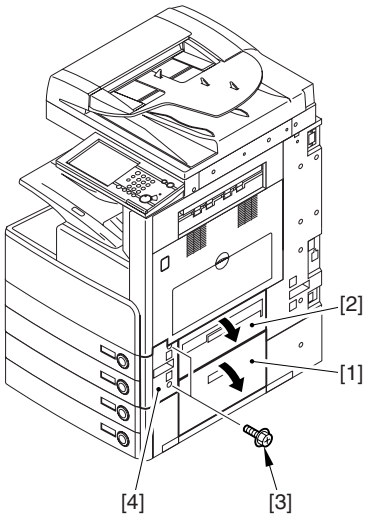

F-8-105

8.8.2.3 Removing the Pickup Assembly 2

iR2270 / iR2870 / iR3570 / iR4570 / / iR2270N / / iR2870N / / iR3570N / / iR4570N / iR2230 / / / iR3530 /

1) Slide out the cassette 1/2.
2) Disconnect the connector [1], and free the harness from the guide; then, remove the 4 screws [2], and detach the pickup assembly 2 [3].

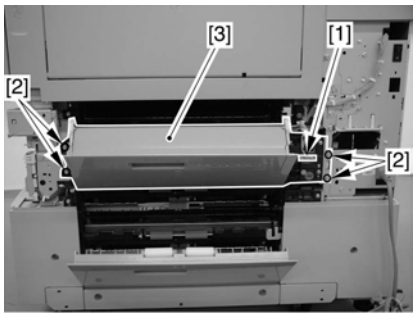

F-8-106

8.8.3 Pickup Roller

8.8.3.1 Removing the Pickup Roller/Feed Roller/ Separation Roller

iR2270 / iR2870 / iR3570 / iR4570 / / iR2270N / / iR2870N / / iR3570N / / iR4570N / iR2230 / / / iR3530 /

1) Slide out the cassette.
2) Open the right door (in the case of the separation roller).
3) Pick the tabs of the individual rollers, and detach the pickup roller [1], feed roller [2], and separation roller [3].

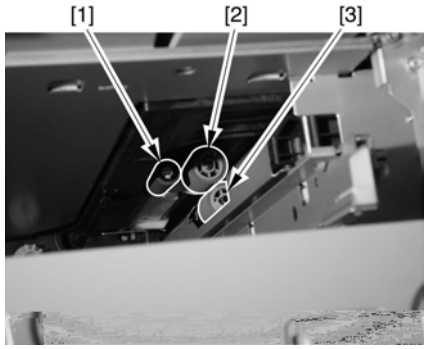

F-8-107

Point to Note When Replacing the Feed/Separation Roller 1
The collar (roller core) of the machine's feed/separation roller is black.

8.8.4 Sensor Mount

8.8.4.1 Removing the Right Cover (rear)

iR2270 / iR2870 / iR3570 / iR4570 / / iR2270N / / iR2870N / / iR3570N / / iR4570N / iR2230 / / / iR3530 /

1) Open the pedestal right door [1]. (if equipped with a 2-Cassette Pedestal-Y2)
2) Open the right lower door [2].
3) Remove the 5 screws [3], and detach the right cover (rear) [4].

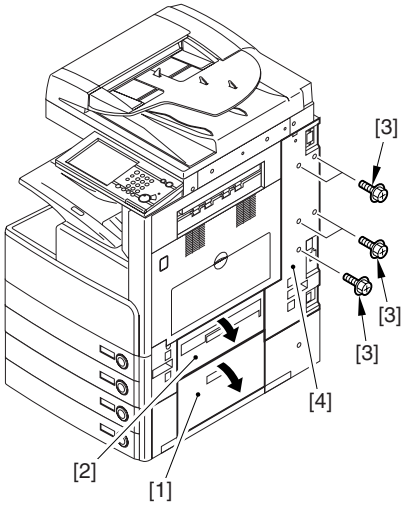

F-8-108

8.8.4.2 Removing the Right Door

iR3570 / iR4570 / / iR3570N / / iR4570N / iR2230 / / / iR3530 /

1) Open the right door.

F-8-109

2) Remove the screw [1], and detach the fixing plate [2].

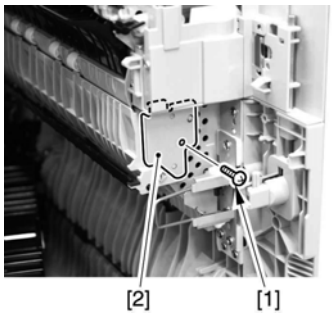

F-8-110

3) Remove the joint shaft [1], and free the extension delivery unit [2] from the right door.

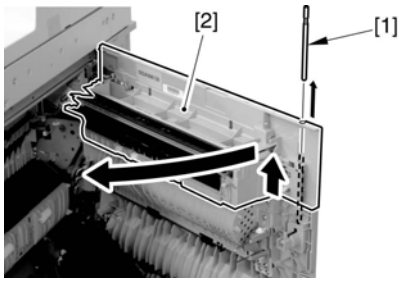

F-8-111

4) Disconnect the connector [1], and remove the reuse band [2]; then, remove the 2 screws (M4x8; RS tightening).

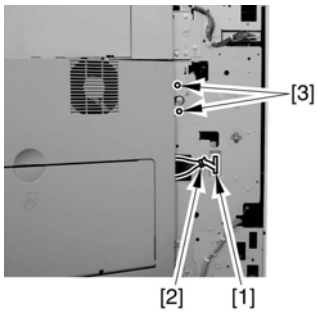

F-8-112

5) While freeing the hinge assembly [2], detach the right door.

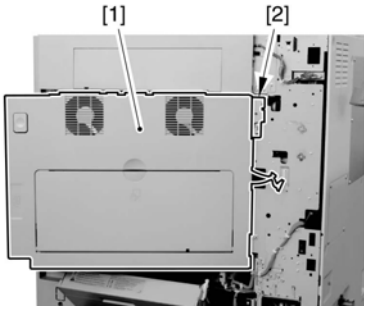

F-8-113

Attaching the Right Door

1) Match the hinge [1] found at the bottom of the right door against the lug.
2) Engage the hinge [2] found on the top of the right door with the hook found on the side plate.

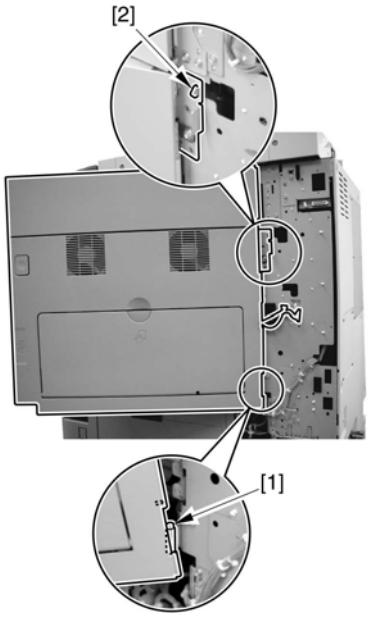

F-8-114

When tightening the 2 screws used to fix the hinge in place, be sure to close the right door first.

8.8.4.3 Removing the Right Door

iR2270 / iR2870 / / iR2270N / / iR2870N / iR2230 / / / iR3530 /

1) Open the right door.

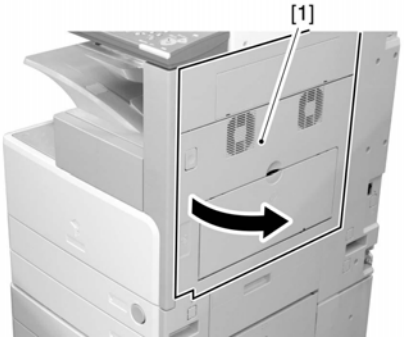

F-8-115

2) Remove the reuse band [1], and disconnect the connector [2].
3) Remove the 2 screws (M4x8; RS tightening), and detach the right door.

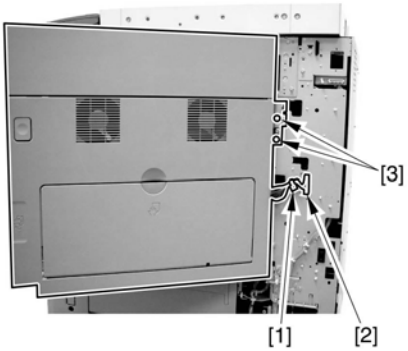

F-8-116

Attaching the Right Door
1) Match the hinge [1] found at the bottom of the right door against the lug.
2) Engage the hinge [2] found on the top of the right door with the hook found on the side plate.

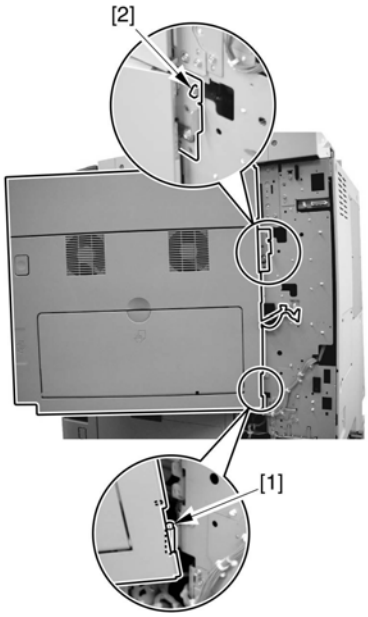

F-8-117

When tightening the 2 screws used to fix the hinge in place, be sure to close the right door first.

8.8.4.4 Removing the Right Cover (lower front)

iR2270 / iR2870 / iR3570 / iR4570 / / iR2270N / / iR2870N / / iR3570N / / iR4570N / iR2230 / / / iR3530 /

1) Open the right door [1] of the pedestal (if a 2-Cassette Pedestal-Y1 is installed).
2) Open the lower right cover [2].
3) Remove the 2 screws, and detach the right cover (lower front) [3].

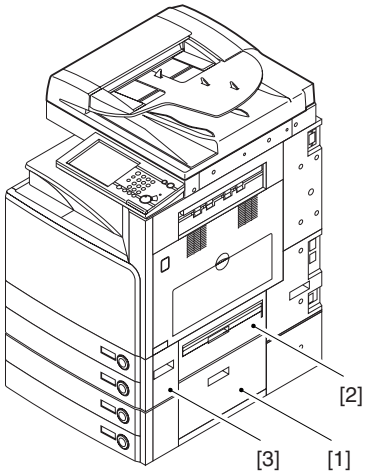

F-8-118

8.8.4.5 Removing the Pickup Assembly 1

iR2270 / iR2870 / iR3570 / iR4570 / / iR2270N / / iR2870N / / iR3570N / / iR4570N / iR2230 / / / iR3530 /

1) Slide out the cassette 1/2.
2) Disconnect the 3 connectors [1]; then, free the harness from the 2 wire saddles [2] and the 2 clamps [3].

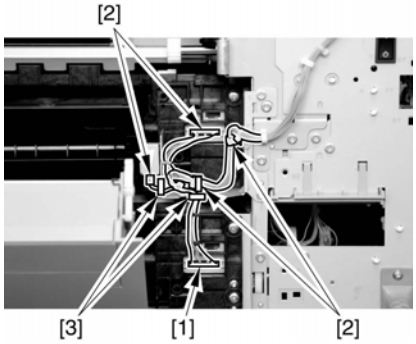

F-8-119

3) Remove the 4 screws [1], and take out the pickup unit 1 [2].

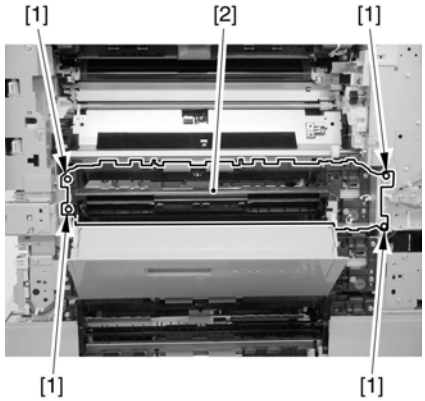

F-8-120

8.8.4.6 Removing the Pickup Assembly 2

iR2270 / iR2870 / iR3570 / iR4570 / / iR2270N / / iR2870N / / iR3570N / / iR4570N / iR2230 / / / iR3530 /

1) Slide out the cassette 1/2.
2) Disconnect the connector [1], and free the harness from the guide; then, remove the 4 screws [2], and detach the pickup assembly 2 [3].

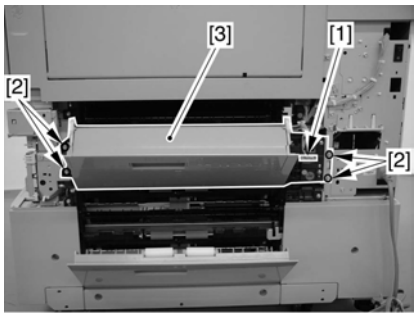

F-8-121

8.8.4.7 Removing the Sensor Mounting Plate

iR2270 / iR2870 / iR3570 / iR4570 / / iR2270N / / iR2870N / / iR3570N / / iR4570N / iR2230 / / / iR3530 /

1) Remove the 2 TP screws [1] and the binding screw [2] from the rear of the pickup assembly, and detach the bracket [3].

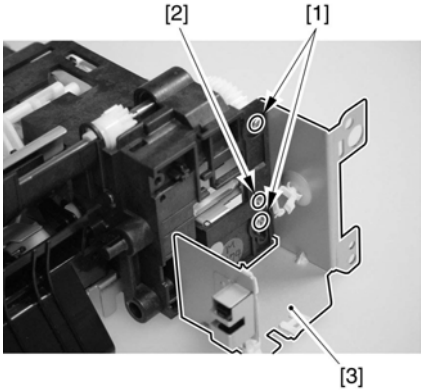

F-8-122

Pickup Unit 1

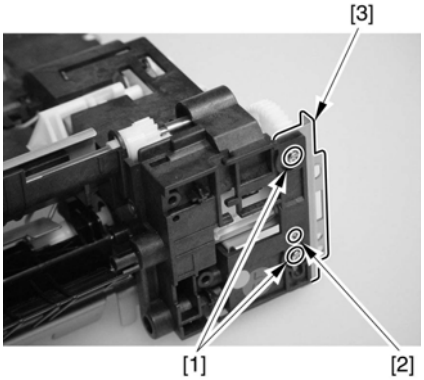

F-8-123

Pickup Unit 2

2) Disconnect the connector [1], and remove the screw; then, detach the cassette pickup solenoid [3].
3) Remove the bushing and the 5 screws [4]; then, detach the sensor base [5].

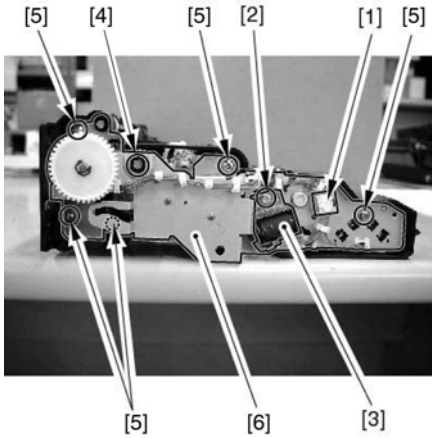

F-8-124

8.8.4.8 Mounting the Sensor Mounting Plate

iR2270 / iR2870 / iR3570 / iR4570 / / iR2270N / / iR2870N / / iR3570N / / iR4570N / iR2230 / / / iR3530 /

Take care not to orient the pickup unit facing down when mounting the sensor base; otherwise, the gears will fall out.

1) After fitting the bushing [1] to the frame, mount the gear shaft [2].

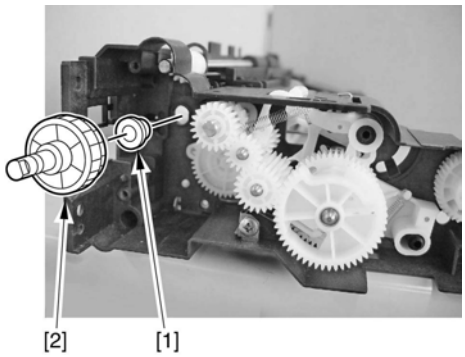

F-8-125

2) Fit the 6 points [A] indicated in the figure in the holes of the base; then, mount the sensor base [2] using 4 screws [1].

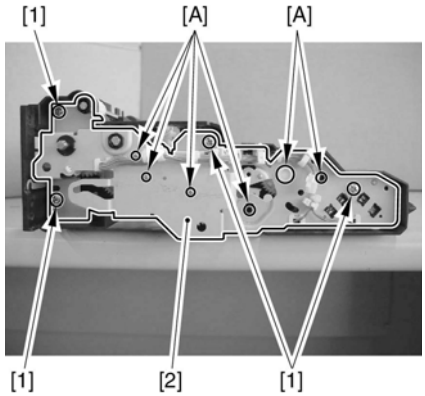

F-8-126

3) Mount the gear [1] and the E-ring [2].

Be sure not to leave out the pickup solenoid [1]. When mounting it, be sure that the stop [2] is fully engaged with the cam gear [3].

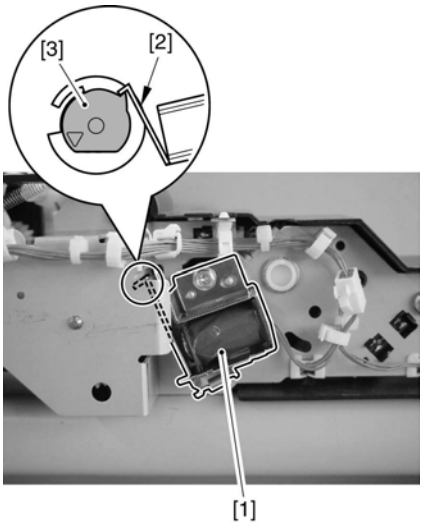

F-8-127

Try turning the gears to be sure that they turn without resistance.

8.8.5 Cassette Pick-up Motor 1

8.8.5.1 Removing the Rear Cover

iR2270 / iR2870 / iR3570 / iR4570 / / iR2270N / / iR2870N / / iR3570N / / iR4570N / iR2230 / / / iR3530 /

1) Remove the 13 screws [1] and then the other screw [2]; then, detach the rear cover [3].

If the left cover (lower) has already been detached, the screw [3] should also have been removed.

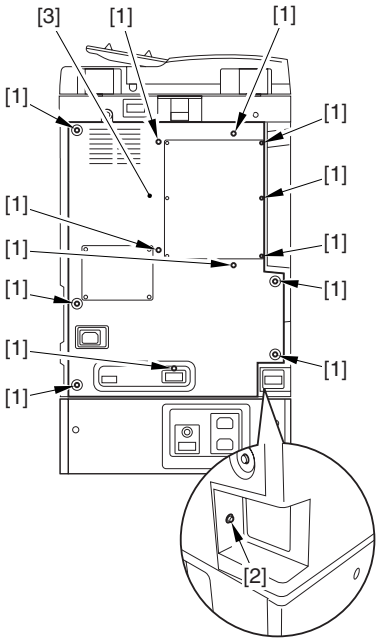

F-8-128

8.8.5.2 Removing the Right Cover (rear)

iR2270 / iR2870 / iR3570 / iR4570 / / iR2270N / / iR2870N / / iR3570N / / iR4570N / iR2230 / / / iR3530 /

1) Open the pedestal right door [1]. (if equipped with a 2-Cassette Pedestal-Y2)
2) Open the right lower door [2].
3) Remove the 5 screws [3], and detach the right cover (rear) [4].

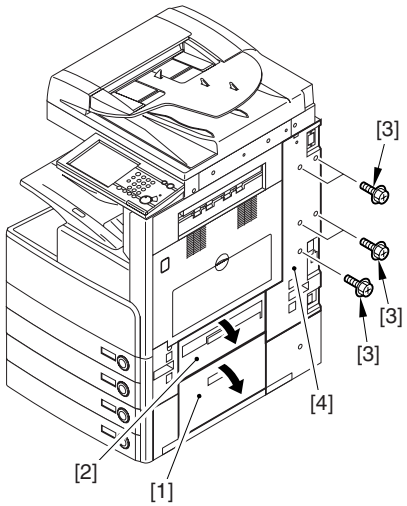

F-8-129

8.8.5.3 Removing the Pickup Motor Base

iR2270 / iR2870 / iR3570 / iR4570 / / iR2270N / / iR2870N / / iR3570N / / iR4570N / iR2230 / / / iR3530 /

1) Free the harness [1] from the 2 wire saddles [2].

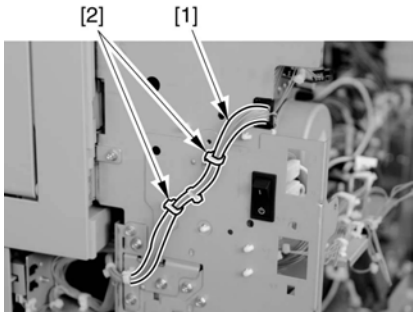

F-8-130

2) Remove the 5 screws [1]. Remove the power cord base [2].

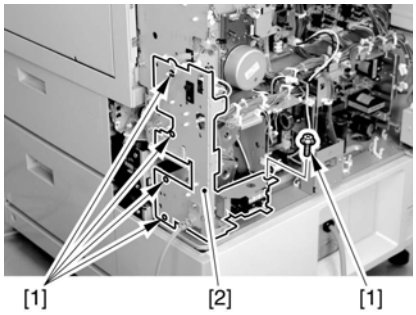

F-8-131

3) Disconnect the 2 connectors [1].

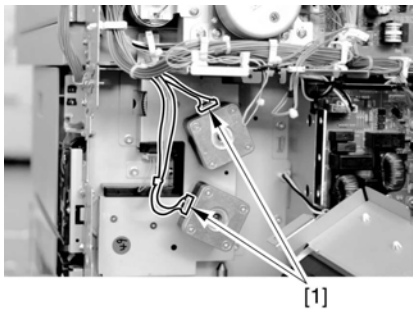

F-8-132

4) Remove the 5 screws [1], and detach the pickup motor base [2].

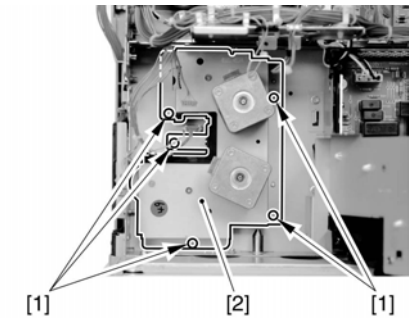

F-8-133

8.8.5.4 Removing the Cassette Pickup Motor 1

iR2270 / iR2870 / iR3570 / iR4570 / / iR2270N / / iR2870N / / iR3570N / / iR4570N / iR2230 / / / iR3530 /

1) Remove the 2 screws, and detach the cassette pickup motor 1 [2].

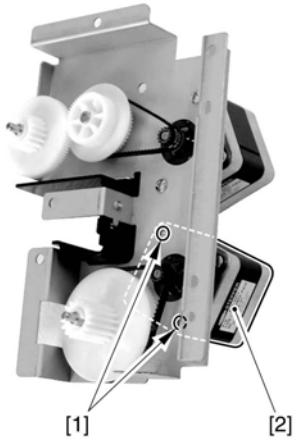

F-8-134

8.8.6 Cassette Pick-up Motor 2

8.8.6.1 Removing the Rear Cover

iR2270 / iR2870 / iR3570 / iR4570 / / iR2270N / / iR2870N / / iR3570N / / iR4570N / iR2230 / / / iR3530 /

1) Remove the 13 screws [1] and then the other screw [2]; then, detach the rear cover [3].

If the left cover (lower) has already been detached, the screw [3] should also have been removed.

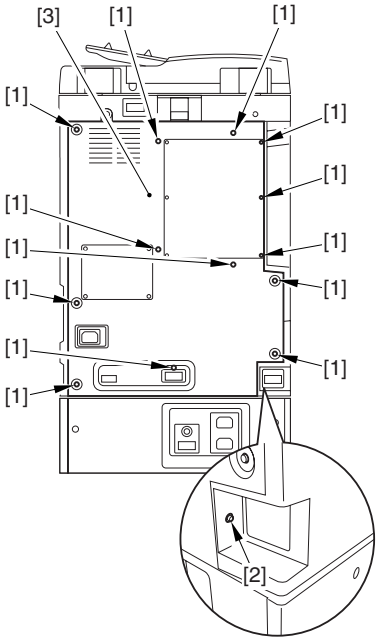

F-8-135

8.8.6.2 Removing the Right Cover (rear)

iR2270 / iR2870 / iR3570 / iR4570 / / iR2270N / / iR2870N / / iR3570N / / iR4570N / iR2230 / / / iR3530 /

1) Open the pedestal right door [1]. (if equipped with a 2-Cassette Pedestal-Y2)
2) Open the right lower door [2].
3) Remove the 5 screws [3], and detach the right cover (rear) [4].

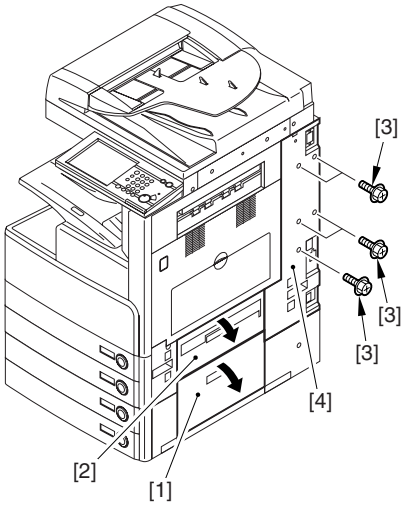

F-8-136

8.8.6.3 Removing the Pickup Motor Base

iR2270 / iR2870 / iR3570 / iR4570 / / iR2270N / / iR2870N / / iR3570N / / iR4570N / iR2230 / / / iR3530 /

1) Free the harness [1] from the 2 wire saddles [2].

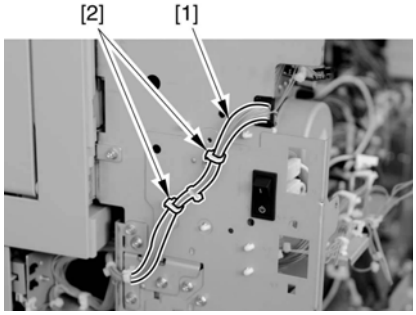

F-8-137

2) Remove the 5 screws [1]. Remove the power cord base [2].

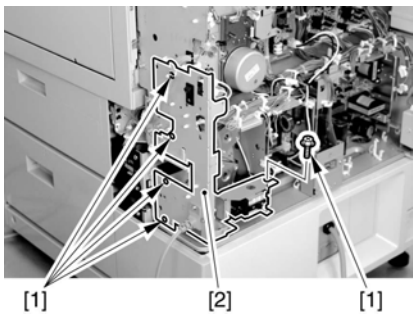

F-8-138

3) Disconnect the 2 connectors [1].

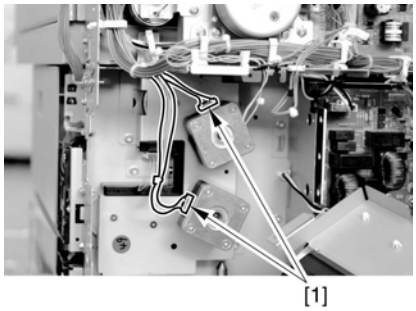

F-8-139

4) Remove the 5 screws [1], and detach the pickup motor base [2].

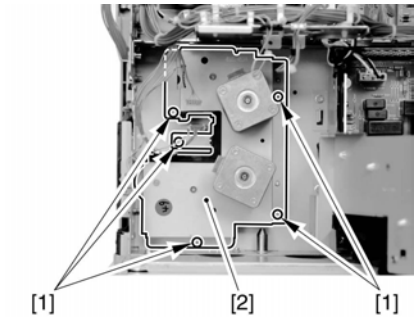

F-8-140

8.8.6.4 Removing the Cassette Pickup Motor 2

iR2270 / iR2870 / iR3570 / iR4570 / / iR2270N / / iR2870N / / iR3570N / / iR4570N / iR2230 / / / iR3530 /

1) Remove the 2 screws [1], and detach the cassette pickup motor 2 [2].

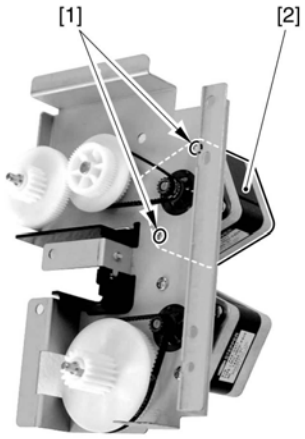

F-8-141

8.8.7 Cassette Size Sensor

8.8.7.1 Removing the Right Cover (rear)

iR2270 / iR2870 / iR3570 / iR4570 / / iR2270N / / iR2870N / / iR3570N / / iR4570N / iR2230 / / / iR3530 /

1) Open the pedestal right door [1]. (if equipped with a 2-Cassette Pedestal-Y2)
2) Open the right lower door [2].
3) Remove the 5 screws [3], and detach the right cover (rear) [4].

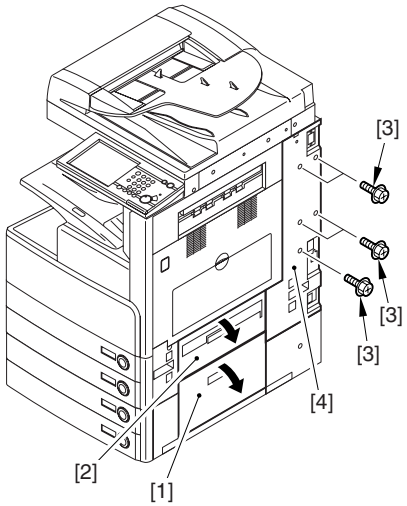

F-8-142

8.8.7.2 Removing the Right Door

iR3570 / iR4570 / / iR3570N / / iR4570N / iR2230 / / / iR3530 /

1) Open the right door.

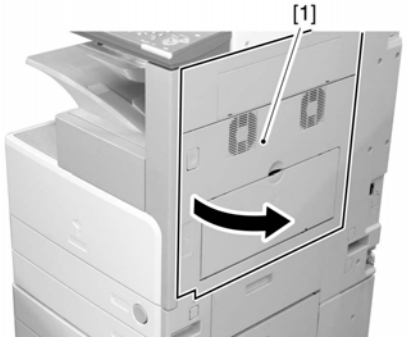

F-8-143

2) Remove the screw [1], and detach the fixing plate [2].

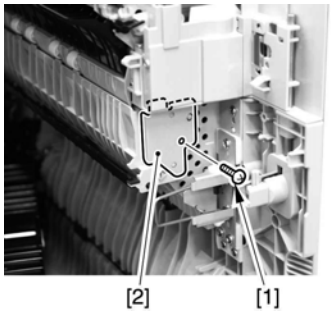

F-8-144

3) Remove the joint shaft [1], and free the extension delivery unit [2] from the right door.

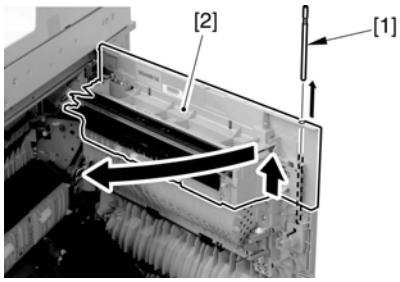

F-8-145

4) Disconnect the connector [1], and remove the reuse band [2]; then, remove the 2 screws (M4x8; RS tightening).

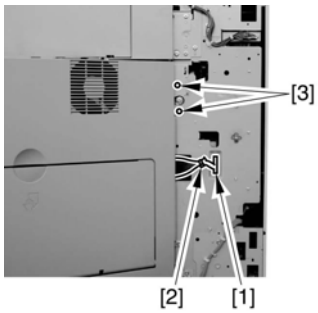

F-8-146

5) While freeing the hinge assembly [2], detach the right door.

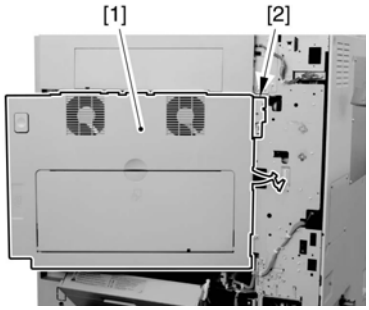

F-8-147

Attaching the Right Door

1) Match the hinge [1] found at the bottom of the right door against the lug.
2) Engage the hinge [2] found on the top of the right door with the hook found on the side plate.

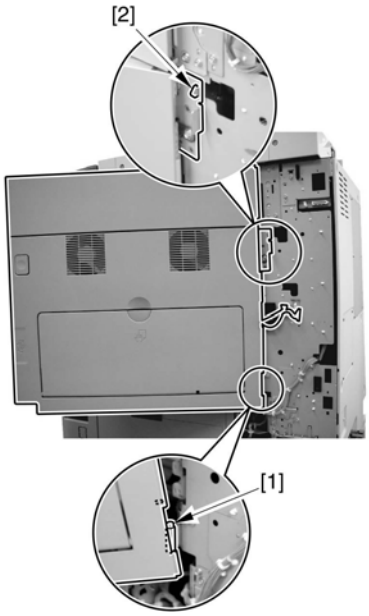

F-8-148

When tightening the 2 screws used to fix the hinge in place, be sure to close the right door first.

8.8.7.3 Removing the Right Door

iR2270 / iR2870 / / iR2270N / / iR2870N / iR2230 / / / iR3530 /

1) Open the right door.

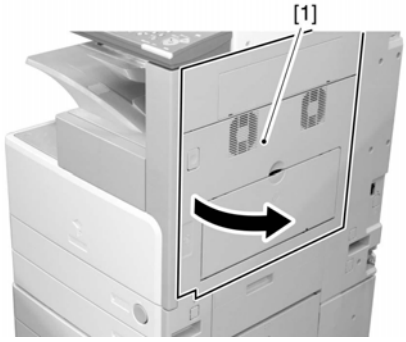

F-8-149

2) Remove the reuse band [1], and disconnect the connector [2].
3) Remove the 2 screws (M4x8; RS tightening), and detach the right door.

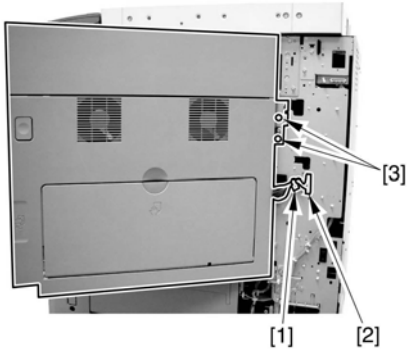

F-8-150

Attaching the Right Door

1) Match the hinge [1] found at the bottom of the right door against the lug.
2) Engage the hinge [2] found on the top of the right door with the hook found on the side plate.

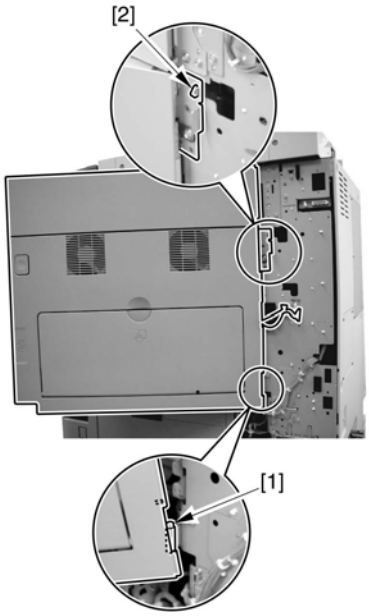

F-8-151

When tightening the 2 screws used to fix the hinge in place, be sure to close the right door first.

8.8.7.4 Removing the Right Cover (lower front)

iR2270 / iR2870 / iR3570 / iR4570 / / iR2270N / / iR2870N / / iR3570N / / iR4570N / iR2230 / / / iR3530 /

1) Open the pedestal right door [1]. (if equipped with a Cassette Feeding Unit-Y2)
2) Open the lower right door [2].
3) Remove the 2 screws [3], and detach the right cover (lower front) [4].

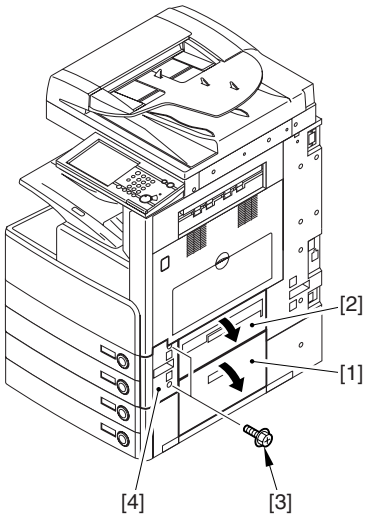

F-8-152

8.8.7.5 Removing the Pickup Assembly 2

iR2270 / iR2870 / iR3570 / iR4570 / / iR2270N / / iR2870N / / iR3570N / / iR4570N / iR2230 / / / iR3530 /

1) Slide out the cassette 1/2.
2) Disconnect the connector [1], and free the harness from the guide; then, remove the 4 screws [2], and detach the pickup assembly 2 [3].

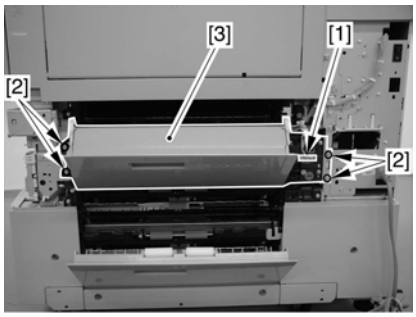

F-8-153

8.8.7.6 Removing the Pickup Assembly 1

iR2270 / iR2870 / iR3570 / iR4570 / / iR2270N / / iR2870N / / iR3570N / / iR4570N / iR2230 / / / iR3530 /

1) Slide out the cassette 1/2.
2) Disconnect the 3 connectors [1]; then, free the harness from the 2 wire saddles [2] and the 2 clamps [3].

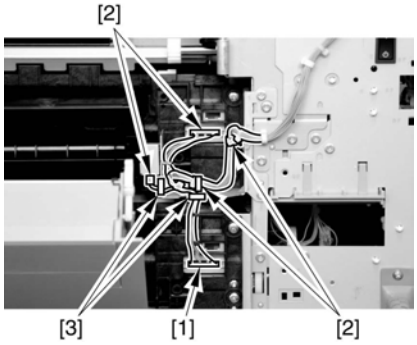

F-8-154

3) Remove the 4 screws [1], and take out the pickup unit 1 [2].

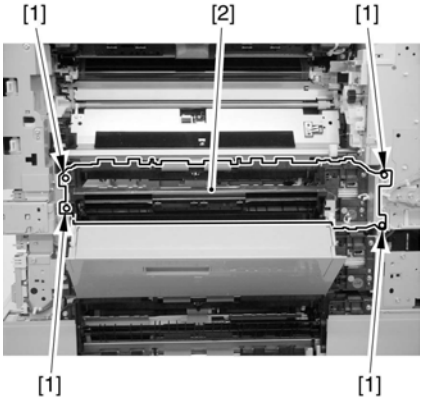

F-8-155

8.8.7.7 Removing the Cassette Size Sensor

iR2270 / iR2870 / iR3570 / iR4570 / / iR2270N / / iR2870N / / iR3570N / / iR4570N / iR2230 / / / iR3530 /

1) Remove the snap stop, and detach the PCB cover [1].

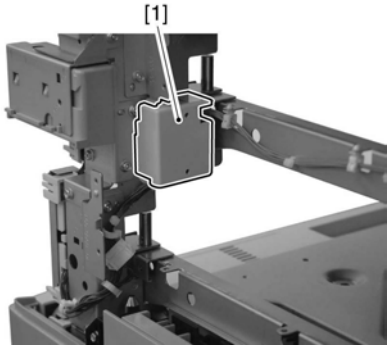

F-8-156

2) Disconnect the connector from the cassette size sensor relay PCB (in the case of the size sensor 1, disconnect the connector [1]; in the case of the size sensor 2, disconnect the connector [2]).
3) Free the harness from the clamp (in the case of the size sensor 1, the 2 clamps [3]; in the case of the size sensor 2, the 4 clamps [3] and [4]).

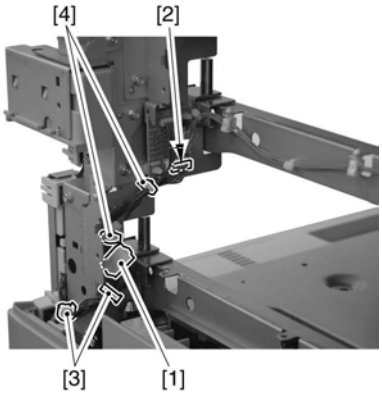

F-8-157

4) Remove the screw [1], and detach the cassette size sensor together with the PCB [2] (in the case of the size sensor 1, together with the size sensor 2; in the case of the size sensor 2, remove the sensor on its own).

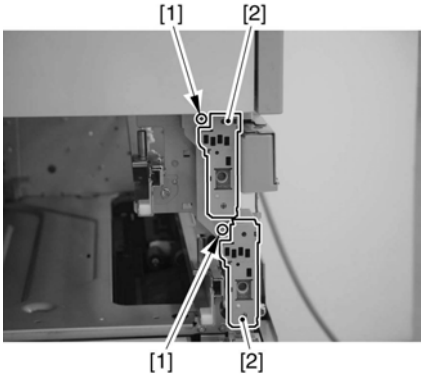

F-8-158

5) Detach the cover [1] from the PCB.

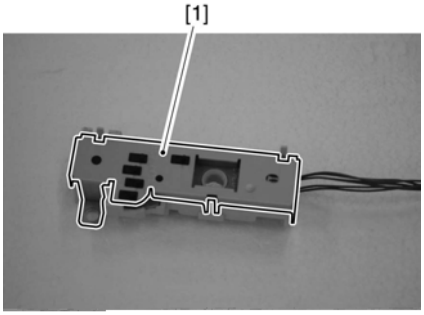

F-8-159

6) Detach the size sensor [1] from the PCB.

F-8-160

8.8.8 Cassette Retry Paper Sensor

8.8.8.1 Removing the Right Cover (rear)

iR2270 / iR2870 / iR3570 / iR4570 / / iR2270N / / iR2870N / / iR3570N / / iR4570N / iR2230 / / / iR3530 /

1) Open the pedestal right door [1]. (if equipped with a 2-Cassette Pedestal-Y2)
2) Open the right lower door [2].
3) Remove the 5 screws [3], and detach the right cover (rear) [4].

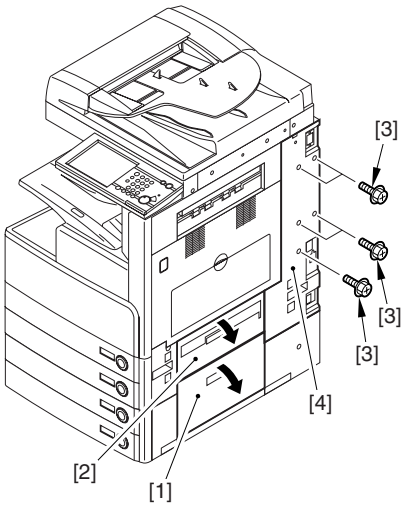

F-8-161

8.8.8.2 Removing the Right Door

iR3570 / iR4570 / / iR3570N / / iR4570N / iR2230 / / / iR3530 /

1) Open the right door.

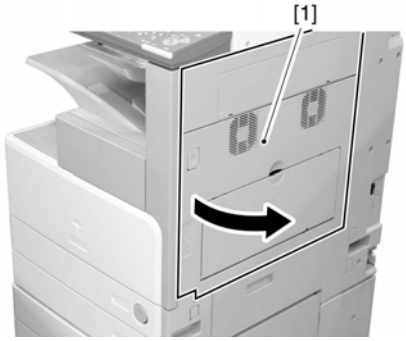

F-8-162

2) Remove the screw [1], and detach the fixing plate [2].

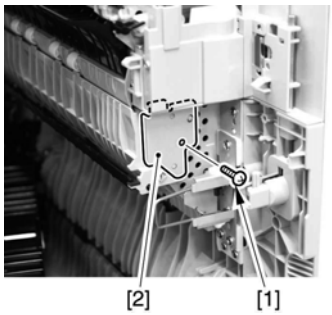

F-8-163

3) Remove the joint shaft [1], and free the extension delivery unit [2] from the right door.

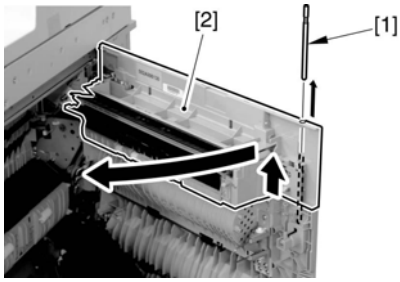

F-8-164

4) Disconnect the connector [1], and remove the reuse band [2]; then, remove the 2 screws (M4x8; RS tightening).

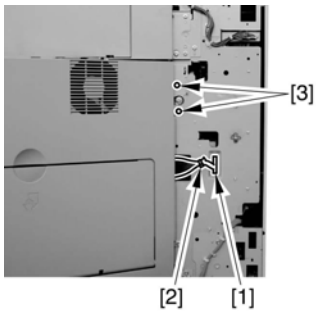

F-8-165

5) While freeing the hinge assembly [2], detach the right door.

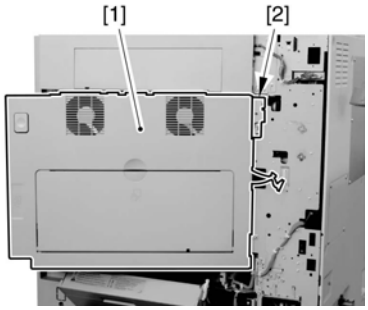

F-8-166

Attaching the Right Door

1) Match the hinge [1] found at the bottom of the right door against the lug.
2) Engage the hinge [2] found on the top of the right door with the hook found on the side plate.

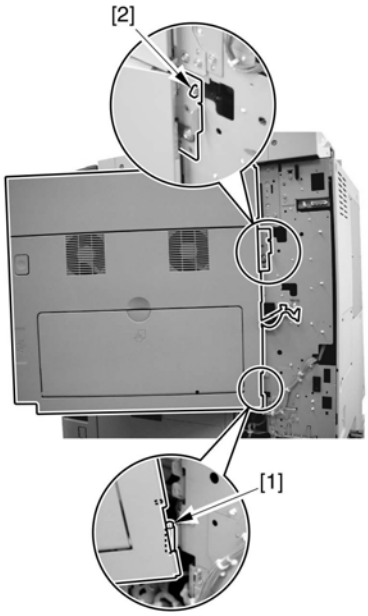

F-8-167

When tightening the 2 screws used to fix the hinge in place, be sure to close the right door first.

8.8.8.3 Removing the Right Door

iR2270 / iR2870 / / iR2270N / / iR2870N / iR2230 / / / iR3530 /

1) Open the right door.

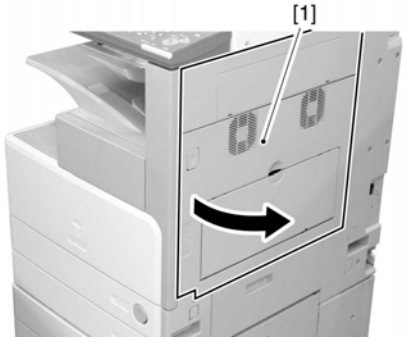

F-8-168

2) Remove the reuse band [1], and disconnect the connector [2].
3) Remove the 2 screws (M4x8; RS tightening), and detach the right door.

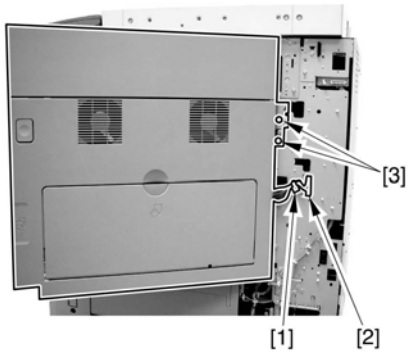

F-8-169

Attaching the Right Door

1) Match the hinge [1] found at the bottom of the right door against the lug.
2) Engage the hinge [2] found on the top of the right door with the hook found on the side plate.

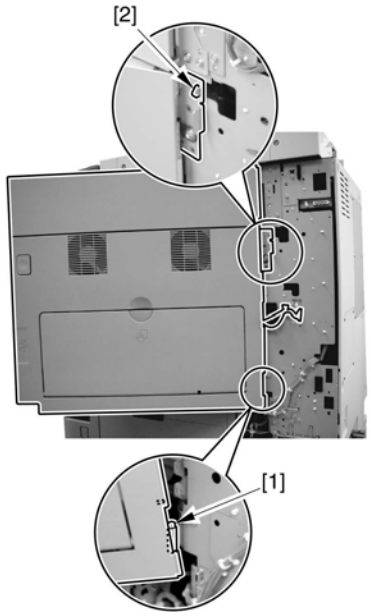

F-8-170

When tightening the 2 screws used to fix the hinge in place, be sure to close the right door first.

8.8.8.4 Removing the Right Cover (lower front)

iR2270 / iR2870 / iR3570 / iR4570 / / iR2270N / / iR2870N / / iR3570N / / iR4570N / iR2230 / / / iR3530 /

1) Open the pedestal right door [1]. (if equipped with a Cassette Feeding Unit-Y2)
2) Open the lower right door [2].
3) Remove the 2 screws [3], and detach the right cover (lower front) [4].

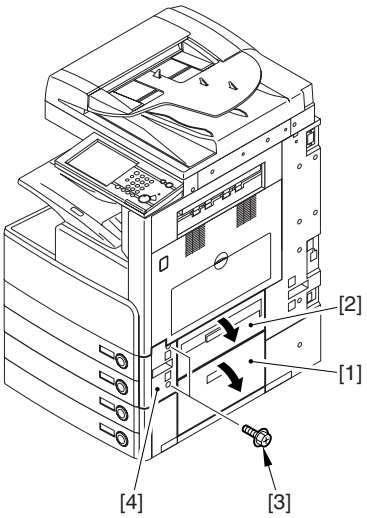

F-8-171

8.8.8.5 Removing the Pickup Assembly 1

iR2270 / iR2870 / iR3570 / iR4570 / / iR2270N / / iR2870N / / iR3570N / / iR4570N / iR2230 / / / iR3530 /

1) Slide out the cassette 1/2.
2) Disconnect that 3 connectors [1]; then, free the harness from the 2 wire saddles [2] and the 2 clamps [3].

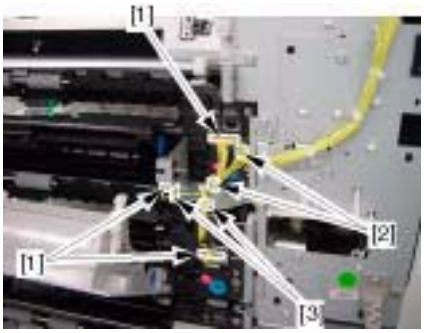

F-8-172

3) Remove the 4 screws [1], and take out the pickup unit 1 [2].

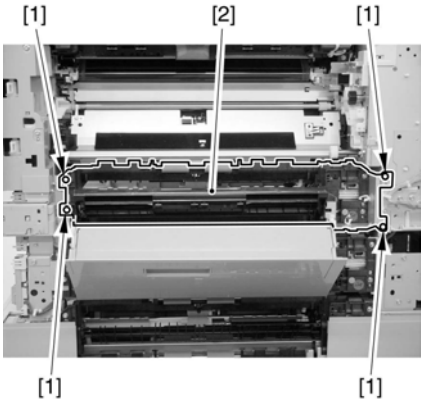

F-8-173

8.8.8.6 Removing the Pickup Assembly 2

iR2270 / iR2870 / iR3570 / iR4570 / / iR2270N / / iR2870N / / iR3570N / / iR4570N / iR2230 / / / iR3530 /

1) Slide out the cassette 1/2.
2) Disconnect the connector [1], and free the harness from the guide; then, remove the 4 screws [2], and detach the pickup assembly 2 [3].

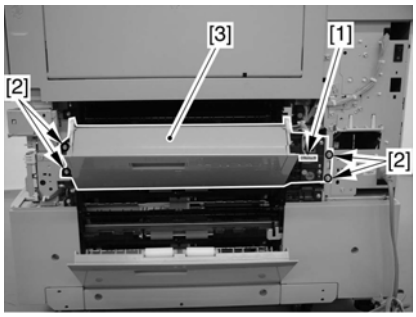

F-8-174

8.8.8.7 Removing the Sensor Mounting Plate

iR2270 / iR2870 / iR3570 / iR4570 / / iR2270N / / iR2870N / / iR3570N / / iR4570N / iR2230 / / / iR3530 /

1) Remove the 2 TP screws [1] and the binding screw [2] from the rear of the pickup assembly, and detach the bracket [3].

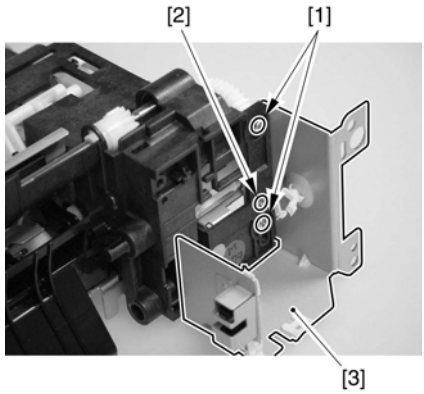

F-8-175

Pickup Unit 1

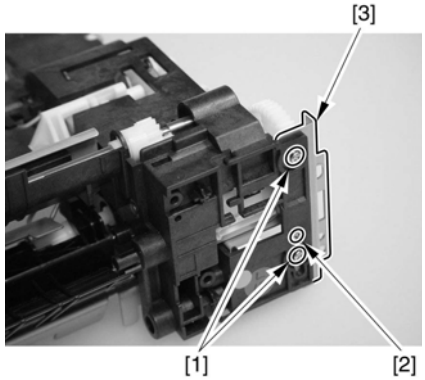

F-8-176

Pickup Unit 2
2) Disconnect the connector [1], and remove the screw; then, detach the cassette pickup solenoid [3].
3) Remove the bushing and the 5 screws [4]; then, detach the sensor base [5].

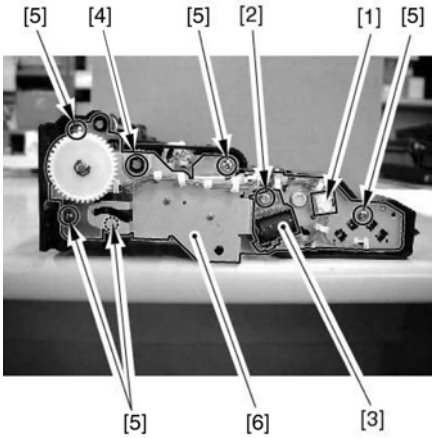

F-8-177

8.8.8.8 Removing the Cassette Retry Paper Sensor

iR2270 / iR2870 / iR3570 / iR4570 / / iR2270N / / iR2870N / / iR3570N / / iR4570N / iR2230 / / / iR3530 /

1) Disconnect the connector [1], and detach the cassette retry paper sensor [2].

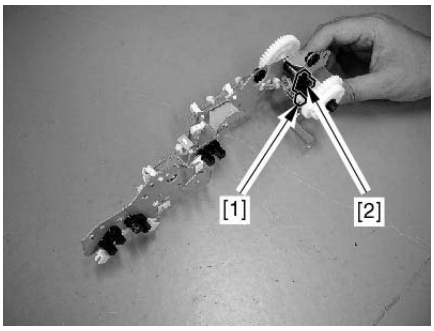

F-8-178

8.8.9 Cassette Paper Sensor

8.8.9.1 Removing the Right Cover (rear)

iR2270 / iR2870 / iR3570 / iR4570 / / iR2270N / / iR2870N / / iR3570N / / iR4570N / iR2230 / / / iR3530 /

1) Open the pedestal right door [1]. (if equipped with a 2-Cassette Pedestal-Y2)
2) Open the right lower door [2].
3) Remove the 5 screws [3], and detach the right cover (rear) [4].

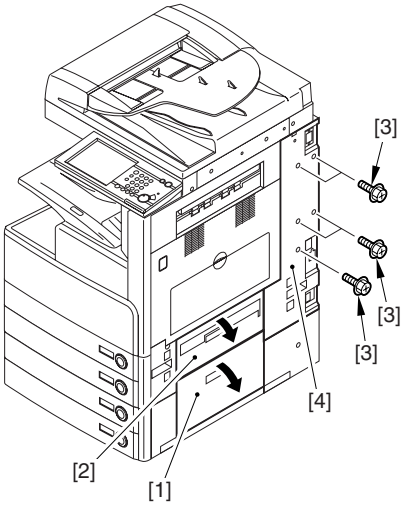

F-8-179

8.8.9.2 Removing the Right Door

iR3570 / iR4570 / / iR3570N / / iR4570N / iR2230 / / / iR3530 /

1) Open the right door.

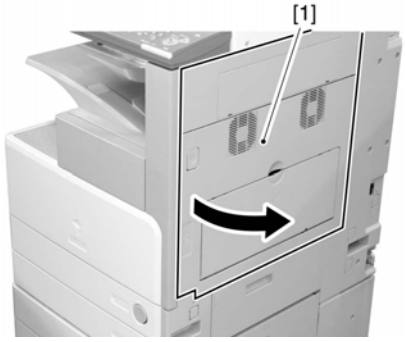

F-8-180

2) Remove the screw [1], and detach the fixing plate [2].

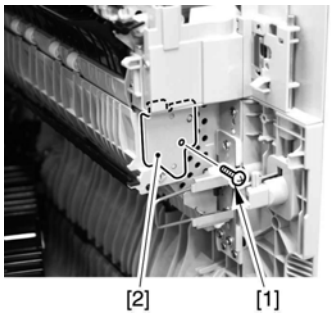

F-8-181

3) Remove the joint shaft [1], and free the extension delivery unit [2] from the right door.

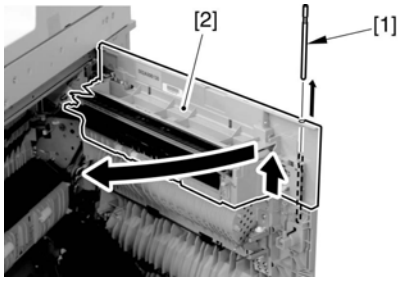

F-8-182

4) Disconnect the connector [1], and remove the reuse band [2]; then, remove the 2 screws (M4x8; RS tightening).

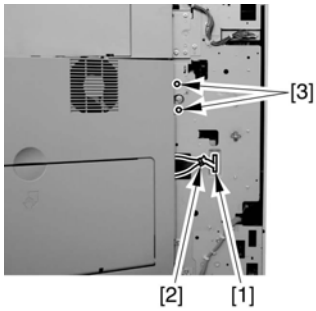

F-8-183

5) While freeing the hinge assembly [2], detach the right door.

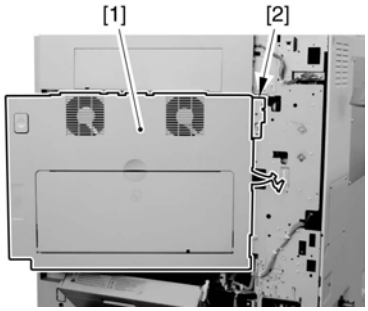

F-8-184

Attaching the Right Door

1) Match the hinge [1] fou
2) Engage the hinge [2] f
found on the side plate.

When tightening the 2 screw
the right door first.

8.8.9.3 Removin

iR2270 / iR2870 /

1) Open the

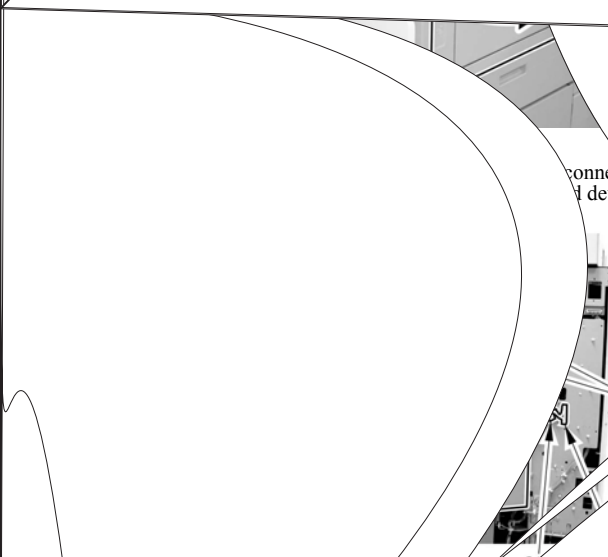

connect
d detach t

8.8.9.5 Removing

R2270 / iR2870 / iR3
R4570N / iR2230 /

out the cassett
ct the 3 c
the

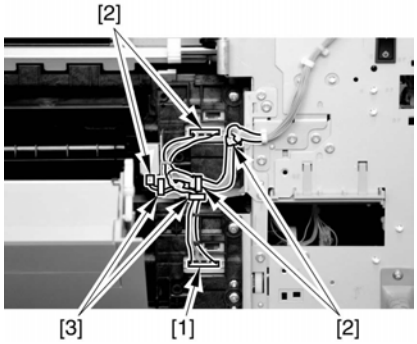

F-8-190

3) Remove the 4 screws [1], and take out the pickup unit 1 [2].

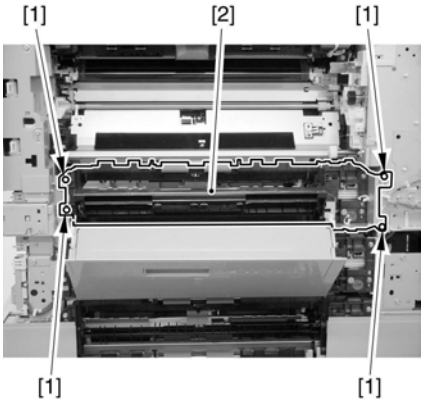

F-8-191

8.8.9.6 Removing the Pickup Assembly 2

iR2270 / iR2870 / iR3570 / iR4570 / / iR2270N / / iR2870N / / iR3570N / / iR4570N / iR2230 / / / iR3530 /

1) Slide out the cassette 1/2.
2) Disconnect the connector [1], and free the harness from the guide; then, remove the 4 screws [2], and detach the pickup assembly 2 [3].

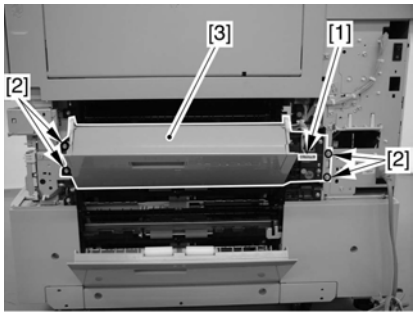

F-8-192

8.8.9.7 Removing the Sensor Mounting Plate

iR2270 / iR2870 / iR3570 / iR4570 / / iR2270N / / iR2870N / / iR3570N / / iR4570N / iR2230 / / / iR3530 /

1) Remove the 2 TP screws [1] and the binding screw [2] from the rear of the pickup assembly, and detach the bracket [3].

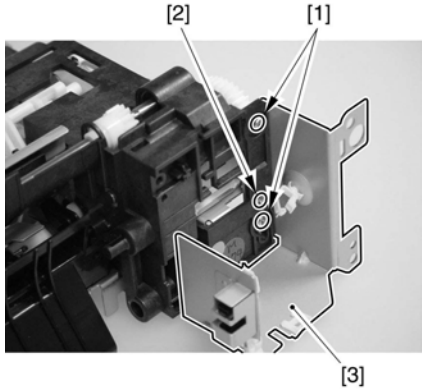

F-8-193

Pickup Unit 1

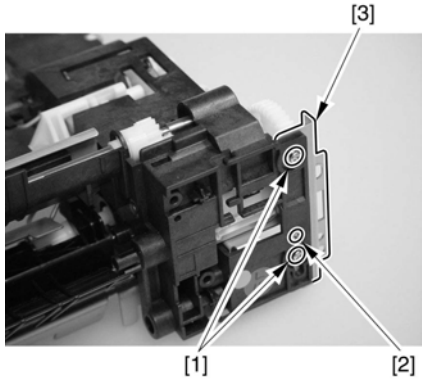

F-8-194

Pickup Unit 2
2) Disconnect the connector [1], and remove the screw; then, detach the cassette pickup solenoid [3].
3) Remove the bushing and the 5 screws [4]; then, detach the sensor base [5].

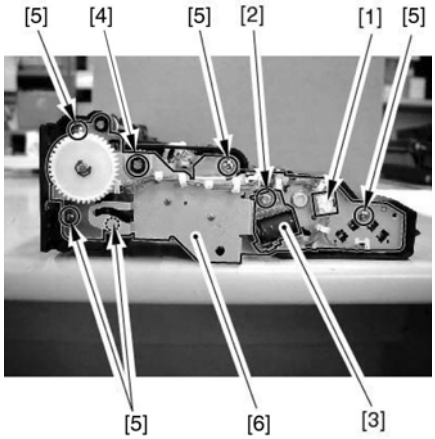

F-8-195

8.8.9.8 Removing the Cassette Paper Sensor

iR2270 / iR2870 / iR3570 / iR4570 / / iR2270N / / iR2870N / / iR3570N / / iR4570N / iR2230 / / / iR3530 /

1) Disconnect the connector [1], and detach the cassette paper sensor [2].

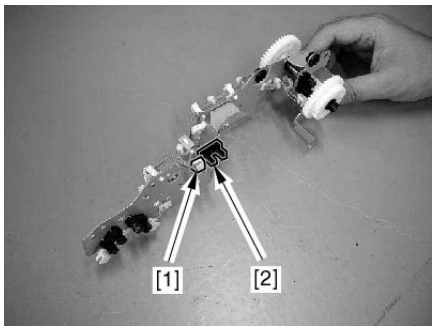

F-8-196

8.8.10 Cassette Paper Level Sensor (A/B)

8.8.10.1 Removing the Right Cover (rear)

iR2270 / iR2870 / iR3570 / iR4570 / / iR2270N / / iR2870N / / iR3570N / / iR4570N / iR2230 / / / iR3530

1) Open the pedestal right door [1]. (if equipped with a 2-Cassette Pedestal-Y2)
2) Open the right lower door [2].
3) Remove the 5 screws [3], and detach the right cover (rear) [4].

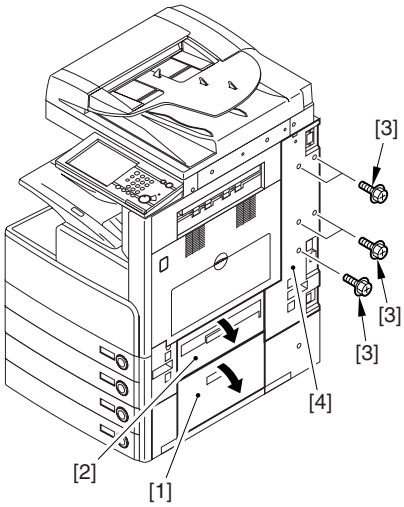

F-8-197

8.8.10.2 Removing the Right Door

iR3570 / iR4570 / / iR3570N / / iR4570N / iR2230 / / / iR3530

1) Open the right door.

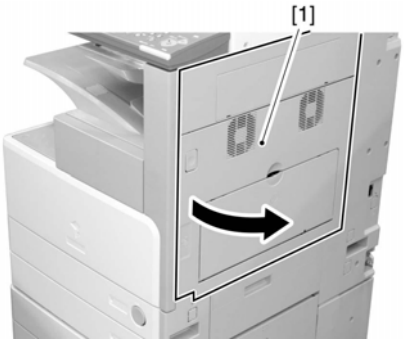

F-8-198

2) Remove the screw [1], and detach the fixing plate [2].

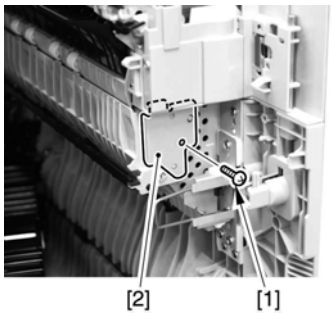

F-8-199

3) Remove the joint shaft [1], and free the extension delivery unit [2] from the right door.

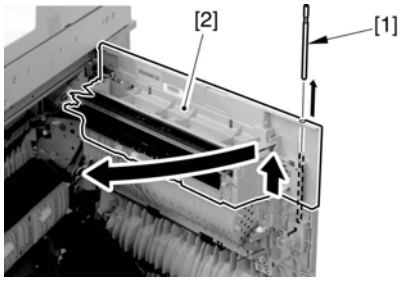

F-8-200

4) Disconnect the connector [1], and remove the reuse band [2]; then, remove the 2 screws (M4x8; RS tightening).

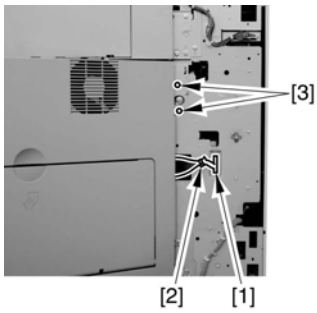

F-8-201

5) While freeing the hinge assembly [2], detach the right door.

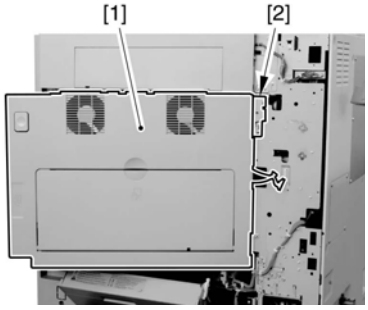

F-8-202

Attaching the Right Door

1) Match the hinge [1] found at the bottom of the right door against the lug.
2) Engage the hinge [2] found on the top of the right door with the hook found on the side plate.

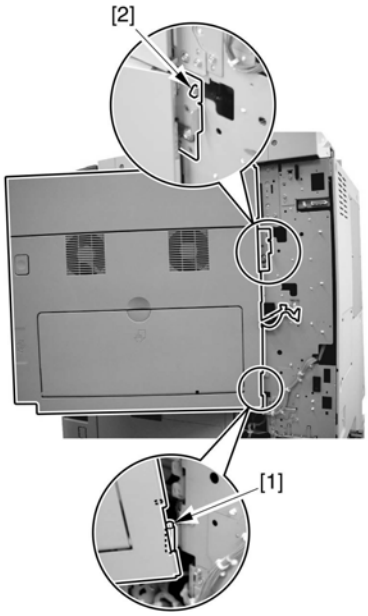

F-8-203

When tightening the 2 screws used to fix the hinge in place, be sure to close the right door first.

8.8.10.3 Removing the Right Door

iR2270 / iR2870 / / iR2270N / / iR2870N / iR2230 / / / iR3530

1) Open the right door.

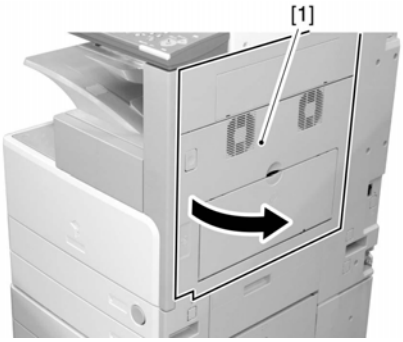

F-8-204

2) Remove the reuse band [1], and disconnect the connector [2].
3) Remove the 2 screws (M4x8; RS tightening), and detach the right door.

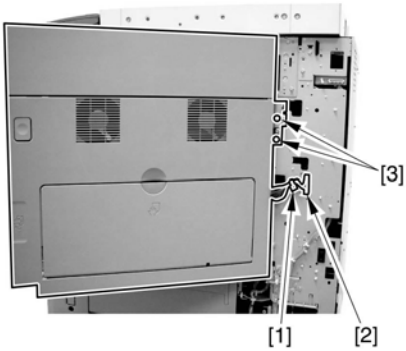

F-8-205

Attaching the Right Door
1) Match the hinge [1] found at the bottom of the right door against the lug.
2) Engage the hinge [2] found on the top of the right door with the hook found on the side plate.

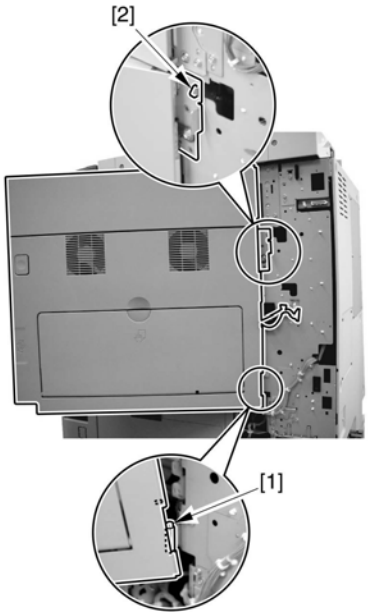

F-8-206

When tightening the 2 screws used to fix the hinge in place, be sure to close the right door first.

8.8.10.4 Removing the Right Cover (lower front)

iR2270 / iR2870 / iR3570 / iR4570 / / iR2270N / / iR2870N / / iR3570N / / iR4570N / iR2230 / / / iR3530

1) Open the pedestal right door [1]. (if equipped with a Cassette Feeding Unit-Y2)
2) Open the lower right door [2].
3) Remove the 2 screws [3], and detach the right cover (lower front) [4].

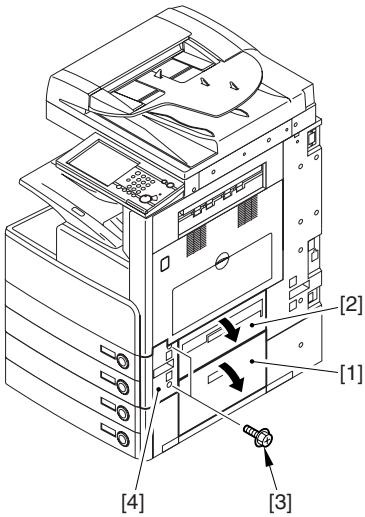

F-8-207

8.8.10.5 Removing the Pickup Assembly 1

iR2270 / iR2870 / iR3570 / iR4570 / / iR2270N / / iR2870N / / iR3570N / / iR4570N / iR2230 / / / iR3530

1) Slide out the cassette 1/2.
2) Disconnect the 3 connectors [1]; then, free the harness from the 2 wire saddles [2] and the 2 clamps [3].

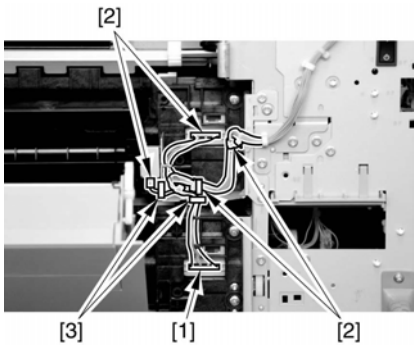

F-8-208

3) Remove the 4 screws [1], and take out the pickup unit 1 [2].

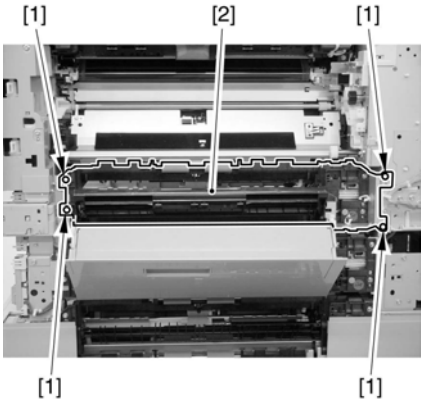

F-8-209

8.8.10.6 Removing the Pickup Assembly 2

iR2270 / iR2870 / iR3570 / iR4570 / / iR2270N / / iR2870N / / iR3570N / / iR4570N / iR2230 / / / iR3530

1) Slide out the cassette 1/2.
2) Disconnect the connector [1], and free the harness from the guide; then, remove the 4 screws [2], and detach the pickup assembly 2 [3].

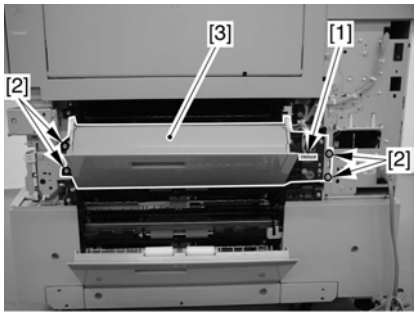

F-8-210

8.8.10.7 Removing the Sensor Mounting Plate

iR2270 / iR2870 / iR3570 / iR4570 / / iR2270N / / iR2870N / / iR3570N / / iR4570N / iR2230 / / / iR3530

1) Remove the 2 TP screws [1] and the binding screw [2] from the rear of the pickup assembly, and detach the bracket [3].

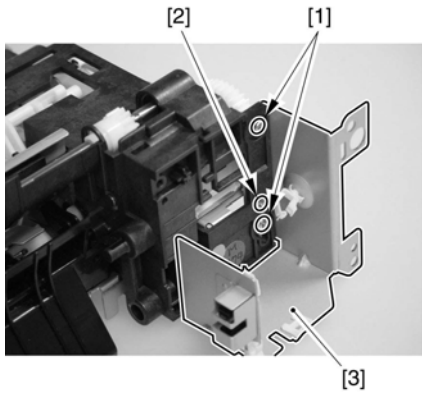

F-8-211

Pickup Unit 1

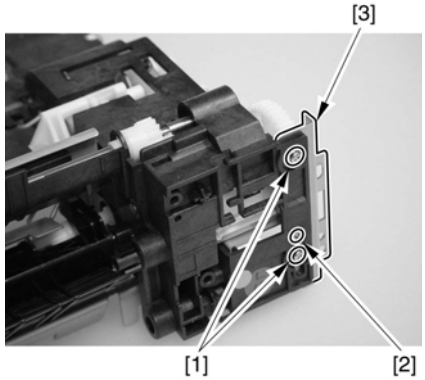

F-8-212

Pickup Unit 2

2) Disconnect the connector [1], and remove the screw; then, detach the cassette pickup solenoid [3].
3) Remove the bushing and the 5 screws [4]; then, detach the sensor base [5].

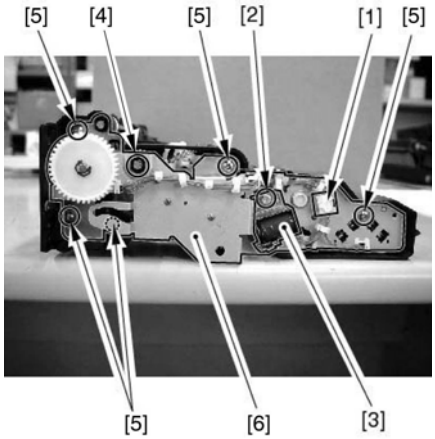

F-8-213

8.8.10.8 Removing the Cassette Paper Level Sensor (A/B)

iR2270 / iR2870 / iR3570 / iR4570 / / iR2270N / / iR2870N / / iR3570N / / iR4570N / iR2230 / / / iR3530

1) Disconnect the connector [1] (1 pc. each), and detach the cassette power level sensor (A/B) [2].

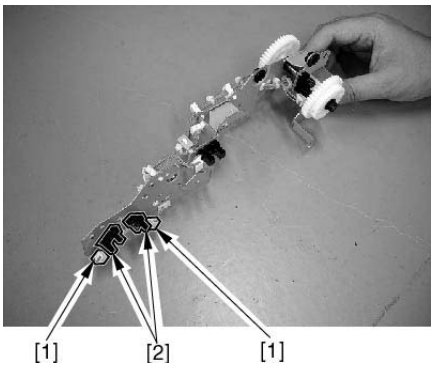

F-8-214

8.8.11 Slide Resistor

8.8.11.1 Removing the Right Cover (rear)

iR2270 / iR2870 / iR3570 / iR4570 / / iR2270N / / iR2870N / / iR3570N / / iR4570N / iR2230 / / / iR3530 /

1) Open the pedestal right door [1]. (if equipped with a 2-Cassette Pedestal-Y2)
2) Open the right lower door [2].
3) Remove the 5 screws [3], and detach the right cover (rear) [4].

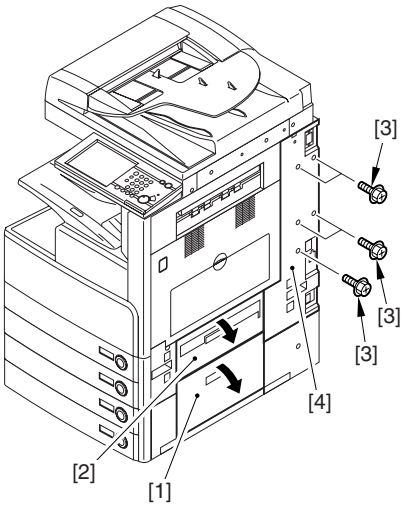

F-8-215

8.8.11.2 Removing the Right Door

iR3570 / iR4570 / / iR3570N / / iR4570N / iR2230 / / / iR3530 /

1) Open the right door.

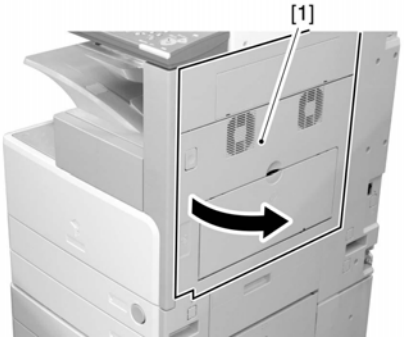

F-8-216

2) Remove the screw [1], and detach the fixing plate [2].

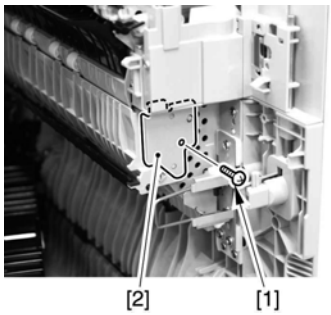

F-8-217

3) Remove the joint shaft [1], and free the extension delivery unit [2] from the right door.

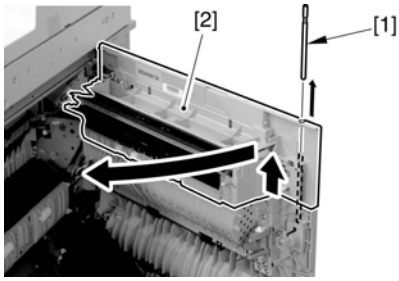

F-8-218

4) Disconnect the connector [1], and remove the reuse band [2]; then, remove the 2 screws (M4x8; RS tightening).

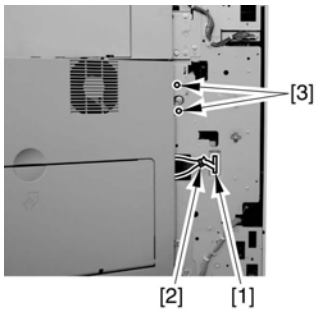

F-8-219

5) While freeing the hinge assembly [2], detach the right door.

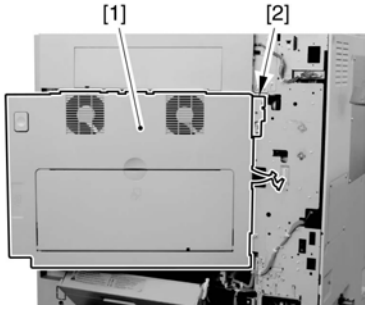

F-8-220

Attaching the Right Door

1) Match the hinge [1] found at the bottom of the right door against the lug.
2) Engage the hinge [2] found on the top of the right door with the hook found on the side plate.

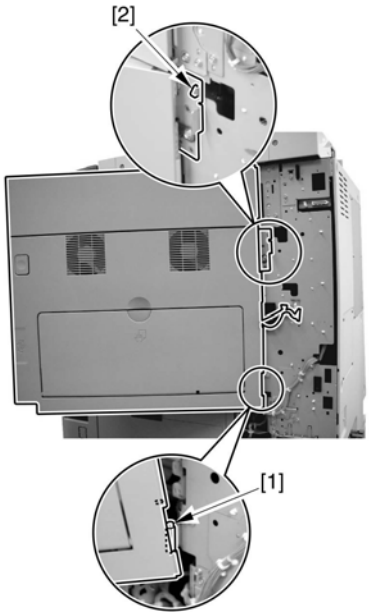

F-8-221

When tightening the 2 screws used to fix the hinge in place, be sure to close the right door first.

8.8.11.3 Removing the Right Door

iR2270 / iR2870 / / iR2270N / / iR2870N / iR2230 / / / iR3530 /

1) Open the right door.

F-8-222

2) Remove the reuse band [1], and disconnect the connector [2].
3) Remove the 2 screws (M4x8; RS tightening), and detach the right door.

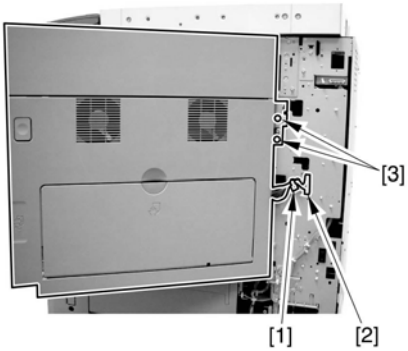

F-8-223

Attaching the Right Door

1) Match the hinge [1] found at the bottom of the right door against the lug.
2) Engage the hinge [2] found on the top of the right door with the hook found on the side plate.

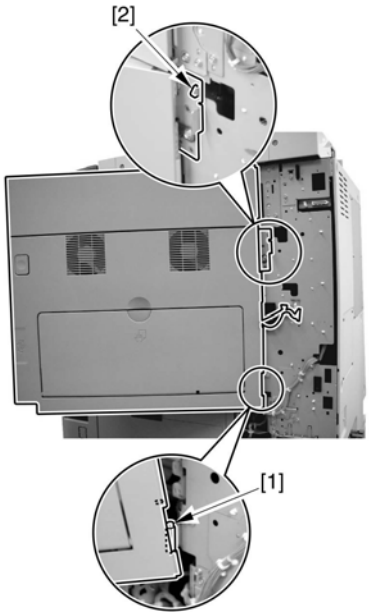

F-8-224

When tightening the 2 screws used to fix the hinge in place, be sure to close the right door first.

8.8.11.4 Removing the Manual Feed Unit

iR2270 / iR2870 / iR3570 / iR4570 / / iR2270N / / iR2870N / / iR3570N / / iR4570N / iR2230 / / / iR3530 /

1) Remove the manual upper guide link [1] (plastic E-ring [2] and boss [3]).

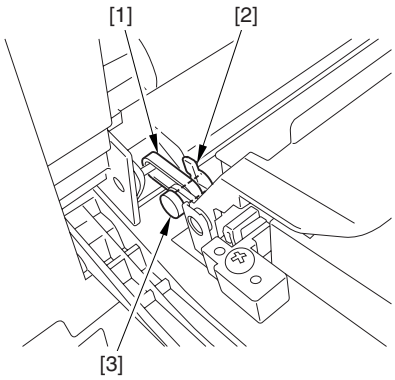

F-8-225

2) Remove the screw [2], and detach the manual feed guide [1].

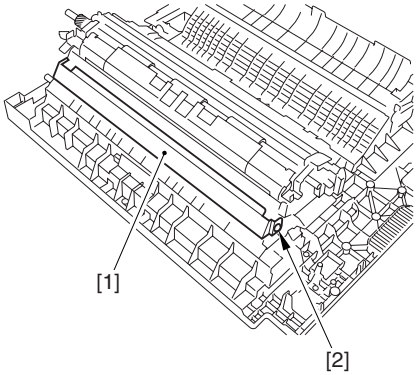

F-8-226

3) Remove the connector cover [1] (snap-on).

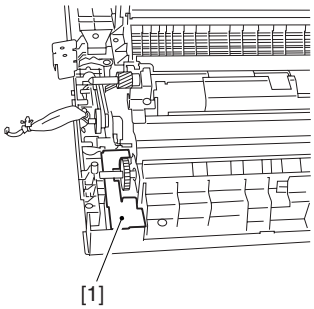

F-8-227

4) Disconnect the connector [1].
5) Remove the 4 screws [2], and detach the manual feed unit [3].

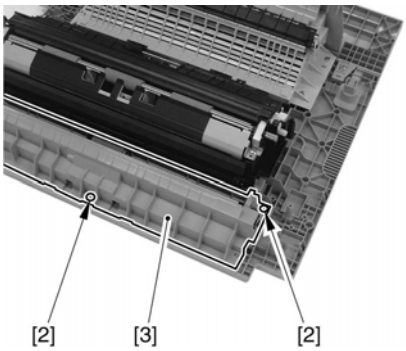

F-8-228

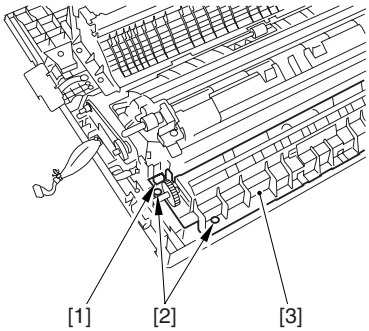

F-8-229

8.8.11.5 Removing the Manual Tray Unit

iR2270 / iR2870 / iR3570 / iR4570 / / iR2270N / / iR2870N / / iR3570N / / iR4570N / iR2230 / / / iR3530 /

1) Disconnect the connector [1].
2) Remove the tie-wrap [2].

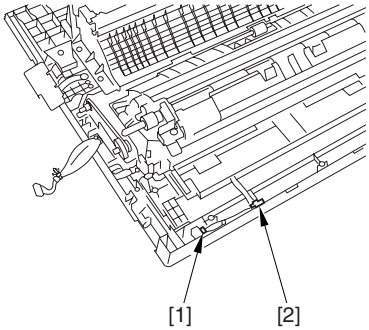

F-8-230

3) Remove the manual feed tray unit [3].

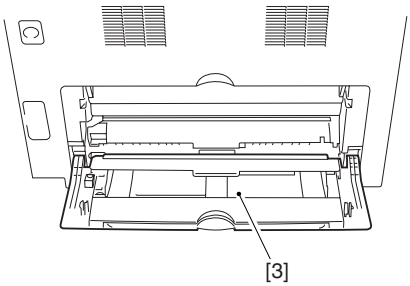

F-8-231

8.8.11.6 Removing the Slide Resistor

iR2270 / iR2870 / iR3570 / iR4570 / / iR2270N / / iR2870N / / iR3570N / / iR4570N / iR2230 / / / iR3530 /

1) Remove 2 screws [1], and detach the manual feed tray upper cover [2].

If possible, mark the position of the point of horizontal registration before removal.

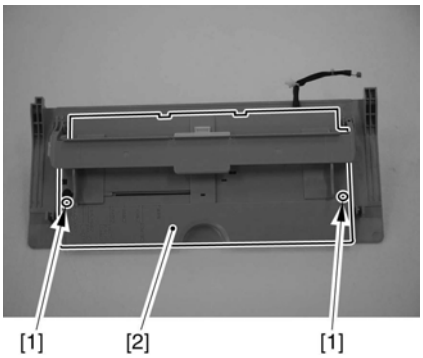

F-8-232

2) Remove the slide resistor [1] (connector [2]).

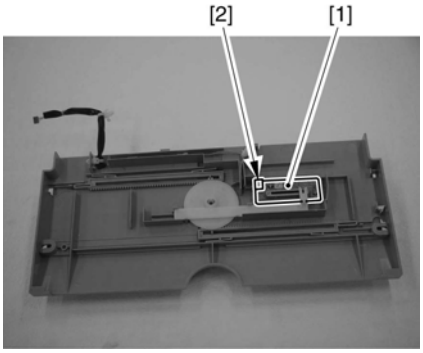

F-8-233

8.8.12 Cassette Pickup Solenoid

8.8.12.1 Removing the Right Cover (rear)

iR2270 / iR2870 / iR3570 / iR4570 / / iR2270N / / iR2870N / / iR3570N / / iR4570N / iR2230 / / / iR3530 /

1) Open the pedestal right door [1]. (if equipped with a 2-Cassette Pedestal-Y2)
2) Open the right lower door [2].
3) Remove the 5 screws [3], and detach the right cover (rear) [4].

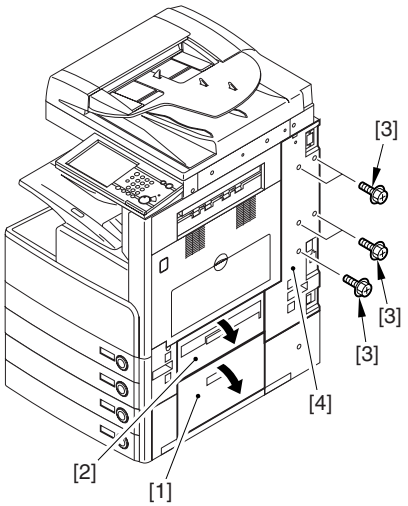

F-8-234

8.8.12.2 Removing the Right Door

iR3570 / iR4570 / / iR3570N / / iR4570N / iR2230 / / / iR3530 /

1) Open the right door.

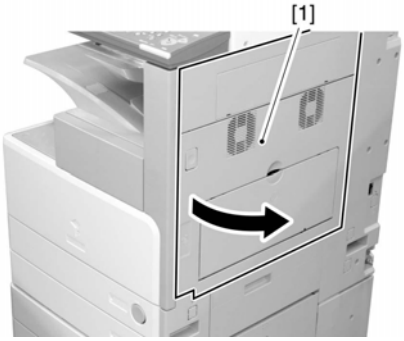

F-8-235

2) Remove the screw [1], and detach the fixing plate [2].

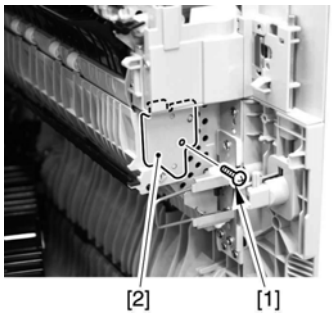

F-8-236

3) Remove the joint shaft [1], and free the extension delivery unit [2] from the right door.

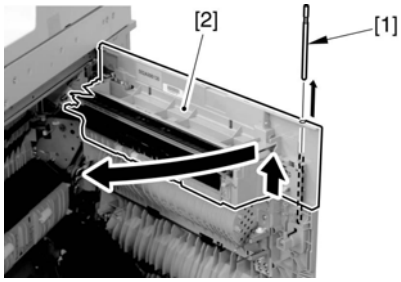

F-8-237

4) Disconnect the connector [1], and remove the reuse band [2]; then, remove the 2 screws (M4x8; RS tightening).

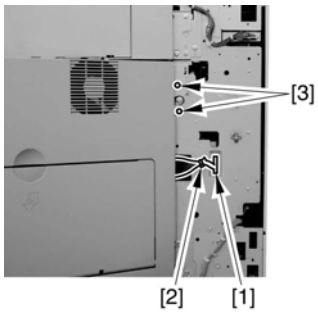

F-8-238

5) While freeing the hinge assembly [2], detach the right door.

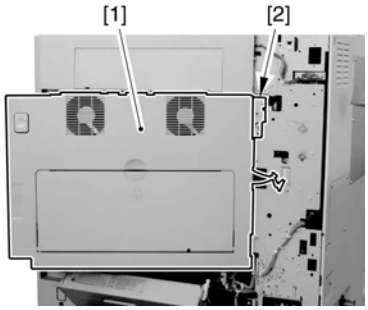

F-8-239

Attaching the Right Door

1) Match the hinge [1] found at the bottom of the right door against the lug.
2) Engage the hinge [2] found on the top of the right door with the hook found on the side plate.

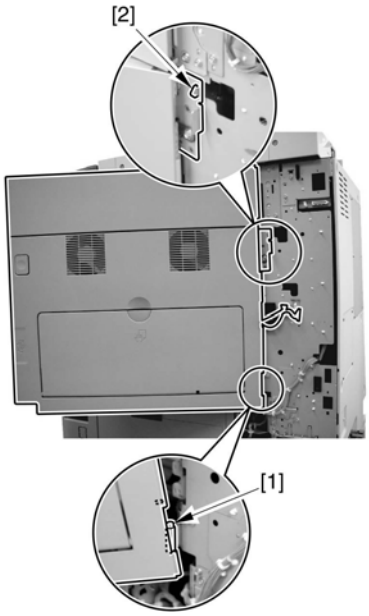

F-8-240

When tightening the 2 screws used to fix the hinge in place, be sure to close the right door first.

8.8.12.3 Removing the Right Door

iR2270 / iR2870 / / iR2270N / / iR2870N / iR2230 / / / iR3530 /

1) Open the right door.

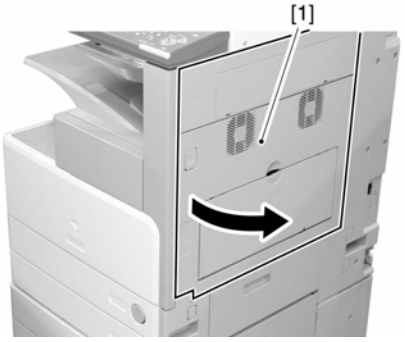

F-8-241

2) Remove the reuse band [1], and disconnect the connector [2].
3) Remove the 2 screws (M4x8; RS tightening), and detach the right door.

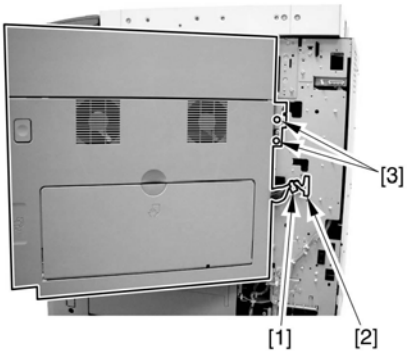

F-8-242

Attaching the Right Door
1) Match the hinge [1] found at the bottom of the right door against the lug.
2) Engage the hinge [2] found on the top of the right door with the hook found on the side plate.

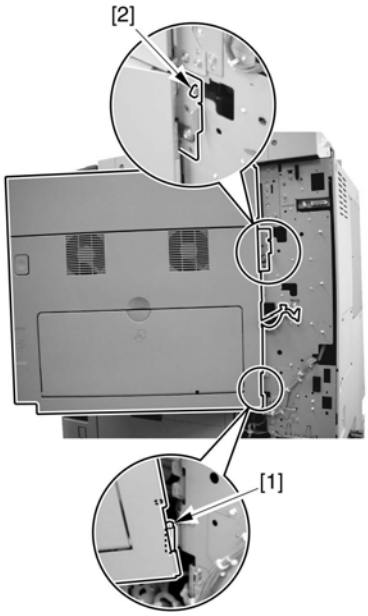

F-8-243

When tightening the 2 screws used to fix the hinge in place, be sure to close the right door first.

8.8.12.4 Removing the Right Cover (lower front)

iR2270 / iR2870 / iR3570 / iR4570 / / iR2270N / / iR2870N / / iR3570N / / iR4570N / iR2230 / / / iR3530 /

1) Open the pedestal right door [1]. (if equipped with a Cassette Feeding Unit-Y2)
2) Open the lower right door [2].
3) Remove the 2 screws [3], and detach the right cover (lower front) [4].

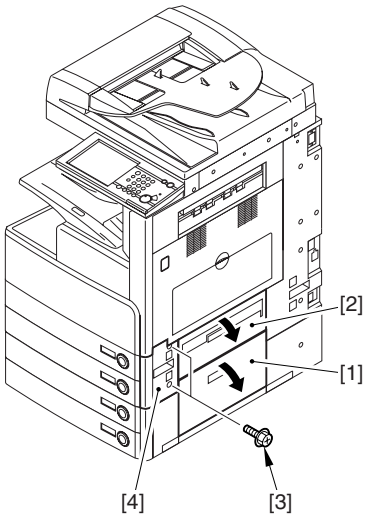

F-8-244

8.8.12.5 Removing the Pickup Assembly 1

iR2270 / iR2870 / iR3570 / iR4570 / / iR2270N / / iR2870N / / iR3570N / / iR4570N / iR2230 / / / iR3530 /

1) Slide out the cassette 1/2.
2) Disconnect the 3 connectors [1]; then, free the harness from the 2 wire saddles [2] and the 2 clamps [3].

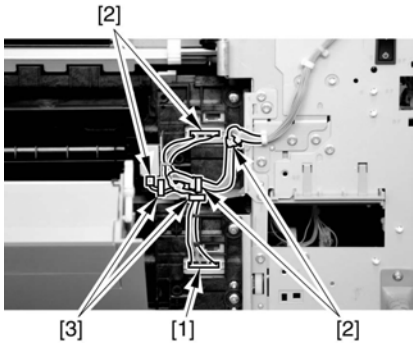

F-8-245

3) Remove the 4 screws [1], and take out the pickup unit 1 [2].

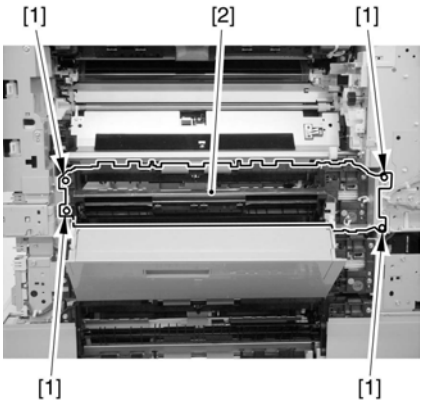

F-8-246

8.8.12.6 Removing the Pickup Assembly 2

iR2270 / iR2870 / iR3570 / iR4570 / / iR2270N / / iR2870N / / iR3570N / / iR4570N / iR2230 / / / iR3530 /

1) Slide out the cassette 1/2.
2) Disconnect the connector [1], and free the harness from the guide; then, remove the 4 screws [2], and detach the pickup assembly 2 [3].

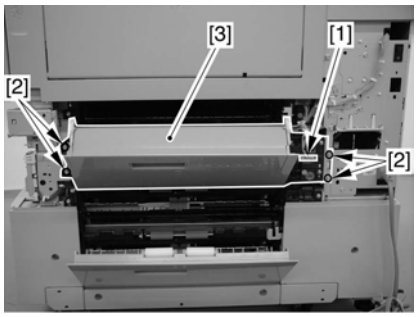

F-8-247

8.8.12.7 Removing the Cassette Pickup Solenoid

iR2270 / iR2870 / iR3570 / iR4570 / / iR2270N / / iR2870N / / iR3570N / / iR4570N / iR2230 / / / iR3530 /

1) Disconnect the connector [1], and remove the screw [2]; then, detach the cassette pickup solenoid [3].

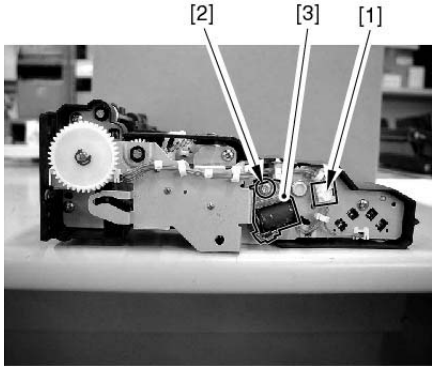

F-8-248

8.8.13 Cassette Size Sensor Relay PCB

8.8.13.1 Removing the Right Cover (rear)

iR2270 / iR2870 / iR3570 / iR4570 / / iR2270N / / iR2870N / / iR3570N / / iR4570N / iR2230 / / / iR3530 /

1) Open the pedestal right door [1]. (if equipped with a 2-Cassette Pedestal-Y2)
2) Open the right lower door [2].
3) Remove the 5 screws [3], and detach the right cover (rear) [4].

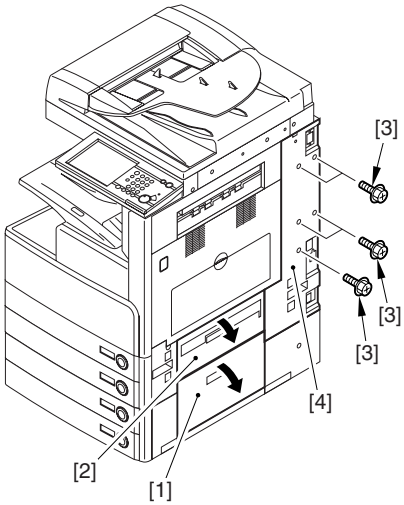

F-8-249

8.8.13.2 Removing the Right Door

iR3570 / iR4570 / / iR3570N / / iR4570N / iR2230 / / / iR3530 /

1) Open the right door.

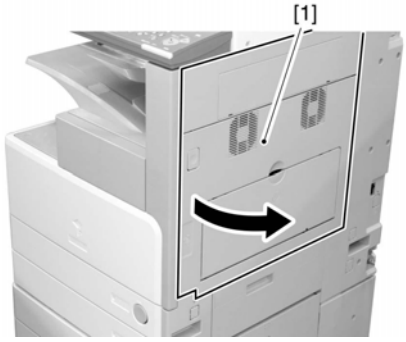

F-8-250

2) Remove the screw [1], and detach the fixing plate [2].

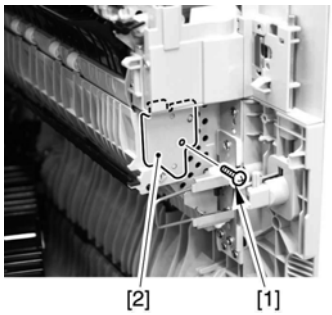

F-8-251

3) Remove the joint shaft [1], and free the extension delivery unit [2] from the right door.

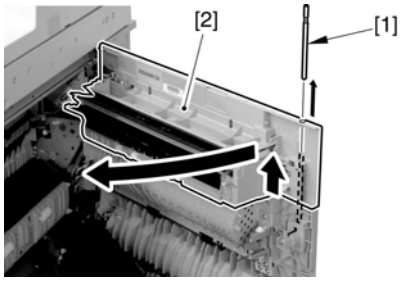

F-8-252

4) Disconnect the connector [1], and remove the reuse band [2]; then, remove the 2 screws (M4x8; RS tightening).

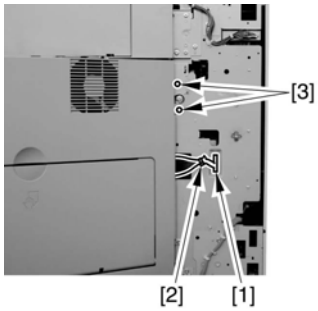

F-8-253

5) While freeing the hinge assembly [2], detach the right door.

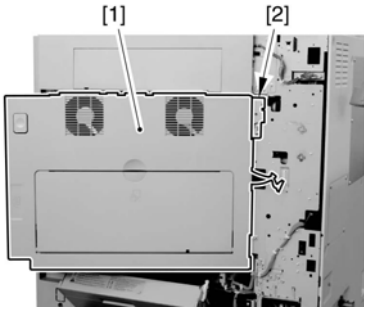

F-8-254

Attaching the Right Door

1) Match the hinge [1] found at the bottom of the right door against the lug.
2) Engage the hinge [2] found on the top of the right door with the hook found on the side plate.

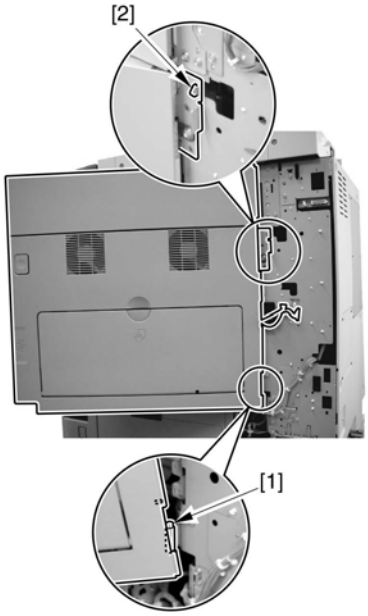

F-8-255

When tightening the 2 screws used to fix the hinge in place, be sure to close the right door first.

8.8.13.3 Removing the Right Door

iR2270 / iR2870 / / iR2270N / / iR2870N / iR2230 / / / iR3530 /

1) Open the right door.

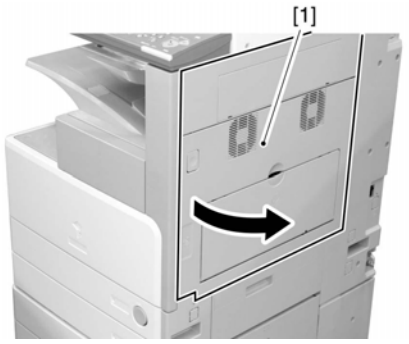

F-8-256

2) Remove the reuse band [1], and disconnect the connector [2].
3) Remove the 2 screws (M4x8; RS tightening), and detach the right door.

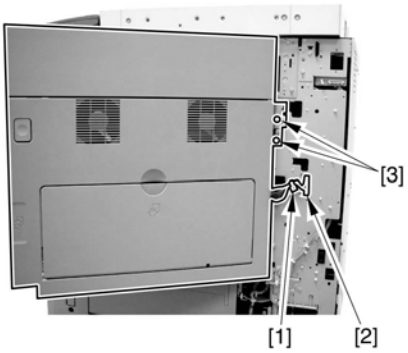

F-8-257

Attaching the Right Door
1) Match the hinge [1] found at the bottom of the right door against the lug.
2) Engage the hinge [2] found on the top of the right door with the hook found on the side plate.

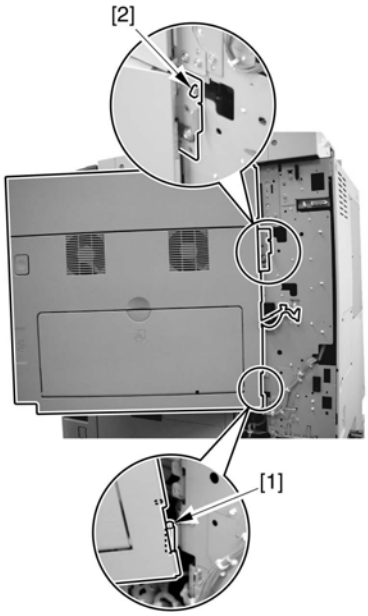

F-8-258

When tightening the 2 screws used to fix the hinge in place, be sure to close the right door first.

8.8.13.4 Removing the Right Cover (lower front)

iR2270 / iR2870 / iR3570 / iR4570 / / iR2270N / / iR2870N / / iR3570N / / iR4570N / iR2230 / / / iR3530 /

1) Open the pedestal right door [1]. (if equipped with a Cassette Feeding Unit-Y2)
2) Open the lower right door [2].
3) Remove the 2 screws [3], and detach the right cover (lower front) [4].

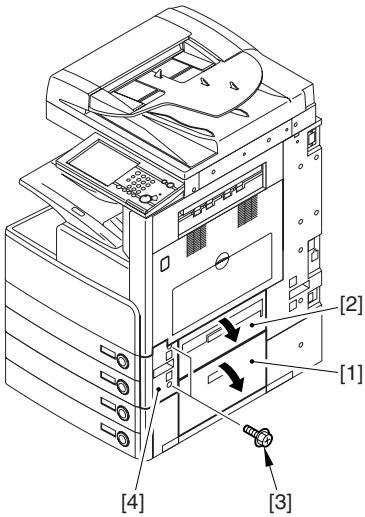

F-8-259

8.8.13.5 Removing the Pickup Assembly 1

iR2270 / iR2870 / iR3570 / iR4570 / / iR2270N / / iR2870N / / iR3570N / / iR4570N / iR2230 / / / iR3530 /

1) Slide out the cassette 1/2.
2) Disconnect the 3 connectors [1]; then, free the harness from the 2 wire saddles [2] and the 2 clamps [3].

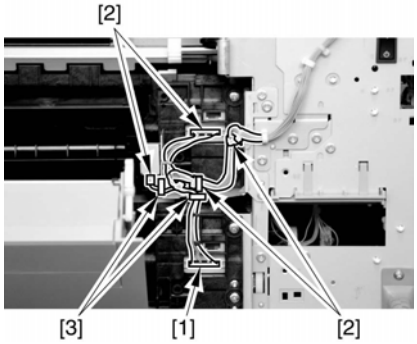

F-8-260

3) Remove the 4 screws [1], and take out the pickup unit 1 [2].

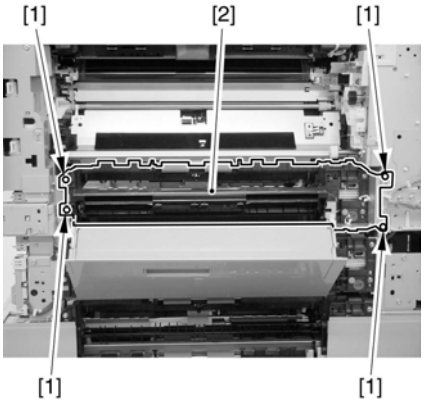

F-8-261

8.8.13.6 Removing the Pickup Assembly 2

iR2270 / iR2870 / iR3570 / iR4570 / / iR2270N / / iR2870N / / iR3570N / / iR4570N / iR2230 / / / iR3530 /

1) Slide out the cassette 1/2.
2) Disconnect the connector [1], and free the harness from the guide; then, remove the 4 screws [2], and detach the pickup assembly 2 [3].

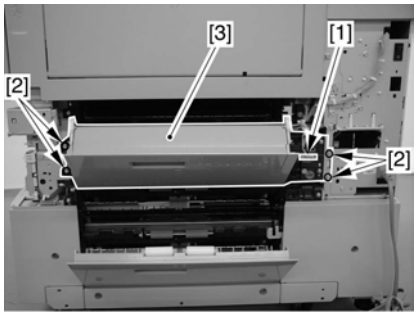

F-8-262

8.8.13.7 Removing the Cassette Size Sensor Relay PCB

iR2270 / iR2870 / iR3570 / iR4570 / / iR2270N / / iR2870N / / iR3570N / / iR4570N / iR2230 / / / iR3530 /

1) Remove the PCB cover [1] (snap-on).

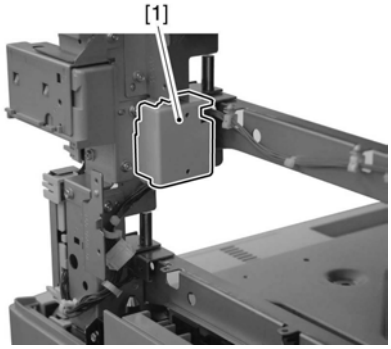

F-8-263

2) Remove the cassette size sensor relay PCB [2] (3 connectors [2], 2 clamps [3]).

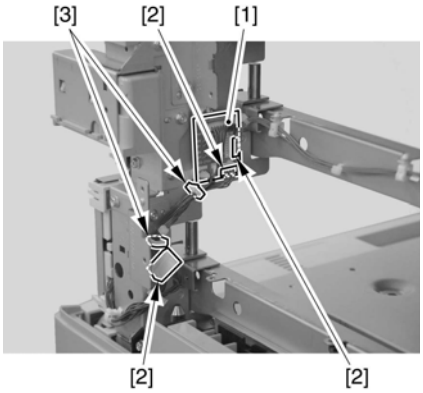

F-8-264

8.8.14 Manual Tray Assembly

8.8.14.1 Removing the Right Cover (rear)

iR2270 / iR2870 / iR3570 / iR4570 / / iR2270N / / iR2870N / / iR3570N / / iR4570N / iR2230 / / / iR3530 /

1) Open the pedestal right door [1]. (if equipped with a 2-Cassette Pedestal-Y2)
2) Open the right lower door [2].
3) Remove the 5 screws [3], and detach the right cover (rear) [4].

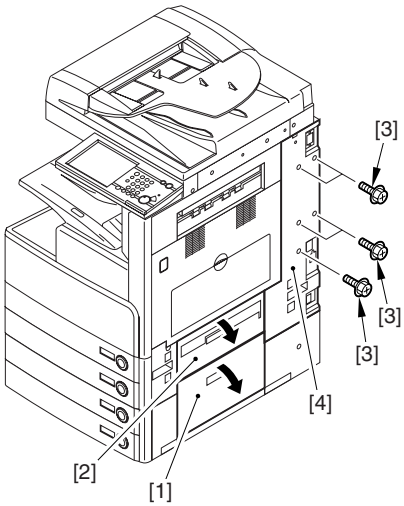

F-8-265

8.8.14.2 Removing the Right Door

iR3570 / iR4570 / / iR3570N / / iR4570N / iR2230 / / / iR3530 /

1) Open the right door.

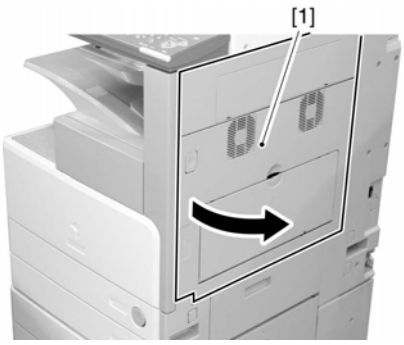

F-8-266

2) Remove the screw [1], and detach the fixing plate [2].

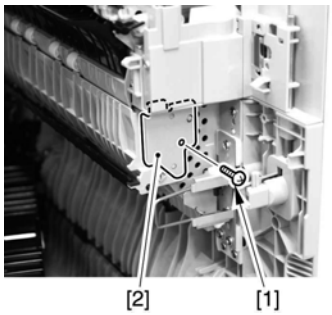

F-8-267

3) Remove the joint shaft [1], and free the extension delivery unit [2] from the right door.

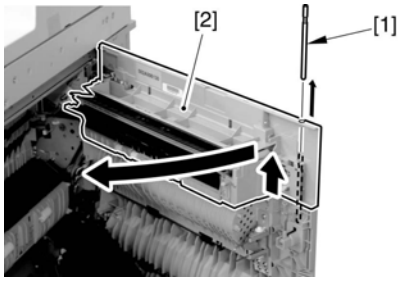

F-8-268

4) Disconnect the connector [1], and remove the reuse band [2]; then, remove the 2 screws (M4x8; RS tightening).

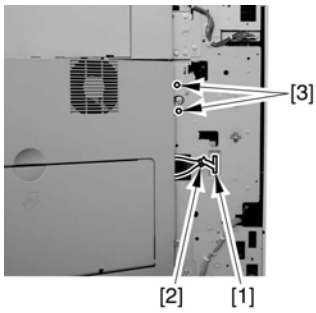

F-8-269

5) While freeing the hinge assembly [2], detach the right door.

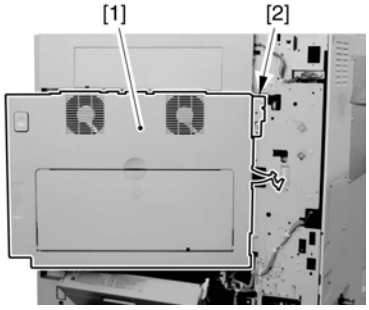

F-8-270

Attaching the Right Door

1) Match the hinge [1] found at the bottom of the right door against the lug.
2) Engage the hinge [2] found on the top of the right door with the hook found on the side plate.

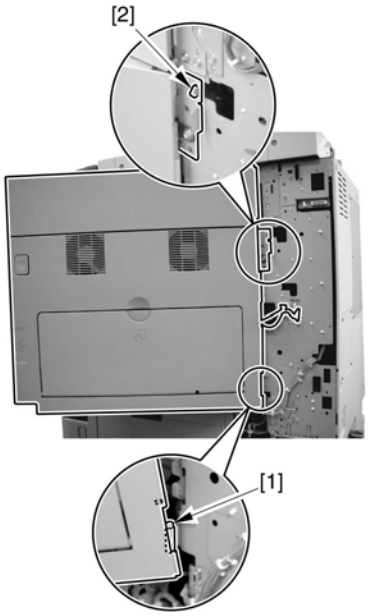

F-8-271

When tightening the 2 screws used to fix the hinge in place, be sure to close the right door first.

8.8.14.3 Removing the Right Door

iR2270 / iR2870 / / iR2270N / / iR2870N / iR2230 / / / iR3530 /

1) Open the right door.

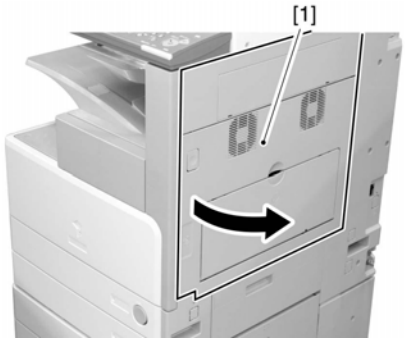

F-8-272

2) Remove the reuse band [1], and disconnect the connector [2].
3) Remove the 2 screws (M4x8; RS tightening), and detach the right door.

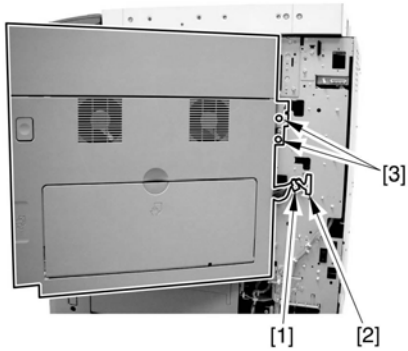

F-8-273

Attaching the Right Door

1) Match the hinge [1] found at the bottom of the right door against the lug.
2) Engage the hinge [2] found on the top of the right door with the hook found on the side plate.

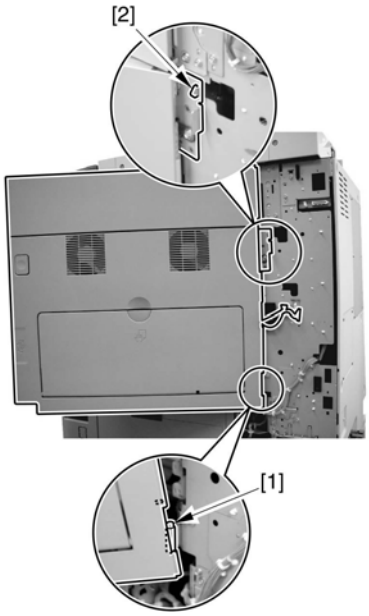

F-8-274

When tightening the 2 screws used to fix the hinge in place, be sure to close the right door first.

8.8.14.4 Removing the Manual Feed Unit

iR2270 / iR2870 / iR3570 / iR4570 / / iR2270N / / iR2870N / / iR3570N / / iR4570N / iR2230 / / / iR3530 /

1) Remove the manual upper guide link [1] (plastic E-ring [2] and boss [3]).

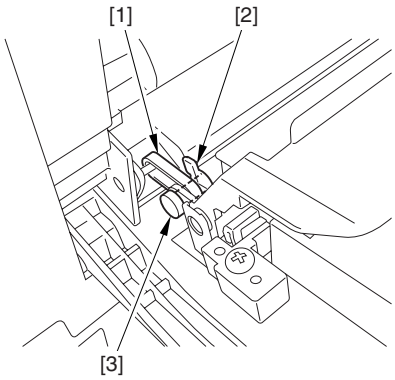

F-8-275

2) Remove the screw [2], and detach the manual feed guide [1].

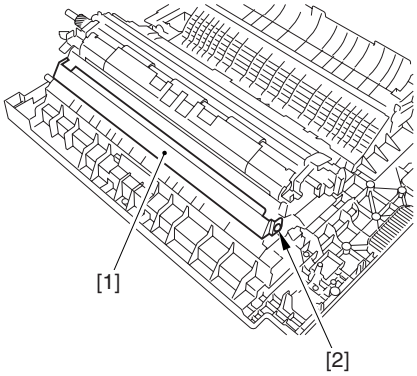

F-8-276

3) Remove the connector cover [1] (snap-on).

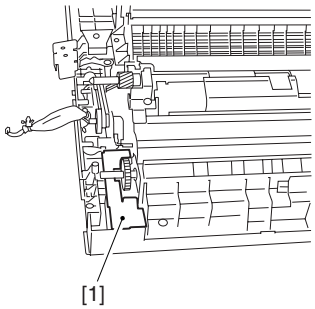

F-8-277

4) Disconnect the connector [1].
5) Remove the 4 screws [2], and detach the manual feed unit [3].

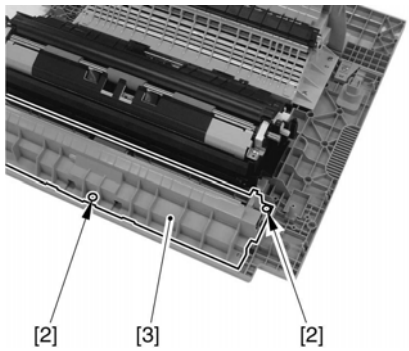

F-8-278

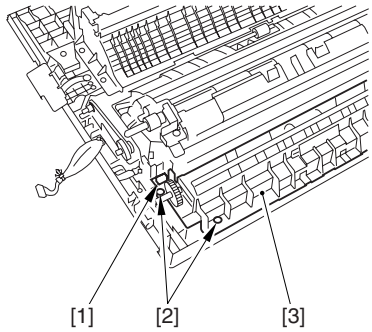

F-8-279

8.8.14.5 Removing the Manual Feed Tray Assembly

iR2270 / iR2870 / iR3570 / iR4570 / / iR2270N / / iR2870N / / iR3570N / / iR4570N / iR2230 / / / iR3530 /

1) Disconnect the connector [1].
2) Remove the tie-wrap [2].

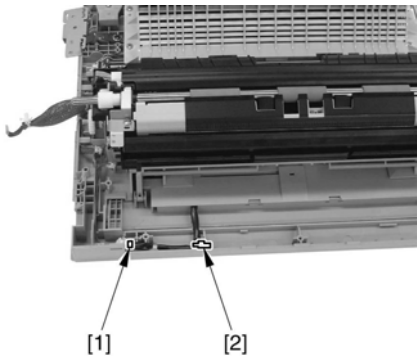

F-8-280

3) Remove the manual feed tray unit [3].

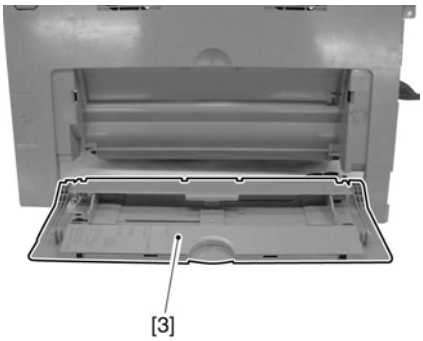

F-8-281

8.8.15 Manual Feed Unit

8.8.15.1 Removing the Right Cover (rear)

iR2270 / iR2870 / iR3570 / iR4570 / / iR2270N / / iR2870N / / iR3570N / / iR4570N / iR2230 / / / iR3530 /

1) Open the pedestal right door [1]. (if equipped with a 2-Cassette Pedestal-Y2)
2) Open the right lower door [2].
3) Remove the 5 screws [3], and detach the right cover (rear) [4].

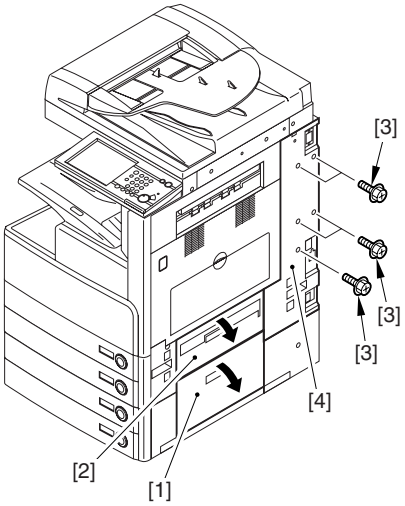

F-8-282

8.8.15.2 Removing the Right Door

iR3570 / iR4570 / / iR3570N / / iR4570N / iR2230 / / / iR3530 /

1) Open the right door.

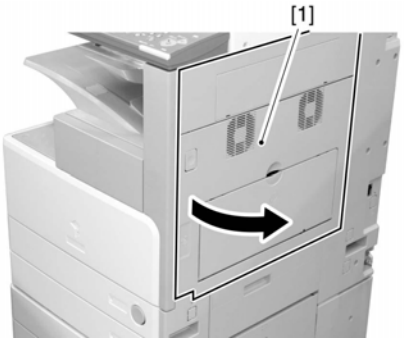

F-8-283

2) Remove the screw [1], and detach the fixing plate [2].

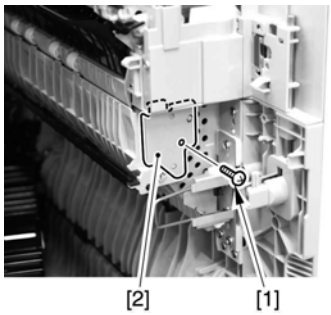

F-8-284

3) Remove the joint shaft [1], and free the extension delivery unit [2] from the right door.

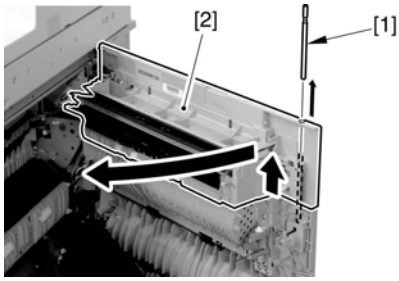

F-8-285

4) Disconnect the connector [1], and remove the reuse band [2]; then, remove the 2 screws (M4x8; RS tightening).

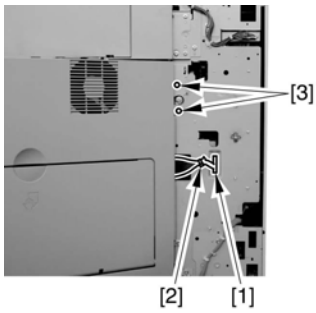

F-8-286

5) While freeing the hinge assembly [2], detach the right door.

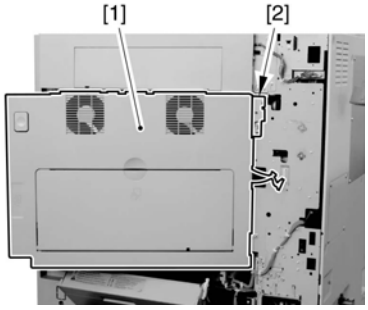

F-8-287

Attaching the Right Door

1) Match the hinge [1] found at the bottom of the right door against the lug.
2) Engage the hinge [2] found on the top of the right door with the hook found on the side plate.

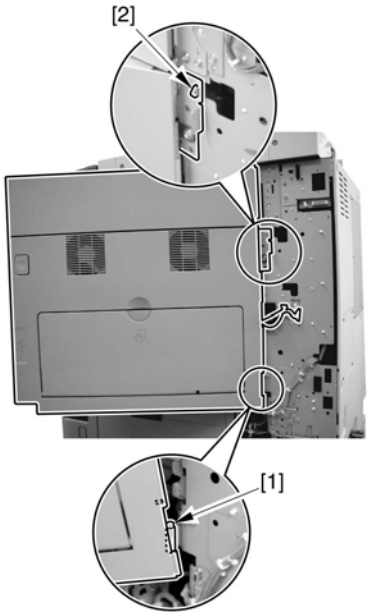

F-8-288

When tightening the 2 screws used to fix the hinge in place, be sure to close the right door first.

8.8.15.3 Removing the Right Door

iR2270 / iR2870 / / iR2270N / / iR2870N / iR2230 / / / iR3530 /

1) Open the right door.

F-8-289

2) Remove the reuse band [1], and disconnect the connector [2].
3) Remove the 2 screws (M4x8; RS tightening), and detach the right door.

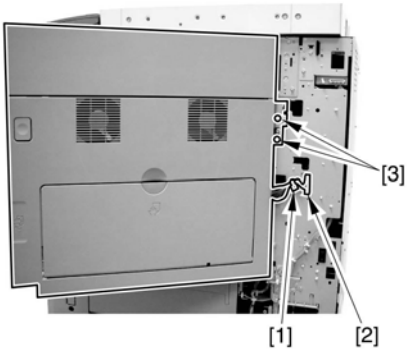

F-8-290

Attaching the Right Door
1) Match the hinge [1] found at the bottom of the right door against the lug.
2) Engage the hinge [2] found on the top of the right door with the hook found on the side plate.

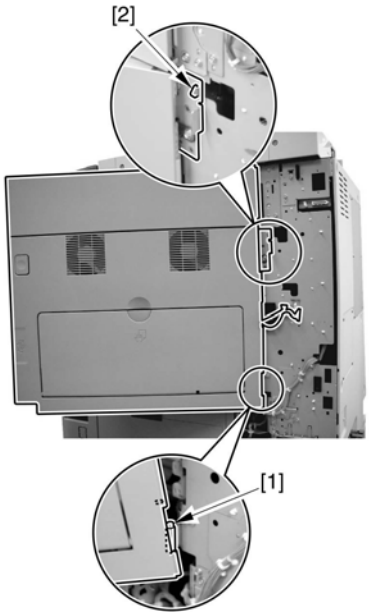

F-8-291

When tightening the 2 screws used to fix the hinge in place, be sure to close the right door first.

8.8.15.4 Removing the Manual Feed Unit

iR2270 / iR2870 / iR3570 / iR4570 / / iR2270N / / iR2870N / / iR3570N / / iR4570N / iR2230 / / / iR3530 /

1) Remove the manual upper guide link [1] (plastic E-ring [2] and boss [3]).

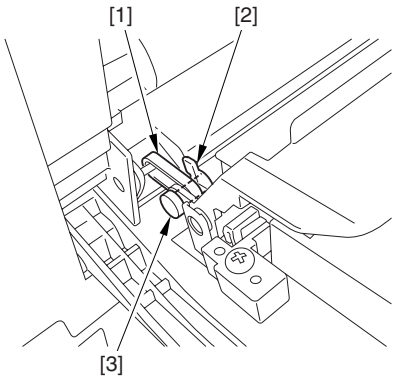

F-8-292

2) Remove the screw [2], and detach the manual feed guide [1].

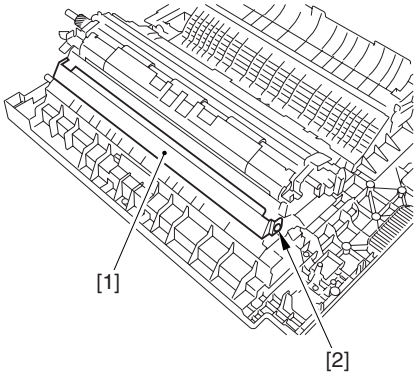

F-8-293

3) Remove the connector cover [1] (snap-on).

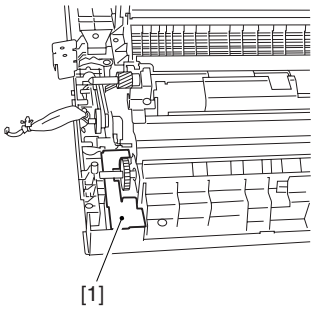

F-8-294

4) Disconnect the connector [1].
5) Remove the 4 screws [2], and detach the manual feed unit [3].

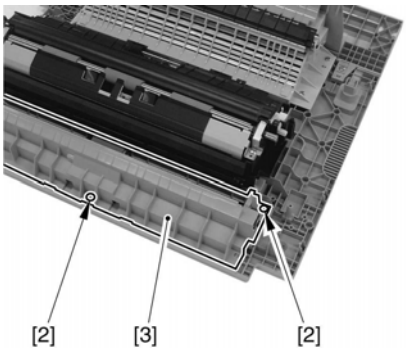

F-8-295

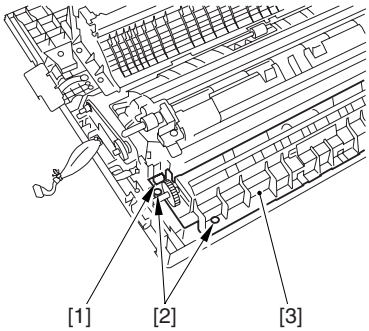

F-8-296

8.8.16 Manual Pickup Roller

8.8.16.1 Removing the Right Cover (rear)

iR2270 / iR2870 / iR3570 / iR4570 / / iR2270N / / iR2870N / / iR3570N / / iR4570N / iR2230 / / / iR3530 /

1) Open the pedestal right door [1]. (if equipped with a 2-Cassette Pedestal-Y2)
2) Open the right lower door [2].
3) Remove the 5 screws [3], and detach the right cover (rear) [4].

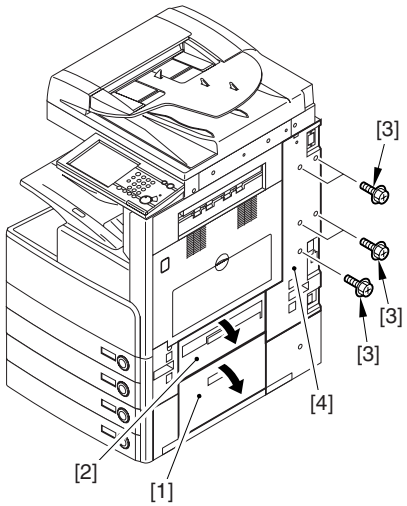

F-8-297

8.8.16.2 Removing the Right Door

iR3570 / iR4570 / / iR3570N / / iR4570N / iR2230 / / / iR3530 /

1) Open the right door.

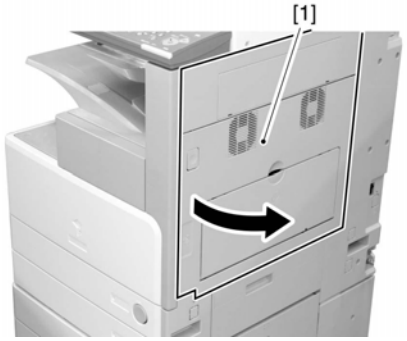

F-8-298

2) Remove the screw [1], and detach the fixing plate [2].

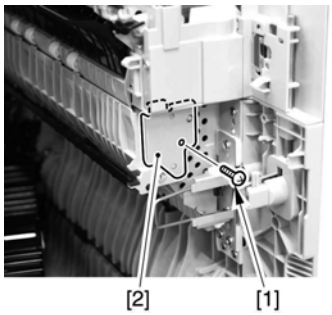

F-8-299

3) Remove the joint shaft [1], and free the extension delivery unit [2] from the right door.

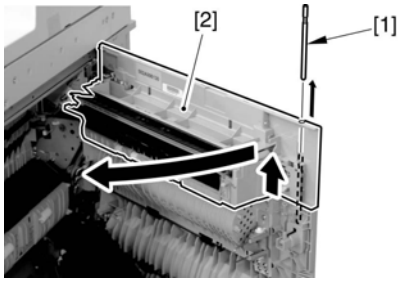

F-8-300

4) Disconnect the connector [1], and remove the reuse band [2]; then, remove the 2 screws (M4x8; RS tightening).

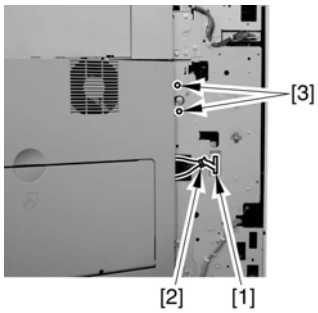

F-8-301

5) While freeing the hinge assembly [2], detach the right door.

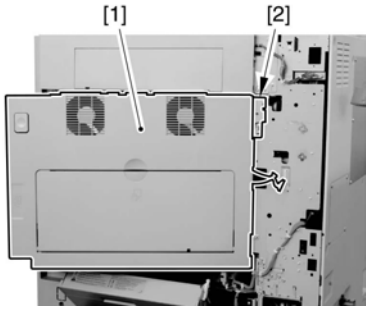

F-8-302

Attaching the Right Door

1) Match the hinge [1] found at the bottom of the right door against the lug.
2) Engage the hinge [2] found on the top of the right door with the hook found on the side plate.

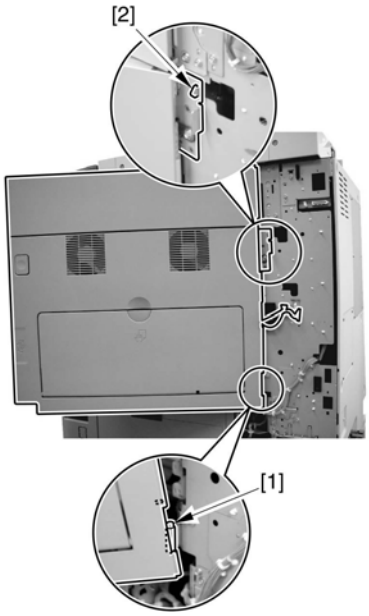

F-8-303

When tightening the 2 screws used to fix the hinge in place, be sure to close the right door first.

8.8.16.3 Removing the Right Door

iR2270 / iR2870 / / iR2270N / / iR2870N / iR2230 / / / iR3530 /

1) Open the right door.

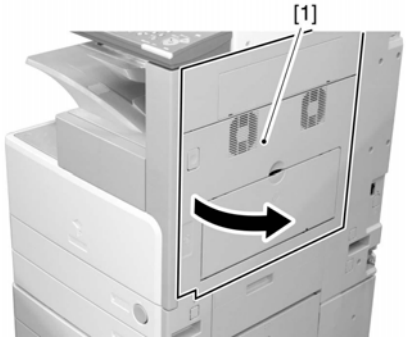

F-8-304

2) Remove the reuse band [1], and disconnect the connector [2].
3) Remove the 2 screws (M4x8; RS tightening), and detach the right door.

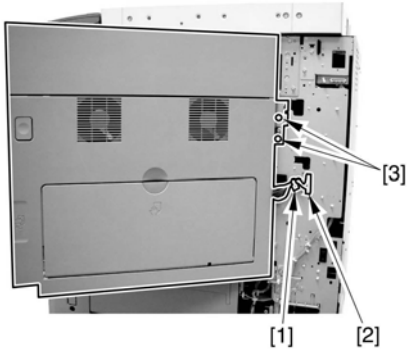

F-8-305

Attaching the Right Door

1) Match the hinge [1] found at the bottom of the right door against the lug.
2) Engage the hinge [2] found on the top of the right door with the hook found on the side plate.

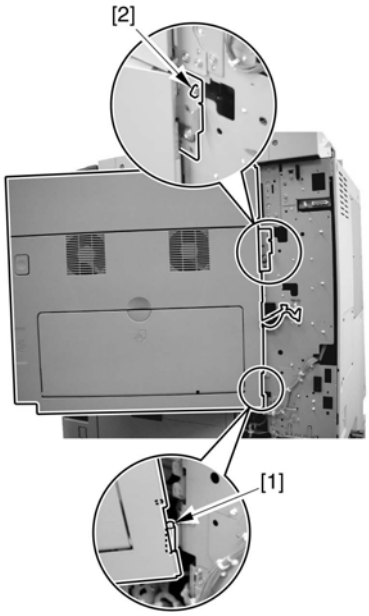

F-8-306

When tightening the 2 screws used to fix the hinge in place, be sure to close the right door first.

8.8.16.4 Removing the Manual Feed Unit

iR2270 / iR2870 / iR3570 / iR4570 / / iR2270N / / iR2870N / / iR3570N / / iR4570N / iR2230 / / / iR3530 /

1) Remove the manual upper guide link [1] (plastic E-ring [2] and boss [3]).

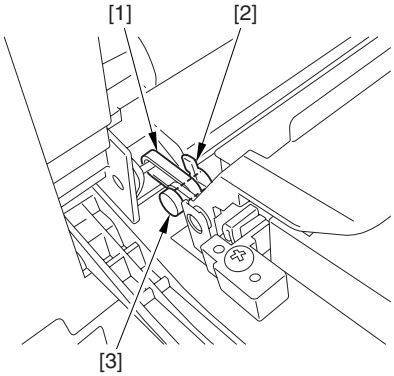

F-8-307

2) Remove the screw [2], and detach the manual feed guide [1].

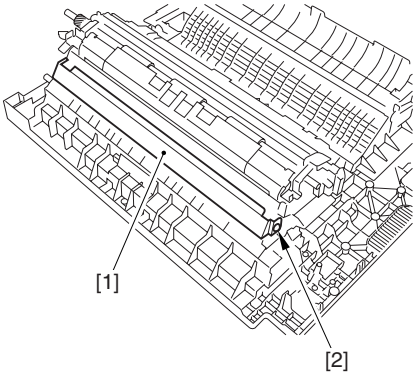

F-8-308

3) Remove the connector cover [1] (snap-on).

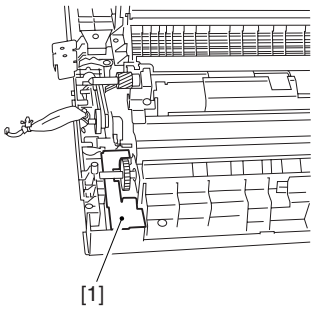

F-8-309

4) Disconnect the connector [1].
5) Remove the 4 screws [2], and detach the manual feed unit [3].

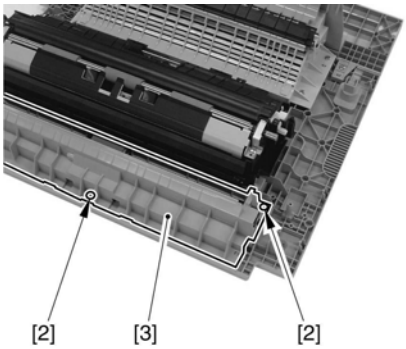

F-8-310

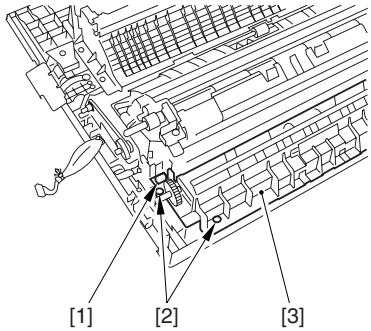

F-8-311

8.8.16.5 Removing the Manual Feed Pickup Roller

iR2270 / iR2870 / iR3570 / iR4570 / / iR2270N / / iR2870N / / iR3570N / / iR4570N / iR2230 / / / iR3530 /

1) Remove the manual feed upper cover [1] (snap-on).

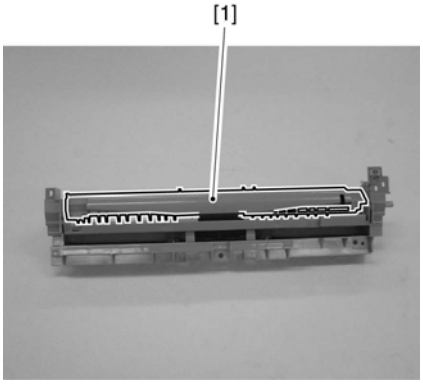

F-8-312

2) Remove the bush [2], and detach the manual feed pickup roller [3] together with the shaft.
3) Remove the plastic E-ring [4], and detach the manual feed pickup roller from shaft. Take care not to drop the parallel pin.

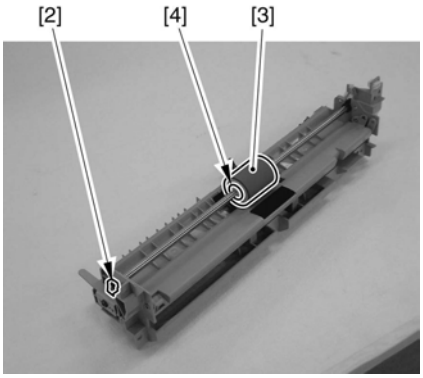

F-8-313

8.8.17 Manual Pick-up Clutch

8.8.17.1 Removing the Right Cover (rear)

iR2270 / iR2870 / iR3570 / iR4570 / / iR2270N / / iR2870N / / iR3570N / / iR4570N / iR2230 / / / iR3530 /

1) Open the pedestal right door [1]. (if equipped with a 2-Cassette Pedestal-Y2)
2) Open the right lower door [2].
3) Remove the 5 screws [3], and detach the right cover (rear) [4].

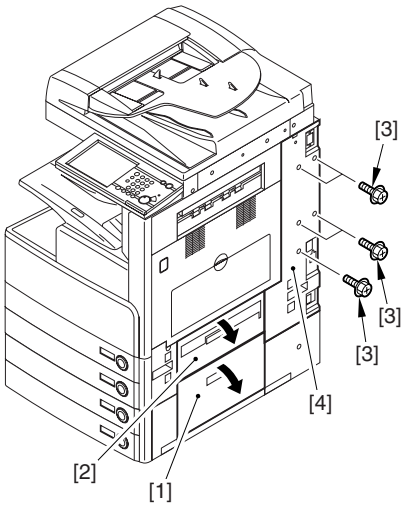

F-8-314

8.8.17.2 Removing the Right Door

iR3570 / iR4570 / / iR3570N / / iR4570N / iR2230 / / / iR3530 /

1) Open the right door.

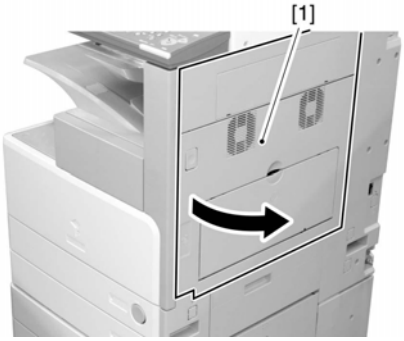

F-8-315

2) Remove the screw [1], and detach the fixing plate [2].

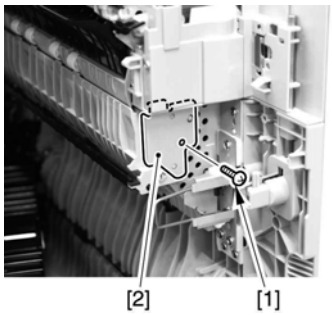

F-8-316

3) Remove the joint shaft [1], and free the extension delivery unit [2] from the right door.

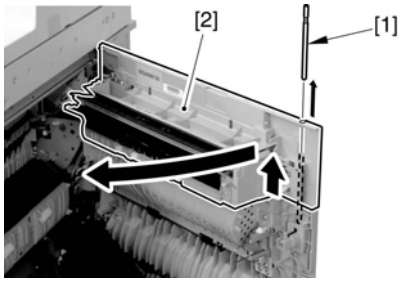

F-8-317

4) Disconnect the connector [1], and remove the reuse band [2]; then, remove the 2 screws (M4x8; RS tightening).

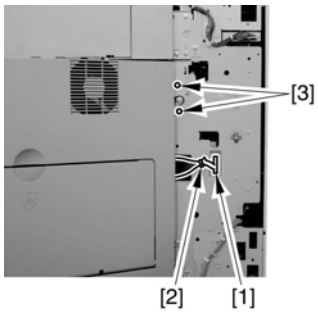

F-8-318

5) While freeing the hinge assembly [2], detach the right door.

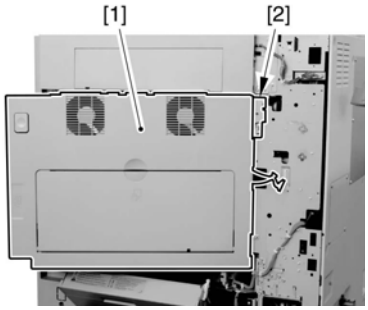

F-8-319

Attaching the Right Door

1) Match the hinge [1] found at the bottom of the right door against the lug.
2) Engage the hinge [2] found on the top of the right door with the hook found on the side plate.

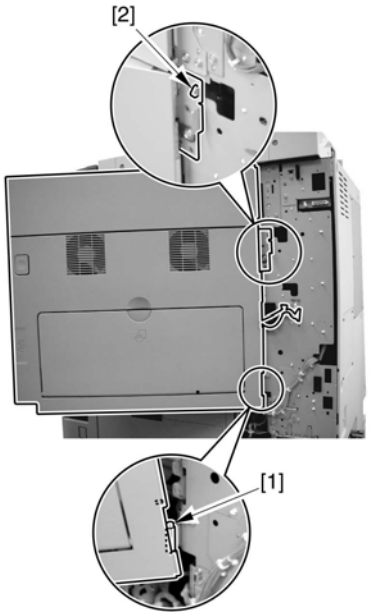

F-8-320

When tightening the 2 screws used to fix the hinge in place, be sure to close the right door first.

8.8.17.3 Removing the Right Door

iR2270 / iR2870 / / iR2270N / / iR2870N / iR2230 / / / iR3530 /

1) Open the right door.

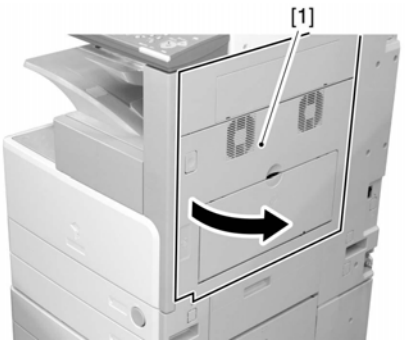

F-8-321

2) Remove the reuse band [1], and disconnect the connector [2].
3) Remove the 2 screws (M4x8; RS tightening), and detach the right door.

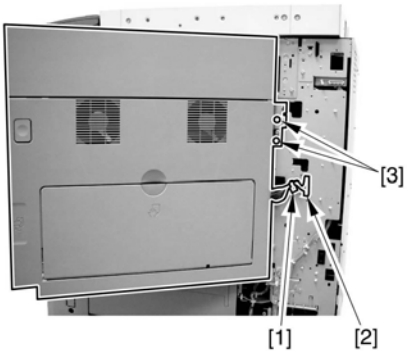

F-8-322

Attaching the Right Door
1) Match the hinge [1] found at the bottom of the right door against the lug.
2) Engage the hinge [2] found on the top of the right door with the hook found on the side plate.

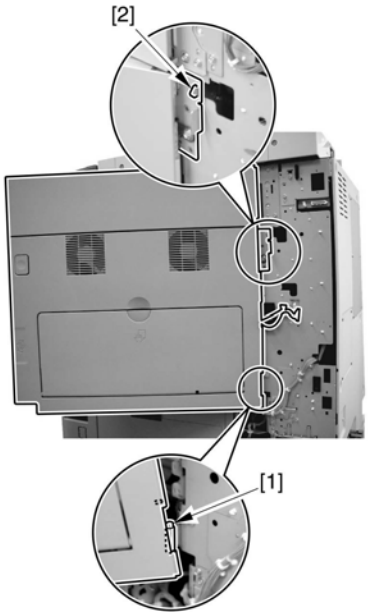

F-8-323

When tightening the 2 screws used to fix the hinge in place, be sure to close the right door first.

8.8.17.4 Removing the Rear Cover

iR2270 / iR2870 / iR3570 / iR4570 / / iR2270N / / iR2870N / / iR3570N / / iR4570N / iR2230 / / / iR3530 /

1) Remove the 13 screws [1] and then the other screw [2]; then, detach the rear cover [3].

If the left cover (lower) has already been detached, the screw [3] should also have been removed.

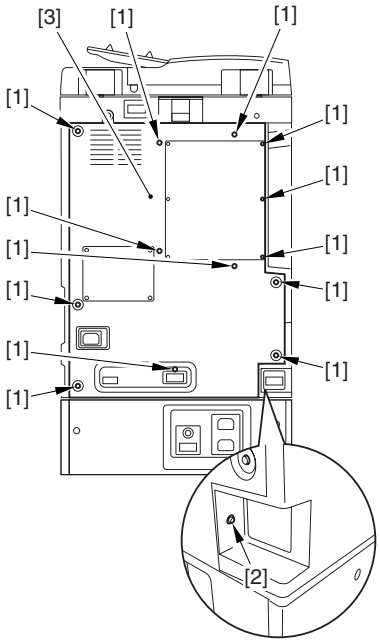

F-8-324

8.8.17.5 Removing the Main Power Switch

iR2270 / iR2870 / iR3570 / iR4570 / / iR2270N / / iR2870N / / iR3570N / / iR4570N / iR2230 / / / iR3530 /

1) Remove the 4 fastons [1], and detach the main power switch [2]. (snap-on type)

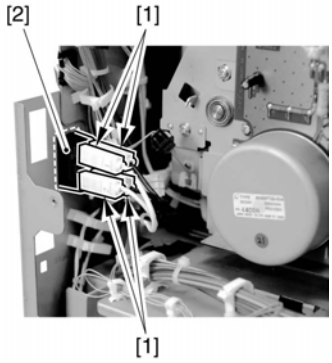

F-8-325

When connecting the 4 fastons, be sure that they are located as indicated by their specific location numbers.

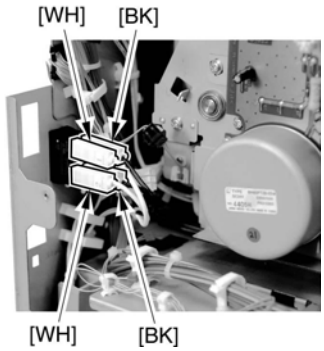

F-8-326

8.8.17.6 Removing the Manual Feed Pickup Clutch

iR2270 / iR2870 / iR3570 / iR4570 / / iR2270N / / iR2870N / / iR3570N / / iR4570N / iR2230 / / / iR3530 /

1) Disconnect the connector (2P) [1].

2) Free the clutch cable [2] from the wire saddle [3].
3) Remove the fixing plate [4]. (2 screws [5])

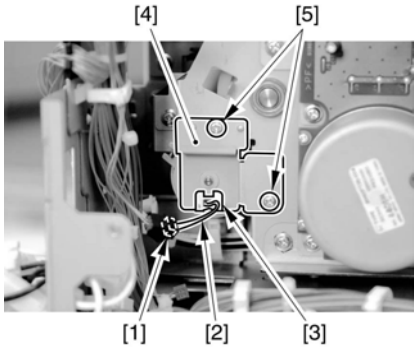

F-8-327

4) Pull out the manual feed pickup clutch [1].

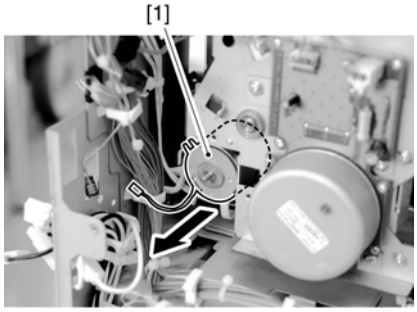

F-8-328

8.8.18 Manual Separation Pad

8.8.18.1 Removing the Right Cover (rear)

iR2270 / iR2870 / iR3570 / iR4570 / / iR2270N / / iR2870N / / iR3570N / / iR4570N / iR2230 / / / iR3530 /

1) Open the pedestal right door [1]. (if equipped with a 2-Cassette Pedestal-Y2)
2) Open the right lower door [2].
3) Remove the 5 screws [3], and detach the right cover (rear) [4].

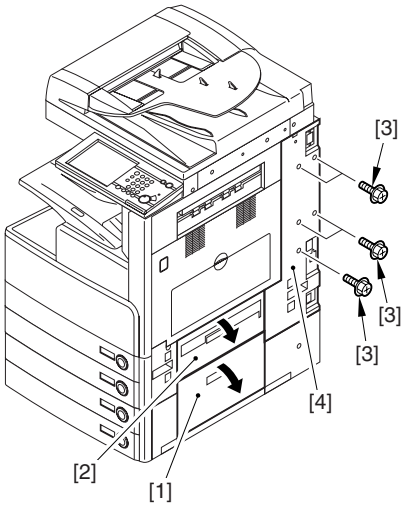

F-8-329

8.8.18.2 Removing the Right Door

iR3570 / iR4570 / / iR3570N / / iR4570N / iR2230 / / / iR3530 /

1) Open the right door.

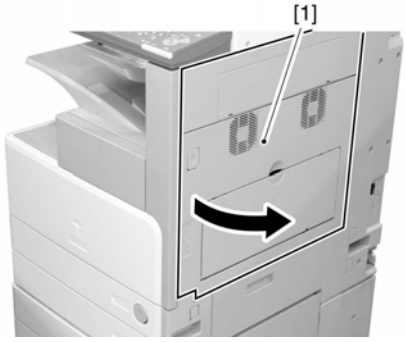

F-8-330

2) Remove the screw [1], and detach the fixing plate [2].

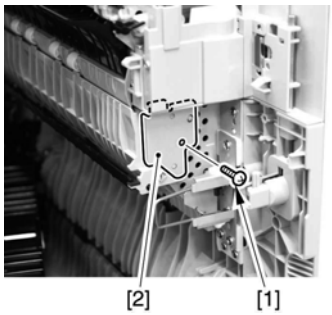

F-8-331

3) Remove the joint shaft [1], and free the extension delivery unit [2] from the right door.

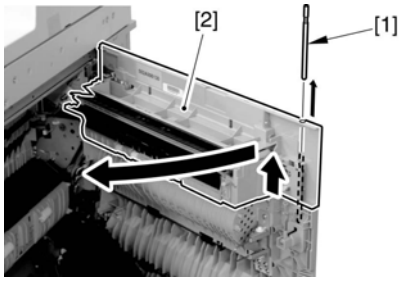

F-8-332

4) Disconnect the connector [1], and remove the reuse band [2]; then, remove the 2 screws (M4x8; RS tightening).

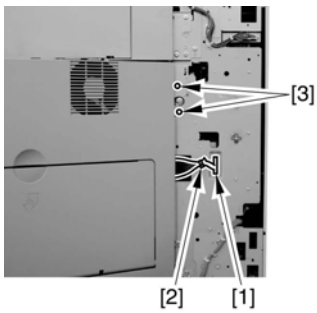

F-8-333

5) While freeing the hinge assembly [2], detach the right door.

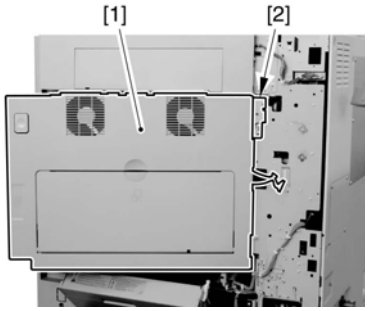

F-8-334

Attaching the Right Door

1) Match the hinge [1] found at the bottom of the right door against the lug.
2) Engage the hinge [2] found on the top of the right door with the hook found on the side plate.

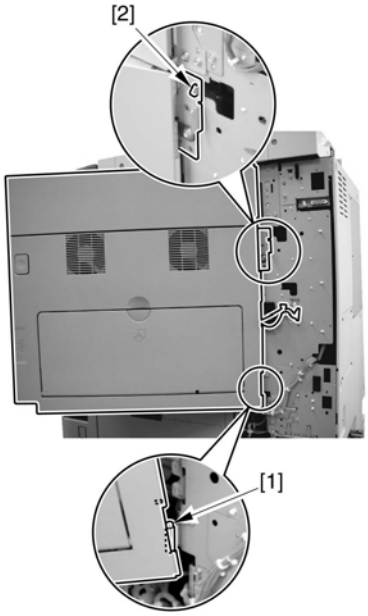

F-8-335

When tightening the 2 screws used to fix the hinge in place, be sure to close the right door first.

8.8.18.3 Removing the Right Door

iR2270 / iR2870 / / iR2270N / / iR2870N / iR2230 / / / iR3530 /

1) Open the right door.

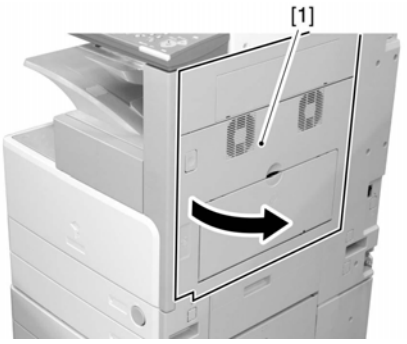

F-8-336

2) Remove the reuse band [1], and disconnect the connector [2].
3) Remove the 2 screws (M4x8; RS tightening), and detach the right door.

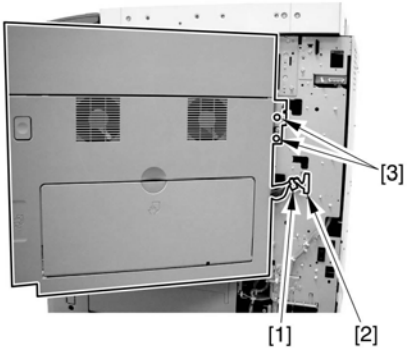

F-8-337

Attaching the Right Door
1) Match the hinge [1] found at the bottom of the right door against the lug.
2) Engage the hinge [2] found on the top of the right door with the hook found on the side plate.

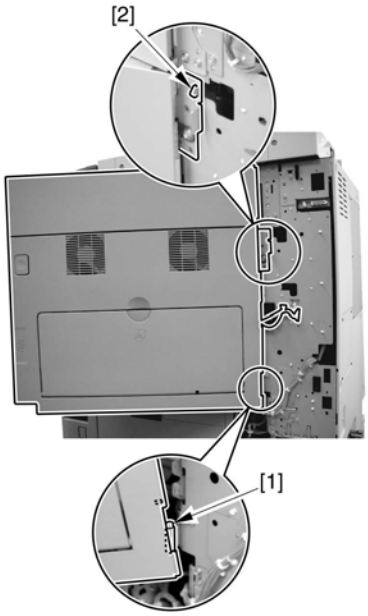

F-8-338

When tightening the 2 screws used to fix the hinge in place, be sure to close the right door first.

8.8.18.4 Removing the Manual Feed Unit

iR2270 / iR2870 / iR3570 / iR4570 / / iR2270N / / iR2870N / / iR3570N / / iR4570N / iR2230 / / / iR3530 /

1) Remove the manual upper guide link [1] (plastic E-ring [2] and boss [3]).

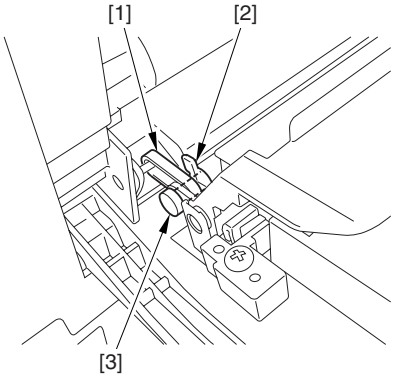

F-8-339

2) Remove the screw [2], and detach the manual feed guide [1].

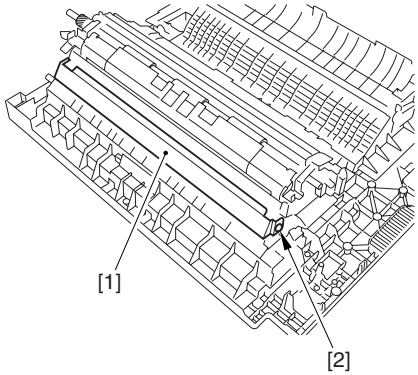

F-8-340

3) Remove the connector cover [1] (snap-on).

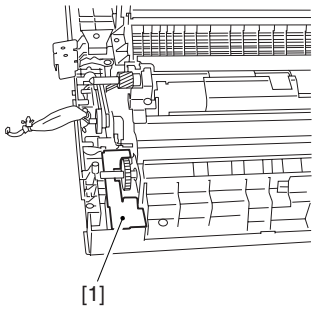

F-8-341

4) Disconnect the connector [1].
5) Remove the 4 screws [2], and detach the manual feed unit [3].

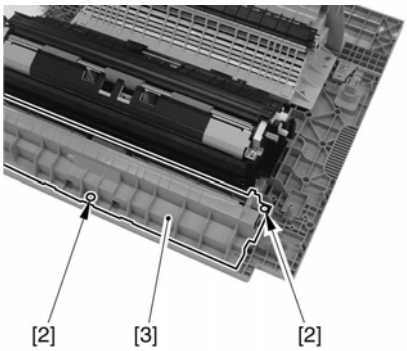

F-8-342

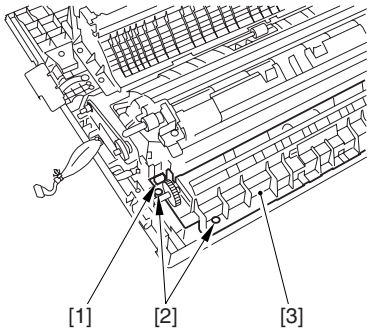

F-8-343

8.8.18.5 Removing the Manual Feed Pickup Roller

iR2270 / iR2870 / iR3570 / iR4570 / / iR2270N / / iR2870N / / iR3570N / / iR4570N / iR2230 / / / iR3530 /

1) Remove the manual feed upper cover [1] (snap-on).

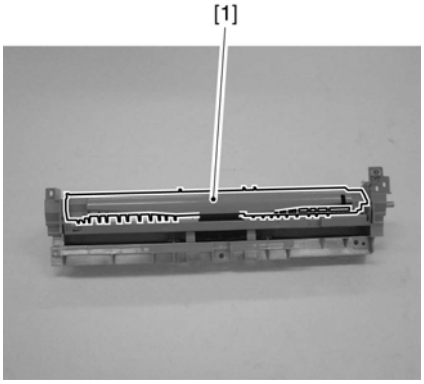

F-8-344

2) Remove the bush [2], and detach the manual feed pickup roller [3] together with the shaft.
3) Remove the plastic E-ring [4], and detach the manual feed pickup roller from shaft. Take care not to drop the parallel pin.

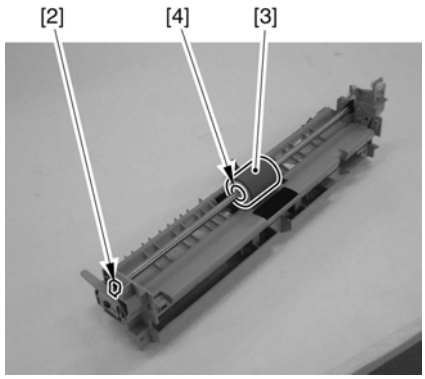

F-8-345

8.8.18.6 Removing the Manual Feed Separation pad

iR2270 / iR2870 / iR3570 / iR4570 / / iR2270N / / iR2870N / / iR3570N / / iR4570N / iR2230 / / / iR3530 /

1) Remove the holding plate [5].
2) Remove the separation pad [6].

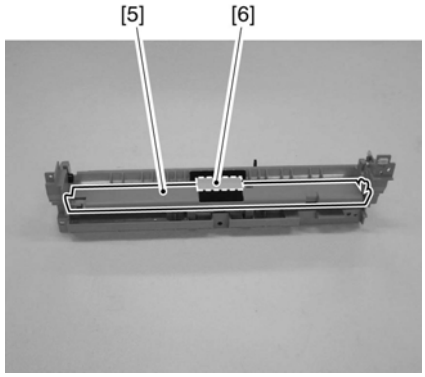

F-8-346

8.8.19 Registration Clutch

8.8.19.1 Removing the Rear Cover

iR2270 / iR2870 / iR3570 / iR4570 / / iR2270N / / iR2870N / / iR3570N / / iR4570N / iR2230 / / / iR3530 /

1) Remove the 13 screws [1] and then the other screw [2]; then, detach the rear cover [3].

If the left cover (lower) has already been detached, the screw [3] should also have been removed.

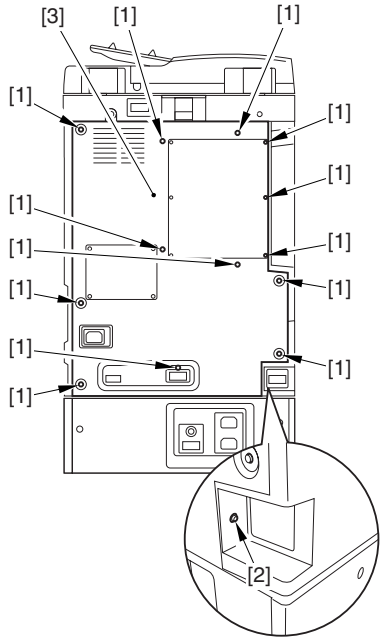

F-8-347

8.8.19.2 Removing the Main Drive Assembly

iR3570 / iR4570 / / iR3570N / / iR4570N / iR2230 / / / iR3530 /

1) Disconnect the connector [1], and free the harness [2] from the wire saddle.

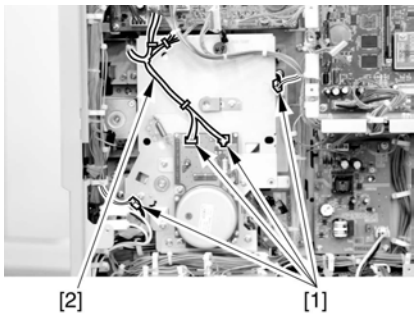

F-8-348

2) Remove the 4 screws [1], and detach the main drive assembly [2].

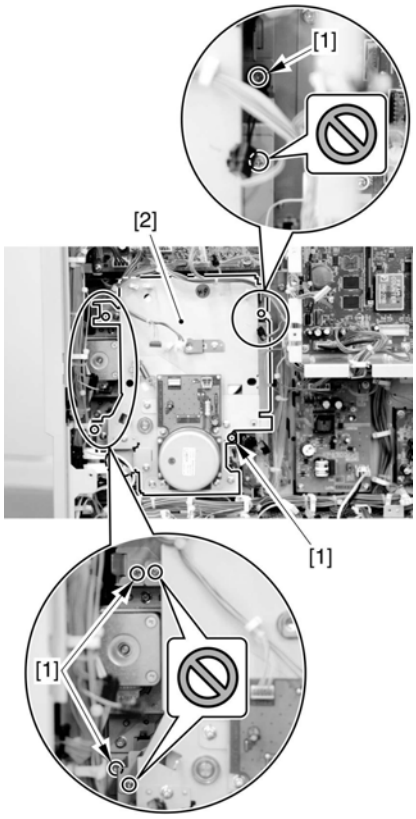

F-8-349

Do not touch the screws that are glued in place.

8.8.19.3 Removing the Main Drive Assembly

iR2270 / iR2870 / / iR2270N / / iR2870N / iR2230 / / / iR3530 /

1) Disconnect the 6 connectors [1].
2) Free the cable from the 6 cable clamps [2].
3) Remove the re-use band [3].

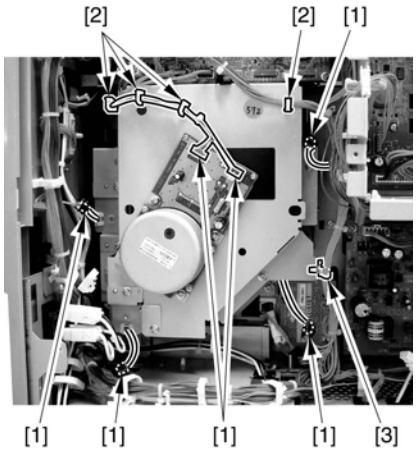

F-8-350

4) Remove the 4 screws [1], and detach the main drive assembly [2].

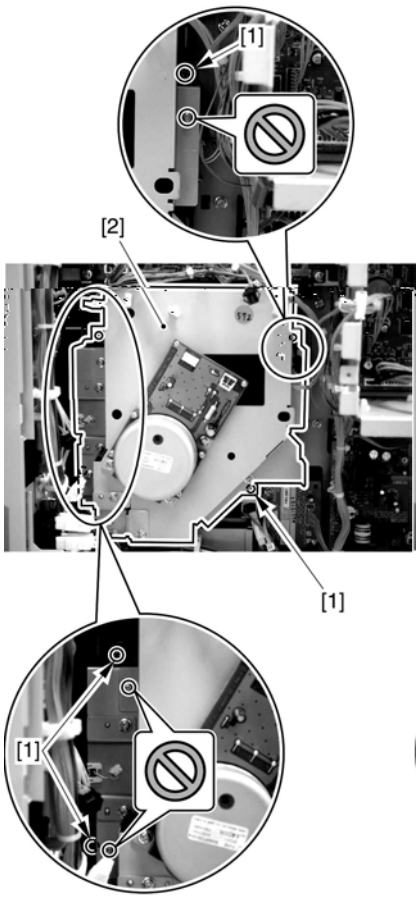

F-8-351

8.8.19.4 Removing the Registration Clutch

iR2270 / iR2870 / iR3570 / iR4570 / / iR2270N / / iR2870N / / iR3570N / / iR4570N / iR2230 / / / iR3530 /

1) Disconnect the connector (2P) [1], and free the cable from the edge saddle [2] and the 3 wire saddles [3].
2) Remove the E-ring [4], and detach the registration clutch [5].

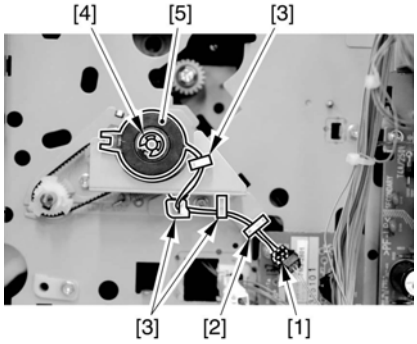

F-8-352

8.8.20 Feeding Roller

8.8.20.1 Removing the Pickup Roller/Feed Roller/ Separation Roller

iR2270 / iR2870 / iR3570 / iR4570 / / iR2270N / / iR2870N / / iR3570N / / iR4570N / iR2230 / / / iR3530 /

1) Slide out the cassette.
2) Open the right door (in the case of the separation roller).
3) Pick the tabs of the individual rollers, and detach the pickup roller [1], feed roller [2], and separation roller [3].

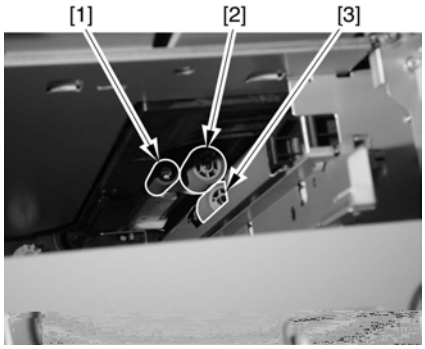

F-8-353

Point to Note When Replacing the Feed/Separation Roller 1
The collar (roller core) of the machine's feed/separation roller is black.

8.8.21 Vertical Path Roller

8.8.21.1 Removing the Right Cover (rear)

iR2270 / iR2870 / iR3570 / iR4570 / / iR2270N / / iR2870N / / iR3570N / / iR4570N / iR2230 / / / iR3530 /

1) Open the pedestal right door [1]. (if equipped with a 2-Cassette Pedestal-Y2)
2) Open the right lower door [2].
3) Remove the 5 screws [3], and detach the right cover (rear) [4].

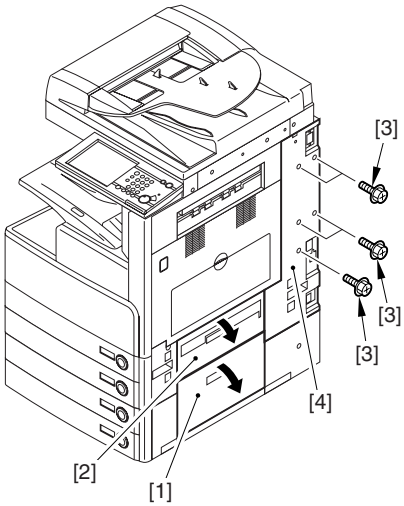

F-8-354

8.8.21.2 Removing the Right Door

iR3570 / iR4570 / / iR3570N / / iR4570N / iR2230 / / / iR3530 /

1) Open the right door.

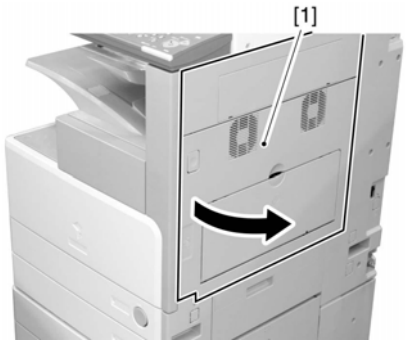

F-8-355

2) Remove the screw [1], and detach the fixing plate [2].

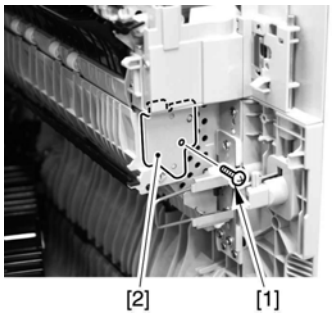

F-8-356

3) Remove the joint shaft [1], and free the extension delivery unit [2] from the right door.

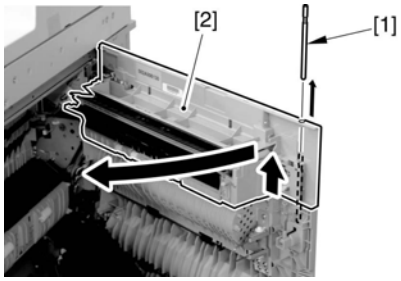

F-8-357

4) Disconnect the connector [1], and remove the reuse band [2]; then, remove the 2 screws (M4x8; RS tightening).

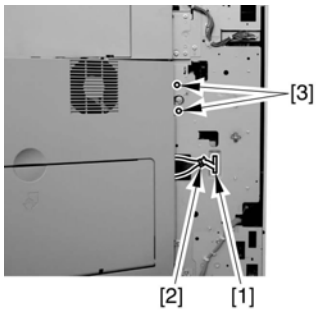

F-8-358

5) While freeing the hinge assembly [2], detach the right door.

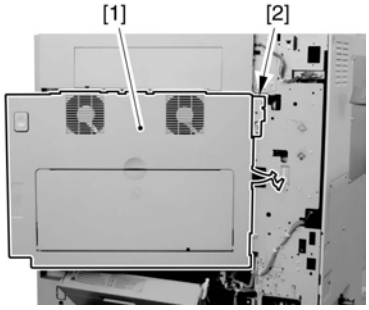

F-8-359

Attaching the Right Door

1) Match the hinge [1] found at the bottom of the right door against the lug.
2) Engage the hinge [2] found on the top of the right door with the hook found on the side plate.

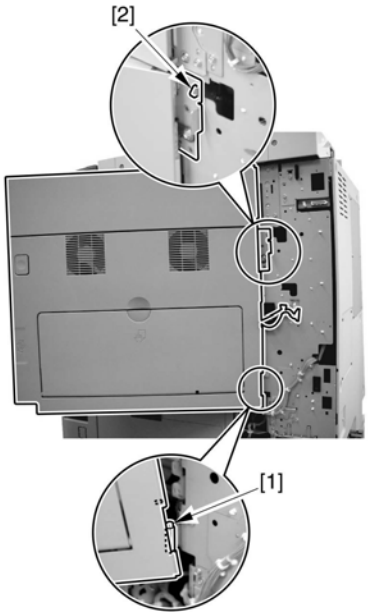

F-8-360

When tightening the 2 screws used to fix the hinge in place, be sure to close the right door first.

8.8.21.3 Removing the Right Door

iR2270 / iR2870 / / iR2270N / / iR2870N / iR2230 / / / iR3530 /

1) Open the right door.

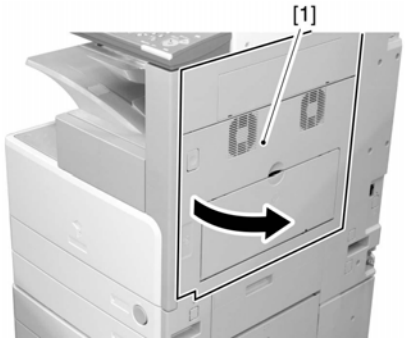

F-8-361

2) Remove the reuse band [1], and disconnect the connector [2].
3) Remove the 2 screws (M4x8; RS tightening), and detach the right door.

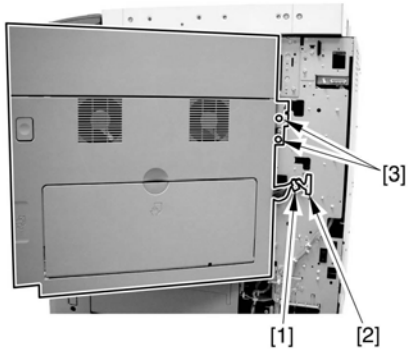

F-8-362

Attaching the Right Door

1) Match the hinge [1] found at the bottom of the right door against the lug.
2) Engage the hinge [2] found on the top of the right door with the hook found on the side plate.

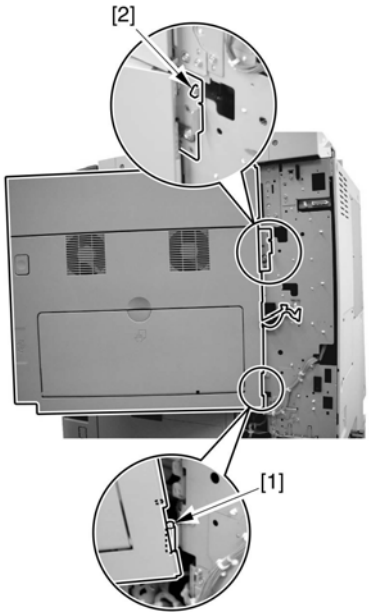

F-8-363

When tightening the 2 screws used to fix the hinge in place, be sure to close the right door first.

8.8.21.4 Removing the Right Cover (lower front)

iR2270 / iR2870 / iR3570 / iR4570 / / iR2270N / / iR2870N / / iR3570N / / iR4570N / iR2230 / / / iR3530 /

1) Open the pedestal right door [1]. (if equipped with a Cassette Feeding Unit-Y2)
2) Open the lower right door [2].
3) Remove the 2 screws [3], and detach the right cover (lower front) [4].

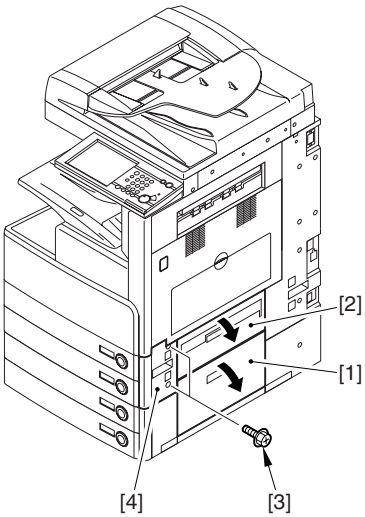

F-8-364

8.8.21.5 Removing the Pickup Assembly 1

iR2270 / iR2870 / iR3570 / iR4570 / / iR2270N / / iR2870N / / iR3570N / / iR4570N / iR2230 / / / iR3530 /

1) Slide out the cassette 1/2.
2) Disconnect the 3 connectors [1]; then, free the harness from the 2 wire saddles [2] and the 2 clamps [3].

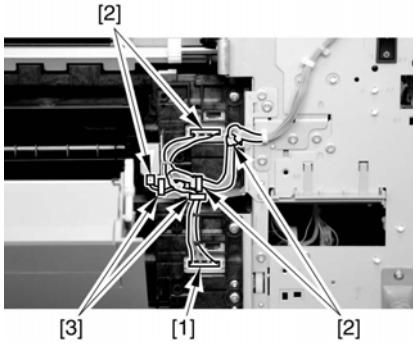

F-8-365

3) Remove the 4 screws [1], and take out the pickup unit 1 [2].

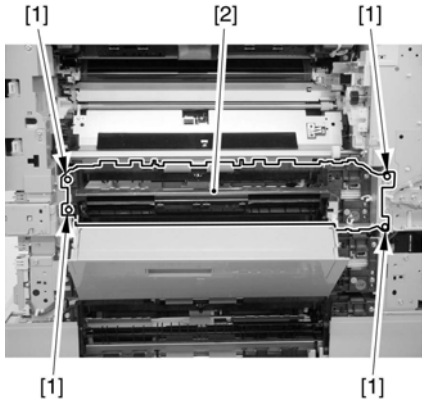

F-8-366

8.8.21.6 Removing the Pickup Assembly 2

iR2270 / iR2870 / iR3570 / iR4570 / / iR2270N / / iR2870N / / iR3570N / / iR4570N / iR2230 / / / iR3530 /

1) Slide out the cassette 1/2.
2) Disconnect the connector [1], and free the harness from the guide; then, remove the 4 screws [2], and detach the pickup assembly 2 [3].

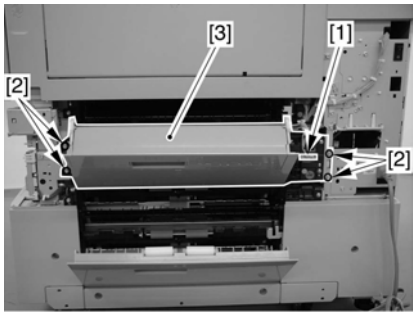

F-8-367

8.8.21.7 Removing the Sensor Mounting Plate

iR2270 / iR2870 / iR3570 / iR4570 / / iR2270N / / iR2870N / / iR3570N / / iR4570N / iR2230 / / / iR3530 /

1) Remove the 2 TP screws [1] and the binding screw [2] from the rear of the pickup assembly, and detach the bracket [3].

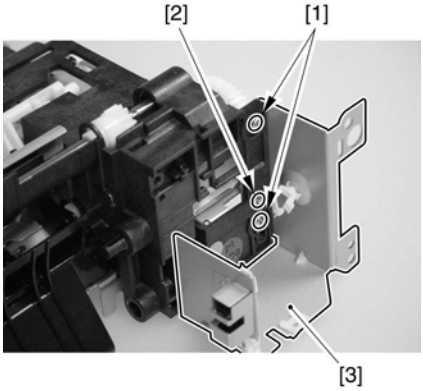

F-8-368

Pickup Unit 1

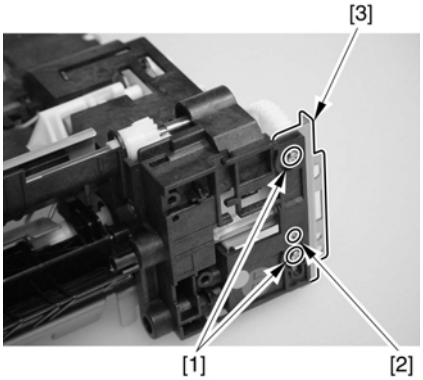

F-8-369

Pickup Unit 2

2) Disconnect the connector [1], and remove the screw; then, detach the cassette pickup solenoid [3].
3) Remove the bushing and the 5 screws [4]; then, detach the sensor base [5].

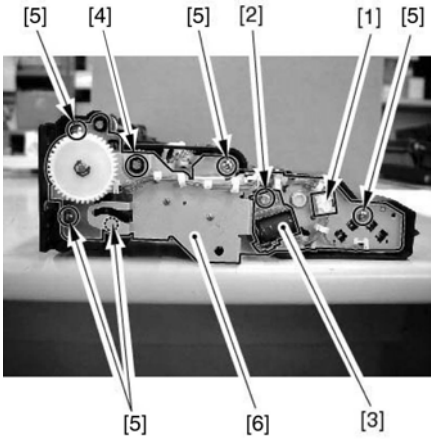

F-8-370

8.8.21.8 Removing the Vertical Path Roller

iR2270 / iR2870 / iR3570 / iR4570 / / iR2270N / / iR2870N / / iR3570N / / iR4570N / iR2230 / / / iR3530 /

1) Free the claw [A] of the gear [1] at the rear; then, detach the gear and the bushing [2].

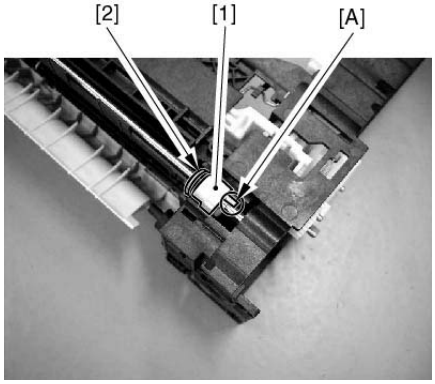

F-8-371

2) Free the claw [A] of the bushing [1] at the front; then, shift it to the rear, and lift the vertical path roller [2] to detach.

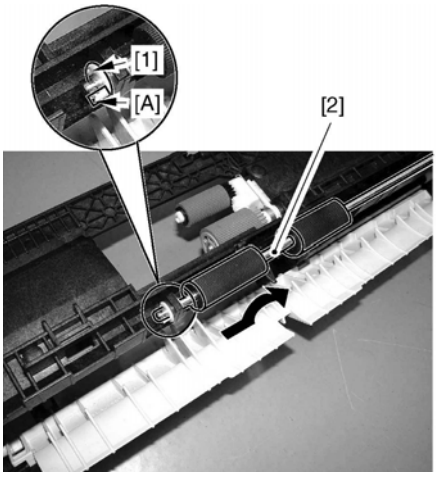

F-8-372

8.8.22 Duplex Feed Roller 2

8.8.22.1 Removing the Right Cover (rear)

iR2270 / iR2870 / iR3570 / iR4570 / / iR2270N / / iR2870N / / iR3570N / / iR4570N / iR2230 / / / iR3530 /

1) Open the pedestal right door [1]. (if equipped with a 2-Cassette Pedestal-Y2)
2) Open the right lower door [2].
3) Remove the 5 screws [3], and detach the right cover (rear) [4].

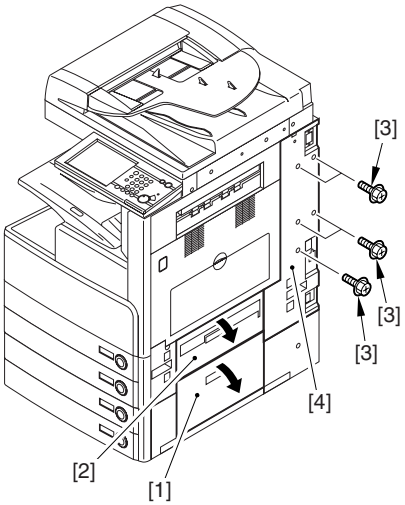

F-8-373

8.8.22.2 Removing the Right Door

iR3570 / iR4570 / / iR3570N / / iR4570N / iR2230 / / / iR3530 /

1) Open the right door.

F-8-374

2) Remove the screw [1], and detach the fixing plate [2].

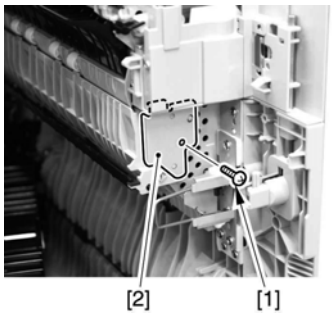

F-8-375

3) Remove the joint shaft [1], and free the extension delivery unit [2] from the right door.

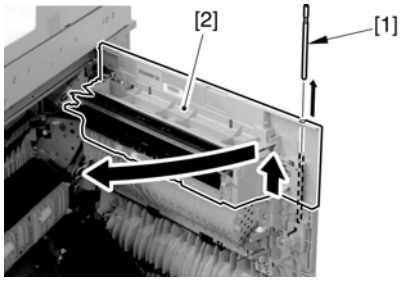

F-8-376

4) Disconnect the connector [1], and remove the reuse band [2]; then, remove the 2 screws (M4x8; RS tightening).

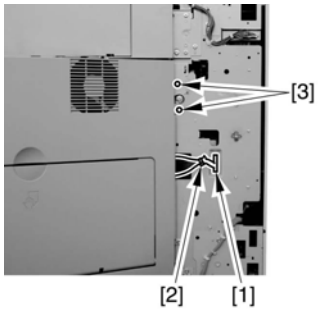

F-8-377

5) While freeing the hinge assembly [2], detach the right door.

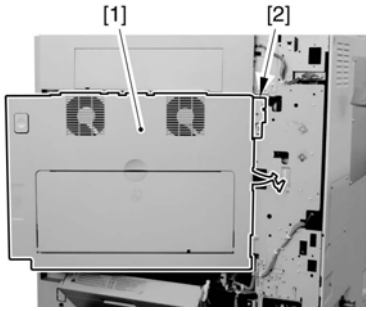

F-8-378

Attaching the Right Door

1) Match the hinge [1] found at the bottom of the right door against the lug.
2) Engage the hinge [2] found on the top of the right door with the hook found on the side plate.

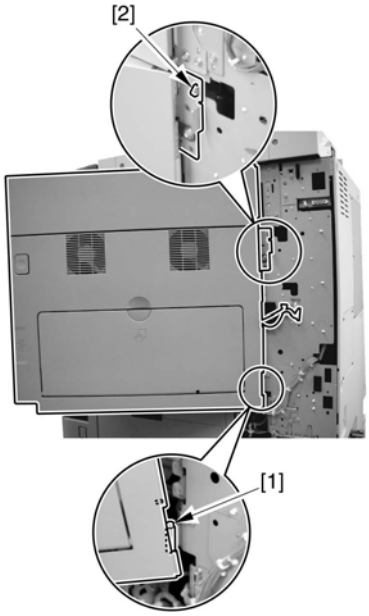

F-8-379

When tightening the 2 screws used to fix the hinge in place, be sure to close the right door first.

8.8.22.3 Removing the Right Door

iR2270 / iR2870 / / iR2270N / / iR2870N / iR2230 / / / iR3530 /

1) Open the right door.

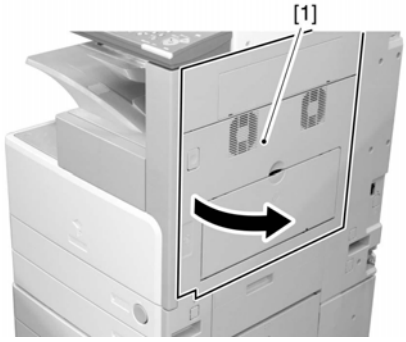

F-8-380

2) Remove the reuse band [1], and disconnect the connector [2].
3) Remove the 2 screws (M4x8; RS tightening), and detach the right door.

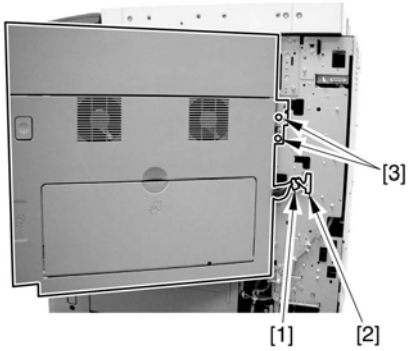

F-8-381

Attaching the Right Door

1) Match the hinge [1] found at the bottom of the right door against the lug.
2) Engage the hinge [2] found on the top of the right door with the hook found on the side plate.

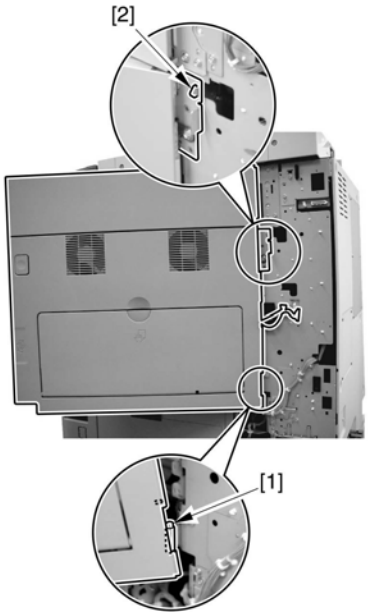

F-8-382

When tightening the 2 screws used to fix the hinge in place, be sure to close the right door first.

8.8.22.4 Removing the Duplex Feed Roller 2

iR2270 / iR2870 / iR3570 / iR4570 / / iR2270N / / iR2870N / / iR3570N / / iR4570N / iR2230 / / / iR3530 /

1) Free the coil spring [1] and, at the same time, remove the E-ring [2] to pull out the shaft [3]; then, detach the duplex feed frame [4].

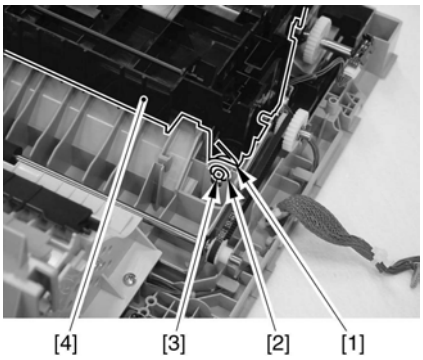

F-8-383

2) Remove the E-ring [1], and detach the one-way gear [2].

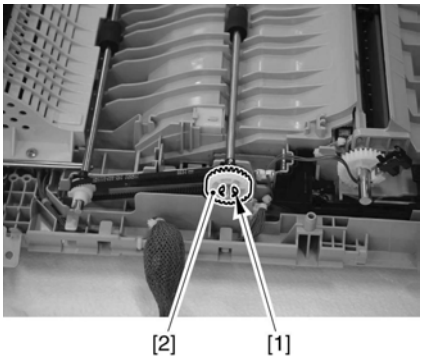

F-8-384

3) Remove the E-ring [1], and detach the duplex feed roller 2 [2].

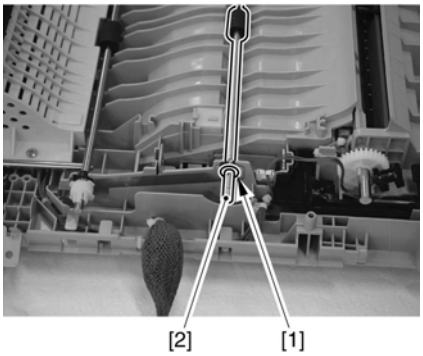

F-8-385

8.8.23 Duplex Feed Sensor

8.8.23.1 Removing the Right Cover (rear)

iR2270 / iR2870 / iR3570 / iR4570 / / iR2270N / / iR2870N / / iR3570N / / iR4570N / iR2230 / / / iR3530 /

1) Open the pedestal right door [1]. (if equipped with a 2-Cassette Pedestal-Y2)
2) Open the right lower door [2].
3) Remove the 5 screws [3], and detach the right cover (rear) [4].

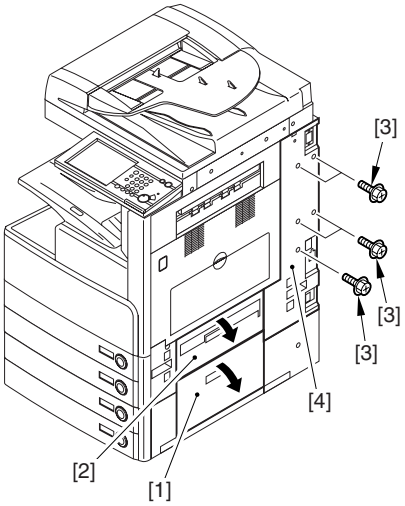

F-8-386

8.8.23.2 Removing the Right Door

iR3570 / iR4570 / / iR3570N / / iR4570N / iR2230 / / / iR3530 /

1) Open the right door.

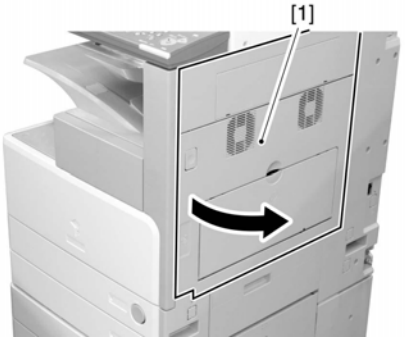

F-8-387

2) Remove the screw [1], and detach the fixing plate [2].

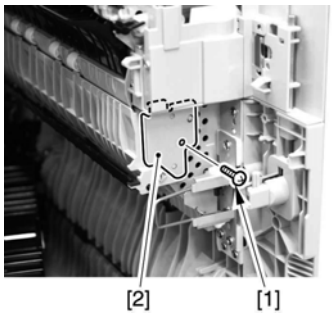

F-8-388

3) Remove the joint shaft [1], and free the extension delivery unit [2] from the right door.

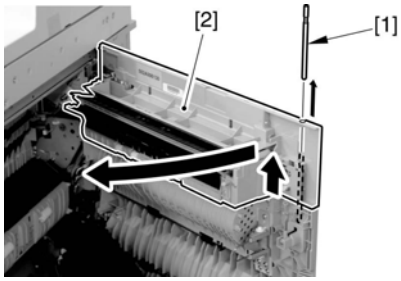

F-8-389

4) Disconnect the connector [1], and remove the reuse band [2]; then, remove the 2 screws (M4x8; RS tightening).

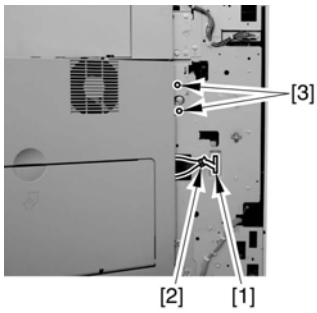

F-8-390

5) While freeing the hinge assembly [2], detach the right door.

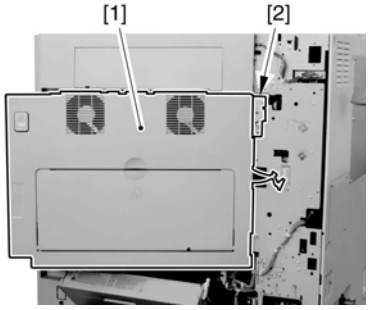

F-8-391

Attaching the Right Door

1) Match the hinge [1] found at the bottom of the right door against the lug.
2) Engage the hinge [2] found on the top of the right door with the hook found on the side plate.

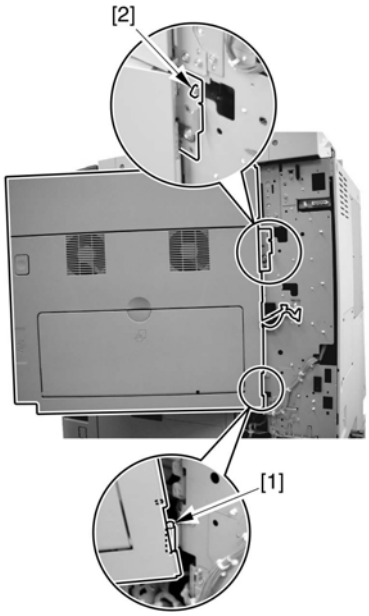

F-8-392

When tightening the 2 screws used to fix the hinge in place, be sure to close the right door first.

8.8.23.3 Removing the Right Door

iR2270 / iR2870 / / iR2270N / / iR2870N / iR2230 / / / iR3530 /

1) Open the right door.

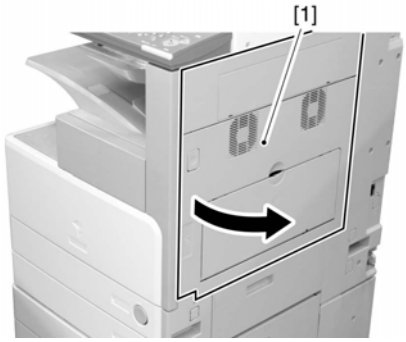

F-8-393

2) Remove the reuse band [1], and disconnect the connector [2].
3) Remove the 2 screws (M4x8; RS tightening), and detach the right door.

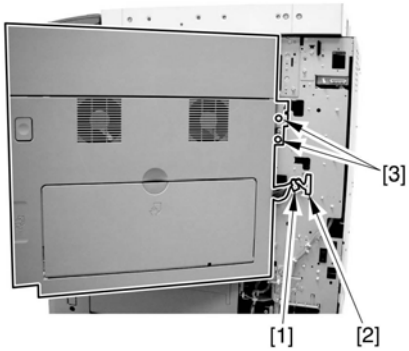

F-8-394

Attaching the Right Door

1) Match the hinge [1] found at the bottom of the right door against the lug.
2) Engage the hinge [2] found on the top of the right door with the hook found on the side plate.

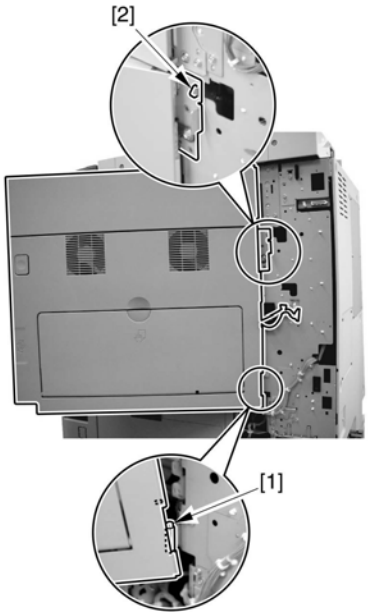

F-8-395

When tightening the 2 screws used to fix the hinge in place, be sure to close the right door first.

8.8.23.4 Removing the Duplex Feed Sensor

iR2270 / iR2870 / iR3570 / iR4570 / / iR2270N / / iR2870N / / iR3570N / / iR4570N / iR2230 / / / iR3530 /

1) Remove the 2 screws (w/ collar) [1], and detach the transfer frame [2].

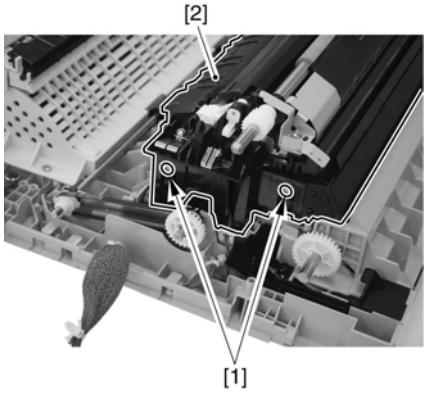

F-8-396

2) Disconnect the connector [1], and remove the duplex feed sensor [2].

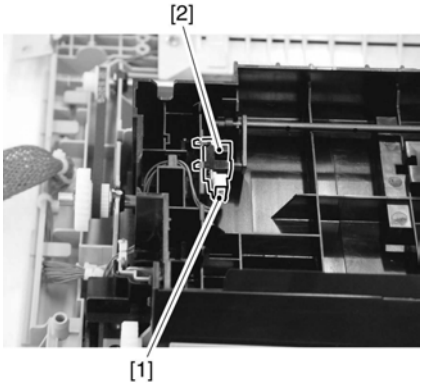

F-8-397

8.8.24 Duplex Feed Clutch

8.8.24.1 Removing the Rear Cover

iR2270 / iR2870 / / iR2270N / / iR2870N / iR2230 / /

1) Remove the 13 screws [1] and then the other screw [2]; then, detach the rear cover [3].

If the left cover (lower) has already been detached, the screw [3] should also have been removed.

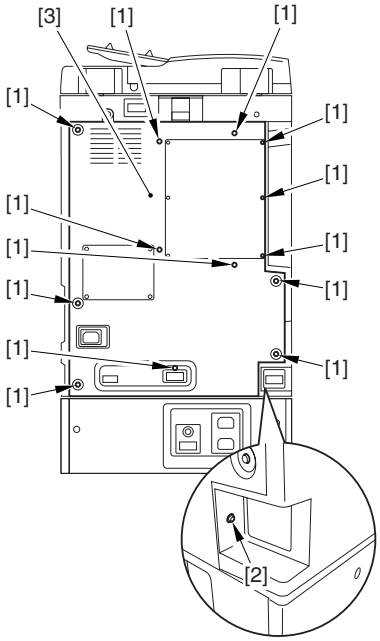

F-8-398

8.8.24.2 Removing the Duplex Feed Clutch

iR2270 / iR2870 / / iR2270N / / iR2870N / iR2230 / /

1) Disconnect the connector [1], and remove the 2 screws [2]; then, detach the clutch fixing plate [3].

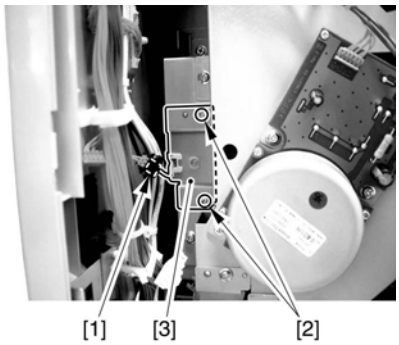

F-8-399

2) Remove the duplex feed clutch [1].

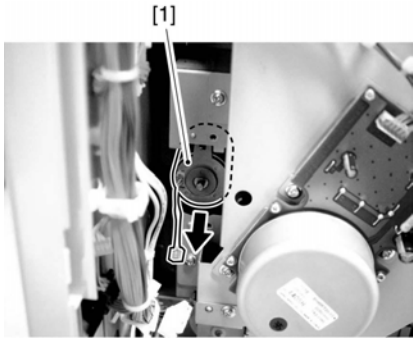

F-8-400

8.8.25 Delivery Assembly 1

8.8.25.1 Removing the Right Cover (rear)

iR2270 / iR2870 / iR3570 / iR4570 / / iR2270N / / iR2870N / / iR3570N / / iR4570N / iR2230 / / / iR3530 /

1) Open the pedestal right door [1]. (if equipped with a 2-Cassette Pedestal-Y2)
2) Open the right lower door [2].
3) Remove the 5 screws [3], and detach the right cover (rear) [4].

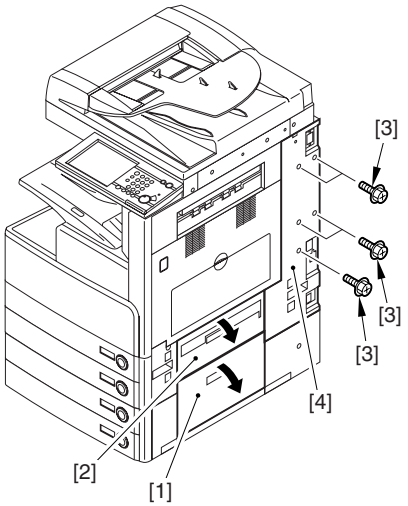

F-8-401

8.8.25.2 Removing the Front Cover Unit

iR2270 / iR2870 / iR3570 / iR4570 / / iR2270N / / iR2870N / / iR3570N / / iR4570N / iR2230 / / / iR3530 /

1) Open the front cover [1].

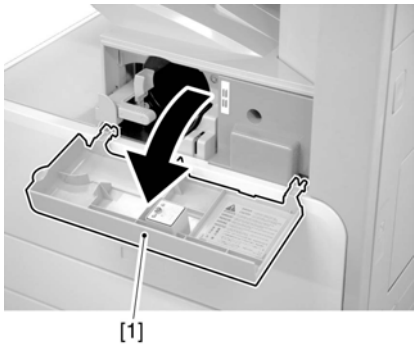

F-8-402

2) Remove the face cover rubber [1].
3) Remove the binding screw [2].
4) Remove the RS tightening screw [3].
5) Detach the front cover unit [4] by moving it in the direction of the arrow.

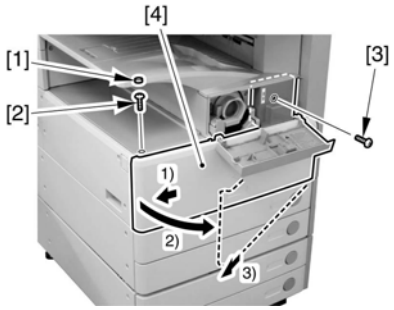

F-8-403

8.8.25.3 Removing the Delivery Tray

iR2270 / iR2870 / iR3570 / iR4570 / / iR2270N / / iR2870N / / iR3570N / / iR4570N / iR2230 / / / iR3530 /

1) Loosen the screw [1].
2) Remove the screw [2].
3) Detach the delivery tray [3].

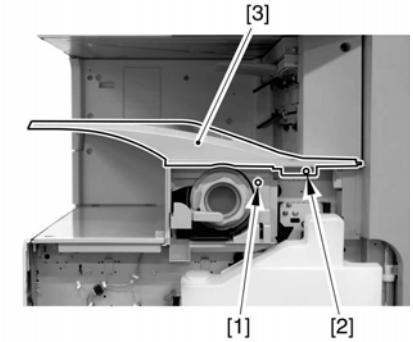

F-8-404

8.8.25.4 Removing the Right Door

iR3570 / iR4570 / / iR3570N / / iR4570N / iR2230 / / / iR3530 /

1) Open the right door.

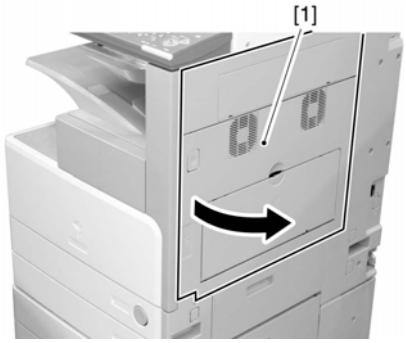

F-8-405

2) Remove the screw [1], and detach the fixing plate [2].

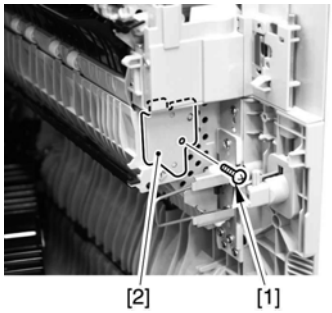

F-8-406

3) Remove the joint shaft [1], and free the extension delivery unit [2] from the right door.

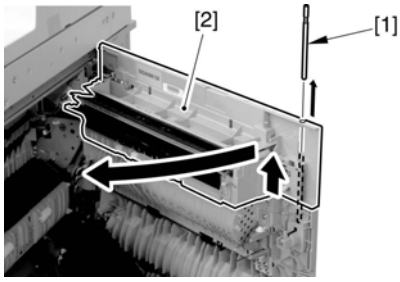

F-8-407

4) Disconnect the connector [1], and remove the reuse band [2]; then, remove the 2 screws (M4x8; RS tightening).

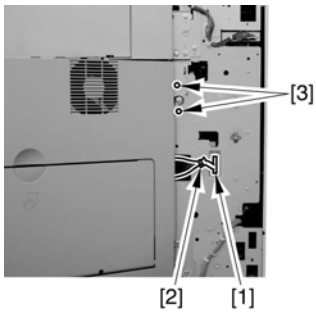

F-8-408

5) While freeing the hinge assembly [2], detach the right door.

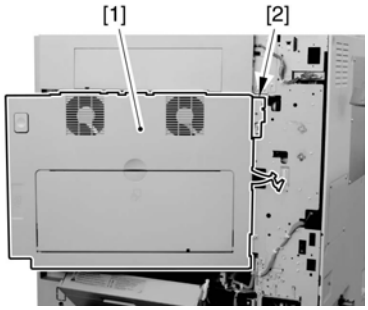

F-8-409

Attaching the Right Door

1) Match the hinge [1] found at the bottom of the right door against the lug.
2) Engage the hinge [2] found on the top of the right door with the hook found on the side plate.

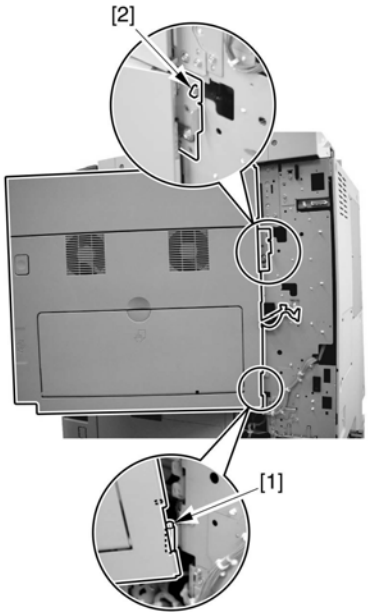

F-8-410

When tightening the 2 screws used to fix the hinge in place, be sure to close the right door first.

8.8.25.5 Removing the Right Door

iR2270 / iR2870 / / iR2270N / / iR2870N / iR2230 / / / iR3530 /

1) Open the right door.

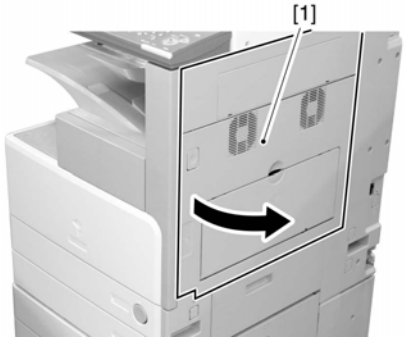

F-8-411

2) Remove the reuse band [1], and disconnect the connector [2].
3) Remove the 2 screws (M4x8; RS tightening), and detach the right door.

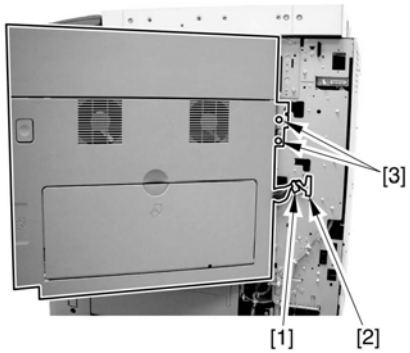

F-8-412

Attaching the Right Door

1) Match the hinge [1] found at the bottom of the right door against the lug.
2) Engage the hinge [2] found on the top of the right door with the hook found on the side plate.

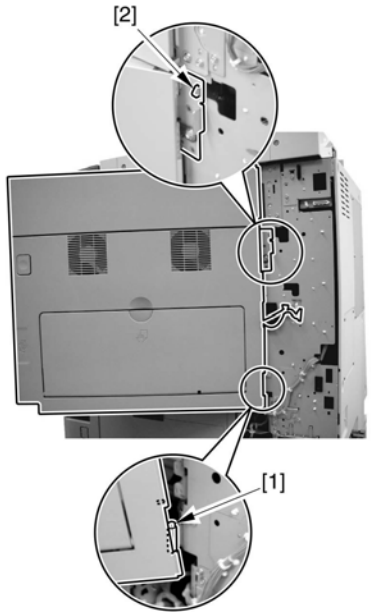

F-8-413

When tightening the 2 screws used to fix the hinge in place, be sure to close the right door first.

8.8.25.6 Removing the Extension Delivery Kit

iR3570 / iR4570 / / iR3570N / / iR4570N / iR2230 / / / iR3530 /

1) Remove the self-tapping screw [1], and detach the upper inside cover [2].

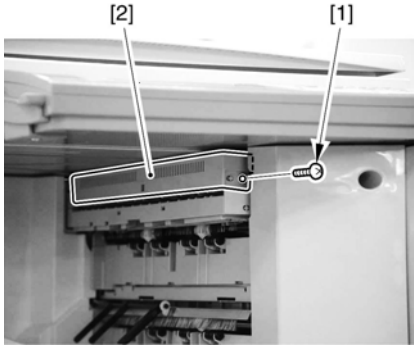

F-8-414

2) Free the harness [2] from the cable clamp [3], and detach the 2 re-use bands.
3) Disconnect the connector [1] from the machine terminal.

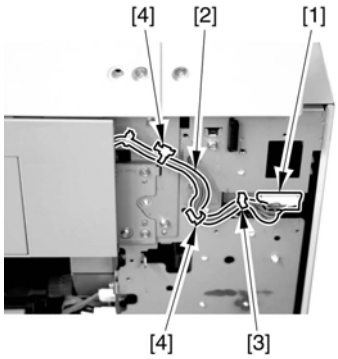

F-8-415

4) Open the Extension Delivery Kit [1].
5) Remove the 2 screws [3].
6) Remove the 2 screws [2], and close the Extension Delivery Kit.

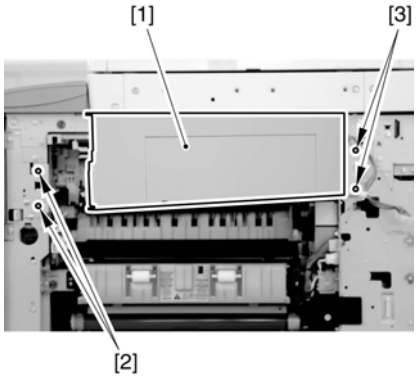

F-8-416

7) Pull out the Extension Delivery Kit [1] from the machine.

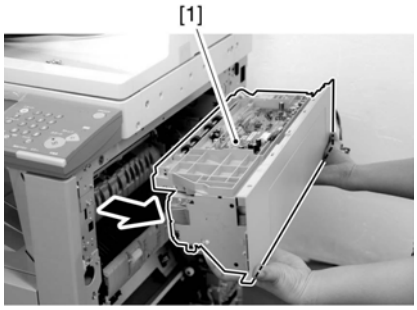

F-8-417

8.8.25.7 Removing the Delivery Assembly 1

iR2270 / iR2870 / iR3570 / iR4570 / / iR2270N / / iR2870N / / iR3570N / / iR4570N / iR2230 / / / iR3530 /

1) Remove the delivery assembly 1 [1]. (3 screws [2]; 2 stepped screws on the left)

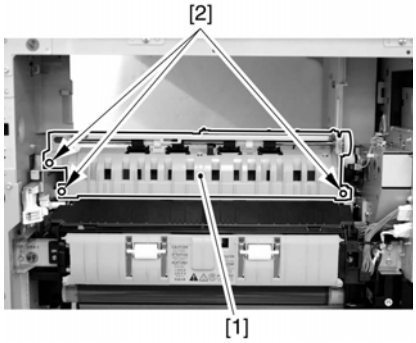

F-8-418

8.8.26 Fixing/ Delivery Drive Assembly

8.8.26.1 Removing the Right Cover (rear)

iR2270 / iR2870 / iR3570 / iR4570 / / iR2270N / / iR2870N / / iR3570N / / iR4570N / iR2230 / / / iR3530 /

1) Open the pedestal right door [1]. (if equipped with a 2-Cassette Pedestal-Y2)
2) Open the right lower door [2].
3) Remove the 5 screws [3], and detach the right cover (rear) [4].

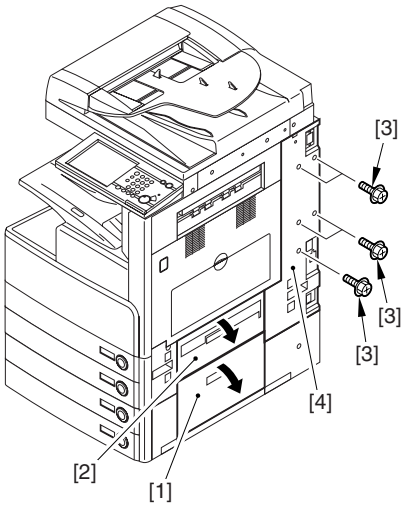

F-8-419

8.8.26.2 Removing the Front Cover Unit

iR2270 / iR2870 / iR3570 / iR4570 / / iR2270N / / iR2870N / / iR3570N / / iR4570N / iR2230 / / / iR3530 /

1) Open the front cover [1].

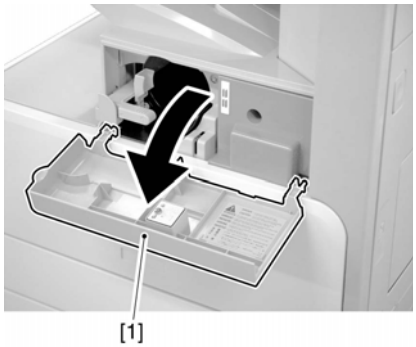

F-8-420

2) Remove the face cover rubber [1].
3) Remove the binding screw [2].
4) Remove the RS tightening screw [3].
5) Detach the front cover unit [4] by moving it in the direction of the arrow.

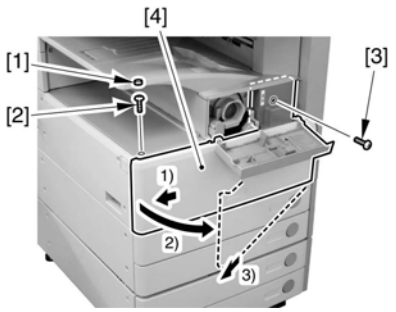

F-8-421

8.8.26.3 Removing the Delivery Tray

iR2270 / iR2870 / iR3570 / iR4570 / / iR2270N / / iR2870N / / iR3570N / / iR4570N / iR2230 / / / iR3530 /

1) Loosen the screw [1].
2) Remove the screw [2].
3) Detach the delivery tray [3].

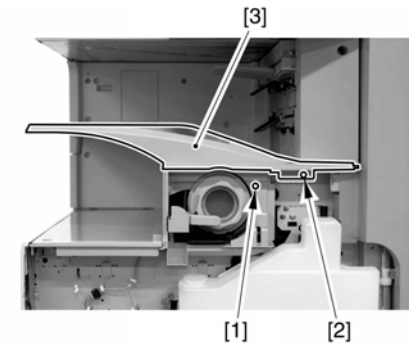

F-8-422

8.8.26.4 Removing the Right Door

iR3570 / iR4570 / / iR3570N / / iR4570N / iR2230 / / / iR3530 /

1) Open the right door.

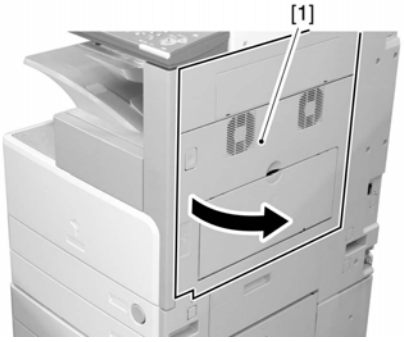

F-8-423

2) Remove the screw [1], and detach the fixing plate [2].

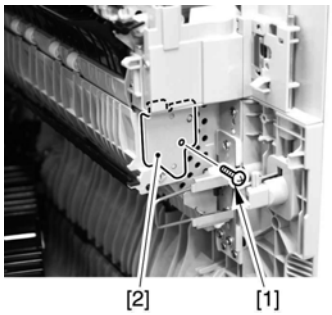

F-8-424

3) Remove the joint shaft [1], and free the extension delivery unit [2] from the right door.

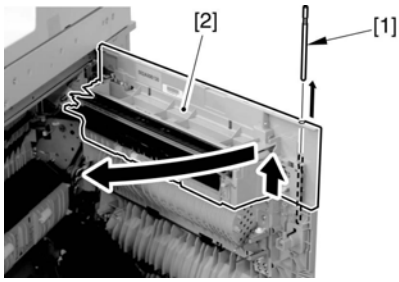

F-8-425

4) Disconnect the connector [1], and remove the reuse band [2]; then, remove the 2 screws (M4x8; RS tightening).

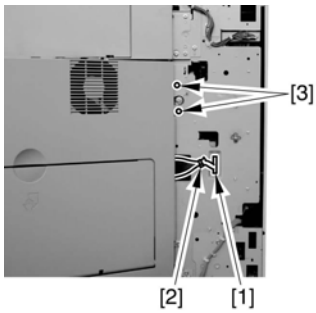

F-8-426

5) While freeing the hinge assembly [2], detach the right door.

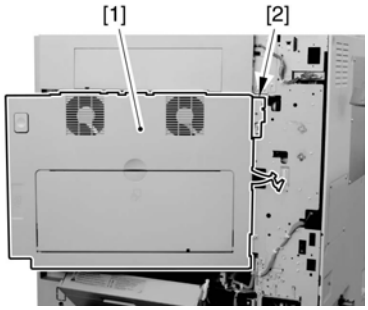

F-8-427

Attaching the Right Door

1) Match the hinge [1] found at the bottom of the right door against the lug.
2) Engage the hinge [2] found on the top of the right door with the hook found on the side plate.

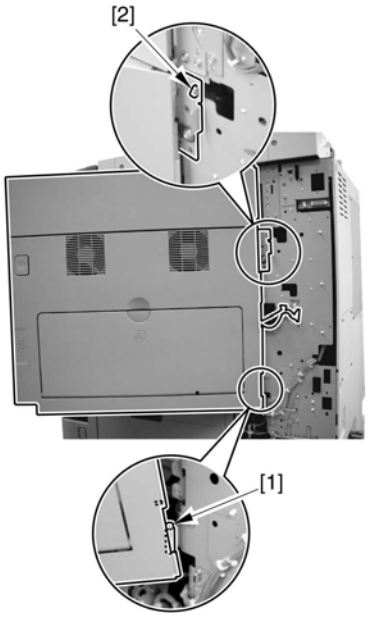

F-8-428

When tightening the 2 screws used to fix the hinge in place, be sure to close the right door first.

8.8.26.5 Removing the Right Door

iR2270 / iR2870 / / iR2270N / / iR2870N / iR2230 / / / iR3530 /

1) Open the right door.

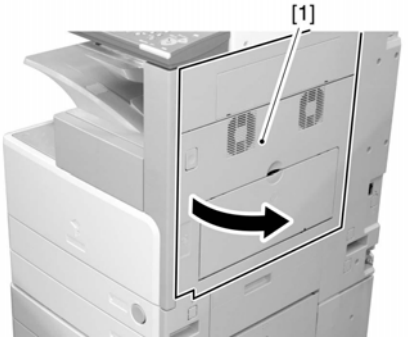

F-8-429

2) Remove the reuse band [1], and disconnect the connector [2].
3) Remove the 2 screws (M4x8; RS tightening), and detach the right door.

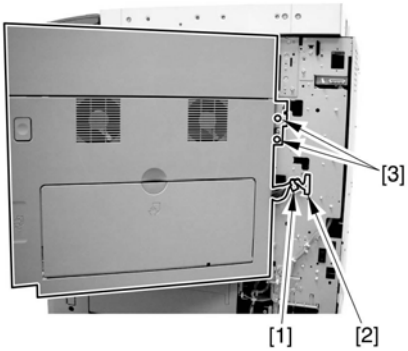

F-8-430

Attaching the Right Door
1) Match the hinge [1] found at the bottom of the right door against the lug.
2) Engage the hinge [2] found on the top of the right door with the hook found on the side plate.

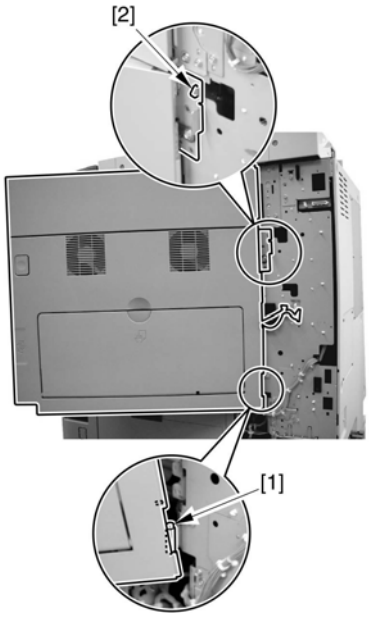

F-8-431

When tightening the 2 screws used to fix the hinge in place, be sure to close the right door first.

8.8.26.6 Removing the Delivery Assembly 1

iR2270 / iR2870 / iR3570 / iR4570 / / iR2270N / / iR2870N / / iR3570N / / iR4570N / iR2230 / / / iR3530 /

1) Remove the delivery assembly 1 [1]. (3 screws [2]; 2 stepped screws on the left)

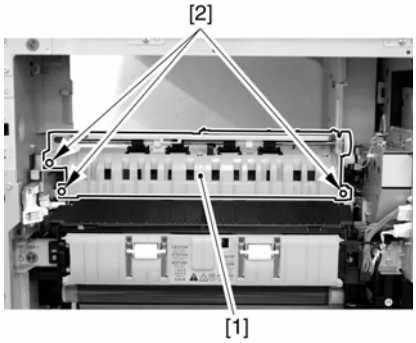

F-8-432

8.8.26.7 Removing the Fixing Unit

iR2270 / iR2870 / iR3570 / iR4570 / / iR2270N / / iR2870N / / iR3570N / / iR4570N / iR2230 / / / iR3530 /

1) Remove the screw [1], and detach the harness cover [2].

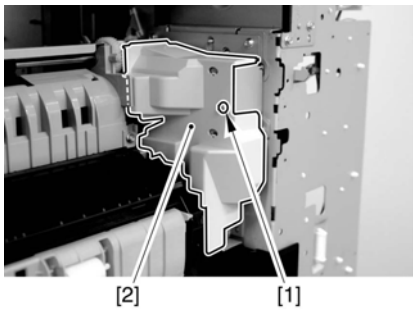

F-8-433

2) Disconcert the 3 connectors [1].

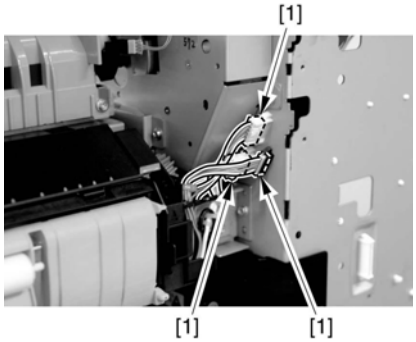

F-8-434

3) Remove the 4 screws [1].

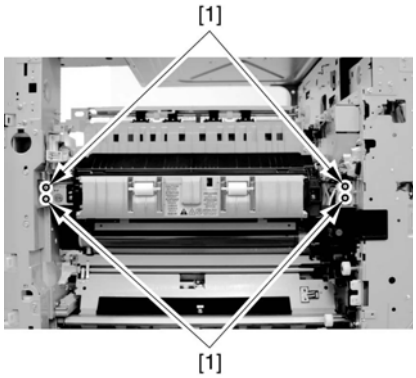

F-8-435

4) Detach the fixing unit [1] toward the front.

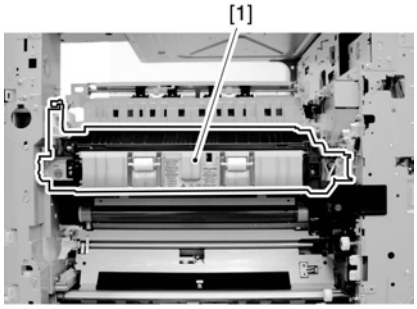

F-8-436

When mounting the harness cover [1], be sure to keep the harness [2] within the space [3] indicated in the figure so that the harness [2] will not come into contact with the gear [4].

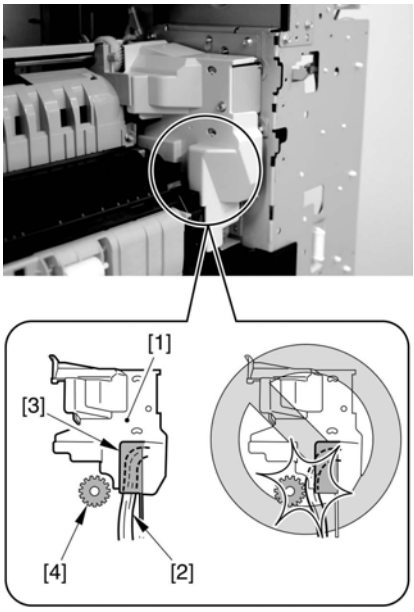

F-8-437

Do not touch the screw [1]. Turning it will change the pressure of the fixing assembly, which cannot be adjusted in the field, necessitating the replacement of the fixing assembly.

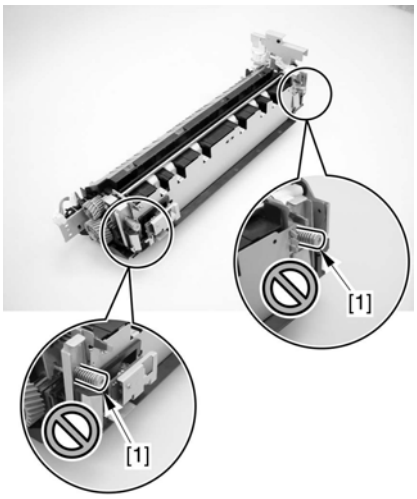

F-8-438

8.8.26.8 Removing the Fixing/Delivery Drive Assembly

iR2270 / iR2870 / iR3570 / iR4570 / / iR2270N / / iR2870N / / iR3570N / / iR4570N / iR2230 / / / iR3530 /

1) Remove the screw [1], and detach the harness cover [2].

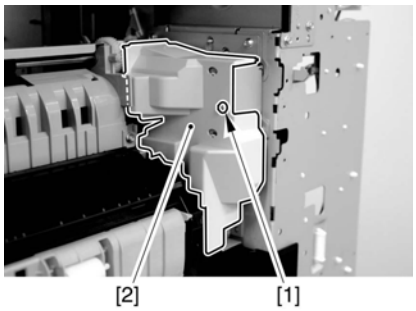

F-8-439

2) Disconnect the connector [1] of the harness, and free the harness from the cable clamp [2].

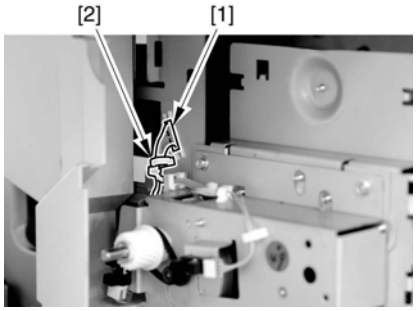

F-8-440

3) Remove the 4 screws [1], and detach the fixing/delivery drive assembly 1 [2].

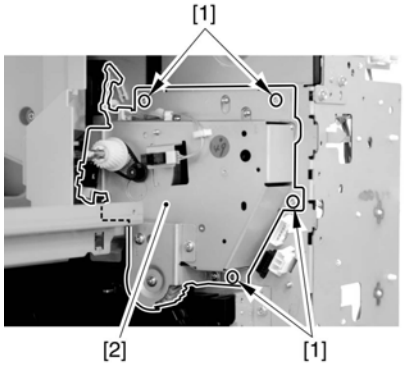

F-8-441

8.8.27 Separation Roller

8.8.27.1 Removing the Pickup Roller/Feed Roller/ Separation Roller

iR2270 / iR2870 / iR3570 / iR4570 / / iR2270N / / iR2870N / / iR3570N / / iR4570N / iR2230 / / / iR3530 /

1) Slide out the cassette.
2) Open the right door (in the case of the separation roller).
3) Pick the tabs of the individual rollers, and detach the pickup roller [1], feed roller [2], and separation roller [3].

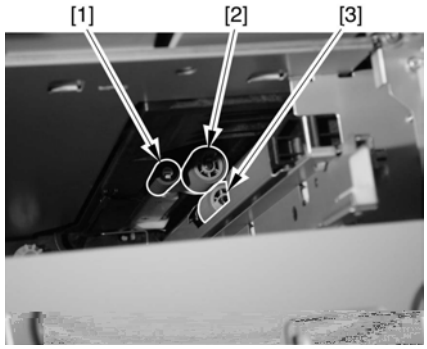

F-8-442

Point to Note When Replacing the Feed/Separation Roller 1
The collar (roller core) of the machine's feed/separation roller is black.

Chapter 9 Fixing System

Contents

9.1 Construction 9-1
9.1.1 Specifications, Control Mechanisms, and Functions 9-1
9.1.2 Major Components 9-1
9.2 Basic Sequence 9-1
9.2.1 Power-On Sequence 9-1
9.2.2 Down Sequence 9-2
9.3 Various Control Mechanisms 9-2
9.3.1 Controlling the Speed of the Fixing Film 9-2
9.3.1.1 Controlling the Fixing Film Speed in Response to Low Temperature 9-2
9.3.1.2 Controlling the Fixing Film Speed 9-2
9.3.2 Controlling the Fixing Film Temperature 9-2
9.3.2.1 Controlling the Power Supply in Response to Low Temperature 9-2
9.3.2.2 Controlling the Feeding in Response to Low Temperature 9-2
9.3.2.3 Controlling the Power Supply at Start-Up 9-2
9.3.2.4 Copying Temperature Control 9-3
9.3.2.5 Changing the Fixing Film Control Temperature 9-3
9.3.2.6 Temperature Control in Response to Automatic Double-Sided Copy 9-3
9.3.2.7 Temperature Control in Response to Change of Paper Size 9-3
9.3.3 Cleaning 9-3
9.3.3.1 Fixing Film Cleaning 9-3
9.3.4 Detecting the Passage of Paper 9-4
9.3.4.1 Detecting the Passage of Paper 9-4
9.4 Protective Functions 9-4
9.4.1 Protective Functions 9-4
9.4.2 Detecting an Error 9-5
9.5 Parts Replacement Procedure 9-5
9.5.1 Fixing Unit 9-5
9.5.1.1 Removing the Right Cover (rear) 9-5
9.5.1.2 Removing the Right Door 9-5
9.5.1.3 Removing the Right Door 9-6
9.5.1.4 Removing the Fixing Unit 9-6
9.5.2 Pressure Roller 9-7
9.5.2.1 Removing the inside delivery cover unit (old) 9-7
9.5.2.2 Removing the inside delivery cover unit (new) 9-9
9.5.2.3 Removing the Grounding Plate 9-9
9.5.2.4 Removing the Fixing Film Cover 9-9
9.5.2.5 Removing the Left Side Plate 9-10
9.5.2.6 Releasing the Locking Plate 9-11
9.5.2.7 Removing the Fixing Film Unit 9-11
9.5.2.8 Removing the Inlet Guide 9-12
9.5.2.9 Removing the Pressure Roller 9-12
9.5.3 Cleaning Roller 9-13
9.5.3.1 Removing the inside delivery cover unit (old) 9-13
9.5.3.2 Removing the inside delivery cover unit (new) 9-15
9.5.3.3 Removing the Cleaning Roller 9-15
9.5.4 Fixing Film 9-15
9.5.4.1 Removing the inside delivery cover unit (old) 9-15
9.5.4.2 Removing the inside delivery cover unit (new) 9-17
9.5.4.3 Removing the Grounding Plate 9-17
9.5.4.4 Removing the Fixing Film Cover 9-17
9.5.4.5 Removing the Left Side Plate 9-17
9.5.4.6 Releasing the Locking Plate 9-18
9.5.4.7 Removing the Fixing Film Unit 9-19

9.5.5 Internal Delivery Sensor 9-20
9.5.5.1 Removing the inside delivery cover unit (old) 9-20
9.5.5.2 Removing the inside delivery cover unit (new) 9-21
9.5.5.3 Removing the Grounding Plate 9-21
9.5.5.4 Removing the Fixing Film Cover 9-21
9.5.5.5 Removing the Left Side Plate 9-22
9.5.5.6 Releasing the Locking Plate 9-23
9.5.5.7 Removing the Fixing Film Unit 9-23
9.5.5.8 Removing the Inside Delivery Sensor 9-24
9.5.6 Fixing Film Sensor 9-24
9.5.6.1 Removing the inside delivery cover unit (old) 9-24
9.5.6.2 Removing the inside delivery cover unit (new) 9-26
9.5.6.3 Removing the Grounding Plate 9-26
9.5.6.4 Removing the Fixing Film Sensor 9-26

9.1 Construction

9.1.1 Specifications, Control Mechanisms, and Functions

iR2270 / iR2870 / iR3570 / iR4570 / / iR2270N / / iR2870N / / iR3570N / / iR4570N / iR2230 / / / iR3530 /

The machine's fixing system has the following major functions:

T-9-1

Item	Description
Fixing method	by fixing film + pressure roller
Fixing heater	plate-type heater
Control temperature	180 deg C (at PSTBY)
Fixing drive control	by control of fixing film speed
Fixing temperature detection	by main thermistor
Protective mechanism	by sub thermistor
Cleaning method	by cleaning roller

9.1.2 Major Components

iR2270 / iR2870 / iR3570 / iR4570 / / iR2270N / / iR2870N / / iR3570N / / iR4570N / iR2230 / / / iR3530 /

The machine's fixing system has the following major components:

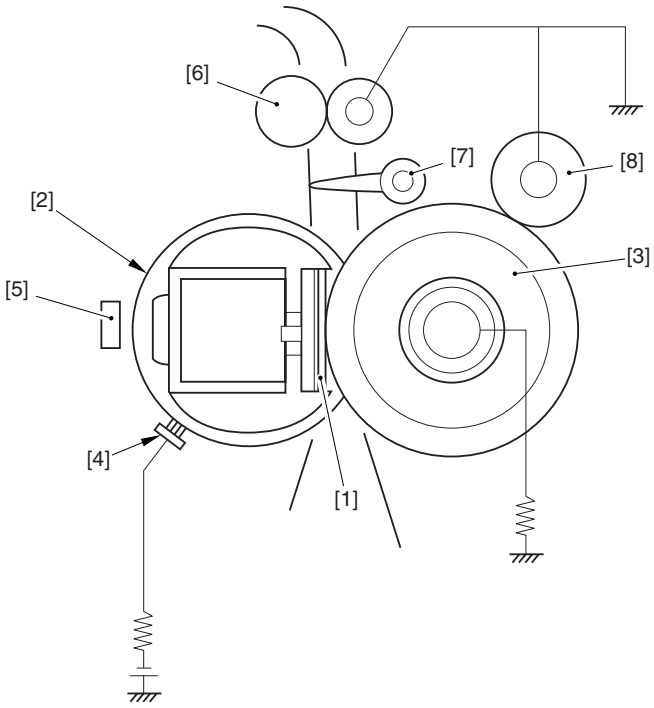

F-9-1

[1] Fixing heater
[2] Fixing film unit
[3] Pressure roller
[4] Power supply brush
[5] Film sensor
[6] Delivery roller
[7] Fixing inside delivery sensor flag
[8] Cleaning roller

9.2 Basic Sequence

9.2.1 Power-On Sequence

iR2270 / iR2870 / iR3570 / iR4570 / / iR2270N / / iR2870N / / iR3570N / / iR4570N / iR2230 / / / iR3530 /

If the thermistor detection temperature is less than 100 deg C when the power is turned on or the sleep mode is released, the control described below is performed.
1. Increases the speed of the fixing motor in phases (1/4 speed to 1/2 speed and then to normal speed).
2. Performs the start-up current control.
3. Performs the temperature control at 200 deg C for 10 sec.
4. Stops the fixing motor. When the fixing motor is stopped, the fixing temperature control is also stopped, and the machine enters the stand-by mode.

When the print preparation request is received during wait time, the control described below is performed.
1. Increases the speed of the fixing motor in phases (1/4 speed to 1/2 speed and then to normal speed).
2. Performs the start-up current control.
3. Starts measuring the time passed after the machine reaches the target temperature T deg C.
Target temperature T deg C = 200 deg C (iR3570/iR4570): 190 deg C (iR2270/iR2870)
4. Starts feeding in the case of printing in plain paper mode.
5. Starts feeding when 5 sec have passed after the machine reached the target temperature in the case of printing in special paper mode.

9.2.2 Down Sequence

iR2270 / iR2870 / iR3570 / iR4570 / / iR2270N / / iR2870N / / iR3570N / / iR4570N / iR2230 / / / iR3530 /

Down sequence is to prevent the machine from operating when the temperature of the end portion of the fixing film exceeds a specific temperature as when using small-size paper continuously. The details of the control are described below:
1. The sub thermistor detection temperature is 275 deg C or more.
2. Reduces the number of sheets passed by increasing the paper interval.
3. Returns the number of sheets to the normal when the sub thermistor detection temperature is 265 deg C or less.

9.3 Various Control Mechanisms

9.3.1 Controlling the Speed of the Fixing Film

9.3.1.1 Controlling the Fixing Film Speed in Response to Low Temperature

iR2270 / iR2870 / iR3570 / iR4570 / / iR2270N / / iR2870N / / iR3570N / / iR4570N / iR2230 / / / iR3530 /

As in the morning, driving the fixing film in a low-temperature environment without warm-up could cause the film to become displaced. In consideration of this fact, the fixing motor is started up in phases (1/4 speed to 1/2 speed and then to normal speed).

9.3.1.2 Controlling the Fixing Film Speed

iR2270 / iR2870 / iR3570 / iR4570 / / iR2270N / / iR2870N / / iR3570N / / iR4570N / iR2230 / / / iR3530 /

The rotation cycle of the fixing film is monitored to control the fixing motor to a specific speed.
When the fixing film rotates and, as a result, the reflecting member positioned in the loop of the film approaches the speed sensor, the machine detects the rotation of the fixing film.

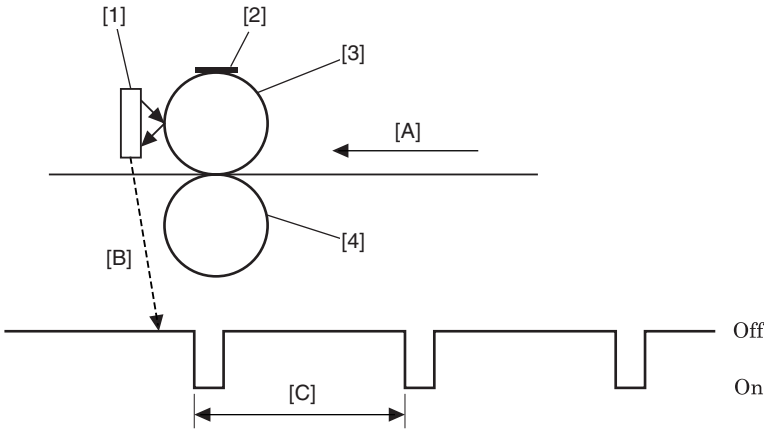

F-9-2

[1]Speed sensor
[2]Reflecting member
[3]Fixing film (driven by fixing motor)
[4]Pressure roller
[A]Paper feed direction
[B]Speed sensor output
[C]1 rotation of fixing film
Timing of Control
The speed of fixing film rotation is monitored at all times after the fixing motor goes on and its speed reaches a specific value. The speed of the fixing motor is then controlled so that it remains at a specific level at all times.

9.3.2 Controlling the Fixing Film Temperature

9.3.2.1 Controlling the Power Supply in Response to Low Temperature

iR2270 / iR2870 / iR3570 / iR4570 / / iR2270N / / iR2870N / / iR3570N / / iR4570N / iR2230 / / / iR3530 /

In a low temperature environment, the heater is supplied with power before the fixing film is driven so as to soften the grease applied to the fixing film. The mechanism of control is as follows:
If the temperature of the fixing film detected by the thermistor is lower than a specific level, the heater is supplied with power for a specific period of time before a normal start-up mechanism is initiated.
If the temperature of the fixing film detected by the thermistor is higher than a specific level, the normal start-up mechanism is imitated.

9.3.2.2 Controlling the Feeding in Response to Low Temperature

iR2270 / iR2870 / iR3570 / iR4570 / / iR2270N / / iR2870N / / iR3570N / / iR4570N / iR2230 / / / iR3530 /

In a low temperature environment, the feeding timing is changed according to the temperature detected by the environment sensor so as to enhance the fixing capability. The details are described below.
When the environment sensor detection temperature is 13 deg C or less, the feeding timing is delayed by 5000 msec.

In thick paper mode, the feeding timing is not changed even if the environment sensor detection temperature is 13 deg C or less.

9.3.2.3 Controlling the Power Supply at Start-Up

iR2270 / iR2870 / iR3570 / iR4570 / / iR2270N / / iR2870N / / iR3570N / / iR4570N / iR2230 / / / iR3530 /

When the thermistor detection temperature is 180 deg C or less, the power control to compensate for the heater, (varying according to input voltage and a heater resistor value) is performed so as to raise the temperature of the fixing unit to the required temperature for fixing in a short time.
1. starts 65% power supply.

2. uses thermistor reading = T1 (deg C) occurring 400 msec after the start of 65% power supply.
3)uses thermistor reading = T2 (deg C) occurring 500 msec after the start of 65% power supply.
4. computes the difference between T2 and T1, refers to a power supply ratio table to compute a power supply ratio X (%), and uses the result.
5. uses the thermistor reading = T3 (deg C) occurring 200 msec after the start of X (%) power supply.
6. uses the thermistor reading = T4 (deg C) occurring 300 msec after the start of the X (%) power supply.
7. computes the difference between T4 and T2, refers to a power supply ratio table, computes a power supply ratio Y (%), and uses the result.
8. repeats step 5 through 7 until the start-up control target temperature is reached.
9. when the start-up control temperature is reached, shifts to copying temperature control.

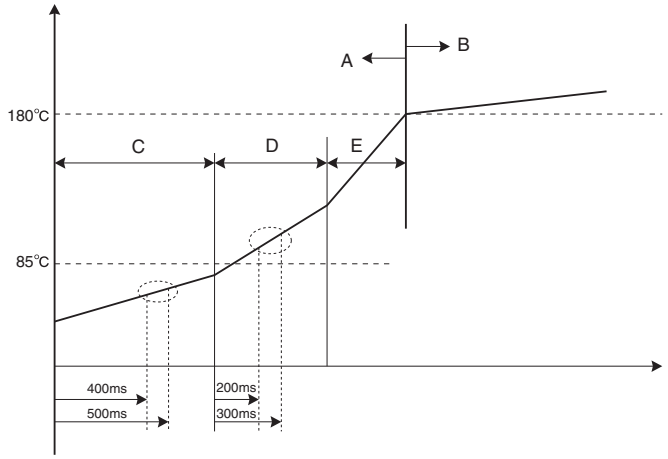

F-9-3

A: start-up control
B: copying temperature control
C: 65 (%) power supply
D: X (%) power supply
E: Y (%) power supply

9.3.2.4 Copying Temperature Control

iR2270 / iR2870 / iR3570 / iR4570 / / iR2270N / / iR2870N / / iR3570N / / iR4570N / iR2230 / / / iR3530 /

The machine uses this mechanism to control the temperature of the fixing heater to an optimum level while a recording medium is passing through the fixing film assembly; specifically,
1.the machine varies the power ratio in relation to the difference between the temperature detected by the thermistor and the target control temperature.
2.if the temperature detected by the thermistor is higher than the target control temperature for a specific period of time (0.6 sec), the machine will decrease the power ratio; if lower, it will increase the power rate.

9.3.2.5 Changing the Fixing Film Control Temperature

iR2270 / iR2870 / iR3570 / iR4570 / / iR2270N / / iR2870N / / iR3570N / / iR4570N / iR2230 / / / iR3530 /

When a fixing failure occurs or creases appear, the fixing film control temperature can be changed in the service mode as shown below.
COPIER> OPTION> BODY> TEMP-CON (to switch the fixing temperature mode for heavy paper)
COPIER> OPTION> BODY> TEMPCON2 (to switch the fixing temperature mode)
0: OFF (default), 1: -10 deg C, 2: -6 deg C, 3: -3 deg C, 4: +3 deg C, 5: +6 deg C, 6: +10 deg C, 7: 15 deg C

9.3.2.6 Temperature Control in Response to Automatic Double-Sided Copy

iR2270 / iR2870 / iR3570 / iR4570 / / iR2270N / / iR2870N / / iR3570N / / iR4570N / iR2230 / / / iR3530 /

The second side of an automatic double-sided copy requires lower control temperature in comparison with the first side. For this reason, the control temperature is lowered for the second side of an automatic double-sided copy so as to prevent adverse effects such as rises in temperature.

9.3.2.7 Temperature Control in Response to Change of Paper Size

iR2270 / iR2870 / iR3570 / iR4570 / / iR2270N / / iR2870N / / iR3570N / / iR4570N / iR2230 / / / iR3530 /

The machine has a function to switch the paper size during continuous mode such as in rotation sort. When small-size paper is qenerated continuously, the temperature of the end portion of the fixing film rises. Immediately thereafter, if large-size paper is passed, high-temperature offset might occur at the end portion where the temperature is likely to have risen. To prevent high-temperature offset, the control temperature is changed when the paper size chanqes.

9.3.3 Cleaning

9.3.3.1 Fixing Film Cleaning

iR2270 / iR2870 / iR3570 / iR4570 / / iR2270N / / iR2870N / / iR3570N / / iR4570N / iR2230 / / / iR3530 /

Purpose
In the event of a jam or when wear on the fixing film advances, the fixing film is rotated idly for collection of toner from both the film and the pressure roller to the cleaning roller.
The timing of control is as follows:
1. If the reading of the cleaning counter has exceeded the interval (expressed in terms of the number of sheets), the machine starts cleaning with the fixing motor rotating at 1/4 speed. The length, timing, and intervals of cleaning may be set in service mode: COPIER>OPTION>BODY>FIX-CLN. Further, the cleaning counter reading is reset at the end of cleaning.

COPIER > OPTION > BODY > FIX-CLN

T-9-2

	0 (default)	1	2	3
Cleaning control temperature	0	225	225	225
Cleaning control time	0	60	60	60
Cleaning intervals	0	500	200	100

If a copy or print job arrives while cleaning is under way, the machine will not pick up paper until the ongoing cleaning ends.
If last rotation is under way in response to a rise in temperature at the film edge, the machine will hold cleaning until the end of the ongoing last rotation.
2. If a jam has been removed, the machine starts cleaning at time of recovery, at 220 deg C and for 10 sec.

9.3.4 Detecting the Passage of Paper

9.3.4.1 Detecting the Passage of Paper

iR2270 / iR2870 / iR3570 / iR4570 / / iR2270N / / iR2870N / / iR3570N / / iR4570N / iR2230 / / / iR3530 /

The paper passage detection configuration in the fixing unit is shown below.

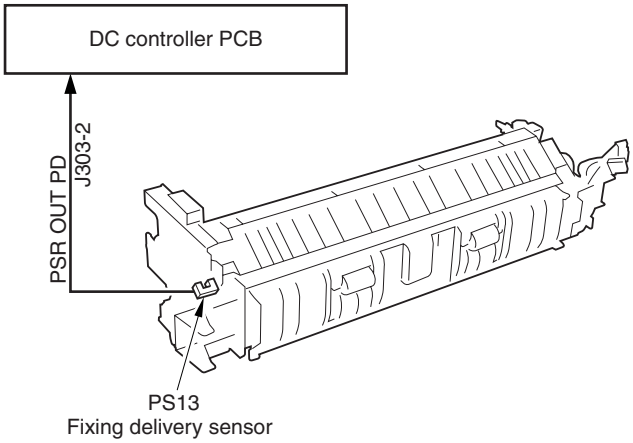

F-9-4

When a delay jam of the fixing delivery sensor (PS13) occurs, the fixing motor is stopped immediately so as to prevent paper from wrapping around the fixing roller.
The pressure of the fixing film and the pressure roller is released when a jam occurs so that jammed paper can be taken out easily.

9.4 Protective Functions

9.4.1 Protective Functions

iR2270 / iR2870 / iR3570 / iR4570 / / iR2270N / / iR2870N / / iR3570N / / iR4570N / iR2230 / / / iR3530 /

As part of its protective mechanism, the machine has a thermo switch, triacs, and a relay. Protective measures according to location are described below:

1. When the thermistor is out of order
Software detects a failure, and the triac and the relay are turned off.
The thermo switch is turned off.

2. When the CPU goes out of control
The latch circuit detects the excessive temperature rise, and the relay is turned off.
The thermo switch is turned off.

3. When the triac short-circuits
Software detects failure, and the relay is turned off.
The latch circuit detects the excessive temperature rise, and the relay is turned off.
The thermo switch is turned off.
Protective Circuit Block Configuration Diagram

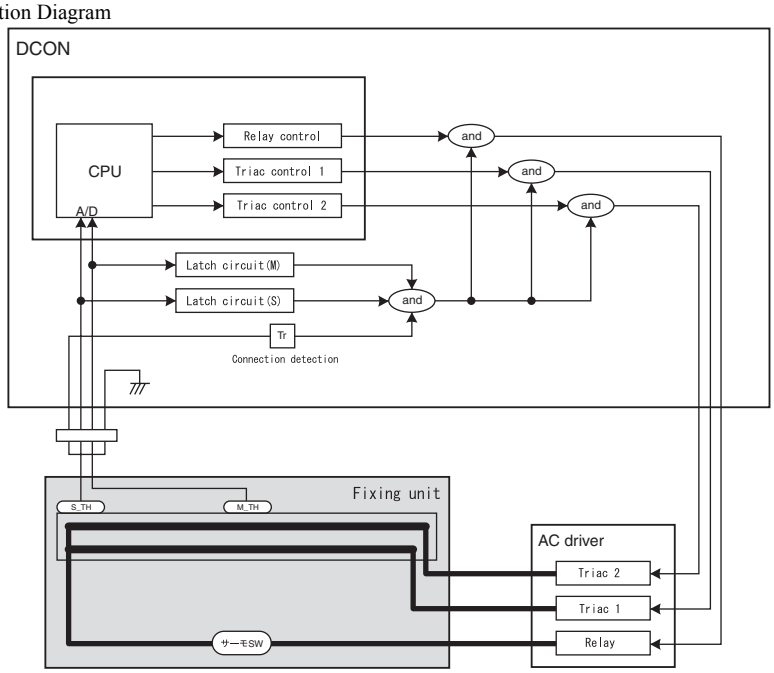

F-9-5

9.4.2 Detecting an Error

iR2270 / iR2870 / iR3570 / iR4570 / / iR2270N / / iR2870N / / iR3570N / / iR4570N / iR2230 / / / iR3530 /

As part of its protective mechanism, the machine checks for the following error conditions:

T-9-3

Error code	Detail code	Symptom	Description
E000	0000	The fixing temperature fails to increase.	In the course of start-up control, the thermistor reading is less than 30 deg C 1 sec after the start of power supply or is less than 70 deg C 2 sec after the start of power supply; the machine will identify an error condition if any of the foregoing continues for 200 msec or more.
E001	0000	The thermistor detects overheating.	The thermistor detects 235 deg C for 200 msec or more continuously.
	0001	A hardware circuit detects overheating.	A hardware circuit detects overheating in relation to the thermistor (main or sub).
	0002	The sub thermistor detects overheating.	The thermistor detects 295 deg C or more for 200 msec or more continuously.
E002	0000	The fixing temperature fails to reach a specific level.	In the course of start-up control, the thermistor detects a temperature lower then 115 deg C for 200 msec continuously after it has detected 100 deg C; the thermistor detects a temperature less than 150 deg C for 200 msec or more continuously after it has detected 140 deg C; or, the thermistor detects a temperature lower than 165 deg C for 20 msec or more continuously 1 sec after it has detected 160 deg C.
E003	0000	The fixing temperature has dropped to an abnormally low level.	In the course of normal temperature control, the thermistor detects a temperature lower than 140 deg C for 20 msec or more continuously.
E007	0000	The fixing film rotates in an abnormal way.	The reading of the main thermistor is in excess of 100 deg C with the fixing motor in a locked state and, in addition, the machine fails to detect the marker signal for 6 sec.
E014	0000	The machine detects a fixing motor error.	During operation, the machine detects an overload condition continuously for 3 sec or more.

9.5 Parts Replacement Procedure

9.5.1 Fixing Unit

9.5.1.1 Removing the Right Cover (rear)

iR2270 / iR2870 / iR3570 / iR4570 / / iR2270N / / iR2870N / / iR3570N / / iR4570N / iR2230 / / / iR3530 /

1) Open the pedestal right door [1]. (if equipped with a 2-Cassette Pedestal-Y2)
2) Open the right lower door [2].
3) Remove the 5 screws [3], and detach the right cover (rear) [4].

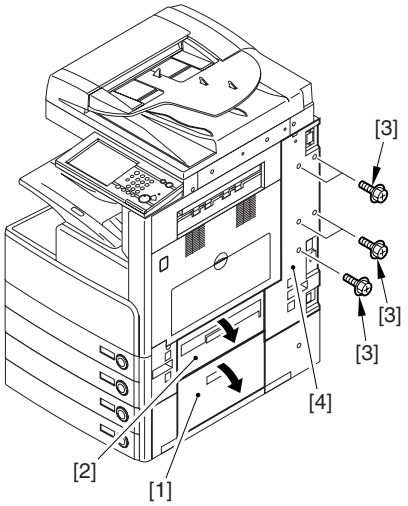

F-9-6

9.5.1.2 Removing the Right Door

iR3570 / iR4570 / / iR3570N / / iR4570N / iR2230 / / / iR3530 /

1) Open the right door.

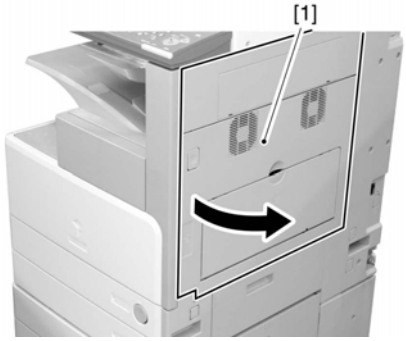

F-9-7

2) Remove the screw [1], and detach the fixing plate [2].

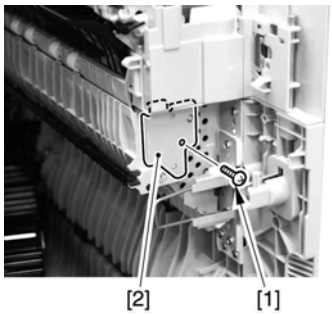

F-9-8

3) Remove the joint shaft [1], and free the extension delivery unit [2] from the right door.

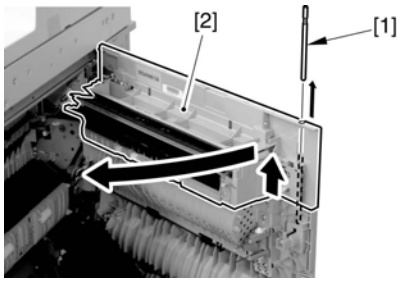

F-9-9

4) Disconnect the connector [1], and remove the reuse band [2]; then, remove the 2 screws (M4x8; RS tightening).

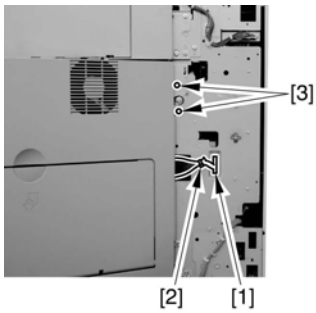

F-9-10

5) While freeing the hinge assembly [2], detach the right door.

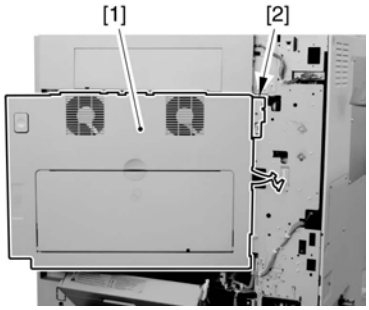

F-9-11

Attaching the Right Door

1) Match the hinge [1] found at the bottom of the right door against the lug.
2) Engage the hinge [2] found on the top of the right door with the hook found on the side plate.

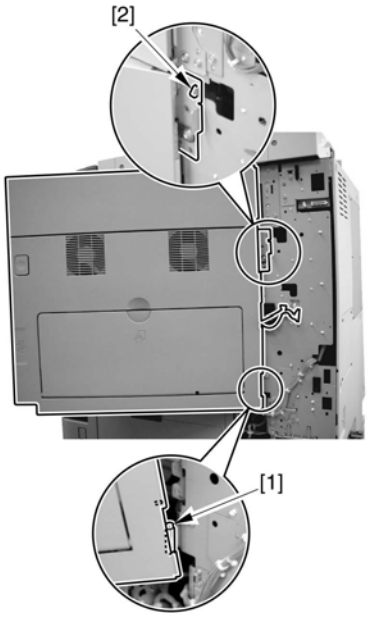

F-9-12

When tightening the 2 screws used to fix the hinge in place, be sure to close the right door first.

9.5.1.3 Removing the Right Door

iR2270 / iR2870 / / iR2270N / / iR2870N / iR2230 / / / iR3530 /

1) Open the right door.

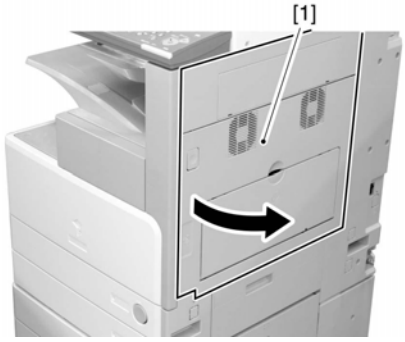

F-9-13

2) Remove the reuse band [1], and disconnect the connector [2].
3) Remove the 2 screws (M4x8; RS tightening), and detach the right door.

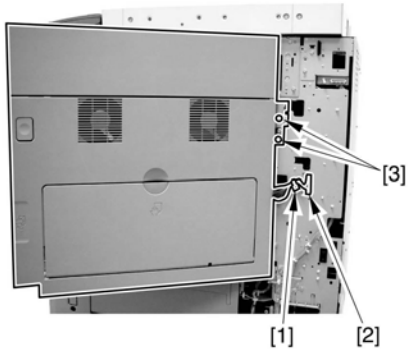

F-9-14

Attaching the Right Door

1) Match the hinge [1] found at the bottom of the right door against the lug.
2) Engage the hinge [2] found on the top of the right door with the hook found on the side plate.

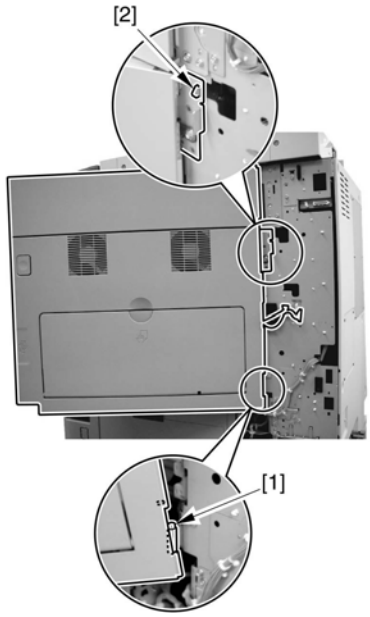

F-9-15

When tightening the 2 screws used to fix the hinge in place, be sure to close the right door first.

9.5.1.4 Removing the Fixing Unit

iR2270 / iR2870 / iR3570 / iR4570 / / iR2270N / / iR2870N / / iR3570N / / iR4570N / iR2230 / / / iR3530 /

1) Remove the screw [1], and detach the harness cover [2].

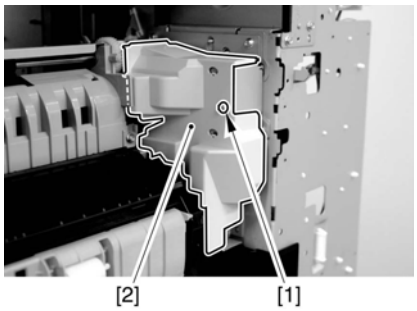

F-9-16

2) Disconcert the 3 connectors [1].

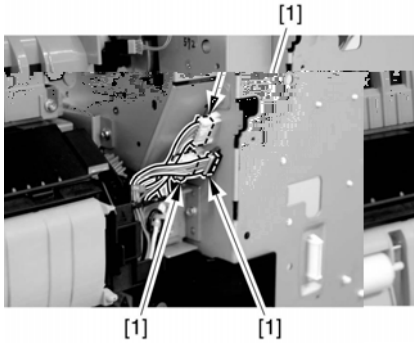

F-9-17

3) Remove the 4 screws [1].

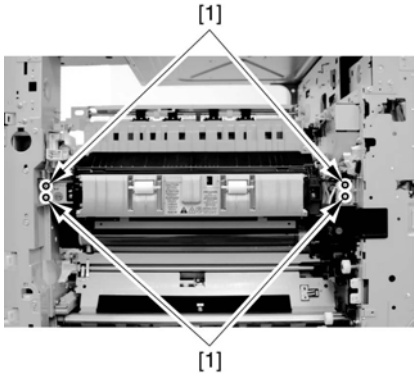

F-9-18

4) Detach the fixing unit [1] toward the front.

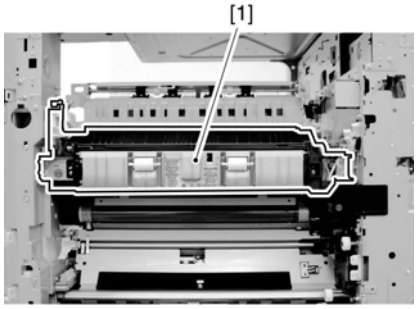

F-9-19

When mounting the harness cover [1], be sure to keep the harness [2] within the space [3] indicated in the figure so that the harness [2] will not come into contact with the gear [4].

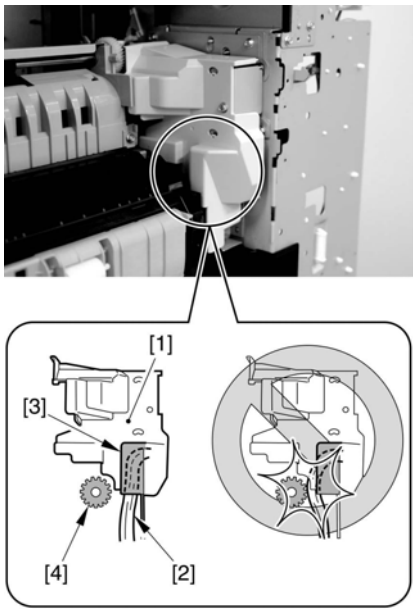

F-9-20

Do not touch the screw [1]. Turning it will change the pressure of the fixing assembly, which cannot be adjusted in the field, necessitating the replacement of the fixing assembly.

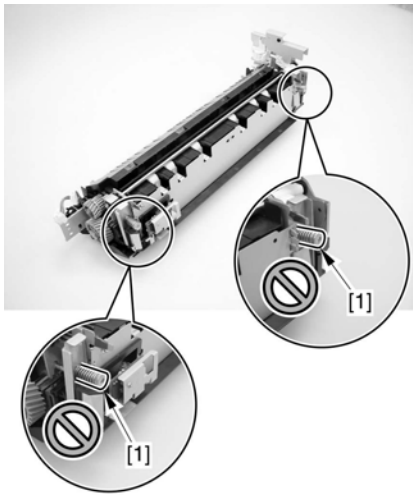

F-9-21

9.5.2 Pressure Roller

9.5.2.1 Removing the inside delivery cover unit (old)

iR2270 / iR2870 / iR3570 / iR4570 / / iR2270N / / iR2870N / / iR3570N / / iR4570N / iR2230 / / / iR3530 /

The difference between new and old inside delivery cover unit:
Old inside delivery cover unit does not have a grip ring [1] at hinge. In this case, detach the cover following the procedure below.

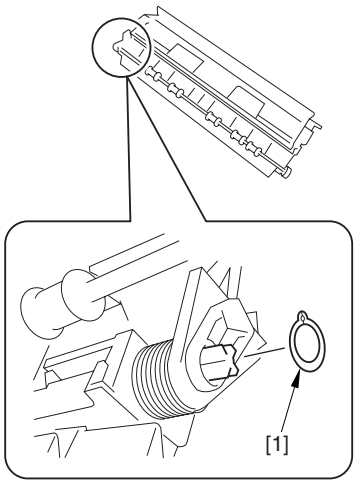

F-9-22

1) Remove the screw [1] and the stepped screw [2], and detach the inside delivery cover unit [3].

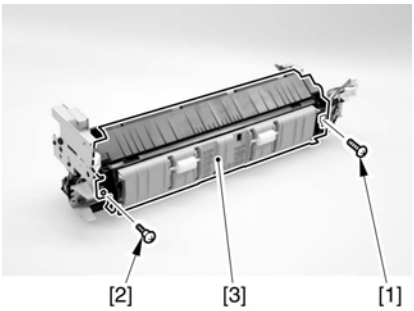

F-9-23

Note 1
Point to note when removing the inside delivery cover unit
Remove the inside delivery cover unit while supporting the guide [1] in the arrow direction A and opening it in the arrow direction B in the figure. Otherwise, the guide may come off the inside delivery cover unit.

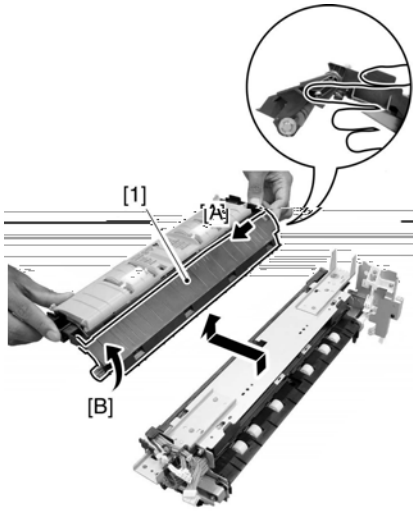

F-9-24

Note 2
Procedure for attaching the guide
Perform the following steps if the guide has come off the inside delivery cover unit.
1) Attach the torsion spring [2] to the duplexing support feeder mount [1]. At this time, hook the edge of the torsion spring on the area A of the duplexing support feeder mount.

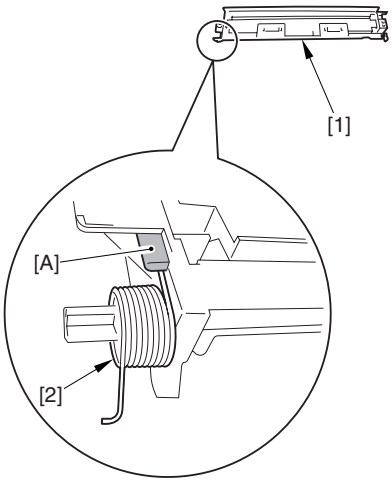

F-9-25

2) Attach the guide [1] to the duplexing support feeder mount [2]. At this time, fit [b] into [a] and [d] into [c]. Make sure that the edge [e] of the torsion spring is outside the guide.

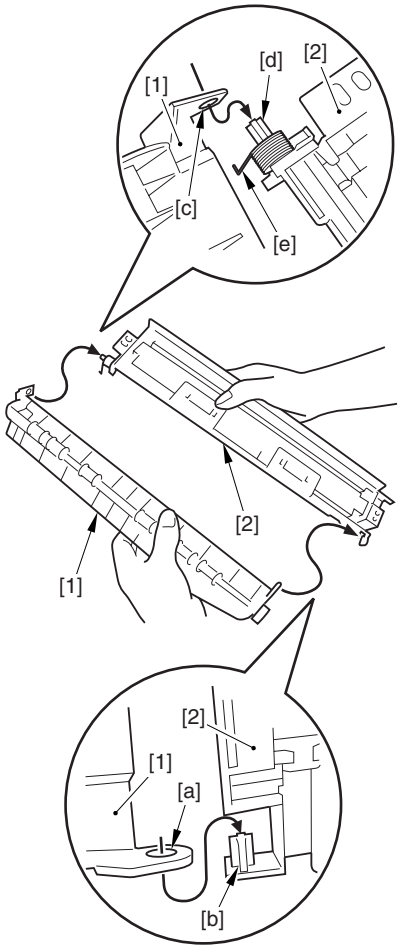

F-9-26

3) Hook the edge [1] of the torsion spring on the spring-hook area [2] of the inside delivery cover.

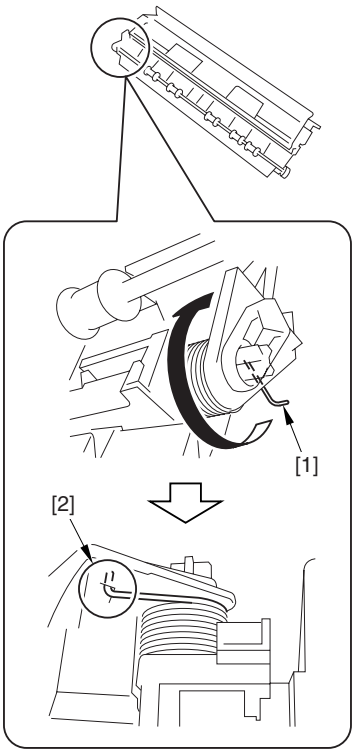

F-9-27

Note 3
Attaching the inside delivery cover unit

1) Attach the inside delivery cover unit while supporting the guide [1] in the arrow direction A and opening it in the arrow direction B. Opening the guide can prevent it from coming off the inside delivery cover unit. After attaching, make sure that the guide [1] rotates smoothly.

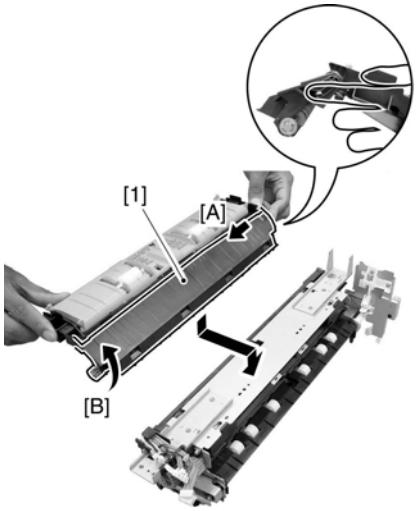

F-9-28

2) Attach the screw [1] and the stepped screw [2], and fix the inside delivery cover unit [3].

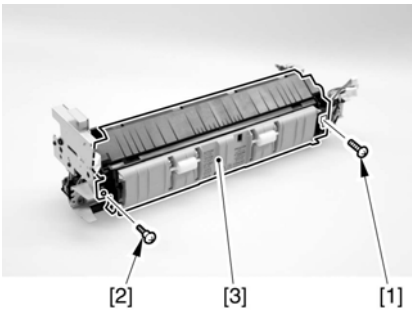

F-9-29

9.5.2.2 Removing the inside delivery cover unit (new)

iR2270 / iR2870 / iR3570 / iR4570 / / iR2270N / / iR2870N / / iR3570N / / iR4570N / iR2230 / / / iR3530 / / / / /

The difference between new and old inside delivery cover unit:
New inside delivery cover unit has a grip ring [1] at hinge. In this case, detach the cover following the procedure below.

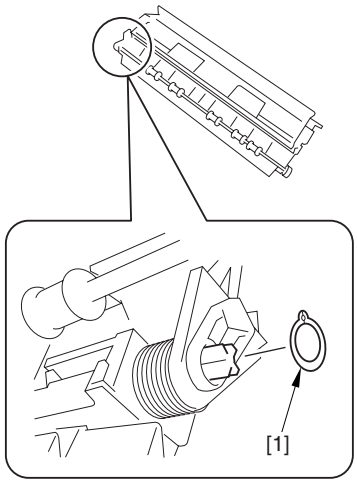

F-9-30

1) Remove the screw [1] and the stepped screw [2], and detach the inside delivery cover unit [3].

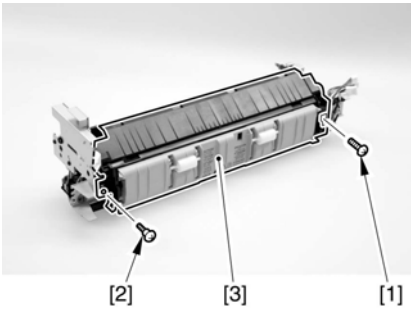

F-9-31

9.5.2.3 Removing the Grounding Plate

iR2270 / iR2870 / iR3570 / iR4570 / / iR2270N / / iR2870N / / iR3570N / / iR4570N / iR2230 / / / iR3530 /

1) Remove the 2 screws [1], and detach the grounding plate [2].

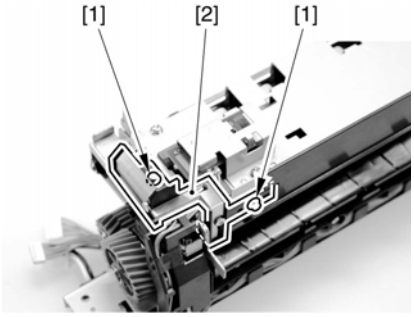

F-9-32

9.5.2.4 Removing the Fixing Film Cover

iR2270 / iR2870 / iR3570 / iR4570 / / iR2270N / / iR2870N / / iR3570N / / iR4570N / iR2230 / / / iR3530 /

1) Remove the 3 screws [1], and remove the self-tapping screw [2]; then, detach the fixing film cover [3].

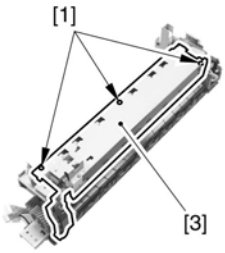

F-9-33

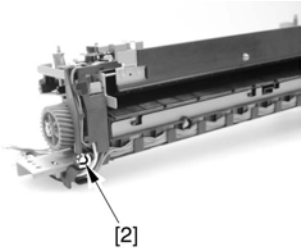

F-9-34

When mounting the fixing film cover unit, be sure to check that it has not ridden over the emboss [1] indicated by the arrow in the figure before tightening the screw.

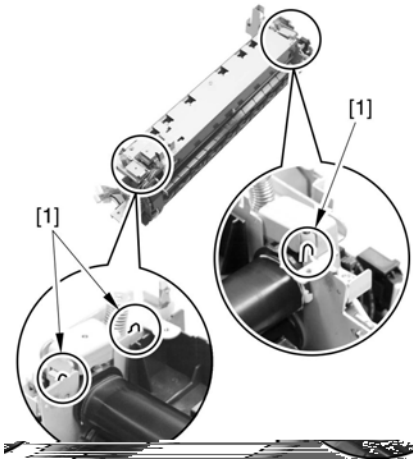

F-9-35

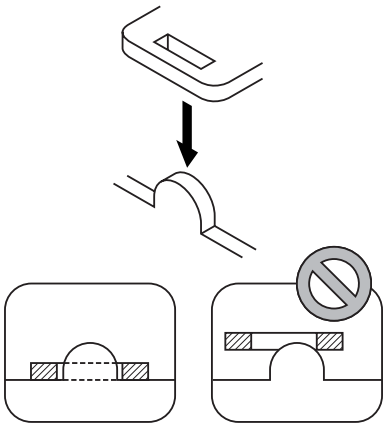

F-9-36

9.5.2.5 Removing the Left Side Plate

iR2270 / iR2870 / iR3570 / iR4570 / / iR2270N / / iR2870N / / iR3570N / / iR4570N / iR2230 / / / iR3530 /

1) Remove the screw [1], and detach the left side plate cover [2].

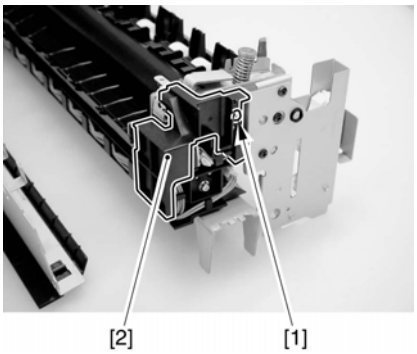

F-9-37

2) Remove the 2 screws [1].

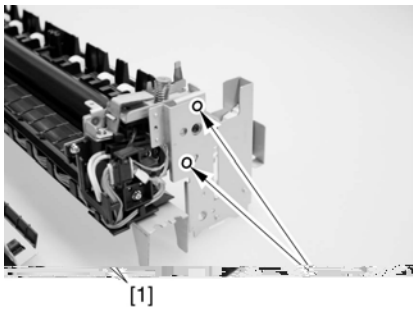

F-9-38

3) Slide the left side plate [1] in the direction of the arrow to detach.

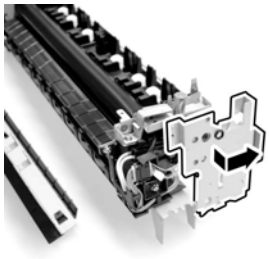

F-9-39

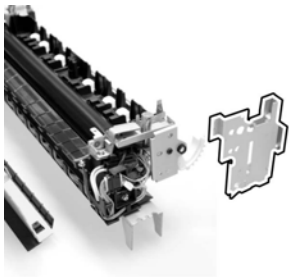

F-9-40

When mounting the left side plate, be sure that it is correctly positioned so that the locking lever and the teeth are correctly engaged. (See the figure.)

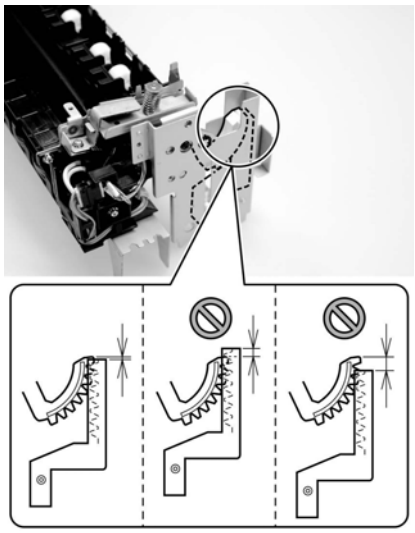

F-9-41

9.5.2.6 Releasing the Locking Plate

iR2270 / iR2870 / iR3570 / iR4570 / / iR2270N / / iR2870N / / iR3570N / / iR4570N / iR2230 / / / iR3530 /

1) Turn the locking gear [1] in the direction of the arrow to release the locking roller.

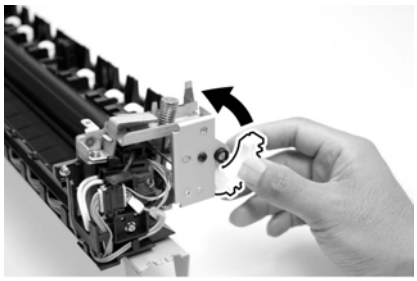

F-9-42

2) Remove the 2 screws [1].

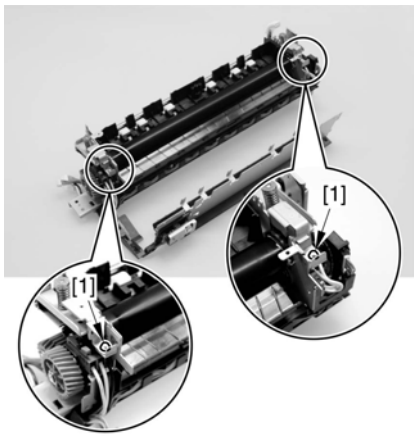

F-9-43

Do not touch the screw [1] used to keep the fixing assembly in place. Turning the screw will change the pressure of the fixing assembly, which cannot be adjusted in the field, necessitating the replacement of the fixing assembly.

F-9-44

3) Turn the locking plate [1] in the direction of the arrow to release it.

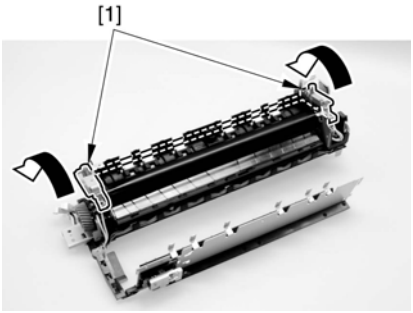

F-9-45

9.5.2.7 Removing the Fixing Film Unit

iR2270 / iR2870 / iR3570 / iR4570 / / iR2270N / / iR2870N / / iR3570N / / iR4570N / iR2230 / / / iR3530 /

1) While pushing down the release lever (front) [1], pull out the heater contact [2].

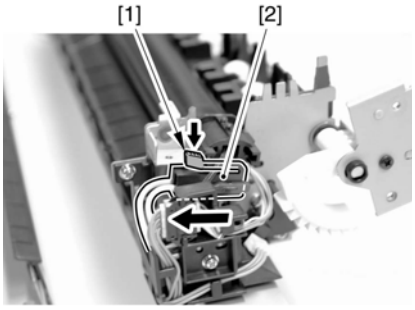

F-9-46

2) While pushing down the release lever (rear) [1], pull out the heater contact [2].

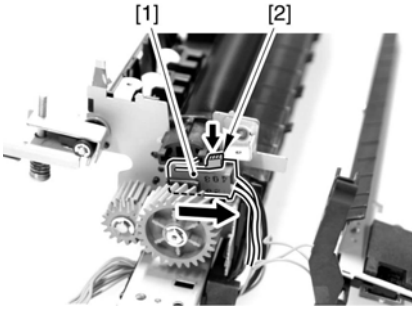

F-9-47

3) Remove the screw [1], and free the AC harness [2].

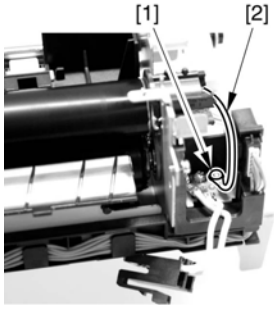

F-9-48

4) Free the AC harness [1] from the edge saddle [2].

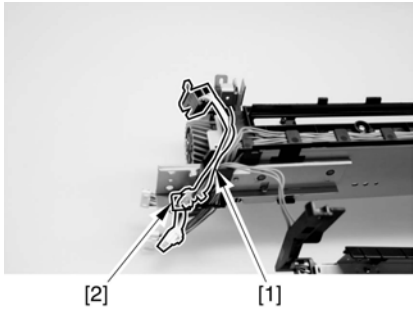

F-9-49

5) Free the relay connector [1] of the signal cable from the connector holder [2].

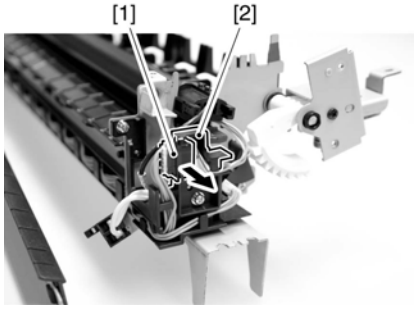

F-9-50

6) Disconnect the connector [2] from the relay connector [1].

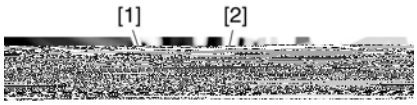

F-9-51

7) Remove the fixing film unit [1].

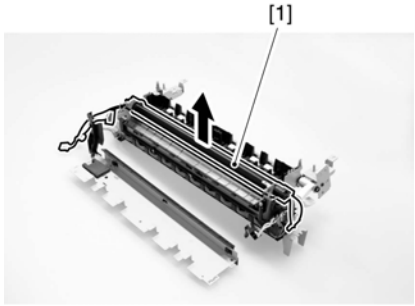

F-9-52

9.5.2.8 Removing the Inlet Guide

iR2270 / iR2870 / iR3570 / iR4570 / / iR2270N / / iR2870N / / iR3570N / / iR4570N / iR2230 / / / iR3530 /

1) Slide the inlet guide [1] in the direction of the arrow to detach.

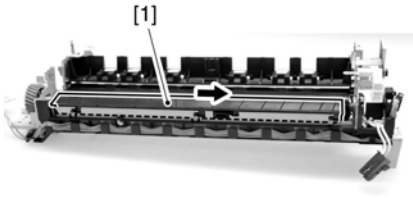

F-9-53

9.5.2.9 Removing the Pressure Roller

iR2270 / iR2870 / iR3570 / iR4570 / / iR2270N / / iR2870N / / iR3570N / / iR4570N / iR2230 / / / iR3530 /

1) Remove the E-ring [1], and detach the drive gear [2].

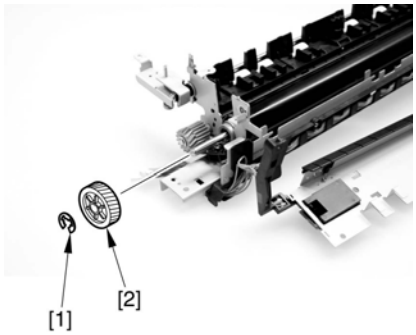

F-9-54

2) Lift the front of the pressure roller [1].

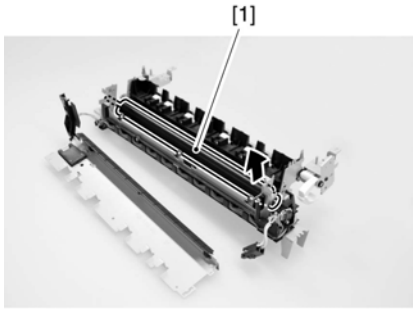

F-9-55

3) Push in the bush [1] found at the rear in the direction of the arrow to free it; then, detach the pressure roller.

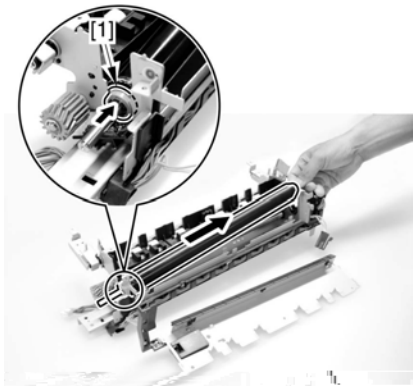

F-9-56

Be sure to pay attention to the position and the orientation of the insulating bush.

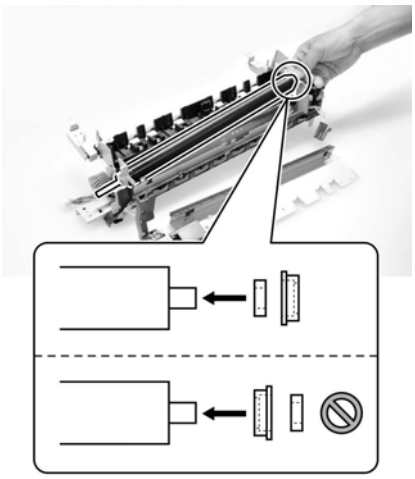

F-9-57

The insulating bush may be of 2 different shapes: one for the iR3570/4570 and the other for the iR2270/2870. If the machine is an iR2270/2870, be sure to pay attention to the direction of the protrusion of the insulating bush.

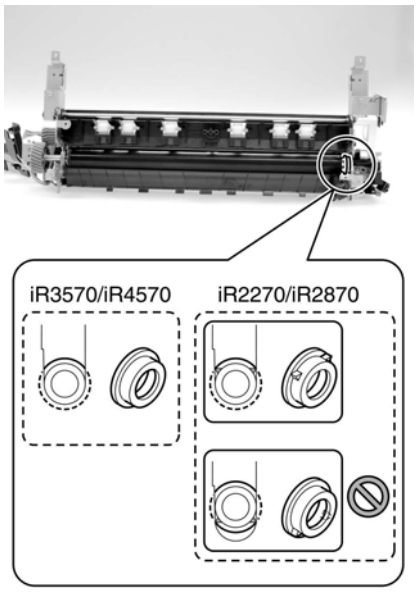

F-9-58

9.5.3 Cleaning Roller

9.5.3.1 Removing the inside delivery cover unit (old)

iR2270 / iR2870 / iR3570 / iR4570 / / iR2270N / / iR2870N / / iR3570N / / iR4570N / iR2230 / / / iR3530 /

The difference between new and old inside delivery cover unit:
Old inside delivery cover unit does not have a grip ring [1] at hinge. In this case, detach the cover following the procedure below.

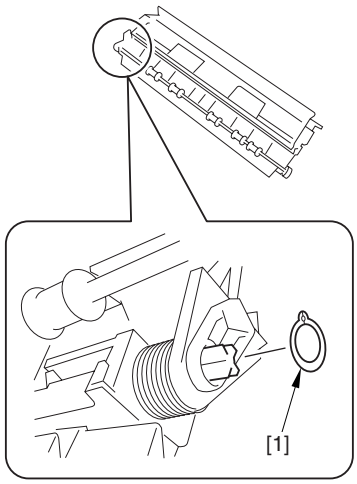

F-9-59

1) Remove the screw [1] and the stepped screw [2], and detach the inside delivery cover unit [3].

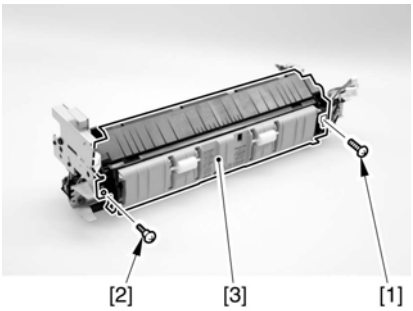

F-9-60

Note 1
Point to note when removing the inside delivery cover unit
Remove the inside delivery cover unit while supporting the guide [1] in the arrow direction A and opening it in the arrow direction B in the figure. Otherwise, the guide may come off the inside delivery cover unit.

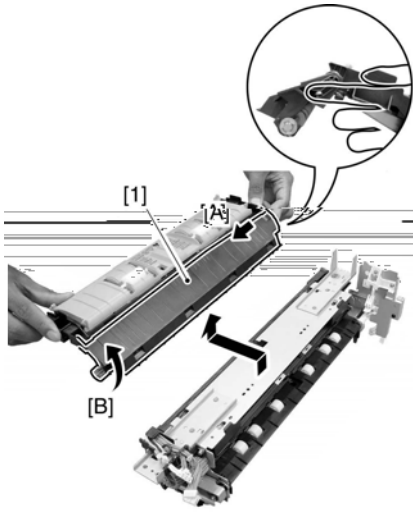

F-9-61

Note 2
Procedure for attaching the guide
Perform the following steps if the guide has come off the inside delivery cover unit.

1) Attach the torsion spring [2] to the duplexing support feeder mount [1]. At this time, hook the edge of the torsion spring on the area A of the duplexing support feeder mount.

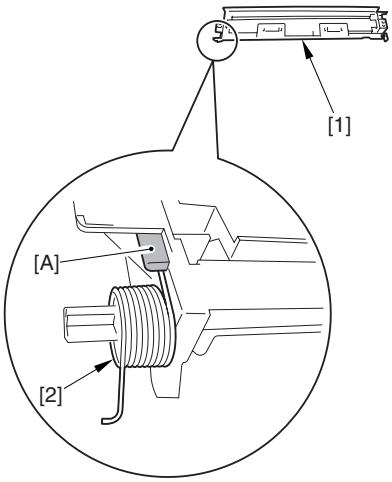

F-9-62

2) Attach the guide [1] to the duplexing support feeder mount [2]. At this time, fit [b] into [a] and [d] into [c]. Make sure that the edge [e] of the torsion spring is outside the guide.

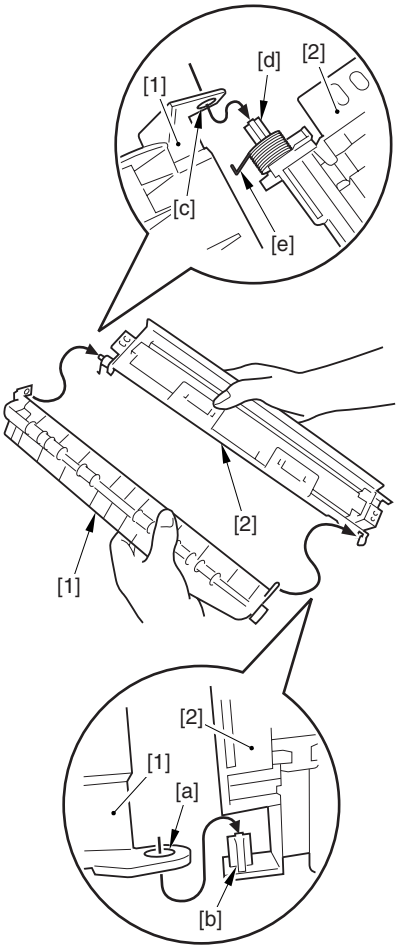

F-9-63

3) Hook the edge [1] of the torsion spring on the spring-hook area [2] of the inside delivery cover.

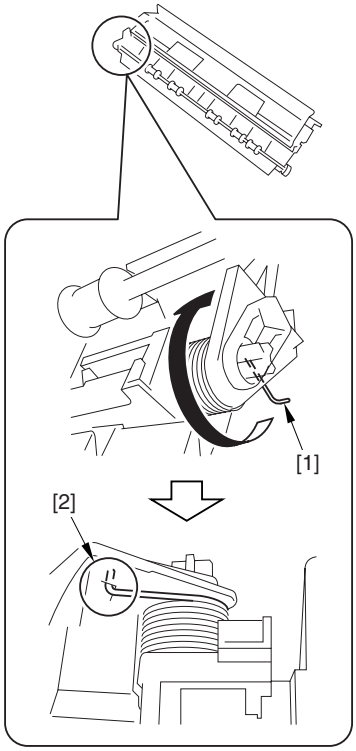

F-9-64

Note 3
Attaching the inside delivery cover unit

1) Attach the inside delivery cover unit while supporting the guide [1] in the arrow direction A and opening it in the arrow direction B. Opening the guide can prevent it from coming off the inside delivery cover unit. After attaching, make sure that the guide [1] rotates smoothly.

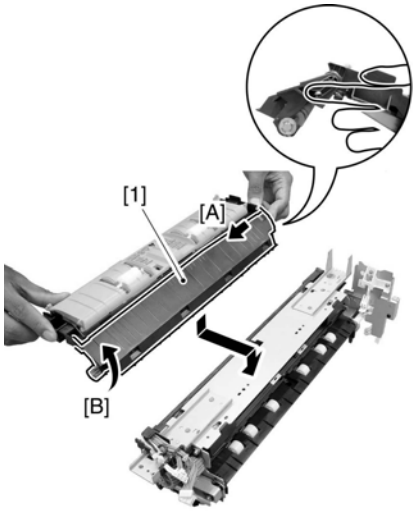

F-9-65

2) Attach the screw [1] and the stepped screw [2], and fix the inside delivery cover unit [3].

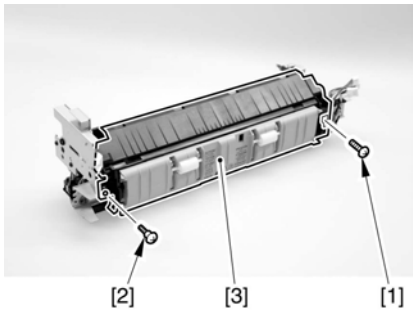

F-9-66

9.5.3.2 Removing the inside delivery cover unit (new)

iR2270 / iR2870 / iR3570 / iR4570 / / iR2270N / / iR2870N / / iR3570N / / iR4570N / iR2230 / / / iR3530 / / / / /

The difference between new and old inside delivery cover unit:
New inside delivery cover unit has a grip ring [1] at hinge. In this case, detach the cover following the procedure below.

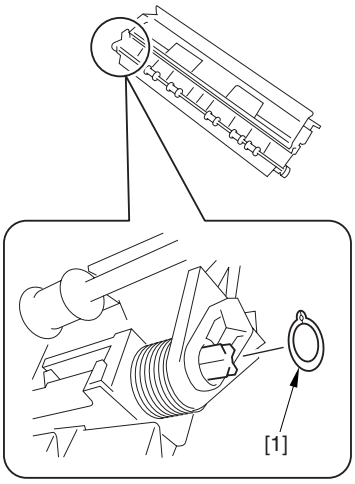

F-9-67

1) Remove the screw [1] and the stepped screw [2], and detach the inside delivery cover unit [3].

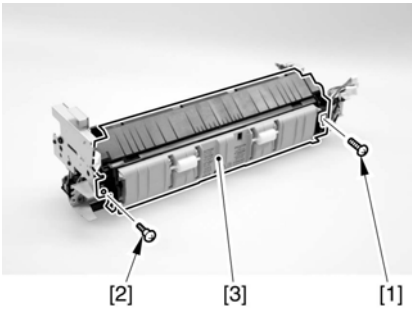

F-9-68

9.5.3.3 Removing the Cleaning Roller

iR2270 / iR2870 / iR3570 / iR4570 / / iR2270N / / iR2870N / / iR3570N / / iR4570N / iR2230 / / / iR3530 /

1) Remove the 2 self-tapping screws [1], and detach the cleaning roller together with the cleaning roller holder [2].

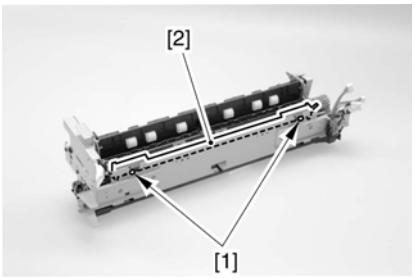

F-9-69

2) Remove the cleaning roller holder [1].

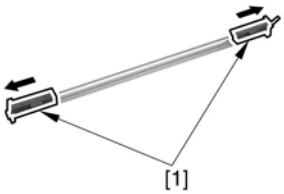

F-9-70

The foregoing steps assume that the fixing unit has already been removed from the machine. The cleaning roller may also be removed without first removing the fixing unit from the machine in the same way.

9.5.4 Fixing Film

9.5.4.1 Removing the inside delivery cover unit (old)

iR2270 / iR2870 / iR3570 / iR4570 / / iR2270N / / iR2870N / / iR3570N / / iR4570N / iR2230 / / / iR3530 /

The difference between new and old inside delivery cover unit:
Old inside delivery cover unit does not have a grip ring [1] at hinge. In this case, detach the cover following the procedure below.

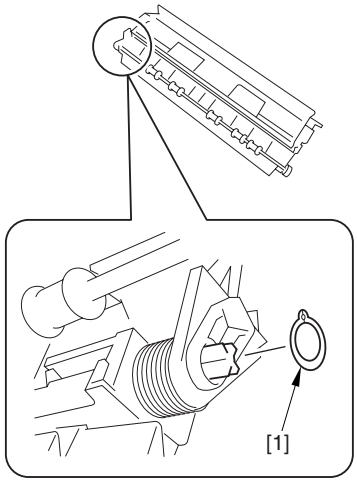

F-9-71

1) Remove the screw [1] and the stepped screw [2], and detach the inside delivery cover unit [3].

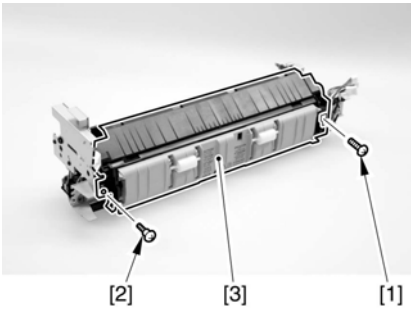

F-9-72

Note 1
Point to note when removing the inside delivery cover unit
Remove the inside delivery cover unit while supporting the guide [1] in the arrow direction A and opening it in the arrow direction B in the figure. Otherwise, the guide may come off the inside delivery cover unit.

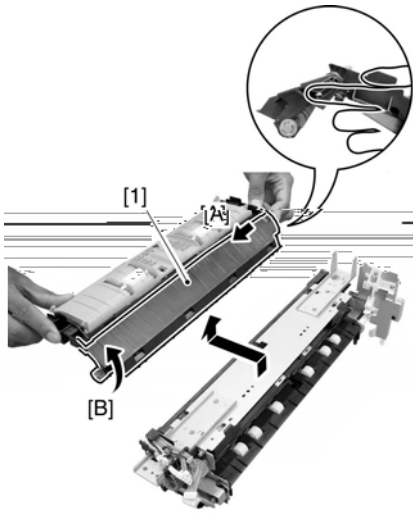

F-9-73

Note 2
Procedure for attaching the guide
Perform the following steps if the guide has come off the inside delivery cover unit.
1) Attach the torsion spring [2] to the duplexing support feeder mount [1]. At this time, hook the edge of the torsion spring on the area A of the duplexing support feeder mount.

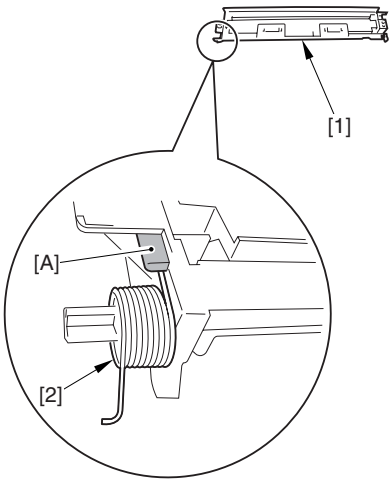

F-9-74

2) Attach the guide [1] to the duplexing support feeder mount [2]. At this time, fit [b] into [a] and [d] into [c]. Make sure that the edge [e] of the torsion spring is outside the guide.

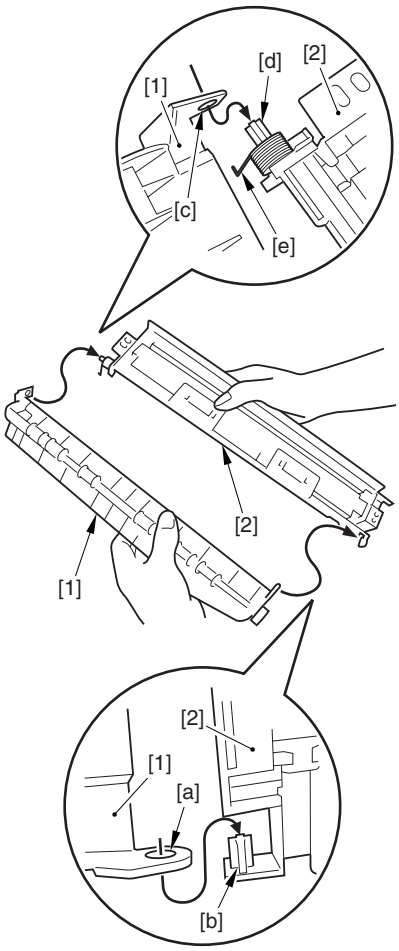

F-9-75

3) Hook the edge [1] of the torsion spring on the spring-hook area [2] of the inside delivery cover.

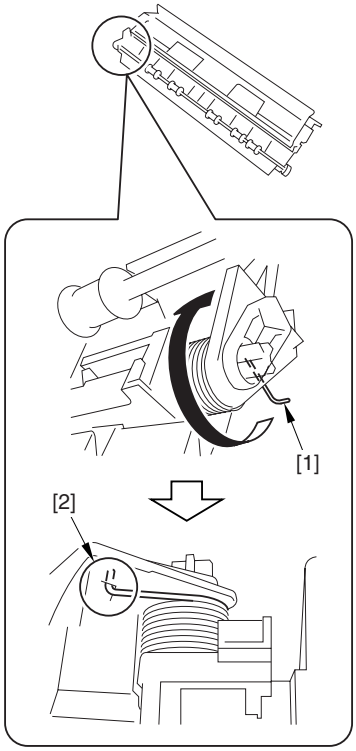

F-9-76

Note 3
Attaching the inside delivery cover unit
1) Attach the inside delivery cover unit while supporting the guide [1] in the arrow direction A and opening it in the arrow direction B. Opening the guide can prevent it from coming off the inside delivery cover unit. After attaching, make sure that the guide [1] rotates smoothly.

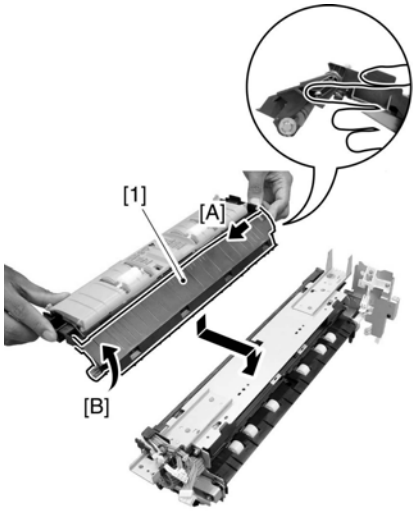

F-9-77

2) Attach the screw [1] and the stepped screw [2], and fix the inside delivery cover unit [3].

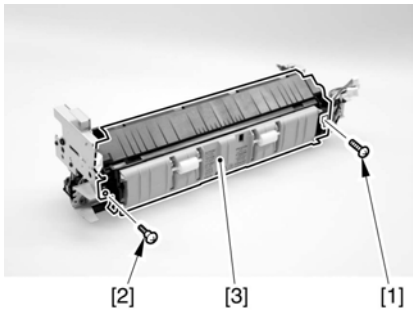

F-9-78

9.5.4.2 Removing the inside delivery cover unit (new)

iR2270 / iR2870 / iR3570 / iR4570 / / iR2270N / / iR2870N / / iR3570N / / iR4570N / iR2230 / / / iR3530 / / / / /

The difference between new and old inside delivery cover unit:
New inside delivery cover unit has a grip ring [1] at hinge. In this case, detach the cover following the procedure below.

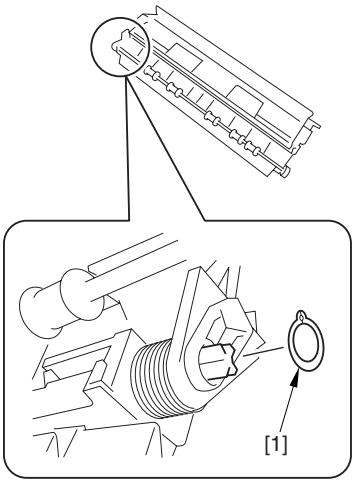

F-9-79

1) Remove the screw [1] and the stepped screw [2], and detach the inside delivery cover unit [3].

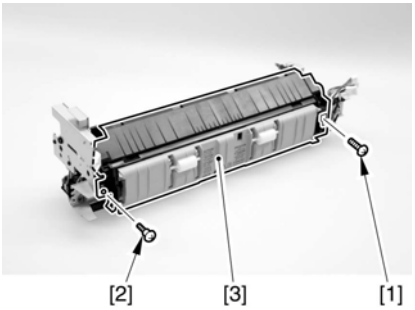

F-9-80

9.5.4.3 Removing the Grounding Plate

iR2270 / iR2870 / iR3570 / iR4570 / / iR2270N / / iR2870N / / iR3570N / / iR4570N / iR2230 / / / iR3530 /

1) Remove the 2 screws [1], and detach the grounding plate [2].

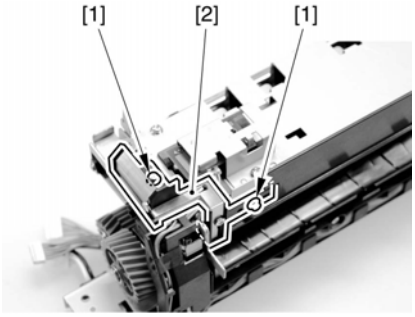

F-9-81

9.5.4.4 Removing the Fixing Film Cover

iR2270 / iR2870 / iR3570 / iR4570 / / iR2270N / / iR2870N / / iR3570N / / iR4570N / iR2230 / / / iR3530 /

1) Remove the 3 screws [1], and remove the self-tapping screw [2]; then, detach the fixing film cover [3].

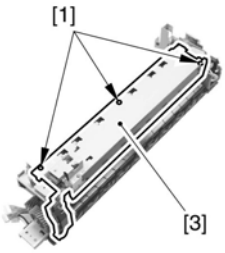

F-9-82

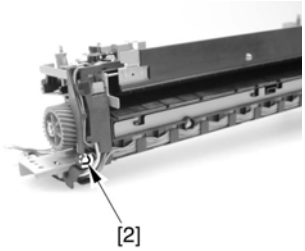

F-9-83

⚠ When mounting the fixing film cover unit, be sure to check that it has not ridden over the emboss [1] indicated by the arrow in the figure before tightening the screw.

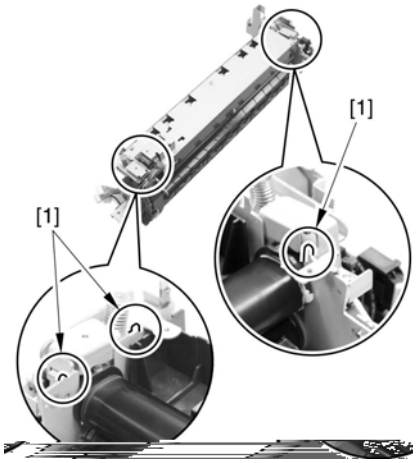

F-9-84

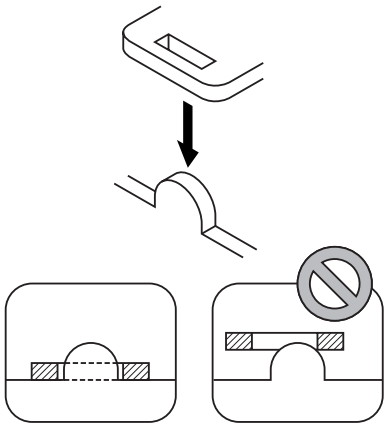

F-9-85

9.5.4.5 Removing the Left Side Plate

iR2270 / iR2870 / iR3570 / iR4570 / / iR2270N / / iR2870N / / iR3570N / / iR4570N / iR2230 / / / iR3530 /

1) Remove the screw [1], and detach the left side plate cover [2].

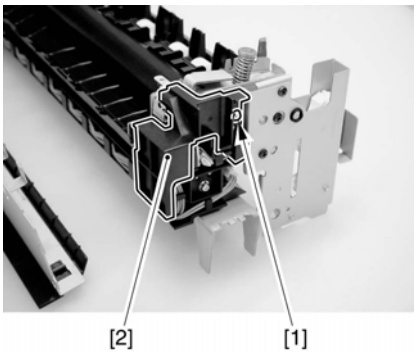

F-9-86

2) Remove the 2 screws [1].

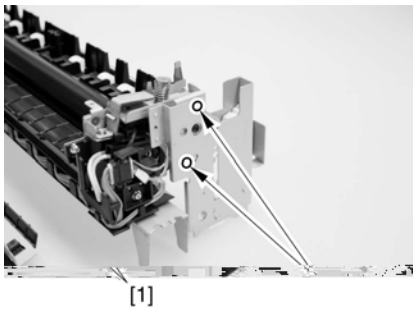

F-9-87

3) Slide the left side plate [1] in the direction of the arrow to detach.

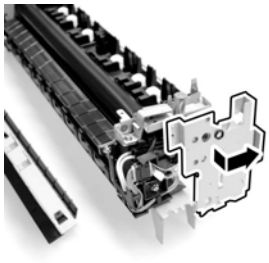

F-9-88

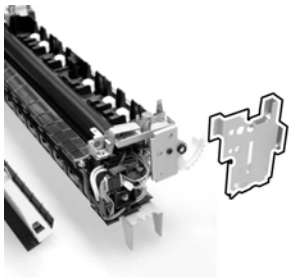

F-9-89

When mounting the left side plate, be sure that it is correctly positioned so that the locking lever and the teeth are correctly engaged. (See the figure.)

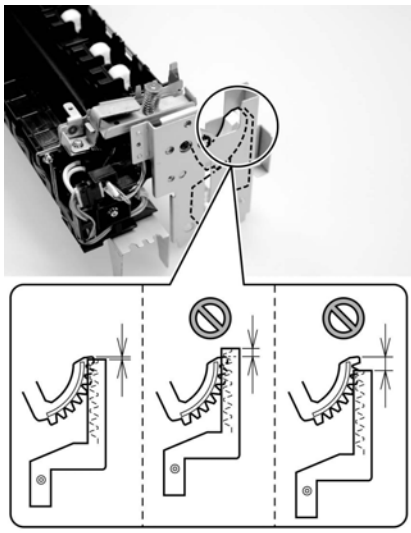

F-9-90

9.5.4.6 Releasing the Locking Plate

iR2270 / iR2870 / iR3570 / iR4570 / / iR2270N / / iR2870N / / iR3570N / / iR4570N / iR2230 / / / iR3530 /

1) Turn the locking gear [1] in the direction of the arrow to release the locking roller.

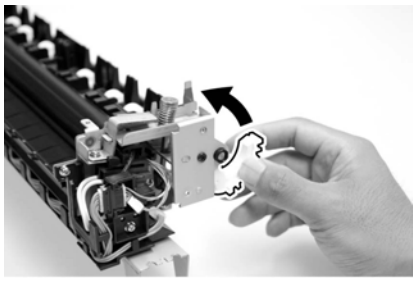

F-9-91

2) Remove the 2 screws [1].

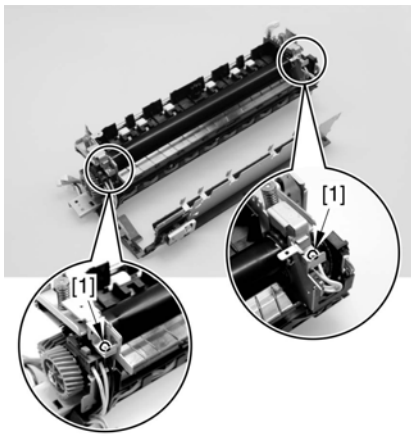

F-9-92

Do not touch the screw [1] used to keep the fixing assembly in place. Turning the screw will change the pressure of the fixing assembly, which cannot be adjusted in the field, necessitating the replacement of the fixing assembly.

F-9-93

3) Turn the locking plate [1] in the direction of the arrow to release it.

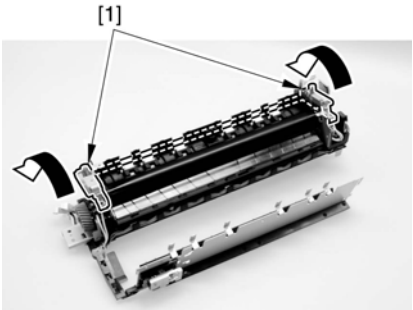

F-9-94

9.5.4.7 Removing the Fixing Film Unit

iR2270 / iR2870 / iR3570 / iR4570 / / iR2270N / / iR2870N / / iR3570N / / iR4570N / iR2230 / / / iR3530 /

1) While pushing down the release lever (front) [1], pull out the heater contact [2].

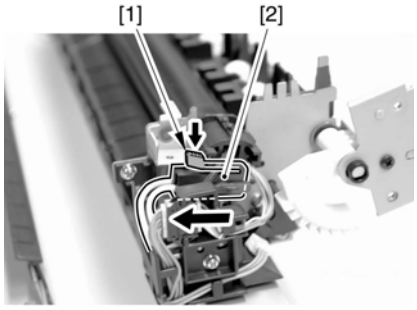

F-9-95

2) While pushing down the release lever (rear) [1], pull out the heater contact [2].

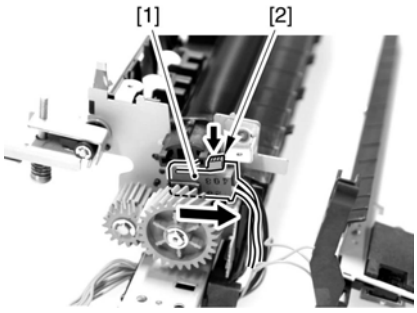

F-9-96

3) Remove the screw [1], and free the AC harness [2].

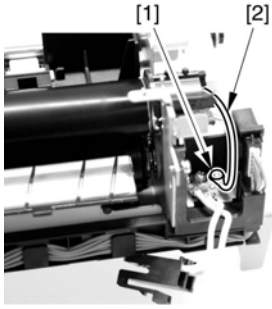

F-9-97

4) Free the AC harness [1] from the edge saddle [2].

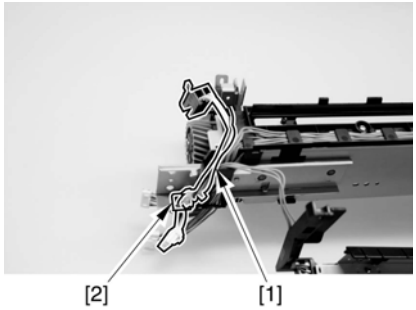

F-9-98

5) Free the relay connector [1] of the signal cable from the connector holder [2].

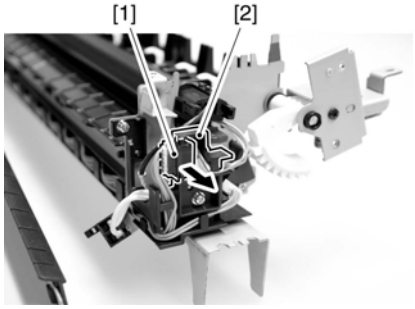

F-9-99

6) Disconnect the connector [2] from the relay connector [1].

F-9-100

7) Remove the fixing film unit [1].

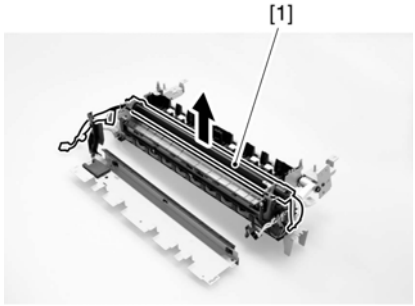

F-9-101

9.5.5 Internal Delivery Sensor

9.5.5.1 Removing the inside delivery cover unit (old)

iR2270 / iR2870 / iR3570 / iR4570 / / iR2270N / / iR2870N / / iR3570N / / iR4570N / iR2230 / / / iR3530 /

The difference between new and old inside delivery cover unit:
Old inside delivery cover unit does not have a grip ring [1] at hinge. In this case, detach the cover following the procedure below.

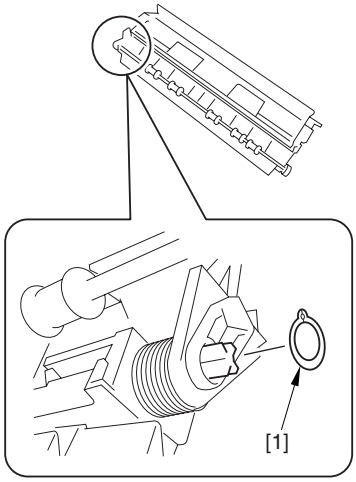

F-9-102

1) Remove the screw [1] and the stepped screw [2], and detach the inside delivery cover unit [3].

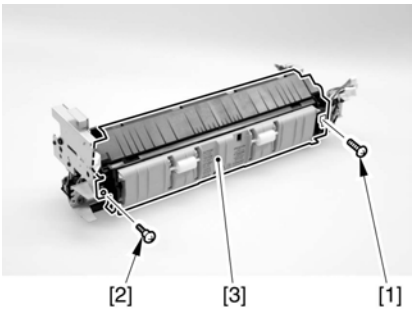

F-9-103

Note 1
Point to note when removing the inside delivery cover unit
Remove the inside delivery cover unit while supporting the guide [1] in the arrow direction A and opening it in the arrow direction B in the figure. Otherwise, the guide may come off the inside delivery cover unit.

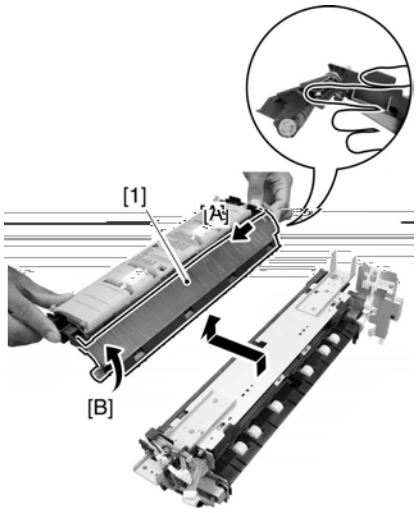

F-9-104

Note 2
Procedure for attaching the guide
Perform the following steps if the guide has come off the inside delivery cover unit.

1) Attach the torsion spring [2] to the duplexing support feeder mount [1]. At this time, hook the edge of the torsion spring on the area A of the duplexing support feeder mount.

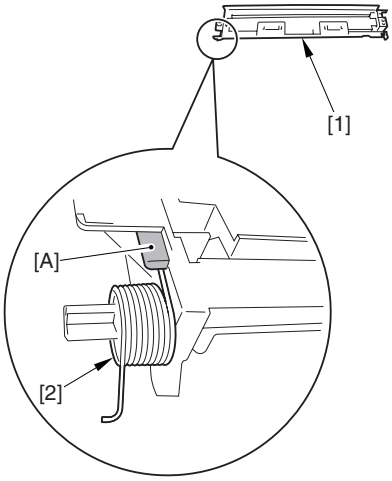

F-9-105

2) Attach the guide [1] to the duplexing support feeder mount [2]. At this time, fit [b] into [a] and [d] into [c]. Make sure that the edge [e] of the torsion spring is outside the guide.

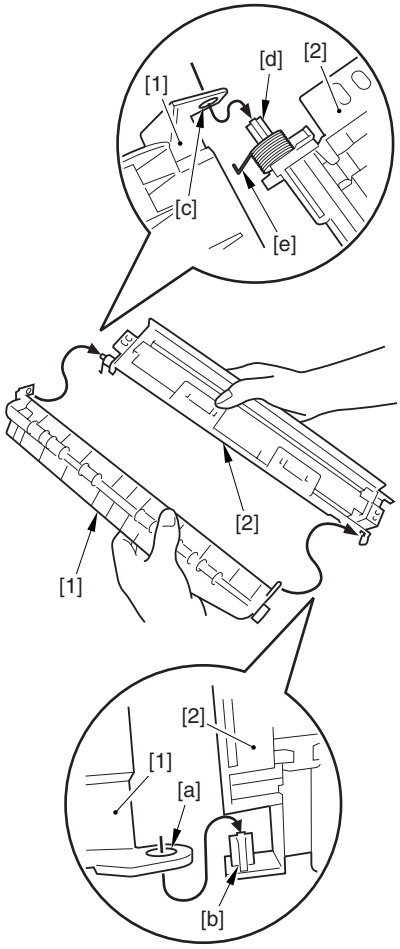

F-9-106

3) Hook the edge [1] of the torsion spring on the spring-hook area [2] of the inside delivery cover.

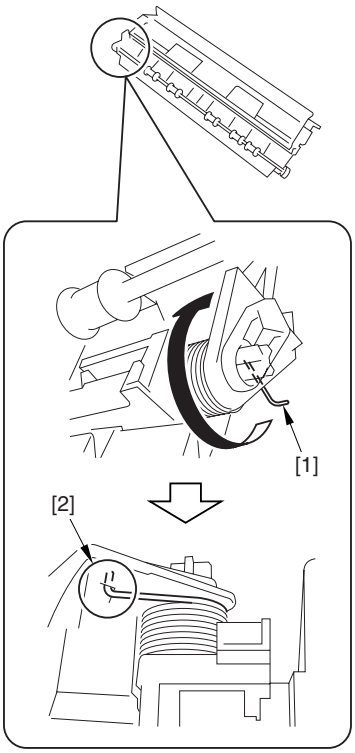

F-9-107

Note 3
Attaching the inside delivery cover unit

1) Attach the inside delivery cover unit while supporting the guide [1] in the arrow direction A and opening it in the arrow direction B. Opening the guide can prevent it from coming off the inside delivery cover unit. After attaching, make sure that the guide [1] rotates smoothly.

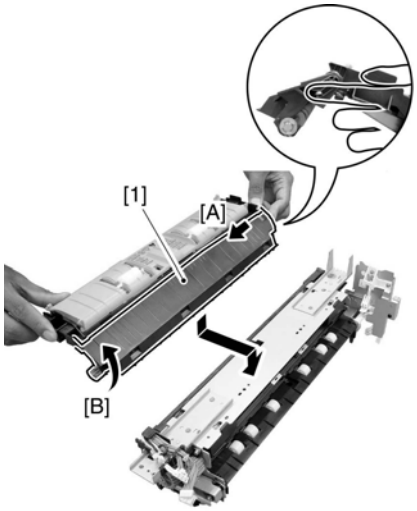

F-9-108

2) Attach the screw [1] and the stepped screw [2], and fix the inside delivery cover unit [3].

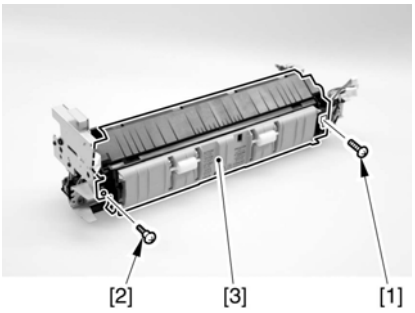

F-9-109

9.5.5.2 Removing the inside delivery cover unit (new)

iR2270 / iR2870 / iR3570 / iR4570 / / iR2270N / / iR2870N / / iR3570N / / iR4570N / iR2230 / / / iR3530 / / / / /

The difference between new and old inside delivery cover unit:
New inside delivery cover unit has a grip ring [1] at hinge. In this case, detach the cover following the procedure below.

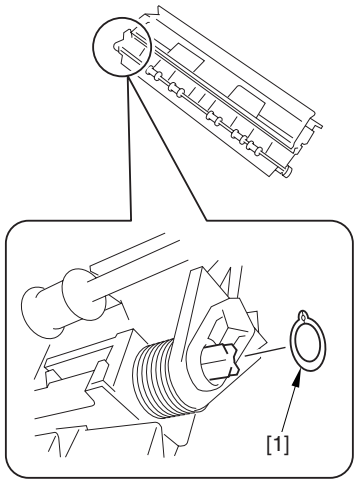

F-9-110

1) Remove the screw [1] and the stepped screw [2], and detach the inside delivery cover unit [3].

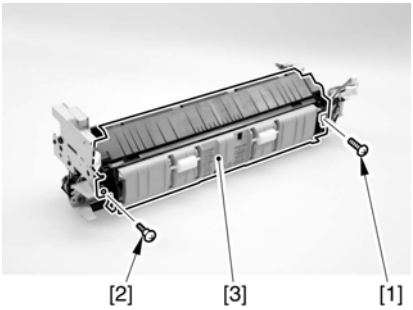

F-9-111

9.5.5.3 Removing the Grounding Plate

iR2270 / iR2870 / iR3570 / iR4570 / / iR2270N / / iR2870N / / iR3570N / / iR4570N / iR2230 / / / iR3530 /

1) Remove the 2 screws [1], and detach the grounding plate [2].

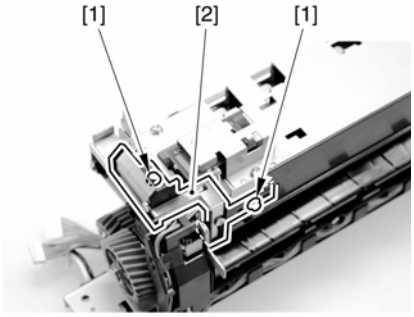

F-9-112

9.5.5.4 Removing the Fixing Film Cover

iR2270 / iR2870 / iR3570 / iR4570 / / iR2270N / / iR2870N / / iR3570N / / iR4570N / iR2230 / / / iR3530 /

1) Remove the 3 screws [1], and remove the self-tapping screw [2]; then, detach the fixing film cover [3].

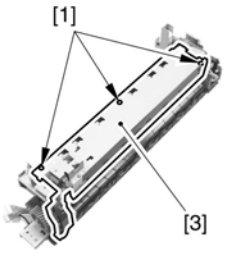

F-9-113

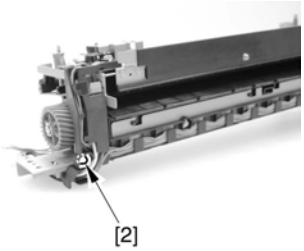

F-9-114

When mounting the fixing film cover unit, be sure to check that it has not ridden over the emboss [1] indicated by the arrow in the figure before tightening the screw.

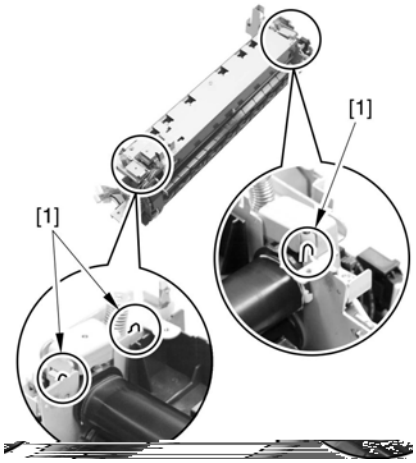

F-9-115

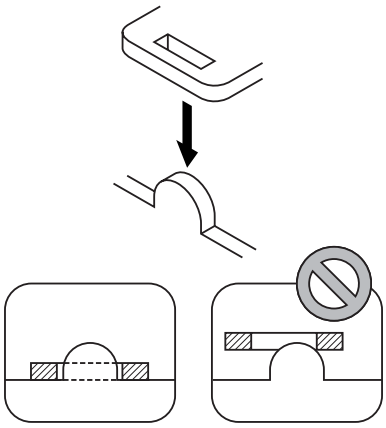

F-9-116

9.5.5.5 Removing the Left Side Plate

iR2270 / iR2870 / iR3570 / iR4570 / / iR2270N / / iR2870N / / iR3570N / / iR4570N / iR2230 / / / iR3530 /

1) Remove the screw [1], and detach the left side plate cover [2].

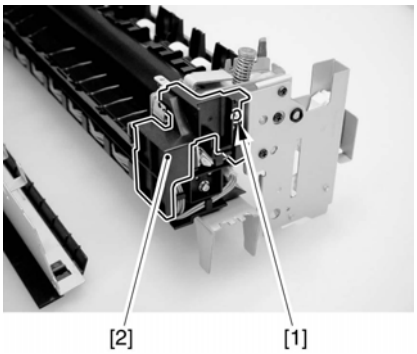

F-9-117

2) Remove the 2 screws [1].

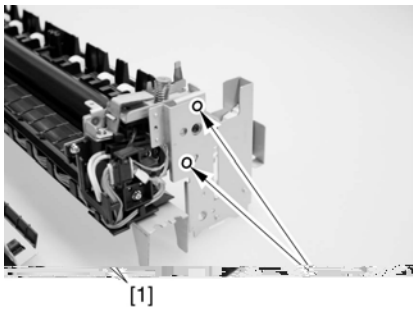

F-9-118

3) Slide the left side plate [1] in the direction of the arrow to detach.

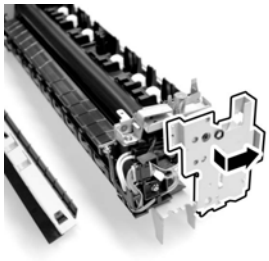

F-9-119

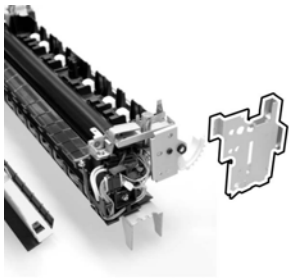

F-9-120

When mounting the left side plate, be sure that it is correctly positioned so that the locking lever and the teeth are correctly engaged. (See the figure.)

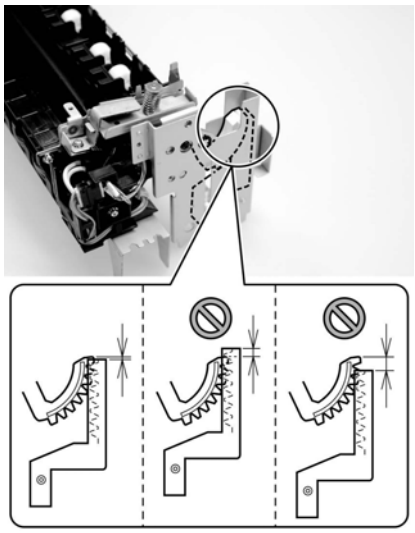

F-9-121

9.5.5.6 Releasing the Locking Plate

iR2270 / iR2870 / iR3570 / iR4570 / / iR2270N / / iR2870N / / iR3570N / / iR4570N / iR2230 / / / iR3530 /

1) Turn the locking gear [1] in the direction of the arrow to release the locking roller.

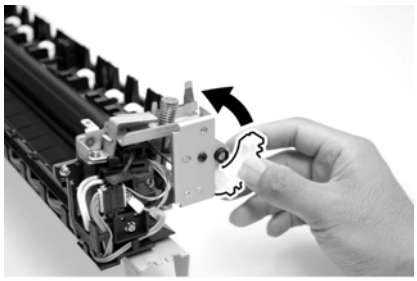

F-9-122

2) Remove the 2 screws [1].

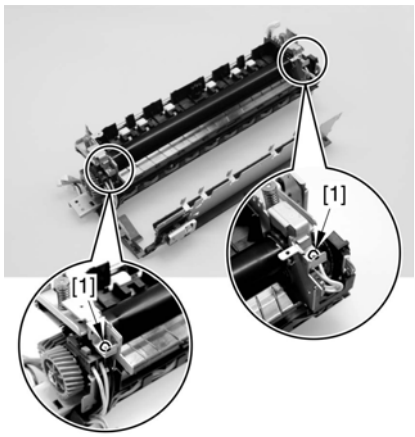

F-9-123

Do not touch the screw [1] used to keep the fixing assembly in place. Turning the screw will change the pressure of the fixing assembly, which cannot be adjusted in the field, necessitating the replacement of the fixing assembly.

F-9-124

3) Turn the locking plate [1] in the direction of the arrow to release it.

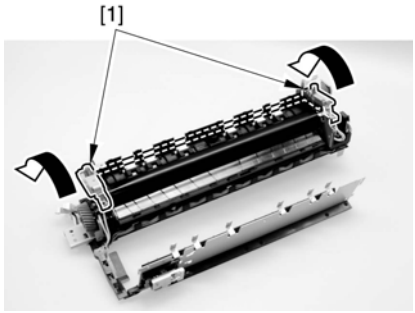

F-9-125

9.5.5.7 Removing the Fixing Film Unit

iR2270 / iR2870 / iR3570 / iR4570 / / iR2270N / / iR2870N / / iR3570N / / iR4570N / iR2230 / / / iR3530 /

1) While pushing down the release lever (front) [1], pull out the heater contact [2].

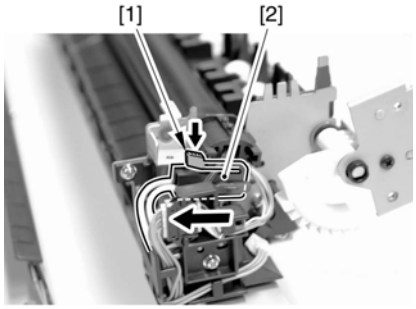

F-9-126

2) While pushing down the release lever (rear) [1], pull out the heater contact [2].

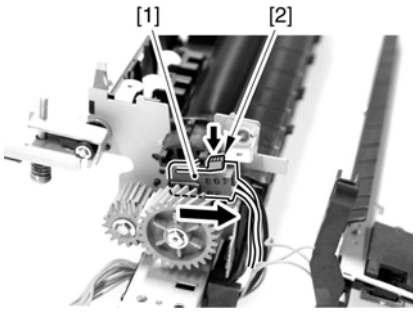

F-9-127

3) Remove the screw [1], and free the AC harness [2].

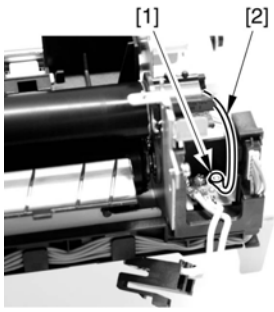

F-9-128

4) Free the AC harness [1] from the edge saddle [2].

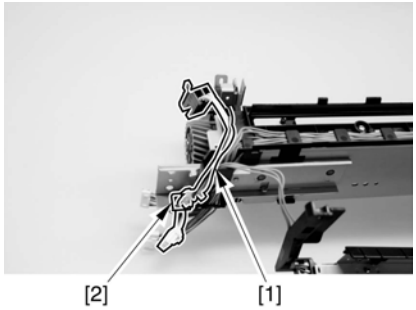

F-9-129

5) Free the relay connector [1] of the signal cable from the connector holder [2].

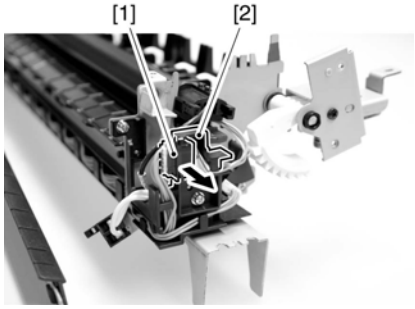

F-9-130

6) Disconnect the connector [2] from the relay connector [1].

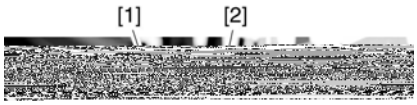

F-9-131

7) Remove the fixing film unit [1].

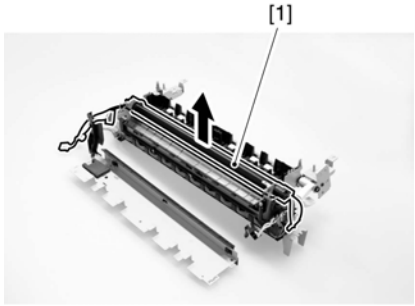

F-9-132

9.5.5.8 Removing the Inside Delivery Sensor

iR2270 / iR2870 / iR3570 / iR4570 / / iR2270N / / iR2870N / / iR3570N / / iR4570N / iR2230 / / / iR3530 /

1) Disconnect the connector [2] of the harness [1].

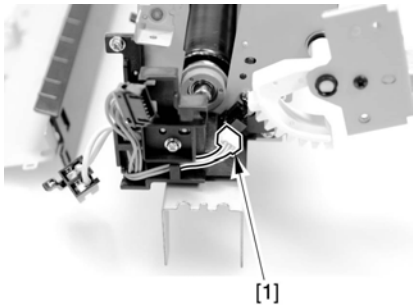

F-9-133

2) Remove the front latch [2] of the inside delivery sensor [1]; then, detach the inside delivery sensor.

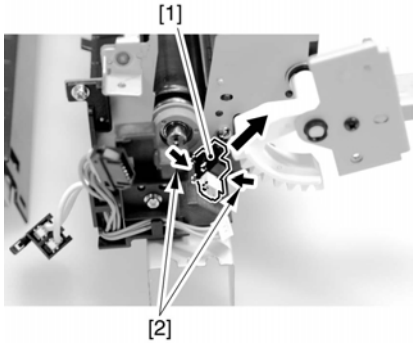

F-9-134

9.5.6 Fixing Film Sensor

9.5.6.1 Removing the inside delivery cover unit (old)

iR2270 / iR2870 / iR3570 / iR4570 / / iR2270N / / iR2870N / / iR3570N / / iR4570N / iR2230 / / / iR3530 /

The difference between new and old inside delivery cover unit:
Old inside delivery cover unit does not have a grip ring [1] at hinge. In this case, detach the cover following the procedure below.

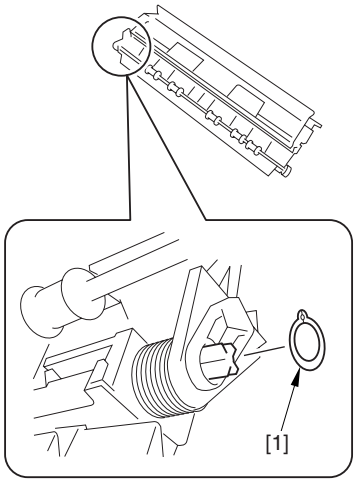

F-9-135

1) Remove the screw [1] and the stepped screw [2], and detach the inside delivery cover unit [3].

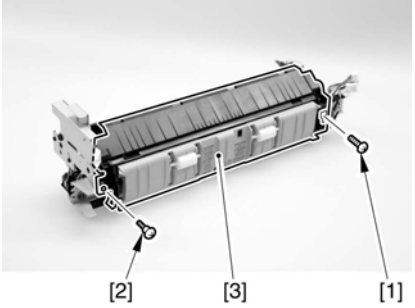

F-9-136

Note 1
Point to note when removing the inside delivery cover unit
Remove the inside delivery cover unit while supporting the guide [1] in the arrow direction A and opening it in the arrow direction B in the figure. Otherwise, the guide may come off the inside delivery cover unit.

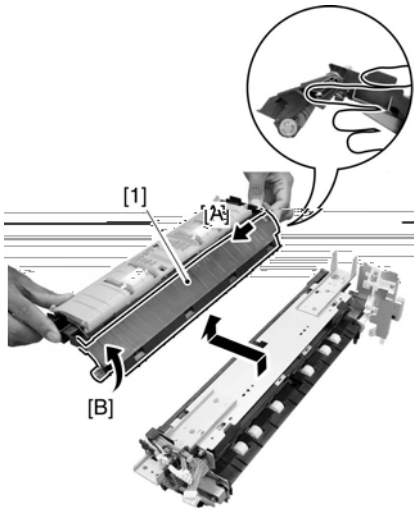

F-9-137

Note 2
Procedure for attaching the guide
Perform the following steps if the guide has come off the inside delivery cover unit.
1) Attach the torsion spring [2] to the duplexing support feeder mount [1]. At this time, hook the edge of the torsion spring on the area A of the duplexing support feeder mount.

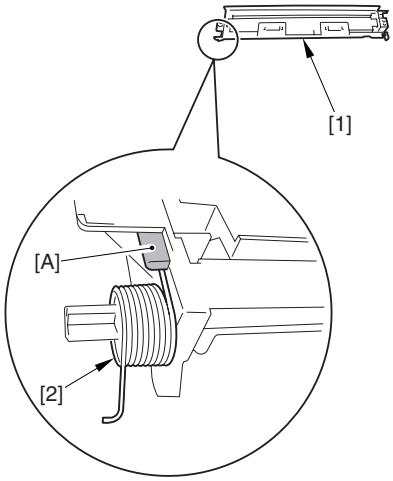

F-9-138

2) Attach the guide [1] to the duplexing support feeder mount [2]. At this time, fit [b] into [a] and [d] into [c]. Make sure that the edge [e] of the torsion spring is outside the guide.

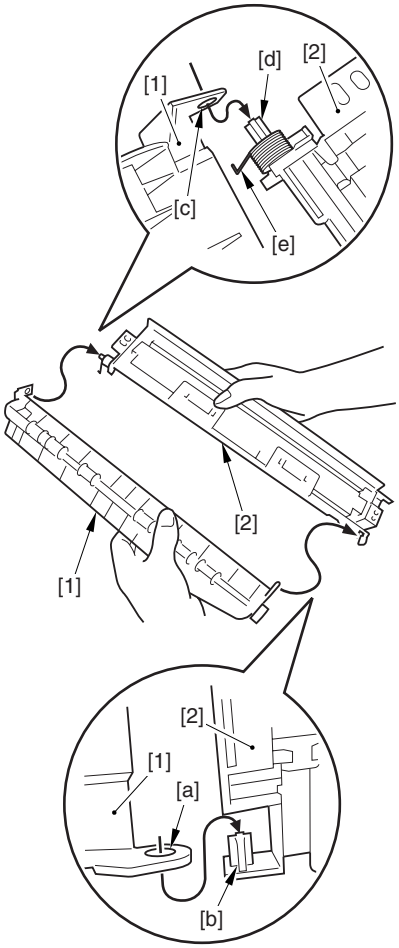

F-9-139

3) Hook the edge [1] of the torsion spring on the spring-hook area [2] of the inside delivery cover.

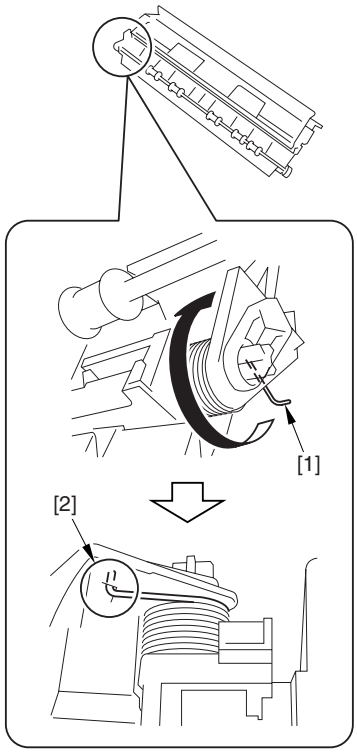

F-9-140

Note 3
Attaching the inside delivery cover unit
1) Attach the inside delivery cover unit while supporting the guide [1] in the arrow direction A and opening it in the arrow direction B. Opening the guide can prevent it from coming off the inside delivery cover unit. After attaching, make sure that the guide [1] rotates smoothly.

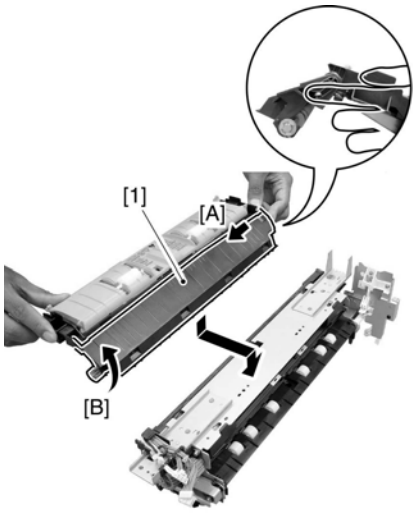

F-9-141

2) Attach the screw [1] and the stepped screw [2], and fix the inside delivery cover unit [3].

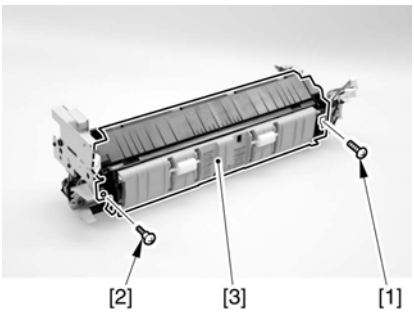

F-9-142

9.5.6.2 Removing the inside delivery cover unit (new)

iR2270 / iR2870 / iR3570 / iR4570 / / iR2270N / / iR2870N / / iR3570N / / iR4570N / iR2230 / / / iR3530 / / / / /

The difference between new and old inside delivery cover unit:
New inside delivery cover unit has a grip ring [1] at hinge. In this case, detach the cover following the procedure below.

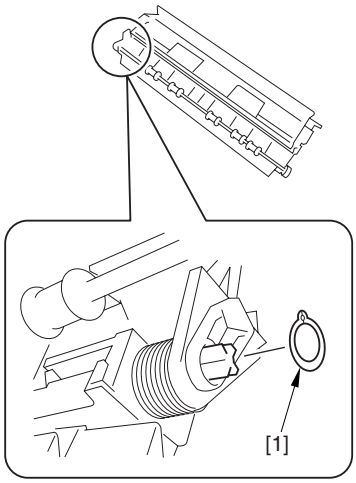

F-9-143

1) Remove the screw [1] and the stepped screw [2], and detach the inside delivery cover unit [3].

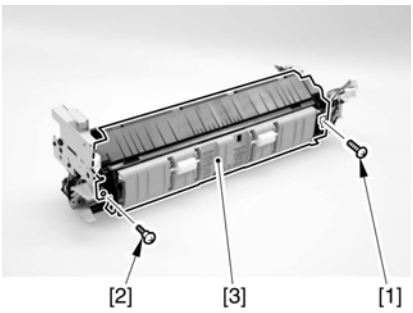

F-9-144

9.5.6.3 Removing the Grounding Plate

iR2270 / iR2870 / iR3570 / iR4570 / / iR2270N / / iR2870N / / iR3570N / / iR4570N / iR2230 / / / iR3530 /

1) Remove the 2 screws [1], and detach the grounding plate [2].

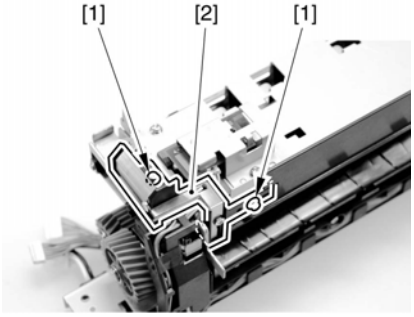

F-9-145

9.5.6.4 Removing the Fixing Film Sensor

iR2270 / iR2870 / iR3570 / iR4570 / / iR2270N / / iR2870N / / iR3570N / / iR4570N / iR2230 / / / iR3530 /

1) Remove the screw [1].

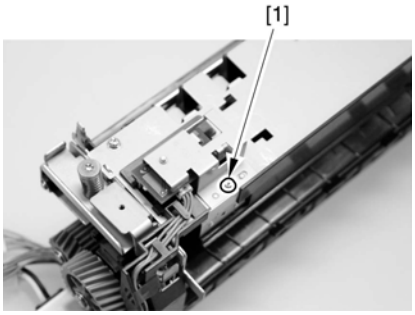

F-9-146

2) Detach the harness [1] from the guide [2].

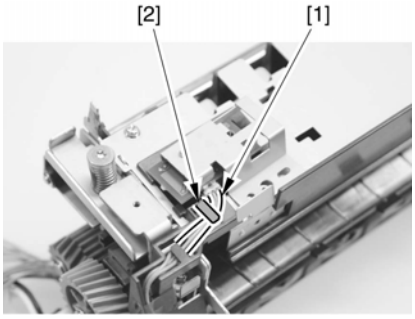

F-9-147

3) Disconnect the connector [1], and detach the fixing film sensor [2].

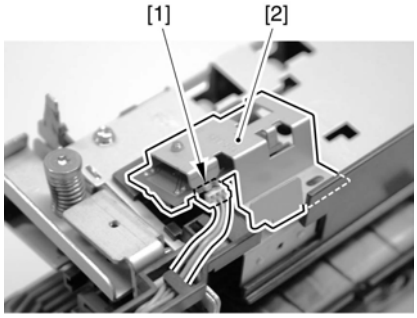

F-9-148

Chapter 10 External and Controls

Contents

10.1 Control Panel 10-1
10.1.1 Overview 10-1
10.1.2 Overview 10-1
10.1.3 LCD Indication Processing 10-1
10.1.4 LCD Indication Processing 10-2
10.1.5 Adjustment of the LCD Contact 10-2
10.1.6 Adjustment of the LCD Contact 10-2
10.1.7 Functions of the Control Panel CPU 10-2
10.1.8 Functions of the Control Panel CPU 10-2
10.2 Counters 10-2
10.2.1 Overview 10-2
10.2.2 Timing of Increasing the Count 10-3
10.3 Fans 10-3
10.3.1 Overview 10-3
10.3.2 2-Speed Control 10-3
10.3.3 Sequence of Operation 10-4
10.4 Power Supply System 10-4
10.4.1 Power Supply 10-4
10.4.1.1 Route of Power Inside the Printer Unit 10-4
10.4.1.2 Route of Power Inside the Printer Unit 10-5
10.4.1.3 Power Supply Route in the Reader Unit 10-6
10.4.1.4 Timing of Supply to the Reader Unit 10-6
10.4.1.5 Connections to Various Accessories 10-7
10.4.1.6 Connections to Various Accessories 10-7
10.4.2 Rated Output of the DC Power Supply PCB 10-8
10.4.2.1 Rated Output of the Printer Unit Power Supply PCB 10-8
10.4.2.2 Rated Output of the Controller Power Supply PCB 10-8
10.4.2.3 Rated Output of the Accessories Power Supply PCB 10-8
10.4.2.4 Rated Output of the All-Night Power Supply PCB 10-9
10.4.3 Protection Function 10-9
10.4.3.1 Protective Mechanisms 10-9
10.4.4 Backup Battery 10-9
10.4.4.1 Backup Battery 10-9
10.4.5 Energy-Saving Function 10-9
10.4.5.1 Overview 10-9
10.4.5.2 Machine as Supplied with Power 10-10
10.4.5.3 SNMP setup 10-10
10.4.5.4 SNMP setup (with HDD) 10-13
10.5 Parts Replacement Procedure 10-15
10.5.1 Main Drive Assembly 10-15
10.5.1.1 Removing the Rear Cover 10-15
10.5.1.2 Removing the Main Drive Assembly 10-15
10.5.1.3 Removing the Main Drive Assembly 10-15
10.5.2 Power Supply Unit 10-16
10.5.2.1 Removing the Rear Cover 10-16
10.5.2.2 Removing the Left Cover (lower) 10-16
10.5.2.3 Removing the Accessories Power Supply PCB 10-16
10.5.2.4 Removing the Main Power Supply 10-17
10.5.3 Control Panel 10-18
10.5.3.1 Removing the Control Panel 10-18
10.5.3.2 Removing the Control Panel 10-18
10.5.4 Control Panel LCD Unit 10-19

10.5.4.1 Removing the Control Panel 10-19
10.5.4.2 Removing the Control Panel Base Cover 10-19
10.5.4.3 Removing the Control Panel Inside Frame 10-20
10.5.4.4 Removing the Control Panel LCD 10-20
10.5.4.5 Removing the Control Panel 10-20
10.5.4.6 Removing the Control Panel Base Cover 10-21
10.5.4.7 Removing the Control Panel Frame 10-21
10.5.4.8 Removing the Control Panel LCD PCB 10-22
10.5.5 DC Controller PCB 10-22
10.5.5.1 Removing the Rear Cover 10-22
10.5.5.2 Removing the DC Controller PCB 10-22
10.5.6 Control Panel Inverter PCB 10-23
10.5.6.1 Removing the Control Panel 10-23
10.5.6.2 Removing the Control Panel Base Cover 10-23
10.5.6.3 Removing the Control Panel Inverter PCB 10-23
10.5.6.4 Removing the Control Panel 10-23
10.5.6.5 Removing the Control Panel Base Cover 10-24
10.5.6.6 Removing the Control Panel Frame 10-24
10.5.6.7 Removing the Control Panel Inverter PCB 10-25
10.5.7 Control Panel Key Switch PCB 10-25
10.5.7.1 Removing the Control Panel 10-25
10.5.7.2 Removing the Control Panel Base Cover 10-26
10.5.7.3 Removing the Control Panel Frame 10-26
10.5.7.4 Removing the Control Panel Key Switch PCB 10-26
10.5.7.5 Removing the Control Panel 10-26
10.5.7.6 Removing the Control Panel Base Cover 10-27
10.5.7.7 Removing the Control Panel Frame 10-27
10.5.7.8 Removing the Control Panel Key Switch PCB 10-28
10.5.8 Control Panel CPU PCB 10-28
10.5.8.1 Removing the Control Panel 10-28
10.5.8.2 Removing the Control Panel Base Cover 10-29
10.5.8.3 Removing the Controller Panel CPU PCB 10-29
10.5.8.4 Removing the Control Panel 10-29
10.5.8.5 Removing the Control Panel Base Cover 10-30
10.5.8.6 Removing the Control Panel CPU PCB 10-30
10.5.9 All Night Power Supply PCB 10-30
10.5.9.1 Removing the Rear Cover 10-30
10.5.9.2 Removing the All-Night Power Supply PCB 10-30
10.5.10 Controller Power Supply PCB 10-31
10.5.10.1 Removing the Rear Cover 10-31
10.5.10.2 Removing the Left Cover (lower) 10-31
10.5.10.3 Removing the Left Cover (Rear) 10-31
10.5.10.4 Removing the Accessories Power Supply PCB 10-31
10.5.10.5 Removing the Controller Power Supply PCB 10-32
10.5.11 Option Power Supply PCB 10-32
10.5.11.1 Removing the Rear Cover 10-32
10.5.11.2 Removing the Left Cover (lower) 10-32
10.5.11.3 Removing the Left Cover (Rear) 10-32
10.5.11.4 Removing the Accessories Power Supply PCB 10-33
10.5.12 High-Voltage PCB 10-33
10.5.12.1 Removing the Front Cover Unit 10-33
10.5.12.2 Removing the Waste Toner Case 10-33
10.5.12.3 Removing the Toner Cartridge 10-34
10.5.12.4 Removing the Drum Unit 10-34
10.5.12.5 Removing the Developing Assembly 10-35
10.5.12.6 Removing the Upper Tray 10-36
10.5.12.7 Removing the Toner Cartridge Cover 10-36
10.5.12.8 Removing the Pre-Exposure Lamp 10-36
10.5.12.9 Removing the Left Cover 10-36
10.5.12.10 Removing the Laser Unit 10-37
10.5.12.11 Removing the Hopper Assembly 10-37

10.5.12.12 Removing the Right Cover (rear) 10-38
10.5.12.13 Removing the Right Door 10-38
10.5.12.14 Removing the Right Door 10-39
10.5.12.15 Removing the Right Door 10-40
10.5.12.16 Removing the Fixing Unit 10-40
10.5.12.17 Removing the Gear 10-41
10.5.12.18 Removing the High-Voltage PCB 10-41
10.5.13 Exhaust Fan 10-42
10.5.13.1 Removing the Heat Discharge Fan 10-42
10.5.13.2 Removing the Heat Discharge Fan 10-43
10.5.14 Motor of Main Drive Assembly 10-43
10.5.14.1 Removing the Rear Cover 10-43
10.5.14.2 Removing the Main Drive Assembly 10-43
10.5.14.3 Removing the Main Drive Motor 10-44
10.5.14.4 Removing the Main Drive Motor 10-44
10.5.15 Fixing Driver Motor 10-45
10.5.15.1 Removing the Rear Cover 10-45
10.5.15.2 Removing the DC Controller PCB 10-45
10.5.15.3 Removing the Fixing Drive Motor 10-45
10.5.16 Right Door 10-46
10.5.16.1 Removing the Right Cover (rear) 10-46
10.5.16.2 Removing the Right Door 10-46
10.5.16.3 Removing the Right Door 10-47
10.5.17 Circuit Braker 10-47
10.5.17.1 Removing the Rear Cover 10-47
10.5.17.2 Removing the Circuit Breaker 10-47

10.1 Control Panel

10.1.1 Overview

iR2270 / iR2870 / iR3570 / iR4570 / / iR2270N / / iR2870N / / iR3570N / / iR4570N

The machine's control panel consists of the following PCBs, LCD, and touch panel:
The major functions of the control panel are as follows:
- LCD indication
- contrast adjustment
- touch switch input
- hardware key input

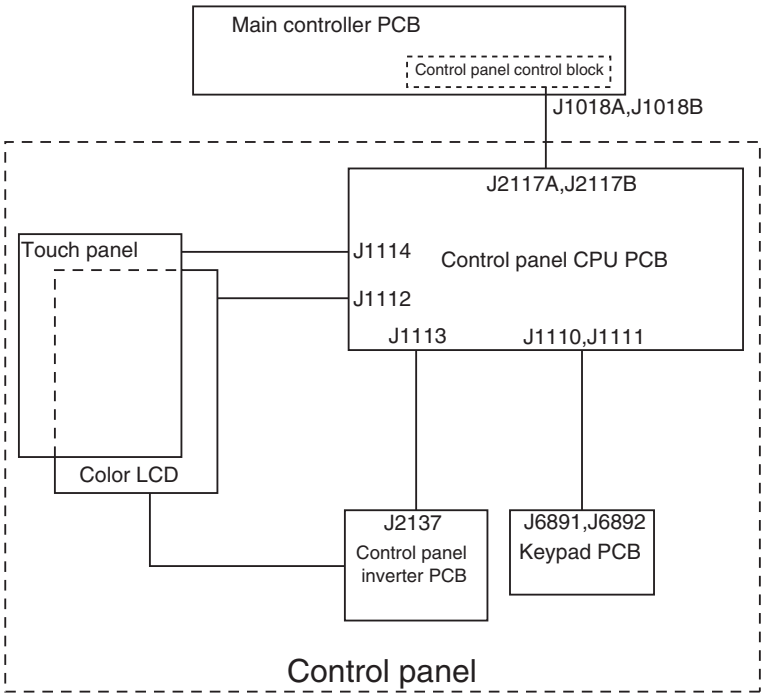

F-10-1

10.1.2 Overview

iR2230 / / / iR3530 /

The machine's control panel consists of the following PCBs, LCD, and touch panel:
The major functions of the control panel are as follows:
- LCD indication
- contrast adjustment
- touch switch input
- hardware key input

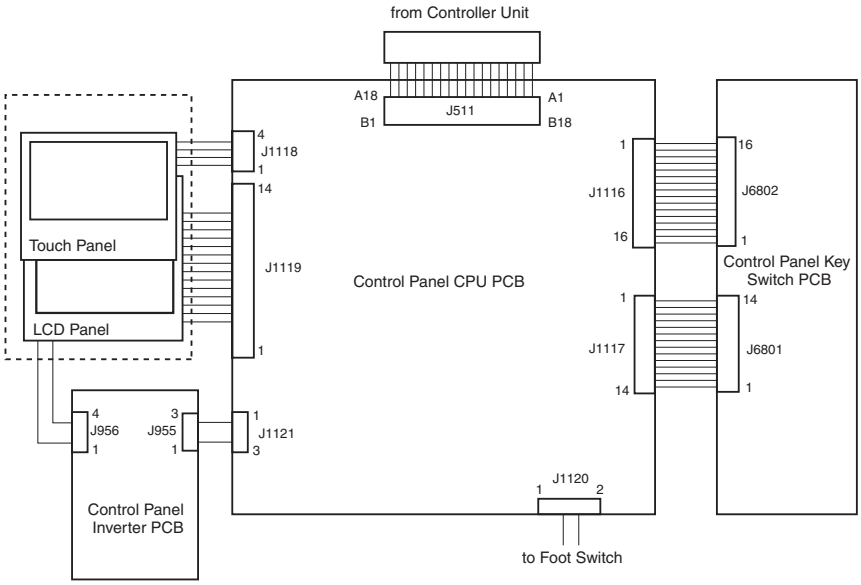

F-10-2

10.1.3 LCD Indication Processing

iR2270 / iR2870 / iR3570 / iR4570 / / iR2270N / / iR2870N / / iR3570N / / iR4570N

The CPU on the main controlled PCB sends data (display data) to the control panel CPU PCB as instructed by the program.
The data is sent through the control panel PCB to reach the color LCD.

10.1.4 LCD Indication Processing

iR2230 / / / iR3530 /

The CPU on the main controlled PCB sends data (display data) to the control panel CPU PCB as instructed by the program.
The data is sent through the control panel PCB to reach the LCD.

10.1.5 Adjustment of the LCD Contact

iR2270 / iR2870 / iR3570 / iR4570 / / iR2270N / / iR2870N / / iR3570N / / iR4570N

The machine is equipped with a density adjustment volume (VR6801) on its keypad PCB for use by the user to adjust the contrast of the LCD screen.

10.1.6 Adjustment of the LCD Contact

iR2230 / / / iR3530 /

The machine is equipped with a density adjustment volume (VR2) on its keypad PCB for use by the user to adjust the contrast of the LCD screen.

10.1.7 Functions of the Control Panel CPU

iR2270 / iR2870 / iR3570 / iR4570 / / iR2270N / / iR2870N / / iR3570N / / iR4570N

- Monitoring the Key Inputs
  It communicates the keypad and function key inputs to the CPU on the main controller PCB.
- Monitoring the Touch Panel Input
  It communicates the key inputs made on the touch panel to the CPU on the main controller PCB.
- Controlling the Buzzer Sound
- Controlling the Control Panel LED

Memo:
the color LCD is driven by the main controller, and the control panel CPU PCB serves to relay the drive signals.

10.1.8 Functions of the Control Panel CPU

iR2230 / / / iR3530 /

- Monitoring the Key Inputs
  It communicates the keypad and function key inputs to the CPU on the main controller PCB.
- Monitoring the Touch Panel Input
  It communicates the key inputs made on the touch panel to the CPU on the main controller PCB.
- Controlling the Buzzer Sound
- Controlling the Control Panel LED

Memo:
the LCD is driven by the main controller, and the control panel CPU PCB serves to relay the drive signals.

10.2 Counters

10.2.1 Overview

iR2270 / iR2870 / iR3570 / iR4570 / / iR2270N / / iR2870N / / iR3570N / / iR4570N / iR2230 / / / iR3530 /

The machine is equipped with counters that keep track of printouts according to the type of printer unit. The counters are indicated in response to a press on the Check key on the control panel. The following shows the functions of the counter as set at time of shipment from the factory.

T-10-1

	Counter 1	Counter 2	Counter 3	Counter 4	Counter 5	Counter 6
Japan*1 ***	total 1	not indicated**	not indicated**	not indicated**	not indicated**	not indicated**
	101	**000**	**000**	**000**	**000**	**000**
Japan*1 ****	total 2	copy (total 2)	total A (total 2)	not indicated**	not indicated**	not indicated**
	102	**202**	**127**	**000**	**000**	**000**
120VTW *2	total 1	total (large)	copy (total 1)	copy (large)	not indicated**	not indicated**
	101	**103**	**201**	**203**	**000**	**000**
120V UL *3	total 1	total (large)	copy (total 1)	copy (large)	not indicated**	not indicated**
	101	**103**	**201**	**203**	**000**	**000**
230V *4	total 1	total (large)	copy (total 1)	copy (large)	not indicated**	not indicated**
	101	**103**	**201**	**203**	**000**	**000**
240V EUR *5	total 1	total (large)	total (small)	scan (total 1)	not indicated**	not indicated**
	101	**103**	**104**	**501**	**000**	**000**
240V CA *6	total 1	total (large)	copy (total 1)	copy (large)	not indicated**	not indicated**
	101	**103**	**201**	**203**	**000**	**000**

<Guide to Symbols>
large: large-sized paper (in feed direction, 364 mm or longer; count x 1)
small: small-sized paper (in feed direction, 364 mm or less).
total: all (C + P); count x 1.
double-sided: in auto double-side copying count x 1; feed.

- The 3-digit symbol in the Counter column indicates the setting in the following service does item:
1 through 6 under COUNTER>OPTION>USER>COUNTER.
- Counters 2 through 6 may be changed in the following service mode mode item:
COPIER>OPTION>USER.
*1 :F14-3213/ 3223/ 3218/ 3211/ 3228/ 3221/ 3318/ 3311/ 3328/ 3321/ 3319/ 3312/ 6718/ 6711/ 6728/ 6721/ 6719/ 6712
*2 :None in particular
*3 :F14-3338/ 3331/ 6738/ 6731/ 5438/ 5431
*4 :F14-3248/ 3241/ 3348/ 3341/ 6748/ 6741/ 5448/ 5441
*5 :F14-3298/ 3291/ 3398/ 3391/ 6798/ 6791/ 5498/ 5491
*6 :F14-3268/ 3261/ 3368/ 3361/ 6768/ 6761/ 5468/ 5461
** by default, not indicated; may be changed in service mode.
*** '1' is set for the following service mode item: COPIER>OPTION>USE>CNT-SW.
**** '1' is set for the following service mode item: COPIER>OPTION>USER>CNT-SW.

10.2.2 Timing of Increasing the Count

iR2270 / iR2870 / iR3570 / iR4570 / / iR2270N / / iR2870N / / iR3570N / / iR4570N / iR2230 / / / iR3530 /

The timing at which the count is increased differs depending on the printing mode (single-sided or double-sided), target of delivery, and type of accessory:
1. Singe-Sided Printing, 2nd Side of a Double-Sided Print
In single-side printing or for the 2nd side of a double-sided print, the count is increased when the trailing edge of the sheet is discharged outside the machine in relation to the output of the following sensors:

T-10-2

Condition	Target of delivery	Sensor
Finisher absent	Tray 1	Delivery sensor (PS14)
	Tray 2	No. 2 delivery sensor (PS1A)
	Tray 3	No. 3 delivery sensor (PS5)
Finisher present		Delivery sensor of the finisher

2. 1st Side of a Double-Sided Print
When the double-sided print feed sensor (PS17) goes on, the machine will assume that printing on the 1st side has been completed, thereby increasing the count.

10.3 Fans

10.3.1 Overview

iR2270 / iR2870 / iR3570 / iR4570 / / iR2270N / / iR2870N / / iR3570N / / iR4570N / iR2230 / / / iR3530 /

The names and the functions of the fans used in the machine are as follows:

T-10-3

Notation	Name	Filter	2-speed control	Description
FM1	Heat discharge fan (rear)	Present	Used	Cools the fixing assembly.
FM2	Heat discharge fan (front)	Present	Used	Cools the fixing assembly.

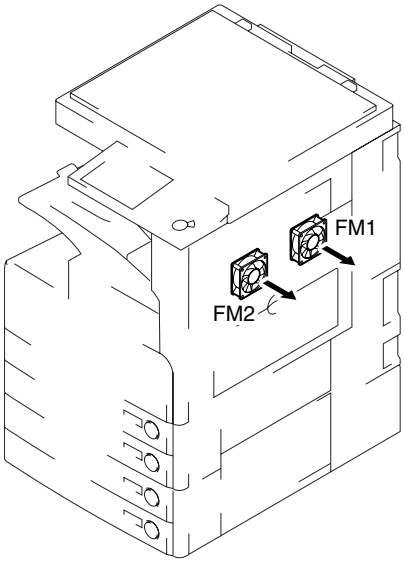

F-10-3

10.3.2 2-Speed Control

iR2270 / iR2870 / iR3570 / iR4570 / / iR2270N / / iR2870N / / iR3570N / / iR4570N / iR2230 / / / iR3530 /

The rotation of the 2 fans used in the machine is controlled to 2 different speeds by the voltage switchover circuit of the individual fans.

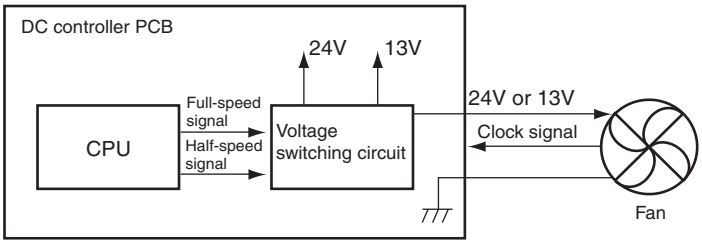

F-10-4

10.3.3 Sequence of Operation

iR2270 / iR2870 / iR3570 / iR4570 / / iR2270N / / iR2870N / / iR3570N / / iR4570N / iR2230 / / / iR3530 /

1. Standby Mode, Sleep Mode
In standby mode or sleep mode, the heat discharge fan (front, rear; FM1/2) is at rest.

2. Printing
While printing is under way, the fans are switched between full speed and half speed depending on whether the machine is in full speed mode or half speed mode and the reading of the environment sensor (HU1).

- Double-Side Printing

T-10-4

Environment sensor (HU1) reading	Full speed, half speed
25 deg C or more	Full speed
Less than 25 deg C	Half speed

- Single-Sided Printing

T-10-5

Environment sensor (HU1) reading	Full speed, half speed
30 deg C or ore	Full speed
Less hand 30 deg C	Half speed

Note 1:
While the machine is in continuous printing mode, the insertion of one or more double-sided prints will start the control used for double-sided printing.
Note 2:
The printing interval covers the interval up to when the fixing motor (M3) stops rotation.

10.4 Power Supply System

10.4.1 Power Supply

10.4.1.1 Route of Power Inside the Printer Unit

iR2270 / iR2870 / iR3570 / iR4570 / / iR2270N / / iR2870N / / iR3570N / / iR4570N

The machine's DC power is controlled by the printer unit power supply PCB.
The following shows the functions of the individual power supply PCBs used or accessories and the distribution of power:

T-10-6

Name	Description	Remarks
Printer unit power supply PCB	Generates DC power (24 V, 13 V); supplies DC power to the controller power supply PCB and cassette pedestal.	
Accessories power supply PCB	Supplies power to the side paper deck, buffer path, and finisher.	
Main switch	Turns on/off the power to the AC driver PCB.	
Door switch	Turns on/off 24 VU1 to the DC controller PCB.	
Leakage breaker	Cuts power in the event of an error.	
Environment heater switch PCB	Turns on/off power to the cassette heater, printer unit heater, and deck heater.	Optional
High-voltage power supply PCB	Generate various high voltage.	
AC driver PCB	Supplies AC power to the printer unit power supply PCB, accessories power supply PCB, Supplies AC power to all-night power supply PCB; drives the fixing system.	
Controller power supply PCB	Supplies DC power to the 3-way unit, fax board, controller, HVT and DC controller PCB; generates DC power (13V, 5V, 3.3V).	
	Generates DC power (5V,3.3V).	
All-night power supply PCB	Generates and supplies all-night power (3 VB).	

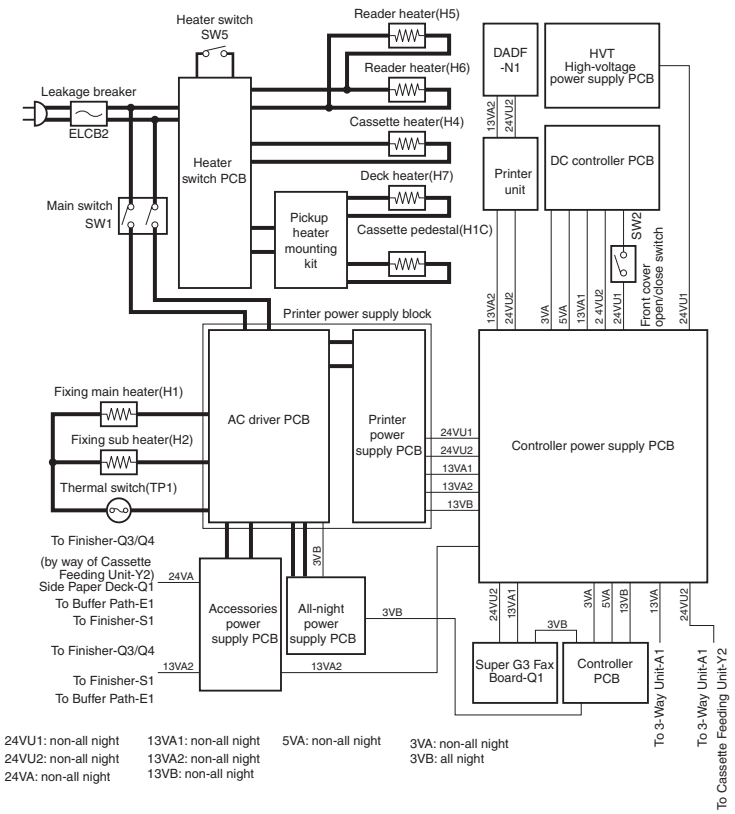

F-10-5

10.4.1.2 Route of Power Inside the Printer Unit

iR2230 / / / iR3530 /

The machine's power is supplied by the printer power supply PCB. The DC power to accessories is supplied by the accessories power supply PCB. The functions of the individual power supply PCBs are as follows, shown together with the distribution of power:

T-10-7

Name	Description	Remarks
Printer power supply PCB	generates DC power (24 V, 13 V). supplies DC power to controller PCB, cassette pedestal	
Accessories power supply PCB	supplies DC power to finisher.	
Main switch	turns on/off AC power to AC driver PCB.	
Door switch	turns on/off DC power to DC driver PCB.	
Leakage breaker	cuts off power in the event of error.	
High-voltage power supply PCB	generates various high voltage.	
AC driver PCB	supplies AC power to printer power supply PCB, accessories power supply PCB, uninterrupted power supply PCB. Fixing drive.	
Controller power supply PCB	supplies DC power to 3way unit-A1, fax board, controller, DC controller PCB, HVT.	
	generates DC power (5 V, 3.3 V).	
Uninterruptive power supply PCB	generates and supplies uninterruptive power (3 VB).	

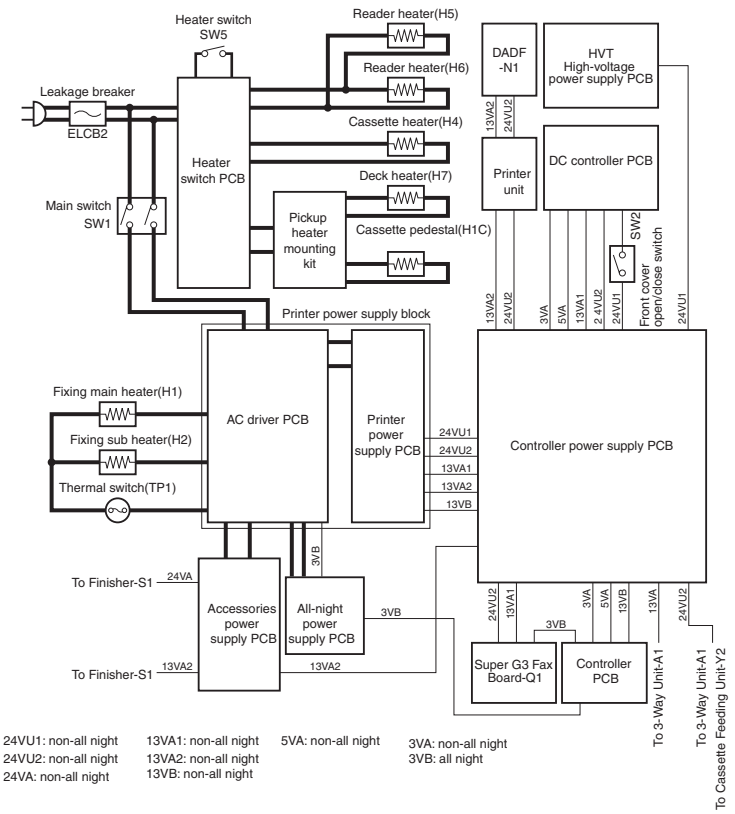

F-10-6

10.4.1.3 Power Supply Route in the Reader Unit

iR2270 / iR2870 / iR3570 / iR4570 / / iR2270N / / iR2870N / / iR3570N / / iR4570N / iR2230 / / / iR3530 /

The printer unit controller PCB generates the following DC voltages using the 13 VDC supplied by the printer unit:

- 24 VDC (for motor drive)
- 13 VDC (for LED array)
- 5 VDC (for sensor drive)
- 3.3 VDC (for IC drive/for CCD drive)

24 VDC power is used to drive the motors, while 13 VDC power is used to turn on the LED array for illumination of originals.

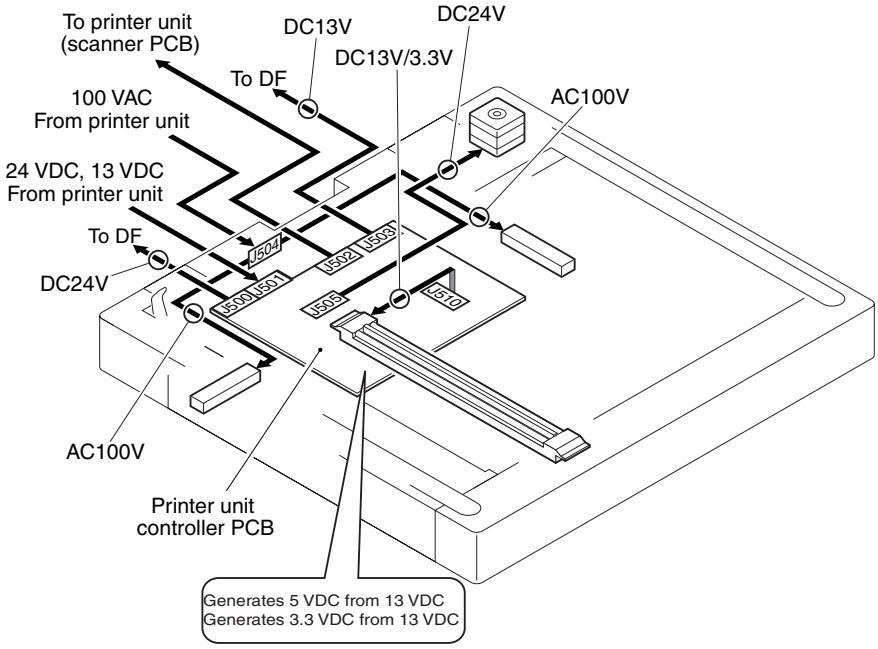

F-10-7

10.4.1.4 Timing of Supply to the Reader Unit

iR2270 / iR2870 / iR3570 / iR4570 / / iR2270N / / iR2870N / / iR3570N / / iR4570N / iR2230 / / / iR3530 /

The reader unit is supplied with 24 VDC/1.3 VDC by the printer unit at such times as described below.

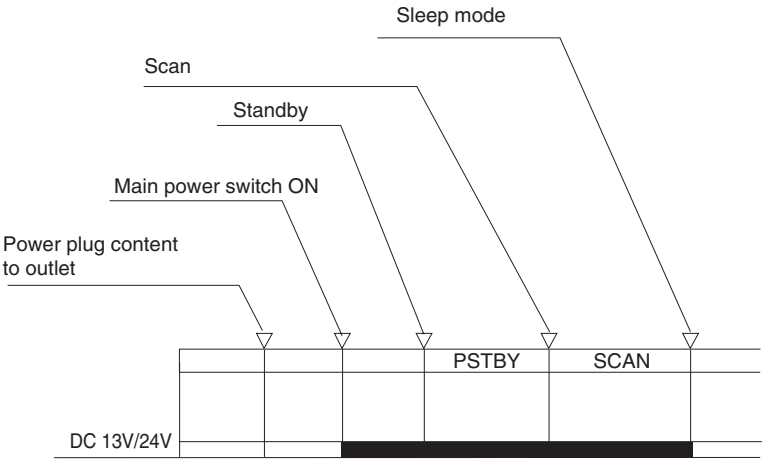

F-10-8

10.4.1.5 Connections to Various Accessories

iR2270 / iR2870 / iR3570 / iR4570 / / iR2270N / / iR2870N / / iR3570N / / iR4570N /

The following diagram shows the connections between the printer unit and the various accessories used for the supply of power:

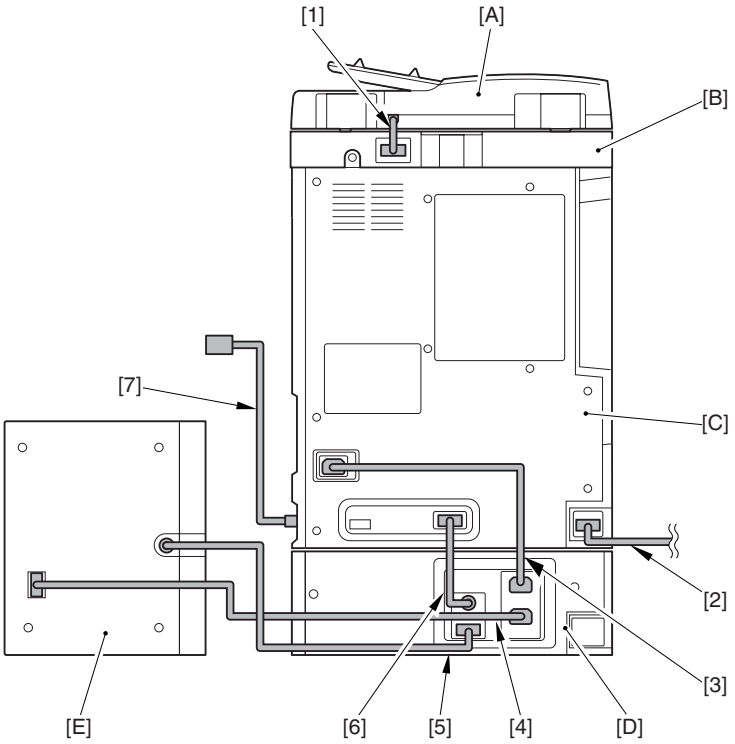

F-10-9

[1] DADF I/F cable
[2] Finisher-Q3, Saddle Finisher-Q4 I/F cable
[3] Pickup heater cable
[4] Side deck heater cable
[5] Side deck I/F cable
[6] Cassette pedestal I/F cable
[7] AC input

[A] DADF-N1
[B] Reader unit
[C] Printer unit
[D] Cassette Feeding Unit-Y2
[E] Paper Deck-Q1

10.4.1.6 Connections to Various Accessories

iR2230 / / / iR3530 /

The following diagram shows the connections between the printer unit and the various accessories used for the supply of power:

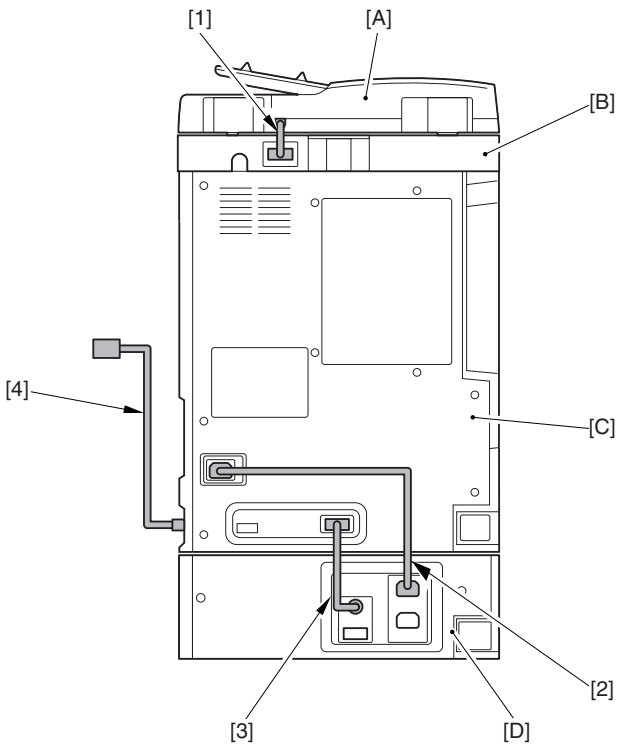

F-10-10

[1] DADF I/F cable
[2] Pickup heater cable
[3] Cassette pedestal I/F cable
[4] AC input

[A] DADF-N1
[B] Reader unit
[C] Printer unit
[D] Cassette Feeding Unit-Y2

10.4.2 Rated Output of the DC Power Supply PCB

10.4.2.1 Rated Output of the Printer Unit Power Supply PCB

iR2270 / iR2870 / iR3570 / iR4570 / / iR2270N / / iR2870N / / iR3570N / / iR4570N / iR2230 / / / iR3530 /

The following are the ratings and the tolerances of the printer unit power supply PCB:

T-10-8

Output	13VA1	13VA2	13VB	24VU1	24VU2
All-night/non-all night	non-all night	non-all night	non-all night	non-all night	
Rated output	13.2V	13.2V	13.2V	24V	
Power supply tolerance	+/-3%	+/-3%	+/-3%	+5, -5% (0.1 to 8A)	
				+8%, -6% (from 0A to 0.1 A, from 8A to 10A)	

10.4.2.2 Rated Output of the Controller Power Supply PCB

iR2270 / iR2870 / iR3570 / iR4570 / / iR2270N / / iR2870N / / iR3570N / / iR4570N / iR2230 / / / iR3530 /

The following are the ratings and the power supply tolerances of the controller power supply PCB:

T-10-9

Output	3VA	5VA
All-night/non-all night	non-all night	non-all night
Rated output	3.4V	5.1V
Power supply tolerance	+/-4%	+/-3%

10.4.2.3 Rated Output of the Accessories Power Supply PCB

iR2270 / iR2870 / iR3570 / iR4570 / / iR2270N / / iR2870N / / iR3570N / / iR4570N / iR2230 / / iR3530 /

The following are the ratings and the power supply tolerances of the accessories power supply PCB:

T-10-10

Output	24VA
All night/non-all night	non -all night
Rated output	24V
Power supply tolerance	+/-5% (from 0.1A to 6.5A)

Output	24VA
	+8%,-6% (from 0A to 0.1A, from 6.5 to 12A)

10.4.2.4 Rated Output of the All-Night Power Supply PCB

iR2270 / iR2870 / iR3570 / iR4570 / / iR2270N / / iR2870N / / iR3570N / / iR4570N / iR2230 / / / iR3530 /

The following are the ratings and the power supply tolerances of the all-night power supply PCB:

T-10-11

Output	3VB
All-night/non-all night	all night
Rated output	3.4V
Power supply tolerance	+/-3%

10.4.3 Protection Function

10.4.3.1 Protective Mechanisms

iR2270 / iR2870 / iR3570 / iR4570 / / iR2270N / / iR2870N / / iR3570N / / iR4570N / iR2230 / / / iR3530 /

The machine's DC power supply PCB and accessories power supply PCB are equipped with an over-current protective mechanism and an over-voltage protective mechanism that will automatically shut off the output voltage to protect its electrical circuitry in the event of a short circuit or other fault in any of its loads causing over-current.
In the event of a fault in the 3 VB power (all-night power supply), all supplies of power will be shut off. A fault in other power supplies will shut off power to all loads except for 3 VB.
If a malfunction occurs in 3VB (all-night power supply), it is necessary to turn off the main power switch of the printer unit, remove the cause triggering the protection circuit, and replace the all-night power supply PCB. (The fuse of the all-night power supply PCB is likely to have blown.)
For other cases than above, the protection circuit can be reset by turning off the main power switch of the printer unit, removing the cause triggering the protection circuit, leaving the printer unit alone for more than 3 min, and tuning on the power again.

10.4.4 Backup Battery

10.4.4.1 Backup Battery

iR2270 / iR2870 / iR3570 / iR4570 / / iR2270N / / iR2870N / / iR3570N / / iR4570N / iR2230 / / / iR3530 /

The controller PCB and the DC controller PCB are equipped with a lithium battery (1 pc. each) to serve as a source of power, backing up various data in the even of power failure.

T-10-12

Controller PCB	manganese dioxide lithium battery (3 V, 1000 mAh)
DC controller PCB	lithium battery (3 V, 600 mAh)
Life	DC controller PCB: 7 yr or less Controller PCB: 8.8 yr or more (with the power plug disconnected)
Replacement	The batteries cannot be replaced on their own in the field.

Be sure to exercise care whenever you have to replace the battery. In certain cases, it may explode.
Do not use a battery which is not of a type specifically indicated (same name, or equivalent).
Dispose of any used battery according to the instructions of its manufacturer.

10.4.5 Energy-Saving Function

10.4.5.1 Overview

iR2270 / iR2870 / iR3570 / iR4570 / / iR2270N / / iR2870N / / iR3570N / / iR4570N / iR2230 / / / iR3530 /

1. Standby Mode
When the machine is in standby mode, all its power supplies are provided with power, and the machine is ready for immediate operation.
2. Sleep Mode
2-1. Sleep 1
When the machine is in sleep mode 1, its control panel remains off, and the polygon motor (M1) will not rotate even when any of the control panel keys is pressed. In this mode, the machine is provided with power as in standby mode.

2-2. Sleep 3
When the machine is in sleep mode 3, only 3 VB is available. The machine will move to standby mode from sleep 3 in response to any of the following:
- print job
- press on the control panel power switch
- incoming fax
The following shows the sections of the machine that are provided with power in sleep 3:

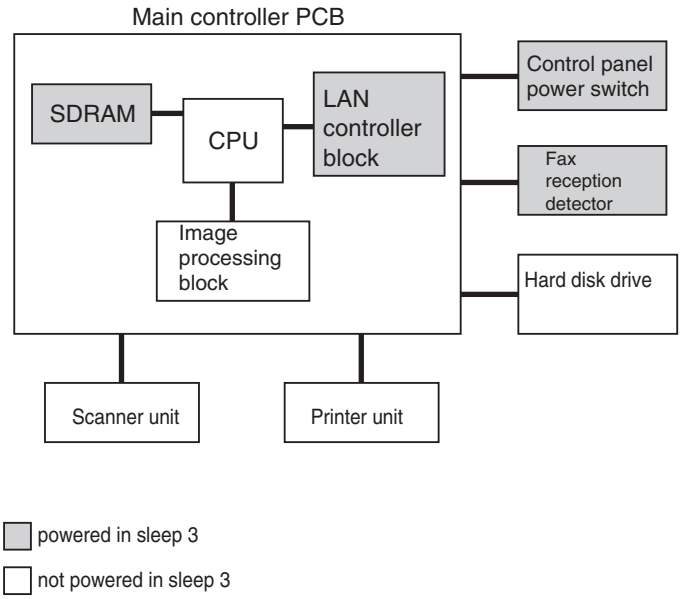

F-10-11

3. AC Off Mode
When the machine is in AC off mode, its power swish is off. All its power supplies and its heater control mechanism are off.

10.4.5.2 Machine as Supplied with Power

iR2270 / iR2870 / iR3570 / iR4570 / / iR2270N / / iR2870N / / iR3570N / / iR4570N / iR2230 / / / iR3530 /

- Standby Mode, Sleep Mode, AC Off Mode

T-10-13

			Stand-by mode	Sleep mode		AC off mode
				1	3	
		Remote 1	ON	ON	OFF	OFF
		Remote 2	ON	ON	OFF	OFF
Reader unit	non-all night	13VA2	ON	ON	OFF	OFF
	non-all night	24VU2	ON	ON	OFF	OFF
DC controller PCB	non-all night	3VA	ON	ON	OFF	OFF
	non-all night	5VA	ON	ON	OFF	OFF
	non-all night	13VA1	ON	ON	OFF	OFF
	non-all night	24VU1	ON	ON	OFF	OFF
	non-all night	24VU2	ON	ON	OFF	OFF
Main controller PCB	non-all night	3VA	ON	ON	OFF	OFF
	all night	3VB	ON	ON	ON	OFF
	non-all night	5VA	ON	ON	OFF	OFF
	non-all night	12VA	ON	ON	OFF	OFF
Fax	all night	5VS	ON	ON	ON	OFF
	non-all night	13VA1	ON	ON	OFF	OFF
	non-all night	24VU2	ON	ON	OFF	OFF

Memo:
The power supply output state is determined according to combinations of remote 1 and 2. States, i.e., remote 1 and 2, are output from the main controller PCB.

10.4.5.3 SNMP setup

iR2270 / iR2870 / iR3570 / iR4570 / / iR2270N / / iR2870N / / iR3570N / / iR4570N / / / / /

When the machine is used as a Windows printer, enabling 'Use SNMP' causes the operating system to collect machine status information at specific intervals, preventing the machine from starting a sleep state.
To avoid the situation, disable the setting (Windows' printer properties).
-Disabling 'Use SNMP'
1) Select 'Configure Port' on the Ports screen (printer properties).

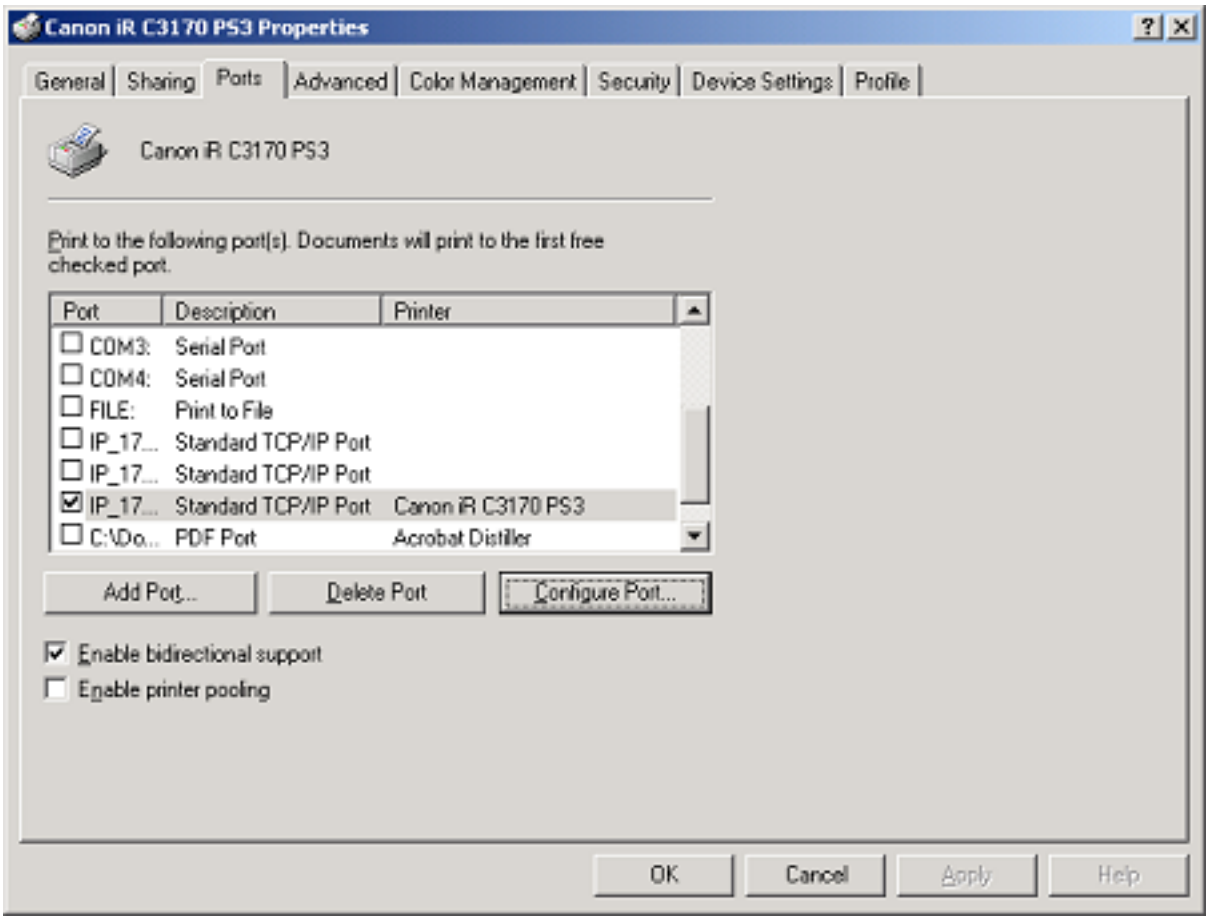

F-10-12

2) Remove the check mark from 'SNMP Status Enabled'.

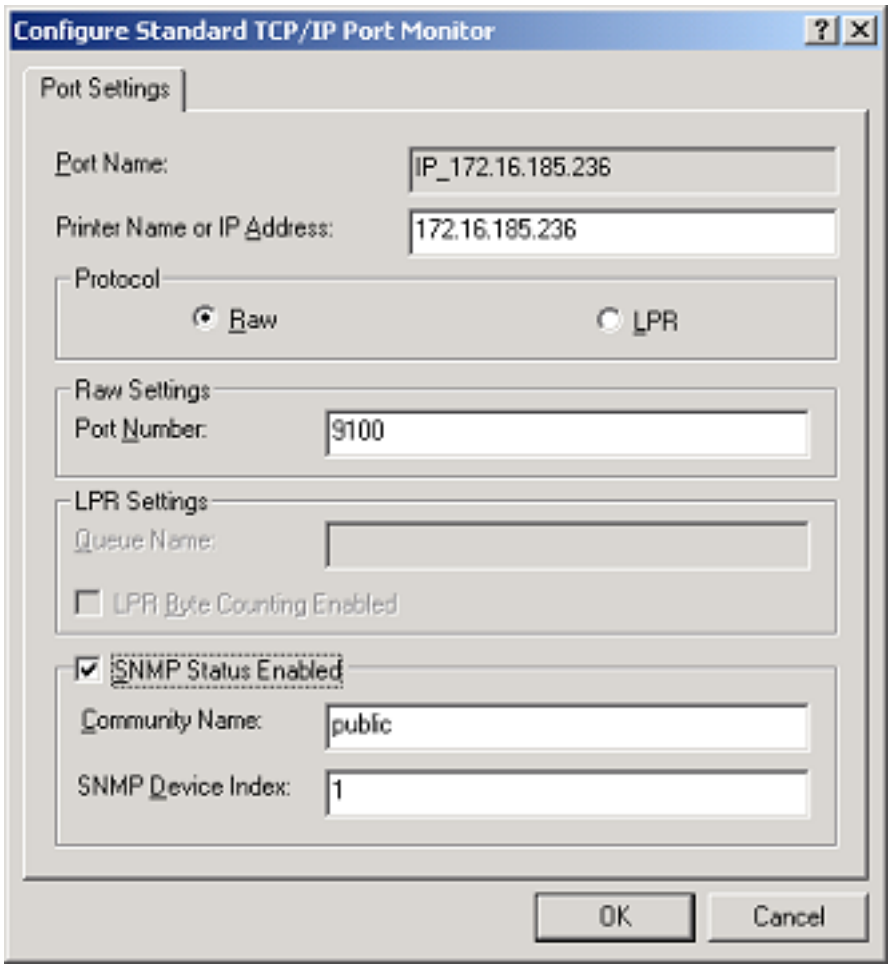
Configure Standard TCP/IP Port Monitor
Port Settings
Port Name:
IP_172.16.185.236
Printer Name or IP Address:
172.16.185.236
Protocol
Raw
LPR
Raw Settings
Port Number:
9100
LPR Settings
Queue Name:
LPR Byte Counting Enabled
SNMP Status Enabled
Community Name:
public
SNMP Device Index:
1
OK
Cancel

F-10-13

10.4.5.4 SNMP setup (with HDD)

iR2230 / / iR3530 / / /

When the machine is used as a Windows printer, enabling 'Use SNMP' causes the operating system to collect machine status information at specific intervals, preventing the machine from starting a sleep state.
To avoid the situation, disable the setting (Windows' printer properties).
-Disabling 'Use SNMP'
1) Select 'Configure Port' on the Ports screen (printer properties).

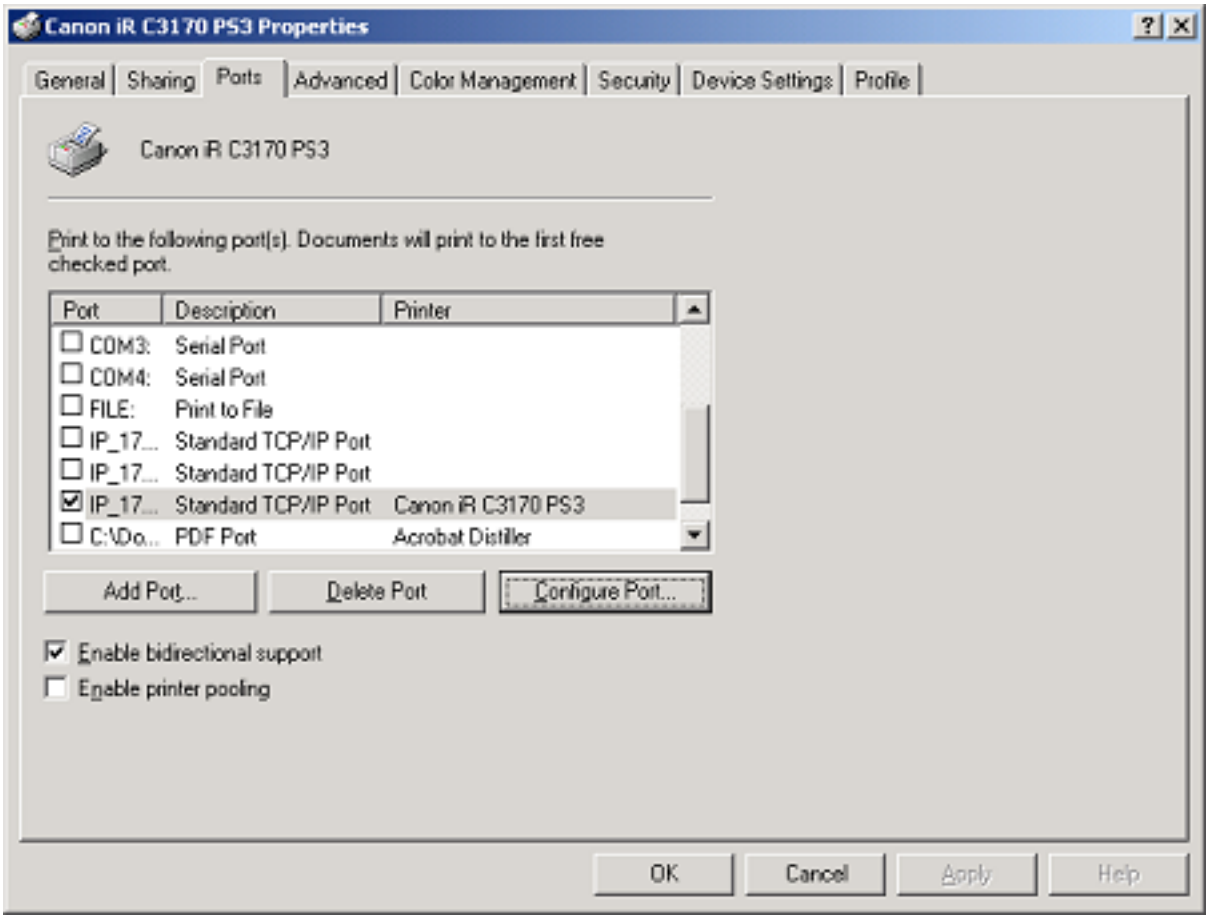

F-10-14

2) Remove the check mark from 'SNMP Status Enabled'.

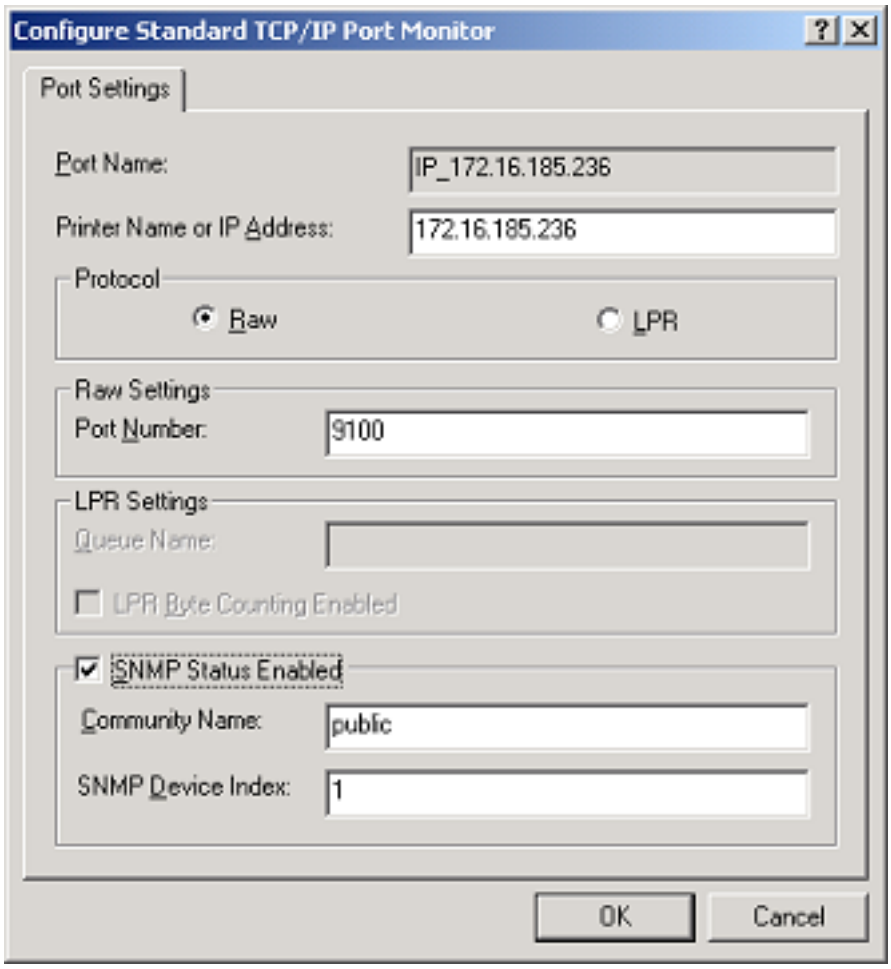
Configure Standard TCP/IP Port Monitor
Port Settings
Port Name:
IP_172.16.185.236
Printer Name or IP Address:
172.16.185.236
Protocol
Raw
LPR
Raw Settings
Port Number:
9100
LPR Settings
Queue Name:
LPR Byte Counting Enabled
SNMP Status Enabled
Community Name:
public
SNMP Device Index:
1
OK
Cancel

F-10-15

10.5 Parts Replacement Procedure

10.5.1 Main Drive Assembly

10.5.1.1 Removing the Rear Cover

iR2270 / iR2870 / iR3570 / iR4570 / / iR2270N / / iR2870N / / iR3570N / / iR4570N / iR2230 / / / iR3530 / / / / /

1) Remove the 13 screws [1] and then the other screw [2]; then, detach the rear cover [3].

If the left cover (lower) has already been detached, the screw [3] should also have been removed.

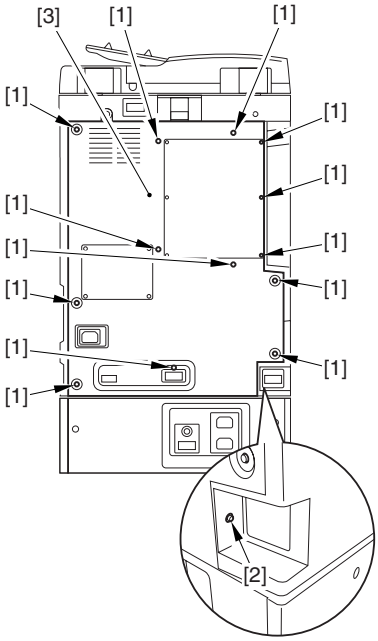

F-10-16

10.5.1.2 Removing the Main Drive Assembly

iR3570 / iR4570 / / iR3570N / / iR4570N / iR3530 /

1) Disconnect the connector [1], and free the harness [2] from the wire saddle.

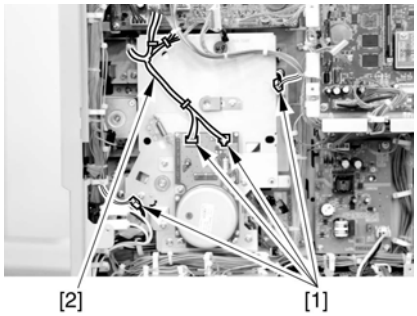

F-10-17

2) Remove the 4 screws [1], and detach the main drive assembly [2].

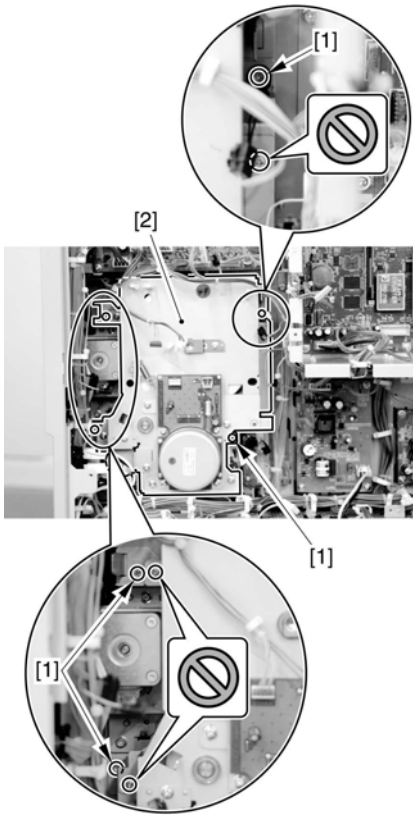

F-10-18

Do not touch the screws that are glued in place.

10.5.1.3 Removing the Main Drive Assembly

iR2270 / iR2870 / / iR2270N / / iR2870N / iR2230 / /

1) Disconnect the 6 connectors [1].
2) Free the cable from the 6 cable clamps [2].
3) Remove the re-use band [3].

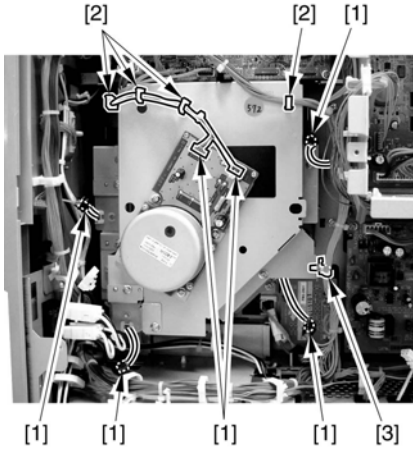

F-10-19

4) Remove the 4 screws [1], and detach the main drive assembly [2].

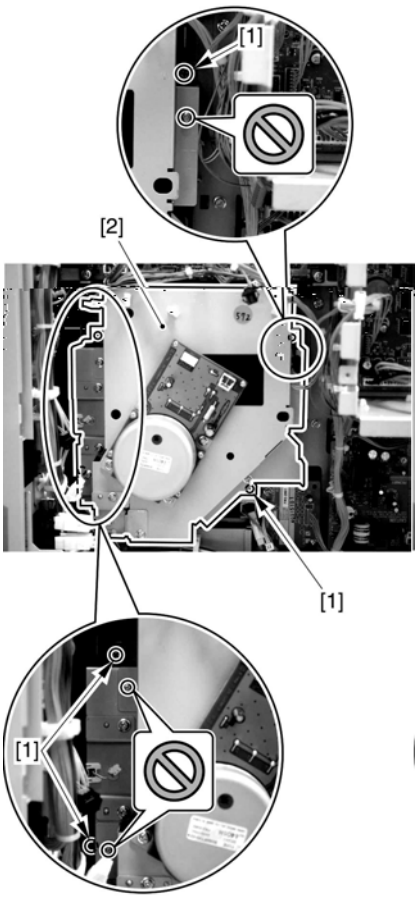

F-10-20

10.5.2 Power Supply Unit

10.5.2.1 Removing the Rear Cover

iR2270 / iR2870 / iR3570 / iR4570 / / iR2270N / / iR2870N / / iR3570N / / iR4570N / iR2230 / / / iR3530 /

1) Remove the 13 screws [1] and then the other screw [2]; then, detach the rear cover [3].

If the left cover (lower) has already been detached, the screw [3] should also have been removed.

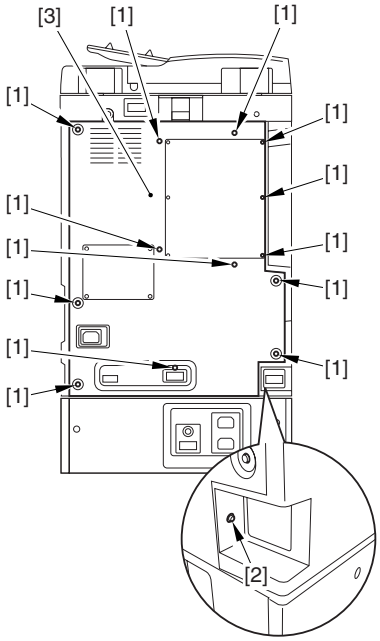

F-10-21

10.5.2.2 Removing the Left Cover (lower)

iR2270 / iR2870 / iR3570 / iR4570 / / iR2270N / / iR2870N / / iR3570N / / iR4570N / iR2230 / / / iR3530 /

1) Take out the cassettes 1 and 2 [1].
2) Remove the 4 screws [2] and the other screw [3]; then, detach the left cover (lower) [4].

If the rear cover has already been detached, the screw [3] should also have been removed.

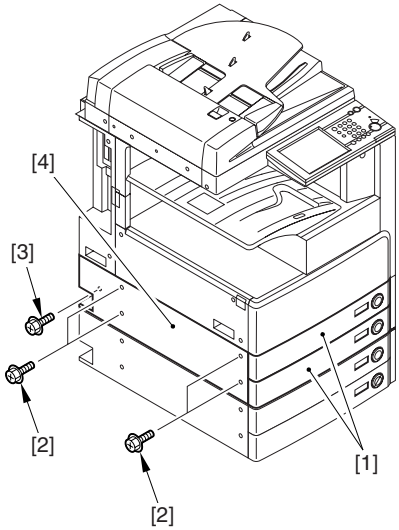

F-10-22

10.5.2.3 Removing the Accessories Power Supply PCB

iR2270 / iR2870 / iR3570 / iR4570 / / iR2270N / / iR2870N / / iR3570N / / iR4570N / iR2230 / / / iR3530 /

1) Disconnect the connector J640 [1].

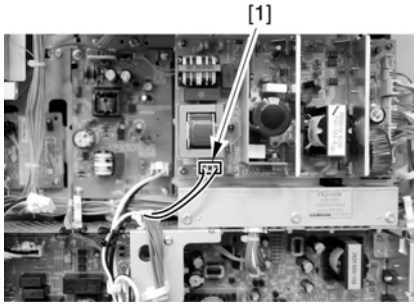

F-10-23

2) Remove the 6 connectors [1], and free the harness from the cable clamp [2].

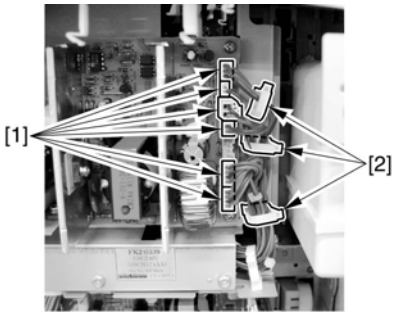

F-10-24

3) Remove the 5 binding screws [1], and detach the accessories power supply PCB [2].

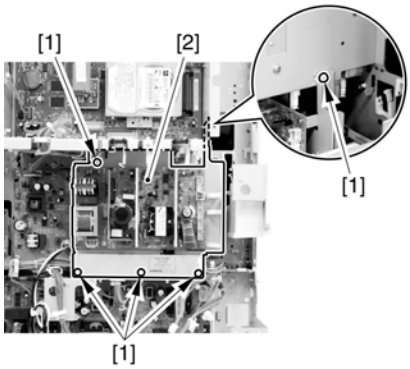

F-10-25

10.5.2.4 Removing the Main Power Supply

iR2270 / iR2870 / iR3570 / iR4570 / / iR2270N / / iR2870N / / iR3570N / / iR4570N / iR2230 / / / iR3530 /

1) Remove the screw [1], and disconnect the finisher connector [2].

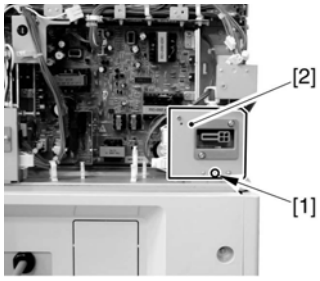

F-10-26

2) Remove the screw [1], and disconnect the pedestal connector [2].

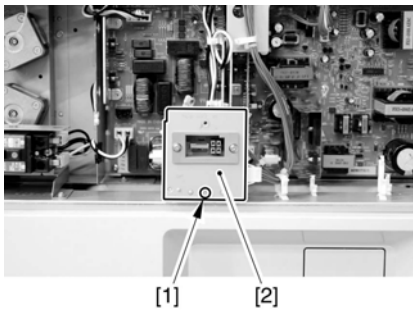

F-10-27

3) Free the harness [1] of the pedestal connector from the lamp [2].

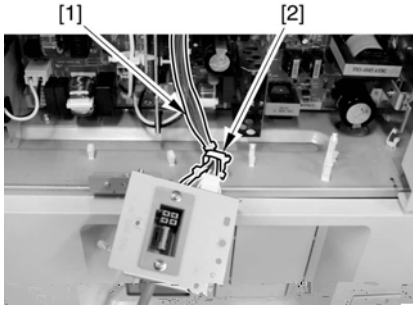

F-10-28

4) Disconnect the 7 connectors [1], and free the harness from the 4 clamps [2].

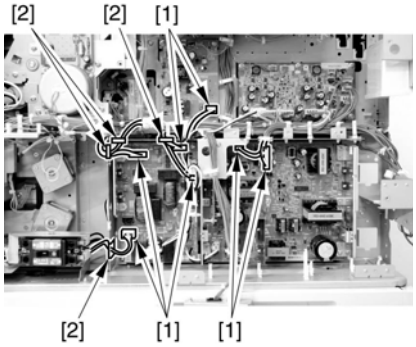

F-10-29

5) Free the harness [1] from the clamp [2].

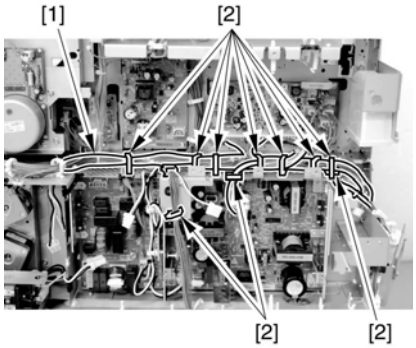

F-10-30

6) Remove the 4 screws [1], and detach the main power supply [2].

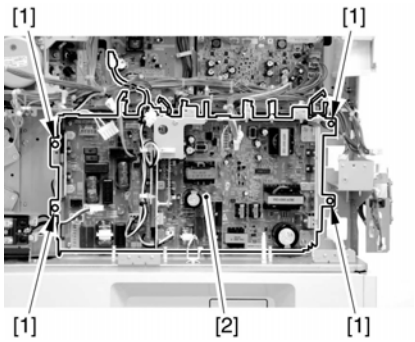

F-10-31

10.5.3 Control Panel

10.5.3.1 Removing the Control Panel

iR2270 / iR2870 / iR3570 / iR4570 / / iR2270N / / iR2870N / / iR3570N / / iR4570N

1) Remove the rubber cap [1], and remove the screw [2].

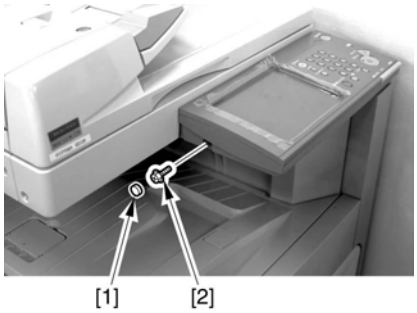

F-10-32

2) Open the right door [1].

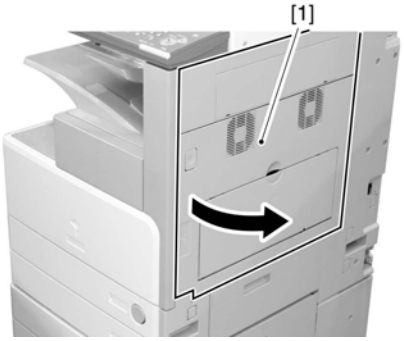

F-10-33

3) Remove the 2 screws [1].

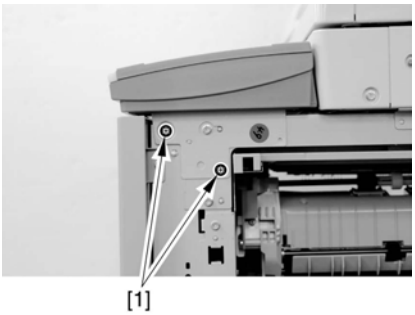

F-10-34

4) Slide the control panel [1] in the direction of the arrow.

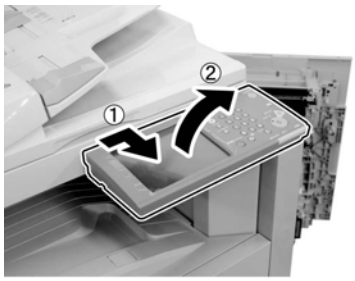

F-10-35

5) Free the harness [2] from the clamp [1].

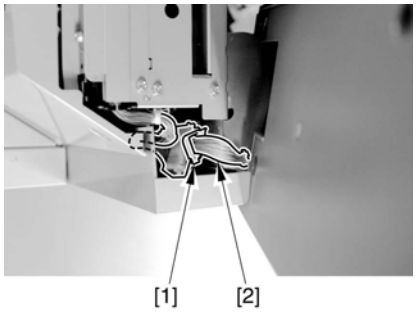

F-10-36

6) Disconnect the connector [1], and detach the control panel.

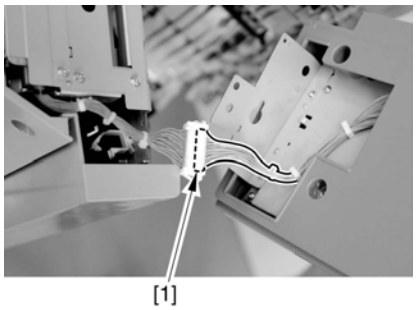

F-10-37

10.5.3.2 Removing the Control Panel

iR2230 / / / iR3530 /

1) Open the right door [1].

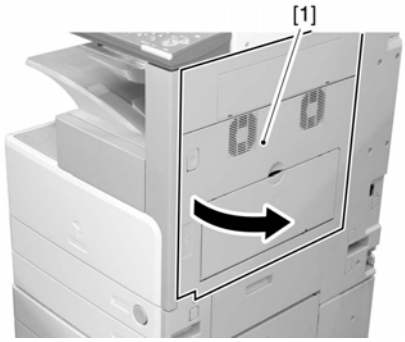

F-10-38

2) Remove the 2 screws [1].

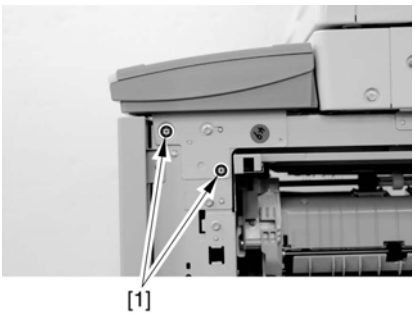

F-10-39

3) Remove the rubber cap [1], and remove the screw [2].
4) Slide the control panel in the direction of the arrow.

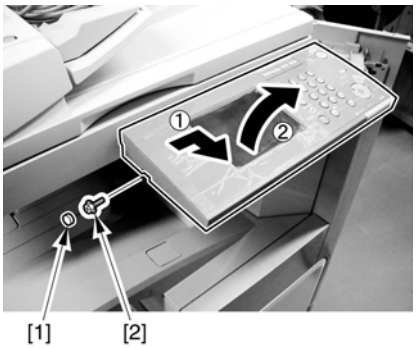

F-10-40

5) Disconnect the connector [1], and detach the control panel.

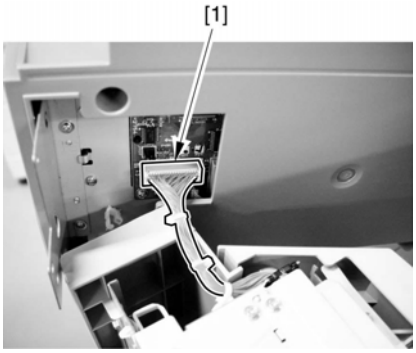

F-10-41

10.5.4 Control Panel LCD Unit

10.5.4.1 Removing the Control Panel

iR2270 / iR2870 / iR3570 / iR4570 / / iR2270N / / iR2870N / / iR3570N / / iR4570N

1) Remove the rubber cap [1], and remove the screw [2].

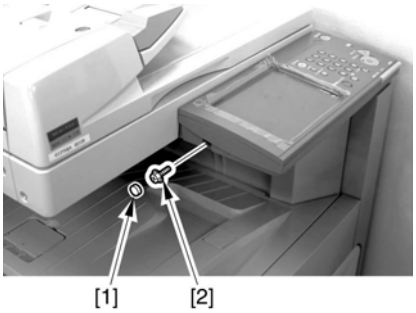

F-10-42

2) Open the right door [1].

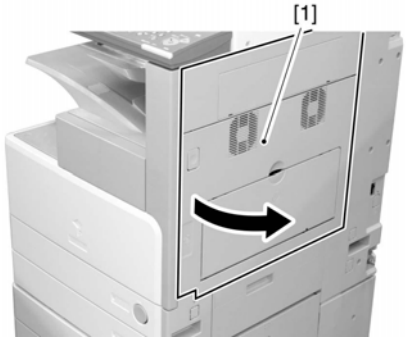

F-10-43

3) Remove the 2 screws [1].

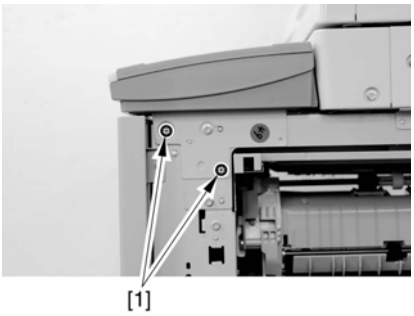

F-10-44

4) Slide the control panel [1] in the direction of the arrow.

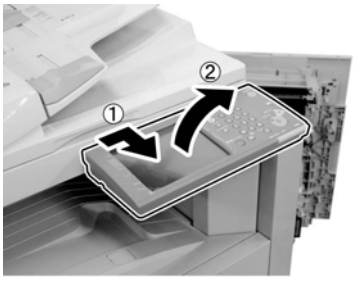

F-10-45

5) Free the harness [2] from the clamp [1].

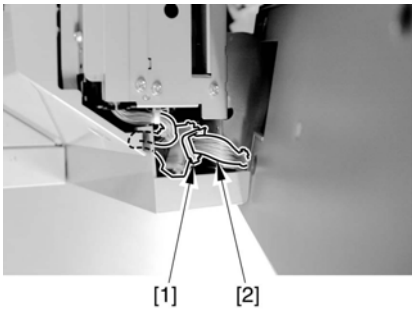

F-10-46

6) Disconnect the connector [1], and detach the control panel.

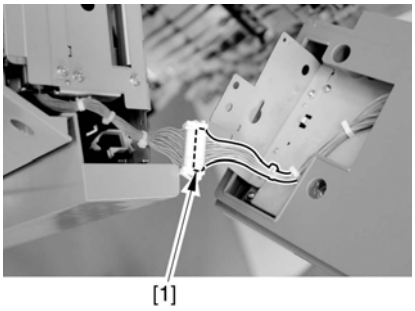

F-10-47

10.5.4.2 Removing the Control Panel Base Cover

iR2270 / iR2870 / iR3570 / iR4570 / / iR2270N / / iR2870N / / iR3570N /

/ iR4570N

1) Remove the 4 screws [1], and detach the control panel base cover [2].

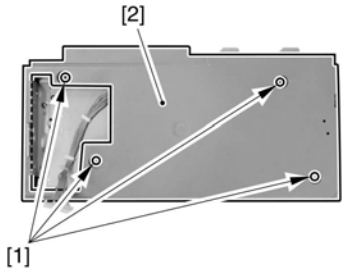

F-10-48

10.5.4.3 Removing the Control Panel Inside Frame

iR2270 / iR2870 / iR3570 / iR4570 / / iR2270N / / iR2870N / / iR3570N / / iR4570N

1) Disconnect the 2 connectors between the control panel PCB and the control panel key switch PCB; then, free the harness from the 2 clamps [2].
2) Disconnect the 2 connectors [3] between the control panel PCB and the control panel LCD.

Be sure to move the stopper in the direction of the arrow to detach. These 2 stoppers are moved in different directions.

3) Disconnect the 2 connectors [3] between the control panel inverter PCB.

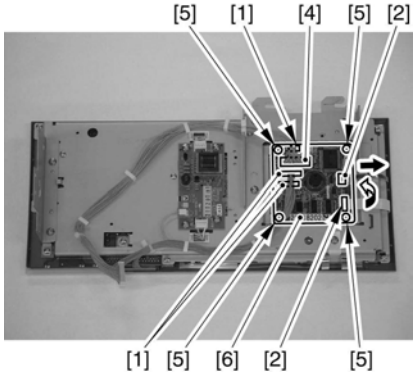

F-10-49

4) Remove the control panel inside frame [1]. (2 TP screws [2], and 11 self-tapping screws [3])

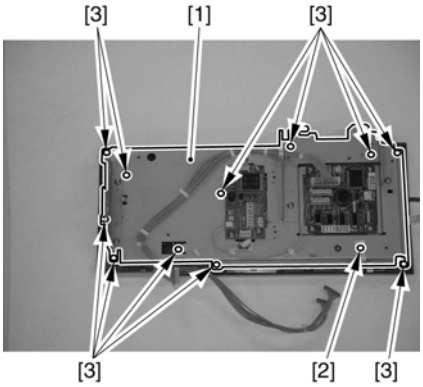

F-10-50

10.5.4.4 Removing the Control Panel LCD

iR2270 / iR2870 / iR3570 / iR4570 / / iR2270N / / iR2870N / / iR3570N / / iR4570N

1) Remove the screw [1], and detach the control panel LCD [2].

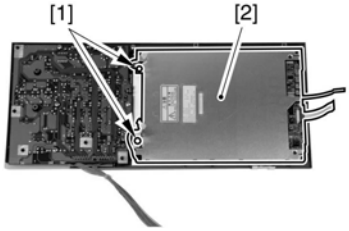

F-10-51

10.5.4.5 Removing the Control Panel

iR2230 / / / iR3530 /

1) Open the right door [1].

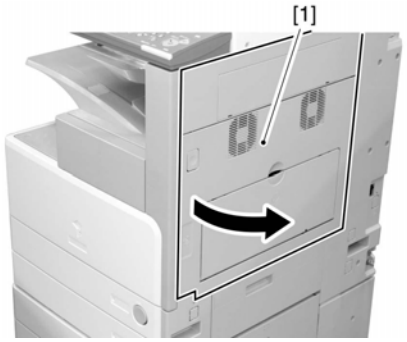

F-10-52

2) Remove the 2 screws [1].

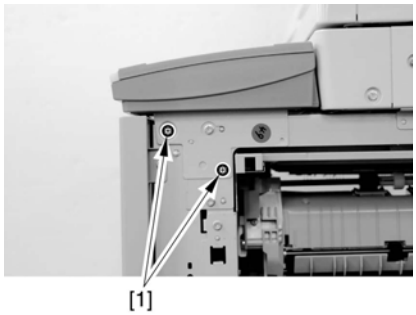

F-10-53

3) Remove the rubber cap [1], and remove the screw [2].
4) Slide the control panel in the direction of the arrow.

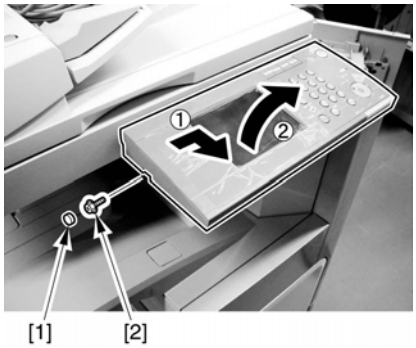

F-10-54

5) Disconnect the connector [1], and detach the control panel.

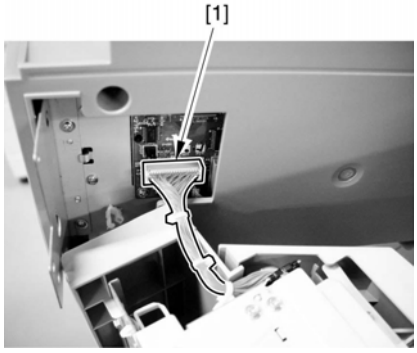

F-10-55

10.5.4.6 Removing the Control Panel Base Cover

iR2230 / / / iR3530 /

1) Remove the 4 screws [1], and detach the control panel base cover [2].

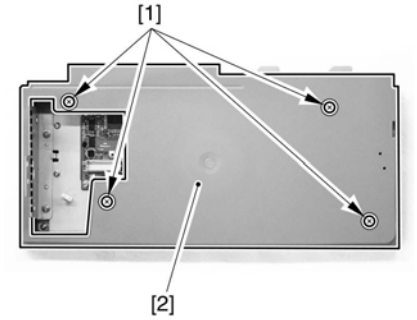

F-10-56

10.5.4.7 Removing the Control Panel Frame

iR2230 / / / iR3530 /

1)Disconnect the flat cable [1] in the direction of the arrow.
2)Move the connector stopper [2] in the direction of the arrow, and disconnect the flat cable [3].

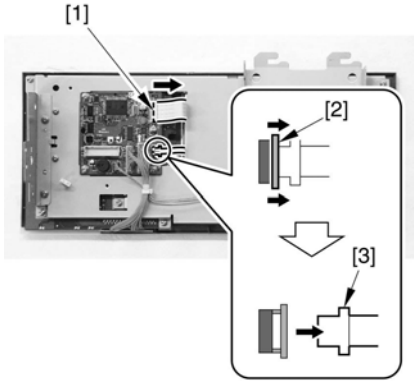

F-10-57

3)Disconnect the 3 connectors [1].

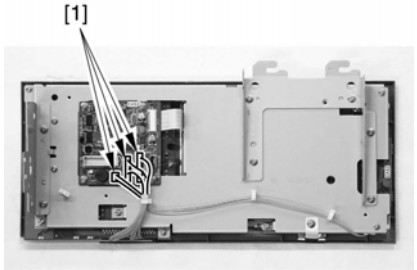

F-10-58

4)Free the harness from the 3 clamps [1].

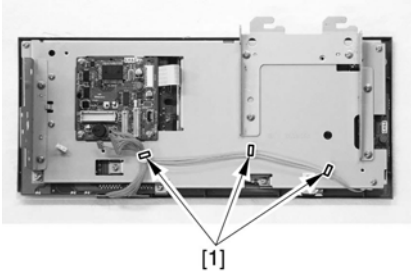

F-10-59

5)Remove the 5 screws [1], and detach the control panel hook [2].

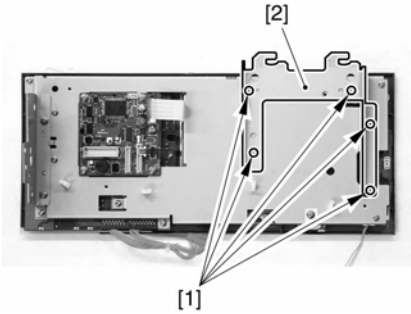

F-10-60

6)Remove the self-tapping screws [1] and the flat-head screw [2]; then, detach the control panel frame [3].

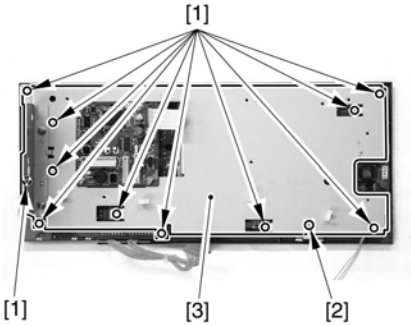

F-10-61

⚠Routing the Harness When Mounting the Control Panel Frame
1.Check to be sure that the inverter harness is routed [1] as shown in the figure.

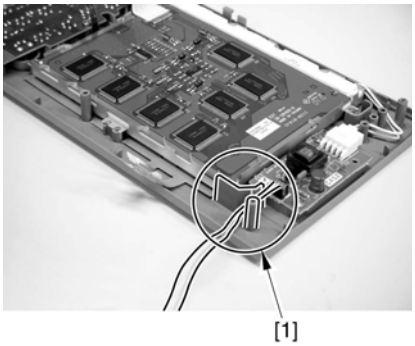

F-10-62

2.After mounting the control panel frame, be sure to route the inverter harness through the edge saddle [1].

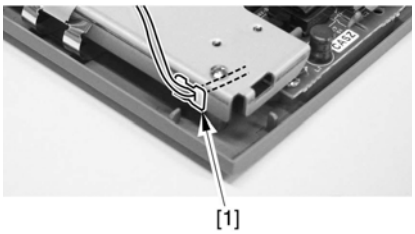

F-10-63

10.5.4.8 Removing the Control Panel LCD PCB

iR2230 / / / iR3530 /

1)Disconnect the connector [1] from the control panel inverter PCB.
2)Remove the 3 self-tapping screws [2], and detach the control panel LCD PCB [3].

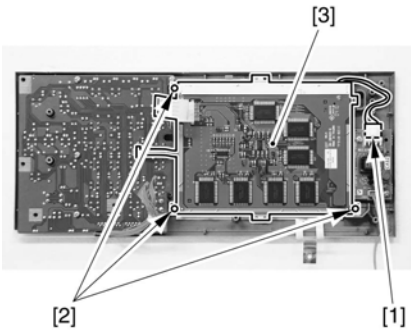

F-10-64

10.5.5 DC Controller PCB

10.5.5.1 Removing the Rear Cover

iR2270 / iR2870 / iR3570 / iR4570 / / iR2270N / / iR2870N / / iR3570N / / iR4570N / iR2230 / / / iR3530 /

1) Remove the 13 screws [1] and then the other screw [2]; then, detach the rear cover [3].

If the left cover (lower) has already been detached, the screw [3] should also have been removed.

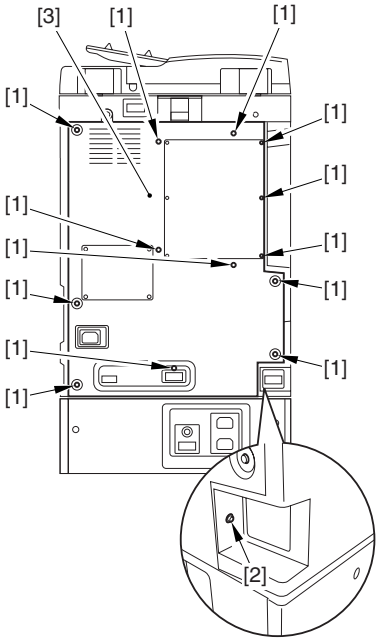

F-10-65

10.5.5.2 Removing the DC Controller PCB

iR2270 / iR2870 / iR3570 / iR4570 / / iR2270N / / iR2870N / / iR3570N / / iR4570N / iR2230 / / / iR3530 /

1) Disconnect the connector [1].

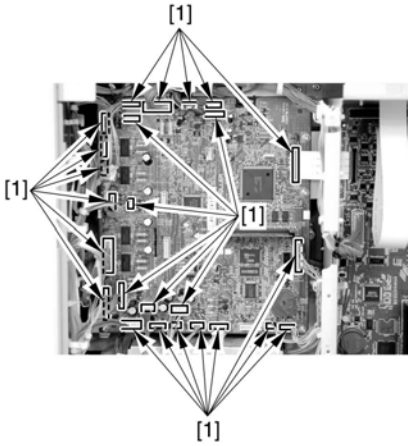

F-10-66

How to Remove the Flexible Cable [1]

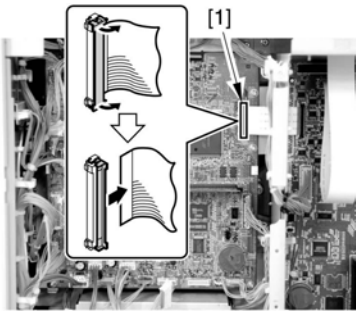

F-10-67

2) Remove the screw [1], and detach the DC controller PCB.

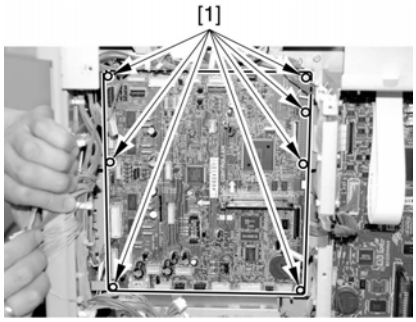

F-10-68

Points to Note When Replacing the DC Controller PCB
Be sure to remove the boot ROM [1] from the exiting DC controller PCB, and mount it to the new DC controller PCB.

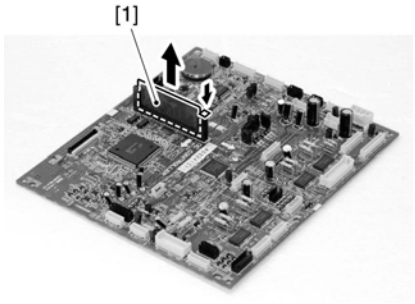

F-10-69

10.5.6 Control Panel Inverter PCB

10.5.6.1 Removing the Control Panel

iR2270 / iR2870 / iR3570 / iR4570 / / iR2270N / / iR2870N / / iR3570N / / iR4570N

1) Remove the rubber cap [1], and remove the screw [2].

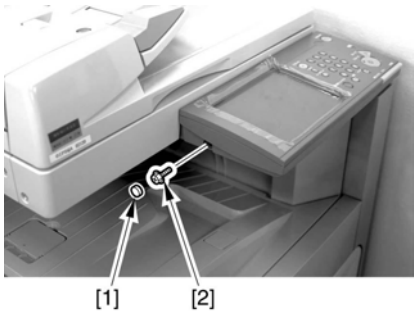

F-10-70

2) Open the right door [1].

F-10-71

3) Remove the 2 screws [1].

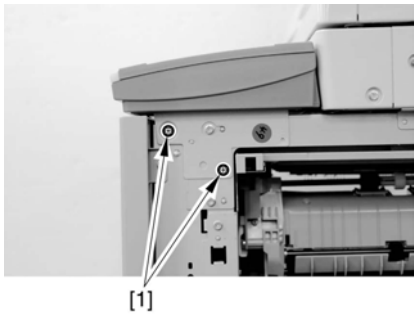

F-10-72

4) Slide the control panel [1] in the direction of the arrow.

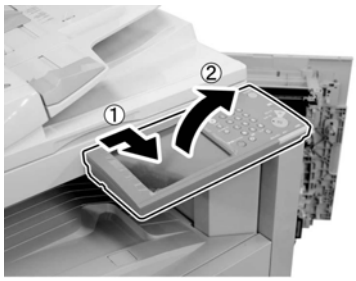

F-10-73

5) Free the harness [2] from the clamp [1].

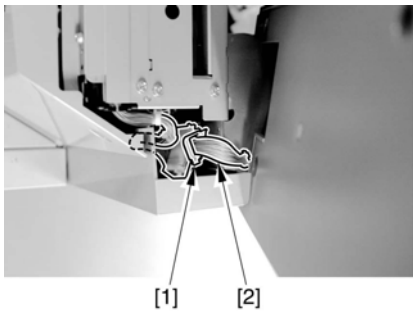

F-10-74

6) Disconnect the connector [1], and detach the control panel.

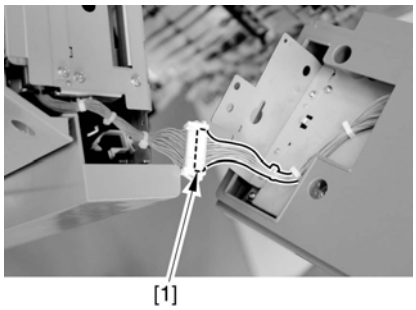

F-10-75

10.5.6.2 Removing the Control Panel Base Cover

iR2270 / iR2870 / iR3570 / iR4570 / / iR2270N / / iR2870N / / iR3570N / / iR4570N

1) Remove the 4 screws [1], and detach the control panel base cover [2].

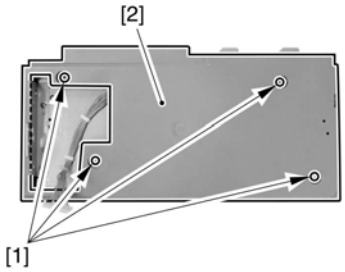

F-10-76

10.5.6.3 Removing the Control Panel Inverter PCB

iR2270 / iR2870 / iR3570 / iR4570 / / iR2270N / / iR2870N / / iR3570N / / iR4570N

1) Remove the control panel inverter PCB [1]. (3 connectors [2], 4 screws [3])

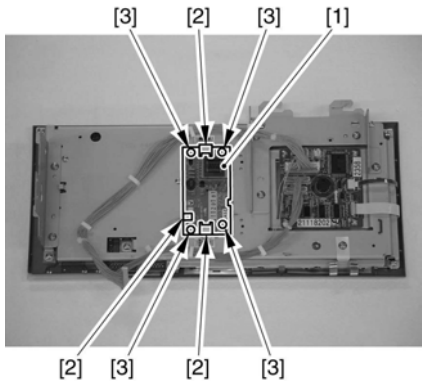

F-10-77

10.5.6.4 Removing the Control Panel

iR2230 / / / iR3530 /

1) Open the right door [1].

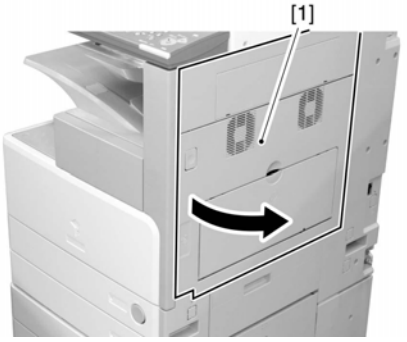

F-10-78

2) Remove the 2 screws [1].

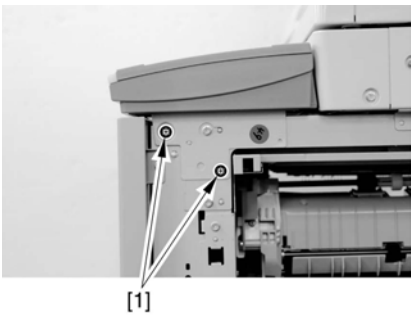

F-10-79

3) Remove the rubber cap [1], and remove the screw [2].
4) Slide the control panel in the direction of the arrow.

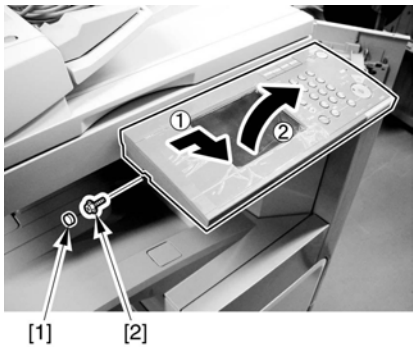

F-10-80

5) Disconnect the connector [1], and detach the control panel.

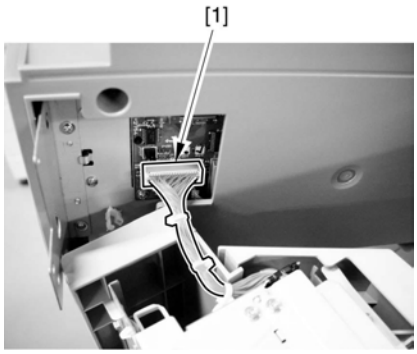

F-10-81

10.5.6.5 Removing the Control Panel Base Cover

iR2230 / / / iR3530 /

1) Remove the 4 screws [1], and detach the control panel base cover [2].

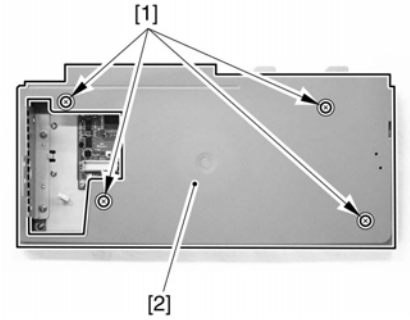

F-10-82

10.5.6.6 Removing the Control Panel Frame

iR2230 / / / iR3530 /

1)Disconnect the flat cable [1] in the direction of the arrow.
2)Move the connector stopper [2] in the direction of the arrow, and disconnect the flat cable [3].

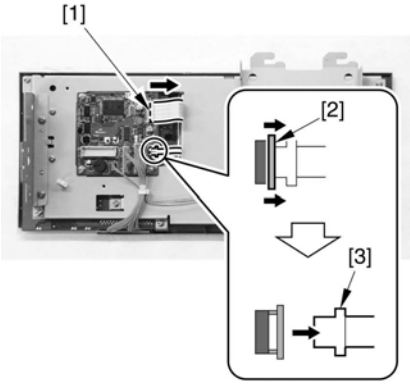

F-10-83

3)Disconnect the 3 connectors [1].

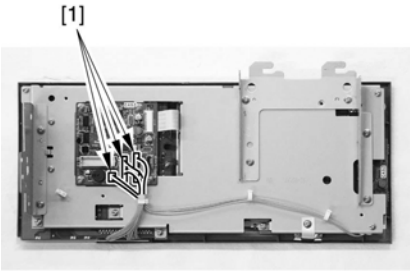

F-10-84

4)Free the harness from the 3 clamps [1].

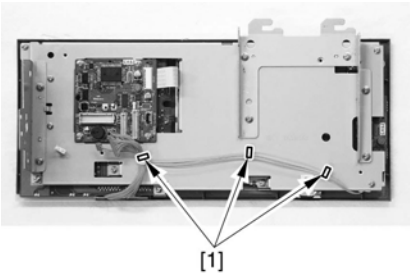

F-10-85

5)Remove the 5 screws [1], and detach the control panel hook [2].

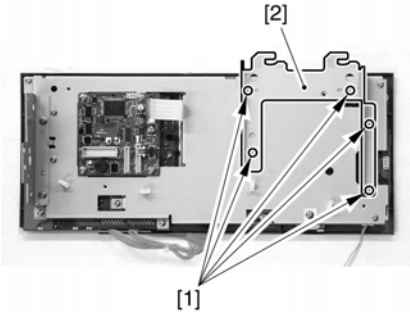

F-10-86

6)Remove the self-tapping screws [1] and the flat-head screw [2]; then, detach the control panel frame [3].

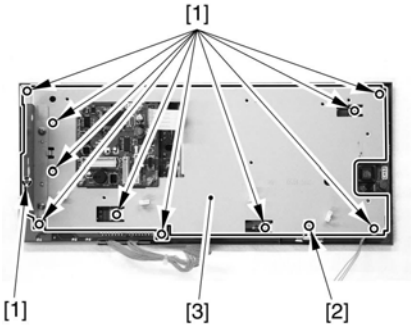

F-10-87

Routing the Harness When Mounting the Control Panel Frame

1.Check to be sure that the inverter harness is routed [1] as shown in the figure.

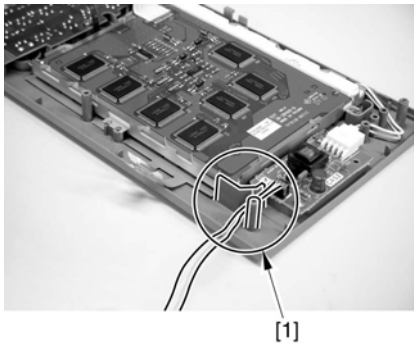

F-10-88

2.After mounting the control panel frame, be sure to route the inverter harness through the edge saddle [1].

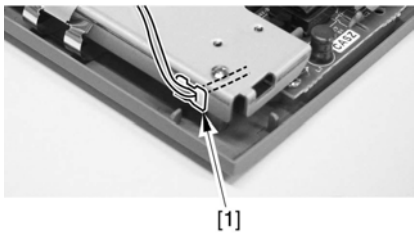

F-10-89

10.5.6.7 Removing the Control Panel Inverter PCB

iR2230 / / / iR3530 /

1)Disconnect the 2 connectors [1].

2)Remove the 2 self-tapping screws [2], and detach the control panel inverter PCB [3].

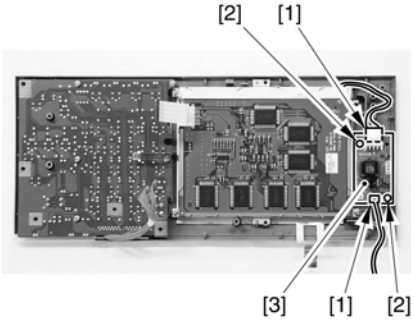

F-10-90

10.5.7 Control Panel Key Switch PCB

10.5.7.1 Removing the Control Panel

iR2270 / iR2870 / iR3570 / iR4570 / / iR2270N / / iR2870N / / iR3570N / / iR4570N

1) Remove the rubber cap [1], and remove the screw [2].

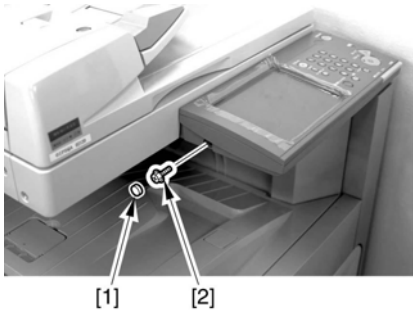

F-10-91

2) Open the right door [1].

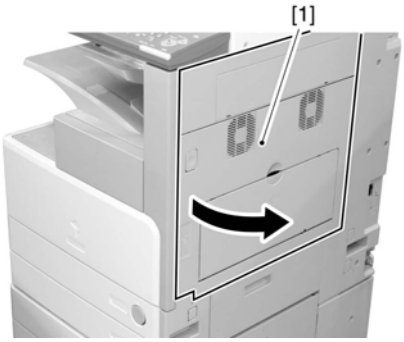

F-10-92

3) Remove the 2 screws [1].

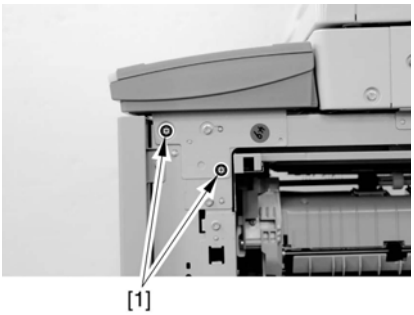

F-10-93

4) Slide the control panel [1] in the direction of the arrow.

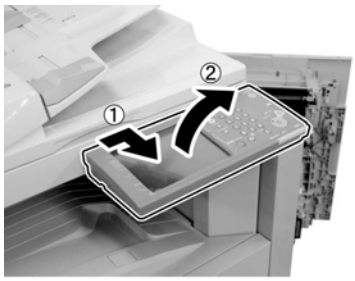

F-10-94

5) Free the harness [2] from the clamp [1].

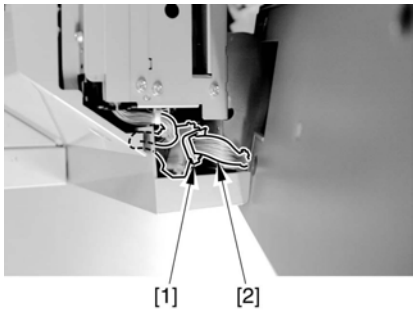

F-10-95

6) Disconnect the connector [1], and detach the control panel.

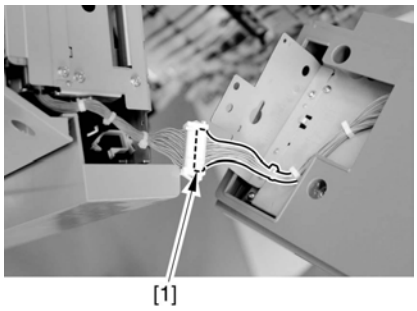

F-10-96

10.5.7.2 Removing the Control Panel Base Cover

iR2270 / iR2870 / iR3570 / iR4570 / / iR2270N / / iR2870N / / iR3570N / / iR4570N

1) Remove the 4 screws [1], and detach the control panel base cover [2].

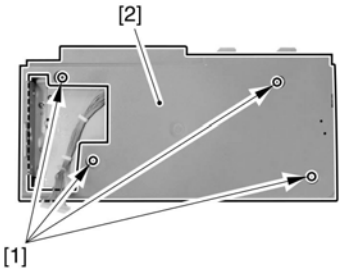

F-10-97

10.5.7.3 Removing the Control Panel Frame

iR2270 / iR2870 / iR3570 / iR4570 / / iR2270N / / iR2870N / / iR3570N / / iR4570N

1) Disconnect the 2 connectors [1] between the control panel PCB and the control panel key switch PCB; then, free the harness front the 3 clamps [2].
2) Disconnect the 2 connectors [3] between the control panel PCB and the control panel LCD.

Be sure to move the stopper in the direction of the arrow. These 2 stoppers are moved in different directions.

3) Disconnect the 2 connectors [4] of the control panel inverter PCB.

4) Remove the control panel inside frame [1]. (1 TP screw [2]; 11 self-tapping screws [3])

10.5.7.4 Removing the Control Panel Key Switch PCB

iR2270 / iR2870 / iR3570 / iR4570 / / iR2270N / / iR2870N / / iR3570N / / iR4570N

1) Disconnect the 2 connectors [3] between the control panel PCB and the control panel LCD.

Be sure to move the stopper in the direction of the arrow. These 2 stoppers must be moved in different directions.

2) Disconnect the 2 connectors [4] between the control panel inverter PCB.

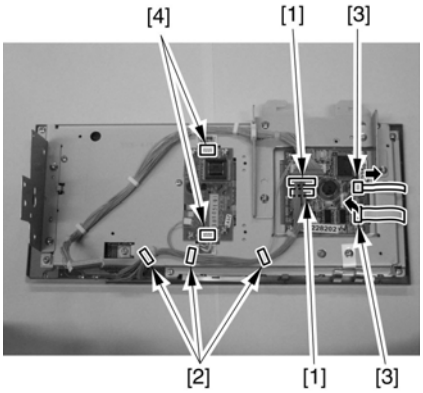

F-10-98

3) Remove the control panel inside frame [1]. (1 TP screw [2]; 11 self-tapping screws [3])

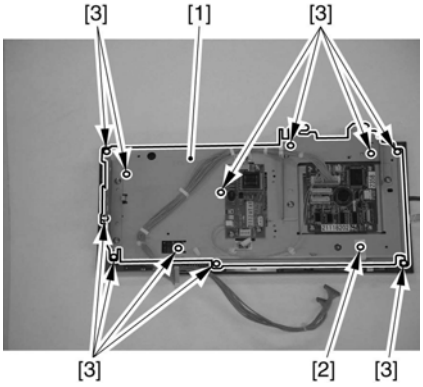

F-10-99

4) Remove the control panel key switch PCB [1]. (5 self-tapping screws [2])

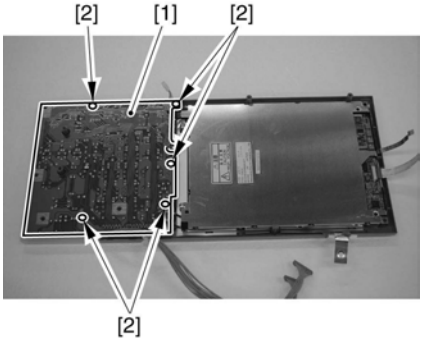

F-10-100

10.5.7.5 Removing the Control Panel

iR2230 / / / iR3530 /

1) Open the right door [1].

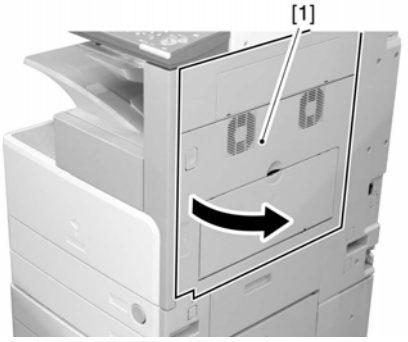

F-10-101

2) Remove the 2 screws [1].

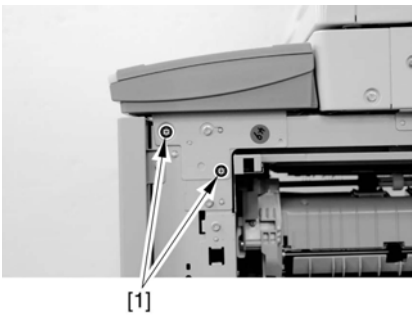

F-10-102

3) Remove the rubber cap [1], and remove the screw [2].
4) Slide the control panel in the direction of the arrow.

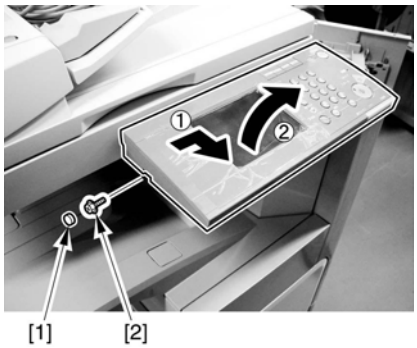

F-10-103

5) Disconnect the connector [1], and detach the control panel.

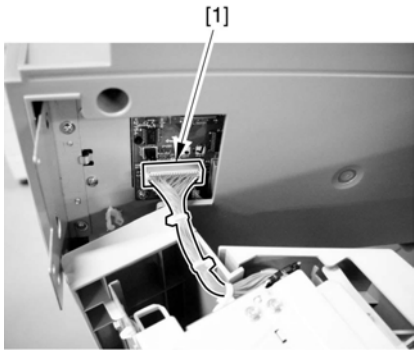

F-10-104

10.5.7.6 Removing the Control Panel Base Cover

iR2230 / / / iR3530 /

1) Remove the 4 screws [1], and detach the control panel base cover [2].

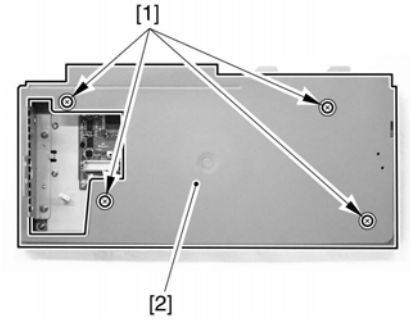

F-10-105

10.5.7.7 Removing the Control Panel Frame

iR2230 / / / iR3530 /

1)Disconnect the flat cable [1] in the direction of the arrow.
2)Move the connector stopper [2] in the direction of the arrow, and disconnect the flat cable [3].

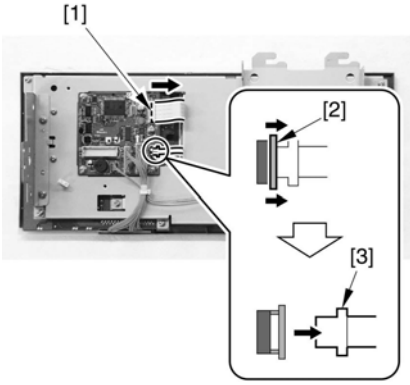

F-10-106

3)Disconnect the 3 connectors [1].

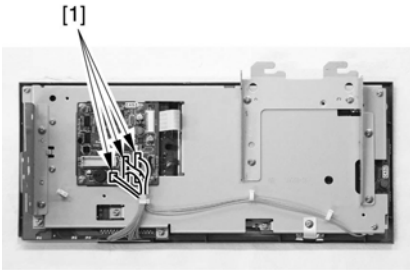

F-10-107

4)Free the harness from the 3 clamps [1].

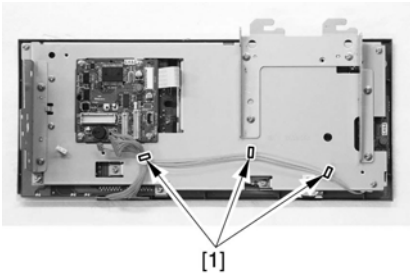

F-10-108

5)Remove the 5 screws [1], and detach the control panel hook [2].

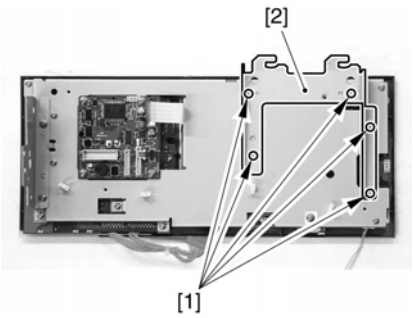

F-10-109

6)Remove the self-tapping screws [1] and the flat-head screw [2]; then, detach the control panel frame [3].

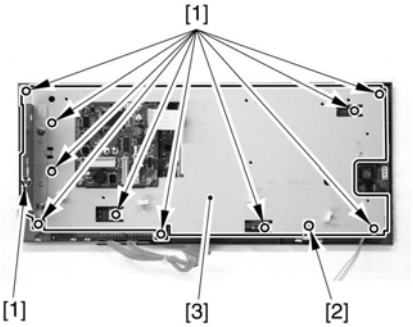

F-10-110

Routing the Harness When Mounting the Control Panel Frame

1.Check to be sure that the inverter harness is routed [1] as shown in the figure.

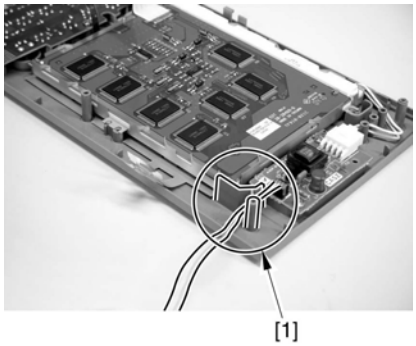

F-10-111

2.After mounting the control panel frame, be sure to route the inverter harness through the edge saddle [1].

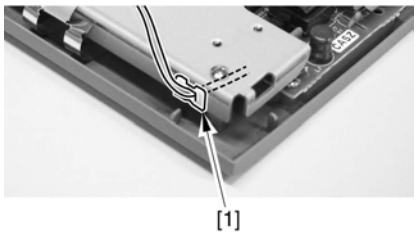

F-10-112

10.5.7.8 Removing the Control Panel Key Switch PCB

iR2230 / / / iR3530 /

1)Remove the 5 self-tapping screws [1], and detach the control panel key switch PCB [2].

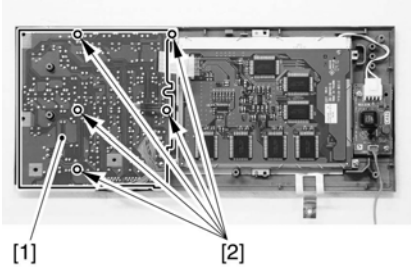

F-10-113

10.5.8 Control Panel CPU PCB

10.5.8.1 Removing the Control Panel

iR2270 / iR2870 / iR3570 / iR4570 / / iR2270N / / iR2870N / / iR3570N / / iR4570N

1) Remove the rubber cap [1], and remove the screw [2].

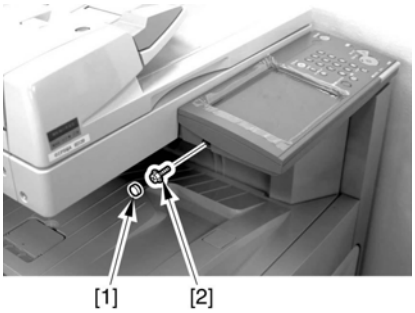

F-10-114

2) Open the right door [1].

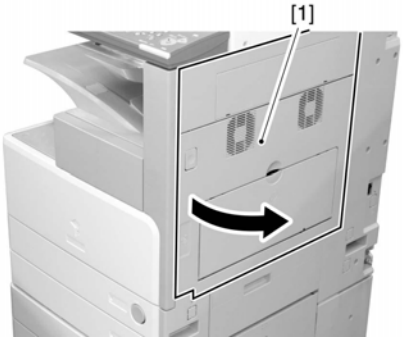

F-10-115

3) Remove the 2 screws [1].

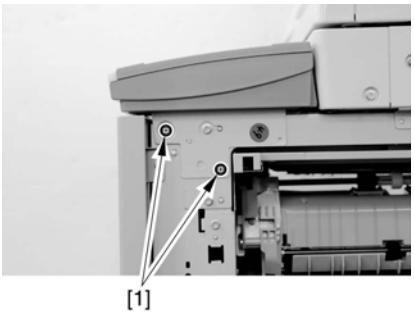

F-10-116

4) Slide the control panel [1] in the direction of the arrow.

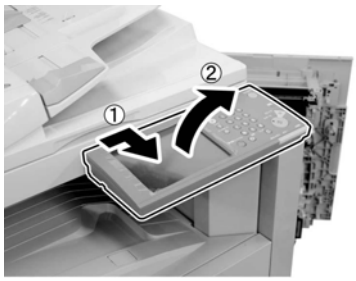

F-10-117

5) Free the harness [2] from the clamp [1].

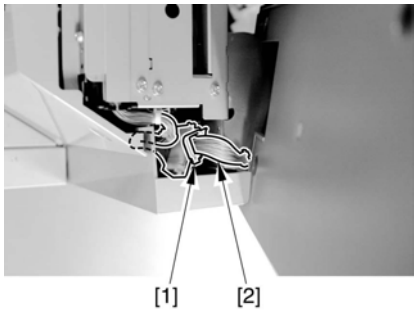

F-10-118

6) Disconnect the connector [1], and detach the control panel.

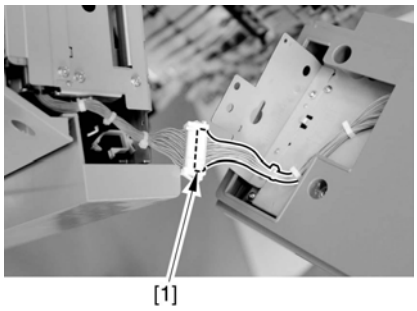

F-10-119

10.5.8.2 Removing the Control Panel Base Cover

iR2270 / iR2870 / iR3570 / iR4570 / / iR2270N / / iR2870N / / iR3570N / / iR4570N

1) Remove the 4 screws [1], and detach the control panel base cover [2].

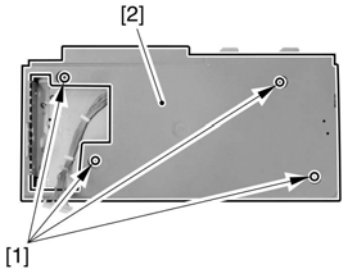

F-10-120

10.5.8.3 Removing the Controller Panel CPU PCB

iR2270 / iR2870 / iR3570 / iR4570 / / iR2270N / / iR2870N / / iR3570N / / iR4570N

1) Disconnect the 3 connectors [1] of the cable used between control panel PCB and the control panel key switch PCB.
2) Disconnect the 2 connectors [2] used between the control panel PCB and the control panel LCD.

⚠

Be sure to move the stopper in the direction of the arrow. Each of the 2 stoppers has its own direction of movement.

3) Disconnect the control panel cable [4].
4) Remove the 4 TP screws [5], and detach the control panel PCB [6].

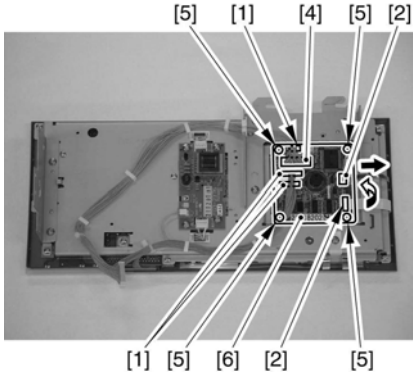

F-10-121

10.5.8.4 Removing the Control Panel

iR2230 / / / iR3530 /

1) Open the right door [1].

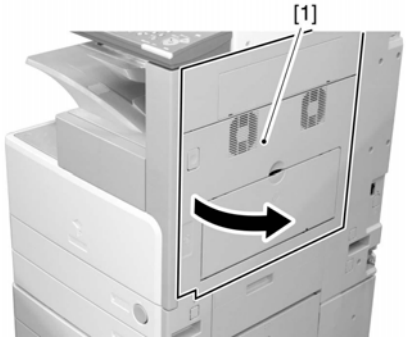

F-10-122

2) Remove the 2 screws [1].

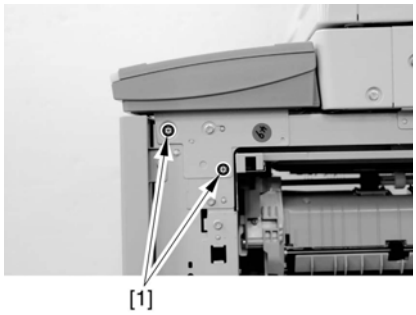

F-10-123

3) Remove the rubber cap [1], and remove the screw [2].
4) Slide the control panel in the direction of the arrow.

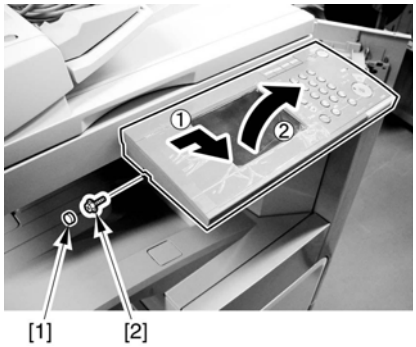

F-10-124

5) Disconnect the connector [1], and detach the control panel.

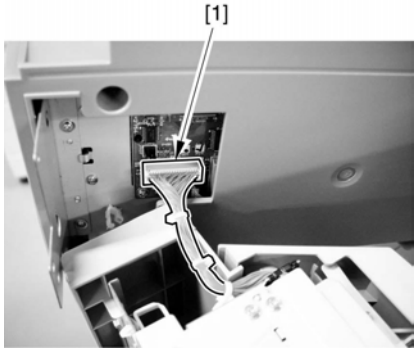

F-10-125

10.5.8.5 Removing the Control Panel Base Cover

iR2230 / / / iR3530 /

1) Remove the 4 screws [1], and detach the control panel base cover [2].

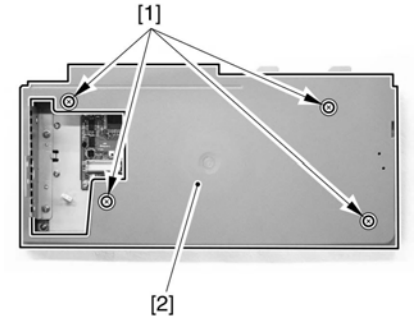

F-10-126

10.5.8.6 Removing the Control Panel CPU PCB

iR2230 / / / iR3530 /

1)Disconnect the flat cable [1] in the direction of the arrow.
2)Move the connector stopper [2] in the direction of the arrow to detach the flat cable [3].

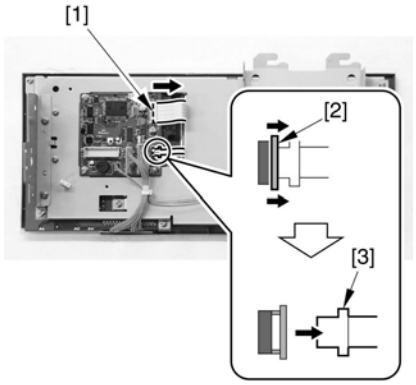

F-10-127

3)Disconnect the 3 connectors [1].

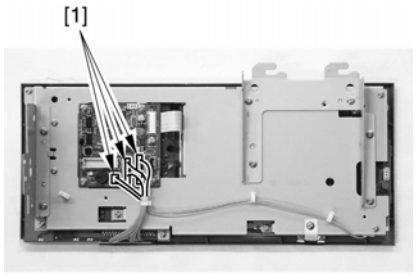

F-10-128

4)Remove the 4 screws [1], and detach the control panel CPU PCB [2].

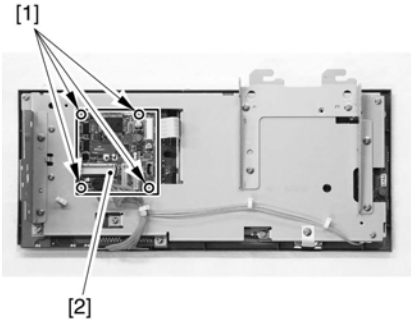

F-10-129

10.5.9 All Night Power Supply PCB

10.5.9.1 Removing the Rear Cover

iR2270 / iR2870 / iR3570 / iR4570 / / iR2270N / / iR2870N / / iR3570N / / iR4570N / iR2230 / / / iR3530 /

1) Remove the 13 screws [1] and then the other screw [2]; then, detach the rear cover [3].

If the left cover (lower) has already been detached, the screw [3] should also have been removed.

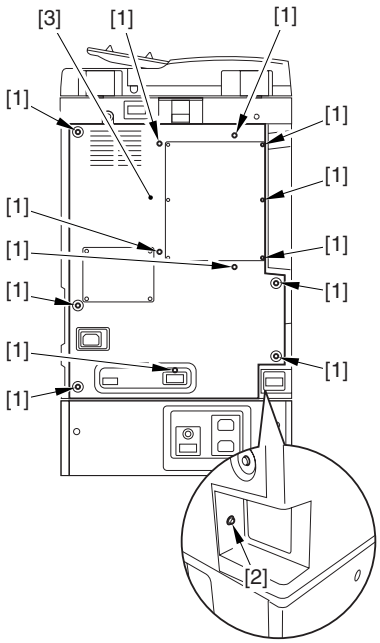

F-10-130

10.5.9.2 Removing the All-Night Power Supply PCB

iR2270 / iR2870 / iR3570 / iR4570 / / iR2270N / / iR2870N / / iR3570N / / iR4570N / iR2230 / / / iR3530 /

1) Disconnect the 4 connectors [1].

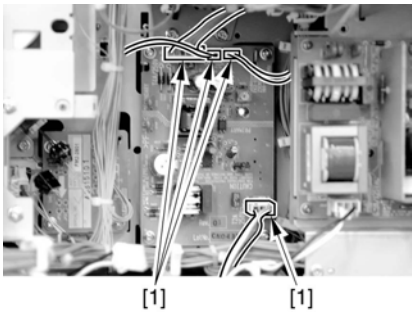

F-10-131

2) Remove the 4 screws [1], and detach the all-night power supply PCB [2].

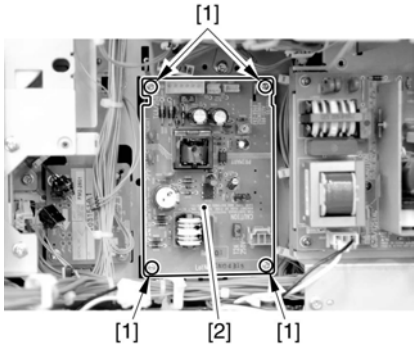

F-10-132

10.5.10 Controller Power Supply PCB

10.5.10.1 Removing the Rear Cover

iR2270 / iR2870 / iR3570 / iR4570 / / iR2270N / / iR2870N / / iR3570N / / iR4570N / iR2230 / / / iR3530 /

1) Remove the 13 screws [1] and then the other screw [2]; then, detach the rear cover [3].

If the left cover (lower) has already been detached, the screw [3] should also have been removed.

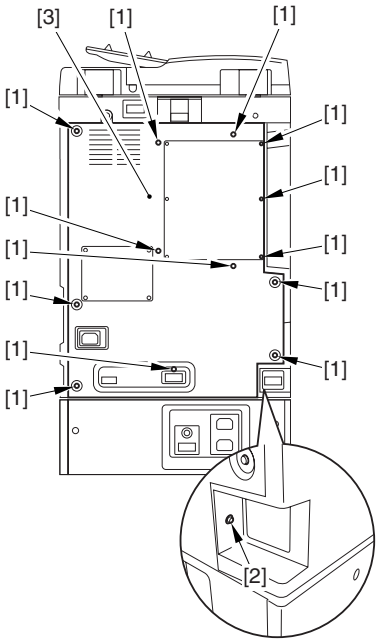

F-10-133

10.5.10.2 Removing the Left Cover (lower)

iR2270 / iR2870 / iR3570 / iR4570 / / iR2270N / / iR2870N / / iR3570N / / iR4570N / iR2230 / / / iR3530 /

1) Take out the cassettes 1 and 2 [1].
2) Remove the 4 screws [2] and the other screw [3]; then, detach the left cover (lower) [4].

If the rear cover has already been detached, the screw [3] should also have been removed.

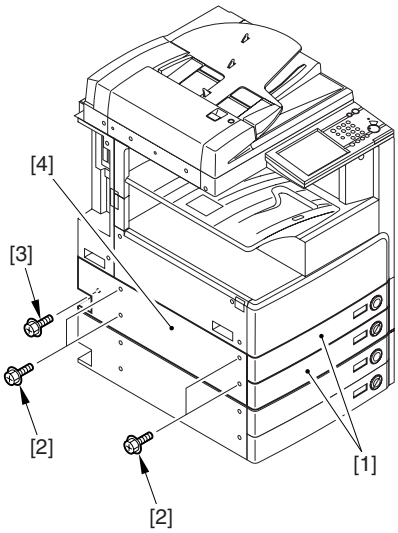

F-10-134

10.5.10.3 Removing the Left Cover (Rear)

iR2270 / iR2870 / iR3570 / iR4570 / / iR2270N / / iR2870N / / iR3570N / / iR4570N / iR2230 / / / iR3530 /

1) Remove the 2 screws [1]; then, detach the left cover (rear) [2].

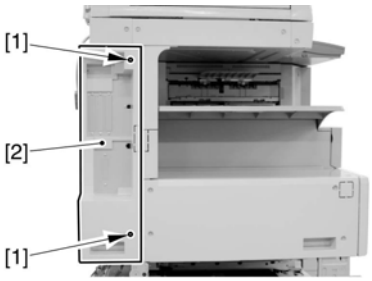

F-10-135

10.5.10.4 Removing the Accessories Power Supply PCB

iR2270 / iR2870 / iR3570 / iR4570 / / iR2270N / / iR2870N / / iR3570N / / iR4570N / iR2230 / / / iR3530 /

1) Disconnect the connector J640 [1].

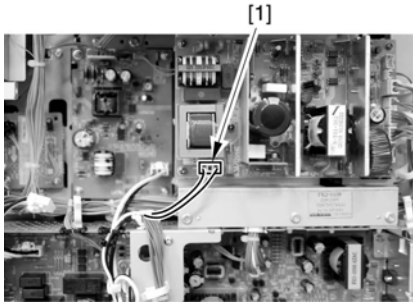

F-10-136

2) Remove the 6 connectors [1], and free the harness from the cable clamp [2].

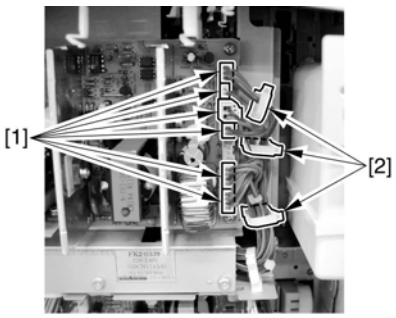

F-10-137

3) Remove the 5 binding screws [1], and detach the accessories power supply PCB [2].

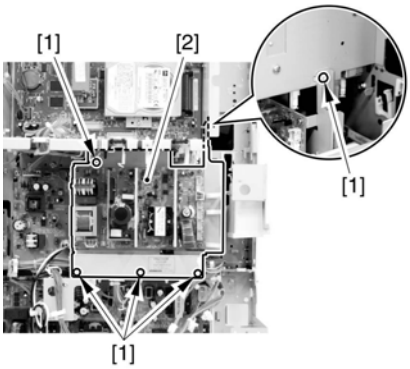

F-10-138

10.5.10.5 Removing the Controller Power Supply PCB

iR2270 / iR2870 / iR3570 / iR4570 / / iR2270N / / iR2870N / / iR3570N / / iR4570N / iR2230 / / / iR3530 /

1) Disconnect the connector [1].

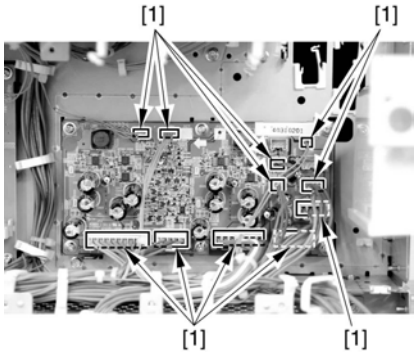

F-10-139

2) Remove the 6 screws [1], and detach the controller power supply PCB [2].

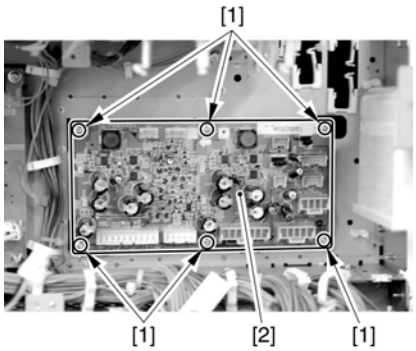

F-10-140

10.5.11 Option Power Supply PCB

10.5.11.1 Removing the Rear Cover

iR2270 / iR2870 / iR3570 / iR4570 / / iR2270N / / iR2870N / / iR3570N / / iR4570N / iR2230 / / iR3530 /

1) Remove the 13 screws [1] and then the other screw [2]; then, detach the rear cover [3].

⚠

If the left cover (lower) has already been detached, the screw [3] should also have been removed.

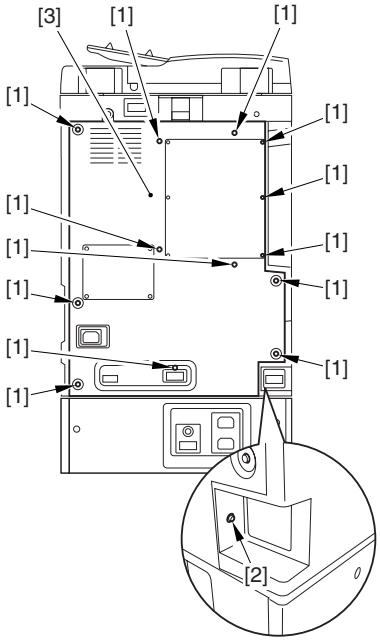

F-10-141

10.5.11.2 Removing the Left Cover (lower)

iR2270 / iR2870 / iR3570 / iR4570 / / iR2270N / / iR2870N / / iR3570N / / iR4570N / iR2230 / / iR3530 /

1) Take out the cassettes 1 and 2 [1].
2) Remove the 4 screws [2] and the other screw [3]; then, detach the left cover (lower) [4].

⚠

If the rear cover has already been detached, the screw [3] should also have been removed.

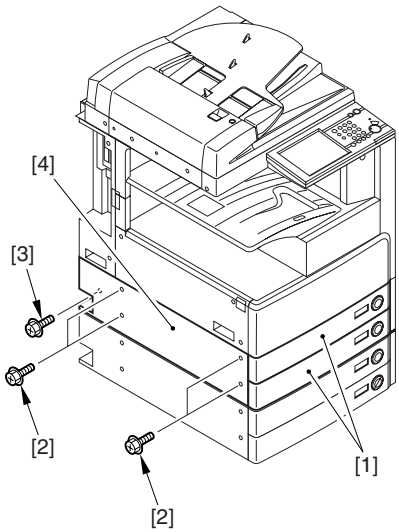

F-10-142

10.5.11.3 Removing the Left Cover (Rear)

iR2270 / iR2870 / iR3570 / iR4570 / / iR2270N / / iR2870N / / iR3570N / / iR4570N / iR2230 / / iR3530 /

1) Remove the 2 screws [1]; then, detach the left cover (rear) [2].

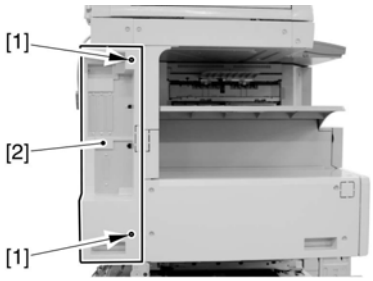

F-10-143

10.5.11.4 Removing the Accessories Power Supply PCB

iR2270 / iR2870 / iR3570 / iR4570 / / iR2270N / / iR2870N / / iR3570N / / iR4570N / iR2230 / / iR3530 /

1) Disconnect the connector J640 [1].

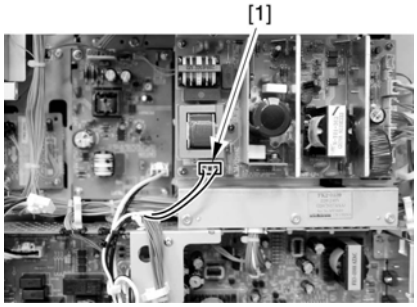

F-10-144

2) Remove the 6 connectors [1], and free the harness from the cable clamp [2].

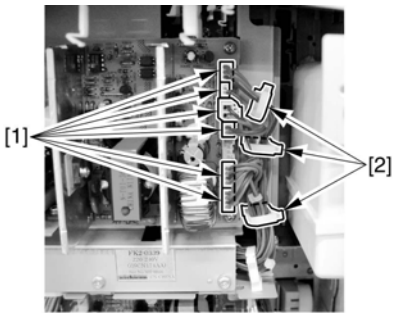

F-10-145

3) Remove the 5 binding screws [1], and detach the accessories power supply PCB [2].

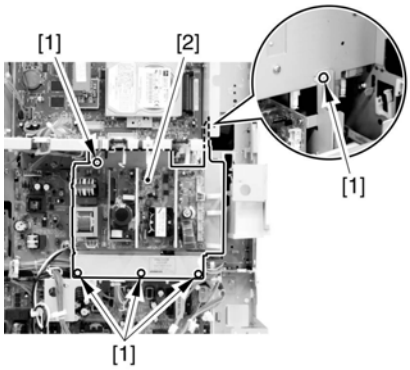

F-10-146

10.5.12 High-Voltage PCB

10.5.12.1 Removing the Front Cover Unit

iR2270 / iR2870 / iR3570 / iR4570 / / iR2270N / / iR2870N / / iR3570N / / iR4570N / iR2230 / / / iR3530 /

1) Open the front cover [1].

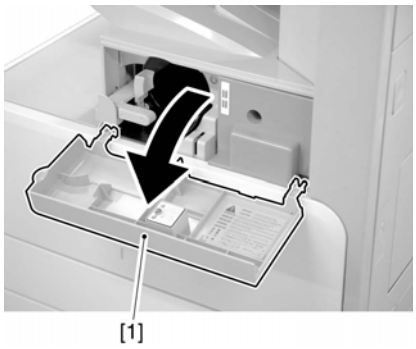

F-10-147

2) Remove the face cover rubber [1].
3) Remove the binding screw [2].
4) Remove the RS tightening screw [3].
5) Detach the front cover unit [4] by moving it in the direction of the arrow.

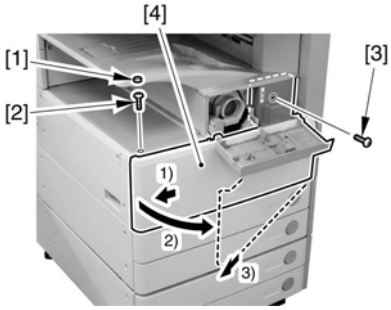

F-10-148

10.5.12.2 Removing the Waste Toner Case

iR2270 / iR2870 / iR3570 / iR4570 / / iR2270N / / iR2870N / / iR3570N / / iR4570N / iR2230 / / / iR3530 /

1) Remove the waste toner case [1].

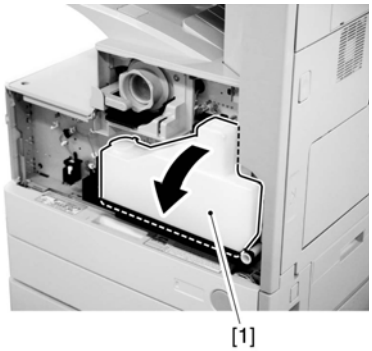

F-10-149

⚠Point to note after attaching the waste toner receptacle
After attaching the waste toner receptacle, move the waste toner full detection lever [1] up and down to make sure that the lever is moved smoothly. Faulty detection may be resulted if the lever is caught in something and is not moved smoothly.

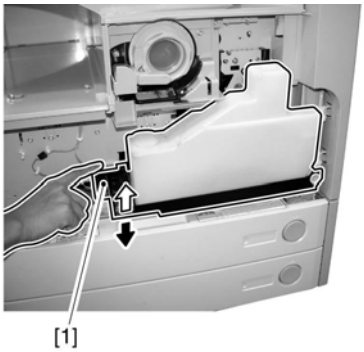

F-10-150

10.5.12.3 Removing the Toner Cartridge

iR2270 / iR2870 / iR3570 / iR4570 / / iR2270N / / iR2870N / / iR3570N / / iR4570N / iR2230 / / / iR3530 /

1) Shift up the lever [1].

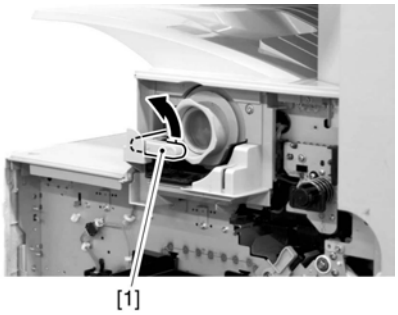

F-10-151

2) Remove the toner cartridge [1].

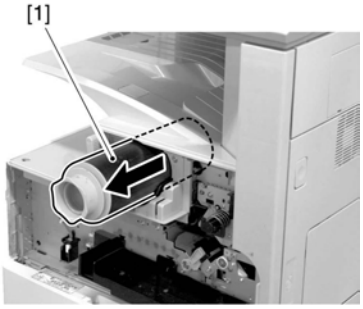

F-10-152

Points to Note on Handing the Toner Cartridge

1. Care should be taken not to bump the toner stop [1] against the covers or the like when and after removing the toner cartridge. Since the toner stop comes off easily, toner scattering may be resulted if it comes off by accident.
2. Keep the toner cartridge horizontal after removing. Since the toner stop [1] comes off easily as mentioned above, toner scattering may be resulted if the toner cartridge is placed with the toner stop side down.

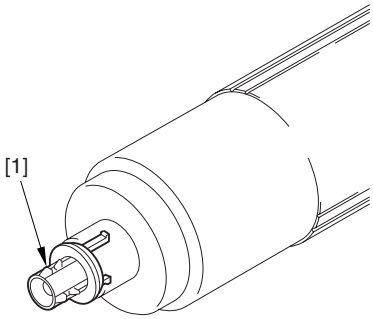

F-10-153

10.5.12.4 Removing the Drum Unit

iR2270 / iR2870 / iR3570 / iR4570 / / iR2270N / / iR2870N / / iR3570N / / iR4570N / iR2230 / / / iR3530 /

1) Open the right door [1].

F-10-154

2) Remove the screw [1].

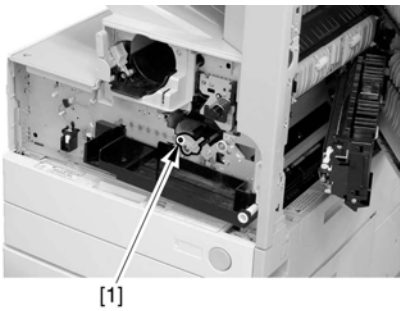

F-10-155

3) Shift the locking lever [1] to the left to release the developing assembly.

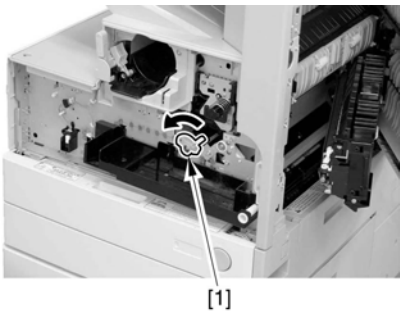

F-10-156

4) Remove the screw [1].

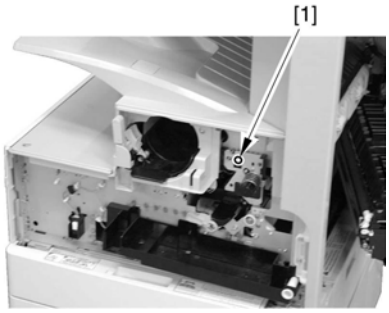

F-10-157

5) Remove the drum unit [1].

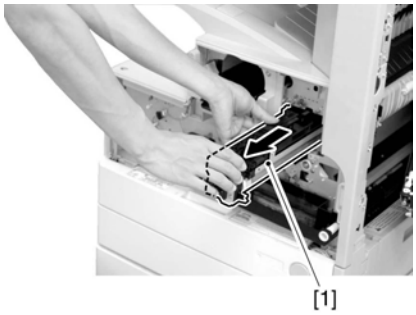

F-10-158

Be sure to hold the drum unit as shown.

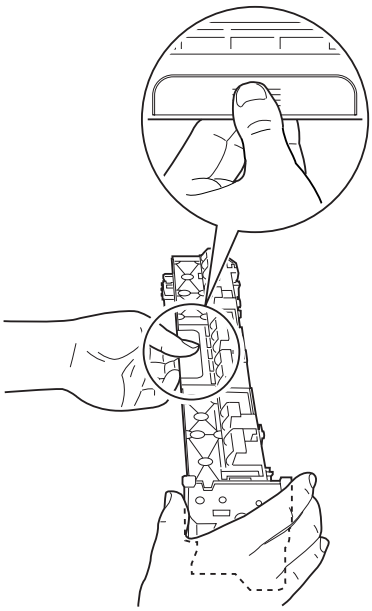

F-10-159

10.5.12.5 Removing the Developing Assembly

iR2270 / iR2870 / iR3570 / iR4570 / / iR2270N / / iR2870N / / iR3570N / / iR4570N / iR2230 / / / iR3530 /

1) Remove the screw [1].

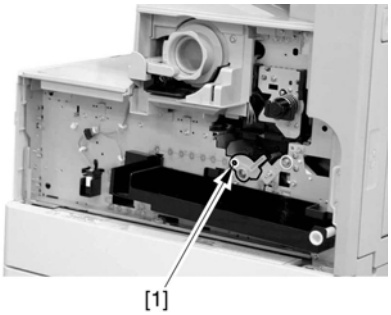

F-10-160

2) Shift the locking lever [1] to the left to release the developing assembly.

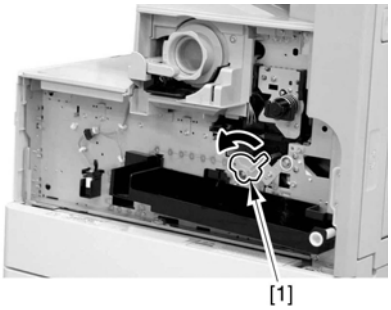

F-10-161

3) Slide the developing assembly [1] slightly to the front; then, disconnect the connector [2].

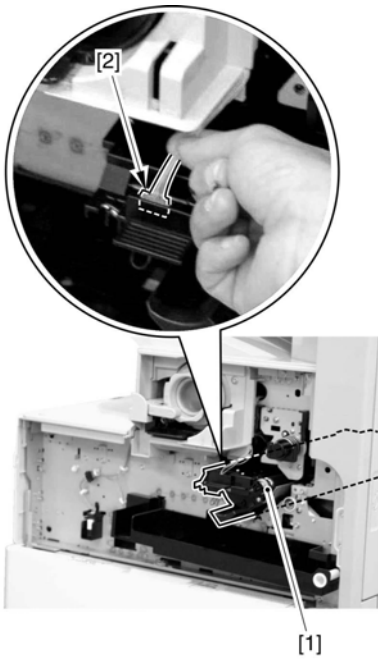

F-10-162

4) Remove the developing assembly [1].

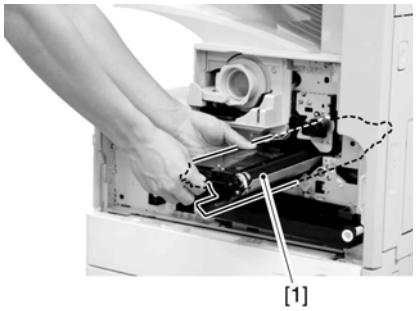

F-10-163

Be sure to hold the developing assembly as shown.

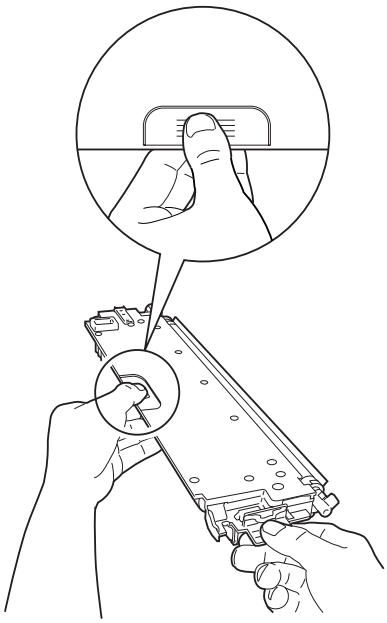

F-10-164

When fitting the developing assembly, be sure to fit the lower right segment [2] of the developing assembly [1] in the rail [3] of the machine. Thereafter, slide the developing assembly so that [A] of the developing assembly matches [B] of the rail.

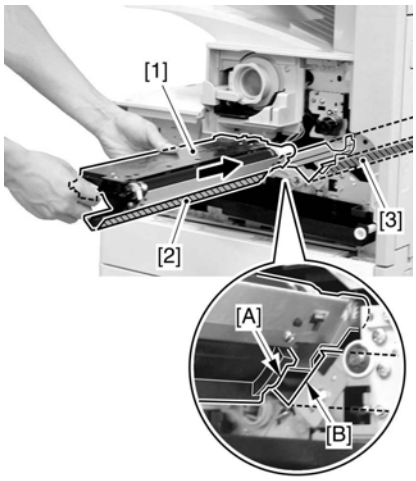

F-10-165

10.5.12.6 Removing the Upper Tray

iR2270 / iR2870 / iR3570 / iR4570 / / iR2270N / / iR2870N / / iR3570N / / iR4570N / iR2230 / / / iR3530 /

1) Remove the 2 screws [1], and detach the upper tray [2].

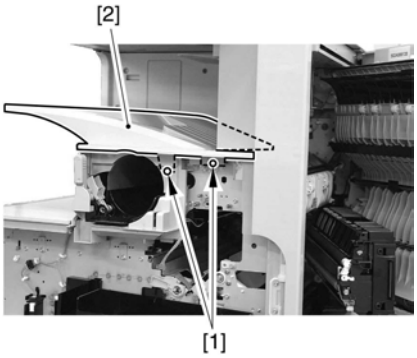

F-10-166

Reference:
Lift the front of the upper tray [1], and detach it as if to slide it toward the front.

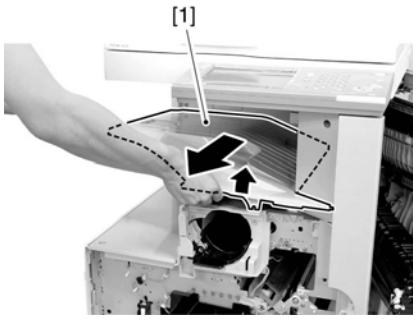

F-10-167

10.5.12.7 Removing the Toner Cartridge Cover

iR2270 / iR2870 / iR3570 / iR4570 / / iR2270N / / iR2870N / / iR3570N / / iR4570N / iR2230 / / / iR3530 /

1) Remove the 2 screws [1]; then, detach the toner bottle cover [2].

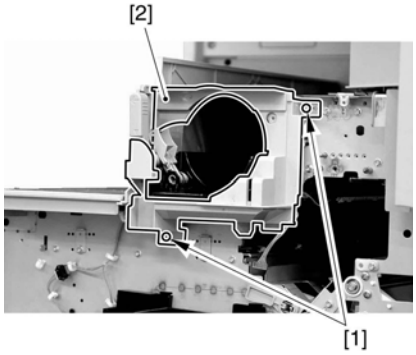

F-10-168

10.5.12.8 Removing the Pre-Exposure Lamp

iR2270 / iR2870 / iR3570 / iR4570 / / iR2270N / / iR2870N / / iR3570N / / iR4570N / iR2230 / / / iR3530 /

1) Open the 2 wire saddles [1], and disconnect the 2 relay connectors [2].

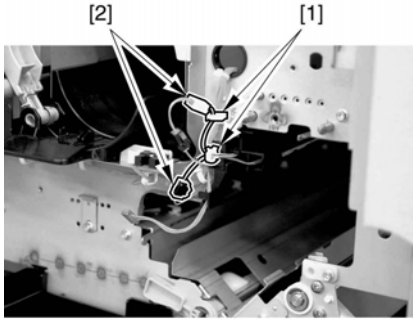

F-10-169

2) While freeing the lock [1] toward the right, detach the pre-exposure lamp [2].

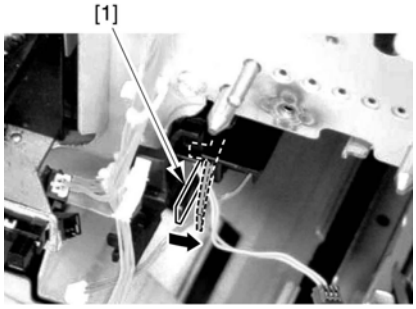

F-10-170

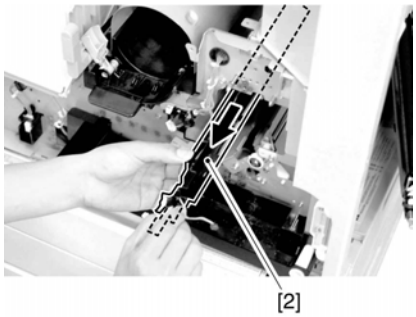

F-10-171

10.5.12.9 Removing the Left Cover

iR2270 / iR2870 / iR3570 / iR4570 / / iR2270N / / iR2870N / / iR3570N / / iR4570N / iR2230 / / / iR3530 /

1) Remove the 4 screws [1], and detach the left cover [2].

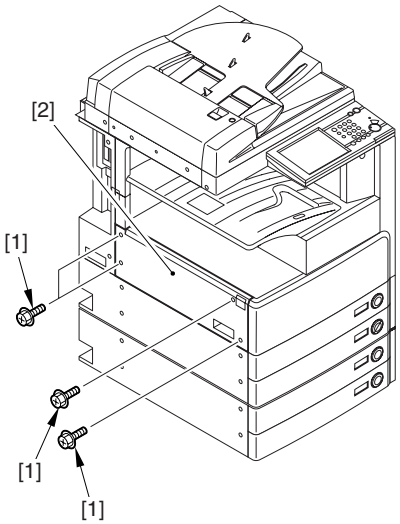

F-10-172

10.5.12.10 Removing the Laser Unit

iR2270 / iR2870 / iR3570 / iR4570 / / iR2270N / / iR2870N / / iR3570N / / iR4570N / iR2230 / / / iR3530 /

1) Open the 2 wire saddles [1], and disconnect the 2 connectors [2].

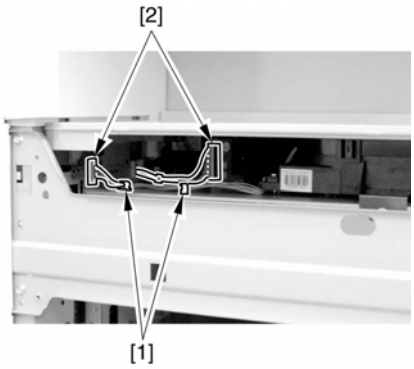

F-10-173

When you have disconnected the connector [1], be sure to take care so that it will not come into contact with the PCB that is mounted to the laser scanner unit. (The PCB is equipped with a laser intensity adjustment variable resistor. Contact with the PCB can change the adjustment setting.)

2) Open the wire saddle [1], and disconnect the connector [2].

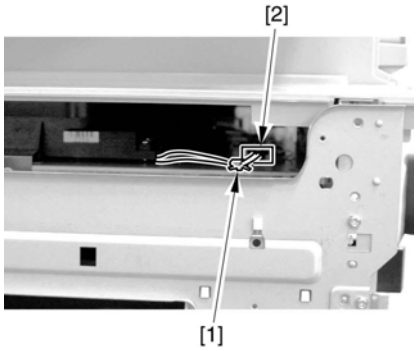

F-10-174

3) Remove the screw [1], and detach the fixing [2].

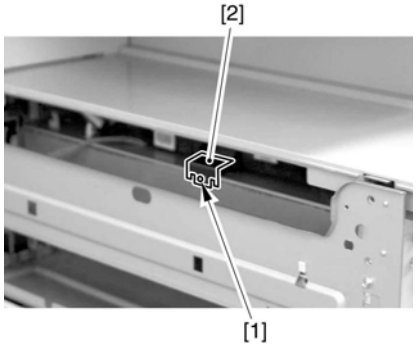

F-10-175

4) Lift the front of the laser unit [1], and slide it to the front.

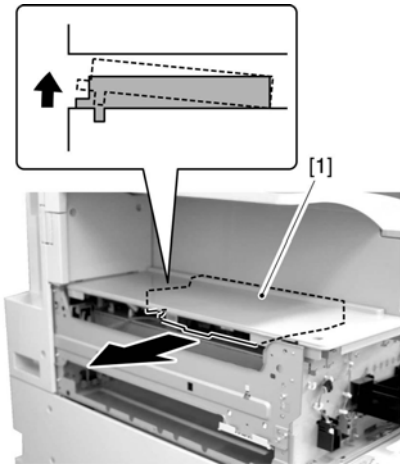

F-10-176

When sliding out the laser scanner unit, be sure to take care not to touch the PCB mounted to the laser scanner unit. (The PCB is equipped with a laser scanner intensity adjustment variable resistor, and contact with the PCB can change the adjustment setting.)

10.5.12.11 Removing the Hopper Assembly

iR2270 / iR2870 / iR3570 / iR4570 / / iR2270N / / iR2870N / / iR3570N / / iR4570N / iR2230 / / / iR3530 /

1) Remove the inside base cover [1] and the inside right color [2].

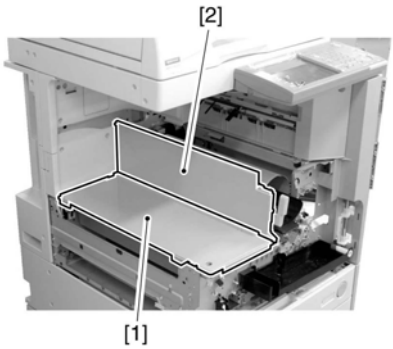

F-10-177

2) Disconnect the 3 connectors [1] found at the front and the connector [2] found at the rear.

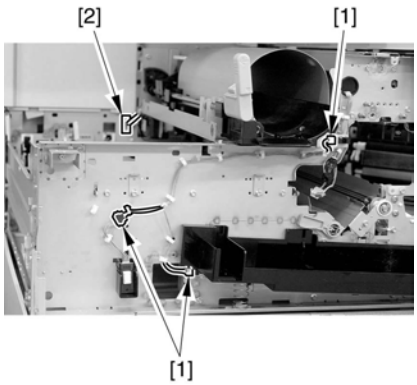

F-10-178

3) Open the 11 wire saddles [1], and pull out the harness [3] through the hole [2] in the plate.

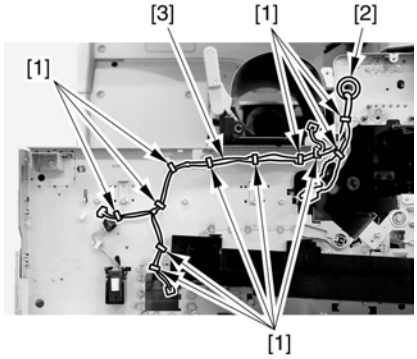

F-10-179

4) Remove the 3 screws [1], and detach the hopper assembly [2].

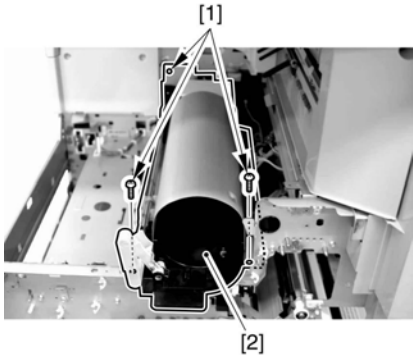

F-10-180

When fitting the hopper assembly to the machine, be sure that the connectors [1] are securely connected. If the connectors [1] are not connected, the environment heater will not be supplied with power, leading to image faults.

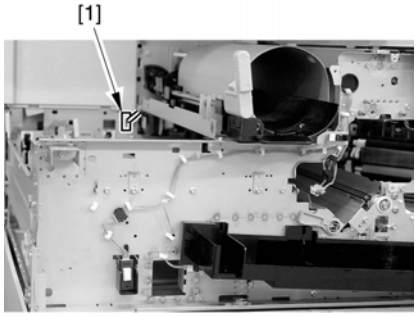

F-10-181

10.5.12.12 Removing the Right Cover (rear)

iR2270 / iR2870 / iR3570 / iR4570 / / iR2270N / / iR2870N / / iR3570N / / iR4570N / iR2230 / / / iR3530 /

1) Open the pedestal right door [1]. (if equipped with a 2-Cassette Pedestal-Y2)

2) Open the right lower door [2].
3) Remove the 5 screws [3], and detach the right cover (rear) [4].

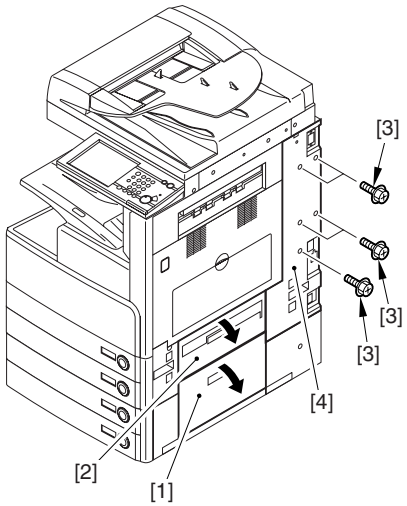

F-10-182

10.5.12.13 Removing the Right Door

iR3570 / iR4570 / / iR3570N / / iR4570N / iR2230 / / / iR3530 /

1) Open the right door.

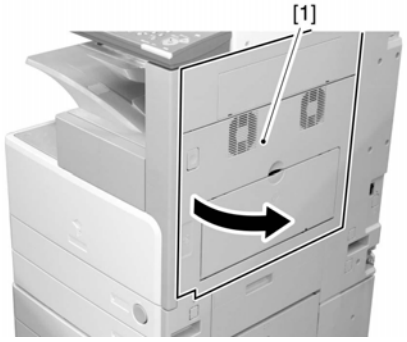

F-10-183

2) Remove the screw [1], and detach the fixing plate [2].

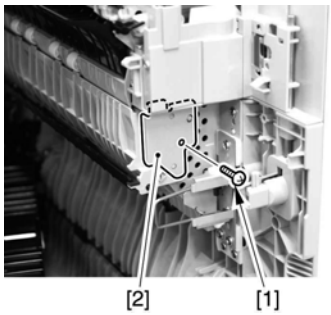

F-10-184

3) Remove the joint shaft [1], and free the extension delivery unit [2] from the right door.

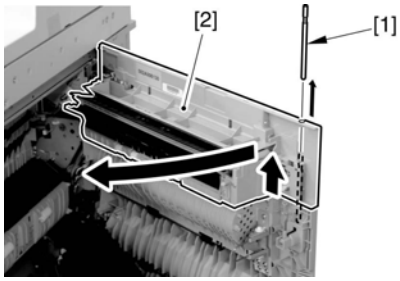

F-10-185

4) Disconnect the connector [1], and remove the reuse band [2]; then, remove the 2 screws (M4x8; RS tightening).

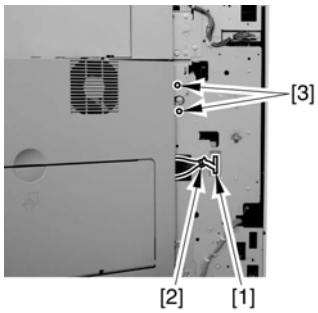

F-10-186

5) While freeing the hinge assembly [2], detach the right door.

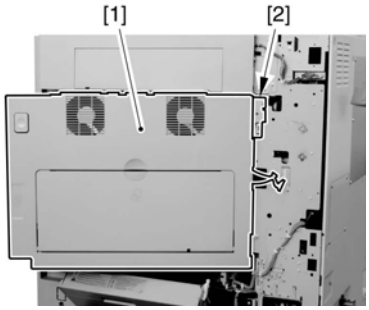

F-10-187

Attaching the Right Door

1) Match the hinge [1] found at the bottom of the right door against the lug.
2) Engage the hinge [2] found on the top of the right door with the hook found on the side plate.

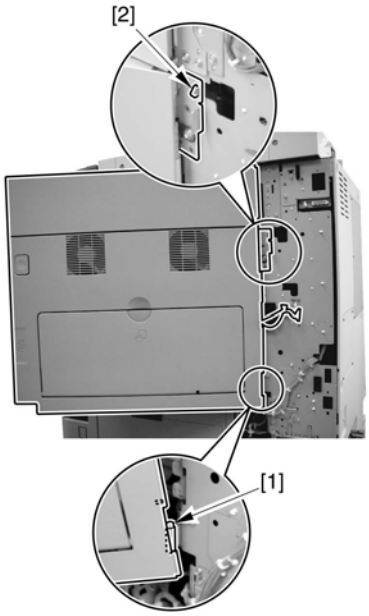

F-10-188

When tightening the 2 screws used to fix the hinge in place, be sure to close the right door first.

10.5.12.14 Removing the Right Door

iR2270 / iR2870 / iR3570 / iR4570 / / iR2270N / / iR2870N / / iR3570N / / iR4570N / iR2230 / / / iR3530 /

1) Open the right door.

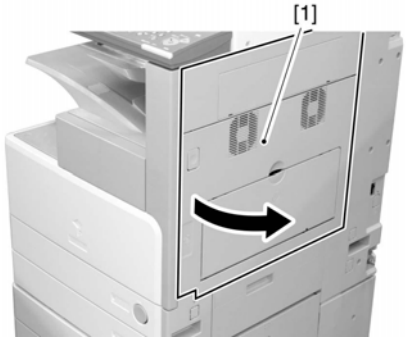

F-10-189

2) Remove the screw [1], and detach the fixing plate [2].

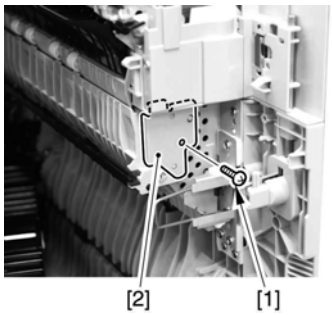

F-10-190

3) Remove the joint shaft [1], and free the extension delivery unit [2] from the right door.

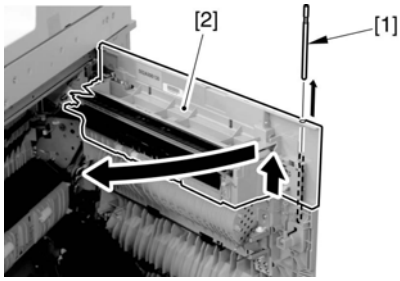

F-10-191

4) Disconnect the connector [1], and remove the reuse band [2]; then, remove the 2 screws (M4x8; RS tightening).

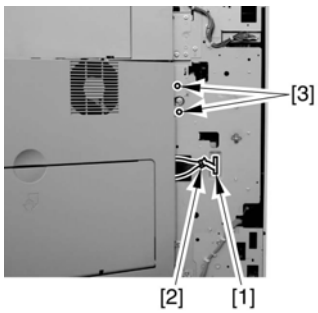

F-10-192

5) While freeing the hinge assembly [2], detach the right door.

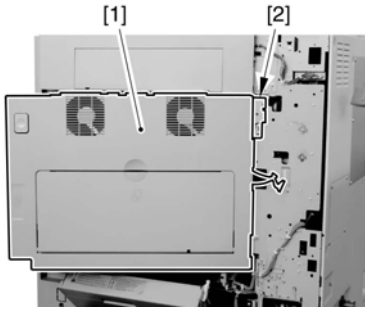

F-10-193

Attaching the Right Door

1) Match the hinge [1] found at the bottom of the right door against the lug.
2) Engage the hinge [2] found on the top of the right door with the hook found on the side plate.

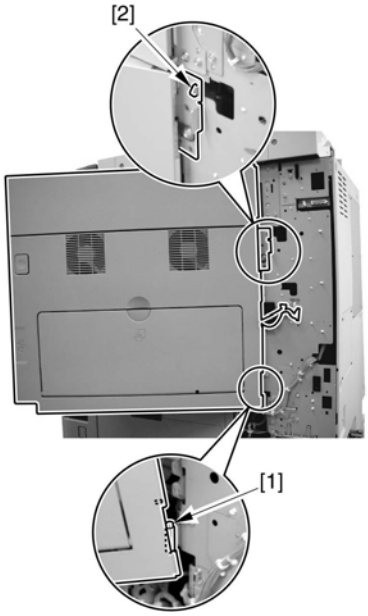

F-10-194

When tightening the 2 screws used to fix the hinge in place, be sure to close the right door first.

10.5.12.15 Removing the Right Door

iR2270 / iR2870 / / iR2270N / / iR2870N / iR2230 / / / iR3530 /

1) Open the right door.

F-10-195

2) Remove the reuse band [1], and disconnect the connector [2].
3) Remove the 2 screws (M4x8; RS tightening), and detach the right door.

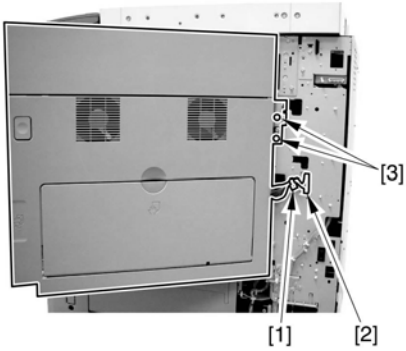

F-10-196

Attaching the Right Door
1) Match the hinge [1] found at the bottom of the right door against the lug.
2) Engage the hinge [2] found on the top of the right door with the hook found on the side plate.

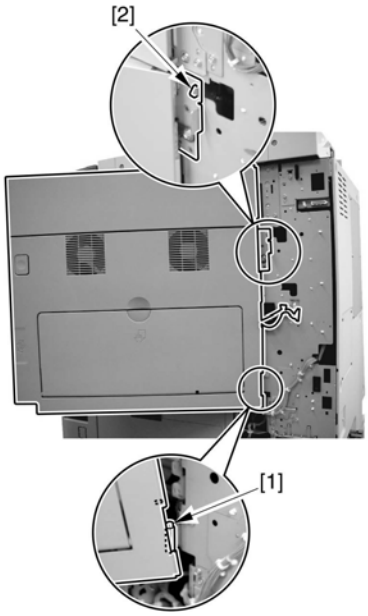

F-10-197

When tightening the 2 screws used to fix the hinge in place, be sure to close the right door first.

10.5.12.16 Removing the Fixing Unit

iR2270 / iR2870 / iR3570 / iR4570 / / iR2270N / / iR2870N / / iR3570N / / iR4570N / iR2230 / / / iR3530 /

1) Remove the screw [1], and detach the harness cover [2].

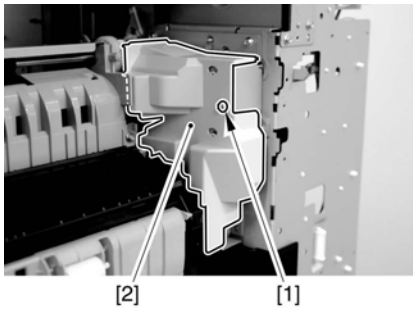

F-10-198

2) Disconcert the 3 connectors [1].

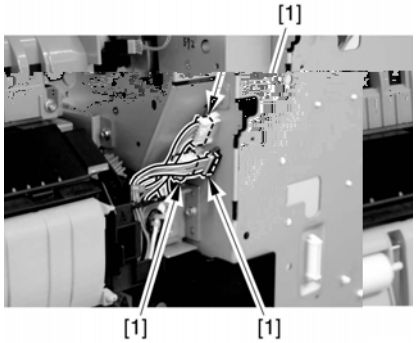

F-10-199

3) Remove the 4 screws [1].

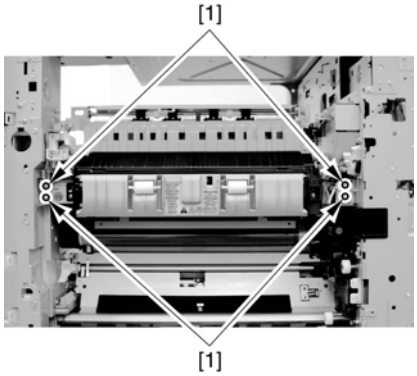

F-10-200

4) Detach the fixing unit [1] toward the front.

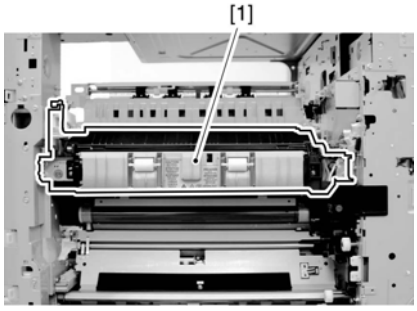

F-10-201

When mounting the harness cover [1], be sure to keep the harness [2] within the space [3] indicated in the figure so that the harness [2] will not come into contact with the gear [4].

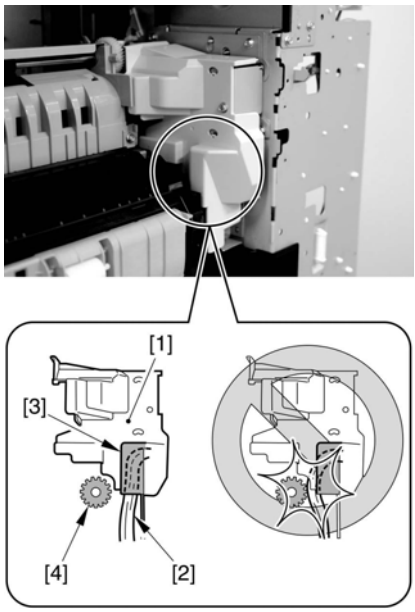

F-10-202

Do not touch the screw [1]. Turning it will change the pressure of the fixing assembly, which cannot be adjusted in the field, necessitating the replacement of the fixing assembly.

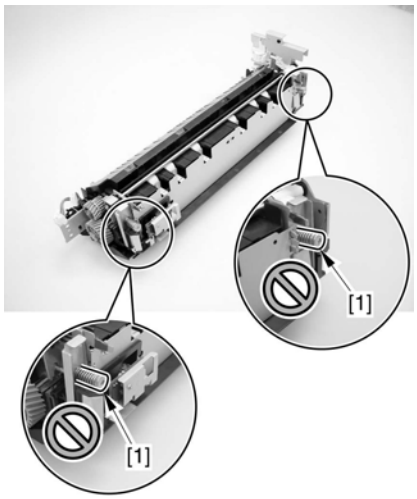

F-10-203

10.5.12.17 Removing the Gear

iR2270 / iR2870 / iR3570 / iR4570 / / iR2270N / / iR2870N / / iR3570N / / iR4570N / iR2230 / / / iR3530 /

1) Remove the 4 screws [1], and detach the gear cover [2].

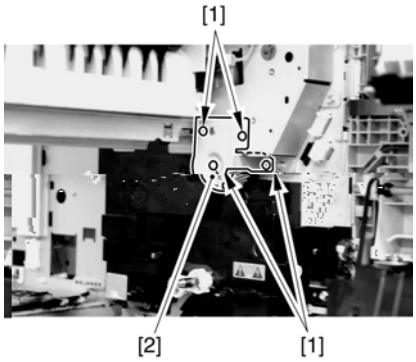

F-10-204

2) Remove the gear [1].

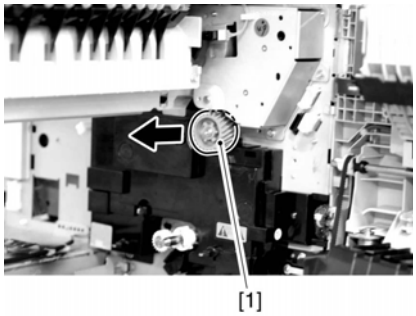

F-10-205

10.5.12.18 Removing the High-Voltage PCB

iR2270 / iR2870 / iR3570 / iR4570 / / iR2270N / / iR2870N / / iR3570N / / iR4570N / iR2230 / / / iR3530 /

1) Remove the screw [1], and detach the fixing member [2].

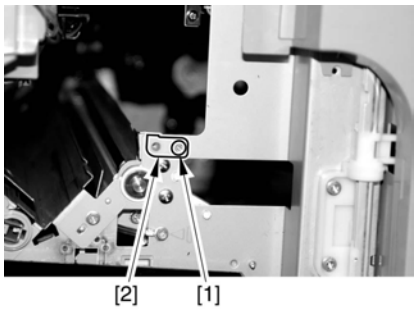

F-10-206

2) Slide the guide [1] as shown to detach.

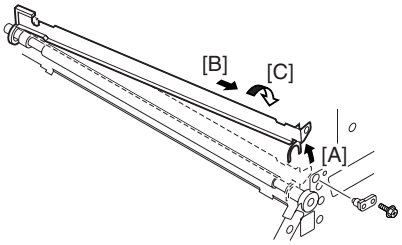

F-10-207

3) Disconnect the connector [1], and remove the latch [2] and 3 screws [3]; then, detach the high-voltage PCB [4].

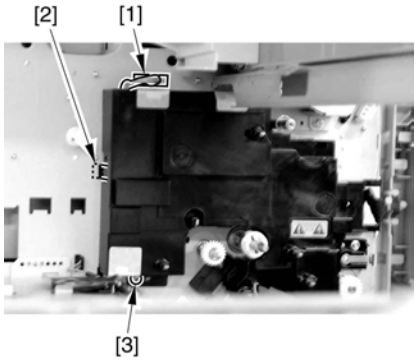

F-10-208

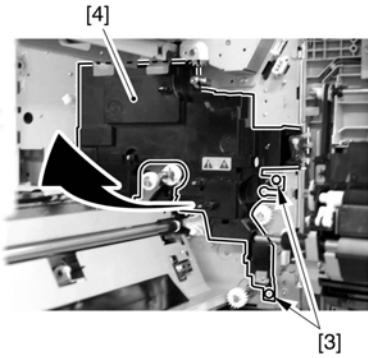

F-10-209

10.5.13 Exhaust Fan

10.5.13.1 Removing the Heat Discharge Fan

iR3570 / iR4570 / / iR3570N / / iR4570N / iR2230 / / / iR3530

1) Open the right door.

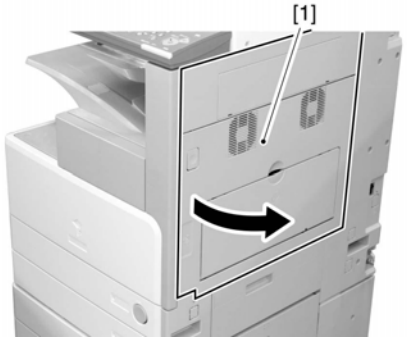

F-10-210

2) Remove the screw [1], and detach the fixing plate [2].

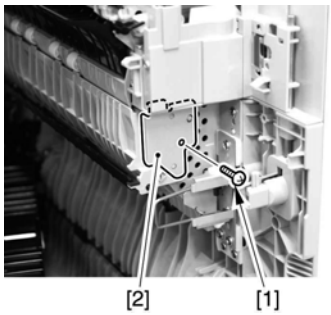

F-10-211

3) Remove the feed guide [1].

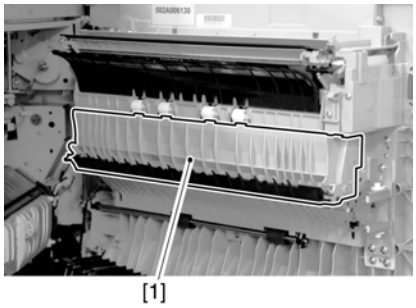

F-10-212

4) Remove the 7 screws [1], and detach the feed guide (lower) [2].

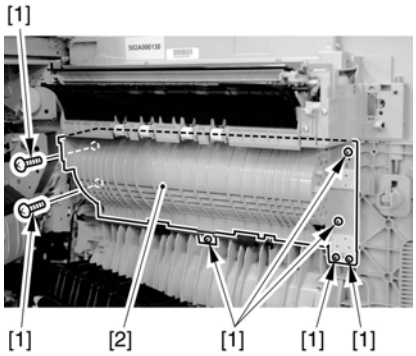

F-10-213

5) Disconnect the connector [1], and detach the heat discharge fan [2].

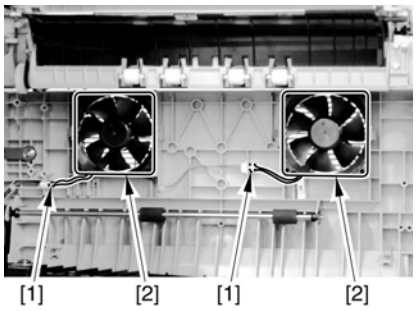

F-10-214

10.5.13.2 Removing the Heat Discharge Fan

iR2270 / iR2870 / / iR2270N / / iR2870N / iR2230 / / / iR3530 /

1) Open the right door.

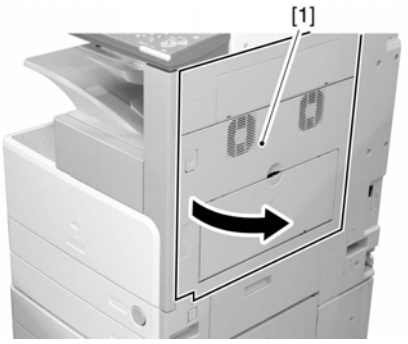

F-10-215

2) Remove the 2 self-tapping screws [2], and detach the upper right cover [1].

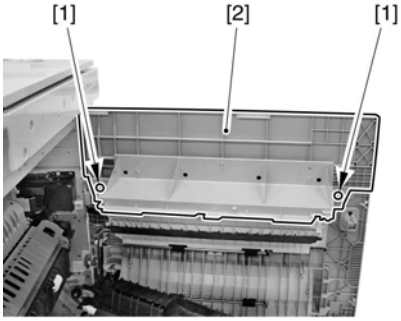

F-10-216

3) Remove the self-tapping screw [1], and detach the feed guide [2].

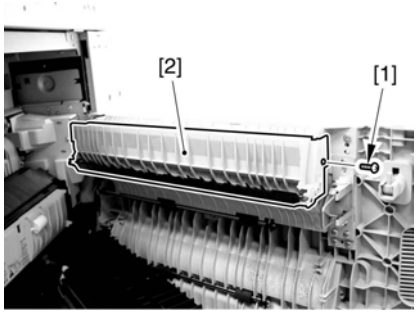

F-10-217

4) Remove the 7 screws [1], and detach the feed guide (lower) [2].

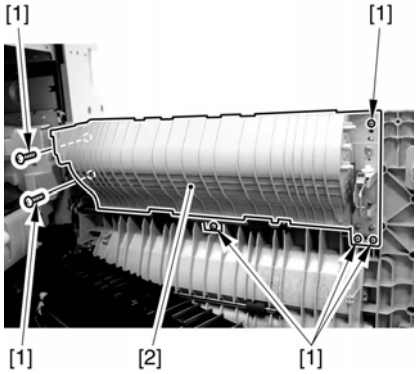

F-10-218

5) Disconnect the connector [1], and detach the heat discharge fan [2].

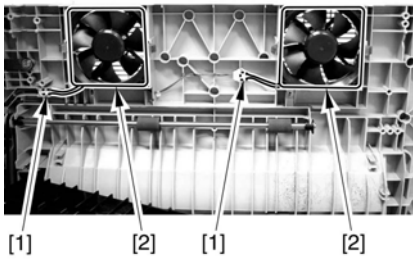

F-10-219

10.5.14 Motor of Main Drive Assembly

10.5.14.1 Removing the Rear Cover

iR2270 / iR2870 / iR3570 / iR4570 / / iR2270N / / iR2870N / / iR3570N / / iR4570N / iR2230 / / / iR3530 /

1) Remove the 13 screws [1] and then the other screw [2]; then, detach the rear cover [3].

If the left cover (lower) has already been detached, the screw [3] should also have been removed.

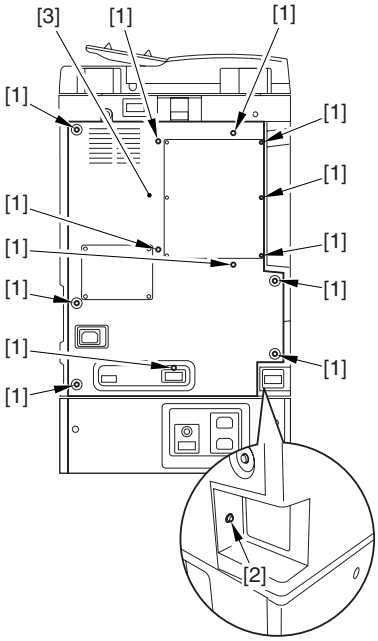

F-10-220

10.5.14.2 Removing the Main Drive Assembly

iR3570 / iR4570 / / iR3570N / / iR4570N / iR2230 / / / iR3530 /

1) Disconnect the connector [1], and free the harness [2] from the wire saddle.

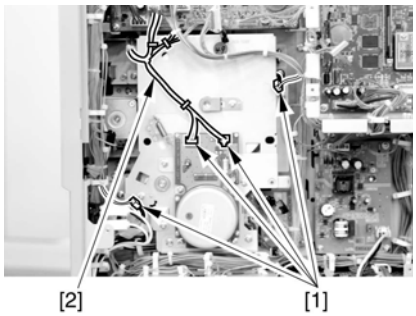

F-10-221

2) Remove the 4 screws [1], and detach the main drive assembly [2].

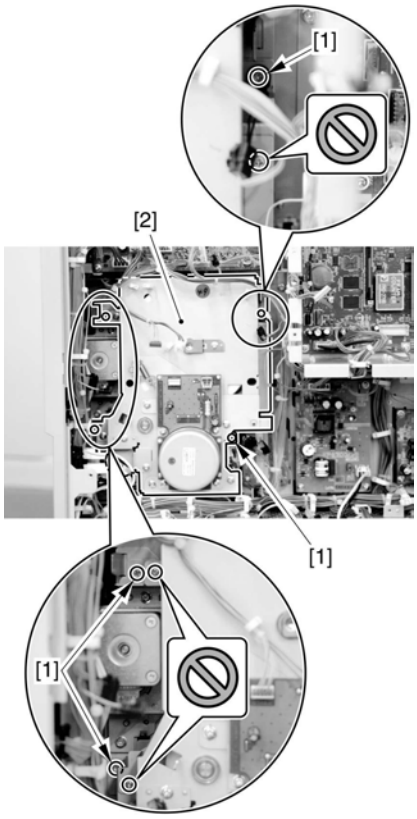

F-10-222

Do not touch the screws that are glued in place.

10.5.14.3 Removing the Main Drive Motor

iR3570 / iR4570 / / iR3570N / / iR4570N / iR2230 / / / iR3530 /

1) Remove the 4 screws [1], and detach the main drive motor [2].

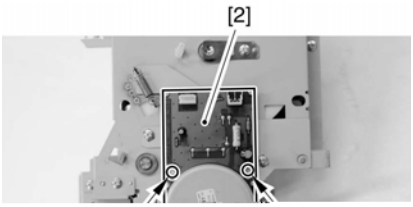

F-10-223

Points to Note During the Work
Be sure that the 2 timing belts [2] are fitted to the shaft [1] of the main drive motor as shown.

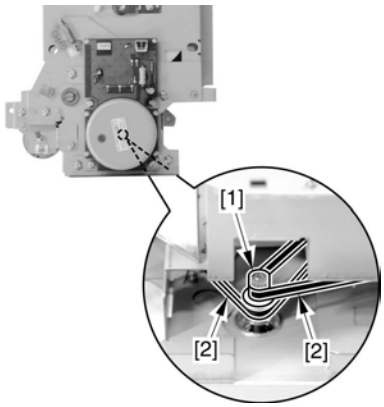

F-10-224

Adjusting the Tension of the Main Drive Motor

1) Temporarily fix the main drive motor in place to the main motor base.
2) So that the motor gear [1] and the teeth [2] of the pulley mesh correctly, move the motor in the direction of the arrow.

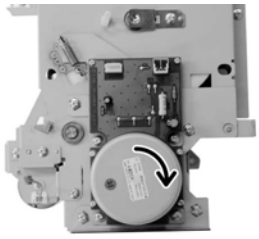

F-10-225

3) Tighten the screws [1] of the main drive motor in the order indicated.

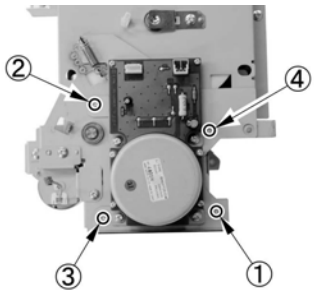

F-10-226

10.5.14.4 Removing the Main Drive Motor

iR2270 / iR2870 / / iR2270N / / iR2870N / iR2230 / / / iR3530 /

1) Disconnect the 2 connectors [1].

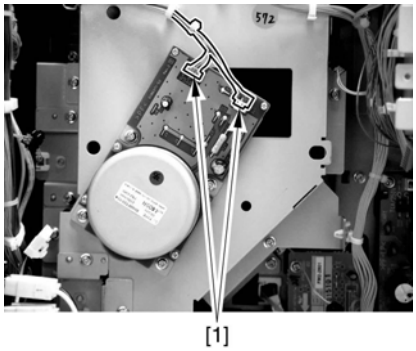

F-10-227

2) Remove the 4 screws [1], and detach the main dive motor [2].

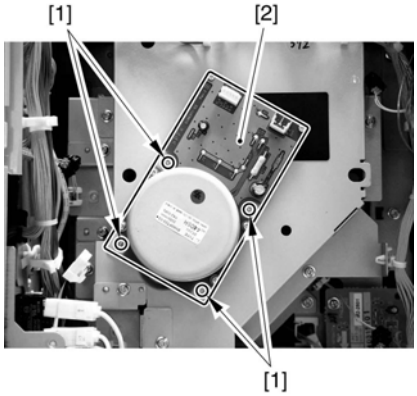

F-10-228

10.5.15 Fixing Driver Motor

10.5.15.1 Removing the Rear Cover

iR2270 / iR2870 / iR3570 / iR4570 / / iR2270N / / iR2870N / / iR3570N / / iR4570N / iR2230 / / / iR3530 /

1) Remove the 13 screws [1] and then the other screw [2]; then, detach the rear cover [3].

If the left cover (lower) has already been detached, the screw [3] should also have been removed.

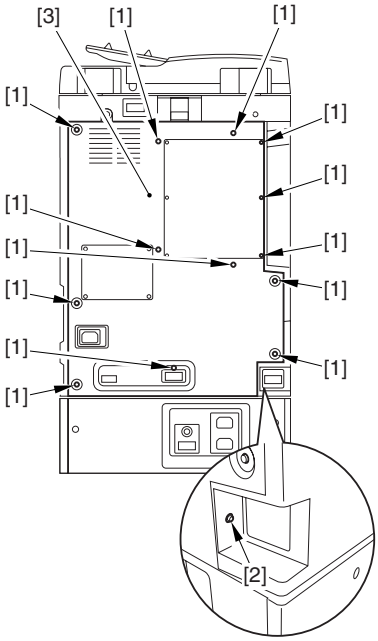

F-10-229

10.5.15.2 Removing the DC Controller PCB

iR2270 / iR2870 / iR3570 / iR4570 / / iR2270N / / iR2870N / / iR3570N / / iR4570N / iR2230 / / / iR3530 /

1) Disconnect the connector [1].

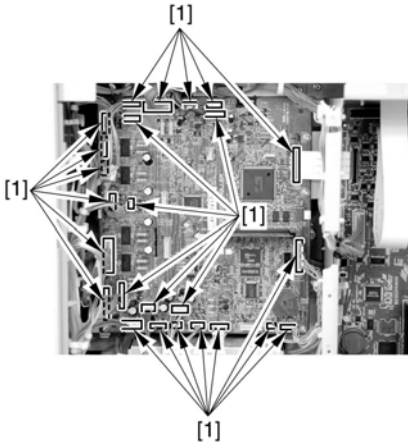

F-10-230

How to Remove the Flexible Cable [1]

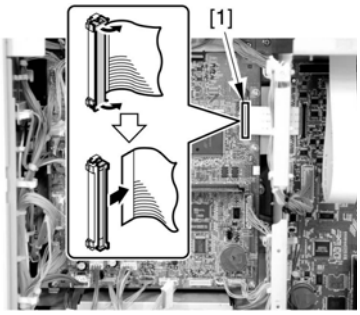

F-10-231

2) Remove the screw [1], and detach the DC controller PCB.

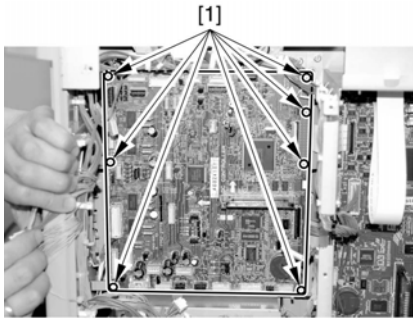

F-10-232

Points to Note When Replacing the DC Controller PCB
Be sure to remove the boot ROM [1] from the exiting DC controller PCB, and mount it to the new DC controller PCB.

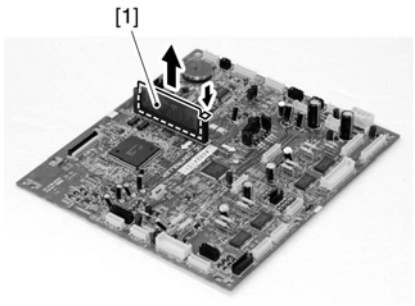

F-10-233

10.5.15.3 Removing the Fixing Drive Motor

iR2270 / iR2870 / iR3570 / iR4570 / / iR2270N / / iR2870N / / iR3570N / / iR4570N / iR2230 / / / iR3530 /

1) Disconnect the 2 connectors [1].

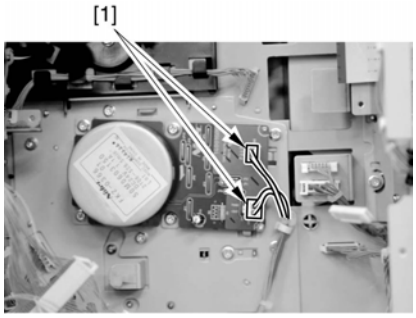

F-10-234

2) Remove the 4 screws [1], and detach the fixing drive motor [2].

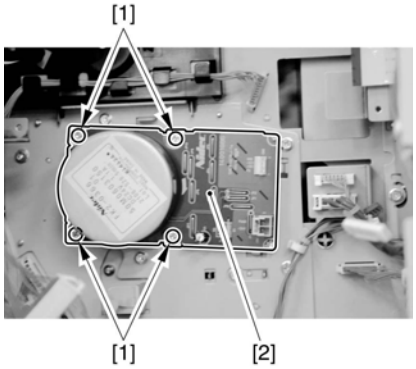

F-10-235

10.5.16 Right Door

10.5.16.1 Removing the Right Cover (rear)

iR2270 / iR2870 / iR3570 / iR4570 / / iR2270N / / iR2870N / / iR3570N / / iR4570N / iR2230 / / / iR3530 /

1) Open the pedestal right door [1]. (if equipped with a 2-Cassette Pedestal-Y2)
2) Open the right lower door [2].
3) Remove the 5 screws [3], and detach the right cover (rear) [4].

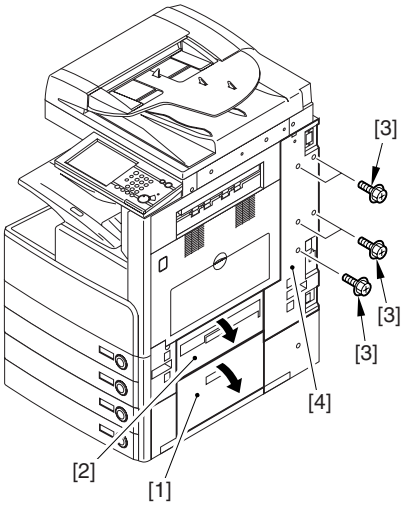

F-10-236

10.5.16.2 Removing the Right Door

iR3570 / iR4570 / / iR3570N / / iR4570N / iR2230 / / / iR3530 /

1) Open the right door.

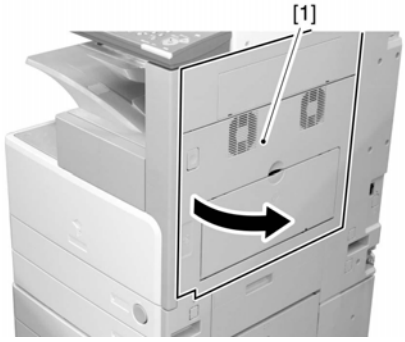

F-10-237

2) Remove the screw [1], and detach the fixing plate [2].

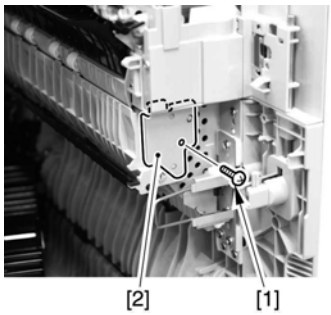

F-10-238

3) Remove the joint shaft [1], and free the extension delivery unit [2] from the right door.

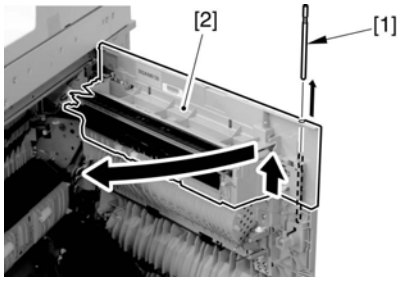

F-10-239

4) Disconnect the connector [1], and remove the reuse band [2]; then, remove the 2 screws (M4x8; RS tightening).

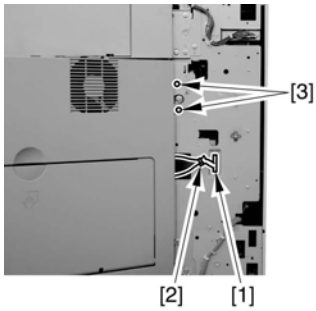

F-10-240

5) While freeing the hinge assembly [2], detach the right door.

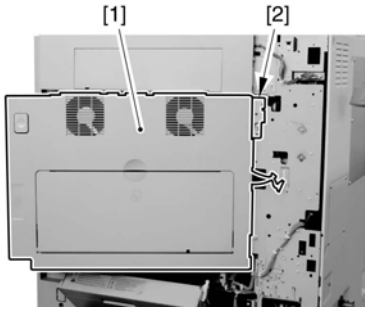

F-10-241

Attaching the Right Door

1) Match the hinge [1] found at the bottom of the right door against the lug.
2) Engage the hinge [2] found on the top of the right door with the hook found on the side plate.

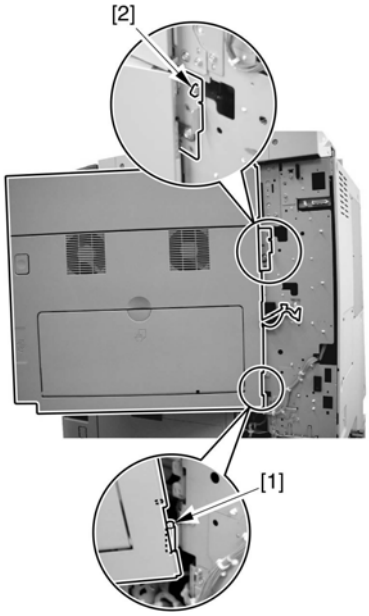

F-10-242

When tightening the 2 screws used to fix the hinge in place, be sure to close the right door first.

10.5.16.3 Removing the Right Door

iR2270 / iR2870 / / iR2270N / / iR2870N / iR2230 / / / iR3530 /

1) Open the right door.

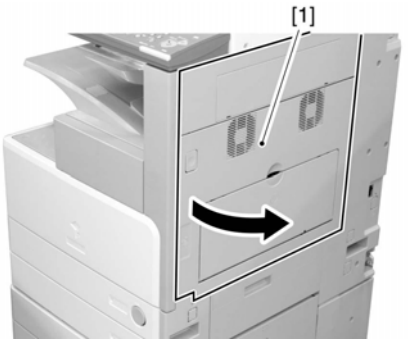

F-10-243

2) Remove the reuse band [1], and disconnect the connector [2].
3) Remove the 2 screws (M4x8; RS tightening), and detach the right door.

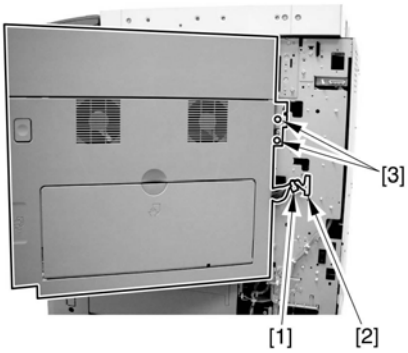

F-10-244

Attaching the Right Door
1) Match the hinge [1] found at the bottom of the right door against the lug.
2) Engage the hinge [2] found on the top of the right door with the hook found on the side plate.

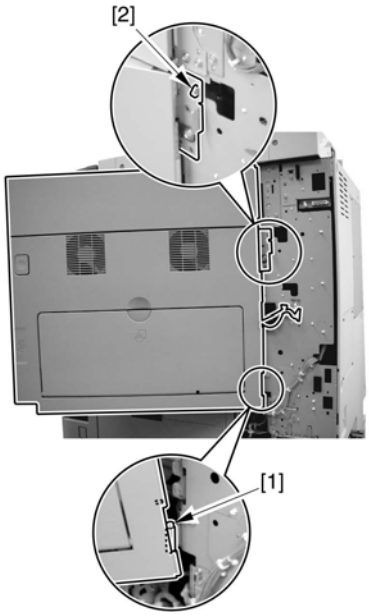

F-10-245

When tightening the 2 screws used to fix the hinge in place, be sure to close the right door first.

10.5.17 Circuit Braker

10.5.17.1 Removing the Rear Cover

iR2270 / iR2870 / iR3570 / iR4570 / / iR2270N / / iR2870N / / iR3570N / / iR4570N / iR2230 / / / iR3530 /

1) Remove the 13 screws [1] and then the other screw [2]; then, detach the rear cover [3].

If the left cover (lower) has already been detached, the screw [3] should also have been removed.

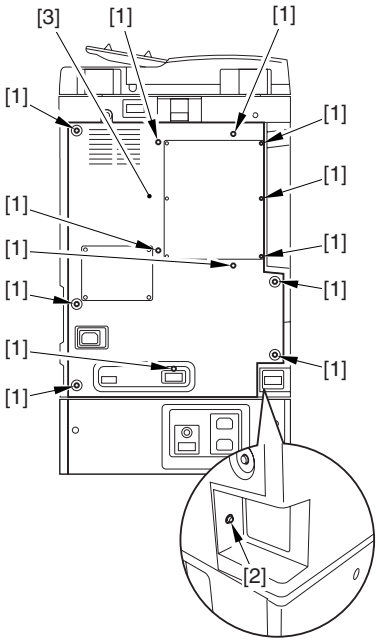

F-10-246

10.5.17.2 Removing the Circuit Breaker

iR2270 / iR2870 / iR3570 / iR4570 / / iR2270N / / iR2870N / / iR3570N / / iR4570N / iR2230 / / / iR3530 /

1) Remove the 2 screws [1].

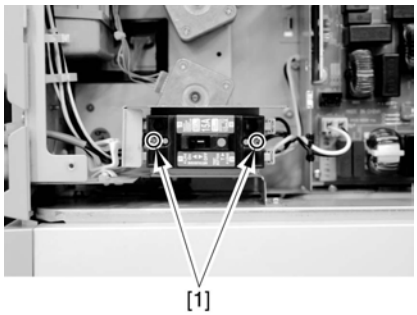

F-10-247

2) Remove the 4 fastons [1], and detach the circuit breaker [2].

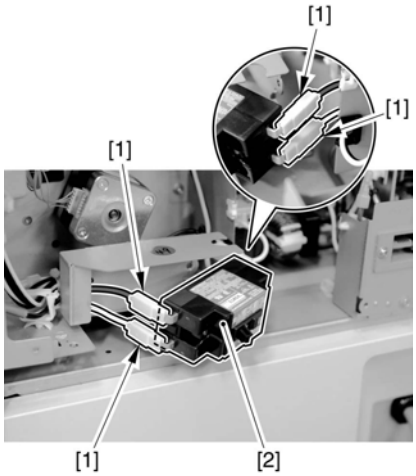

F-10-248

Points to Note When Mounting
When mounting the circuit breaker, be sure that the AC harness is identified correctly by color as shown.

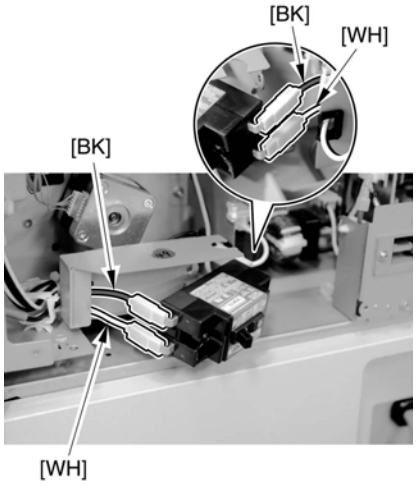

F-10-249

Chapter 11 MEAP

Contents

11.1 MEAP 11-1
11.1.1 Overview 11-1
11.1.2 MEAP Counter 11-1
11.1.3 Construction of the MEAP Platform 11-1

11.1 MEAP

11.1.1 Overview

iR2270 / iR2870 / iR3570 / iR4570 / / iR2270N / / iR2870N / / iR3570N / / iR4570N / iR2230 /

The term MEAP stands for Multifunctional Embedded Application Platform, and is used to generically refer to a platform for software built into MFPs and peripheral equipment. The architecture is based on Java (J2ME, i.e., Java 2 Platform Micro Edition), and is designed to enable the execution of Java applications.
A MEAP application behaves independently from its host printer's system software, and may be installed or uninstalled using SMS (Service Management Service), which is an interface that runs as part of the browser on a PC. As long as the device supports MEAP, most MEAP applications may be added to the device in the field.

11.1.2 MEAP Counter

iR2270 / iR2870 / iR3570 / iR4570 / / iR2270N / / iR2870N / / iR3570N / / iR4570N / iR2230 /

In addition to the commonly found print counters, a device that supports MEAP is equipped with a counter mechanism used to keep track of which functions are used as well as how often they are used for individual MEAP applications that are installed. The MEAP counter readings may be checked by making the following selections on the device control panel: Counter Check Key>MEAP Counter Check. A device may possess the following MEAP counters, and which counter to use and, therefore, to display all depend on the application in question.
A counter reading may be of a type that is forced to increase as a job is expected or of a type that is increased when the application sends instructions; or, it may be of a type that increases independently of the host device, thus increasing solely in response to the application being run; specifics are as follows:

T-11-1

Type	Count item
forced	total
	total (black-and-white 1)
	total (black-and-while large)
	scan (total 1)
	black-and-white scan (total 1)
in response to instructions from application	black-and-white scan 1
	black-and-white scan 2
	black-and-white scan 3
	black-and-white scan 4
application-independent	free 1
	free 2
	free 3
	free 4
	free 5
	free 6
	free 7
	free 8
	free 9
	free 10
	free 11
	free 12

MEMO:
forced: the device forces the counter to increase its reading in response to execution of a job.
in response to instructions from application: the counter increases its reading only in response to instructions from the application.
application independent: the counter operates according to the specifications of the application.

11.1.3 Construction of the MEAP Platform

iR2270 / iR2870 / iR3570 / iR4570 / / iR2270N / / iR2870N / / iR3570N / / iR4570N / iR2230 /

In addition to the installation of the system software, language file, and RUI, a printer equipped with MEAP functions calls for the installation of MEAP content, which offers functions (system services) needed to run MEAP applications and class libraries needed by the MEAP applications to control the device.
It is important that the version of the system software be fully compatible with the version of the MEAP content, calling for special care. (In the case of a mismatch, the device will not be able to run the MEAP application.) For version information, refer to the Service Information bulletin that is released in conjunction with the system software.

The following shows the components of a MEAP application:

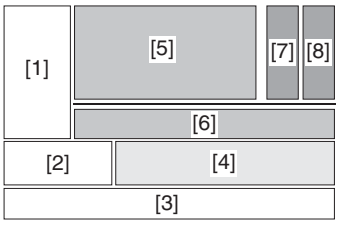

F-11-1

[1] User Interface Control Bock
installed as part of the system software
[2] Device Control Block
installed as part of the system software
[3] Operating System
installed as part of the system software
[4] Java VM

installed as part of the system software
[5] MEAP System Services (includes SDL/SSO)
installed as part of MEAP content
[6] Device Control Class Library
installed as part of MEAP content
[7] internally developed application
[8] externally developed application

Chapter 12 Maintenance and Inspection

Contents

12.1 Periodically Replaced Parts 12-1
12.1.1 Overview 12-1
12.1.2 Reader Unit 12-1
12.1.3 Printer Unit 12-1
12.2 Durables and Consumables 12-1
12.2.1 Overview 12-1
12.2.2 Reader Unit 12-1
12.2.3 Printer Unit 12-1
12.3 Scheduled Servicing Basic Procedure 12-2
12.3.1 Scheduled Servicing for the Reader Unit 12-2
12.3.2 Scheduled Servicing for the Printer Unit 12-2
12.3.3 Scheduled Servicing Basic Procedures 12-4
12.3.4 Points to Note About the Scheduled Servicing 12-5
12.4 Cleaning 12-7
12.4.1 Cleaning the Transfer/Feed Guide 12-7
12.4.2 Cleaning the Developing Assembly Spacer, Feed Guide, Dust-Blocking Glass, and Fixing Inlet Guide 12-7
12.4.3 Cleaning the Film Bias Static Eliminator 12-13
12.4.4 Cleaning the Film Bias Static Eliminator 12-19

12.1 Periodically Replaced Parts

12.1.1 Overview

iR2270 / iR2870 / iR3570 / iR4570 / / iR2270N / / iR2870N / / iR3570N / / iR4570N / iR2230 / / / iR3530 /

The machine has parts that must be replaced on a periodical basis to ensure a specific level of functional performance. (The loss of the function of any of these parts will significantly affect the machine performance, regardless of the presence/absence of external changes or damage.)
If possible, schedule the replacement so that it coincides with a scheduled service visit.

The timing of replacement may vary depending on the site environment or user habit.

12.1.2 Reader Unit

iR2270 / iR2870 / iR3570 / iR4570 / / iR2270N / / iR2870N / / iR3570N / / iR4570N / iR2230 / / / iR3530 /

The reader unit does not have parts that require periodical replacement.

12.1.3 Printer Unit

iR2270 / iR2870 / iR3570 / iR4570 / / iR2270N / / iR2870N / / iR3570N / / iR4570N / iR2230 / / / iR3530 /

The printer unit does not have parts that require periodical replacement.

12.2 Durables and Consumables

12.2.1 Overview

iR2270 / iR2870 / iR3570 / iR4570 / / iR2270N / / iR2870N / / iR3570N / / iR4570N / iR2230 / / / iR3530 /

The machine has parts that may require replacement once or more during the period of product warranty because of wear or damage. Replace them as needed by referring to their indicated estimated lives.
- Checking the Timing of Replacement
Use the following service mode item to check the timing of replacement:

- Copier
COPIER>COUNTER>DRBL-1
COPIER>COUNTER>MISC
- Accessory
COPIER>COUNTER>DRBL-2

12.2.2 Reader Unit

iR2270 / iR2870 / iR3570 / iR4570 / / iR2270N / / iR2870N / / iR3570N / / iR4570N / iR2230 / / / iR3530 /

The reader unit does not have parts that are classified as durables.

12.2.3 Printer Unit

iR2270 / iR2870 / iR3570 / iR4570 / / iR2270N / / iR2870N / / iR3570N / / iR4570N / iR2230 / / / iR3530 /

T-12-1

As of Dec. 2004

Ref.	Parts name	Parts No.	Q'ty	Life	Remarks
[1]	Transfer roller	FC6-2911-000	1	150,000 prints	
[2]	Static eliminator holder	FL2-0247-000	1	150,000 prints	
[3]	Developing cylinder	FL2-0290-000	1	480,000 prints	
[4]	Fixing film unit	FM2-0293-000	1	150,000 prints	iR2270/2870/2230/2830 100V
	Fixing film unit	FM2-0358-000	1	150,000 prints	iR2270/2870/2230/2830 115V
	Fixing film unit	FM2-0359-000	1	150,000 prints	iR2270/2870/2230/2830 230V
	Fixing film unit	FM2-1792-000	1	240,000 prints	iR3570/4570/3530 100V
	Fixing film unit	FM2-1793-000	1	240,000 prints	iR3570/4570/3530 115V
	Fixing film unit	FM2-1794-000	1	240,000 prints	iR3570/4570/3530 230V
[5]	Pressure roller	FC6-2942-000	1	150,000 prints	iR2270/2870/2230/2830
	Pressure roller	FC5-7207-000	1	240,000 prints	iR3570/4570/3530
[6]	Waste toner box	FM2-0303-000	1	75,000 prints	iR2270/2870/2230/2830
	Waste toner box	FM2-0303-000	1	85,000 prints	iR3570/4570/3530
[7]	Fixing heat discharge roller	FB5-4931-000	1	150,000 prints	iR2270/2870/2230/2830
	Fixing heat discharge roller	FB5-4931-000	1	240,000 prints	iR3570/4570/3530

As of Dec. 2004

Ref.	Parts name	Parts No.	Q'ty	Life	Remarks
[8]	Pickup roller	FB6-3405-000	2	120,000 prints	
[9]	Feed/separation roller	FC5-6934-000	4	120,000 prints	
[10]	Manual feed separation pad	FC5-0488-000	1	240,000 prints	
[11]	Manual feed pickup roller	FB1-8581-000	1	240,000 prints	
[12]	Heat discharge fan filter	FC5-1546-000	2	150,000 prints	iR2270/2870/2230/2830
	Heat discharge fan filter	FC5-1546-000	2	240,000 prints	iR3570/4570/3530
[13]	Pressure roller bushing	RS5-1446-000	2	300,000 prints	iR2270/2870/2230/2830

The value is the mean value collected from the results of evaluation. The parts number may change because of changes in design.

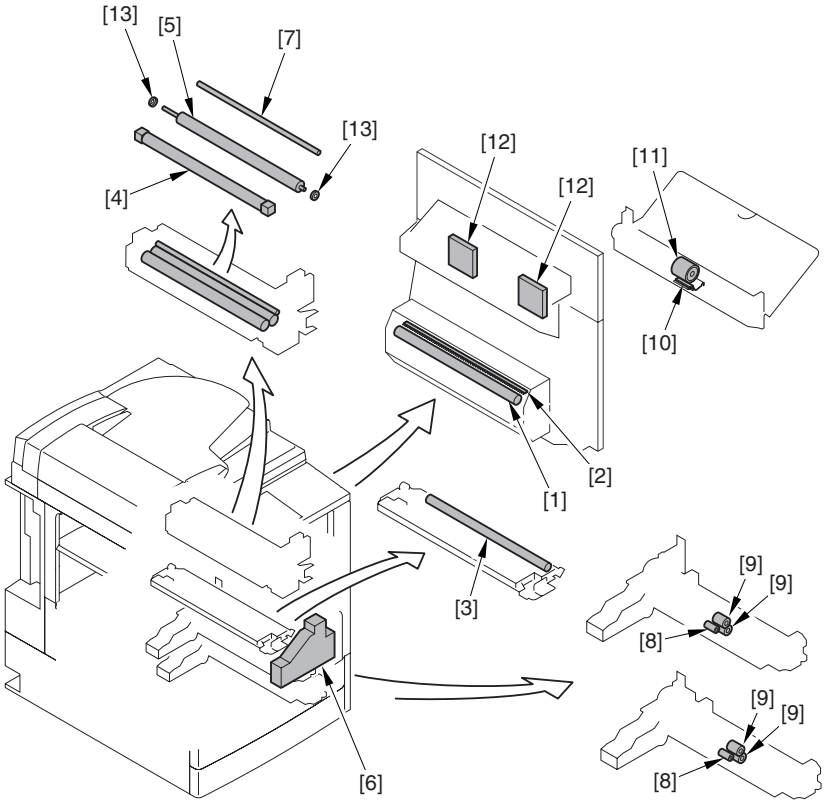

F-12-1

12.3 Scheduled Servicing Basic Procedure

12.3.1 Scheduled Servicing for the Reader Unit

iR2270 / iR2870 / iR3570 / iR4570 / / iR2270N / / iR2870N / / iR3570N / / iR4570N / iR2230 / / / iR3530 /

The reader unit does not have items that require scheduled servicing.

Be sure to clean the copyboard glass and the ADF reading glass during every service visit.

12.3.2 Scheduled Servicing for the Printer Unit

iR2270 / iR2870 / iR3570 / iR4570 / / iR2270N / / iR2870N / / iR3570N / / iR4570N / iR2230 / / / iR3530 /

Do not use solvents or oils other than those indicated.

T-12-2

Transfer assembly	Location	Transfer/feed guide assembly
	Task	clean:(dry wiping)
	Interval	120,000 prints
	Remarks 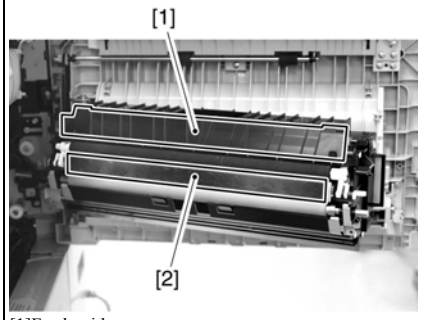 [1]Feed guide [2]Transfer guide	
Developing assembly	Location	Photosensitive drum butting spacer/feed guide
	Task	clean:(dry wiping)
	Interval	120,000 prints
	Remarks 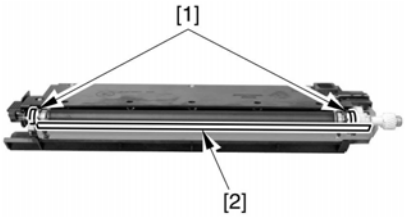 [1]Photosensitive drum butting spacer [2]Feed guide	

Fixing assembly	Location	Fixing inlet guide
	Task	clean:(dry wiping/alcohol)
	Interval	120,000 prints
	Remarks 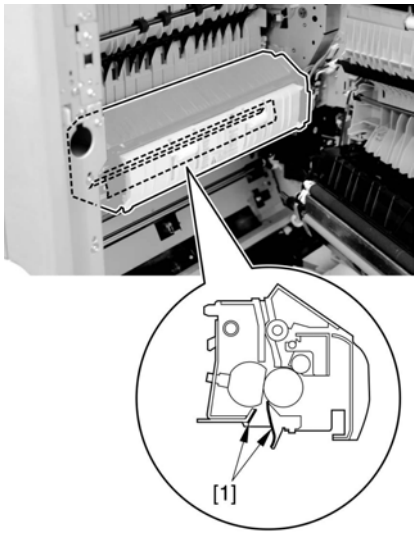 [1]Fixing inlet guide	
	Location	Film bias static eliminator
	Task	clean
	Interval	150,000 prints (iR2270/2870) 240,000 prints (iR3570/4570)
	Remarks 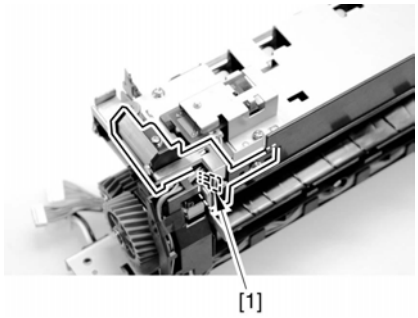 [1]Film bias static eliminator	
Laser scanner assembly	Location	Dust-blocking glass
	Task	clean:(dry wiping or alcohol)
	Interval	120,000 prints
	Remarks 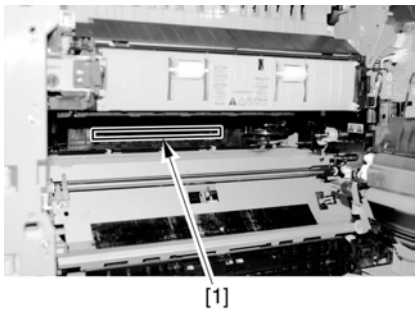 [1]Dust-blocking glass	

⚠The foregoing values are estimates only, and are subject to change depending on future data.

12.3.3 Scheduled Servicing Basic Procedures

iR2270 / iR2870 / iR3570 / iR4570 / / iR2270N / / iR2870N / / iR3570N / / iR4570N / iR2230 / / / iR3530 /

⚠
- As a rule, perform scheduled servicing every 120,000 prints.
- Before setting out on a scheduled visit, check with the Service Book, and take parts for which replacement is expected.
- If the power plug is exposed to dust, humidity, or oily smoke, the resulting buildup can prove to be a fire hazard. (The buildup of dust, for instance, can absorb moisture and suffer insulating failure.) Be sure to disconnect the power plug on a periodical basis, and remove any buildup of dust and dirt with a dry cloth.

<Work Procedure>
1) Report to the person in change, and have an understanding of the situation.
2) Record the counter reading, and check the faulty prints.
3) Check the following items, and adjust or clean the parts as needed.

T-12-3

Item		
Test copy	image density	
	background (for soiling)	
	characters (for clarity)	
	margin	
	fixing	misregistration, soiled back
	margin (single-sided)	leading edge:2.5±1.5mm
		left:2.5±1.5mm
	margin (double-sided)	leading edge:2.5±2.0mm
		left edge:2.5±2.0mm
Laser exposure system	dust-blocking glass (cleaning)	
Feeding system	toner/feed guide	
	fixing inlet guide	
Developing system	developing butting spacer	

4) Check the waste toner collection case.
If the case is half full or more, empty it in an appropriate bag for collection. Or, replace the waste toner collection case.

- When disposing of the waste toner, be sure to follow all applicable regulations of the local government.
- Do not dispose of waste toner in fire. (Doing so can cause an explosion.)

5) Clean the copyboard glass and the reading glass.
6) Make test copies.
7) Make sample copies.
8) Check the operation of the leakage breaker.
While the machine is supplied with power (power switch ON), press the test switch of the leakage breaker to see if the breaker operates normally (i.e., the lever will shift to OFF to cut off the power).

If the leakage breaker fails to operate normally, replace the breaker, and make a check once again.
<Resetting>
When you have checked the operation of the leakage breaker, turn off the power switch, shift the lever to ON, and turn on the power switch.
9) Put the sample copies in order, and clean up the area around the machine.
10) Record the latest counter readings. At this time, be sure to also record the settings of the following: 'FX-UP-RL' and 'DV-UNIT-K'.
11) Fill out the form in the Service Book, and report to the person in charge. be sure also to indicate the check on the leakage breaker in the history of checks.

12.3.4 Points to Note About the Scheduled Servicing

iR2270 / iR2870 / iR3570 / iR4570 / / iR2270N / / iR2870N / / iR3570N / / iR4570N / iR2230 / / / iR3530 /

- If you used solvent, be sure that it has dried before putting the part back into the machine.
- Unless otherwise indicated, do not use a cloth moistened with water.
- Be sure to provide scheduled servicing at specific intervals.

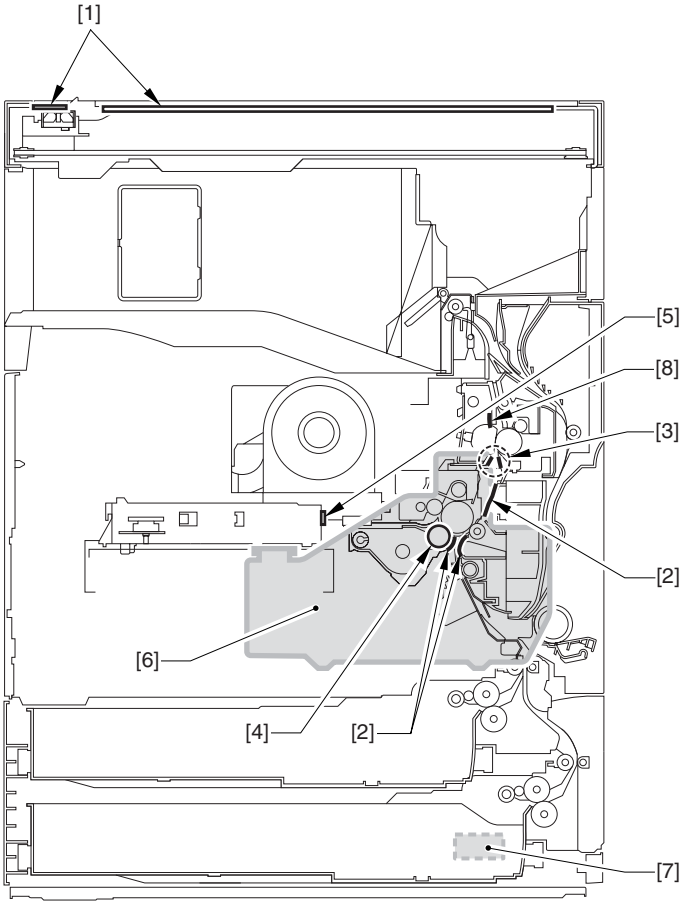

F-12-2

[1]Copyboard glass, reading glass (clean, using water or mild detergent)
[2]Transfer/feed guide (clean; dry wiping)
[3]Fixing inlet guide (clean; dry wiping; alcohol)
[4]Photosensitive drum butting spacer (clean; dry wiping)
[5]Dust-blocking glass (clean; dry wiping or with alcohol)
[6]Waste toner collection case (check)
[7]Leakage breaker (check)
[8]Film bias static eliminator (clean)

12.4 Cleaning

12.4.1 Cleaning the Transfer/Feed Guide

iR2270 / iR2870 / iR3570 / iR4570 / / iR2270N / / iR2870N / / iR3570N / / iR4570N / iR2230 / / / iR3530 /

1) Open the right door.

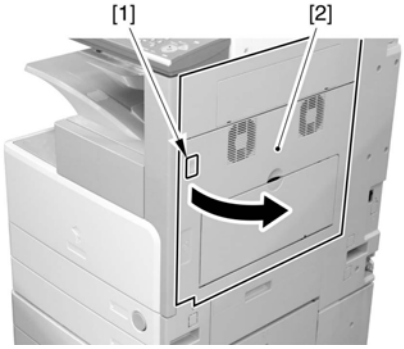

F-12-3

2) Clean (dry wipe) the feed guide [1] and the transfer guide [2].

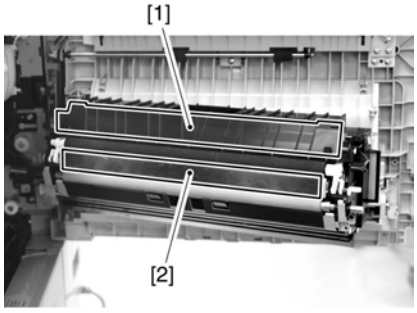

F-12-4

3) Close the right door.

12.4.2 Cleaning the Developing Assembly Spacer, Feed Guide, Dust-Blocking Glass, and Fixing Inlet Guide

iR2270 / iR2870 / iR3570 / iR4570 / / iR2270N / / iR2870N / / iR3570N / / iR4570N / iR2230 / / / iR3530 /

A. Preparatory Work
1) Open the upper front cover [1].

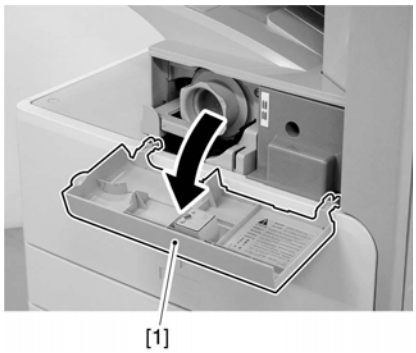

F-12-5

2) Remove the face rubber [1] and the 2 screws [2]; then, slide the front cover unit [3] to the left to detach.

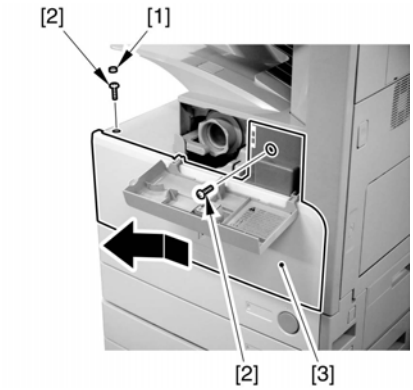

F-12-6

3) Remove the waste toner box [1].

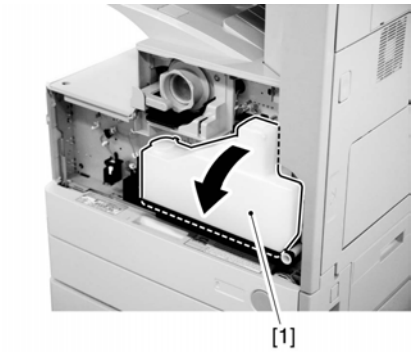

F-12-7

4) Open the right door [1].

F-12-8

5) Remove the locking screw [1] of the pressure lever.

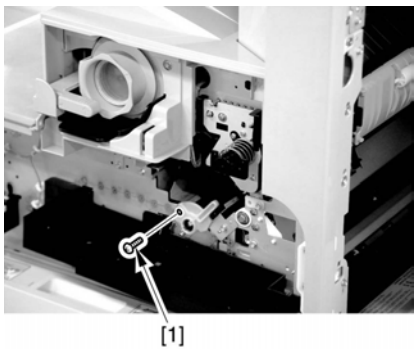

F-12-9

6) Shift the locking lever [1] of the developing assembly to the left to release the developing assembly.

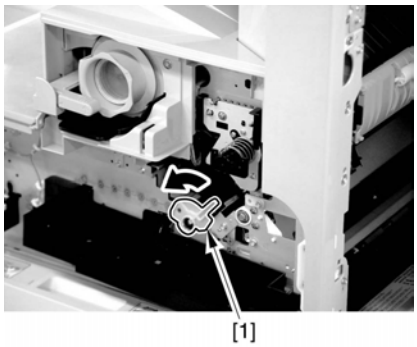

F-12-10

7) Remove the screw (M5) [1].

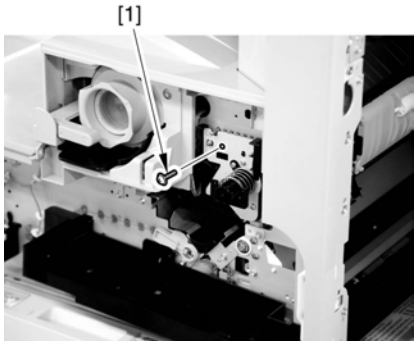

F-12-11

8) Remove the drum unit [1].

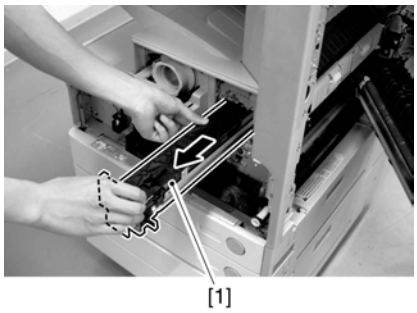

F-12-12

- Do not touch the surface of the photosensitive drum.
- Do not expose the surface of the photosensitive drum to light more than necessary.
- Do not touch the spur of the drum unit.

9) Disconnect the connector [1], and detach the developing assembly [2].

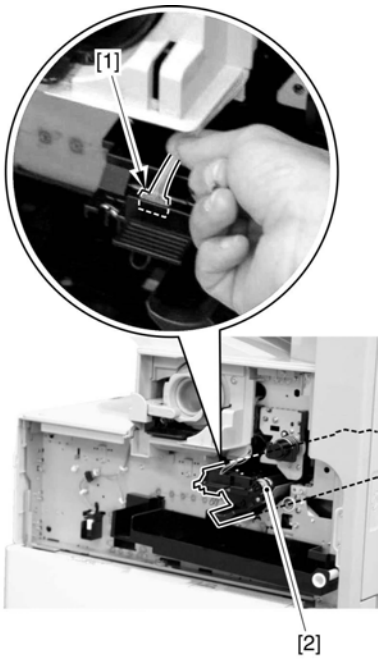

F-12-13

B. Cleaning the Developing Spacer and the Feed Guide

1) Clean the developing assembly spacer [1] and the feed guide [2]. (Dry wipe them using lint-free paper.)

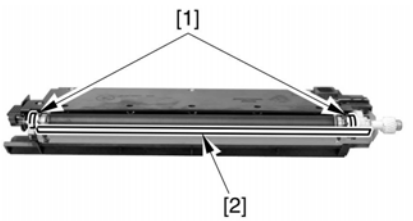

F-12-14

C. Cleaning the Dust-Blocking Glass

1) Clean the dust-blocking glass [1]. (Dry wipe it, or use alcohol.)

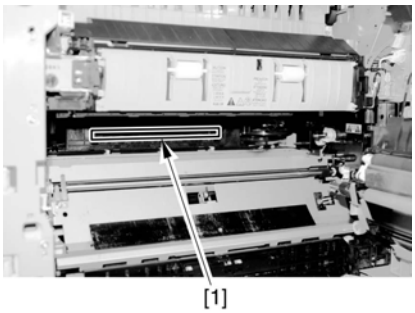

F-12-15

D. Cleaning the Fixing Inlet Guide

1) Remove the screw (w/ washer) [1], and detach the fixing inlet guide (upper) [2].

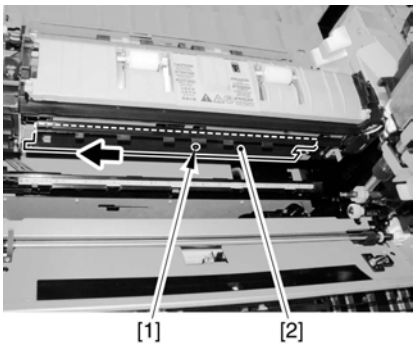

F-12-16

2) Clean the fixing inlet guide (upper) [1] with alcohol. Be sure to completely remove all toner sticking to the fixing inlet guide (upper).

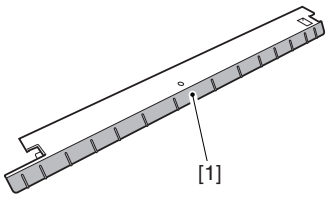

F-12-17

3) Clean the fixing inlet guide (lower) [1] using lint-free paper.

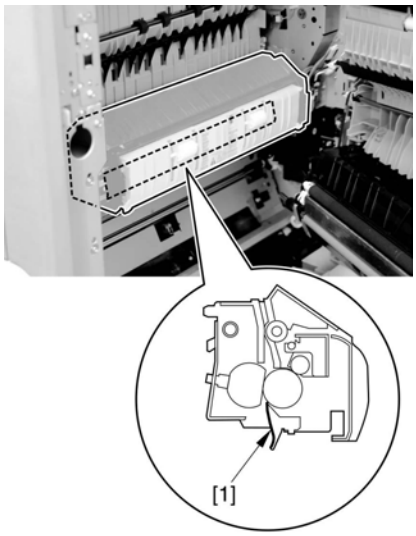

F-12-18

4) Mount the fixing inlet guide (upper) using a screw (w/ washer).

E. After the Work

1) Put the drum unit [1] in the machine.

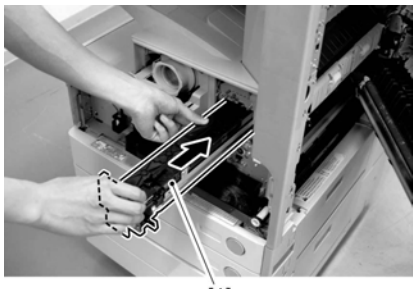

F-12-19

2) Secure the drum unit in place using a screw (M5) [1].

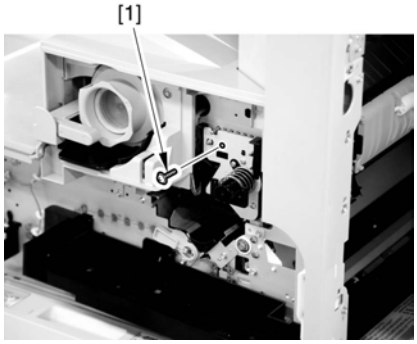

F-12-20

3) Put the developing unit in the machine.

3-1) Place segment A of the developing assembly on segment B of the developing assembly rail.

3-2) By sliding the base [2] of the developing assembly [1] along the developing assembly rail [3], fit the assembly in place inside the machine.

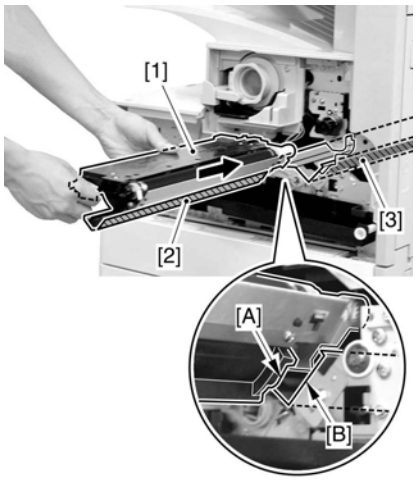

F-12-21

4) Connect the connector [1], and push the developing assembly [2] all the way in.

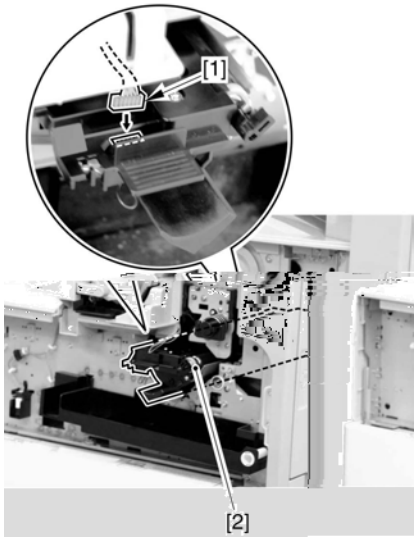

F-12-22

5) Shift back the locking lever [1] of the developing assembly to the right to lock the assembly in place.

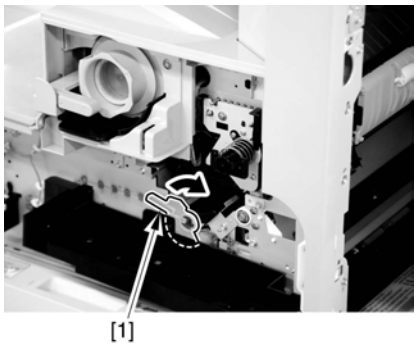

F-12-23

6) Fit and tighten the screw [1] of the locking lever.

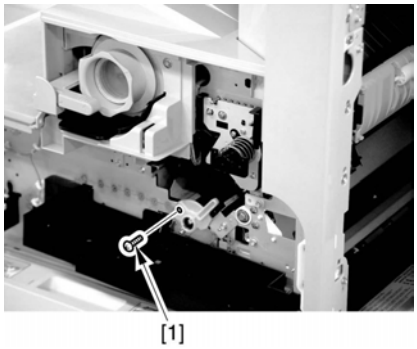

F-12-24

7) Close the right door.
8) Fit the waste toner box [1].

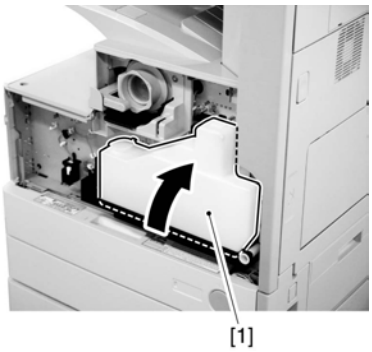

F-12-25

9) Mount the front cover unit [3] using 2 screws [2], and fit the face rubber [1].

At this time, be sure to slide it to the right so that the claw of the front cover matches the machine.

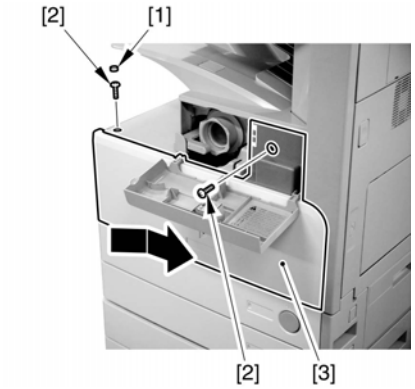

F-12-26

10) Close the upper front cover [1].

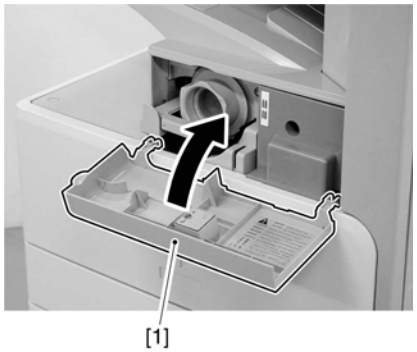

F-12-27

12.4.3 Cleaning the Film Bias Static Eliminator

iR3570 / iR4570 / / iR3570N / / iR4570N / iR2230 / / / iR3530 /

A. Removing the Right Door
1) Open the pedestal right door [1]. (if w/ Cassette Feeding Unit)
2) Open the lower right door [2].
3) Remove the 5 screws [3], and detach the right cover (rear) [4].

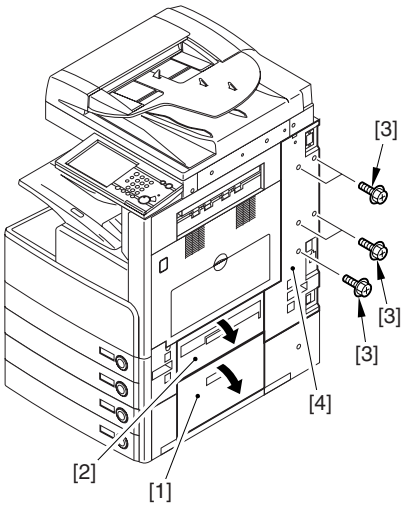

F-12-28

4) Open the right door.

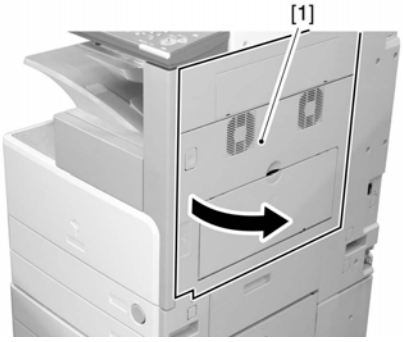

F-12-29

5) Remove the self-tapping screw [1], and detach the fixing plate [2].

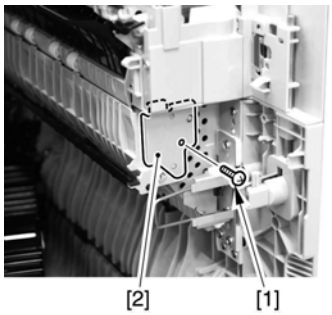

F-12-30

6) Remove the joint shaft [1], and detach the extension delivery unit [2] from the right door.

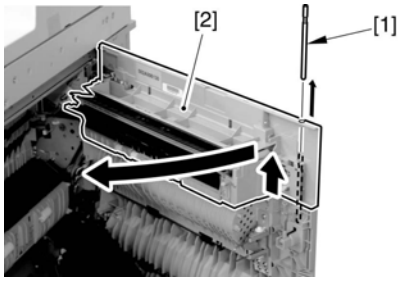

F-12-31

7) Disconnect the connector [1], and remove the reuse band [2]; then, remove the 2 screws (M4x8; RS tightening) [3].

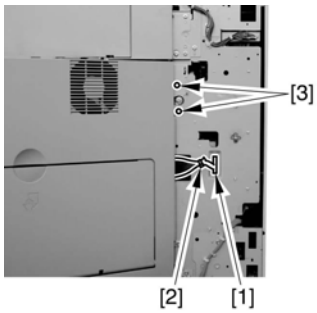

F-12-32

8) Free and detach the right door [1] from the hinge assembly [2].

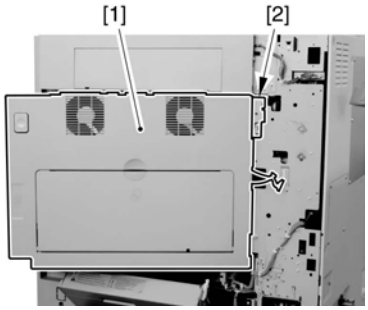

F-12-33

B. Removing the Fixing Assembly

1) Remove the screw [1], and detach the harness cover [2].

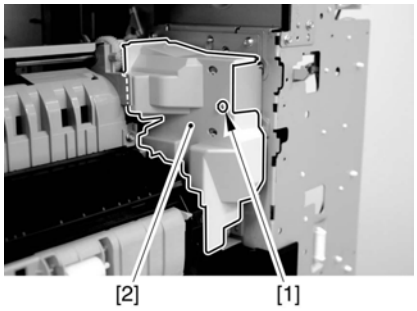

F-12-34

2) Disconnect the 3 connectors [1].

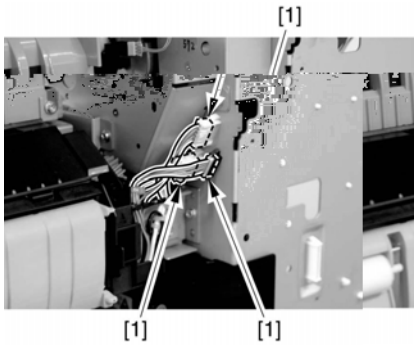

F-12-35

3) Remove the 4 screws [1].

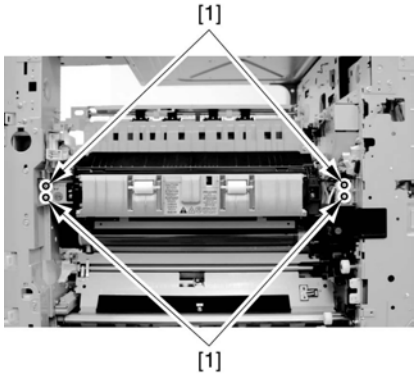

F-12-36

4) Remove the fixing unit [1] toward the front.

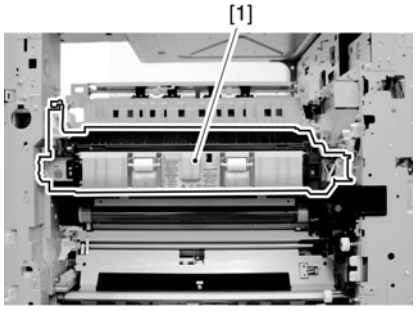

F-12-37

C. Cleaning the Film Bias Static Eliminator

1) Remove the 2 screws [1], and detach the grounding plate [2].

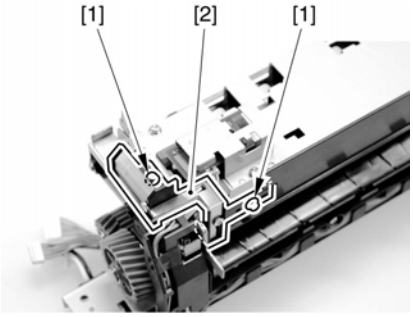

F-12-38

2) Clean the film bias static eliminator [1] found behind the grounding plate (to remove the cake of toner, if any, that may have collected on the static eliminator).

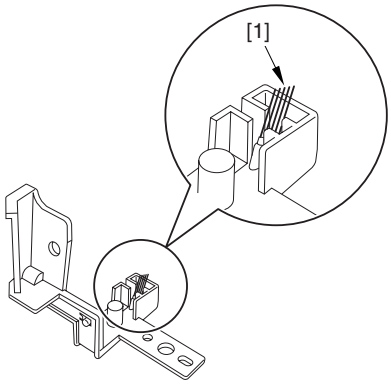

F-12-39

3) Mount the grounding plate [2] with 2 screws.

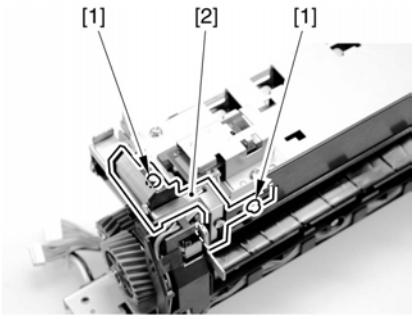

F-12-40

D. Mounting the Fixing Assembly

1) Mount the fixing unit [1] to the machine frame.

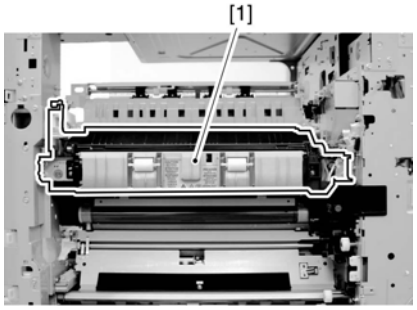

F-12-41

2) Secure the fixing assembly in place using 4 screws [1].

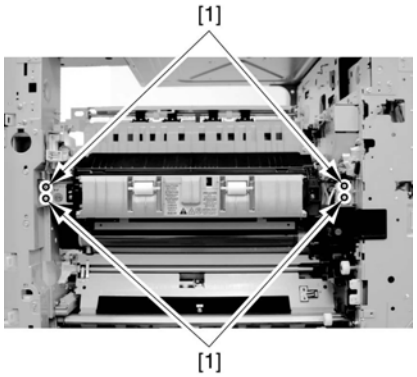

F-12-42

3) Connect the 3 connectors [1].

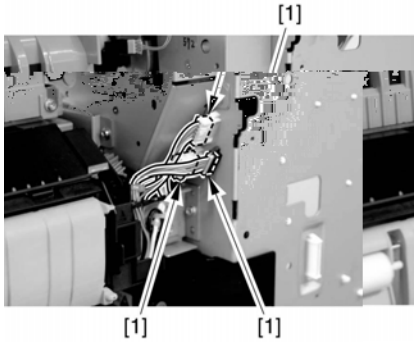

F-12-43

4) Mount the harness cover [2] using a screw [1].

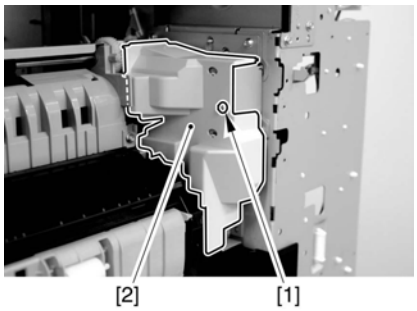

F-12-44

E. Mounting the Right Door

1) Match the hole [1] of the right door bottom and the pin [2].

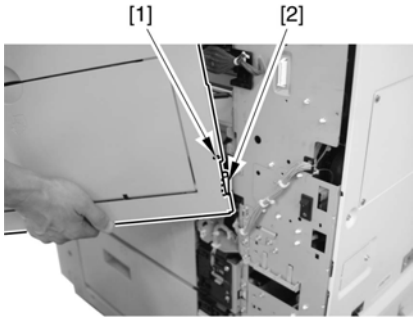

F-12-45

2) Match the mounting plate [1] of the right door top against the hook [2], and mount the right door.
3) Secure the mounting plate [1] using 3 screws [3].
4) Connect the connector [4], and fit the reuse band [5] in place.

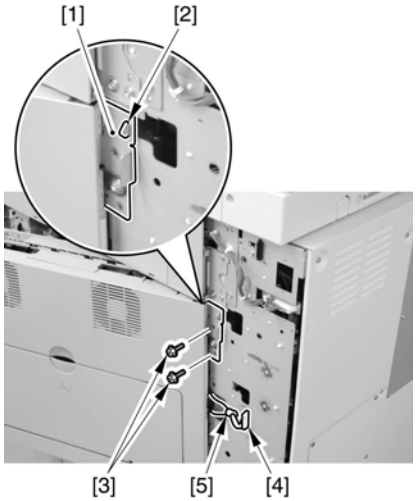

F-12-46

5) Open the expansion delivery kit [1].
6) Lift the expansion delivery kit [1] slightly to match it against the right door [2].

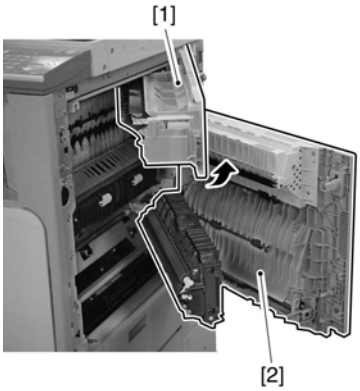

F-12-47

When matching the position, take care so that the expansion delivery kit will not open wider than 80 deg.

7) Push in the pin [1] through the hole [2] until it stops; then, connect the expansion delivery kit [3] to the right door [4].

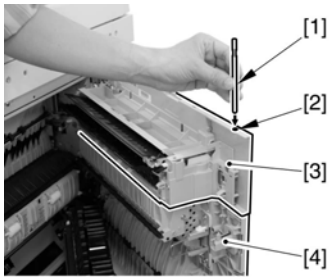

F-12-48

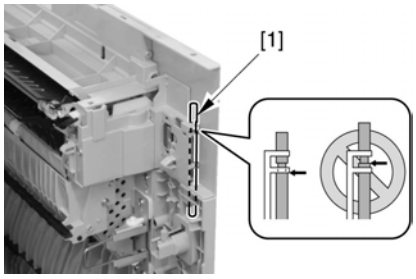

F-12-49

Check to be sure that the joint pin is fully fitted as shown in the figure.

8) Using the self-tapping screw [1] you removed in step A-5), fix the joint plate [2] in place.

Check to be sure that the protrusion [3] of the joint plate is fully in the mounting hole.

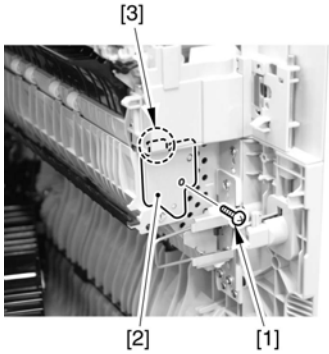

F-12-50

10) Mount the right cover (rear) using 5 screws.

Take care not to trap the harness [1] by the cut-off [2] of the right cover (rear).

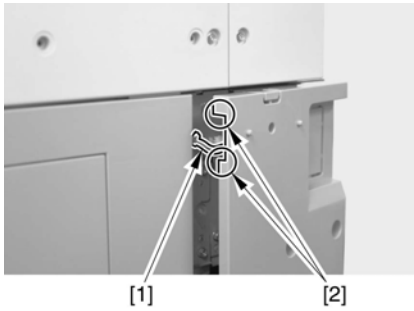

F-12-51

11) Close the right door.

12.4.4 Cleaning the Film Bias Static Eliminator

iR2270 / iR2870 / / iR2270N / / iR2870N / iR2230 / / / iR3530 /

A. Removing the Right Door

1) Open the pedestal right door [1]. (if equipped with a Cassette Feeding Unit-Y2)
2) Open the lower right door [2].
3) Remove the 5 screws [3], and detach the right cover (rear) [4].

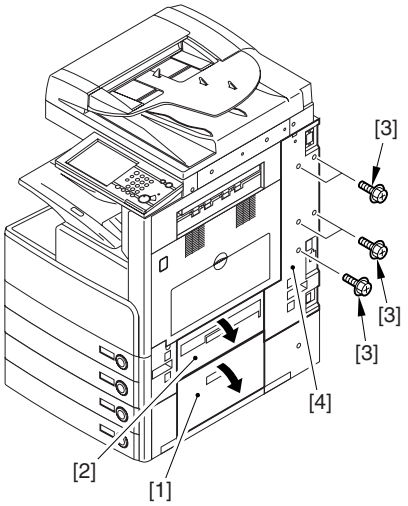

F-12-52

4) Open the right door.

F-12-53

5) Remove the reuse band [1], and disconnect the connector [2].
6) Remove the 2 screws (M4x8; RS tightening) [3]; then, detach the right door.

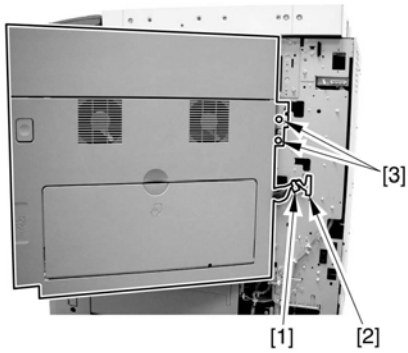

F-12-54

B. Removing the Fixing Assembly
1) Remove the screw [1], and detach the harness cover [2].

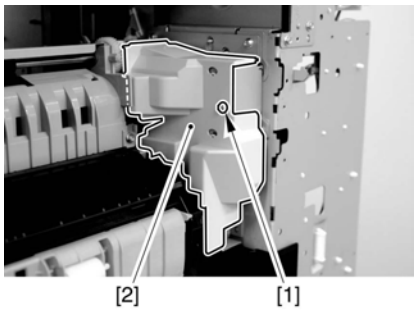

F-12-55

2) Disconnect the 3 connectors [1].

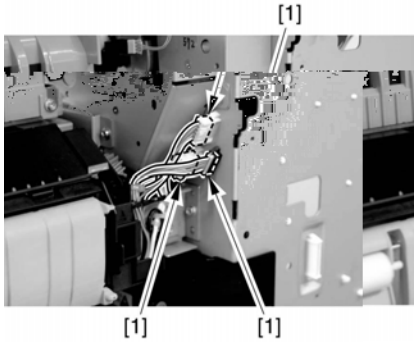

F-12-56

3) Remove the 4 screws [1].

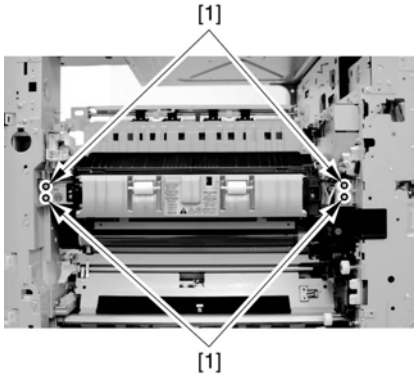

F-12-57

4) Slide out the fixing unit [1] toward the front.

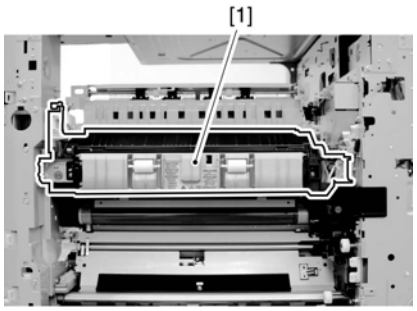

F-12-58

C. Cleaning the Film Bias Static Eliminator

1) Remove the 2 screws [1], and detach the grounding plate [2].

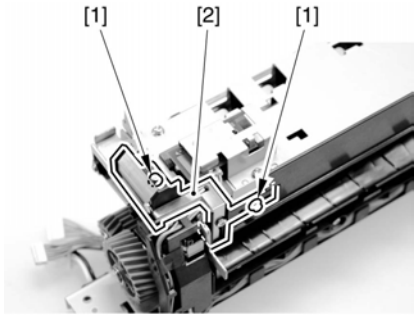

F-12-59

2) Clean the film bias static eliminator [1] found on the back of the grounding plate. (Be sure to remove the cake of toner that may have collected on the static eliminator.)

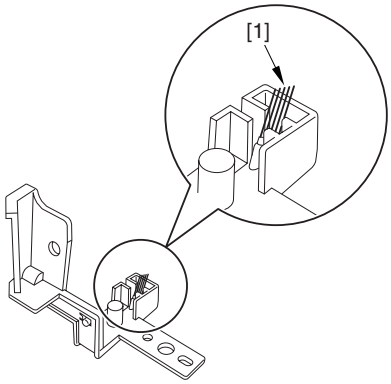

F-12-60

3) Fix the grounding plate [2] in place using 2 screws [1].

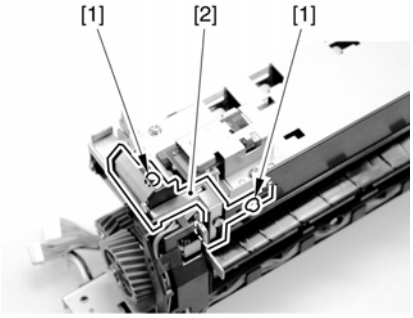

F-12-61

D. Mounting the Fixing Assembly

1) Fit the fixing unit [1] to the machine frame.

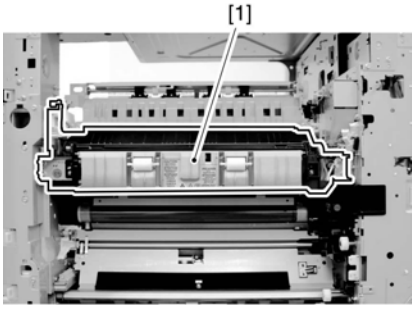

F-12-62

2) Secure the fixing assembly in place using 4 screws [1].

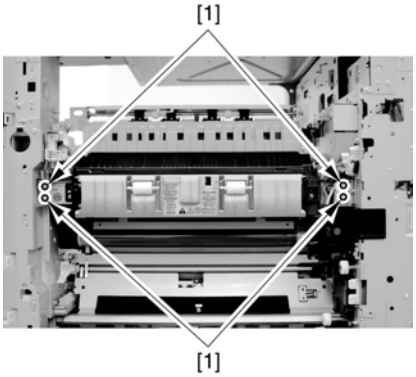

F-12-63

3) Connect the 3 connectors [1].

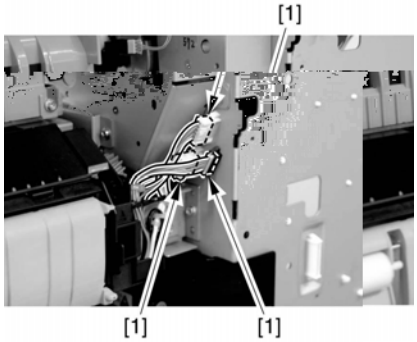

F-12-64

4) Mount the harness cover [2] using a screw [1].

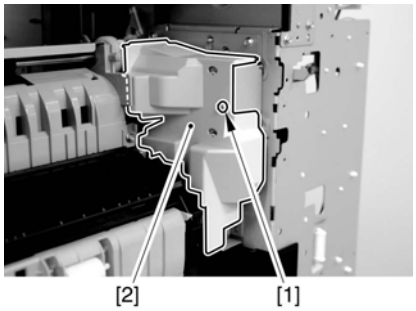

F-12-65

E. Mounting the Right Door

1) Match the hinge [1] found at the bottom of the right door against the protrusion.
2) Engage the hinge [2] found at the top of the right door on the hook on the machine side plate.

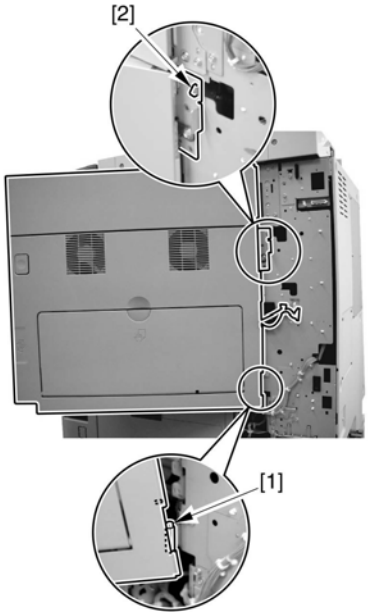

F-12-66

3) Fix the mounting base [1] in place using 2 screws [3].
4) Connect the connector [4], and fit the reuse band [5] in place.

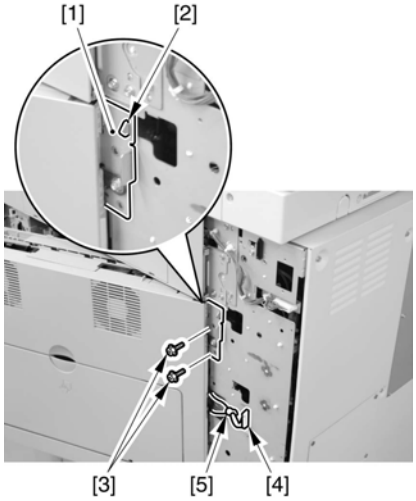

F-12-67

5) Mount the right cover (rear) using 5 screws.

Take care not to trap the harness [1] by the cut-off [2] of the right cover (re).

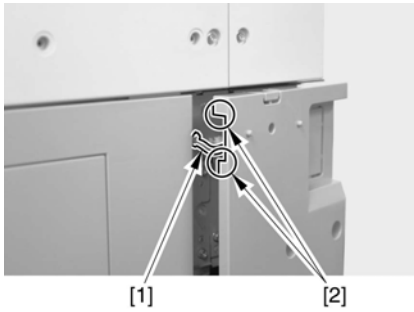

F-12-68

6) Close the right door.

Chapter 13 Standards and Adjustments

Contents

13.1 Image Adjustments 13-1
13.1.1 Standards for Image Position 13-1
13.1.2 Adjusting the Image Position 13-1
13.1.3 Cassette 13-2
13.1.4 Manual Feed Tray 13-3
13.1.5 Side Paper Deck 13-3
13.2 Scanning System 13-4
13.2.1 After Replacement of the CIS 13-4
13.2.2 After Replacing the Reader Controller PCB or Initializing the RAM 13-4
13.3 Laser Exposure System 13-4
13.3.1 After Replacing the Laser Scanner Unit 13-4
13.4 Image Formation System 13-4
13.4.1 After Replacing the Developing Unit 13-4
13.4.2 After Replacing the Drum Unit (APVC correction) 13-4
13.5 Electrical Components 13-5
13.5.1 After Replacing the HDD 13-5
13.5.2 After Replacing the DC Controller PCB 13-5
13.5.3 After Replacing the Main Controller PCB 13-5
13.5.4 After Replacing the Reader Controller PCB 13-5
13.6 Pickup/Feeding System 13-6
13.6.1 Adjusting the Horizontal Registration When Replacing the Cassette 13-6
13.6.2 Adjusting the Horizontal Registration When Replacing the Duplex Unit 13-7
13.6.3 Adjusting the Manual Feed Pickup Horizontal Registration 13-8
13.6.4 Registering the Paper Width Basic Value 13-8

13.1 Image Adjustments

13.1.1 Standards for Image Position

iR2270 / iR2870 / iR3570 / iR4570 / / / / / iR2230 / / / iR3530 /

A print made at a magnification of 100% must meet the following standards for image margin/non-image width:

- Margin Along the Leading Edge

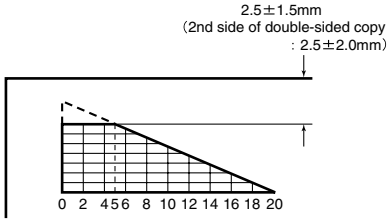

F-13-1

- Left/Right Image Margin

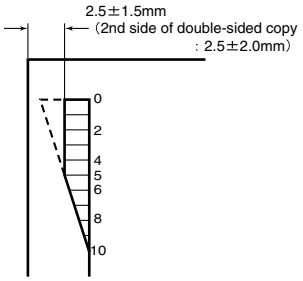

F-13-2

- Leading Edge Non-Image Width

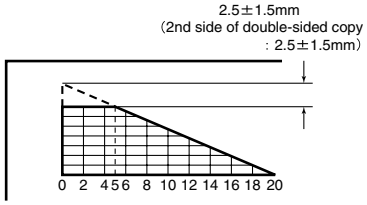

F-13-3

- Left/Right Non-Image Width

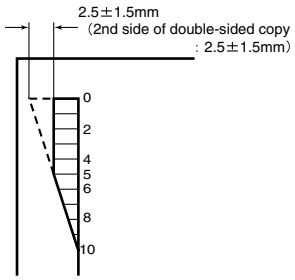

F-13-4

13.1.2 Adjusting the Image Position

iR2270 / iR2870 / iR3570 / iR4570 / / / / / iR2230 / / / iR3530 /

Using the source of paper indicated, make 10 prints each to see if the image margin and the non-image margin are as indicated:
[1] Cassettes
[2] Manual feed tray
[3] Side paper deck

If not as indicated, adjust the image position as follows:

1.Adjusting the Leading Edge Image Margin
Adjust the registration in service mode:
COPIER > ADJUST > FEED-ADJ > REGIST

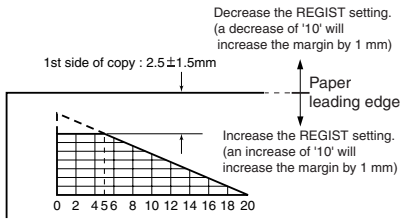

F-13-5

2. Adjusting the Left/Right Image (1st side)
Mechanical Horizontal Registration Adjustment
3. Adding the Left/Right Image Margin (2nd side)
Adjust the horizontal registration in service mode.

- Small Size
COPIER > ADJUST > FEED-ADJ > ADJ-REFE

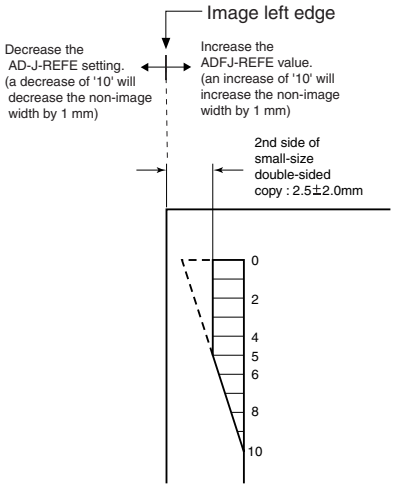

F-13-6

- Large Size (longer than A4/LTR in feed direction)
COPIER > ADJUST > FEED-ADJ > ADJ-RE-L

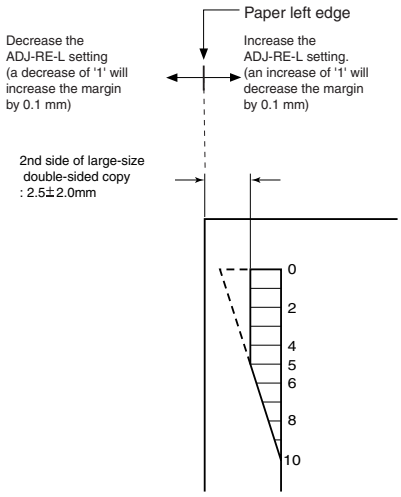

F-13-7

4. Adjusting the Leading Edge Non-Image Width
Use service mode to make adjustments:
COPIER > ADJUST > ADJ-XY > ADJ-X

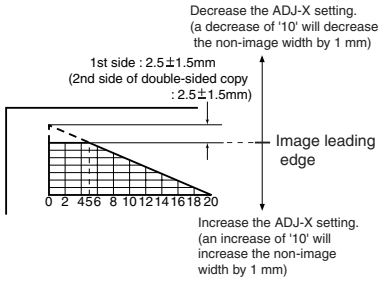

F-13-8

5. Adjusting the Left/Right Non-Image Width

Use service mode to make adjustments:
COPIER > ADJUST > ADJ-XY > ADJ-Y

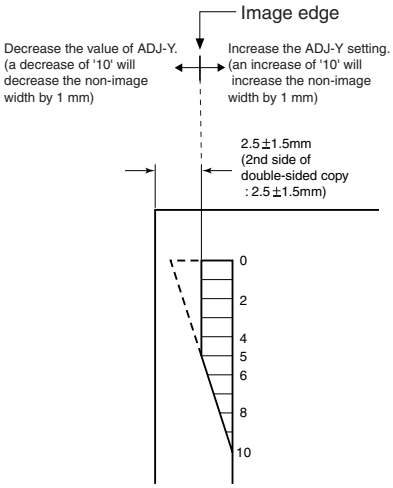

F-13-9

13.1.3 Cassette

iR2270 / iR2870 / iR3570 / iR4570 / / iR2270N / / iR2870N / / iR3570N / / iR4570N / iR2230 / / / iR3530

A. Adjusting the Left/Right Margin (1st side)

1) Open the pedestal lower right cover [1] and lower right color [2]; then, remove the 2 screws [3], and detach the cover (lower front) [4].

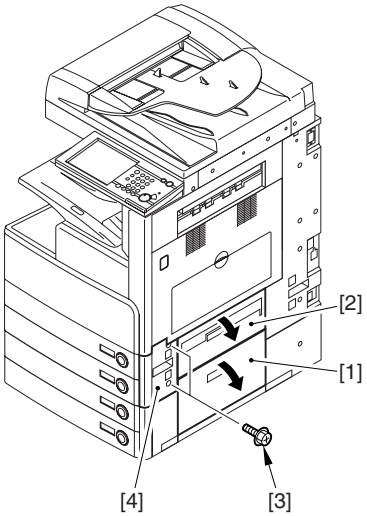

F-13-10

2) Take out the cassette 1 or 2.
(in the case of a 2-cassette pedestal, the cassette 3 or 4)
3) Check the index [1].
(the same applies to a 2-cassette pedestal.)

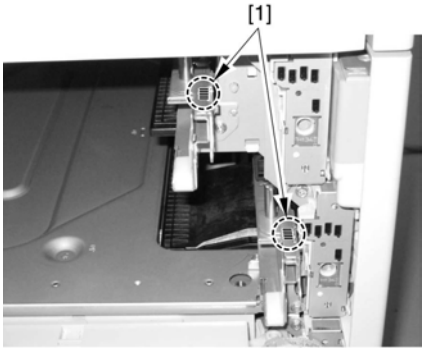

F-13-11

A-1. Adjusting the Cassette 1 (left/right image margin; 1st side)
4) Remove the 2 claws [2], and detach the grip (right front) [1].

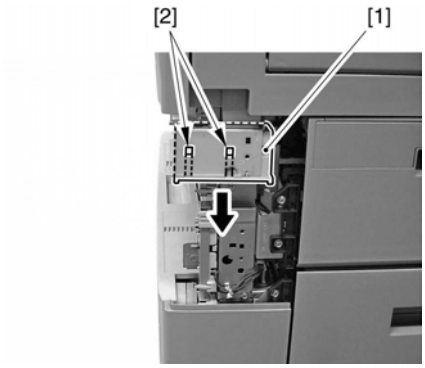

F-13-12

5) Loosen the fixing screw [2] on the horizontal registration adjusting plate [1] of the cassette.
6) While referring to the index you checked in step 3), move the horizontal registration adjusting plate back and forth. (Moving the plate toward the rear of the machine will increase the left/right image margin along the image front.)

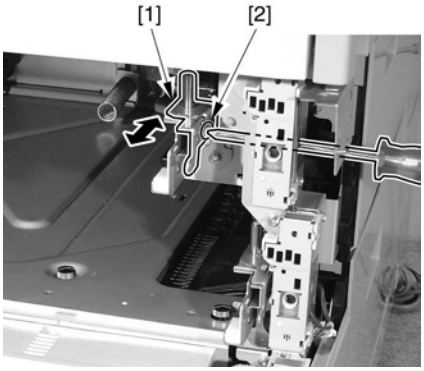

F-13-13

7) Loosen the fixing screw.
8) Put the cassette 1 back in place.
9) Make a copy using the cassette 1 as the source of paper, and check to make sure that the marking is as indicated.
10) Fit the grip (right front) in place.
11) Mount the right front cover of the machine.

A-2. Adjusting the Cassette 2 (left/right image margin; 1st side)
4) Loosen the fixing screw [2] of the horizontal registration adjusting plate [1] of the cassette.
5) While referring to the index you checked in step 3), move the horizontal registration adjusting plate back and forth. (Moving the plate toward the rear of the machine will increase the left/right image margin along the image front.)

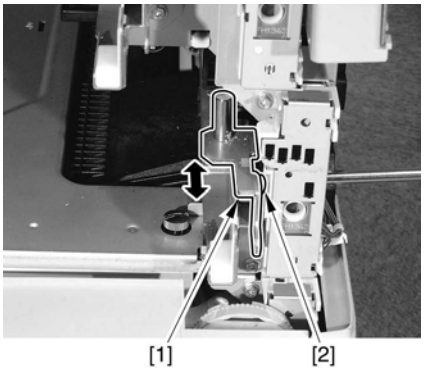

F-13-14

6) Tighten the fixing screw.
7) Put the cassette 2 back in place.
8) Make a copy using the cassette 2 as the source of paper, and check to make sure that the margin is as indicated.
9) Mount the right front cover of the machine.

B. Adjusting the Left/Right Image Margin (2nd side)

B-1. 2nd Side of Small-Size Paper (left/right image margin)
1) If the margin is not as indicated, change the setting of the 2nd side left/right image margin of the cassette 1:
COPIER>ADJUST>FEED-ADJ>ADJ-REFE

An increase of '1' will decrease the left/right image margin along the front side by 0.1 mm.

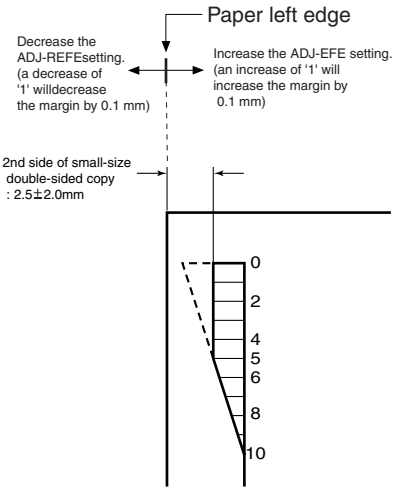

F-13-15

B-2. 2nd Side of Large-Size Paper (left/right image margin)
1) Enter the same ADJ-REFE:
COPIER>ADJUST>FEED-ADJ>ADJ-RE-L
2) Make a double-sided copy using large-size paper, and check to make sure that the marking is as indicated.
3) If not as indicated, change the adjustment value for the 2nd side right/left image margin for large-size paper:
COPIER>ADJUST>FEED-ADJ>ADJ-RE-L
An increase of '1' will decrease the left/right image margin on the front side by 0.1 mm.

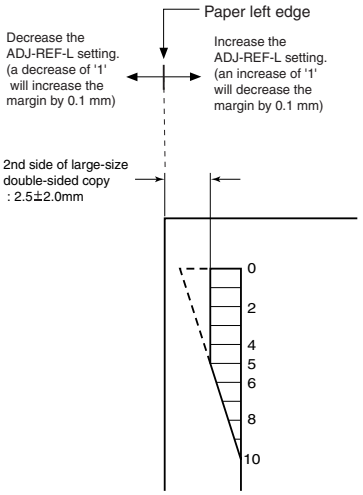

F-13-16

4) Record the new setting on the service label:
- ADJ-REFE
- ADJ-RE-L
5) Press the Reset key twice to end service mode.

13.1.4 Manual Feed Tray

iR2270 / iR2870 / iR3570 / iR4570 / / iR2270N / / iR2870N / / iR3570N / / iR4570N / iR2230 / / / iR3530 /

A. Adjusting the Left/Right Image Margin (1st side; mechanical)
1) Put paper in the manual feed tray.
2) Make a copy using the manual feeder as the source of paper, and check to be sure that the left/right image margin is 2.5 +/-1.5 mm.

- If not as indicated, make the following adjustments:
3) Remove the paper from the manual feed tray.
4) Loosen the fixing screw [1] on the upper over of the manual feed d tray.

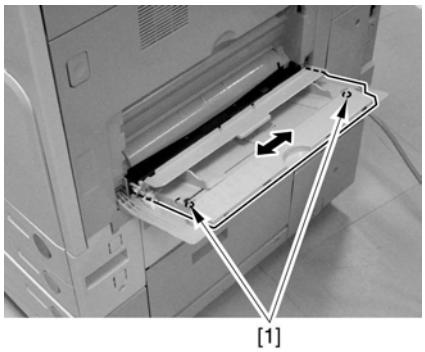

F-13-17

5) So that the margin is as indicated, move the top cover of the manual feed tray back and forth.
Moving the top cover of the manual feed tray toward the rear of the machine will decrease the left/right image margin along the front side.
6) Tighten fixing screw on the top cover of the manual feed tray.
7) Put paper in the manual feed tray.
8) Make a copy using the manual feed tray as the source of paper, and check to make sure that the margin is as indicated.

13.1.5 Side Paper Deck

iR2270 / iR2870 / iR3570 / iR4570 / / iR2270N / / iR2870N / / iR3570N / / iR4570N / iR2230 / / / iR3530 /

1) Check to make sure that the 4 adjusters [1] of the pedestal of the host machine are in contact with the floor.

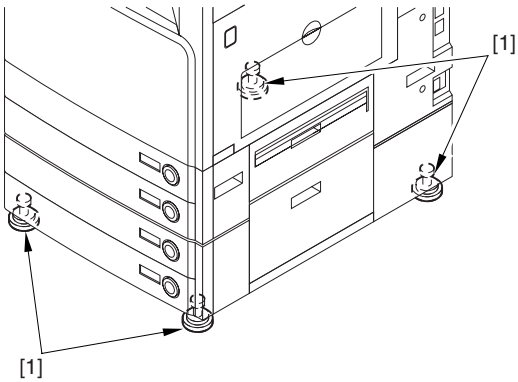

F-13-18

2) Connect the power plug of the host machine, and turned on the power switch.
3) When the host machine has completed its wait period, open the machine using the paper deck as the source of paper to make sure that the operation is normal.

A. Adjusting the Let/Right Image Margin (1s side; mechanical adjustment)
1) Make a copy using the paper deck as the source of paper, and check to make sure that the left/right image margin in the image front direction is 2.5 +/-1.5 mm.

- If not as indicated, go through the following:
2) Slide out the compartment.
3) Turn the 2 screws [2] to adjust the mounting position of the latch plate [1] of the deck open solenoid (SL2D) found at the left rear.

At this time, use the index [3] of the latch plate as a reference.

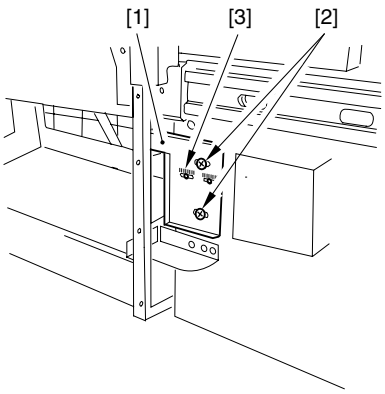

F-13-19

13.2 Scanning System

13.2.1 After Replacement of the CIS

iR2270 / iR2870 / iR3570 / iR4570 / / iR2270N / / iR2870N / / iR3570N / / iR4570N / iR2230 / / / iR3530 /

Be sure to enter the value indicated on the CIS label attached to the contact image sensor (CIS) using the following service mode item:

COPIER>ADJUST>CCD>MTF-MG
(main scanning direction MTR correction value)

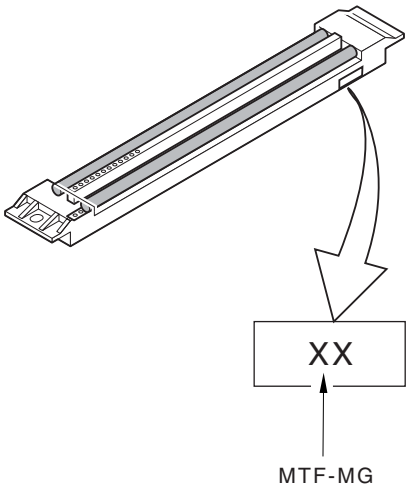

F-13-20

Be sure also to update the value indicated on the service label found behind the left cover of the reader unit so that it is identical to the value indicated on the CIS label.

Reference:
At time of shipment from the factory, no CIS label is attached.

13.2.2 After Replacing the Reader Controller PCB or Initializing the RAM

iR2270 / iR2870 / iR3570 / iR4570 / / iR2270N / / iR2870N / / iR3570N / / iR4570N / iR2230 / / / iR3530 /

⚠ - Before replacing the reader controller PCB, be sure to print out the latest P-PRINT page.
<if you are executing RAM initialization for the reader controller without replacing the PCB>
- Using the SST, upload the backup data of the reader controller, and download it after initializing the RAM so that you need not perform the following:
1. Reader Unit-Related Adjustments
1) Using the SST, download the latest system software (R-CON).
2) Make the following selections in service mode: COPIER>FUNCTION>LEARN>R-CON. Then, press the OK key to initialize the RAM; thereafter, turn off and then on the main power.
3) Enter the following values in service mode:
a. values indicated on the service label (found behind the left cover of the reader unit)

a-1. CIS read position adjustment (for fixed reading)
COPIER>ADJUST>ADJ-XY>ADJ-X
a-2. main scanning direction position adjustment (for fixed reading)
COPIER>ADJUST>ADJ-XY>ADJ-Y
a-3. shading position adjustment (for fixed reading)
COPIER>ADJUST>ADJ-XY>ADJ-S
a-4. main scanning direction MTF
COPIER>ADJUST>CCD>MTF-MG
2. ADF-Related Adjustments

⚠ The machine is designed to retain ADF-related service data in its reader controller RAM. As such, if you have replaced the reader controller or initialized the RAM, you will also have to make ADF-related adjustments.

1) Enter the following values by referring to the values indicated on the P-PRINT page you have previously printed out.
a. main scanning direction position adjustment (for stream reading)
COPIER>ADJSUT>ADJ-XY>ADJ-Y-DF
b. original stop position adjustment
FEEDER>ADJSUT>DOCST
c. original feed speed (magnification) adjustment
FEEDER>ADUST>LA-SPEED

2) Make adjustments using the following service mode items:
a. Tray Width Adjustment
FEEDER>FUNCTION>TRY-A4
FEEDER>FUNCTION>TRY-A5R
FEEDER>FUNCTION>TRY-LTR
FEEDER>FUNCTION>TRY-LTRR
b. CIS Read Position Adjustment (for stream reading)
COPIER>FUNCTION>INSTALL>STRD-POS
c. White Level Adjustment
COPIER>FUNCTION>CCD>DF-WLVL1
COPIER>FUNCTION>CCD>DF-WLVL2

When you have made all the foregoing adjustments, put the P-PRINT page [1] in the service book case, and dispose of the previous printout.

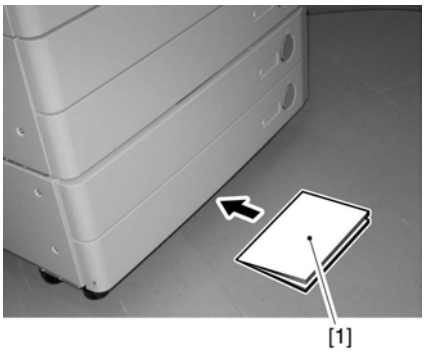

F-13-21

13.3 Laser Exposure System

13.3.1 After Replacing the Laser Scanner Unit

iR2270 / iR2870 / iR3570 / iR4570 / / iR2270N / / iR2870N / / iR3570N / / iR4570N / iR2230 / / / iR3530 /

Enter the values recorded on the label on the laser scanner unit for the following in service mode:
- COPIER>ADJUST>LASER>LA-DELAY

13.4 Image Formation System

13.4.1 After Replacing the Developing Unit

iR2270 / iR2870 / iR3570 / iR4570 / / iR2270N / / iR2870N / / iR3570N / / iR4570N / iR2230 / / / iR3530 /

1) Execute the following service mode items:
- COPIER > FUNCTION > INSTALL > STIR-K
2) Initialize the following service mode items:
- COPIER > COUNTER > DRBL-1 > DVG-CYL

⚠ A test copy that is made right after the toner has been stirred can be soiled on its back with a small amount of stray toner. The symptom will likely disappear when 3 or so copies are made.

13.4.2 After Replacing the Drum Unit (APVC correction)

iR2270 / iR2870 / iR3570 / iR4570 / / iR2270N / / iR2870N / / iR3570N / / iR4570N / iR2230 / / / iR3530

1) Connect the power plug to the power outlet, and turn on the main power unit.
2) In the host machine's service mode, make the following selections: COPIER>FUNCTION>DPC>D-GAMMA.
3) Press the OK key.
- The machine will pick up paper from cassette 1 (regardless of the size of the paper inside the cassette).
- If no paper exists in cassette 1, the machine will try to find paper in the lower cassettes in order.
- The paper will be discharged blank to end APVC correction.
4) Press the Reset key twice to end service mode.

13.5 Electrical Components

13.5.1 After Replacing the HDD

iR2270 / iR2870 / iR3570 / iR4570 / / iR2270N / / iR2870N / / iR3570N / / iR4570N / iR2230 / / / iR3530 /

1) Format the HDD.
Start up the machine in safe mode (i.e., while holding down the 2 and 8 keys, turn on the main power).
Using the HD format function of the SST, format all partitions ($); for details, see the descriptions given for upgrading.
2) Download the system software.
Using the SST, download the following: LANGUAGE, RUI, PS-FRONT, OCR dictionary, SSL coding key, SSL CA certificate, MEAP content.
Keep in mind that the machine may take about 5 min to start up after downloading.

13.5.2 After Replacing the DC Controller PCB

iR2270 / iR2870 / iR3570 / iR4570 / / iR2270N / / iR2870N / / iR3570N / / iR4570N / iR2230 / / / iR3530

- Before replacing the DC controller PCB, print out the latest P-PRINT page.
Å@Å@Å@**COPIER>FUNCTION>MISC-P>P-PRINT**
1) Using the SST, download the latest system software.
2) Using the following service mode item, initialize the memory of the DC controller PCB:
Å@**COPIER>FUNCTION>CLEAR>DC-CON**
3) Using the following service mode items, enter the values indicated on the P-PRINT page:
- COPIER>ADJUST>LASER>**LA-DELAY/ LA-OFF/ POWER**
- COPIER>ADJUST>DEVELOP>**DE-OFST**

- COPIER>ADJUST>BLANK>**BLANK-T/BLANK-B**

- COPIER>ADJUST>HV-RPRI>**OFST-DC/ OFST-AC**

- COPIER>ADJUST>HV-TR all items under

- COPIER>ADJUST>FEED-ADJ all items under

- COPIER>ADJUST>CST-ADJ all items under

- COPIER>ADJUST>FIXING all items under

- COPIER>ADJUST>MISC all items under
4) Execute the following service mode items:
- COPIER > FUNCTION > DPC > D-GAMMA

13.5.3 After Replacing the Main Controller PCB

iR2270 / iR2870 / iR3570 / iR4570 / / iR2270N / / iR2870N / / iR3570N / / iR4570N / iR2230 / / / iR3530

If you are replacing the main controller PCB, be sure to transfer the following components from the old to new PCB:
[1]Å@boot ROM
[2]Å@HDD
[3]Å@image memory (SDRAM)
[4]Å@counter memory PCB

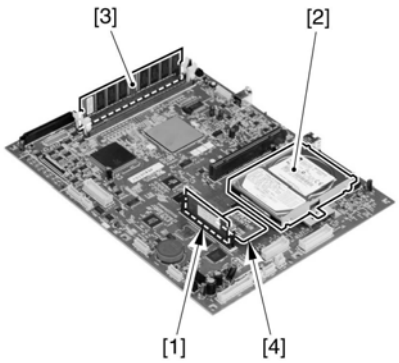

F-13-22

If the user uses NetSpot Accountant (NSA) in Combination with a Card Reader

The SDRAM of the main controller retains card ID used by NSA. If you have replaced the main controller, you will have to download the card data from NSA once again to permit NSA to perform statistical operations.
If you have formatted the HDD and downloaded the system software, you will have to go through a specific set of steps:

1) Format the HDD.
2) Download the system software.
3) Make the following selections:
Å@COPIER>FUNCTION>INSTALL>CARD.
4) Enter a card No.
Å@Enter the first of the numbers that will be used for group control, and press the OK key (e.g., if you are planning to use cards from No. 1 thorough No. 100, enter '1').
5) turn off and then on the main power.
6) Check the count control mechanism in user mode.
Å@system control setup>group ID control>count control
check to see as many as 'ID00000001 through ID00001000' have been prepared.
7) Set the IP address in user mode.
Å@system control setup>network setup>TCP/IP setup>IP address
Set 'IP address', 'gateway address', and 'sub net mask'.
8) Enter a number of your choice in user mode.
Å@system administrator info setup>system control group ID>system control ID No.
9) Hold down the control panel power switch for 3 sec or more.
10) Go through the instructions on the control panel for shut-down sequence so that the main power switch may be turned off.
11) Turn off the main power switch. Wait for 3 sec or more, and turn it back on.

Unless you have registered 'system control group ID' and 'system control ID No.', you will not be able to register cards for the device in the course of Net Spot Accountant setup work.

12) Download the card ID.
Å@Keep the machine in a standby state < and download the card ID to be used from the NSA>
13) Check the count control particulars in user mode.
Å@system control setup>group ID control>count control
See that only the downloaded ID data is shown.
14) Check to see that the operation is normal.
Make copies using a user card that has been registered using the NSA, and check to see that the count of the card in question has been incremented correctly.

13.5.4 After Replacing the Reader Controller PCB

iR2270 / iR2870 / iR3570 / iR4570 / / iR2270N / / iR2870N / / iR3570N / / iR4570N / iR2230 / / / iR3530 /

- Before replacing the reader controller PCB, be sure to print out the latest P-PRINT page.
<if you are executing RAM initialization for the reader controller without replacing the PCB>
- Using the SST, upload the backup data of the reader controller, and download it after initializing the RAM so that you need not perform the following:
1. Reader Unit-Related Adjustments
1) Using the SST, download the latest system software (R-CON).
2) Make the following selections in service mode: COPIER>FUNCTION>LEARN>R-CON. Then, press the OK key to initialize the RAM; thereafter, turn off and then on the main power.
3) Enter the following values in service mode:
a. values indicated on the service label (found behind the left cover of the reader unit)

a-1. CIS read position adjustment (for fixed reading)
COPIER>ADJUST>ADJ-XY>ADJ-X
a-2. main scanning direction position adjustment (for fixed reading)

COPIER>ADJUST>ADJ-XY>ADJ-Y
a-3. shading position adjustment (for fixed reading)
COPIER>ADJUST>ADJ-XY>ADJ-S
a-4. main scanning direction MTF
COPIER>ADJUST>CCD>MTF-MG
2. ADF-Related Adjustments

⚠The machine is designed to retain ADF-related service data in its reader controller RAM. As such, if you have replaced the reader controller or initialized the RAM, you will also have to make ADF-related adjustments.

1) Enter the following values by referring to the values indicated on the P-PRINT page you have previously printed out.
a. main scanning direction position adjustment (for stream reading)
COPIER>ADJSUT>ADJ-XY>ADJ-Y-DF
b. original stop position adjustment
FEEDER>ADJSUT>DOCST
c. original feed speed (magnification) adjustment
FEEDER>ADUST>LA-SPEED

2) Make adjustments using the following service mode items:
a. Tray Width Adjustment
FEEDER>FUNCTION>TRY-A4
FEEDER>FUNCTION>TRY-A5R
FEEDER>FUNCTION>TRY-LTR
FEEDER>FUNCTION>TRY-LTRR
b. CIS Read Position Adjustment (for stream reading)
COPIER>FUNCTION>INSTALL>STRD-POS
c. White Level Adjustment
COPIER>FUNCTION>CCD>DF-WLVL1
COPIER>FUNCTION>CCD>DF-WLVL2

When you have made all the foregoing adjustments, put the P-PRINT page [1] in the service book case, and dispose of the previous printout.

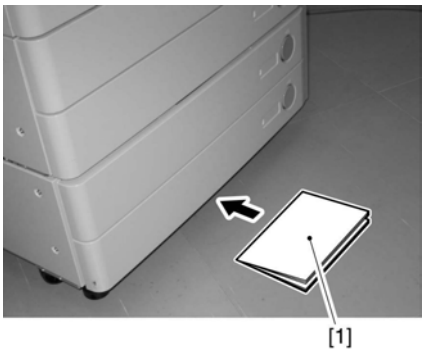

F-13-23

13.6 Pickup/Feeding System

13.6.1 Adjusting the Horizontal Registration When Replacing the Cassette

iR2270 / iR2870 / iR3570 / iR4570 / / iR2270N / / iR2870N / / iR3570N / / iR4570N / iR2230 / / / iR3530 /

- 1st Side Adjustment (mechanism)

1) Make a copy using the cassette 1/2, and check to make sure that the front margin is 2.5 +/-1.5 mm.

- If the value is not as indicated for the cassette 1 or 2, make the following adjustments:

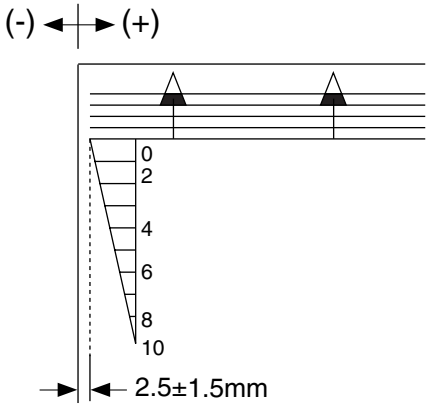

F-13-24

2) If a 2-Cassette Pedestal-Y2 is installed, open the right door [1] of the pedestal.
3) Open the lower right cover [2]; then, remove the 2 screws [3], and detach the cover (lower front) [4].

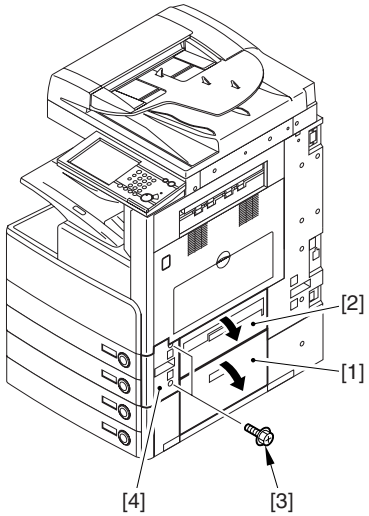

F-13-25

4) Take out the cassette 1 or 2.
5) Check the index [1] of the adjusting plate.

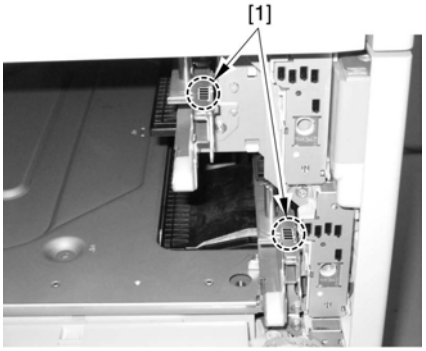

F-13-26

- Adjusting the Cassette 1
6) Remove the 2 claws [2], and detach the grip (right front) [1].

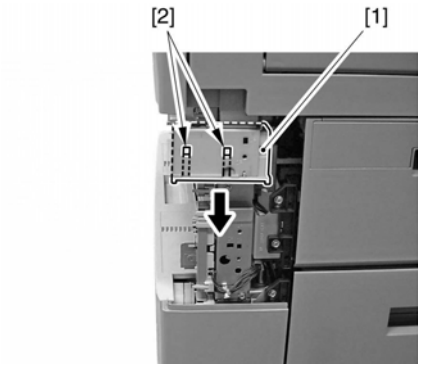

F-13-27

7) Loosen the fixing screw [2] of the adjusting plate [1].
8) While referring to the index you check in step 5), move the adjusting plate back and forth. Moving the adjusting plate toward the rear of the machine will increase the margin along the image front.

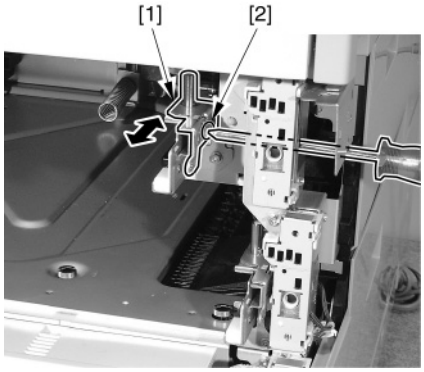

F-13-28

9) Tighten the fixing screw.
10) Put the cassette 1 back into the machine.
11) Make a copy using the cassette 1 as the source of paper; then, check to make sure that the margin in the image front direction is 2.5 +/-1.5 mm.
12) Fit the grip (right front) in place.
13) Mount the right front cover of the machine.

- Adjusting the Cassette 2
6) Loosen the fixing screws [2] on the horizontal registration adjusting plate [1] of the cassette.
7) While referring to the index you checked in step 5), move the adjusting plate back and forth. Moving the adjusting plate toward the rear of the machine will increase the margin along the image front.

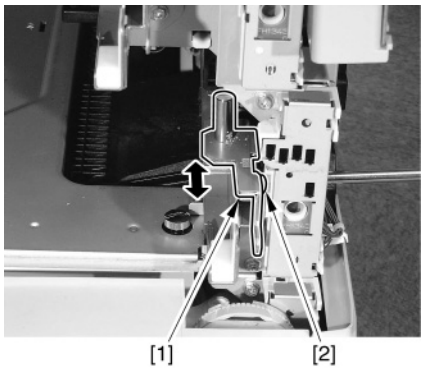

F-13-29

8) Tighten the fixing screw.
9) Put the cassette 2 back in place.
10) Make a copy using the cassette 2 as the source of paper, and check to make sure that the margin in the image front direction is 2.5 +/-1.5 mm.
11) Mount the right front cover.

- margin adjustment (2nd side; small-size)

1) Make a double-sided copy (small-size) using the cassette you have adjusted for the 1st side as the source of paper, and check to make sure that the front margin is 2.5 +/-2.0 mm.

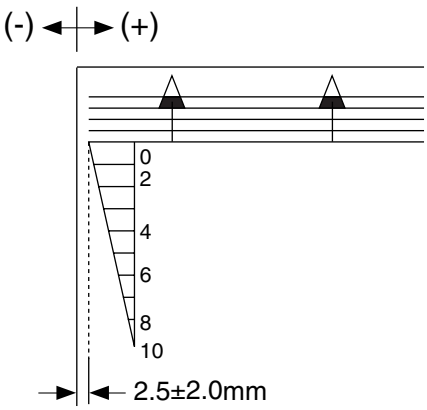

F-13-30

2) If the value is not as indicated, change the adjustment value of the 2nd side horizontal registration for small-size.
- COPIER>ADJUST>FEED-ADJ>ADJ-REFE
An increase of '1' will decrease the margin at the front by 0.1 mm.
3) Record the new setting on the service label.
- ADJ-REFE

- margin adjustment (2nd side; large-size; A4/LTR or longer in feed direction)

1) Make a double-sided copy (large-size) using the cassette you have adjusted for the 1st side as the source of power, and check to make sure that the front margin is 2.5 +/-2.0 mm.

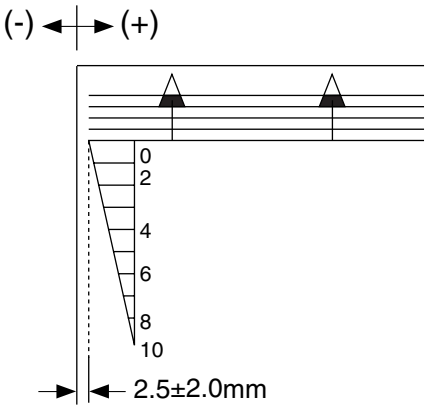

F-13-31

2) If the value is not as indicated, change the adjustment value for 2nd side horizontal registration for large-size.
- COPIER>ADJUST>FEED-ADJ>ADJ-RE-L
An increase of '1' will decrease the margin on the front by 0.1 mm.
3) Record the new setting on the service label.
- ADJ-RE-L

13.6.2 Adjusting the Horizontal Registration When Replacing the Duplex Unit

iR2270 / iR2870 / iR3570 / iR4570 / / iR2270N / / iR2870N / / iR3570N / / iR4570N / iR2230 / / / iR3530 /

1) Make double-sided small- and large-size copies, and check to make sure that the front margin is 2.5 +/-2.0 mm. A sheet is large-size if its length in feed direction is longer than A4/LTR.

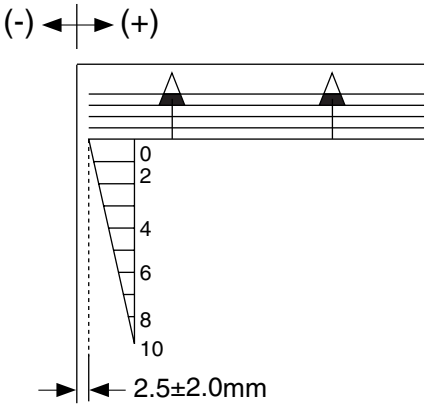

F-13-32

2) If the value is not as indicated, change the adjustment value of the 2nd side horizontal registration for small-/large-size.
- COPIER>ADJUST>FEED-ADJ>ADJ-REFE(small-size)
- COPIER>ADJUST>FEED-ADJ>ADJ-RE-L(large-size)
An increases of '1' will decrease the margin at the front by 0.1 mm.
3) Record the new setting on the service label.
- ADJ-REFE
- ADJ-RE-L

13.6.3 Adjusting the Manual Feed Pickup Horizontal Registration

iR2270 / iR2870 / iR3570 / iR4570 / / iR2270N / / iR2870N / / iR3570N / / iR4570N / iR2230 / / / iR3530 /

- 1st Side (mechanical)
1) Place paper in the manual feed tray.
For instructions on how to place paper, see the label attached to the manual feeder assembly.
2) Make a copy using the manual feeder as the source of paper, and check to make sure that the front margin is 2.5 +/-1.5 mm.

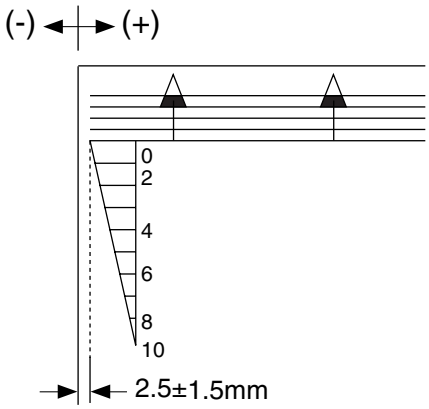

F-13-33

- If the value is not as indicated, make the following adjustments:
3) Remove paper from the manual feed tray.
4) Loosen the fixing screw [1] on the top cover of the manual feed tray.
5) While referring to the index you checked in step 2), move the top cover of the manual feed tray back and forth. Moving the top cover of the manual feed tray toward the rear of the machine will increase the front margin.

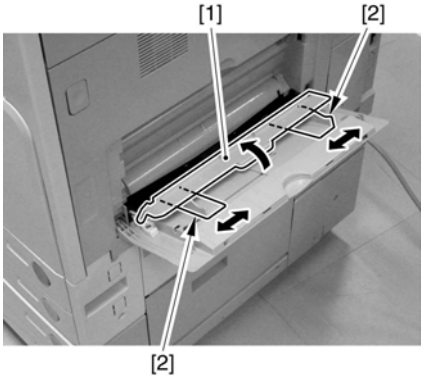

F-13-34

6) Tighten the fixing screw on the top cover of the manual feed tray.
7) Put paper in the manual feed tray.
8) Make a copy using the manual feeder as the source of paper, and check to make sure that the margin along the front is 2.5 +/-1.5 mm.

13.6.4 Registering the Paper Width Basic Value

iR2270 / iR2870 / iR3570 / iR4570 / / iR2270N / / iR2870N / / iR3570N / / iR4570N / iR2230 / / / iR3530 /

1) Turn on the main power switch.
2) Register the paper width basic value for A4R as follows:
2-1) Match the manual feed side guide [1] against the A4R marking.

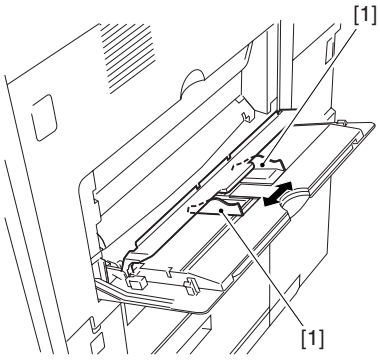

F-13-35

2-2) Start service mode, and select 'register manual feed d A4R width'.
CPOIER>FUNCTION>CST>MF-A4R
2-3) Press the OK key to save the new A4R width.

3) Register the paper width basic value for A4 as follows:
3-1) Mach the manual feed guide against the A4 marking.
3-2) In service mode, select 'manual feed A4 width'.
CPOIER>FUNCTION>CST>MF-A4
3-3) Press the OK key to save the new A4 width.

4) Register the paper width basic value for A6R as follows:
4-1) Match the manual feed side guide against the A6R marking.
4-2) In service mode, select 'register A6R width'.
CPOIER>FUNCTION>CST>MF-A6R
4-3) Press the OK key to save the new A6R width.

5) Press the Reset key twice to end service mode.
6) Hold down the control panel power switch for 3 sec or more.
7) Go through the steps for the shut-down sequence shown on the control panel so that the main power switch may be turned off.
8) Turn off the main power switch.
9) Wait for 3 sec or more; then, turn the main power switch back on.
10) Print out the latest P-ROINT page in service mode.
11) Put the printed P-PRINT page [1] in the service book case, and dispose of the previous printout.

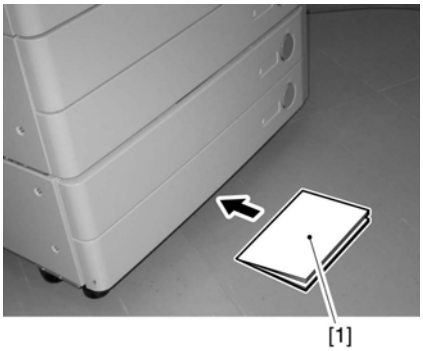

F-13-36

Chapter 14 Correcting Faulty Images

Contents

14.1 Making lnitial Checks 14-1
14.1.1 Site Environment 14-1
14.1.2 Checking the Paper 14-1
14.1.3 Checking the Placement of Paper 14-1
14.1.4 Checking the Durables 14-1
14.1.5 Checking the Periodically Serviced Items 14-1
14.1.6 Checking the Units and Functional Systems 14-1
14.1.7 Others 14-2
14.2 Troubleshooting 14-2
14.2.1 Image Faults 14-2
14.2.1.1 Blank Image 14-2
14.2.1.1.1 Blank image/Toner is not supplied: Because pin of toner sensor connector for developing assembly is bent 14-2
14.2.1.2 Foggy Image 14-2
14.2.1.2.1 When copying book original, fogging/shadow occurs on output image 14-2
14.2.1.2.2 Faulty image (fully fogged image) occurs in copyboard-glass scanning, stream reading, and FAX transmission 14-3
14.2.1.2.3 Fogging caused by original-to-copyboard glass gap/ lines caused by original with creases (especially book) 14-4
14.2.1.3 Uneven Density 14-4
14.2.1.3.1 Uneven/coarse image occurs at 59mm intervals in sub scanning direction: iR3570/iR4570 14-4
14.2.1.3.2 Distorted image/skewed image occurs around 45mm from trailing edge after attaching new type compression spring to rear side of registration roller 14-5
14.2.1.3.3 White dots on black solid image/sandy image: Occurs even after executing "D-GAMMA" at time of replacement of drum unit 14-5
14.2.1.3.4 Uneven Density in Sub Scanning Direction 14-5
14.2.1.3.5 Uneven Density Caused by Irregular Rotation of the Main Motor 14-6
14.2.1.4 Partially Blank/Streaked 14-7
14.2.1.4.1 White lines appear in sub scanning direction on solid black and halftone images: Dust on top cover of Developing Assembly 14-7
14.2.1.4.2 White lines appear in sub scanning direction on solid black and halftone images: Foreign substances adhere to edge of Feeder Guide 14-7
14.2.1.4.3 Void/uneven image/toner is not supplied: Because connector of toner feedscrew motor is unplugged 14-8
14.2.1.4.4 Faulty image/void (in sub scanning direction) appears approx. 10mm away from front side of paper: Because contact image sensor is faulty 14-8
14.2.1.4.5 Void at about 43mm intervals/uneven density (in main scanning direction): Because developing assembly is faulty 14-8
14.2.1.4.6 Horizontal Line/Blurring at Intervals of 94 to 95 mm 14-12
14.2.1.4.7 White Lines in Sub Scanning Direction 14-12
14.2.1.5 Smudged/Streaked 14-13
14.2.1.5.1 Stray Toner Along Fine Lines 14-13
14.2.1.5.2 Soiled Image Leading Edge 14-14
14.2.1.5.3 Black Dots 14-15
14.2.1.6 Ghost/Memory 14-16
14.2.1.6.1 Ghost 14-16
14.2.1.7 Stretching/Shrinking 14-17
14.2.1.7.1 Distorted line or jagged line occurs when copying drawing or document including ruled line: Because of defective laser scanner assembly 14-17
14.2.1.7.2 DADF-N1: Image stretch or shrinkage (in sub scanning direction) occurs in stream reading upon installation 14-18
14.2.1.7.3 Output image is scaled down in original feed direction because CIS read position is shifted: After replacing paper pick-up assembly for DADF-N1 14-18
14.2.2 Malfunction 14-19
14.2.2.1 No Power 14-19
14.2.2.1.1 Upon installation, machine does not start up / LCD does not come on although main power indicator on control panel lights up: Poor connection of ROM/RAM 14-19
14.2.2.1.2 Progress bar stops at midpoint and machine fails to start/Unable to power-on: Because J1016 connector is broken 14-19
14.2.2.1.3 LCD on control panel does not display anything upon installation: Because Main Controller PCB is faulty 14-19
14.2.2.1.4 No power/machine does not start up/LCD displays nothing: Because Main controller PCB is faulty 14-19
14.2.2.1.5 LCD displays nothing/progress bar on LCD stops at one-fifth point and machine repeats restart: Because main controller PCB is faulty 14-20
14.2.2.2 Control Panel-Related 14-20

14.2.2.2.1 LCD on control panel remains black: Pilot lamp blinks 14-20
14.2.2.3 Counter Malfunction 14-21
14.2.2.3.1 Card Reader-C1: Card cannot be recognized (Card No. 2500) 14-21
14.2.2.4 Malfunction/Faulty Detection 14-21
14.2.2.4.1 1011 Jam Code: Occurs on machine with finisher-S1 when executing APVC control (DGAMMA) in service mode 14-21
14.2.2.4.2 Size of paper on manual feed tray is detected incorrectly 14-21
14.2.2.4.3 DADF-N1: False detection of document size occurs upon installation 14-21
14.2.2.4.4 No paper indication does not disappear/paper lifting plate for cassette3 and 4 does not ascend: Cassette Feeding Unit-Y1/Y2 14-21
14.2.2.4.5 None of settings is displayed in [Tray Designation]: Inner 2way tray-D1 and copy tray-J1 14-22
14.2.2.4.6 Only "Book 2-sided" and "1 2-sided" buttons appear under "Two-sided" button 14-22
14.2.2.4.7 Cassette Feeding Unit-Y2 cannot be recognized: Because connectors on DC controller PCB have bad connection 14-22
14.2.2.5 Noise 14-22
14.2.2.5.1 Abnormal sound occurs during last rotation: Because upper hinge plate is faulty 14-22
14.2.2.5.2 Abnormal (buzzing) sound occurs when feeding paper from cassette of machine or Cassette Feeding Unit-Y1 14-22
14.2.2.5.3 Noise at Time of Pickup from the Cassette 14-23
14.2.2.6 User Warning Message 14-23
14.2.2.6.1 Message "Check the network connection." or "Check the TCP/IP." is displayed 14-23
14.2.2.6.2 Message "Close the drawer's lower right cover." is displayed: Because pedestal driver PCB is faulty 14-23
14.2.2.6.3 Message "You must insert a control card" is displayed on machine without control card 14-23
14.2.2.7 Other Defect 14-23
14.2.2.7.1 Unable to start Remote UI: Because SSL encrypting communication is available 14-23
14.2.2.7.2 What is key pair? 14-24
14.2.2.7.3 BootROM writing error: Because main power switch is turned off when Boot software is being downloaded from service support tool (SST) 14-24
14.2.2.7.4 Tray B is not displayed on Tray Designation screen under User Mode: After installing Inner 2-Way Tray-D1 14-24
14.2.2.7.5 LCD on control panel does not come on remaining black (the main power indicator alone comes on): Because PS controller assembly is faulty 14-24
14.2.2.8 Part Breakage/Detachment 14-25
14.2.2.8.1 Toner is not supplied upon installation: Because shutter arm is damaged 14-25
14.2.3 Printing/scanning 14-25
14.2.3.1 No Output 14-25
14.2.3.1.1 Machine accepts print job but does not run it 14-25
14.2.4 Network 14-25
14.2.4.1 Ping Failure 14-25
14.2.4.1.1 Ping failure sometimes occurs 14-25
14.2.4.2 Connection Problem 14-25
14.2.4.2.1 E291 Error Code: Occurs when upgrading system software using SST 14-25
14.2.5 Transmission/fax-related 14-25
14.2.5.1 Transmission Problem 14-25
14.2.5.1.1 Latter half of image is lost when scanning and sending A3-size original from DF 14-25
14.2.5.1.2 Machine does not send E-mail 14-26
14.2.5.1.3 Machine hangs up during FAX transmission: Because read sensor (PI3) of DADF-N1 is not snapped securely 14-26
14.2.5.2 Other Operational Defect 14-26
14.2.5.2.1 LCD on control panel responds slowly: Because numbers of destinations are registered 14-26
14.2.5.2.2 DADF-N1: Stamp is not printed when sending FAX message because solenoid connector has poor connection 14-26
14.2.6 Jam (Main Unit) 14-26
14.2.6.1 0105 Jam Code: Occurs only at pickup from cassette 1 because right lower door sheet is faulty 14-26
14.2.6.2 0207 Jam Code: Because solenoid (SL1) does not work on account of defective delivery controller PCB 14-26
14.2.6.3 0207 Jam Code: Because solenoid (SL1) of 1st paper delivery flapper is mounted in wrong position. 14-27
14.2.6.4 0B00 Jam Code: Description of this jam code 14-27
14.2.7 Jam (FIN) 14-27
14.2.7.1 1205 Jam Code: Finisher-Q3/Saddle Finisher-Q4 14-27
14.2.7.2 1644 Jam Code: Occurs upon power-on or when first paper is fed in punch mode after machine's front cover is opened/closed, Finisher-S1 14-27
14.2.8 Error Code 14-27
14.2.8.1 E000-0001 Error Code: Because fixing heater is cracked 14-27
14.2.8.2 E001-0000 Error Code: Because main power supply PCB is faulty 14-28
14.2.8.3 E014-0002 Error Code/Abnormal sound from fixing assembly: Because cleaning roller mounts (front/rear) are damaged (iR4570/iR3570) 14-28
14.2.8.4 E024-0001 Error Code: Description of this error code 14-28
14.2.8.5 E024-0001 Error Code: Because toner stays in developing assembly toner sensor (TS1) 14-28

14.2.8.6 E110-0001 Error Code: Because DC controller PCB is faulty 14-28
14.2.8.7 E202-0002 Error Code: Because reader controller PCB is faulty 14-28
14.2.8.8 E244 Error Code: Occurs when formatting service part hard disk drive (HDD) 14-28
14.2.8.9 E261-0000 Error Code: Because main power supply PCB is faulty 14-29
14.2.8.10 E315-000d Error Code: Because main controller PCB is faulty 14-29
14.2.8.11 E520 Error Code: Description of this code 14-29
14.2.8.12 E602-0001 Error Code: Progress bar stops at one-fifth point because hard disk (HDD) is faulty 14-29
14.2.8.13 E716-0010 Error Code: Occurs when machine is equipped with 3 Way Unit-A1 14-29
14.2.8.14 E732-0001 Error Code: Because Reader Controller PCB is faulty 14-29
14.2.8.15 E732-0001 Error Code: Because DIMMs have poor connection 14-29
14.2.8.16 E733-0001 Error Code is displayed at FAX reception/transmission; however it is solved by switching OFF/ON 14-29
14.2.9 FAX # Code 14-30
14.2.9.1 #037/##795/###796 User Error Code: Occurs when FAX Activity Report is set to be printed automatically at time of FAX reception 14-30
14.2.10 Specifications-related FAQ 14-30
14.2.10.1 FAQ on Main Unit Specifications 14-30
14.2.10.1.1 Equation to calculate estimated remaining days before next replacement of consumable parts 14-30
14.2.10.1.2 Settings for not displaying "Mail Box" tab on LCD 14-30
14.2.10.1.3 How to check estimated remaining days before next replacement of consumable parts 14-30
14.2.10.1.4 Output image size is different between when using "Zoom by Percentage" function and "Preset Zoom" function although same copy ratio is set 14-30
14.2.10.1.5 Applicable paper sizes 14-30
14.2.10.1.6 How to clear "system administrator" password 14-31
14.2.10.1.7 Applicable paper types 14-31
14.2.10.1.8 Unable to select [Stack Bypass Settings] button 14-31
14.2.10.1.9 Finisher-Q3/Saddle Finisher-Q4: Necessary options when installing finisher 14-31
14.2.10.1.10 Necessary options when expanding iR Security Kit-A2 14-31
14.2.10.1.11 Stack Bypass Standard Settings: How to register arbitrary paper size and paper type as standard mode for stack bypass 14-31
14.2.10.1.12 How to fix Ethernet setting at 10BASE-T 14-31
14.2.10.1.13 How many CA certificate files can be registered? 14-31
14.2.10.1.14 Unable to delete registered key pair 14-31
14.2.10.1.15 Estimated life of the fixing heatsink roller 14-32
14.2.10.1.16 How to number pages in sequence: Page numbering feature 14-32
14.2.10.1.17 Procedure to be followed after replacement of drum unit: APVC control 14-32
14.2.10.1.18 White dots on solid black image/Sandy image: Occurs after replacement of drum unit 14-32
14.2.10.1.19 How to register key pair file and server certificate file installed from PC 14-32
14.2.10.1.20 Does fixing assembly for iR2270, iR2870, iR3570, and iR4570 have interchangeability? 14-32
14.2.10.1.21 Is it possible to replace fixing film itself with a new one? 14-32
14.2.10.1.22 How to install CA certificate file to machine using Remote UI 14-33
14.2.10.1.23 How to generate and use key pairs and digital (server) certificate 14-33
14.2.10.1.24 Unable to print document stored in Inbox with page numbers or copy set numbers 14-33
14.2.10.1.25 How to assign copy set number (serial number) to each copy set: Copy Set Numbering 14-33
14.2.10.1.26 Position where drum counter label is affixed 14-33
14.2.10.1.27 How to register user-defined text for page numbers and watermarks 14-33
14.2.10.1.28 Wants to adjust print position of page number, copy set number and watermark 14-33
14.2.10.1.29 How to create user own watermark: Watermark printing 14-34
14.2.10.1.30 Is it necessary to clear the "DLM-LIFE" value upon making replacement of drum unit? 14-34
14.2.10.1.31 Is it possible to perform APVC control on new drum that has been used for some time after its installation? 14-34
14.2.10.1.32 Explanation about functions of iR Security Kit-A1 14-34
14.2.10.1.33 How many MAC addresses that are allowed to access to can be registered? 14-34
14.2.10.1.34 How many key pairs can be registered? 14-34
14.2.10.1.35 Wants to superimpose previously scanned image (image form) on output: Form composition 14-34
14.2.10.1.36 Necessary options when connecting USB device for MEAP application 14-34
14.2.10.1.37 Are tandem copy and remote copy supported? 14-35
14.2.10.1.38 Is image separation mode supported? 14-35
14.2.10.1.39 How to register CA certificate file that is installed using Remote UI 14-35
14.2.10.1.40 Message "Load paper " appears when using machine together with Finisher-S1 in staple mode 14-35
14.2.10.1.41 Stamp function in FAX direct sending 14-35
14.2.10.1.42 Version of SST that is required for upgrading software 14-35
14.2.10.1.43 Does toner bottle for iR2270, iR2870, iR3570, and iR4570 have interchangeability? 14-35
14.2.10.1.44 Explanation on MAC address filter 14-35
14.2.10.1.45 How many department IDs can this machine manage? 14-35

14.2.10.1.46 How does this machine detect level of toner in waste toner box? 14-36
14.2.10.1.47 Print position of copy set numbering that has been set in user mode is not available: When selecting "Number in 5 Locations" 14-36
14.2.10.1.48 How to print document stored in Inbox with page number, copy set number, watermark, or date 14-36
14.2.10.1.49 How to superimpose image form over data stored in User Inbox 14-36
14.2.10.1.50 How many image forms can be registered for form composition? 14-36
14.2.10.1.51 Is it possible to use encrypted SSL communication for E-main/I-FAX? 14-36
14.2.10.1.52 Necessary options when installing Finishe-S1 14-36
14.2.10.1.53 Slow first copy output time (FCOT): Under what condition does machine needs FCOT of 10 seconds or more? 14-36
14.2.10.1.54 How to check extended printer options: Device Configuration 14-37
14.2.10.1.55 Are all destinations in Address Book deleted when RAM on Main controller PCB is cleared? 14-37
14.2.10.1.56 How many sheets of paper can be loaded on Buffer Pass Unit-E1? 14-37
14.2.10.1.57 Horizontal registration adjustment is not as required even after adjusting cassette position: 2-Cassette Pedestal-Y2 14-37
14.2.10.1.58 DADF-N1: Adjustments to be required when installing DADF-N1 14-37
14.2.10.1.59 DADF-N1: Scanning operation in different size originals mode 14-37
14.2.10.1.60 Condensation upon installation/faulty image/malfunction 14-37
14.2.10.1.61 Combination of main drive assembly and models 14-38
14.2.10.1.62 How to hide message "Functions limited" on Copy screen: Finisher-Q3 14-38
14.2.10.2 FAQ on Send Specifications 14-38
14.2.10.2.1 Address cannot be deleted 14-38
14.2.10.2.2 How to set machine to automatically select appropriate zoom ratio based on size of originals and selected record size when scanning and sending different size originals: Auto zoom scanning 14-38
14.2.10.2.3 When sending different size originals, all originals are scanned at same zoom ratio even if machine is set to automatically select appropriate zoom ratio based on size of originals and selected record size 14-38
14.2.10.2.4 Machine fails to automatically select appropriate zoom ratio based on size of originals and record size/Message "Fax TX is not possible with this mode set." is displayed: When using different size originals mode in FAX transmission 14-38
14.2.10.2.5 How to change number of characters extracted for document (file) name when sending in PDF(OCR) mode: FAX transmission 14-38
14.2.10.2.6 Text recognized in PDF (OCR) mode 14-39
14.2.10.2.7 Wants to use text extracted from scanned document as name of document (file) when sending in PDF (OCR) mode: FAX transmission 14-39
14.2.10.2.8 DADF-N1: Scanning time in different size originals mode 14-39
14.2.10.2.9 How to expand Universal Send Kit-B1 14-39
14.2.10.3 FAQ on G3FAX Specifications 14-39
14.2.10.3.1 How to display FAX error codes on Activity Report 14-39
14.2.10.3.2 How to output System Dump List 14-39
14.2.10.3.3 How to print FAX Activity Report when necessary 14-39
14.2.10.3.4 How to erase all destinations stored in Address Book and One-Touch buttons at once 14-40
14.2.10.3.5 Wants to hide destination name printed at sender information area on receiving side when sending FAX message: FAX transmission 14-40
14.2.10.3.6 Characteristics of direct sending: FAX transmission 14-40
14.2.10.3.7 Message "FAX TX is not possible with this mode set" is displayed 14-40
14.2.10.3.8 Is it possible to install Multi Line Fax Board-D1 (2 lines) in Fax model? 14-40
14.2.10.3.9 FAX TX REPORT and TX REPORT are output when FAX transmission ends in error: FAX transmission 14-40
14.2.10.3.10 How to enable Incoming Ring function: Auto FAX reception 14-40
14.2.10.4 FAQ on I-FAX Specifications 14-40
14.2.10.4.1 How to send I-Fax on Intranet 14-40
14.2.10.5 FAQ on Remote UI Specifications 14-41
14.2.10.5.1 "Page numbering" and "copy set numbering" functions are unavailable when printing document stored in User Inbox from Remote UI 14-41
14.2.10.5.2 How to superimpose image form over data stored in User Inbox: When using Remote UI 14-41
14.2.10.5.3 How to print document stored in User Inbox from Remote UI with page numbers, copy set numbers, watermark or date 14-41
14.2.10.5.4 How to install key pair file and server certificate file from PC to machine 14-41
14.2.10.5.5 Use of encrypted SSL communication for Remote UI 14-41
14.2.10.5.6 Is change in "Use SSL" setting of Remote UI reflected to "Use HTTP" setting of MEAP? 14-41
14.3 Outline of Electrical Components 14-41
14.3.1 Clutch/Solenoid 14-41
14.3.1.1 Clutches and Solenoids 14-41
14.3.2 Motor 14-42
14.3.2.1 Motors 14-42
14.3.3 Fan 14-44
14.3.3.1 Fans 14-44

14.3.4 Sensor 14-45
14.3.4.1 Sensors 14-45
14.3.5 Switch 14-48
14.3.5.1 Switches 14-48
14.3.6 Lamps, Heaters, and Others 14-48
14.3.6.1 Lamps, Heaters, and Others 14-48
14.3.6.2 Lamps, Heaters, and Others 14-50
14.3.7 PCBs 14-51
14.3.7.1 PCBs 14-51
14.3.7.2 PCBs 14-53
14.3.8 Variable Resistors (VR), Light-Emitting Diodes (LED), and Check Pins by PCB 14-55
14.3.8.1 Variable Resistors (VR), Light-Emitting Diodes, and Check Pins by PCB 14-55
14.3.8.2 Points to Note About the Leakage Breaker 14-55
14.3.8.3 All-Night Power Supply PCB 14-56

14.1 Making Initial Checks

14.1.1 Site Environment

iR2270 / iR2870 / iR3570 / iR4570 / / iR2270N / / iR2870N / / iR3570N / / iR4570N / iR2230 / / / iR3530 /

a. There must be a source of power whose voltage is as specified (+/-10%). The power plug must never be disconnected day and night.
b. The machine must not be in an area subject to high humidity (near a water faucet, water boiler, humidifier). The site must not be too cold or subject to dust. The machine must not be near a source of fire.
c. The site must not be subject to ammonium gas.
d. The machine must not be exposed to the rays of the sun. As necessary, curtains must be provided.
e. The area must be well ventilated. The machine must be on a level floor.

In addition, be sure that there is a source of power that can be used by the machine at all times.

14.1.2 Checking the Paper

iR2270 / iR2870 / iR3570 / iR4570 / / iR2270N / / iR2870N / / iR3570N / / iR4570N / iR2230 / / / iR3530 /

a. Be sure the paper being used is of a type recommended by Canon.
b. Be sure that the paper is not moist. Try using paper fresh out of package.

14.1.3 Checking the Placement of Paper

iR2270 / iR2870 / iR3570 / iR4570 / / iR2270N / / iR2870N / / iR3570N / / iR4570N / iR2230 / / / iR3530 /

a. There must be paper in the cassette or the tray deposited within a specific limit.
b. If transparencies are used, be sure that they are placed in the manual feed tray in the correct orientation.

14.1.4 Checking the Durables

iR2270 / iR2870 / iR3570 / iR4570 / / iR2270N / / iR2870N / / iR3570N / / iR4570N / iR2230 / / / iR3530 /

Refer to the table of durables, and replace those that have reached the end of their lives.

14.1.5 Checking the Periodically Serviced Items

iR2270 / iR2870 / iR3570 / iR4570 / / iR2270N / / iR2870N / / iR3570N / / iR4570N / iR2230 / / / iR3530 /

Refer to the periodical servicing chart and the table of periodically replaced parts. As necessary, clean or replace parts.

14.1.6 Checking the Units and Functional Systems

iR2270 / iR2870 / iR3570 / iR4570 / / iR2270N / / iR2870N / / iR3570N / / iR4570N / iR2230 / / / iR3530 /

Reader Unit
- Check the scanner unit (contact sensor, white plate, copyboard glass) for scratches, dirt, and foreign matter.
- Check the contact sensor unit to see if it moves smoothly and if it is free of dirt.
- Check to see if the contact sensor is free of flickering.
- Check to see that the scanner system is free of condensation.

Process Components
- Check to see that the drum unit and the developing unit are properly fitted.
- Check to see that the photosensitive drum is free of scratches and dirt.

Transfer Components
- Check to see that the transfer roller is free of wear, scratches, dirt, and deformation.

Fixing Assembly
- Check to see if the fixing film and the pressure roller are free of wear, scratches, dirt, and deformation.
- Check to see that the fixing thermistor is free of an open circuit.
- Check to see if the thermal switch is free of disruption in its electrical continuity.

Paper Feed System
- Check to make sure that there is no paper lint or foreign matter.
- Check to make sure that there is no buildup of paper around the pickup, feed, and separation rollers. See that they are free of wear, scratches, dirt, and deformation.
- Check to make sure that the paper is free of a bent leading edge and is free of curling, waving, and excess moisture.
- Try using paper and transparency of a type recommended by Canon to see if the problem is corrected.

Mechanical
- Check to make sure that the load imposed on the drive system is not more than permitted.
- Check to make sure that the gears are free of wear and chipping.

Cassette
- Check to see that the cassette is correctly fitted. Check to see that the paper size is correctly set. Try replacing with a fault-free cassette to see if the problem is corrected.
- Check to see that the movement of the holding plate of the cassette is normal and the plate is free of deformation.
- Check to see that the side guide plate and the rear guide plate of the cassette are fitted correctly.
- Check to see if the switch of the cassette heater is turned on (only if a cassette heater is mounted).

Service Mode
- Check to see that the various adjustment settings of the CCD are as indicated on the service label.
  (COPIER>ADJUST>CCD>all items)
- Check to see if registration adjustment is executed.
  (COPIER>ADJUST>FEED>ADJ>REGIST)
- Check to see if the image read start position adjustment is correct.
  (COPIER>ADJUST>ADJ-XY>ADJ-X/ADJ-Y)
- Check to see if the setting of ADJUST/OPTION is identical to that indicated on the service label.
- Check to see if all errors have been reset.
  (COPIER>FUNCTION>CLEAR-ERR)

General

- Check to see if the power plug is securely connected.
- Check to see if the power outlet provides a specific level of AC voltage.
- Check to see that that the sensors, clutches, motors, and solenoids are operating normally and all connectors are connected securely. (Be sure to check the power supply and signal routes by referring to the general circuit diagram.)
- Check to see that the leakage breaker and circuit breaker are operating normally.
- Check to see that there is no biting of wires and loosening of screws.
- Check to see that all external panels and covers have been correctly fitted.
- Check to see that the main power switch and the control panel power switch are turned on.
- Check to see that the power and signal cables are correctly routed.
- Check to see that the operation of the cover switch is normal.
- Check to see that none of the fuses on the PCBs have an open circuit.
- Check to see that the user has a correct understanding of how to use the machine and is using it correctly.

14.1.7 Others

iR2270 / iR2870 / iR3570 / iR4570 / / iR2270N / / iR2870N / / iR3570N / / iR4570N / iR2230 / / / iR3530 /

If a machine is brought from a cold to warm room, its inside can start to develop condensation, leading to various problems.
a. condensation on the BD sensor is likely to cause problems associated with E100
b. condensation on the dust-proof glass is likely to cause poor image density in sub scanning direction
c. condensation on the contact sensor of the reader unit or on the copyboard glass can cause light images
d. condensation on the pickup or feed guide can cause paper feed problems
If the problem given in d. above has occurred, dry wipe the units in the feed system. Do not open the package containing a toner cartridge, developing unit, or drum unit right after it has been brought in from a cold to warm place to avoid condensation. Be sure to leave it alone for a while (1 to 2 hr), opening it after it has become fully used to the temperature of the site.

14.2 Troubleshooting

14.2.1 Image Faults

14.2.1.1 Blank Image

14.2.1.1.1 Blank image/Toner is not supplied: Because pin of toner sensor connector for developing assembly is bent

0010-4138

iR2270 / iR2870 / iR3570 / iR4570 / / / / / iR2230 / / / iR3530 / / / / /

[Inspected by Canon Inc.]

Description

As a result of inspection, it was found that the symptom occurred because a pin of the toner sensor connector for the developing assembly was bent, thereby causing the machine to fail to detect the absent of toner.

Field Remedy

When the symptom occurs, check the toner sensor connector J3405 for bad connection. If the connector has bad connection, modify it.

14.2.1.2 Foggy Image

14.2.1.2.1 When copying book original, fogging/shadow occurs on output image

0010-4135

iR2270 / iR2870 / iR3570 / iR4570 / / / / / iR2230 / / / iR3530 / / / / /

[Inspected by Canon Inc.]

Description

As a result of inspection, it was found that the symptom occurred with a ripply original. However, the symptom was solved by executing the service mode item "CCD-ADJ" using paper with low whiteness such as recycled paper. When the symptom occurs, try the following procedure.

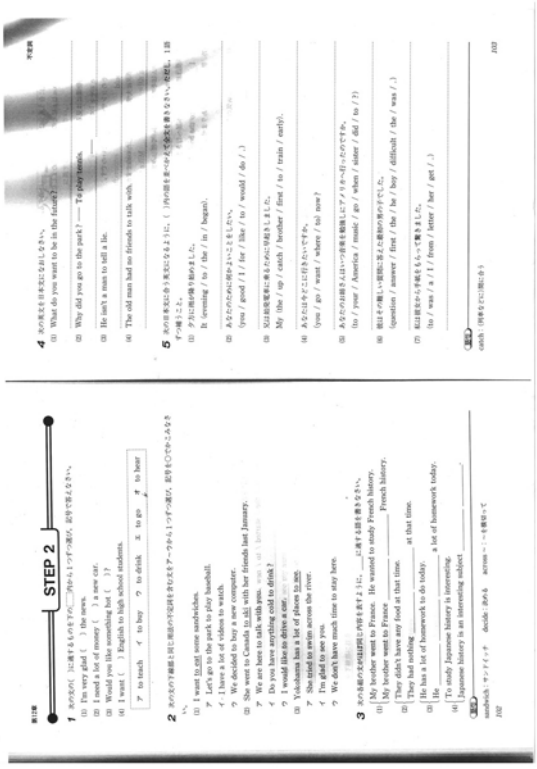

F-14-1

Field Remedy

1. Set paper with low whiteness such as recycled paper on the copyboard glass.
2. In service mode [COPIER > FUNCTION > CCD > CCD-ADJ], press [OK].
3. In service mode [COPIER > ADJUST > CCD > MTF-MG/MTF-SG/DFTAR-R/DFTAR2-R], enter the value of each setting in the service label.

14.2.1.2.2 Faulty image (fully fogged image) occurs in copyboard-glass scanning, stream reading, and FAX transmission

0010-4165

iR2270 / iR2870 / iR3570 / iR4570 / / / / / iR2230 / / / iR3530 / / / / /

[Inspected by Canon Inc.]

Description

Although a faulty image (fully fogged image) occurred in both stream reading and FAX transmission, it was corrected by replacement of the main controller PCB.

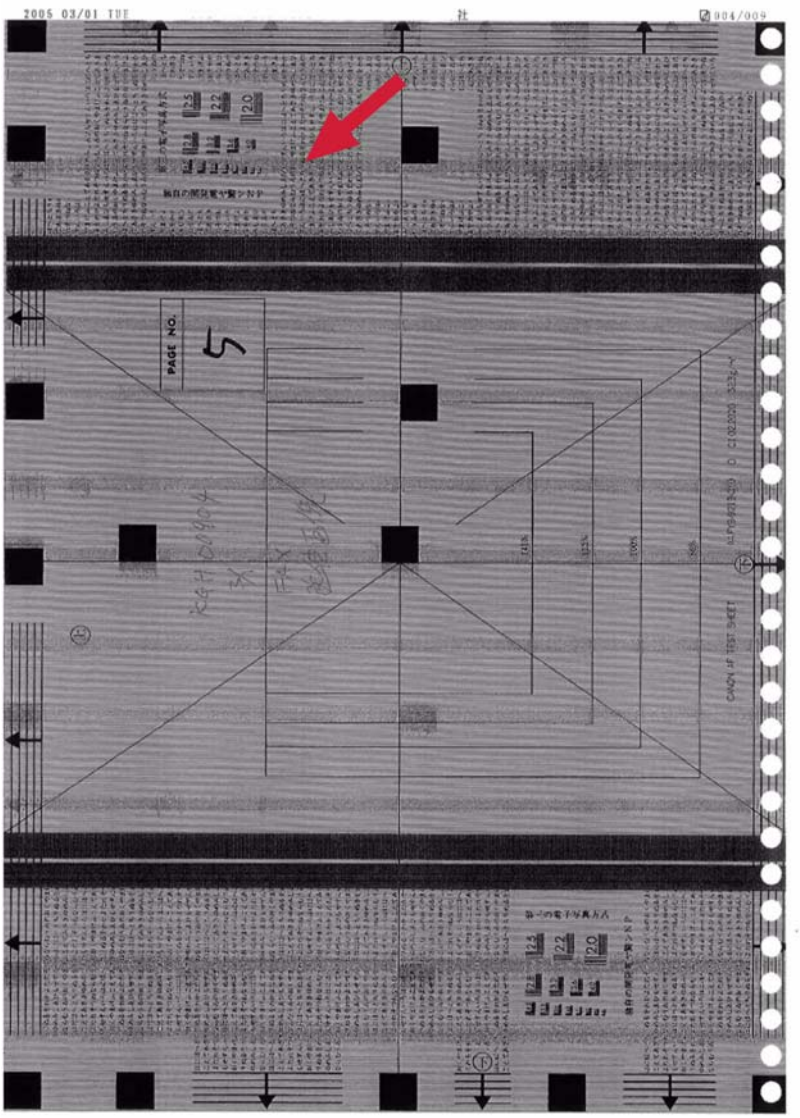

F-14-2

Field Remedy
When the symptom occurs, re-insert all connectors on the main controller PCB. If the symptom still occurs, replace the main controller PCB with a new one.
FM2-4550 Main Controller Board

14.2.1.2.3 Fogging caused by original-to-copyboard glass gap/ lines caused by original with creases (especially book)

0010-6729

iR2270 / iR2870 / iR3570 / iR4570 / / iR2270N / / iR2870N / / iR3570N / / iR4570N / iR2230 / / / iR3530 / / / / /

[Case in the field]

Description
In the field, when a book or an original with creases was copied, the shadow caused by the gap between the book and the copyboard glass or the creases of the original was recognized as fogging, and as a result, the contact image sensor was replaced with a new type one to improve the symptom. When the symptom is pointed out, follow the procedure below.

Field Remedy
1. Take notes of the CIS label value (MTF-MG) affixed on the side of the new type contact image sensor unit (FL2-3000).
Note: Regarding the new type contact image sensor unit, its CIS label describes the parts number "FL2-3000-xxx", too.
2. Replace the contact image sensor unit with a new type one.
3. In service mode [COPIER > ADJUST >CCD > MTF-MG], input the CIS label value that was taken note of in Step1.
4. In service mode (Level 2) [COPIER > OPTION > BODY > CCD-TYPE], input "1".
5. Place more than 10 sheets of white paper (that has the highest level of whiteness among all types of paper the user uses) on the copyboard glass, and then perform the CIS white level adjustment in service mode [COPIER > FUNCTION > CCD-ADJ].
6. When the DADF-M1 is used, place the paper the user often uses on the copyboard glass, and then perform the ADF white level adjustment in service mode [COPIER > FUNCTION > CCD > DF-WLVL1/2].
7. Hold down the control panel switch for more than 3 sec. > press [Start] on the LCD > turn the main power switch OFF following the instruction on the LCD > wait 10 sec. or more > turn the main power switch ON again.
FL2-3000 Contact Image Sensor Unit

14.2.1.3 Uneven Density

14.2.1.3.1 Uneven/coarse image occurs at 59mm intervals in sub scanning direction: iR3570/iR4570

0010-4141

iR2270 / iR2870 / iR3570 / iR4570 / / iR2270N / / iR2870N / / iR3570N / / iR4570N / iR2230 / / / iR3530 / / / / /

[Inspected by Canon Inc.]

Description

As a result of inspection, it was found that the symptom was solved by replacing the H.V. transfer PCB with a new one.

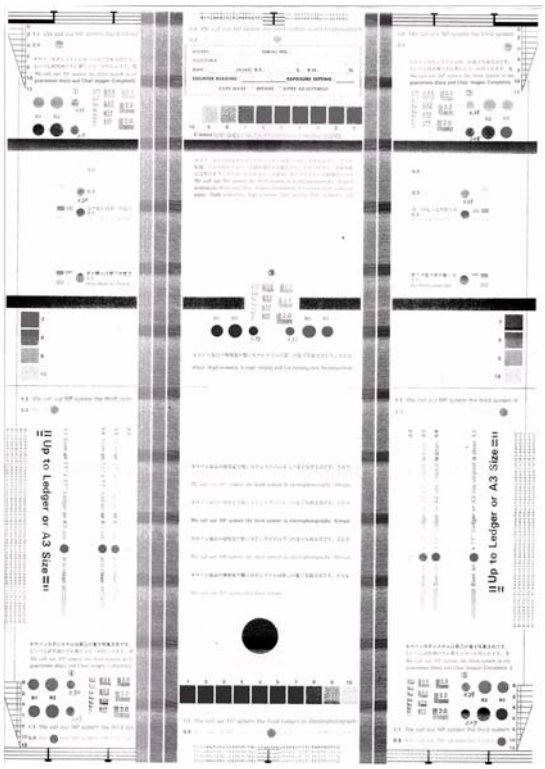

F-14-3

Field Remedy
When the symptom occurs, check the transfer roller for improper attachment or soiled surface. If the symptom still occurs, replace the H.V. transfer PCB with a new one.
FM2-0261 H.V. Transfer PCB Assembly

14.2.1.3.2 Distorted image/skewed image occurs around 45mm from trailing edge after attaching new type compression spring to rear side of registration roller

0010-4143

iR2270 / iR2870 / iR3570 / iR4570 / / / / / iR2230 / / / iR3530 / / / / /

[Case in the field]

Description
In the field, the symptom occurred because the washer was returned to its original position after the new type compression spring was attached to the rear side of the registration roller.
Field Remedy
The new service part compression spring has been offered to the rear side of the registration roller. With regard to the new service part, no washer is required when attaching and color is also changed to gold. Therefore, pay attention to these points at time of replacement of the rear compression spring.
Note: No modification was made to the compression spring that is attached to the front side of the registration roller.
Type of service part compression spring and necessity of washer
Rear side: New type GOLD spring (FU6-2020) does not need the washer.
Rear side: Old type SILVER spring (FU6-2014) needs the washer (XD1-1106-219).
Front side: Existing spring (FU5-2611) needs the washer (XD1-1106-219).

14.2.1.3.3 White dots on black solid image/sandy image: Occurs even after executing "D-GAMMA" at time of replacement of drum unit

0010-4162

iR2270 / iR2870 / iR3570 / iR4570 / / / / / iR2230 / / / iR3530 / / / / /

[Inspected by Canon Inc.]

Description
Upon installation or when the drum unit is replaced with a new one, the following service mode item has to be executed to prevent white dots (sandy image) from occurring: [Service mode > COPIER > FUNCTION > DPC > D-GAMMA]. Although rare in the case of a text image, however, the symptom may appear in a limited degree when a fully black solid image is copied right after the execution of the item. This is because there is a lot of resistance in the primary charging roller of the newly installed drum unit. In order to correct this symptom, follow the procedure below.
Field Remedy
Make the following selections in sequence: [Service mode > COPIER > TEST > PG], and then
1. In [TYPE], enter "12" (Halftone H60).
2. In [PG-PICK], enter the number of the cassette on which A3 size paper is loaded.
For example, If A3 paper is set on the cassette 1, enter "1" in this service mode item.
3. In [PG-QTY], enter "50" and press the Start key. (50 sheets of test print will be output.)

14.2.1.3.4 Uneven Density in Sub Scanning Direction

0007-7464

iR2270 / iR2870 / iR3570 / iR4570 / / iR2270N / / iR2870N / / iR3570N / / iR4570N / iR2230 / / / iR3530 /

<Description>
This fault can occur when the machine is left alone for about 10 min to 5 hr without removing a paper jam.

<Cause>
When a paper jam occurs, the machine forces the main motor to stop, thus stopping the operation without removing charges from the surface of the photosensitive drum. If the machine is left alone for a long time with the surface potential of its photosensitive drum uneven, potential memory tends to occur within a layer of the photosensitive drum, ultimately resulting in uneven density in sub scanning direction.
<Field Remedy>
To rid the surface of the photosensitive drum of potential memory, leave the machine alone for 30 min after removing the jam. There is no specific instructions as to how it may be left alone.
<Image Sample>

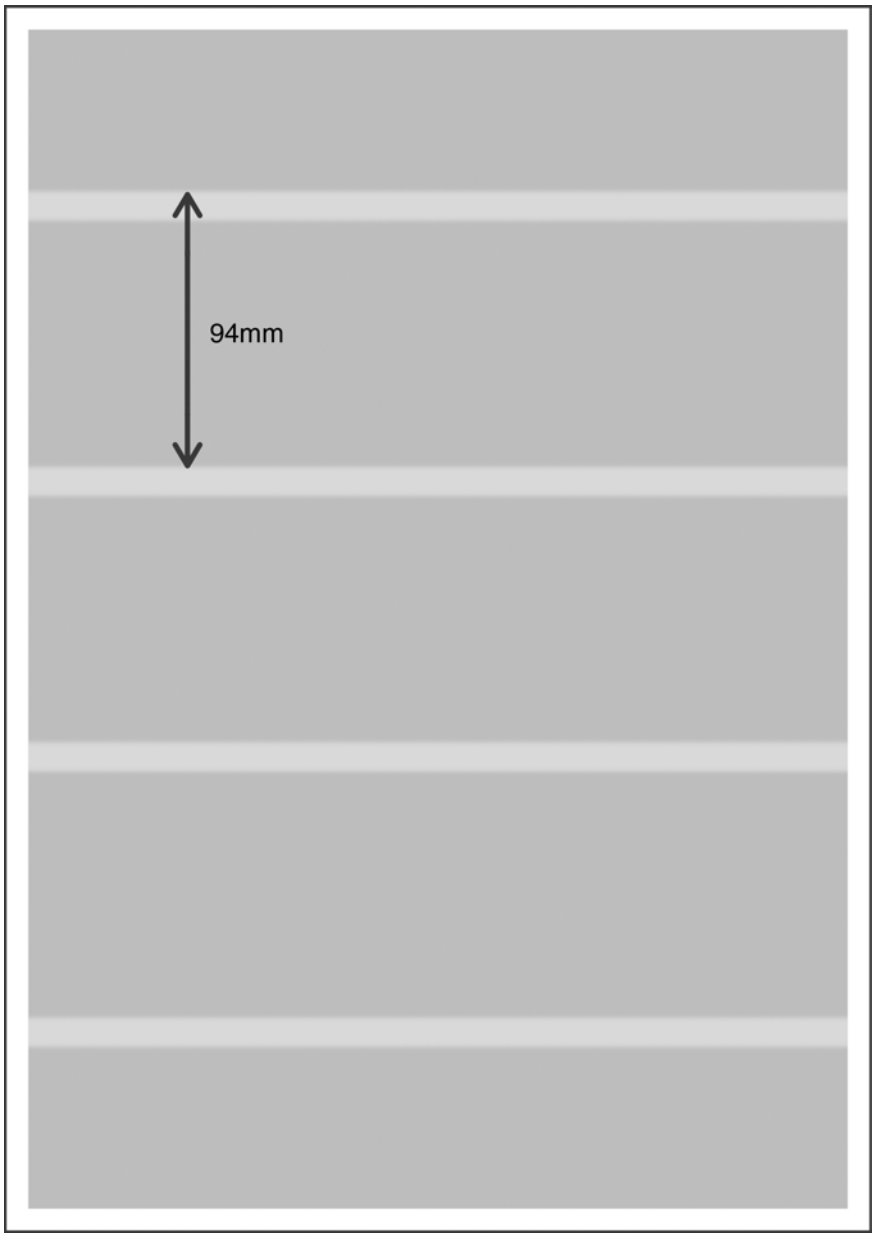

F-14-4

14.2.1.3.5 Uneven Density Caused by Irregular Rotation of the Main Motor

0007-9967

iR2270 / iR2870 / iR3570 / iR4570 / / iR2270N / / iR2870N / / iR3570N / / iR4570N / iR2230 / / / iR3530 /

<Symptom>
Uneven density at specific intervals tends to occur in sub scanning direction (from leading edge to trailing edge in relation to paper movement) when the main motor starts to rotate irregularly.

- iR2270/2870
  intervals of about 3.5 mm

- iR3570/4570
  intervals of about 6.3 mm

To facilitate a check, use a halftone test pattern.
<Remedy>

Replace the main motor.

14.2.1.4 Partially Blank/Streaked

14.2.1.4.1 White lines appear in sub scanning direction on solid black and halftone images: Dust on top cover of Developing Assembly

0008-3408

iR2270 / iR2870 / iR3570 / iR4570 / / iR2270N / / iR2870N / / iR3570N / / iR4570N / iR2230 / / / iR3530 /

[Inspected by Canon Inc.]
Description
As a result of inspection, it was found this symptom occurred because the laser light was intercepted by dust on the top cover of the developing assembly. If the symptom occurs, remove the developing assembly and clean its top cover referring to the Service Manual [Maintenance and Inspection > Cleaning > Cleaning the Developing Assembly Spacer, Feed Guide, Dust-Blocking Glass and Fixing Inlet Guide].

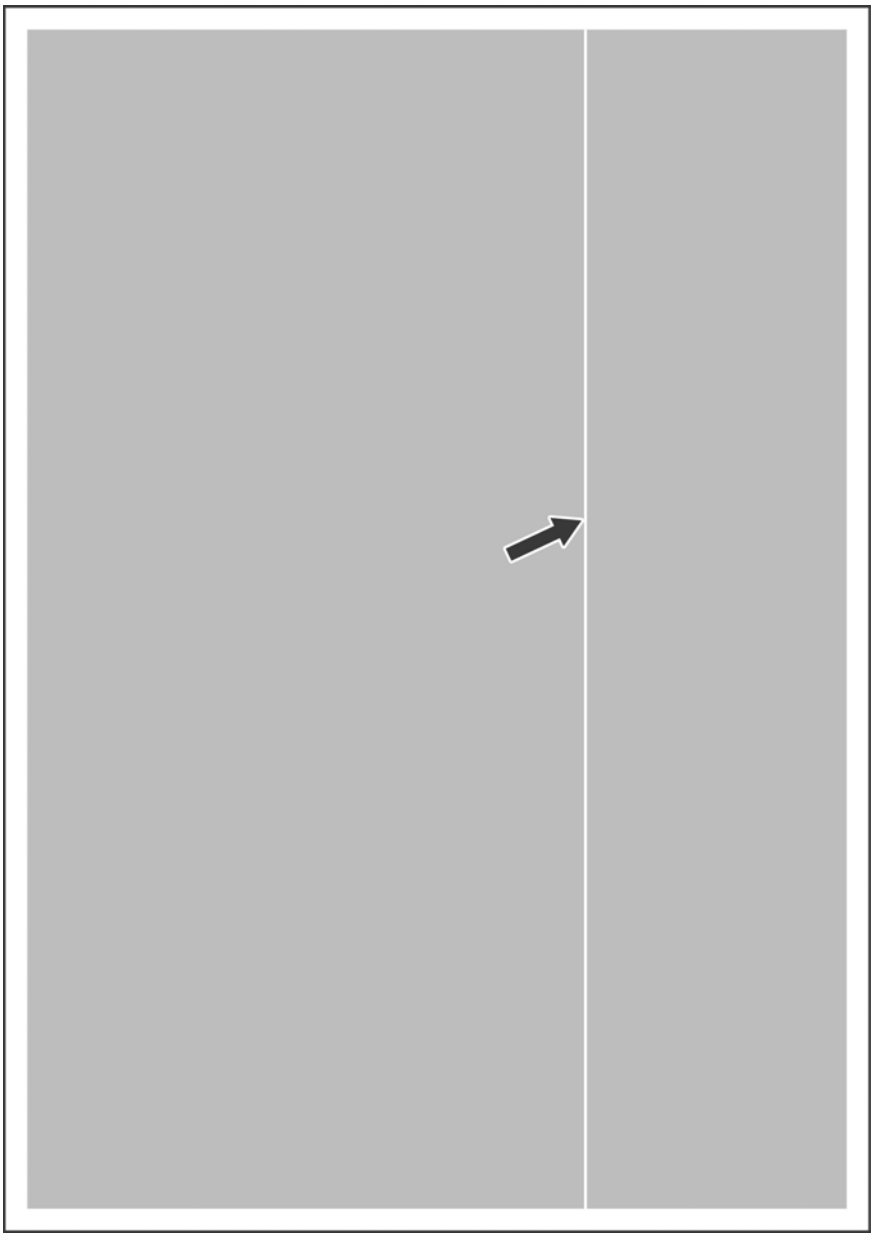

F-14-5

14.2.1.4.2 White lines appear in sub scanning direction on solid black and halftone images: Foreign substances adhere to edge of Feeder Guide

0008-3472

iR2270 / iR2870 / iR3570 / iR4570 / / iR2270N / / iR2870N / / iR3570N / / iR4570N / iR2230 / / / iR3530 /

[Inspected by Canon Inc.]
Description
As a result of inspection, it was found this symptom occurred because foreign substances on the edge of the feed guide of the developing assembly came into contact with the surface of the drum. If the symptom occurs, clean the feed guide referring to the Service Manual [Maintenance and Inspection > Cleaning > Cleaning the Developing Assembly Spacer, Feed Guide, Dust-Blocking Glass and Fixing Inlet Guide].

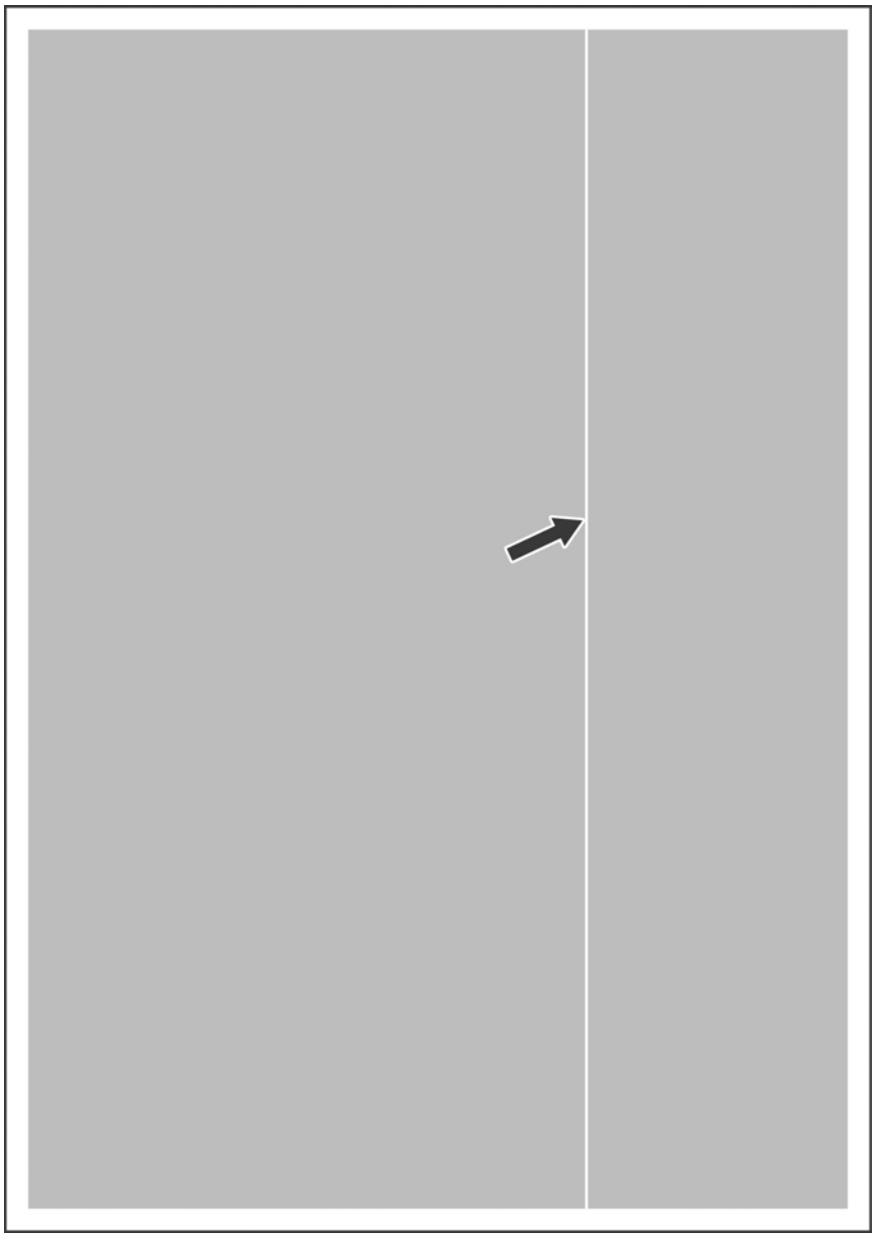

F-14-6

14.2.1.4.3 Void/uneven image/toner is not supplied: Because connector of toner feedscrew motor is unplugged

0010-4137

iR2270 / iR2870 / iR3570 / iR4570 / / / / / iR2230 / / / iR3530 / / / / /

[Inspected by Canon Inc.]

Description

As a result of inspection, it was found that the symptom occurred because the connector of the toner feed screw motor was unplugged.

Field Remedy

When the symptom occurs, execute the following service mode to make a test run of the toner feedscrew motor. If operating noise does not occur, check the connector J3205 of the motor in the rear side of the hopper assembly.

[Service mode > COPIER > FUNCTION > PART-CHK > MTR > enter "9" > OK > MTR-ON].

14.2.1.4.4 Faulty image/void (in sub scanning direction) appears approx. 10mm away from front side of paper: Because contact image sensor is faulty

0010-6762

iR2270 / iR2870 / iR3570 / iR4570 / / iR2270N / / iR2870N / / iR3570N / / iR4570N / iR2230 / / / iR3530 / / / / /

[Inspected by Canon Inc.]

Description

In a certain inspection case, void (in sub scanning direction) appeared approx. 10mm away from the front side of paper; however, replacement of the contact image sensor corrected it.

Field Remedy

If there is a difference in the position of void between when an image size is enlarged and when the image size is reduced, replace the contact image sensor with a new one.

FL2-3000 Contact Image Sensor Unit

14.2.1.4.5 Void at about 43mm intervals/uneven density (in main scanning direction): Because developing assembly is faulty

0010-7368

iR2270 / iR2870 / iR3570 / iR4570 / / iR2270N / / iR2870N / / iR3570N / / iR4570N / iR2230 / / / iR3530 / / / / /

[âšêÕéñó·]
ê‡ñæ
ñÒ43mmÉsÉbÉ`ÇÃâÊëúîðÇØ/îZìxÉÄÉâÅiéÂëñç³ï°å¸ÅjÇ™î¦ê¹ÇµåªëúäÌÇšåšä²ÇµÇƒåªè¤Ç™âšè¡ÇµÇ¾âšêÕéñó·Ç™Ç†ÇËÇ‹Ç²ÅB
ÅÀiR4570_395
ésèÍèàíu
åªè¤î¦ê¹éûÅAåªëúäÌÇšåšä²ÇµÇƒÇ›ÇƒÇ¦ÇæÇŠÇ¢ÅB
FM2-0287 åªëúäÍ

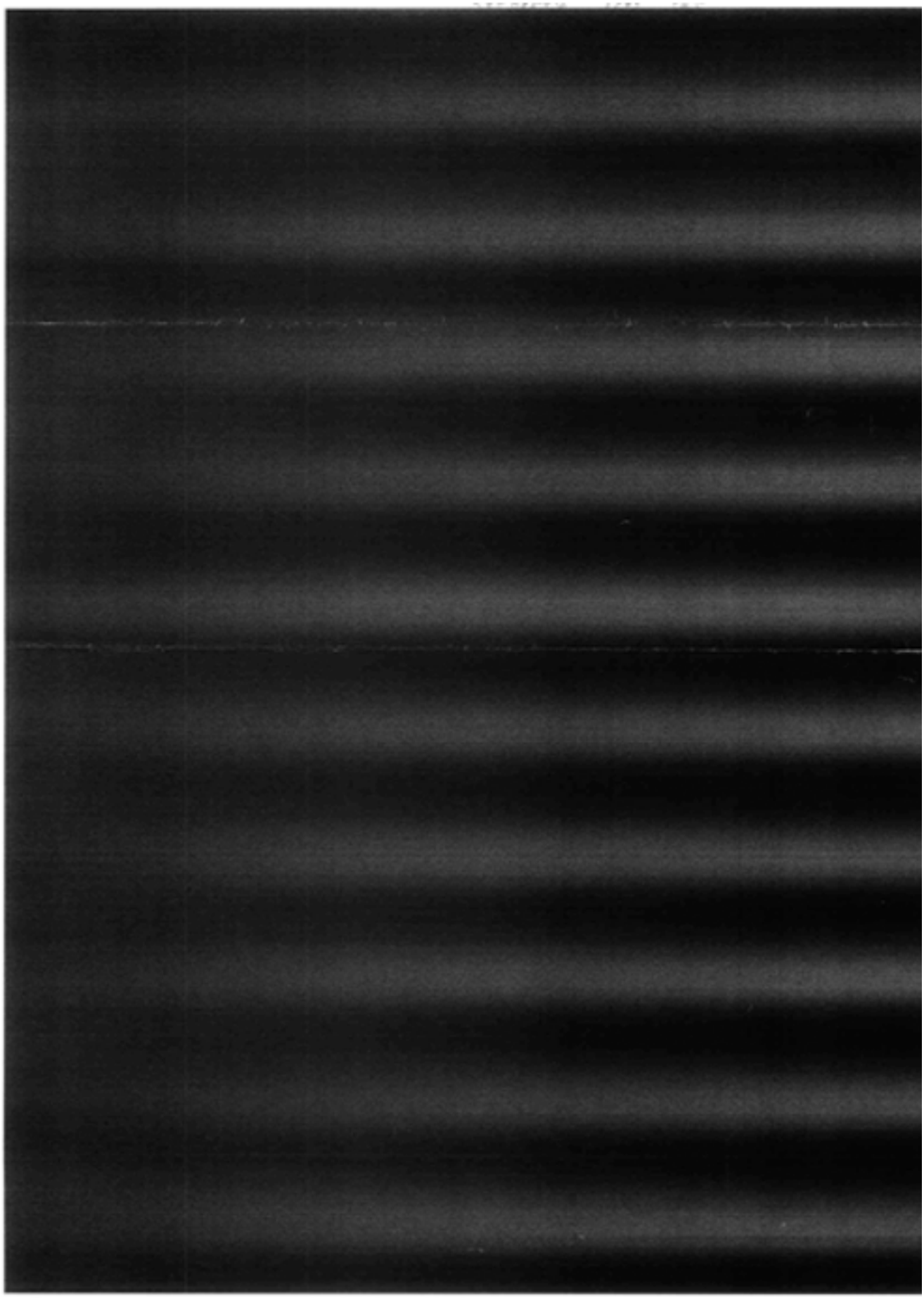

F-14-7

14.2.1.4.6 Horizontal Line/Blurring at Intervals of 94 to 95 mm

0007-7091

iR2270 / iR2870 / iR3570 / iR4570 / / iR2270N / / iR2870N / / iR3570N / / iR4570N / iR2230 / / / iR3530 /

<Cause>
The coefficient of friction on the surface of the photosensitive drum where the edge of the cleaning blade remains in contact tends to change, causing uneven rotation and thus blurring.
This problem tends to occur during the initial period of use (less than 10K), when the coefficient of friction is relatively even, or when a halftone image is generated after leaving the machine alone for 1 to 2 days. This problem, on the other hand, tends to disappear when about 10 printouts are made.
This problem can also occur when the drum unit is taken out of and put back in the machine, with the edge of the cleaning blade forcing itself against the surface of the photopositive drum and increasing the friction.
<Field Remedy>
Make about 10 copies of the Test Chart.
<Image Sample>

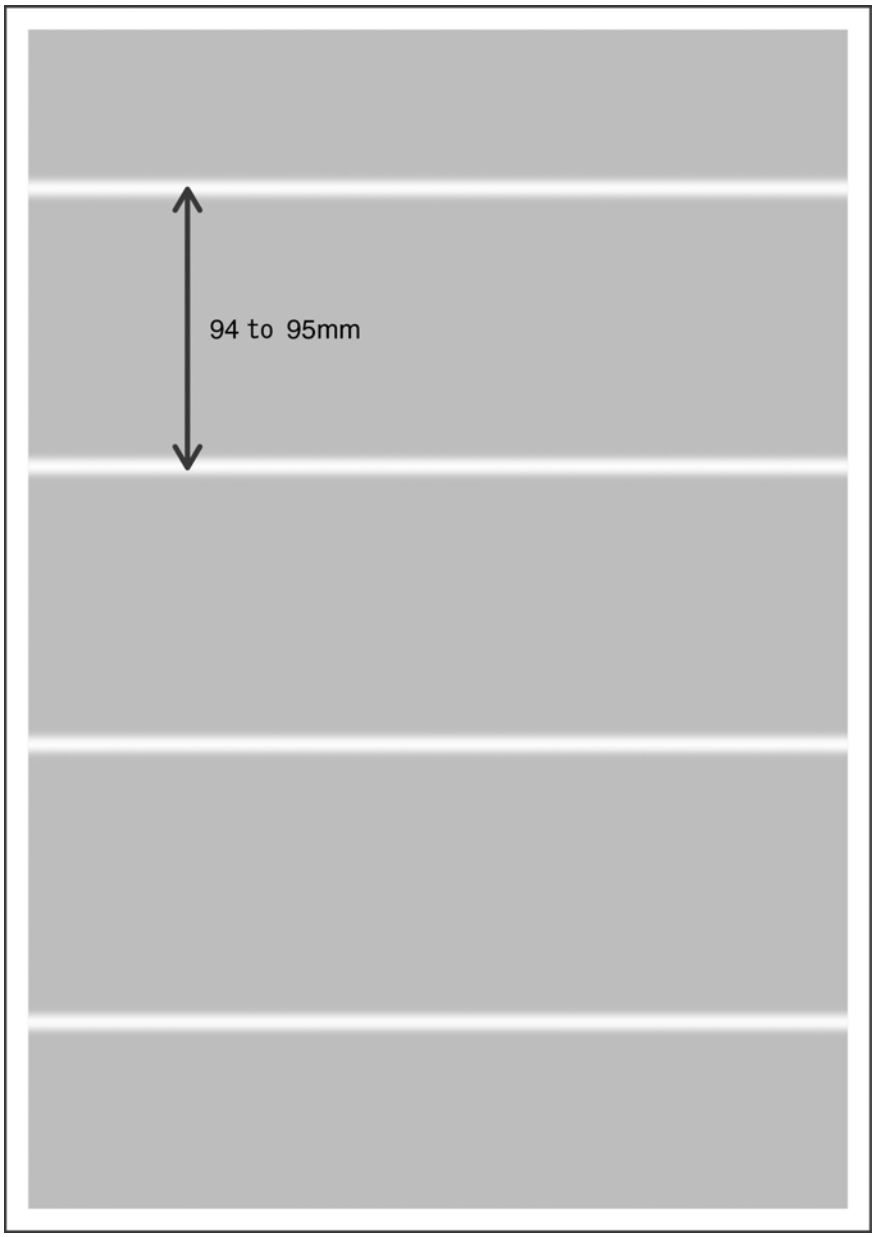

F-14-8

14.2.1.4.7 White Lines in Sub Scanning Direction

0007-7465

iR2270 / iR2870 / iR3570 / iR4570 / / iR2270N / / iR2870N / / iR3570N / / iR4570N / iR2230 / / / iR3530 /

<Cause>
The presence of foreign matter inside the developing assembly can make its way to the developing cylinder, preventing toner from being evenly deposited on the cylinder and, thus causing white lines.
<Field Remedy>
Replace the Developing Assembly
<Image Sample>

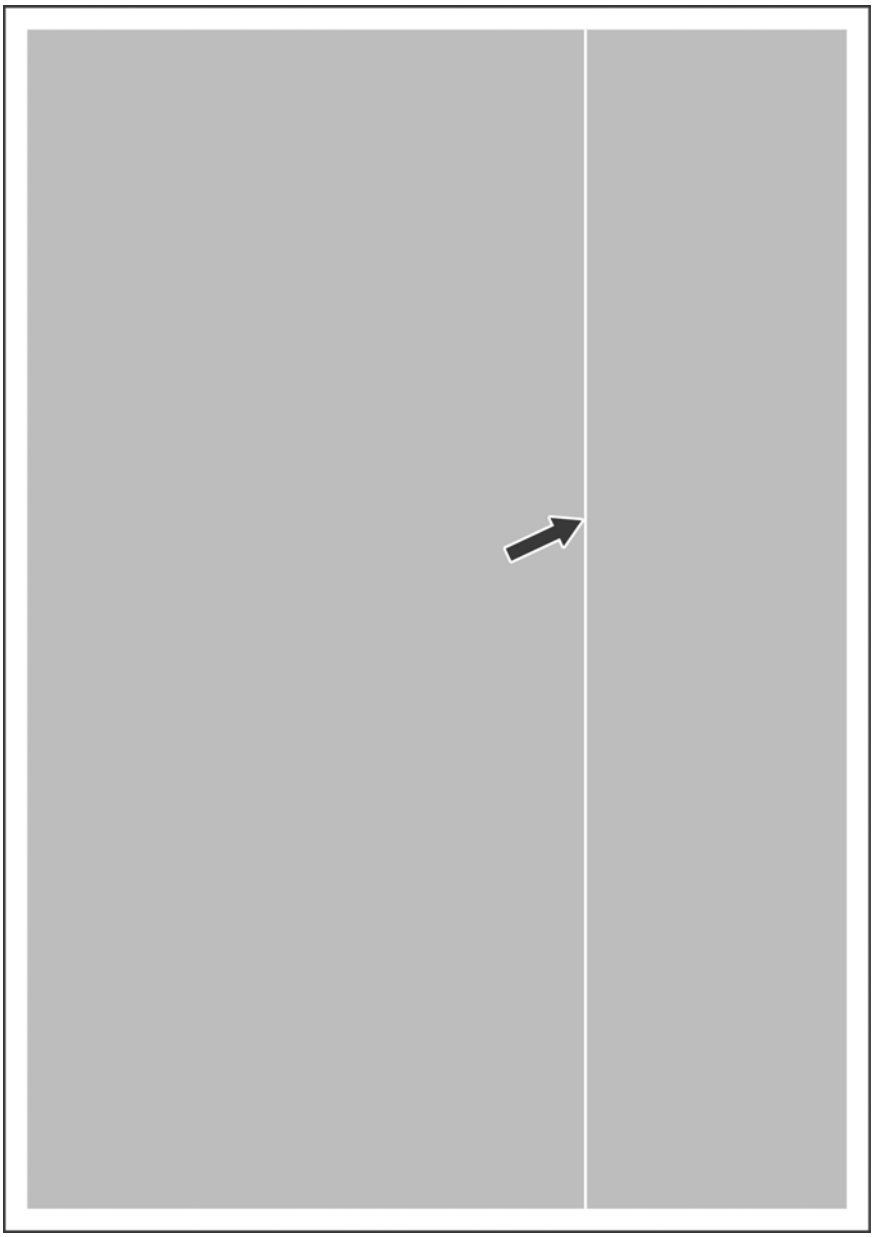

F-14-9

<Note>
If you remove the right door or the drum unit when replacing the fixing assembly and work with the developing assembly inside the machine, the developing cylinder will remain exposed and become subjected to dust or other foreign matter. For this reason, it is important to remove the developing assembly as well as the drum unit when disassembling and assembling the image formation or fixing system. This, however, does not apply if you are simply replacing the drum unit.
If you have removed the developing assembly, be sure to place it on a clean sheet of paper to protect it from dust.

14.2.1.5 Smudged/Streaked

14.2.1.5.1 Stray Toner Along Fine Lines

0007-7083

iR2270 / iR2870 / iR3570 / iR4570 / / iR2270N / / iR2870N / / iR3570N / / iR4570N / iR2230 / / / iR3530 /

<Cause>
The moisture held in paper evaporates in response to the heat from the fixing assembly, thus causing toner to fly astray. This problem tends to occur when paper has low resistance and in a high temperature/high humidity environment.
<Field Remedy>
Use the following service mode item to decrease the developing bias, thus suppressing the symptom:
COPIER>OPTION>BODY>FIX-SMR
0: default
1: decrease the developing bias by a single step (-20 V)
2: decrease the developing bias by 2 steps (-40 V)
If '2' is selected, the lines can become thinner.
<Image Sample>

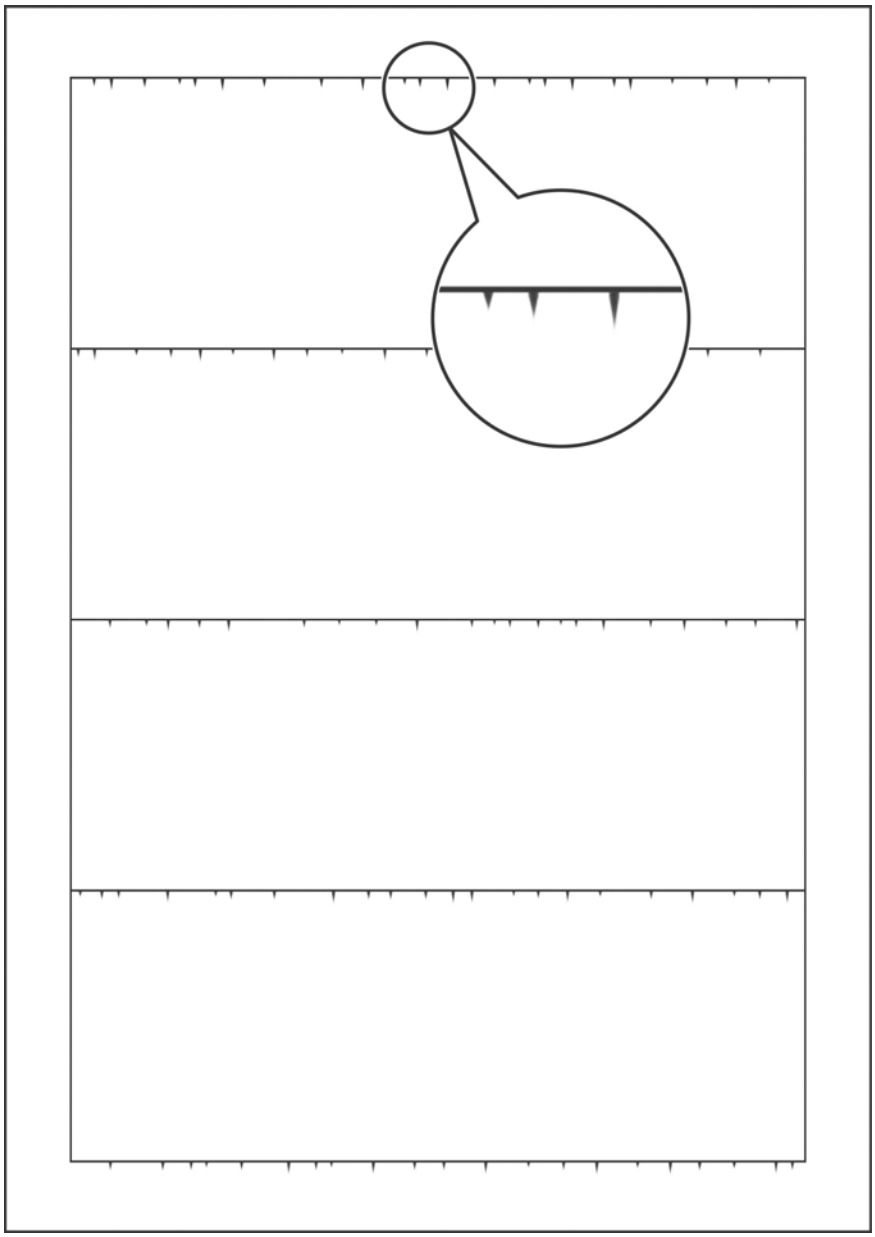

F-14-10

14.2.1.5.2 Soiled Image Leading Edge

0007-7089

iR2270 / iR2870 / iR3570 / iR4570 / / iR2270N / / iR2870N / / iR3570N / / iR4570N / iR2230 / / / iR3530 /

<Cause>
This problem occurs when paper moves between the photosensitive drum and the transfer roller. When the photopositive surface comes close to or into contact with the toner-coated surface of paper, the toner layer can become shifted toward the trailing edge of the paper. This problem tends to be conspicuous when the toner layer is relatively high against the width of lines (about 0.2 to 0.6 mm) and, in addition, when the lines are at a right angle to the feed direction (axial direction of the photosensitive drum).
<Field Remedy>
Use the following service mode item to decrease the developing bias, thus suppressing the symptom:
COPIER>OPTION>BODY>FIX-SMR
0: default
1: decrease the developing bias by a single step (-20 V)
2: decrease the developing bias by 2 steps (-40 V)
If '2' is selected, the lines can become thinner.
<Image Sample>

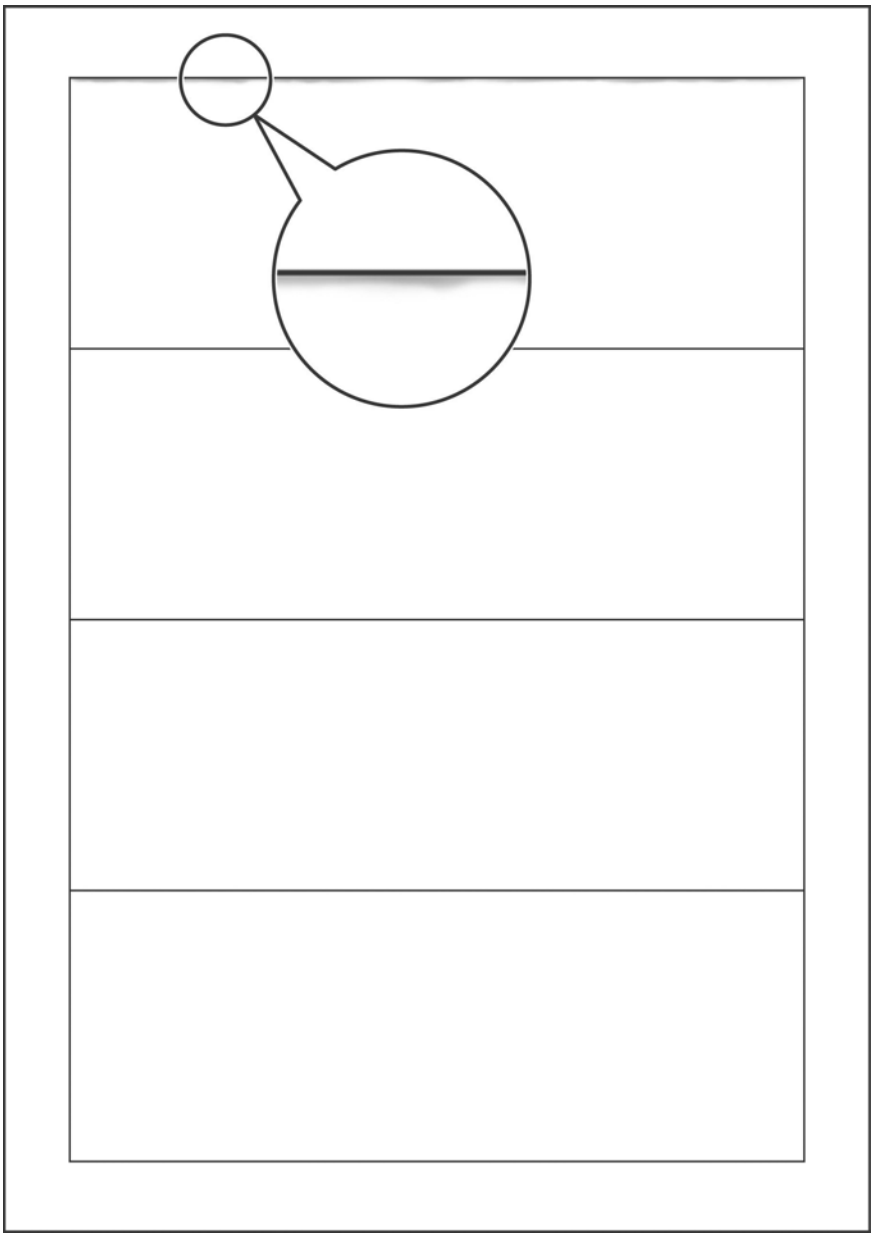

F-14-11

14.2.1.5.3 Black Dots

0007-7093

iR2270 / iR2870 / iR3570 / iR4570 / / iR2270N / / iR2870N / / iR3570N / / iR4570N / iR2230 / / / iR3530 /

<Cause>
On some types of paper (especially those with a high calcium carbonate content), toner offset to the fixing film can start to cake, moving from the fixing film or the pressure roller to the face or back of paper.
<Field Remedy>
Use the following service mode item to change the timing at which the fixing pressure roller is cleaned:
COPIER>OPTION>BODY>FIX-CLN
0: disable cleaning (default)
1: execute cleaning during last rotation every 500 printouts
2: execute cleaning during last rotation every 200 printouts
3: execute cleaning during last rotation every 100 printouts
<Image Sample>

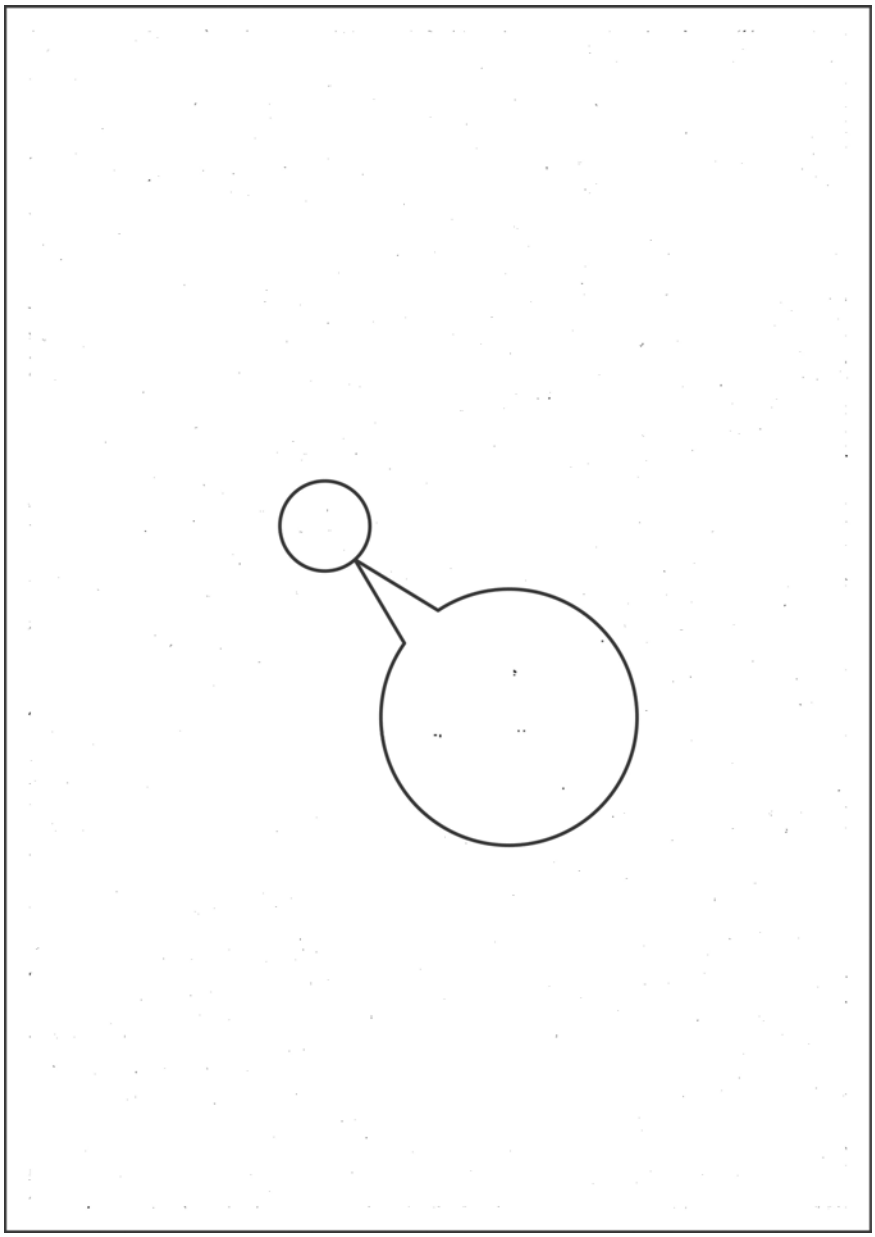

F-14-12

14.2.1.6 Ghost/Memory

14.2.1.6.1 Ghost

0007-7096

iR2270 / iR2870 / iR3570 / iR4570 / / iR2270N / / iR2870N / / iR3570N / / iR4570N / iR2230 / / / iR3530 /

<Cause>
This problem tends to occur when there are both residual toner and fresh toner on the developing cylinder and, thus, difference in charge between these two kinds of toner.
<Field Remedy>
Make several copies of a solid image.
<Image Sample>

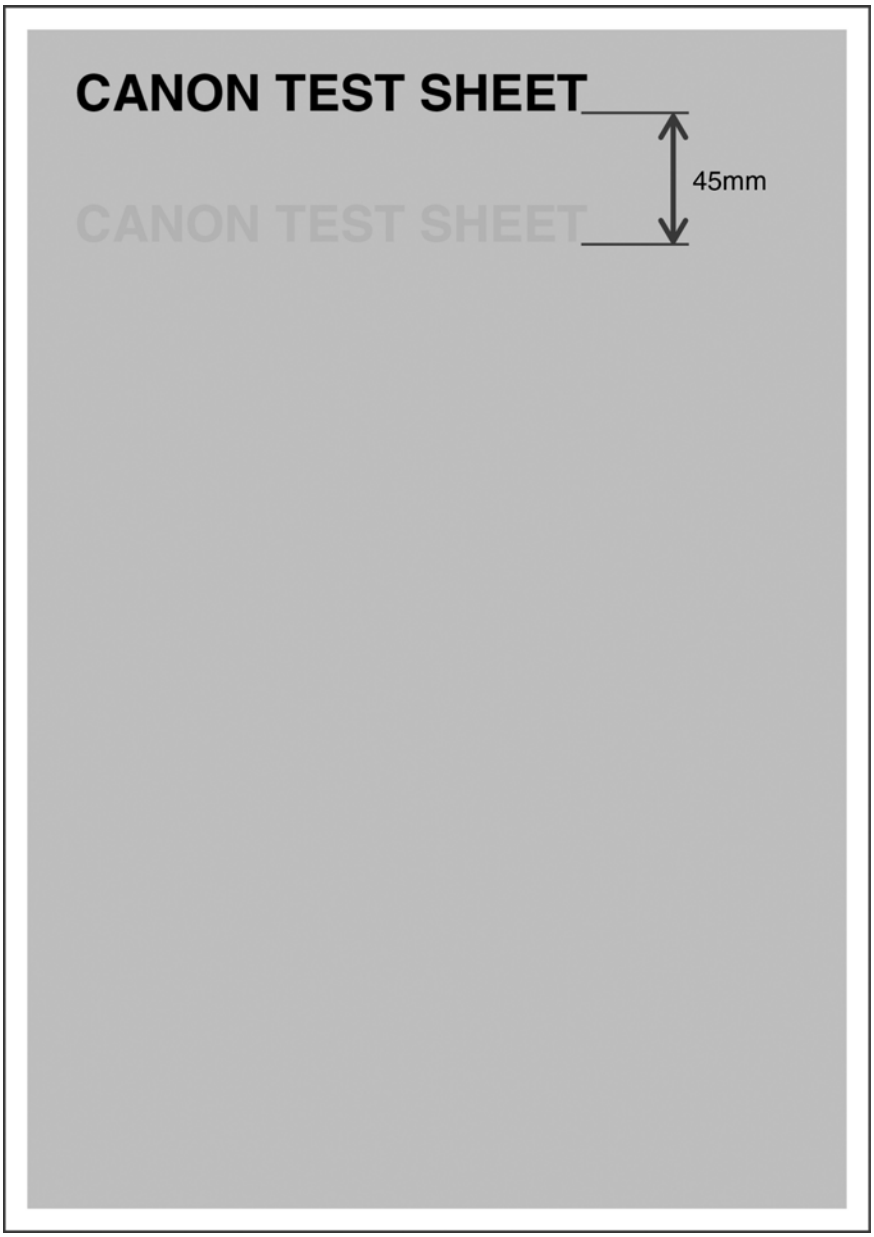

F-14-13

14.2.1.7 Stretching/Shrinking

14.2.1.7.1 Distorted line or jagged line occurs when copying drawing or document including ruled line: Because of defective laser scanner assembly

0010-4144

iR2270 / iR2870 / iR3570 / iR4570 / / / / / iR2230 / / / iR3530 / / / / /

[Inspected by Canon Inc.]

Description

Random distorted (jagged) line sometimes occurred in the sub scanning direction when copying a drawing. However, this symptom was corrected by replacing the laser scanner assembly with a new one.

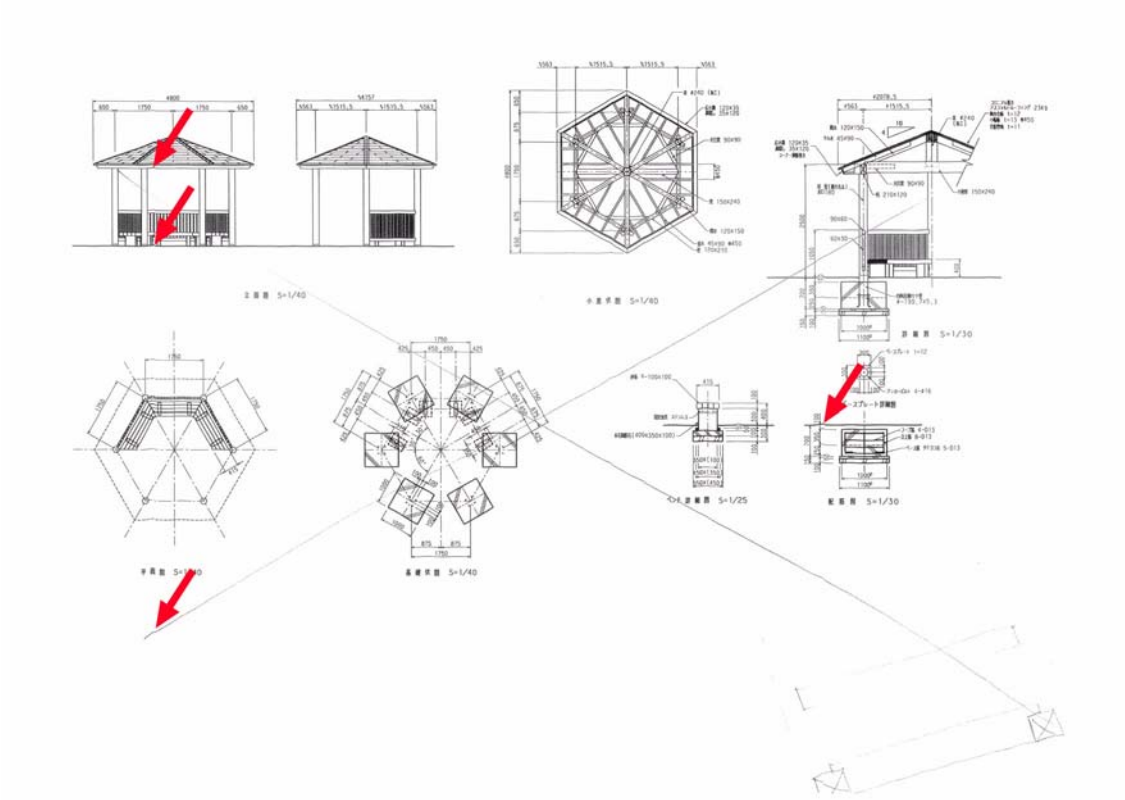

F-14-14

Field Remedy
When a faulty image like the above has occurred, replace the laser scanner assembly with a new one.
Note: After replacing the laser scanner assembly, never fail to input the "Delay value" on the label attached to the old laser scanner assembly into the following service mode:
[Service mode > COPIER > ADJUST > LASER > LA-DELAY]
FM2-0276 Laser Scanner Assembly (for iR2270/2870 series)
FM2-0334 Laser Scanner Assembly (for iR3570/4570 series)

14.2.1.7.2 DADF-N1: Image stretch or shrinkage (in sub scanning direction) occurs in stream reading upon installation

0010-6550

iR2270 / iR2870 / iR3570 / iR4570 / / iR2270N / / iR2870N / / iR3570N / / iR4570N / iR2230 / / / iR3530 / / / / /

[Case in the field]

Description
In the field, image stretch or shrinkage occurred depending on the types of paper used. This was because the service mode item "LA-SPEED" (adjustment of original feeding speed in stream reading) was not executed upon installation.

Field Remedy
When the symptom has occurred, follow the procedure below.
1. Place the Test Chart in the DADF-N1 and make a copy. Refer to the output as "Copy A."
2. Compare the Test Chart and Copy A in terms of the length of the image in feed direction.
3. In service mode [FEEDER > ADJUST > LA-SPEED], adjust the setting as follows. (Unit of adjustments: 0.1%)
- As a result of the comparison in Step2, if the image of Copy A is longer, increase the setting to shrink the image.
- As a result of the comparison in Step2, if the image of Copy A is shorter, decrease the setting to stretch the image.

14.2.1.7.3 Output image is scaled down in original feed direction because CIS read position is shifted: After replacing paper pick-up assembly for DADF-N1

0011-6435

iR2270 / iR2870 / iR3570 / iR4570 / / iR2270N / / iR2870N / / iR3570N / / iR4570N / iR2230 / / / iR3530 / / / / / / /

[Case in the field]

Description
In the field, the CIS read position was shifted after replacement of the paper pick-up assembly for the DADF-N1, the output image was scaled down in the original feed direction. When the symptom has occurred, perform the following field remedy.

Field Remedy
1. CIS read position adjustment
Service mode > COPIER > Function > INSTALL > STRD-POS > OK
2. Magnification adjustment
In Service mode [FEEDER > Adjust], decrease the setting value for [LA-SPEED]. (Adjustable range: -30 to 30).
Note: Increasing this setting value will increase the original feed speed, thus scaling down the output image. Conversely, decreasing the value will decrease the original feed speed, thus scaling up the output image.

14.2.2 Malfunction

14.2.2.1 No Power

14.2.2.1.1 Upon installation, machine does not start up / LCD does not come on although main power indicator on control panel lights up: Poor connection of ROM/RAM

0008-3477

iR2270 / iR2870 / iR3570 / iR4570 / / iR2270N / / iR2870N / / iR3570N / / iR4570N / iR2230 / / / iR3530

[Inspected by Canon Inc.]
Field Remedy
In inspection, reinsertion of the ROM corrected the symptoms. If any of the symptoms mentioned above occurs during installation, reinsert the BOOTROM or the RAM.

14.2.2.1.2 Progress bar stops at midpoint and machine fails to start/Unable to power-on: Because J1016 connector is broken

0009-9821

iR2270 / iR2870 / iR3570 / iR4570 / / / / / iR2230 / / / iR3530 / / / /

[Inspected by Canon Inc.]
Description
In the field, the symptom occurred because the J1016 connector on the Main Controller PCB (for the cable connecting to the reader assembly) was broken.
Field Remedy
When the symptom occurs, check the connector for breakage. If it is broken, replace the Main Controller PCB with a new one.
FM2-3226 Main Controller PCB Assembly

14.2.2.1.3 LCD on control panel does not display anything upon installation: Because Main Controller PCB is faulty

0009-9822

iR2270 / iR2870 / iR3570 / iR4570 / / / / / iR2230 / / / iR3530 / / / /

[Inspected by Canon Inc.]
Description
As a result of inspection, it was found that the symptom was solved by replacing the main controller PCB with a new one.
Field Remedy
When the symptom occurs, reinsert the connectors on the Main Controller PCB, the BootROM and the RAM. If the symptom still occurs, replace the Main Controller PCB with a new one.
FM2-3226 Main Controller PCB Assembly

14.2.2.1.4 No power/machine does not start up/LCD displays nothing: Because Main controller PCB is faulty

0010-5007

iR2270 / iR2870 / iR3570 / iR4570 / / / / / iR2230 / / / iR3530 / / / /

[Inspected by Canon Inc.]
Description
When the startup screen does not appear on the LCD although the main power indicator on the control panel comes on, follow the procedure below.
Field Remedy
Remove the rear cover, and then check if the registers R64 (Fig.[3]), R65 (Fig.[4]), and R66 (Fig.[5]) on the main controller PCB remain supplied with 3.3V in a state in which the main power switch is turned ON.
a. If 3.3V is not applied to either of the above-mentioned resisters, and the resister remains supplied with nearly 0V, follow the procedure below:

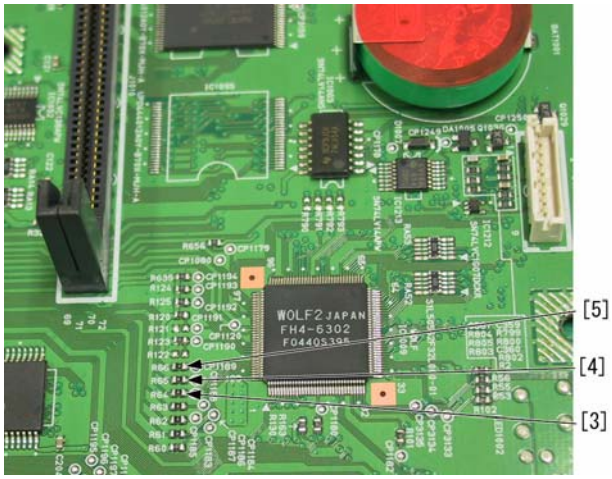

F-14-15

1. Hold down the control panel switch for more than 3 sec., press the Start key on the LCD, and then turn the main power switch OFF referring to the instruction displayed on the LCD.
2. Connect the resister switch board (Fig.[6]: FH9-0807) to the connector J1013 (Fig.[7]) on the main controller PCB.

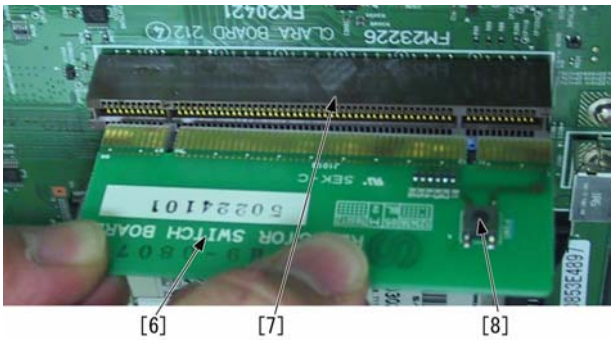

F-14-16

3. Turn the main power switch ON and then check to make sure that the startup screen is displayed on the LCD.
4. If the startup screen does not appear, push the switch [8] on the resister switch board for only 2 sec. in a state in which the main power switch is turned ON, turn the main power switch OFF in accordance with the procedure explained in step1 above, turn the main power switch ON 10 sec. later, and then, check to make sure that the startup screen appears on the LCD.
Note: If the switch (Fig.[8]) is held down for more than 2 sec., the main controller PCB may be damaged. Therefore, be sure to hold down the switch for less than 2sec.
5. If the startup screen does not appear, replace the main controller PCB with a new one.
b. If 3.3V is applied to all the resisters, reinsert all the connectors of the main controller PCB, the BOOTROM, and the RAM. If the symptom still occurs, replace the main controller PCB with a new one.
FH9-0807 Resister Switch Board
MF2-4550 Main Controller PCB Assembly

14.2.2.1.5 LCD displays nothing/progress bar on LCD stops at one-fifth point and machine repeats restart: Because main controller PCB is faulty

0010-6604

iR2270 / iR2870 / iR3570 / iR4570 / / iR2270N / / iR2870N / / iR3570N / / iR4570N / iR2230 / / / iR3530 / / / / /

[Inspected by Canon Inc.]

Description

In the field, the progress bar on the startup screen stopped at one-fifth point and the LCD became black. Then, the startup screen reappeared on the LCD, and the machine repeated restart.

Field Remedy

When the symptom occurs, check if 3.3V is supplied for the resisters R64 (Fig.[3]), R65 (Fig.[4]), and R66 (Fig.[5]) on the main controller PCB. If such voltage is not applied to either of these resisters, cope with such power supply condition using the service parts resister switch board (FH9-0807).

FH9-0807 Resister Switch Board
FM2-4550 Main Controller PCB Assembly (For iR4570 series)
FM2-4551 Main Controller PCB Assembly (for iR2230)

14.2.2.2 Control Panel-Related

14.2.2.2.1 LCD on control panel remains black: Pilot lamp blinks

0011-6429

iR2270 / iR2870 / iR3570 / iR4570 / / iR2270N / / iR2870N / / iR3570N / / iR4570N / iR2230 / / / iR3530 / / / / / / /

[Case in the field]

Description

In the field, the LCD on the control panel remained black and the pilot lamp blinked because the all day power PCB and the BootROM were faulty.

Field Remedy

1. Turn the main power switch OFF > unplug the power code > insert the resister switching board (FH9-0807) to an empty PCI on the main controller PCB > plug the power code > turn the main power switch ON.
2. If the symptom still occurs, replace the all day power PCB with a new one. If the pilot lamp still blinking, replace the BootROM with a new one.
FK2-0340 All Day Power PCB Assembly

14.2.2.3 Counter Malfunction

14.2.2.3.1 Card Reader-C1: Card cannot be recognized (Card No. 2500)

0010-4186

iR2270 / iR2870 / iR3570 / iR4570 / / / / / iR2230 / / / iR3530 / / / /

[Case in the field]

Description

According to the specification of the card reader, any number from "1" through "2001" can be entered as the smallest number of the card. Since 1000 cards starting with the entered number are acceptable, in order to make the card reader recognize the card "2500", enter any number from "1501" through "2001" as the smallest number.

Field Remedy

In service mode [COPIER> Function> INSTALL> CARD], enter any number from "1501" through "2001".

14.2.2.4 Malfunction/Faulty Detection

14.2.2.4.1 1011 Jam Code: Occurs on machine with finisher-S1 when executing APVC control (DGAMMA) in service mode

0009-9826

iR2270 / iR2870 / iR3570 / iR4570 / / / / / iR2230 / / / iR3530 / / / /

[Inspected by Canon Inc.]

Field Remedy

Upgrade the ROM on the DC Controller PCB to version 4.01 or later. With these versions, the APVC control sequence is modified so as to support the machine equipped with the finisher-S1. When you want to connect the finisher to the machine, but it is impossible to upgrade the ROM right away, execute the APVC control first and then connect the finisher.

- 1011 Jam Code: Feed stationary jam at inlet path sensor (PI5) of finisher-S1

14.2.2.4.2 Size of paper on manual feed tray is detected incorrectly

0009-9827

iR2270 / iR2870 / iR3570 / iR4570 / / / / / iR2230 / / / iR3530 / / / /

[Inspected by Canon Inc.]

Field Remedy

When the machines with the following serial numbers cause the symptom and they have the history on replacement of the DC controller, follow the steps below to register the basic paper width of the manual feed tray.

1. Place an A4R size paper on the manual feed tray and set the size guide to the A4R width.
2. In service mode [COPIER > FUNCTION > CST > MF-A4R], press OK to register the width.
3. As for an A6R size and A4 size papers, follow the same steps as the avobe. (In service mode, select [MF-A6R] for the A6R paper and [MF-A4] for the A4 size paper.)
3. In service mode [COPIER > ADJUST > CST-ADJ > MF-A4R/MF-A6R/MF-A4], check the registered width of each paper, and then write down the width on the service label.

Description

In the inspection, the symptom occurred on the machines with the following serial numbers, because the paper width detection resister on the DC Controller PCB was different from that on the service part DC Controller PCB.

Serial Number
[iR4570]
120V machine: KAY00001 to KAY00002
230V machine for EUR: KAZ00001 to KAZ00013
230V machine: KBB00001 to KBB00005
[iR3570]
230V machine for EUR: KBG00001 to KBG00006
[iR2870]
120V machine: KBM00001 to KBM00002
230V machine for EUR: KBN00001 to KBN00005
230V machine: KBP00001 to KBP00006
[iR2270]
230V machine for EUR: KBU00001 to KBU0002

14.2.2.4.3 DADF-N1: False detection of document size occurs upon installation

0010-4189

iR2270 / iR2870 / iR3570 / iR4570 / / / / / iR2230 / / / iR3530 / / / /

[Case in the field]

Description

When the symptom occurs, follow the procedure below to adjust the tray width.

1. In service mode [FEEDER > FUNCTION], select [TRY-A4] or [TRY-LTR].
2. Move the tray side guide to the index "A3/A4" or "LTR/11x17".
3. On the LCD, highlight the service mode item that has been selected in the step 1, and press [OK] to register the A4 or LTR width.
4. In service mode [FEEDER > FUNCTION], select [TRY-A5R] or [TRY-LTRR].
5. Move the tray side guide to the index "A5R" or "STRM/LTRR/LGL".
6. On the LCD, highlight the service mode item that has been selected in the step 4, and press [OK] to register the A5R or LTRR width.
7. Press and hold the control panel switch for 3 seconds or more, press the Start button on the LCD, and then turn the main power switch OFF. Ten seconds later, turn the main power switch ON again.

14.2.2.4.4 No paper indication does not disappear/paper lifting plate for cassette3 and 4 does not ascend: Cassette Feeding Unit-Y1/Y2

0010-6733

iR2270 / iR2870 / iR3570 / iR4570 / / iR2270N / / iR2870N / / iR3570N / / iR4570N / iR2230 / / / iR3530 / / / / /

[Inspected by Canon Inc.]

Description

As a result of inspection, the following was found: The paper lifting plate for the cassette 3 and 4 does not ascend and no paper indication does not disappear because J214-1 of the PS controller has poor connection.

Field Remedy

When the symptom has occurred, check if J214-1 of the PS controller is removed from the housing, and then re-insert it if necessary.

FM2-2764 PS Controller Assembly

14.2.2.4.5 None of settings is displayed in [Tray Designation]: Inner 2way tray-D1 and copy tray-J1

0011-2573

iR2270 / iR2870 / iR3570 / iR4570 / / iR2270N / / iR2870N / / iR3570N / / iR4570N / iR2230 / / / iR3530 / / / / / / /

[Manual-related]
Description
When connecting the inner 2way tray-D1 or the copy tray-J1 to the machine, be sure to perform the following procedure to set up the necessary service mode item. Otherwise, none of the settings will be displayed in the Tray Designation screen under user mode.
Field Remedy
a. When connecting the inner 2way tray-D1
In service mode [COPIER > Option > ACC], set [IN-TRAY] at "1".
b. When connecting the copy tray-J1
In service mode [COPIER > Option > ACC], set [OUT-TRAY] at "1".
Note: The same holds true for the iR4570/3570 machines that come standard with an expansion delivery unit.

14.2.2.4.6 Only "Book 2-sided" and "1 2-sided" buttons appear under "Two-sided" button

0011-6428

iR2270 / iR2870 / iR3570 / iR4570 / / iR2270N / / iR2870N / / iR3570N / / iR4570N / iR2230 / / / iR3530 / / / / / / /

[Case in the field]
Description
In the field, a connector of the I/F cable between the main body and the DADF-N1 had bad connection, thereby allowing only "1 2-sided" and "Book 2-sided" buttons to appear under "Two-sided" button on the LCD.
Field Remedy
Enter service mode and check if "FEEDER" button is displayed under "COPIER" button; if not, re-insert the I/F cable connector of the DADF-N1. If the symptom still occurs, re-insert the lattice connector in the main body side or the connector of the DC controller (in the DADF-N1 side).

14.2.2.4.7 Cassette Feeding Unit-Y2 cannot be recognized: Because connectors on DC controller PCB have bad connection

0011-6434

iR2270 / iR2870 / iR3570 / iR4570 / / iR2270N / / iR2870N / / iR3570N / / iR4570N / iR2230 / / / iR3530 / / / / / / /

[Case in the field]
Description
In the field, the connectors on the DC controller PCB had bad connection, and as a result, the cassette feeding unit-Y2 could not be recognized.
Field Remedy
When the symptom occurs, re-insert the connectors J325 and J326 on the DC controller PCB.

14.2.2.5 Noise

14.2.2.5.1 Abnormal sound occurs during last rotation: Because upper hinge plate is faulty

0010-6580

iR2270 / iR2870 / iR3570 / iR4570 / / iR2270N / / iR2870N / / iR3570N / / iR4570N / iR2230 / / / iR3530 / / / / /

[Inspected by Canon Inc.]
Description
As a result of inspection, it was found that abnormal sound occurred during last rotation that started just before a copy job was completed, and replacement of the upper hinge plate for the right door solved the symptom.
Field Remedy
When the symptom has occurred, replace the upper hinge plate with a new one.
FC6-4815 Upper Hinge Plate

14.2.2.5.2 Abnormal (buzzing) sound occurs when feeding paper from cassette of machine or Cassette Feeding Unit-Y1

0011-2575

iR2270 / iR2870 / iR3570 / iR4570 / / iR2270N / / iR2870N / / iR3570N / / iR4570N / iR2230 / / / iR3530 / / / / / / /

[Inspected by Canon Inc.]
Description
In the field, abnormal (buzzing) sound was caused by the feed roller or the separation roller because paper was fed into the machine in a bunch; based on the results of inspection, however, it was found that the new type separation roller was implemented to the machines and the cassette feeding units with the following serial numbers for the purpose of reducing the abnormal (buzzing) sound. When the symptom has occurred, replace the separation roller with a new type one.
Note: In the event of the symptom, be sure to replace only the separation roller [1] with a new type one although the same roller (FC5-6934) is shared between the separation roller [1] and the feed roller [2].

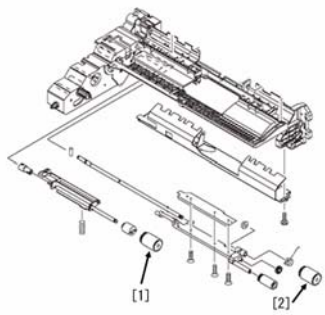

F-14-17

- The serial numbers of the machines
iR2230
120V: KJC06517 and later/230V: EUR KJD09529 and later/230V: KJE00527 and later
iR2270

120V: SLH00790 and later/230V: EUR KGL28273 and later/230V: KGM01375 and later/230V(CA): SLF00298 and later/220V (CN): KJL00191 and later/120V (TW): KJN00020 and later
iR2830
120V: KJY02039 and later
iR2870
120V: SLG00328 and later/230V (EUR): KGD05691 and later/230V: KGE00094 and later/230V (CA): SLD00034 and later/220V (CN): KJP00181 and later/120V (TW): KJR00039 and later
iR3530
120V: KJG04808 and later/230V (EUR): KJH03769 and later/230V: KJJ00355 and later
iR3570
120V: SKV00221 and later/230V (EUR): KFW09421 and later/230V: KFX00880 and later/230V (CA): SKT00049 and later/220V (CN): KJS00106 and later/120V (TW): KJU00343 and later
iR4570
120V: SKU00209 and later/230V (EUR): KFQ05358 and later/230V: KFR00577 and later/230V (CA): SKQ00059 and later/220V (CN): KJV00113 and later/120V (TW): KJX00047 and later
- The serial numbers of the cassette feeding unit-Y2
SQN03463 and later

Cause

As paper had no clean-cut edge or has high resistance, it was fed to the feed roller or the separation roller in a bunch.
FC6-6661 Separation Roller

14.2.2.5.3 Noise at Time of Pickup from the Cassette

0007-7052

iR2270 / iR2870 / iR3570 / iR4570 / / iR2270N / / iR2870N / / iR3570N / / iR4570N / iR2230 / / / iR3530

<Cause>
When double-feeding occurs at time of pickup, the contact between the sheets and the feed roller and the separation roller cause the separation roller assembly to vibrate.
<Field Remedy>
Replace the roller with a sponge retard roller (FB5-0873; to be used as needed; cassette only).

14.2.2.6 User Warning Message

14.2.2.6.1 Message "Check the network connection." or "Check the TCP/IP." is displayed

0009-9829

iR2270 / iR2870 / iR3570 / iR4570 / / / / / iR2230 / / / iR3530 / / / /

[Case in the field]

Field Remedy

When using this machine without connecting to the network, follow the procedure below to prevent the display of such messages.
1. In user mode [System Settings > Network Settings > Ethernet Driver Settings > Auto Detection], change the setting from [ON] to [OFF].
2. In user mode [System Settings > Network Settings > TCP/IP Settings > IP Address Settings > IP Address], enter the given IP address (e.g., 172.16.1.100).
3. Turn the control panel switch OFF and then turn the main power switch OFF/ON.
Note: Executing the step3 will protect the hard disk data of the machine.

14.2.2.6.2 Message "Close the drawer's lower right cover." is displayed: Because pedestal driver PCB is faulty

0010-4188

iR2270 / iR2870 / iR3570 / iR4570 / / / / / iR2230 / / / iR3530 / / / /

[Case in the field]

Description

In the field, the message was displayed. However, it was corrected by replacing the pedestal driver PCB with a new one.

Field Remedy

When the message has been displayed, re-insert all connectors of the pedestal driver PCB. If it is still displayed, replace the PCB with a new one.
FG3-3203 Pedestal Driver PCB Assembly

14.2.2.6.3 Message "You must insert a control card" is displayed on machine without control card

0011-2581

iR2270 / iR2870 / iR3570 / iR4570 / / iR2270N / / iR2870N / / iR3570N / / iR4570N / iR2230 / / / iR3530 / / / / / / /

[Case in the field]

Description

In the field, the message "you must insert a control card" was displayed when printing although the machine did not use the control card function. Additionally, abnormal values "512" and "1536" were displayed in service mode [COPIER > Option > ACC > COIN] and [COPIER > Option > USER > CONTROL], respectively; however, performing the field remedy below solved these symptoms.

Field Remedy

1. In service mode, make the following selection in sequence [COPIER > Function > CLEAR > CARD > OK]. Next, turn the control panel switch OFF, and then turn the main power switch OFF/ON. If the symptom still occurs, go to Step 2 and 3 below.
2. In service mode, make the following selection in sequence to output the P-PRINT printout: [COPIER > Function > MISC-P > P-PRINT > OK].
3. Service mode > COPIER > Function > CLEAR > OPTION > OK.
4. In service mode [COPIER > Option], check all the displayed setting values against the values on the P-PRINT printout generated in Step 2; if there is any difference, input the values on the P-PRINT printout. This is because Step 3 may reset all the setting values displayed under the Option screen to the default values (i.e., the values at time of RAM clear).

14.2.2.7 Other Defect

14.2.2.7.1 Unable to start Remote UI: Because SSL encrypting communication is available

0009-9820

iR2270 / iR2870 / iR3570 / iR4570 / / / / / iR2230 / / / iR3530 / / / /

[Inspected by Canon Inc.]

Description

In the field, the symptom was solved by setting the default key pair again after generating a key pair. When the symptom occurs with the SSL available, generate a key pair and set it as the default key pair following the procedure below.

Field Remedy

a. Generating a key pair
a-1. User mode > System Settings > Network Settings > TCP/IP Settings > Certificate Settings > Generate key > enter a name for the key > select the key length > press [Next] to go to the Digital Certificate Setting screen

a-2. Digital Certificate Setting screen > enter the date for [Start Date of Validity] > enter the date for [End Date of Validity] > enter one of the following: [Country Name]. [State], [City], Organization], [Organztion Unit], and [Shared Name] > press [Start Key Generation].
a-3. Press [Done] to close the User mode screen.
a-4. Turn OFF the control panel switch and the main power switch. 10 seconds or more later, turn the main power switch ON.
b. Setting the default key pair
b-1. User mode > System Settings > Network Settings > TCP/IP Settings > Certificate Settings > Key and Certificate List > select the key generated in the step [a] > Default Key Settings
b-2. Press [Done] to close the User mode screen.
b-3. Turn OFF the control panel switch and the main power switch. 10 seconds or more later, turn the main power switch ON.

14.2.2.7.2 What is key pair?

0009-9824

iR2270 / iR2870 / iR3570 / iR4570 / / / / / iR2230 / / / iR3530 / / / /

[Inspected by Canon Inc.]

Description

It is necessary to generate and register a key pair in order to use encrypted SSL communication. This machine has the preinstalled key pair and this key pair enables you to use encrypted SSL communication for IPP printing, e-mail and I-faxes, the Remote UI, and delivery device information.

14.2.2.7.3 BootROM writing error: Because main power switch is turned off when Boot software is being downloaded from service support tool (SST)

0010-4166

iR2270 / iR2870 / iR3570 / iR4570 / / / / / iR2230 / / / iR3530 / / / /

[Case in the field]

Description

Never turn the main power switch OFF when BOOT software is being downloaded from SST.
In the field, the symptom occurred because the caution displayed on the LCD was misunderstood and the main power switch was turned OFF while Boot software was being downloaded from SST. The symptom was not corrected even when the software was downloaded again.

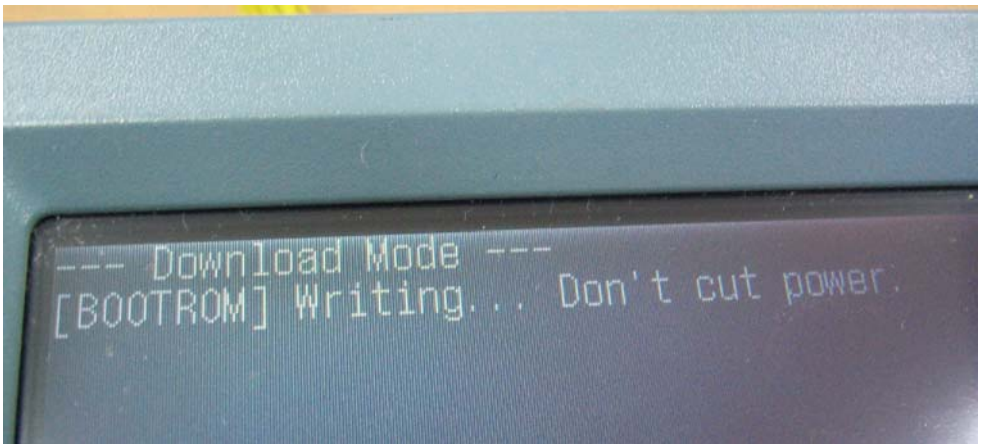

F-14-18

Field Remedy

When the symptom occurs, replace the BootROM with a new one, and then download the software again from SST.

14.2.2.7.4 Tray B is not displayed on Tray Designation screen under User Mode: After installing Inner 2-Way Tray-D1

0010-4168

iR2270 / iR2870 / iR3570 / iR4570 / / / / / iR2230 / / / iR3530 / / / /

[Case in the field]

Description

1. In service mode [COPIER > OPTION > ACC], set "1" in [IN-TRAY].
2. Press and hold the control panel switch for more than three seconds, and then turn the main power switch OFF/ON.
3. In user mode [Common Settings > Tray Designation], check to make sure that Tray B is added to the tray designation menu in the Tray Designation screen.

14.2.2.7.5 LCD on control panel does not come on remaining black (the main power indicator alone comes on): Because PS controller assembly is faulty

0010-4171

iR2270 / iR2870 / iR3570 / iR4570 / / / / / iR2230 / / / iR3530 / / / /

[Inspected by Canon Inc.]

Description

As a result of inspection, it was found that the symptom is solved by replacing the PS controller assembly with a new one.

Field Remedy

When the symptom occurs, follow the procedure below.
1. Connect the red lead terminal of a tester to J303-1 of the main power supply PCB and the black lead terminal to the ground and make sure that 13V DC is not placed there.
2. Turn the main power switch OFF, remove the connector that is connected to J302 (Two-pin connector) on the main power supply PCB, and then turn the main power switch ON.
3. Using the test, make sure that 13V DC is placed between J303-1 on the main power supply PCB and the ground.
4. If 13V DC is placed there, replace the PS controller assembly with a new one.
FM2-2764 PS Controller Assembly
FM2-0260 Main Power Supply PCB Assembly (100V/120V)
FM2-0245 Main Power Supply PCB Assembly (230V)

14.2.2.8 Part Breakage/Detachment

14.2.2.8.1 Toner is not supplied upon installation: Because shutter arm is damaged

0010-4170

iR2270 / iR2870 / iR3570 / iR4570 / / / / / iR2230 / / / iR3530 / / / /

[Inspected by Canon Inc.]

Description

As a result of inspection, it was found that the symptom occurred because the shutter arm that opens/closes the supply mouth of the sub hopper was damaged.

Field Remedy

When the symptom occurs, execute the following service mode to make a test run of the toner feedscrew motor. If operating noise occurs, check the sub hopper shutter for damage. If no noise occurs, it is thought that the toner feedscrew motor is faulty or that a fault occurs between the connector J3205 and the DC controller PCB.

[Service mode > COPIER > FUNCTION > PART-CHK > MTR > enter "9" > OK > MTR-OON].

FC5-1265 Shutter

14.2.3 Printing/scanning

14.2.3.1 No Output

14.2.3.1.1 Machine accepts print job but does not run it

0010-4128

iR2270 / iR2870 / iR3570 / iR4570 / / / / / iR2230 / / / iR3530 / / / /

[Case in the field]

Description

In the field, the following occurred: When the LAN cable is temporarily disconnected from a PC, since the machine is receiving a print job from the PC, it fails to run the job, and moreover, fails to run print jobs that are sent after reconnection of the LAN cable, even if it can accept such jobs.

Field Remedy

On the System Monitor screen, cancel the print job, of which transmission was not completed. This will allow the machine to run print jobs that were sent after reconnection of the LAN cable. In case that the causal job is not canceled, the machine cancels it 5 minutes later in accordance with the specifications and starts running the print jobs that are stopped by the causal job.

14.2.4 Network

14.2.4.1 Ping Failure

14.2.4.1.1 Ping failure sometimes occurs

0010-4116

iR2270 / iR2870 / iR3570 / iR4570 / / / / / iR2230 / / / iR3530 / / / /

[Inspected by Canon Inc.]

Description

In the field, Ping failure occurred because the Ping command was executed within 60 seconds after this machine started up. This is because the spanning tree process performed between switching hubs prevents them from communicating with each other immediately after the machine connects to a switching hub. Assuming this problem, the startup time (default: 60 sec.) is required to be set up for the purpose of delaying the start of communication between this machine and a switching hub.

Field Remedy

When the symptom occurs, start the ping command 60 seconds or more after the machine starts up.

- How to start PING command:

User mode > System Settings > Network Settings > TCP/IP Settings > PING Command

- How to change Startup Time:

User mode > System Settings > Network Settings > Startup Time Settings (Settable range: 0 to 300 sec.)

14.2.4.2 Connection Problem

14.2.4.2.1 E291 Error Code: Occurs when upgrading system software using SST

0010-4117

iR2270 / iR2870 / iR3570 / iR4570 / / / / / iR2230 / / / iR3530 / / / /

[Case in the field]

Description

In the field, the symptom occurred when a PC with the service support tool (SST) was connected to the machine, and then the machine was started up in normal mode (by turning on the main power switch while pressing the "1" and "7" keys at the same time).

Field Remedy

When the symptom occurs, follow the procedure below.

1. Open the Command Prompt screen on the PC making the following selection [Start > Programs > Accessories > Command Prompt], type "IPCONFIG" in [C:\ >], press the Enter key, and then, change the setting for "IP Address" and "Subnet Mask" to the following:

- IP Address: 172.16.1.160
- Subnet Mask: 255.255.255.0

Note: Never enter the following addresses in "IP Address".

- 172.16.1.0
- 172.16.1.100
- 172.16.1.255

2. On the Command Prompt screen, type "Ping_172.16.1.110" (the IP address assigned to the machine) in [C:\ >], and press the Enter key. If "Unknown host 172.16.1.110" is displayed, type the correct IP address and make sure that Ping is successful.

3. In the machine, make the following selection [Service mode > COPIER > FUNCTION > SYSTEM > DOWNLOAD] to make sure that the service support tool screen is opened.

14.2.5 Transmission/fax-related

14.2.5.1 Transmission Problem

14.2.5.1.1 Latter half of image is lost when scanning and sending A3-size original from DF

0009-2432

iR2270 / iR2870 / iR3570 / iR4570 / / iR2270N / / iR2870N / / iR3570N / / iR4570N / iR2230 / / / iR3530

[Inspected by Canon Inc.]

Description

As a result of inspection, the following was found: When an A3-size original with sharp folds is set in the document feeder (DF), the machine detects it as A4-size and scans the corresponding area. This is because the latter half of the original is folded and fails to come into contact with the document length sensor flag on the DF, consequently preventing the length sensor from detecting the original as large size.

When scanning an original with sharp folds from the DF, remove the folds or place it on the copyboard glass. Moreover, the use of the Preview button on the LCD before scanning enables you to check whether the full image of the original is scanned. Please explain these to your customer.

14.2.5.1.2 Machine does not send E-mail

0010-4397

iR2270 / iR2870 / iR3570 / iR4570 / / / / / iR2230 / / / iR3530 / / / /

[Case in the field]

Description

In the field, the symptom occurred because the host name and the domain name were not registered in user mode [System Settings > Network Settings > TCP/IP Settings > DNS Server Settings].

Field Remedy

When the symptom occurs, enter user mode [System Settings > Network Settings > TCP/IP Settings > DNS Server Settings], and enter the name assigned to this machine as the host name and the name of network domain to which this machine belongs as the domain name.

14.2.5.1.3 Machine hangs up during FAX transmission: Because read sensor (PI3) of DADF-N1 is not snapped securely

0010-8165

iR2270 / iR2870 / iR3570 / iR4570 / / iR2270N / / iR2870N / / iR3570N / / iR4570N / iR2230 / / / iR3530 / / / / / / /

[Inspected by Canon Inc.]

Description

When running a FAX transmission job consisting of 20 sheets of A4-size originals using the DADF-N1, the leading edge of an original stopped at the original reading position, and then the machine hung up. This was because the read sensor (PI3) of the DADF chattered. This is for your information, but if the claws of PI3 are not snapped securely into the mount, the sensor may chatter.

Field Remedy

When the symptom has occurred, snap the sensor into the mount again.

WG8-5624 Photointerrupter (PI3)

14.2.5.2 Other Operational Defect

14.2.5.2.1 LCD on control panel responds slowly: Because numbers of destinations are registered

0010-4392

iR2270 / iR2870 / iR3570 / iR4570 / / / / / iR2230 / / / iR3530 / / / /

[Verified by Canon Inc.]

Description

When 178 destinations were registered in the one-touch buttons, 780 destinations in the address book, and 78 destinations as the forwarding settings, the LCD on the control panel responded slowly. As the measure for this symptom, system software version 8.02 was released.

Field Remedy

When the symptom occurs, upgrade system software to version 8.02 or later.

14.2.5.2.2 DADF-N1: Stamp is not printed when sending FAX message because solenoid connector has poor connection

0010-4394

iR2270 / iR2870 / iR3570 / iR4570 / / / / / iR2230 / / / iR3530 / / / /

[Case in the field]

Field Remedy

In the field, a stamp was not printed when a document was scanned for FAX transmission. This was because the connector (J14) of the solenoid (SL2) had poor connection. When the symptom has occurred, execute the following in service mode:

[FEEDER > FUNCTION > SL-CHK > enter "1" > OK > SL-ON > OK].

If the operating sound of the solenoid is not heard, reinsert the connector J14.

14.2.6 Jam (Main Unit)

14.2.6.1 0105 Jam Code: Occurs only at pickup from cassette 1 because right lower door sheet is faulty

iR2270 / iR2870 / iR3570 / iR4570 / / iR2270N / / iR2870N / / iR3570N / / iR4570N / iR2230 / / / iR3530 / / / / / / /

[Case in the field]

Description

In the field, the right lower door sheets were affixed askew to the inside of both upper ends of the right lower door that accompany the paper pick-up assembly for the cassette 2, leading to 0105 Jam every time paper was fed from the cassette1.

Field Remedy

When a right lower door sheet is attached askew, re-fit it. If it is deteriorated, replace it with a new one.

FC5-7413 Right Lower Door Sheet

14.2.6.2 0207 Jam Code: Because solenoid (SL1) does not work on account of defective delivery controller PCB

iR2270 / iR2870 / iR3570 / iR4570 / / iR2270N / / iR2870N / / iR3570N / / iR4570N / iR2230 / / / iR3530 / / / / /

[Case in the field]

Description

In the field, the solenoid (SL1) of the 1st delivery flapper (FL2-1212) did not work, and as a result, a paper jam occurred at the delivery assembly when making copies continuously. However, this symptom was solved by replacing the delivery controller PCB with a new one.

- 0207 Jam Code: Stationary jam at the fixing/delivery sensor (PS13).

Field Remedy

1. Service mode > COPIER > FUNCTION > PART-CHK > set [SL] to "7" (SL1 operation code) > OK > SL-ON > OK. This setting will make the machine turn the SL1 ON and then OFF three times. On this occasion, check if the SL1 makes operating sound.
2. When executing [SL-ON] in service mode, if the indication on the LCD changes in the following order: START > ACTIVE > OK!, and no operating sound occurs, check if the SL1 has electrical continuity.
3. If the SL1 have electrical continuity, re-insert the delivery controller PCB connectors, and then execute Step 1 again.
4. If the SL1 still makes no operating sound, replace the delivery controller PCB with a new one.

FM2-3221 Delivery Controller PCB Assembly

14.2.6.3 0207 Jam Code: Because solenoid (SL1) of 1st paper delivery flapper is mounted in wrong position.

iR2270 / iR2870 / iR3570 / iR4570 / / iR2270N / / iR2870N / / iR3570N / / iR4570N / iR2230 / / / iR3530 / / / / /

[Case in the field]

Description

In the field, a sheet of paper dumped into the 1st paper delivery flapper (FL2-1212), causing a paper jam. This was because the solenoid (SL1) of the 1st paper deliver flapper was positioned higher than usual (i.e., the lower mounting screw was tighten in an upper position of the mounting slot).

- 0207 Jam Code: Stationary jam at the fixing/delivery sensor (PS13).

Field Remedy

When the symptom has occurred, follow the procedure below.

1. Open the right door, release the 2nd delivery frame assembly, remove the 2 screws from the solenoid cover (FC5-1053), and then detach the cover.
2. Loosen the 2 screws that fix the solenoid (SL1), and then tighten the screws again while pushing the solenoid downward.
3. Attach the solenoid cover and the 2nd delivery frame, and then close the right door.
4. Make copies to make sure that no paper jam occurs.

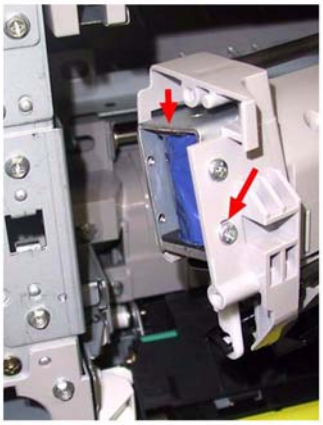

F-14-19

14.2.6.4 0B00 Jam Code: Description of this jam code

iR2270 / iR2870 / iR3570 / iR4570 / / / / / iR2230 / / / iR3530 / / / /

[Manual-related]

Description

This code can be displayed when the following switch and sensors detect opening of a door during copying or printing.

- Door switch (SW2)
- Feed cover sensor (PS18)
- Front cover sensor (PS22)
- Right door open/closed sensor (PS59: on the cassette feeding unit-Y1/Y2)

14.2.7 Jam (FIN)

14.2.7.1 1205 Jam Code: Finisher-Q3/Saddle Finisher-Q4

iR2270 / iR2870 / iR3570 / iR4570 / / / / / iR2230 / / / iR3530 / / / /

[Manual-related]

Description

1205 Jam Code means timing jam and can be displayed when the inlet sensor (PI33) detects paper before receiving a delivery signal from the copier.

14.2.7.2 1644 Jam Code: Occurs upon power-on or when first paper is fed in punch mode after machine's front cover is opened/closed, Finisher-S1

iR2270 / iR2870 / iR3570 / iR4570 / / / / / iR2230 / / / iR3530 / / / /

[Inspected by Canon Inc.]

Description

As a result of inspection, the following was found: The machine with the finisher-S1 causes the symptom when the main power of the machine is turned ON or when the first paper is fed into the machine in the punch mode after the front cover of the machine is opened and closed.

- 1644 Jam Code: Punch hole jam

Field Remedy

Upgrade the controller software of the finisher-S1 to version 8.01 or later.

14.2.8 Error Code

14.2.8.1 E000-0001 Error Code: Because fixing heater is cracked

iR2270 / iR2870 / iR3570 / iR4570 / / / / / iR2230 / / / iR3530 / / / /

[Inspected by Canon Inc.]

Description

As a result of inspection, it was found that the error code was displayed because the fixing heater had been cracked.

- E000-0001 can be displayed when the fixing temperature does not reach a given level after a specified period of time has passed.

Field Remedy

The conceivable cause of this error code is a fault in the main thermistor or the DC Controller PCB. In the field, however, it occurred because of a crack on the fixing heater. Therefore, when the error appears, check the fixing heater using a tester. If it has an open-circuit, replace the fixing film unit with a new one.

FM2-0358 Fixing Film Unit (for iR2270/2870: 120V)
FM2-0359 Fixing Film Unit (for iR2270/2870: 230V)
FM2-1793 Fixing Film Unit (for iR3570/4570: 120V)

FM2-1794 Fixing Film Unit (for iR3570/4570: 230V)

14.2.8.2 E001-0000 Error Code: Because main power supply PCB is faulty

iR2270 / iR2870 / iR3570 / iR4570 / / iR2270N / / iR2870N / / iR3570N / / iR4570N / iR2230 / / / iR3530 / / / / / / /

[Inspected by Canon Inc.]

Description

E001-0000 was displayed after a copy job was completed; however, replacing the main power supply PCB solved this code.

- E001-0000 can be displayed when the main thermistor detects the temperature of more than 250 deg. C for more than 200msec continuously.

Field Remedy

When the symptom has occurred, re-insert all the connectors of the main power supply PCB. If the symptom still occurs, replace the PCB with a new one.

FM2-0260 Main Power Supply PCB Assembly (for the 120V machine)

FM2-0245 Main Power Supply PCB Assembly (for the 230V machine)

14.2.8.3 E014-0002 Error Code/Abnormal sound from fixing assembly: Because cleaning roller mounts (front/rear) are damaged (iR4570/iR3570)

iR2270 / iR2870 / iR3570 / iR4570 / / iR2270N / / iR2870N / / iR3570N / / iR4570N / iR2230 / / / iR3530 / / / / /

[Inspected by Canon Inc.]

Description

As a result of inspection, the following was found: One of the cleaning roller mounts is damaged and causes the fixing heatsink roller to fall down, resulting in abnormal sound and E014-0002.

Field Remedy

When the symptom has occurred, replace the cleaning roller mount (front/rear) with a new one.

FM2-1775 Cleaning Roller Mount Unit (Front)

FM2-1776 Cleaning Roller Mount Unit (Rear)

14.2.8.4 E024-0001 Error Code: Description of this error code

iR2270 / iR2870 / iR3570 / iR4570 / / / / / iR2230 / / / iR3530 / / / /

[Manual-related]

Description

E024-0001 can be displayed under the following conditions:

- iR4570/3570/3530 series

When the disconnection of the wire used for detecting the connection of the toner sensor (TS1) has been detected for 7.5 min without interruption. (12.5 min in the manual/envelop cassette feeding)

- iR2870/2270/2830/2230 series

When the disconnection of the wire used for detecting the connection of the toner sensor has been detected for 12.5 min without interruption.

Field Remedy

When the symptom occurs, re-insert the connector J3405L. If the symptom still occurs, replace the sensor with a new one.

FK2-0358 Toner Sensor

14.2.8.5 E024-0001 Error Code: Because toner stays in developing assembly toner sensor (TS1)

iR2270 / iR2870 / iR3570 / iR4570 / / iR2270N / / iR2870N / / iR3570N / / iR4570N / iR2230 / / / iR3530 / / / / /

[Inspected by Canon Inc.]

Description

As a result of inspection, the following was found. Toner gets in the developing assembly toner sensor (TS1) and eludes toner stirring operation, resulting in the symptom. However, re-attachment of the sensor solves the symptom.

Field Remedy

When the symptom has occurred, make the following selections in service mode [COPIER > I/O > DC-CON] and check the setting for the bit1 of [P021]. If the setting is "1", re-attach the toner sensor.

- E024-0001 Error Code: The toner level sensor has an open-circuit.

FK2-0358 Toner Sensor

14.2.8.6 E110-0001 Error Code: Because DC controller PCB is faulty

iR2270 / iR2870 / iR3570 / iR4570 / / iR2270N / / iR2870N / / iR3570N / / iR4570N / iR2230 / / / iR3530 / / / / / / /

[Inspected by Canon Inc.]

Description

Since E110-0001 was displayed, the DC controller PCB was replaced with a new one for solution.

- E110-0001 can be displayed when the scanner motor causes a problem.

Field Remedy

When the symptom has occurred, re-insert all the connectors of the DC controller PCB. If the symptom still occurs, replace the PCB with a new one.

FM2-2779 DC Controller PCB Assembly (for iR3570/iR4570)

FM2-2767 DO Controller PCB Assembly (for iR2270/iR2870)

14.2.8.7 E202-0002 Error Code: Because reader controller PCB is faulty

iR2270 / iR2870 / iR3570 / iR4570 / / iR2270N / / iR2870N / / iR3570N / / iR4570N / iR2230 / / / iR3530 / / / / /

[Inspected by Canon Inc.]

Description

E202-0002 error code was displayed; however, replacing the reader controller PCB corrected the symptom.

- E202-0002 can be displayed when there is an error in the detection of the CIS home position.

Field Remedy

When the symptom has occurred, re-insert all the connectors of the reader controller PCB. If the symptom still occurs, replace the PCB with a new one.

FG3-3765 Reader Controller PCB Assembly

14.2.8.8 E244 Error Code: Occurs when formatting service part hard disk drive (HDD)

iR2270 / iR2870 / iR3570 / iR4570 / / / / / iR2230 / / / iR3530 / / / /

[Inspected by Canon Inc.]

Field Remedy

The service support tool (SST) has been upgraded. When the HDD is replaced with a service part one, format it using SST version 3.04 or later.

Description

In the field, the error code was displayed when formatting a service part HDD. Because SST of version 3.03 or younger was used.

- E2444: Serial communication error (Signal communication error between the machine and SST)

14.2.8.9 E261-0000 Error Code: Because main power supply PCB is faulty

iR2270 / iR2870 / iR3570 / iR4570 / / iR2270N / / iR2870N / / iR3570N / / iR4570N / iR2230 / / / iR3530 / / / / /

[Inspected by Canon Inc.]

Description

In a certain inspection case, the error code appeared; however, replacement of the main power supply PCB solved it.

Field Remedy

When the symptom has occurred, re-insert J210 connector of the main power supply PCB. If the symptom still occurs, replace the PCB with a new one.

- E261-0000 Error Code can be displayed when the zero-cross signal is not detected for 500msc or more when the relay is on.

FM2-0260 Main Power Supply PCB Assembly (120V)

FM2-0245 Main Power Supply PCB Assembly (230V)

14.2.8.10 E315-000d Error Code: Because main controller PCB is faulty

iR2270 / iR2870 / iR3570 / iR4570 / / iR2270N / / iR2870N / / iR3570N / / iR4570N / iR2230 / / / iR3530 / / / / / / /

[Inspected by Canon Inc.]

Description

E315-000d was displayed; however, replacing the main controller PCB corrected it.

- E315-000d can be displayed when there is an error in JBIG decoding.

Field Remedy

When the symptom has occurred, re-insert all the connectors of the main controller PCB. If the symptom still occurs, replace the PCB with a new one.

FM2-4550 Main Controller PCB Assembly (for the iR4570 series)

FM2-4551 Main Controller PCB Assembly (for the iR2230)

14.2.8.11 E520 Error Code: Description of this code

iR2270 / iR2870 / iR3570 / iR4570 / / / / / iR2230 / / / iR3530 / / / /

[Manual-related]

Description

When an error is detected during an operation of the finisher-S1, either of the following error codes is displayed. The cause of these error codes is a problem in the offset motor (M4), the offset HP sensor (PI6), or the finisher controller PCB.

- E520-0000 can be displayed when PI6 of the offset roller does not go ON even if M4 has been driven for 1000msec.
- E520-0002 can be displayed when PL6 of the offset roller does not go OFF even if M4 has been driven for 1000msec.

14.2.8.12 E602-0001 Error Code: Progress bar stops at one-fifth point because hard disk (HDD) is faulty

iR2270 / iR2870 / iR3570 / iR4570 / / / / / iR2230 / / / iR3530 / / / /

[Inspected by Canon Inc.]

Description

The error code was displayed when the progress bar stopped at about one-fifth point and then the machine kept such a situation for a while. As a solution, the hard disk (HDD) was replaced with a new one.

- E602-0001 can be displayed when the startup partition (BOOTDEV) cannot be found at startup.

Field Remedy

Turn the control panel switch and the main power switch OFF in sequence, re-connect the HDD, and then turn the main power switch ON. If the symptom still occurs, replace the HDD with a new one.

WM2-5216 HDD

14.2.8.13 E716-0010 Error Code: Occurs when machine is equipped with 3 Way Unit-A1

iR2270 / iR2870 / iR3570 / iR4570 / / / / / iR2230 / / / iR3530 / / / /

[Manual-related]

Description

E716-0010 can be displayed when an error in the communication with the 3 Way Unit-A1 occurs within 5 sec after detecting the connection with the finisher. The conceivable causes are the open-circuit of the cable, poor connection of the connectors J741 and J2107F, faulty 3 Way Unit-A1 driver PCB, and faulty DC controller PCB.

14.2.8.14 E732-0001 Error Code: Because Reader Controller PCB is faulty

iR2270 / iR2870 / iR3570 / iR4570 / / / / / iR2230 / / / iR3530 / / / /

[Inspected by Canon Inc.]

Description

The error code was displayed and the indication "R-CON" was not displayed under the service mode screens [VERSION] and [CLEAR]. Consequently, both the version check of the ROM on the reader controller PCB and the clear of the RAM were impossible in service mode. However, these symptoms were corrected by replacing the reader controller PCB with a new one.

- E732-0001: DDI-S communication error

Field Remedy

When the symptom occurs, re-insert all connectors of the reader controller PCB. If the symptom still occurs, replace the PCB with a new one.

FG3-3765 Reader Controller PCB Assembly

14.2.8.15 E732-0001 Error Code: Because DIMMs have poor connection

iR2270 / iR2870 / iR3570 / iR4570 / / / / / iR2230 / / / iR3530 / / / /

[Case in the field]

Description

In the field, the error code was displayed. However, it was corrected by re-inserting the DIMMs.

- E732-0001 can be displayed when the DDI-S communication error occurs.

Field Remedy

1. Re-insert the connector J1014 (for DDI communication) on the Main controller PCB.
2. If the symptom still occurs, re-insert the DIMM connected to the main controller PCB (J1004) and the DC controller PCB (J381).

14.2.8.16 E733-0001 Error Code is displayed at FAX reception/transmission; however it is solved by switching OFF/ON

iR2270 / iR2870 / iR3570 / iR4570 / / iR2270N / / iR2870N / / iR3570N / / iR4570N / iR2230 / / / iR3530 / / / / / / /

[Case in the field]

Description
In the field, E733-0001 was displayed at FAX communication; however, this symptom was solved by upgrading system software to Ver. 20.05.
Cause
Since the machine repeated FAX communication, the memory management program caused a process error, causing the controller software to hang up.
Field Remedy
When the symptom has occurred, upgrade system software to Ver. 20.05 or later.
Note: Be sure to maintain compatibility with other firmware products when upgrading system software.

14.2.9 FAX # Code

14.2.9.1 #037/##795/###796 User Error Code: Occurs when FAX Activity Report is set to be printed automatically at time of FAX reception

iR2270 / iR2870 / iR3570 / iR4570 / / iR2270N / / iR2870N / / iR3570N / / iR4570N / iR2230 / / / iR3530 / / / /

[Verified by Canon Inc.]
Description
When the Auto Print function was set to OFF in user mode [Report Settings > Fax under Settings > Fax Activity Report], the symptom occurred because fax activity report data were remained unprocessed.
- #037 can be displayed when documents could not be received because there was insufficient memory available.
- ##795 can be displayed when a decoding error occurs during communication.
- ###796 can be displayed when a coding error occurs after ECM reception.
Field Remedy
When the symptom occurs, set the Auto Print function to ON and then output the unprocessed FAX Activity Reports data manually. To do this, never fail to obtain the user's agreement before setting the Auto Print function to ON. If the user does not desire to set the function to ON, upgrade system software version 8.02 or later.

14.2.10 Specifications-related FAQ

14.2.10.1 FAQ on Main Unit Specifications

14.2.10.1.1 Equation to calculate estimated remaining days before next replacement of consumable parts

0009-2407

iR2270 / iR2870 / iR3570 / iR4570 / / iR2270N / / iR2870N / / iR3570N / / iR4570N / iR2230 / / / iR3530

[Manual-related]
Description
The remaining days before next replacement of consumable parts are calculated from the following equation: (L x D / C) - D
D: Days between installation of the host machine (or part replacement) and to date, C: Counter, L: Limit (life of the parts)
Note that the remaining days are just reference because they are predicated on that the host machine will be continuously used at the same pace as before.

14.2.10.1.2 Settings for not displaying "Mail Box" tab on LCD

0009-2408

iR2270 / iR2870 / iR3570 / iR4570 / / iR2270N / / iR2870N / / iR3570N / / iR4570N / iR2230 / / / iR3530

[Manual-related]
Field Remedy
You can select in service mode whether or not the operation panel for the mail box functions is displayed. In order not to display it, change the setting in service mode (Level 2) [COPIER> Option> BODY> UI-BOX], set it to "0" (not display). Then, turn the control panel switch OFF and turn the main power switch OFF/ON.

14.2.10.1.3 How to check estimated remaining days before next replacement of consumable parts

0009-2409

iR2270 / iR2870 / iR3570 / iR4570 / / iR2270N / / iR2870N / / iR3570N / / iR4570N / iR2230 / / / iR3530

[Manual-related]
Description
In service mode [COPIER> Counter> MISC] and [COPIER> Counter> DRBL-1/DRBL-2], the rightmost reading for each consumable parts indicates how many days are left before the next replacement.

14.2.10.1.4 Output image size is different between when using "Zoom by Percentage" function and "Preset Zoom" function although same copy ratio is set

0009-2412

iR2270 / iR2870 / iR3570 / iR4570 / / iR2270N / / iR2870N / / iR3570N / / iR4570N / iR2230 / / / iR3530

[Manual-related]
Description
In the "Zoom by Percentage" function, originals can be reduced or enlarged in an integer magnification which is set on the LCD. In the "Preset Zoom" function, on the other hand, all the preset buttons on the LCD show an integer: however, rescale of the original is done at the decimal level. This is the reason why the size of the output image differs between those functions. This is true for other models.

14.2.10.1.5 Applicable paper sizes

0009-2414

iR2270 / iR2870 / iR3570 / iR4570 / / iR2270N / / iR2870N / / iR3570N / / iR4570N / iR2230 / / / iR3530

[Manual-related]
Description
The following lists paper sizes that can be loaded in each paper input:
a. Cassette: A3, LDR, B4, LGL, A4, LTR, A4R, LTRR, B5, A5R, B5R, STMTR, EXE, Com10, Monarch, DL, ISO-C5ISO-B5, YOKEI No. 4
b. Manual Feed Tray: A3, LDR, B4, LGL, A4, LTR, A4R, LTRR, B5, A5R, B5R, STMTR, EXE, Postcard A6R Modified, Double Postcard A5R Modified, A4 Modified, Com10, Monarch, DL, ISO-C5ISO-B5, YOKEI No. 4
c. Side Paper Deck-Q1: A4, LTR
For more details, refer to the Service Manual [Introduction > Product Specifications > Function List > Types of Paper].

14.2.10.1.6 How to clear "system administrator" password

0009-2416

iR2270 / iR2870 / iR3570 / iR4570 / / iR2270N / / iR2870N / / iR3570N / / iR4570N / iR2230 / / / iR3530

[Manual-related]
Field Remedy
In service mode [COPIER> Function> CLEAR> PWD-CLR], press the OK key. Then, turn the control panel switch OFF and turn the main power OFF/ON.

14.2.10.1.7 Applicable paper types

0009-2418

iR2270 / iR2870 / iR3570 / iR4570 / / iR2270N / / iR2870N / / iR3570N / / iR4570N / iR2230 / / / iR3530

[Manual-related]
Description
The following lists paper types that can be loaded in each paper input:
a. Cassette: Plain Paper (64-80g), Recycled Paper (64-80g), Heavy Paper (81-128g), OHT, 3-Hole Paper, Tracing Paper, Envelope
b. Manual Feed Tray: Plain Paper (64-80g), Recycled Paper (64-80g), Heavy Paper (81-128g), OHT, Postcard, 4-Plane Postcard, Label Paper, 3-Hole Paper, Tracing Paper, Envelope
c. Side Paper Deck-Q1: Plain Paper (64-80g), Recycled Paper (64-80g), 3-Hole Paper
For more details, refer to the Service Manual [Introduction > Product Specifications > Function List > Types of Paper].

14.2.10.1.8 Unable to select [Stack Bypass Settings] button

0009-2419

iR2270 / iR2870 / iR3570 / iR4570 / / iR2270N / / iR2870N / / iR3570N / / iR4570N / iR2230 / / / iR3530

[Manual-related]
Description
If [Stack Bypass Standard Settings] is set at [On], the button [Stack Bypass Settings] does not work. In such a case, in user mode [Common Settings> Stack Bypass Standard Settings], select [Off].

14.2.10.1.9 Finisher-Q3/Saddle Finisher-Q4: Necessary options when installing finisher

0009-2422

iR2270 / iR2870 / iR3570 / iR4570 / / iR2270N / / iR2870N / / iR3570N / / iR4570N / iR2230 / / / iR3530

[Manual-related]
Description
The following options are necessary depending on model when installing the finisher.
230V machine of iR2870/2270
- Buffer Path Unit-E1
- Accessories Power Supply-P2
- 3 Way Unit-A1
230V machine of iR4570/3570 and 120V machine of all models
- Buffer Path Unit-E1
- Accessories Power Supply-P2

14.2.10.1.10 Necessary options when expanding iR Security Kit-A2

0009-2424

iR2270 / iR2870 / iR3570 / iR4570 / / iR2270N / / iR2870N / / iR3570N / / iR4570N / iR2230 / / / iR3530

[Manual-related]
Description
The following options are necessary when expanding the iR Security Kit-A2 (License).
- Expansion Bus-B1
- USB Application Interface Board-D1

14.2.10.1.11 Stack Bypass Standard Settings: How to register arbitrary paper size and paper type as standard mode for stack bypass

0009-2426

iR2270 / iR2870 / iR3570 / iR4570 / / iR2270N / / iR2870N / / iR3570N / / iR4570N / iR2230 / / / iR3530

[Manual-related]
Field Remedy
In user mode [Common Settings> Stack Bypass Standard Settings> On> Register], select any paper size and paper type.
Once the above setting is done, it is unnecessary to select the size and type for stack bypass. So, it is convenient if the customer always uses paper of the same size and same type for stack bypass.

14.2.10.1.12 How to fix Ethernet setting at 10BASE-T

0009-2428

iR2270 / iR2870 / iR3570 / iR4570 / / iR2270N / / iR2870N / / iR3570N / / iR4570N / iR2230 / / / iR3530

[Manual-related]
Field Remedy
In user mode [System Settings> Network Settings> Ethernet Driver Settings> Auto Detect], select [Off]. Then, select [10BASE-T] for [Ethernet Type].

14.2.10.1.13 How many CA certificate files can be registered?

0009-9838

iR2270 / iR2870 / iR3570 / iR4570 / / / / / iR2230 / / / iR3530 / / / /

[Manual-related]
Description
Up to 50 CA certificate files can be registered.

14.2.10.1.14 Unable to delete registered key pair

0009-9839

iR2270 / iR2870 / iR3570 / iR4570 / / / / / iR2230 / / / iR3530 / / / /

[Manual-related]

Description

If all the following user mode items are set to "ON", it is impossible to delete the key pair that has been set as the default key pair. In order to delete the default key pair, set those user mode items to "OFF".
- System Settings > Remote UI > Use SSL
- System Settings > Network Settings > TCP/IP Settings > IPP Settings > Use SSL
- System Settings > Network Settings > E-mail/I-Fax > SMTP Receipt
- System Settings > Device Information Delivery Settings > Receive Limit for Each Function
- System Settings > MEAP Settings > Use HTTP

14.2.10.1.15 Estimated life of the fixing heatsink roller

0009-9840

iR2270 / iR2870 / iR3570 / iR4570 / / / / / iR2230 / / / iR3530 / / / /

[Manual-related]

Description

Although the fixing heatsink roller (FB5-4931) is used in common with all the models of this series, its estimated life varies as follows depending on the model to which it is attached. This is because making replacement of the roller and fixing film unit simultaneously increase the serviceability of each model.
- iR2270/2870: 150,000 copies
- iR3570/4570: 240,000 copies

14.2.10.1.16 How to number pages in sequence: Page numbering feature

0009-9841

iR2270 / iR2870 / iR3570 / iR4570 / / / / / iR2230 / / / iR3530 / / / /

[Manual-related]

Description

Page numbering is a new feature adopted first with this machine. When you want to number the pages in sequence, in the Special Features screen [Pg/ Copy Set Numbering > Page Numbering], select the type of numbering ([Numbers Only], [Numbers with Hyphens], [Numbered Chapters], or [Total Page Numbering]) and the print position of the page numbering.

14.2.10.1.17 Procedure to be followed after replacement of drum unit: APVC control

0009-9842

iR2270 / iR2870 / iR3570 / iR4570 / / / / / iR2230 / / / iR3530 / / / /

[Manual-related]

Field Remedy

When replacing the drum unit with a new one, be sure to enter service mode [COPIER > FUNCTION > DPC > DGAMMA] and press [OK]. The machine will pick up and deliver a blank sheet to end the APVC control. (No increase in the counter reading.)

Description

This machine performs the APVC control (photosensitive drum resistance detection) automatically every 500 prints to keep the best image quality. In the control, a reference voltage is applied to the primary charging roller and the level of output current at that time is measured to correct the primary charging application voltage used in image forming. Therefore, when installing a new drum unit, be sure to execute the APVC control to correct the voltage.

14.2.10.1.18 White dots on solid black image/Sandy image: Occurs after replacement of drum unit

0009-9843

iR2270 / iR2870 / iR3570 / iR4570 / / / / / iR2230 / / / iR3530 / / / /

[Manual-related]

Description

In the field, the symptom occurred because the APVC control was not executed in service mode. When replacing the drum unit with a new one, be sure to enter service mode [COPIER > FUNCTION > DPC > DGAMMA] and press [OK] to execute the APVC control.

14.2.10.1.19 How to register key pair file and server certificate file installed from PC

0009-9844

iR2270 / iR2870 / iR3570 / iR4570 / / / / / iR2230 / / / iR3530 / / / /

[Manual-related]

Description

In order to register the key pair file and server certificate file that have been installed from a PC with the machine, follow the procedure below.
1. User mode > System Settings > Network Settings > TCP/IP Settings > Certificate Settings > Register Key and Certificate > select the file name to register > Register > make an entry in [Key Name] and [Password] > OK > Done.
2. Turn the control panel switch OFF and then turn the main power switch OFF. 10 seconds or more later, turn the main power switch ON.

14.2.10.1.20 Does fixing assembly for iR2270, iR2870, iR3570, and iR4570 have interchangeability?

0009-9848

iR2270 / iR2870 / iR3570 / iR4570 / / / / / iR2230 / / / iR3530 / / / /

[Manual-related]

Description

The models of which fixing assembly has interchangeability are as follows.
a. iR2270 and iR2870
- FM2-0356: Fixing Assembly for 120V machine
- FM2-0357: Fixing Assembly for 230V machine

b. iR3570 and iR4570
- FM2-1786: Fixing Assembly for 120V machine
- FM2-1787: Fixing Assembly for 230V machine

Note: With the fixing assembly, there is no interchangeability between the combination of models [a] and [b] above. Please be careful when performing service work.

14.2.10.1.21 Is it possible to replace fixing film itself with a new one?

0009-9850

iR2270 / iR2870 / iR3570 / iR4570 / / / / / iR2230 / / / iR3530 / / / /

[Manual-related]

Description

It is impossible to replace the fixing film itself with a new one. When you want to replace it with a new one, replace the fixing film unit with a new one.

FM2-0358 Fixing Film Unit (iR2270/2870: 120V)
FM2-0359 Fixing Film Unit (iR2270/2870: 230V)
FM2-1793 Fixing Film Unit (iR3570/4570: 120V)
FM2-1794 Fixing Film Unit (iR3570/4570: 230V)

14.2.10.1.22 How to install CA certificate file to machine using Remote UI

0009-9981

iR2270 / iR2870 / iR3570 / iR4570 / / / / / iR2230 / / / iR3530 / / / /

[Manual-related]

Description

Apart from the certificate files that are preinstalled in the machine, you can also install a CA certificate file using the Remote UI.

Field Remedy

To install a CA certificate file, follow the procedure below.

[Remote UI > Add. Func. > Custom Settings > CA Certificate Settings > Register CA certificate > Install > Browse > select the certificate file to register > Start Installation].

14.2.10.1.23 How to generate and use key pairs and digital (server) certificate

0009-9982

iR2270 / iR2870 / iR3570 / iR4570 / / / / / iR2230 / / / iR3530 / / / /

[Manual-related]

Field Remedy

Following the procedure below enables you to generate and use key pairs and server certificate with this machine.

a. Generating a key pair

a-1. User mode > System Settings > Network Settings > TCP/IP Settings > Certificate Settings > Generate key > enter a name for the key > select the key length > press [Next] to go to the Digital Certificate Setting screen

a-2. Digital Certificate Setting screen > enter the date for [Start Date of Validity] > enter the date for [End Date of Validity] > enter one of the following: [Country Name], [State], [City], Organization], [Organztion Unit], and [Shared Name] > press [Start Key Generation].

a-3. Press [Done] to close the User mode screen.

a-4. Turn OFF the control panel switch and the main power switch. 10 seconds or more later, turn the main power switch ON.

b. Setting the default key pair

b-1. User mode > System Settings > Network Settings > TCP/IP Settings > Certificate Settings > Key and Certificate List > select the key generated in the step [a] > Default Key Settings

b-2. Press [Done] to close the User mode screen.

b-3. Turn OFF the control panel switch and the main power switch. 10 seconds or more later, turn the main power switch ON.

14.2.10.1.24 Unable to print document stored in Inbox with page numbers or copy set numbers

0009-9983

iR2270 / iR2870 / iR3570 / iR4570 / / / / / iR2230 / / / iR3530 / / / /

[Manual-related]

Description

Because of a specification constraint of this machine, only the documents stored in an inbox at 600 x 600 dpi can be printed with page numbers or copy set numbers.

14.2.10.1.25 How to assign copy set number (serial number) to each copy set: Copy Set Numbering

0009-9984

iR2270 / iR2870 / iR3570 / iR4570 / / / / / iR2230 / / / iR3530 / / / /

[Manual-related]

Description

Copy Set Numbering is a new feature and is adopted first with this machine. This feature will be helpful when collecting the distributed copies of a confidential document for safekeeping. To use this feature, follow the procedure below.

In the Special Features screen [Pg/Copy Set Numbering > Copy Set Numbering], select the orientation and position of the copy set numbering and then set [Starting Number], [Number Size], and [Density].

14.2.10.1.26 Position where drum counter label is affixed

0009-9985

iR2270 / iR2870 / iR3570 / iR4570 / / / / / iR2230 / / / iR3530 / / / /

[Manual-related]

Description

With this machine, affix the drum counter label to the backside of the upper front cover.

14.2.10.1.27 How to register user-defined text for page numbers and watermarks

0009-9986

iR2270 / iR2870 / iR3570 / iR4570 / / / / / iR2230 / / / iR3530 / / / /

[Manual-related]

Description

Following the field remedy below enables you to register specific text for page numbers and watermarks. This is convenient when you want to print the same text every time using the page numbering or watermark feature in the copy mode or mailbox mode.

Field Remedy

User mode > Common Settings > Resister Characters for Page No./Watermark > Register > enter the desired characters > OK

14.2.10.1.28 Wants to adjust print position of page number, copy set number and watermark

0009-9987

iR2270 / iR2870 / iR3570 / iR4570 / / / / / iR2230 / / / iR3530 / / / /

[Manual-related]

Description

The print position of page number, copy set number and watermark can be adjustable within the range from +8mm to –8mm in relation to the factory setting in 1mm increment. When you want to adjust the print position, follow the procedure below.

[User mode > Adjustment/Cleaning > Page Num./Copy/Watermark Position Adjust > adjust "X (horizontal position)" and "Y (vertical position)" by using "+" and "-" keys > OK].

Note: If [Numbers in 5 Locations] is selected in the Copy Set Numbering mode, the print position setting that is set by following the procedure above is

ignored.

14.2.10.1.29 How to create user own watermark: Watermark printing

0009-9988

iR2270 / iR2870 / iR3570 / iR4570 / / / / / iR2230 / / / iR3530 / / / /

[Manual-related]

Description

Although this machine has 6 types of preset watermarks, following procedure enables you to create your own watermark.
In the Special Features screen, select [Watermark/Print Date > Watermark > select the orientation and print position of the watermark > Next > Create > enter the text > OK].
Note: You can enter up to 32 characters for the watermark.

14.2.10.1.30 Is it necessary to clear the "DLM-LIFE" value upon making replacement of drum unit?

0009-9989

iR2270 / iR2870 / iR3570 / iR4570 / / / / / iR2230 / / / iR3530 / / / /

[Manual-related]

Field Remedy

Unlike the iRC3100, it is unnecessary for this machine to clear the "DLM-LIFE" value after replacement of the drum unit. However, follow the steps below without fail when replaceing the drum unit with a new one.
1. In service mode [COPIER > FUNCTION > DPC > DGAMMA], press OK. A sheet of blank paper is delivered and the "APVC control" is performed. (No increase in the counter value.)
2. Fill in the date and counter value at the time of drum replacement on the drum counter label, and affix it on the backside of the upper front cover.

14.2.10.1.31 Is it possible to perform APVC control on new drum that has been used for some time after its installation?

0009-9990

iR2270 / iR2870 / iR3570 / iR4570 / / / / / iR2230 / / / iR3530 / / / /

[Manual-related]

Description

Although this machine performs the APVC control (photosensitive drum resistance detection) automatically every 500 prints to keep the best image quality, it is possible to perform the control on a new drum that has been used for a while after its installation. However, what is the most important is to carry out the control without fail right after replacement of the drum.

14.2.10.1.32 Explanation about functions of iR Security Kit-A1

0009-9993

iR2270 / iR2870 / iR3570 / iR4570 / / / / / iR2230 / / / iR3530 / / / /

[Manual-related]

Description

The iR Security Kit-A1 has the following three functions.
1. Encrypting the data on the HDD (address book data and job log data)
2. Full initialization of the HDD
3. Enabling/disenabling display of the job log
Of those functions, the data encryption is a new function and is adopted first with this machine.
Note: To use these functions, the optional iR Security Kit-A1 (License) has to be extended.

14.2.10.1.33 How many MAC addresses that are allowed to access to can be registered?

0010-0037

iR2270 / iR2870 / iR3570 / iR4570 / / / / / iR2230 / / / iR3530 / / / /

[Manual-related]

Description

Up to 100 MAC addresses can be registered.

14.2.10.1.34 How many key pairs can be registered?

0010-0045

iR2270 / iR2870 / iR3570 / iR4570 / / / / / iR2230 / / / iR3530 / / / /

[Manual-related]

Description

Up to two key pairs can be registered. One of those key pair will be set as the default key pair.

14.2.10.1.35 Wants to superimpose previously scanned image (image form) on output: Form composition

0010-0056

iR2270 / iR2870 / iR3570 / iR4570 / / / / / iR2230 / / / iR3530 / / / /

[Manual-related]

Description

The form composition is a new function and is adopted first with this machine. The following steps enable you to superimpose a previously scanned image (image form), which has been stored in the memory of this machine, on the output.
1. Image form registration
[Set an original that you want to use as an image form on the copyboard glass > User mode > Common Settings > Register Form for Form Composition > Register > select the size of the original > Next > select [Entire Image Composition] or [Transparent Image] > Next > assign a name to the image form > press the Start key to scan the original].
2. Form composition
[Copy screen > Special Features > Form Composition > select the image to be superimposed over the original > OK > Back >set the original on the copyboard glass and press the Start key].

14.2.10.1.36 Necessary options when connecting USB device for MEAP application

0010-0061

iR2270 / iR2870 / iR3570 / iR4570 / / / / / iR2230 / / / iR3530 / / / /

[Manual-related]

Description

The following options are necessary when connecting a UBS device for the MEAP application to the machine.
- USB Application Interface Board D-1
- Expansion Bus-B1

14.2.10.1.37 Are tandem copy and remote copy supported?

0010-0062

iR2270 / iR2870 / iR3570 / iR4570 / / / / / iR2230 / / / iR3530 / / / /

[Manual-related]
Description
Tandem copy and remote copy are not supported with this product.

14.2.10.1.38 Is image separation mode supported?

0010-0063

iR2270 / iR2870 / iR3570 / iR4570 / / / / / iR2230 / / / iR3530 / / / /

[Manual-related]
Description
The image separation mode is not supported with this machine.

14.2.10.1.39 How to register CA certificate file that is installed using Remote UI

0010-0064

iR2270 / iR2870 / iR3570 / iR4570 / / / / / iR2230 / / / iR3530 / / / /

[Manual-related]
Description
To register a CA certificate file that has been installed using Remote UI, follow the field remedy below.
Field Remedy
User mode > System Settings > Network Settings > TCP/IP Settings > Certificate Settings > Register CA Certificate > select the desired file name > Register.

14.2.10.1.40 Message "Load paper " appears when using machine together with Finisher-S1 in staple mode

0010-0065

iR2270 / iR2870 / iR3570 / iR4570 / / / / / iR2230 / / / iR3530 / / / /

[Case in the field]
Description
In the field, the message was displayed when setting "Orientation" to "Portrait" and "Staple Position" to "Upper Right" in the printer driver and then trying to print on A4 size paper. This was because the A4R size paper was not set in the machine.
Field Remedy
Because of a specification constraint of the finisher-S1, the A4R size paper has to be set in the machine in order to enable the combination of the following settings; "Portrait" for "Orientation", and "Upper Right" or "Lower Left" for "Staple Position."

14.2.10.1.41 Stamp function in FAX direct sending

0010-0086

iR2270 / iR2870 / iR3570 / iR4570 / / / / / iR2230 / / / iR3530 / / / /

[Manual-related]
Description
With this machine, the stamp function cannot be used in combination with the direct sending function. However, it is available to separate scanned originals when scanning originals from the feeder for E-mail sending or FAX memory sending.

14.2.10.1.42 Version of SST that is required for upgrading software

0010-0087

iR2270 / iR2870 / iR3570 / iR4570 / / / / / iR2230 / / / iR3530 / / / /

[Manual-related]
Description
SST of version 3 or later will be required when upgrading software of this machine.

14.2.10.1.43 Does toner bottle for iR2270, iR2870, iR3570, and iR4570 have interchangeability?

0010-0089

iR2270 / iR2870 / iR3570 / iR4570 / / / / / iR2230 / / / iR3530 / / / /

[Manual-related]
Description
The models of which toner bottle has interchangeability are as follows.
a. iR2270 and iR2870
b. iR3570 and iR4750
Note: With the toner bottle, there is no interchangeability between the combination of models [a] and [b] above. Please be careful when performing service work.

14.2.10.1.44 Explanation on MAC address filter

0010-0092

iR2270 / iR2870 / iR3570 / iR4570 / / / / / iR2230 / / / iR3530 / / / /

[Manual-related]
Description
This is a new function and is adopted first with this machine. The procedure below enables you to specify the MAC addresses to allow access to for the purpose of avoiding unnecessary communications.
1. User mode > System Settings > Network Settings > TCP/IP Settings > Receiving MAC address Settings > Apply Settings > ON > Register > register a MAC address to allow access to > OK > Done
2. Turn OFF the control panel switch and the main power switch. 10 seconds or more later, turn ON the main power switch.

14.2.10.1.45 How many department IDs can this machine manage?

0010-0093

iR2270 / iR2870 / iR3570 / iR4570 / / / / / iR2230 / / / iR3530 / / / /

[Manual-related]
Description
Although the iR3300 series machine can manage only 300 department IDs at a maximum, this machine can manage up to 1,000 department IDs.

14.2.10.1.46 How does this machine detect level of toner in waste toner box?

0010-0094

iR2270 / iR2870 / iR3570 / iR4570 / / / / / iR2230 / / / iR3530 / / / /

[Manual-related]
Description
This machine detects the level of waste toner inside the waste toner box using the mechanical detection method. Therefore, even if the waste toner box is reused after the waste toner inside it is removed, the machine is hard to cause faulty detection of waste toner level compared to the machines using the sensor detection method.

14.2.10.1.47 Print position of copy set numbering that has been set in user mode is not available: When selecting "Number in 5 Locations"

0010-0095

iR2270 / iR2870 / iR3570 / iR4570 / / / / / iR2230 / / / iR3530 / / / /

[Manual-related]
Description
Even if the print position of copy set numbering has been set in user mode, it is ignored when [Number in 5 locations] (default setting) is selected in the position setting screen of Copy Set Numbering. In order to make the print position setting available, select one of the 4 locations from "Print Position."

14.2.10.1.48 How to print document stored in Inbox with page number, copy set number, watermark, or date

0010-0096

iR2270 / iR2870 / iR3570 / iR4570 / / / / / iR2230 / / / iR3530 / / / /

[Manual-related]
Description
Page Numbering, Copy Set Numbering, Watermark Printing, and Data Printing are new features and are adopted first with this machine. To use these features in the Inbox mode, follow the procedure below.
[Mail Box screen > select the desired inbox > select the desired document > Print > Change Pr. Settings > Special Features > select "Pg/Copy Set Numbering" or "Watermark/Print Date" that you want].

14.2.10.1.49 How to superimpose image form over data stored in User Inbox

0010-0104

iR2270 / iR2870 / iR3570 / iR4570 / / / / / iR2230 / / / iR3530 / / / /

[Manual-related]
Description
This is a new function and is adopted first with this machine. The procedure below will enable you to superimpose an image form over data stored in the User Inbox.
1. Registering an image form
Set an original on the copyboard glass and select [User mode > Common Settings > Register Form for Form Composition > Register > select the original size > Next > select [Entire Image Composition] or [Transparent Image] > Next > enter a name for [Form Name] > press the Start key].
2. Composing the image form on data stored in User Inbox
[The Mail Box screen > select the desired data from the Inbox > Print > Change Pr. Settings > Special Features > Form Composition > select the registered image form > OK > Done > Start Print].

14.2.10.1.50 How many image forms can be registered for form composition?

0010-0110

iR2270 / iR2870 / iR3570 / iR4570 / / / / / iR2230 / / / iR3530 / / / /

[Manual-related]
Description
Up to 100 image forms can be registered. However, the registrable number of image forms varies depending on the free space of the hard disk.

14.2.10.1.51 Is it possible to use encrypted SSL communication for E-main/I-FAX?

0010-0112

iR2270 / iR2870 / iR3570 / iR4570 / / / / / iR2230 / / / iR3530 / / / /

[Manual-related]
Description
It is possible to use the encrypted SSL communication for E-mail and I-FAX if the POP server and SMTP server support the communication method.

14.2.10.1.52 Necessary options when installing Finishe-S1

0010-2650

iR2270 / iR2870 / iR3570 / iR4570 / / / / / iR2230 / / / iR3530 / / / /

[Manual-related]
Description
The following options are necessary when installing the finisher-S1.
230V machine of iR2870/2270
- 3 Way Unit-A1
230V machine of iR4570/3570 and 120V machine for all models
- No necessary option

14.2.10.1.53 Slow first copy output time (FCOT): Under what condition does machine needs FCOT of 10 seconds or more?

0010-4193

iR2270 / iR2870 / iR3570 / iR4570 / / / / / iR2230 / / / iR3530 / / / /

[Manual-related]
Description
Under the following conditions, the machine needs the initial rotation time longer than usual to ensure the most appropriate fixing capability. This delays the

first copy output time (FCOT) of the machine.
- iR4570 series: Ambient temperature is 17 deg. C or lower (Initial rotation time: 7 seconds longer than usual)
- iR2270 series: Ambient temperature is 13 deg. C or lower (Initial rotation time: 5 seconds longer than usual)

14.2.10.1.54 How to check extended printer options: Device Configuration

0010-4194

iR2270 / iR2870 / iR3570 / iR4570 / / / / / iR2230 / / / iR3530 / / / /

[Manual-related]

Field Remedy

Follow the procedure below to check the extended printer options.

1. Press the counter check key on the control panel, and then press "Device Configuration" to check if a printer option is displayed on any of the software option fields. Note that the Printer Expansion Kit-A1 can be checked in this field, however, the UFR II Printer Kit-E3 cannot be checked. If no option is displayed in the field, go to the step2.
2. In service mode [COPIER > ACC-STS > PDL-FNC1], check the value of each bit displayed. Starting from the left, each bit shows the following in sequence: BDL, PS. PCL, PDF, LIPS, N201, I5577, ESC/P, HPGL, HPGL2, IMAGING, and KS. (The remaining bits are reserved.) If a printer option has been extended, the corresponding bit is set to "1".

14.2.10.1.55 Are all destinations in Address Book deleted when RAM on Main controller PCB is cleared?

0010-4202

iR2270 / iR2870 / iR3570 / iR4570 / / / / / iR2230 / / / iR3530 / / / /

[Manual-related]

Description

All destinations registered in the address book and all service data are deleted when the data of RAM on the DC controller PCB is cleared in the service mode. When clearing the RAM data, follow the procedure below in advance to keep all the destinations in the address book and all service data.

a. Backup of all destinations in Address Book to a PC
In the Remote UI screen [Add. Func. > Import/Export > Address Book > Export > Start Export].
b. Backup of all service data
In service mode [COPIER > FUNCTION < MISC-P > P-PRINT], output all the service mode values as a P-Print.

14.2.10.1.56 How many sheets of paper can be loaded on Buffer Pass Unit-E1?

0010-4378

iR2270 / iR2870 / iR3570 / iR4570 / / / / / iR2230 / / / iR3530 / / / /

[Manual-related]

Description

The number of sheets that can be loaded on the buffer pass unit-E1 is as follows:
- A4/A5R/LTR/STMTR size paper: 100 sheets at a maximum
- A3/A4R/LDR/LGL/LTRR size paper: 50 sheets at a maximum

14.2.10.1.57 Horizontal registration adjustment is not as required even after adjusting cassette position: 2-Cassette Pedestal-Y2

0010-4379

iR2270 / iR2870 / iR3570 / iR4570 / / / / / iR2230 / / / iR3530 / / / /

[Case in the field]

Description

At time of installation, horizontal registration adjustment is performed by executing the cassette position adjustment and the service mode adjustment. Therefore, when horizontal registration adjustment is not as required under the set of standards even after executing the cassette position adjustment, follow the procedure below to enter the horizontal registration adjustment value in service mode.

Field Remedy

In serviced mode (Level2) [COPIER > ADJUST > MISC > C3-ADJ-Y (for cassette 3)/C4-ADJ-Y (for cassette 4) > enter a value > OK]. This will change the laser write start position for paper fed from a cassette. An increase of '1' will increase the front margin by 0.1mm. (Adjustment range: -128 to 127, the value at time of factory shipment:0)

14.2.10.1.58 DADF-N1: Adjustments to be required when installing DADF-N1

0010-4380

iR2270 / iR2870 / iR3570 / iR4570 / / / / / iR2230 / / / iR3530 / / / /

[Case in the field]

Description

The following adjustments are required when installing DADF-N1.

Field Remedy

When installing the DADF-N1, make the following eight adjustments referring to the installation manual that comes with the unit.

1. Height adjustment
2. Tray width adjustment
3. Right angle adjustment
4. Read position adjustment
5. Magnification adjustment
6. Horizontal registration adjustment
7. Trailing edge registration adjustment
8. White level adjustment

14.2.10.1.59 DADF-N1: Scanning operation in different size originals mode

0010-4382

iR2270 / iR2870 / iR3570 / iR4570 / / / / / iR2230 / / / iR3530 / / / /

[Case in the field]

Description

When selecting the different size originals mode as a special feature of a copying job and scanning either of the following combination of original size from the DADF-N1; LTR and LDR, LTRR and LGL, STMT and LTRR, or LGL and STMT, if "Same Width" is selected in the copy screen [Special Features > Different Size Originals], the machine feeds the originals as if it scans two-sided originals. However, if "Different Width" is selected under Special Features, the machine never operates in such a manner.

14.2.10.1.60 Condensation upon installation/faulty image/malfunction

0010-4383

iR2270 / iR2870 / iR3570 / iR4570 / / / / / iR2230 / / / iR3530 / / / /

[Case in the field]
Description
In the field, a faulty image or a malfunction occurred because of condensation caused on the machine. It is assumed that this condensation occurred because the machine was installed immediately after it was transferred from a cold place to a warm place.
Field Remedy
When the machine is transferred from a cold place to a warm place, leave it for more than 1 hour without unpacking to let it get to know the surrounding temperature.

14.2.10.1.61 Combination of main drive assembly and models

0010-4388

iR2270 / iR2870 / iR3570 / iR4570 / / / / / iR2230 / / / iR3530 / / / /

[Manual-related]
Description
The combination of the main drive assembly and models are as follows:
FM2-0241: iR2270/2807 series models
FM2-1772: iR3570/4570 series models

14.2.10.1.62 How to hide message "Functions limited" on Copy screen: Finisher-Q3

0011-6430

iR2270 / iR2870 / iR3570 / iR4570 / / iR2270N / / iR2870N / / iR3570N / / iR4570N / iR2230 / / / iR3530 / / / / / / /

[Manual-related]
Description
In order to hide the massage "Functions limited" for the Finisher-Q3 from the Copy screen, set "Limited Functions Mode" to OFF under User mode > Common Settings.

14.2.10.2 FAQ on Send Specifications

14.2.10.2.1 Address cannot be deleted

0009-2405

iR2270 / iR2870 / iR3570 / iR4570 / / iR2270N / / iR2870N / / iR3570N / / iR4570N / iR2230 / / / iR3530

[Manual-related]
Description
An address cannot be deleted if it is registered in one-touch button or as a group. In such a case, delete the address from one-touch button or the group in advance.

14.2.10.2.2 How to set machine to automatically select appropriate zoom ratio based on size of originals and selected record size when scanning and sending different size originals: Auto zoom scanning

0009-9980

iR2270 / iR2870 / iR3570 / iR4570 / / / / / iR2230 / / / iR3530 / / / /

[Manual-related]
Description
This is a new function and is adopted first with this machine. This function enables you to set the machine to automatically select the appropriate zoom ratio based on the size of originals and the selected record size when scanning and sending different size originals.
Field Remedy
[The Send screen > Scanning Settings > Option > Copy Ratio > Auto > select the desired record size > OK > Special Features > Different Size Originals > select "Same Width" or "Different Width" > OK > Done > Resolution > select "300 x 300 dpi" or "600 x 600 dpi" > OK].

14.2.10.2.3 When sending different size originals, all originals are scanned at same zoom ratio even if machine is set to automatically select appropriate zoom ratio based on size of originals and selected record size

0009-9992

iR2270 / iR2870 / iR3570 / iR4570 / / / / / iR2230 / / / iR3530 / / / /

[Case in the field]
Description
When you want to make the machine scan different size originals by automatically selecting the appropriate zoom ratio based on the size of each original and the selected record size, you have to follow the field remedy below. In the field, however, the symptom occurred because only "Auto" was selected in "Copy Ratio", and "Different Size Originals" was not selected as the special feature setting in the procedure. To prevent the symptom, be sure to follow the procedure below.
Field Remedy
[The Send screen > Scanning Settings > Option > Copy Ratio > Auto > select the desired record size > OK > Special Features > Different Size Originals > select "Same Width" or "Different Width" > OK > Done > Resolution > select "300 x 300 dpi" or "600 x 600 dpi" > OK].

14.2.10.2.4 Machine fails to automatically select appropriate zoom ratio based on size of originals and record size/Message "Fax TX is not possible with this mode set." is displayed: When using different size originals mode in FAX transmission

0010-0055

iR2270 / iR2870 / iR3570 / iR4570 / / / / / iR2230 / / / iR3530 / / / /

[Case in the field]
Description
In the field, the symptom occurred because the direct sending was set. When setting machine to automatically select the appropriate zoom ratio based on the size of originals and the record size in the different size originals mode, it is impossible to set the direct sending method or the manual sending method simultaneously. Additionally, resolution has to be set to 300 x 300dpi or 600 x 600dpi.

14.2.10.2.5 How to change number of characters extracted for document (file) name when sending in PDF(OCR) mode: FAX transmission

0010-0057

iR2270 / iR2870 / iR3570 / iR4570 / / / / / iR2230 / / / iR3530 / / / /

[Manual-related]
Description
In user mode [Communications Settings > TX Settings under Common Settings > PDF(OCR) Settings > Num. of Char. for Doc Name Setting], change the number of characters extracted for the document name between 1 and 24 characters (default: 24 characters).

14.2.10.2.6 Text recognized in PDF (OCR) mode

0010-0058

iR2270 / iR2870 / iR3570 / iR4570 / / / / / iR2230 / / / iR3530 / / / /

[Manual-related]

Description

Text recognized in the PDF (OCR) mode follows the limitations below.
1. Font
Helvetica, Courier New, Time New Roman
2. Font size
6 to 72 pt
3. Limitations
130 characters per lines (100 lines max)

14.2.10.2.7 Wants to use text extracted from scanned document as name of document (file) when sending in PDF (OCR) mode: FAX transmission

0010-0059

iR2270 / iR2870 / iR3570 / iR4570 / / / / / iR2230 / / / iR3530 / / / /

[Manual-related]

Description

In the Send screen, press [Send Settings] button and [Doc Name OCR] button in sequence, and then press [Start] key. The first 24 characters (default) of the first text block extracted from the first page of the scanned document will be automatically set as the document name. The number of the characters extracted as the document name is changeable between 1 and 24 characters in user mode [Communications Settings > TX Settings under Common Settings > PDF(OCR) Settings > Num. of Char. for Doc Name Setting].

14.2.10.2.8 DADF-N1: Scanning time in different size originals mode

0010-4377

iR2270 / iR2870 / iR3570 / iR4570 / / / / / iR2230 / / / iR3530 / / / /

[Manual-related]

Description

When two single-sided different size originals, which, for example, are A3- and A4-size originals, are copied at the 100% scaling ratio to make two single-sided prints, the length of time that the DADF-N1 needs for scanning such originals varies based on the mode ("Same Width" or "Different Width") selected in the original type specification screen for the different size originals mode. The length of scanning time needed in "Same Width" mode is shorter than that in "Different Width". This is because of the following scanning operation:
-In case "Same Width" is selected
The DADF-N1 picks up an original; when reading ends, it delivers the original as it is. (Normal rotation pickup/Delivery)
- In case "Different Width" is selected
The DADF-N1 feeds an original idly to check the size, and reverses it; when reading ends, it delivers the original as it is. (Idle feeding/Reverse pick-up/Delivery)

14.2.10.2.9 How to expand Universal Send Kit-B1

0010-4386

iR2270 / iR2870 / iR3570 / iR4570 / / / / / iR2230 / / / iR3530 / / / /

[Case in the field]

Description

When expanding the universal send kit-B1, follow the steps below.
1. Access the License Management System using the following URL: http://www.canon.com/lms/ir/
2. In the LMS screen, enter the 24-digit number indicated on the License Access Number Certificate and the serial number of the machine (e.g., ABC01234) and then copy the 24-digit number shown on the Web browser screen in the space given for the purpose on the License Access Number Certificate sheet.
Note: Be sure to double-check the number to avoid an error. Be sure that the user is aware of the importance of the License Access Number Certificate and that it must be stored away in a safe place.
3. In user mode [System Settings > License Registration], enter the 24-digit number obtained in step 2 and then press [Start].
4. Press and hold the control panel switch for 3 seconds or more, press [Start] on the LCD, turn the main power switch OFF in accordance with the instruction on the LCD, and then turn the main power switch ON again more than 10 seconds later.
5. When the machine has started up, press the counter key on the control panel and then select [Device Configuration] to make sure that the name of this kit is displayed as one of software options.

14.2.10.3 FAQ on G3FAX Specifications

14.2.10.3.1 How to display FAX error codes on Activity Report

0009-2410

iR2270 / iR2870 / iR3570 / iR4570 / / iR2270N / / iR2870N / / iR3570N / / iR4570N / iR2230 / / / iR3530

[Manual-related]

Field Remedy

In service mode [FAX> SSSW> SW01> bit0], set it at "1".

14.2.10.3.2 How to output System Dump List

0009-2411

iR2270 / iR2870 / iR3570 / iR4570 / / iR2270N / / iR2870N / / iR3570N / / iR4570N / iR2230 / / / iR3530

[Manual-related]

Field Remedy

In service mode [FAX> REPORT> DUMP], press the OK key to output the system dump list.

14.2.10.3.3 How to print FAX Activity Report when necessary

0009-2425

iR2270 / iR2870 / iR3570 / iR4570 / / iR2270N / / iR2870N / / iR3570N / / iR4570N / iR2230 / / / iR3530

[Manual-related]

Field Remedy

When you want to print the FAX Activity Report at a timing other than the specified times or every 40 transmissions,
select [Send screen > System Monitor > Fax > Log] and press "Print List."

14.2.10.3.4 How to erase all destinations stored in Address Book and One-Touch buttons at once

0009-2429

iR2270 / iR2870 / iR3570 / iR4570 / / iR2270N / / iR2870N / / iR3570N / / iR4570N / iR2230 / / / iR3530

[Manual-related]
Field Remedy
In service mode, [COPIER > FUNCTION > CLEAR > ADRS-BK > OK], then turn the control panel power switch off and switch on the main power of the machine again.

14.2.10.3.5 Wants to hide destination name printed at sender information area on receiving side when sending FAX message: FAX transmission

0010-0034

iR2270 / iR2870 / iR3570 / iR4570 / / / / / iR2230 / / / iR3530 / / / /

[Manual-related]
Description
The following procedure enables you to hide the destination name that is printed at the sender information area on the receiving side. This function is useful when you register destination names in the abbreviated form. However, please note that this function is not available for the iR3300 series machines.
In user mode [Communication Settings > TX Settings under Common Settings > TX Terminal ID > Display Destination Name], select [OFF].

14.2.10.3.6 Characteristics of direct sending: FAX transmission

0010-0085

iR2270 / iR2870 / iR3570 / iR4570 / / / / / iR2230 / / / iR3530 / / / /

[Manual-related]
Description
Unlike the direct sending function of the conventional machines, the function of this machine has the following characteristics.
1. Communication time is considerably reduced.
2. After negotiation with the machine on the FAX receiving side, this machine scans up to ten sheets of original.
3. This function cannot be used in combination with the Stamp function.

14.2.10.3.7 Message "FAX TX is not possible with this mode set" is displayed

0010-0091

iR2270 / iR2870 / iR3570 / iR4570 / / / / / iR2230 / / / iR3530 / / / /

[Case in the field]
Description
In the field, the message was displayed because the stamp function was set in combination with the direct sending mode. When the message appears, change the FAX sending mode to the memory sending or disable the stamp function.

14.2.10.3.8 Is it possible to install Multi Line Fax Board-D1 (2 lines) in Fax model?

0010-4381

iR2270 / iR2870 / iR3570 / iR4570 / / / / / iR2230 / / / iR3530 / / / /

[Case in the field]
Description
It is possible to install the Multi Line Fax Board-D1 to a Fax model. When installing the board, however, follow the field remedy below.
Field Remedy
Detach the standard Fax board from the model and then install the Multi Line Fax Board-D1 (2 lines board).

14.2.10.3.9 FAX TX REPORT and TX REPORT are output when FAX transmission ends in error: FAX transmission

0010-4384

iR2270 / iR2870 / iR3570 / iR4570 / / / / / iR2230 / / / iR3530 / / / /

[Manual-related]
Description
These two reports are set to be output by default. If TX REPORT is not necessary, follow the procedure below.
[User mode > Report Settings > Send under Settings > TX Report > OFF].

14.2.10.3.10 How to enable Incoming Ring function: Auto FAX reception

0010-4387

iR2270 / iR2870 / iR3570 / iR4570 / / / / / iR2230 / / / iR3530 / / / /

[Manual-related]
Description
To enable the incoming ring function, follow the procedure below.
1. Install the optional handset or a telephone set in the machine.
2. In user mode [Communication Settings > RX Settings under FAX Settings > Incoming Ring > ON].
3. Hold down the control panel switch for more than 3 seconds, press the Start button on the LCD, and then turn the main power switch OFF referring to the instruction on the LCD.
4. Wait 10 seconds or more, and then turn the main power switch ON again to enable the incoming ring function.

14.2.10.4 FAQ on I-FAX Specifications

14.2.10.4.1 How to send I-Fax on Intranet

0010-4385

iR2270 / iR2870 / iR3570 / iR4570 / / / / / iR2230 / / / iR3530 / / / /

[Manual-related]
Description
Make the following setting on the LCD:
[Send > I-Fax > set "Mode" to "Simple" > enter the receiver's I-Fax address in "I-Fax Address" > set "Send via Server" to "OFF"].
- How to set SMTP server
[User mode > System Settings > Network Settings > E-mail/I-Fax > set "SMTP Receipt" to "ON" > enter IP address or name to "SMTP Server" > enter E-mail address to "E-mail Address"].

14.2.10.5 FAQ on Remote UI Specifications

14.2.10.5.1 "Page numbering" and "copy set numbering" functions are unavailable when printing document stored in User Inbox from Remote UI

0009-9830

iR2270 / iR2870 / iR3570 / iR4570 / / / / / iR2230 / / / iR3530 / / / /

[Manual-related]

Description

Because of a specification constraint, the page numbering and copy set numbering functions are available only for documents that were scanned at 600 x 600 dpi. When selecting a document scanned at another resolution setting, the "Page/Copy Set Numbering" button is not displayed on the Remote UI screen.

14.2.10.5.2 How to superimpose image form over data stored in User Inbox: When using Remote UI

0009-9831

iR2270 / iR2870 / iR3570 / iR4570 / / / / / iR2230 / / / iR3530 / / / /

[Manual-related]

Description

This is a new function and is adopted first with this machine. Following the procedure below enables you to superimpose an image form stored in the memory of this machine over data stored in Inbox.

Field Remedy

[Remote UI > User Inbox > select the data over which an image form is superimposed > Print > Change Print Settings > Form Composition > Settings > select [ON] for "Form Composition" > select image forms that are superimposed over the user inbox data > OK > OK > Start Print].

14.2.10.5.3 How to print document stored in User Inbox from Remote UI with page numbers, copy set numbers, watermark or date

0009-9832

iR2270 / iR2870 / iR3570 / iR4570 / / / / / iR2230 / / / iR3530 / / / /

[Manual-related]

Description

This is a new function adopted first with this machine. To use this function, follow the procedure below.

[Remote UI screen > Mail Box > User Inbox screen > select the desired box > select the desired document > Print > Change Print Settings > select "Page/Copy Set Numbering" or "Watermark/Print Date"].

Note: The page numbering and copy set numbering functions are available only for documents scanned at 600 x 600 dip.

14.2.10.5.4 How to install key pair file and server certificate file from PC to machine

0009-9837

iR2270 / iR2870 / iR3570 / iR4570 / / / / / iR2230 / / / iR3530 / / / /

[Manual-related]

Description

When installing those files, start the Remote UI and follow the procedure below.

Field Remedy

Remote UI > Add. Func. > Custom Setting > Key and Certificate Settings under Network Settings > Register Key and Certicate > Install > click [Browse] to select the file to register > Start Installation.

14.2.10.5.5 Use of encrypted SSL communication for Remote UI

0010-0036

iR2270 / iR2870 / iR3570 / iR4570 / / / / / iR2230 / / / iR3530 / / / /

[Inspected by Canon Inc.]

Description

This is a new function and is adopted first with this machine. This function protects important data such as address book data and user mode settings from being eavesdropped when they are imported or exported via Remote UI.

When using this function, follow the procedure below.

1. User mode > System Settings > Remote UI > ON > Use SSL > ON
2. Turn OFF the control panel switch and the main power switch. 10 seconds or more later, turn the main power switch ON.

Note: The user mode item [Use SSL] mentioned in step1 is in synchronization with the following user mode item: [System Settings > MEAP Settings > Use HTTP > Use SSL].

14.2.10.5.6 Is change in "Use SSL" setting of Remote UI reflected to "Use HTTP" setting of MEAP?

0010-0054

iR2270 / iR2870 / iR3570 / iR4570 / / / / / iR2230 / / / iR3530 / / / /

[Manual-related]

Description

The change in the "Use SSL" setting of the Remote UI is reflected to the "Use HTTP" setting of the MEAP. The converse is also true.

14.3 Outline of Electrical Components

14.3.1 Clutch/Solenoid

14.3.1.1 Clutches and Solenoids

iR2270 / iR2870 / iR3570 / iR4570 / / iR2270N / / iR2870N / / iR3570N / / iR4570N / iR2230 / / / iR3530 /

<Reader Unit>
The reader unit does not have a clutch or solenoid.
<Printer Unit>

T-14-1

Notation	Name	Description	Remarks
CL1	manual feed pickup clutch	drives the manual feed pickup roller	

Notation	Name	Description	Remarks
CL2	registration clutch	drives the registration roller	
CL3	developing sleeve clutch	drives the developing sleeve	
CL6	duplex feed clutch	drives the duplex roller 1/2	iR2270/2270F/2870/2870F
SL1	cassette 1 pickup solenoid	drives the cassette 1 pickup roller	
SL2	cassette 2 pickup solenoid	drives the cassette 2 pickup roller	

T-14-2

Notation	Parts No.	PART-CHK	DC controller PCB
CL1	FH6-5076	CL>1	J306
CL2	FH6-5075(iR2270/2270F/2870/2870F) FK2-0361(iR3570/3570F/4570/4570F)	CL>2	J313
CL3	FK2-0404	CL>3	J313
CL6	FH6-5005	CL>4	J306
SL1	FK2-0408	SL>1	J308
SL2	FK2-0408	SL>2	J318

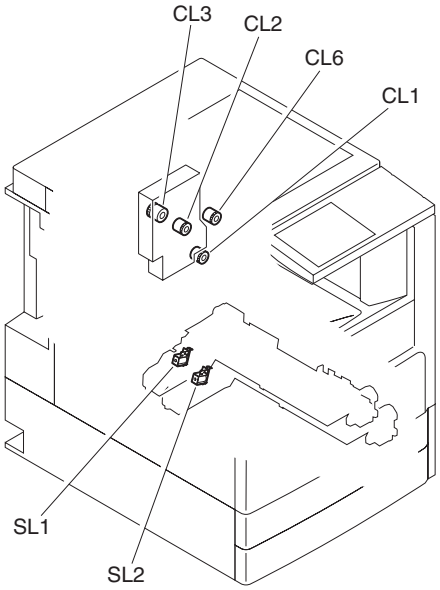

F-14-20

14.3.2 Motor

14.3.2.1 Motors

iR2270 / iR2870 / iR3570 / iR4570 / / iR2270N / / iR2870N / / iR3570N / / iR4570N / iR2230 / / / iR3530 /

<Reader Unit>

T-14-3

Notation	Name	Description
M501	reader motor	drives the carriage

T-14-4

Notation	Parts No.	Reader controller PCB	Error
M501	FH5-1028	J505	E202

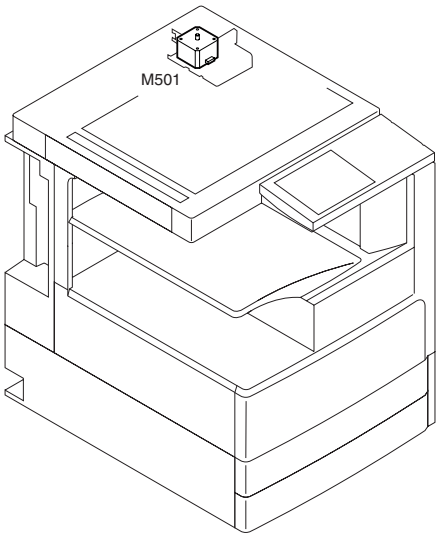

F-14-21

<Printer Unit>

T-14-5

Notation	Name	Description	Remarks
M1	polygon motor	drives the laser scanner	
M2	main motor	drives the major components of the printer unit	
M3	fixing motor	drives the fixing assembly	
M4	delivery motor 1	drives the delivery roller	
M5	bottle rotation motor	drives the rotation of the bottle	
M6	cassette 1 pickup motor	drives the pickup unit 1	
M7	cassette 2 pickup motor	drives the pickup unit 2	
M10	duplex feed motor	drives the duplex roller 1/2	iR3570/3570F/4570/4570F
M12	hopper motor	drives the hopper	

T-14-6

Notation	Parts No.	PART-CHK	DC controller PCB	Error
M1	scanner unit FM2-0276(iR2270/2270F/2870/2870F) FM2-0334(iR3570/3570F/4570/4570F)	MTR>1	J316	E110
M2	FK2-0385(iR2270/2270F/2870/2870F) FM2-0362 (iR3570/3570F/4570/4570F)	MTR>2	J312	E010
M3	FK2-0367	MTR>3	J311,J319	E014
M4	FK2-0365	MTR>4	J305	
M5	FK2-0015	MTR>5	J302A	E025
M6	FK2-0377	MTR>6	J307A	
M7	FK2-0377	MTR>7	J307A	
M10	FL2-3266	MTR>8	306	
M12	FK2-0379	MTR>9	J302A	E025

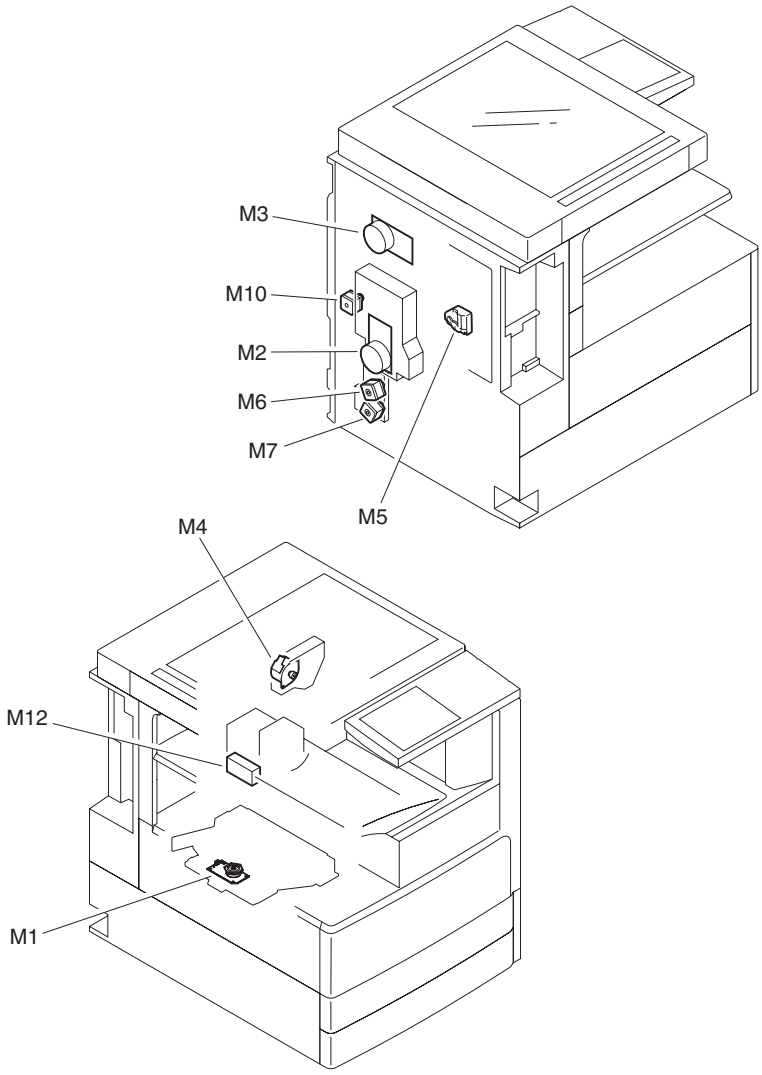

F-14-22

14.3.3 Fan

14.3.3.1 Fans

iR2270 / iR2870 / iR3570 / iR4570 / / iR2270N / / iR2870N / / iR3570N / / iR4570N / iR2230 / / / iR3530 /

<Reader Unit>
The reader unit does not have a fan.
<Printer Unit>

T-14-7

Notation	Name	Description
FM1	heat discharge fan (front)	discharges heat from the fixing unit
FM2	heat discharge fan (rear)	discharges heat from the fixing unit

T-14-8

Notation	Parts No.	I/O		DC controller PCB	Error
FM1	FK2-0360	P020-6	1:ON	J307B	E805
FM2	FK2-0360	P023-2	1:ON	J307B	E805

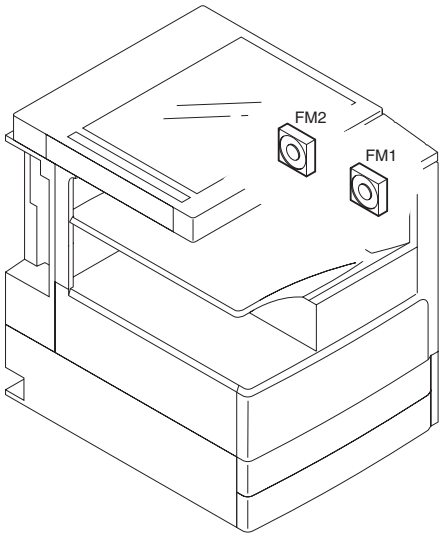

F-14-23

14.3.4 Sensor

14.3.4.1 Sensors

iR2270 / iR2870 / iR3570 / iR4570 / / iR2270N / / iR2870N / / iR3570N / / iR4570N / iR2230 / / / iR3530 /

<Reader Unit>

T-14-9

Notation	Name	Description
PS501	copyboard cover open/closed sensor (rear)	detects the state (open/closed) of the copyboard cover
PS502	copyboard cover open/closed sensor (front)	detects the state (open/closed) of the copyboard cover
PS503	CIS HP sensor	detects the CIS home position
PS504	original sensor 1	detects original size (AB, Inch/A, Inch/AB)
PS505	original sensor 2	detects original size (AB, A, Inch/AB)
PS506	original sensor 3	detects original size (for all countries)
PS507	original sensor 4	detects original size (AB, Inch/AB)
PS508	original sensor 5	detects original size (Inch/A)
CIS1	CIS	reads originals

T-14-10

Notation	Parts No.	I/O		Reader controller PCB	Jam/error code
PS501	WG8-5624	P006-7	1: copyboard cover closed	J506	
PS502	WG8-5624	P006-5	1: copyboard cover closed	J506	0090, 0091
PS503	WG8-5624	P006-6	1: HP	J506	E202
PS504	FH7-7569	P004-0	0: original present	J507	
PS505	FH7-7569	P004-1	0: original present	J507	
PS506	FH7-7569	P004-2	0: original present	J508	
PS507	FH7-7569	P004-3	0: original present	J508	
PS508	FH7-7569	P004-3	0: original present	J508	
CIS1	FL2-2997			J510	E225

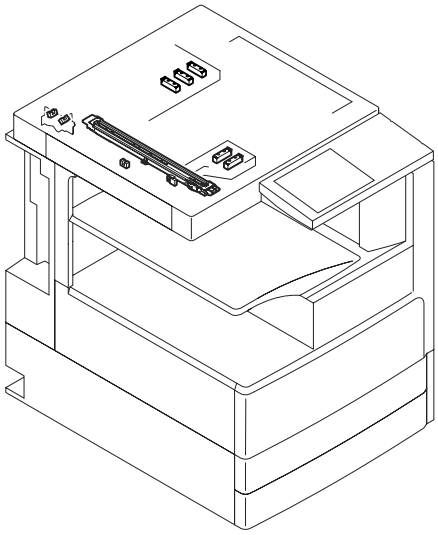

F-14-24

<Printer Unit>

T-14-11

Notation	Name	Description
PS1	cassette 1 paper sensor	detects the presence/absence of cassette 1
PS2	cassette 2 paper sensor	detects the presence/absence of cassette 2
PS3	cassette 1 paper level sensor A	detects paper level A in cassette 1
PS4	cassette 1 paper level B sensor	detects paper level B in cassette 1
PS5	cassette 2 paper level A sensor	detects paper level A in cassette 2
PS6	cassette 2 paper level B sensor	detects paper level B in cassette 2
PS7	manual feeder paper sensor	detects paper in the manual feeder
PS8	fixing film speed sensor	detects the speed of the fixing film
PS9	pre-registration sensor	detects paper before registration
PS10	cassette 1 retry sensor	detects pickup retry in cassette 1
PS11	cassette 2 retry sensor	detects pickup retry in cassettes 2
PS13	fixing outlet sensor	detects paper at the fixing outlet
PS14	No. 1 delivery sensor	detects delivery
PS15	No. 1 delivery full sensor	detects a delivery full condition
PS16	waste toner sensor	detects a waste toner full condition
PS17	duplex feed sensor	detects duplex feed
PS18	feed cover sensor	detects the feed cover state
PS22	front cover sensor	detects the state (open/closed) of the front cover
HU1	environment sensor	detects the machine inside temperature
TS1	developing assembly toner sensor	detects the toner inside the developing assembly
TS2	sub hopper toner sensor	detects the tone inside the sub hopper
TH1	fixing main thermistor	detects the temperature of the fixing heater
TH2	fixing sub thermistor	detects the temperature of the fixing heater
TH3	drum thermistor	detects the temperature of the drum
TP1	thermal switch	cuts off the power to the heater in response to overheating

T-14-12

Notation	Parts No.	I/O		DC controller PCB	JAM
PS1	FH7-7312	P028-5	1: paper absent	J308	
PS2	FH7-7312	P019-5	1: paper absent	J318	
PS3	FH7-7312	P028-6	1: level about 50% or less	J308	
PS4	FH7-7312	P028-7	1: level about 50 sheets or less	J308	
PS5	FH7-7312	P019-6	1: level about 50% or less	J318	
PS6	FH7-7312	P019-7	1: level about 50 sheets or less	J318	
PS7	FH7-7312	P021-0	0: paper present	J307B	
PS8	FM2-2769			J303	
PS9	FK2-0149	P027-1	1: paper present	J313	xx05

14.3.5 Switch

14.3.5.1 Switches

iR2270 / iR2870 / iR3570 / iR4570 / / iR2270N / / iR2870N / / iR3570N / / iR4570N / iR2230 / / / iR3530 /

<Reader Unit>
The reader unit does not have a switch.
<Printer Unit>

T-14-14

Notation	Name	Description
SW1	main power switch	turns on/off the main power switch
SW2	door switch	checks the right door
SW5	environment heater switch	turns on/off the environment heater (option)

T-14-15

Notation	Parts No.	DC controller PCB	AC driver PCB
SW1	FK2-0140		J201
SW2	FK2-0384	J309	
SW5	WC1-5182		

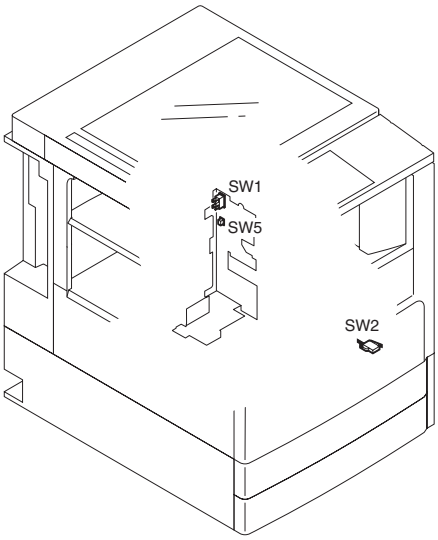

F-14-26

14.3.6 Lamps, Heaters, and Others

14.3.6.1 Lamps, Heaters, and Others

iR2270 / iR2870 / iR3570 / iR4570 / / iR2270N / / iR2870N / / iR3570N / / iR4570N / iR2230 / / / iR3530

<Reader Unit>

T-14-16

Notation	Name	Parts No.	Description
H5	reader heater (left)	NPN	prevents condensation on the reading glass
H6	reader heater (right)	NPN	prevents condensation on the copyboard glass
LCD1	LCD panel	FL2-1092	display on the control panel (touch panel)

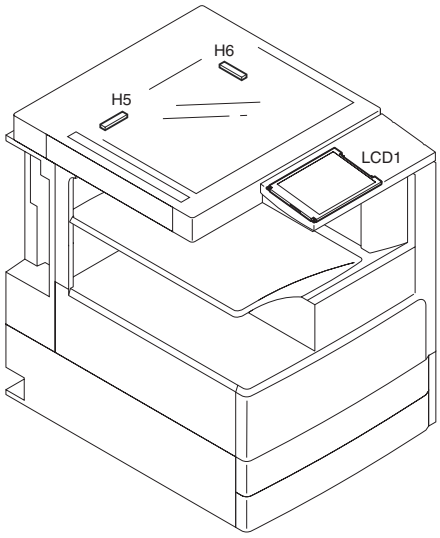

F-14-27

<Printer Unit>

T-14-17

Notation	Name	Description
H1	fixing main heater	fixing main heater
H2	fixing sub heater	fixing sub heater
H4	cassette heater	prevents absorption of moisture by the paper inside the cassette
H7	deck heater	prevents absorption of moisture by paper inside the side deck
ELCB1	leakage breaker (100V)	leakage breaker
ELCB2	leakage breaker (230V)	leakage breaker
LA1	pre-exposure lamp	removes residual charges from the drum
VA1	varistor	varistor
HDD1	hard disk	stores programs and image data
SVR1	paper width detecting VR	detects the width of paper in the manual feeder
SP1	speaker	speaker (fax unit)

T-14-18

Notation	Parts No.	
H1,H2	fixing film unit iR2270/2270F/2870/2870F FM2-0293(100V) FM2-0358(120V) FM2-0359(230V)	fixing film unit iR3570/3570F/4570/4570F FM2-1792(100V) FM2-1793(120V) FM2-1794(230V)
H4	FK2-0375(100V) FK2-0376(230V)	
H7	NPN(100V) FH7-4585(230V)	
ELCB1	FH7-7626	
ELCB2	FH7-7625	

T-14-19

Notation	Parts No.	Main controller PCB	DC controller PCB
LA1	FK2-0368		J302B
VA1	FL2-3265		
HDD1	WM2-5216	J1026	
SVR1	FM2-2768		J302B
SP1	FM2-0342		

F-14-28

14.3.6.2 Lamps, Heaters, and Others

iR2230 / / / iR3530 /

<Reader Unit>

T-14-20

Notation	Name	Parts No.	Description
H5	Reader heater (left)	NPN	Prevents condensation on the reading glass (100, 230 V)
H6	Reader heater (right)	NPN	Prevents condensation on the platen board glass (100, 230 V)
LCD1	LCD panel	FH6-0735	Control panel indication (touch panel)

F-14-29

<Printer Unit>

T-14-21

Notation	Name	Description
H1	Fixing main heater	Fixing main heater
H2	Fixing sub heater	Fixing sub heater
H4	Cassette heater	Prevents absorption of moisture by paper inside the cassette
H7	Deck heater	Prevents absorption of moisture by paper inside the side deck
ELCB1	Leakage breaker (100 V)	Leakage breaker
ELCB2	Leakage breaker (230 V)	Leakage breaker
LA1	Pre-exposure lamp	Removes residual charge from the drum
VA1	Varistor	Varistor

Notation	Name	Description
HDD1 *1	Hard disk	Program, Image storage
SVR1	Paper-width detection volume	Manual feed paper-width detection
SP1	Speaker	Speaker(FAX unit)

*1 A hard disk(HDD1) is an optional in iR2230/2830/3530.

T-14-22

Name	Parts No.	
H1,H2	Fixing film unit iR2230/2230F/2830 FM2-0293(100V) FM2-0358(120V) FM2-0359(230V)	Fixing film unit iR3530 FM2-1793(120V) FM2-1794(230V)
H4	FK2-0375(100V) FK2-0376(230V)	
ELCB1	FH7-7626	
ELCB2	FH7-7625	

T-14-23

Notation	Parts No.	Main controller PCB	DC controller PCB
LA1	FK2-0368		J302B
VA1	FL2-3265		
HDD1	WM2-5216	J1026	
SVR1	FM2-2768		J302B
SP1	FM2-0342		

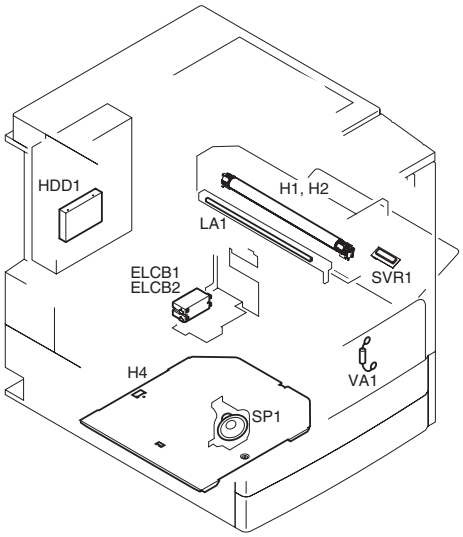

F-14-30

14.3.7 PCBs

14.3.7.1 PCBs

iR2270 / iR2870 / iR3570 / iR4570 / / iR2270N / / iR2870N / / iR3570N / / iR4570N

<Reader Unit>

T-14-24

	Name	Part No.	Description
[1]	reader controller PCB	FG3-3765	controls the reader unit/ADF
[2]	control panel CPU PCB	FG6-8938	controls the control panel
[3]	control pen key PCB	FG3-2834	controls the inputs from the keypad keys
[4]	control panel inverter PCB	FG6-8939	controls the activation of the backlight of the LCD

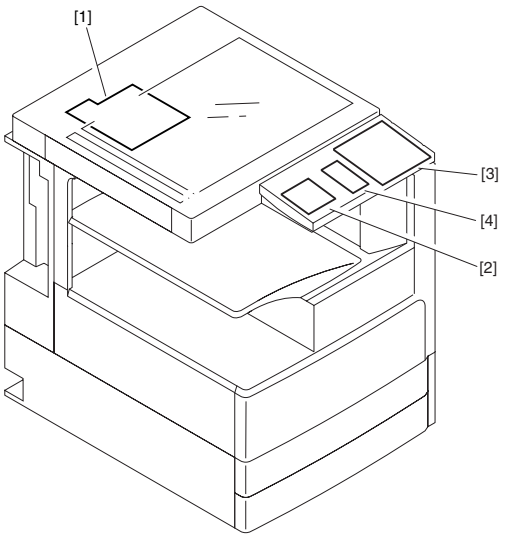

F-14-31

<Printer Unit>

T-14-25

	Name	Parts No.	Description
[2]	cassette 1 size detection PCB	FM2-2770	detects the size of cassette 1
[3]	cassette 2 size detection PCB	FM2-2770	detects the size of cassette 2
[4]	cassette size detection relay PCB	FM2-2771	relays data for cassette size
[5]	pseudo-CI PCB	FM2-2773	generates the pseudo CI signal
[6]	BD PCB	scanner unit FM2-0276(iR2270/ 2270F/2870/2870F) FM2-0334(iR3570/ 3570F/4570/4570F)	generates the BD signal
[7]	NCU PCB	FM2-2790	controls the line switching operation
[9]	fax board PCB	FM2-2789	control the fax unit
[10]	laser driver PCB	scanner unit FM2-0276(iR2270/ 2270F/2870/2870F) FM2-0334(iR3570/ 3570F/4570/4570F)	controls the laser unit drive
[11]	G3 fax power supply PCB	FM2-0860	G3 fax power supply
[12]	modular PCB	FM2-0343	line I/F
[13]	high-voltage power supply PCB	FM2-0261	high-voltage power supply
[14]	printer power supply PCB	main power supply PCB unit FM2-0245	printer power supply
[15]	controller power supply PCB	FM2-2764	controller PCB
[16]	AC driver PCB	main power supply PCB FM2-0245	AC drive
[17]	accessories power supply PCB	FK2-0339	accessorizes power supply
[18]	environment switch PCB	FG3-2787	heater power supply switch
[19]	DC controller PCB	FM2-2767	controls the printer unit/accessory
[20]	main controller PCB	FM2-3226	processes output image data for the printer unit
[21]	expansion bus PCB	FM2-2804	connection interface
[22]	USB board	FM2-3010	USB interface
[23]	all-night power supply PCB	FK2-0341	supplies power thorough day and night

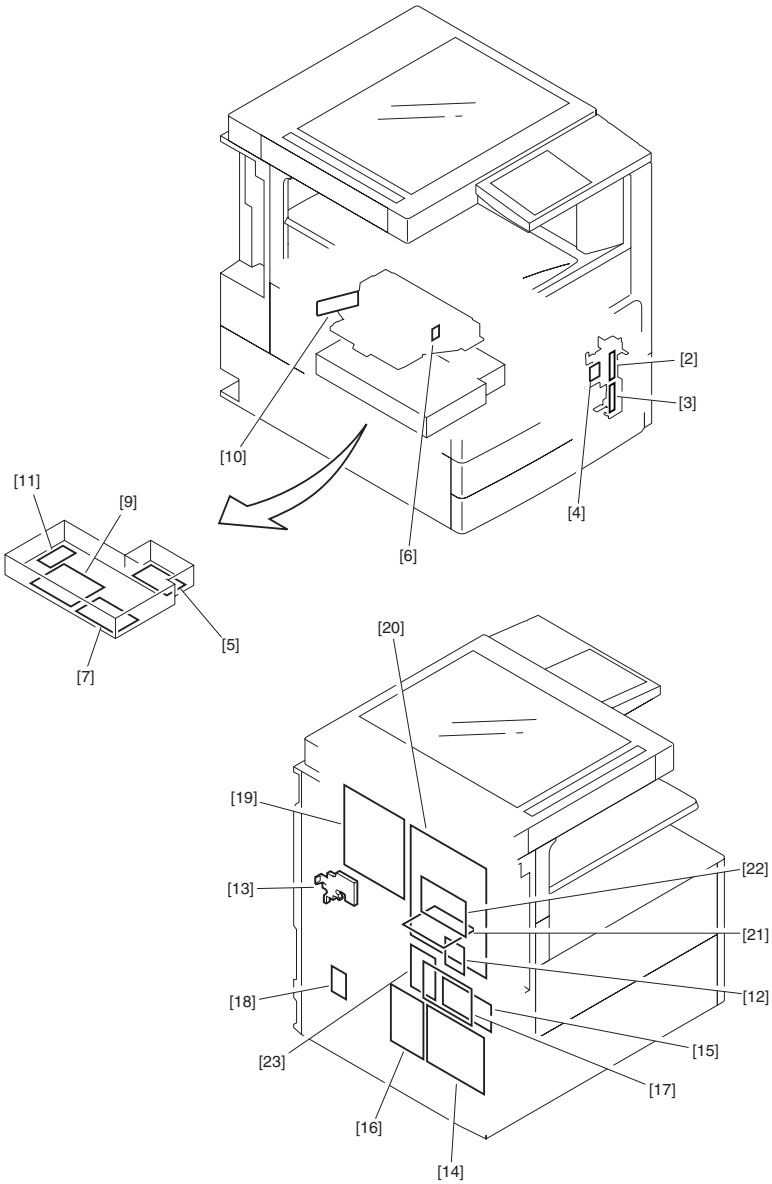

F-14-32

14.3.7.2 PCBs

iR2230 / / / iR3530 /

<Reader Unit>

T-14-26

Ref.	Name	Parts No.	Function
[1]	Reader controller PCB	FG3-3765	Controls the reader unit/ADF.
[2]	Control panel inverter PCB	FM2-2753	Controls the activation of the LCD back light.
[3]	Control panel CPU PCB	FM2-2754	Controls the control panel.
[4]	Control panel key PCB	FG6-8939	Controls the keypad inputs.

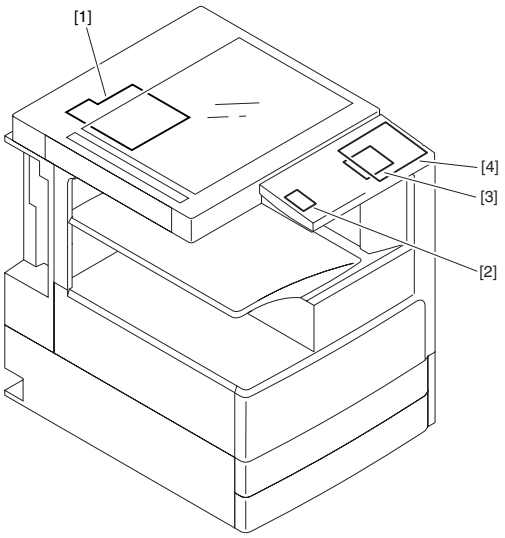

F-14-33

<Printer Unit>

T-14-27

Ref.	Name	Parts No.	Description
[1]	Arrestor PCB (100 V)	FM2-2973	Protects against high voltage.
[2]	Cassette 1 size detection PCB	FM2-2770	Cassette 1 size detection
[3]	Cassette 2 size detection PCB	FM2-2770	Cassette 2 size detection
[4]	Cassette size detection relay PCB	FM2-2771	Cassette size detection relay
[5]	Pseudo CI PCB	FM2-2773	Pseudo CI signal generation
[6]	BD PCB	Scanner unit FM2-0276(iR2230/2230F/2830) FM2-0334(iR3530)	BD signal generation
[7]	NCU PCB	FM2-2790	Line switch control
[9]	Fax board PCB	FM2-2789	Fax unit control
[10]	Laser driver PCB	Scanner unit FM2-0276(iR2230/2230F/2830) FM2-0334(iR3530)	Laser unit drive control
[11]	G3 fax power supply PCB	FM2-0860	G3 fax power supply
[12]	Modular PCB	FM2-0343	Line I/F
[13]	High-voltage power supply PCB	FM2-0261	High-voltage power supply
[14]	Printer power supply PCB	Main power supply PCB unit FM2-0260(100/115V) FM2-02458(230V)	Printer power supply
[15]	Controller power supply PCB	FM2-2764	Controller power supply
[16]	AC driver PCB	Main power supply PCB unit FM2-0260(100/115V) FM2-02458(230V)	AC drive
[17]	Accessories power supply PCB	FK2-0338(100/115V) FK2-0339(230V)	Accessories power supply
[18]	Environment switch PCB (100, 230 V)	FG3-2787	Heater power switch
[19]	DC controller PCB	FM2-2767	Controls the printer unit/accessories.
[20]	Main controller PCB	FM2-3226	Processes image data for output to the printer unit.
[21]	Expansion bus PCB	FM2-2804	Interface
[22]	USB board	FM2-3010	USB interface
[23]	Uninterruptive power supply PCB	FK2-0340(100/115V) FK2-0341(230V)	Supplies uninterruptive power.

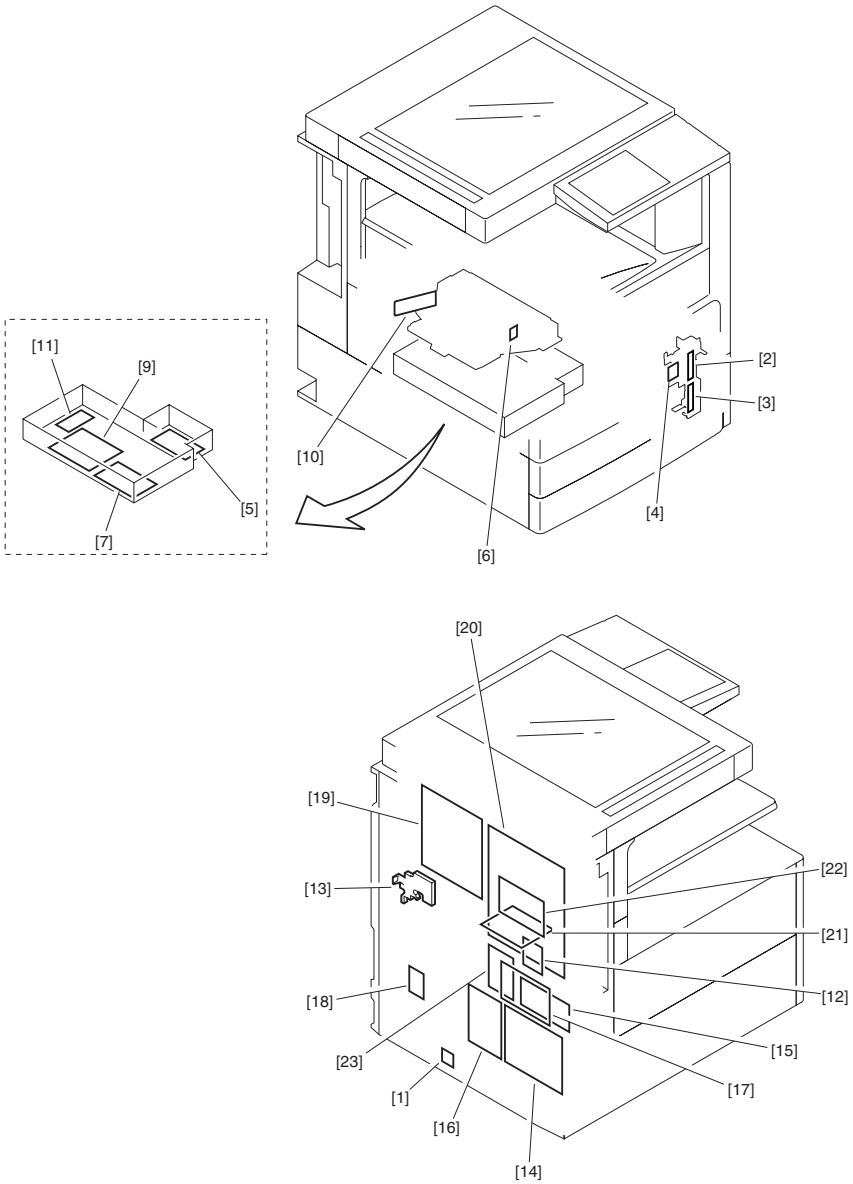

F-14-34

14.3.8 Variable Resistors (VR), Light-Emitting Diodes (LED), and Check Pins by PCB

14.3.8.1 Variable Resistors (VR), Light-Emitting Diodes, and Check Pins by PCB

iR2270 / iR2870 / iR3570 / iR4570 / / iR2270N / / iR2870N / / iR3570N / / iR4570N / iR2230 / / / iR3530 /

Of the variable resistors (VR), light-emitting diodes (LED), and check pins found in the machine, those that are needed when servicing the machine in the field are discussed.

- Some LEDs carry current and emit light when they are off; this is a normal condition, and must be kept in mind.
- Take note of the following:

...VR that may be used in the field.

...VR that must not be used in the field.

14.3.8.2 Points to Note About the Leakage Breaker

iR2270 / iR2870 / iR3570 / iR4570 / / iR2270N / / iR2870N / / iR3570N / / iR4570N / iR2230 / / / iR3530 /

Points to Note When Checking the Output of a PCB
Normally, an AC voltage is applied to the terminal of the leakage breaker [1].
Take care not to touch it when making a check.

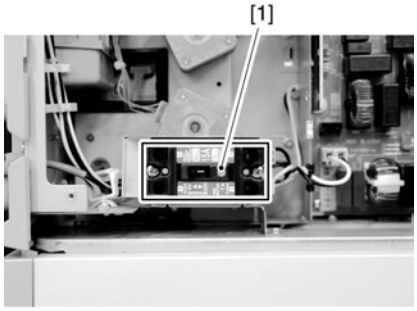

F-14-35

14.3.8.3 All-Night Power Supply PCB

iR2270 / iR2870 / iR3570 / iR4570 / / iR2270N / / iR2870N / / iR3570N / / iR4570N / iR2230 / / / iR3530 /

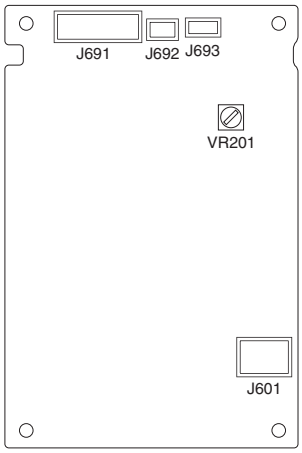

F-14-36

T-14-28

Notation	Description
VR201	for factory use

Chapter 15 Self Diagnosis

Contents

15.1 Error Code Table 15-1
15.1.1 Error Code 15-1
15.2 Error Code Details 15-2
15.2.1 Error Code Details 15-2
15.2.2 E602 in Detaill 15-7
15.2.3 Error Code Details（test for A4 size） 15-12
15.3 Error Code (SEND) 15-16
15.3.1 Results of Self-Diagnosis 15-16
15.3.2 Error Codes 15-17
15.4 Jam Code 15-21
15.4.1 Jam Code (printer unit) 15-21
15.4.2 Jam Code (finisher-related) 15-21
15.4.3 Jam Code (finisher-related) 15-22
15.4.4 Jam Code (ADF-related) 15-22
15.5 Alarm Code 15-23
15.5.1 Alarm Code 15-23
15.5.2 Alarm Code 15-23
15.6 Finisher/Saddle Finisher Error Codes 15-24
15.6.1 Error Code in Detail (finisher, puncher) 15-24
15.6.2 Error Code Detail (finisher, puncher) 15-31
15.7 DADF Error Codes 15-34
15.7.1 Error Code in Detail (DF) 15-34

15.1 Error Code Table

15.1.1 Error Code

iR2270 / iR2870 / iR3570 / iR4570 / / iR2270N / / iR2870N / / iR3570N / / iR4570N / iR2230 / / iR3530 /

T-15-1

Code	Error name/description
E000	fixing overheating
E001	fixing assembly overheating
E002	fixing assembly low temperature
E003	post-standby fixing low temperature
E007	fixing film rotation error
E010	main motor rotation error
E014	fixing motor rotation error
E019	waste toner case full, waste toner case full sensor error
E020	toner clogging between sub hopper and developing assembly
E024	developing assembly connector disconnection
E025	hopper motor, bottle motor error
E032	NE controller counter error
E064	power supply voltage error (high-voltage)
E100	BD interval error
E110	scanner motor error
E191	communication error for high voltage power supply
E202	CIS home position detection error
E225	CIS light intensity error
E227	reader unit power supply error
E248	backup memory error
E261	zero-cross signal error
E315	image data error
E400	feeder communication error
E490	wrong DF type
E500	finisher communication error
E503	finisher internal communication error
E505	finisher backup memory error
E514	stack delivery/trailing edge assist motor error
E519	gear change motor error
E520	off-set motor error
E530	rear alignment error
E531	stapling error
E532	stapler shift error
E535	swing error
E537	front alignment error
E540	stack tray ascent error/upper tray ascent error
E542	lower tray ascent error
E577	paddle error
E584	shutter error
E590	punching error
E591	puncher dust sensor error
E592	punch horizontal registration sensor error
E593	punch shift error
E5F0	saddle paper positioning error
E5F1	saddle paper folding error
E5F2	saddle guide error
E5F3	saddle alignment error
E5F4	saddle rear stapling error
E5F5	saddle front stapling error
E5F6	saddle butting error
E5F8	saddle connector error
E5F9	saddle switch error
E602	hard disk error
E604	image memory error/shortage
E609	hard disk error
E610	herd disk coding key fault
E674	fax board communication error
E710	IPC initialization error
E711	IPC communication error
E713	communication error for finisher

Code	Error name/description
E716	communication error for pedestal/ communication error for 3-way unit-A1
E717	communication error for NE controller
E719	coin vendor error
E730	PDL software error
E732	scanner communication error
E733	printer communication error
E740	Ether board error
E743	DDI communication error
E744	language file/boot ROM error
E745	TokenRing board error
E746	accessories board wrong model error
E748	controller board and SDRAM size mismatch
E805	fan error

15.2 Error Code Details

15.2.1 Error Code Details

iR2270 / iR2870 / iR3570 / iR4570 / / iR2270N / / iR2870N / / iR3570N / / iR4570N / iR2230 / /

T-15-2

Code	Cause	Remedy
E000	The temperature of the fixing assembly is abnormally high.	
0001	While startup control is under way, the reading of the main thermistor is less than 30 deg C continuously for 200 msec or more 1 sec after the start of power supply. While startup control is under way, the reading of the main thermistor is less than 70 deg C continuously for 200 msec or more 2 sec after the start of power supply. While startup control is under way, the reading of the main thermistor is less than 120 deg C continuously for 200 msec 6 sec after the start of power supply. The startup control does not end 30 sec after the start of power supply.	Reset the condition in service mode: COPIER>FUNCTION>CLEAR>ERR. Replace the main thermistor. Replace the DC controller PCB.
E001	The temperature of the fixing assembly is abnormally high.	
0000	The reading of the main thermistor is 250 deg C or more continuously for 200 msec.	Reset the condition in service mode: COPIER>FUNCTION>CLEAR>ERR. Replace the main thermistor. Replace the DC controller PCB.
0001	The hardware circuit detects overheating of the main or sub thermistor for 200 msec.	Reset the condition in service mode: COPIER>FUNCTION>CLEAR>ERR. Replace the DC controller PCB.
0002	The reading of the sub thermistor is 295 deg C or more continuously for 200 msec.	Reset the condition in service mode: COPIER>FUNCTION>CLEAR>ERR. Replace the sub thermistor. Replace the DC controller PCB.
E002	The rise in temperature of the fixing assembly is faulty.	
0000	While startup control is under way, the reading of the main thermistor is less than 115 deg C continuously for 400 msec 1.3 sec after it has indicated 100 deg C. While startup control is under way, the reading of the main thermistor is less than 150 deg C continuously for 400 msec 1.3 sec after it has indicated 140 deg C.	Reset the condition in service mode: COPIER>FUNCTION>CLEAR>ERR. Replace the main thermistor. Replace the DC controller PCB.
E003	The fixing temperature is too low after a standby state.	
0000	While regular temperature control is under way, the reading of the main thermistor is less than 140 deg C continuously for 400 msec or more.	Reset the condition in service mode: COPIER>FUNCTION>CLEAR>ERR. Replace the main thermistor. Replace the DC controller PCB.
E007	The rotation of the fixing film is faulty.	
0000	While the fixing motor is rotating, the marker signal is not detected for 6 sec with the reading of the main thermistor indicating 100 deg C or more.	Reset the condition in service mode: COPIER>FUNCTION>CLEAR>ERR. Replace the main thermistor. Replace the DC controller PCB.
E010	The rotation of the main motor is faulty.	
0001	Detection is executed every 100 msec after the start of motor rotation; however, the drive detection signal is absent for 2 sec.	Replace the main motor. Replace the DC controller PCB.
0002	During motor rotation, detection is executed every 100 msec; however, the drive signal is absent 5 times in sequence.	Replace the main motor. Replace the DC controller PCB.
E014	The rotation of the fixing motor is faulty.	
0001	Detection is executed every 100 msec after the start of motor rotation; however, the drive detection signal is absent for 2 sec.	Replace the fixing motor. Replace the DC controller PCB.

Code	Cause	Remedy
0002	During motor rotation, detection is executed every 100 msec; however, the drive signal is absent 5 times in sequence.	Replace the fixing motor. Replace the DC controller PCB.
E019	The waste toner case is full, or the waste toner case full sensor is faulty.	
0000	When the waste toner case is identified as being full for 2000 prints continuously, an alert is issued; thereafter, the case is identified as being full continuously for 100 prints.	Replace the waste toner sensor. Replace the DC controller PCB.
E020	The path between the sub hopper and the developing assembly is clogged with toner.	
0000	The developing assembly toner sensor detects the absence of toner, while the sub hopper toner sensor detects the presence of toner. With the developing clutch turned on, the hopper feedscrew motor is rotated for 1 sec intermittently 194 times; still, the developing assembly toner sensor does not detect the presence of toner.	Replace the developing assembly toner sensor. Replace the sub hopper toner sensor. Replace the DC control PCB.
E024	The developing assembly connector is disconnected/Disconnection of Toner sensor.	
0000	The connection detection signal is absent continuously for 100 msec.	Replace the developing assembly toner sensor. Connect the connector. Replace the DC controller PCB.
0001	Disconnection of the wire used for detecting the connection of the toner level sensor is found. When the disconnection of the wire used for detecting the connection of the toner level sensor has been detected for 7.5 min without interruption (12.5 min in the manual /envelop cassette feeding). When the disconnection of the wire used for detecting the connection of the toner level sensor has been detected for 12.5 min without interruption. -iR4570/3570/3530 When the disconnection of the wire used for detecting the connection of the toner level sensor has been detected for 7.5 min without interruption (12.5 min in the manual /envelop cassette feeding). -iR2870/2270/2230 When the disconnection of the wire used for detecting the connection of the toner level sensor has been detected for 12.5 min without interruption.	Correct the cable. Replace the sensor.
E025	The hopper motor or the bottle motor is faulty.	
0000	The sub hopper toner sensor connection detection signal is absent for 100 msec 10 times in sequence.	Replace the sub hopper toner sensor. Connect the connector. Replace the detection PCB.
0001	While the hopper motor is rotating, the motor error lock signal is detected continuously 4 times every 56 msec. Or, while the bottle motor is rotating, the motor error lock signal is detected 22 times in sequence every 10 msec.	Replace the hopper motor. Replace the bottle motor. Replace the DC controller PCB.
E032	The NE controller counter malfunctions.	
0001	An open circuit is detected for the count pulse signal.	Turn off the main power, and check the cable for an open circuit; then, turn the main power back on.
E064	The voltage of the power supply is faulty (high-voltage error).	
0001	The value read from the EEPORM is outside a specific range.	Turn off and then back on the main power. Replace the EEPROM.
0002	While output is being generated, the AD value of the primary DC voltage is 230 (DEC) or more for 100 msec 2 times in sequence. (However, after output, it is not detected for 100 msec.)	Replace the high-voltage power supply. Replace the DC controller PCB.
0003	While output is being generated, the AD value of the developing DC voltage is 224 (DEC) or more for 10 msec 2 times in sequence. (However, after output, it is not detected for 100 msec.)	Replace the high-voltage power supply. Replace the DC controller PCB.
0004	While output is being generated, the AD value of the transfer output current is 205 (DEC) or more for 100 msec 2 times in sequence. (However, after output, it is not detected for 100 msec.)	Replace the high-voltage power supply. Replace the controller PCB.
0005	While output is being generated, the AD value of the transfer output voltage is 0 (DEC) for 100 msec 2 times in sequence. (However, after output, it is not detected for 100 msec.)	Replace the high-voltage power supply. Replace the DC controller PCB.
E100	The BD interval is outside a specific range.	
0001	After the machine has become ready for image formation (i.e., the scanner motor is ready for operation, and the laser has been turned on), an error has occurred 50 times or more (BD error).	Replace the laser unit. Replace the DC controller PCB. Check the wiring.
E110	The scanner motor is faulty.	
0001	The scanner motor speed lock signal does not indicate a locked state a specific period of time after the scanner motor has been started.	Replace the laser unit. Replace the DC controller PCB. Check the wiring.

Code	Cause	Remedy
0002	The speed lock signal indicates a deviation 10 times in sequence at intervals of 10 msec after the signal has indicated a locked state.	Replace the laser unit. Replace the DC controller PCB. Check the wiring.
0003	With the image clock switched over, the scanner motor speed lock signal does not indicate a locked state 6.5 sec after a switchover is made from low to normal speed or 8 sec after a switchover is made from normal to low speed.	Replace the laser unit. Replace the DC controller PCB. Check the wiring.
E191	There is an error in the communication with the high-voltage power supply.	
0000	The data transmission/reception does not end normally 500 msec after the most recent transmission/reception of data ended normally.	Replace the high-voltage power supply. Replace the DC controller PCB.
E202	There is an error in the detection of the CIS home position.	
0001	The attempt to detect the home position fails when the CIS is moved forward.	Disconnect and then connect the harness connector. Replace the following as necessary: scanner home position sensor, scanner motor, reader controller PCB.
0002	The attempt to detect the home position fails when the CIS is moved back.	Disconnect and then connect the harness connector. Replace the following as necessary: scanner home position sensor, scanner motor, reader controller PCB.
E225	The light intensity of the CIS is faulty.	
0001	During shading operation, the intensity is below a specific level.	Disconnect and then connect the flexible cable. Replace the following as necessary: flexible cable, CIS, reader controller PCB.
0002	During DF stream reading, the sheet-to-sheet light intensity is faulty.	Disconnect and then connect the flexible cable. Replace the following as necessary: flexible cable, CIS, reader controller PCB.
E227	The reader unit power supply is faulty.	
0001	At time of power-on, the 24-V port is off.	Disconnect and then connect the power supply harness connector. Replace the power supply.
0002	At the start of a job, the 24-V port is off.	Disconnect and then connect the power supply harness connector. Replace the power supply.
0003	At the end of a job, the 24-V port is off.	Disconnect and then connect the power supply harness connector. Replace the power supply.
0004	When a load is being driven, the 24-V port is off.	Disconnect and then connect the power supply harness. Replace the power supply.
E248	The backup memory is faulty.	
0000	[Cause] A check error has occurred on the backup SRAM board. [Location] bottom ROM [Timing of Detection] once when the boot ROM is started up	1. Check the presence/absence of a backup SRAM PCB. 2. Disconnect and then connect the backup SRAM PCB. 3. Replace the backup SRAM PCB with a new one.
0001	An error has occurred at power-on.	Replace the reader controller PCB.
0002	An error has occurred during a write operation.	Replace the reader controller PCB.
0003	An error has occurred during a read operation following a write operation.	Replace the reader controller PCB.
E261	The zero-cross signal is faulty.	
0000	When the relay is on, the zero-cross signal is not detected for 500 msec or more.	Replace the AC driver PCB. Replace the DC controller PCB.
E315	There is an error in image data.	
0007	There is an error in JBIG encoding.	Turn off and then back on the power.
000d	There is an error in JBIG decoding.	Turn off and then back on the power.
E602	There is an error on the hard disk.	
0001	[Cause] An HDD detection error has occurred. The HDD cannot be detected. The HDD does not become ready. The HDD returns an error. [Detection] while boot ROM is in session BARSAC startup, mounting (usrIde) [Timing of Detection] once at startup	See the details under 602.
0002	[Cause] There is no startup file. The program for the main CPU does not exist on the HDD or in BOOTDEV/BOOT, and so on. [Detection] while boot ROM is in use at time of system file loading (usrIde) [Timing of Detection] once at startup	See the details under 602.

Code	Cause	Remedy
0003	[Cause] An HD write abort error has occurred. The sectors for BOOTDEV on the HD cannot be read. [Detection] BARSAC (all; at time of bootable startup) [Timing of Detection] once at startup	See the details under 602.
0006	[Cause] A subbootable that matches the PDL type does not exit in BOOTDEV/BOOT. [Detection] during loading of sub boot in oclibroot [Timing of Detection] once at bootable startup	See the details under 602.
0007	[Cause] An ICC profile that matches the PDL type does not exist in BOOTDEV/PDL. [Detection] beginning of oclibroot; judgment based on functions of PDL team that are called in [Timing of Detection] once at bootable startup	See the details under 602.
01XX	/DOSDEV is faulty.	See the details under 602.
02XX	/FSTDEV is faulty.	See the details under 602.
03XX	/DOSDEV2 is faulty.	See the details under 602.
04XX	/FSTPDEV is faulty.	See the details under 602.
05XX	/DOSDEV3 is faulty.	See the details under 602.
06XX	/PDLDEV is faulty.	See the details under 602.
07XX	/DOSDEV4 is faulty.	See the details under 602.
08XX	/BOOTDEV is faulty.	See the details under 602.
09XX	/DOSDEV5 is faulty.	See the details under 602.
FFXX	There is an error in a partition that cannot be identified.	See the details under 602.
E604	The image memory is faulty or is inadequate.	
0000	The memory size does not match the model.	Increase the memory.
E609	There is an error on the HDD.	
0008	At startup, the HDD fails to reach a specific temperature level within a specific period of time.	Replace the hard disk. Replace the DC controller PCB.
0009	At time of sleep recovery, the temperature fails to reach a specific level.	Replace the hard disk. Replace the DC controller PCB.
E610	The HDD coding key is faulty.	
	The SRM/PCB is faulty. The battery has become exhausted, leading to loss of SRAM contents.	Try step 1); if it fails, try step 2). 1) Turn off and then back on the power switch to generate the key once again. 2) If the same error still continues, replace the board on which the SRAM is mounted. (Keep in mind that doing so will lead to loss of all user data.)
E674	An error has occurred in communication between the fax control PCB (2-line) and main controller PCB.	
0001	An attempt to set mode for the fax device has failed.	1. Check the connection of the cable between the fax control PCB (2-line) and the main controller PCB. 2. Replace the ROM DIMM of the fax control PCB (2-line). 3. Replace the fax control PCB (2-line). 4. Replace the main controller PCB.
E710	There is an error in the initialization of the IPC.	
0001	The machine fails to become ready 3 sec or less after the IPC chip startup.	Check the cable.
0002	When the main power is turned on, the communication IC (IPC) on the DC controller PCB cannot be initialized.	Check the cable.
E711	There is an error in the IPC communication.	
0001	The occurrence of an error has been recorded in the error register of the IPC chip 4 times or more within 1.5 sec.	Check the cable.
0002	The occurrence of an error has been recorded in the error register of the IPC chip 4 times or more within 2 sec.	Check the cable.
E713	There is an error in the communication with the finisher or 3 Way Unit-A1.	
0000	The communication with the finisher does not resume within 5 sec after it has been disrupted.	Check the cable. Replace the DC controller PCB. Replace the finisher controller PCB.
E716	There is an error in the communication with the pedestal.	
0000	After the presence of a pedestal has been detected, the communication fails to be normal for 5 sec.	Check the cable. Replace the DC controller PCB. Replace the pedestal drive PCB.
0010	When the communication with the 3 Way Unit-A1 is faulty after detecting the connection with the finisher.	Install the 3 Way Unit-A1. Replace the DC controller PCB after checking the cable.

Code	Cause	Remedy
E717	There is an error in the communication with the NE controller.	
0001	The NE controller is not connected at power on, although it was connected before the power was turned off because of an error.	Check the cable; thereafter, reset the condition in service mode: COPIER>FUNCTION>CLEAR>ERR.
0002	An IPC error has occurred while the NE controller is in operation. There is an open circuit for the IPC. An error has occurred, and the IPC communication remains disabled.	Check the cable; thereafter, reset the condition in service mode: COPIER>FUNCTION>CLEAR>ERR.
E719	There is a coin vendor error.	
0001	The coin vendor is not connected when the power is turned on, although it was connected before the power was turned off because of an error.	Check the cable; thereafter, reset the condition in service mode: COPIER>FUNCTION>CLEAR>ERR.
0002	While the coin vendor is in operation, an IPC error has occurred, IPC has developed an open circuit, or an error preventing recovery of IPC communication has occurred. An open circuit has been detected in the line for the pickup/delivery signal. An illegal signal has been detected.	Check the cable; thereafter, reset the condition in service mode: COPIER>FUNCTION>CLEAR>ERR.
0003	While the unit price is being checked at startup, an error occurs in the communication with the coin vendor.	Check the cable; thereafter, reset the condition in service mode: COPIER>FUNCTION>CLEAR>ERR.
0011	An error has occurred at new card reader startup. The new card reader is not connected when the power is turned off, although it was connected when the power was turned off.	Check the cable; thereafter, reset the condition in service mode: COPIER>FUNCTION>CLEAR>ERR.
0012	An IPC error has occurred at new card reader startup. There is an IPC open circuit. An error has occurred that prevents recovery of IPC communication.	Check the cable; thereafter, reset the condition in service mode: COPIER>FUNCTION>CLEAR>ERR.
E730	There is a PDL software error.	
1001	An initialization error has occurred.	1. Execute PDL resetting. 2. Turn on the power once again.
100A	An error that may be critical to the system (e.g., failed initialization) has occurred.	1. Execute PDL resetting. 2. Turn on the power once again.
9004	There is an error in the communication (PAI) with an external controller.	1. Turn on the power once main. 2. Check the connection of the open I/F board and the cable. 3. Replace the board for the external controller open I/F. 4. Replace the main board.
9005	There is a fault in the connector of the vide cable to the external controller.	1. Turn on the power once main. 2. Check the connection of the open I/F board and the cable. 3. Replace the board for the external controller open I/F. 4. Replace the main board.
A006	The PDL board does not respond. A subbootable is faulty or absent.	1. Execute PDL resetting. 2. Turn on the power once again. 3. Check the connection of the SURF board. 4. Re-install the firmware. 5. Replace the main board.
A007	There is a mismatch between the control software of the machine and the PDL control software in regard to version.	1. Execute PDL resetting. 2. Turn on the power once again. 3. Execute system formatting (all), and reinstall the system.
B013	There is corruption in the font data.	1. Turn on the power once again. 2. Re-install the software. 3. Execute system formatting (all), and reinstall the system.
E732	There is an error in the communication with the scanner.	
0001	There is a DDI-S communication error.	1. Check the connector used to connect the scanner. 2. Check the power supply of the scanner (to see if initialization takes place at startup). 3. Replace the reader controller, scanner board, or main board as necessary.
E733	There is an error in the communication with the printer.	
0000	At startup, communication with the printer fails.	1. Check the connector used to connect to the printer. 2. Check the power supply of the printer (to see if initialization takes place at startup). 3. Replace the DC controller or the main board.
0001	There is a DDI-P communication error.	1. Check the connection with the printer. 2. Check the power supply of the printer (to see if initialization takes place at startup). 3. Replace the DC controller or the main board.

Code	Cause	Remedy
E740	There is an error on the Ether board.	
0002	The MAC address is illegal.	Replace the LAN card.
E743	There is an error in the DDI communication.	
0000	An SCI error has occurred. The received data is faulty. A reception timeout condition has occurred. An SEQ timeout error has occurred.	Disconnect and then connect the flexible cable used to connect the reader unit and the printer unit. Replace the following as necessary: flexible cable, reader controller PCB, main controller PCB.
E744	There is an error in the language file/boot ROM.	
0001	The version of the language file on the HDD and that of the bootable do not match.	Download a language file of the correct version.
0002	The size of the language file on the HDD is too large.	Download a language file of the correct version.
0003	There is no language file on the HDD indicated by config.txt for a switchover.	Download a language file of the correct version.
0004	An attempt to switchover to a language on the HDD fails.	Download a language file of the correct version.
1000	The boot ROM that is mounted is of the wrong type.	Replace the boot ROM with one of the model in question.
2000	The engine ID indicated by the software ID is illegal.	Replace it with a software ID of the correct model.
3xxx	Disagreement between the installed memory and the boot ROM	Confirm and correct the installed memory and the boot ROM.
E745	There is a fault on the TokeRing board.	
0001	An attempt at PCI initialization has failed.	1. Disconnect and then connect the TokeRing board. 2. Replace the TokeRing board.
0002	The MAC address is faulty.	1. Replace the TokenRing board.
0003	There is an error in the acquisition/setting of board information.	1. Replace the TokenRing board.
0004	There is a connection error.	1. Check the connection of the cable. 2. Replace the cable. 3. Check the power source of the MAU. 4. Replace the MAU. 5. Replace the TokenRing board.
0005	Other Errors	
E746	The accessories board is of the wrong type.	
0003	At startup, a board for a different model has been detected.	Replace the UFR board of the correct type (model).
E748	There is a mismatch between controller board and SDRAM size.	
1001	There is a mismatch between the control board and the SDRAM.	Check the correct combination between board and SDRAM.
E805	There is a fan error.	
0000	While the fan is at rest, the lock signal has been detected for 5 sec. While the fan is in operation, the lock signal is not detected for 5 sec.	Replace the fan. Replace the DC controller PCB.

15.2.2 E602 in Detaill

iR2270 / iR2870 / iR3570 / iR4570 / / iR2270N / / iR2870N / / iR3570N / / iR4570N / iR2230 / /

T-15-3

XX	YY	Description	Remedy
00	01	The HDD cannot be recognized. The startup partition (BOOTDEV) cannot be found at startup.	1. Turn off the main switch, and check the cable connector. Then, turn on the main switch. 2. Check to see if the HDD spins up when the main switch is turned on and if the 5V/12V power is supplied. 3. If the symptom still exists after the foregoing, replace the HDD, re-install the system software. If the symptom still exists, replace the main board.
00	02	The system software for the main CPU does not exist.	1. Start up in safe mode, and format the HDD using the SST (all); then, re-initial the system software (System, Language, RUI); then turn off and then back on the main power switch. 2. If the symptom still exists after the foregoing, suspect a fault on the HDD, and replace the HDD and re-install the system software.

XX	YY	Description	Remedy
00	03	Suspension of a write operation to the boot device has been detected.	1. Find the sector for which the write operation has been suspended; then, execute recovery operation. <in the case of black-and-white E code> 1-1 The machine will not permit the use of service mode; go through the following: 1-2 Turn off the power. Then, turn on the power while holding down on the 1 and 9 keys so that the repair routine for the sector for which the write operation was suspended will automatically start up and the screen will turn solid black. 1-3 Wait for about 40 to 50 min. There will soon be an indicator of progress of work. The screen will turn solid white when the routine ends. <if the spanner symbol is indicated> 1-1 Set 'CHK-TYPE-0', and execute 'HD-CHECK' (50 to 50 min); thereafter, turn off and then back on the main power switch. 2. If the symptom still exists after the foregoing, start up in safe mode; then, format the HDD (full) using the SST, and re-install the system software (System, Language, RUI), and turn off and then back on the main power switch. 3. If the symptom still exists after the foregoing, suspect a fault on the HDD, and replace the HDD and re-install the system software.
00	04	Symptom absent	
00	05	Symptom absent	
00	06	The system software of the sub CPU does not exist.	1. Start up in safe mode, and execute full formatting using the SST and re-install the system software (System, Language, RUI); then, turn off and then back on the main power. 2. If the symptom still exists after the foregoing, suspect a fault on the HDD, and replace the HDD and re-install the system software once again.
00	07	The IC profile does not exist.	1. Start up in safe mode, and execute full formatting using the SST and re-install the system software (System, Language, RUI); then, turn off and then on the main power. 2. If the symptom still exits after the foregoing, suspect a fault on the HDD, and replace the HDD and re-install the system software.

[E602-XXYY]

T-15-4

XX				YY					
XX	CHK-TYPE	Partition in question	Description	01	02	03	11, 21	13, 25	10, 12, 14, 22, 23, 24
				At startup			During routine operation		
				Reme-dy	Reme-dy	Reme-dy	Reme-dy	Reme-dy	Reme-dy
1	1	DOSDEV	General data storage area	*1	*5	*9	*10	*11	*12
2	1	FSTDEV	Image data storage area (e.g., Box)	*1	*5	*9	*10	*11	*12
3	1	DOSDEV 2	Image thumbnail display data area (e.g., Box)	*1	*5	*9	*10	*11	*12
4	1	FSTPDEV	Image data storage area (e.g., Box)	*1	*5	*9	*10	*11	*12
5	2	DOSDEV 3	General file storage area (user settings, logs, PDL spool, image data control info)	*1	*5	*9	*10	*11	*12
6	3	PDLDEV	PDL-related file storage area (font, registered form, ICC profile, color correction info file for PDL function)	*1	*5	*9	*10	*11	*12
7	4	DOSDEV 4	Firmware storage area (address book, filter)	*2	*6	*9	*10	*11	*12

XX				YY					
XX	**CHK-TYPE**	**Partition in question**	**Description**	**01**	**02**	**03**	**11, 21**	**13, 25**	**10, 12, 14, 22, 23, 24**
				At startup			**During routine operation**		
				Reme-dy	**Reme-dy**	**Reme-dy**	**Reme-dy**	**Reme-dy**	**Reme-dy**
8	4	BOOTDEV	Firmware storage area (System, Language, RUI)	*3	*8	*9	*10	*11	*12
9	5	DOSDEV5	For future expansion	*1	*5	*9	*10	*11	*12
FF	0	Not identified	Entire HDD (check on faulty sector and recovery)	*4	*7	*9	*10	*11	*12

[HDD formatting]

T-15-5

XX	CHK-TYPE	Partition in question	Description	Typical item deleted	HDD formatting by HD-CLEAR	Normal mode + HDD formatting with SST	Safe mode + HDD formatting with SST
1	1	DOSDEV	General data storage area	Entire collection of image data (e.g., Box)	Possible (4 partitions, simul-taneously)	FSTDEV specified (4 partitions, simul-taneously)	Possible; however, selection of a specific partition is not allowed, requiring deletion of all data. After formatting, the system software must be downloaded.
2	1	FSTDEV	Image data storage area (e.g., Box)	Entire collection of image data (e.g., Box)	Possible (4 partitions, simul-taneously)	FSTDEV specified (4 partitions, simul-taneously)	Possible; however, selection of a specific partition is not allowed, requiring deletion of all data. After formatting, the system software must be downloaded.
3	1	DOSDEV2	Image thumbnail display data area (e.g., Box)	Entire collection of image data (e.g., Box)	Possible (4 partitions, simul-taneously)	FSTDEV specified (4 partitions, simul-taneously)	Possible; however, selection of a specific partition is not allowed, requiring deletion of all data. After formatting, the system software must be downloaded.
4	1	FSTPDEV	Image data storage area (e.g., Box)	Entire collection of image data (e.g., Box)	Possible (4 partitions, simul-taneously)	FSTDEV specified (4 partitions, simul-taneously)	Possible; however, selection of a specific partition is not allowed, requiring deletion of all data. After formatting, the system software must be downloaded.
5	2	DOSDEV3	General file storage area (user settings, logs, PDL spool, image data control info)	Items that are relatively less critical	Possible	DOSDEV3 specified	Possible; however, selection of a specific partition is not allowed, requiring deletion of all data. After formatting, the system software must be downloaded.

XX	CHK-TYPE	Partition in question	Description	Typical item deleted	HDD formatting by HD-CLEAR	Normal mode + HDD formatting with SST	Safe mode + HDD formatting with SST
6	3	PDLDEV	PDL-related file storage area (font, registered form, ICC profile, color correction info file for PDL function)	User Font IccProfil	Possible	PDLDEV specified	Possible; however, selection of a specific partition is not allowed, requiring deletion of all data. After formatting, the system software must be downloaded.
7	4	DOSDEV4	Firmware storage area (address book, filter)	Address book	Not possible	DOSDEV4 specified	Possible; however, selection of a specific partition is not allowed, requiring deletion of all data. After formatting, the system software must be downloaded.
8	4	BOOTDEV	Firmware storage area (System, Language, RUI)	System software	Not possible	Not possible	Possible; however, selection of a specific partition is not allowed, requiring deletion of all data. After formatting, the system software must be downloaded.
9	5	DOSDEV5	For future expansion	None in particular	Possible	DOSDEV5 specified	Possible; however, selection of a specific partition is not allowed, requiring deletion of all data. After formatting, the system software must be downloaded.
FF	0	Not identified	Entire HDD (check on faulty sector and recovery)	-	-	-	-

* When the machine starts up for the first time after its HDD has been formatted, it may take longer than usual to complete the startup session.

[Remedy]

T-15-6

	YY	Description	Remedy
*1	01	The ongoing write operation has been suspended (at startup).	1. Set '0' to TYPE-TYPE, and execute HDD-CHECK (50 to 50 min). Thereafter, turn off and then back on the power. 2. If the symptom still exists after the foregoing, type in TYPE-TYPE for the partition in question, and execute HDD-CLEAR. Thereafter, turn off and then back on the main switch.
*2	01	The ongoing operation has been suspended (at startup).	1. If possible, ask the user to back up the address book data using the RUI. 2. Set '0' to TYPE-TYPE, and execute HDD-CHECK (40 to 50 min). Thereafter, turn off and then back on the power. 3. If the symptom still exists after the foregoing, start download mode, and execute full formatting using the SST and re-install the system software (System, Language, RUI). Thereafter, turn off and then back on the main power.
*3	01	The ongoing write operation has been suspended (at startup).	To run a recovery session for the boot partition, you will have to use safe mode in combination with the SST. 1. Set '0' for TYPE-TYPE, and execute HDD-CHECK (40 to 50 min). Thereafter, turn off and the back on the power. 2. If the symptom still exits after the foregoing, start download mode, and execute full formatting using the SST, and re-install the system software (System, Language, RUI). Thereafter, turn off and then back on the power.

	YY	Description	Remedy
*4	01	The ongoing write operation has been suspended (at startup).	1. Set '0' for TYPE-TYPE, and execute HDD-CHECK (40 to 50 min). Thereafter, turn off and then back on the power. 2. If the symptom still exits after the foregoing, execute HDD-CLEAR using TYPE-TYPE=1, 2, 3, 5. Thereafter, turn off and then back on the power.
*5	02	A file system error has occurred.	1. Type in TYPE-TYPE of the partition in question, and execute HDD-CLEAR. Thereafter, turn off and then back on the main switch. 2. If the system still exits after the foregoing, suspect a fault on the HDD, and replace the HDD and re-install the system software.
*6	02	There is a file system error.	The system software is designed so that the information in this partition (e.g., address book, filter) is not deleted inadvertently; i.e., you will not the able to execute HDD-CLEAR from service mode. 1. If possible, ask the user to back up the address book data using the RUI. 2. From service mode, start download mode; then, execute full formatting using the SST and re-install the system software (System, Language, RUI). Thereafter, turn off and the back on the main power.
*7	02	A file system error has occurred.	This type of error is highly rare. 1. Using TYPE-TYPE=1, 2, 3, 5, execute HDD-CLEAR. Thereafter, turn off and then back on the power. 2. If the symptom still exits after the foregoing, suspect a fault on the HDD, and replace the HDD and re-install the system software.
*8	02	A file system error has occurred.	The system software is designed so that a recovery session will not run for the boot partition unless you use safe mode in combination with the SST. 1. Start up in safe mode, and execute full formatting using the SST and re-install the system software (System, Language, RUI). Thereafter, turn off and then on the main power. 2. If the symptom still exits after the foregoing, suspect a fault on the HDD, and replace the HDD and re-install the system software.
*9	03	There is poor contact of the HDD, or a v.x Works system error has occurred.	1. Check the cable and power supply connectors. 2. If the symptom still exits after the foregoing, start up in safe mode, and execute full formatting using the SST and re-install the system software (System, Language, RUI). Thereafter, turn off and then back on the main power. 3. If the symptom still exits after the foregoing, suspect a fault on the HDD, and replace the HDD and re-install the system software.
*10	11,21	The HDD has poor contact.	This type of error is highly rare in relation to read/write operations. 1. Check the cable and the power supply connectors. 2.If the symptom still exits after the foregoing, suspect a fault on the HDD, and replace the HDD and install the system software.
*11	13, 25	The ongoing write operation has been suspended.	There is a likelihood of the presence of damage to the file data on the HDD (e.g., Box). 1. Set '0' for TYPE-TYPE, and execute HDD-CHECK (40 to 50 min). Thereafter, turn off and then back on the power. 2. If the symptom still exits after the foregoing, set '1' for TYPE-TYPE, and execute HDD-CLEAR. (In the case of DOSDEV4 or BOOTDEV, execute formatting and re-installation once again.) 3. If the symptom still exists after the foregoing, suspect a fault on the HDD, and replace the HDD and re-install the system software.
*12	10, 12, 14, 22, 23, 24	There is a system error or a packet data error.	The data may be corrupted or there is a software bug. 1. Start up in safe mode, and execute full formatting using the SST and re-install the system software (System, Language, RUI). Thereafter, turn off and then back on the main power. 2. If the symptom still exits after the foregoing, suspect a fault on the HDD, and replace the HDD and re-install the system software.

- HD-CLEAR
When you have executed HD-CLEAR, all contents of the partition in question (files, sub directories) will be lost.
The actual formatting will take place when the machine is started up after it has been turned off upon execution of HD-CLEAN.
At this time, the Startup screen shows a progress bar, its edge reaching the end in about 5 min. Be sure not to turn off the power while the progress bar is moving.
This function (i.e., mode item) cannot be used for BOOTDEV and DOSDEV4; to re-format any of these 2 partitions, you will have to use the SST.
Keep in mind that formatting of the HDD in service mode will necessarily be full formatting.

- HD-CHECK
If the power is cut while data is being written to the HDD, the occurrence of a write-suspended sector is a possibility. When HD-CHECK is run on such a sector, repairs will be made, but all data in the sector will be lost. A write-suspended sector may be repaired only by HDD-CHECK (0); if not TYPE-TYPE=0, the task will be limited to an FS level check.
If the write-suspended sector happens to be a critical sector that holds a control area, there is no way of repairing it; you will have to execute HDD formatting.

- Replacing the HDD
1. Turn off the main switch.
2. Connect the new HDD.
3. Start up the machine in safe mode.
4. Connect the SST, and execute full formatting.
5. Using the SST, download the system software (System, Language, RUI).
6. Turn off and then back on the power. (It may take about 5 min for the machine to start up).

15.2.3 Error Code DetailsÅitest for A4 sizeÅj

iR2270 / iR2870 / iR3570 / iR4570 / / iR2270N / / iR2870N / / iR3570N / / iR4570N / iR2230 / / / iR3530 / / / / /

T-15-7

Code	Cause	Remedy
E000	The temperature of the fixing assembly is abnormally high.	
0001	While startup control is under way, the reading of the main thermistor is less than 30 deg C continuously for 200 msec or more 1 sec after the start of power supply. While startup control is under way, the reading of the main thermistor is less than 70 deg C continuously for 200 msec or more 2 sec after the start of power supply. While startup control is under way, the reading of the main thermistor is less than 120 deg C continuously for 200 msec 6 sec after the start of power supply. The startup control does not end 30 sec after the start of power supply.	Reset the condition in service mode: COPIER>FUNCTION>CLEAR>ERR. Replace the main thermistor. Replace the DC controller PCB.
E001	The temperature of the fixing assembly is abnormally high.	
0000	The reading of the main thermistor is 250 deg C or more continuously for 200 msec.	Reset the condition in service mode: COPIER>FUNCTION>CLEAR>ERR. Replace the main thermistor. Replace the DC controller PCB.
0001	The hardware circuit detects overheating of the main or sub thermistor for 200 msec.	Reset the condition in service mode: COPIER>FUNCTION>CLEAR>ERR. Replace the DC controller PCB.
0002	The reading of the sub thermistor is 295 deg C or more continuously for 200 msec.	Reset the condition in service mode: COPIER>FUNCTION>CLEAR>ERR. Replace the sub thermistor. Replace the DC controller PCB.
E002	The rise in temperature of the fixing assembly is faulty.	
0000	While startup control is under way, the reading of the main thermistor is less than 115 deg C continuously for 400 msec 1.3 sec after it has indicated 100 deg C. While startup control is under way, the reading of the main thermistor is less than 150 deg C continuously for 400 msec 1.3 sec after it has indicated 140 deg C.	Reset the condition in service mode: COPIER>FUNCTION>CLEAR>ERR. Replace the main thermistor. Replace the DC controller PCB.
E003	The fixing temperature is too low after a standby state.	
0000	While regular temperature control is under way, the reading of the main thermistor is less than 140 deg C continuously for 400 msec or more.	Reset the condition in service mode: COPIER>FUNCTION>CLEAR>ERR. Replace the main thermistor. Replace the DC controller PCB.
E007	The rotation of the fixing film is faulty.	
0000	While the fixing motor is rotating, the marker signal is not detected for 6 sec with the reading of the main thermistor indicating 100 deg C or more.	Reset the condition in service mode: COPIER>FUNCTION>CLEAR>ERR. Replace the main thermistor. Replace the DC controller PCB.
E010	The rotation of the main motor is faulty.	
0001	Detection is executed every 100 msec after the start of motor rotation; however, the drive detection signal is absent for 2 sec.	Replace the main motor. Replace the DC controller PCB.
0002	During motor rotation, detection is executed every 100 msec; however, the drive signal is absent 5 times in sequence.	Replace the main motor. Replace the DC controller PCB.
E014	The rotation of the fixing motor is faulty.	
0001	Detection is executed every 100 msec after the start of motor rotation; however, the drive detection signal is absent for 2 sec.	Replace the fixing motor. Replace the DC controller PCB.
0002	During motor rotation, detection is executed every 100 msec; however, the drive signal is absent 5 times in sequence.	Replace the fixing motor. Replace the DC controller PCB.
E019	The waste toner case is full, or the waste toner case full sensor is faulty.	
0000	When the waste toner case is identified as being full for 2000 prints continuously, an alert is issued; thereafter, the case is identified as being full continuously for 100 prints.	Replace the waste toner sensor. Replace the DC controller PCB.
E020	The path between the sub hopper and the developing assembly is clogged with toner.	
0000	The developing assembly toner sensor detects the absence of toner, while the sub hopper toner sensor detects the presence of toner. With the developing clutch turned on, the hopper feedscrew motor is rotated for 1 sec intermittently 194 times; still, the developing assembly toner sensor does not detect the presence of toner.	Replace the developing assembly toner sensor. Replace the sub hopper toner sensor. Replace the DC control PCB.
E024	The developing assembly connector is disconnected.	
0000	The connection detection signal is absent continuously for 100 msec.	Replace the developing assembly toner sensor. Connect the connector. Replace the DC controller PCB.

Code	Cause	Remedy
E025	The hopper motor or the bottle motor is faulty.	
0000	The sub hopper toner sensor connection detection signal is absent for 100 msec 10 times in sequence.	Replace the sub hopper toner sensor. Connect the connector. Replace the detection PCB.
0001	While the hopper motor is rotating, the motor error lock signal is detected continuously 4 times every 56 msec. Or, while the bottle motor is rotating, the motor error lock signal is detected 22 times in sequence every 10 msec.	Replace the hopper motor. Replace the bottle motor. Replace the DC controller PCB.
E032	The NE controller counter malfunctions.	
0001	An open circuit is detected for the count pulse signal.	Turn off the main power, and check the cable for an open circuit; then, turn the main power back on.
E064	The voltage of the power supply is faulty (high-voltage error).	
0001	The value read from the EEPORM is outside a specific range.	Turn off and then back on the main power. Replace the EEPROM.
0002	While output is being generated, the AD value of the primary DC voltage is 230 (DEC) or more for 100 msec 2 times in sequence. (However, after output, it is not detected for 100 msec.)	Replace the high-voltage power supply. Replace the DC controller PCB.
0003	While output is being generated, the AD value of the developing DC voltage is 224 (DEC) or more for 10 msec 2 times in sequence. (However, after output, it is not detected for 100 msec.)	Replace the high-voltage power supply. Replace the DC controller PCB.
0004	While output is being generated, the AD value of the transfer output current is 205 (DEC) or more for 100 msec 2 times in sequence. (However, after output, it is not detected for 100 msec.)	Replace the high-voltage power supply. Replace the controller PCB.
0005	While output is being generated, the AD value of the transfer output voltage is 0 (DEC) for 100 msec 2 times in sequence. (However, after output, it is not detected for 100 msec.)	Replace the high-voltage power supply. Replace the DC controller PCB.
E100	The BD interval is outside a specific range.	
0001	After the machine has become ready for image formation (i.e., the scanner motor is ready for operation, and the laser has been turned on), an error has occurred 50 times or more (BD error).	Replace the laser unit. Replace the DC controller PCB. Check the wiring.
E110	The scanner motor is faulty.	
0001	The scanner motor speed lock signal does not indicate a locked state a specific period of time after the scanner motor has been started.	Replace the laser unit. Replace the DC controller PCB. Check the wiring.
0002	The speed lock signal indicates a deviation 10 times in sequence at intervals of 10 msec after the signal has indicated a locked state.	Replace the laser unit. Replace the DC controller PCB. Check the wiring.
0003	With the image clock switched over, the scanner motor speed lock signal does not indicate a locked state 6.5 sec after a switchover is made from low to normal speed or 8 sec after a switchover is made from normal to low speed.	Replace the laser unit. Replace the DC controller PCB. Check the wiring.
E191	There is an error in the communication with the high-voltage power supply.	
0000	The data transmission/reception does not end normally 500 msec after the most recent transmission/reception of data ended normally.	Replace the high-voltage power supply. Replace the DC controller PCB.
E202	There is an error in the detection of the CIS home position.	
0001	The attempt to detect the home position fails when the CIS is moved forward.	Disconnect and then connect the harness connector. Replace the following as necessary: scanner home position sensor, scanner motor, reader controller PCB.
0002	The attempt to detect the home position fails when the CIS is moved back.	Disconnect and then connect the harness connector. Replace the following as necessary: scanner home position sensor, scanner motor, reader controller PCB.
E225	The light intensity of the CIS is faulty.	
0001	During shading operation, the intensity is below a specific level.	Disconnect and then connect the flexible cable. Replace the following as necessary: flexible cable, CIS, reader controller PCB.
0002	During DF stream reading, the sheet-to-sheet light intensity is faulty.	Disconnect and then connect the flexible cable. Replace the following as necessary: flexible cable, CIS, reader controller PCB.
E227	The reader unit power supply is faulty.	
0001	At time of power-on, the 24-V port is off.	Disconnect and then connect the power supply harness connector. Replace the power supply.
0002	At the start of a job, the 24-V port is off.	Disconnect and then connect the power supply harness connector. Replace the power supply.
0003	At the end of a job, the 24-V port is off.	Disconnect and then connect the power supply harness connector. Replace the power supply.
0004	When a load is being driven, the 24-V port is off.	Disconnect and then connect the power supply harness. Replace the power supply.
E248	The backup memory is faulty.	
0000	[Cause] A check error has occurred on the backup SRAM board. [Location] bottom ROM [Timing of Detection] once when the boot ROM is started up	1. Check the presence/absence of a backup SRAM PCB. 2. Disconnect and then connect the backup SRAM PCB. 3. Replace the backup SRAM PCB with a new one.
0001	An error has occurred at power-on.	Replace the reader controller PCB.
0002	An error has occurred during a write operation.	Replace the reader controller PCB.
0003	An error has occurred during a read operation following a write operation.	Replace the reader controller PCB.
E261	The zero-cross signal is faulty.	
0000	When the relay is on, the zero-cross signal is not detected for 500 msec or more.	Replace the AC driver PCB. Replace the DC controller PCB.
E315	There is an error in image data.	
0007	There is an error in JBIG encoding.	Turn off and then back on the power.
000d	There is an error in JBIG decoding.	Turn off and then back on the power.
E602	There is an error on the hard disk.	

Code	Cause	Remedy
0001	[Cause] An HDD detection error has occurred. The HDD cannot be detected. The HDD does not become ready. The HDD returns an error. [Detection] while boot ROM is in session BARSAC startup, mounting (usrIde) [Timing of Detection] once at startup	See the details under 602.
0002	[Cause] There is no startup file. The program for the main CPU does not exist on the HDD or in BOOTDEV/BOOT, and so on. [Detection] while boot ROM is in use at time of system file loading (usrIde) [Timing of Detection] once at startup	See the details under 602.
0003	[Cause] An HD write abort error has occurred. The sectors for BOOTDEV on the HD cannot be read. [Detection] BARSAC (all; at time of bootable startup) [Timing of Detection] once at startup	See the details under 602.
0006	[Cause] A subbootable that matches the PDL type does not exit in BOOTDEV/ BOOT. [Detection] during loading of sub boot in oclibroot [Timing of Detection] once at bootable startup	See the details under 602.
0007	[Cause] An ICC profile that matches the PDL type does not exist in BOOTDEV/ PDL. [Detection] beginning of oclibroot; judgment based on functions of PDL team that are called in [Timing of Detection] once at bootable startup	See the details under 602.
01XX	/DOSDEV is faulty.	See the details under 602.
02XX	/FSTDEV is faulty.	See the details under 602.
03XX	/DOSDEV2 is faulty.	See the details under 602.
04XX	/FSTPDEV is faulty.	See the details under 602.
05XX	/DOSDEV3 is faulty.	See the details under 602.
06XX	/PDLDEV is faulty.	See the details under 602.
07XX	/DOSDEV4 is faulty.	See the details under 602.
08XX	/BOOTDEV is faulty.	See the details under 602.
09XX	/DOSDEV5 is faulty.	See the details under 602.
FFXX	There is an error in a partition that cannot be identified.	See the details under 602.
E604	The image memory is faulty or is inadequate.	
0000	The memory size does not match the model.	Increase the memory.
E609	There is an error on the HDD.	
0008	At startup, the HDD fails to reach a specific temperature level within a specific period of time.	Replace the hard disk. Replace the DC controller PCB.
0009	At time of sleep recovery, the temperature fails to reach a specific level.	Replace the hard disk. Replace the DC controller PCB.
E610	The HDD coding key is faulty.	
	The SRM/PCB is faulty. The battery has become exhausted, leading to loss of SRAM contents.	Try step 1); if it fails, try step 2). 1) Turn off and then back on the power switch to generate the key once again. 2) If the same error still continues, replace the board on which the SRAM is mounted. (Keep in mind that doing so will lead to loss of all user data.)
E674	An error has occurred in communication between the fax control PCB (2-line) and main controller PCB.	
0001	An attempt to set mode for the fax device has failed.	1. Check the connection of the cable between the fax control PCB (2-line) and the main controller PCB. 2. Replace the ROM DIMM of the fax control PCB (2-line). 3. Replace the fax control PCB (2-line). 4. Replace the main controller PCB.
E710	There is an error in the initialization of the IPC.	
0001	The machine fails to become ready 3 sec or less after the IPC chip startup.	Check the cable.
0002	When the main power is turned on, the communication IC (IPC) on the DC controller PCB cannot be initialized.	Check the cable.
E711	There is an error in the IPC communication.	
0001	The occurrence of an error has been recorded in the error register of the IPC chip 4 times or more within 1.5 sec.	Check the cable.
0002	The occurrence of an error has been recorded in the error register of the IPC chip 4 times or more within 2 sec.	Check the cable.
E713	There is an error in the communication with the finisher.	
0000	The communication with the finisher does not resume within 5 sec after it has been disrupted.	Check the cable. Replace the DC controller PCB. Replace the finisher controller PCB.
E716	There is an error in the communication with the pedestal.	

Code	Cause	Remedy
0000	After the presence of a pedestal has been detected, the communication fails to be normal for 5 sec.	Check the cable. Replace the DC controller PCB. Replace the pedestal drive PCB.
E717	There is an error in the communication with the NE controller.	
0001	The NE controller is not connected at power on, although it was connected before the power was turned off because of an error.	Check the cable; thereafter, reset the condition in service mode: COPIER>FUNCTION>CLEAR>ERR.
0002	An IPC error has occurred while the NE controller is in operation. There is an open circuit for the IPC. An error has occurred, and the IPC communication remains disabled.	Check the cable; thereafter, reset the condition in service mode: COPIER>FUNCTION>CLEAR>ERR.
E719	There is a coin vendor error.	
0001	The coin vendor is not connected when the power is turned on, although it was connected before the power was turned off because of an error.	Check the cable; thereafter, reset the condition in service mode: COPIER>FUNCTION>CLEAR>ERR.
0002	While the coin vendor is in operation, an IPC error has occurred, IPC has developed an open circuit, or an error preventing recovery of IPC communication has occurred. An open circuit has been detected in the line for the pickup/delivery signal. An illegal signal has been detected.	Check the cable; thereafter, reset the condition in service mode: COPIER>FUNCTION>CLEAR>ERR.
0003	While the unit price is being checked at startup, an error occurs in the communication with the coin vendor.	Check the cable; thereafter, reset the condition in service mode: COPIER>FUNCTION>CLEAR>ERR.
0011	An error has occurred at new card reader startup. The new card reader is not connected when the power is turned off, although it was connected when the power was turned off.	Check the cable; thereafter, reset the condition in service mode: COPIER>FUNCTION>CLEAR>ERR.
0012	An IPC error has occurred at new card reader startup. There is an IPC open circuit. An error has occurred that prevents recovery of IPC communication.	Check the cable; thereafter, reset the condition in service mode: COPIER>FUNCTION>CLEAR>ERR.
E730	There is a PDL software error.	
1001	An initialization error has occurred.	1. Execute PDL resetting. 2. Turn on the power once again.
100A	An error that may be critical to the system (e.g., failed initialization) has occurred.	1. Execute PDL resetting. 2. Turn on the power once again.
9004	There is an error in the communication (PAI) with an external controller.	1. Turn on the power once main. 2. Check the connection of the open I/F board and the cable. 3. Replace the board for the external controller open I/F. 4. Replace the main board.
9005	There is a fault in the connector of the vide cable to the external controller.	1. Turn on the power once main. 2. Check the connection of the open I/F board and the cable. 3. Replace the board for the external controller open I/F. 4. Replace the main board.
A006	The PDL board does not respond. A subbootable is faulty or absent.	1. Execute PDL resetting. 2. Turn on the power once again. 3. Check the connection of the SURF board. 4. Re-install the firmware. 5. Replace the main board.
A007	There is a mismatch between the control software of the machine and the PDL control software in regard to version.	1. Execute PDL resetting. 2. Turn on the power once again. 3. Execute system formatting (all), and reinstall the system.
B013	There is corruption in the font data.	1. Turn on the power once again. 2. Re-install the software. 3. Execute system formatting (all), and reinstall the system.
E732	There is an error in the communication with the scanner.	
0001	There is a DDI-S communication error.	1. Check the connector used to connect the scanner. 2. Check the power supply of the scanner (to see if initialization takes place at startup). 3. Replace the reader controller, scanner board, or main board as necessary.
E733	There is an error in the communication with the printer.	
0000	At startup, communication with the printer fails.	1. Check the connector used to connect to the printer. 2. Check the power supply of the printer (to see if initialization takes place at startup). 3. Replace the DC controller or the main board.
0001	There is a DDI-P communication error.	1. Check the connection with the printer. 2. Check the power supply of the printer (to see if initialization takes place at startup). 3. Replace the DC controller or the main board.
E740	There is an error on the Ether board.	
0002	The MAC address is illegal.	Replace the LAN card.
E743	There is an error in the DDI communication.	
0000	An SCI error has occurred. The received data is faulty. A reception timeout condition has occurred. An SEQ timeout error has occurred.	Disconnect and then connect the flexible cable used to connect the reader unit and the printer unit. Replace the following as necessary: flexible cable, reader controller PCB, main controller PCB.
E744	There is an error in the language file/boot ROM.	
0001	The version of the language file on the HDD and that of the bootable do not match.	Download a language file of the correct version.
0002	The size of the language file on the HDD is too large.	Download a language file of the correct version.
0003	There is no language file on the HDD indicated by config.txt for a switchover.	Download a language file of the correct version.

Code	Cause	Remedy
0004	An attempt to switchover to a language on the HDD fails.	Download a language file of the correct version.
1000	The boot ROM that is mounted is of the wrong type.	Replace the boot ROM with one of the model in question.
2000	The engine ID indicated by the software ID is illegal.	Replace it with a software ID of the correct model.
E745	There is a fault on the TokeRing board.	
0001	An attempt at PCI initialization has failed.	1. Disconnect and then connect the TokeRing board. 2. Replace the TokeRing board.
0002	The MAC address is faulty.	1. Replace the TokenRing board.
0003	There is an error in the acquisition/setting of board information.	1. Replace the TokenRing board.
0004	There is a connection error.	1. Check the connection of the cable. 2. Replace the cable. 3. Check the power source of the MAU. 4. Replace the MAU. 5. Replace the TokenRing board.
0005	Other Errors	
E746	The accessories board is of the wrong type.	
0003	At startup, a board for a different model has been detected.	Replace the UFR board of the correct type (model).
E748	There is a mismatch between controller board and SDRAM size.	
1001	There is a mismatch between the control board and the SDRAM.	Check the correct combination between board and SDRAM.
E805	There is a fan error.	
0000	While the fan is at rest, the lock signal has been detected for 5 sec. While the fan is in operation, the lock signal is not detected for 5 sec.	Replace the fan. Replace the DC controller PCB.

15.3 Error Code (SEND)

15.3.1 Results of Self-Diagnosis

iR2270 / iR2870 / iR3570 / iR4570 / / iR2270N / / iR2870N / / iR3570N / / iR4570N / iR2230 / / iR3530 /

T-15-8

Cause	Remedy
There is a shortage of TCP/IP resources. Try again later.	
While continuous transmission is under way or has ended in FTP or Windows (SMB), a shortage of TCP/IP resources has occurred, not permitting reference.	Wait a while; then, try again.
Set the IP address.	
The IP address of the machine has yet to be set.	In user mode, set the IP address; thereafter, turn off and then on the machine.
The server does not respond. Check the settings.	
The settings of the selected server are not correct, or the server has not been turned on. Or, there may be a shortage of resources.	Wait a while; then, try again. If browsing is still not permitted, select a different server.
NetWare is in use. Try again later.	
NetWare is printing using PSeve or NDSPServer, not permitting browsing.	Wait until NetWare finishes printing; then, try again.
The layer in question at the target is too deep to browse.	
The number of characters is in excess of the number allowed.	The layer in question cannot be specified. Specify a different address.
There is no response.	
The server is not ready for file transmission.	Check the target.
The network is cut for file transmission. (An attempt to connect to the target of transmission may have failed, or there is an open circuit in the middle.)	Check the network.
The tree name is not specified for NetWare transmission.	Type in the tree name.
An error has occurred for TCP/IP in the course of e-mail or i-fax transmission.	Check the condition of the network cable and the connector.
Check TCP/IP.	
The machine's TCP/IP is not in operation.	In user mode, check the TCP/IP settings (IP address, DHCP, RARP, BOOTP).
The selected server cannot be found. Check the settings.	
The IP address in question cannot be identified.	1. In user mode, check the DNS settings. 2. On the DNS side, check the DNS data settings.
If the login information for the LDAP server is set to 'use (security authentication)', the host name in question cannot be identified.	In user mode, check the TCP/IP settings (DNS settings).
The selected server cannot be connected. Check the settings.	

Cause	Remedy
An attempt to connect to the IP address/port in question fails.	1. In user mode, check the TCP/IP settings (gateway address of the IP address settings). 2. In user mode, check the LDAP server settings. 3. Check to see that the LDAP server is operating normally. 4. If the login information of the LDAP server is set to 'use (security authentication)', check to see if the UDP packet is blocked by a filter.
Check the user name, password, or the settings.	
If the login information of the LDAP server is set to 'use' or 'use (security authentication)', the user name or the password is wrong.	In user mode, check the LDAP server settings (user name, password).
If the login information of the LDAP server is set to 'use (security authentication)', the domain name is wrong.	In user mode, check the LDAP server settings (domain name).
A timeout condition has occurred, and a search cannot be completed. Check the settings.	
The search cannot be completed within the specified period of time.	In user mode, increase the length of time before a timeout condition occurs (part of LDAP server settings).
An upper limit for search results has been exceeded. If the desired address is not indicated in the results, change the search conditions.	
The number of matches has exceeded the number of results brought up in response to the search.	1. Narrow down the search conditions, and try again. 2. Try increasing the upper limit.
The search conditions include a character that cannot be used for the selected server.	
The symbol \ is used in the search condition.	Remove the symbol \ from the search condition, and try once again.
The combination of characters used in the search condition fails to make up a correct search condition. There must be as many "s as there are "s The symbol * is not included within parentheses.	Check to be sure that the combination of characters is in keeping with the rule; then, try once again.
If LDAP of the server and the character code is version 2 (JIS), there is a character that is not part of the ASCII code (0x20-0x7E).	Remove any character that cannot be used; then, try once gain.
The version setting of the server is wrong, and the search cannot be initiated. Check the settings.	
In user mode, the LDAP server settings (server LDAP version and character code) is set for version 3; however, the LDAP server is operating for version 2.	In user mode, set the LDAP server settings so that the LDAP server version and the character code are both version 2.

15.3.2 Error Codes

iR2270 / iR2870 / iR3570 / iR4570 / / iR2270N / / iR2870N / / iR3570N / / iR4570N / iR2230 / / iR3530 /

T-15-9

Cause	Remedy
# 001	
There is a paper or original jam.	Remove the jammed paper or original.
# 003	
A communication lasting longer than a specific period of time (64 min) will cause an error state.	1. Decrease the resolution for transmission. 2. In the case of reception, ask the source to decrease the resolution or divide the original.
# 005	
The target does not respond within 35 sec.	Check to be sure that the target is ready to communicate; then, try once again.
The target is a non-G3 model.	Check the target.
# 009	
There is no paper.	Supply paper.
The cassette is not fitted properly.	Fit the cassette correctly.
# 011	
The original to be transmitted is not placed properly.	Start over from the beginning.
# 012	
The target is out of recording paper, and transmission has failed.	Ask the target to supply recording paper.
# 018	
There is no response to a redial attempt.	Check to make sure that the target is ready for communication; then, try once again.
The target is engaged for a different communication, and transmission has failed.	Check to make sure that the target is ready for communication; then, try once again.
The settings do not match the settings of the target, and the transmission has failed.	Check to make sure that the target is ready for communication; then, try once again.
# 022	
The particulars of the group address selected as the forwarding target may have been deleted, or there is no more than a user box, thus causing the transmission to fail.	Try transmitting once again.
The attempt to transmit to an address registered in the address book has failed because the address has been removed from the address table while in wait for transmission.	Try once again.

Cause	Remedy
# 037	
There is a shortage of memory, not permitting reception.	Remove error files and unnecessary files to increase available memory.
# 080	
F code is not set on the target.	Check the F code of the target, and start over.
# 081	
The appropriate password is not set on the target.	Check the password of the target, and start over.
# 099	
The transmission has been suspended in the middle.	Start over.
# 102	
There is a mismatch of F code or password.	Check the F code and the password of the target, and start over.
# 107	
There is a shortage of memory, not permitting transmission.	1. Decrease the resolution, and try once again. 2. Remove unnecessary files to increase available space.
# 701	
The group ID set when the job was introduced no longer exits. Or, the password has been changed.	Type in the correct group ID or the ID No. (using the keypad); then, start over.
# 702	
The memory is full, not permitting transmission.	1. Wait a while. Try again until the ongoing transmission of a job ends. 2. Try not to transmit to too many addresses at once; rather, try dividing the address into smaller groups.
# 703	
The memory image area is full, not permitting further writing.	1. Wait a while. Try transmitting after the ongoing transmission of a job ends. 2. Remove files from the Box; if the operation still fails to return to normal, turn off and then back on the main power.
# 704	
An error has occurred while an attempt is made to obtain address information from the address book.	Check the settings of the address, and try once again; if the operation is still not normal, try turning off and then back on the main power.
# 705	
The image data size is in excess of the upper limit imposed on transmission data size set in user mode, thus causing suspension of transmission.	Try changing the upper limit imposed on transmission data size as part of the communication control settings of system control settings (user mode). When selecting low resolution mode or using i-fax, try decreasing the number of images to send at one time so that the transmission will not be in excess of the upper limit imposed on transfer data size.
# 706	
An address table is being imported from or to the remote UI; or, a different transmission component is being used.	Start over once again.
# 711	
All memory of the Box is used.	Delete files from the Box.
# 712	
The Box is full of files.	Remove file from the Box.
# 713	
The file has been removed from the Box before transmitting the URL.	Put the file in question back into the Box, and start over.
# 751	
The server is yet to start up. The network is disconnected. (The connection to the target may have failed, or the connection may have been cut in the middle.)	Check the target. Check the network.
# 752	
The SMTP server name of the e-main/i-fax in question may be wrong, or the server in question is yet to start up. Or, the appropriate domain name or e-mail address has not been set. Or, the network has been disconnected.	Using the network settings of the system control setup (user mode), check the SMTP server name, domain name, and e-mail address. Check to see that the SMTP server is operating normally. Check the connection of the network.
# 753	
A TCP/IP error has occurred in the course of e-mail transmission. (e.g., socket, select error)	Check the condition of the network cable and the connector. If the operation does not return to normal, try turning off and then back on the main power of the machine.
# 754	
The server has not been started up for transmission, or the network is disconnected. Or, the target settings are wrong.	Check the server and the network. Check the settings of the target.
# 755	
The TCP/IP settings are not operating normally, thus not permitting transmission.	In user mode, check the TCP/IP settings.
The appropriate IP address has not been set up.	In user mode, check the TCP/IP settings.

Cause	Remedy
When the machine is started up, its IP address is not assigned by means of DHCP, RARP, or BOOTP.	In user mode, check the TCP/IP settings.
# 756	
In system control setup (user mode), 'use NetWare' is set to 'off' in NetWare settings.	In network settings of system control setup (user mode), set 'use NetWare' to 'on'.
# 801	
While e-mail is being transmitted or i-fax is transmitted/ received, the communication with the SMTP server encountered a timeout error because of a factor associated with the main server.	1. Check to see that SMTP is operating normally. 2. Check the condition of the network.
While an SMTP connection is being used, the SMTP server has returned an error. The address setting is not correct. When data is transmitted to the file server, an error has occurred owing to a factor associated with the server.	1. Check to see if SMTP is operating normally. 2. Check the condition of the network. 3. Check the address setting. 4. Check the condition of the file server and the setting.
An attempt has been made to transmit data to an address not authorized for a write operation.	Check the address setting.
In the course of transmitting data (file server), it was found that there is a file having the same name, and an overwrite operation to the file is prohibited.	Change the setting of the file server so that overwriting may be permitted.
In relation to transmission (file server), the folder name or the password that has been specified is wrong.	Check the address setting.
# 802	
In the system control setup (user mode), the settings of the SMTP server for e-mail/i-fax are wrong. The setting of the DNS server is wrong. The attempt to connect to the DNS server has failed.	In the network settings under system control settings (user mode), check the SMTP server name and the DNS server name. Check to see if the DNS server is operating normally.
# 803	
Before all pages have been transmitted, the target has cut off the network.	Try once again.
# 804	
When an attempt is made to transmit to the file server, it has been found that no match exits in the specified directory.	Check the address.
You are not authorized for access to the folder.	Set the server so that you will be authorized to access the folder.
# 806	
When an attempt to transmit to the file server is made, it has been found that the specified user name or password is wrong.	Change the user name or the password of the address.
The address specified for e-mail/i-fax transmission is wrong.	Check the address of the e-mail/i-fax in question.
# 810	
When an attempt is made to receive i-fax, a POP server connection error has occurred.	1. In user mode, check the POP server name setting. 2. Check the operation of the POP server. 3. Check the condition of the network.
While a connection is made to the POP server, an error has been returned by the POP server.	1. In user mode, check the POP server name setting. 2. Check the operation of the POP server. 3. Check the condition of the network.
While a connection is made to the POP server, a timeout error has occurred owing to a factor associated with the server.	1. In user mode, check the POP server name setting. 2. Check the operation of the POP server. 3. Check the condition of the network.
# 815	
If a file that has been transmitted to the file server is being printed, you will not be able to log in to the server in question.	Wait a while, and then try once again. Or, change the NetWare server settings of the target, or stop PServer.
# 818	
The data that has been received is in a format that does not permit printing.	Ask the source to change the file format and transmit it once again.
# 819	
The data that has been received is of a type that cannot be handled (i.e., its MIME information is illegal).	Ask the target to check the settings and transmit it once again.
# 820	
The data that has been received is of a type that cannot be handled (i.e., BASE64 or Unicode is illegal).	Ask the source to check the settings and transmit it once again.
# 821	
The data that has been received is of a type that cannot be handled (i.e., TIFF interpretation error has occurred).	Ask the target to check the settings and transmit once again.
# 822	
The data that has been received is of a type that cannot be handled (i.e., the image cannot be decoded).	Ask the source to check the settings and transmit once again.
# 827	
The data that has been received is of a type that cannot be handed (i.e., part of its MIME information is not supported).	Ask the source to check the settings and transmit once again.
# 828	

Cause	Remedy
HTML data has been received.	Ask the source to use a format other than HTML.
# 829	
The data that is being received consists of 100 pages or more.	The machine is designed so that it removes data for the 100th and subsequent pages and prints or saves in memory up to the 999th page. Ask the source to transmit the remaining pages one again.
# 830	
A DSN error notice has been received because of the following: the i-fax address or the target settings are wrong, or the data of the file that has been transmitted is greater than the size permitted by the mail server.	1. Check the i-fax address and the target settings. 2. In user mode, decrease the upper limit imposed on the size of transmission data so that it is lower than the size permitted by the mail server. 3. Check the condition of the mail server, DNS server, and network.
# 831	
An attempt to receive i-fax in SMTP has failed because of the reception/printing range settings made as part of the IP address range setting in user mode.	Change the reception/printing range settings made as part of the IP address range setting in user mode.
# 832	
In user mode, the e-mail setting or the network setting is yet to be made, causing a mail server fault and, thus, preventing reception of MDN (transmission confirmation) mail.	1. In user mode, check the DNS setting, e-mail/i-fax setting, and IP address made as part of the network settings. 2. Check the condition of the mail server and the DNS server.
# 833	
The network settings have not been made in user mode or there is a mail-server related fault, thus preventing the transmission of the mail (MDN; transmission acknowledgement).	1. In user mode, check the DNS setting, e-mail/i-fax setting, and IP address made as part of the network settings. 2. Check the condition of the mail server and the DNS server.
# 834	
The i-fax address or the condition settings of the target may be wrong, there may be a fault in the network or the mail server, or the target may have encountered a memory full condition, thus causing an MDS error notice.	Check the specified i-fax address and the target conditions.
# 835	
The number of text lines is more than the maximum number of lines permitted for i-fax.	Ask the target to decrease the number of text lines and try once again.
# 837	
A request has been made by a host that comes under the restrictions imposed by 'IP address range setting' in user mode.	Check the setting of the IP address range in user mode. The attempt to access in question may be illegal.
# 839	
The SMTP authentication (SMTPAUTH) user name or password for e-mail/i-fax (network settings) may be wrong.	Check the user name and password used for SMTP authentication (SMTPAUTH) as part of the network settings under system control settings (user mode).
# 841	
In relation to an attempt for transmission for e-mail/i-fax, there is no coding algorithm that may be used in common with the mail server.	1. Set 'SSL' to 'OFF' as part of the network settings under system control settings (user mode). 2. Add a coding algorithm that may be used in common (mail server settings).
# 842	
In relation to an attempt for transmission of e-mail/i-fax, a request has been made for the use of a client certificate by the mail server.	1. Set 'SSL' to 'OFF' as part of the network settings under the system control settings (user mode). 2. Change the mail server settings so that it will not request a client certificate.
# 843	
The time used by the KDC (key distribution center) server and the time used by the machine are different significantly.	1. Correct the time as part of the date/time settings under the system control settings (user mode). 2. Correct the time used by the KDC (key distribution center) server.
# 847	
The memory of the Box has been used up, not permitting the storage of the received file in the fax box.	Remove unnecessary files from the fax box or the system box.
# 851	
The remaining memory of the machine is running short.	Check the remaining memory of the machine; then, remove unnecessary files for the Box.
There are more than 100 files in the specified box, not permitting additional storage.	Remove unnecessary files from the specified box.
# 852	
The main power switch has been turned off while a job is being executed, causing an error.	Check to see that the main power switch is on; as necessary, try once again.
# 899	
The transmission of e-mail or i-fax has ended. However, the transmission has gone through multiple servers, and there is no way of finding out whether the transmission has reached the target.	1. Check with the target to see if the transmission has arrived. 2. Check to see if an error notice has arrived.
# 995	

Cause	Remedy
The reservation for the transmission has been cancelled.	As necessary, start over.

15.4 Jam Code

15.4.1 Jam Code (printer unit)

iR2270 / iR2870 / iR3570 / iR4570 / / / / / iR2230 / / / iR3530 /

T-15-10

Code	Jam
01xx	delay jam
02xx	stationary jam
0Axx	residual jam
0B00	door open jam

T-15-11

Code	Sensor	Sensor notation
xx01	cassette 1 tray sensor	PS10
xx02	cassette 2 retry sensor	PS11
xx03	cassette 3 retry sensor	PS1 (cassette pedestal)
xx04	cassette 4 retry sensor	PS2 (cassette pedestal)
xx05	registration sensor	PS9
xx06	---	---
xx07	fixing delivery sensor	PS13
xx08	No. 1 delivery sensor	PS14
xx09	No. 2 delivery sensor	PS1A (2/3 delivery unit)
xx0A	reversal sensor	PS4A (2/3 delivery unit)
xx0B	No. 3 delivery sensor	PS5A (2/3 delivery unit)
xx0C	duplexing assembly feed sensor	PS3A (2/3 delivery unit)
xx0D	duplex/feed sensor	PS17
xx0E	deck retry sensor	PS6D (side paper deck)
xx0F	deck pull-off sensor	PS1D (side paper deck)
xx11	buffer inlet sensor	PS1B (buffer path unit)
xx12	buffer outlet sensor	PS2B (buffer path unit)
0B00	door switch	SW2
0B00	feeding cover sensor	PS18
0B00	front cover sensor	PS22
0B00	right cover open/ closed sensor	PS59 (cassette pedestal)

15.4.2 Jam Code (finisher-related)

iR2270 / iR2870 / iR3570 / iR4570 / / / /

-Finisher-Q3/ Saddle Fnisher-Q4

T-15-12

Code	Jam	Sensor notation
1011	inlet path sensor feed delay jam	PI33
1012	punch path sensor (punch registration sensor) feed delay jam	LED5/PTR5
1014	delay path sensor feed delay jam	PI34
1121	inlet path sensor feed stationary jam	PI33
1122	punch path sensor (punch registration sensor) feed stationary jam	LED5/PTR5
1124	delivery path sensor feed stationary jam	PI34
1205	timing jam	PI33
1506	stapler jam	PI50
1307	power-on jam	PI33,PI34
1408	door open jam	PI31,PI32, MS31
1644	punch jam	PI63
1645	punch power-on jam	LED5/PTR5
1091	saddle feed sensor feed delay jam	PI18
1092	saddle delivery sensor feed delay jam	PI11
1093	saddle inlet sensor feed delay jam	PI22
11A1	saddle feed sensor feed stationary jam	PI18,PI19,PI 20
11A2	saddle delivery sensor feed stationary jam	PI11,PI17
11A3	saddle inlet sensor feed stationary jam	PI22
1586	saddle staple jam	SW7,SW5

1387	saddle power-on jam	PI8, PI11,PI17,PI18,PI19,PI20,PI22
1488	saddle door open jam	PI3, PI9, PI32

- Finisher-S1

T-15-13

Code	Jam	Sensor notation
1011	inlet path sensor feed delay jam	PI5
1121	inlet path sensor feed stationary jam	PI5
1F81	stack delivery jam	PI1
1506	staple jam	STP
1307	power-on jam	POWER ON
1408	door open jam (joint)	DOOR
1644	punch hole jam	SR2
1347	punch power-on jam	LED7/PTR7

15.4.3 Jam Code (finisher-related)

iR2230 / / iR3530 /

- Finisher-S1

T-15-14

Code	Jam	Sensor notation
1011	inlet path sensor feed delay jam	PI5
1121	inlet path sensor feed stationary jam	PI5
1F81	stack delivery jam	PI1
1506	staple jam	STP
1307	power-on jam	POWER ON
1408	door open jam (joint)	DOOR
1644	punch hole jam	SR2
1347	punch power-on jam	LED7/PTR7

15.4.4 Jam Code (ADF-related)

iR2270 / iR2870 / iR3570 / iR4570 / / / /

T-15-15

Code	Jam	Sensor notation	Description
0003	registration sensor delay	PI2	The registration sensor does not detect paper with 1.5 sec after pickup. At time of reversal, the registration sensor does not detect paper even after the read motor has rotated for a specific period of time.
0004	registration sensor stationary	PI2	After the registration sensor has gone on, it does not go off even when the paper has been moved for 500 mm (700 mm if in extra length mode).
0005	read sensor delay	PI2,PI3	The read sensor does not detect paper even when the feed motor has rotated for a specific period of time after it has received the pickup request signal from the reader unit.
0006	read sensor stationary	PI3	After the read sensor has gone on, it does not go off even when the paper has been moved 500 mm (700 mm if in extra length mode).
0007	delivery sensor delay	PI3,PI4	The delivery sensor does not detect paper even after the read motor has rotated for a specific period of time in response to the read request signal from the reader unit.
0008	delivery sensor stationary	PI4	After the delivery sensor has gone on, it does not go off even after the paper has been moved 500 mm (700 mm if in extra length mode).
0044	1st sheet registration sensor stationary	PI2	The 1st original has been identified as a registration sensor stationary jam.
0045	1st sheet read sensor delay	PI2,PI3	The 1st original has been identified as a read sensor delay jam.
0046	1st sheet read sensor stationary	PI3	The 1st original has been identified as a read sensor stationary jam.
0047	1st sheet delivery sensor delay	PI3,PI4	The 1st original has been identified as a delivery sensor delay jam.

Code	Jam	Sensor notation	Description
0048	1st sheet delivery sensor stationary	PI4	The 1st original has been identified as a delivery sensor stationary jam.
0071	timing error	TIMING NG	The software sequence fails to end normally within a specific period of time.
0090	ADF open	reader unit sensor	The ADF has been opened while the machine is in operation (while the drive system is in operation).
0091	user ADF open	reader unit sensor	The ADF has been opened while the machine is in operation (while the drive system is at rest).
0092	ADF cover open	PI10	The ADF cover has been opened while the machine is in operation (while the drive system is in operation).
0093	user cover open	PI10	The ADF cover has been opened while the machine is in operation (while the drive system is at rest).
0094	initial stationary	PI2,PI3,PI4	The presence of paper is detected inside the feeder when the 1st sheet is being picked up.
0095	pickup fault	PICKUP NG	With no original in the tray, the pickup signal is received for 2 sec.

15.5 Alarm Code

15.5.1 Alarm Code

iR2270 / iR2870 / iR3570 / iR4570 / / / /

T-15-16

Location code	Description	
02 scanner system	0002	indication of soiling of glass in stream reading mode
04 pickup/feed system	0008	optional deck lifter error
	0011	1st cassette retry alarm
	0012	2nd cassette retry alarm
	0013	3rd cassette retry alarm
	0014	4th cassette retry alarm
	0018	optional deck retry alarm
05 ADF general	0001	Upper limit of the post-separation sensor exceeds the specified value
	0002	Lower limit of the post-separation sensor exceeds the specified value.
	0003	Upper limit of the reed sensor exceeds the specified value. Lower limit of the reed sensor exceeds the specified value.
	0004	Upper limit of the delivery reversal sensor exceeds the specified value.
	0005	Lower limit of the delivery reversal sensor exceeds the specified value.
	0006	Insufficient light intensity of the post-separation sensor Insufficient light intensity of the read sensor
	0007	Insufficient light intensity of the delivery reversal sensor The separation alarm is continuously given.
	0008	
	0009	
	0010	
61 finisher	0001	no staple
62 saddle stitcher	0001	no stitch staple
65 puncher	0001	punch waste case full

15.5.2 Alarm Code

iR2230 / / iR3530 /

T-15-17

Location code	Alarm Code	
02 Scanner	0002	alerts to soiling on glass in stream reading mode
04 Pickup/feeder	0008	accessory deck lifter error
	0011	1st cassette retry alarm
	0012	2nd cassette retry alarm
	0013	3rd cassette retry alarm
	0014	4th cassette retry alarm
	0018	accessory deck retry alarm

Location code	Alarm Code	
05 ADF general	0001	Upper limit of the post-separation sensor exceeds the specified value
	0002	Lower limit of the post-separation sensor exceeds the specified value.
	0003	Upper limit of the reed sensor exceeds the specified value. Lower limit of the reed sensor exceeds the specified value.
	0004	Upper limit of the delivery reversal sensor exceeds the specified value.
	0005	Lower limit of the delivery reversal sensor exceeds the specified value.
	0006	Insufficient light intensity of the post-separation sensor Insufficient light intensity of the read sensor
	0007	Insufficient light intensity of the delivery reversal sensor The separation alarm is continuously given.
	0008	
	0009	
	0010	
61 Finisher	0001	no staple
65 Puncher	0001	punch waste case full

15.6 Finisher/Saddle Finisher Error Codes

15.6.1 Error Code in Detail (finisher, puncher)

iR2270 / iR2870 / iR3570 / iR4570 / / iR2270N / / iR2870N / / iR3570N / / iR4570N

T-15-18

Code	Detail code	Name	Detection	Remedy
E500	0001	fault in communication with the finisher (common among all finishers)		Replace the finisher controller PCB. Replace the DC controller PCB.
E503	0002	fault in communication with the finisher (Finisher-Q3/Q4)	fault in communication between finisher and saddle unit	Replace the finisher controller PCB. Replace the saddle controller PCB. Check the cable.
	0003		fault in communication between finisher and punch unit	Replace the finisher controller PCB. Replace the punch drive PCB. Check the cable.
E505	0001	fault in the backup memory of the finisher (common among all finishers)	fault in the data stored in backup memory	Turn off the main power. Check the wiring of the DC controller PCB and the finisher controller, and check the fuse of the 24-V power supply. Thereafter, turn the main power back on.
	0002		fault in the EEPROM data of the punch unit	Replace the punch driver PCB. Replace the finisher controller PCB.
E514	0001	fault in stack delivery motor (Finisher-S1)	When the stack retaining spacer is returned to home position, the belt escape home position sensor does not go on within 1.5 sec.	Replace the finisher controller PCB. Replace the stack delivery motor. Check the stack delivery drive mechanism.
	0002		When the stack retaining spacer is shifted from home position, the belt escape home position sensor does not go off within 1.5 sec.	
E514	0001	fault in trailing edge assist motor (Finisher-Q3/Q4)	The home position sensor does not go off even when the trailing edge assist motor has rotated for a specific period of time.	Replace the finisher control PCB. Replace the trailing edge assist motor.
	0002		The home position sensor does not go on even after the trailing edge assist motor has rotated for a specific period of time.	

Code	Detail code	Name	Detection	Remedy
E519	0001	Gear change motor error (Finisher-Q3/Q4)	The home position sensor does not go off even when the gear change motor has rotated for a specific period of time.	Replace the finisher controller PCB. Replace the gear change motor. Check the gear change mechanism.
	0002		The home position sensor does not go on even when the gear change motor has rotated for a specific period of time.	
E520	0001	The offset motor or the finisher controller PCB is faulty. The offset home position sensor is faulty (Finisher-S1).	While the offset motor is in operation, drive was applied for 1000 msec for movement toward the home position sensor; however, the offset home position sensor does not go on.	Replace the offset motor. Replace the offset home position sensor. Replace the finisher controller PCB.
	0002		While the offset motor is in operation, drive was applied for 1000 msec for movement away from the home position sensor; however, the offset home position sensor does not go off.	
E530	8001	Rear alignment error (Finisher-S1)	The home position sensor does not go on within 2000 msec after the start of operation when the rear aligning plate is shifted to home position.	Replace the finisher controlled PCB. Replace the rear alignment motor. Check the rear aligning plate drive mechanism. Check the rear alignment home position sensor.
	8002		The home position sensor does not go off within 1000 msec after the start of operation when the rear aligning plate is shifted from home position.	
E530	0001	Front alignment error (Finisher-Q3/Q4)	The home position sensor does not go off even when the front alignment motor has been rotated for a specific period of time.	Replace the finisher controller PCB. Replace the front alignment motor. Check the front aligning plate drive mechanism. Check the front alignment home position sensor.
	0002		The home position sensor does not go on even when the front alignment motor has been rotated for a specific period of time.	
E531	8001	Stapler error (Finisher-S1)	At time of staple jam recovery, the home position sensor does not go on with 500 msec after the start of reverse rotation of the stapler motor.	Replace the finisher controller PCB. Replace the stapler. Check the harness.
	8002		The home position sensor does not go off within 500 msec after the stapler motor has been started.	
E531	0001	Stapler error (Finisher-Q3/Q4)	The home position sensor does not go off even when the stapler motor has rotated for a specific period of time.	Replace the finisher controller PCB. Replace the stapler. Check the harness.
	0002		The home position sensor does not go on even when the stapler motor has rotated for a specific period of time.	

Code	Detail code	Name	Detection	Remedy
E532	8001	Stapler shift error (Finisher-S1)	The stapler slide home position sensor does not go on within 11 sec when the stapler is shifted to home position.	Replace the finisher controller PCB. Replace the stapler shift motor. Check the stapler shift home position sensor. Check the harness.
	8002		The stapler slide home position sensor does not go off within 1.0 sec when the stapler is shifted from home position.	
E532	0001	Stapler shift error (Finisher-Q3/Q4)	The home position sensor does not go off even after the stapler shift motor has rotated for a specific period of time.	Replace the finisher controller PCB. Replace the stapler shift motor. Check the stapler shift home position sensor. Check the harness.
	0002		The home position sensor does not go on even when the stapler shift motor has rotated for a specific period of time.	
E535	0001	Swing cam error (Finisher-S1)	The home position sensor does not go off within 1000 msec after the start of operation when the swing arm is shifted from home position.	Replace the finisher controller PCB. Replace the swing cam motor. Check the swing cam home position sensor. Check the harness.
	0002		The home position sensor does not go off within 1.0 sec when the stack delivery roller swing arm is moved from home position.	
E535	0001	Swing cam error (Finisher-Q3/Q4)	The home position sensor does not go off even when the swing motor has rotated for a specific period of time.	Replace the finisher controller PCB. Replace the swing cam motor. Check the swing cam home position sensor. Check the harness.
	0002		The home position sensor does not go on even when the swing motor has rotated for a specific period of time.	
E537	8001	Front alignment error (Finisher-S1)	The home position sensor does not go on within 2.0 sec when the front aligning plate is moved to home position.	Replace the finisher controller PCB. Replace the front alignment motor. Check the front aligning plate drive mechanism. Check the front alignment home position sensor.
	8002		The home position sensor dos not go off within 1.0 sec when the front aligning plate is shifted from home position.	
E537	0001	Rear alignment error (Finisher-Q3/Q4)	The home position sensor does not go on within 2000 msec after the start of operation when the read aligning plate is moved to home position.	Replace the finisher controller PCB. Replace the rear alignment motor. Check the rear aligning plate drive mechanism. Check the rear alignment home position sensor.
	0002		The home position sensor does not go off within 1000 msec after the start of operation when the rear aligning plate is moved form home position.	
E540	8002	Stack tray motor error (Finisher-S1)	The operation to detect the paper surface of the stack tray does not end within 1.0 sec.	Replace the finisher controller PCB. Replace the tray ascent/ descent motor. Check the stack tray drive mechanism. Check the paper surface sensor.
	8003		An abnormal combination of sensor states has been detected.	Replace the finisher controller PCB. Check the stack tray upper limit sensor. Check the stack tray lower limit sensor. Check the stack tray upper paper surface sensor. Check the stack tray lower paper surface sensor.

Code	Detail code	Name	Detection	Remedy
E540	0002	Upper tray ascent/ descent motor error (Finisher -Q3/Q4)	Upper tray ascent/ descent motor clock error	Replace the No. 1 tray shift motor. Replace the finisher controller PCB. Check the tray ascent/descent mechanism.
	0003		Area error	Replace the No. 1 tray area sensor PCB. Replace the finisher controller PCB.
	0004		Safety switch activation	Check the No. 1 tray closed detecting switch. Replace the finisher controller PCB.
E542	0002	Lower tray ascent/ descent motor error (Finisher-Q3/Q4)	Lower tray ascent/ descent motor clock error	Replace the No. 2 tray shift motor. Replace the finisher controller PCB. Check the tray ascent/descent mechanism.
	0003		Area error	Replace the No. 2 tray shift area sensor PCB. Replace the finisher controller PCB.
E577	8001	Paddle error (Finisher-S1)	The paddle home position sensor does not go on within 1.5 sec when the paddle is shifted to home position.	Check the paddle motor. Check the paddle home position sensor. Replace the finisher controller PCB.
	8002		The paddle home position sensor does not go off within 1.0 sec when the paddle is moved to home position.	
E584	0001	Shutter unit error (Finisher-Q3/Q4)	The shutter open sensor does not go off (i.e., the shutter does not close).	Check the stack edging motor. Check the open/close clutch. Check the shutter home position sensor. Replace the finisher controller PCB.
	0002		The shutter open sensor does not go on (i.e., the shutter does not open).	
E590	0001	Punch motor error	The punching home position is not detected even when the puncher motor has been driven for 20 msec.	Check the punch motor. Check the punch motor clock sensor. Check the punch driver PCB. Replace the finisher controller PCB.
	0002		The punch home position sensor is not defected even after the motor has stopped at time of punch motor initial operation.	
E591	0001	Punch dust sensor error	Error in light-receiving voltage while light is emitted	Check the waste paper case full sensor. Check the punch driver PCB. Replace the finisher controller PCB.
	0002		Error in light-receiving voltage while light is not emitted	
E592	0001	Paper trailing edge sensor/horizontal sensor error	Error in light-receiving voltage when light is emitted (trailing edge sensor)	Check the paper trailing edge sensor. Check the horizontal registration sensor. Check the punch driver PCB. Replace the finisher controller PCB.
E592	0002	paper trailing edge sensor/registration sensor error	Error in light-receiving voltage when light is not emitted (trailing edge sensor)	Check the paper trailing edge sensor. Check the horizontal registration sensor. Check the punch drive PCB. Replace the finisher controller PCB.
E592	0003	Power trailing edge sensor/registration sensor	Error in light-receiving voltage when light is emitted (horizontal registration sensor 1)	Check the paper trailing edge sensor. Check the horizontal registration sensor. Check the punch driver PCB. Replace the finisher controller PCB.
E592	0004	Paper trailing edge sensor/registration sensor error	Error in light-receiving voltage when light is not emitted (horizontal registration sensor 1)	Check the paper trailing edge sensor. Check the horizontal registration sensor. Check the punch driver PCB. Replace the finisher controller PCB.
E592	0005	Paper trailing edge sensor/registration sensor error	Error in light-receiving voltage when light is emitted (horizontal registration sensor 2)	Check the paper training edge sensor. Check the horizontal registration sensor. Check the punch driver PCB. Replace the finisher controller PCB.
E592	0006	Paper trailing edge sensor/registration sensor error	Error in light-receiving voltage when light is not emitted (horizontal registration sensor 2)	Check the paper training edge sensor. Check the horizontal registration sensor. Check the punch driver PCB. Replace the finisher controller.

Code	Detail code	Name	Detection	Remedy
E592	0007	Paper trailing edge sensor/registration sensor error	Error in light-receiving voltage when light is emitted (horizontal registration sensor 3)	Check the paper trailing edge sensor. Check the horizontal registration sensor. Check the punch driver PCB. Replace the finisher controller PCB.
E592	0008	Paper trailing edge sensor/registration sensor error	Error in light-receiving voltage when light is not emitted (horizontal registration sensor 3)	Check the paper trailing edge sensor. Check the horizontal registration sensor. Check the punch drive PCB. Replace the finisher controller PCB.
E592	0009	Paper trailing edge sensor/registration sensor error	Error in light-receiving voltage when light is not emitted (horizontal registration sensor 4)	Check the paper trailing edge sensor. Check the horizontal registration sensor. Check the punch driver PCB. Replace the finisher controller PCB.
E592	000A	Paper trailing edge sensor/registration sensor error	Error in light-receiving voltage when light is not emitted (horizontal registration sensor 4)	Check the paper trailing edge sensor. Check the horizontal registration sensor. Check the punch drive PCB. Replace the finisher controller PCB.
E593	0001	Punch shift motor error	The light-receiving voltage home position sensor does not go off when light is emitted.	Check the horizontal registration motor. Check the horizontal registration home position sensor. Check the punch driver PCB. Replace the finisher controller PCB. Check the punch shift mechanism.
	0002		The light-receiving voltage home position sensor does not go on when light is not emitted.	
E5F0	0001	Saddle paper positioning plate error	The paper positioning plate home position sensor does to go on when the paper positioning motor has been driven for 1.33 sec. Paper positioning plate motor (M4S)/paper positioning plate home position sensor (P17S)	Check the paper positioning plate motor. Check the paper positioning plate home position sensor. Replace the finisher controller PCB. Check the paper positioning plate drive mechanism.
	0002		The paper positioning plate home position sensor doest not go off when the paper positioning plate motor has been driven for 1 sec. Paper positioning plate motor (M4S)/paper positioning plate home position sensor (P17S)	
E5F1	0001	Saddle paper folding error	The number of detection pulses of the paper folding motor clock sensor has dropped below a specific value. Paper folding motor (M2S)/paper folding motor clock sensor (P14S)	Check the paper folding motor. Check the paper folding motor clock sensor. Replace the finisher controller PCB. Check the paper folding plate drive mechanism.
	0002		The state of the paper folding home position sensor doest not change when the paper folding motor has been driven for 3 sec. Paper folding motor (M2S)/paper folding motor clock sensor (P14S)	

Code	Detail code	Name	Detection	Remedy
E5F2	0001	Saddle guide error	The guide home position sensor does not go on when the guide motor has been driven for 0.455 sec. Guide motor (M3S)/ guide home position sensor (PI13S)	Check the guide motor. Check the guide home position sensor. Replace the finisher controller PCB. Check the guide drive mechanism.
	0002		The guide home position sensor does not go off when the guide motor has been driven for 1 sec. Guide motor (M3S)/ guide home position sensor (PI13S)	
E5F3	0001	saddle alignment error	The aligning plate home position sensor does not go on when the alignment motor has been driven for 0.5 sec. (at time of initialization, 1.67 sec.) Alignment motor (M5S)/aligning plate home position sensor (PI5S)	Check the alignment motor. Check the alignment home position sensor. Check the aligning plate drive mechanism. Replace the finisher controller PCB.
	0002		The aligning plate home position sensor does not go off when the alignment motor has been driven for 1 sec. Alignment motor (M5S)/aligning plate home position sensor (PI5S)	
E5F4	0001	Saddle rear stapling error	The stitching home position sensor does not go on when the stitch motor (rear) has been rotated in reverse for 0.5 sec or more. Stitch motor (rear; M6S)/stitching home position sensor (rear; MS5S)	Replace the stitcher (rear). Check the harness. Replace the finisher controller PCB.
	0002		The stitching home position sensor does not go off when the stitch motor (rear) has been rotated in normal direction for 0.5 sec or more. Stitch motor (rear; MS)/ stitching home position sensor (rear; MS5S)	
E5F5	0001	Saddle front stapling error	The stitching home position sensor does not go on when the stitch motor (front) has been rotated in reverse for 0.5 sec or more. Stitch motor (front; M7S)/stitching home position sensor (front; MS7S)	Replace the stitcher (front). Check the harness. Replace the finisher controller PCB.
	0002		The stitching home position sensor does not go off when the switch motor (front) has been rotated in normal direction for 0.5 sec or more. Stitch motor (front; M7S)/stitching home position sensor (front; MS7S)	

Code	Detail code	Name	Detection	Remedy
E5F6	0001	Saddle butting error	The paper butting plate home position sensor does not go on when the paper butting plate motor has been driven for 0.3 sec. Paper butting plate motor (M8S)/paper butting plate home position sensor (PI14S)	Check the paper butting plate motor. Check the paper butting plate home position sensor. Replace the finisher controller PCB.
E5F6	0002	Saddle butting error	The paper butting plate home position sensor does not go off when the paper butting plate motor has been driven for 80 msec or more. Paper butting plate motor (M8S)/paper butting plate home position sensor (PI14S)	
E5F6	0003	Saddle butting error	The number of detection pulses of the paper butting plate motor has dropped below a specific value. paper butting plate motor (M8S)/paper butting plate motor clock sensor (PI1S)	Check the paper butting plate motor. Check the paper butting plate motor clock sensor. Replace the finisher controller PCB.
E5F6	0004	Saddle butting error	The paper butting plate leading edge sensor does not go off when the paper butting plate motor has been driven for 80 msec. Paper butting plate motor (M8S)/paper butting plate leading edge sensor (PI15S)	Check the paper butting plate motor. Check the paper butting plate leading edge sensor. Replace the finisher controller PCB.
E5F6	0005	Saddle butting error	The paper butting plate leading edge sensor does not go on when the paper butting plate motor has been driven for 0.3 sec. Paper butting plate more (M8S)/paper butting plate leading edge sensor (PI15S)	
E5F8	0001	Saddle connector error	The connector of the paper butting plate home position sensor has been identified as being disconnected. Connector of guide home position sensor (PI13S)	Connect the connector of the guide home position sensor. Check the harness. Replace the finisher controller PCB.
	0002		The connector of the paper butting plate home position sensor has been identified as being disconnected. Connector of paper butting plate home position sensor (PI14S)	Connect the connector of the paper butting plate home position sensor. Check the harness. Replace the finisher controller PCB.
	0003		The connector of the paper butting plate leading edge sensor has been identified as being disconnected. Connector of paper butting plate leading edge sensor (PI15S)	Connect the connector of the paper butting plate leading edge sensor. Check the harness. Replace the finisher controller PCB.

Code	Detail code	Name	Detection	Remedy
E5F	0001	Saddle switch error	The inlet cover switch has been identified as being open for 1 sec or more after the start of printing or the start of initial rotation with the following sensors identifying their respective covers as being closed: - inlet cover sensor (PI9S) - nt cover open/closed sensor (PI2S) - delivery cover sensor (PI3S) Or, the front over switch (MS2S) or the delivery cover switch (MS3S) is open. Inlet cover switch (MS1S)/front cover switch (MS2S)/ delivery cover switch (MS3S)	Check the inlet cover switch. Check the inlet cover sensor. Check the front cover open/closed sensor. Check the delivery cover sensor. Replace the finisher controller PCB.
E5F	0002	Saddle switch error	The front cover switch has been identified as being open from the start of printing or the start of initial rotation with the following sensors identifying their respective covers as being closed. - inlet cover sensor (PI9S) - front cover open/ closed sensor (PI2S) - delivery cover sensor (PI3S) - front cover switch (MS2S)/delivery cover switch (MS3S)	Check the front cover switch. Check the inlet cover sensor. Check the front cover open/closed sensor. Check the delivery cover sensor. Replace the finisher controller PCB.
E5F	0003	Saddle switch error	The delivery cover switch has been identified as being open after the start of printing or the start of initial rotation of the host machine with the following sensors identifying their respective covers as being closed: - inlet cover sensor (PI9S) - front cover open/ closed sensor (PI2S) - delivery cover sensor (PI3S) - delivery cover switch (MS3S)	Check the delivery cover switch. Check the inlet cover sensor. Check the inlet cover sensor. Check the front cover open/closed sensor. Check the delivery cover sensor. Replace the finisher controller PCB.

15.6.2 Error Code Detail (finisher, puncher)

iR2230 / / iR3530 /

T-15-19

Code	Detail code	Items	Description	Remedial action
E500	0001	Finisher communication error		Replace the finisher controller PCB. Check the cable. Replace the DC controller PCB.
E503	0003	Finisher internal communication error	There is an error in the communication between the finisher and the punch unit.	Replace the finisher controller PCB. Replace the punch driver PCB. Check the cable.
E505	0001	Finisher backup memory error	There is an error in the data stored in the backup memory.	Turn off the main power, and check the following: DC controller PCB and finisher PCB wiring, 24V fuse. Thereafter, turn on the main power.
	0002		There is an error in the punch unit EEPROM data.	Replace the punch driver PCB. Replace the finisher controller PCB.

Code	Detail code	Items	Description	Remedial action
E514	0001	Stack delivery motor error (Finisher-S1)	When the stack retainer is moving to home position, the return belt escape HP sensor does not go on within 1.5 sec.	Replace the finisher controller PCB. Replace the stack delivery motor. Check the stack delivery drive mechanism.
	0002		When the stack retainer is moving from home position, the return belt escape HP sensor does not go off within 1.5 sec.	
E520	0001	The offset motor or the finisher controller PCB is faulty. The offset home position sensor is faulty.	While the offset motor is in operation, drive was applied for 1000 msec for movement toward the home position sensor; however, the offset home position sensor does not go on.	Replace the offset motor. Replace the offset home position sensor. Replace the finisher controller PCB.
	0002		While the offset motor is in operation, drive was applied for 1000 msec for movement away from the home position sensor; however, the offset home position sensor does not go off.	
E530	8001	Rear alignment error (Finisher-S1)	When the rear aligning plate is moving to home position, the HP sensor is not identified as being ON within 2000 msec after the start of the movement.	Replace the finisher controller PCB. Replace the rear alignment motor. Check the rear aligning plate drive unit. Check the rear alignment HP sensor.
	8002		When the rear aligning plate is moving from home position, the HP sensor is not identified as being OFF within 1000 msec after the start of the movement.	
E531	8001	Staple error (Finisher-S1)	At time of a staple jam recovery session, the HP sensor is not identified as being ON within 500 msec after the start of staple motor reversal drive.	Replace the finisher controller PCB. Replace the Staple. Check the harness.
	8002		The HP sensor is not identified as being OFF within 500 msec after the start of staple motor drive.	
E532	8001	Stapler shift error (Finisher-S1)	When the stapler is moving to home position, the stapler slide HP sensor does not go on within 11 sec.	Replace the finisher controller PCB. Replace the stapler shift motor. Check the stapler shift home position sensor. Check the harness.
	8002		When the stapler is moving from home position, the stapler slide HP sensor does not go off within 1.0 sec.	
E535	0001	Swing cam error (Finisher-S1)	When the swing arm is moving from home position, the HP sensor is not identified as being OFF within 1000 msec after the start of the movement.	Replace the finisher controller PCB. Replace the swing cam motor. Check the swing cam home position sensor. Check the harness.
	0002		When the stack delivery roller swing arm is moving from home position, the swing cam HP sensor does not go off within 1.0 sec.	

Code	Detail code	Items	Description	Remedial action
E537	8001	Front alignment error (Finisher-S1)	When the front aligning plate is moving to home position, the front alignment HP sensor does not go on within 2.0 sec.	Replace the finisher controller PCB. Replace the front alignment motor. Check the front aligning plate drive unit. Check the front alignment HP sensor.
	8002		When the front alignment plate is moving from home position, the front alignment HP sensor does not go off within 1.0 sec.	
E540	8002	Stack tray shift motor error (Finisher-S1)	The stack tray paper surface detection does not end within 1.0 sec.	Replace the finisher controller PCB. Replace the tray ascent/ descent motor. Check the stack tray drive mechanism. Check the paper surface sensor.
	8003		An error sensor output combination has been detected.	Replace the finisher controller PCB. Check the stack tray upper limit sensor. Check the stack tray lower limit sensor. Check the stack tray paper surface sensor. Check the stack tray lower paper surface sensor.
E577	8001	Paddle error (Finisher-S1)	When the paddle is moving to home position, the paddle HP sensor does not go on within 1.5 sec.	Check the paddle motor. Check the paddle home position sensor. Replace the finisher controller PCB.
	8002		When the paddle is moving from home position, the paddle HP sensor does not go off within 1.0 sec.	
E590	0001	Punch motor error	The punch home position sensor is not detected even when the punch motor has been driven for 200 msec.	Check the punch motor. Check the punch motor clock sensor. Check the punch driver PCB. Replace the finisher controller PCB.
	0002		At time of punch motor initial operation, the punch home position sensor is not detected after the motor has stopped.	
E591	0001	Punch dust sensor error	There is an error in the voltage of light reception while light is shined.	Check the dust case full sensor. Check the punch driver PCB. Replace the finisher controller PCB.
	0002		There is an error in the voltage of light reception while light is not shined.	
E592	0001	Paper trailing edge sensor/horizontal registration sensor error	There is an error in the voltage of light reception while light is shined (trailing edge sensor).	Check the paper trailing edge sensor. Check the horizontal registration sensor. Check the punch driver PCB. Replace the finisher controller PCB.
E592	0002	Paper trailing edge sensor/registration sensor error	There is an error in the voltage of light reception while light is not shined (trailing edge sensor).	Check the paper trailing edge sensor. Check the horizontal registration sensor. Check the punch driver PCB. Replace the finisher controller PCB.
E592	0003	Paper trailing edge sensor/registration sensor error	There is an error in the voltage of light reception while light is shined (horizontal registration sensor 1).	Check the paper trailing edge sensor. Check the horizontal registration sensor. Check the punch driver PCB. Replace the finisher controller PCB.
E592	0004	Paper trailing edge sensor/registration sensor error	There is an error in the voltage of light reception while light is not shined (horizontal registration sensor 1).	Check the paper trailing edge sensor. Check the horizontal registration sensor. Check the punch driver PCB. Replace the finisher controller PCB.
E592	0005	Paper trailing edge sensor/registration sensor error	There is an error in the voltage of light reception while light is shined (horizontal registration sensor 2).	Check the power trailing edge sensor. Check the horizontal registration sensor. Check the punch driver PCB. Replace the finisher controller PCB.
E592	0006	Paper trailing edge sensor/registration sensor error	There is an error in the voltage of light reception when light is not shined (horizontal registration sensor 2).	Check the paper trailing edge sensor. Check the horizontal registration sensor. Check the punch drive PCB. Replace the finisher controller PCB.

Code	Detail code	Items	Description	Remedial action
E592	0007	Paper trailing edge sensor/registration sensor error	There is an error in the voltage of light reception while light is shined (horizontal registration sensor 3).	Check the paper trailing edge sensor. Check the horizontal registration sensor. Check the punch drive PCB. Replace the finisher controller PCB.
E592	0008	Paper trailing edge sensor/registration sensor error	There is an error in the voltage of light reception while light is not shined (horizontal registration sensor 3).	Check the paper trailing edge sensor. Check the horizontal registration sensor. Check the punch drive PCB. Replace the finisher control PCB.
E592	0009	Paper trailing edge sensor/registration sensor error	There is an error in the voltage of light reception while light is shined (horizontal registration sensor 4).	Check the paper trailing edge sensor. Check the horizontal registration sensor. Check the punch drive PCB. Replace the finisher controller PCB.
E592	000A	Paper trailing edge sensor/registration sensor error	There is an error in the voltage of light reception while light is not shined (horizontal registration sensor 4).	Check the paper trailing edge sensor. Check the horizontal registration sensor. Check the punch drive PCB. Replace the finisher controller PCB.
E593	0001	Punch shift motor error	The light reception voltage HP sensor does not go off when light is shined.	Check the horizontal registration motor. Check the horizontal registration HP sensor. Check the punch driver PCB. Check the finisher controller PCB. Check the punch shift mechanism.
	0002		The light reception voltage HP sensor does not go on while light is not shined.	

15.7 DADF Error Codes

15.7.1 Error Code in Detail (DF)

iR2270 / iR2870 / iR3570 / iR4570 / / iR2270N / / iR2870N / / iR3570N / / iR4570N / iR2230 / / iR3530 /

T-15-20

Code	Detail code	Description	Type	Remedy
E400	0001	DF communication error	Check sum error	Disconnect and then connect the connector. Replace the reader controller PCB. Replace the ADF controller PCB.
	0002		Reception status error	Disconnect and then connect the connector. Replace the reader control PCB. Replace the ADF control PCB.
	0003		Reception interrupt error	Disconnect and then connect the connector. Replace the reader controlled PCB. Replace the ADF controller PCB.
E490	0001	Wrong DF	The installed DF is not of a supported type.	Install an ADF that is compatible with the machine.

Chapter 16 Service Mode

Contents

16.1 Outline....16-1
16.1.1 Construction of Service Mode....16-1
16.1.2 Starting Service Mode and Making Selections....16-1
16.1.3 Ending Service Mode....16-2
16.1.4 Back-Up....16-2
16.1.5 Initial Screen....16-2
16.1.6 2nd/3rd Item Screen....16-3
16.1.7 4th Item Screen....16-3
16.2 DISPLAY (Status Display Mode)....16-4
16.2.1 COPIER....16-4
16.2.1.1 Copier List....16-4
16.2.2 FEEDER....16-8
16.2.2.1 Feeder List....16-8
16.3 I/O (I/O Display Mode)....16-8
16.3.1 Outline....16-8
16.3.2 <DC-CON>....16-9
16.3.3 <R-CON>....16-10
16.3.4 <FEEDER>....16-11
16.3.5 <SORTER>....16-12
16.4 ADJUST (Adjustment Mode)....16-17
16.4.1 COPIER....16-17
16.4.1.1 Copier List....16-17
16.4.2 FEEDER....16-23
16.4.2.1 FEEDER List....16-23
16.4.3 SORTER....16-23
16.4.3.1 Sorter List....16-23
16.5 FUNCTION (Operation/Inspection Mode)....16-24
16.5.1 COPIER....16-24
16.5.1.1 Copier List....16-24
16.5.2 FEEDER....16-30
16.5.2.1 Feeder List....16-30
16.6 OPTION (Machine Settings Mode)....16-31
16.6.1 COPIER....16-31
16.6.1.1 Copier List....16-31
16.6.2 FEEDER....16-48
16.6.2.1 Feeder List....16-48
16.6.3 SORTER....16-48
16.6.3.1 Sorter List....16-48
16.6.4 BOARD....16-48
16.6.4.1 Board List....16-48
16.7 TEST (Test Print Mode)....16-49
16.7.1 COPIER....16-49
16.7.1.1 Copier List....16-49
16.8 COUNTER (Counter Mode)....16-50
16.8.1 COPIER....16-50
16.8.1.1 Copier List....16-50

16.1 Outline

16.1.1 Construction of Service Mode

iR2270 / iR2870 / iR3570 / iR4570 / / / / / iR2230 / / / iR3530 /

The machine's service mode has a 3-layer screen construction: Initial screen, Level 1/2 screen, and Level 3 screen. Its mode items are grouped into those used in regular maintenance work (Level 1 items) and those used in response to faults (Level 2 items).

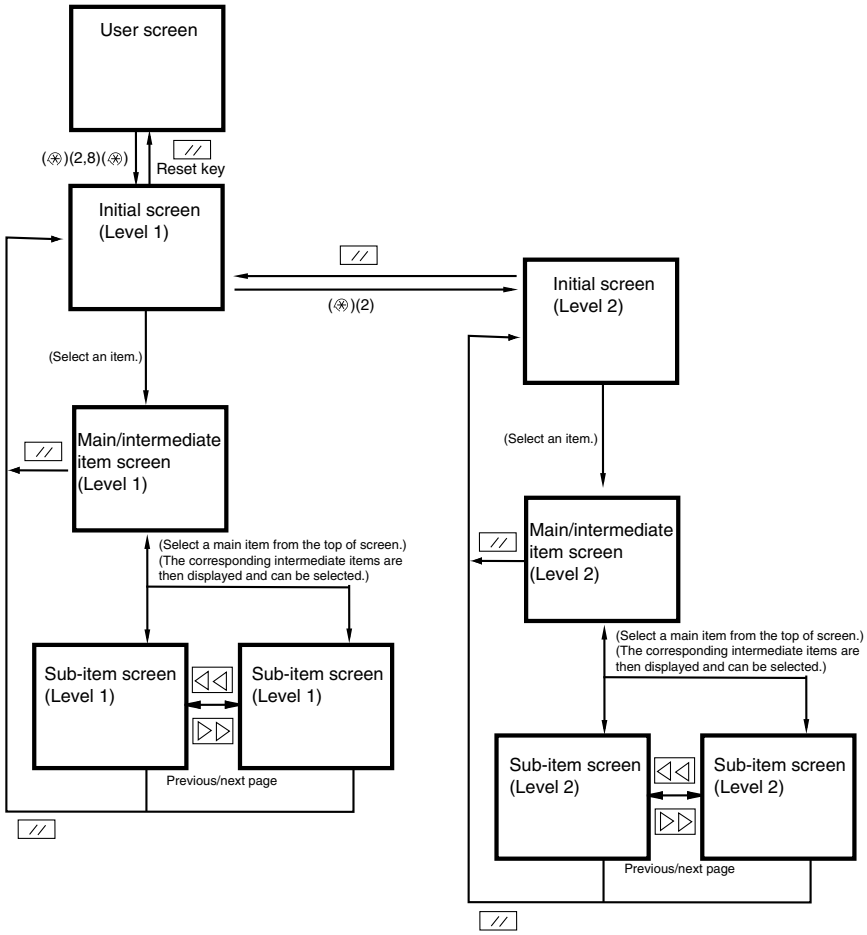

F-16-1

The machine's service mode is divided into the following 7 types:

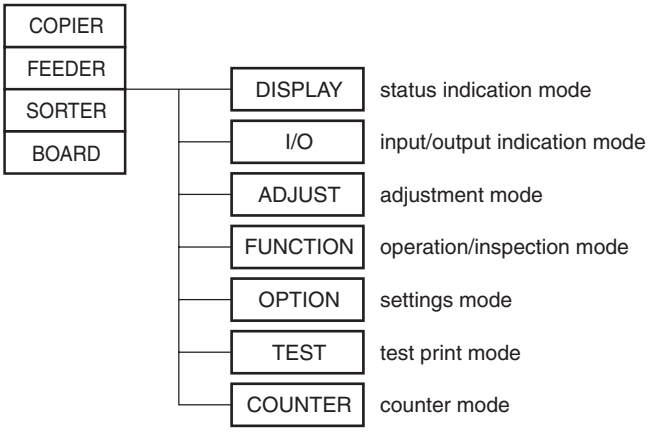

F-16-2

16.1.2 Starting Service Mode and Making Selections

iR2270 / iR2870 / iR3570 / iR4570 / / / / / iR2230 / / / iR3530 /

If you want to execute a machine operation using a service mode item, be sure to disconnect all cables from an external controller or a network before starting service mode. Particularly, if you are using a FUNCTION (operation/inspection) mode item, the arrival of a print job from an external source can cause the machine to malfunction, leading to damage.

1) Press the asterisk key "✱" on the control panel.

2) Press the 2 and 8 keys of the keypad at the same time.

3) Press the asterisk key "✱" on the control panel.
In response to the foregoing key operations, the machine will bring up the following Initial screen:

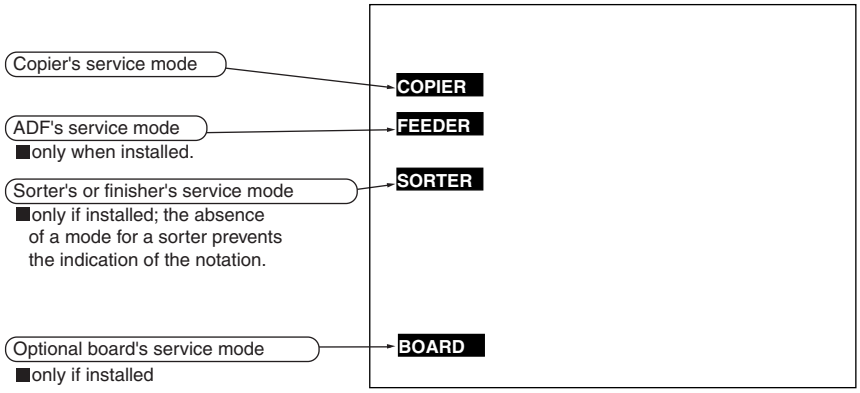

F-16-3

16.1.3 Ending Service Mode

iR2270 / iR2870 / iR3570 / iR4570 / / / / / iR2230 / / / iR3530 /

A press on the Reset key will bring back the Service Mode Initial screen.
Another press on the Reset key will end service mode, and bring back the User screen (standard screen).

⚠ If you used service mode (ADJUST, FUNCTION, OPTION), be sure to turn off and then on the main power switch after ending service mode.

16.1.4 Back-Up

iR2270 / iR2870 / iR3570 / iR4570 / / / / / iR2230 / / / iR3530 /

At time of shipment from the factory, all machines are adjusted individually, and adjustment values are recorded in their respective service labels.
If you have replaced the reader controller PCB or the DC controller PCB, or if you have initialized the RAM, the adjustment values (for ADJUST and OPTION) will return to their default settings. If there has been any change in a service mode item, be sure to update its setting indicated on the service label. As necessary, make use of the space in the service label (as when recording an item not found on the label).
- Service Label for the Reader Controller PCB (behind the left cover [1] of the reader unit)
- Service Label [2] for the Main Controller PCB/DC controller PCB (behind the front cover unit of the printer unit)

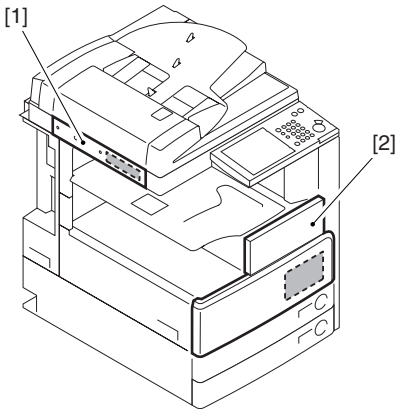

F-16-4

16.1.5 Initial Screen

iR2270 / iR2870 / iR3570 / iR4570 / / / / / iR2230 / / / iR3530 /

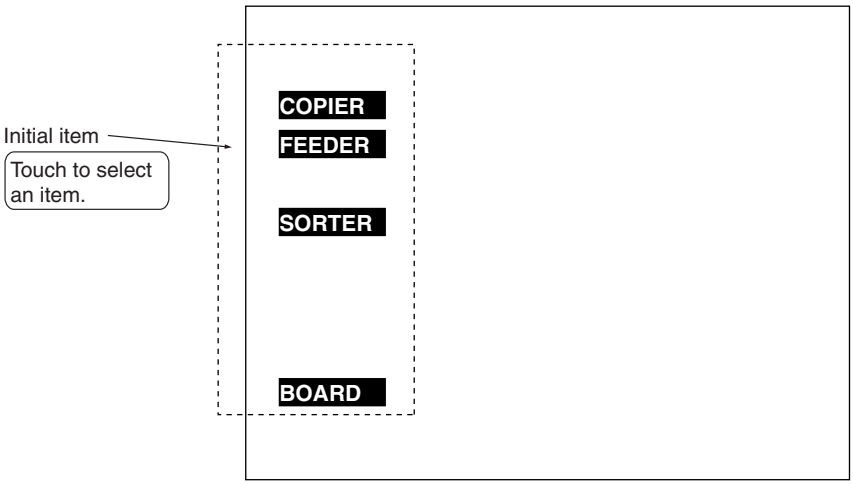

F-16-5

16.1.6 2nd/3rd Item Screen

iR2270 / iR2870 / iR3570 / iR4570 / / / / / iR2230 / / / iR3530 /

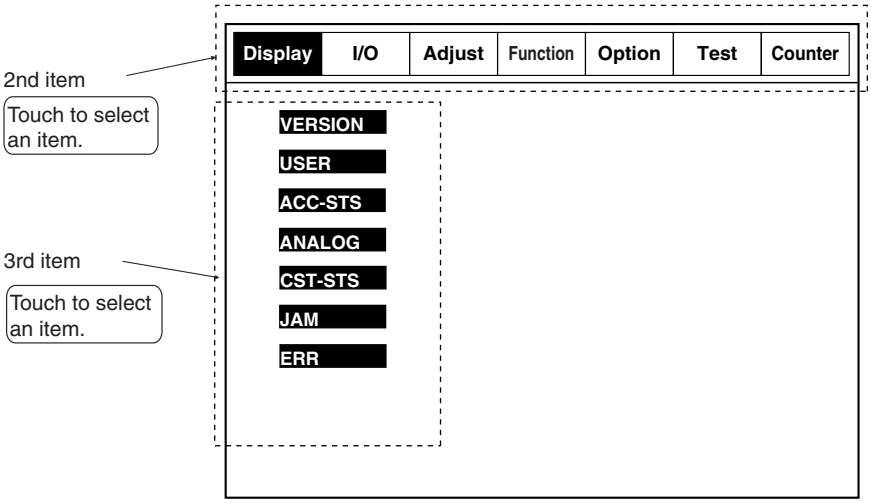

F-16-6

16.1.7 4th Item Screen

iR2270 / iR2870 / iR3570 / iR4570 / / / / / iR2230 / / / iR3530 /

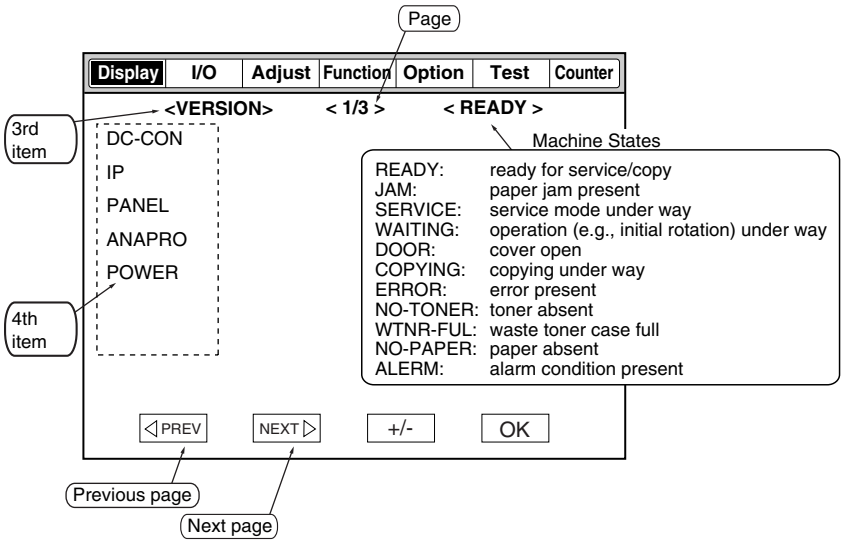

F-16-7

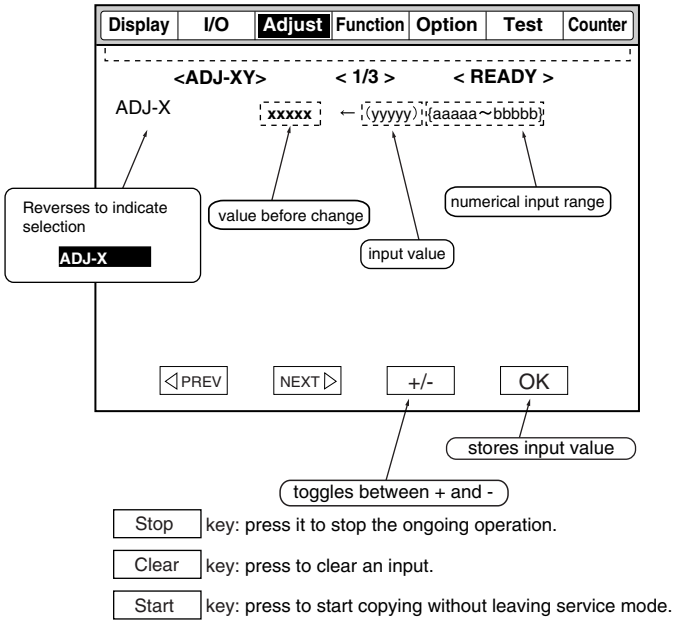

F-16-8

16.2 DISPLAY (Status Display Mode)

16.2.1 COPIER

16.2.1.1 Copier List

iR2270 / iR2870 / iR3570 / iR4570 / / / / / iR2230 / / / iR3530 /

<VERSION>

T-16-1

COPIER > DISPLAY > VERSION		
Sub-item	**Description**	**Level**
ROM version of each circuit board Marking style<R-CON XX.YY> XX : Version number ,YY : Development control number - <--.--> if no circuit boards are connected.		
DC-CON	ROM version of the DC controller circuit board	1
R-CON	ROM version of the reader controller circuit board	1
PANEL	ROM version of the CPU circuit of the operator panel	1
POWER	ROM version of the composite power circuit board	1
FEEDER	ROM version of the DADF controller circuit board	1
SORTER	ROM version of the finisher controller circuit board	1
FAX	ROM version of the fax board	1
NIB	Version of the network software	1
SDL-STCH	ROM version of the saddle stitcher controller circuit board	1
MN-CONT	ROM version of the main controller circuit board	1
DIAG-DVC	ROM version of the self-diagnostic device	1
RUI	Version of the remote UI	1
PUNCH	Version of the punch unit	1
LANG-EN	Version of the English language file	1
LANG-FR	Version of the French language file	1
LANG-DE	Version of the German language file	1
LANG-IT	Version of the Italian language file	1
LANG-JP	Version of the Japanese language file	1
JAVA-VM	Version of JavaVM in bootable	1
MEAP	Version of the MEAP Description on the hard disk	1
OCR-CN	Version of the simple-font Chinese OCR	1
OCR-JP	Version of the Japanese OCR	1
OCR-KR	Version of the Korean OCR	1
OCR-TW	Version of the full-font Chinese OCR	1
BOOTROM	Boot ROM version of the main controller circuit board Marking style: xx.yy_z z indicates the boot ROM type.	1
LANG-CS	Version of the Czech language file	2
LANG-DA	Version of the Danish language file	2
LANG-EL	Version of the Greek language file	2

COPIER > DISPLAY > VERSION		
Sub-item	**Description**	**Level**
LANG-ES	Version of the Spanish language file	2
LANG-ET	Version of the Estonian language file	2
LANG-FI	Version of the Finnish language file	2
LANG-HU	Version of the Hungarian language file	2
LANG-KO	Version of the Korean language file	2
LANG-NL	Version of the Dutch language file	2
LANG-NO	Version of the Norwegian language file	2
LANG-PL	Version of the Polish language file	2
LANG-PT	Version of the Portuguese language file	2
LANG-RU	Version of the Russian language file	2
LANG-SL	Version of the Slovenian language file	2
LANG-SV	Version of the Swedish language file	2
LANG-TW	Version of the full-font Chinese language file	2
LANG-ZH	Version of the simple-font Chinese language file	2
LANG-BU	Version of the Bulgarian language file	2
LANG-CR	Version of the Croatian language file	2
LANG-RM	Version of the Rumanian language file	2
LANG-SK	Version of the Slovak language file	2
LANG-TK	Version of the Turkish language file	2

<ACC-STS>

T-16-2

COPIER > DISPLAY > ACC-STS		
Sub-item	**Description**	**Level**
FEEDER	DADF connection status 0: Not connected 1: Connected	1
SORTER	Finisher and punch unit connection status Sorter type 0: None 1: Finisher 2: Saddle finisher Punch type 0: None 1: 2 holes 2: 2/3 holes 3: 4 holes (fr) 4: 4 holes (sw)	1
DECK	Paper deck connection status 0: Not connected 1: Connected	1
CARD	Card reader connection status 0: Card reader connected with no card inserted 1: Card reader not connected or connected with card inserted (1: Ready to copy, 0: Not ready to copy)	1
DATA-CON	Copy data controller connection status 0: Not connected 1: Connected	1
RAM	Capacity of the memory on the main controller circuit board 256 MB, 512 MB	1
COINROBO	Coin vendor connection status 0: Not connected 1: Connected	1
NIB	Network board connection status 0: No board connected 1: Ethernet board connected 2: Token ring board connected 3: Ethernet board and token ring board connected	1
PS/PCL	Not used	1
NETWARE	Netware firmware installation status 0: Not installed 1: Installed	1
SEND	Send function addition status 0: Send function not added 1: Send function added	1
PDL-FNC1/2	Valid PDL 0000 0000 0000 0000 to 1111 1111 1111 1111 (0:OFF,1:ON) b31 to b16 for PDL-FNC1 b15 to b0 for PDL-FNC2 b31: BDL, b30: PS, b29: PCL, b28: PDF, b27: LIPS, b26: N201, b25: I5577, b24: ESC/P, b23: HPGL, b22: HPGL2, b21: IMAGING, b20: KS, b19 to b0: Reserved	1
HDD	Model name of the hard disk drive	1
PCI1/2/3	PCI1/2/3 board name Not connected: Hyphen (-) displayed Connected: Board name displayed	1

<ANALOG>

T-16-3

COPIER > DISPLAY > ANALOG		
Sub-item	**Description**	**Level**
TEMP	In-machine temperature (environment sensor): Unit: deg C	1
HUM	In-machine humidity (environment sensor): Unit: %RH	1
ABS-HUM	Water content (environment sensor): Unit: g	1
DR-TEMP	Photoconductor drum ambient temperature (drum sensor): Unit: deg C	1
FIX-C	Fixing heater temperature (main thermistor): Unit: deg C	1
FIX-E	Fixing heater edge temperature (sub-thermistor): Unit: deg C	1

<CST-STS>

T-16-4

COPIER > DISPLAY > CST-STS		
Sub-item	**Description**	**Level**
WIDTH-MF	Paper width on the manual feedtray Unit: mm	2

<JAM>

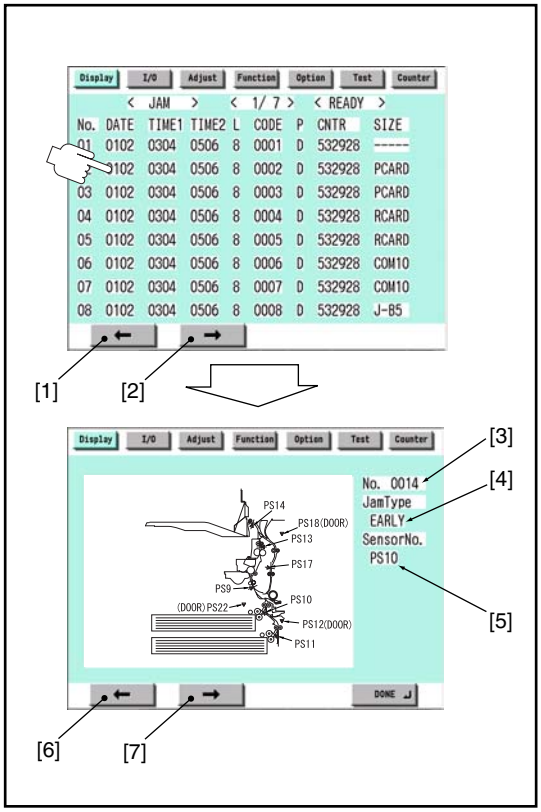

F-16-9

Touch an arbitrary jam display screen to see details about the jam.
(1) To previous page
(2) To next page
(3) Jam sequential number
(4) Jam type
(5) Corresponding sensor
(6) To next jam screen
(7) To previous jam screen
<No.> Jam sequential number: 1 to 50 (The oldest jam has the greatest number.)
<DATE> Jam occurrence date
<TIME1> Jam occurrence time
<TIME2> Jam reset time
<L>Location of the jam: 0 - 2 (0:host machine, 1:Feeder, 2:Finisher)
<CODE>Jam Code
<P> Paper feed position
1: Cassette 1, 2: Cassette 2, 3: Cassette 3, 4: Cassette 4, 7: Side paper deck, 8: Manual feed tray, 9: Duplex section
<CNTR> Software counter value of the paper feed stage
<SIZE> Paper size

<ERR>

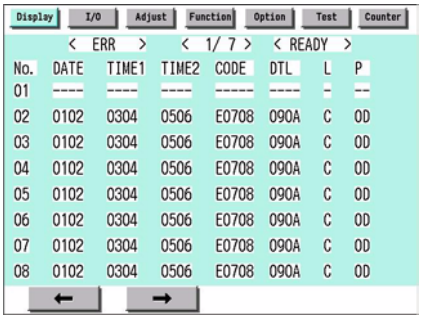

F-16-10

<No.> Error sequential number: 1 to 50 (The oldest error has the greatest number.)
<DATE> Error occurrence date
<TIME1> Error occurrence time
<TIME2> Error reset time

<CODE> Error code
<DTL> Error detail code (0000 for none)
<L> Error location
0: Main controller 1: DADF 2: Finisher 3: Not used 4: Reader unit 5: Printer unit
6: Various PDL board 7: Fax board
<P> Not used

<HV-STS>

T-16-5

COPIER > DISPLAY > HV-STS		
Sub-item	**Description**	**Leve**
PRIMARY	Primary charge current at photoconductor drum Registrationance detection control (APVC) Unit: uA	1
TR	Transfer current setting for the job executed last Unit: uA	1
BIAS	Developing bias setting for the job executed last Unit: V	1
TR-V	Voltage at transfer charging roller Registrationance detection control (ATVC) Unit: V	1

<CCD>

T-16-6

COPIER > DISPLAY > CCD		
Sub-item	**Description**	**Level**
TARGET-R	Red shooting target value	2
OFST	CCD offset level adjustment value	2
GAIN	CCD gain level adjustment value	2
MFIL	Main-scan MTF correction index	2
SFIL	Subscan MTF correction index	2

<SENSOR>

T-16-7

COPIER > DISPLAY > SENSOR		
Sub-item	**Description**	**Level**
DOC-SZ	Document size detected by the document size sensor	2

<ALARM-2>

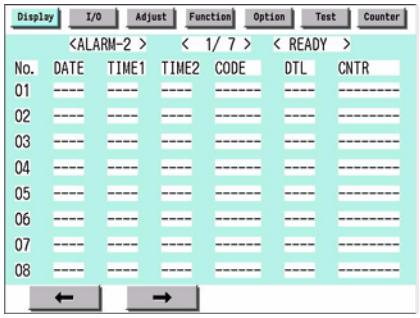

F-16-11

<No.> Alarm sequential number: 1 to 50 (The oldest alarm has the greatest number.)
<DATE> Alarm occurrence date
<TIME1> Alarm occurrence time
<TIME2> Alarm reset time
<CODE> Alarm location code and alarm code
<DTL> Alarm detail code
<CNTR> Total counter value at alarm occurrence
<ENVRNT>
Environmental log display
Changes of [In-machine temperature (deg C)/humidity (%) / Fixing roller surface (center) temperature (deg C) are displayed as log data.
Remarks: The data acquisition cycle can be set at COPIER>OPTION>BODY>ENVP-INT in Service Mode.

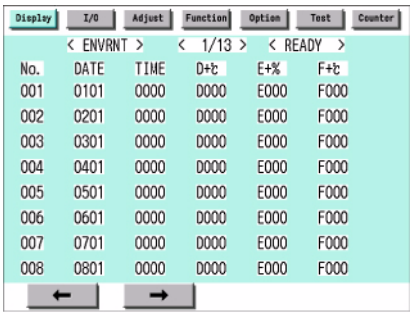

F-16-12

T-16-8

Item	Description
No.	Error sequential number: (The oldest error has the greatest number.)
DATE	Data acquisition date
TIME	Data acquisition time
D+deg C	In-machine temperature
E+%	In-machine humidity
F+deg C	Fixing roller surface temperature

16.2.2 FEEDER

16.2.2.1 Feeder List

iR2270 / iR2870 / iR3570 / iR4570 / / / / / iR2230 / / / iR3530 /

FEEDER >DISPLAY

T-16-9

FEEDER >DISPLAY		
Sub-item	Description	Level
FEEDSIZE	Document size detected by the feeder	1
TRY-WIDE	Distance between document width detection slides (Paper width detection [mm])	1

16.3 I/O (I/O Display Mode)

16.3.1 Outline

iR2270 / iR2870 / iR3570 / iR4570 / / / / / iR2230 / / / iR3530 /

The figures below show the COPIER>I/O screen and the next pages describe the items (necessary items for market services only).

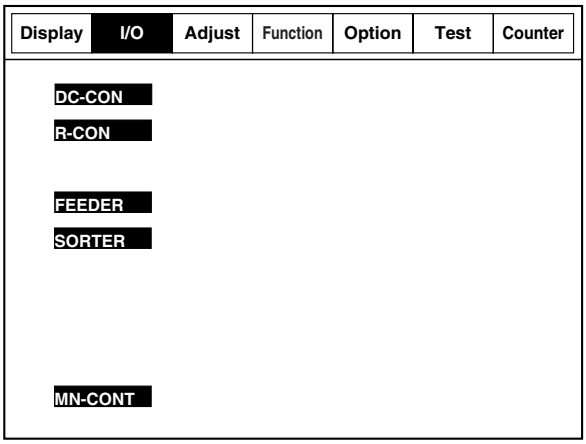

F-16-13

<Screen interpretation>

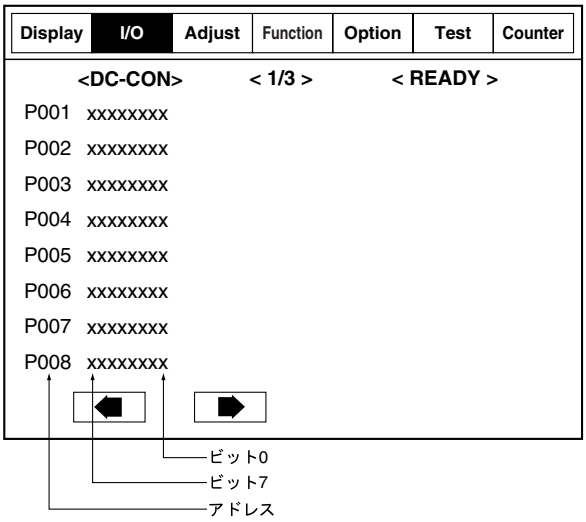

F-16-14

16.3.2 <DC-CON>

iR2270 / iR2870 / iR3570 / iR4570 / / / / / iR2230 / / / iR3530 /

T-16-10

Address	Bit	Display contents	Remarks
P001	0-1	For development	
	2	Fixing motor FG output signal	-
	3	Polygon motor FG output signal	-
	4-7	For development	
	8-15	Not used	
P002	0-1	For development	
	2-3	Not used	
	4-5	For development	
	6	Thermistor: Overheat	0:Relay OFF
	7	High-voltage board high voltage reset detection	0:High voltage reset detection
	8-15	Not used	
P003	0-7	For development	
	8-15	Not used	
P004	0-7	For development	
	8-15	Not used	
P005	0-5	Not used	
	6	High-voltage board high voltage reset request	0:High voltage reset request
	7	For development	
	8-15	Not used	
P006	0	Cassette 1 feed motor current switching 0	-
	1	Cassette 1 feed motor current switching 1	-
	2	Cassette 1 feed motor current switching 2	-
	3	Cassette 1 feed motor current switching 3	-
	4	Fixing motor deceleration signal	-
	5	Fixing motor acceleration signal	-
	6	Thermistor pull-up resistor switching	1:At low temperature
	7	Fan half-speed switching signal	1:Half speed
	8-15	Not used	
P007	0-15	Not used	
P008	0-2	For development	
	3	Laser power select	-
	4	Main motor	1:ON
	5-7	For development	
	8-15	Not used	
P009	0-5	Not used	
	6	Polygon motor acceleration signal	-
	7-15	For development	
P010	0-7	Not used	
P011	0-7	Not used	
P012	0-7	Not used	
P013	0-7	Not used	
P014	0-7	Not used	
P015	0-7	Not used	
P016	0-7	Not used	
P017	0-7	For development	
P018	0-7	For development	
P019	0	Manual feed clutch	1:ON
	1	Registration clutch	1:ON
	2	Sleeve clutch	1:ON
	3	Duplex transport clutch (iR2270/2270F/2870/2870F model only)	1:ON
	4	Cassette 2 retry sensor	1:Detected
	5	Cassette 2 paper sensor	1:No paper
	6	Cassette 2 paper level A sensor	1Half or less
	7	Cassette 2 paper level B sensor	1:About 50 sheets or less

P020	0	Polygon motor standby signal	1:STBY
	1	Bottle rotation motor	1:ON
	2	Hopper screw motor	1:ON
	3	Pre-exposure board	1:Pre-exposure with large quantity of light
	4	First paper ejection motor current switching 0	-
	5	First paper ejection motor current switching 1	-
	6	Heat exhaust fan F	1:ON
	7	Pre-exposure light quantity switching	1:Pre-exposure with medium quantity of light
P021	0	Manual feed detection sensor	0:Paper present
	1	Toner detection	1:Toner remaining
	2	Duplex transport sensor	1:Detected
	3	Heat exhaust fan F lock detection	0:Locked
	4-7	For development	
P022	0-7	For development	
P023	0	Duplex motor current switching 10	-
	1	Duplex motor current switching 11	-
	2	Heat exhaust fan R	1:ON
	3	For development	-
	4	Waste toner sensor	0:Full
	5	For development	
	6	Pre-exposure switching	1:Pre-exposure with small quantity of light
	7	For development	
P024	0-7	For development	
P025	0-3	For development	
	4	Pickup 1 solenoid	1:ON
	5	Pickup 2 solenoid	1:ON
	6-7	For development	
P026	1-7	For development	
P027	0	Door switch	1:OPEN
	1	Pre-registration sensor	1:etected
	2	For development	
	3	Heat exhaust fan R lock detection	0:Locked
	4	For development	
	5	Main motor lock detection	0:Locked
	6	Bottle power supply overcurrent detection	-
	7	For development	
P028	0-4	For development	
	5	Cassette 1 paper sensor	1:No paper
	6	Cassette 1 paper level A sensor	1:Half or less
	7	Cassette 1 paper level B sensor	1:About 50 sheets or less
P029	0	First paper ejection sensor	1:Detected
	1	First paper ejection full sensor	0:Full
	2	Fused paper ejection sensor	1:Detected
	3	Front door sensor	0:OPEN
	4-7	For development	
P030	0-1	For development	
	2	Paper feed door sensor	0:OPEN
	3	Hopper level sensor	0:No toner
	4	Cassette 1 retry sensor	1:Detected
	5-7	For development	
P031	0-7	Not used	
P032	0-7	Not used	
P033	0-7	Not used	
P034	0-7	Not used	
P035	0-7	Not used	

16.3.3 <R-CON>

iR2270 / iR2870 / iR3570 / iR4570 / / iR2270N / / iR2870N / / iR3570N / / iR4570N / iR2230 / / / iR3530 /

T-16-11

Address	Bit	Address	Remarks
P001	0	Not used	
	1	For development	
	2	For development	

Address	Bit	Address	Remarks
	3	For development	
	4	For development	
	5	Not used	
	6	For development	
	7	Size sensor drive signal	1:ON
P002	0	Not used	
	1	24V power supply monitor signal	0:Normal
	2	Optical motor drive signal	1: Forward 0: Reverse
	3	For development	
	4	For development	
	5	13V power supply monitor signal	0:Normal
	6	Not used	
	7	For development	
P003	0	For development	
	1	For development	
	2	For development	
	3	For development	
	4	LED control signal	1:ON
	5	For development	
	6	None	
	7	None	
P004	0	Not used	
	1	Not used	
	2	Not used	
	3	Not used	
	4	Not used	
	5	For development	
	6	For development	
	7	Not used	
P005	0-3	For development	
	4-7	None	
P006	0	Not used	
	1	For development	
	2	For development	
	3	For development	
	4	ADF sensor interrupt input	0:In operation
	5	Platen sensor interrupt input 0	1:Platen closed
	6	HP sensor interrupt input	1:HP
	7	Platen sensor interrupt input 1	1:Platen closed
P007	0	For development	
	1	For development	
	2	For development	
	3	For development	
	4	Optical motor driver power saving	0:active
	5	ADF feed motor clock interrupt input	Repetition of 0/1
	6	ADF read motor clock interrupt input	Repetition of 0/1
	7	Not used	
P008	0	Lamp ON signal	1:ON
	1	CIS drive ON signal	1:ON
	2	For development	
	3	For development	
	4	For development	
	5	For development	
	6	For development	
	7	For development	
P009	0-4	For development	
	5-7	None	

16.3.4 <FEEDER>

iR2270 / iR2870 / iR3570 / iR4570 / / iR2270N / / iR2870N / / iR3570N / / iR4570N / iR2230 / / / iR3530 /

T-16-12

Address	Bit	Display contents	Remarks
P001	0	Read sensor	1:Detected
	1	Pre-registration sensor	1:Detected
P002	0	-	

Address	Bit	Display contents	Remarks
	1	-	
	2	-	
	3	-	
	4	Stamp solenoid	1:ON
	5	Clutch	1:ON
	6	Document load LED	1:ON
	7	-	
P003	0-7	-	
P004	0	Document detection sensor	1:Document present
	1	Cover sensor	1:Closed
	2	-	
	3	-	
	4	-	
	5	For development	
	6	For development	
	7	For development	
P005	0	End sensor	1:Paper present
	1	Length sensor 2	1:Paper present
	2	Length sensor 1	1:Paper present
	3	A4/LTR judgment sensor	1:Paper present
	4	-	
	5	-	
	6	Paper ejection sensor	1:Paper present
	7	-	
P006	0-7	For development	
P007	0-7	-	
P008	0-7	-	
P009	0-7	-	
P010	0-7	For development	
P011	0-7	For development	

16.3.5 <SORTER>

iR2270 / iR2870 / iR3570 / iR4570 / / iR2270N / / iR2870N / / iR3570N / / iR4570N / iR2230 / / / iR3530 /

T-16-13

Address	Controller	Bit	Display contents	Remarks
P001	STACKER	0	Entry transport motor A	
		1	Entry transport motor B	
		2	Entry transport motor A-	
		3	Entry transport motor B-	
		4	Entry transport motor current switching 0	0:ON
		5	Entry transport motor current switching 1	0:ON
		6	Entry transport/bundle ejection motor standby signal	1:ON
		7	Common solenoid ON signal	0:ON
P002	STACKER	0	Punch transport motor A	
		1	Punch transport motor A-	
		2	Punch transport motor B	
		3	Punch transport motor B-	
		4	Punch transport motor current switching 0	1:ON
		5	Punch transport motor current switching 1	1:ON
		6	Tray 2 motor clock	
		7	Tray 1 motor clock	
P003	STACKER	0	For development	
		1	For development	
		2	For development	
		3	For development	
		4	Not used	
		5	Not used	
		6	Not used	
		7	Not used	
P004	STACKER	0	Saddle connection detection signal	0:ON
		1	Not used	
		2	Oscillating HP sensor	1:ON
		3	Top cover sensor	0:ON
		4	Front cover sensor	0:ON

Address	Controller	Bit	Display contents	Remarks
		5	Front cover interlock sensor	1:ON
		6	Gear change HP sensor	1:ON
		7	Not used	
P005	STACKER	0	For development	
		1	For development	
		2	Punch send request signal	0:ON
		3	Saddle 13VON signal	1:ON
		4	Not used	
		5	Not used	
		6	Not used	
		7	Not used	
P006	STACKER	0	Punch connection sensor	0:ON
		1	Not used	
		2	Not used	
		3	Punch motor standby	1:ON
		4	Entry sensor(IRQ0)	1:ON
		5	Paper rear end sensor(IRQ1)	1:ON
		6	Punch communication input(IRQ2)	0:ON
		7	Not used	
P007	STACKER	0	Tray proximity sensor	0:ON
		1	Tray 2 area sensor 1	0:ON
		2	Tray 2 area sensor 2	0:ON
		3	Tray 2 area sensor 3	0:ON
		4	Tray 2 paper detection sensor	1:ON
		5	Tray 2 paper surface sensor	1:ON
		6	Entry motor clock input	
		7	Bundle ejection motor clock input	
P008	STACKER	0	Tray 3 paper detection sensor	1:ON
		1	Tray 3 connection sensor	0:ON
		2	High-quality paper sensor	1:ON
		3	Tray 1 interlock detection sensor	1:ON
		4	Tray 1 area sensor 1	0:ON
		5	Tray 1 area sensor 2	0:ON
		6	Tray 1 area sensor 3	0:ON
		7	Tray 1 paper detection sensor	1:ON
P009	STACKER	0	Tray 1 shift motor CW	0:ON
		1	Tray 1 shift motor enable	1:ON
		2	Tray 1 shift motor power switching 0	0:ON
		3	Tray 1 shift motor power switching 1	0:ON
		4	Tray 2 shift motor CW	0:ON
		5	Tray 2 shift motor enable	1:ON
		6	Tray 2 shift motor power switching 0	0:ON
		7	Tray 2 shift motor power switching 1	0:ON
P010	STACKER	0	Not used	
		1	Oscillating pressure motor power switching 0	0:ON
		2	Oscillating pressure motor phase-A pulse output	
		3	Oscillating pressure motor phase-B pulse output	
		4	Not used	
		5	Not used	
		6	Not used	
		7	Not used	
P011	STACKER	0	Entry roller spaced solenoid	1:ON
		1	For development	
		2	For development	
		3	Buffer roller spaced solenoid	1:ON
		4	Transport path sensor	1:ON
		5	Not used	
		6	Not used	
		7	Not used	
P012	STACKER	0	Gear change phase A	
		1	Gear change phase B	
		2	Gear change motor current switching 0	0:ON
		3	Gear change motor current switching 1	0:ON
		4	Not used	
		5	For development	

Address	Controller	Bit	Display contents	Remarks
		6	For development	
		7	For development	
P013	STACKER	0	For development	
		1	Pre-alignment HP sensor	1:ON
		2	Pre-alignment HP sensor	1:ON
		3	Processing tray paper detection sensor	1:ON
		4	Rear-end assist HP sensor	1:ON
		5	Not used	
		6	Not used	
		7	Not used	
P014	STACKER	0	Post-alignment motor phase A	
		2	Post-alignment motor phase B	
		3	Post-alignment motor current switching 0	0:ON
		4	Not used	
		5	Not used	
		6	Not used	
		7	Not used	
P015	STACKER	0	Pre-alignment phase A	
		1	Pre-alignment phase B	
		2	Pre-alignment motor current switching 0	0:ON
		3	Not used	
		4	Not used	
		5	Not used	
		6	Not used	
		7	Not used	

T-16-14

Address	Controller	Bit	Display contents	Remarks
P016	STACKER	0	Rear-end assist phase A	
		1	Rear-end assist phase B	
		2	Rear-end assist motor current switching 0	0:ON
		3	Rear-end assist motor current switching 1	0:ON
		4	Rear-end assist standby	1:ON
		5	Not used	
		6	Not used	
		7	Not used	
P017	STACKER	0	Stapler slide standby	1:ON
		1	Stapler CW	1:ON
		2	Stapler CCW	1:ON
		3	Not used	
		4	Stapler slide phase A	
		5	Stapler slide phase B	
		6	Not used	
		7	Not used	
P018	STACKER	0	Not used	
		1	Not used	
		2	Stapler HP sensor	1:ON
		3	Staple Ready signal	1:ON
		4	Staple Present signal	1:ON
		5	Stapler connection signal	0:ON
		6	Stapler slide HP sensor	1:ON
		7	Stapler - alignment plate interference sensor	1:ON
P019	STACKER	0	Stapler slide current switching 0	0:ON
		1	Stapler slide current switching 1	0:ON
		2	Under-bundle roller clutch	1:ON
		3	Shutter clutch	1:ON
		4	First paper ejection roller spaced solenoid	1:ON
		5	Buffer paper rear-end press solenoid	1:ON
		6	Bundle-out motor current switching 1	0:ON
		7	Bundle-out motor current switching 0	0:ON
P020	STACKER	0	Bundle-out motor phase A	
		1	Bundle-out motor phase B	
		2	Bundle-out motor phase A-	
		3	Bundle-out motor phase B-	
		4	Ejection-position paper detection sensor	1:ON
		5	Scalable interlock	1:ON

Address	Controller	Bit	Display contents	Remarks
		6	Shutter HP sensor	1:ON
		7	Oscillating guide interlock	1:ON
P021	STACKER	0	DIPSW_8	0:ON
		1	DIPSW_7	0:ON
		2	DIPSW_6	0:ON
		3	DIPSW_5	0:ON
		4	DIPSW_4	0:ON
		5	DIPSW_3	0:ON
		6	DIPSW_2	0:ON
		7	DIPSW_1	0:ON
P022	STACKER	0	PUSU switch 1	0:ON
		1	PUSU switch 2	0:ON
		2	PUSU switch 3	0:ON
		3	Not used	
		4	5V detection signal	1:ON
		5	24V detection signal	0:ON
		6	Not used	
		7	Fan error detection signal	0:ON
P023	STACKER	0	FAN ON	1:ON
		1	LED1	0:ON
		2	LED2	0:ON
		3	LED3	0:ON
		4	FIN internal power supply ON	0:ON
		5	Not used	
		6	Not used	
		7	Return roller spaced solenoid	0:ON
P024	SADDLE	0	Guide motor phase A	
		1	Guide motor phase B	
		2	Guide motor current switching	0:ON
		3	Saddle transport motor current switching	
		4	Saddle transport motor phase A	
		5	Saddle transport motor phase B	
		6	Saddle transport motor phase A-	
		7	Saddle transport motor phase B-	
P025	SADDLE	0	Alignment motor phase A	
		1	Alignment motor phase B	
		2	Alignment motor current switching	0:ON
		3	Paper positioning motor current switching	0:ON
		4	Paper positioning motor phase A	
		5	Paper positioning motor phase B	
		6	For development	
		7	For development	
P026	SADDLE	0	Not used	
		1	For development	
		2	Not used	
		3	For development	
		4	Not used	
		5	Not used	
		6	Not used	
		7	Not used	
P027	SADDLE	0	Stapler current detection signal	1:ON
		1	Stapler current detection signal	1:ON
		2	Paper ejection cover sensor connector open	0:ON
		3	Front cover sensor connector open	0:ON
		4	Butting plate HP connector open	0:ON
		5	Folding roller guide HP connector open	0:ON
		6	Saddle stapler unit connector open	0:ON
		7	Butting plate TOP connector open	0:ON
P028	SADDLE	0	Inside staple detection	1:ON
		1	Front staple detection	1:ON
		2	Front stapler motor reverse rotation signal	0:ON
		3	Transport motor driver standby signal	0:ON
		4	Not used	
		5	Not used	
		6	Not used	
		7	Not used	

Address	Controller	Bit	Display contents	Remarks
P029	SADDLE	0	Front cover open - 24V down detection	1:ON
		1	Entry cover open - 24V down detection	1:ON
		2	Folding motor forward rotation signal	1:ON
		3	Folding motor reverse rotation signal	1:ON
		4	Folding motor clock sensor	1:ON
		5	Butting motor clock sensor	1:ON
		6	Stapler HP sensor	1:ON
		7	Stapler HP sensor	1:ON
P030	SADDLE	0	Paper positioning plate HP sensor	0:ON
		1	Folding roller guide HP sensor	1:ON
		2	Entry cover open detection	0:ON
		3	Saddle stapler open detection	1:ON
		4	Butting plate HP sensor	1:ON
		5	Butting plate TOP sensor	1:ON
		6	Not used	
		7	Transport clock	

T-16-15

Address	Controller	Bit	Display contents	Remarks
P031	SADDLE	0	Saddle tray paper detection sensor	0:ON
		1	Paper positioning section paper detection sensor	0:ON
		2	Crescent roller HP sensor	0:ON
		3	Saddle paper ejection path sensor	0:ON
		4	Saddle path (upstream) sensor	1:ON
		5	Saddle path (midstream) sensor	1:ON
		6	Saddle path (downstream) sensor	1:ON
		7	Saddle path sensor	1:ON
P032	SADDLE	0	Butting motor enable signal	1:ON
		1	Butting motor forward rotation signal	1:ON
		2	Butting motor reverse rotation signal	1:ON
		3	Folding roller HP sensor	1:ON
		4	Front door open detection sensor	0:ON
		5	Paper ejection cover open detection sensor (photosensor)	0:ON
		6	Saddle alignment HP sensor	0:ON
		7	Paper ejection cover open and 24V down detection	1:ON
P033	SADDLE	0	Entry flapper solenoid	1:ON
		1	Saddle path switching flapper 1	1:ON
		2	Saddle path switching flapper 2	1:ON
		3	Intermediate transport solenoid	1:ON
		4	Not used	
		5	Not used	
		6	Entry path sensor	1:ON
		7	Not used	
P034	SADDLE	0	Inside stapler motor forward rotation	0:ON
		1	Inside stapler motor reverse rotation	0:ON
		2	Front stapler motor forward rotation	0:ON
		3	Not used	
		4	Folding roller HP connector open	0:ON
		5	Not used	
		6	Not used	
		7	Not used	
P035	SADDLE	0	DIPSW_1	0:ON
		1	DIPSW_2	0:ON
		2	DIPSW_3	0:ON
		3	DIPSW_4	0:ON
		4	DIPSW_5	0:ON
		5	DIPSW_6	0:ON
		6	DIPSW_7	0:ON
		7	DIPSW_8	0:ON
P036	SADDLE	0	Not used	
		1	Not used	
		2	Push switch 1	0:ON
		3	5V detection signal	0:ON
		4	24V detection signal	0:ON

Address	Controller	Bit	Display contents	Remarks
		5	Not used	
		6	Not used	
		7	Not used	
P037	SADDLE	0	POWER_ON	1:ON
		1	LED1	1:ON
		2	LED2	1:ON
		3	LED3	1:ON
		4	LEDY	0:ON
		5	TRAY_MTR_CUR	0:ON
		6	TRAY_MTR_B	0:ON
		7	TRAY_MTR_A	0:ON
P038	PUNCHER	0	DIPSW1	0:ON
		1	DIPSW2	0:ON
		2	DIPSW3	0:ON
		3	-	
		4	PCH-OUT	
		5	Rear-end sensor	1:ON
		6	Punch encoder clock	
		7	Punch HP sensor	0:ON
P039	PUNCHER	0	For development	
		1	For development	
		2	For development	
		3	-	
		4	-	
		5	-	
		6	-	
		7	-	
P040	PUNCHER	0	For development	
		1	For development	
		2	For development	
		3	For development	
		4	Horizontal registration HP sensor	1:ON
		5	Horizontal registration motor STB	0:ON
		6	Punch motor CCW	0:ON
		7	Punch motor CW	0:ON
P041	PUNCHER	0	-	
		1	-	
		2	-	
		3	-	
		4	DIPSW4	0:ON
		5	Horizontal registration motor CUR	0:ON
		6	For development	
		7	-	
P042	PUNCHER	0	LED1	0:ON
		1	For development	
		2	For development	
		3	LED2	0:ON
		4	Front cover sensor	0:ON
		5	For development	
		6	PUSHSW2	0:ON
		7	PUSHSW1	0:ON
P043	PUNCHER	0	-	
		1	-	
		2	-	
		3	-	
		4	-	
		5	Top cover sensor	0:ON
		6	-	
		7	-	

16.4 ADJUST (Adjustment Mode)

16.4.1 COPIER

16.4.1.1 Copier List

iR2270 / iR2870 / iR3570 / iR4570 / / / / / iR2230 / / / iR3530 /

<AE>

T-16-16

COPIER > ADJUST > AE		
Sub-item	**Description**	**Level**
AE-TBL	Adjusting the character density at image density adjustment	1
	<Setting range> 1 to 9 (Default: 5) Setting a greater value makes characters darker. Setting a smaller value makes characters lighter. If RAM on the reader controller circuit board has been cleared, enter the value from the service label.	

<ADJ-XY>

T-16-17

COPIER > ADJUST > ADJ-XY		
Sub-item	**Description**	**Level**
Adjusting the mage read start position - If RAM on the reader controller circuit board has been cleared or the board itself has been replaced, enter the value from the service label. - If the setting of this item has been changed, enter the new value into the service label.		
ADJ-X	Adjusting the optical image head position (image read start position in the subscan direction)	1
	<Setting range> 1 to 100 (Default: 20) Increasing the value by 1 shifts the image read start position 0.1 mm backward.	
ADJ-Y	Adjusting the CCD read start cell position (image read start position in the main scan direction)	1
	<Setting range> 85 to 169 (Default: 144) Increasing the value by 1 shifts the image read start position 0.1 mm outward.	
ADJ-S	Adjusting the optical shading measuring position	1
	<Setting range> 20 to 200 (Default: 40) Increasing the value by 1 shifts the shading measuring position 0.1 mm forward.	
ADJ-Y-DF	Adjusting the main scan position at DF flow read	1
	<Setting range> 50 to 250 (Default: 144) Increasing the value by 1 shifts the image read start position 0.1 mm outward.	
STRD_POS	Adjusting the CCD read start position at DF flow read	1
	<Setting range> 1 to 200 (Default: 100) Increasing the value by 1 shifts the image read start position 0.1 mm to left.	

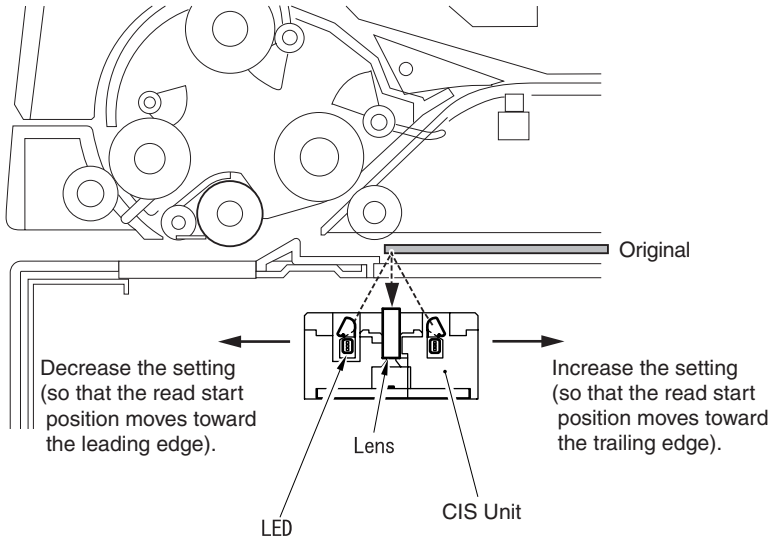

F-16-15

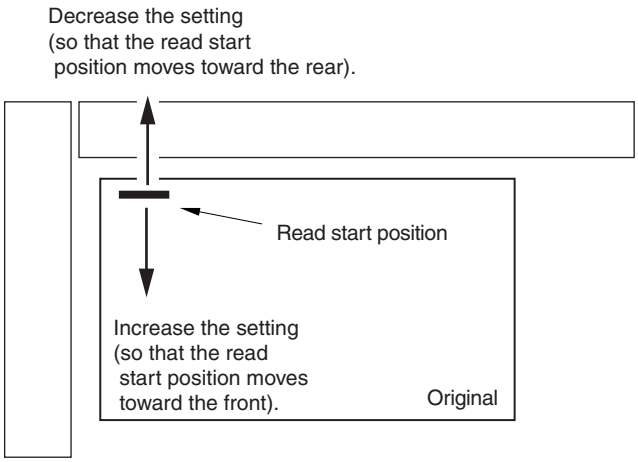

F-16-16

<CCD>

T-16-18

COPIER > ADJUST > CCD		
Sub-item	**Desciption**	**Level**
MTF-MG	Entering a main-scan MTF correction value	1
	<Setting range> 0 to 99 (Default: 0) - If the CIS unit has been replaced, enter the value from the label affixed to the CIS unit. - If RAM on the reader controller circuit board has been cleared or the board itself has been replaced, enter the value from the service label. - If the setting of this item has been changed, enter the new value into the service label.	
MTF-SG	Not used	1
DFTAR-R	Entering a shading target value (red) when DF is in use (Ordinary document read position)	1
	<Setting range> 1 to 2047 (Default: 1106) If an image error (attributable to a dirty chart or other) has occurred after the execution of COPIER>FUNCTION>DF-WLVL1/DF-WLVL2, enter factory measurement data in this mode.	
DFTAR2-R	Entering a shading target value (red) when DF is in use (Secondary document read position)	1
	<Setting range> 1 to 2047 (Default: 1138) If an image error (attributable to a dirty chart or other) has occurred after the execution of COPIER>FUNCTION>DF-WLVL2, enter factory measurement data in this mode.	
SH-TRGT	Entry of a white level target value at the time of shading correction	1
	<Setting range>1 to 2046 Default: 1070 As a remedy in the field, a shade on an image occurring when a folded/creased document is read is lessened.	

<LASER>

T-16-19

COPIER > ADJUST > LASER		
Sub-item	**Description**	**Level**
LA-OFF	Adjusting the rear-end laser OFF position	1
	<Setting range> -128 to 127 (Default: 0) If RAM on the DC controller circuit board has been cleared or the board itself has been replaced, enter the value from the service label.	
LA-DELAY	Entering a delay value after laser unit displacement (Matching the laser main scan)	1
	<Setting range> 360 to 440 Enter the delay value peculiar to the unit affixed to the unit at laser unit replacement.	
POWER	Adjusting the laser power	1
	<Setting range> -128 to 127 (Default: 0) If RAM on the DC controller circuit board has been cleared or the board itself has been replaced, enter the value from the service label.	

<DEVELOP>

T-16-20

COPIER > ADJUST > DEVELOP		
Sub-item	**Description**	**Level**
DE-OFST	Entering an offset value for the developing bias DC	1
	<Setting range> -128 to 127 (Default: 0) Setting a greater value increases the density.	

<DENS>

T-16-21

COPIER > ADJUST > DENS		
Sub-item	**Description**	**Level**
DENS-ADJ	Correcting the image (copy/print) density The F-value table is corrected if an image becomes fogged or blurred.	1
	<Setting range> 1 to 9 (Default: 5) Setting a greater value reduces fogging. Setting a smaller value reduces blurring. If RAM on the DC controller circuit board has been cleared or the board itself has been replaced, enter the value from the service label.	

<BLANK>

T-16-22

COPIER > ADJUST > BLANK		
Sub-item	**Description**	**Level**
BLANK-T	Entering an adjustment value for the chipping width at the front of an image	1
	<Setting range> -128 to 127 (Default: 0) Setting a greater value increases the chipping width. If RAM on the DC controller circuit board has been cleared or the board itself has been replaced, enter the value from the service label.	
BLANK-B	Entering an adjustment value for the chipping width at the rear of an image	1
	<Setting range> -128 to 127 (Default: 0) Setting a greater value increases the chipping width. If RAM on the DC controller circuit board has been cleared or the board itself has been replaced, enter the value from the service label.	

<HV-PRI>

T-16-23

COPIER > ADJUST > HV-PRI		
Sub-item	**Description**	**Level**
OFST1-DC	Entering an adjustment value for primary charge DC offset 1	1
	<Setting range> -128 to 127 (Default: 0) If RAM on the DC controller circuit board has been cleared or the board itself has been replaced, enter the value from the service label. Note: If the compound power circuit board has been replaced, enter the value from the label affixed to the casing of the new compound power circuit board.	
OFST1-AC	Entering an adjustment value for primary charge AC offset 1	1
	<Setting range> -128 to 127 (Default: 0) If RAM on the DC controller circuit board has been cleared or the board itself has been replaced, enter the value from the service label. Note: If the compound power circuit board has been replaced, enter the value from the label affixed to the casing of the new compound power circuit board.	

<HV-TR>

T-16-24

COPIER > ADJUST > HV-TR		
Sub-item	**Description**	**Level**
TR-OFST	Entering an output adjustment value for transfer charge current offset	1
	<Setting range> -128 to 127 (Default: 0) If RAM on the DC controller circuit board has been cleared or the board itself has been replaced, enter the value from the service label.	
TR-SPP	Entering an output adjustment value for thick-paper transfer bias (for simplex printing on thick paper and duplex printing on the 1/2 side) - Increasing the value is very effective.	1
	<Setting range> -128 to 127 (Default: 0) If RAM on the DC controller circuit board has been cleared or the board itself has been replaced, enter the value from the service label.	
TR-TP-TM	Adjusting the length of application time of transfer lead edge weak bias	1
	<Adjustment method> Enter the service label value when clearing RAM of the DC controller PCB or replacing the PCB. This mode determines the length of time in which weak bias is applied to transfer lead edge. The transfer lead edge weak bias becomes effective with the following settings. 1) Output condition: Execute 'COPIER>OPTION>COMBO> (1) PPR-SLCT (paper type) / (2) MOD-SLCT (paper pick-up mode) / (3) ENV-SLCT (environment selection)' and register them under TR-SW 1 to 5. 2) Execute 'COPIER>ADJUST>HV-TR> (1) TR-TP-TM (length of application time) / (2) TR-TP-LV (application level).' <Setting range> 0 to 127 (Default: 0) (Unit: 2msec) Refer to the following table for setting values. Example) iR4570: Enter '50'. -> Application width: approx. 5 to 7mm, IR2270: Enter '80'. -> Application width: approx. 5.5 to 6mm * Recommended value to be set when a separation jam occurs at the second side of double-sided copy iR4570, iR3570 series: 50 iR2270, iR2870 series: 80	

iR4570/4530/3570/3530 Reference value for the application width

T-16-25

TR-TP-TM	Application width from the lead edge of paper
45	approx. 3 to 4mm
50	approx. 5 to 7mm

55	approx. 7 to 8.5mm
60	approx. 9 to 10.5mm
65	approx. 12 to 13mm

iR2230/2270/2830/2870 Reference value for the application width

T-16-26

TR-TP-TM	Application width from the lead edge of paper
70	approx. 3mm
80	approx. 5.5 to 6mm
90	approx. 8 to 9mm
100	approx. 11 to 12mm

T-16-27

COPIER > ADJUST > HV-TR		
Sub-item	**Description**	**Level**
TR-TP-LV	Adjusting the level of transfer lead edge weak bias	1
	<Setting range> -50 to 50 (Default: 0) (Unit: %) If RAM on the DC controller circuit board has been cleared or the board itself has been replaced, enter the value from the service label. This mode is to set the voltage application level. The setting becomes enabled depending on the combination of the following modes. COPIER>OPTION>COMBO>PPR-SLCT/MOD-SLCT/ENV-SLCT/ TR-SW1 to 5<Adjustment method> Enter the service label value when clearing RAM of the DC controller PCB or replacing the PCB. This mode determines the level of applying weak bias to transfer lead edge. The transfer lead edge weak bias becomes effective with the following settings. 1) Output condition: Execute 'COPIER>OPTION>COMBO> (1) PPR-SLCT (paper type) / (2) MOD-SLCT (paper pick-up mode) / (3) ENV-SLCT (environment selection)' and register them under TR-SW 1 to 5. 2) Execute 'COPIER>ADJUST>HV-TR (1) TR-TP-TM (length of application time) / (2) TR-TP-LV (application level).' <Setting range> -50 to 50 (Default: 0) (Unit: %) The following settings, however, have different ratios. 48: -60% 49: -80% 50: -100% Example: Enter '-50'. -> -50% Enter '47'. -> 47% Enter '50'. -> -100% (For DCON Ver.15.11 or later)	
2TR-TGT1 to 2TR-TGT8	Setting an offset value for the paper sharing voltage in ATVC	2
	<Setting range> -10 to 10 (Value at shipping: Factory adjustment value / Value after RAM clearance: 0)	
TR-PPR1 to TR-PPR8	Setting a paper type at ATVC setting	2
	<Setting range> 1 to 8 (Value at shipping: Factory adjustment value / Value after RAM clearance: 0) 1: Plain paper (Default), 2: thick paper, 3: envelope, 4: tracing paper, 5: OHP transparency, 6: Postcard, 7: Label paper, 8: Bond paper	
TR-ENV1 to TR-ENV8	Setting environment at ATVC setting	2
	<Setting range> 1 to 3 1: Category A (low temperature) (Default), 2: Category B (room temperature), 3: Category C (high temperature)	
TR-DUP1 to TR-DUP8	Setting simplex paper feed mode at ATVC setting	2
	<Setting range> 1to 4 1: Simplex (Default), 2: Auto duplex feed, 3: Multiple simplex feed, 4: Multiple duplex feed	

<FEED-ADJ>

T-16-28

COPIER > ADJUST > FEED-ADJ		
Sub-item	**Description**	**Level**
REGIST	Adjusting the registration roller clutch ON timing	1
	<Setting range> -128 to 127 (Default: 0) Increasing the value by 1 shifts the image 0.1 mm forward. If RAM on the DC controller circuit board has been cleared or the board itself has been replaced, enter the value from the service label.	
LOOP-CST	Adjusting the registration loop amount at cassette paper feed	1
	<Setting range> -128 to 127 (Default: 63) A higher setting will increase the degree of paper arching. (unit:0.1mm) If RAM on the DC controller circuit board has been cleared or the board itself has been replaced, enter the value from the service label.	
LOOP-MF	Adjusting the registration loop amount at cassette paper feed	1
	<Setting range> -128 to 127 (Default: 45) A higher setting will increase the degree of paper arching. (unit:0.1mm) If RAM on the DC controller circuit board has been cleared or the board itself has been replaced, enter the value from the service label.	
ADJ-REFE	Adjusting the horizontal registration at paper re-feed (Small paper) - If the image is deviated to this side, increase the value.	1
	<Setting range> -128 to 127 (Default: 0) If RAM on the DC controller circuit board has been cleared or the board itself has been replaced, enter the value from the service label.	
LOOPREFE	Adjusting the registration loop amount at duplex paper feed	1
	<Setting range> -128 to 127 (Default: 45) A higher setting will increase the degree of paper arching. (unit:0.1mm) If RAM on the DC controller circuit board has been cleared or the board itself has been replaced, enter the value from the service label.	

COPIER > ADJUST > FEED-ADJ		
Sub-item	**Description**	**Level**
RG-HF-SP	Adjusting the registration clutch ON timing	1
	<Setting range> -128 to 127 (Default: 0) If RAM on the DC controller circuit board has been cleared or the board itself has been replaced, enter the value from the service label.	
ADJ-RE-L	Adjusting the horizontal registration at paper re-feed (Large paper) - If the image is deviated to this side, increase the value.	1
	<Setting range> -128 to 127 (Default: 0) If RAM on the DC controller circuit board has been cleared or the board itself has been replaced, enter the value from the service label.	
LOOP-THK	Adjusting the registration loop amount at thick-paper feed	2
	<Setting range> -128 to 127 (Default: 0) A higher setting will increase the degree of paper arching. (unit:0.1mm)	
LOOP-SP	Adjusting the registration loop amount at special-paper feed	2
	<Setting range> -128 to 127 (Default: 0) A higher setting will increase the degree of paper arching. (unit:0.1mm)	
LOOP-ENV	Adjusting the registration loop amount at envelope feed from a cassette	2
	<Setting range> -128 to 127 (Default: 0) A higher setting will increase the degree of paper arching. (unit:0.1mm)	

<CST-ADJ>

T-16-29

COPIER > ADJUST > CST-ADJ		
Sub-item	**Description**	**Level**
MF-A4R	Entering the basic paper width of the manual feed tray (A4R)	1
	<Setting range> 0 to 1024 (Default: 516) If RAM on the DC controller circuit board has been cleared or the board itself has been replaced, enter the value from the service label. For replacing the paper with detection VR or registering a new value for the firs time, this service mode shall be executed by FUNCTION>CST.	
MF-A6R	Entering the basic paper width of the manual feed tray (A6R)	1
	<Setting range> 0 to 1024 (Default: 175) If RAM on the DC controller circuit board has been cleared or the board itself has been replaced, enter the value from the service label. For replacing the paper with detection VR or registering a new value for the firs time, this service mode shall be executed by FUNCTION>CST.	
MF-A4	Entering the basic paper width of the manual feed tray (A4)	1
	<Setting range> 0 to 1024 (Default: 791) If RAM on the DC controller circuit board has been cleared or the board itself has been replaced, enter the value from the service label. For replacing the paper with detection VR or registering a new value for the firs time, this service mode shall be executed by FUNCTION>CST.	

<FIXING>

T-16-30

COPIER > ADJUST > FIXING		
Sub-item	**Description**	**Level**
FX-FL-SP	Entering a fine adjustment value for the fixing film speed when plain paper is used. Make a fine adjustment of the target control speed for the fixing film speed when plain paper is used.	2
	<Setting range> -3 to 3 (Default: 0) (Unit: ms) If RAM on the DC controller circuit board has been cleared or the board itself has been replaced, enter the value from the service label.	
FX-FL-TH	Entering a fine adjustment value for the fixing film speed when thick paper is used. Make a fine adjustment of the target control speed for the fixing film speed when thick paper is used.	2
	<Setting range> -3 to 3 (Default: 0) (Unit: ms) If RAM on the DC controller circuit board has been cleared or the board itself has been replaced, enter the value from the service label.	
FX-FL-LW	Entering a fine adjustment value for the fixing film speed when low-speed plain paper is used. Make a fine adjustment of the target control speed for the fixing film speed when low-speed plain paper is used.	2
	<Setting range> -3 to 3 (Default: 0) (Unit: ms) If RAM on the DC controller circuit board has been cleared or the board itself has been replaced, enter the value from the service label.	

<MISC>

T-16-31

COPIER > ADJUST > MISC		
Sub-item	**Description**	**Level**
IMG-DLY	Entering a fine adjustment value for the image delay in the subscan direction Make a fine adjustment of the image delay in the subscan direction when image data is transferred from the controller board to the DCON board.	1
	<Setting range> -128 to 127 iR2270/2270F/2870/2870F: +23 (Default) iR3570/3570F/4570/4570F: +35 (Default) If RAM on the DC controller circuit board has been cleared or the board itself has been replaced, enter the value from the service label.	
C1/2/3/4-ADJ-Y	Entering a horizontal registration adjustment value for Cassette 1/2/3/4 Enter the horizontal registration adjustment value for Cassette 1/2/3/4. Enter the laser writing start position on the paper picked up from Cassette 1/2/3/4, based on the registered value. An increase by +1 enlarges the front margin by 0.1mm. <Note> When clearing RAM of the DC controller PCB or replacing the PCB, enter the service label value.	2
	<Setting range> -128 to 127 (Default:0)	
MF-ADJ-Y	Entering a horizontal registration adjustment value for the multiple manual feed tray Enter a laser write start position for paper fed from the multiple manual feed tray according to the registered numeric value.	2
	<Setting range> -128 to 127 (Default: 0)	
DK-ADJ-Y	Entering a horizontal registration adjustment value for the side paper deck Enter a laser write start position for paper fed from the side paper deck according to the registered numeric value.	2
	<Setting range> -128 to 127 (Default: 0)	
FRAME-X	Entering a fine adjustment value in the subscan direction for zooming Enter an image zooming value in the subscan direction according to the registered numeric value.	2
	<Setting range> -10 to 10 (-1% to 1%)	
FRAME-Y	Entering a fine adjustment value in the main scan direction for zooming Enter an image zooming value in the main scan direction according to the registered numeric value.	2
	<Setting range> -10 to 10 (-1% to 1%)	

16.4.2 FEEDER

16.4.2.1 FEEDER List

iR2270 / iR2870 / iR3570 / iR4570 / / / / / iR2230 / / / iR3530 /

FEEDER >ADJUST

T-16-32

FEEDER >ADJUST		
Sub-item	Description	Level
DOCST	Adjusting the front position of document image <Adjustment method> Setting a greater value delays the image front timing.	1
	<Setting range> -50 to 50 (Value at shipping: Factory adjustment value / Value after RAM clearance: 0)	
LA-SPEED	Adjusting the document transport speed at feeder flow read <Adjustment method> Setting a greater value increases the speed (Reducing the image)	1
	<Setting range> -30 to 30 (Value at shipping: Factory adjustment value / Value after RAM clearance: 0)	

16.4.3 SORTER

16.4.3.1 Sorter List

iR2270 / iR2870 / iR3570 / iR4570 / / / / / iR2230 / / / iR3530 /

SORTER > ADJUST

T-16-33

SORTER > ADJUST		
Sub-item	Description	Level
PNCH-HLE	Adjusting the distance from the paper end to the punched hole position	1
	<Setting range> -4 to 2 (Value at shipping / Value after RAM clearance: 0)	

16.5 FUNCTION (Operation/Inspection Mode)

16.5.1 COPIER

16.5.1.1 Copier List

iR2270 / iR2870 / iR3570 / iR4570 / / / / / iR2230 / / / iR3530 /

<INSTALL>

T-16-34

COPIER > FUNCTION > INSTALL		
Sub-item	**Description**	**Level**
TONER-S	Stirring toner in the developer at installation	1
	<Operating procedure> 1. Select an item to reverse its display. 2. "Check the Developer" is displayed. Check that the developer connector is connected. 3. Press the OK key to start operation. The operation automatically stops after count-down. **<Reference>** "Check the Developer" is displayed to prevent the connector from being disconnected when the developer is replaced. Therefore, this message is not necessary when the machine is shipped with the developer for installation.	
STRD-POS	Automatically adjusting the CCD read position at flow read - This is necessary when DF is installed and when ADF is removed and mounted again.	1
	<Operating procedure> 1) Select an item to reverse its display. Then press the OK key. - Adjustment automatically starts and stops. 2) Since the value is updated in the service mode, COPIER>ADJUST>ADJ-XY>STRD-POSenter the value into the service label.	
CARD	Installing and setting the card reader	1
	<Operating procedure> Enter the card number (1 to 2001) and press the OK key. (One thousand cards can be used from the input card number.) Then the card management information (department ID and PIN) is initialized.	
E-RDS	Setting whether or not to use Embedded RDS	1
	<Setting range> 0: Do not use E-RDS (Default) 1: Use E-RDS (Sending all counter information)	
RGW-PORT	Specifying the port number of the dealer server for use by Embedded RDS	1
	<Setting range> 1 to 65535 (Default: 433)	
COM-TEST	Checking connection to the dealer server for use by Embedded RDS	1
	<Operating procedure> 1) Select an item to reverse its display. Then press the OK key. 2) The connection is checked and OK or NG is displayed. OK: Connected, NG: Not connected	
COM-LOG	Displaying the detailed results of testing connection to the dealer server for use by Embedded RDS	1
	<Operating procedure> 1) Select an item to reverse its display. Then press the information display field. Maximum log count: 30 Display contents: Date, time, error code, and error detail information (128 characters max.)	
RGW-ADR	Specifying the URL of the dealer server for use by Embedded RDS	1
	<Operating procedure> 1) Select an item to reverse its display. Then press the information display field. 2) The URL input screen is displayed. After input, press the OK key. Default: http://a01.ugwdevice.net/ugw/agentif010	

<CCD>

T-16-35

COPIER > FUNCTION > CCD		
Sub-item	**Description**	**Level**
CCD-ADJ	Automatically adjusting CCD	1
	<Operating procedure> 1) Place about 10 or more sheets of standard white paper (whitest paper used by the user, excluding color print paper) on the document table. 2) Select <CCD-ADJ> to reverse its display. Then press the OK key. 3) Adjustment is executed automatically (about 15 seconds). During adjustment, <ACTIVE> is displayed at the upper right of the screen. 4) The LED lamp (for document lighting) lights twice and the automatic adjustment ends with <OK> displayed on the screen. 5) Since all items are updated in this service mode (COPIER>ADJUST>CCD), enter the values into the service label.	

COPIER > FUNCTION > CCD		
Sub-item	**Description**	**Level**
DF-WLVL1/2	Adjusting the ADF white level (Platen scan/Flow read scan)	1
	<Operating procedure> 1) Place the user's usual paper on the document table and execute COPIER>FUNCTION>CCD>DF-WLVL1: Read the white level in Book mode (to check the transparency of the glass for Book mode). 2) Load the user's usual paper on DF and execute COPIER>FUNCTION>CCD>DF-WLVL2: Read the white level in DF (flow read) mode (to check the transparency of the glass for flow read). (Reading both sides of the chart) Front side read: Calculating DFTAR-R Back side read: Calculating DFTAR2-R Note: Both items shall be executed simultaneously.	
LUT-ADJ2	Data 2 for CCD link correction	2

<DENS>

T-16-36

COPIER > FUNCTION > DENS		
Sub-item	**Description**	**Level**
WHITE-ME	Automatically correcting the white level	1
	<Operating procedure> 1) Place about 10 or more sheets of standard white paper (the user's usual paper) on the document table. 2) Select <WHITE-ME> to reverse the display. Then press the OK key. 3) The document lighting lamp scans once and the operation terminates.	
PD-DENS	Outputting a print pattern for automatic density adjustment in Character mode Note: Since binarizing is supported by the PD method in Character mode, execute this mode to adjust the density automatically.	1
	<Operating procedure> 1) Select <PD-DENS> to reverse its display. Then press the OK key. 2) Paper is fed from Cassette 2 and a 17-tone print pattern is output. This print pattern is used in <PD-ME>.	
PD-ME	Automatically adjusting the density in Character mode (Reading PD-DENS output pattern)	1
	<Operating procedure> 1) As shown in the figure, set the PD-DENS output pattern on the document table by noting the following: - Face the print side down. - Orient the white (light) side of the 17-tone chart toward the vertical size plate. - Align the output pattern with the index inside left of the document table. 2) Select <PD-ME> to reverse its display. Then press the OK key. 3) The document lighting lamp is turned ON and OFF for 13 automatic scans.	

<DPC>

T-16-37

COPIER > FUNCTION > DPC		
Sub-item	**Description**	**Level**
D-GAMMA	Controlling photoconductor drum resistance measurement (APVC) Note: Execute this mode only in the following cases and skip it when unnecessary. - Adjustment if the drum unit has been replaced - Fault isolation if automatic copy density adjustment (PD-ME) has ended abnormally - Reference for checking the drum endurance	1
	<Operating procedure> 1) Select an item and press the OK key. 2) Automatic control terminates after outputting one blank copy. 3) Select DISPLAY>HV-STS>PRIMARY to display the measurement results.	

<CST>

T-16-38

COPIER > FUNCTION > CST		
Sub-item	**Description**	**Level**
MF-A4R MF-A6R MF-A4	Registering the basic paper width of the manual feeder (DADF) A4R width: 210 mm, A6R width: 105 mm, A4 width: 297 mm For micro adjustment after basic width registration, select MF-A4R, MF-A6R, or MF-A4 from COP. COPIER>ADJUST>CST-ADJ.	1
	<Operating procedure> 1) Place an A4R size document on the manual feed and align the size guide with the A4R width. 2) Select (MF-A4R) in this service mode to reverse its display. Press the OK key to register the numeric value after automatic adjustment. 3) Also about the A6R and A4 sizes, register the basic width by following the steps of 1) and 2).	

<FIXING>

T-16-39

COPIER > FUNCTION > FIXING		
Sub-item	**Description**	**Level**
NIP-CHK	Making output for measuring the fixing nip width automatically	1
	<Operating procedure> 1) Make a solid black print in A4/LTR. 2) Make about 20 A4/LTR prints of the Test Sheet. 3) Place the A4/LTR solid black output obtained in step 1. in the manual feed tray with the printed side facing down. 4) Select this service mode and press the OK key (to feed paper from the manual feed tray). 5) The fed paper is held once by the fixing roller and ejected after about 10 seconds. 6) Check that the nip width of the ejected paper conforms to the standard. **<Standard>** iR4570/4570F/3570/3570F:7.6 to 10.6mm iR2870/2870F/2270/2270F:4.0 to 6.0mm **<Note>** This machine does not allow nip width adjustment. This item is used for nip width checking only.	

<PANEL>

T-16-40

COPIER > FUNCTION > PANEL		
Sub-item	**Description**	**Level**
LCD-CHK	Checking the LCD display for missing dots	1
	<Operating procedure> 1) Select this item and press the OK key to start operation. The front of the panel lights repeatedly in order of white, black, red, green, and blue. (Check this lighting.) 2) Press the Stop key to terminate the operation.	
LED-CHK	Checking LED lighting in the operating section	1
	<Operating procedure> 1) Select this item and press the OK key to start operation. The LED lamps light sequentially. 2) Press LED-OFF to terminate the operation.	
LED-OFF	Checking LED lighting in the operating section	1
	<Operating procedure> 1) Select this item to terminate LED-CHK operation.	
KEY-CHK	Checking key input	1
	<Operating procedure> 1) Select KEY-CHK to display the input key numbers and names. 2) Press a key to check. If the key is normal, the touchpanel displays the corresponding key. (See the attached table.) 3) Select KEY-CHK again to exit from key input check.	
TOUCHCHK	Adjusting the coordinate positions on the analog touchpanel	1
	<Operating procedure> - Align the press positions on the touchpanel and the coordinate positions on the LCD section. - If the LCD section has been replaced, execute this service mode. 1) Select TOUCHCHK to reverse its display. Then press the OK key. 2) Press sequentially the nine positive signs (+) that appear on the touchpanel in order.	

<Input Key Numbers and Names>

T-16-41

Key	**Screen Display**
0 to 9, #, and *	0 to 9, #, and *
Reset	RESET
Stop	STOP
User Mode	USER
Start	START
Clear	CLEAR
PIN	ID
Help	?
Counter Check	BILL

<PART-CHK>

T-16-42

COPIER > FUNCTION > PART-CHK		
Sub-item	**Description**	**Level**
CL	Specifying a clutch to check its operation (Range: 1 to 6)	1
	<Operating procedure> 1) Select this item. 2) Enter the code of the clutch from the ten-key pad. 3) Press the OK key. 4) Press CL-ON to check its operation.	

COPIER > FUNCTION > PART-CHK		
Sub-item	**Description**	**Level**
CL-ON	Starting the clutch operation check **<Operating procedure>** 1) Select this item and press the OK key to repeat ON and OFF in the following pattern: 0.5-second ON ->10-second OFF -> 0.5-second ON -> 10-second OFF -> 0.5-second ON -> OFF	1
MTR	Specifying a motor to check its operation (Range: 1 to 16) **<Operating procedure>** 1) Select this item. 2) Enter the code of the motor from the ten-key pad. 3) Press the OK key. 4) Press MTR-ON to check its operation.	1
MTR-ON	Starting the motor operation check **<Operating procedure>** 1) Select this item and press the OK key to repeat ON and OFF in the following pattern: 20-second ON -> OFF	1
SL	Specifying a solenoid to check its operation (Range: 1 to 9) **<Operating procedure>** 1) Select this item. 2) Enter the code of the solenoid from the ten-key pad. 3) Press the OK key. 4) Press SOL-ON to check its operation.	1
SL-ON	Starting the solenoid operation check **<Operating procedure>** 1) Select this item and press the OK key to repeat ON and OFF in the following pattern: 0.5-second ON -> 5-second OFF -> 0.5-second ON -> 5-second OFF -> 0.5-second ON -> OFF	1

- Designation numbers and corresponding clutches

T-16-43

1	Multiple paper feed clutch (CL1)	4	Duplex transport clutch (iR2270/2270F/2870/2870F only) (CL6)
2	Registration clutch (CL2)	5	Extraction clutch (deck) (CL1)
3	Developing sleep clutch (CL3)	6	Paper feed clutch (deck) (CL2)

- Designation numbers and corresponding motors

T-16-44

1	Polygon motor (M1)	9	Hopper screw motor (M12)
2	Main motor (M2)	10	Cassette 3 paper feed motor (cassette pedestal) (M1)
3	Fixing motor (M3)	11	Cassette 4 paper feed motor (cassette pedestal) (M2)
4	First paper ejection motor (M4)	12	Deck paper feed motor (deck) (M1)
5	Bottle rotation motor (M5)	13	Deck lifter motor (deck) (M2)
6	Cassette 1 paper feed motor (M6)	14	Second paper ejection motor (2/3 paper ejection) (M1)
7	Cassette 2 paper feed motor (M7)	15	Third paper ejection motor (2/3 paper ejection) (M2)
8	Duplex motor (iR3570/3570F/4570/4570F only) (M10)	16	Buffer pass motor (M1)

- Designation numbers and corresponding solenoids

T-16-45

1	Cassette 1 pickup solenoid (CL1)	6	Storage open solenoid (deck) (SL2)
2	Cassette 2 pickup solenoid (SL2)	7	First flapper solenoid (SL1)
3	Cassette 3 pickup solenoid (cassette pedestal) (SL2)	8	Second flapper solenoid (2/3 paper ejection) (SL2)
4	Cassette 4 pickup solenoid (cassette pedestal) (SL2)	9	Second flapper solenoid (2/3 paper ejection) (SL3)
5	Pickup solenoid (deck) (SL1)		

<CLEAR>

T-16-46

COPIER > FUNCTION > CLEAR		
Sub-item	**Description**	**Level**
ERR	Clearing an error code (Object error code: E000/E001/E002/E003) **<Operating procedure>** 1) Select this item and press the OK key. 2) Turn the main power switch OFF and ON.	1

COPIER > FUNCTION > CLEAR		
Sub-item	**Description**	**Level**
DC-CON	Clearing RAM on the DC controller circuit board The RAM is cleared when the main power switch is turned OFF and ON.	1
	<Operating procedure> 1) Select COPIER>FUNCTION>MISC-P>P-PRINT to print out the contents of the service mode. 2) Select this item and press the OK key. 3) Turn the main power switch OFF and ON. 4) Enter the P-PRINT output data as required.	
R-CON	Clearing RAM on the reader controller circuit board The RAM is cleared when the main power switch is turned OFF and ON.	1
	<Operating procedure> 1) Select COPIER>FUNCTION>MISC-P>P-PRINT to print out the contents of the service mode. 2) Select this item and press the OK key. 3) Turn the main power switch OFF and ON. 4) Enter the P-PRINT output data as required.	
JAM-HIST	Clearing the jam history The jam history is cleared when the OK key is pressed.	1
	<Operating procedure> 1) Select this item and press the OK key.	
ERR-HIST	Clearing the error history The error history is cleared when the OK key is pressed.	1
	<Operating procedure> 1) Select this item and press the OK key.	
PWD-CLR	Clearing the password of the system administrator set in user mode The password is cleared when the OK key is pressed.	1
	<Operating procedure> 1) Select this item and press the OK key.	
ADRS-BK	Clearing the address book on the reader controller circuit board The address book is cleared when the main power switch is turned OFF and ON.	1
	<Operating procedure> 1) Select this item and press the OK key. 2) Turn the main power switch OFF and ON.	
CNT-MCON	Clearing the service counter incremented by the main controller circuit board The password is cleared when the OK key is pressed.	1
	<Operating procedure> 1) Select this item and press the OK key.	
CNT-DCON	Clearing a service counter incremented by the DC controller circuit board The password is cleared when the OK key is pressed. This applies to SORT, FIN-STPR, SADDLE, and SDL-STPL under COPIER>COUNTER>DRBL-2.	1
	<Operating procedure> 1) Select this item and press the OK key.	
OPTION	Resetting a service mode (OPTION) to default (values after RAM clearance) The service mode is reset when the OK key is pressed. This clears data in the main controller, DC controller, and reader controller.	1
	<Operating procedure> 1) Select COPIER>FUNCTION>MISC-P>P-PRINT to print the contents of the service mode. 2) Select this item and press the OK key.	
MMI	Clearing the following settings in User mode - Backup data (user-defined values) for copy operations - Backup data (user-defined values) of common settings - Various backup data (user-defined values), excluding fax The settings are cleared when the main power switch is turned OFF and ON.	1
	<Operating procedure> 1) Select this item and press the OK key. 2) Turn the main power switch OFF and ON.	
MN-CON	Clearing RAM on the main controller circuit board The RAM is cleared when the main power switch is turned OFF and ON.	1
	<Operating procedure> 1) Select COPIER>FUNCTION>MISC-P>P-PRINT to print the contents of the service mode. 2) Select this item and press the OK key. 3) Turn the main power switch OFF and ON. 4) Enter the P-PRINT output data as required.	
CARD	Clearing the card ID (department) related data The card ID related data is cleared when the main power switch is turned OFF and ON.	1
	<Operating procedure> 1) Select this item and press the OK key. 2) Turn the main power switch OFF and ON.	
ALARM	Clearing the alarm log The alarm log is cleared when the main power switch is turned OFF and ON.	1
	<Operating procedure> 1) Select this item and press the OK key. 2) Turn the main power switch OFF and ON.	

COPIER > FUNCTION > CLEAR		
Sub-item	**Description**	**Level**
SLT-CLR	Clearing the salutation setting **<Operating procedure>** 1) Select this item and press the OK key.	1
SND-STUP	Clearing the send-read settings The send-read settings are cleared when the main power switch is turned OFF and ON. **<Operating procedure>** 1) Select this item and press the OK key. 2) Turn the main power switch OFF and ON.	1
CA-KEY	Clearing the CA certificate and key pair The CA certificate and key pair are cleared when the main power switch is turned OFF and ON. **<Operating procedure>** 1) Select this item and press the OK key. 2) Turn the main power switch OFF and ON.	2

<MISC-R>

T-16-47

COPIER > FUNCTION > MISC-R		
Sub-item	**Description**	**Level**
SCANLAMP	Lighting the LED lamp (for document lighting) **<Operating procedure>** 1) Select this item. 2) Press the OK key. The LED lamp (for document lighting) is lit for three seconds.	1

<MISC-P>

T-16-48

COPIER > FUNCTION > MISC-P		
Sub-item	**Description**	**Level**
P-PRINTS	Printing out the service mode settings **<Operating procedure>** 1) Select this item. 2) Press the OK key to start printing.	1
USER-PRT	Printing out the user mode list **<Operating procedure>** 1) Select this item. 2) Press the OK key to start printing.	1
LBL-PRNT	Printing out the service label **<Operating procedure>** 1) Load A4 or LTR paper on Cassette 1. 2) Select this item. 3) Press the OK key to start printing.	1
PRE-EXP	Checking the pre-exposure lamp (LED) **<Operating procedure>** 1) Press this item to reverse its display. 2) Press the OK key. After executing each operation for several seconds, the machine stops automatically. (All lit) 3) Press the OK key to start printing. Reference If the lighting of the pre-exposure lamp gives a problem to the photoconductor drum, rotate the drum.	1
D-PRINT	Printing out the service mode (DISPLAY) contents This mode outputs only the DISPLAY items (excluding ones output by P-RPINT/LBL-PRINT/HIST-PRINT and ALARM). **<Operating procedure>** 1) Select this item. 2) Press the OK key to start printing.	1
ENV-PRT	Printing out the in-machine temperature & humidity and fixing temperature change log Changes of the in-machine temperature & humidity and the fixing temperature (center) are printed as log data. **<Operating procedure>** 1) Select this item. 2) Press the OK key to start printing.	1
KEY-HIST	Printing out the operating section key input history **<Operating procedure>** 1) Select this item. 2) Press the OK key to start printing.	2
HIST-PRT	Printing out the jam history and error history **<Operating procedure>** 1) Select this item. 2) Press the OK key to start printing.	2

COPIER > FUNCTION > MISC-P		
Sub-item	**Description**	**Level**
TRS-DATA	Transferring memory received data to the box **<Operating procedure>** 1) Select this item. 2) Press the OK key to start data transfer.	2

<SYSTEM>

T-16-49

COPIER > FUNCTION > SYSTEM		
Sub-item	**Description**	**Level**
DOWNLOAD	Switching to Download mode **<Operating procedure>** 1) Select this item. 2) Press the OK button to enter Download mode.	1
CHK-TYPE	Specifying a partition number for executing HD-CHK **<Operating procedure>** 1) Select this item. 2) Select a partition number with the ten-key pad. 0: Entire HDD 1: Image accumulation area 2: General-purpose file (user-defined data/various log data/PDL spool data/image data management information) storage area 3: PDL-related file storage area 4: Firmware/address book/file storage area 5: MEAP area 6: Address book area Remarks: HD-CLEAR shall be indispensable for 4 and 6.	1
HD-CHECK	Checking and restoring the partition specified by CHK-TYPE **<Operating procedure>** 1) Select this item. 2) Press the OK key. 3) The result (1:OK, 2:NG (hardware), 3:NG (software) restored/alternative sector) is displayed.	1
HD-CLEAR	Initializing the partition specified by CHK-TYPE **<Operating procedure>** 1) Select this item. 2) Press the OK key.	1

16.5.2 FEEDER

16.5.2.1 Feeder List

iR2270 / iR2870 / iR3570 / iR4570 / / / / / iR2230 / / / iR3530 /

FEEDER >FUNCTION

T-16-50

FEEDER >FUNCTION		
Sub-item	**Description**	**Level**
MTR-CHK	Checking the ADF motor and other individually **<Operating procedure>** 1) Press MTR-CHK to reverse its display. 2) Enter a part corresponding number from the ten-key pad. 3) Press the OK key. 4) Press MTR-ON to check the motor operation. **<Setting range>** 0 to 1	1
TRY-A4	Automatically adjusting document width detection by DF (A4 width)	1
TRY-A5R	Automatically adjusting document width detection by DF (A5R width)	1
TRY-LTR	Automatically adjusting document width detection by DF (LTR width)	1
TRY-LTRR	Automatically adjusting document width detection by DF (LTRR width)	1
FEED-CHK	Checking ADF paper feed operation **<Operating procedure>** 1) Press FEED-CHK to reverse its display. 2) Enter a part corresponding number from the ten-key pad. 3) Press the OK key. 4) Press FEED-ON to check ADF paper feed operation. Paper feed mode 0: Simplex feed 1: Duplex feed 2: Simplex feed with stamping 3: Duplex feed with stamping [Value at shipping: Factory adjustment value / Value after RAM clearance: 0]	1

FEEDER >FUNCTION		
Sub-item	**Description**	**Level**
CL-CHK	Checking DF clutch operation **<Operating procedure>** 1) Press CL-CHK to reverse its display. 2) Enter a part corresponding number from the ten-key pad. 3) Press the OK key. 4) Press CL-ON to check DF clutch operation.	1
CL-ON	Starting clutch operation Press CL-ON. Then press the OK key to start clutch operation. Press the OK key again to stop the operation. (The operation stops automatically in two seconds but the status changes to STOP only when the OK key is pressed again.)	1
SL-CHK	Checking ADF solenoid operation **<Operating procedure>** 1) Press SL-CHK to reverse its display. 2) Enter a part corresponding number from the ten-key pad. 3) Press the OK key. 4) Press SL-ON to check ADF solenoid operation. Part corresponding number 0: Pressurizing solenoid 1: Stamping solenoid [Value at shipping: Factory adjustment value / Value after RAM clearance: 0]	1
SL-ON	Starting solenoid operation **<Operating procedure>** Operation specifications shall differ depending on the model. 1) Press SL to reverse its display. Then press the OK key to start solenoid operation. 2) Press the OK key again to stop the operation. (The operation stops automatically in five seconds but the status changes to STOP only when the OK key is pressed again.)	1
MTR-ON	Starting motor operation **<Operating procedure>** Operation specifications shall differ depending on the model. 1) Press MTR-ON to reverse its display. Then press the OK key to start motor operation. 2) Press the OK key again to stop the operation. (The operation stops automatically in five seconds but the status changes to STOP only when the OK key is pressed again.)	1
ROLL-CLN	Cleaning the ADF roller While the roller is being rotated automatically by a motor, press alcohol-moistened lens cleaning paper against the roller for cleaning. <Operating procedure> 1) Press ROLL-CLN to reverse its display. 2) While the roller is rotating, press alcohol-moistened lens cleaning paper against the roller for cleaning. 3) Press ROLL-CLN to reverse its display. Press the OK key to stop the roller.	1
FEED-ON	Checking ADF paper feed operation **<Operating procedure>** 1) Press FEED-ON and then the OK key to start paper feed in the operation mode set by FEED-CHK.	1

16.6 OPTION (Machine Settings Mode)

16.6.1 COPIER

16.6.1.1 Copier List

iR2270 / iR2870 / iR3570 / iR4570 / / / / iR4570N / iR2230 / / / iR3530 /

<BODY>

T-16-51

COPIER > OPTION > BODY		
Sub-item	**Description**	**Level**
MODEL-SZ	Switching regular resized display and ADF document size detection <Setting range> 0: AB (6R5E) [Default] 1: INCH (5R4E) 2: A (3R3E) 3: AB/INCH (6R5E)	1

COPIER > OPTION > BODY

Sub-item	Description	Level
FIX-TEMP	Switching the plain paper down sequence table <Setting range> 0: OFF (Default) 1: Prioritize productivity. Set the control temperature at -20 deg C across the board. 2: Set the control temperature at -10 deg C across the board. 3: It is -20Åé only in case of 21Åé or more in room temperature as for the control temperature. 4: It is -10Åé only in case of 21Åé or more in room temperature as for the control temperature. 5: Set the control temperature at +6 deg C across the board. 6: Set the control temperature at +10 deg C across the board. 7: Set the control temperature at +15 deg C across the board. (For DCON Ver.15 or later) <Additional information> This can be set with TEMP-COM or TEMPCON2. Example) When FIX-TEMP is set to -6 deg C and TEMP-COM is set to -6 deg C , the control temperature is offset by -12 deg C .	1
TRANS-SW	Switching transfer high-voltage control from constant current control to constant voltage control <Setting range> 0: No switching [Default], 1: Constant voltage mode 1, 2: Constant voltage mode 2	1
TEMP-CON	Switching the thick paper fixing temperature mode <Setting range> 0: OFF (Default) 1: Prioritize productivity. Set the control temperature at -10 deg C across the board. 2: Set the control temperature at -6 deg C across the board. 3: Set the control temperature at -3 deg C across the board. 4: Prioritize fixing performance. Set the control temperature at +3 deg C across the board. 5: Set the control temperature at +6 deg C across the board. 6: Set the control temperature at +10 deg C across the board. 7: Set the control temperature at +15 deg C across the board. <Additional information> This can be set with FIX-TEMP. When FIX-TEMP is set to -6 deg C and TEMP-COM is set to -6 deg C, the control temperature is offset by -12 deg C.	1
PRIAC-SW	Improving the image quality in case of a drum charging fault Note: This setting is cleared if APVC is executed with a new drum unit or if a service mode (FUNCTION>D-GAMMA) is executed. <Setting range> 0: No UP [Default], 1: 50 mA UP, 2: 100 mA UP	1
TEMPCON 2	Improving fixing (Increasing the fixing temperature) Switching the multiple plain paper fixing temperature mode <Note> This is only valid for iR3530/3570/3570F/4530/4570/4570F. <Setting range> 0: OFF (Default) 1: Prioritize productivity. Set the control temperature at -10 deg C across the board. 2: Set the control temperature at -6 deg C across the board. 3: Set the control temperature at -3 deg C across the board. 4: Prioritize fixing performance. Set the control temperature at +3 deg C across the board. 5: Set the control temperature at +6 deg C across the board. 6: Set the control temperature at +10 deg C across the board. 7: Set the control temperature at +15 deg C across the board. <Additional information> This can be set with FIX-TEMP. When FIX-TEMP is set to -6 deg C and TEMPCOM2 is set to -6 deg C, the control temperature is offset by -12 deg C.	1
CONFIG	Selecting several types of firmware installed on the hard disk and switching the country, language, and paper size type of this machine <Adjustment method> XXYYZZAAXX: Country (UP), YY: Language (ja), ZZ(00) Destination, AA(00): Paper size type The display contents conform to the display method of (COPIER>DISPLAY>USER>LANGUAGE). Enclosed in the brackets are defaults. The country and language are only displayed. <Operating procedure> 1) Select <CONFIG>. 2) Select an item to reverse its display. Then press the + or - key to change the contents. 3) Each time the + or - key is pressed, the contents change sequentially. 4) Display the intended contents at all items and press the OK key. 5) Turn the main power switch OFF and ON.	1
W/SCNR	Setting whether a scanner is present (Copy model) <Setting range> 0: Printer model [Default] 1: Model with scanner	1

COPIER > OPTION > BODY

Sub-item	Description	Level
FTPTXPN	Specifying the send destination port (FTP) number <Setting range> 0 to 65535 (Default: 21)	1
DFDST-L1	Adjusting the dust detection level when DF is used (Inter-paper correction) Setting a greater value makes it easy to detect even small particles. <Setting range> 0 to 255 (0 to set this mode OFF) (Default: 242)	1
DFDST-L2	Adjusting the dust detection level when DF is used (Post-job detection) Setting a greater value makes it easy to detect even small particles. <Setting range> 0 to 255 (0 to set this mode OFF) (Default: 242)	1
CCD-LUT	Setting whether or not to use LUT for gain correction 0: Do not use (Default) 1: Use (One-point correction) 2: Do not use (Three-point correction)	1
ENVP-INT	Setting the in-machine temperature & humidity and fixing temperature log acquisition cycle Select COPIER>FUNCTION>MISC-P>ENV-PRT and COPIER>DISPLAY>ENVRNT to set the log acquisition cycles. <Setting range> 0 to 480 <minute> (0 for no log acquisition) Default: 60	1
BASE-SW	Switching from the MEAP-Full mode to the Base model <Setting range> 0: OFF (Base model), 1: ON (Full model)	1
FIX-LOW	Improving fixing at low temperature Note: Valid for iR3570/3570F/4570/4570F only <Setting range> 0: OFF [Default], 1: Low-temperature fixing improvement mode ON	1
SC-L-CNT	Switching the threshold value of the paper size (Large/Small) of the scan counter <Setting range> 0: Count B4 as the small size [Default] 1: Count B4 as the large size	1
FIX-CLN	Setting the timing at which the fixing pressure roller is cleaned <Setting range> 0: No cleaning(Default), 1: Once every 500 sheets at 225deg C regulated temperature and 60-second idling, 2: Once every 200 sheets at 225deg C regulated temperature and 60-second idling, 3: Once every 100 sheets at 225deg C regulated temperature and 60-second idling	2
CPMKP-SW	Turning ON and OFF the sequence of reducing the copy speed to maintain the fixing performance for copy images <Setting range> 0: OFF, 1: ON	2
HUM-SW	switches over charging output settings based on humidity sensor readings range of settings: between 0 and 5 Using the Mode Item Select a setting between 1 and 5 to suit the site environment so that the transfer current output will be controlled accordingly. low-humidity environment: increases the transfer current output high-humidity environment: decreases the transfer current output 1: low humidity 2: relatively low humidity 3: normal humidity 4: relatively high humidity 5: high humidity 0: automatic control based on humidity sensor reading (default)	2
SCANSLCT	Turning ON or OFF the function of calculating a scan area from the selected paper size <Setting range> 0: OFF (Determining the scan area by document detection) 1: ON (Determining the scan area by paper size)	2
SENS-CNF	Setting the arrangement of document detection sensors <Setting range> 0: AB type [Default] 1: Inch type 2: A type	2
RAW-DATA	Setting whether or not to print out received data with no change If a received image has a problem, the problem is used to isolate the data contents and image processing. <Setting range> 0: Usual operation [Default] 1: Print out with no change	2

COPIER > OPTION > BODY

Sub-item	Description	Level
SHARP	Changing the sharpness level (Setting the central value) <Setting range> 1 to 5 [Default: 3]	2
COTDPC-D	Saving the toner (Potential (VD) low) <Setting range> 0: No saving [Default] 1: Down about 10% 2: Down about 20% 3: Down about 30%	2
RMT-LANG	Changing the remote UI language from web <Adjustment method> Select a language code with the + or - key.	2
IFAX-LIM	Limiting the number of output lines when a large amount of data has been received by IFAX. <Setting range> 0: No limit 0 to 999 [Default: 500]	2
DF-BLINE	Taking corrective measures against a black line caused by dust on the platen at flow read <Setting range> 0: No corrective measures [Default] 1: Corrective measures	2
TEMP-TBL	<Setting range> 0: OFF (Default) Normal mode 1: Mode in which FCOT is prioritized This mode sets the pre-fixing rotation control (7 seconds) to OFF at a room temperature of 14 to 17 deg C . (only for iR4570 series) Condition: This is only valid when the Start button is pressed within 5 seconds after a copy is made. <Note> This is only valid for iR3530/3570/3570F/4530/4570/4570F.	2
FIX-SMR	Taking corrective measures against smearing at fixing <Setting range> 1: Lower the absolute value of developing bias Vdc by 20 V 2: Lower the absolute value of Vdc by 40 V 3: (Reserved)	2
FAN-EXTN	Setting the post-job fan extension mode <Setting range> 0: OFF [Default] 1: ON	2
SMTPTXPN	Changing the SMTP send port number <Setting range> 0 to 65535 (units of 1) [Default: 25]	2
SMTPRXPN	Changing the SMTP send port number <Setting range> 0 to 65535 (units of 1) [Default: 25]	2
POP3PN	Changing the POP receive port number <Setting range> 0 to 65535 (units of 1) [Default: 110]	2
RUI-DSP	Setting whether to display a copy screen for RUI (Option switch conforming to the Disability Law) <Setting range> 0: Do not display [Default] 1: Display	2
ORG-LGL	Setting a special paper size that cannot be recognized by DF This is targeted at LGL notified of by DF. <Setting range> 0: LEGAL [Default] 1: FOOLSCAP 2: A-FOOLSCAP 3: FORIO 4: G-LEGAL 5: OFFICIO 6: E-OFFICIO 7: A-OFFICIO 8: B-OFFICIO 9: A-LEAGAL 10: M-OFFICIO 11: LEGAL	2
ORG-LTR	Setting a special paper size that cannot be recognized by DF This is targeted at LTR notified of by DF. <Setting range> 0: LTR [Default] 1:G-LTR 2:A-LTR 3:EXECTIVE 4:LTR	2

COPIER > OPTION > BODY

Sub-item	Description	Level
ORG-LTRR	Setting a special paper size that cannot be recognized by DF This is targeted at LTR-R notified of by DF. <Setting range> 0: LTR-R [Default] 1:G-LTR-R 2:A-LTR-R 3:OFFICIO 4:E-OFFICIO 5:EXECTIVE-R 6:LTR-R	2
ORG-LDR	Setting a special paper size that cannot be recognized by DF This is targeted at LDR notified of by DF. <Setting range> 0: LDR [Default] 1:A-LETTER 2:LDR	2
ORG-B5	Setting a special paper size that cannot be recognized by DF This is targeted at B5 notified of by DF. <Setting range> 0: B5 [Default] 1: K-LEAGAL 2:B5	2
UI-BOX	Setting whether or not to display the box screen of the operating section <Setting range> 0: Do not display 1: Display [Default]	2
UI-SEND	Setting whether or not to display the send screen of the operating section <Setting range> 0: Do not display 1: Display [Default]	2
UI-FAX	Setting whether or not to display the fax screen of the operating section <Setting range> 0: Do not display 1: Display [Default]	2
UI-EXT	Setting whether or not to display the extended screen of the operating section <Setting range> 0: Do not display 1: Display [Default]	2
NEGA-GST	Making additional setting about the pre-exposure sequence (excluding laser) <Setting range> 0: Environmental control [Default] 1: Full 2: Slightly weak 3: Weak	2
NW-SPEED	Selecting the data transfer speed at service network connection <Setting range> 0: Auto [Default] 1: 100Base-TX 2: 100Base-T	2
STS-PORT	Turning the TOT synchronous command communication port ON or OFF The port for Inquiry/Response (synchronous) command communication in TUIF over TCP/IP is turned ON or OFF. <Setting range> 0: OFF [Default] 1: ON	2
CMD-PORT	Turning the TOT asynchronous status communication port ON or OFF The port for asynchronous status communication in TUIF over TCP/IP is turned ON or OFF. <Setting range> 0: OFF [Default] 1: ON	2
NS-CMD5	Limiting the use of CRAM-MD5 in SMTP authentication This is set to limit the use of CRAM-MD5 in SMTP authentication <Setting range> 0: Dependent on the SMTP server [Default] 1: Do not use	2
NS-GSAPI	Limiting the use of GSSAPI in SMTP authentication This is set to limit the use of GSSAPI in SMTP authentication. <Setting range> 0: Dependent on the SMTP server [Default] 1: Do not use	2
NS-NTLM	Limiting the use of NTLM in SMTP authentication This is set to limit the use of NTLM in SMTP authentication. <Setting range> 0: Dependent on the SMTP server [Default] 1: Do not use	2

COPIER > OPTION > BODY

Sub-item	Description	Level
NS-PLNWS	Limiting the use of PLAIN and LOGIN for SMTP authentication in an environment of communication packet encryption This is set to limit the use of PLAIN and LOGIN for SMTP authentication in an environment where communication packets are encrypted <Setting range> 0: Dependent on the SMTP server [Default] 1: Do not use	2
NS-PLN	Limiting the use of PLAIN and LOGIN for SMTP authentication in an environment This is set to limit the use of PLAIN and LOGIN for SMTP authentication in an environment where communication packets are not encrypted. <Setting range> 0: Dependent on the SMTP server [Default] 1: Do not use	2
NS-LGN	Limiting the use of LOGIN for SMTP authentication This is set to limit the use of LOGIN for SMTP authentication in an environment where communication packets are encrypted <Setting range> 0: Dependent on the SMTP server [Default] 1: Do not use	2
MEAP-PN	Changing the HTTP port number of the MEAP application <Setting range> 0 to 65535 (Default: 8000)	2
SVMD-ENT	Switching how to enter service mode 0: [User mode key] -> Simultaneous press of [2] and [*]-> [User mode] (Default) 1: [User mode key] -> Simultaneous press of [4] and [9]-> [User mode]	2
SSH-SW	Turning the SSH server function ON or OFF <Setting range> 0: OFF [Default] 1: ON	2
RMT-LGIN	Turning remote login to the SSH server ON or OFF <Setting range> 0: OFF [Default] 1: ON	2
RE-PKEY	Turning the regeneration of the SSH server key ON or OFF <Setting range> 0: OFF [Default] 1: ON	2
U-NAME	Setting a user name for connection to the SSH server Setting value: Up to 8 characters (half-size alphanumeric)	2
U-PASWD	Setting a user password for connection to the SSH server Setting value: Up to 8 characters (half-size alphanumerics)	2
DA-PORT	Turning the TOT asynchronous status communication port ON or OFF <Setting range> 0: CLOSE [Default] 1: OPEN (when DA is attached)	2
DA-CNCT	Setting DA connection <Setting range> 0: OFF [Default] 1: ON	2
CHNG-STS	Setting the TOT status connection port number <Setting range> 1 to 65535 [Default: 20010]	2
CHNG-CMD	Setting the TOT status connection port number <Setting range> 1 to 65535 [Default: 20000]	2
MEAP-DSP	Turning screen transition from MEAP to Native ON or OFF <Setting range> 0: OFF (Transition to the Native screen) [Default] 1: ON (No transition to the Native screen)	2
ANIM-SW	Turn MEAP application error/jam screen display ON or OFF <Setting range> 0: OFF (Display warning screen) [Default] 1: ON (Do not display warning screen)	2
MEAP-SSL	Setting the MEAP HTTPS port <Setting range> 0 to 65535 (same as the setting of another network port system) [Default: 8443]	2
CCD-TYPE	Setting the CCD unit type <Setting range> 0: Initial CCD unit [Default] 1: Revised CCD unit	2

COPIER > OPTION > BODY		
Sub-item	**Description**	**Level**
KSIZE-SW	Use it to enable/disable support of K paper. <Setting range> 0: do not support K paper [Default] 1: support K paper procedure 1) Set '0' in this service mode. 2) Set '0' for the following: COPIER > OPTION > BODY > MODEL-SZ. 3) Perform the shut-down sequence, and turn off and then on the main power.	2

<USER>

T-16-52

COPIER > OPTION >USER		
Sub-item	**Description**	**Level**
COPY-LIM	Changing the upper limit of copy count	1
	<Setting range> 1 to 9999 [Default: 999]	
SLEEP	Turning the sleep function ON or OFF	1
	<Setting range> 0: OFF 1: ON [Default] The sleep function is set with Timer in User Mode.	
COUNTER1	Setting Software counter 1 on the User mode screen	1
	<Setting value> 101: Total 1 [Value at shipping / Value after RAM clearance = 101 -> Cannot be changed]	
COUNTER2to6	Setting Software counters 2 to 6 on the User mode screen	1
	<Setting range> 0 to 999	
CONTROL	Limiting the user of a control card for a PDL job	1
	<Setting range> 0: Do not use [Default] 1: Use	
B4-L-CNT	Setting whether to count B4 as the large size or the small size on Software counters 1 to 6	1
	<Setting range> 0: Small size [Default] 1: Large size	
COPY-JOB	Prohibiting copy job reservation when a card reader and a coin robot are used	1
	<Setting range> 0: Copy job reserved [Default] 1: Copy job not reserved	
PR-PSESW	Setting whether or not to display the print pause function switch	1
	<Setting range> 0: No print pause function [Default] The user screen does not display the print pause function. (Conventional specification) 1: Print pause function [Default] The user screen does not display the print output stop and restart settings.	
IDPRN-SW	Switching the count-up job type about the department management counter	1
	<Setting range> 0: Counting BoxPrint, ReportPrint, SendLocalPrint, and PDLPrint in the PRINT category 1: Counting ReportPrint, SendLocalPrint, and PDLPrint in the PRINT category	
CNT-SW	Switching the charging counter and default display items	1
	<Setting range> - When the set value is 0 [Default] 101: Total 1 - When the set value is 1 102: Total 2 202: Copy total 2 127: Total A Total 2 - When the set value is 2 101: Total 1 104: Total small 103: Total large 501: Scan total 1	
REMPNL	Turning the remote panel function ON or OFF	1
	<Setting range> 0: OFF [Default] 1: ON	
BCNT-AST	Switching the job type of counting box prints by ASSIST	1
	<Setting range> 0: Count as PDL job [Default] 1: Count as Copy job	

COPIER > OPTION >USER		
Sub-item	**Description**	**Level**
DOC-REM	Setting whether or not to display the document removal message	1
	<Setting range> 0: Do not display [Default 1] 1: Display	
SIZE-DET	Turning the document size detection function ON or OFF	2
	<Setting range> 0: OFF (When the platen is opened, the user will not be dazzled because the lamp does not light.) 1: ON [Default]	
DATE-DSP	Switching the date display format	2
	<Setting range> 0: YYMM/DD 1: DD/MM/YY 2: MM/DD/YY	
MB-CCV	Limiting the mailbox control card user	2
	<Setting range> 0: No [Default] 1: Yes	
TRY-STP	Setting output or no output in the tray full state	2
	<Setting range> 0: Ordinary mode (Interrupt when the finisher tray is full) [Default] 1: Interrupt by height detection only	
MF-LG-ST	Setting the long mode key	2
	<Setting range> 0: Ordinary [Default] 1: Display a long mode key on the corresponding mode screen	
CNT-DISP	Setting whether or not to display a serial number when the counter confirmation key is pressed	2
	<Setting range> 0: Display a serial number [Default] 1: Do not display a serial number	
PH-D-SEL	Setting the number of lines for printing in Photo mode	2
	<Setting range> 0: 141 lines [Default] 1: 134 lines	
OP-SZ-DT	Turning document size detection in Book mode ON or OFF Copying with the platen open is switched to the manual document size input mode (conventional) or the automatic document size detection mode.	2
	<Setting range> 0: Manual document size input mode [Default] 1: Automatic document size detection mode	
NW-SCAN	Enabling or disabling the network scan function	2
	<Setting range> 0: Network scan function disabled [Default] 1: Network scan function enabled Notes: Not changeable for anything in Japan Always 1 for PSPCL outside Japan Changeable for other outside Japan	
HDCR-DSP	Setting whether or not display HDD clearance in User mode and changing the contents of clearance	2
	<Setting range> 1: Clear once with 0 [Default] 2: Clear once with random data 3: Clear three times with random data	2
JOB-INVL	Setting the job interval at interrupt	2
	<Setting range> 0: Output the next job continuously in interrupt copying (Standard) [Default] 1: Start outputting the next job after the last paper of the interrupted copy job is output 2: Start outputting the next job after the last paper of all jobs is output	
LGSW-DSP	Setting whether or not to display [Log display ON/OFF] on the User mode screen	2
	<Setting range> 0: Do not display [Log display ON/OFF] [Default] 1: Display [Log display ON/OFF]	
PCL-COPY	Supporting the PCL command [COPIES Meru/Pinatubo/Hood]	2
	<Setting range> 0: Control each page according to the command of the COPIES command specified to the page [Default] 1: Meru/Pinatubo/Hood compatible mode 2 to 65535: Reserved	
PRJOB-CP	Setting the CCV count pulse at reception and report output	2
	<Setting range> 0: Do not output count pulse [Default] 1: Output count pulse	

COPIER > OPTION >USER		
Sub-item	**Description**	**Level**
DPT-ID-7	Registering the department ID and entering 7 digits for authentication	2
	<Setting range> 0: Conventional [Default] 1: 7-digit input	
RUI-RJT	Disconnecting the HTTP port from RUI by three authentication failures	2
	<Setting procedure> 0: Invalid [Default] 1: Valid	
CTM-S06	Setting whether or not to erase the password from the export file of the file send address	2
	<Setting range> 0: Do not erase the password from the export file. [Default] 1: Erase the password from the export file.	
CTM-S07	Setting whether or not to erase the RUI address display or the send password source display on the edit screen	2
	<Setting range> 0: Do not erase the send password source display on the edit screen. [Default] 1: Erase the send password source display on the edit screen.	
FREG-SW	Setting whether or not to display the free section of the MEAP counter (SEND)	2
	<Setting range> 0: Do not display [Default] 1: Display	
MEAPSAFE	Turning the MEAP Safe mode ON or OFF	2
	<Setting range> 0: OFF [Default] 1: ON (Safe mode)	
IFAX-SZL	Enabling or disabling the send size limit in IFAX transmission (not via server only)	2
	<Setting range> 0: Send size limit enabled (via server/not via server) 1: Send size limit disabled (not via server only) [Default]	
IFAX-PGD	Setting whether or not to permit split send in pages (only beyond the upper limit of the send data size)	2
	<Setting range> 0: Do not permit split send in IFAX Simple mode transmission [Default] 1: Permit split send in IFAX Simple mode transmission	
AFN-PSWD	Limiting access in User mode	2
	<Setting range> 0: OFF (Transition to the User mode screen with no password request) [Default] 1: ON (Transition to the User mode screen after password matching)	
PTJAM-RC	Turning PDL jam recovery ON or OFF	2
	<Setting range> 0: OFF (Do not recover) 1: ON (Recover) [Default]	
SLP-SLCT	Setting whether or not to use a network application supporting BW2 (CL1)	2
	<Setting range> 0: Do not use (1w(2w) sleep possible) [Default] 1: Use (1w(2w) sleep not possible) [Default]	
PS-MODE	Setting PS internal mode	2
	<Setting range> 0 to 65535 0: Not compatible [Default] 1: PS Type 3 Halftone command compatible (conventional) (Dither growth forward and reverse) 2 to 65535: Reserved	

Software counter specifications
100 - 199: Total
200 - 299: Copy (001 to 099 added in case of shortage)
300 - 399: Print
400 - 499: Copy and print
500 - 599: Scan
600 - 699: Box print
700 - 799: Receive print
800 - 899: Report print
900 - 999: Send
Explanations of symbols and terms in the table
- YES: Counter valid in this machine
- Large size: Paper greater than B4
- Small size: Paper of B4 or smaller
- Counter Description: Numerals 1 and 2 indicate the counts of large size paper.
In service mode (COPIER>OPTION>USER>B4-L-CNT), B4 or greater can be set as the large size.
- Total A: Total excluding local and remote copies
- Total B: Total excluding local and remote copies and box prints
- Copy: Local and remote copies
- Copy A: Local and remote copies and box prints
- Print: PDL, report, and box prints
- Print A: PDL and report prints

- Scan: Black-and-white and color scans

T-16-53

No.	Counter Description	Support
101	Total 1	yes
102	Total 2	yes
103	Total (Large)	yes
104	Total (Small)	yes
105	Total (Full-color 1)	
106	Total (Full-color 2)	
108	Total (Black-and-white 1)	yes
109	Total (Black-and-white 2)	yes
110	Total (Monochrome / Large)	
111	Total (Monochrome / Small)	
112	Total (Black-and-white / Large)	yes
113	Total (Black-and-white / Small)	yes
114	Total 1 (Duplex)	yes
115	Total 2 (Duplex)	yes
116	Large (Duplex)	yes
117	Small (Duplex)	yes
118	Total (Monochrome 1)	
119	Total (Monochrome 2)	
120	Total (Full-color / Large)	
121	Total (Full-color / Small)	
122	Total (Full-color + Monochrome / Large)	
123	Total (Full-color + Monochrome / Small)	
124	Total (Full-color + Monochrome 2)	
125	Total (Full-color + Monochrome 1)	
126	Total A1	yes
127	Total A2	yes
128	Total A (Large)	yes
129	Total A (Small)	yes
130	Total A (Full-color 1)	
131	Total A (Full-color 2)	
132	Total A (Black-and-white 1)	yes
133	Total A (Black-and-white 2)	yes
134	Total A (Monochrome / Large)	
135	Total A (Monochrome / Small)	
136	Total A (Black-and-white / Large)	yes
137	Total A (Black-and-white / Small)	yes
138	Total A1 (Duplex)	
139	Total A2 (Duplex)	
140	Large A (Duplex)	
141	Small A (Duplex)	
142	Total A (Monochrome 1)	
143	Total A (Monochrome 2)	
144	Total A (Full-color / Large)	
145	Total A (Full-color / Small)	
146	Total A (Full-color + Monochrome / Large)	
147	Total A (Full-color + Monochrome / Small)	
148	Total A (Full-color + Monochrome 2)	
149	Total A (Full-color + Monochrome 1)	
150	Total B1	yes
151	Total B2	yes
152	Total B (Large)	yes
153	Total B (Small)	yes
154	Total B (Full-color 1)	
155	Total B (Full-color 2)	
156	Total B (Black-and-white 1)	yes
157	Total B (Black-and-white 2)	yes
158	Total B (Monochrome / Large)	
159	Total B (Monochrome / Small)	
160	Total B (Black-and-white / Large)	yes
161	Total B (Black-and-white / Small)	yes
162	Total B1 (Duplex)	
163	Total B2 (Duplex)	
164	Large B (Duplex)	
165	Small B (Duplex)	

No.	Counter Description	Support
166	Total B (Monochrome 1)	
167	Total B (Monochrome 2)	
168	Total B (Full-color / Large)	
169	Total B (Full-color / Small)	
170	Total B (Full-color + Monochrome / Large)	
171	Total B (Full-color + Monochrome / Small)	
172	Total B (Full-color + Monochrome 2)	
173	Total B (Full-color + Monochrome 1)	
201	Copy (Total 1)	yes
202	Copy (Total 2)	yes
203	Copy (Large)	yes
204	Copy (Small)	yes
205	Copy A (Total 1)	yes
206	Copy A (Total 2)	yes
207	Copy A (Large)	yes
208	Copy A (Small)	yes
209	Local copy (Total 1)	yes
210	Local copy (Total 2)	yes
211	Local copy (Large)	yes
212	Local copy (Small)	yes
213	Remote copy (Total 1)	yes
214	Remote copy (Total 2)	yes
215	Remote copy (Large)	yes
216	Remote copy (Small)	yes
217	Copy (Full-color 1)	
218	Copy (Full-color 2)	
219	Copy (Monochrome 1)	
220	Copy (Monochrome 2)	
221	Copy (Black-and-white 1)	yes
222	Copy (Black-and-white 2)	yes
223	Copy (Full-color / Large)	
224	Copy (Full-color / Small)	
225	Copy (Monochrome / Large)	
226	Copy (Monochrome / Small)	
227	Copy (Black-and-white / Large)	yes
228	Copy (Black-and-white / Small)	yes
229	Copy (Full-color + Monochrome / Large)	
230	Copy (Full-color + Monochrome / Small)	
231	Copy (Full-color + Monochrome / 2)	
232	Copy (Full-color + Monochrome / 1)	
233	Copy (Full-color / Large / Duplex)	
234	Copy (Full-color / Small / Duplex)	
235	Copy (Monochrome / Large / Duplex)	
236	Copy (Monochrome / Small / Duplex)	
237	Copy (Black-and-white / Large / Duplex)	
238	Copy (Black-and-white / Small / Duplex)	
245	Copy A (Full-color 1)	
246	Copy A (Full-color 2)	
247	Copy A (Monochrome 1)	
248	Copy A (Monochrome 2)	
249	Copy A (Black-and-white 1)	yes
250	Copy A (Black-and-white 2)	yes
251	Copy A (Full-color / Large)	
252	Copy A (Full-color / Small)	
253	Copy A (Monochrome / Large)	
254	Copy A (Monochrome / Small)	
255	Copy A (Black-and-white / Large)	yes
256	Copy A (Black-and-white / Small)	yes
257	Copy A (Full-color + Monochrome / Large)	
258	Copy A (Full-color + Monochrome / Small)	
259	Copy A (Full-color + Monochrome / 2)	
260	Copy A (Full-color + Monochrome / 1)	
261	Copy A (Full-color / Large / Duplex)	
262	Copy A (Full-color / Small / Duplex)	
263	Copy A (Monochrome / Large / Duplex)	
264	Copy A (Monochrome / Small / Duplex)	

No.	Counter Description	Support
265	Copy A (Black-and-white / Large / Duplex)	
266	Copy A (Black-and-white / Small / Duplex)	
273	Local copy (Full-color 1)	
274	Local copy (Full-color 2)	
275	Local copy (Monochrome 1)	
276	Local copy (Monochrome 2)	
277	Local copy (Black-and-white 1)	yes
278	Local copy (Black-and-white 2)	yes
279	Local copy (Full-color / Large)	
280	Local copy (Full-color / Small)	
281	Local copy (Monochrome / Large)	
282	Local copy (Monochrome / Small)	
283	Local copy (Black-and-white / Large)	yes
284	Local copy (Black-and-white / Small)	yes
285	Local copy (Full-color + Monochrome / Large)	
286	Local copy (Full-color + Monochrome / Small)	
287	Local copy (Full-color + Monochrome / 2)	
288	Local copy (Full-color + Monochrome / 1)	
289	Local copy (Full-color / Large / Duplex)	
290	Local copy (Full-color / Small / Duplex)	
291	Local copy (Monochrome / Large / Duplex)	
292	Local copy (Monochrome / Small / Duplex)	
293	Local copy (Black-and-white / Large / Duplex)	
294	Local copy (Black-and-white / Small / Duplex)	
002	Remote copy (Full-color 1)	
003	Remote copy (Full-color 2)	
004	Remote copy (Monochrome 1)	
005	Remote copy (Monochrome 2)	
006	Remote copy (Black-and-white 1)	yes
007	Remote copy (Black-and-white 2)	yes
008	Remote copy (Full-color / Large)	
009	Remote copy (Full-color / Small)	
010	Remote copy (Monochrome / Large)	
011	Remote copy (Monochrome / Small)	
012	Remote copy (Black-and-white / Large)	yes
013	Remote copy (Black-and-white / Small)	yes
014	Remote copy (Full-color + Monochrome / Large)	
015	Remote copy (Full-color + Monochrome / Small)	
016	Remote copy (Full-color + Monochrome / 2)	
017	Remote copy (Full-color + Monochrome / 1)	
018	Remote copy (Full-color / Large / Duplex)	
019	Remote copy (Full-color / Small / Duplex)	
020	Remote copy (Monochrome / Large / Duplex)	
021	Remote copy (Monochrome / Small / Duplex)	
022	Remote copy (Black-and-white / Large / Duplex)	
023	Remote copy (Black-and-white / Small / Duplex)	
301	Print (Total 1)	yes
302	Print (Total 2)	yes
303	Print (Large)	yes
304	Print (Small)	yes
305	Print A (Total 1)	yes
306	Print A (Total 2)	yes
307	Print A (Large)	yes
308	Print A (Small)	yes
309	Print (Full-color 1)	
310	Print (Full-color 2)	
311	Print (Monochrome 1)	
312	Print (Monochrome 2)	
313	Print (Black-and-white 1)	yes
314	Print (Black-and-white 2)	yes
315	Print (Full-color / Large)	
316	Print (Full-color / Small)	
317	Print (Monochrome / Large)	
318	Print (Monochrome / Small)	
319	Print (Black-and-white / Large)	yes
320	Print (Black-and-white / Small)	yes

No.	Counter Description	Support
321	Print (Full-color + Monochrome / Large)	
322	Print (Full-color + Monochrome / Small)	
323	Print (Full-color + Monochrome / 2)	
324	Print (Full-color + Monochrome / 1)	
325	Print (Full-color / Large / Duplex)	
326	Print (Full-color / Small / Duplex)	
327	Print (Monochrome / Large / Duplex)	
328	Print (Monochrome / Small / Duplex)	
329	Print (Black-and-white / Large / Duplex)	
330	Print (Black-and-white / Small / Duplex)	
331	PDL print (Total 1)	yes
332	PDL print (Total 2)	yes
333	PDL print (Large)	yes
334	PDL print (Small)	yes
335	PDL print (Full-color 1)	
336	PDL print (Full-color 2)	
339	PDL print (Black-and-white 1)	yes
340	PDL print (Black-and-white 2)	yes
341	PDL print (Full-color / Large)	
342	PDL print (Full-color / Small)	
345	PDL print (Black-and-white / Large)	yes
346	PDL print (Black-and-white / Small)	yes
351	PDL print (Full-color / Large / Duplex)	
352	PDL print (Full-color / Small / Duplex)	
355	PDL print (Black-and-white / Large / Duplex)	
356	PDL print (Black-and-white / Small / Duplex)	
401	Copy + Print (Full-color / Large)	
402	Copy + Print (Full-color / Small)	
403	Copy + Print (Monochrome / Large)	
404	Copy + Print (Monochrome / Small)	
405	Copy + Print (Monochrome 2)	
406	Copy + Print (Monochrome 1)	
407	Copy + Print (Full-color + Monochrome / Large)	
408	Copy + Print (Full-color + Monochrome / Small)	
409	Copy + Print (Full-color + Monochrome / 2)	
410	Copy + Print (Full-color + Monochrome / 1)	
411	Copy + Print (Large)	
412	Copy + Print (Small)	
413	Copy + Print (2)	
414	Copy + Print (1)	
415	Copy + Print (Monochrome / Large)	
416	Copy + Print (Monochrome / Small)	
417	Copy + Print (Full-color / Large / Duplex)	
418	Copy + Print (Full-color / Small / Duplex)	
419	Copy + Print (Monochrome / Large / Duplex)	
420	Copy + Print (Monochrome / Small / Duplex)	
421	Copy + Print (Black-and-white / Large / Duplex)	
422	Copy + Print (Black-and-white / Small / Duplex)	
501	Scan (Total 1)	yes
502	Scan (Total 2)	yes
503	Scan (Large)	yes
504	Scan (Small)	yes
505	Black-and-white scan (Total 1)	yes
506	Black-and-white scan (Total 2)	yes
507	Black-and-white scan (Large)	yes
508	Black-and-white scan (Small)	yes
509	Color scan (Total 1)	
510	Color scan (Total 2)	
511	Color scan (Large)	
512	Color scan (Small)	
601	Box print (Total 1)	yes
602	Box print (Total 2)	yes
603	Box print (Large)	yes
604	Box print (Small)	yes
605	Box print (Full-color 1)	
606	Box print (Full-color 2)	

No.	Counter Description	Support
607	Box print (Monochrome 1)	
608	Box print (Monochrome 2)	
609	Box print (Black-and-white 1)	yes
610	Box print (Black-and-white 2)	yes
611	Box print (Full-color / Large)	
612	Box print (Full-color / Small)	
613	Box print (Monochrome / Large)	
614	Box print (Monochrome / Small)	
615	Box print (Black-and-white / Large)	yes
616	Box print (Black-and-white / Small)	yes
617	Box print (Full-color + Monochrome / Large)	
618	Box print (Full-color + Monochrome / Small)	
619	Box print (Full-color + Monochrome / 2)	
620	Box print (Full-color + Monochrome / 1)	
621	Box print (Full-color / Large / Duplex)	
622	Box print (Full-color / Small / Duplex)	
623	Box print (Monochrome / Large / Duplex)	
624	Box print (Monochrome / Small / Duplex)	
625	Box print (Black-and-white / Large / Duplex)	
626	Box print (Black-and-white / Small / Duplex)	
701	Receive print (Total 1)	yes
702	Receive print (Total 2)	yes
703	Receive print (Large)	yes
704	Receive print (Small)	yes
705	Receive print (Full-color 1)	
706	Receive print (Full-color 2)	
707	Receive print (Gray-scale 1)	
708	Receive print (Gray-scale 2)	
709	Receive print (Monochrome 1)	yes
710	Receive print (Monochrome 2)	yes
711	Receive print (Full-color / Large)	
712	Receive print (Full-color / Small)	
713	Receive print (Gray-scale / Large)	
714	Receive print (Gray-scale / Small)	
715	Receive print (Monochrome / Large)	yes
716	Receive print (Monochrome / Small)	yes
717	Receive print (Full-color + Gray-scale / Large)	
718	Receive print (Full-color + Gray-scale / Small)	
719	Receive print (Full-color + Gray-scale 2)	
720	Receive print (Full-color + Gray-scale 1)	
721	Receive print (Full-color / Large / Duplex)	
722	Receive print (Full-color / Small / Duplex)	
723	Receive print (Gray-scale / Large / Duplex)	
724	Receive print (Gray-scale / Small / Duplex)	
725	Receive print (Monochrome / Large / Duplex)	
726	Receive print (Monochrome / Small / Duplex)	
801	Report print (Total 1)	yes
802	Report print (Total 2)	yes
803	Report print (Large)	yes
804	Report print (Small)	yes
805	Report print (Full-color 1)	
806	Report print (Full-color 2)	
807	Report print (Gray-scale 1)	
808	Report print (Gray-scale 2)	
809	Report print (Monochrome 1)	yes
810	Report print (Monochrome 2)	yes
811	Report print (Full-color / Large)	
812	Report print (Full-color / Small)	
813	Report print (Gray-scale / Large)	
814	Report print (Gray-scale / Small)	
815	Report print (Monochrome / Large)	yes
816	Report print (Monochrome / Small)	yes
817	Report print (Full-color + Gray-scale / Large)	
818	Report print (Full-color + Gray-scale / Small)	
819	Report print (Full-color + Gray-scale 2)	
820	Report print (Full-color + Gray-scale 1)	

No.	Counter Description	Support
821	Report print (Full-color / Large / Duplex)	
822	Report print (Full-color / Small / Duplex)	
823	Report print (Gray-scale / Large / Duplex)	
824	Report print (Gray-scale / Small / Duplex)	
825	Report print (Monochrome / Large / Duplex)	
826	Report print (Monochrome / Small / Duplex)	
901	Copy scan total 1 (Color)	
902	Copy scan total 1 (Black-and-white)	
903	Copy scan total 2 (Color)	
904	Copy scan total 2 (Black-and-white)	
905	Copy scan total 3 (Color)	
906	Copy scan total 3 (Black-and-white)	
907	Copy scan total 4 (Color)	
908	Copy scan total 4 (Black-and-white)	
909	Local copy scan (Color)	
910	Local copy scan (Black-and-white)	
911	Remote copy scan (Color)	
912	Remote copy scan (Black-and-white)	
913	Send scan total 1 (Color)	
914	Send scan total 1 (Black-and-white)	
915	Send scan total 2 (Color)	
916	Send scan total 2 (Black-and-white)	yes
917	Send scan total 3 (Color)	
918	Send scan total 3 (Black-and-white)	yes
919	Send scan total 4 (Color)	
920	Send scan total 4 (Black-and-white)	
921	Send scan total 5 (Color)	
922	Send scan total 5 (Black-and-white)	yes
929	Send scan total 6 (Color)	
930	Send scan total 6 (Black-and-white)	yes
931	Send scan total 7 (Color)	
932	Send scan total 7 (Black-and-white)	
933	Send scan total 8 (Color)	
934	Send scan total 8 (Black-and-white)	
935	Universal send scan total (Color)	
936	Universal send scan total (Black-and-white)	
937	Box scan (Color)	
938	Box scan (Black-and-white)	
939	Remote scan (Color)	
940	Remote scan (Black-and-white)	yes
941	Send scan / FAX (Color)	
942	Send scan / FAX (Black-and-white)	
943	Send scan / IFAX (Color)	
944	Send scan / IFAX (Black-and-white)	
945	Send scan / E-mail (Color)	
946	Send scan / E-mail (Black-and-white)	
947	Send scan / FTP (Color)	
948	Send scan / FTP (Black-and-white)	
949	Send scan / SMB (Color)	
950	Send scan / SMB (Black-and-white)	
951	Send scan / IPX (Color)	
952	Send scan / IPX (Black-and-white)	
953	Send scan / Database (Color)	
954	Send scan / Database (Black-and-white)	
955	Send scan / Local print (Color)	
956	Send scan / Local print (Black-and-white)	
957	Send scan / Box (Color)	
958	Send scan / Box (Black-and-white)	

<CST>

T-16-54

COPIER > OPTION > CST		
Sub-item	**Description**	**Level**
ENV1/2	Registering Envelope cassette ENV1/2	1
	<Setting range> 21: ISO-C5 [Default], 22: COM10, 23: Monarch, 24: DL, 25: ISO-B5, 26: Western style No.4	
U1-NAMEto U4-NAME	Setting whether or not to display a paper name when a paper size group (U1 to U4) has been detected	2
	<Setting range> 0: Display U1, U2, U3, or U4 on the touchpanel. 1: Display the paper name set in service mode (CST-U1/U2/U3/U4).	
CST-U1/U2/U3/U4	Specifying paper names for use in paper size groups If the following special paper sizes are set to U1, U2, U3, and U4, paper of the sizes can be handled on the universal cassette as special size paper.	2
	<Setting range> 24: FOOLSCAP (CST-U2: Default) 25: Australian FOOLSCAP 26: OFFICIO 27: Ecuadorian OFFICIO 28: Bolivian OFFICIO 29: Argentine LETTER (U4: Default) 30: Argentine LETTER-R 31: Governmental LETTER (U1: Default) 32: Governmental LETTER-R 34: Governmental LEGAL (U3: Default) 35: FOLIO 36: Argentine OFFICIO 37: Mexican OFFICIO 38: EXECUTIVE	

<ACC>

T-16-55

COPIER > OPTION > ACC		
Sub-item	**Description**	**Level**
COIN	Switching the coin vendor Set whether the coin vendor management mode can be entered or not.	1
	<Setting range> 0: OFF [Default] 1: ON	
DK-P	Setting a paper size for use on a paper deck (option)	1
	<Setting range> 0: A4 [Default] 1: B5 2: LTR	
OUT-TRAY	Setting whether or not to use the third paper ejection tray (mainly when the second and third paper ejection units are mounted)	1
	<Setting range> 0: Do not use [Default] 1: Use	
IN-TRAY	Setting whether or not to use an inner paper ejection tray	1
	<Setting range> 0: Do not use [Default] 1: Use	
CC-SPSW	Setting whether or not to support the control card (CC IV /CCV) interface	2
	<Setting range> 0: Do not support [Default] 1: Support	

<INT-FACE>

T-16-56

COPIER > OPTION > INT-FACE		
Sub-item	**Description**	**Level**
IMG-CONT	Setting the EFI controller connection	1
	<Setting range> 0: Usual operation [Default]	
AP-OPT	Permitting or prohibiting printing from the PrintMe application installed in the PS print server unit	2
	<Setting range> 0: Permit printing by a specified account 1: Permit printing, irrespective of the account [Default] 2: Prohibit printing (except by specified department ID	
AP-ACCNT	Setting a department ID for a print job from the PrintMe application installed in the PS print server unit	2
	<Setting range> 0 to 99999999 [Default: 0]	

COPIER > OPTION > INT-FACE		
Sub-item	**Description**	**Level**
AP-CODE	Setting a CPCA path for a print job from the PrintMe application installed in the PS print server unit **<Setting range>** 0 to 99999999 [Default: 0]	2

<COMBO>

T-16-57

COPIER >OPTION > COMBO		
Sub-item	**Description**	**Level**
PPR-SLCT	SW for the setting of transfer lead edge weak bias (paper type) <Setting range> 1: Plain paper (Default), 2: Thick paper, 3: Envelope, 4: Intermediate paper, 5: OHP, 6: Postcard, 7: Label paper, 8: Bond paper <Additional information> The transfer lead edge weak bias becomes effective with the following settings. 1.Output condition: Execute 'COPIER>OPTION>COMBO> (1) PPR-SLCT (paper type) / (2) MOD-SLCT (paper pick-up mode) / (3) ENV-SLCT (environment selection)' and register them under TR-SW 1 to 5. 2. Execute 'COPIER>ADJUST>HV-TR> (1) TR-TP-TM (length of application time) / (2) TR-TP-LV (application level).'	1
MOD-SLCT	SW for the setting of transfer lead edge weak bias (paper pick-up mode) 1: One-sided (Default) 2: Second side of the paper picked up from a cassette 3: Second side of the paper manually fed <Additional information> The transfer lead edge weak bias becomes effective with the following settings. 1. Output condition: Execute 'COPIER>OPTION>COMBO> (1) PPR-SLCT (paper type) / (2) MOD-SLCT (paper pick-up mode) / (3) ENV-SLCT (environment selection)' and register them under TR-SW 1 to 5. 2. Execute 'COPIER>ADJUST>HV-TR> (1) TR-TP-TM (length of application time) / (2) TR-TP-LV (application level).'	1
ENV-SLCT	SW for the setting of transfer lead edge weak bias (environment selection) <Setting range> 1: Low humidity 2: Rather low humidity 3: Normal humidity (Default: 3) 4: Rather high humidity 5: High humidity <Additional information 1> The setting of '17 becomes valid in all environments only for iR3570/3570F/4570/4570F/iR3530/4530. <Additional information 2> The transfer lead edge weak bias becomes effective with the following settings. 1.Output condition: Execute 'COPIER>OPTION>COMBO> (1) PPR-SLCT (paper type) / (2) MOD-SLCT (paper pick-up mode) / (3) ENV-SLCT (environment selection)' and register them under TR-SW 1 to 5. 2.Execute 'COPIER>ADJUST>HV-TR> (1) TR-TP-TM (length of application time) / (2) TR-TP-LV (application level).'	1
TR-SW1/2/3/4/5	SW 1/2/3/4/5 for the setting of transfer lead edge weak bias <Setting range> 0: OFF (Default) 1: ON Register the following setting under this switch. COPIER>OPTION>COMBO>PPR-SLCT/MOD-SLCT/ENV-SLCT How to use this mode 1) Set a required combination of the 3 service modes shown above. 2) Select any of TR-SW 1 through 5. 3) Set the selected switch to '1'. * The transfer lead edge weak bias becomes effective under this condition. ** When you select one of TR-SW 1 through 5 while setting any of them to '1', the setting of the selected switch is displayed under OPIER>OPTION>COMBO>PPR-SLCT/MOD-SLCT/ENV-SLCT. The transfer lead edge weak bias becomes effective with the settings shown above and below. COPIER>ADJUST>HV-TR (1) TR-TP-TM (length of application time) / (2) TR-TP-LV (application level)	1

<LCNS-TR>
Example of display: ST-XXXX 1 ( ) {0 to 0}
[1] [2]
[1] Status display 0: Not installed [Default] 1: Installed
[2] Invalidation 0: Invalidate (Only 0 can be entered.)

Transfer invalidation procedure
1. Select ST-XXXX, enter 0, and press the OK key.
2. A transfer license number (24 digits) is displayed at TR-XXXX.

T-16-58

COPIER >OPTION >LCNS-TR		
Sub-item	**Description**	**Level**
ST-SEND	Displaying the send function installation status in transfer invalidation and executing transfer invalidation	2
TR-SEND	Acquiring a transfer license key for the send function in transfer invalidation	2

COPIER >OPTION >LCNS-TR		
Sub-item	**Description**	**Level**
ST-ENPDF	Displaying the encrypted PDF send function installation status in transfer invalidation and executing transfer invalidation	2
TR-ENPDF	Acquiring a transfer license key for the encrypted PDF send function in transfer invalidation	2
ST-SPDF	Displaying the searchable PDF send function installation status in transfer invalidation and executing transfer invalidation	2
TR-SPDF	Acquiring a transfer license key for the searchable PDF send function in transfer invalidation	2
ST-EXPDF	Displaying the PDF extension kit (compound function of encrypted PDF and searchable PDF) installation status in transfer invalidation and executing transfer invalidation	2
TR-EXPDF	Acquiring a transfer license key for the PDF extension kit (compound function of encrypted PDF and searchable PDF) installation status in transfer invalidation	2
ST-LIPS	Displaying the LIPS installation status in transfer invalidation and executing transfer invalidation	2
TR-LIPS	Acquiring a transfer license key for LIPS in transfer invalidation	2
ST-PDFDR	Displaying the PDF direct function installation status in transfer invalidation and executing transfer invalidation	2
TR-PDFDR	Acquiring a transfer license key for the PDF direct function in transfer invalidation	2
ST-SCR	Displaying the encrypted secure print function installation status in transfer invalidation and executing transfer invalidation	2
TR-SCR	Acquiring a transfer license key for the encrypted secure print function in transfer invalidation	2
ST-HDCLR	Displaying the HDD encryption/complete erasure function installation status in transfer invalidation and executing transfer invalidation	2
TR-HDCLR	Acquiring a transfer license key for the HDD encryption/complete erasure function in transfer invalidation	2
ST-BRDIM	Displaying the BarDIMM installation status in transfer invalidation and executing transfer invalidation	2
TR-BRDIM	Acquiring a transfer license key for BarDIMM in transfer invalidation	2

16.6.2 FEEDER

16.6.2.1 Feeder List

iR2270 / iR2870 / iR3570 / iR4570 / / / / / iR2230 / / / iR3530 /

FEEDER>OPTION

T-16-59

FEEDER > OPTION		
Sub-item	Description	Level
SIZE-SW	Setting whether or not to detect a mixed document of A/B size and inch size	1
	<Setting value> 0: Do not detect [Default] 1: Detect	

16.6.3 SORTER

16.6.3.1 Sorter List

iR2270 / iR2870 / iR3570 / iR4570 / / / / / iR2230 / / / iR3530 /

SORTER > OPTION>

T-16-60

SORTER > OPTION		
Sub-item	**Description**	**Level**
BLNK-SW	Setting the margin width (W) on each side of the folding position when the saddle stitcher is used	1
	<Setting value> 0: Ordinary width (5 mm) 1: Large width (10 mm) [Value at shipping/Value after RAM clearance: 1]	
MD-SPRTN	Setting the finisher function limit	1
	<Setting value> 0: Usual 1: Degenerated [Value at shipping/Value after RAM clearance: 0]	

16.6.4 BOARD

16.6.4.1 Board List

iR2270 / iR2870 / iR3570 / iR4570 / / / / / iR2230 / / / iR3530 /

BOARD > OPTION

T-16-61

BOARD > OPTION		
Sub-item	**Description**	**Level**
FONTDL	Setting whether or not to display the font service setting screen for list display by the PS kanji font downloader	1
	<Setting value> 0: Do not display [Default] 1: Display	
MENU-1 to MENU-4	Setting whether or not to display Levels 1 to 4 of the printer setting menu	2
	<Setting value> 0: Do not display 1: Display [Value at shipping/Value after RAM clearance: 0]	

16.7 TEST (Test Print Mode)

16.7.1 COPIER

16.7.1.1 Copier List

iR2270 / iR2870 / iR3570 / iR4570 / / / / / iR2230 / / / iR3530 /

<PG>

T-16-62

COPIER>TEST>PG		
Sub-item	**Description**	**Level**
TYPE	Enter a test print type number and press the Start key for test printing. (After test printing, be sure to return the number to 0.) 0: Image from CCD (Ordinary print) 1: Checker 2: 17 tones (Error diffusion method [T0BIC]) 3: 17 tones (Dither screen method) 4: Totally white 00H 5: Halftone 80H (Error diffusion method [T0BIC]) 6: Halftone 80H (Dither screen method) 7: Totally black FFH 8: Horizontal line (space: 27 dots, line width: 40 dots) 9: Horizontal line (space: 50 dots, line width: 60 dots) 10: Horizontal line (space: 3 dots, line width: 2 dots) 11: Halftone 60H (Error diffusion method [T0BIC]) 12: Halftone 60H (Dither screen method) 13: Halftone 30H (Error diffusion method [T0BIC]) 14: Halftone 30H (Dither screen method) 15 - 20: For development	1
TXPH	Reserved	1
PG-PICK	Selecting an output stage for test printing 1: Cassette 1 2: Cassette 2 3: Cassette 3 4: Cassette 4 5: Side deck 6: Manual feed 7 - 8: Not used	1
2-SIDE	Setting the output mode for test printing 0: Simplex [Default] 1: Duplex	1
PG-QTY	Setting the number of pages for test printing 1 to 999 [Default: 1]	1

<NETWORK>

T-16-63

COPIER>TEST>NETWORK		
Sub-item	**Description**	**Level**
PING	Checking the connection from this machine to the network (TCP/IP only) The network connection is checked when the machine has been installed and when the connection has become faulty.	1

1) Press the switch at the operating section long for the shutdown sequence and turn the main power switch OFF.
2) Connect the network cable to this machine and turn the main power switch ON.
3) Notify the system administrator that the machine has been installed to request network setup.
4) Notify the system administrator of the network connection check plan and check the PING remote host address (IP address of a PC terminal in the user network).
5) Select the service mode (COPIER>TEST>NETWORK>PING), enter the IP address checked at Step 4 from the ten-key pad of the operating section, and press the OK key and the Start key.
   - Once the network has been connected normally, OK is displayed. (End)
   - If NG is displayed, check the connection of the network cable first. If the network cable is connected normally, do Step 6 and later. If the network cable is not connected normally, repeat Step 5.
6) Select the service mode (COPIER>TEST>NETWORK>PING), enter the loopback address *(127.0.0.1), and press the OK key and the Start key.
   - If NG is displayed, the TCP/IP setting of the local machine may be wrong. Return to Step 3 and check the setting again.
   - If OK is displayed, the TCP/IP setting of the local machine seems correct but the network controller (main controller circuit board) may be faulty. Check the controller at Step 7.
   *: Since the loopback address signal is returned before the network controller, the TCP/IP setting of the local machine can be checked.
7) Select the service mode (COPIER>TEST>NETWORK>PING), enter the local host address (IP address of the local machine), and press the OK key.
   - If NG is displayed, the IP address of the local machine may be wrong or the network controller may be faulty. Check the IP address with the system administrator or replace the main controller circuit board.

- If OK is displayed, there seem to be no problems about the network setting of the local machine or the network controller.
Then the problem may be attributable to the user network environment. Report this to the system administrator and request action.

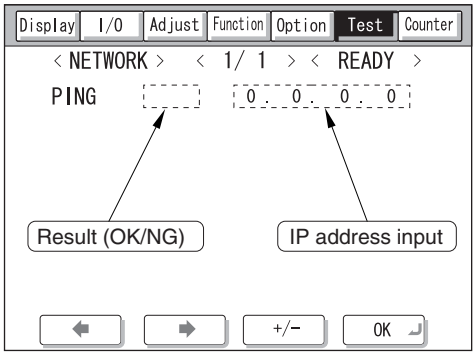

F-16-17

16.8 COUNTER (Counter Mode)

16.8.1 COPIER

16.8.1.1 Copier List

iR2270 / iR2870 / iR3570 / iR4570 / / / / / iR2230 / / / iR3530 /

<TOTAL>

T-16-64

COPIER>COUNTER>TOTAL		
Sub-item	**Description**	**Level**
SERVICE1	Total service counter 1 This counter is incremented when paper is ejected out of the printer. Irrespective of the paper size, large or small, the increment is one. After 99999999, the count returns to 00000000.	1
SERVICE2	Total service counter 2 This counter is incremented when paper is ejected out of the printer. The increment is 2 for the large size and 1 for the small size. After 99999999, the count returns to 00000000.	1
COPY	Total copy counter This counter is incremented when a copy is created and ejected out of the printer. After 99999999, the count returns to 00000000.	1
PDL-PRT	PDL print counter This counter is incremented with the charging counter when a print is ejected out of the machine or loaded again for printing the other side in PDL printing. The increment is 0 for blank print and 5 each for a large or small print. After 99999999, the count returns to 00000000.	1
FAX-PRT	FAX receive print counter This counter is incremented with the charging counter when a print is ejected out of the machine or loaded again for printing the other side in fax reception. The increment is 0 for blank print and 1each for a large or small print. The count can be cleared. After 99999999, the count returns to 00000000.	1
RMT-PRT	Remote print counter This counter is incremented with the charging counter when a print is ejected out of the machine or loaded again for printing the other side in remote printing. The increment is 0 for blank print and 1each for a large or small print. The count can be cleared. After 99999999, the count returns to 00000000.	1
BOX-PRT	Box print counter This counter is incremented with the charging counter when a print is ejected out of the machine or loaded again for printing the other side in box printing. The increment is 0 for blank print and 1each for a large or small print. The count can be cleared. After 99999999, the count returns to 00000000.	1
RPT-PRT	Report print counter This counter is incremented with the charging counter when a print is ejected out of the machine or loaded again for printing the other side in report printing. The increment is 0 for blank print and 1each for a large or small print. The count can be cleared. After 99999999, the count returns to 00000000.	1
2-SIDE	Duplex copy/print counter This counter is incremented with the charging counter when a duplex copy/print is ejected out of the machine or loaded again for printing the other side in remote printing. The increment is 0 for blank copy/print and 1each for a large or small copy/print. The count can be cleared. After 99999999, the count returns to 00000000.	1
SCAN	Scan counter This counter is incremented at the end of a scan. The increment is 1each for the large or small size. The count can be cleared. After 99999999, the count returns to 00000000.	1

<PICK-UP>

T-16-65

COPIER>COUNTER>PICK-UP		
Sub-item	**Description**	**Level**
C1/2/3/4	Cassette 1/2/3/4 paper feed total counter The number of sheets fed from Cassette 1/2/3/4 is displayed. Irrespective of the paper size, large or small, this counter is incremented one. After 99999999, the count returns to 00000000.	1
MF	Manual feed total counter The number of sheets fed from the manual paper feed unit is displayed. Irrespective of the paper size, large or small, this counter is incremented one. After 99999999, the count returns to 00000000.	1
DK	Deck paper feed total counter The number of sheets fed from the deck paper feed unit is displayed. Irrespective of the paper size, large or small, this counter is incremented one. After 99999999, the count returns to 00000000.	1
2-SIDE	Duplex paper feed total counter The number of duplex fed sheets is displayed. Irrespective of the paper size, large or small, this counter is incremented one. After 99999999, the count returns to 00000000.	1

<FEEDER>

T-16-66

COPIER>COUNTER>FEEDER		
Sub-item	**Description**	**Level**
FEED	ADF document feed total counter The number of documents fed from ADF is displayed. Irrespective of the paper size, large or small, this counter is incremented one. After 99999999, the count returns to 00000000.	1
DFOP-CNT	ADF hinge open-close counter The ADF hinge open-close count is displayed. After 99999999, the count returns to 00000000.	1

<JAM>

T-16-67

COPIER>COUNTER>JAM		
Sub-item	**Description**	**Level**
TOTAL	Copier total jam counter	1
FEEDER	Feeder total jam counter	1
SORTER	Finisher total jam counter	1
2-SIDE	Duplex unit jam counter	1
MF	Manual paper feed jam counter	1
C1/2/3/4	Cassette 1/2/3/4 jam counter	1
DK	Side paper deck jam counter	1

<MISC>

T-16-68

COPIER>COUNTER>MISC		
Sub-item	**Description**	**Level**
LSR-MTR	Scanner motor counter This counter counts motor rotations. If the time until the motor run become stable is shorter than the average, however, this counter is not incremented. Average time iR2230/2870: About 1.3 seconds iR3570/4570: About 3.3 seconds	1

<DRBL-1>

T-16-69

COPIER>COUNTER>DRBL-1		
Sub-item	**Description**	**Level**
TR-ROLL	Transfer roller counter Irrespective of the paper size, large or small, this counter is incremented one.	1
SP-SC-EL	Separate discharge needle high-voltage ON counter Irrespective of the paper size, large or small, this counter is incremented one.	1
DVG-CYL	Developing cylinder rotation counter Irrespective of the paper size, large or small, this counter is incremented one.	1
C1/2/3/4-PU-RL	Cassette 1/2/3/4 feed roller counter This counter is incremented two for the large size and one for the small size.	1
C1/2/3/4-SP-RL	Cassette 1/2/3/4 separation roller counter This counter is incremented two for the large size and one for the small size.	1
C1/2/3/4-FD-RL	Cassette 1/2/3/4 transport roller counter This counter is incremented two for the large size and one for the small size.	1
M-PU-RL	Manual paper feed roller counter This counter is incremented two for the large size and one for the small size.	1
M-SP-PD	Manual separation pad counter This counter is incremented two for the large size and one for the small size.	1

COPIER>COUNTER>DRBL-1		
Sub-item	**Description**	**Level**
FX-LW-RL	Lower fixing roller counter This counter is incremented two for the large size and one for the small size.	1
FX-FILM	Fixing film counter This counter is incremented two for the large size and one for the small size.	1
FX-CL-RL	Fixing cleaning roller counter This counter is incremented two for the large size and one for the small size.	1
FX-LW-BR	Pressurizing roller bearing counter This counter is incremented two for the large size and one for the small size.	1
FL-WD	Fixing unit counter by paper size (Wide paper) This counter is incremented one when paper of 279.4 mm or greater main scan width has passed.	1
FL-NRW	Fixing unit counter by paper size (Narrow paper) This counter is incremented one when paper of main scan width smaller than 279.4 mm has passed.	1
OZ-FIL-1	Ozone filter (FM1) fan counter This counter is incremented two for the large size and one for the small size.	1

<DRBL-2>

T-16-70

COPIER>COUNTER>DRBL-2		
Sub-item	**Description**	**Level**
DF-PU-RL	ADF paper feed roller counter Irrespective of the paper size, large or small, this counter is incremented one for each read document (not side) both in simplex mode and duplex mode.	1
DF-SP-PL	ADF separator counter The large and small sizes are not distinguished from each other.	1
DF-SP-PD	ADF separation pad counter Irrespective of the paper size, large or small, this counter is incremented one for each read document (not side) both in simplex mode and duplex mode.	1
DF-FD-RL	ADF transport roller counter Irrespective of the paper size, large or small, this counter is incremented one for each document in simplex mode and three for each read document (front, back, and idle transfer) in duplex mode.	1
LNT-TAPE	ADF dust collection tape counter Irrespective of the paper size, large or small, this counter is incremented one for each read document (not side) both in simplex mode and duplex mode.	1
PD-PU-RL	Paper deck feed roller counter This counter is incremented two for the large size and one for the small size.	1
PD-SP-RL	Paper deck separation roller counter This counter is incremented two for the large size and one for the small size.	1
PD-FD-RL	Paper deck transport roller counter This counter is incremented two for the large size and one for the small size.	1
SORT	Sort counter The large and small sizes are not distinguished from each other.	1
FIN-STPR	Stacker stapling counter	1
SADDLE	Saddle paper transport counter The large and small sizes are not distinguished from each other.	1
SDL-STPL	Saddle stapling counter	1
PUNCH	Punching counter	1
FN-BFFRL	Buffer roller counter The large and small sizes are not distinguished from each other.	1

Chapter 17 Upgrading

Contents

17.1 Outline 17-1
17.1.1 Outline of Upgrading the Machine 17-1
17.1.2 Outline of the Service Support Tool 17-1
17.2 Making Preparations 17-3
17.2.1 Registering the System Software 17-3
17.2.2 Making Connections 17-5
17.3 Formatting the HDD 17-7
17.3.1 Formatting All Partitions 17-7
17.3.2 Formatting Selected Partitions 17-8
17.3.3 Formatting Procedure 17-9
17.4 Downloading System Software 17-10
17.4.1 Downloading System 17-10
17.4.1.1 Outline 17-10
17.4.1.2 Downloading Procedure 17-10
17.4.2 Downloading RUI, and Language 17-13
17.4.2.1 Outline 17-13
17.4.2.2 Downloading Procedure 17-14
17.4.3 Downloading SDICT 17-15
17.4.3.1 Outline 17-15
17.4.3.2 Downloading Procedure 17-15
17.4.4 Downloading MEAPCONT 17-17
17.4.4.1 Outline 17-17
17.4.4.2 Downloading Procedure 17-17
17.4.5 Downloading KEY 17-18
17.4.5.1 Outline 17-18
17.4.5.2 Downloading Procedure 17-19
17.4.6 Downloading BOOT 17-20
17.4.6.1 Outline 17-20
17.4.6.2 Downloading Procedure 17-21
17.4.7 Downloading Dcon and Rcon 17-22
17.4.7.1 Outline 17-22
17.4.7.2 Downloading Procedure 17-23
17.4.8 Downloading G3 FAX 17-24
17.4.8.1 Outline 17-24
17.4.8.2 Downloading Procedure 17-25
17.4.9 Uploading and Downloading Backup Data 17-26
17.4.9.1 Outline 17-26
17.4.9.2 Uploading Procedure 17-27
17.4.9.3 Downloading Procedur 17-29

17.1 Outline

17.1.1 Outline of Upgrading the Machine

iR2270 / iR2870 / iR3570 / iR4570 / / / / / iR2230 / / / iR3530 /

The machine and its accessories may be upgraded by replacing DIMM-ROM or using the Service Support Tool (hereafter, SST) installed on a personal computer (PC).
The following table shows the various system software used in conjunction with the machine and how they may be upgraded.

T-17-1

Type	Type of system software	Method of upgrading		Remarks
		SST	ROM-DIMM replacement	
Machine				
	System (main controller)	Yes	No	The machine controller is also used to control the Super G3 Fax Board-Q1.
	Language (language mode)	Yes	No	
	RUI (remote user interface)	Yes	No	
	Boot (boot program)	Yes	Yes	
	MEAP CONT (MEAP library)	Yes	No	
	SDICT (OCR dictionary)	Yes	No	
	KEY (encryption communication key)	Yes	No	
	DCON (DC controller)	Yes	No	
	RCON (reader controller)	Yes	No	The reader controller is also used to control the ADF.
Accessory				
	Fin-S1 (Finisher-S1)	Yes	No	A special service tool (downloader PCB: FY9-2034) is needed.
	Fin_QR (Finisher-Q3/Saddle Finisher-Q4)	Yes	No	A special service tool (downloader PCB: FY9-2034) is needed.

17.1.2 Outline of the Service Support Tool

iR2270 / iR2870 / iR3570 / iR4570 / / iR2270N / / iR2870N / / iR3570N / / iR4570N / iR2230 / / / iR3530 /

The Service Support Tool (hereafter, SST) has the following functions:

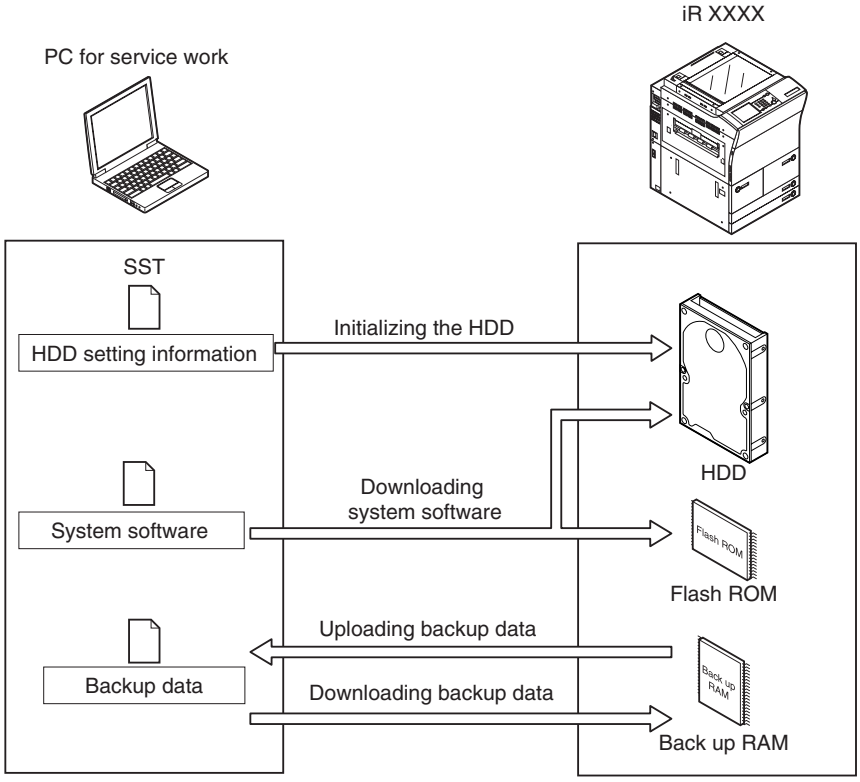

F-17-1

The machine must be in download mode when the SST is used.
The download control program comes in 2 types:

-Normal Mode (download mode B)
turn on the main power while holding down 1+7; then, make the following selections in service mode: COPIER>FUNCTION>SYSTEM>DOWNLOAD
-Safe Mode(download mode A)
turn on the main power while holding down 2+8

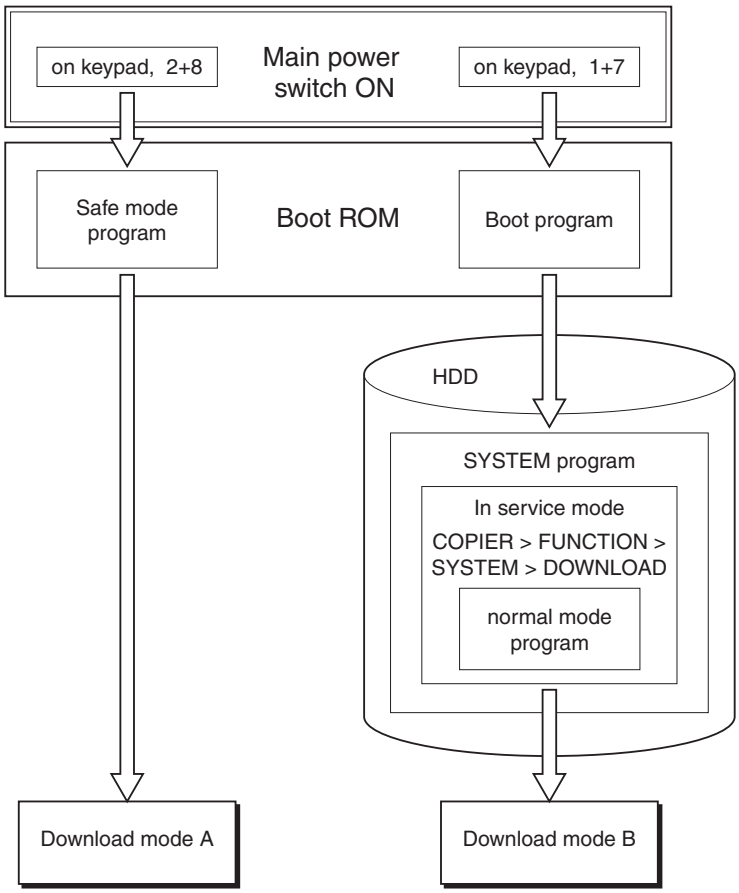

F-17-2

Use safe mode for the following:
-when you have replaced the HDD.
-when the system fails to start up normally.

The following table shows the functions that may be used in download mode with the SST in use:

T-17-2

Function	Download mode	
	Normal mode (download mode B)	Safe mode (download mode A)
Formatting the HDD	-	Entire HDD
	-	BOOTDEV
	FSTDEV	-
	TMP_GEN	-
	TMP_PSS	-
	TMP_FAX	-
	APL_SEND	-
	APL_MEAP	-
	APL_GEN	-
	PDL_DEV	-
	FSTCDEV	-
Downloading the system software	-System	-System
	-Language	-Language
	-RUI	-RUI
	-Boot	-Boot
	-G3FAX	-
	-Dcon	-Dcon
	-Rcon	-Rcon
	-SDICT	-SDICT
	-MEAPCONT	-MEAPCONT
	-KEY	-KEY
Uploading/downloading backup data	-	-SramImg
	-	-Meapback

Installing the System Software
The system software that has been downloaded by the SST (version 3.01 or later) is saved in the temporary storage area of the HDD. You must then turn off and then on the main power switch so that the system software will be written to the system area, boot ROM, and flash ROM when the machine starts up. When you turn off and then on the main power switch for a second time, the machine will start up using the new version of the system software.

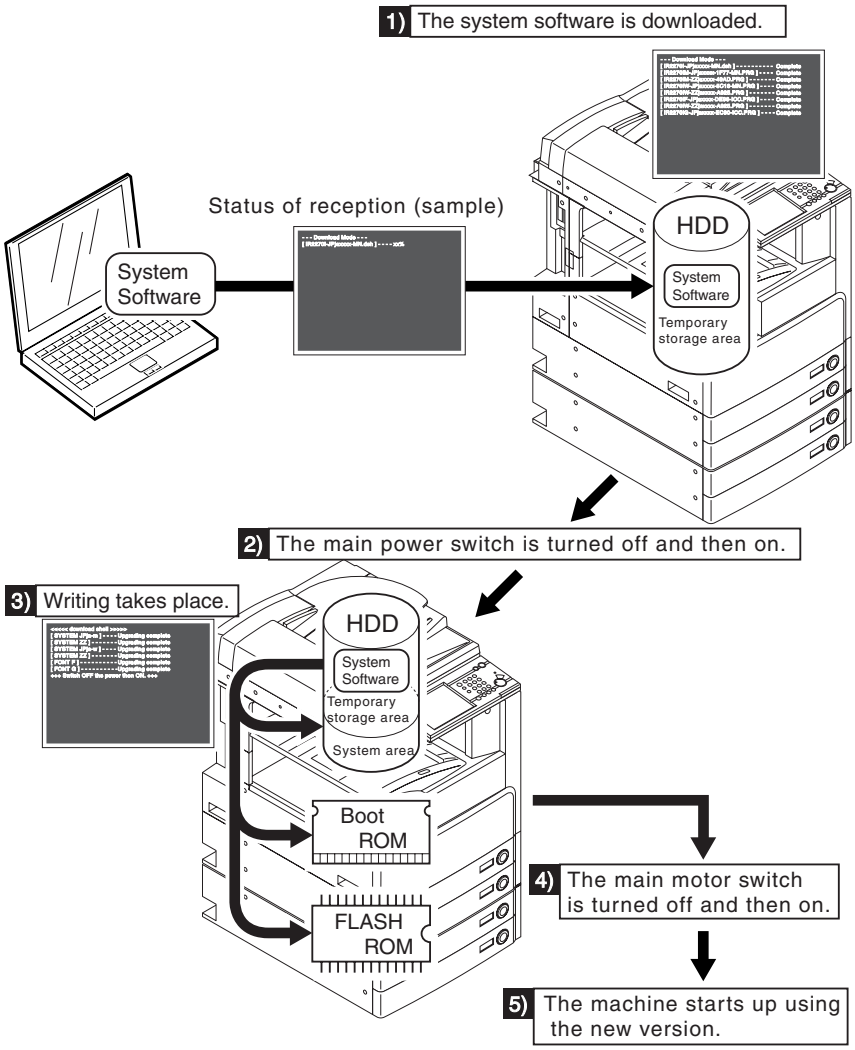

F-17-3

17.2 Making Preparations

17.2.1 Registering the System Software

iR2270 / iR2870 / iR3570 / iR4570 / / iR2270N / / iR2870N / / iR3570N / / iR4570N

You must first register the system software found on the System CD to the SST.

[Preparatory Work]
Items to Prepare
-PC to which the SST (version 3.01 or later) has been installed
-System CD for the iR4570/3570, 2870/2270 Series

[Registering the System Software]
1) Start up the PC.
2) Set the system CD in the PC.
3) Start up the SST.
4) Click [Register System Software]

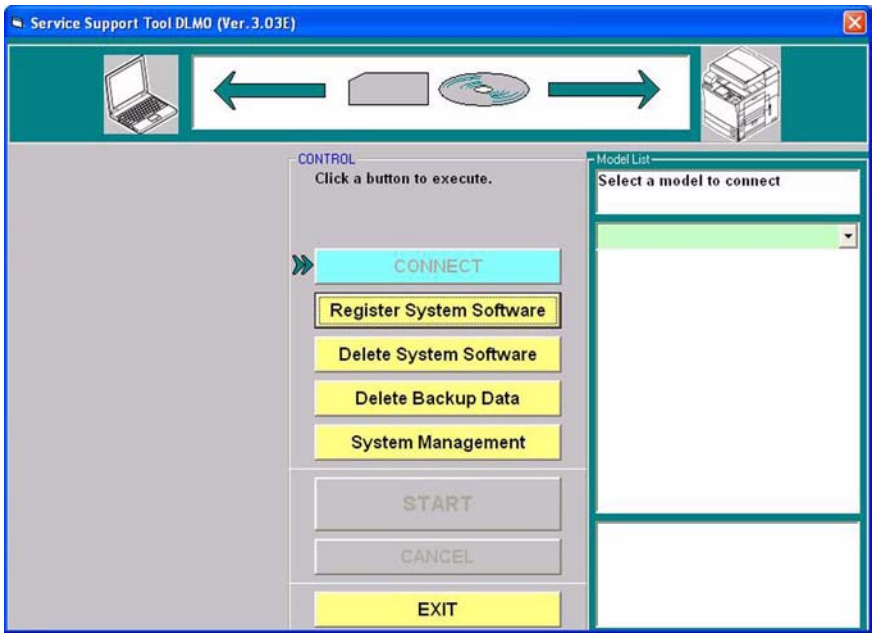

F-17-4

5) Select the drive in which you have set the System CD, and click [SEARCH].

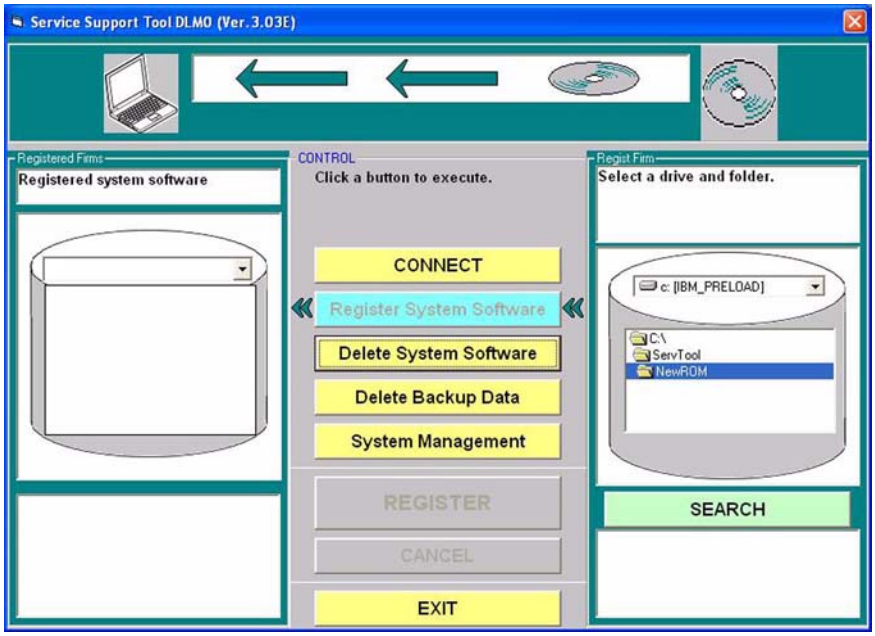

F-17-5

6) The list of system software found on the System CD appears. Remove the check from the folders and software you will not need; then, click [REGISTER].

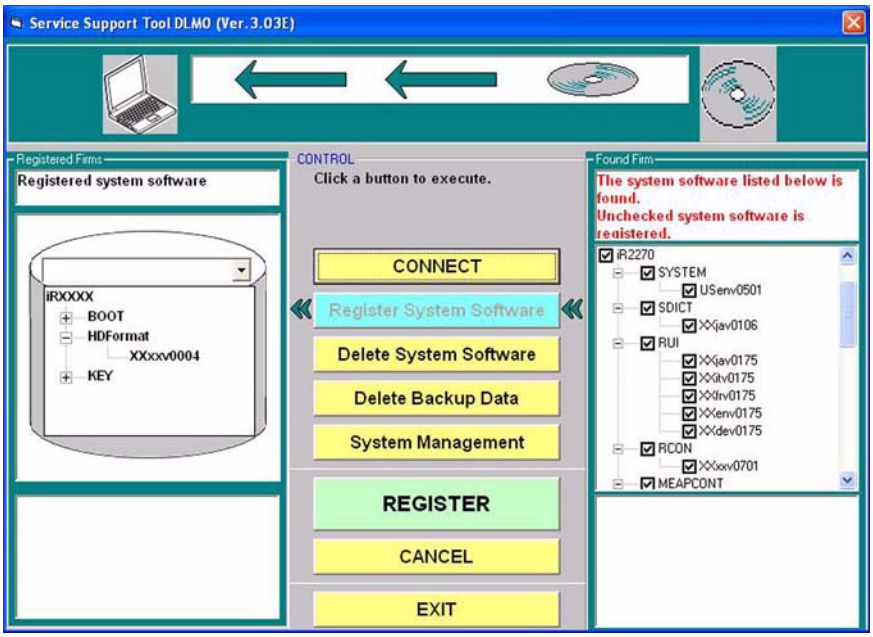

F-17-6

7) When the result of registration is indicated, click [OK].

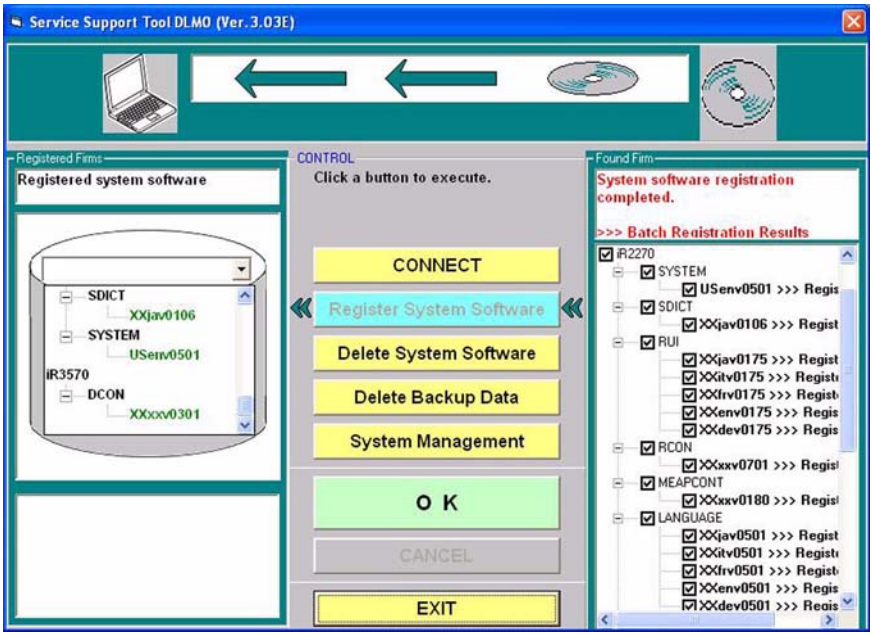

F-17-7

17.2.2 Making Connections

iR2270 / iR2870 / iR3570 / iR4570 / / iR2270N / / iR2870N / / iR3570N / / iR4570N

You are now ready to connect the PC to the machine.

[Preparatory Work]
Items to Prepare
- PC to which the SST (version 3.01 or later) and the system software for the iR4570/3570, 2870/2270 has been registered
- Twisted pair cross cable
10Base-T: Category 3 or 5
100Base-TX: Category 5

[Procedure]
1) Start up the PC.
2) Check the network settings of the PC.
- At the command prompt, type 'IPCONFIG', and press the Return key.
- Check to see that the network settings are as follows:
IP address: 172.16.1.160
subnet mask: 255.255.255.0
default gateway: any

⚠Do not use the following IP address:
- 172.16.1.0
- 172.16.1.100
- 172.16.1.255
If the settings are not as indicated below, make the appropriate changes:

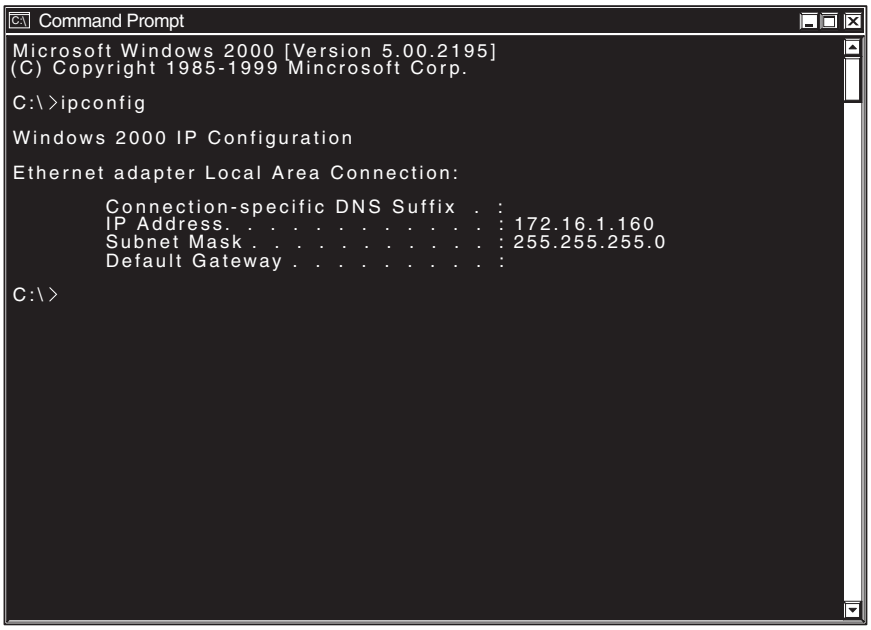

F-17-8

3) Check to see that the Execute/Memory lamp on the control panel is off, and turn off the main power switch (iR4570/3570, 2870/2270 Series).
3-1) Hold down the power switch on the control panel for 3 sec or more.
3-2) Follow the instructions indicated on the control panel so that the main power switch may be turned off.
3-3) Turn off the main power switch.
4) Connect the PC to the machine using a cross cable (iR4570/3570, 2870/2270 Series).

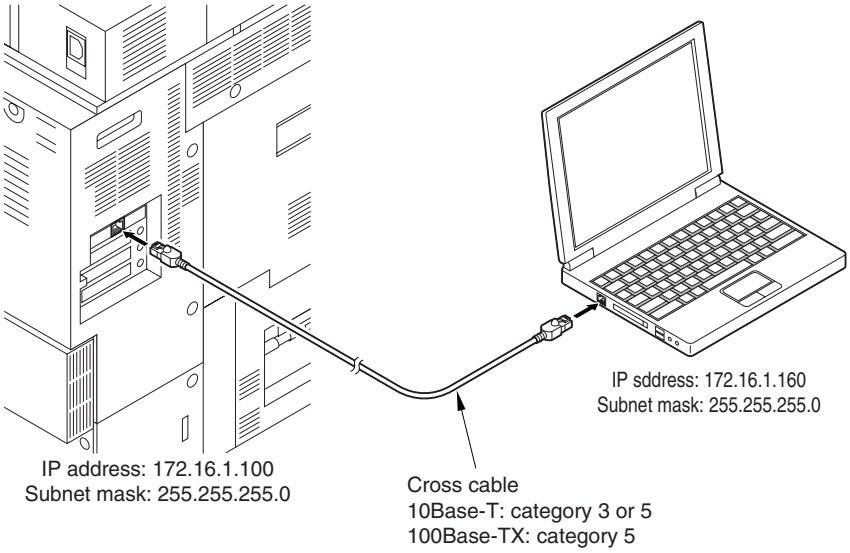

F-17-9

5) Start up the machine to suit the download mode you will be using (iR4570/3570, 2870/2270 Series).
- Normal Mode
Turn on the main power switch while holding down 1+7.
When the machine has started up, make the following selections: COPIER > FUNCTION > SYSTEM > DOWNLOAD.
- Safe Mode
Turn on the main power switch while holding down 2+8.
6) Start up the Service Support Tool.
7) Select the model of the machine to connect (iR2270/3570).

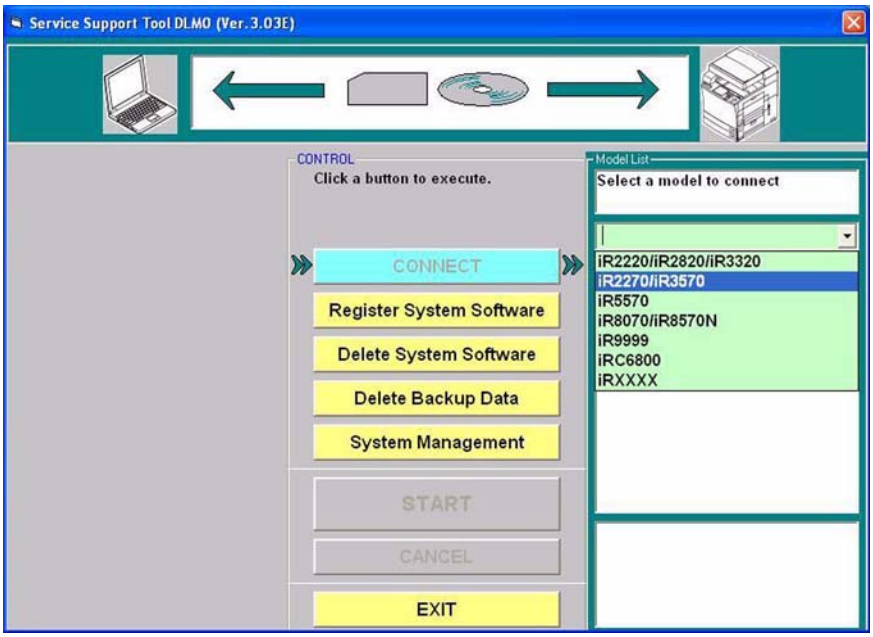

F-17-10

8) Click [START].

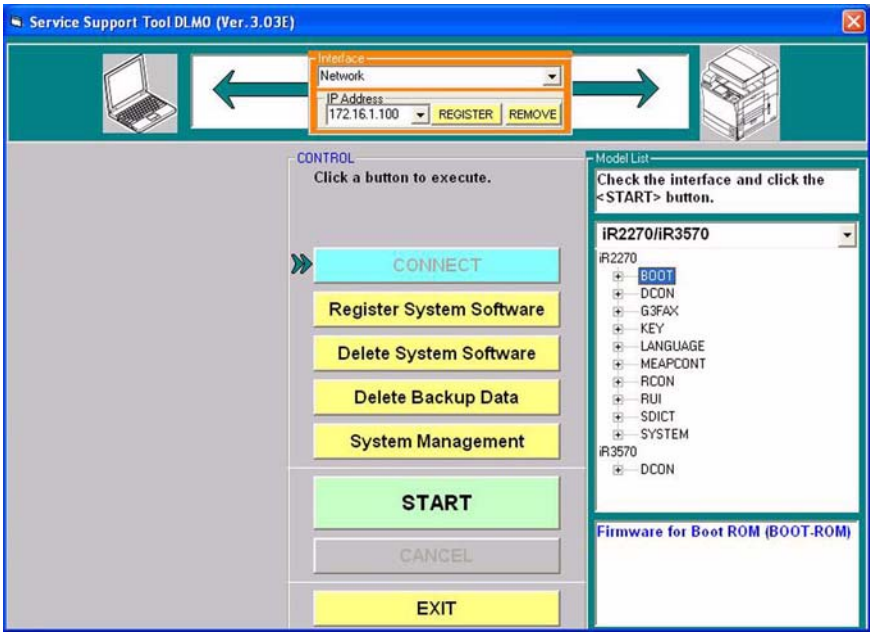

F-17-11

17.3 Formatting the HDD

17.3.1 Formatting All Partitions

iR2270 / iR2870 / iR3570 / iR4570 / / iR2270N / / iR2870N / / iR3570N / / iR4570N / iR2230 / / / iR3530 /

When you format all partitions of the HDD, all individual partitions will be initialized and made ready for use by the main controller.
The information needed for partition settings is stored under HDFormat of the iRXXXX.

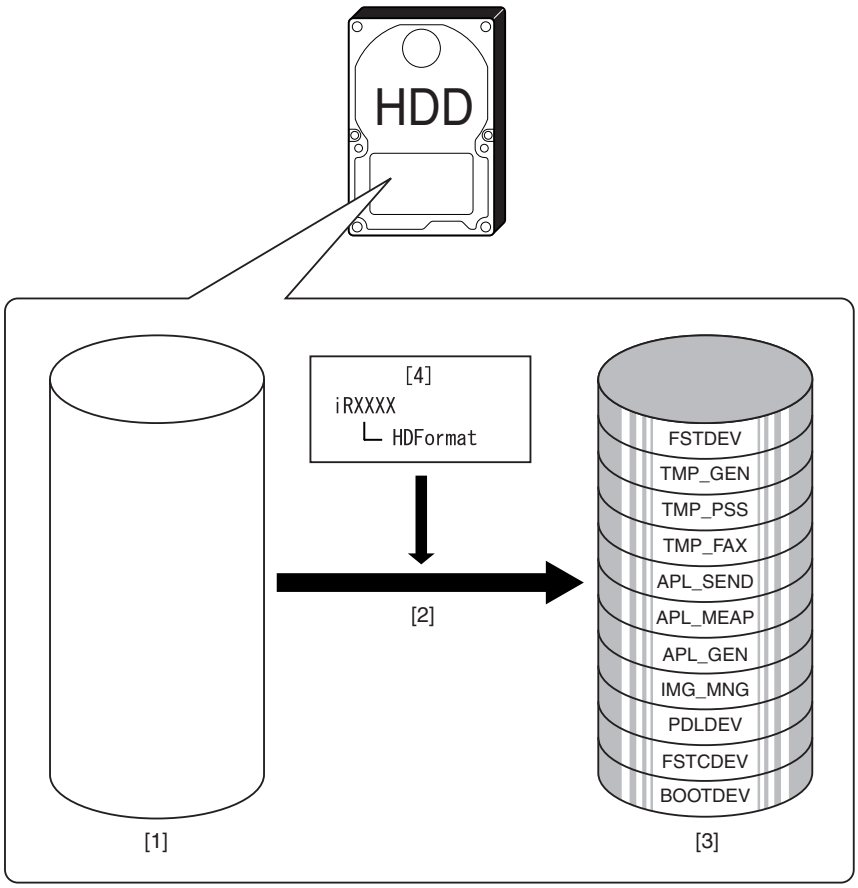

F-17-12

[1] HDD (service part; without partition setup)
[2] Formatting of all partitions (in safe mode only)
[3] HDD after formatting
[4] Partition setup information

17.3.2 Formatting Selected Partitions

iR2270 / iR2870 / iR3570 / iR4570 / / iR2270N / / iR2870N / / iR3570N / / iR4570N / iR2230 / / / iR3530 /

You can also format (initialize) only those partitions that you select.

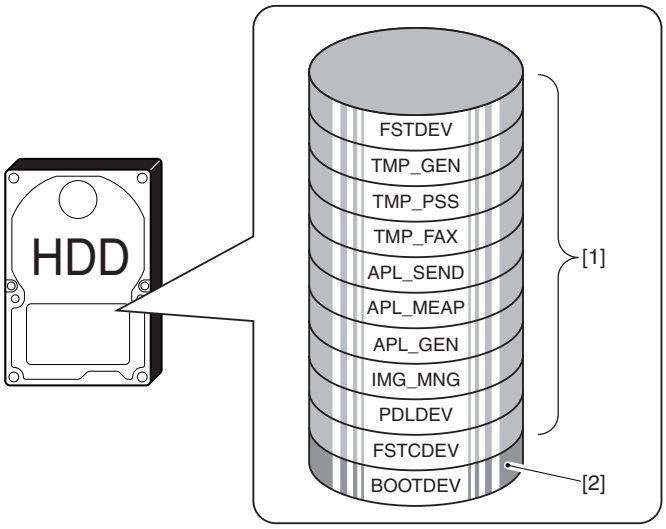

F-17-13

[1] Formatting possible in normal mode
[2] Formatting possible in safe mode (requires downloading of System and RUI after formatting)

1. Unless you have selected 'ALL', you may execute formatting without registering HDFormat.
2. An attempt to format after selecting TMP_FAX in the absence of a fax board will cause an error.
3. An attempt to format after selecting FSTCDEV for expansion will cause an

17.3.3 Formatting Procedure

iR2270 / iR2870 / iR3570 / iR4570 / / iR2270N / / iR2870N / / iR3570N / / iR4570N / iR2230 / / / iR3530 /

1) Click [Format HDD].

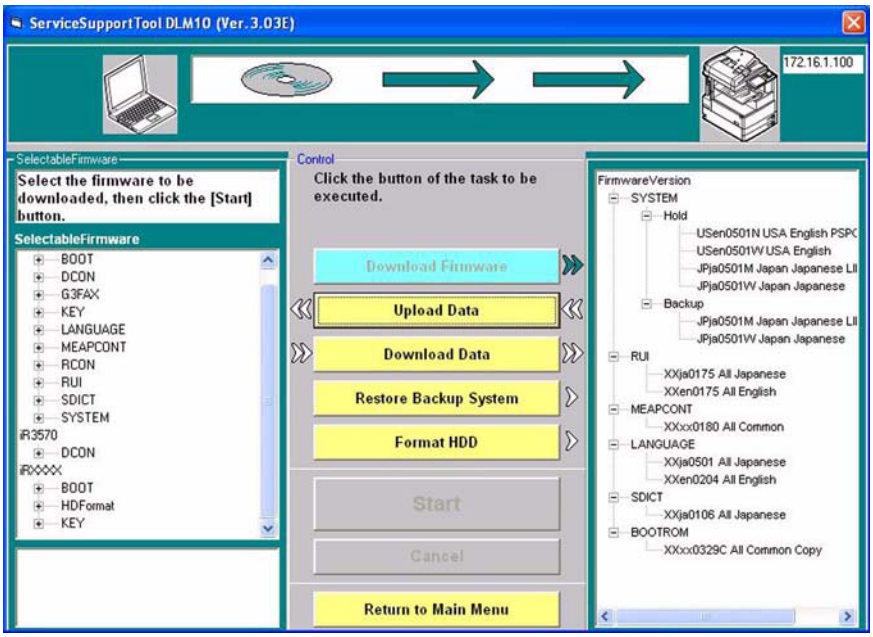

F-17-14

2) Select the partitions you want to format. Or, select 'ALL'.

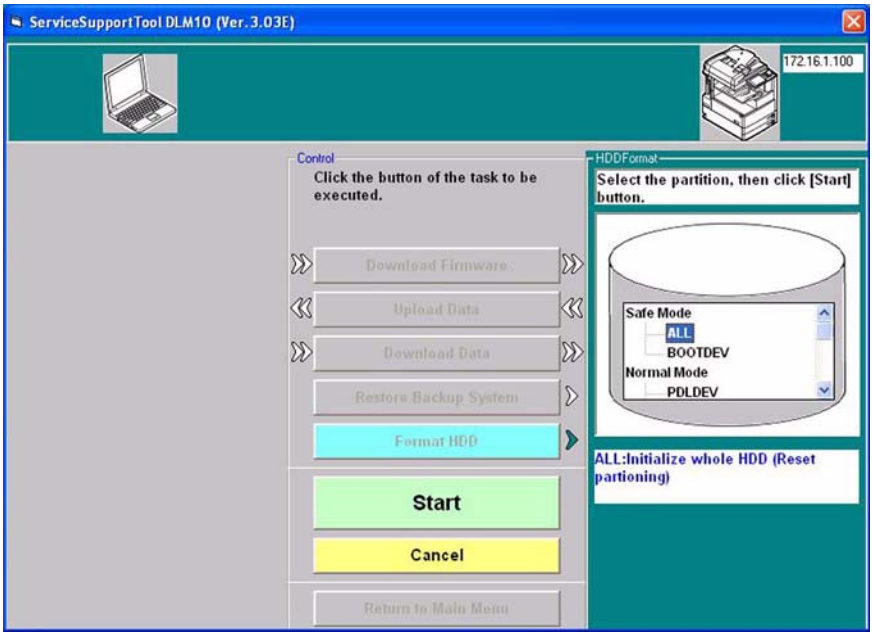

F-17-15

3) Click [Start].
4) When the Confirmation screen has appeared, click [Execute Formatting].

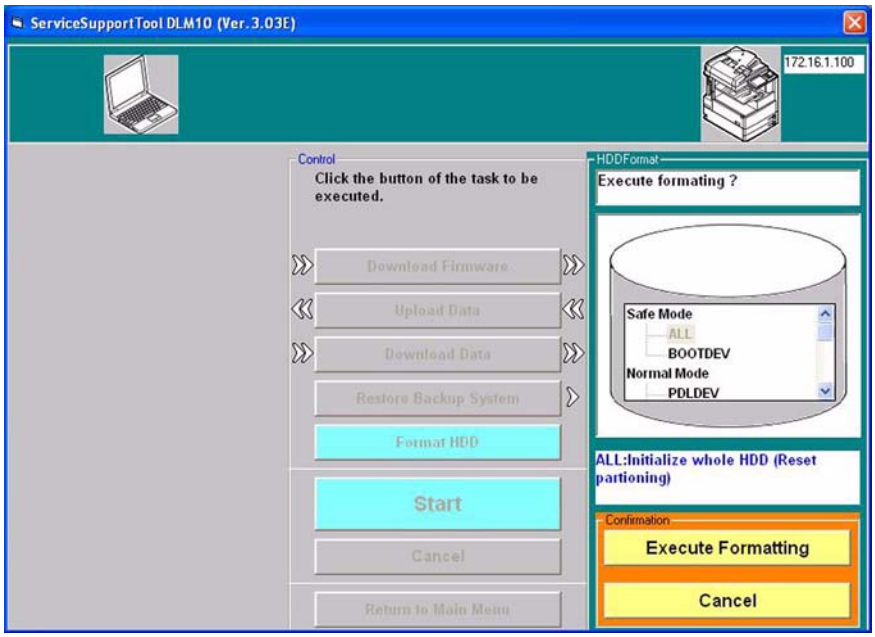

F-17-16

5) When the session has ended, click [OK].

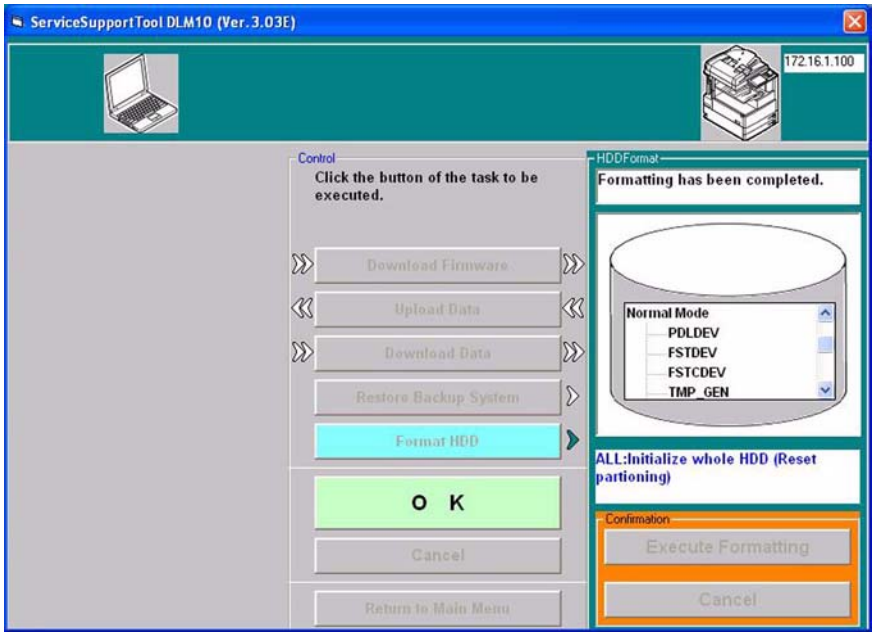

F-17-17

6) Start a download session. Or, turn off and then on the machine to end the work.

- If you have formatted all partitions or formatted BOOTDEV, be sure to download System newly. (Otherwise, 'E602' will occur when you turn on the main power.)

17.4 Downloading System Software

17.4.1 Downloading System

17.4.1.1 Outline

iR2270 / iR2870 / iR3570 / iR4570 / / iR2270N / / iR2870N / / iR3570N / / iR4570N / iR2230 / / / iR3530

The system software comes in 2 types (one for use inside Japan and the other, outside Japan).

Unlike previous iR controllers, however, there is only one type of system software. (Previously, one type supported NetWare while the other did not. There is now only one type for the machine supporting NetWare.)

17.4.1.2 Downloading Procedure

iR2270 / iR2870 / iR3570 / iR4570 / / iR2270N / / iR2870N / / iR3570N / / iR4570N / iR2230 / / / iR3530 /

You can run a downloading session either in normal or safe mode.
1) Select the version of the system you want to download.

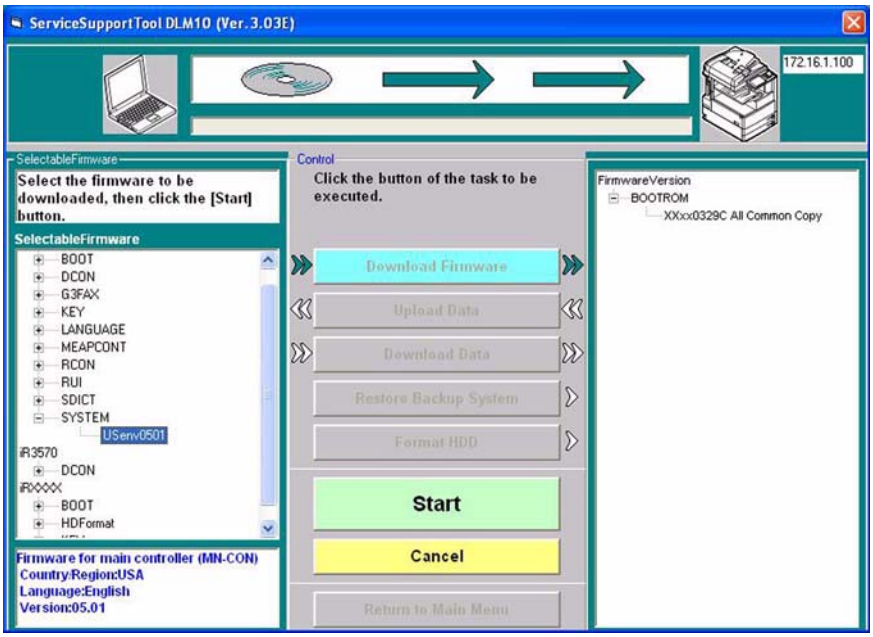

F-17-18

2) Click [Start].

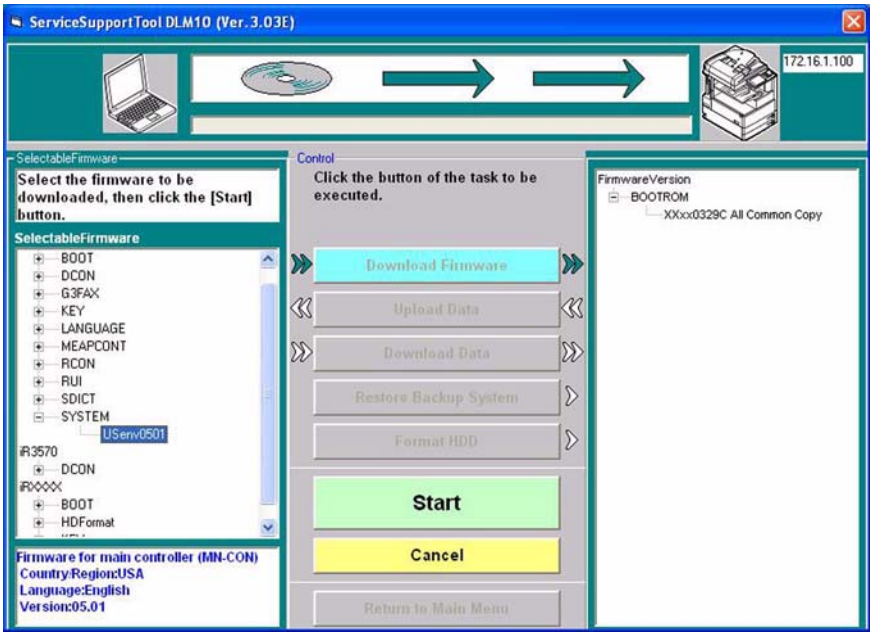

F-17-19

3) When the session has ended, click [OK].

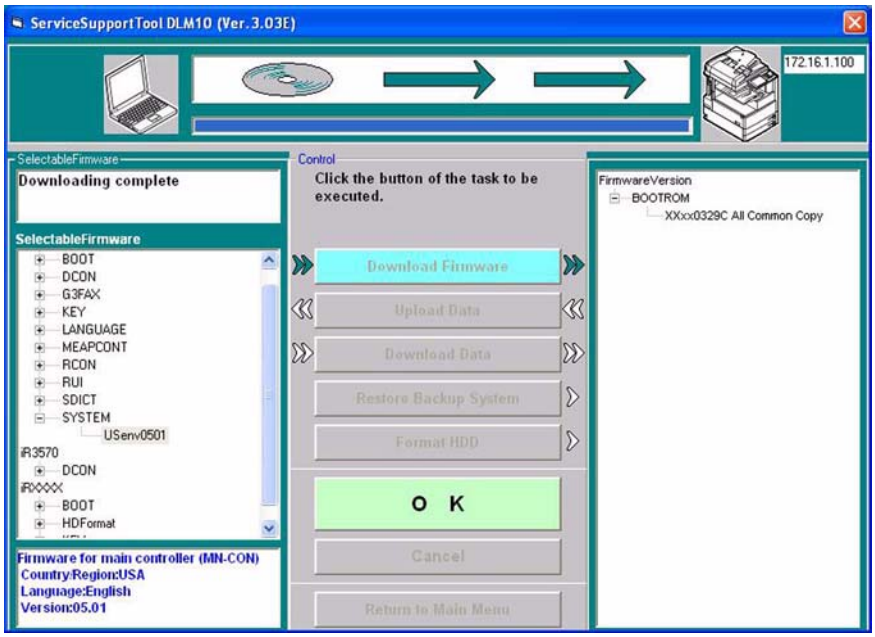

F-17-20

4) If you want to start another downloading session, see the appropriate instructions.
5) When you are done with downloading, turn off and then on the main power (iR4570/3570, 2870/2270 Series).
6) See the upgrade status indicated on the control panel (iR4570/3570, 2870/2270 Series). When a message appears asking you to turn off and then on the switch, turn off and then on the main power (iR4570/3570,2870/2270 Series).

Be sure never to turn off the power while the machine is executing a downloading session or writing downloaded software. The ongoing session will be suspended and the machine may fail to start up.

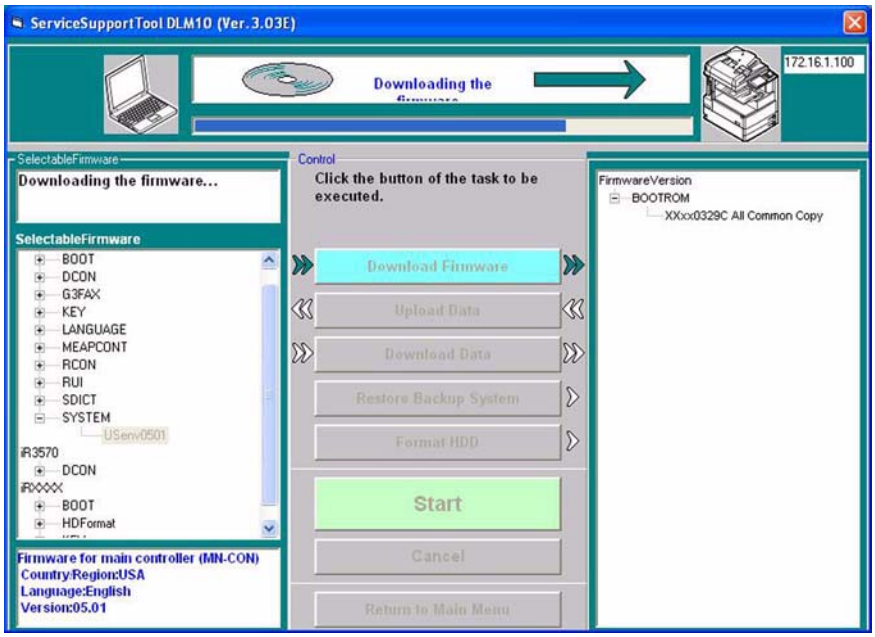

F-17-21

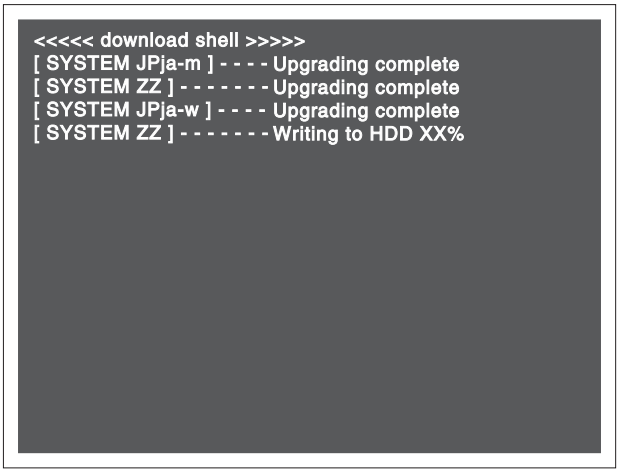

F-17-22

If the machine fails to start up, format BOOTDEV using HDFormat and then download such software as System, Language, and RUI.

17.4.2 Downloading RUI, and Language

17.4.2.1 Outline

iR2270 / iR2870 / iR3570 / iR4570 / / iR2270N / / iR2870N / / iR3570N / / iR4570N / iR2230 / / / iR3530

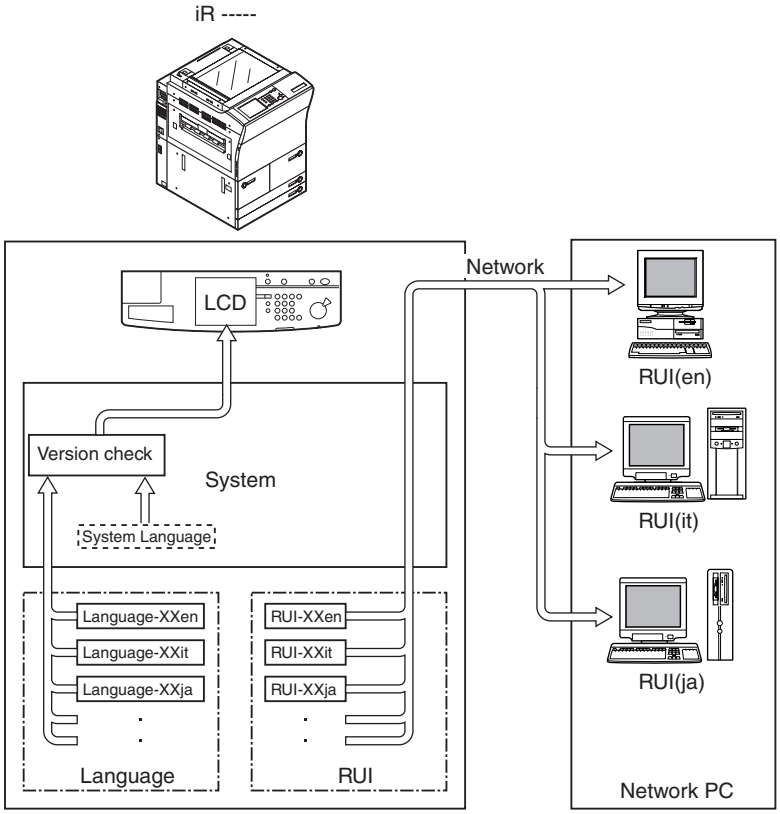

F-17-23

T-17-3

Control Panel LCD Display Language
Check the version of System and Language.
Å@ 1. If correct, You can switch languages by making the following selections in user mode: common settings>display language change.
Å@ 2. If not correct, 'E744' will be indicated, and System Language will be used when the main power is turned off and then on.

T-17-4

RUI Display Language	
Select using the RUI. You can select a different language for a different PC.	
<Language Code>	<Language>

RUI Display Language	
de	German
en	English
fr	French
it	Italian
ja	Japanese

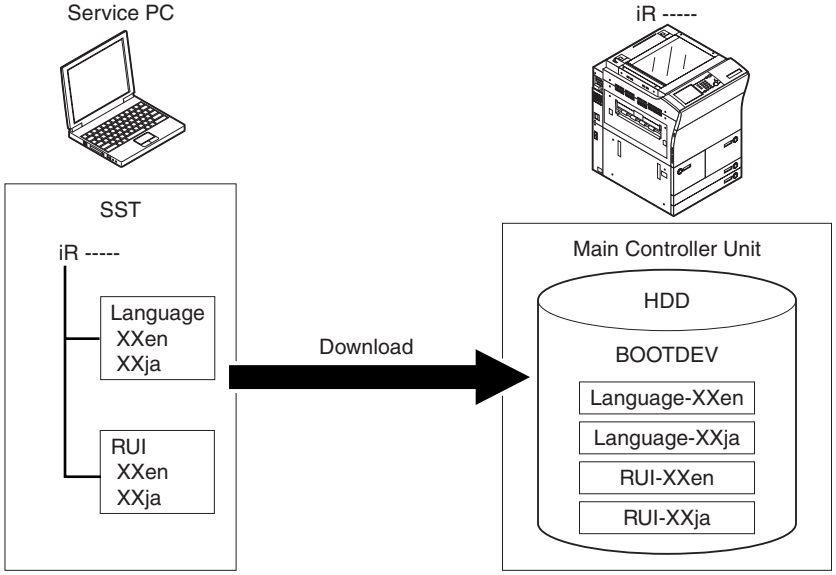

F-17-24

17.4.2.2 Downloading Procedure

iR2270 / iR2870 / iR3570 / iR4570 / / iR2270N / / iR2870N / / iR3570N / / iR4570N / iR2230 / / / iR3530 /

You can run a download session in either normal or safe mode.
[In the Case of Language]
1) Select the version of Language to download.

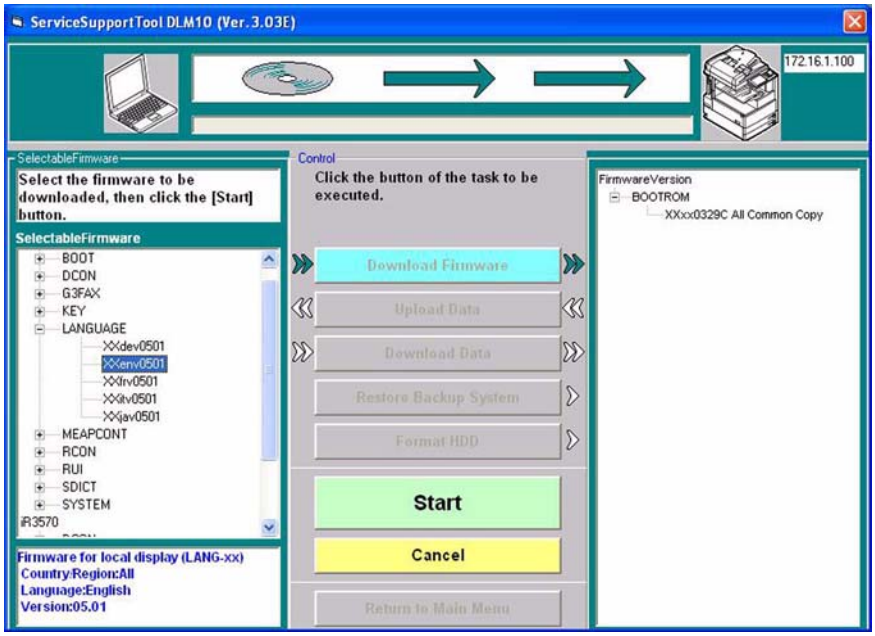

F-17-25

2) Click [Start].

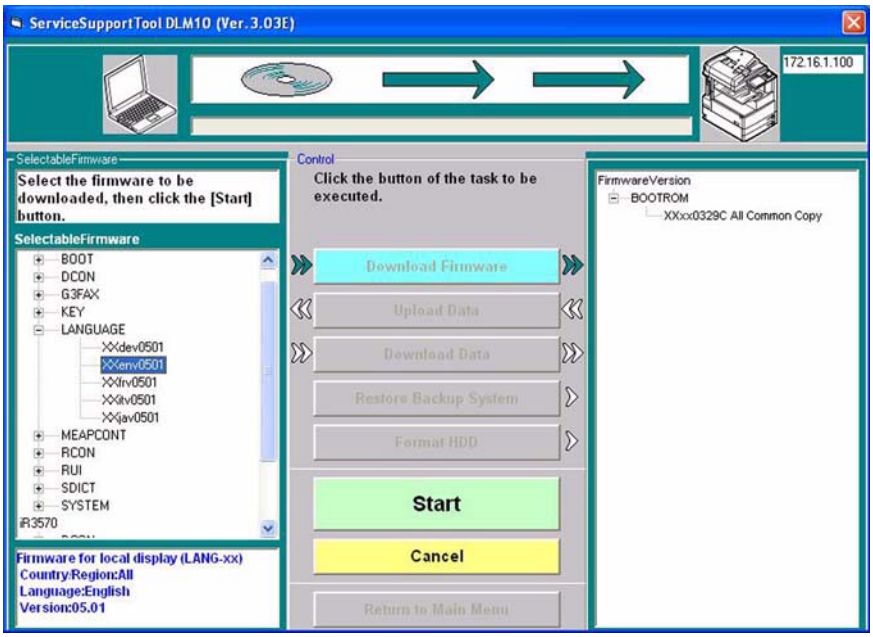

F-17-26

3) When the result of the downloading session has appeared, click [OK].

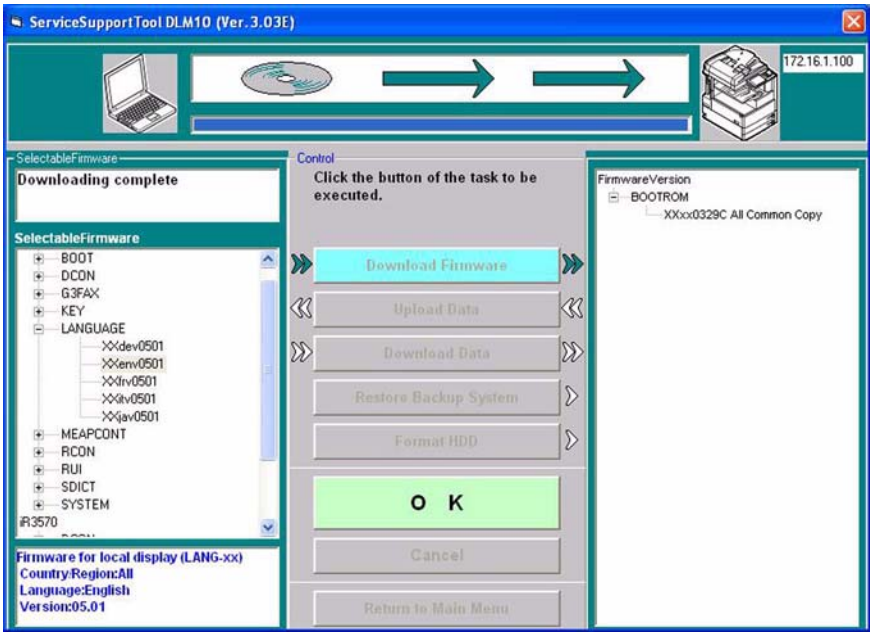

F-17-27

4) If you want another downloading session, see the appropriate instructions.
5) When you are done, turn off and then on the main power (iR4570/3570, 2870/2270 Series).
6) See the status of upgrading indicated on the control panel (iR4570/3570, 2870/2270 Series). When a message appears asking you to turn off and then on the machine, turn off and then on the main power (iR4570/3570, 2870/2270 Series).

Be sure never to turn off the power while the machine is executing a downloading session or writing downloaded software. Otherwise, the ongoing session will be suspended and the machine may fail to start up.
If the machine fails to start up, format BOOTDEV using HDFormat, and download such software as System, Language, and RUI.

17.4.3 Downloading SDICT

17.4.3.1 Outline

iR2270 / iR2870 / iR3570 / iR4570 / / iR2270N / / iR2870N / / iR3570N / / iR4570N / iR2230 / / / iR3530 /

SDICT is a dictionary used when converting image data read by the reader unit into character code (OCR processing). This function is used in conjunction with the PDF Generation Expansion Kit-B1.

17.4.3.2 Downloading Procedure

iR2270 / iR2870 / iR3570 / iR4570 / / iR2270N / / iR2870N / / iR3570N / / iR4570N / iR2230 / / / iR3530 /

You can run a downloading session in either normal or safe mode.
1) Select the version of SDICT to download.

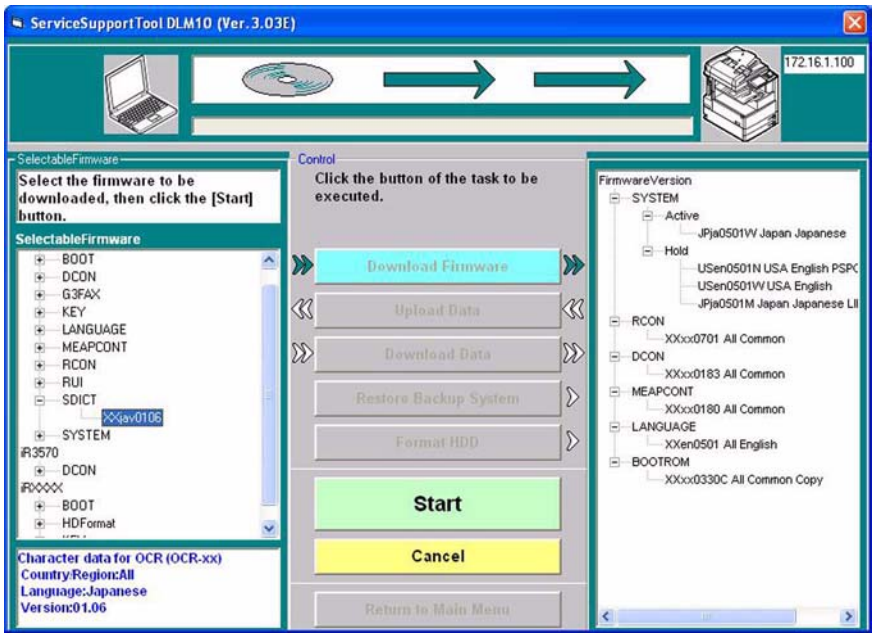

F-17-28

2) Click [Start].

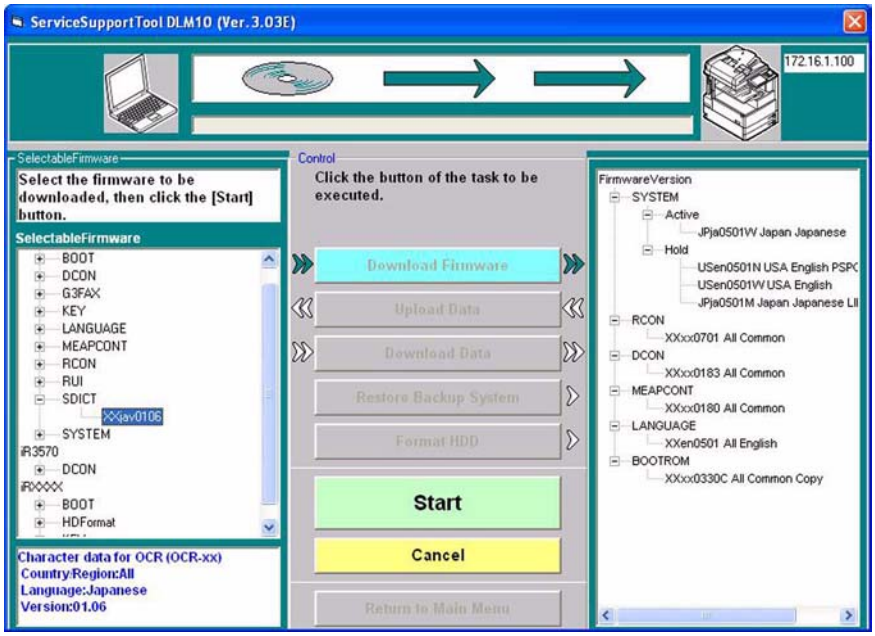

F-17-29

3) When the session has ended, click [OK].

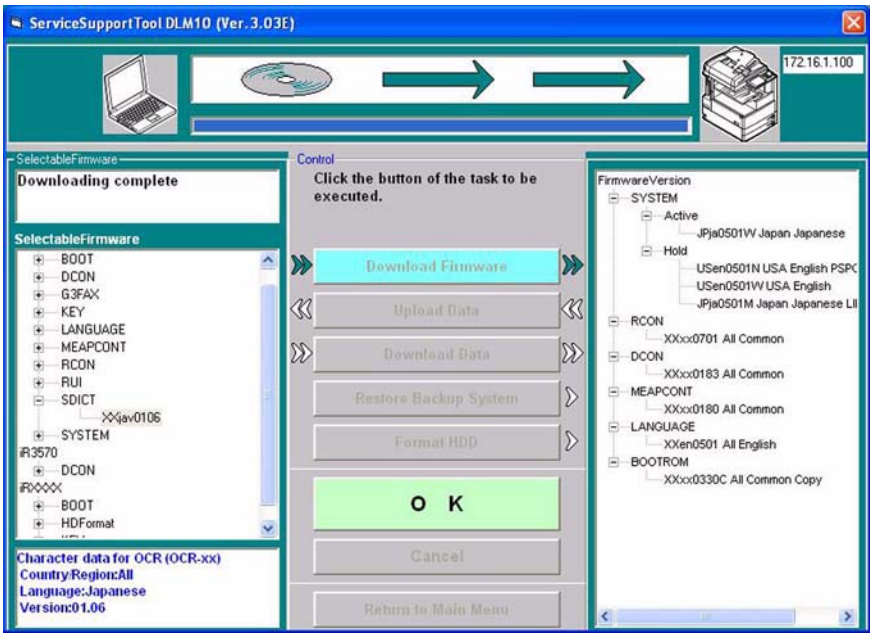

F-17-30

4) If you want to run another downloading session, see the appropriate instructions.
5) When you are done, turn off and then on the main power (iR4570/3570, 2870/2270 Series).
6) See the status of upgrading indicated on the control panel (iR4570/3570, 2870/2270 Series). When a message appears asking you to turn off and then on the switch, turn off and then on the main power (iR4570/3570, 2870/2270 Series).

Be sure never to turn off the machine while it is executing a downloading session or writing downloaded software. Otherwise, the ongoing session will be suspended and the machine may fail to start up.
If the machine fails to start up, format BOOTDEV using HDFormat, and download such software as System, Language, and RUI.

17.4.4 Downloading MEAPCONT

17.4.4.1 Outline

iR2270 / iR2870 / iR3570 / iR4570 / / iR2270N / / iR2870N / / iR3570N / / iR4570N / iR2230 / / / iR3530 /

MEAPCONT is a standard library used in conjunction with a MEAP application.

17.4.4.2 Downloading Procedure

iR2270 / iR2870 / iR3570 / iR4570 / / iR2270N / / iR2870N / / iR3570N / / iR4570N / iR2230 / / / iR3530 /

You can execute a downloading session in either normal or safe mode.
1) Select the version of MEAPCONT you want to download.

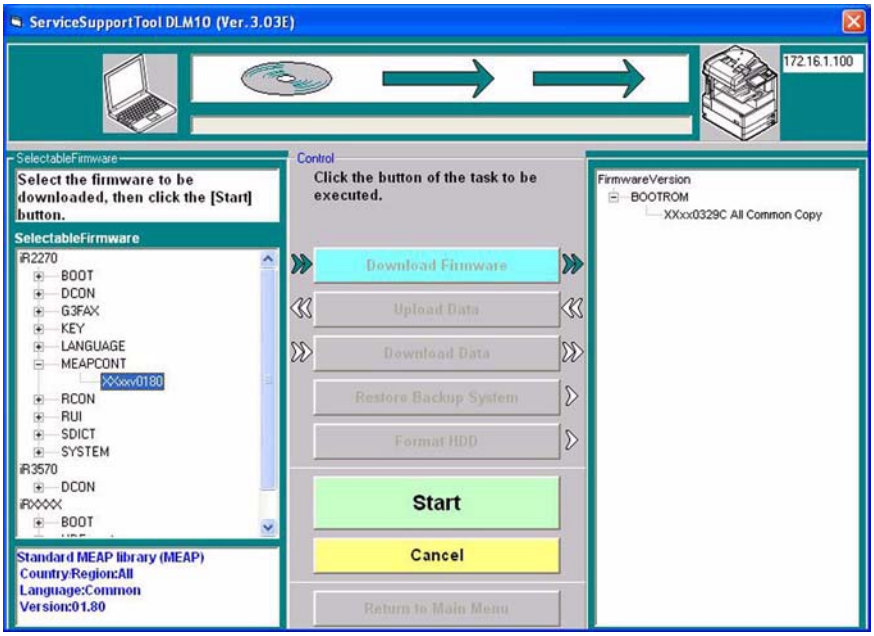

F-17-31

2) Click [Start].

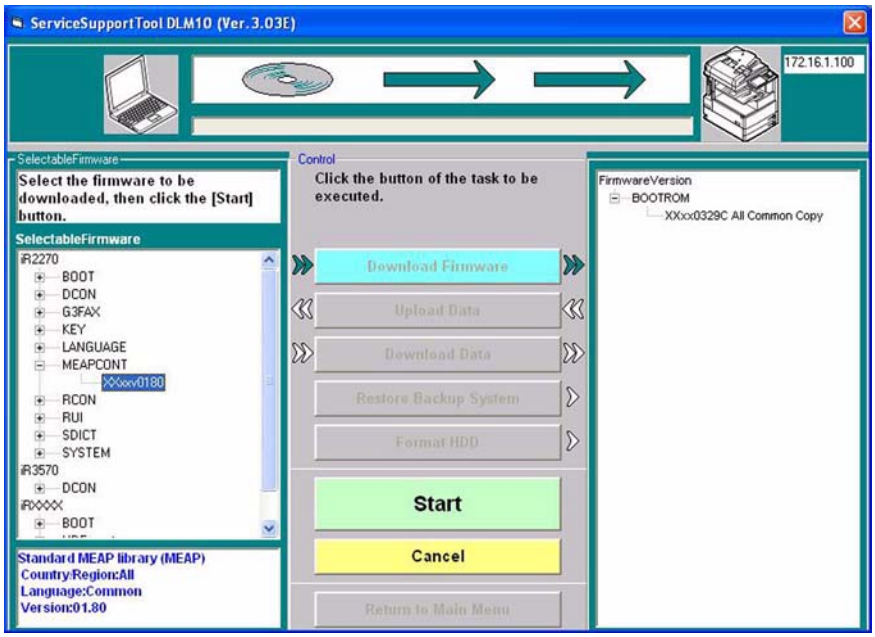

F-17-32

3) When the downloading session has ended, click [OK].

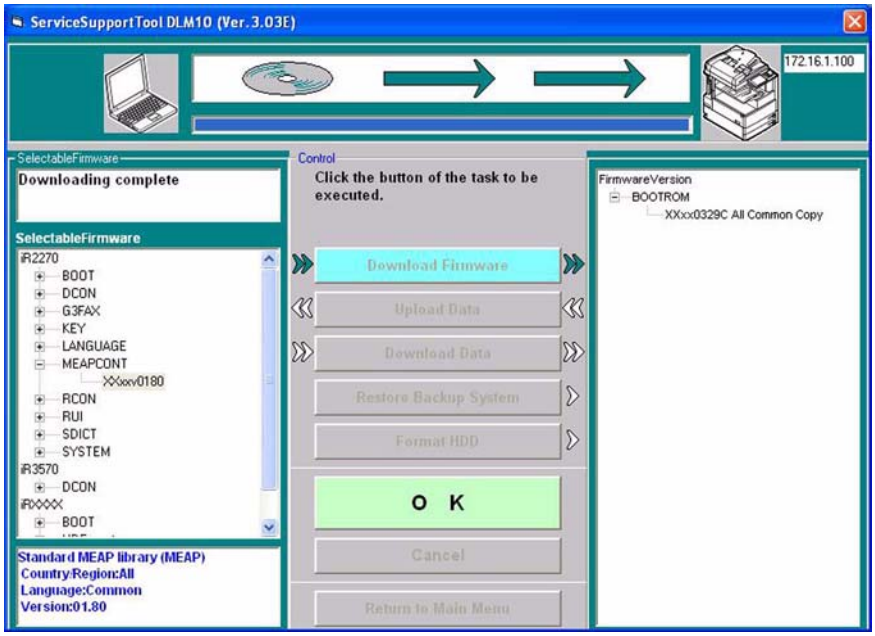

F-17-33

4) If you want to run another downloading session, see the appropriate instructions.
5) When you are done, turn off and then on the main power (iR4570/3570, 2870/2270 Series).
6) See the status of upgrading indicated on the control panel (iR4570/3570, 2870/2270 Series). When a message appears asking you to turn off and then on the switch, turn off and then on the main power (iR4570/3570, 2870/2270 Series).

Be sure never to turn off the machine while it is executing a downloading session or writing downloaded software. Otherwise, the ongoing session will be suspended and the machine may fail to start up.
If the machine fails to start up, format BOOTDEV using HDFormat, and download such software as System, Language, and RUI.

17.4.5 Downloading KEY

17.4.5.1 Outline

iR2270 / iR2870 / iR3570 / iR4570 / / iR2270N / / iR2870N / / iR3570N / / iR4570N / iR2230 / / / iR3530 /

KEY serves as a certificate used for encrypted communications over a network.

KEY may be either of 2 types: XXxc and XXxp. Be sure to download both types.

17.4.5.2 Downloading Procedure

iR2270 / iR2870 / iR3570 / iR4570 / / iR2270N / / iR2870N / / iR3570N / / iR4570N / iR2230 / / / iR3530 /

You can execute a download session in either normal or safe mode.
1) Select the version of KEY you want to download.

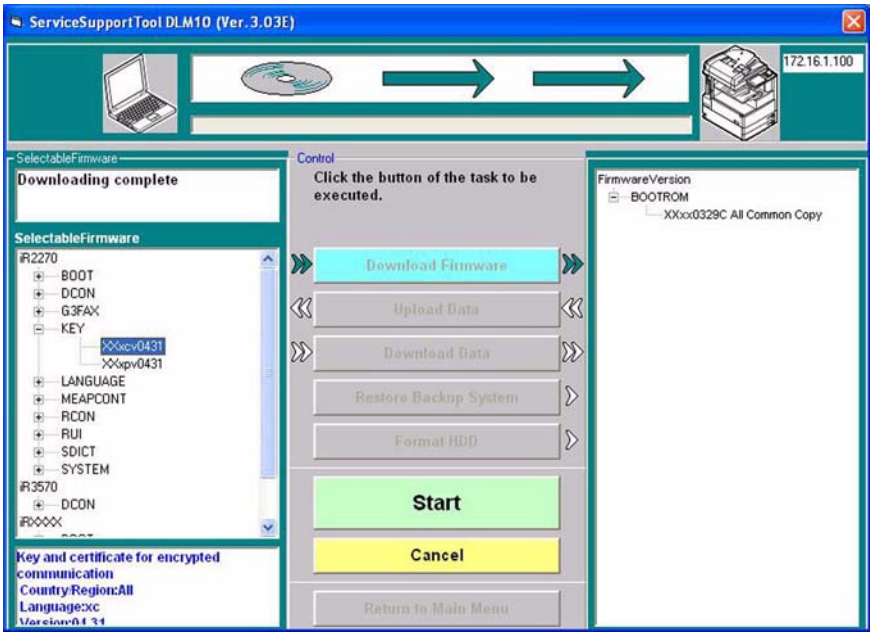

F-17-34

2) Click [Start].

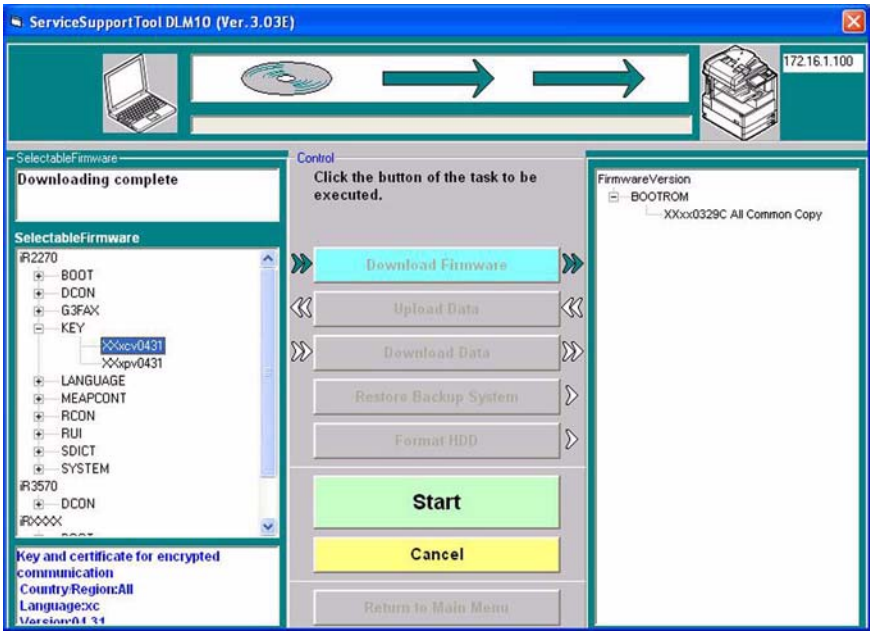

F-17-35

3) When the downloading session has ended, click [OK].

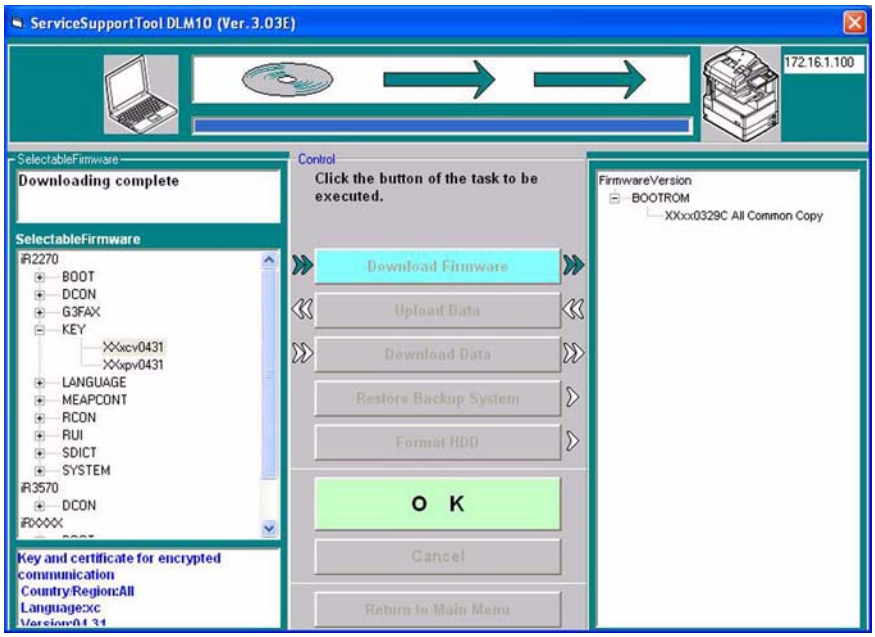

F-17-36

4) If you want to execute a different downloading session, see the appropriate instructions.
5) When you are done, turn off and then on the main power (iR4570/3570, 2870/2270 Series).
6) See the status of upgrading indicated on the control panel of the machine (iR4570/3570, 2870/2270 Series). When a message appears asking you to turn off and then on the switch, turn off and then on the main power (iR4570/3570, 2870/2270 Series).

Be sure never to turn off the machine while it is executing a downloading session or writing downloaded system software. Otherwise, the ongoing write operation will be suspended and the machine may fail to start up.
If the machine fails to start up, format BOOTDEV using HDFormat, and download such software as System, Language, and RUI.

17.4.6 Downloading BOOT

17.4.6.1 Outline

iR2270 / iR2870 / iR3570 / iR4570 / / iR2270N / / iR2870N / / iR3570N / / iR4570N / iR2230 / / / iR3530 /

Boot registered in the SST may be used in common for various types of boot ROMs. You cannot change the type of a boot ROM by means of downloading.

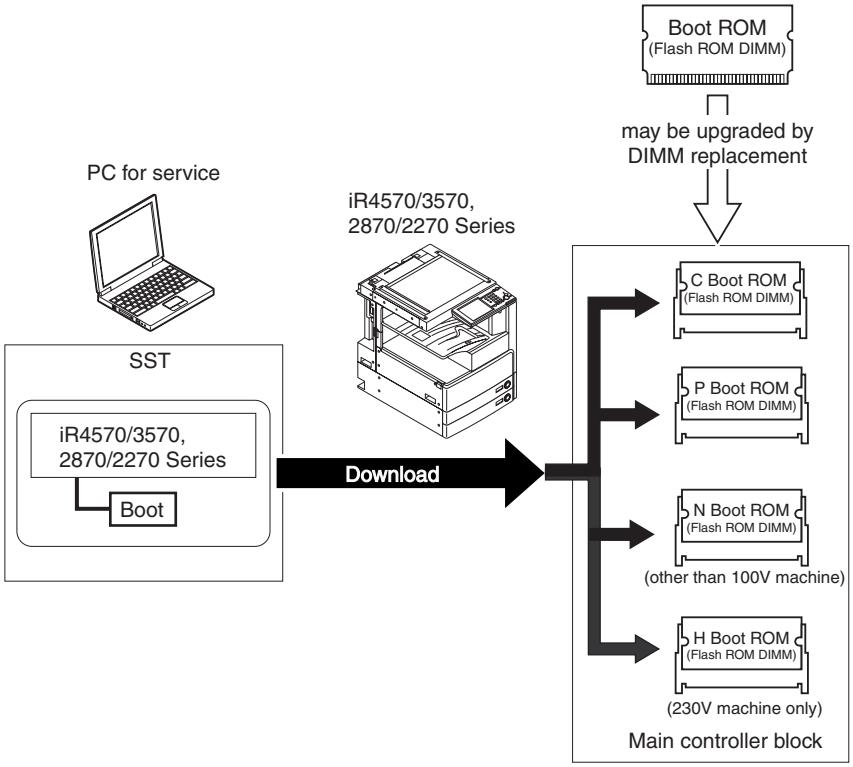

F-17-37

If a downloading session fails, you will have to replace the boot ROM.

17.4.6.2 Downloading Procedure

iR2270 / iR2870 / iR3570 / iR4570 / / iR2270N / / iR2870N / / iR3570N / / iR4570N / iR2230 / / / iR3530 /

You can execute a downloading session in either normal or safe mode.
1) Select the version of BOOT to download.

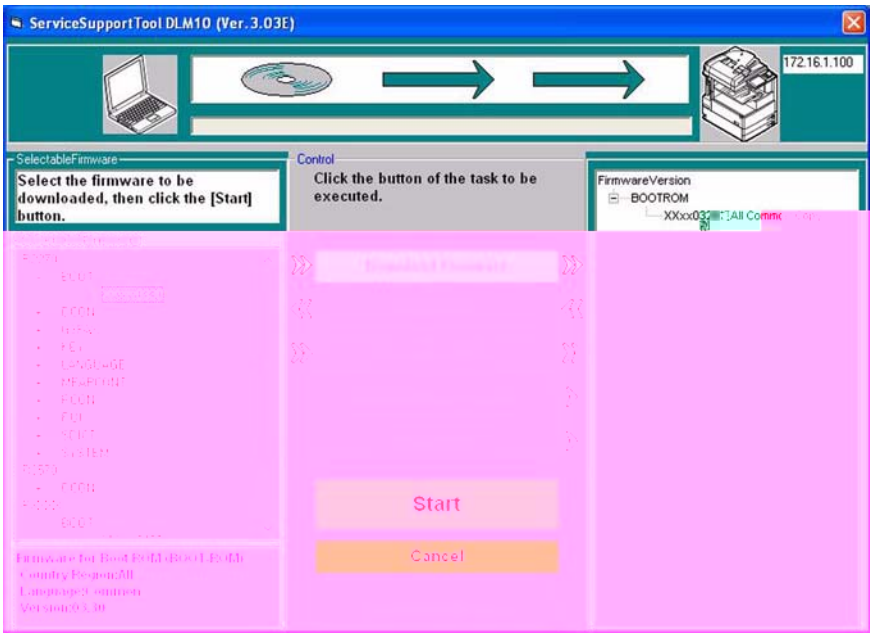

F-17-38

2) Click [Start].

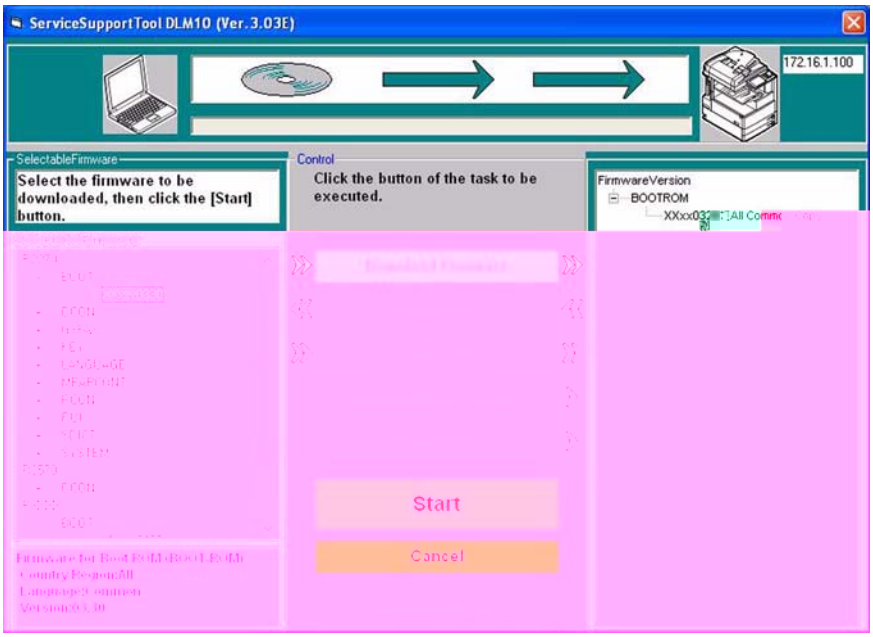

F-17-39

3) When the downloading session has ended, click [OK].

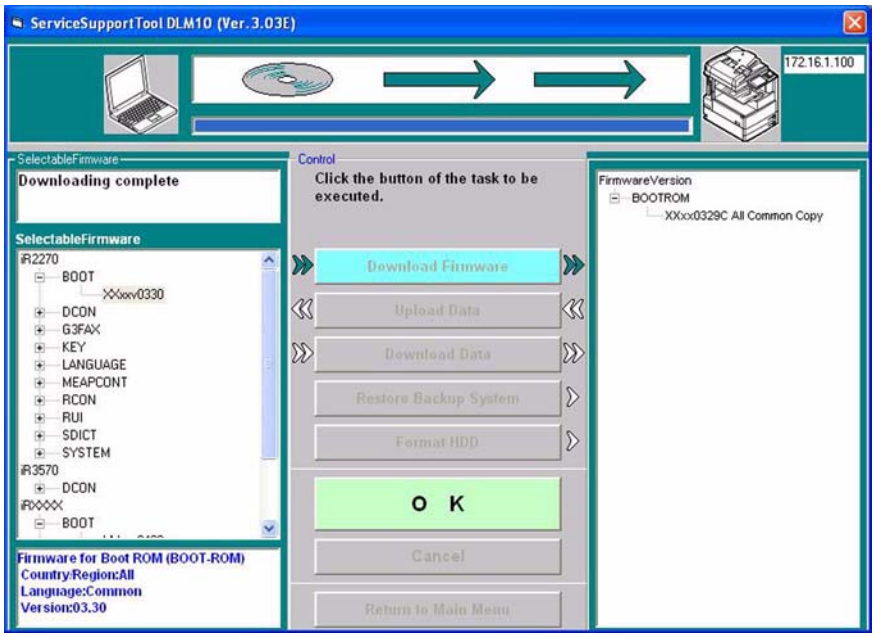

F-17-40

4) If you want to execute a different downloading session, see the appropriate instructions.
5) When you are done, turn off and then on the main power (iR4570/3570, 2870/2270 Series).
6) See the status of upgrading indicated on the control panel of the machine (iR4570/3570, 2870/2270 Series). When a message appears asking you to turn off and then on the switch, turn off and then on the main power (iR4570/3570, 2870/2270 Series).

Be sure never to turn off the machine while it is executing a download session or writing downloaded system software. Otherwise, the ongoing write operation will be suspended and the machine may not start up.
If the machine fails to start up, format BOOTDEV using HDFormat, and download such software as System, Language, and RUI.

If the machine fails to start up, be sure to replace the boot ROM.

17.4.7 Downloading Dcon and Rcon

17.4.7.1 Outline

iR2270 / iR2870 / iR3570 / iR4570 / / iR2270N / / iR2870N / / iR3570N / / iR4570N / iR2230 / / / iR3530 /

Dcon/Rcon is downloaded by way of the main controller unit.

- The DC controller PCB/reader controller PCB is equipped with a boot ROM, and downloading may be attempted multiple times in the event of failure.
- The system software used in the DC controller differs between the iR3570/3570 and the iR2870/2270. The system software designed for the iR4570/3570 is stored as iR3570, while the system software designed for the iR2870/2270 is stored as iR2270. The machine has a mechanism to read the appropriate system software. It is a good idea to download both types of system software.

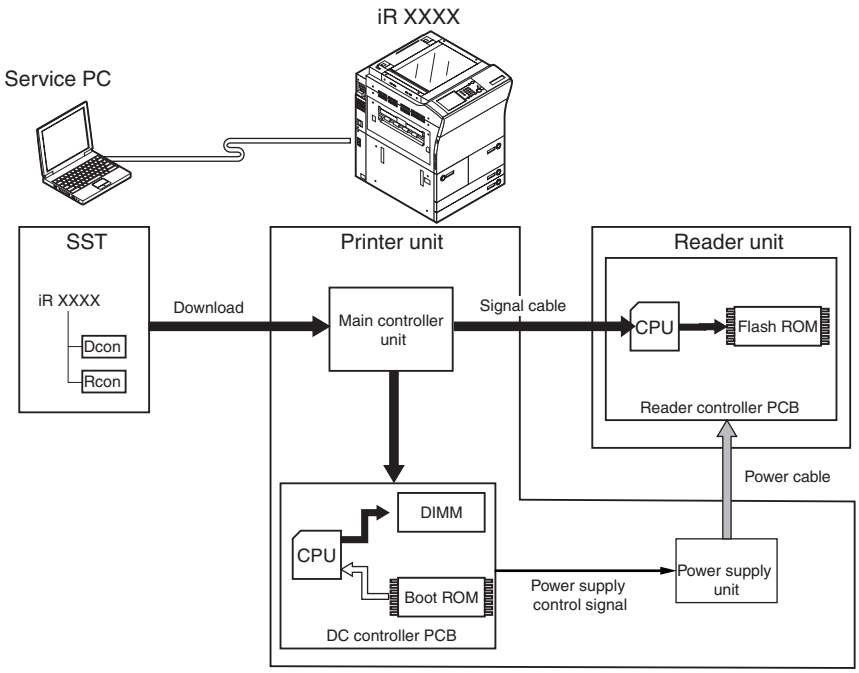

F-17-41

You will not be able to download Rcon unless the DC controller has started up normally (as, otherwise, the power supply control signal will not be valid and, as a result, the reader unit remains without power).

17.4.7.2 Downloading Procedure

iR2270 / iR2870 / iR3570 / iR4570 / / iR2270N / / iR2870N / / iR3570N / / iR4570N / iR2230 / / / iR3530 /

You can execute a downloading session in either normal or safe mode. In the case of safe mode, however, you will not be able to find out the version of Dcon/Rcon, causing all downloading to occur (overwriting of the same version and downgrading).
[Downloading Rcon]
1) Select the version of Rcon to download.

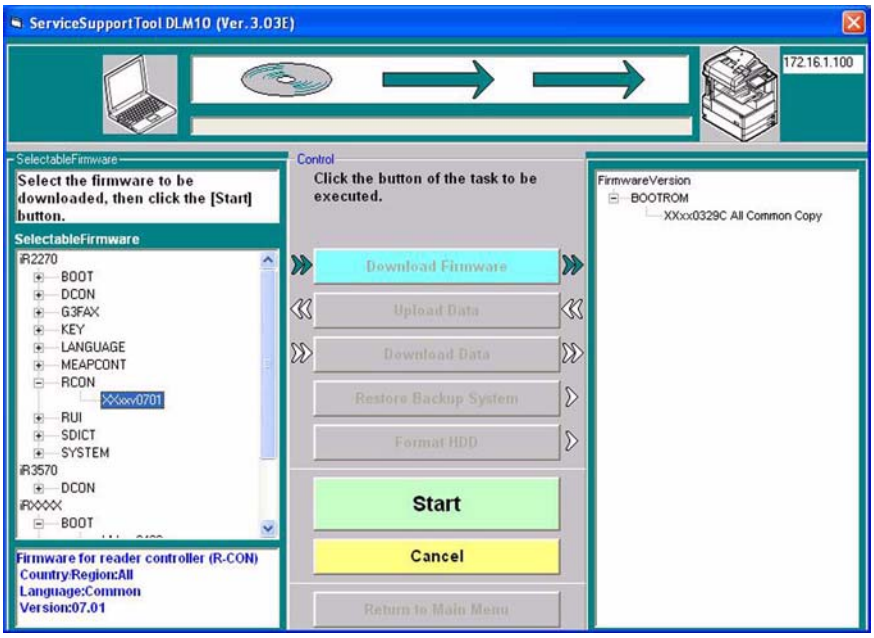

F-17-42

2) Click [Start].

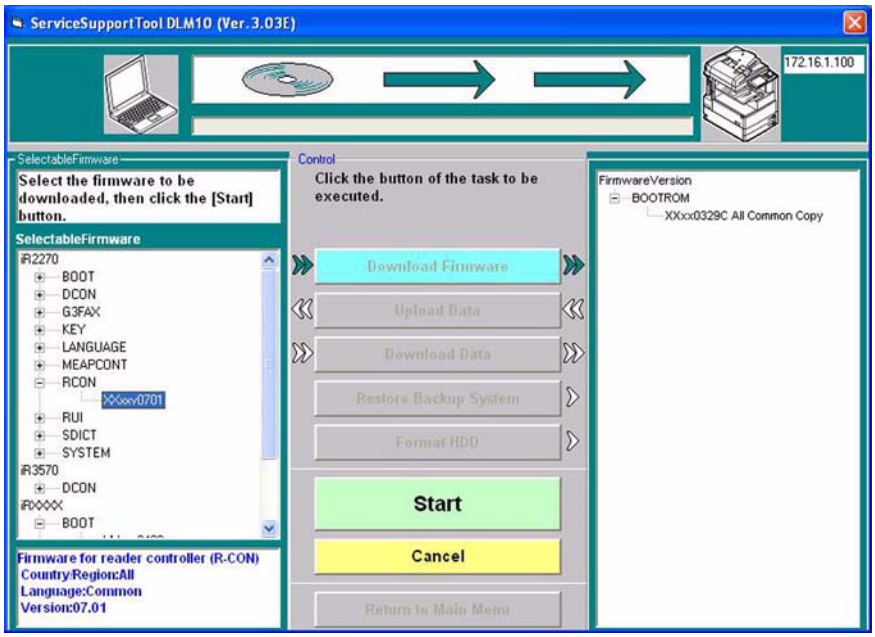

F-17-43

3) When the downloading session has ended, click [OK].

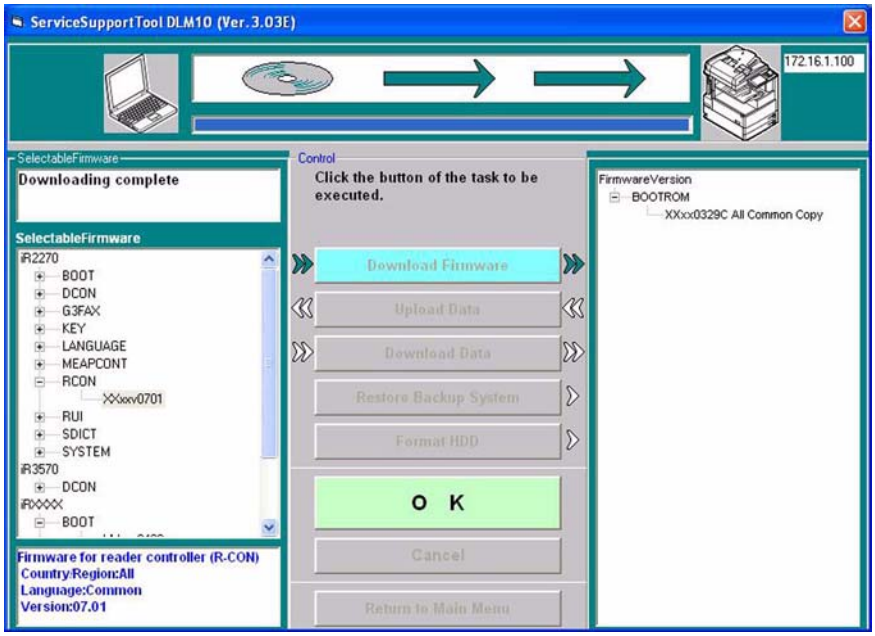

F-17-44

4) If you want to execute a different downloading session, see the appropriate instructions.
5) When the downloading session has ended, turn off and then on the machine (iR4570/3570, 2870/2270 Series).
6) See the status of upgrading indicated on the control panel of the machine (iR4570/3570, 2870/2270 Series). When a message appears asking you to turn off and then on the machine, turn off and then on the main power (iR4570/3570, 2870/2270 Series).

⚠

Be sure never to turn off the machine while it is executing a downloading session or writing downloaded system software. Otherwise, the machine may not be able to start up.
If the machine fails to start up, format BOOTDEV using HDFormat, and download such software as System, Language, and RUI.
If an error code is indicated, be sure to download appropriate firmware.

17.4.8 Downloading G3 FAX

17.4.8.1 Outline

iR2270 / iR2870 / iR3570 / iR4570 / / iR2270N / / iR2870N / / iR3570N / / iR4570N / iR2230 / / / iR3530 /

The Multi Fax Board-D1 (2-line) comes with a control CPU and its system software, which is downloaded by way of the main controller unit.

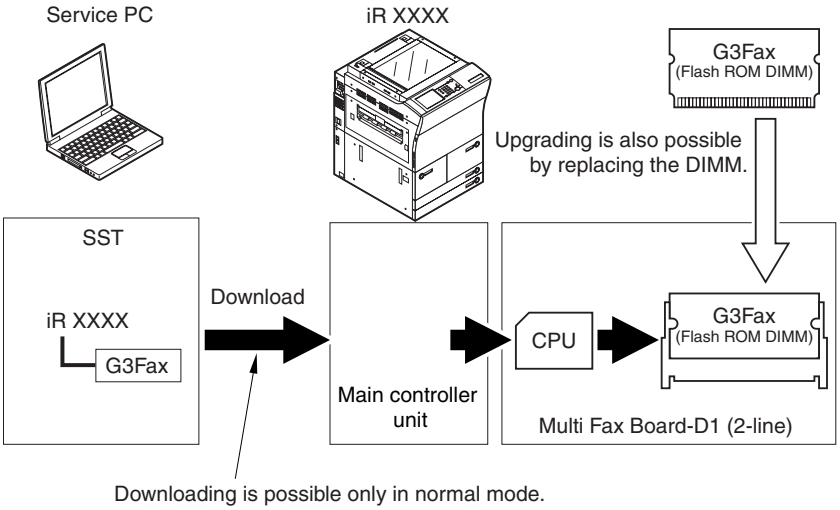

F-17-45

If a downloading session fails, you will have to replace the flash ROM DIMM.

17.4.8.2 Downloading Procedure

iR2270 / iR2870 / iR3570 / iR4570 / / iR2270N / / iR2870N / / iR3570N / / iR4570N / iR2230 / / / iR3530 /

You will have to use normal mode for downloading.
1) Select the version of G3FAX you want to download.

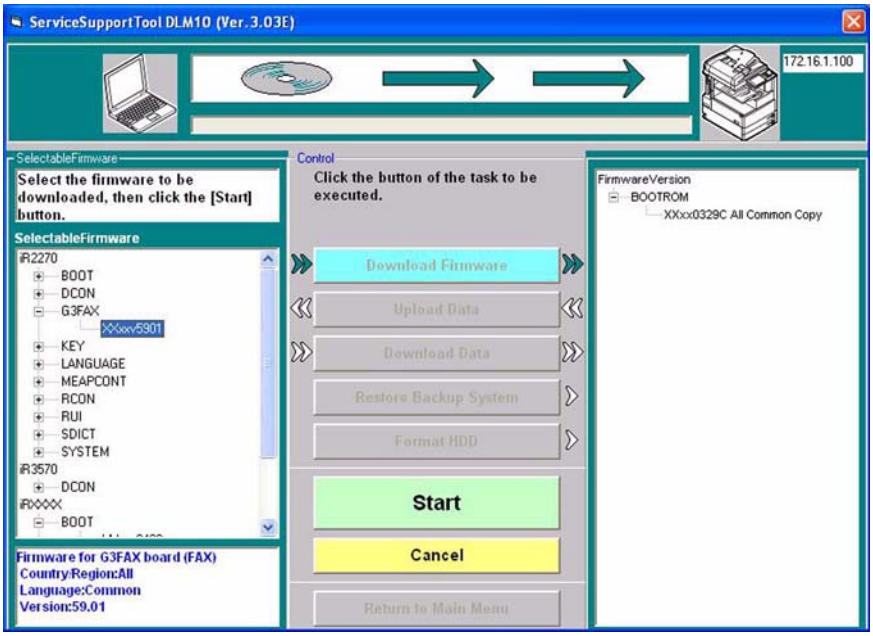

F-17-46

2) Click [Start].

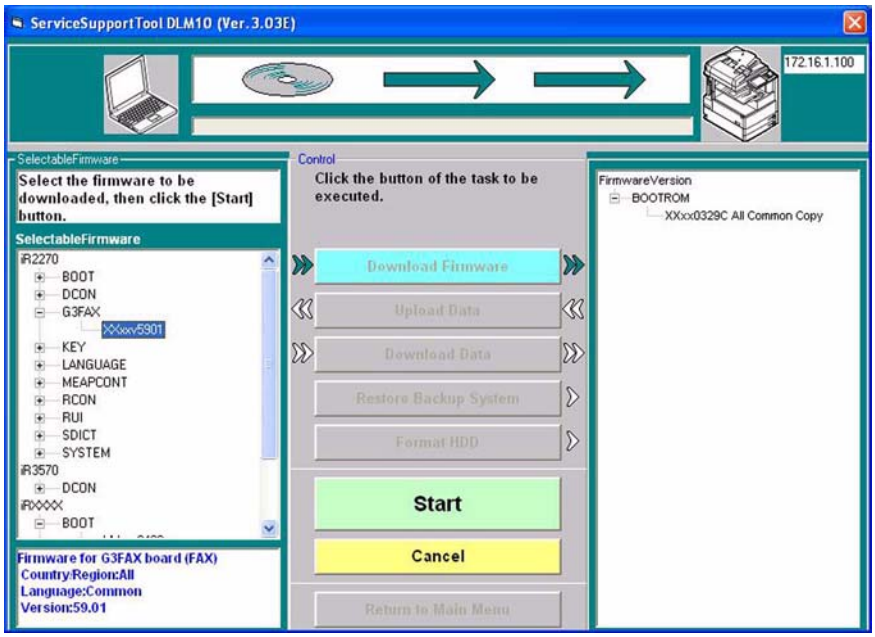

F-17-47

3) When the downloading session has ended, click [OK].

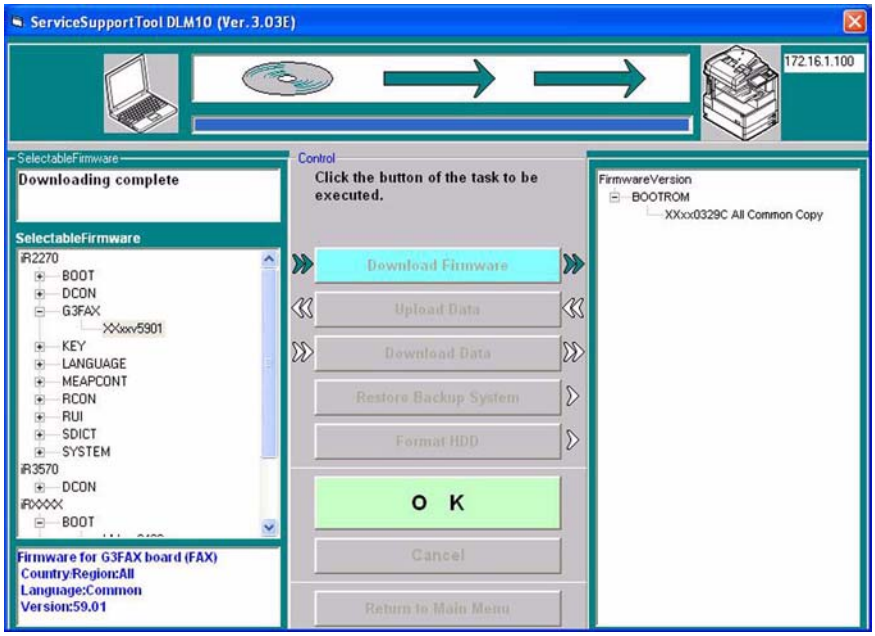

F-17-48

4) When you are done, turn off and then on the main power of the machine (iR4570/3570, 2870/2270 Series).
5) See the status of upgrading indicated on the control panel of the machine (iR4570/3570, 2870/2270 Series). When a message appears asking you to turn off and then on the machine, turn off and then on the main power (iR4570/570, 2870/2270 Series).

You will not be able to download G3Fax twice in succession. (Once downloading is executed, the board will be reset, causing download mode to end.)
Be sure never to turn off the machine while it is executing a downloading session or writing downloaded system software. Otherwise, the write operation (to the flash ROM DIMM of the G3 fax board) may fail, preventing board functions. In the event the board fails to function, be sure to replace the flash ROM DIMM found on the G3 fax board.

17.4.9 Uploading and Downloading Backup Data

17.4.9.1 Outline

iR2270 / iR2870 / iR3570 / iR4570 / / iR2270N / / iR2870N / / iR3570N / / iR4570N / iR2230 / / / iR3530

SramImg is data that is stored in the SRAM of the main controller PCB, while MeapBack is a MEAP application and its data stored on the HDD.

T-17-5

Backup data	Files to select for downloading/uploading
Main controller PCB backup RAM	SramImg.bin
MEAP application	MeapBack.bin
for R&D	Sublog.txt

- If you are replacing the main controller PCB, you can transfer such data as parts counter readings by uploading the data before replacement and downloading it after replacement.
- If you are replacing the HDD or executing 'ALL' or 'APL_MEP', you can temporarily set aside MEAP applications by uploading MeapBack before execution and downloading it after execution.
- Only the machine uploaded can download SramImg and MeapBack.

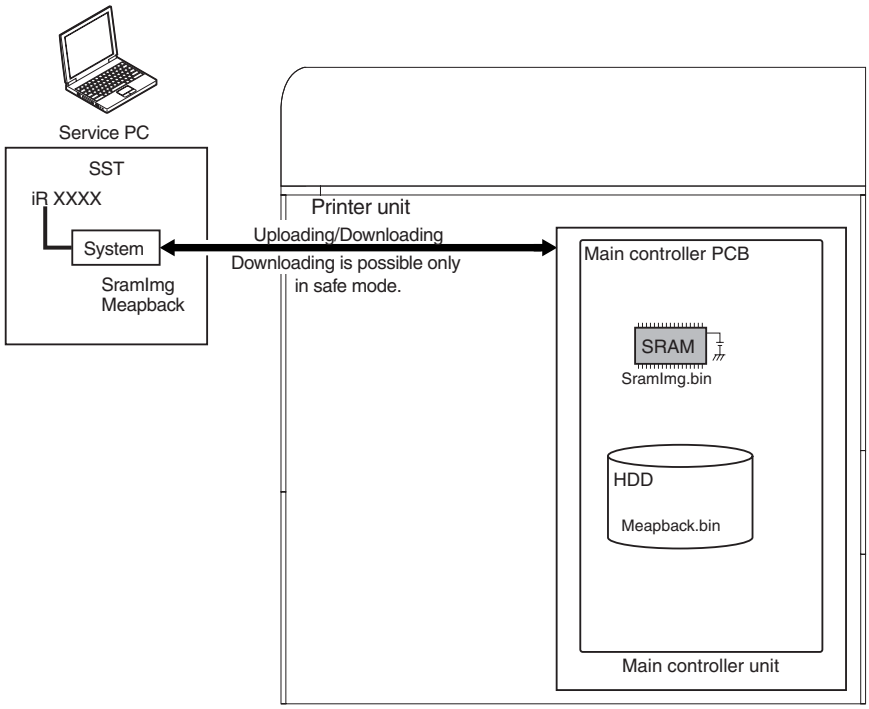

F-17-49

17.4.9.2 Uploading Procedure

iR2270 / iR2870 / iR3570 / iR4570 / / iR2270N / / iR2870N / / iR3570N / / iR4570N / iR2230 / / / iR3530 /

Use safe mode for uploading.
1) Select [Upload Data].

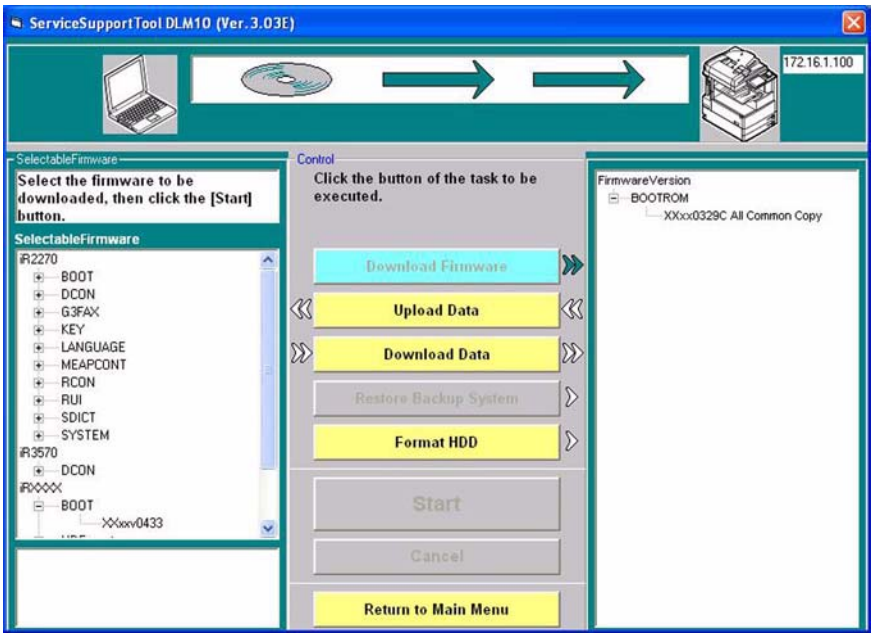

F-17-50

2) Select the data you want to back up.

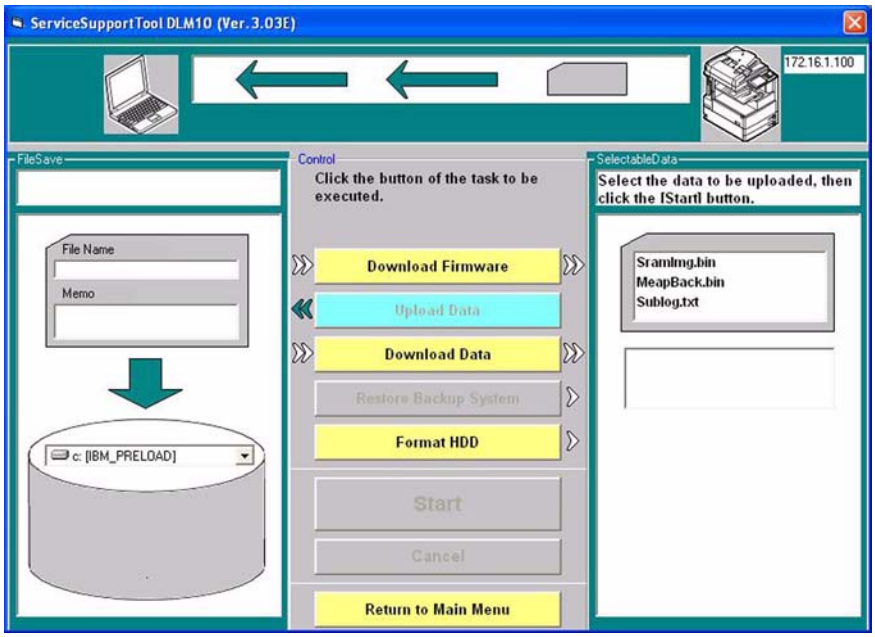

F-17-51

3) Click [Start].

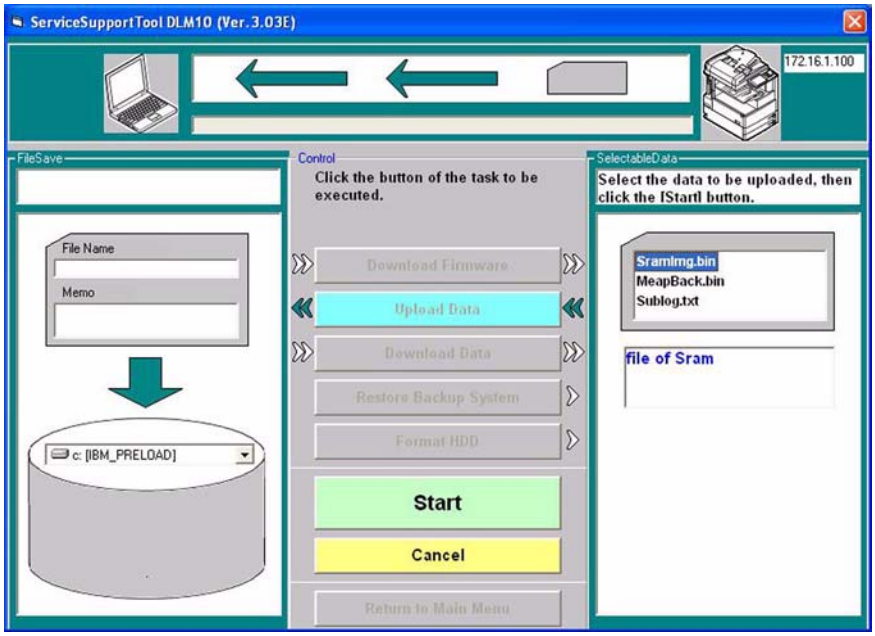

F-17-52

4) Click [Save].

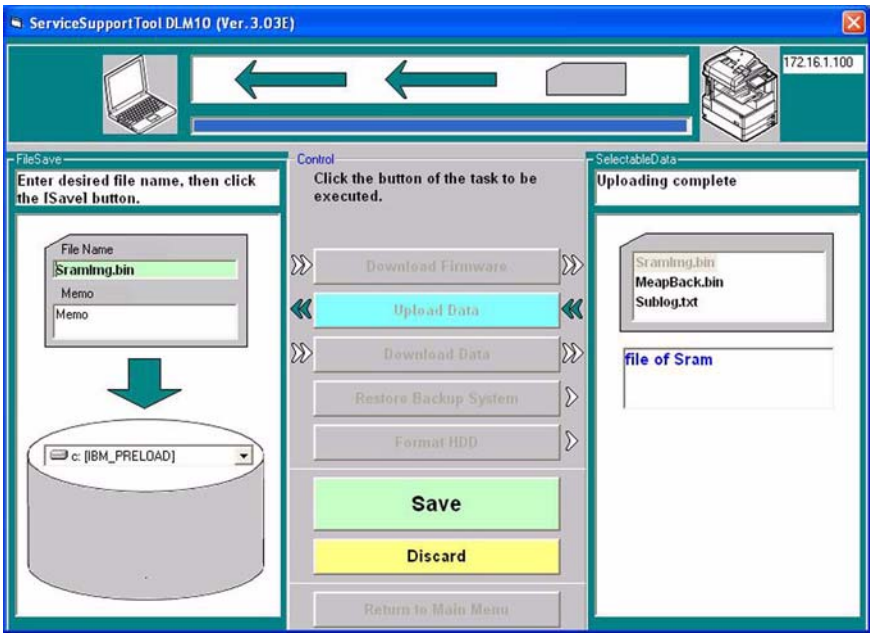

F-17-53

5) Click [OK].

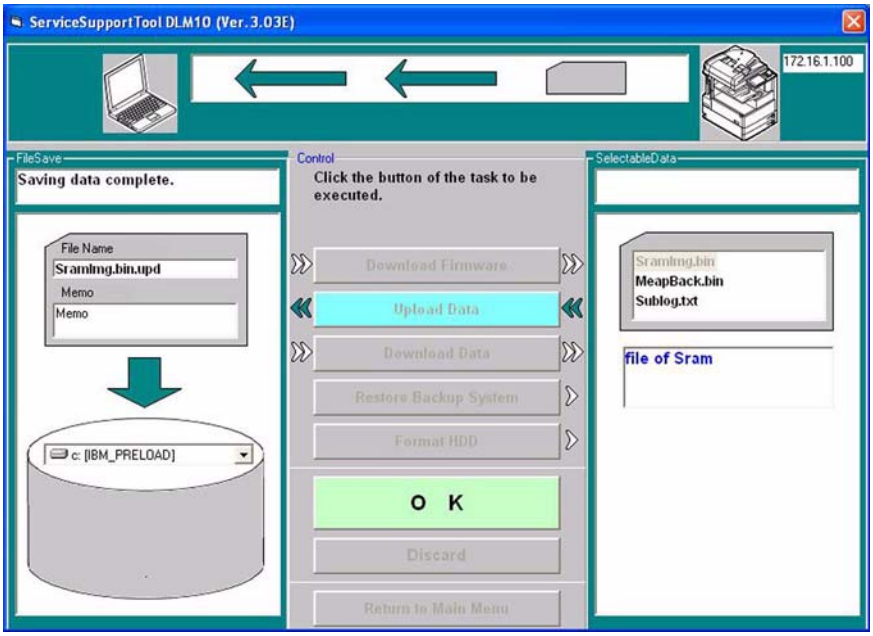

F-17-54

17.4.9.3 Downloading Procedur

iR2270 / iR2870 / iR3570 / iR4570 / / iR2270N / / iR2870N / / iR3570N / / iR4570N / iR2230 / / / iR3530 /

Use safe mode for downloading.
1) Select [Download Data].

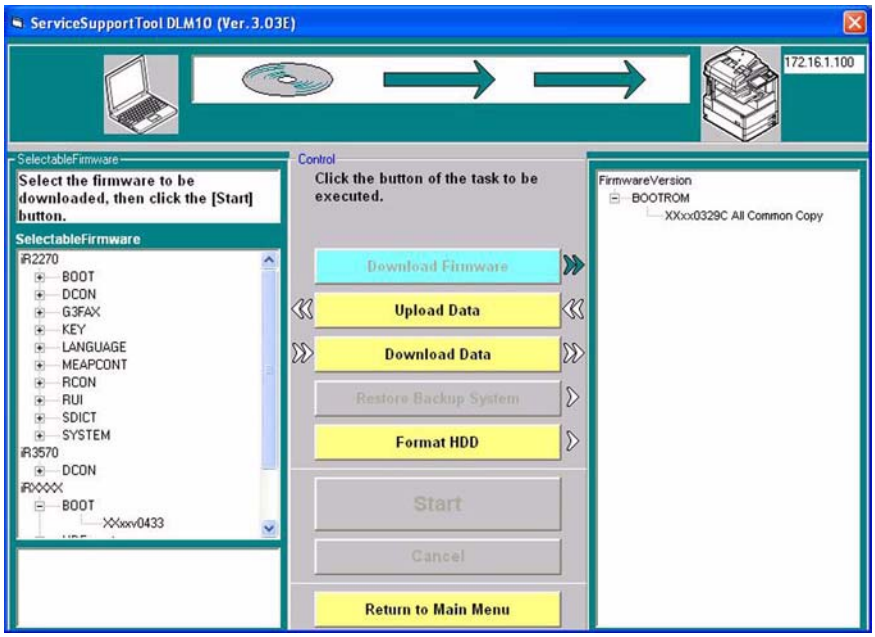

F-17-55

2) Select the data to download.

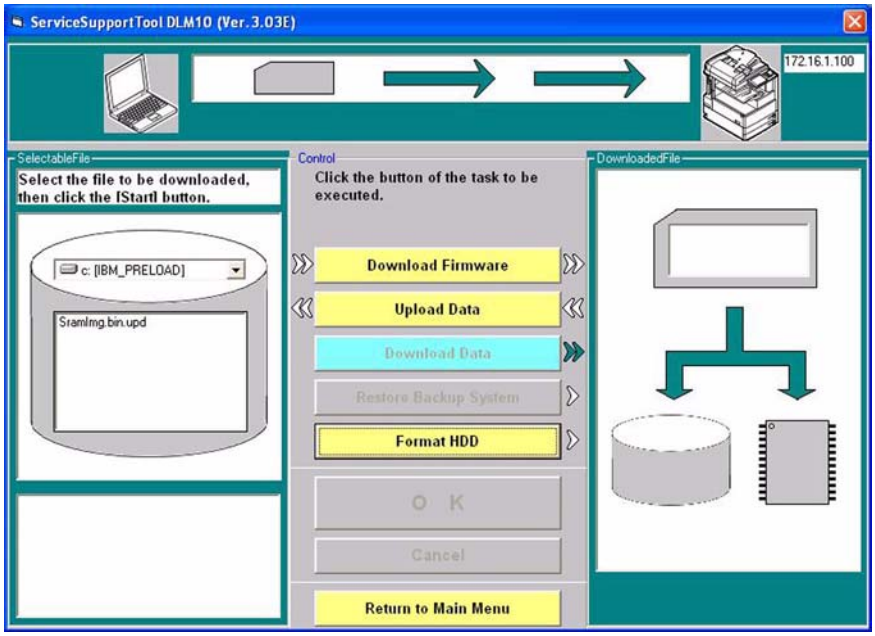

F-17-56

3) Click [Start].

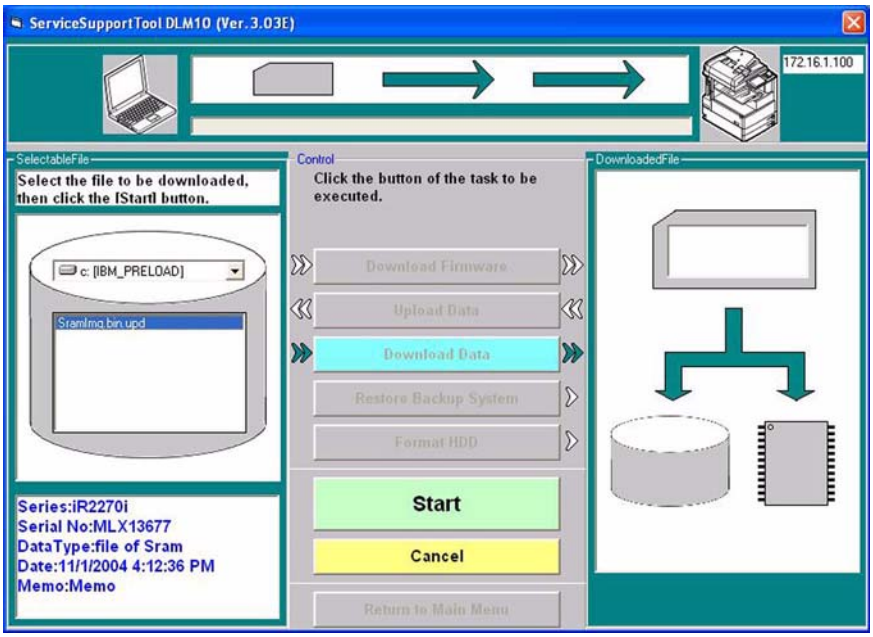

F-17-57

4) Click [OK].

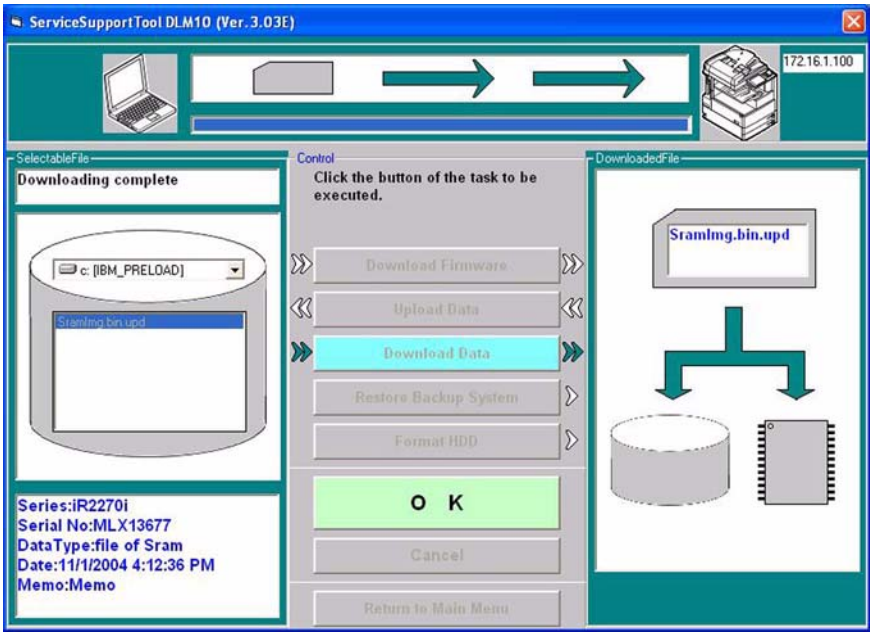

F-17-58

5) When you are done with downloading, turn off and then on the main power (iR4570/3570, 2870/2270 Series).
6) See the status of upgrading indicated on the control panel of the machine (iR4570/3570, 2870/2270 Series). When a message appears asking you to turn off and then on the switch, turn off and then on the main power (iR4570/3570, 2870/2270 Series).

Be sure not to turn off the machine while it is executing a downloading session or writing downloaded system software. The write operation will be suspended, and the machine may fail to start up.
If the machine fails to start up, format BOOTDEV using HDFormat, and download System, Language, and RUI.

Chapter 18 Service Tools

Contents

18.1 Service Tools.....18-1
18.1.1 Special Tools.....18-1
18.1.2 Oils and Solvents.....18-1

18.1 Service Tools

18.1.1 Special Tools

iR2270 / iR2870 / iR3570 / iR4570 / / iR2270N / / iR2870N / / iR3570N / / iR4570N / iR2230 / / / iR3530 /

In addition to the standard tools set, you will need the following special tools for servicing of the machine:

T-18-1

Tool name	Tool No.	Rank	Shape	Uses
Digital multimeter	FY9-2002	A	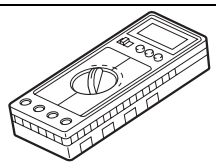	For making electrical checks.
Cover switch	TKN-0093	A	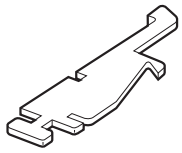	
Tester extension pin	FY9-3038	A	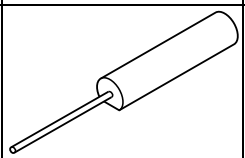	As an addition when making an electrical check.
Tester extension pin (L-shipped)	FY9-3039	A	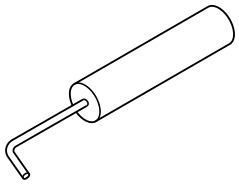	As an addition when making an electrical check.
NA-3 Test Chart	FY9-9196	A	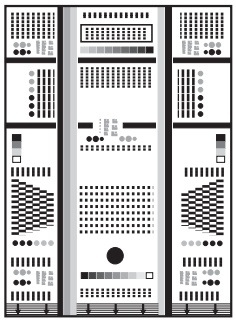	For checking and adjusting images.

Key to Notation (rank)
A: each service engineer is expected to carry one.
B: each group of 5 service engineers is expected to carry one.
C: each workshop is expected to carry one.

18.1.2 Oils and Solvents

iR2270 / iR2870 / iR3570 / iR4570 / / iR2270N / / iR2870N / / iR3570N / / iR4570N / iR2230 / / / iR3530 /

T-18-2

Name	Uses	Composition	Remarks
Alcohol	cleaning; e.g., glass, plastic, rubber; external covers	fluoride-family hydrocarbon alcohol surface activating agent water	- Do not bring near fire. - Procure locally. - IPA (isopropyl alcohol) may be substituted.
Solvent	cleaning; e.g., metal; soiling with oil or toner	fluorine-family hydrocarbon chlorine-family hydrocarbon alcohol	- Do not bring near fire. - Procure locally. - MEK may be substituted.
Lubricant		mineral oil (paraffin family)	- CK-0524 (100 cc)
Lubricant	drive mechanism, sliding mechanism	silicone oil	- CK-0551 (20 g)
Lubricant (EM-50L)	gear	special oil special solid lubricating agent lithium soap	- HY9-0007
Lubricant	scanner rail	silicone oil	- KF96SS (300CS) - FY9-6011 (50 cc)

Jan 17 2007

Canon