PARTS CATALOG

iR2422/2420/2320/2318 Series

Canon

Dec 19 2012

TONER
www.tonerplus.com.ua

PREFACE

This Parts Catalog contains listings of parts used

Diagrams are provided with the listings to aid the service technician in identifying clearly, the item to be orderd.
Whenever ordering parts, consult this Parts Catalog for all of the information pertaining to each item. Be sure to include, in the Parts Request, the full item description, the item part number, and the quantity.

COPYRIGHT (C) 1999 CANON INC.

Use of this manual should be strictly supervised to avoid disclosure of confidential information.

Contents

NUMERICAL INDEX

iR2422/2420/2320/2318 Series(Numerical Index)..... 1-1

iR2422/2420/2320/2318 Series(Parts Catalog)

A1 ASSEMBLY LOCATION DIAGRAM 2-1
A2 OPTION PARTS CATALOG LIST 2-4
001 ACCESSORIES 2-5
100 EXTERNAL COVERS, PANELS, ETC. 2-6
101 MACHINE FRONT PLATE 2-9
102 INTERNAL COMPONENTS 1 2-11
103 INTERNAL COMPONENTS 2 2-14
104 MACHINE REAR PLATE 2-18
130 CONTROL PANEL ASSEMBLY 2-20
140 LEFT DOOR ASSEMBLY 2-23
141 TRANSFER MOUNT ASSEMBLY 2-26
250 MAIN DRIVE ASSEMBLY 2-28
280 FIXING DRIVE ASSEMBLY 2-30
300 CASSETTE UNIT 2-31
310 CASSETTE FEEDER ASSEMBLY 2-33
311 PAPER PICK-UP ASSEMBLY 2-35
312 CASSETTE FEEDER ASSEMBLY(2 CASSETTE UNIT model) 2-38
313 PAPER PICK-UP ASSEMBLY(2 CASSETTE UNIT model) 2-41
315 MULTI FEED TRAY ASS'Y 2-44
350 PAPER DELIVERY ASSEMBLY 2-46
400 EXTERNAL COVERS, PANELS, ETC. 2-48
640 DEVELOPING ASSEMBLY 2-52
810 FIXING ASSEMBLY 2-54
C10 COPYBOARD COVER ASSEMBLY(COPYBOARD model) 2-57
G10 NETWORK I/F PCB ASSEMBLY(NETWORK model) 2-59
S01 PACKING KIT(DUPLEX model) 2-60
S20 DUPLEX FEEDER ASSEMBLY(DUPLEX model) 2-62
S50 DUPLEX REVERSE UNIT(DUPLEX model) 2-65
ZZA MECHANICAL STANDARD PARTS (HOW TO USE) 2-66
ZZB MECHANICAL STANDARD PARTS (SCREWS) 2-67
ZZC MECHANICAL STANDARD PARTS (BOLTS) 2-74
ZZD MECHANICAL STANDARD PARTS (NUTS) 2-75
ZZE MECHANICAL STANDARD PARTS (RETAINING RINGS) 2-76

NUMERICAL INDEX
iR2422/2420/2320/2318 Series(Numerical Index)

PARTS NUMBER	FIGURE & KEY NO.	PARTS NUMBER	FIGURE & KEY NO.	PARTS NUMBER	FIGURE & KEY NO
FA4-1159-000	103 - 51	FB6-1909-000	313 - 26	FC6-4215-000	315 - 1
FA8-2447-000	312 - 12	FB6-1910-000	310 - 5	FC6-4218-000	315 - 2
FA8-2448-000	313 - 1	FB6-1910-000	312 - 7	FC6-4219-000	315 - 3
FA8-2449-000	313 - 2	FB6-1920-000	312 - 14	FC6-4220-000	315 - 4
FA9-2112-000	103 - 11	FB6-1996-000	312 - 15	FC6-4221-000	315 - 5
FA9-3870-000	100 - 27	FB6-1997-000	312 - 16	FC6-4222-000	315 - 6
FB4-5532-000	310 - 1	FB6-2000-000	300 - 4	FC6-4223-000	315 - 7
FB4-5532-000	312 - 2	FB6-6896-000	640 - 24	FC6-4224-000	140 - 12
FB4-5808-020	300 - 18	FC5-0543-000	140 - 24	FC6-4227-020	140 - 14
FB4-5809-020	300 - 9	FC5-0792-000	400 - 12	FC6-4232-000	140 - 15
FB4-5810-000	300 - 11	FC5-1444-000	400 - 13	FC6-4234-000	140 - 17
FB4-5813-020	300 - 10	FC5-4265-000	C10 - 5	FC6-4238-000	140 - 18
FB4-5814-000	300 - 1	FC5-4847-000	350 - 1	FC6-4239-000	140 - 19
FB4-5824-000	300 - 19	FC5-4860-000	810 - 1	FC6-4244-000	102 - 25
FB4-6032-000	313 - 3	FC5-5297-000	810 - 2	FC6-4245-000	103 - 44
FB4-6033-000	313 - 4	FC5-6805-000	810 - 22	FC6-4259-020	100 - 3
FB4-6034-000	313 - 5	FC6-3002-000	103 - 19	FC6-4262-000	100 - 6
FB4-9817-030	311 - 25	FC6-3002-000	810 - 36	FC6-4264-000	100 - 8
FB4-9817-030	313 - 39	FC6-4113-000	101 - 1	FC6-4265-020	100 - 9
FB6-1536-000	312 - 13	FC6-4114-000	101 - 14	FC6-4266-000	100 - 10
FB6-1541-000	311 - 22	FC6-4115-000	101 - 15	FC6-4267-000	100 - 11
FB6-1550-000	311 - 1	FC6-4116-000	101 - 21	FC6-4268-000	100 - 12
FB6-1550-000	313 - 6	FC6-4118-000	102 - 29	FC6-4271-000	100 - 15
FB6-1551-000	313 - 7	FC6-4120-000	101 - 16	FC6-4272-000	100 - 14
FB6-1608-000	310 - 2	FC6-4134-000	102 - 30	FC6-4273-000	100 - 16
FB6-1608-000	312 - 3	FC6-4135-000	102 - 19	FC6-4284-000	311 - 26
FB6-1613-000	313 - 8	FC6-4136-000	103 - 54	FC6-4285-000	311 - 6
FB6-1614-000	313 - 9	FC6-4137-000	103 - 55	FC6-4286-000	311 - 7
FB6-1615-000	313 - 10	FC6-4138-000	103 - 27	FC6-4288-020	311 - 46
FB6-1616-000	313 - 11	FC6-4140-020	101 - 2	FC6-4288-020	313 - 51
FB6-1623-000	313 - 12	FC6-4143-020	101 - 3	FC6-4290-000	311 - 21
FB6-1624-000	313 - 13	FC6-4144-000	101 - 13	FC6-4290-000	313 - 32
FB6-1626-000	311 - 2	FC6-4146-020	101 - 4	FC6-4291-000	311 - 8
FB6-1626-000	313 - 14	FC6-4147-000	101 - 19	FC6-4297-000	310 - 9
FB6-1628-000	313 - 15	FC6-4148-000	103 - 20	FC6-4298-000	310 - 10
FB6-1631-030	313 - 40	FC6-4149-000	101 - 26	FC6-4300-000	310 - 11
FB6-1634-000	313 - 18	FC6-4163-000	640 - 16	FC6-4304-000	311 - 9
FB6-1635-000	313 - 19	FC6-4164-000	640 - 2	FC6-4304-000	313 - 24
FB6-1636-000	313 - 20	FC6-4165-000	640 - 3	FC6-4305-000	103 - 2
FB6-1640-000	300 - 2	FC6-4166-000	640 - 4	FC6-4306-000	103 - 3
FB6-1644-000	300 - 3	FC6-4167-000	640 - 5	FC6-4307-000	103 - 52
FB6-1646-000	300 - 12	FC6-4168-000	640 - 6	FC6-4308-000	103 - 34
FB6-1649-000	300 - 13	FC6-4169-000	640 - 7	FC6-4309-030	103 - 35
FB6-1650-000	300 - 7	FC6-4170-000	640 - 8	FC6-4310-000	103 - 36
FB6-1660-000	311 - 4	FC6-4176-000	640 - 11	FC6-4311-020	103 - 4
FB6-1660-000	313 - 21	FC6-4177-000	640 - 12	FC6-4312-020	103 - 5
FB6-1722-000	104 - 1	FC6-4191-000	103 - 40	FC6-4313-000	141 - 7
FB6-1905-000	313 - 22	FC6-4202-000	640 - 17	FC6-4314-030	141 - 8
FB6-1908-000	311 - 20	FC6-4205-000	103 - 43	FC6-4315-000	141 - 9
FB6-1908-000	313 - 31	FC6-4209-020	140 - 9	FC6-4316-000	141 - 11
FB6-1909-000	311 - 5	FC6-4210-000	140 - 10	FC6-4317-000	141 - 3
FB6-1909-000	313 - 23	FC6-4211-000	140 - 11	FC6-4324-000	141 - 4

NUMERICAL INDEX
iR2422/2420/2320/2318 Series(Numerical Index)

PARTS NUMBER	FIGURE & KEY NO.	PARTS NUMBER	FIGURE & KEY NO.	PARTS NUMBER	FIGURE & KEY NO
FC6-4326-000	311 - 10	FC6-4492-000	810 - 10	FC6-6759-000	S20 - 7
FC6-4327-000	311 - 3	FC6-4495-000	103 - 10	FC6-6759-000	S50 - 2
FC6-4337-000	300 - 5	FC6-4501-000	810 - 11	FC6-6760-000	S20 - 8
FC6-4348-000	311 - 11	FC6-4502-000	350 - 7	FC6-6764-000	S20 - 24
FC6-4351-000	311 - 27	FC6-4503-000	810 - 42	FC6-6765-000	S20 - 9
FC6-4352-000	311 - 13	FC6-4504-000	350 - 19	FC6-6767-000	S20 - 10
FC6-4352-000	313 - 25	FC6-4506-000	400 - 30	FC6-6768-000	S20 - 11
FC6-4355-000	311 - 14	FC6-4508-000	C10 - 1	FC6-6769-000	S20 - 25
FC6-4355-000	313 - 33	FC6-4509-000	C10 - 2	FC6-6776-000	S20 - 12
FC6-4356-000	311 - 28	FC6-4511-000	400 - 37	FC6-6777-000	S20 - 13
FC6-4356-000	313 - 41	FC6-4513-000	100 - 26	FC6-6779-000	S50 - 3
FC6-4357-000	310 - 3	FC6-4514-000	400 - 31	FC6-6780-000	S50 - 4
FC6-4357-000	312 - 4	FC6-4522-000	400 - 2	FC6-6781-000	S50 - 1
FC6-4360-030	103 - 18	FC6-4528-000	400 - 14	FC6-7092-000	101 - 8
FC6-4361-000	300 - 6	FC6-4529-000	100 - 20	FC6-7095-000	101 - 27
FC6-4375-000	810 - 39	FC6-4541-010	400 - 15	FC6-8678-000	S01 - 6
FC6-4376-000	140 - 2	FC6-4558-000	400 - 20	FC7-1757-020	101 - 3
FC6-4377-000	140 - 20	FC6-4559-000	400 - 39	FC7-1765-000	102 - 8
FC6-4386-000	140 - 3	FC6-4560-000	400 - 6	FC7-1766-000	102 - 11
FC6-4390-000	313 - 17	FC6-4561-010	400 - 40	FC7-1770-000	311 - 44
FC6-4391-000	100 - 2	FC6-4562-000	400 - 19	FC7-1771-000	810 - 44
FC6-4399-020	103 - 6	FC6-4573-010	400 - 16	FC7-1772-000	640 - 9
FC6-4413-000	140 - 5	FC6-4576-000	C10 - 3	FC8-0139-000	100 - 4
FC6-4414-000	140 - 6	FC6-4580-000	100 - 21	FC8-0140-000	100 - 5
FC6-4435-000	103 - 7	FC6-4582-000	400 - 5	FC8-0160-000	313 - 16
FC6-4436-000	250 - 1	FC6-4689-000	103 - 47	FC8-0165-000	140 - 32
FC6-4437-000	250 - 2	FC6-4690-000	101 - 6	FC8-0166-000	140 - 48
FC6-4438-020	350 - 2	FC6-4691-000	104 - 7	FC8-0167-000	140 - 16
FC6-4446-000	103 - 8	FC6-4693-000	102 - 24	FC8-0168-000	140 - 13
FC6-4447-000	103 - 9	FC6-4710-000	102 - 5	FC8-0170-000	311 - 47
FC6-4448-000	810 - 21	FC6-4719-000	101 - 23	FC8-0170-000	313 - 54
FC6-4449-000	810 - 16	FC6-4720-000	102 - 6	FC8-0172-000	313 - 8
FC6-4450-000	810 - 17	FC6-4723-000	102 - 2	FC8-0215-000	350 - 6
FC6-4452-000	810 - 3	FC6-4724-000	100 - 22	FC8-0218-000	400 - 7
FC6-4453-000	810 - 4	FC6-4727-000	400 - 17	FC8-0219-000	400 - 8
FC6-4454-000	810 - 41	FC6-4734-000	102 - 7	FC8-0220-000	S01 - 1
FC6-4458-020	810 - 38	FC6-4738-000	C10 - 4	FC8-0221-000	S01 - 5
FC6-4462-000	810 - 5	FC6-6706-000	312 - 5	FC8-0269-000	300 - 24
FC6-4463-000	810 - 6	FC6-6710-000	312 - 22	FC8-0351-000	S01 - 2
FC6-4465-020	350 - 13	FC6-6712-000	312 - 31	FC8-0353-000	312 - 29
FC6-4467-000	810 - 43	FC6-6714-000	312 - 17	FC9-4264-000	104 - 17
FC6-4470-030	350 - 4	FC6-6718-000	312 - 24	FC9-4265-000	104 - 17
FC6-4473-020	350 - 14	FC6-6720-000	312 - 1	FC9-4266-000	100 - 13
FC6-4474-030	350 - 5	FC6-6720-000	312 - 9	FC9-4270-000	400 - 48
FC6-4476-000	100 - 1	FC6-6740-000	S20 - 23	FC9-4274-000	311 - 7
FC6-4477-000	350 - 3	FC6-6752-000	S20 - 1	FC9-4288-000	311 - 12
FC6-4478-000	102 - 3	FC6-6753-000	S20 - 2	FC9-4288-000	313 - 36
FC6-4479-000	810 - 7	FC6-6754-000	S20 - 15	FC9-4290-000	311 - 15
FC6-4480-000	810 - 8	FC6-6755-000	S20 - 3	FC9-4290-000	313 - 27
FC6-4481-000	810 - 9	FC6-6756-000	S20 - 4	FC9-4301-000	130 - 2
FC6-4482-000	102 - 4	FC6-6757-000	S20 - 5	FC9-4302-000	130 - 3
FC6-4484-000	350 - 15	FC6-6758-000	S20 - 6	FC9-4303-000	130 - 4

NUMERICAL INDEX
iR2422/2420/2320/2318 Series(Numerical Index)

PARTS NUMBER	FIGURE & KEY NO.	PARTS NUMBER	FIGURE & KEY NO.	PARTS NUMBER	FIGURE & KEY NO
FC9-4304-000	130 - 5	FK3-2134-000	001 - 1	FM1-A893-000	400 - 44
FC9-4305-000	130 - 6	FK4-0056-000	103 - 13	FM2-3287-000	640 - 18
FC9-4306-000	130 - 7	FL2-3180-000	102 - 12	FM2-3294-000	315 -
FC9-4307-000	130 - 8	FL2-3181-000	102 - 13	FM2-3315-000	141 -
FC9-4308-000	130 - 9	FL2-3193-000	640 - 13	FM2-3319-000	310 - 4
FC9-4309-000	130 - 10	FL2-3197-000	640 - 15	FM2-3320-050	311 -
FC9-4311-000	130 - 11	FL2-3200-000	140 - 23	FM2-3325-000	300 - 8
FC9-4312-000	130 - 12	FL2-3201-010	140 - 25	FM2-3326-000	300 - 17
FC9-4313-000	130 - 13	FL2-3202-000	140 - 26	FM2-3328-000	810 -
FC9-4314-000	130 - 14	FL2-3211-000	141 - 14	FM2-3329-000	810 - 13
FC9-4316-000	130 - 17	FL2-3213-000	103 - 15	FM2-3330-300	140 -
FC9-4318-000	130 - 15	FL2-3214-000	141 - 6	FM2-3331-000	140 - 46
FC9-4329-000	100 - 19	FL2-3220-000	350 - 8	FM2-3345-000	810 -
FC9-4330-000	102 - 1	FL2-3230-000	400 - 21	FM2-3346-000	810 - 13
FC9-8862-000	400 - 49	FL2-3268-010	100 - 23	FM2-3348-000	810 - 19
FE3-1264-000	100 - 12	FL2-3269-000	100 - 24	FM2-3349-000	810 - 20
FE5-4048-000	311 - 29	FL2-3282-000	400 - 24	FM2-3350-000	280 -
FE5-4048-000	313 - 42	FL2-3286-010	400 - 38	FM2-3351-000	350 -
FF6-1610-000	313 - 34	FL2-3287-000	300 - 25	FM2-3352-000	810 -
FF6-1621-000	311 - 16	FL2-3288-000	300 - 26	FM2-3353-000	810 - 13
FF6-1621-000	313 - 28	FL2-3304-000	640 - 10	FM2-3383-000	102 - 14
FG3-3501-000	810 - 12	FL2-3736-000	312 - 20	FM2-4020-000	101 - 18
FG6-8440-000	312 - 6	FL2-3744-000	S20 - 26	FM2-4400-000	400 - 41
FH5-3543-000	141 - 5	FL2-3856-000	S20 - 14	FM2-4401-000	102 - 28
FH7-7569-000	400 - 46	FL2-8094-000	S01 - 4	FM2-4403-000	310 - 7
FK2-1066-020	400 - 28	FL2-9922-000	313 - 12	FM2-4405-000	810 - 24
FK2-1067-000	102 - 10	FL3-2105-000	100 - 7	FM2-4408-000	103 - 45
FK2-1068-000	311 - 17	FL3-2106-000	100 - 7	FM2-4410-000	104 - 4
FK2-1070-000	140 - 21	FL3-2107-000	100 - 7	FM2-4411-000	810 - 25
FK2-1072-000	140 - 22	FL3-2108-000	100 - 7	FM2-4414-000	104 - 12
FK2-1082-000	311 - 18	FL3-2109-000	100 - 7	FM2-4416-000	104 - 11
FK2-1084-000	140 - 8	FL3-2110-000	130 - 1	FM2-4417-000	140 - 43
FK2-1104-000	313 - 29	FL3-2111-000	130 - 1	FM2-4421-000	140 - 27
FK2-1114-000	S20 - 17	FL3-2112-000	130 - 1	FM2-4423-020	400 - 11
FK2-5349-000	103 - 12	FL3-2114-000	130 - 1	FM2-4424-000	103 - 49
FK2-8101-000	103 - 13	FL3-2115-000	130 - 1	FM2-4427-000	400 - 45
FK2-8102-000	103 - 13	FL3-2117-000	100 - 7	FM2-4433-000	101 - 9
FK2-8103-000	103 - 13	FL3-2118-000	100 - 7	FM2-4483-000	312 - 11
FK2-8104-000	103 - 48	FL3-2119-000	100 - 7	FM2-4484-010	313 -
FK2-8240-000	G10 - 1	FL3-2122-000	130 - 1	FM2-4493-000	S50 -
FK2-8505-000	001 - 1	FL3-4276-000	100 - 7	FM2-4495-000	312 - 19
FK3-0181000	104 - 2	FL3-4277-000	100 - 7	FM2-4496-000	312 - 30
FK3-0182-000	104 - 3	FL3-7128-000	100 - 7	FM2-4497-000	312 - 23
FK3-0183-000	104 - 16	FL3-7129-000	100 - 7	FM2-4499-000	312 - 25
FK3-0184-000	104 - 15	FL3-7130-000	100 - 7	FM2-4500-000	312 - 27
FK3-0185-000	102 - 9	FL3-7131-000	100 - 7	FM2-4515-000	S20 - 41
FK3-0186-000	400 - 18	FL3-7132-000	100 - 7	FM2-4517-000	S20 - 30
FK3-0905-000	001 - 1	FL3-7133-000	100 - 7	FM2-4518-030	S20 - 31
FK3-0906-000	001 - 1	FL3-7134-000	100 - 7	FM2-4519-000	S20 - 32
FK3-2131-000	001 - 1	FL3-7135-000	100 - 7	FM2-4520-000	S20 - 33
FK3-2132-000	001 - 1	FL3-7136-000	100 - 7	FM2-4596-000	313 -
FK3-2133-000	001 - 1	FL3-7993-000	100 - 7	FM2-4789-000	350 - 16

NUMERICAL INDEX
iR2422/2420/2320/2318 Series(Numerical Index)

PARTS NUMBER	FIGURE & KEY NO.	PARTS NUMBER	FIGURE & KEY NO.	PARTS NUMBER	FIGURE & KEY NO
FM3-3015-000	S01 - 3	FS5-9714-000	313 - 52	FU5-8613-000	100 - 17
FM3-3671-010	640 -	FS6-2917-000	300 - 20	FU5-8680-000	312 - 21
FM3-3672-010	640 - 20	FS7-0207-000	300 - 21	FU5-8696-000	S20 - 16
FM3-3676-000	640 - 19	FS7-0225-000	311 - 31	FU5-8699-000	140 - 4
FM3-5746-000	103 - 53	FS7-0225-000	313 - 44	FU6-0761-000	640 - 14
FM3-5751-000	103 - 41	FS7-0226-000	311 - 32	FU6-0762-000	640 - 21
FM3-6924-000	140 -	FS7-0226-000	313 - 45	FU6-0763-000	640 - 22
FM3-8304-000	140 -	FS7-0227-000	313 - 46	FU6-0764-000	640 - 23
FM4-0027-000	104 - 9	FS7-0228-000	311 - 33	FU6-0765-000	640 - 1
FM4-0028-000	104 - 9	FS7-0228-000	313 - 47	FU6-0766-000	250 - 5
FM4-0029-000	130 - 16	FS7-0229-000	311 - 34	FU6-0767-000	250 - 6
FM4-0030-000	102 - 23	FS7-0229-000	313 - 48	FU6-0769-000	311 - 36
FM4-0031-000	400 - 23	FS7-0230-000	311 - 35	FU6-0770-000	311 - 37
FM4-0032-010	400 - 42	FS7-0230-000	313 - 49	FU6-0771-030	311 - 38
FM4-0033-010	400 - 43	FS7-8335-000	102 - 15	FU6-0773-000	141 - 12
FM4-0034-000	103 - 1	FU5-0732-000	350 - 9	FU6-0775-000	311 - 39
FM4-0035-000	400 - 44	FU5-1498-000	102 - 20	FU6-0776-030	311 - 40
FM4-0036-000	101 - 24	FU5-1499-000	102 - 21	FU6-0788-000	250 - 4
FM4-0037-000	101 - 10	FU5-1519-000	810 - 26	FU6-0790-000	250 - 7
FM4-0038-000	104 - 13	FU5-1520-000	810 - 27	FU6-0791-000	250 - 8
FM4-0039-000	400 - 47	FU5-1522-000	350 - 10	FU6-0792-000	250 - 9
FM4-0040-000	103 - 14	FU5-1527-000	140 - 28	FU6-0793-000	250 - 10
FM4-0041-000	130 - 16	FU5-1528-000	140 - 29	FU6-0794-000	103 - 38
FM4-0042-000	103 - 1	FU5-1529-000	140 - 30	FU6-0795-000	250 - 11
FM4-0043-000	102 - 26	FU5-1530-000	140 - 31	FU6-0796-000	103 - 39
FM4-0044-000	102 - 23	FU5-2470-000	810 - 18	FU6-0799-000	810 - 30
FM4-0640-000	130 -	FU5-2476-000	141 - 2	FU6-0800-000	810 - 31
FM4-0641-000	130 -	FU5-3328-000	400 - 32	FU6-0801-000	810 - 32
FM4-0643-000	130 -	FU5-3340-000	400 - 33	FU6-0802-000	280 - 1
FM4-0644-000	130 -	FU5-8573-000	101 - 25	FU6-0803-000	102 - 16
FM4-0645-000	130 -	FU5-8574-000	101 - 11	FU6-0804-000	280 - 2
FM4-0646-000	101 - 5	FU5-8575-000	810 - 28	FU6-0806-000	103 - 17
FM4-0655-000	130 -	FU5-8576-000	810 - 29	FU6-0814-000	140 - 33
FM4-0656-000	311 -	FU5-8581-000	400 - 25	FU6-0933-000	S20 - 18
FM4-0660-010	400 - 36	FU5-8582-000	400 - 27	FU6-0934-000	S20 - 19
FM4-0667-000	102 - 14	FU5-8585-000	310 - 8	FU6-0935-000	S20 - 34
FM4-0668-000	140 -	FU5-8586-000	310 - 13	FU6-0936-000	S20 - 20
FM4-0670-000	130 -	FU5-8588-000	300 - 14	FU6-0937-000	S20 - 35
FM4-0671-000	810 -	FU5-8589-000	315 - 9	FU6-0938-000	S20 - 27
FM4-2724-000	103 - 14	FU5-8590-000	400 - 25	FU6-0939-000	S20 - 28
FM4-2724-000	103 - 14	FU5-8591-000	400 - 27	FU6-0940-000	S20 - 36
FM4-2725-000	103 - 14	FU5-8592-000	400 - 25	FU6-2146-000	102 - 18
FM4-5267-000	104 - 9	FU5-8593-000	400 - 27	FU6-2148-000	103 - 21
FM4-5269-000	130 - 16	FU5-8602-000	100 - 17	FU6-2149-000	103 - 22
FM4-5270-010	400 - 36	FU5-8603-000	100 - 18	FU6-2150-000	103 - 23
FM4-5272-000	103 - 14	FU5-8604-000	315 - 9	FU6-2151-000	103 - 24
FM4-9837-000	104 - 9	FU5-8605-000	315 - 8	FU6-2152-000	103 - 25
FM4-9838-000	104 - 9	FU5-8606-000	103 - 42	FU6-2156-000	103 - 28
FM4-9839-000	104 - 9	FU5-8607-000	140 - 1	FU6-2157-000	103 - 29
FS1-1205-000	311 - 30	FU5-8608-000	101 - 12	FU6-2158-000	103 - 30
FS1-1205-000	313 - 43	FU5-8610-000	101 - 20	FU6-2159-000	103 - 31
FS5-9714-000	311 - 45	FU5-8611-000	100 - 28	FU6-2160-000	140 - 44

NUMERICAL INDEX
iR2422/2420/2320/2318 Series(Numerical Index)

PARTS NUMBER	FIGURE & KEY NO.	PARTS NUMBER	FIGURE & KEY NO.	PARTS NUMBER	FIGURE & KEY NO
FU6-2162-000	140 - 45	NPN	100 -	XD9-0136-000	311 - 24
FU6-2170-000	310 - 12	NPN	101 -	XD9-0136-000	312 - 18
FU6-2171-000	141 - 1	NPN	102 -	XD9-0136-000	313 - 38
FU6-2173-000	141 - 10	NPN	103 -	XD9-0136-000	400 - 35
FU6-2174-000	311 - 41	NPN	104 -	XD9-0136-000	810 - 37
FU6-2175-000	311 - 42	NPN	250 -	XD9-0136-000	S20 - 22
FU6-2175-000	313 - 53	NPN	300 -	XF2-1109-040	S20 - 29
FU6-2176-000	103 - 16	NPN	310 -	XF2-1112-240	S20 - 40
FU6-2177-020	141 - 13	NPN	312 -	XF2-4620-340	400 - 4
FU6-2178-000	140 - 47	NPN	400 -	XF2-4661-440	400 - 9
FU6-2180-000	140 - 34	NPN	C10 -	XH9-0135-000	310 - 14
FU6-2182-000	140 - 36	NPN	G10 -	XH9-0135-000	312 - 28
FU6-2184-000	250 - 12	NPN	S01 -		
FU6-2185-000	810 - 33	NPN	S20 -		
FU6-2186-000	810 - 34	RB2-1850-000	250 - 3		
FU6-2188-000	810 - 23	VS1-7177-002	140 - 38		
FU6-2189-000	350 - 11	VS1-7177-002	312 - 10		
FU6-2190-000	400 - 29	VS1-7177-003	102 - 27		
FU6-2191-000	400 - 34	VS1-7177-003	140 - 39		
FU6-2193-000	400 - 3	VS1-7177-004	140 - 40		
FU6-2194-000	101 - 17	VS1-7177-010	104 - 6		
FU6-2195-000	103 - 32	VS1-7177-013	312 - 26		
FU6-2198-000	103 - 26	VS1-7207-006	104 - 10		
FU6-2199-000	103 - 33	VS1-7207-007	104 - 8		
FU6-2206-000	350 - 12	VS1-7207-012	S01 - 7		
FU6-2207-020	102 - 17	WC2-5680-000	310 - 6		
FU6-2208-000	810 - 40	WC2-5680-000	312 - 8		
FU6-2209-000	103 - 46	WE8-5648-000	312 - 32		
FU6-2210-000	350 - 17	WG8-5624-000	313 - 50		
FU6-2236-000	400 - 1	WG8-5696-000	101 - 22		
FU6-2387-000	S20 - 37	WG8-5696-000	103 - 37		
FU6-2388-000	S20 - 38	WG8-5696-000	140 - 41		
FU6-8434-000	100 - 29	WG8-5696-000	311 - 43		
FU6-8435-000	100 - 17	WG8-5696-000	350 - 18		
FU6-8436-000	100 - 17	WG8-5696-000	400 - 26		
FU6-8457-000	300 - 23	WG8-5696-000	810 - 35		
FU6-8460-000	300 - 15	WG8-5696-000	S20 - 39		
FU6-8461-000	300 - 16	XA9-0702-000	810 - 15		
FU7-0923-000	311 - 36	XA9-1116-000	S20 - 21		
FU7-2221-000	140 - 35	XA9-1415-000	400 - 22		
FU7-2222-000	140 - 37	XA9-1567-000	100 - 25		
FU7-2234-000	311 - 19	XA9-1567-000	101 - 7		
FU7-2234-000	313 - 30	XA9-1567-000	102 - 22		
FU7-8047-000	300 - 23	XA9-1567-000	103 - 50		
FU7-8048-000	300 - 22	XA9-1567-000	104 - 14		
FU7-8049-000	300 - 22	XA9-1567-000	400 - 10		
FU7-8483-000	300 - 22	XD1-1106-235	312 - 501		
FU7-8484-000	100 - 17	XD3-1200-122	313 - 35		
FU7-8485-000	101 - 20	XD9-0133-000	311 - 23		
FU7-8486-000	102 - 15	XD9-0133-000	313 - 37		
FU7-8487-000	810 - 28	XD9-0134-000	810 - 14		
NPN	001 -	XD9-0136-000	140 - 42		

iR2422/2420/2320/2318 Series(Parts Catalog)

iR2320L

120V US	**F19-0631-000**	**EQL**	
230V	**F19-0641-000**	**EQM**	
230V CN	**F19-0660-000**	**EQS**	COPYBOARD MODEL

iR2318L

120V TW	**F19-0601-000**	**ERB**	COPYBOARD/NETWORK MODEL
230V	**F19-0642-000**	**EQV**	COPYBOARD MODEL
230V CN	**F19-0663-000**	**EQW**	COPYBOARD MODEL
230V KR	**F19-0671-000**	**EQZ**	
230V EUR	**F19-0691-000**	**EQU**	COPYBOARD MODEL

iR2420D

230V CN	**F19-0662-000**	**EQN**	COPYBOARD/DUPLEX/2 CASSETTE MODEL

iR2420L

230V KR	**F19-0670-000**	**EQT**	2 CASSETTE MODEL
120V TW	**F19-1201-000**	**HWQ**	COPYBOARD/NETWORK MODEL
230V	**F19-1242-000**	**HWJ**	COPYBOARD MODEL
220V CN	**F19-1264-000**	**HWK**	COPYBOARD MODEL

iR2320J

230V CN	**F19-0665-000**	**EZF**	COPYBOARD MODEL

iR2320N

230V CN	**F19-0661-000**	**EQR**	COPYBOARD/NETWORK MODEL

iR2320

230V EUR	**F19-0692-000**	**GUQ00500**	COPYBOARD MODEL

iR2318

230V EUR	**F19-0693-000**	**GUR00500**	COPYBOARD MODEL

iR2422L

120V LTN	**F19-1231-000**	**HVZ**	
230V LTN	**F19-1232-000**	**HWA**	
230V	**F19-1241-000**	**HWB**	COPYBOARD MODEL
220V CN	**F19-1263-000**	**HWE**	COPYBOARD MODEL
220V KR	**F19-1271-000**	**HWG**	2 CASSETTE MODEL

iR2422

230V EUR	**F19-1291-000**	**HWH**	COPYBOARD MODEL

iR2420P

220V KR	**F19-1272-000**	**HWM**

iR2420

230V EUR	**F19-1292-000**	**HWR**	COPYBOARD MODEL

iR2422N

220V CN	**F19-1262-000**	**HWD**	COPYBOARD/NETWORK MODEL

iR2422J

220V CN	**F19-1265-000**	**HWF**

iR2422D

220V CN	**F19-1261-000**	**HWC**	COPYBOARD/DUPLEX/2 CASSETTE MODEL

iR2420LS

220V CN	**F19-1266-000**	**KWS**	COPYBOARD MODEL

iR2422

230V EUR	**F19-1293-000**	**PKP**

iR2420

230V EUR	**F19-1294-000**	**PHW**

Contents

A1 ASSEMBLY LOCATION DIAGRAM 2-1
A2 OPTION PARTS CATALOG LIST 2-4
001 ACCESSORIES 2-5
100 EXTERNAL COVERS, PANELS, ETC. 2-6
101 MACHINE FRONT PLATE 2-9
102 INTERNAL COMPONENTS 1 2-11
103 INTERNAL COMPONENTS 2 2-14
104 MACHINE REAR PLATE 2-18
130 CONTROL PANEL ASSEMBLY 2-20
140 LEFT DOOR ASSEMBLY 2-23
141 TRANSFER MOUNT ASSEMBLY 2-26
250 MAIN DRIVE ASSEMBLY 2-28
280 FIXING DRIVE ASSEMBLY 2-30
300 CASSETTE UNIT 2-31
310 CASSETTE FEEDER ASSEMBLY 2-33
311 PAPER PICK-UP ASSEMBLY 2-35
312 CASSETTE FEEDER ASSEMBLY(2 CASSETTE UNIT model) 2-38
313 PAPER PICK-UP ASSEMBLY(2 CASSETTE UNIT model) 2-41
315 MULTI FEED TRAY ASS'Y 2-44
350 PAPER DELIVERY ASSEMBLY 2-46
400 EXTERNAL COVERS, PANELS, ETC. 2-48
640 DEVELOPING ASSEMBLY 2-52
810 FIXING ASSEMBLY 2-54
C10 COPYBOARD COVER ASSEMBLY(COPYBOARD model) 2-57
G10 NETWORK I/F PCB ASSEMBLY(NETWORK model) 2-59
S01 PACKING KIT(DUPLEX model) 2-60
S20 DUPLEX FEEDER ASSEMBLY(DUPLEX model) 2-62
S50 DUPLEX REVERSE UNIT(DUPLEX model) 2-65
ZZA MECHANICAL STANDARD PARTS (HOW TO USE) 2-66
ZZB MECHANICAL STANDARD PARTS (SCREWS) 2-67
ZZC MECHANICAL STANDARD PARTS (BOLTS) 2-74
ZZD MECHANICAL STANDARD PARTS (NUTS) 2-75
ZZE MECHANICAL STANDARD PARTS (RETAINING RINGS) 2-76

FIGURE A1
ASSEMBLY LOCATION DIAGRAM

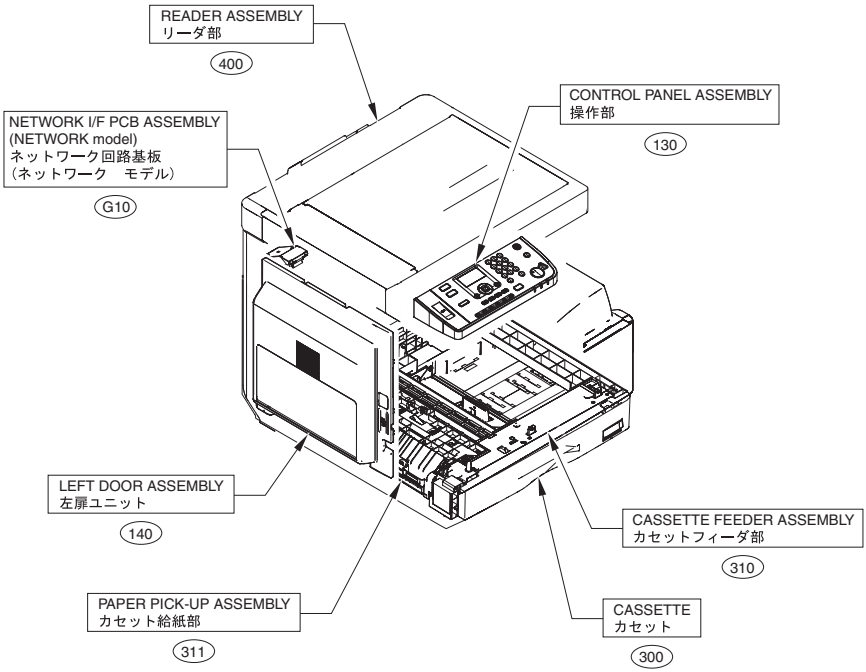

2 CASSETTE UNIT model

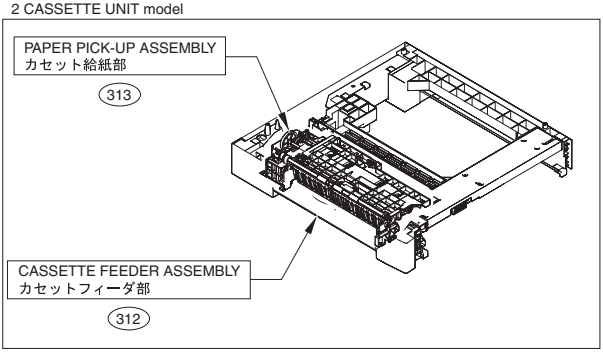

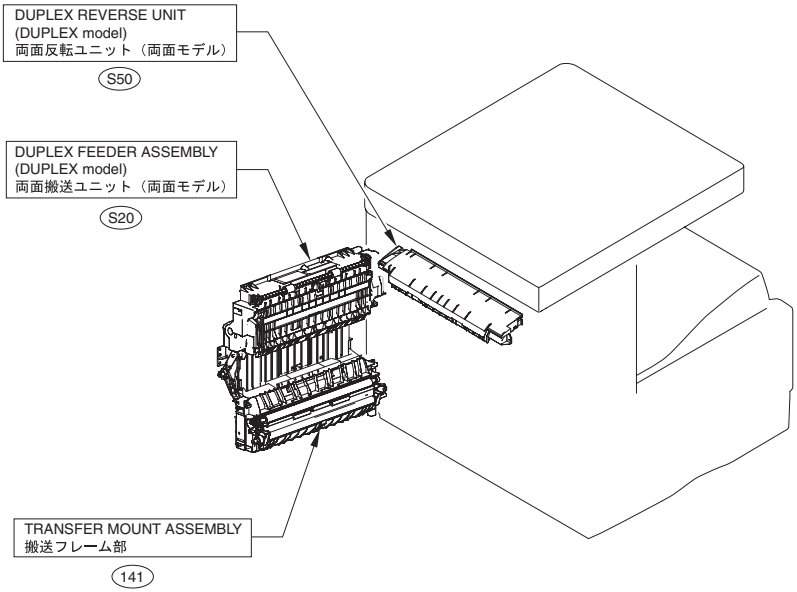
DUPLEX REVERSE UNIT
(DUPLEX model)
両面反転ユニット（両面モデル）
S50
DUPLEX FEEDER ASSEMBLY
(DUPLEX model)
両面搬送ユニット（両面モデル）
S20
TRANSFER MOUNT ASSEMBLY
搬送フレーム部
141

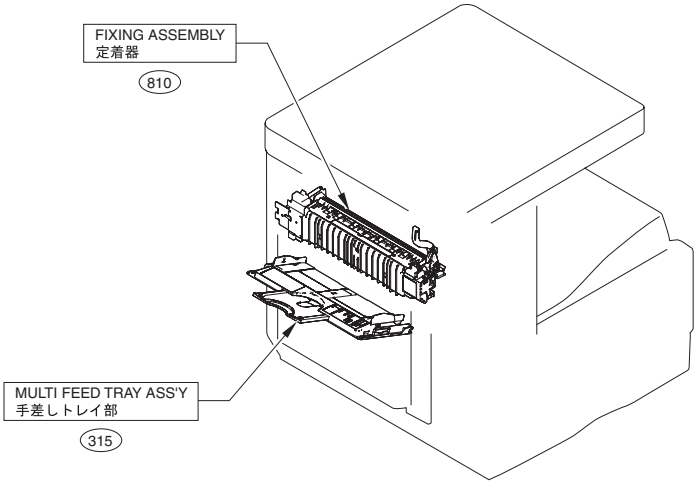
FIXING ASSEMBLY
定着器
810
MULTI FEED TRAY ASS'Y
手差しトレイ部
315

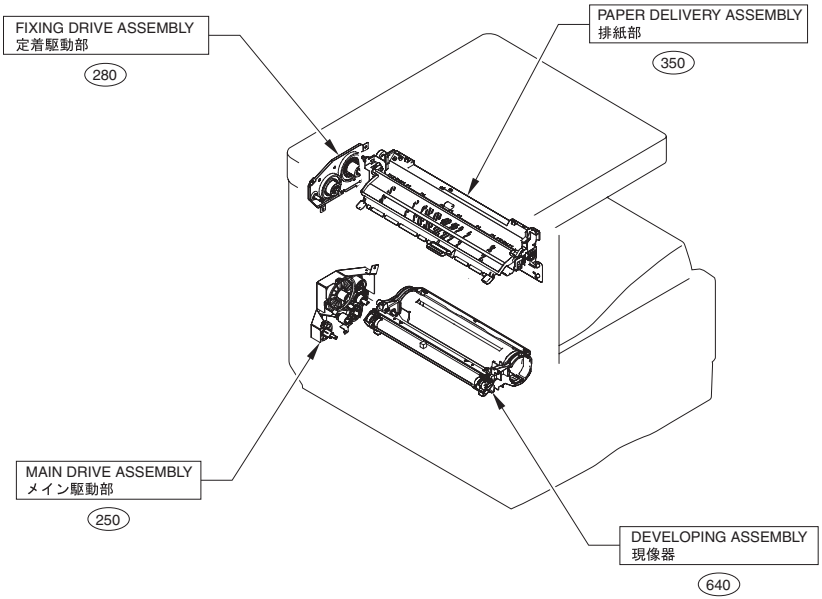

COPYBOARD model

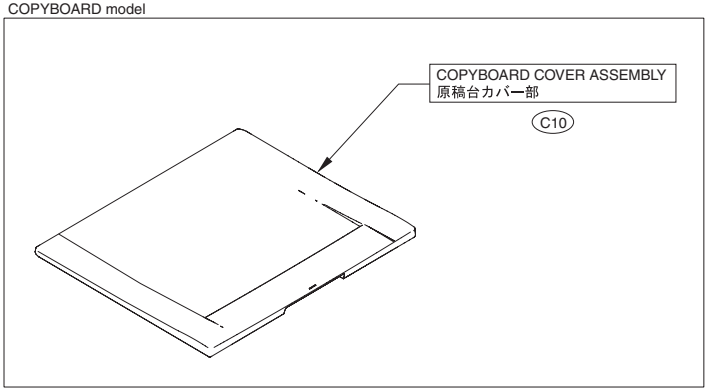

FIGURE A2
OPTION PARTS CATALOG LIST

This is the table of the machine's options whose parts catalog is issued.
本機のオプションで、パーツカタログが発行されている機種の一覧である。

No.	Model Name(English)	Model Name(Japanese)
1	Cassette Feeding Module-T1/T2/S1/S2	1段カセットユニットT1/T2 2段カセットユニットS1/S2
2	Network Interface Adapter iN-E14	Network Interface Adapter iN-E14

FIGURE 001
ACCESSORIES

EXCEPT iR2320J

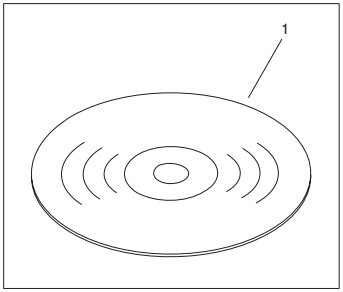

FIGURE & KEY NO.	PARTS NUMBER	RANK	Q'TY	DESCRIPTION	SERIAL NUMBER/ REMARKS	SVC
Fig.001	NPN		RF	ACCESSORIES		
1	FK3-0905-000		1	CD-ROM, UFR2LT USER SOFTWARE	EQL,EQM,EQV	
1	FK2-8505-000		1	CD-ROM, UFR Ⅱ LT USER SOFTWARE	EQU,GUQ,GUR	
1	FK3-0906-000		1	CD-ROM, UFR2LT USER SOFTWARE	ERB,EQS,EQR,EQN,EQT ,EQW,EQZ	
1	FK3-2131-000		1	CD-ROM, UFR2LT USER SOFTWARE	HVZ,HWA,HWB,HWJ	
1	FK3-2132-000		1	CD-ROM, UFR2LT USER SOFTWARE	HWC,HWD,HWE,HWG,H WK,HWM,KWS	
1	FK3-2133-000		1	CD-ROM, UFR2LT USER SOFTWARE	HWH,HWR,PKP,PHW	
1	FK3-2134-000		1	CD-ROM, UFR2LT USER SOFTWARE	HWQ	

FIGURE 100
EXTERNAL COVERS, PANELS, ETC.

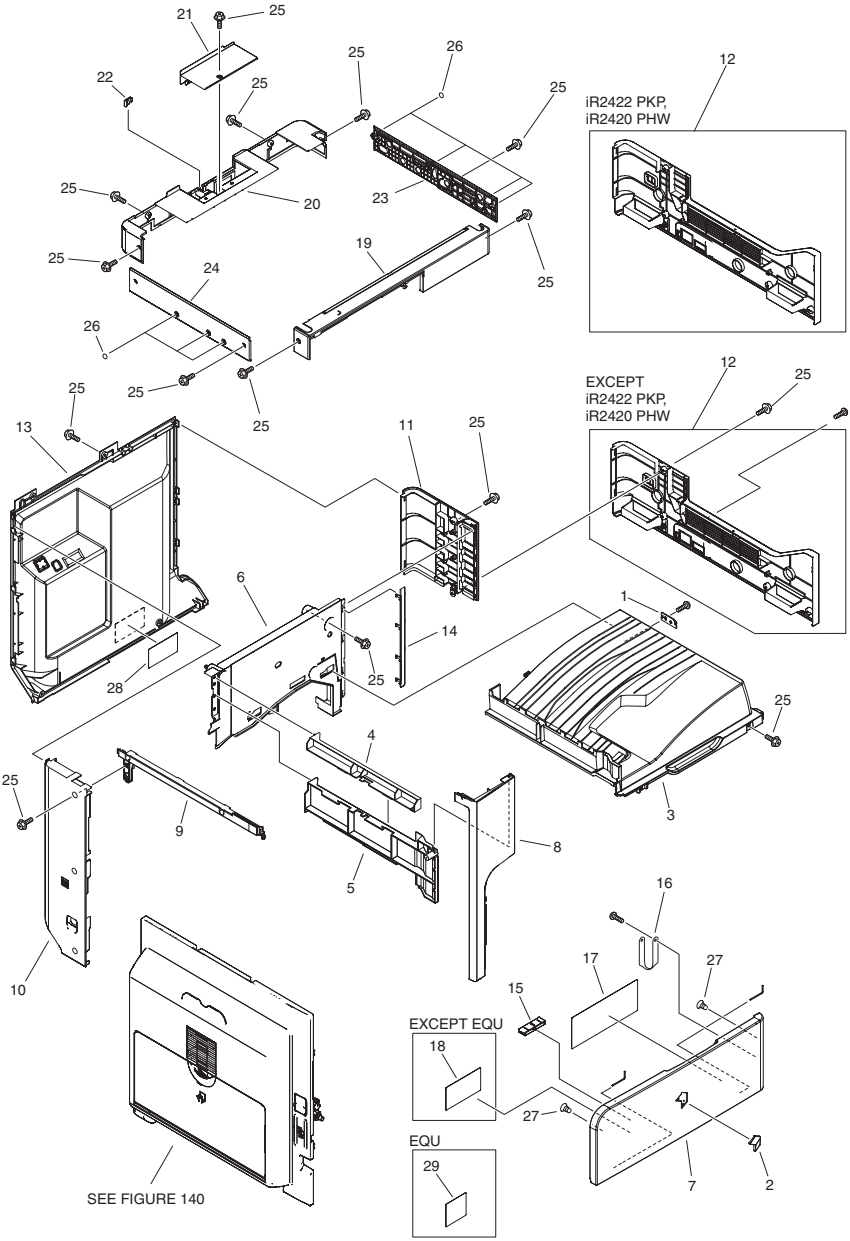

FIGURE & KEY NO.	PARTS NUMBER	RANK	Q'TY	DESCRIPTION	SERIAL NUMBER/ REMARKS	SVC
Fig.100	NPN		RF	EXTERNAL COVERS, PANELS, ETC.		
1	FC6-4476-000		1	PLATE, SUPPORT, COVER		
2	FC6-4391-000		1	EMBLEM		
3	FC6-4259-020		1	TRAY, DELIVERY		
4	FC8-0139-000		1	COVER, PAPER FEED A		
5	FC8-0140-000		1	COVER, PAPER FEED B		
6	FC6-4262-000		1	COVER, REAR, DELIVERY		
7	FL3-2109-000		1	COVER, FRONT	iR2320L EXCEPT 120V US	
7	FL3-2107-000		1	COVER, FRONT	iR2318L EXCEPT 230V EUR	
7	FL3-2108-000		1	COVER, FRONT	iR2320J	
7	FL3-2117-000		1	COVER, FRONT	iR2320N	
7	FL3-2118-000		1	COVER, FRONT	iR2420D	
7	FL3-2119-000		1	COVER, FRONT	iR2420L	
7	FL3-2105-000		1	COVER, FRONT	iR2318L 230V EUR	
7	FL3-2106-000		1	COVER, FRONT	iR2320L 120V US	
7	FL3-4276-000		1	COVER, FRONT	iR2318	
7	FL3-4277-000		1	COVER, FRONT	iR2320	
7	FL3-7133-000		1	COVER, FRONT	iR2420L	
7	FL3-7136-000		1	COVER, FRONT	120V LTN of iR2422L	
7	FL3-7128-000		1	COVER, FRONT	iR2422L EXCEPT 120V LTN	
7	FL3-7129-000		1	COVER, FRONT	iR2422D	
7	FL3-7130-000		1	COVER, FRONT	iR2422N	
7	FL3-7131-000		1	COVER, FRONT	iR2422J	
7	FL3-7134-000		1	COVER, FRONT	iR2420P	
7	FL3-7132-000		1	COVER, FRONT	iR2422	
7	FL3-7135-000		1	COVER, FRONT	iR2420	
7	FL3-7993-000		1	COVER, FRONT	iR2420LS	
8	FC6-4264-000		1	COVER, LEFT, FRONT		
9	FC6-4265-020		1	COVER, LEFT, CENTER		
10	FC6-4266-000		1	COVER, REAR, LEFT		

FIGURE & KEY NO.	PARTS NUMBER	RANK	Q'TY	DESCRIPTION	SERIAL NUMBER/ REMARKS	SVC
11	FC6-4267-000		1	COVER, RIGHT, UPPER		
12	FC6-4268-000		1	COVER, RIGHT, LOWER	EXCEPT iR2422 PKP,iR2420 PHW	
12	FE3-1264-000		1	COVER, RIGHT, LOWER	iR2422 PKP,iR2420 PHW	
13	FC9-4266-000		1	COVER, REAR, LEFT		
14	FC6-4272-000		1	COVER, BLIND		
15	FC6-4271-000		1	COVER, FOOL PROOF		
16	FC6-4273-000		1	STRAP, COVER SUPPORT		
17	FU6-8435-000		1	LABEL, TONER CARTRIDGE	EQL,HVZ	
17	FU5-8602-000		1	LABEL, TONER CARTRIDGE	EQM,EQV,HWA,HWB,HWJ	
17	FU6-8436-000		1	LABEL, TONER CARTRIDGE	EQS,EQR,EQN,EQW,EQT,EQZ,ERB,HWQ,HWD,HWE,HWK,HWF,HWM,HWC,HWG,KWS	
17	FU5-8613-000		1	LABEL, TONER CARTRIDGE	EQU,HWH,HWR,PKP,PHW	
17	FU7-8484-000		1	LABEL, TONER CARTRIDGE	EZF	
18	FU5-8603-000		1	LABEL, LEVER, DEVELOPING SET	EXCEPT EQU,HWH,HWR,HWD,HVZ,HWA,HWB,HWE,HWG,HWF,HWC,HWM,HWQ,HWJ,HWK,KWS	
19	FC9-4329-000		1	COVER, READER, FRONT		
20	FC6-4529-000		1	COVER, READER, REAR		
21	FC6-4580-000		1	WINDOW, PCB		
22	FC6-4724-000		1	COVER, CABLE, DF		
23	FL2-3268-010		1	COVER, READER, RIGHT		
24	FL2-3269-000		1	COVER, READER, LEFT		
25	XA9-1567-000		AR	SCREW, RS, M3X8.5		
26	FC6-4513-000		7	SEAL		
27	FA9-3870-000		2	CATCH, MAGNET		
28	FU5-8611-000		1	LABEL, SERVICE		
29	FU6-8434-000		1	LABEL, TONER CARTRIDGE	EQU,HWH,HWR,PKP,PHW	

FIGURE 101
MACHINE FRONT PLATE

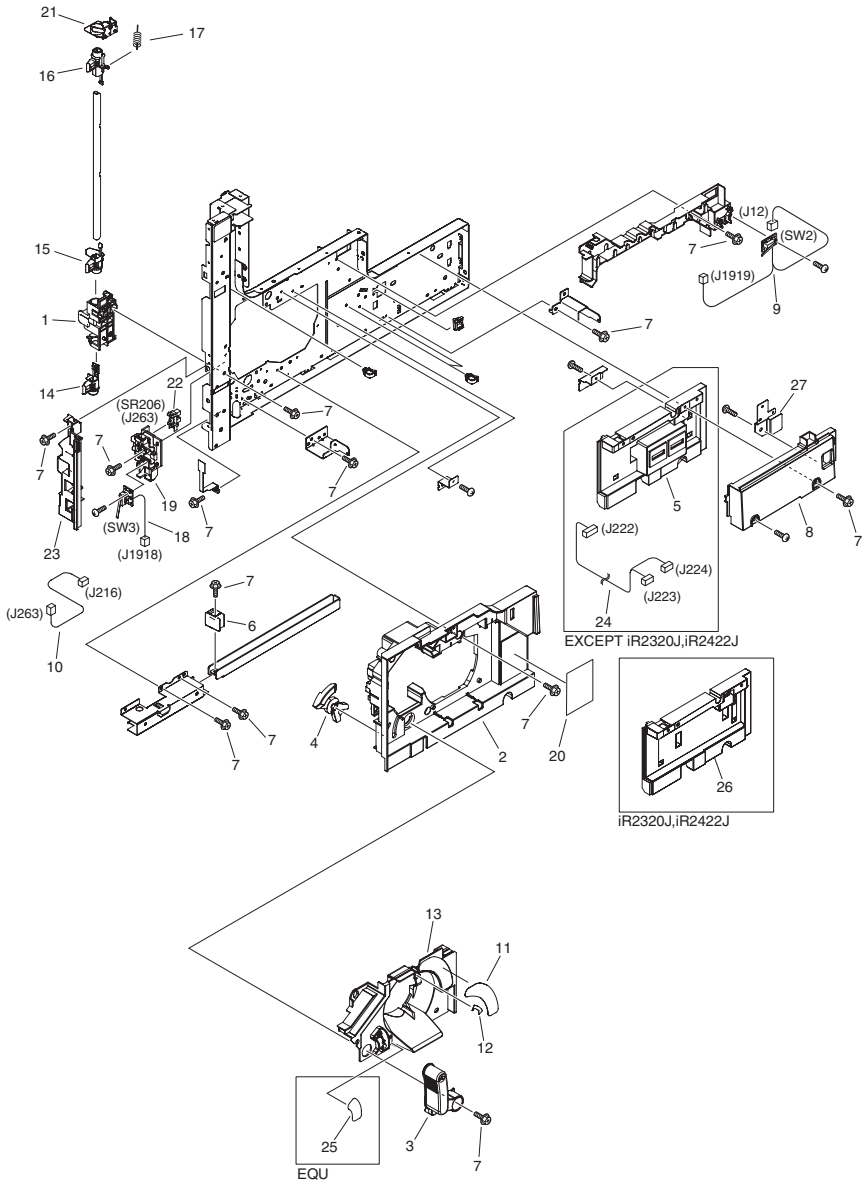

FIGURE & KEY NO.	PARTS NUMBER	RANK	Q'TY	DESCRIPTION	SERIAL NUMBER/ REMARKS	SVC
Fig.101	NPN		1	MACHINE FRONT PLATE		
1	FC6-4113-000		1	BUSHING, HOOK		
2	FC6-4140-020		1	PANEL, INNER		
3	FC6-4143-020		1	LEVER, DEV, PRESSURE	EXCEPT EQU,GUQ,GUR,HWH,HWR,PKP,PHW	
3	FC7-1757-020		1	LEVER, DEV, PRESSURE	EQU,GUQ,GUR,HWH,HWR,PKP,PHW	
4	FC6-4146-020		1	ARM, RELEASE, LEFT DOOR		
5	FM4-0646-000		1	COUNTER UNIT	EXCEPT iR2320J,iR2422J	
6	FC6-4690-000		1	CAP, GRIP, FRONT		
7	XA9-1567-000		AR	SCREW, RS, M3X8.5		
8	FC6-7092-000		1	PANEL, INNER, UPPER		
9	FM2-4433-000		1	DOOR SWITCH PCB ASS'Y 2	SW2	
10	FM4-0037-000		1	CABLE, WASTE TONER DETECTION		
11	FU5-8574-000		1	LABEL, TONER BOTTLE		
12	FU5-8608-000		1	LABEL, TONER SET INSTRUCTION		
13	FC6-4144-000		1	GUIDE, TONER BOTTLE		
14	FC6-4114-000		1	HOOK, DOOR, LOWER		
15	FC6-4115-000		1	HOOK, DOOR, MIDDLE		
16	FC6-4120-000		1	HOOK, DOOR, UPPER		
17	FU6-2194-000		1	SPRING, TENSION		
18	FM2-4020-000		1	DOOR SWITCH PCB ASS'Y		
19	FC6-4147-000		1	GUIDE, SENSOR, TONER FULL		
20	FU5-8610-000		1	LABEL, CAUTION, LASER	EXCEPT iR2320J	
20	FU7-8485-000		1	LABEL, CAUTION, LASER	iR2320J	
21	FC6-4116-000		1	BUSHING, DOOR HOOK, UPPER		
22	WG8-5696-000		1	PHOTO INTERRUPTER, TLP1243		
23	FC6-4719-000		1	COVER, INNER, FRONT LEFT		
24	FM4-0036-000		1	CABLE, COUNTER	EXCEPT iR2320J,iR2422J	
25	FU5-8573-000		1	LABEL, LEVER LOCK	EQU,GUQ,GUR,HWH,HWR,PKP,PHW	
26	FC6-4149-000		1	PANEL, INNER, RIGHT	iR2320J,iR2422J	
27	FC6-7095-000		1	PLATE, MAGNET CATCH		

FIGURE 102
INTERNAL COMPONENTS 1

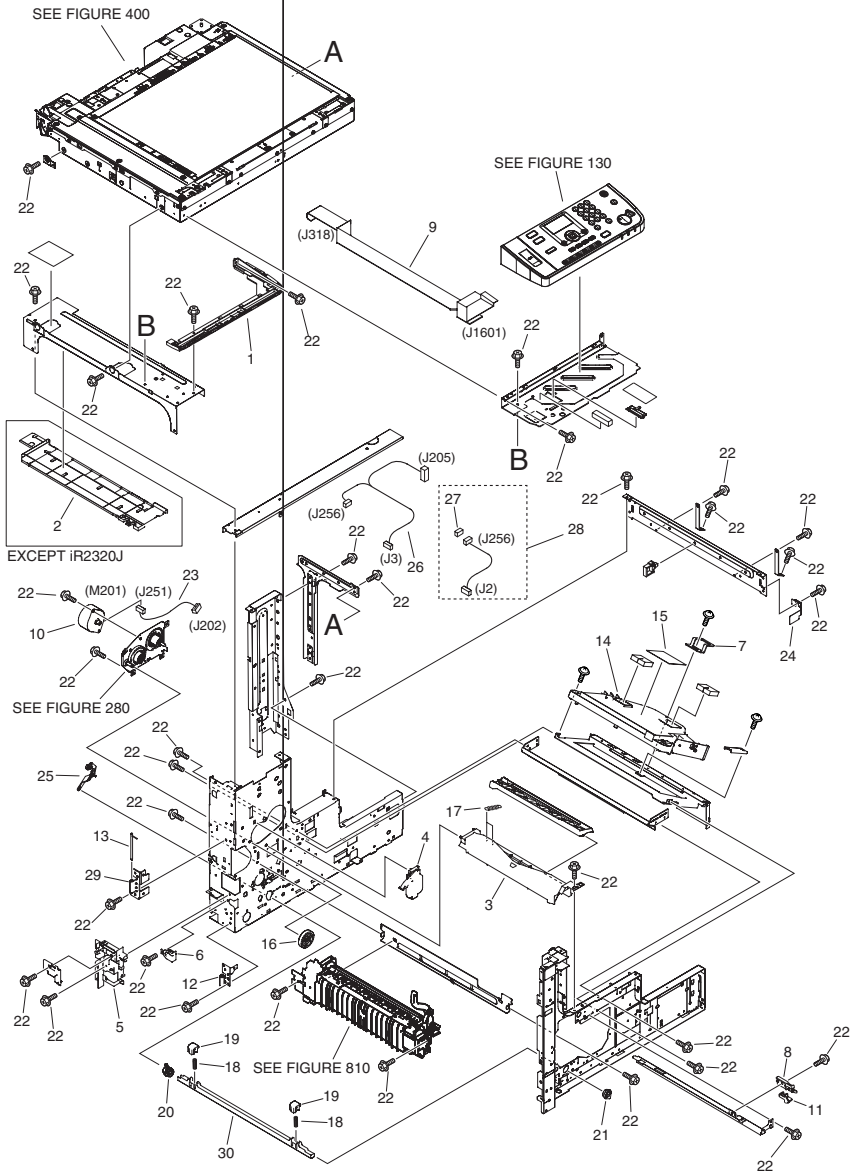

FIGURE & KEY NO.	PARTS NUMBER	RANK	Q'TY	DESCRIPTION	SERIAL NUMBER/ REMARKS	SVC
Fig.102	NPN		RF	INTERNAL COMPONENTS 1		
1	FC9-4330-000		1	COVER, OPERATOR, LOWER		
2	FC6-4723-000		1	GUIDE, FFC	EXCEPT iR2320J	
3	FC6-4478-000		1	DUCT, AIR		
4	FC6-4482-000		1	COVER, GEAR		
5	FC6-4710-000		1	BLOCK, POSITIONING, DOOR		
6	FC6-4720-000		1	BLOCK, POSITIONING, DOOR		
7	FC6-4734-000		1	WASHER, SQUARE		
8	FC7-1765-000		1	HOOK, DRUM		
9	FK3-0185-000		1	CABLE, FLAT		
10	FK2-1067-000		1	MOTOR, STEPPING, DC24V	M201	
11	FC7-1766-000		1	HOLDER, DRUM HOOK		
12	FL2-3180-000		1	PLATE, HINGE, LOWER		
13	FL2-3181-000		1	HINGE PIN UNIT		
14	FM2-3383-000		1	LASER SCANNER ASSEMBLY	EXCEPT iR2320J	
14	FM4-0667-000		1	LASER SCANNER ASSEMBLY	iR2320J	
15	FS7-8335-000		1	LABEL, LASER WARNING	EXCEPT iR2320J	
15	FU7-8486-000		1	LABEL, LASER WARNING	iR2320J	
16	FU6-0803-000		1	GEAR, 31T		
17	FU6-2207-020		2	SPRING, TORSION		
18	FU6-2146-000		2	SPRING, COMPRESSION		
19	FC6-4135-000		1	CAM, PRESSURE, DEV.		
20	FU5-1498-000		1	BUSHING, DEVELOPING, REAR		
21	FU5-1499-000		1	BUSHING, DEVELOPING, FRONT		
22	XA9-1567-000		AR	SCREW, RS, M3X8.5		
23	FM4-0030-000		1	CABLE, FIXING MOTOR	EXCEPT iR2320J	
23	FM4-0044-000		1	CABLE, FIXING MOTOR	iR2320J	
24	FC6-4693-000		1	SPRING, LEAF		
25	FC6-4244-000		1	ARM, RELEASE, DEVELOPPING		
26	FM4-0043-000		1	CABLE, BD-POLYGON		
27	VS1-7177-003		1	CONNECTOR, SNAP TIGHT, BK		
28	FM2-4401-000		1	CABLE, BD		

FIGURE & KEY NO.	PARTS NUMBER	RANK	Q'TY	DESCRIPTION	SERIAL NUMBER/ REMARKS	SVC
29	FC6-4118-000		1	PLATE, HINGE, UPPER		
30	FC6-4134-000		1	SHAFT, DEVELOPING PRESSURE		

FIGURE 103
INTERNAL COMPONENTS 2

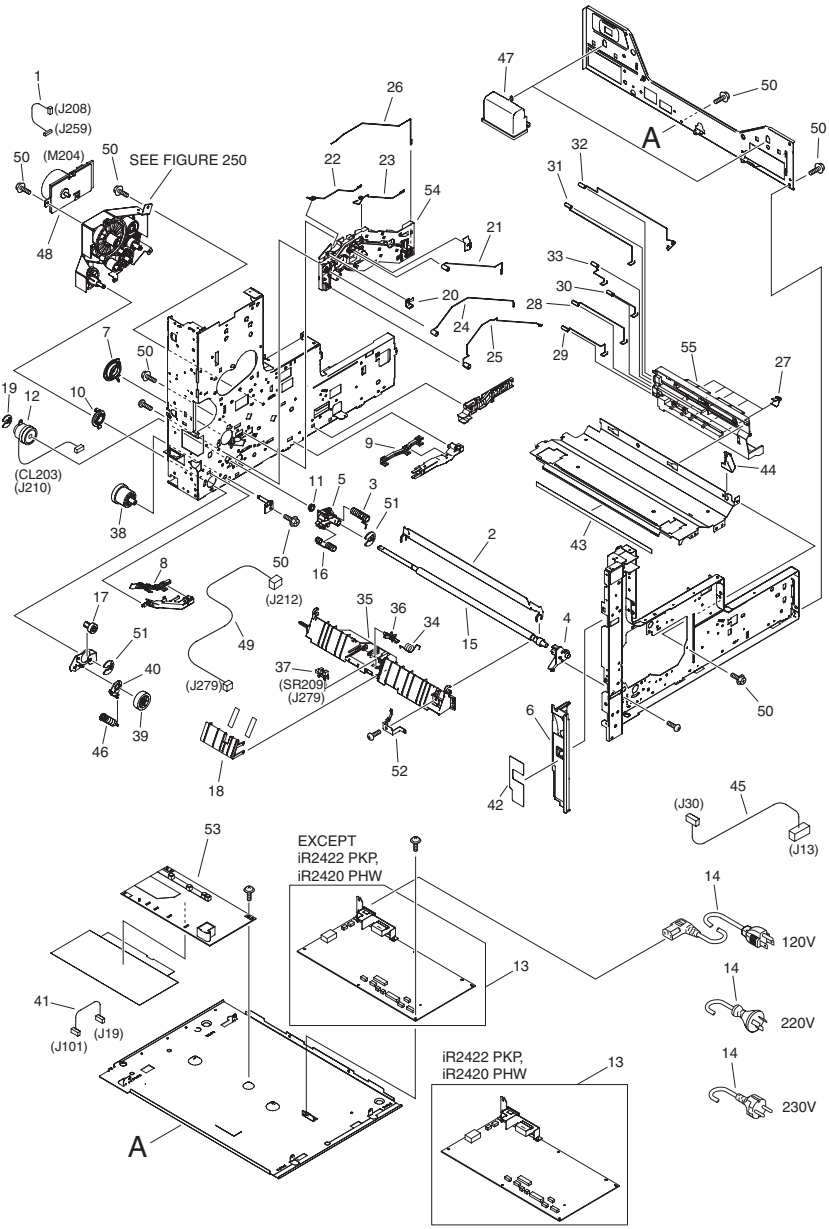

FIGURE & KEY NO.	PARTS NUMBER	RANK	Q'TY	DESCRIPTION	SERIAL NUMBER/ REMARKS	SVC
Fig.103	NPN		1	INTERNAL COMPONENTS 2		
1	FM4-0034-000		1	CABLE, MAIN MOTOR	230V	
1	FM4-0042-000		1	CABLE, MAIN MOTOR	120V	
2	FC6-4305-000		1	GUIDE, TRANSFER, UPPER		
3	FC6-4306-000		1	SPRING		
4	FC6-4311-020		1	BUSHING, TRANSFER, FRONT		
5	FC6-4312-020		1	BUSHING, TRANSFER, REAR		
6	FC6-4399-020		1	COVER, INNER, LEFT-UP		
7	FC6-4435-000		1	BUSHING		
8	FC6-4446-000		1	LID, AC-1		
9	FC6-4447-000		1	LID, AC-2		
10	FC6-4495-000		1	BUSHING		
11	FA9-2112-000		1	BUSHING, PL		
12	FK2-5349-000		1	CLUTCH, REGISTRATION	CL203	
13	FK2-8103-000		1	POWER SUPPLY ASS'Y	120V EQL,ERB,HVZ,HWQ	
13	FK2-8101-000		1	POWER SUPPLY ASS'Y	230V EQM,EQU,EQV,GUQ,GUR,HWA,HWB,HWJ,HWG,HWM,HWH,HWR	
13	FK2-8102-000		1	POWER SUPPLY ASS'Y	230V EQS,EQR,EQN,EQT,EQW,EQZ,HWC,HWD,HWE,HWK,HWF,KWS	
13	FK4-0056-000		1	POWER SUPPLY ASS'Y	iR2422 PKP,iR2420 PHW	
14	FM4-0040-000		1	CORD, POWER	120V EQL,ERB,HWQ,HVZ	
14	FM4-2724-000		1	CORD, POWER	230V EQM,EQT,EQU,EQV,EQZ,GUQ,GUR,HWA,HWB,HWJ,HWM,HWH,HWR,HWG	
14	FM4-2724-000		1	CORD, POWER	iR2422 PKP,iR2420 PHW	
14	FM4-2725-000		1	CORD, POWER	230V EQS,EQR,EQN,EQW,HWD,HWE,HWK,HWF,HWC,KWS	
14	FM4-5272-000		1	CORD, POWER	230V EZF	
15	FL2-3213-000		1	ROLLER, REGISTRATION		
16	FU6-2176-000		1	SPRING, EARTH		

FIGURE & KEY NO.	PARTS NUMBER	RANK	Q'TY	DESCRIPTION	SERIAL NUMBER/ REMARKS	SVC
17	FU6-0806-000		1	GEAR, 17T		
18	FC6-4360-030		1	GUIDE, PRE-REGIST SENSOR		
19	FC6-3002-000		1	RING, RESIN, RETAINING		
20	FC6-4148-000		1	TERMINAL, LEAF, FIXING BIAS		
21	FU6-2148-000		1	TERMINAL, CHARGE		
22	FU6-2149-000		1	TERMINAL, DEVELOPING		
23	FU6-2150-000		1	TERMINAL, DETECTION		
24	FU6-2151-000		1	TERMINAL, STATIC ELIMINATOR		
25	FU6-2152-000		1	TERMINAL, TRANSFER		
26	FU6-2198-000		1	TERMINAL, FIXING		
27	FC6-4138-000		5	TERMINAL, LEAF, HVT		
28	FU6-2156-000		1	TERMINAL, CHARGE		
29	FU6-2157-000		1	TERMINAL, DEVELOPING		
30	FU6-2158-000		1	TERMINAL, DETECTION		
31	FU6-2159-000		1	TERMINAL, STATIC ELIMINATOR		
32	FU6-2195-000		1	TERMINAL, TRANSFER		
33	FU6-2199-000		1	TERMINAL, FIXING		
34	FC6-4308-000		1	SPRING, TORSION		
35	FC6-4309-030		1	GUIDE, PRE-REGIST, UPPER		
36	FC6-4310-000		1	FLAG, SENSOR, PRE-REGIST		
37	WG8-5696-000		1	PHOTO INTERRUPTER, TLP1243	SR209	
38	FU6-0794-000		1	GEAR, 29T		
39	FU6-0796-000		1	GEAR, 33T		
40	FC6-4191-000		1	STOPPER, MULTI FEED		
41	FM3-5751-000		1	CABLE, HVT POWER		
42	FU5-8606-000		1	LABEL, JAM CLEARING		
43	FC6-4205-000		1	SHEET, CLEANING		
44	FC6-4245-000		1	GUIDE, DEVELOPING		
45	FM2-4408-000		1	CABLE, FIXING HEATER		
46	FU6-2209-000		1	SPRING, TENSION		
47	FC6-4689-000		2	HANDLE		
48	FK2-8104-000		1	MOTOR, DC24V	M204	

FIGURE & KEY NO.	PARTS NUMBER	RANK	Q'TY	DESCRIPTION	SERIAL NUMBER/ REMARKS	SVC
49	FM2-4424-000		1	CABLE, RESIST SENSOR		
50	XA9-1567-000		AR	SCREW, RS, M3X8.5		
51	FA4-1159-000		2	RING, RETAINING		
52	FC6-4307-000		1	PLATE, ROLLER, REGIST		
53	FM3-5746-000		1	HVT PCB ASSEMBLY		
54	FC6-4136-000		1	PANEL, INNER, REAR		
55	FC6-4137-000		1	GUIDE, HIGH VOLTAGE CONTACT		

FIGURE 104
MACHINE REAR PLATE

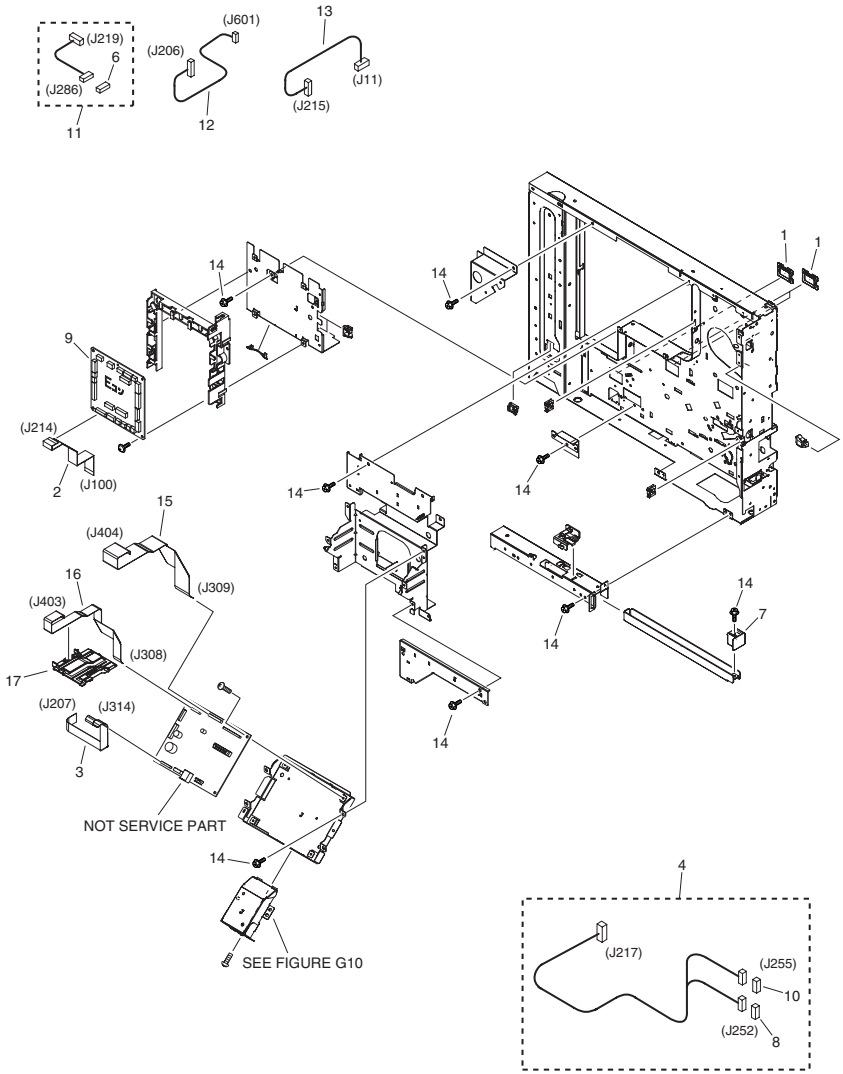

FIGURE & KEY NO.	PARTS NUMBER	RANK	Q'TY	DESCRIPTION	SERIAL NUMBER/ REMARKS	SVC
Fig.104	NPN		RF	MACHINE REAR PLATE		
1	FB6-1722-000		3	BUSHING, SQUARE		
2	FK3-0181000		1	CABLE, FLAT, HVT		
3	FK3-0182-000		1	CABLE, FLAT		
4	FM2-4410-000		1	CABLE, FIXING ASSEMBLY		
6	VS1-7177-010		1	CONNECTOR, SNAP TIGHT, BK		
7	FC6-4691-000		1	CAP, GRIP, REAR		
8	VS1-7207-007		1	CONNECTOR, SNAP TIGHT		
9	FM4-0027-000		1	DC CONTROLLER PCB ASSEMBLY	EXCEPT iR2318L,iR2318,iR2320J	
9	FM4-0028-000		1	DC CONTROLLER PCB ASSEMBLY	iR2318L,iR2318	
9	FM4-5267-000		1	DC CONTROLLER PCB ASSEMBLY	iR2320J	
9	FM4-9837-000		1	DC CONTROLLER PCB ASSEMBLY	iR2422L,iR2422D,iR2422 N,iR2422	
9	FM4-9838-000		1	DC CONTROLLER PCB ASSEMBLY	iR2420L,iR2420P,iR2420	
9	FM4-9839-000		1	DC CONTROLLER PCB ASSEMBLY	iR2422J	
10	VS1-7207-006		1	CONNECTOR, SNAP TIGHT		
11	FM2-4416-000		1	CABLE, LEFT DOOR		
12	FM2-4414-000		1	CABLE, LASER		
13	FM4-0038-000		1	CABLE, DC CONTROLLER		
14	XA9-1567-000		AR	SCREW, RS, M3X8.5		
15	FK3-0184-000		1	CABLE, FLAT		
16	FK3-0183-000		1	CABLE, FLAT		
17	FC9-4265-000		1	GUIDE, CABLE	EXCEPT iR2320J	
17	FC9-4264-000		1	GUIDE, CABLE	iR2320J	

FIGURE 130
CONTROL PANEL ASSEMBLY

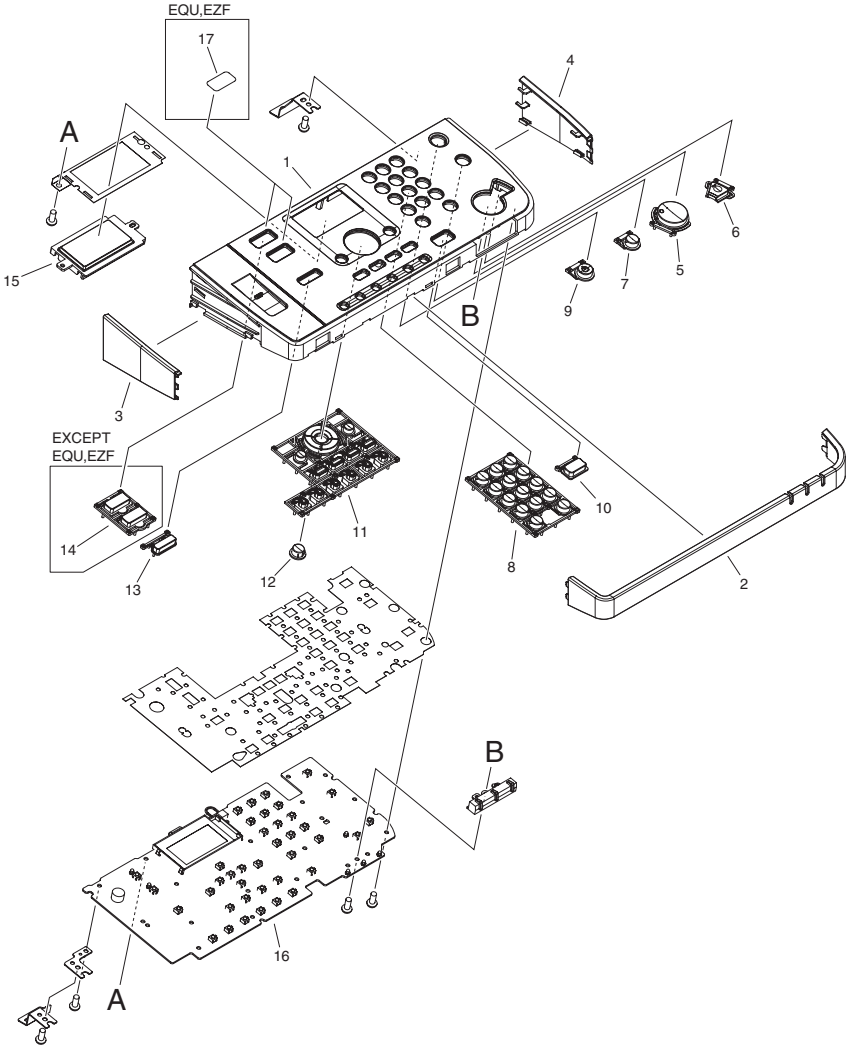

FIGURE & KEY NO.	PARTS NUMBER	RANK	Q'TY	DESCRIPTION	SERIAL NUMBER/ REMARKS	SVC
Fig.130	FM4-0640-000		1	CONTROL PANEL ASSEMBLY	EQL,EQM,EQV,HVZ,HWA ,HWB,HWJ	
Fig.130	FM4-0641-000		1	CONTROL PANEL ASSEMBLY	ERB,EQS,EQR,EQN,EQ W,HWD,HWE,HWK,HWC, KWS	
Fig.130	FM4-0643-000		1	CONTROL PANEL ASSEMBLY	EQU	
Fig.130	FM4-0645-000		1	CONTROL PANEL ASSEMBLY	EQT,EQZ,HWM,HWG	
Fig.130	FM4-0670-000		1	CONTROL PANEL ASSEMBLY	EZF,HWF	
Fig.130	FM4-0655-000		1	CONTROL PANEL ASSEMBLY	GUQ,GUR,HWH,HWR	
Fig.130	FM4-0644-000		1	CONTROL PANEL ASSEMBLY	HWQ	
1	FL3-2110-000		1	COVER, CONTROL PANEL	EQL,EQM,EQV,EQU,HVZ ,HWA,HWB,HWJ	
1	FL3-2111-000		1	COVER, CONTROL PANEL	ERB,EQS,EQR,EQN,EQ W,HWD,HWE,HWK,HWC, KWS	
1	FL3-2115-000		1	COVER, CONTROL PANEL	EQT,EQZ,HWM,HWG	
1	FL3-2112-000		1	COVER, CONTROL PANEL	EZF,HWF	
1	FL3-2122-000		1	COVER, CONTROL PANEL	GUQ,GUR,HWH,HWR,PK P,PHW	
1	FL3-2114-000		1	COVER, CONTROL PANEL	HWQ	
2	FC9-4301-000		1	COVER, CONTROL PANEL, CENTER		
3	FC9-4302-000		1	COVER, CONTROL PANEL, LEFT		
4	FC9-4303-000		1	COVER, CONTROL PANEL, RIGHT		
5	FC9-4304-000		1	KEY TOP, START		
6	FC9-4305-000		1	KEY TOP, STOP		
7	FC9-4306-000		1	KEY TOP, USER MODE		
8	FC9-4307-000		1	KEY TOP, NUMBERS		
9	FC9-4308-000		1	KEY TOP, POWER SUPPLY		
10	FC9-4309-000		1	KEY TOP, RESET		
11	FC9-4311-000		1	KEY TOP, RING		
12	FC9-4312-000		1	KEY TOP, OK		
13	FC9-4313-000		1	KEY TOP, CANCEL		
14	FC9-4314-000		1	KEY TOP, SYSTEM	EXCEPT EQU,EZF,HWF	
15	FC9-4318-000		1	WINDOW, LCD		
16	FM4-0029-000		1	CONTROL PANEL PCB ASSEMBLY	EXCEPT EQU,EZF,HWF	

FIGURE & KEY NO.	PARTS NUMBER	RANK	Q'TY	DESCRIPTION	SERIAL NUMBER/ REMARKS	SVC
16	FM4-0041-000		1	CONTROL PANEL PCB ASSEMBLY	EQU	
16	FM4-5269-000		1	CONTROL PANEL PCB ASSEMBLY	EZF,HWF	
17	FC9-4316-000		2	COVER, SCANNING KEY	EQU,EZF,HWF	

FIGURE 140
LEFT DOOR ASSEMBLY

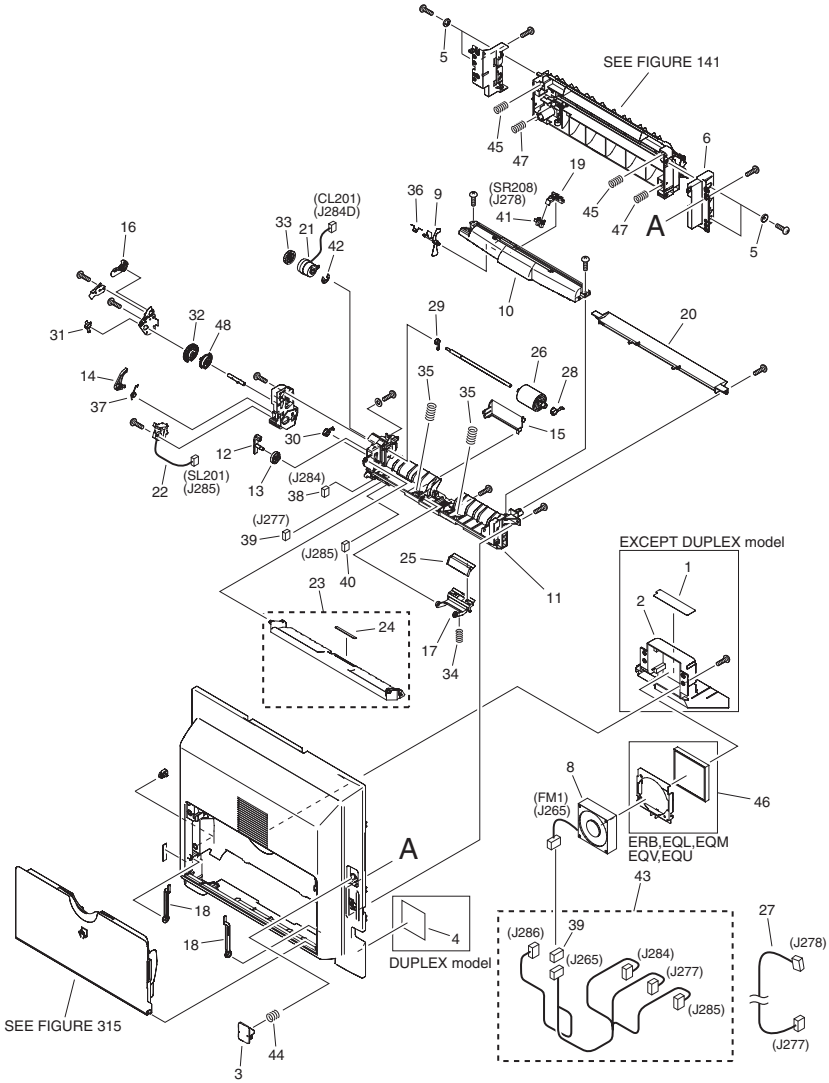

NOTE 1 : This assembly includes the assemblies shown in Figure 141 and 315.
NOTE 2 : This assembly includes the assemblies shown in Figure S20 and S50.(DUPLEX model)
注 1 : このユニットはFigure 141,315のユニットを含みます。
注 2 : このユニットはFigure S20,S50のユニットを含みます。（両面モデル）

FIGURE & KEY NO.	PARTS NUMBER	RANK	Q'TY	DESCRIPTION	SERIAL NUMBER/ REMARKS	SVC
Fig.140	FM2-3330-300		1	LEFT DOOR ASSEMBLY	SEE NOTE ERB,EQL,EQM,EQT,EQU ,EQV,EQZ,GUQ,GUR	
Fig.140	FM3-6924-000		1	LEFT DOOR ASSEMBLY	SEE NOTE EQS,EQR,EQW	
Fig.140	FM3-8304-000		1	LEFT DOOR ASSEMBLY	SEE NOTE EQN	
Fig.140	FM4-0668-000		1	LEFT DOOR ASSEMBLY	SEE NOTE \Nezf	
1	FU5-8607-000		1	LABEL, WARNING, ROLLER	EXCEPT DUPLEX model	
2	FC6-4376-000		1	HOLDER, FAN	EXCEPT DUPLEX model	
3	FC6-4386-000		1	BUTTON, PUSH		
4	FU5-8699-000		1	LABEL, JAM CLEAR	DUPLEX model	
5	FC6-4413-000		4	SPACER, FRAME, FEED		
6	FC6-4414-000		1	MOUNT, FRAME, FEED		
8	FK2-1084-000		1	FAN	FM1	
9	FC6-4209-020		1	FLAG, SENSOR		
10	FC6-4210-000		1	COVER, ROLLER		
11	FC6-4211-000		1	GUIDE, MULTI FEED		
12	FC6-4224-000		1	SUPPORT, CAM, LIFTING		
13	FC8-0168-000		1	CAM, LIFTING PLATE		
14	FC6-4227-020		1	ARM, MULTI FEED		
15	FC6-4232-000		1	COVER, HARNESS		
16	FC8-0167-000		1	STOPPER, SWING PLATE		
17	FC6-4234-000		1	ARM, PAD, SEPARATION		
18	FC6-4238-000		2	STOPPER, MULTI FEED		
19	FC6-4239-000		1	HOLDER, SENSOR		
20	FC6-4377-000		1	GUIDE, FEED		
21	FK2-1070-000		1	CLUTCH, ELECTROMAGNETIC	CL201	
22	FK2-1072-000		1	SOLENOID	SL201	
23	FL2-3200-000		1	LIFTING PLATE ASSEMBLY		
24	FC5-0543-000		1	SHEET, SEPARATION		
25	FL2-3201-010		1	SEPARATION PAD ASS'Y		
26	FL2-3202-000		1	ROLLER, PICK-UP		
27	FM2-4421-000		1	HARNESS, SENSOR, PAPER		

FIGURE & KEY NO.	PARTS NUMBER	RANK	Q'TY	DESCRIPTION	SERIAL NUMBER/ REMARKS	SVC
28	FU5-1527-000		1	BUSHING, ROLLER, PICK-UP		
29	FU5-1528-000		1	BUSHING, SHAFT, PICK-UP		
30	FU5-1529-000		1	BUSHING, SHAFT, CAM (F)		
31	FU5-1530-000		1	BUSHING, SHAFT, CAM (R)		
32	FC8-0165-000		1	GEAR, MULTI FEED		
33	FU6-0814-000		1	GEAR, 25T		
34	FU6-2180-000		1	SPRING, COMPRESSION		
35	FU7-2221-000		2	SPRING, COMPRESSION		
36	FU6-2182-000		1	SPRING, TORSION		
37	FU7-2222-000		1	SPRING, TORSION		
38	VS1-7177-002		1	CONNECTOR, SNAP TIGHT, BK		
39	VS1-7177-003		2	CONNECTOR, SNAP TIGHT, BK		
40	VS1-7177-004		1	CONNECTOR, SNAP TIGHT, BK		
41	WG8-5696-000		1	PHOTO INTERRUPTER, TLP1243	SR208	
42	XD9-0136-000		1	RING, E		
43	FM2-4417-000		1	CABLE, LEFT DOOR		
44	FU6-2160-000		1	SPRING, COMPRESSION		
45	FU6-2162-000		2	SPRING, COMPRESSION		
46	FM2-3331-000		1	FILTER UNIT	ERB,EQL,EQM,EQV,EQU ,GUQ,GUR	
47	FU6-2178-000		2	SPRING, COMPRESSION		
48	FC8-0166-000		1	GEAR, 39T		

FIGURE 141
TRANSFER MOUNT ASSEMBLY

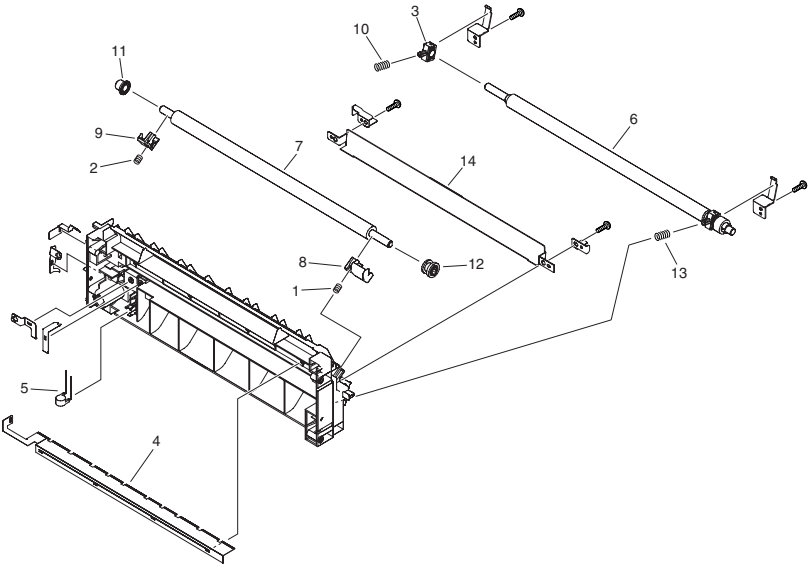

NOTE : This assembly is included in the assembly shown in Figure 140.
注 : このユニットはFigure 140のユニットに含まれます。

TONER
www.tonerplus.com.ua

FIGURE & KEY NO.	PARTS NUMBER	RANK	Q'TY	DESCRIPTION	SERIAL NUMBER/ REMARKS	SVC
Fig.141	FM2-3315-000		1	TRANSFER MOUNT ASSEMBLY	SEE NOTE	
1	FU6-2171-000		1	SPRING, TRANSFER ROLLER, LEFT		
2	FU5-2476-000		1	SPRING, TRANSFER ROLLER, RIGHT		
3	FC6-4317-000		1	BUSHING, REGIST ROLLER		
4	FC6-4324-000		1	ELIMINATOR, STATIC CHARGE		
5	FH5-3543-000		1	VARISTOR		
6	FL2-3214-000		1	REGIST ROLLER ASSEMBLY		
7	FC6-4313-000		1	ROLLER, TRANSFER		
8	FC6-4314-030		1	BUSHING, TRANSFER, FRONT		
9	FC6-4315-000		1	BUSHING, TRANSFER, LOWER		
10	FU6-2173-000		1	SPRING, COMPRESSION		
11	FC6-4316-000		1	ROLLER		
12	FU6-0773-000		1	GEAR, 30T		
13	FU6-2177-020		1	SPRING, COMPRESSION		
14	FL2-3211-000		1	GUIDE,PRE-TRANS.,LW.		

FIGURE 250
MAIN DRIVE ASSEMBLY

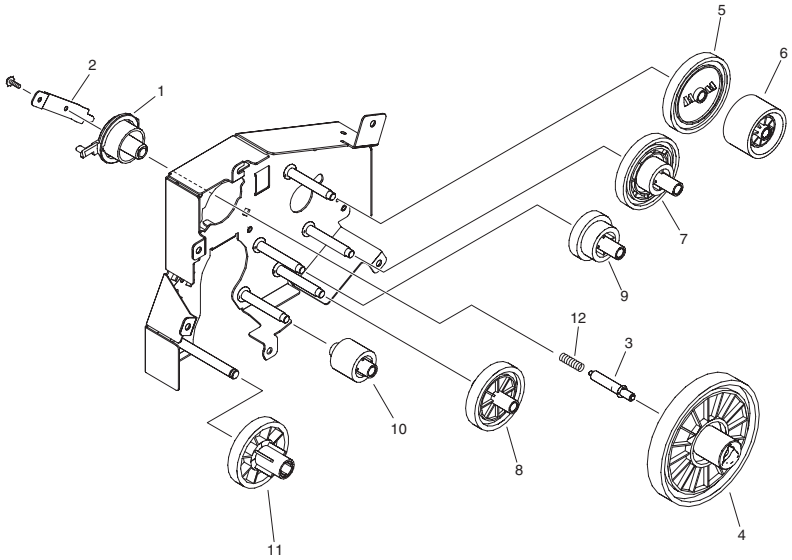

FIGURE & KEY NO.	PARTS NUMBER	RANK	Q'TY	DESCRIPTION	SERIAL NUMBER/ REMARKS	SVC
Fig.250	NPN		RF	MAIN DRIVE ASSEMBLY		
1	FC6-4436-000		1	BUSHING		
2	FC6-4437-000		1	PLATE, EARTH		
3	RB2-1850-000		1	PIN		
4	FU6-0788-000		1	GEAR, 161T		
5	FU6-0766-000		1	GEAR, 13T		
6	FU6-0767-000		1	GEAR, 9T		
7	FU6-0790-000		1	GEAR, 25T/91T		
8	FU6-0791-000		1	GEAR, 53T		
9	FU6-0792-000		1	GEAR, 37T/28T		
10	FU6-0793-000		1	GEAR, 25T		
11	FU6-0795-000		1	GEAR, 55T		
12	FU6-2184-000		1	SPRING, EARTH		

FIGURE 280
FIXING DRIVE ASSEMBLY

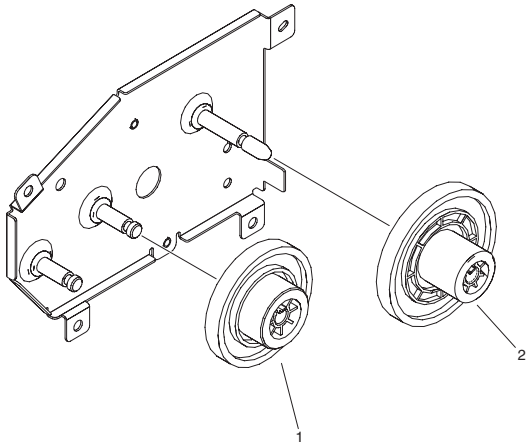

FIGURE & KEY NO.	PARTS NUMBER	RANK	Q'TY	DESCRIPTION	SERIAL NUMBER/ REMARKS	SVC
Fig.280	FM2-3350-000		1	FIXING DRIVE ASSEMBLY		
1	FU6-0802-000		1	GEAR, 80T/17T		
2	FU6-0804-000		1	GEAR, 91T/19T		

FIGURE 300
CASSETTE UNIT

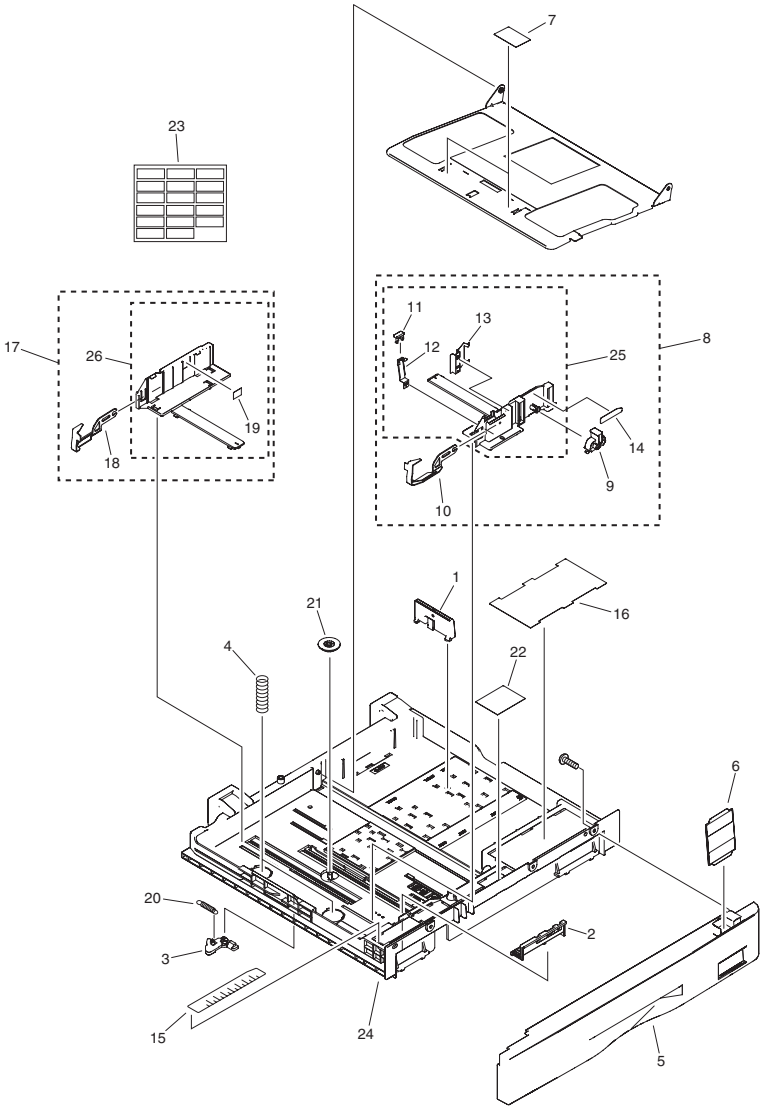

FIGURE & KEY NO.	PARTS NUMBER	RANK	Q'TY	DESCRIPTION	SERIAL NUMBER/ REMARKS	SVC
Fig.300	NPN		RF	CASSETTE UNIT		
1	FB4-5814-000		1	PLATE, SIZE, REAR		
2	FB6-1640-000		1	LEVER, PAPER SIZE		
3	FB6-1644-000		1	LOCK, PAPER LIFTING PLATE		
4	FB6-2000-000		2	SPRING, COMPRESSION		
5	FC6-4337-000		1	COVER, CASSETTE		
6	FC6-4361-000		1	PLATE, SIZE INDICATOR		
7	FB6-1650-000		2	SHEET, SEPARATION		
8	FM2-3325-000		1	PAPER SIDE GUIDE (F) UNIT		
9	FB4-5809-020		1	LEVER, LOCK		
10	FB4-5813-020		1	PLATE, HOLD-DOWN TAB		
11	FB4-5810-000		1	PLATE, PAPER CONTACT		
12	FB6-1646-000		1	SPRING, LEAF		
13	FB6-1649-000		1	SPRING, LEAF		
14	FU5-8588-000		1	LABEL, SIDE LOCK		
15	FU6-8460-000		1	LABEL, PAPER SIZE SETTING		
16	FU6-8461-000		1	LABEL, PAPER SUPPLY		
17	FM2-3326-000		1	PAPER SIDE GUIDE (R) UNIT		
18	FB4-5808-020		1	PLATE, HOLD-DOWN TAB		
19	FB4-5824-000		1	LABEL, LIMIT		
20	FS6-2917-000		1	SPRING, TENSION		
21	FS7-0207-000		1	GEAR, 20T		
22	FU7-8048-000		1	LABEL, WARNING	EXCEPT CN,TW,KR	
22	FU7-8049-000		1	LABEL, WARNING	CN,TW,KR	
22	FU7-8483-000		1	LABEL, CAUTION	iR2320J	
23	FU6-8457-000		1	LABEL, PAPER SIZE	EXCEPT CN	
23	FU7-8047-000		1	LABEL, PAPER SIZE	CN	
24	FC8-0269-000		1	BODY, CASSETTE		
25	FL2-3287-000		1	PLATE, PAPER SIDE END, FRONT		
26	FL2-3288-000		1	PLATE, PAPER SIDE END, REAR		

FIGURE 310
CASSETTE FEEDER ASSEMBLY

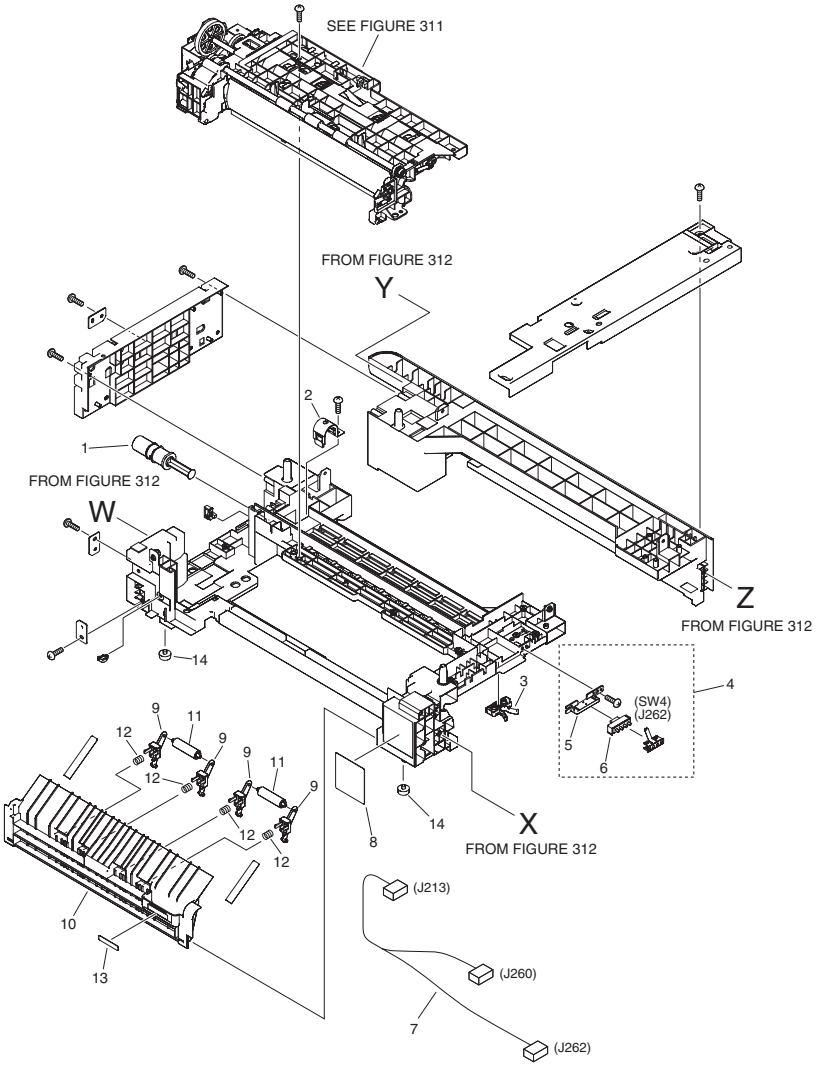

FIGURE & KEY NO.	PARTS NUMBER	RANK	Q'TY	DESCRIPTION	SERIAL NUMBER/ REMARKS	SVC
Fig.310	NPN		RF	CASSETTE FEEDER ASSEMBLY		
1	FB4-5532-000		1	DAMPER		
2	FB6-1608-000		1	HOLDER, DAMPER		
3	FC6-4357-000		1	BLOCK, POSITION		
4	FM2-3319-000		1	SIZE DETECTION ASS'Y		
5	FB6-1910-000		1	MOUNT, SIZE SENSOR		
6	WC2-5680-000		1	SWITCH, PUSH	SW4	
7	FM2-4403-000		1	CABLE, CASSETTE		
8	FU5-8585-000		1	LABEL, JAM CLEARING		
9	FC6-4297-000		4	BUSHING, ROLLER, VERTICAL		
10	FC6-4298-000		1	COVER, CASSETTE, LEFT		
11	FC6-4300-000		2	ROLLER, VERTICAL PASS		
12	FU6-2170-000		4	SPRING, COMPRESSION		
13	FU5-8586-000		1	LABEL, COVER		
14	XH9-0135-000		2	FOOT, RUBBER		

FIGURE 311
PAPER PICK-UP ASSEMBLY

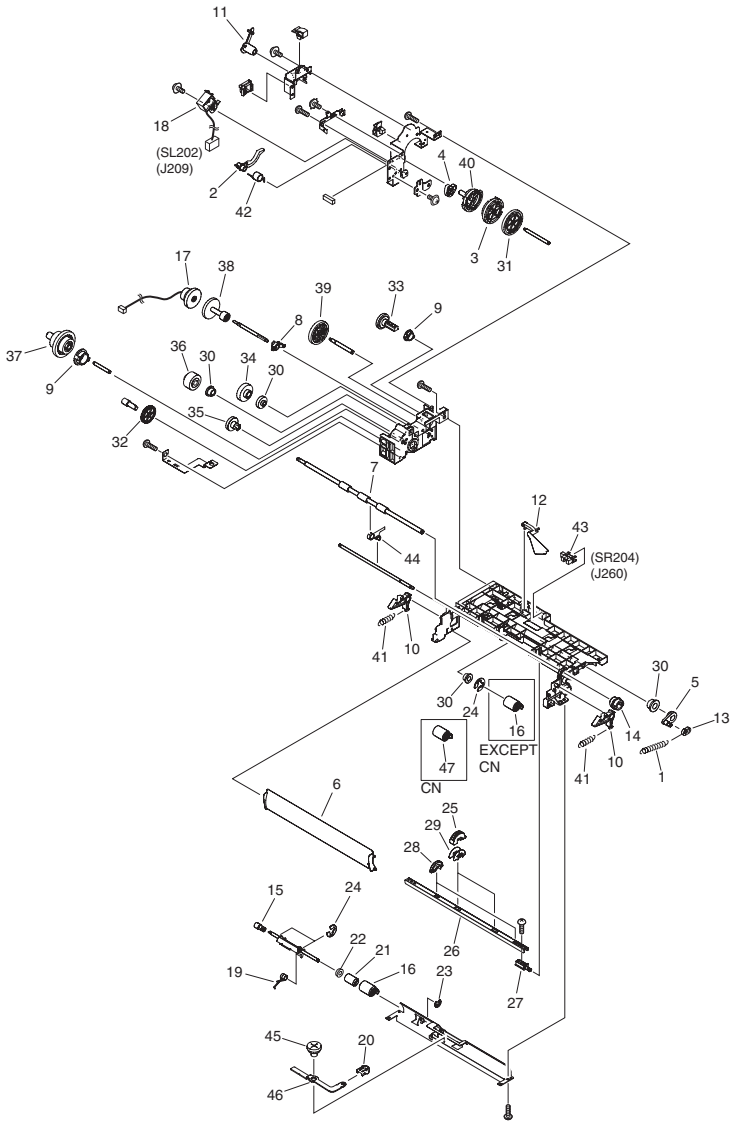

FIGURE & KEY NO.	PARTS NUMBER	RANK	Q'TY	DESCRIPTION	SERIAL NUMBER/ REMARKS	SVC
Fig.311	FM2-3320-050		1	PAPER PICK-UP ASSEMBLY	EXCEPT CN	
Fig.311	FM4-0656-000		1	PAPER PICK-UP ASSEMBLY	CN	
1	FB6-1550-000		1	SPRING, TENSION		
2	FB6-1626-000		1	LEVER, COUPLING		
3	FC6-4327-000		1	GEAR, 50T/36T		
4	FB6-1660-000		1	CAM		
5	FB6-1909-000		1	BUSHING		
6	FC6-4285-000		1	GUIDE, TURN		
7	FC6-4286-000		1	ROLLER, VERTICAL PATH	EXCEPT CN	
7	FC9-4274-000		1	ROLLER, VERTICAL PATH	CN	
8	FC6-4291-000		1	BUSHING, CLUTCH		
9	FC6-4304-000		2	BUSHING, ROLLER, PICK-UP		
10	FC6-4326-000		2	LOCK, VERTICAL PASS		
11	FC6-4348-000		1	BUSHING, CLUTCH, REAR		
12	FC9-4288-000		1	ARM, DETECTION, PAPER		
13	FC6-4352-000		1	COLLAR, SPRING		
14	FC6-4355-000		1	BUSHING		
15	FC9-4290-000		1	JOINT, RETARD		
16	FF6-1621-000		2	ROLLER, SEPARATION		
17	FK2-1068-000		1	CLUTCH, ELECTROMAGNETIC		
18	FK2-1082-000		1	SOLENOID	SL202	
19	FU7-2234-000		1	SPRING, TORSION		
20	FB6-1908-000		1	CAP		
21	FC6-4290-000		1	LIMITER, TORQUE		
22	FB6-1541-000		1	BUSHING		
23	XD9-0133-000		1	RING, E		
24	XD9-0136-000		3	RING, E		
25	FB4-9817-030		2	ROLLER, PICK-UP		
26	FC6-4284-000		1	SHAFT, ROLLER, PICK-UP		
27	FC6-4351-000		1	SHAFT, ROLLER		
28	FC6-4356-000		2	ROLLER, LOOP		
29	FE5-4048-000		2	BLOCK, PICK-UP ROLLER ADPTER		

FIGURE & KEY NO.	PARTS NUMBER	RANK	Q'TY	DESCRIPTION	SERIAL NUMBER/ REMARKS	SVC
30	FS1-1205-000		4	BUSHING		
31	FS7-0225-000		1	GEAR, 53T		
32	FS7-0226-000		1	GEAR, 36T		
33	FS7-0228-000		1	GEAR, 31T		
34	FS7-0229-000		1	GEAR, 18T		
35	FS7-0230-000		1	GEAR, 27T		
36	FU6-0769-000		1	GEAR, 17T	ERB,EQL,EQM,EQV,EQU,GUQ,GUR,HWQ,HVZ,HWA,HWB,HWJ,HWG,HWM,HWH,HWR,PKP,PHW	
36	FU7-0923-000		1	GEAR, 17T	EQS,EQR,EQN,EQT,EQW,EQZ,EZF,HWC,HWD,HWE,HWK,HWF,KWS	
37	FU6-0770-000		1	GEAR, 21T/37T/22T		
38	FU6-0771-030		1	GEAR, 16T/34T		
39	FU6-0775-000		1	GEAR, 39T		
40	FU6-0776-030		1	GEAR, 29T		
41	FU6-2174-000		2	SPRING, TENSION		
42	FU6-2175-000		1	SPRING, TORSION		
43	WG8-5696-000		1	PHOTO INTERRUPTER, TLP1243	SR204	
44	FC7-1770-000		1	BUSHING		
45	FS5-9714-000		1	SCREW,STEPPED,M3		
46	FC6-4288-020		1	LEVER, PRESSURE		
47	FC8-0170-000		1	ROLLER, FEED	CN	

FIGURE 312
CASSETTE FEEDER ASSEMBLY(2 CASSETTE UNIT model)

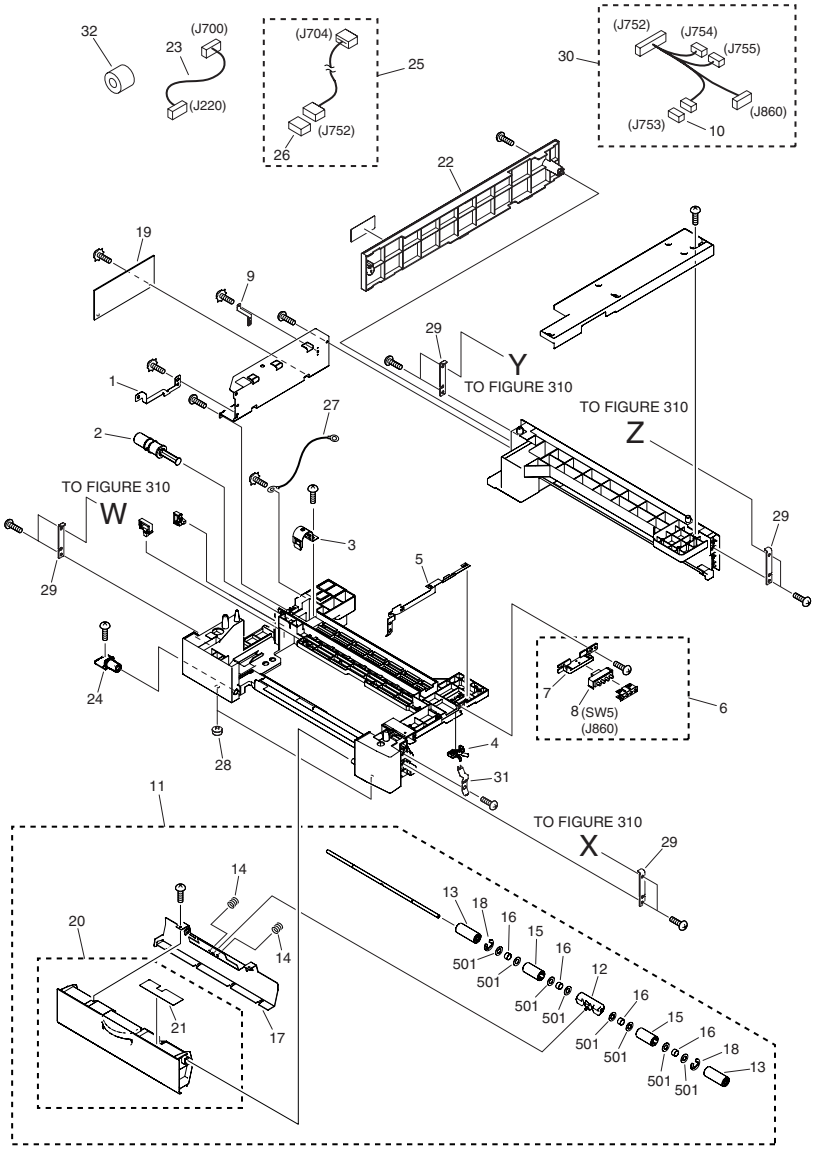

FIGURE & KEY NO.	PARTS NUMBER	RANK	Q'TY	DESCRIPTION	SERIAL NUMBER/ REMARKS	SVC
Fig.312	NPN		RF	CASSETTE FEEDER ASSEMBLY	2 CASSETTE UNIT model	
1	FC6-6720-000		1	PLATE, GROUNDING		
2	FB4-5532-000		1	DAMPER		
3	FB6-1608-000		1	HOLDER, DAMPER		
4	FC6-4357-000		1	BLOCK, POSITION		
5	FC6-6706-000		1	PLATE, EARTH		
6	FG6-8440-000		1	SIZE DETECTION ASS'Y		
7	FB6-1910-000		1	MOUNT, SIZE SENSOR		
8	WC2-5680-000		1	SWITCH, PUSH	SW5	
9	FC6-6720-000		1	PLATE, GROUNDING		
10	VS1-7177-002		1	CONNECTOR, SNAP TIGHT, BK		
11	FM2-4483-000		1	VERTICAL PATH UNIT		
12	FA8-2447-000		1	MOUNT, ROLLER		
13	FB6-1536-000		2	ROLLER		
14	FB6-1920-000		2	SPRING, COMPRESSION		
15	FB6-1996-000		2	ROLLER, VERTICAL PATH		
16	FB6-1997-000		4	SPRING, COMPRESSION		
17	FC6-6714-000		1	GUIDE, VERTICAL PATH		
18	XD9-0136-000		2	RING, E		
19	FM2-4495-000		1	FEEDER CONTROLLER PCB ASS'Y		
20	FL2-3736-000		1	COVER, VERTICAL PATH		
21	FU5-8680-000		1	LABEL,JAM		
22	FC6-6710-000		1	COVER, CASSETTE, REAR		
23	FM2-4497-000		1	CABLE, INTERFACE, 1		
24	FC6-6718-000		1	SHAFT, COVER		
25	FM2-4499-000		1	CABLE, FEEDER		
26	VS1-7177-013		1	CONNECTOR, SNAP TIGHT		
27	FM2-4500-000		2	CABLE, EARTH		
28	XH9-0135-000		2	FOOT, RUBBER		
29	FC8-0353-000		4	PLATE, JOINT		
30	FM2-4496-000		1	CABLE, FEEDER		
31	FC6-6712-000		1	PLATE, EARTH		

FIGURE & KEY NO.	PARTS NUMBER	RANK	Q'TY	DESCRIPTION	SERIAL NUMBER/ REMARKS	SVC
32	WE8-5648-000		1	CORE, SLEEVE FERRITE		
501	XD1-1106-235		8	WASHER,COP		

FIGURE 313
PAPER PICK-UP ASSEMBLY(2 CASSETTE UNIT model)

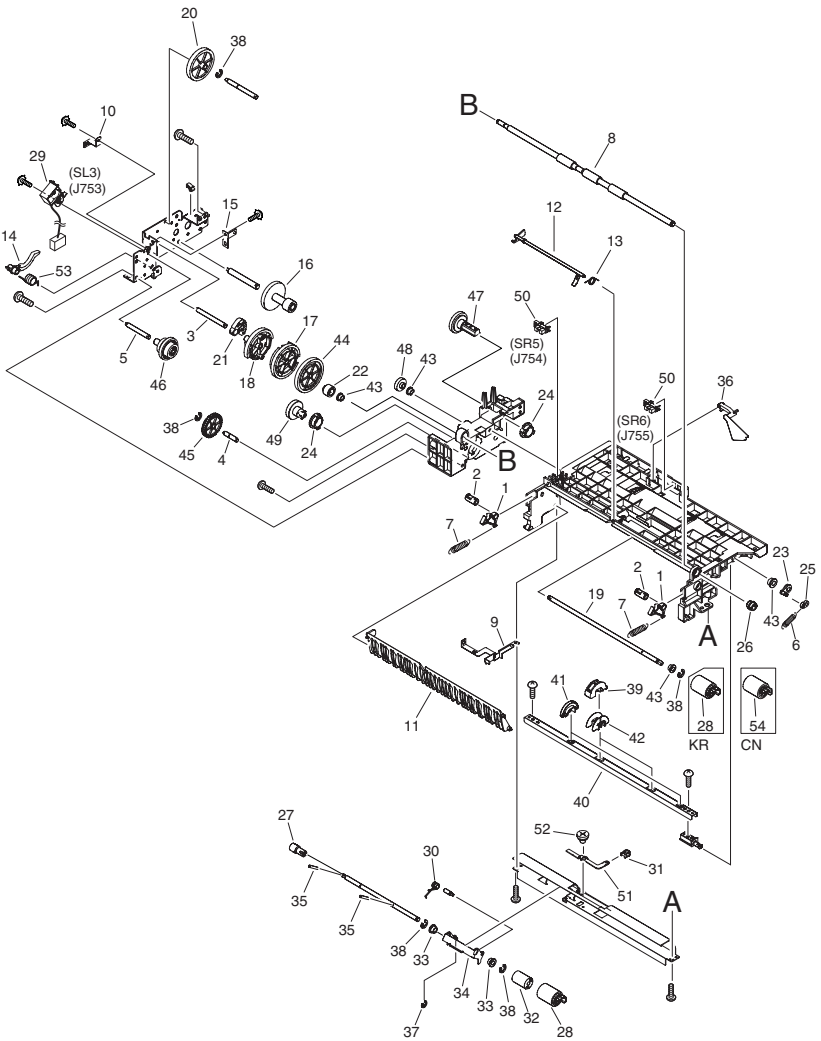

FIGURE & KEY NO.	PARTS NUMBER	RANK	Q'TY	DESCRIPTION	SERIAL NUMBER/ REMARKS	SVC
Fig.313	FM2-4484-010		1	PAPER PICK-UP ASSEMBLY	2 CASSETTE UNIT model KR	
Fig.313	FM2-4596-000		1	PAPER PICK-UP ASSEMBLY	2 CASSETTE UNIT model CN	
1	FA8-2448-000		1	PAWL, LOCK		
2	FA8-2449-000		2	SHAFT, LOCK		
3	FB4-6032-000		2	SHAFT, CLUCH		
4	FB4-6033-000		1	SHAFT, IDLER		
5	FB4-6034-000		1	SHAFT		
6	FB6-1550-000		1	SPRING, TENSION		
7	FB6-1551-000		1	SPRING, TENSION		
8	FC8-0172-000		1	ROLLER, VERTICAL PATH	CN	
8	FB6-1613-000		1	ROLLER, VERTICAL PATH	KR	
9	FB6-1614-000		1	PLATE, GROUNDING		
10	FB6-1615-000		1	PLATE, GROUNDING		
11	FB6-1616-000		1	GUIDE, VERTICAL PATH		
12	FL2-9922-000		1	ARM, FEED SENSOR	CN	
12	FB6-1623-000		1	ARM, FEED SENSOR	KR	
13	FB6-1624-000		1	SPRING, TORSION		
14	FB6-1626-000		1	LEVER, COUPLING		
15	FB6-1628-000		1	PLATE, GROUNDING		
16	FC8-0160-000		1	GEAR, 16T/34T		
17	FC6-4390-000		1	GEAR, 40T/50T		
18	FB6-1634-000		1	GEAR, 29T		
19	FB6-1635-000		1	SHAFT		
20	FB6-1636-000		1	GEAR, 39T		
21	FB6-1660-000		1	CAM		
22	FB6-1905-000		1	GEAR, 14T		
23	FB6-1909-000		1	BUSHING		
24	FC6-4304-000		2	BUSHING, ROLLER, PICK-UP		
25	FC6-4352-000		1	COLLAR, SPRING		
26	FB6-1909-000		1	BUSHING		
27	FC9-4290-000		1	JOINT, RETARD		

FIGURE & KEY NO.	PARTS NUMBER	RANK	Q'TY	DESCRIPTION	SERIAL NUMBER/ REMARKS	SVC
28	FF6-1621-000		2	ROLLER, SEPARATION		
29	FK2-1104-000		1	SOLENOID	SL3	
30	FU7-2234-000		1	SPRING, TORSION		
31	FB6-1908-000		1	CAP		
32	FC6-4290-000		1	LIMITER, TORQUE		
33	FC6-4355-000		1	BUSHING		
34	FF6-1610-000		1	HOLDER, SEPARATION ROLLER		
35	XD3-1200-122		2	SPRING PIN		
36	FC9-4288-000		1	ARM, DETECTION, PAPER		
37	XD9-0133-000		1	RING, E		
38	XD9-0136-000		5	RING, E		
39	FB4-9817-030		2	ROLLER, PICK-UP		
40	FB6-1631-030		1	SHAFT, PICK-UP ROLLER		
41	FC6-4356-000		2	ROLLER, LOOP		
42	FE5-4048-000		2	BLOCK, PICK-UP ROLLER ADPTER		
43	FS1-1205-000		4	BUSHING		
44	FS7-0225-000		1	GEAR, 53T		
45	FS7-0226-000		1	GEAR, 36T		
46	FS7-0227-000		1	GEAR, 21T/33T/22T		
47	FS7-0228-000		1	GEAR, 31T		
48	FS7-0229-000		1	GEAR, 18T		
49	FS7-0230-000		1	GEAR, 27T		
50	WG8-5624-000		2	IC, PHOTO INTERRUPTER	SR5,SR6	
51	FC6-4288-020		1	LEVER, PRESSURE		
52	FS5-9714-000		1	SCREW,STEPPED,M3		
53	FU6-2175-000		1	SPRING, TORSION		
54	FC8-0170-000		1	ROLLER, FEED	CN	

FIGURE 315
MULTI FEED TRAY ASS'Y

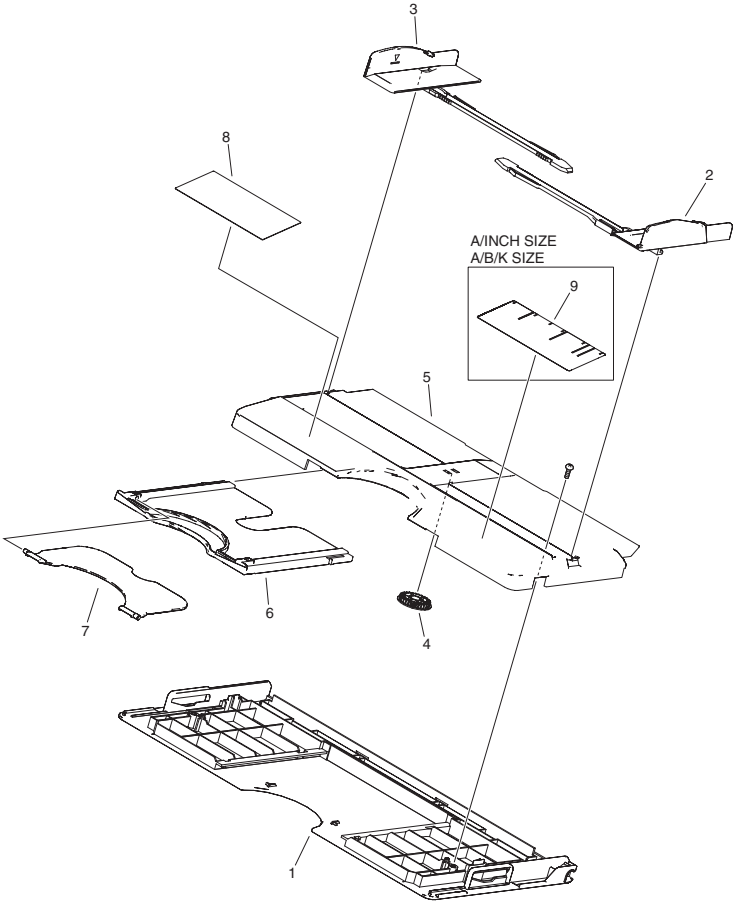

NOTE1 : This assembly is included in the assmbly shown in Figure 140.
NOTE2 : This assembly does not include the part shown with key No.9.
注１：このユニットはFigure140のユニットに含まれます。
注２：このユニットにKey No.9の部品は含まれません。

FIGURE & KEY NO.	PARTS NUMBER	RANK	Q'TY	DESCRIPTION	SERIAL NUMBER/ REMARKS	SVC
Fig.315	FM2-3294-000		1	MULTI FEED TRAY ASS'Y	SEE NOTE	
1	FC6-4215-000		1	COVER, MULTI FEED		
2	FC6-4218-000		1	PLATE, LIMIT, FRONT		
3	FC6-4219-000		1	PLATE, LIMIT, REAR		
4	FC6-4220-000		1	GEAR, PINION		
5	FC6-4221-000		1	TRAY, MULTI FEED		
6	FC6-4222-000		1	TRAY, MULTI FEED, SUB (L)		
7	FC6-4223-000		1	TRAY, MULTI FEED, SUB (S)		
8	FU5-8605-000		1	LABEL, SET		
9	FU5-8589-000		1	LABEL, SIZE INSTRUCTION	SEE NOTE A/INCH SIZE	
9	FU5-8604-000		1	LABEL, SIZE INSTRUCTION	SEE NOTE A/B/K SIZE	

FIGURE 350
PAPER DELIVERY ASSEMBLY

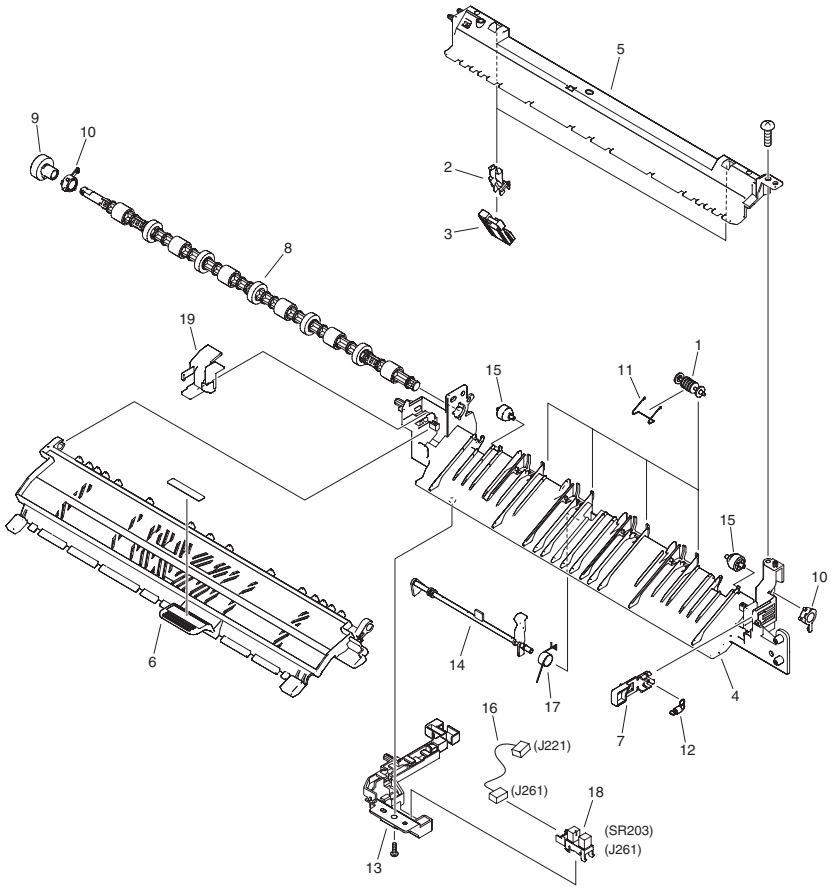

FIGURE & KEY NO.	PARTS NUMBER	RANK	Q'TY	DESCRIPTION	SERIAL NUMBER/ REMARKS	SVC
Fig.350	FM2-3351-000		1	PAPER DELIVERY ASSEMBLY		
1	FC5-4847-000		4	ROLLER, FEEDING		
2	FC6-4438-020		2	HOLDER, RETAINING PLATE		
3	FC6-4477-000		2	PLATE,DELIVERY RETAINING		
4	FC6-4470-030		1	GUIDE, DELIVERY, LOWER		
5	FC6-4474-030		1	GUIDE, DELIVERY, UPPER		
6	FC8-0215-000		1	GUIDE, DELIVERY		
7	FC6-4502-000		1	STOPPER, DELIVERY GUIDE		
8	FL2-3220-000		1	ROLLER, DELIVERY		
9	FU5-0732-000		1	GEAR, 17T		
10	FU5-1522-000		2	BUSHING, DELIVERY ROLLER		
11	FU6-2189-000		4	SPRING, TORSION		
12	FU6-2206-000		1	SPRING, TENSION		
13	FC6-4465-020		1	HOLDER, SENSOR		
14	FC6-4473-020		1	LEVER, DELIVERY SENSOR		
15	FC6-4484-000		2	ROLLER		
16	FM2-4789-000		1	CABLE, SENSOR, DELIVERY		
17	FU6-2210-000		1	SPRING, TORSION		
18	WG8-5696-000		1	PHOTO INTERRUPTER, TLP1243	SR203	
19	FC6-4504-000		1	COVER, GEAR		

FIGURE 400
EXTERNAL COVERS, PANELS, ETC.

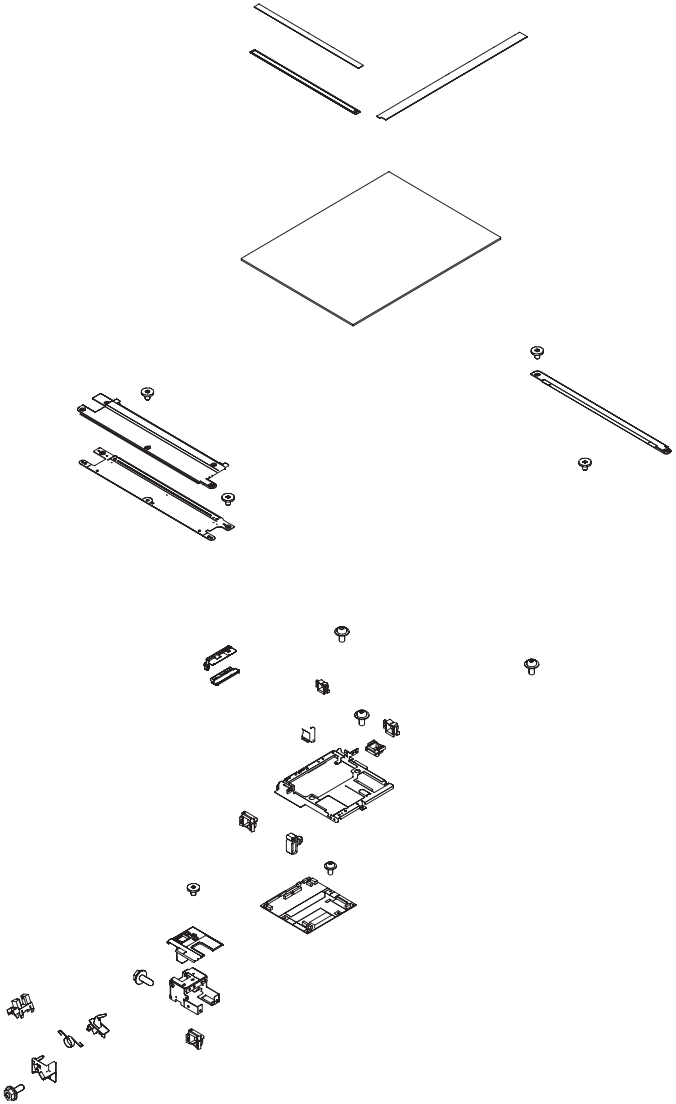

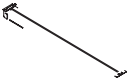

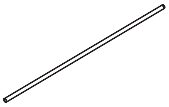

FIGURE & KEY NO.	PARTS NUMBER	RANK	Q'TY	DESCRIPTION	SERIAL NUMBER/ REMARKS	SVC
Fig.400	NPN		1	READER ASSEMBLY		
1	FU6-2236-000		2	SPRING, COMPRESSION		
2	FC6-4522-000		1	HOLDER, CORE	EXCEPT iR2320J	
3	FU6-2193-000		1	SPRING, TENSION		
4	XF2-4620-340		1	BELT, TIMING		
5	FC6-4582-000		1	CLAMP,FLEXIBLE	EXCEPT iR2320J	
6	FC6-4560-000		1	PLATE, HINGE, LEFT		
7	FC8-0218-000		2	COLLAR		
8	FC8-0219-000		2	GUIDE, CIS		
9	XF2-4661-440		1	BELT, TIMING		
10	XA9-1567-000		AR	SCREW, RS, M3X8.5		
11	FM2-4423-020		1	CABLE, READER MOTOR		
12	FC5-0792-000		1	RETAINER, BELT		
13	FC5-1444-000		1	HOLDER, FFC	EXCEPT iR2320J	
14	FC6-4528-000		1	LID, GRASS RETAINER		
15	FC6-4541-010		1	COVER, LEFT, UPPER		
16	FC6-4573-010		1	PLATE, HINGE, RIGHT		
17	FC6-4727-000		1	HOLDER, SENSOR		
18	FK3-0186-000		1	CABLE, FLAT, READER		
19	FC6-4562-000		1	COVER, HINGE, RIGHT		
20	FC6-4558-000		1	COVER, HINGE, LEFT		
21	FL2-3230-000		1	RETAINER, GLASS (R)		
22	XA9-1415-000		12	SCREW, FLAT HEAD, M4		
23	FM4-0031-000		1	CABLE, HP SENSOR		
24	FL2-3282-000		1	GLASS, COPYBOARD		
25	FU5-8590-000		1	PLATE, WIDTH INDEX	A/B/INCH/K SIZE	
25	FU5-8592-000		1	PLATE, WIDTH INDEX	A/INCH SIZE	
25	FU5-8581-000		1	PLATE, WIDTH INDEX	A SIZE	
26	WG8-5696-000		3	PHOTO INTERRUPTER, TLP1243	SR401,SR402,SR403	
27	FU5-8591-000		1	PLATE, LENGTH INDEX	A/B/INCH/K SIZE	
27	FU5-8593-000		1	PLATE, LENGTH INDEX	A/INCH SIZE	
27	FU5-8582-000		1	PLATE, LENGTH INDEX	A SIZE	

FIGURE & KEY NO.	PARTS NUMBER	RANK	Q'TY	DESCRIPTION	SERIAL NUMBER/ REMARKS	SVC
28	FK2-1066-020		1	MOTOR, STEPPING	M401	
29	FU6-2190-000		1	SPRING, TENSION		
30	FC6-4506-000		1	FLANGE		
31	FC6-4514-000		4	FLANGE		
32	FU5-3328-000		3	PULLEY,FOLLOWER		
33	FU5-3340-000		1	PULLEY		
34	FU6-2191-000		1	SPRING, SENSOR		
35	XD9-0136-000		4	RING, E		
36	FM4-0660-010		1	READER CONTROLLER PCB ASSEMBLY	EXCEPT iR2320J	
36	FM4-5270-010		1	READER CONTROLLER PCB ASSEMBLY	iR2320J	
37	FC6-4511-000		2	SLIDER		
38	FL2-3286-010		1	CONTACT IMAGE SENSOR		
39	FC6-4559-000		2	HOLDER, SENSOR		
40	FC6-4561-010		1	LEVER, SENSOR		
41	FM2-4400-000		1	CABLE, SENSOR		
42	FM4-0032-010		1	CABLE, READER CONTROLLER POWER		
43	FM4-0033-010		1	CABLE, READER CONTROLLER POWER		
44	FM4-0035-000		1	CABLE, MAIN CONTROLLER POWER	EXCEPT iR2422 PKP,iR2420 PHW	
44	FM1-A893-000		1	CABLE, MAIN POWER SUPPLY	iR2422 PKP,iR2420 PHW	
45	FM2-4427-000		1	CABLE, DOCUMENT SIZE SENSOR	EQN,HWC,HWG	
46	FH7-7569-000		4	DOCUMENT SIZE SENSOR UNIT	EQN,HWC,HWG SR404,SR405,SR406,SR 407	
47	FM4-0039-000		1	CABLE, DOCUMENT SIZE SENSOR	EQN,HWC,HWG	
48	FC9-4270-000		4	SEAL		
49	FC9-8862-000		1	HOLDER, CORE	iR2320J	

FIGURE 640
DEVELOPING ASSEMBLY

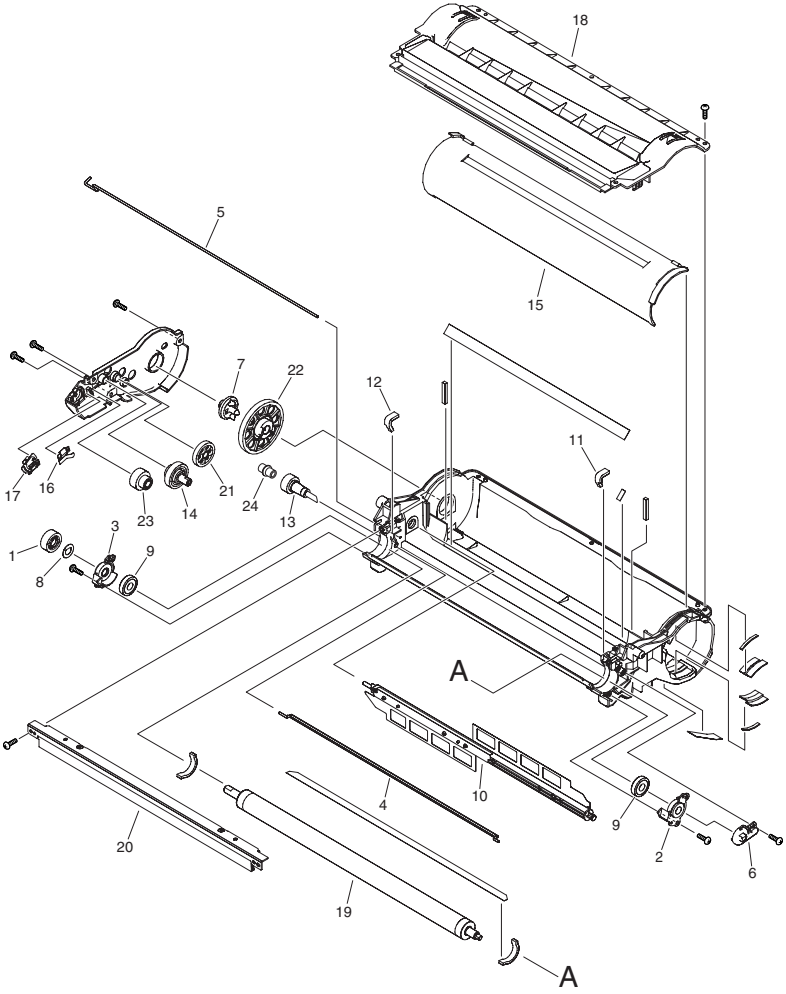

FIGURE & KEY NO.	PARTS NUMBER	RANK	Q'TY	DESCRIPTION	SERIAL NUMBER/ REMARKS	SVC
Fig.640	FM3-3671-010		1	DEVELOPING ASSEMBLY		
1	FU6-0765-000		1	GEAR, 32T		
2	FC6-4164-000		1	BUSHING, SLEEVE, FRONT		
3	FC6-4165-000		1	BUSHING, SLEEVE, REAR		
4	FC6-4166-000		1	ROD, STEERING		
5	FC6-4167-000		1	ROD, DETECTION		
6	FC6-4168-000		1	GUIDE, POSITIONING, MAGNET		
7	FC6-4169-000		1	COUPLER		
8	FC6-4170-000		1	PLATE, TERMINAL, SLEEVE		
9	FC7-1772-000		2	ROLLER		
10	FL2-3304-000		1	ROD, STEERING		
11	FC6-4176-000		1	PAD, SIDE, FRONT		
12	FC6-4177-000		1	PAD, SIDE, REAR		
13	FL2-3193-000		1	GEAR ASSEMBLY		
14	FU6-0761-000		1	GEAR, 41T		
15	FL2-3197-000		1	SHUTTER ASSEMBLY		
16	FC6-4163-000		1	PLATE, DETECTION		
17	FC6-4202-000		1	PLATE, TERMINAL		
18	FM2-3287-000		1	LID, DEVELOPING		
19	FM3-3676-000		1	DEVELOPING SLEEVE UNIT		
20	FM3-3672-010		1	DEVELOPING BLADE UNIT		
21	FU6-0762-000		1	GEAR, 31T		
22	FU6-0763-000		1	GEAR, 70T		
23	FU6-0764-000		1	GEAR, 31T/19T		
24	FB6-6896-000		1	CAP, DEVELOPPING		

FIGURE 810
FIXING ASSEMBLY

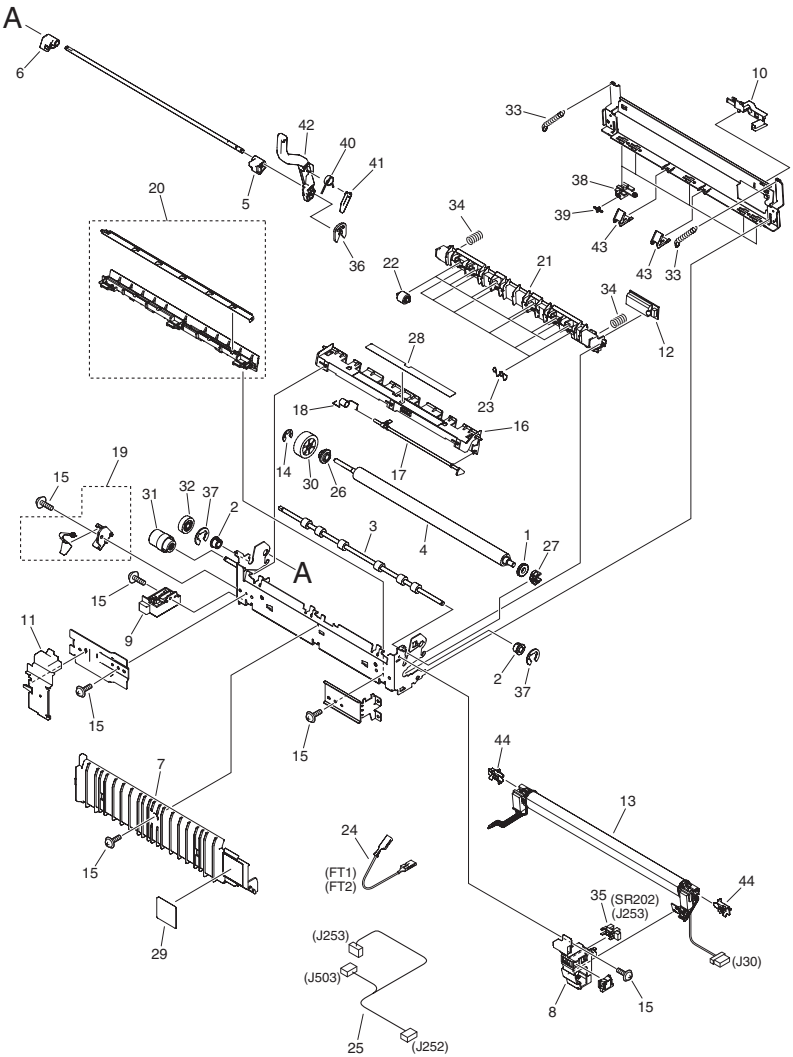

NOTE : This assembly does not include the parts shown with key No. 36, 40, 41 and 42.
注 : このユニットにKey No.36, 40, 41, 42 の部品は含まれません。

FIGURE & KEY NO.	PARTS NUMBER	RANK	Q'TY	DESCRIPTION	SERIAL NUMBER/ REMARKS	SVC
Fig.810	FM2-3345-000		1	FIXING ASSEMBLY	120V EQL,ERB,HWQ,HVZ	
Fig.810	FM2-3352-000		1	FIXING ASSEMBLY	230V EQM,EQU,EQV,EQT,EQZ ,GUQ,GUR,HWA,HWB,H WJ,HWG,HWM,HWH,HW R	
Fig.810	FM2-3328-000		1	FIXING ASSEMBLY	230V EQS,EQR,EQN,EQW,HW C,HWD,HWE,HWK,HWF, KWS	
Fig.810	FM4-0671-000		1	FIXING ASSEMBLY	230V EZF	
1	FC5-4860-000		1	RUBBER RING,CONDUCTIVE		
2	FC5-5297-000		2	BUSHING		
3	FC6-4452-000		1	ROLLER, DELIVERY, MIDDLE		
4	FC6-4453-000		1	ROLLER, PRESSURE		
5	FC6-4462-000		1	BLOCK, PRESSURE RELEASE (F)		
6	FC6-4463-000		1	BLOCK, PRESSURE RELEASE (R)		
7	FC6-4479-000		1	COVER, FIXING, LEFT		
8	FC6-4480-000		1	GUIDE, FIXING CABLE (F)		
9	FC6-4481-000		1	GUIDE, FIXING CABLE (R)		
10	FC6-4492-000		1	GUIDE, FILM SENSOR CABLE		
11	FC6-4501-000		1	COVER, FIXING GEAR		
12	FG3-3501-000		1	FIXING FILM SENSOR ASS'Y		
13	FM2-3346-000		1	FIXING FILM ASSEMBLY	120V EQL,ERB,HWQ,HVZ	
13	FM2-3353-000		1	FIXING FILM ASSEMBLY	230V EQM,EQU,EQV,EQT,EQZ ,GUQ,GUR,HWA,HWB,H WJ,HWG,HWM,HWH,HW R,PKP,PHW	
13	FM2-3329-000		1	FIXING FILM ASSEMBLY	230V EQS,EQR,EQN,EQW,HW C,HWD,HWE,HWK,HWF, KWS	
14	XD9-0134-000		1	RING, E		
15	XA9-0702-000		5	SCREW, W/WASHER, M3X6		
16	FC6-4449-000		1	GUIDE, DELIVERY, LOWER		
17	FC6-4450-000		1	LEVER, DELIVERY SENSOR		
18	FU5-2470-000		1	SPRING, TORSION		
19	FM2-3348-000		1	TERMINAL HOLDER ASSEMBLY		

FIGURE & KEY NO.	PARTS NUMBER	RANK	Q'TY	DESCRIPTION	SERIAL NUMBER/ REMARKS	SVC
20	FM2-3349-000		1	FIXING INLET GUIDE UNIT		
21	FC6-4448-000		1	GUIDE, DELIVERY, UPPER		
22	FC5-6805-000		6	ROLLER, DELIVERY, MIDDLE		
23	FU6-2188-000		6	SPRING, TORSION		
24	FM2-4405-000		1	CABLE, FILM BIAS	FT1,FT2	
25	FM2-4411-000		1	CABLE, FIXING SENSOR		
26	FU5-1519-000		1	BUSHING		
27	FU5-1520-000		1	BUSHING		
28	FU5-8575-000		1	LABEL, WARNING, HIGH TEMP.	EXCEPT iR2320J	
28	FU7-8487-000		1	LABEL, WARNING, HIGH TEMP.	iR2320J	
29	FU5-8576-000		1	LABEL, DRUM CAUTION		
30	FU6-0799-000		1	GEAR, 27T		
31	FU6-0800-000		1	GEAR, 17T		
32	FU6-0801-000		1	GEAR, 17T		
33	FU6-2185-000		2	SPRING, TENSION		
34	FU6-2186-000		2	SPRING, COMPRESSION		
35	WG8-5696-000		1	PHOTO INTERRUPTER, TLP1243	SR202	
36	FC6-3002-000		1	RING, RESIN, RETAINING	SEE NOTE	
37	XD9-0136-000		2	RING, E		
38	FC6-4458-020		5	MOUNT, ROWEL		
39	FC6-4375-000		5	ROWEL		
40	FU6-2208-000		1	SPRING, TORSION	SEE NOTE	
41	FC6-4454-000		1	BLOCK, LEVER RETURN	SEE NOTE	
42	FC6-4503-000		1	LEVER, RELEASE, FRONT	SEE NOTE	
43	FC6-4467-000		2	GUIDDE, PAPER LIMIT		
44	FC7-1771-000		2	CAP, PRESSURE		

FIGURE C10
COPYBOARD COVER ASSEMBLY(COPYBOARD model)

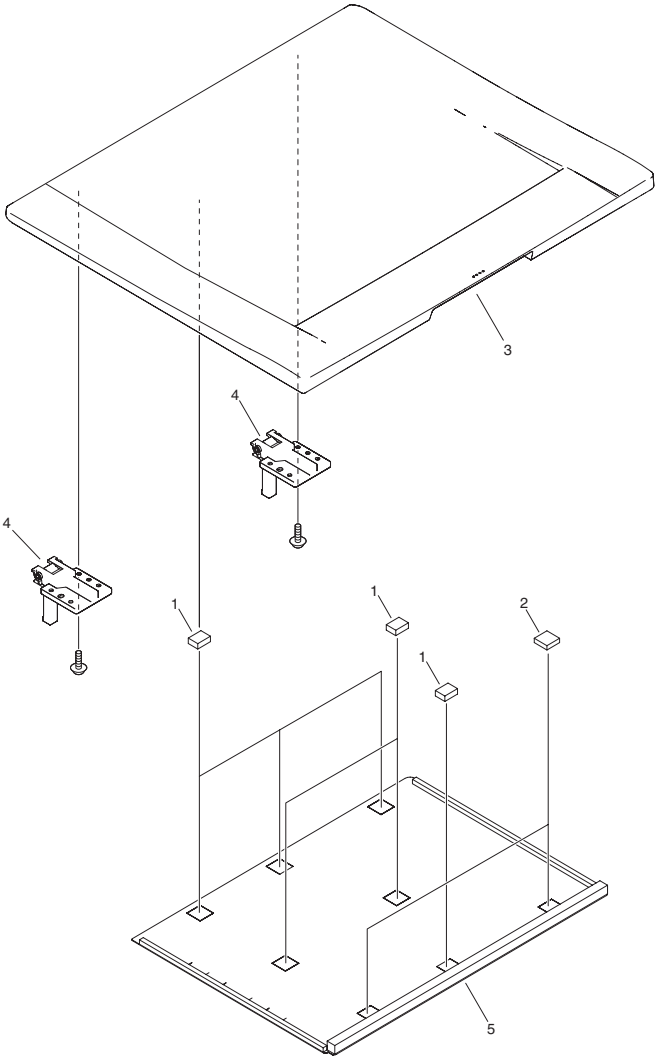

FIGURE & KEY NO.	PARTS NUMBER	RANK	Q'TY	DESCRIPTION	SERIAL NUMBER/ REMARKS	SVC
Fig.C10	NPN		RF	COPYBOARD COVER ASSEMBLY	COPYBOARD model	
1	FC6-4508-000		6	SPONGE, 1		
2	FC6-4509-000		2	SPONGE, 2		
3	FC6-4576-000		1	COVER, COPYBOARD		
4	FC6-4738-000		2	HINGE		
5	FC5-4265-000		1	COVER, COPYBOARDWHITE-BOARD		

FIGURE G10
NETWORK I/F PCB ASSEMBLY(NETWORK model)

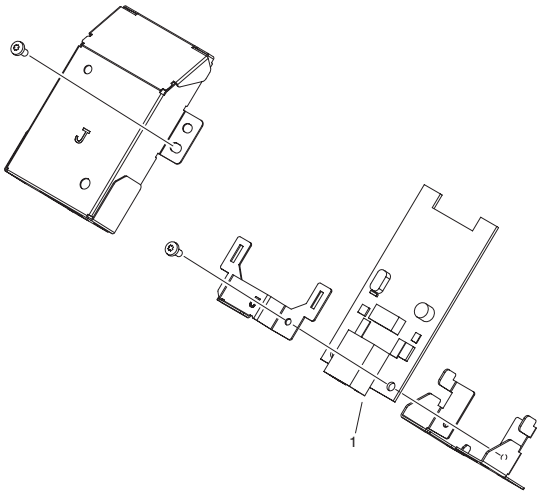

FIGURE & KEY NO.	PARTS NUMBER	RANK	Q'TY	DESCRIPTION	SERIAL NUMBER/ REMARKS	SVC
Fig.G10	NPN		RF	NETWORK I/F PCB ASSEMBLY	NETWORK model	
1	FK2-8240-000		1	NETWORK I/F PCB ASSEMBLY		

FIGURE S01
PACKING KIT(DUPLEX model)

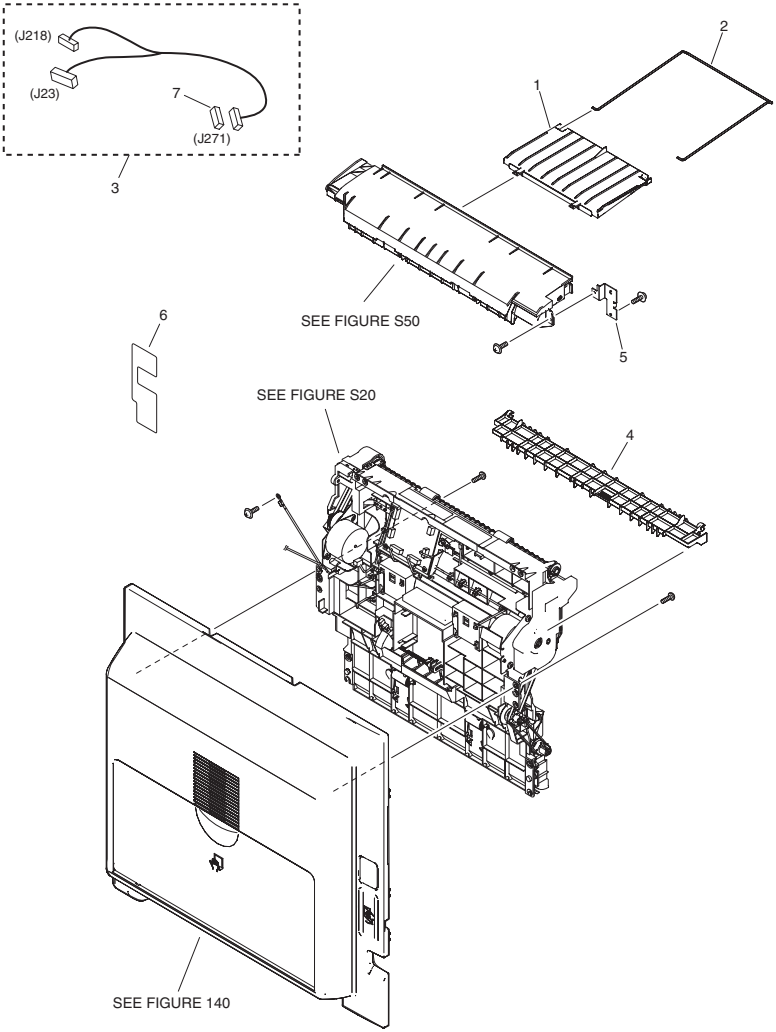

FIGURE & KEY NO.	PARTS NUMBER	RANK	Q'TY	DESCRIPTION	SERIAL NUMBER/ REMARKS	SVC
Fig.S01	NPN		RF	PACKING KIT	DUPLEX model	
1	FC8-0220-000		1	TRAY, REVERSE		
2	FC8-0351-000		1	TRAY, SUB		
3	FM3-3015-000		1	CABLE, DUPLEX UNIT		
4	FL2-8094-000		1	GUIDE, DELIVERY		
5	FC8-0221-000		1	MOUNT, REVERSE GUIDE		
6	FC6-8678-000		1	LABEL, JAM CLEAR		
7	VS1-7207-012		1	CONNECTOR		

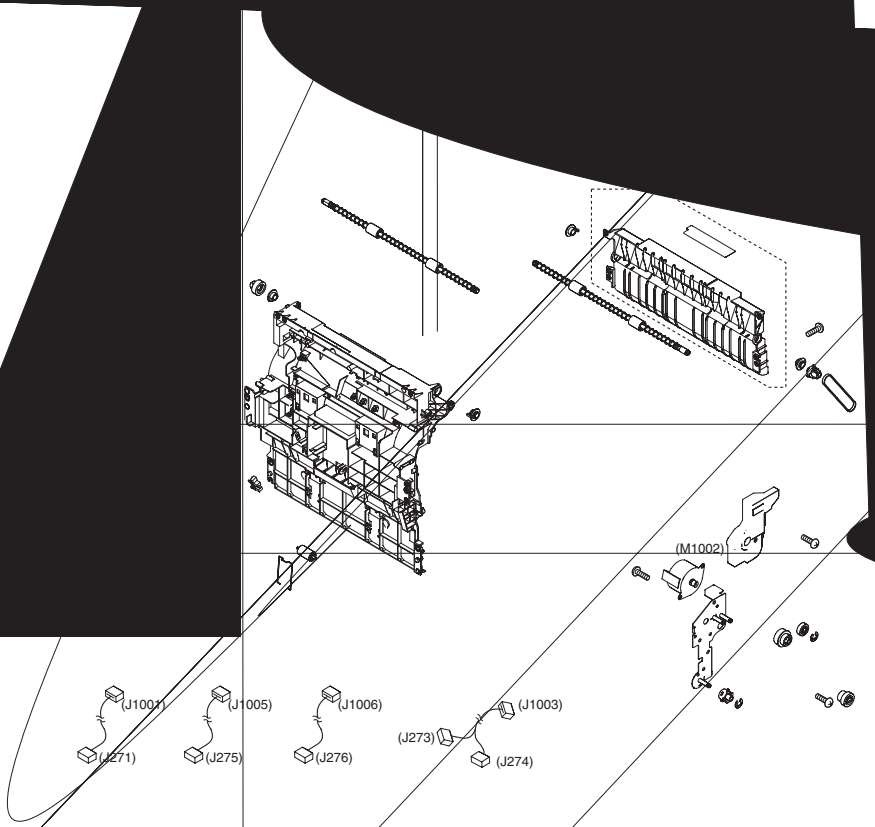
(M1002)
(J1001)
(J1005)
(J1006)
(J1003)
(J273)
(J271)
(J275)
(J276)
(J274)

FIGURE & KEY NO.	PARTS NUMBER	RANK	Q'TY	DESCRIPTION	SERIAL NUMBER/ REMARKS	SVC
Fig.S20	NPN		RF	DUPLEX FEEDER ASSEMBLY	DUPLEX model	
1	FC6-6752-000		1	DEFLECTOR, REVERSE		
2	FC6-6753-000		1	GUIDE, DUPLEX SWING		
3	FC6-6755-000		1	DEFLECTOR, DUPLEX		
4	FC6-6756-000		1	GUIDE, RIGHT UPPER		
5	FC6-6757-000		3	ROLLER		
6	FC6-6758-000		6	BUSHING		
7	FC6-6759-000		4	ROLLER		
8	FC6-6760-000		2	SPRING, ROLLER		
9	FC6-6765-000		1	FLAG, REVERSE SENSOR		
10	FC6-6767-000		1	FLAG, FEEDER SENSOR		
11	FC6-6768-000		2	SPRING, TORSION		
12	FC6-6776-000		1	COVER, DUPLEX, FRONT		
13	FC6-6777-000		1	COVER, DUPLEX, REAR		
14	FL2-3856-000		1	GUIDE, RIGHT, LOWER		
15	FC6-6754-000		1	GUIDE, RIGHT, LOWER		
16	FU5-8696-000		1	LABEL, OPERATION PROHIBITION		
17	FK2-1114-000		4	MOTOR, STEPPING	M1001,M1002	
18	FU6-0933-000		1	GEAR, 47T/17T		
19	FU6-0934-000		1	GEAR, 18T		
20	FU6-0936-000		1	GEAR, 28T		
21	XA9-1116-000		11	SCREW, 3X5		
22	XD9-0136-000		5	RING, E		
23	FC6-6740-000		1	PLATE, LINK		
24	FC6-6764-000		1	FLANGE		
25	FC6-6769-000		1	PLATE, LINK		
26	FL2-3744-000		1	SOLENOID	SL1001	
27	FU6-0938-000		1	GEAR, 47T/22T		
28	FU6-0939-000		1	GEAR, 22T/17T		
29	XF2-1109-040		1	BELT, TIMING		
30	FM2-4517-000		1	CABLE, DUPLEX RELAY		
31	FM2-4518-030		1	CABLE, DUPLEX MOTOR		

FIGURE & KEY NO.	PARTS NUMBER	RANK	Q'TY	DESCRIPTION	SERIAL NUMBER/ REMARKS	SVC
32	FM2-4519-000		1	CABLE, REVERSE MOTOR		
33	FM2-4520-000		1	CABLE, DUPLEX SENSOR		
34	FU6-0935-000		1	GEAR, 21T/28T		
35	FU6-0937-000		1	GEAR, 28T		
36	FU6-0940-000		1	GEAR, 21T		
37	FU6-2387-000		2	SPRING, TENSION		
38	FU6-2388-000		2	SPRING, COMPRESSION		
39	WG8-5696-000		2	PHOTO INTERRUPTER, TLP1243	SR1002,SR1003	
40	XF2-1112-240		2	BELT, TIMING		
41	FM2-4515-000		1	PWB, DUPLEX DRIVER		

FIGURE S50
DUPLEX REVERSE UNIT(DUPLEX model)

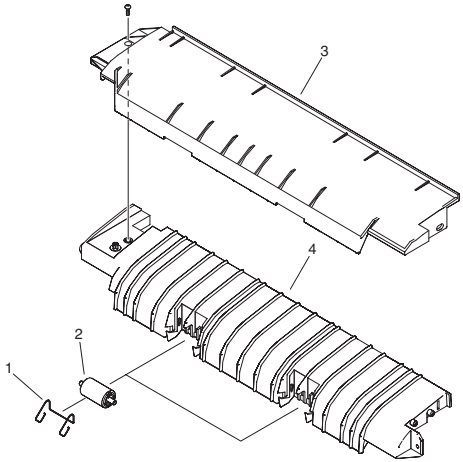

FIGURE & KEY NO.	PARTS NUMBER	RANK	Q'TY	DESCRIPTION	SERIAL NUMBER/ REMARKS	SVC
Fig.S50	FM2-4493-000		1	DUPLEX REVERSE UNIT	DUPLEX model	
1	FC6-6781-000		2	SPRING, ROLLER		
2	FC6-6759-000		2	ROLLER		
3	FC6-6779-000		1	GUIDE, REVERSE UPPER		
4	FC6-6780-000		1	GUIDE, REVERSE, LOWER		

FIGURE ZZA
MECHANICAL STANDARD PARTS (HOW TO USE)

Mechanical standard parts
機械標準部品

About a mechanical standard parts

A Mechanical standard parts is a mechanical part which not parts peculiar to a product.
They are parts which are common to a Canon product and are used, such as a screw and a washer.
The Fig No. and parts number of the mechanical standard parts are not listed in the product parts catalog.
Refer to the parts catalog of mechanical standard parts when checking the parts number for screw or washer etc. and identify them by part shape or size.

機械標準部品とは

機械標準部品とは、製品特有の部品ではなく、ねじやワッシャなどキヤノン製品共通で使用されている機械部品（メカ部品）のことです。
製品のパーツカタログには、機械標準部品のFig No.や部品番号は記載しておりません。
ねじや、ワッシャ等の部品番号を調べるときは、機械標準部品のパーツカタログを参照し、部品の形状や大きさから判断し、使用している部品を調べてください。

Material and surface treatment of a mechanical standard parts

Material and surface treatment of mechanical standard parts are assigned commonly for each part.
Refer to the Table 1 for the parts which material and surface treatment are assigned as numbers.

機械標準部品の材料および表面処理

機械標準部品の材料および表面処理については、各種部品共通で決められています。
材料および表面処理が番号で決められている部品については、表1を参照してください。

Table 1 Material and Surface treatment
表1 材料および表面処理

No. 番号	Material 材料	Surface treatment 表面処理	Color 色
1	Stainless steel ステンレス	Stainless steel black coloring (BC4) ステンレス黒着色(BC4)	Black 黒
2		not to be given なし	White 白
3	Brass 黄銅	Regular nickel plating (NL) 普通ニッケルメッキ(NL)	White 白
4		Black nickel plating (BN) 黒色ニッケルメッキ(BN)	Black 黒
5	Steel 鋼	White zinc trivalent chromate treating (ZC3) 白色亜鉛3価クロメート(ZC3)	White 白
6		Regular nickel chromium plating (NC) 普通ニッケルクロムメッキ(NC)	White 白
7		Regular nickel plating (NL) 普通ニッケルメッキ(NL)	White 白
8		Iron and steel phosphating (P1) 鉄鋼燐酸塩処理(P1)	Black 黒
9		Black zinc trivalent chromate treating (BZ3) 黒色亜鉛3価クロメート(BZ3)	Black 黒

FIGURE ZZB
MECHANICAL STANDARD PARTS (SCREWS)

1. Screws
ねじ

How to read Parts Numbers
部品番号の見方

Screws
ねじ

XB1-2400-609

Type No. 類別番号	XB1-2 expresses Binding head machine screw. XB1−2は、バインドねじを表す
Normal designation (d) ねじの呼び(d)	40 expresses M4.0. 40は、M4.0を表す
Length (L) ねじの長さ(L)	0-60 expresses a length of 6.0mm. 0−60は、6.0mmの長さを表す
Material and Surface treatment 材料および表面処理	9 expresses Steel (Black zinc trivalent chromate treating) from Table 1. 9は、表1より鋼(黒色亜鉛3価クロメート)を表す

1-1. Cross Recessed Head Screws for Precision Equipments
精密機器用十字穴付き小ねじ

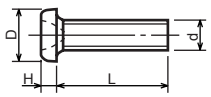

XA1-1, 6, 7

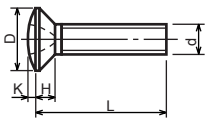

XA1-4

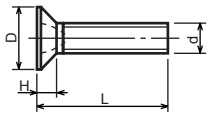

XA1-3

Type No. 類別番号	Type 類別
XA1−1	Pan head Class 1 なべ1種
XA1−3	Countersunk head Class 1 さら1種
XA1−4	Oval countersunk head Class 1 丸さら1種
XA1−6	Pan head Class 3 なべ3種
XA1−7	Pan head Class 2 なべ2種

		Head size (mm) 頭部寸法 (mm)					
		M1.4	M1.6	M1.7	M2	M2.5	M2.6
D	XA1−1	2	2.4	2.5	3	3.8	4
H	XA1−1	0.5	0.55	0.5	0.6	0.9	0.8
D	XA1−3	2	2.4	2.5	3	3.8	4
H	XA1−3	0.48	0.55	0.58	0.73	0.85	0.93
D	XA1−4	2	2.4	2.5	3	3.8	4
H + K	XA1−4	0.68	0.8	0.88	1	1.25	1.3
D	XA1−6	2.5	2.8	3	3.5	4.3	4.5
H	XA1−6	0.8	0.85	0.9	1	1.3	1.2
D	XA1−7	2.5	2.8	3	3.5	4.3	4.5
H	XA1−7	0.5	0.55	0.5	0.6	0.9	0.8

1-2. Precision Tapping Screws
精密用タッピンねじ

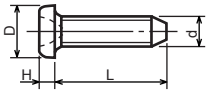

XA4-1, 2, 4

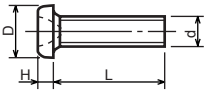

XA4-6, 7, 9

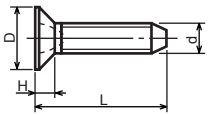

XA4-3

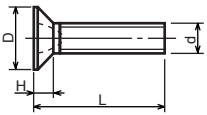

XA4-8

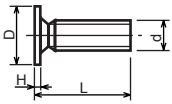

XA4-5

Type No. 類別番号	Type 類別
XA4−1	With tatered end pan head Class 1 絞り−なべ1種
XA4−2	With tatered end pan head Class 3 絞り−なべ3種
XA4−3	With tatered end countersunk head 絞り−さら
XA4−4	With tatered end pan head Class 2 絞り−なべ2種
XA4−5	With parallel end ultra thin head ストレート−超薄頭
XA4−6	With parallel end pan head Class 1 ストレート−なべ1種
XA4−7	With parallel end pan head Class 3 ストレート−なべ3種
XA4−8	With parallel end countersunk head ストレート−さら
XA4−9	With parallel end pan head Class 2 ストレート−なべ2種

		Head size (mm) 頭部寸法 (mm)					
		M1.4	M1.6	M1.7	M2	M2.5	M2.6
D	XA4−1	2	2.4	2.5	3	3.8	4
H	XA4−1	0.5	0.55	0.5	0.6	0.9	0.8
D	XA4−2	2.5	2.8	3	3.5	4.3	4.5
H	XA4−2	0.8	0.85	0.9	1	1.3	1.2
D	XA4−3	2	2.4	2.5	3	3.8	4
H	XA4−3	0.48	0.55	0.58	0.73	0.85	0.93
D	XA4−4	2.5	2.8	3	3.5	4.3	4.5
H	XA4−4	0.5	0.55	0.5	0.6	0.9	0.8
D	XA4−5	2.5	2.8	3	-	-	-
H	XA4−5	0.2	0.2	0.2	-	-	-
D	XA4−6	2	2.4	2.5	3	3.8	4
H	XA4−6	0.5	0.55	0.5	0.6	0.9	0.8
D	XA4−7	2.5	2.8	3	3.5	4.3	4.5
H	XA4−7	0.8	0.85	0.9	1	1.3	1.2
D	XA4−8	2	2.4	2.5	3	3.8	4
H	XA4−8	0.48	0.55	0.58	0.73	0.85	0.93
D	XA4−9	2.5	2.8	3	3.5	4.3	4.5
H	XA4−9	0.5	0.55	0.5	0.6	0.9	0.8

1-3. Cross Recessed Head Screws
一般用十字穴付き小ねじ

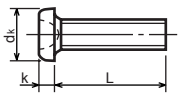

XB1-1

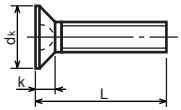

XB1-3

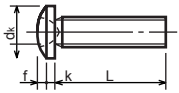

XB1-2

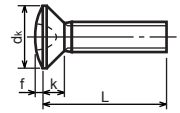

XB1-4

Type No. 類別番号	Type 類別
XB1−1	Pan head なべ
XB1−2	Binding head バインド
XB1−3	Countersunk head さら
XB1−4	Oval countersunk head 丸さら

		Head size (mm) 頭部寸法 (mm)					
		M2	M2.5	M2.6	M3	M4	M5
d_k	XB1−1	3.5	4.5	4.5	5.5	7	9
k	XB1−1	1.3	1.7	1.7	2	2.6	3.3
d_k	XB1−2	4.3	5.3	5.5	6.3	8.3	10.3
k+f	XB1−2	1.2	1.5	1.6	1.9	2.5	3.1
d_k	XB1−3	4	5	-	6	8	10
k	XB1−3	1.2	1.45	-	1.75	2.3	2.8
d_k	XB1−4	4	5	-	6	8	10
k+f	XB1−4	1.6	2	-	2.45	3.2	4
Screw part length b ねじ部長さ b		8	12	12	12	16	20

1-4. Cross Recessed Head Screws with Captive Washer
座金組込み十字穴付き小ねじ

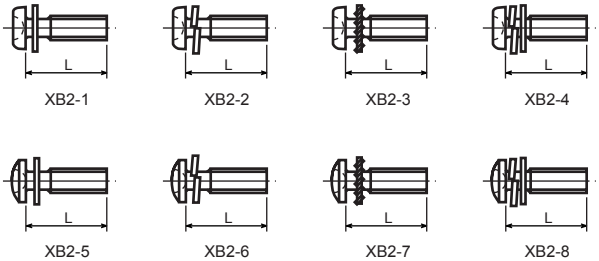

Type No. 類別番号	Type 類別
XB2−1	Pan head + Plain washer (circular bright) なべねじ+平座金
XB2−2	Pan head + Spring washer なべねじ+ばね座金
XB2−3	Pan head + Toothed lock washer なべねじ+歯付座金
XB2−4	Pan head + Spring washer and plain washer (circular bright) なべねじ+(ばね+平)座金
XB2−5	Binding head + Plain washer (circular bright) バインドねじ+平座金
XB2−6	Binding head + Spring washer バインドねじ+ばね座金
XB2−7	Binding head + Toothed lock washer バインドねじ+歯付座金
XB2−8	Binding head + Spring washer and plain washer (circular bright) バインドねじ+(ばね+平)座金

TONER
www.tonerplus.com.ua

1-5. Hexagon Head Tapping Screws for Matallic Materials
金属用六角タッピンねじ

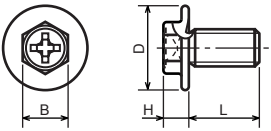

Type No. 類別番号	Type 類別
XB3−6	For metallic materials 金属用タッピン
XB3−7	For metallic materials with clawed 金属用タッピン−つめ付き

	Head size (mm) 頭部寸法 (mm)	
	M3	M4
D	8	10
B	5.5	5.5
H XB3−6	3.1	3.1
H XB3−7	3.2	3.2

1-6. Special Tapping Screws
特殊タッピンねじ

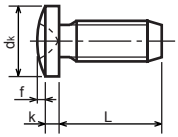

Type No. 類別番号	Type 類別
XB4−5	Binding head バインド

	Head size (mm) 頭部寸法 (mm)	
	M3	M4
d_k	6.3	8.3
k	1.3	1.7
k+f	1.9	2.5

1-7. General Head Tapping Screws
一般用タッピンねじ

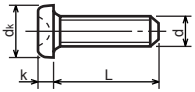

XB4-6

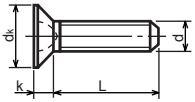

XB4-8

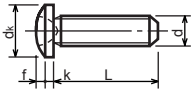

XB4-7

Type No. 類別番号	Type 類別
XB4-6	Pan head なべ
XB4-7	Binding head バインド
XB4-8	Countersunk head さら

		Head size (mm) 頭部寸法 (mm)					
		M2	M2.5	M2.6	M3	M4	M5
d_k	XB4-6	3.5	4.5	4.5	5.5	7	9
k	XB4-6	1.3	1.7	1.7	2	2.6	3.3
d_k	XB4-7	4.3	5.3	5.5	6.3	8.3	10.3
k+f	XB4-7	1.2	1.5	1.6	1.9	2.5	3.1
d_k	XB4-8	4	5	5.2	6	8	10
k	XB4-8	1.2	1.45	1.5	1.75	2.3	2.8

1-8. Tapping Screws for Metallic Materials
金属用タッピンねじ

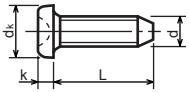

XB5-1

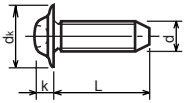

XB5-6

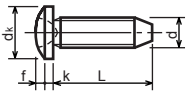

XB5-2

Type No. 類別番号	Type 類別
XB5-1	Pan head なべ
XB5-2	Binding head バインド
XB5-6	Flanged pan head つば付きなべ

		Head size (mm) 頭部寸法 (mm)				
		M2.5	M2.6	M3	M4	M5
d_k	XB5-1	4.5	4.5	5.5	7	9
k	XB5-1	1.7	1.7	2	2.6	3.3
d_k	XB5-2	5.5	5.5	6.3	8.3	10.3
k+f	XB5-2	1.6	1.6	1.9	2.5	3.1
d_k	XB5-6	6.5	6.5	8	10	12
k	XB5-6	2.1	2.1	1.75	3.2	4

1-9. Hexagon Socket Set Screws
六角穴付き止めねじ

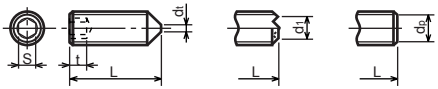

XB6-1 XB6-2 XB6-3

Type No. 類別番号	Type 類別
XB6−1	Cone point とがり先
XB6−2	Double point ダブルポイント
XB6−3	Flat point 平先

	Head size (mm) 頭部寸法 (mm)						
	M1.6 M1.7	M2	M2.5 M2.6	M3	M5	M5	M6
S	0.7	0.9	1.3	1.5	2	2.5	3
t	1.5	1.7	2	2	2.5	3	3.5
$d_{t\ max}$ XB6−1	0.4	0.5	0.65	0.75	1	1.25	1.5
$d_{1\ max}$ XB6−2	-	1.2	1.5	1.7	2.2	2.8	3.3
$d_{1\ min}$ XB6−2	-	1	1.2	1.4	1.9	2.4	2.9
$d_{p\ max}$ XB6−3	0.8	1	1.5	2	2.5	3.5	4
$d_{p\ min}$ XB6−3	0.55	0.75	1.25	1.75	2.25	3.2	3.7

1-10. Flanged Pan Head Machine Screws
つば付きなべ小ねじ

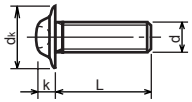

Type No. 類別番号	Type 類別
XB6−7	Flanged pan head つば付きなべ

	Head size (mm) 頭部寸法 (mm)				
	M2	M2.5 M2.6	M3	M5	M5
d_k	5	6.5	8	10	12
k	1.7	2.1	2.5	3.2	4

FIGURE ZZC
MECHANICAL STANDARD PARTS (BOLTS)

2. Bolts (Socket head cap screw)
ボルト

How to read Parts Numbers
部品番号の見方

Bolt (Socket head cap screw)
ボルト

XB7-1080-409

Type No. 類別番号	XB7-1 expresses Hexagon socket head cap screws. XB7−1は、六角穴付きボルトを表す
Normal designation (d) ねじの呼び(d)	080 expresses M8.0. 080は、M8.0を表す
Length (L) ねじの長さ(L)	40 expresses a length of 40mm. 40は、40mmの長さを表す
Material and Surface treatment 材料および表面処理	9 expresses Steel (Black zinc trivalent chromate treating) from Table 1. 9は、表1より鋼(黒色亜鉛3価クロメート)を表す

2-1. Hexagon socket head cap screws
六角穴付きボルト

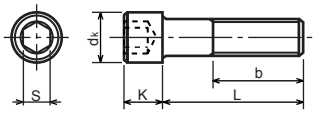

Type No. 類別番号	Type 類別
XB7−1	Hexagon socket head cap screws 六角穴付きボルト

	Head size (mm) 頭部寸法 (mm)						
	M3	M4	M5	M6	M8	M10	M12
S	2.5	3	4	5	6	8	10
d_k	5.5	7	8.5	10	13	16	18
K	3	4	5	6	8	10	12
Screw part length b_{max} ねじ部長さ b_{max}	18	20	22	24	28	32	36

FIGURE ZZD
MECHANICAL STANDARD PARTS (NUTS)

3. Nuts
ナット

How to read Parts Numbers
部品番号の見方

Nuts
ナット

XB7-2100-309

Type No. 類別番号	XB7-210 expresses Hexagon nut class 1. XB7−210は、六角ナット1種を表す
Normal designation (d) ねじの呼び(d)	0-30 expresses M3.0. 0−30は、M3.0を表す
Material and Surface treatment 材料および表面処理	9 expresses Steel (Black zinc trivalent chromate treating) from Table 1. 9は、表1より鋼(黒色亜鉛3価クロメート)を表す

3-1. Hexagon Nuts and Hexagon Thin Nuts
六角ナット

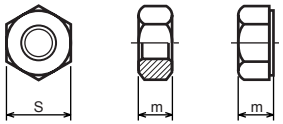

Type No. 類別番号	Type 類別
XB7−210	Hexagon nut Class 1 六角ナット−1種
XB7−220	Hexagon nut Class 3 六角ナット−3種
XB7−230	Hexagon nut Style 1 double chamfered 六角ナット−スタイル1−両面とり
XB7−231	Hexagon nut Style 1 washer faced 六角ナット−スタイル1−座付き
XB7−240	Hexagon nut Style 2 double chamfered 六角ナット−スタイル2−両面とり
XB7−241	Hexagon nut Style 2 washer faced 六角ナット−スタイル2−座付き
XB7−250	Hexagon nut 六角ナット
XB7−260	Hexagon thin nut double chamfered 六角低ナット−両面とり
XB7−270	Hexagon thin nut not chamfered 六角低ナット−面とり無し

	Head size (mm) 頭部寸法 (mm)						
	M2	M2.5	M3	M4	M5	M6	M8
S	4	5	5.5	7	8	10	13
m XB7−210	1.6	2	2.4	3.2	4	5	6.5
m XB7−220	1.2	1.6	1.8	2.4	3.2	3.6	5
m XB7−230, 231	1.6	2	2.4	3.2	4.7	5.2	6.8
m XB7−240, 241	-	-	-	-	5.1	5.7	7.5
m XB7−250	-	-	-	-	5.6	6.1	7.9
m XB7−260	1.2	1.6	1.8	2.2	2.7	3.2	4
m XB7−270	1.2	1.6	1.8	2.2	2.7	3.2	4

FIGURE ZZE
MECHANICAL STANDARD PARTS (RETAINING RINGS)

5. Retaining Rings
止め輪

How to read Parts Numbers
部品番号の見方

Retaining Rings
止め輪

XD2-1100-202

Type No. 類別番号	XD2-110 expresses retaining ring-E type (Type1). XD2−110は、E形止め輪（1種）を表す
Nominal designation 呼び	0-20 expresses a 020 of nominal designation. (See Table 5) 0−20は、呼び020を表す（表5参照）
Material and Surface treatment 材料および表面処理	2 expresses Stainless steel (Surface treatment is not to be given) from Table 1. 2は、表1よりステンレス（表面処理なし）を表す

5-1. Retaining Rings - E type
E形止め輪

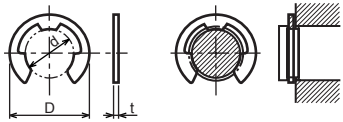

Type No. 類別番号	Type 類別
XD2−110	Retaining ring - E type (Type 1) E形止め輪（1種）
XD2−120	Retaining ring - E type (Type 2) E形止め輪（2種）

Table 5　表5

Type 種類	Nominal designation 呼び	d (mm)	D (mm)	t (mm)
Type 1 1種	007	0.65	2	0.2
	010	0.95	2.8	0.2
	013	1.25	3.3	0.3
	017	1.65	4.2	0.4
	020	1.95	4.6	0.5
	024	2.35	6	0.6
	028	2.74	6.5	0.6
	032	3.14	7.2	0.6
	037	3.64	8	0.7
	040	3.93	10	0.7
	042	4.13	10	0.7
	050	4.93	11	0.7
	058	5.73	12	0.7
	060	5.93	12.7	0.9
	064	6.32	13.5	0.9
	074	7.31	15	0.9
	080	7.91	16.5	1
Type 2 2種	008	0.8	2	0.2
	012	1.2	3	0.3
	015	1.5	4	0.4
	020	2	5	0.4
	025	2.5	6	0.4
	030	3	7	0.6
	040	4	9	0.6
	050	5	11	0.6
	060	6	12	0.8
	070	7	14	0.8
	080	8	16	0.8
	090	9	18	0.8
	100	10	20	1

5-2. Grip Rings
グリップ止め輪

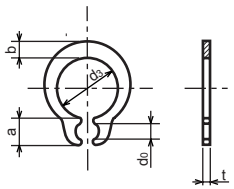

Type No. 類別番号	Type 類別
XD2−210	Grip ring グリップ止め輪

Table 5　表5

Nominal designation 呼び	d_3 (mm)	t (mm)	b (mm)	a (mm)	d_0 (mm)
020	1.9	0.5	1	1.8	0.8
025	2.35	0.5	1.2	1.9	0.9
030	2.85	0.6	1.4	1.9	0.9
035	3.3	0.6	1.6	2	0.9
040	3.8	0.8	1.8	2.8	1.2
045	4.25	0.8	2	2.9	1.3
050	4.75	0.8	2.2	2.9	1.3
060	5.7	1	2.4	3.1	1.4
070	6.7	1	2.7	3.3	1.4
080	7.7	1	3	3.5	1.4
090	8.65	1.2	3.3	4.7	1.5
100	9.65	1.2	3.5	4.7	2

5-3. Toothed Retaining Rings
歯付き形止め輪

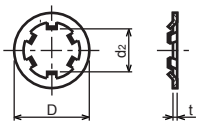

Type No. 類別番号	Type 類別
XD2−230	Toothed retaining ring 歯付き形止め輪

Table 5　表5

Nominal designation 呼び	d_2 (mm)	D (mm)	t (mm)	No of teeth 歯数
015	1.4	5.2	0.25	3
020	1.9	6	0.25	3
024	2.3	6.4	0.25	3
030	2.8	8	0.25	4
040	3.8	9	0.25	4
050	4.8	10	0.25	5
060	5.8	11	0.25	5
080	7.8	13	0.25	5
100	9.8	15.4	0.25	6

5-4. Retaining Rings - C Type
C形止め輪

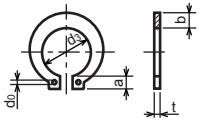

Type No. 類別番号	Type 類別
XD2−310	Retaining ring - C type for shaft C形止め輪　軸用

Table 5　　表5

Nominal designation 呼び	d_3 (mm)	t (mm)	b (mm)	a (mm)	d_0 (mm)
010	9.3	1	1.6	3	1.2
012	11.1	1	1.8	3.2	1.5
014	12.9	1	2	3.4	1.7
015	13.8	1	2.1	3.5	1.7
016	14.7	1	2.2	3.6	1.7
017	15.7	1	2.2	3.7	1.7
018	16.5	1.2	2.6	3.8	1.7
020	18.5	1.2	2.7	3.9	2
022	20.5	1.2	2.7	4.1	2
025	23.2	1.2	3.1	4.3	2
028	25.9	1.5	3.1	4.6	2
030	27.9	1.5	3.5	4.8	2
032	29.6	1.5	3.5	5	2.5
035	32.2	1.5	4	5.4	2.5

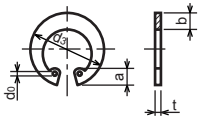

Type No. 類別番号	Type 類別
XD2−320	Retaining ring - C type for hole C形止め輪　穴用

Table 5　　表5

Nominal designation 呼び	d_3 (mm)	t (mm)	b (mm)	a (mm)	d_0 (mm)
010	10.7	1	1.8	3.1	1.2
011	11.8	1	1.8	3.2	1.2
012	13	1	1.8	3.3	1.5
014	15.1	1	2	3.6	1.7
016	17.3	1	2	3.7	1.7
018	19.5	1	2.5	4	1.7
019	20.5	1	2.5	4	2
020	21.5	1	2.5	4	2
022	23.5	1	2.5	4.1	2
025	26.9	1.2	3	4.4	2
028	30.1	1.2	3	4.6	2
030	32.1	1.2	3	4.7	2
032	34.4	1.2	3.5	5.2	2.5
035	37.8	1.5	3.5	5.2	2.5
037	39.8	1.5	3.5	5.2	2.5
040	43.5	1.8	4	5.7	2.5
042	45.5	1.8	4	5.8	2.5
045	48.5	1.8	4.5	5.9	2.5
047	50.5	1.8	4.5	6.1	2.5
050	54.2	2	4.5	6.5	2.5
052	56.2	2	5.1	6.5	2.5
055	59.2	2	5.1	6.5	2.5
060	64.2	2	5.1	6.8	2.5
062	66.2	2	5.5	6.9	2.5
068	72.5	2.5	6	7.4	2.5
072	76.5	2.5	6.6	7.4	2.5
075	79.5	2.5	6.6	7.8	2.5
080	85.5	2.5	7	8	2.5
085	90.5	3	7	8	3
090	95.5	3	7.6	8.3	3
095	100.5	3	8	8.5	3

Prepared by

OIP Business Support Group

CANON INC.

Canon