SERVICE MANUAL

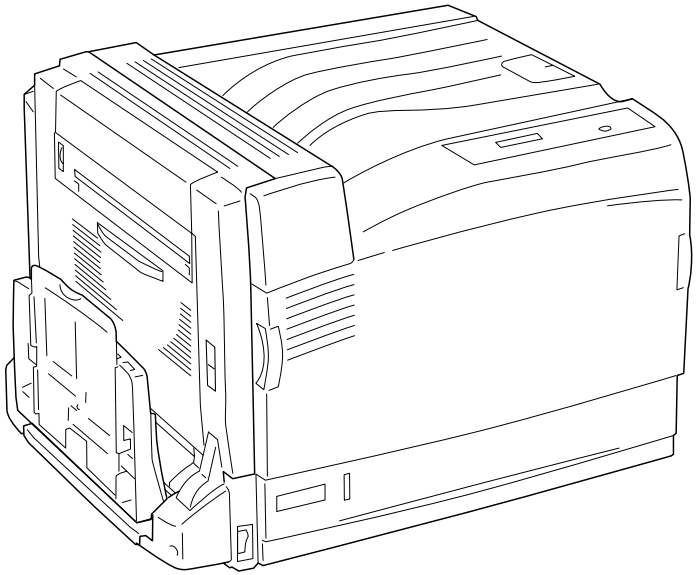

A3 Full Color Laser Printer

EPSON AcuLaser C9100

EPSON

SEPG04001

PRECAUTIONS

Precautionary notations throughout the text are categorized relative to 1)Personal injury and 2) damage to equipment.

DANGER Signals a precaution which, if ignored, could result in serious or fatal personal injury. Great caution should be exercised in performing procedures preceded by DANGER Headings.

WARNING Signals a precaution which, if ignored, could result in damage to equipment.

The precautionary measures itemized below should always be observed when performing repair/maintenance procedures.

DANGER

1. ALWAYS DISCONNECT THE PRODUCT FROM THE POWER SOURCE AND PERIPHERAL DEVICES PERFORMING ANY MAINTENANCE OR REPAIR PROCEDURES.
2. NO WORK SHOULD BE PERFORMED ON THE UNIT BY PERSONS UNFAMILIAR WITH BASIC SAFETY MEASURES AS DICTATED FOR ALL ELECTRONICS TECHNICIANS IN THEIR LINE OF WORK.
3. WHEN PERFORMING TESTING AS DICTATED WITHIN THIS MANUAL, DO NOT CONNECT THE UNIT TO A POWER SOURCE UNTIL INSTRUCTED TO DO SO. WHEN THE POWER SUPPLY CABLE MUST BE CONNECTED, USE EXTREME CAUTION IN WORKING ON POWER SUPPLY AND OTHER ELECTRONIC COMPONENTS.

WARNING

1. REPAIRS ON EPSON PRODUCT SHOULD BE PERFORMED ONLY BY AN EPSON CERTIFIED REPAIR TECHNICIAN.
2. MAKE CERTAIN THAT THE SOURCE VOLTAGES IS THE SAME AS THE RATED VOLTAGE, LISTED ON THE SERIAL NUMBER/RATING PLATE. IF THE EPSON PRODUCT HAS A PRIMARY AC RATING DIFFERENT FROM AVAILABLE POWER SOURCE, DO NOT CONNECT IT TO THE POWER SOURCE.
3. ALWAYS VERIFY THAT THE EPSON PRODUCT HAS BEEN DISCONNECTED FROM THE POWER SOURCE BEFORE REMOVING OR REPLACING PRINTED CIRCUIT BOARDS AND/OR INDIVIDUAL CHIPS.
4. IN ORDER TO PROTECT SENSITIVE MICROPROCESSORS AND CIRCUITRY, USE STATIC DISCHARGE EQUIPMENT, SUCH AS ANTI-STATIC WRIST STRAPS, WHEN ACCESSING INTERNAL COMPONENTS.

5. REPLACE MALFUNCTIONING COMPONENTS ONLY WITH THOSE COMPONENTS BY THE MANUFACTURE; INTRODUCTION OF SECOND-SOURCE ICs OR OTHER NON-APPROVED COMPONENTS MAY DAMAGE THE PRODUCT AND VOID ANY APPLICABLE EPSON WARRANTY.

manuals4you.com

About This Manual

This manual describes basic functions, theory of electrical and mechanical operations, maintenance and repair procedures of the printer. The instructions and procedures included herein are intended for the experienced repair technicians, and attention should be given to the precautions on the preceding page.

Manual Configuration

This manual consists of six chapters and Appendix.

CHAPTER 1.PRODUCT DESCRIPTIONS
Provides a general overview and specifications of the product.

CHAPTER 2.OPERATING PRINCIPLES
Describes the theory of electrical and mechanical operations of the product.

CHAPTER 3.TROUBLESHOOTING
Describes the step-by-step procedures for the troubleshooting.

CHAPTER 4.DISASSEMBLY / ASSEMBLY
Describes the step-by-step procedures for disassembling and assembling the product.

CHAPTER 5.ADJUSTMENT
Provides Epson-approved methods for adjustment.

CHAPTER 6.MAINTENANCE
Provides preventive maintenance procedures and the lists of Epson-approved lubricants and adhesives required for servicing the product.

APPENDIX Provides the following additional information for reference:

- Connector pin assignments
- Electric circuit boards components layout
- Electrical circuit boards schematics
- Exploded diagram & Parts List

Symbols Used in this Manual

Various symbols are used throughout this manual either to provide additional information on a specific topic or to warn of possible danger present during a procedure or an action. Be aware of all symbols when they are used, and always read NOTE, CAUTION, or WARNING messages.

Indicates an operating or maintenance procedure, practice or condition that is necessary to keep the product's quality.

Indicates an operating or maintenance procedure, practice, or condition that, if not strictly observed, could result in damage to, or destruction of, equipment.

May indicate an operating or maintenance procedure, practice or condition that is necessary to accomplish a task efficiently. It may also provide additional information that is related to a specific subject, or comment on the results achieved through a previous action.

Indicates an operating or maintenance procedure, practice or condition that, if not strictly observed, could result in injury or loss of life.

Abbreviation

This manual uses original abbreviations, in addition to general abbreviations.

Typical abbreviations are as follows:

AG ..... Analog Ground
ADC ..... Automatic Density Control
AG ..... Analog Ground
APS .....Auto Paper Select
ARC..... Auto Registration Control
ASSY ..... Assembly
ATS..... Auto Tray Switching
B .....Black
Bk .....Black
BLK .....Black
BLU ..... Blue
BRN ..... Brown
BTR ..... Bias Transfer Roll
C ..... Cyan
CLN .....Cleaner
CRU .....Customer Replaceable Unit
CRUM .....CRU Monitor
DET .....Detoner Roll
DEVE. ..... Developer
DIAG. .....Diagnostic
DISP .....Dispense
dpi ..... dots per inch
DTS ..... Detack Saw
DUP ..... Duplex
ESB ..... Electro Static Brush
ESS ..... Electric Subsystem
F ..... Front
FEED ..... Feeder
FIP .....Fault Isolation Procedure
GND .....Ground
GRN .....Green
GRY .....Gray
HT .....Half Tone
HVPS .....High Voltage Power Supply
ICDC . Image Count Dispense Control
ID .....Image Density
(or Identification)
IDT ..... Intermediate Drum Transfer
INTL .....Interlock
IOT .....Image Output Terminal
K .....Black
L .....Left
L/H .....Left Hand
LD .....Laser diode
LDD .....Lightly Doped Drain
LED ..... Light-emitting diode
LEF .....Long Edge Feed
LH .....Left Hand
LV .....Low Voltage
LVPS .....Low Voltage Power Supply
M .....Magenta
MAG ..... Mag. Roll
MCU .....Machine Control Unit
MOB .....Marks On Belt
MSI ..... Multi Sheet Inserter
N/P ..... No Paper
NVM ..... Non Volatile Memory
OCT ..... Offset Catch Tray
OEM .....Original Equipment
.....Manufacuring
OHP .....Overhead Project
(In this manual, OHP means OHP film)
OPC .....Organic Photo Conductor
ORN .....ORANGE
PC ..... Personal Computer
PH .....Paper Handling
PHD ..... Printer Head
PNK ..... Pink
POP ..... Paper On Photoreceptor
PPM .....Prints Per Minute
PR ..... Process
PV .....Print Volume
PWB..... Printed Wiring Board
R .....Right
R .....Rear
R/H ..... Right Hand
REF .....Refresher
REGI. ..... Registration
RH ..... Right Hand
ROS .....Raster Output Scanner
RTC ..... Rubber Tube Charger
RTN .....Return
SEF ..... Short Edge Feed
SG ..... Signal Ground
SMH ..... Special Material Handler
SNR .....Sensor
SOL. ..... Solenoid
SOS .....Start Of Scan
STM ..... Single Tray Module
SW .....Switch
TEMP. .....Temperature
TM ..... Tray Module
TP ..... Thermopile
VIO ..... Violet
WHT ..... White
XERO .....Xerographic
Y .....Yellow
YEL .....Yellow

manuals4you.com

Safety Information

To prevent accidents during a maintenance procedure, strictly observe the Warnings and Cautions and never depart from the instructions given in this document.
Do not do anything that is dangerous even if not specifically described in this manual.
In addition to the descriptions below and those given in this manual, there are many situations and circumstances that are dangerous.
Be aware of these when you are working with the printer.

Power Supply

Before starting any service procedure, switch off the printer power and unplug the power cord from the wall outlet. If you must service the printer when the power is applied, be aware of the potential for electrical shock and do all tasks by following the procedures in this manual.

WARNING

Do not touch any live part unless you are instructed to do so by a service procedure. The power supply switch/inlet part (MAIN POWER SWITCH & INLET) is live even when the power switch has been turned off. Do not touch any live part.

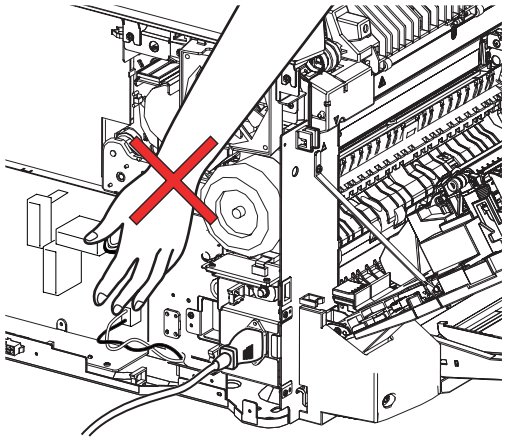

GN005EA

Mechanical Components

If you service a driving assembly (e.g., gears), first turn off the power and unplug the power cord. Then manually rotate the assembly.

WARNING

Do not touch the driving part (e.g., gears) while the assembly (printer) is being driven.

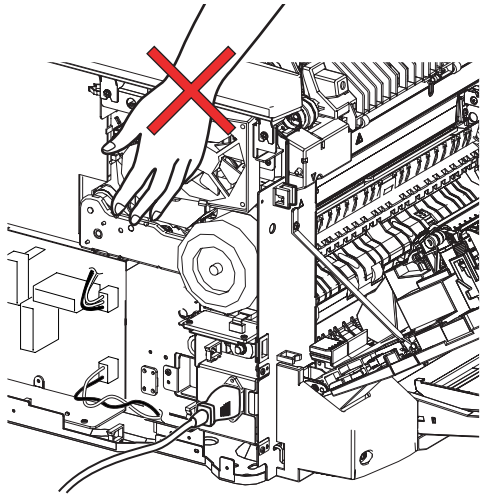

GN006EA

manuals4you.com

Safety Components

The printer is equipped with safety components (e.g., interlock switches, fuses, thermostat) and safety switches for protecting users and service personnel from injury and the equipment from damage. Never handle the printer in such a way that the normal functioning of the safety components is disturbed.
The major safety devices which this printer is equipped with are the following three interlock switches:

- ☐ FRONT COVER OPEN SENSOR
  When the Front Cover opens, the FRONT COVER OPEN SENSOR turns off to cut off +5VDC supplied to each color LDD PWB of the ROS.
- ☐ INTERLOCK SWITCH
  When the Left Cover of the printer main unit opens, the INTERLOCK SWITCH turns off to cut off +24VDC supplied to the DRIVE ASSY MAIN, HVPS, GATE SOLENOID and DUPLEX PWB.
- ☐ LH COVER INTL SW
  When the Left Cover of any additional tray opens, the LH COVER INTL SW turns off.

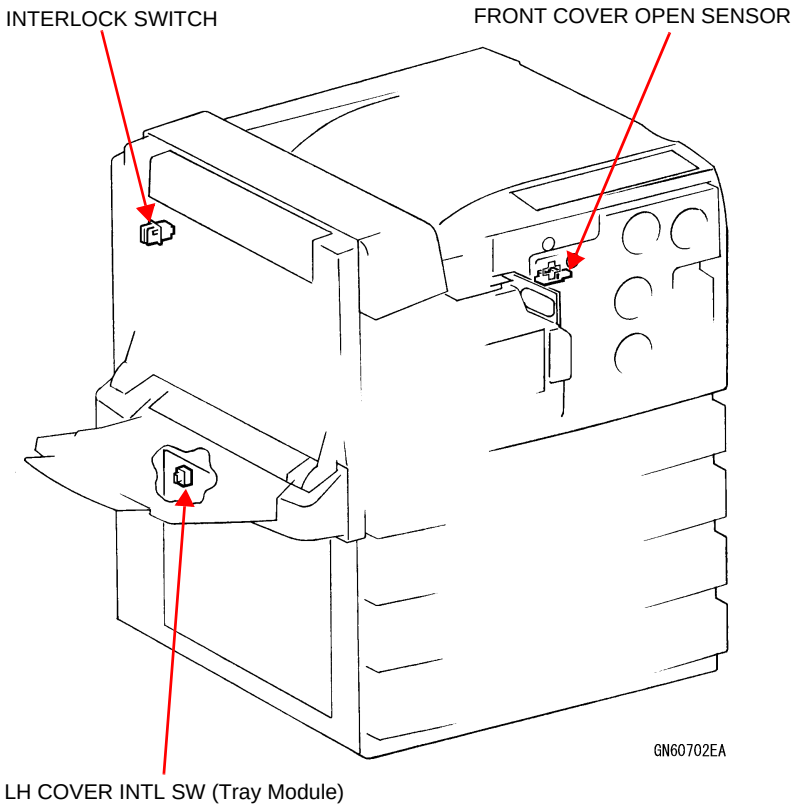

manuals4you.com

Laser Beam

The printer has an interlock switch (FRONT COVER OPEN SENSOR) to prevent exposure to a laser beam from the laser beam output unit (ROS ASSY). This switch turns off when the Front Cover opens. (For details of the switch, refer to the "Safety Components" in the previous section.)
During your maintenance work, never turn on this switch forcibly by other than ordinary operation since doing so may cause the laser beam to be emitted.

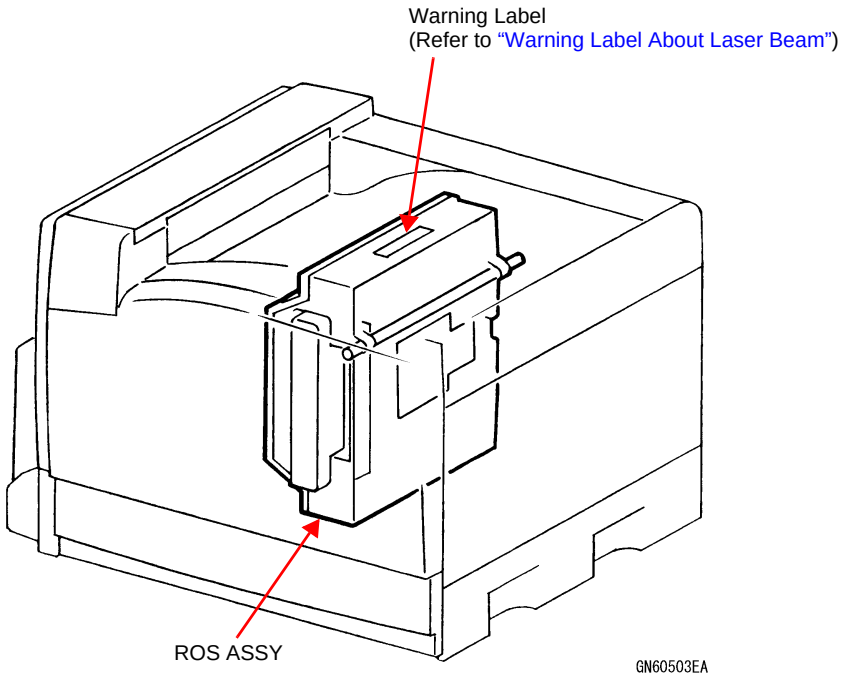

WARNING

- **Exposure of your eyes to a laser beam may lead to blindness.**
- **Never open the Cover where the Warning Label About Laser Beam is affixed.**
- **If you disassemble or assemble the printer, turn off the power.**
- **If you need to work on the printer with power applied, strictly follow the instructions in this manual.**
- **Understand how the laser beam functions and take maximum precautions not to injure yourself or anyone around you.**

CHECK POINT

- **The laser beam has a narrower frequency band and more coherent phases than any other light (sunlight, electric light). The beam has excellent monochromaticity and convergence, thus it reaches long distances. Because of these characteristics, the laser beam converges into one point, causing high density and high temperature. Therefore, a laser beam is harmful to the human body.**
- **The laser beam in this printer is invisible.**

justmanuals.com

High Temperature Assembly

To prevent you from becoming injured or burned, do the following: Before working with a high temperature assembly (e.g., Fuser unit), be sure to turn off the power, unplug the power cord and wait until it cools down adequately.

CAUTION

The high temperature assembly is very hot immediately after any printer operation. Wait at least 20 ~ 30 minutes, until the printer cools down adequately.

Caution Label
(Refer to "Caution Label About High-temperature Surface")

Fuser unit

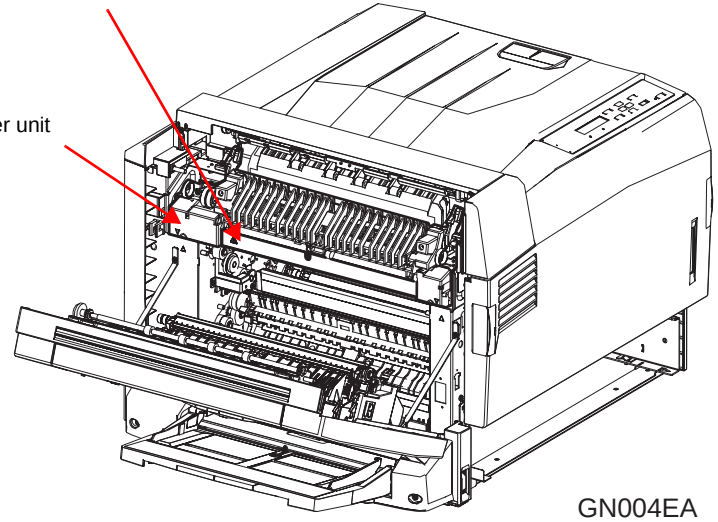

GN004EA

Ozone

Because of the printing principle of laser printers, this machine emits a very small amount of ozone in the process of printing. (The exhaust air may smell of ozone.) This printer generates only a very small amount of ozone that never exceeds the safety permissible value (0.1 ppm / 0.2 mg/m^3) in the normal work environment. Avoid operating the printer under any of the following conditions:

- ☐ Any ambient conditions other than specified for use of this printer
- ☐ Use of two or more laser printers in a small room
- ☐ Use in a place where sufficient ventilation is not available
- ☐ Especially, continuous operation for an extended period of time under any of the above-mentioned conditions

manuals4you.com

Warning/Caution Labels

Warning labels and caution labels are affixed to this printer for accident prevention.

CHECK POINT

In maintenance work, check that the labels are free from peeling and soiling.

☐ Warning Label About Laser Beam

Stuck on the top of the laser beam emitting unit (ROS ASSY) to warn the maintenance personnel of danger of exposure to the laser beam.
(Refer to “Laser Beam”)

CAUTION	CLASS 3B INVISIBLE LASER RADIATION WHEN OPEN. AVOID EXPOSURE TO BEAM.
VORSICHT	UNSICHTBARE LASERSTRAHLUNG KLASSE 3B, WENN ABDECKUNG GEÖFFNET. NICHT DEM STRAHL AUSSETZEN.
ADVARSEL	KLASSE 3B USYNLIG LASERSTRÅLING VED ÅBNING UNDGÅ UDSÆTTELSE FOR STRÅLING
VARO!	KLASS 3B NÄKYMÄTÖNTÄ AVATTAESSA OLET ALTTINA LASERSÄTEILYLLE ÄLÄ KATSO SÄTEESEEN

☐ Caution Label About High-temperature Surface

Stuck on the side wall of the Fuser unit, which becomes hot, in order to warn the user of danger of suffering a burn.
(Refer to “High Temperature Assembly”)

☐ Warning Label About Toner

Stuck on the Waste toner collector and Toner Cartridge to prevent dust explosion caused by toner. This Warning Label prohibits you from throwing toner into fire.

Parts

To prevent you from becoming injured, keep the following in mind:

- ☐ When handling a heavy part (device included), pay careful enough attention to your working posture to prevent back pain.

CAUTION

Handle a heavy part with extreme care. Handling it in an inadvertent posture may put a load on your back or cause you to drop the part.

- ☐ Be careful not to injure yourself with the sharp edges of the parts.
- ☐ Do not work with wet or oily hands-you may drop a part or injure yourself. Dry your hands first.
- ☐ When pulling out a part (including a harness), do not use too much force. Pull out the part carefully and slowly step by step.

Consumables

Understand the following explanation and handle the consumables carefully.

- ☐ Some parts may cause a particulate explosion or fire if handled improperly. Do not handle these parts near fire or throw into a fire.
- ☐ Some materials, especially toner, may cause bodily injury. Do not swallow or inhale such materials or allow them to come in contact with the eyes. Help to protect those around you and follow the prohibitions against swallowing or inhaling such materials. Be careful to protect the eyes at all times.
  Place a sheet inside or under the printer so that the floor or workbench is protected.
- ☐ If the Developer or Fuser Oil gets on your clothing, dry it with a cloth and wash with clean water.
- ☐ To prevent ignition, explosion, burn, injury, etc., do not use a general vacuum cleaner for cleaning dropped toner. (To do so may cause the toner to catch fire by sparks in the vacuum cleaner.)

WARNING

Do not pick up dropped toner with a general vacuum cleaner. To do so may cause ignition.

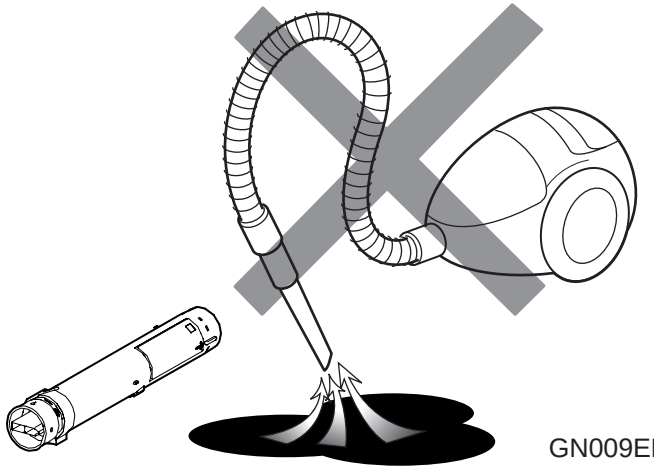

GN009EB

Improper Printer Use

Modifying, revising, tampering with the printer, especially to the safety mechanism, is strictly prohibited in all circumstances.

manuals4you.com

Safety System Outline Diagram

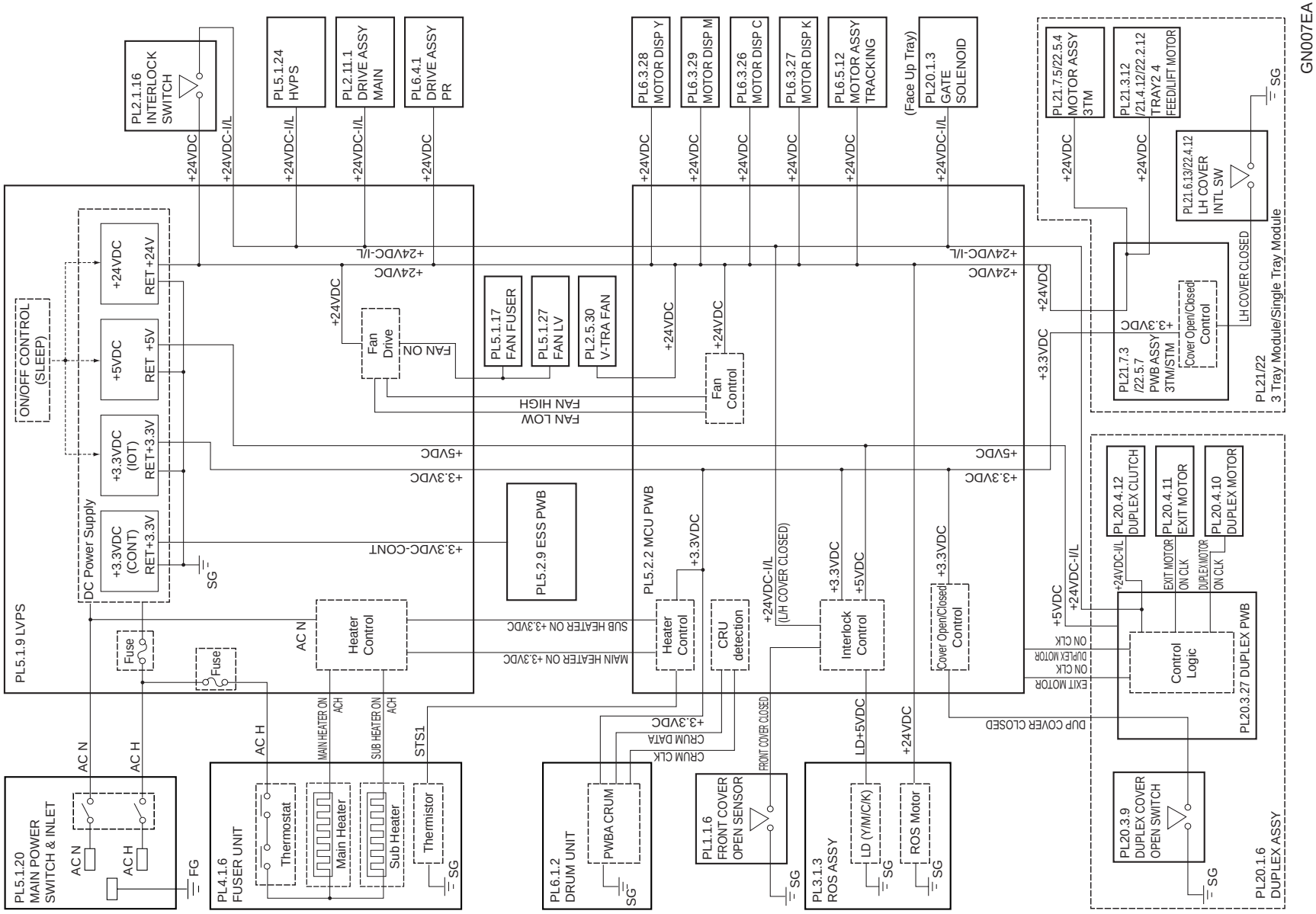

Other Precautions

Paper Storage

When paper is not loaded in the printer, enclose it in a packing material or put it in a plastic or similar bag to prevent dehumidification/moisture absorption in order to optimize print images.

Opening and Closing of LH ASSY during Work

If you have opened and closed the LH ASSY with the printer off, always power on the printer after closing the LH ASSY to warm it up, and then finish your work.
If you do not warm up the printer, the BTR Drive Gear is left in improper engagement and the BTR Roll will be deformed, affecting the print quality.

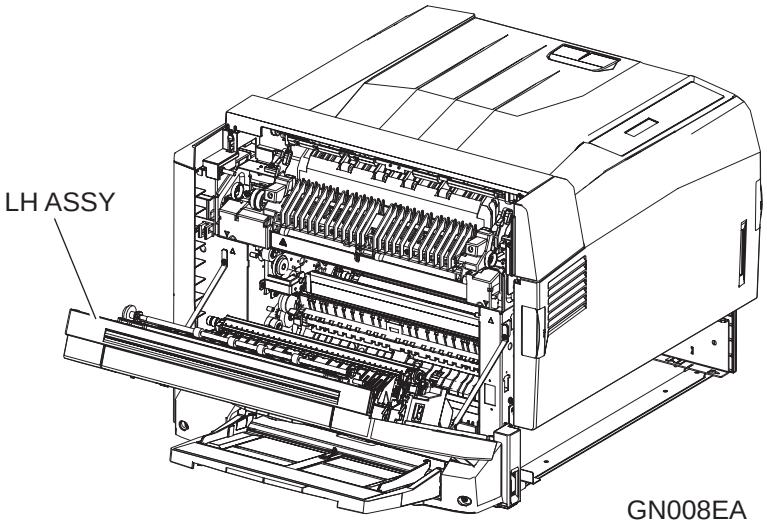

manuals4you.com

Revision Status

Revision	Date of Issue	Description
A	August 26, 2004	First release

CONTENTS

Chapter 1 PRODUCT DESCRIPTION

1.1 Overview 21
1.1.1 Engine features 21
1.1.2 Controller features 22
1.1.3 Software features 22
1.2 Basic Specifications 23
1.2.1 Process Specifications & System 23
1.2.2 Printer Basic Specifications 23
1.3 Adjustment Mechanisms 31
1.4 Paper Specifications 32
1.4.1 Paper Type 32
1.4.2 Paper that may Cause Printing Defects, Paper Jams or Printer Malfunctions 32
1.4.3 Types of Paper Feed 33
1.4.4 Printing Area 34
1.5 Reliability and Serviceability 35
1.5.1 Reliability 35
1.5.2 Durability 36
1.5.3 Serviceability 36
1.6 Operating Conditions (Including Consumables) 37
1.6.1 Space Requirements 37
1.7 Storage and Transport of the Main Unit (Packaged) and Optional Products 38
1.7.1 Temperature and Humidity Conditions 38
1.7.2 Storage Altitude 38
1.7.3 Dropping 38
1.8 Electrical Characteristics 39
1.8.1 Electrical Fast Transient /Bursts (AC Line Noise) 39
1.8.2 Instantaneous Outages 39
1.8.3 Resistance to Static Electricity 39
1.8.4 Inrush Current 39
1.8.5 Insulation Resistance 39
1.8.6 Dielectric Strength 39
1.8.7 Leak Current 39
1.9 Compliance with Standards and Regulations 40
1.9.1 Safety Standards 40
1.9.2 Safety Standards (Laser Transmission) 40
1.9.3 EMI Standards 40
1.9.4 Power Supply Harmonics and Flicker 40
1.9.5 Power Consumption 40
1.9.6 Other 40
1.10 Supplies/Periodic Replacement Units 41
1.10.1 Specifications 41
1.10.2 Packaged Storage and Transport Environment 42
1.11 External Appearance and Unit Names 43
1.11.1 Unit names 43
1.12 Notes When Replacing Supplies and Installing Optional Products 45
1.12.1 Consumables 45
1.13 Engine Restrictions/Limitations 46
1.13.1 Toner Duty Limit 46
1.13.2 Issues that Limit Printing Speed 46
1.14 Controller Specifications 48
1.14.1 Controller basic specifications 48
1.14.2 Controller Configuration 49
1.14.3 External Interface Specifications 50
1.15 Control Panel 52
1.15.1 External Appearance and Names 52
1.15.2 Panel Settings List 53
1.15.3 Description of Menus and Settings 64
1.15.4 Special Operations 69

manuals4you.com

1.16 Printer Status 70
1.16.1 List of Printer Messages 70
1.16.2 Status Messages and Troubleshooting 72
1.16.3 Error Messages and Troubleshooting 73
1.16.4 Warning Messages and Troubleshooting 75
1.16.5 Service Call Error Messages 76
1.17 Increasing the RAM 77
1.18 Handling Precautions 78
1.18.1 Precautions When Turning Off the Power 78
1.18.2 Precautions for High Temperature Parts 78
1.19 Status Sheet 79
1.20 Engine Status Sheet 81
1.21 Color Registration Adjustment Sheet 82
1.22 Configuration Sheet 83
1.23 Paper Handling Algorithm 84

Chapter 2 OPERATING PRINCIPLES

2.1 Print Process 87
2.1.1 Overview 87
2.1.2 Print Process Diagram 88
2.1.3 Technical Explanation 89
2.2 Flow of Print Data 92
2.2.1 Data Flow 92
2.3 Drive Transmission Path 93
2.3.1 DRIVE ASSY MAIN 93
2.3.2 DRIVE ASSY PR 96
2.3.3 DUPLEX ASSY 97
2.3.4 3 Tray Module 99
2.3.5 Single Tray Module 101
2.4 Feeding Paper 103
2.4.1 Paper Feed Path Layout 103
2.4.2 Paper Feed Path 103
2.5 Main Functions of Print Process 104
2.5.1 Main Structure and Functions 104
2.5.2 Drum 106
2.5.3 ROS 107
2.5.4 Development 108
2.5.5 Print and Detachment 111
2.5.6 Collecting Toner 117
2.5.7 Process Control 120
2.5.8 Fusing of Toner 122
2.5.9 Paper Feed 125
2.6 Paper Feed Mechanism 126
2.6.1 Paper Tray 127
2.6.2 Paper Feed 131
2.6.3 Ejection of Paper 135
2.7 Electrical Circuitry and Control 137
2.7.1 Low-voltage Power Supply 137
2.7.2 INTER LOCK 139
2.7.3 Drives 140
2.8 Various Detection Mechanisms 142
2.9 Electric Circuit Operation Principle 144
2.9.1 Main Features 144
2.9.2 Outline Specifications 144

Chapter 3 TROUBLESHOOTING

3.1 Procedure for Troubleshooting 148
3.1.1 Procedure for Troubleshooting 148
3.1.2 Preliminary Checks 148
3.1.3 Precautions in Performing Work 149
3.1.4 Precautions When Using FIP 149
3.1.5 Warming-Up Flowchart At Power-ON 151
3.2 Level 1 FIP 152
3.2.1 Level 1 FIP 152
3.2.2 Level 1 FIP Flowchart 152
3.3 Level 2 FIP 153
3.3.1 Level 2 FIP 153
3.3.2 List of Errors and Warnings 153
3.3.3 Service Call Errors 160
3.3.4 FIP 164
3.4 Printer Operation Trouble 247
3.5 Image Quality Trouble 248
3.5.1 Image Quality Troubleshooting Entry Chart 248

3.5.2 Image Quality FIP 249
3.5.3 Periodic Image Trouble Occurrence Pitches 251
3.5.4 Test Print (IOT Test Pattern Print) 252
3.5.5 FIP 254
3.6 Appendix 290

Chapter 4 DISASSEMBLY AND ASSEMBLY

4.1 Overview 293
4.1.1 Precautions 293
4.1.2 Used Screw List 296
4.1.3 Tools 297
4.1.4 Disassembly and Reassembly Procedure 297
4.2 Cover 298
4.2.1 COVER ASSY RIGHT, COVER ASSY FRONT 298
4.2.2 COVER HIGH ASSY TOP, CONTROL PANEL 299
4.2.3 COVER ASSY REAR, COVER RH LOW 302
4.2.4 COVER FRONT LH LOW, COVER REAR LH LOW 303
4.2.5 FRONT COVER OPEN SENSOR 304
4.3 Paper Transport 305
4.3.1 BTR UNIT ASSY 305
4.3.2 INTERLOCK SWITCH 306
4.3.3 LH ASSY 307
4.3.4 MSI, ROLL ASSY TURN 310
4.3.5 ROLL ASSY FEED ENV, ROLL ASSY FEED, HOLDER ASSY RETARD, SPRING RETARD 312
4.3.6 PLATE ASSY BOTTOM, SPRING PICK UP, GEAR PICK UP, GEAR CAM 314
4.3.7 SOLENOID ASSY 316
4.3.8 MSI TRAY 317
4.3.9 MSI NO PAPER SENSOR 319
4.3.10 GUIDE SIDE FRONT, GUIDE SIDE REAR 320
4.3.11 CAP FUT, COVER EXIT 321
4.3.12 HANDLE ASSY L/H, WIRE ASSY GND 322
4.3.13 CHUTE TRANS, V-TRA FAN 324
4.3.14 POP SENSOR 325
4.3.15 ROLL PINCH TURN, SPRING TURN 326
4.3.16 KIT CHUTE TRANS 327
4.3.17 ROLLER ASSY EXIT 1 328
4.3.18 GATE ASSY FUT 329
4.3.19 CLUTCH ASSY SPRING 330
4.3.20 CHUTE FUT UP 331
4.3.21 PH MAIN ASSY 332
4.3.22 BEARING ONEWAY, CLUTCH ASSY FEED, ROLL ASSY TURN ... 334
4.3.23 SENSOR ASSY MOB ADC 337
4.3.24 CLUTCH REGI, CHUTE PH 338
4.3.25 ACTUATOR REGI, SENSOR REGI, OHP SENSOR 340
4.3.26 LEVEL SENSOR 1, LEVEL SENSOR 2 342
4.3.27 NO PAPER SENSOR, SENSOR ASSY PAPER 343
4.3.28 SWITCH ASSY SIZE, SENSOR ASSY TRACKING 344
4.3.29 SHAFT ASSY, ROLL ASSY FEED, ROLL ASSY SIDE 345
4.3.30 HOLDER ASSY RETARD 347
4.3.31 CAM SIZE, PIN LOCKING, GEAR IDLE 348
4.3.32 GUIDE ASSY END 349
4.3.33 GUIDE ASSY SIDE R, GUIDE ASSY SIDE F 350
4.3.34 ACTUATOR N/E 352
4.3.35 DRIVE ASSY MAIN 353
4.3.36 CLUTCH ASSY FEED 355
4.4 ROS 357
4.4.1 ROS ASSY 357
4.4.2 KIT HEATER ASSY, KIT HEATER DELE ASSY 358
4.5 Fuser and Exit Transport 361
4.5.1 Fuser unit 361
4.5.2 TRANSPORT EXIT ASSY, SENSOR ASSY TP 362
4.5.3 ROLL ASSY EXIT 2 364
4.5.4 FUSER DRAWER CONNECTOR 366
4.6 Electrical 368
4.6.1 SENSOR HUM TE 368
4.6.2 FAN FUSER 369
4.6.3 FAN LV 370
4.6.4 HVPS 371
4.6.5 LVPS & MAIN POWER SWITCH 373
4.6.6 BOARD ASSY, MAIN 375
4.6.7 ESS BOX 378
4.6.8 MCU PWB, X-ROM PWB 382
4.7 Deve. And Xero. 384

manuals4you.com

4.7.1 TONER FULL SENSOR, TONER BOTTLE SET SENSOR 384
4.7.2 IDT UNIT, Photoconductor unit 386
4.7.3 TONER DISPENSER ASSY 389
4.7.4 DEVE UNIT K (C, M, Y) 392
4.7.5 AUGER (Y/M/C/K) 397
4.7.6 MOTOR DISP (Y/M/C/K) 399
4.7.7 ANTENNA CK, ANTENNA YM 401
4.7.8 HSG-CTRG (Y/M/C/K) 403
4.7.9 DRIVE ASSY PR 405
4.7.10 GEAR ASSY HR 406
4.7.11 TRACKING ASSY FRONT 407
4.7.12 MOTOR ASSY TRACKING 408
4.7.13 SHAFT ASSY TRACKING 409
4.7.14 GEAR HIGH ASSY DEVE 411
4.7.15 COVER ASSY INNER 413
4.8 Duplex and Side Tray 414
4.8.1 DUPLEX ASSY 414
4.8.2 TRAY ASSY EXIT, CHUTE ASSY FUT 416
4.8.3 GATE SOLENOID 417
4.8.4 GUIDE DUP IN, DUPLEX FRAME COVER 418
4.8.5 DUPLEX PWB 419
4.8.6 DUPLEX DRIVE 420
4.8.7 DUPLEX ROLL 421
4.8.8 GATE DUPLEX 423
4.8.9 DUPLEX SENSOR, DUPLEX COVER OPEN SWITCH 424
4.8.10 ROLL DCL RUBBER 426
4.8.11 CAM DCL, LEVER DCL 427
4.8.12 EXIT MOTOR, DUPLEX MOTOR, DUPLEX CLUTCH 428
4.8.13 DUPLEX FRAME ASSY 430
4.9 3 Tray Module / Single Tray Module 431
4.9.1 3 Tray Module 431
4.9.2 FRONT UPPER COVER, RIGHT COVER, LEFT LOWER COVER, REAR COVER 432
4.9.3 TRAY 2 FEEDER 433
4.9.4 TRAY 3 FEEDER 434
4.9.5 TRAY 4 FEEDER 435
4.9.6 PAPER SIZE SENSOR 436
4.9.7 KIT FEED/RETARD/NUDGER ROLL 437
4.9.8 ONEWAY CLUTCH, ONEWAY GEAR, FRICTION CLUTCH 438
4.9.9 ACTUATOR SNR, TRAY NO PAPER SENSOR 439
4.9.10 TRAY LEVEL SENSOR 440
4.9.11 TRAY FEED OUT SENSOR 441
4.9.12 ACTUATOR 442
4.9.13 TRAY FEED/LIFT MOTOR 443
4.9.14 TAKEAWAY ROLL ASSY 444
4.9.15 TAKEAWAY SENSOR, LH COVER INTL SW 445
4.9.16 LEFT COVER ASSY 3TM 447
4.9.17 MOTOR ASSY 3TM, PWB ASSY 3TM 448
4.9.18 STOPPER TRAY FR 449
4.10 Single Tray Module 450
4.10.1 Single Tray Module 450
4.10.2 LEFT COVER ASSY STM 451
4.10.3 MOTOR ASSY STM, PWB ASSY STM 452
4.10.4 TRAY 4 FEEDER 453
4.11 Tray Assy 454
4.11.1 LINK END 454
4.11.2 FRONT SIDE GUIDE, REAR SIDE GUIDE 455
4.11.3 END GUIDE ASSY 456
4.11.4 SIDE GUIDE ACTUATOR 457

Chapter 5 ADJUSTMENT

5.1 Overview 459
5.1.1 Instructions 459
5.1.2 Part/unit-based adjustment items 460
5.2 Adjustment 462
5.2.1 Color Registration Adjustment 462
5.2.2 Color Registration Check 466
5.2.3 Writing USB ID 467
5.2.4 Writing adjustment value 469
5.2.5 Controller Firmware Update 472
5.2.6 MCU Firmware Update 475

Chapter 6 MAINTENANCE

6.1 Overview 478
6.2 About On-site Servicing 480

6.2.1 On-site Servicing Flowchart 480
6.2.2 Details of On-site Servicing 481
6.3 Maintenance Menu 483
6.3.1 Maintenance Menu Items 483
6.3.2 Entry into Maintenance Menu 486
6.4 Sheet for servicing 487
6.4.1 Engine Status Sheet Items 487
6.4.2 Print Log Report 492
6.5 Consumables and Periodical Replacement Parts 494
6.5.1 Consumables 494
6.5.2 Regular Replacement Parts 495

Chapter 7 APPENDIX

7.1 Connectors 497
7.1.1 P/J Layout Diagram 497
7.2 Wiring Diagrams and Signal Information 513
7.2.1 How to use Overall Connection Wiring Diagrams 513
7.2.2 How to use Detailed Connection Wiring Diagrams 514
7.2.3 Overall Connection Wiring Diagrams 516
7.2.4 Detailed Connection Wiring Diagrams 519
7.3 Exploded Diagrams 562
7.4 Parts List 604
7.5 Circuit Diagrams 610

manuals4you.com

CHAPTER

1

PRODUCT DESCRIPTION

1.1 Overview

This printer is a non-impact color page printer that takes advantage of laser and electrophotographic technologies. It has resolution of 600/300 dpi, and print speed of 24.0ppm (A4 color)/24.0ppm (A4 monochrome).
In addition, CPGI is included as a full-color technology.

1.1.1 Engine features

- ☐ High speed engine with a print speed of 24.0ppm (color) /24.0ppm (monochrome) and support for HLT to A3, and banner (up to 1,200mm).
- ☐ Warming up time: 30 seconds or less
- ☐ First print output time
  - ■ Color/A4 : 12.0 seconds
  - ■ Monochrome/A4 : 10.5 seconds
- ☐ Support for automatic duplex (option)
  - ■ Printing speed : 20.0ppm (A4, Color/Monochrome)
- ☐ Support for thick paper and transparencies
- ☐ Ultra power saving is possible in sleep mode with the mechanical controller off.
- ☐ Support for the following paper feed
  A maximum of 2,150-sheet, 5-bin feed is possible.
  - ■ Standard : Standard cassette (500 sheets)
    MP tray (150 sheets)
    (Accepts 1,200mm long paper)
  - ■ Option : Either of the following units can be loaded
    - 1,500-sheet paper cassette unit
      (500 sheets x 3 levels)
    - 500-sheet paper cassette unit
      (500 sheets x 1 level)
- ☐ Support for the following paper exit
  - ■ Standard feed : Face-Down 500 sheets
  - ■ Option : Face-Up 150 sheets
- ☐ CSIC installed on Toner Cartridge and Photoconductor unit
- ☐ The replacement cartridge provides a large capacity cartridge.

Table 1-1. Number of sheets available for each Toner Cartridge (A4/5%)

Color	Factory-installed cartridge	Replacement cartridge
BK	7,500 sheets	15,000 sheets
Y	6,000 sheets	12,000 sheets
M	6,000 sheets	12,000 sheets
C	6,000 sheets	12,000 sheets

manuals4you.com

1.1.2 Controller features

- Newly developed high speed controller
  - New RISC CPU : PowerPC750FX (600MHz)
  - DDR333 high speed memory
    : DDR SODIMM (333MHz, CL=2.5)
  - Standard RAM 128MB, expandable to a maximum of 1,024MB with additional RAM
- Color technology
  - Enhanced ASIC (FMV, FAIO)
  - New color registration adjustment function
- 3 types of standard interface
  - IEEE1284 compliant ECP supporting parallel I/F
  - USB (2.0 HS) interface (D4 support)
  - 10Base-T/100Base-TX
- Adding RAM DIMM can improve the following functions
  - Drawing area (CPGI, PGI)
  - Printing speed
  - Resolution
  - Receive buffer capacity
  - Collation (when expanded to more than 128MB)
- ROM update function when flash DIMM is installed (RCC supported)
- HDD can be installed (support for large-capacity types (40GB))

1.1.3 Software features

- ESC/Page-Color
  - ESC/Page Color monochrome printing supported
    (high speed automatic recognition of color/monochrome etc.)
- Printer status and printer environment monitoring with bi-directional EJL and MIB
- Support for PostScript 3 with the optional Adobe PostScript 3 module
- Support for PCL5C with the optional HP-PCL5 module
- Version upgrade function for the engine controller ROM (Flash)
- Support for DCC commands (DIAG command only)
- Calibration function (with a change to the calibration table)
- Support for main unit serial numbers

1.2 Basic Specifications

1.2.1 Process Specifications & System

- ☐ System : Semiconductor laser beam scanning and 2-component dry electrophotographic system
- ☐ Exposure light source : 4-beam semiconductor laser
- ☐ Photoconductor : OPC (organic photoconductor) drum
- ☐ Charging : Roller charger
- ☐ Development : 2-component, contact development
- ☐ Toner : Non-magnetic toner
- ☐ Transfer : Intermediate transfer roller
- ☐ Intermediate transfer media : Roller
- ☐ Fixing : Belt heat fixing (free belt nip)

1.2.2 Printer Basic Specifications

RESOLUTION

Main scanning 600 dpi x sub-scanning 600 dpi

WARMING UP TIME

- ☐ 120V/200V : 30 seconds or less (at 22°C, 55% RH, rated voltage) The time until printing is possible after the power is turned on or when recovering from the sleep status after receiving a command from the controller. However, in a low temperature high humidity environment, warm up time may be + 270 s (condensation prevention mode).

PRINTING SPEED MODE

- ☐ Full speed mode : Prints at the fastest speed of the main unit when printing plain paper, recycled paper, and fine paper.
- ☐ Low speed mode : Feeds paper at reduced speed to prevent loss of print quality when using special paper (thick paper, labels, envelopes, postcards).

manuals4you.com

PRINTING MODE BY PAPER TYPE

The main unit has 24 modes for the various media. Modes are switched by instructions from the controller. The engine determines the combination of modes corresponding to simplex/duplex printing and the media, and sets the process speed to one of 2 levels, full speed and low speed, as shown in the following table.

Table 1-2. Printing mode by paper type

Media compatible mode	Paper type	Printing speed mode	
		Simplex printing	Auto duplex
Plain paper 1 mode	60 to 80 gsm Japanese paper	Full speed	Full speed
Plain paper 2 mode	60 to 80 gsm overseas paper	Full speed	Full speed
Recycled paper mode	60 to 80 gsm recycled paper	Full speed	Full speed
Fine paper mode	81 to 105 gsm paper	Full speed	Full speed
Thick paper 1 mode	106 to 169 gsm thick paper	Low speed	---
Thick paper 2 mode	170 to 216 gsm thick paper	Low speed	---
Transparency mode	Transparency	Low speed	---
Label 1 mode	Japanese labels	Low speed	---
Label 2 mode	Overseas labels	Low speed	---
Envelope mode	Envelopes	Low speed	---
Coated paper 1 mode	106 to 169 gsm coated paper	Low speed	---
Coated paper 2 mode	170 to 216 gsm coated paper	Low speed	---
Postcard mode	Postcards	Low speed	---
Special mode (front side)	Paper not supported by modes shown above	Full speed or low speed	Full speed*
Plain paper 1 (reverse side) mode	Plain paper 1 reverse side after printing	Full speed	---
Plain paper 2 (reverse side) mode	Plain paper 2 reverse side after printing	Full speed	---

Table 1-2. Printing mode by paper type

Media compatible mode	Paper type	Printing speed mode	
		Simplex printing	Auto duplex
Recycled paper (reverse side) mode	Recycled paper reverse side after printing	Full speed	---
Fine paper (reverse side) mode	High quality paper reverse side after printing	Full speed	---
Thick paper 1 (reverse side) mode	Thick paper 1 reverse side after printing	Low speed	---
Thick paper 2 (reverse side) mode	Thick paper 2 reverse side after printing	Low speed	---
Coated paper 1 (reverse side) mode	Coated paper 1 reverse side after printing	Low speed	---
Coated paper 2 (reverse side) mode	Coated paper 2 reverse side after printing	Low speed	---
Postcard (reverse side) mode	Postcard reverse side after printing	Low speed	---
Special mode (reverse side)	Reverse side of paper not supported by modes shown above	Full speed or low speed	Full speed*

Note "*": 60 to 105 gsm paper only supported

PRINT MODE

- ☐ Color mode : Color mode using Y, M, C, K toner
- ☐ Monochrome mode : Monochrome mode using only K toner

FIRST PRINT OUTPUT TIME

The time between receiving the Start command and output of the bottom edge of the first sheet from the paper output roller.
However, this excludes operations that fall under the restrictions on printing speed explained in "1.13 Engine Restrictions/Limitations" *(p.46)*.

Table 1-3. List of first print output time (Unit: seconds or less)

Paper size	Monochrome mode		Color mode	
	Simplex printing	Duplex printing	Simplex printing	Duplex printing
A4	10.5	19.0	12.0	20.5
A3	12.6	22.1	14.1	23.6

Note "*1": Paper used is A4 plain paper, printing speed mode is full speed mode.
Paper feed is the standard universal cassette.
Paper output destination is face-down (standard).
Speed varies if the paper feed or output is changed*2.

"*2": When using a feeder other than the standard universal cassette, the time shown below is added to the color mode time.

Table 1-4.

Paper feed		Added time
500-sheet	1-feeder cassette	≤ 640ms
	3-feeders cassette (1st feeder)	
	3-feeders cassette (2nd feeder)	≤ 800ms
	3-feeders cassette (3rd feeder)	≤ 1,090ms

CONTINUOUS PRINTING SPEED

This excludes operations that fall under the restrictions on printing speed explained in "1.13 Engine Restrictions/Limitations" *(p.46)*.

Table 1-5. List of continuous printing speed (Unit: PPM) *1

Paper size	Simplex printing		Duplex printing
	Full speed mode	Low speed mode	Full speed mode only
Standard size 1*2 • A4, Letter	24.0	12.0	20.0
Standard size 2*2 • Executive, B5, A5, HLT, GLT	24.0	12.0	11.0
Standard size 4*2 • GLG, Legal, B4, F4	15.0	7.5	8.5
Standard size 5*2 • A3, Ledger	13.0	6.5	7.8
C6, DL, COM-10, Monarch	---	12.0	---
ISO-B5	---	9.0	---
Transparency*4	---	6.0	---
User defined size • L*3=216 or less	24.0	12.0	11.0
User defined size • 216 < L*3 ≤ 297	18.0	9.0	9.5
User defined size • 297 < L*3 ≤ 364	15.0	7.5	8.5
User defined size • 364 < L*3 ≤ 432	13.0	6.5	7.8

Note "*1": The same speed for any paper feed

"*2": For details on the paper orientation, refer to "Supported paper size, type and orientation *(p.27)*".
Indicates a length of up to 216mm.

"*3": Paper length size (mm)

"*4": For transparencies, the printer switches to the standard size A4 low speed mode. However since the sheets are printed with an interval of 1 sheet to prevent sticking, the actual speed is 6.0ppm.

PAPER FEED REFERENCE

Center-line reference for each paper size, 500-sheet paper cassette unit (option), and 1500-sheet paper cassette unit (option).

manuals4you.com

PAPER FEED

Table 1-6. Paper feed

Paper feed		Capacity P paper	Capacity J paper	Height capacity (number of sheets)	Paper type/Paper size	Usable paper basis weight*1
Standard	Standard universal cassette	560 sheets	500 sheets	54mm (max)	A3, B4, A4, B5, A5, Ledger, GLG, LEGAL, LETTER, EXECUTIVE User defined size: Width : 182 to 297mm Length : 98.4 to 431.8mm	60 to 216g/m^2
Standard	MP tray	180 sheets	150 sheets	Paper smaller than LTR/A4 size 18mm (max)	A4, B5, A5, LETTER, HLT, GLT, EXECUTIVE, C6, DL, COM-10, MONARCH, User defined size: Width : 90 to 297mm Length : 98 to 216mm	60 to 216g/m^2
Standard	MP tray	100 sheets	100 sheets	Paper larger than LTR/A4 size 10mm (max)	A3, A4, Ledger, GLG, F4, LEGAL,12"x18" User defined size: Width : 298 to 304.8mm Length : 217 to 457.2mm*2	60 to 216g/m^2
Standard	MP tray	---	---	100 sheets	Transparency (A4, LT)	60 to 216g/m^2
Option	500-sheet cassette or 1500-sheet cassette	560 sheets	500 sheets	54mm (max)	A3, A4, B4, B5, LEDGER, GLG, LEGAL, LETTER User defined size: Width : 182 to 297mm Length : 182 to 431.8mm	63 to 175g/m^2
Option	Duplex unit	---	---	---	A3, A4, A5, B4, B5, Letter, Executive, Ledger, GLG, Legal, GLT, F4, HLT	60 to 105g/m^2

Note "*1": Refer to "1.4 Paper Specifications" *(p32)*.

"*2": Lengths of up to 1,200 can be supported, however paper longer than 457.2 mm must be fed by hand one sheet at a time and must be supported by the operator.

OPTIONAL PAPER FEED COMBINATION

Besides the standard universal cassette and MP tray, the optional 500-sheet paper cassette unit or 1500-sheet paper cassette unit can be installed. This combination is shown in total number of sheets.

Table 1-7. List of optional paper feed combination (When using J paper)

Combination			1	2	3
Standard	Standard universal cassette	500 sheets	○	○	○
Standard	MP tray (A4)	150 sheets	○	○	○
Option	500-sheet paper cassette unit	500 sheets	---	○	---
Option	1500-sheet paper cassette unit	1500 sheets	---	---	○
Total number of sheets			650 sheets	1,150 sheets	2,150 sheets

CHECK POINT

Supplement about the optional cassette unit

- **The 500-sheet paper cassette unit does not have casters.**
- **The 1500-sheet paper cassette unit has casters.**
- **Both additional cassette units above cannot be installed at the same time.**

SUPPORTED PAPER SIZE, TYPE AND ORIENTATION

Table 1-8. List of supported paper size, type and orientation

Paper			Paper size Unit: mm (inches) Vertical (length)	Paper size Unit: mm (inches) Horizontal (width)	MP tray	Standard universal cassette unit	Optional paper cassette unit	Duplex printing	Paper orientation	Face-up output
Standard paper and plain paper	A3		420.00	297.00	○	○	○	○	SEF	○
	B4		364.00	257.00	○	○	○	○	SEF	○
	A4		210.00	297.00	○	○	○	○	LEF	○
	B5		182.00	257.00	○	○	○	○	LEF	○
	A5		148.00	210.00	○	○	---	○	LEF	○
	LEGAL		355.60 (14.00")	215.90 (8.50")	○	○	○	○	SEF	○
	GLG		330.20 (13.00")	215.90 (8.50")	○	○	○	○	SEF	○
	LETTER		215.90 (8.50")	279.40 (11.00")	○	○	○	○	LEF	○
	LEDGER (B)		431.80 (17.00")	279.40 (11.00")	○	○	○	○	SEF	○
	HLT		139.70 (5.50")	215.90 (8.50")	○	---	---	○	LEF	○
	EXECUTIVE		184.15 (7.25")	266.70 (10.50")	○	---	---	○	LEF	○
	GLT		203.20 (8.00")	266.70 (10.50")	○	---	---	○	LEF	○
	F4		330.00	210.00	○	---	---	○	SEF	○
Special paper	Transparency		A4: 210.00 LT: 215.90	A4: 297.00 LT: 279.40	○	---	---	---	LEF	○
	Labels		A4: 210.00 LT: 215.90	A4: 297.00 LT: 279.40	○	---	---	---	LEF	○
	Envelopes *1 *2	MONARCH	98.43 (3 7/8)	190.5 (7 1/2)	○	---	---	---	LEF	---
		Com-#10	104.78 (4 1/8)	241.30 (9 1/2)	○	---	---	---	LEF	---
		DL	110.00	220.00	○	---	---	---	LEF	---
		ISO-B5	250.00	176.00	○	---	---	---	SEF	---
		C6	114.00	162.00	○	---	---	---	LEF	---

Note "*1": The supported paper sizes differ depending on the destination.
"*2": For the orientation of envelopes, refer to "Envelope orientation *(p.28)*".

Note : SEF (Short Edge Feed): The short edge of the paper is fed into the printer.

LEF (Long Edge Feed) : The long edge of the paper is fed into the printer.
"---" = Not supported

manuals4you.com

☐ Envelope orientation

Feed direction ↓	↓	↓
Envelope type	ISO-B5	MONARCH, Com-#10, DL, C6

Note 1: Place in the MP tray print side down with the flap open.

2: Only envelopes without adhesive or tape can be used.

PAPER OUTPUT

This product has a face-down output tray as standard, and a face-up unit as an option. The specifications are defined below.

☐ Face-down (standard)

- Output location : Top of the printer
- Output tray capacity : 500 sheets (standard paper)
- Paper size : All paper sizes that can be handled by the printer
- Paper type : All paper types that can be handled by the printer (60 to 216gsm)

☐ Face-up (when the optional face-up unit is installed)

- Output location : Left side of the printer
- Output tray capacity : 150 sheets (standard paper)
- Paper size : All paper sizes that can be handled by the printer, excluding paper sizes with vertical length of less than 135mm
- Paper type : All paper types that can be handled by the printer (60 to 216gsm)

NOTE: *Face-down and face-up can both accept paper longer than 457.2mm, however the results are not guaranteed.*

DIMENSIONS AND WEIGHT

☐ Stand-alone dimensions and weight

Table 1-9. List of dimensions and weight (Unit: mm, kg)

	Width	Depth	Height	Weight
Main unit	678.0	631.0	473.0	55.0 *1
500-sheet paper cassette unit	565.0	591.0	121.0	12.0
1500-sheet paper cassette unit	565.0	591.0	363.0	31.0

Note "*1": Not including the Toner Cartridge, Photoconductor unit, and Waste toner collector packaged with the main unit.

Note : Does not include projecting items.
Tolerance: Dimensions = ±1% mm, Weight = ±1% kg (however, 10kg or less is uniformly ±0.1kg)

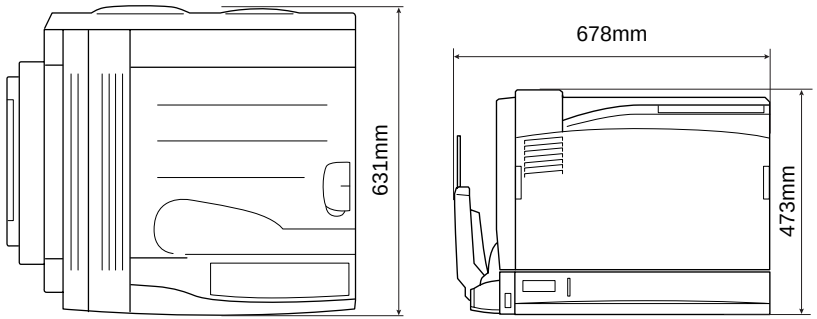

Figure 1-1. Outline Dimensions

☐ Dimensions and weights with options installed

Table 1-10. List of dimensions and weights with options installed (Unit: mm, kg)

	Width	Depth	Height	Weight
Main unit + duplex unit	678.0	631.0	473.0	57.2 *1
Main unit + 1500 sheet paper cassette unit + duplex unit + face-up tray	972.0	631.0	829.5 *2	90.55 *1

Note "*1": Not including the Toner Cartridge, Photoconductor unit, and Waste toner collector packaged with the main unit.

"*2": Includes the height of the casters of the 500-sheet x 3-feeders cassette.

Note : Does not include projecting items.
Tolerance: Dimensions = ±1% mm, Weight = ±1% kg (however, 10kg or less is uniformly ±0.1kg)

SUPPLIES AND PERIODIC REPLACEMENT UNITS

Table 1-11. List of supplies and periodic replacement units

Classification	Replacement unit
Supplies	Toner Cartridge (Black, Cyan, Yellow, Magenta)
	Photoconductor unit
	Waste toner collector
Periodic replacement units	Fuser unit
	BTR UNIT ASSY (Transfer unit)
	IDT UNIT (Intermediate transfer unit)
	DEVE UNIT (Development unit) (Black, Cyan, Yellow, Magenta)

NOTE: *For details, refer to Section* "1.10 Supplies/Periodic Replacement Units" *(p.41)*.

POWER SUPPLY

☐ Power supply operating voltage/frequency

Table 1-12. Power supply operating voltage/frequency

115/120 V series power supply	Voltage	100 - 127V ± 10% (90V to 140V)
	Frequency	50 ± 3Hz / 60 ± 3Hz
200 V series power supply	Voltage	220 - 240V ± 10% (198V to 264V)
	Frequency	50 ± 3Hz / 60 ± 3Hz

☐ Power supply to the printer controller
3.3V ± 5% / 9.5A, 5V ± 5% / 1.5A or less

POWER CONSUMPTION

Table 1-13. List of power consumption

		120V series		200V series	
		Main unit only	With options installed	Main unit only	With options installed
Maximum rated current		12A or less	12A or less	5A or less	5A or less
Power consumption	Maximum	1095W	1100W	1064W	1092W
	Continuous printing average	364W	387W	383W	403W
	Average during standby mode (heater on)	80W	82W	84W	85W
	Average during sleep mode (heater off)	12W or less	12W or less	11W or less	11W or less
	Power source off	0W	0W	0W	0W

CONSUMPTION CURRENT

☐ 500-sheet paper cassette unit : 11.7WDC or less (24V: 0.94A, 5V: 0.09A)

☐ 1500-sheet paper cassette unit: 17.6WDC or less (24V: 1.09A, 5V: 0.09A)

☐ Duplex unit : 11.77WDC or less (24V: 1.2A, 5V: 0.13A)

☐ Face-up unit : 1.65WDC or less (24V: 0.85A)

manuals4you.com

PRODUCT LIFETIME

- Main unit product lifetime: 600,000 pages or 5 years, whichever comes first.

NOTE 1: *If periodical replacement units are replaced.*
2: *Printing conditions are A4 (LEF) or LETTER (LEF).*

- The product lifetime of the following options is the same as the main unit product lifetime shown above.
  - 500-sheet paper cassette unit
  - 1500-sheet paper cassette unit
  - Duplex unit
  - Face-up tray
  - Long paper guide

ACOUSTICS

Table 1-14. Sound pressure

	Printing mode	Standby mode	Sleep mode
Main unit	51dB (A)	25dB (A)	Background noise
With full options installed (Reference)	55dB (A)	---	

Note : Measured in the standard state. Fed from the universal cassette and output to face-down. The paper used is FX-P paper.

Table 1-15. Sound power

	Printing mode	Standby mode	Sleep mode
Main unit	6.3B (A)	4.0B (A)	Background noise
With full options installed (Reference)	6.8B (A)	---	

Note 1: The measuring method and calculation method conforms to ISO-7779 and ISO-9296.

2: 3 units were measured.

EXHAUST GAS

- Ozone : 0.02mg/m^3 or less
- Styrene : 0.07mg/m^3 or less
- Dust : 0.075mg/m^3 or less
- TVOC : 0.50mg/m^3 or less

1.3 Adjustment Mechanisms

- Main Scanning Color Registration Adjustment

  Adjusts registration shift of Y, M, and C with regard to K in the main scanning direction.
  For the adjustment procedure, refer to "5.2.1.2 Adjustment of starting position in main-scanning direction" *(p.464)*.

- Sub-Scanning Direction Shift (Skew) Adjustment

  Adjusts the skew shift of each color when the exposure unit and Intermediate transfer unit are replaced.
  For the adjustment procedure, refer to "5.2.1.1 Correction of starting position in sub-scanning direction" *(p.463)*.

- Printing Mode Adjustment

  With the following items, media compatible modes (refer to "printing mode by paper type *(p.24)*") can be selected and changed.

  - Feed control (changes printing speed, paper feed timing etc.)
  - Change fuser temperature
  - Change transfer voltage

manuals4you.com

1.4 Paper Specifications

1.4.1 Paper Type

- ☐ Standard paper
  RX-80 paper (monochrome), FX 4024 paper (20 lb) (monochrome), EPSON high quality plain paper
- ☐ Plain paper
  - ■ 60g/m^2 to 105g/m^2
    (Normal copy paper or recycled paper)
  - ■ Recommended recycled paper: Steinbeis Recycling Copy classic
- ☐ Special paper
  - ■ EPSON transparency sheets (A4)
  - ■ Labels
  - ■ Thick paper (106g/m^2 to 216g/m^2)
  - ■ Envelopes (85g/m^2 to 105g/m^2)

CHECK POINT

- ■ **lb : Ream weight = lb / 500 sheets / 17" x 22" (431.8x558.8mm)**
- ■ **g/m^2 : 1g/m^2 = 0.2659763lb**
- ■ **Before purchasing a large amount of paper, try feeding the paper first.**

1.4.2 Paper that may Cause Printing Defects, Paper Jams or Printer Malfunctions

- ☐ Copy paper (carbon paper, non-carbon paper), thermal paper, impact paper, acid-based paper
- ☐ Paper that is too thin or too thick
- ☐ Paper that is wet or damp
- ☐ Paper with special coatings or color printer paper with processed surfaces
- ☐ Glossy (too slick on its surface) paper, paper with too smooth/rough surfaces or paper with significantly different roughness on each surface
- ☐ Paper with punch holes or perforations
- ☐ Creased, curled or torn paper
- ☐ Irregularly shaped paper or paper with non-perpendicular corners
- ☐ Labels that peel off easily
- ☐ Paper with glue, staples or paper clips attached to it
- ☐ Inkjet paper for special applications (super-fine, glossy, glossy film, etc.)
- ☐ Paper previously used in a thermal or ink jet printer
- ☐ Paper already printed on other color/monochrome laser printers or photocopiers
- ☐ Transparencies for other color laser printers or color photocopiers
- ☐ Iron print coated paper (for both ink jet and laser printers)
- ☐ Adhesive postcards, unofficial postcards, and postcards for ink jet printers
- ☐ Sheets of paper stuck together
- ☐ Paper deteriorated and discolored by the heat of the fuser unit (about 180°C or less)
- ☐ When postcards with illustrations are used, the paper feed roller may become dirty due to paper particles, causing difficulty in paper feeding.

1.4.3 Types of Paper Feed

Table 1-16. Types of Paper Feed

Paper feed		Standard paper	Plain paper	Special paper				
				Trans-parency	Post card	Labels	Thick paper (106 - 216 g/m²)	Envelopes
Standard	Standard universal cassette	○	◆	X	X	X	X	X
	MP tray	○	◆	◆	◆	◆	◆	◆
	Duplex unit	○	◆	X	X	X	X	X
Option	500-sheet x 1-feeder cassette	○	◆	X	X	X	X	X
	500-sheet x 3-feeders cassette	○	◆	X	X	X	X	X

Note :

○ : Paper feed and image quality is guaranteed.

◆ : Paper feed and printing possible. However, this applies only to general types of paper. Image quality is not guaranteed.

X : Feed is not possible.

manuals4you.com

1.4.4 Printing Area

MAXIMUM PRINTABLE AREA

The area of the maximum vertical paper size for the MP tray, standard universal cassette, and optional cassette excluding 4mm from each edge of the paper. However, with single K printing, the area is 2mm from each edge of the paper when printing from the standard universal cassette and optional cassette.

NOTE: *Although the paper which is smaller than the maximum printable size can be printed overall area of the sheet, if printing is continued over the sheet, it causes soiling inside of the printer and paper jam. Therefore printing a data that the printed area is smaller than the sheet size is recommended.*

GUARANTEED PRINTING AREA

The area excluding 4mm from each edge of the paper. (Refer to the figure below.)

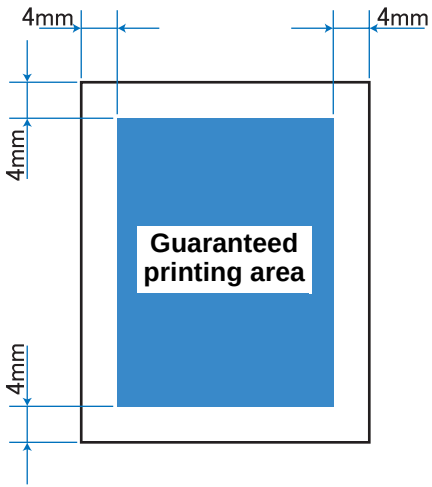

Figure 1-2. Guaranteed printing area

Table 1-17. List of guaranteed printing area

	Printing mode	MP tray	Standard universal cassette	Optional cassette
Maximum vertical area	---	305x457.2mm	297x431.8mm	297x431.8mm
Printable area	Color	297x449.2mm	289x423.8mm	289x423.8mm
	monochrome	297x449.2mm	293x427.8mm	289x423.8mm
Guaranteed printing area	Color	297x449.2mm	289x423.8mm	289x423.8mm
	monochrome	297x449.2mm	289x423.8mm	289x423.8mm

1.5 Reliability and Serviceability

1.5.1 Reliability

MPBF/MTBF

- Main unit: 100,000 pages/12,320 hours

PAPER FEED RELIABILITY

- Running performance (standard universal cassette)

Table 1-18. Running performance (standard universal cassette)

	Standard paper	Ordinary paper	Special paper
Simplex jam rate (pv)	1/5,000	1/3,000	1/100
Multiple-sheet feed rate (pv)	1/2,500	1/1,500	1/50
Duplex jam rate (pv)	1/3,000	1/1,800	---

Note : The running performance of the optional 500-sheet paper cassette unit and 1500-sheet paper cassette unit is the same as that shown above, however the paper weight that can be handled is limited to 63 to 175 gsm.

- Running performance (MP tray)

Table 1-19. Running performance (MP tray)

	Standard paper	Ordinary paper	Special paper
Simplex jam rate (pv)	1/3,000	1/2,000	1/100
Multiple-sheet feed rate (pv)	1/1,500	1/1,000	1/50
Duplex jam rate (pv)	1/1,800	1/1,200	---

PRINTING START POSITION ACCURACY

Table 1-20. Printing start position accuracy

A4/A3	Simplex printing		Duplex printing
	MP tray	Standard universal cassette	
Main scanning direction reference point (c)	±3.0mm	±2.0mm	±2.4mm
Sub-scanning direction reference point (a)	±2.2mm	±1.5mm	±1.9mm

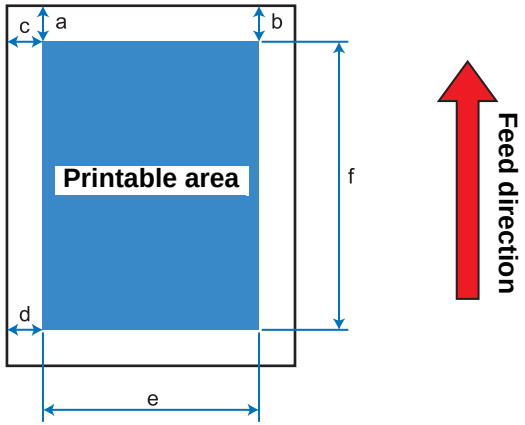

Figure 1-3. Printing start position accuracy

manuals4you.com

SKEW

Table 1-21. Skew

A4/A3	Simplex printing		Duplex printing	Span
	MP tray	Cassette		
Main scanning direction (| a-b |)	2.0mm	1.5mm	2.0mm	200mm
Sub-scanning direction (| c-d |)	4.0mm	3.0mm	4.0mm	400mm

HEIGHT OF CURL OF OUTPUT PAPER

Table 1-22. Height of curl of output paper

Paper type	Curl height
Standard paper, normal paper	15mm
Transparency	TBD

Note 1: The same for simplex and duplex printing

2: Measurement conditions
Image occupation rate 5% misaligned monochrome printing, or color printing with 5% of each color (total 20%)
Print 10 sheets of 1p/J intermittent printing, then measure after an interval of 1 minute
Differs in accordance with the image occupation rate/array pattern printing conditions.

1.5.2 Durability

PRINT VOLUME (PAGES/MONTH)

- ☐ Average : 5,000 pages/month
- ☐ Maximum : 50,000 pages/month

1.5.3 Serviceability

MEAN TIME TO REPAIR

- ☐ MTTR : Average within 30 minutes
  Time for examining malfunction is not included.
  (Time for service personnel to locate and correct the malfunction)

1.6 Operating Conditions (Including Consumables)

TEMPERATURE AND HUMIDITY CONDITIONS

	Temperature (°C)	Humidity (%RH)	Other
When running	10 to 32	15 to 85	No condensation allowed
When stopped	-20 to 40	5 to 85	

AIR PRESSURE (ALTITUDE)

64.86kPa (3,100m or less)

NOTE: *101.33kPa at 0m*

LEVELNESS

5mm front and rear of the desktop (depth of the printer), 10mm left and right (width of the printer)

ILLUMINATION

3,000 lx or less (do not expose to direct sunlight)

1.6.1 Space Requirements

In order to ensure that the printer operates properly, provide at least as much space as shown in the diagram below.

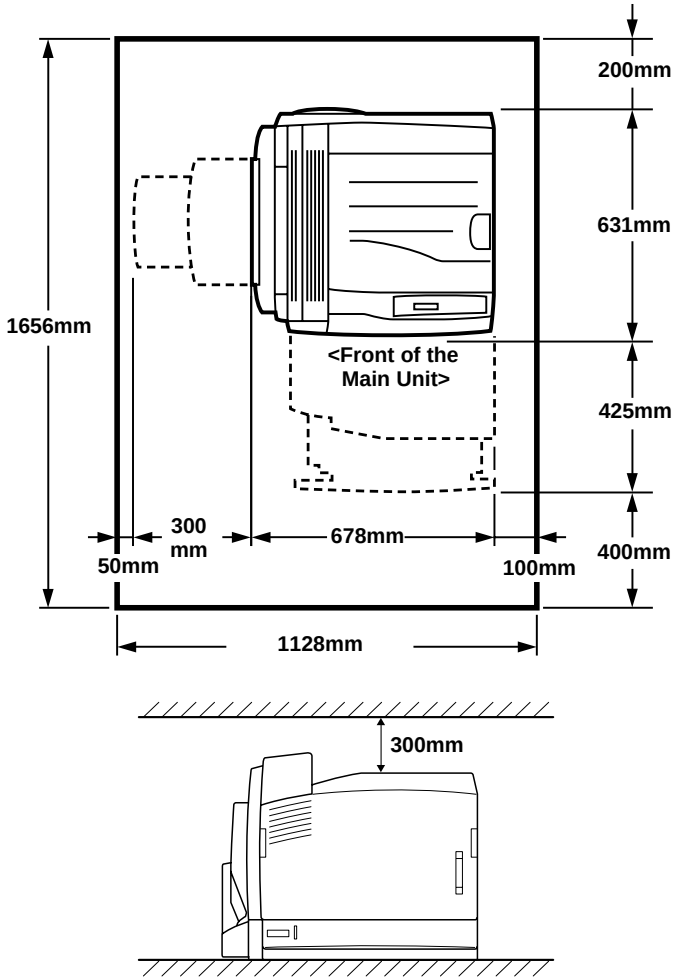

Figure 1-4. Space Requirements

NOTE: *Ensure 300mm or more above the main unit for resolving jams.*

manuals4you.com

1.7 Storage and Transport of the Main Unit (Packaged) and Optional Products

1.7.1 Temperature and Humidity Conditions

Condition	Temperature (°C)		Humidity*1 (%RH)	Guarantee period
Normal conditions	0 to 35		15 to 80	12 months after manufacture
Harsh conditions	High	35 to 40	80 to 95	Maximum of 48 hours
	Low	-20 to 0	5 to 15	

Note "*1": No condensation allowed

1.7.2 Storage Altitude

101.33 to 64.86kPa (0 to 3,100m)
(For transportation by air freight, 0 to 15,000m is possible. However, this does not apply when pressurized to 70.9275kPa or more.)

1.7.3 Dropping

No damage when dropped on 1 corner, 3 edges, and 6 sides when packed.

Table 1-23. EQS (AE05-001-001)

		Dropping height (cm)	<Reference> Package weight (kg)
Standard	Main unit	42*	72.4
Option	500-sheet paper cassette unit	62	15.3
	1500-sheet paper cassette unit	52	36.9

Note : A drop of 52cm on one edge, when the packing specifications meet all the following conditions

(1) Packaged with a pallet

(2) The 4 edges meeting the bottom are each placed on a platform with a height of 15cm, and it does not fall sideways when raised 37cm

1.8 Electrical Characteristics

NOTE: *The following sections do not include any options.*

1.8.1 Electrical Fast Transient /Bursts (AC Line Noise)

In accordance with IEC61000-4-4, when level 2 noise shown below is applied for 2 minutes between each line of the input power source and the earth terminal, no malfunctions such as quality defects occur.

Level	Power supply port, PE	
	Peak-to-peak value voltage	Repeat rate
2	1kV	5kV

1.8.2 Instantaneous Outages

In accordance with EN 61000-4-4, with a testing machine no malfunctions such as quality defects occur when printing an evaluation pattern with 95% dip 0.5 cycles. Furthermore, there is no damage at 30% dip 25 cycles and 95% dip 250 cycles with the same conditions.

1.8.3 Resistance to Static Electricity

In accordance with EN 61000-4-2, if static noise (±4.0kV contacted spark) is applied as contact electric discharge (150pF, 330Ω) to a contactable area or to the earth terminal, no major errors that cause an impact on print quality occur. No problems with 5 continuous prints.
(CISPR24 Criterion B)

1.8.4 Inrush Current

When the power switch is turned on, or for Fuser On, the maximum inrush current is less than 150 A,10 msec.
(Cold or hot start rated voltage ±10%)

1.8.5 Insulation Resistance

When applying DC 500V to the power supply line and exposed metallic parts for 1 minute, insulation resistance is 10MΩ or more.

1.8.6 Dielectric Strength

The equipment and its operation is normal after testing with the conditions below.

- ☐ 100/120V type : When a AC 2,000V, 50/60Hz power supply is applied for 1 minute between the inlet (power input) and non current carrying metal parts, and between the power supply transformer primary and secondary circuits, leakage current is 10mA or less.
- ☐ 200/240V type : When a AC 3,000V, 50/60Hz power supply is applied for 1 minute between the inlet (power input) and non current carrying metal parts, and between the power supply transformer primary and secondary circuits, leakage current is 10mA or less.

1.8.7 Leak Current

When the following condenser and resistor are connected in parallel between a non current carrying metal part and the frame earth, the leakage current is as follows.

- ☐ 100V series : 1.0mA or less
- ☐ 200V series : 3.5mA or less

manuals4you.com

1.9 Compliance with Standards and Regulations

1.9.1 Safety Standards

Table 1-24. Safety Standards

Model Type	Applicable Standards
100V/120V series	UL60950 3rd Edition, CSA C22.2 No.60950-00, laser safety standards (FDA21CFR Chapter 1, Subchapter J, Section 1010, 1040)
220V/240V series	IEC60950 3rd Edition/EN60950, laser safety standards (IEC60825 Class I Laser Product), CD Directive, Nordic Agency Approvals

1.9.2 Safety Standards (Laser Transmission)

Table 1-25. Safety Standards (Laser Transmission)

Model Type	Applicable Standards
120V	FDA21CFR Chapter 1, Subchapter J, Section 1010, 1040
220V/240V series	IEC60825-1 compliant

Note : <Reference>
- Wavelength : 785nm
- Maximum mean power : 5mW

1.9.3 EMI Standards

Table 1-26. EMI Standards

Model Type	Applicable Standards
120V	FCCPart15 Subpart B, Class B (AnSI C63.4)
220V/240V series	EN55022 (CISPR Publication 22), Class B

1.9.4 Power Supply Harmonics and Flicker

The main unit meets the following regulations.

Table 1-27. Power Supply Harmonics and Flicker

Model Type	Applicable Standards
100V series	Japan Business Machine Makers Association (JBMA) harmonics control guidelines
200V series	IEC61000-3-2 (Harmonics) Class A IEC61000-3-3 (Flicker)

1.9.5 Power Consumption

Conforms to International Energy Star Program standards.

1.9.6 Other

- ☐ Toner : No impact on human health (conforms to OSHA, TSCA, EINECS)
- ☐ OPC : No impact on human health (conforms to OSHA)
- ☐ Ozone generation : Conforms to UL478 Issue 5
- ☐ Materials : No relevant domestic standards

1.10 Supplies/Periodic Replacement Units

CAUTION

The numbers of lifetime print pages of the consumables and periodic replacement parts are guidelines. The number of printable sheets changes depending on how printing is done. The number of printable sheets decreases according to intermittent printing (where the number of printed sheets per printing is as small as one to several sheets), paper size, paper orientation, thick paper printing, printed documents, frequent power on/off, etc. Hence, the number of printable sheets may decrease to less than half depending on the operating conditions and operating environment of the user.

1.10.1 Specifications

Table 1-28. Consumables (replaced by the user)

Name	Lifetime*1 (pages)	External dimensions*4 (mm)	Mass*3	Initial content (g)
Toner Cartridge (Black)	7,500	68.8 (W) 409 (D) 70 (H)	399±30g	Toner : 131 Developer : 31
	15,000		574±30g	Toner : 241 Developer : 57
Toner Cartridge (Cyan, magenta, yellow)	6,000	68.8 (W) 394.1 (D) 70 (H)	352±30g (Y) 359±30g (C, M)	Y toner : 110 Y developer : 26 M toner : 126 M developer : 30 C toner : 113 C developer : 27
	12,000		478±30g (Y) 485±30g (C, M)	Y toner : 201 Y developer : 48 M toner : 226 M developer : 53 C toner : 205 C developer : 48

Table 1-28. Consumables (replaced by the user)

Name	Lifetime*1 (pages)	External dimensions*4 (mm)	Mass*3	Initial content (g)
Photoconductor unit (Waste toner collector included in package)	30,000	47 (W) 413.8 (D) 223.5 (H)	2.11 ± 0.1 (kg)	---
Waste toner collector	24,000*2	305 (W) 96.5 (D) 225 (H)	0.45 ± 0.1 (kg)	---

Note "*1": Average number of printed pages using A4 continuous printing at 5% image occupation rate.
Evaluated by printing 100 sheets repeatedly.

"*2": Monochrome: Color = 4:6, average number of printed pages printed at 5% (A4) image occupation rate.
Lifetime also varies according to the number of times the power supply is turned on/off, and the printing method.

"*3": Mass indicates the mass when unpacked completely.

"*4": The tolerance of all external dimensions is ±3mm.

Table 1-29. Periodic replacement units (replaced by service personnel)

Name	Lifetime (pages)
Fuser unit	Average around 100,000
Transfer unit (BTR UNIT ASSY)	Average around 100,000
Intermediate transfer unit (IDT UNIT)	Average around 100,000
Development unit (DEVE UNIT)	Average around 300,000

manuals4you.com

1.10.2 Packaged Storage and Transport Environment

- Temperature and humidity conditions

Condition	Temperature (°C)		Humidity*1 (%RH)	Guarantee period
Normal conditions	0 to 35		15 to 80	24 months
Harsh conditions	High	35 to 40	80 to 95	Maximum of 1 month
	Low	-20 to 0	5 to 15	

Note 1: No condensation allowed

2: Storage time after opening is 12 months in the environment of use.

- Storage altitude
  0 to 3,100m. However, for transportation by air freight, 0 to 15,000m is possible. The cargo compartment must be pressurized to 70.9275kPa or more.
- Package dropping
  - Direction of drop : 1 corner, 6 sides, 3 edges
  - Dropping height : No damage with the conditions below

Table 1-30. Package dropping

Package name		Dropping height	Reference (package weight)
Toner Cartridge (K)	(7,500 pages)	82cm	520±30g
	(15,000 pages)	82cm	698±69g
Toner Cartridge (Y)	(6,000 pages)	82cm	473±47g
	(12,000 pages)	82cm	596±59g
Toner Cartridge (M)	(6,000 pages)	82cm	480±48g
	(12,000 pages)	82cm	605±60g
Toner Cartridge (C)	(6,000 pages)	82cm	480±48g
	(12,000 pages)	82cm	605±60g
Photoconductor unit		82cm	3.72kg±0.1
Waste toner collector		82cm	0.94kg±0.1

1.11 External Appearance and Unit Names

1.11.1 Unit names

Table 1-31. List of unit names

No.	Name	No.	Name	No.	Name	No.	Name
1	Paper output support	8	Power switch	15	Duplex unit connector insertion point	22	Copy station connector
2	Control panel	9	MP tray	16	Power connector	23	Additional cassette unit (3-feeders type)
3	Front cover (A Cover)	10	Right cover	17	Additional cassette unit connector (on main unit)	24	Face-up tray
4	EPSON logo	11	Left cover (B Cover)	18	Network interface connector	25	Duplex unit
5	AcuLaser label	12	B Cover lock release lever	19	Option interface slot	26	D Cover handle
6	Standard universal cassette	13	Face-up tray attachment point	20	Parallel interface connector		
7	Paper level window	14	Duplex unit attachment point	21	USB interface connector		

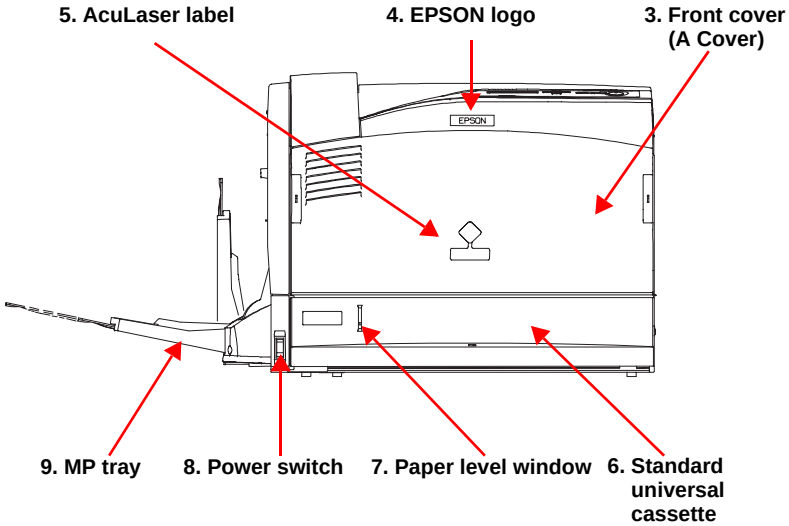

Figure 1-5. Drawing: Front of the Main Unit

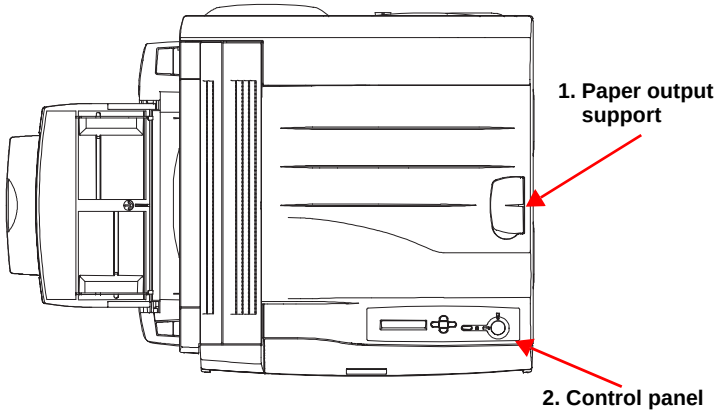

Figure 1-6. Drawing: Top of the Main Unit

manuals4you.com

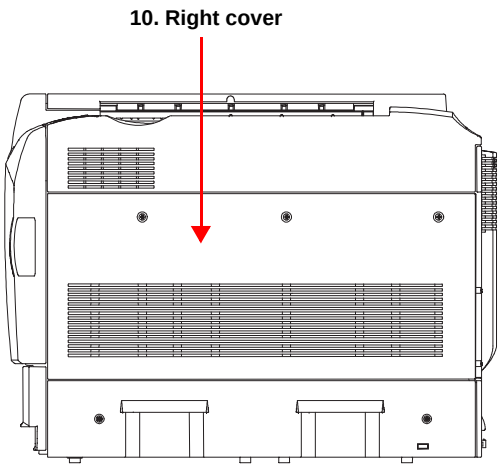

Figure 1-7. Drawing: Right Side of the Main Unit

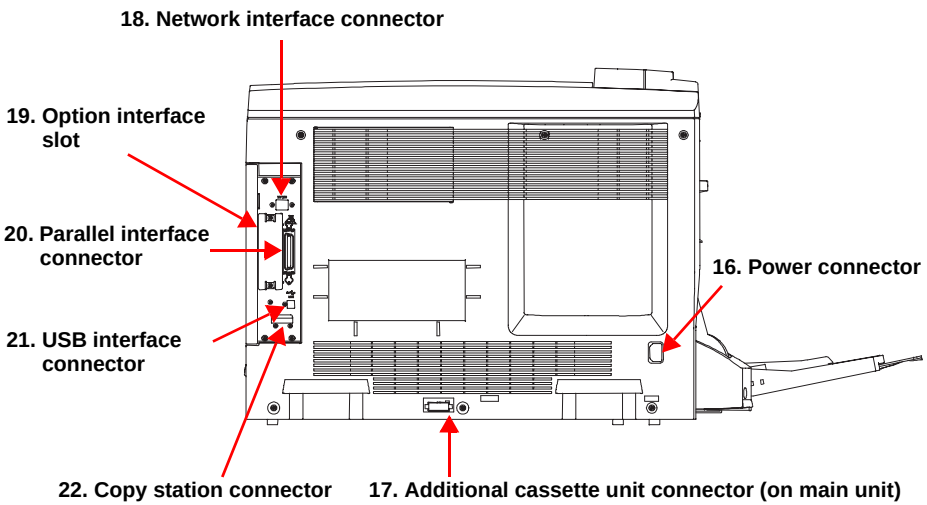

Figure 1-9. Drawing: Back of the Main Unit

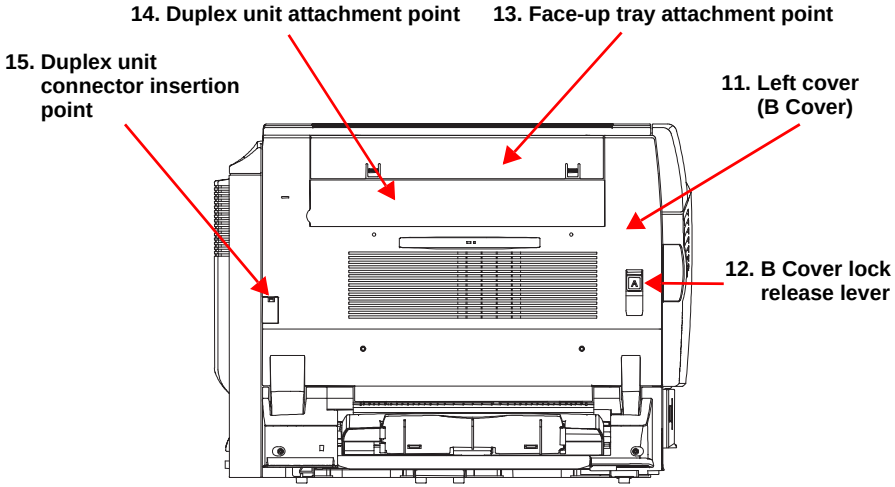

Figure 1-8. Drawing: Left Side of the Main Unit

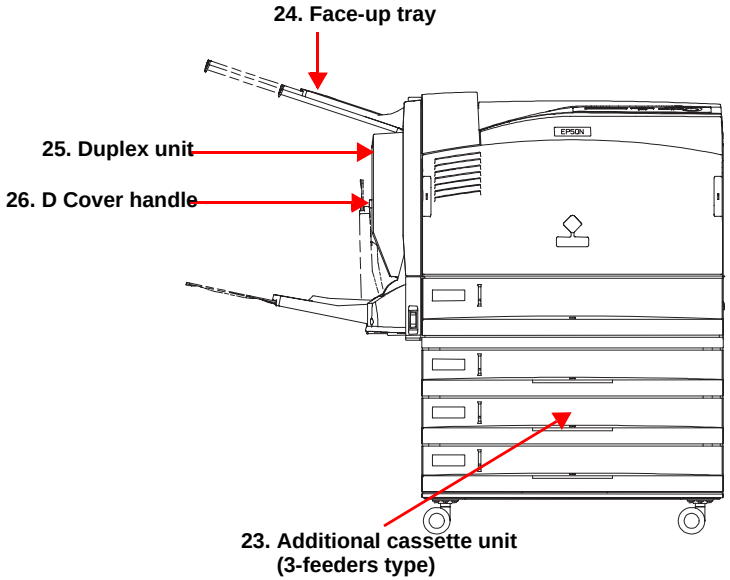

Figure 1-10. Drawing: With Full Options

1.12 Notes When Replacing Supplies and Installing Optional Products

1.12.1 Consumables

- ☐ Toner Cartridge
- ☐ Photoconductor unit
- ☐ Waste toner collector

The consumables shown above can be replaced with the main unit power supply on or off. However, after replacing the Photoconductor unit, adjusting the registration in the main scanning direction may be necessary.
For the adjustment procedure, refer to "5.2.1.2 Adjustment of starting position in main-scanning direction" *(p.464)*.

Options

- ☐ Additional cassette unit
- ☐ Duplex unit
- ☐ Face-up tray

Before installing the options shown above, turn off the power of the main unit. When installed with the main unit power supply turned on, the unit may not be detected.

manuals4you.com

1.13 Engine Restrictions/Limitations

1.13.1 Toner Duty Limit

Toner duty is limited to 240%.

1.13.2 Issues that Limit Printing Speed

This section explains the following two items that influence the print speed.

- ☐ Times consumed by process control and cleaning sequence
- ☐ Reduced productivity with small size paper

CHECK POINT

- **Refer to "2.5.7 Process Control" *(p.120)* for the process control.**
- **Refer to "2.5.6.3 Principle of Cleaning" *(p.118)* for the cleaning sequence.**

TIMES CONSUMED BY PROCESS CONTROL AND CLEANING SEQUENCE

Table 1-32. Limiting Factors and Consumed Times

Timing	Factor		Consumed Time (sec)
When the power is turned on, when returning from power saving mode. (Power On Procon)	Engine startup	(2sec)	30
	Process control	(20.5sec)	
	Cleaning	(7.5sec)	
After a jam	Cleaning twice	(15sec x 2)	60
	Engine startup	(2sec)	
	Process control	(20.5sec)	
	Cleaning	(7.5sec)	
When the interlock is on.	Cleaning	(7.5sec)	7.5
Interlock ON after jam	Cleaning twice	(15sec x 2)	30

Table 1-32. Limiting Factors and Consumed Times

Timing	Factor		Consumed Time (sec)
During printing	Procon starts forcibly in the following cases. ☐ At the end of jobs exceeding 40 p (A4, LEF) ☐ 100 pages continuous printing ☐ Temperature difference of 3°C		36 or 51
	Before printing starts	Cleaning executed at Job start	1.3
	Continuous printing	After printing of 100 pages ends in continuous printing of 100 or more pages	5
		Cleaning is executed with printing forcibly stopped per specified number of sheets in the following items. ☐ Environmental temperature and humidity* ☐ Run Length history ☐ Image Duty * Every 36 pages or 52 pages in a normal temperature environment is standard.	15
After printing	Cleaning after Job end		15
Immediately before switching to power-saving mode	Cleaning before switching to sleep mode		120
Cleaning is executed from the panel (executed for irregular contamination)	Invocation cleaning* * If a print command arrives during cleaning, printing is possible after cleaning finishes (15 s).		120
When the power is turned on in a high temperature high humidity environment	When the power is turned on with temperature and humidity higher than the regulation value, cleaning starts automatically (implemented with procon).		158
Other	Individual sequence for discharging toner with degraded characteristics		216

REDUCED PRODUCTIVITY WITH SMALL SIZE PAPER (REDUCED PPM)

When printing with small size paper (148mm or less in main scanning direction), the temperature at the ends of the heat roller increases and due to measures to prevent the thermostat cutting out, productivity is reduced.

Table 1-33. Number of Printed Small Size Sheets and Print Speed

Paper size	Number of Printed Sheets	Print Speed (ppm)
Paper less than 105 g/m^2 paper	Up 1 to 10 sheets continuous	12
	After 11th sheet	6
Paper more than 106 g/m^2 paper	Up 1 to 10 sheets continuous	6
	After 11th sheet	3

manuals4you.com

1.14 Controller Specifications

1.14.1 Controller basic specifications

- CPU : PowerPC 750FX (600MHz)
- Enhanced technology : CPGI, CRIT, RIT (FMV)
- RAM : DDRSDRAM
  (DDR SODIMM, 333MHz, CL=2.5)
  Maximum 1,024MB
  2 slots (standard RAM: 1 slot used)
  - Standard : 128MB
  - Expanded : 128MB, 256MB, 512MB SODIMM

CAUTION

When the RAM is added, the standard RAM (128MB) DIMM may have to be replaced depending on the increased amount of memory.
Example: When the RAM is increased to 1024MB, two 512MB DIMMs are used and the standard RAM DIMM becomes unnecessary.

- ROM : 32-bit wide (3.3V specification)
  - Program : 8MB (DIMM)
  - Font : Included in program
- Expansion ROM : 2 slots (ROM DIMM, 3.3V specification, installation/removal when power is turned off only)
  - A, B slots : Adobe PostScript 3 ROM module
    HP-PCL5 ROM module
- Panel : LCD 20 digits, 1 line; 3 LEDs; 6 switches
- Interface
  - Standard
    - Parallel : 1ch
      (IEEE1284 compliant bi-directional B-type connector, Compatibility, Nibble, ECP)
    - USB : 1ch (2.0 HS D4 support)
    - 10Base-T/100Base-TX
      : 1ch
  - Option
    - Type-B (level 3 support)
      : 1 slot
    - Copy Station : 1 slot
- HDD : 1 (option, support for large-capacity type (40GB, etc.))
- Printer setting : Using panel settings, EJL, PJL, HTTP, SNMP, ENPC
  Memory element - EEPROM serial type 32 KB
- Printer mode
  - Standard : ESC/Page-Color, PCL5e (monochrome), GL-Like (monochrome), FX (monochrome), ESCP2 (monochrome), I239X (monochrome), ESC/Page (monochrome)
  - Option : Adobe PostScript 3
    PCL5C
  - Other : EJL, PJL modes, RCC mode (firmware update), DIAG mode (engine calibration), EpsonNetConfig (Web)

- Auxiliary software
  - Status Sheet
  - Reserve Job List
  - Form Overlay List
  - Network Status Sheet
  - USB Ext I/F Status Sheet (D4 protocol become valid only when the EPSON D4 compliant device is connected.)
  - AUX Status Sheet (only when Type-B Level 3 is installed)
  - PS3 Status Sheet (only when a PS3 module is installed)
  - Font Sample (each mode)
  - Hex Dump
  - Support Mode
  - Printer Adjust Menu
  - Maintenance Mode (Engine Status Sheet)
  - EFU (Engine firmware update. Possible when the engine controller ROM is Flash)
- Mounting method : Fixed to main unit

1.14.2 Controller Configuration

Factory-set by the jumper resistors as described below.

- R1437 open : Not used
- R1438 open : A4

manuals4you.com

1.14.3 External Interface Specifications

The printer has the following host interfaces.

- ☐ Parallel (IEEE1284 compliant) interface : Standard
- ☐ USB (Rev.2.0 HS) interface : Standard
- ☐ Ethernet (100BaseTX/10BaseT) interface : Standard
- ☐ Option interface (Type-B) 1 slot : Option

If the interface board for Copy Station is installed, a Copy Station interface is also available. (TBD)

The location of the each interface is shown below.

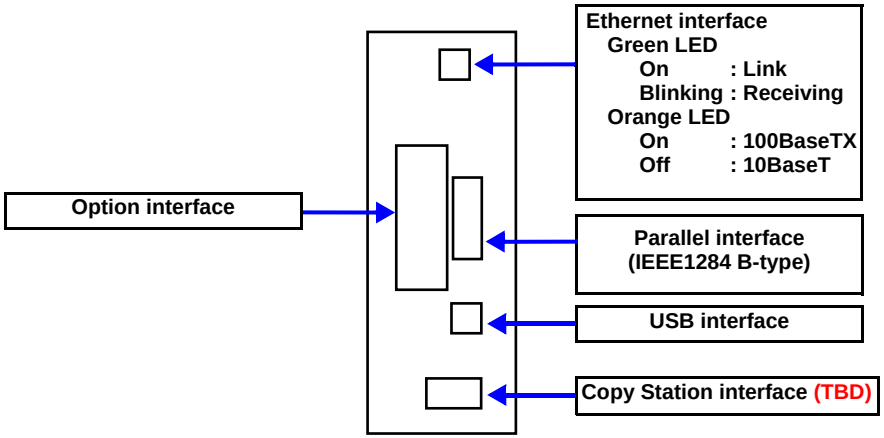

Figure 1-11. Location of external interfaces

PARALLEL INTERFACE SPECIFICATIONS

The Device ID for this printer is as shown below.

CMD:PJL,EJL,PCL,ESCPAGE-04,ESCPAGECOLOR-01,POSTSCRIPT*1,PCL5C*2

Note "*1": Only when the Adobe PostScript3 ROM module is installed.

"*2": Only when the P5C Emulation ROM module is installed.

USB INTERFACE SPECIFICATIONS

The printer supports USB 2.0 HS, and has an 18-digit serial ID for USB. The ID is printed at the bottom of the Status Sheet. The 18 digits have the following meaning.

1, 2	: Model specific number (this printer is 28)
3	: Identifier indicating page printer (P)
4 to 13	: Serial number of the unit
14	: Year of assembly (lower line)
15, 16	: Month of assembly
17, 18	: Day of assembly

When the printer is connected to the PC by the USB port, the interface does not support D4. However D4 support is available if the EPSON external LAN option is connected. The Device ID CMD differs from the parallel interface with D4L3 being added.

CMD:PJL,EJL,PCL,ESCPAGE-04,ESCPAGECOLOR-01,POSTSCRIPT*1,PCL5C*2,D4L3*3

Note "*1": Only when the Adobe PostScript3 ROM module is installed.

"*2": Only when the P5C Emulation ROM module is installed.

"*3": USB port only

CAUTION

When the controller has been replaced, the USB serial number must be written. In that case, the ID may become different from the original USB serial number. Therefore, the user PC recognizes the repaired printer as another printer and requests the USB port driver to be installed.
For how to write USB ID, refer to "5.2.3 Writing USB ID" *(p.467)*.

ETHERNET INTERFACE SPECIFICATIONS

- Printing protocol
  - TCP/IP
    LPR, FTP, IPP, PORT2501, PORT9100
  - Microsoft Network
    Net BIOS over TCP/IP, Net BIOS over NetBEUI
  - NetWare
    Operation mode Standby (factory default), NDS Print Server, Bindery Print Server, Remote Printer
  - AppleTalk
- Management protocols
  - TCP/IP
    SNMP, ENPC, HTTP, TELNET, DHCP, BOOTP, APIPA, PING, DDNS, mDNS*1, SNTP, SSDP, ENPC

    Note"*1":mDNS is used with Rendezvous
  - MS Network (NetBEUI)
    SNMP, ENPC
  - NetWare
    SNMP, ENPC
  - AppleTalk
    SNMP, ENPC

Entity Type: Refer to "Option interface specifications" *(p.51)*.

OPTION INTERFACE SPECIFICATIONS

The printer is provided with one Type-B optional interface slot as standard.

- Main System Type : MTP600dpi, PW5100dt600dpi, PRG(*****)rev, AP800ma, SPD0fast, D4

Note: ***** indicates the ROM version.

- Printer Name : The factory default setting is the same as Product Name.
- Product Name : AcuLaser C9100
- Emulation Type and Entity Type

Table 1-34.

Emulation	Emulation Type	Entity Type
PS*1	POSTSCRIPT-00*1	LaserWriter*1
ESC/Page Color	ESCPAGECOLOR-01	EPSONPAGECOLOR1
ESC/Page	ESCPAGE-04	EPSONPAGE4
LJ4	PCL5E-00	EPSONPCL5
I239X	PRPXL24-01	EPSONPRPXL24
GL2	HPGL2-01	EPSONHPGL2
FX	ESCP9	EPSONFX
ESCP2	ESCPL2	EPSONLQ2
PCL5C*2	PCL5C-00	EPSONPCL5C

Note "*1": Only when the Adobe PostScript3 ROM module is installed.
"*2": Only when the P5C Emulation ROM module is installed.

manuals4you.com

1.15 Control Panel

1.15.1 External Appearance and Names

Table 1-35. Indicators

Indicators	Function
LCD	1 line x 20 characters (5 x 7 dot matrix)
Ready LED	On : Printer is ready to print. Off : Printer is not ready to print.
Data LED	On : Printer contains data that has not been processed yet. Off : Printer has finished processing all print data. Flashing : Printer is currently processing data.
Error LED	Flashing 1 : An error has occurred which permits continuing to print by pressing the Start/Stop button. On : An error has occurred which does not permit the printer to recover without its clearing by the user. Flashing 2 : An error has occurred which requires the user to clear the error and press the Start/Stop button.

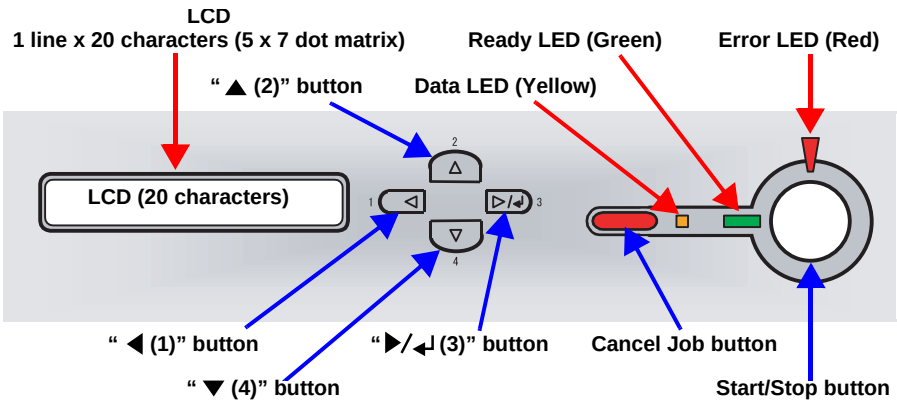

Figure 1-12. External View of Control Panel

Table 1-36. Summary of Button Functions

Button Name	When Ready to Print	When Not Ready to Print	Error Has Occurred	In Panel Setting Mode
Start /Stop	Into pause (not ready to print) status	1. Pressing normally: Into On Line (ready to print) status 2. Pressing for 2 seconds or longer: Ejects paper forcibly	1. Recoverable error: Clears error 2. Non-recoverable error: Displays "Unable Clear Error"	Returns to normal mode (the same state as before entering panel setting mode)
Job Cancel	1. Pressing normally: Deletes printing data 2. Pressing for 2 seconds or longer: Deletes all printing data	1. Pressing normally: Deletes printing data 2. Pressing for 2 seconds or longer: Deletes all printing data	1. Pressing normally: Deletes printing data 2. Pressing for 2 seconds or longer: Deletes all printing data	Invalid
▶/↵ (3)	Enters the printer information menu in the panel setting mode	Enters the printer information menu in the panel setting mode	Invalid	1. When panel setting mode menu is displayed: Displays setting item 2. When setting item for non-execution is displayed: Displays setting value 3. When setting item for execution is displayed: Executes printing or processing 4. When setting value is displayed: Registers the setting value
◀ (1)	Enters the printer information menu in the panel setting mode	Enters the printer information menu in the panel setting mode	Invalid	1. When panel setting mode menu is displayed: Returns to normal mode 2. When setting item or setting value is displayed: Displays the previous higher rank in hierarchy
▲ (2)	Enters the printer information menu in the panel setting mode	Enters the printer information menu in the panel setting mode	Invalid	1. When panel setting mode menu is displayed: Displays the previous panel setting mode menu 2. When setting item is displayed: Displays previous setting item 3. When setting value is displayed: Displays previous setting value
▼ (4)	Enters the printer information menu in the panel setting mode	Enters the printer information menu in the panel setting mode	Invalid	1. When panel setting mode menu is displayed: Displays the next panel setting mode menu 2. When setting item is displayed: Displays next setting item 3. When setting value is displayed: Displays next setting value

1.15.2 Panel Settings List

The printer settings are listed below.
Underlined value in the Setting value column are factory default settings.

INFORMATION MENU

Table 1-37.

Item	Setting value
Status Sheet	---
Reserve Job List*1	---
Form Overlay List*2	---
NetworkStatus Sheet*3	---
Color Regist Sheet	---
AUX Status Sheet*4	---
USB ExtI/FStatusSht*5	---
PS3 Status Sheet*6	---
PS3 Font List*6	---
ESC/Page Font Sample*7	---
LJ4 Font Sample	---
ESCP2 Font Sample	---
FX Font Sample	---
I239X Font Sample	---
C Toner*8	E******F, to E□□□□□□F
M Toner*8	E******F, to E□□□□□□F
Y Toner*8	E******F, to E□□□□□□F
K Toner*8	E******F, to E□□□□□□F
Photocon*8	E******F, to E□□□□□□F
Total Pages*8	0 to 99999999
Color Pages*8	0 to 99999999
B/W Pages*8	0 to 99999999

Note "*1": Displayed only when the job is registered in Quick Print Job.
"*2": Displayed only when a form overlay exists.
"*3": Displayed only when “Network I/F = On”.
"*4": Displayed only when a Type-B host interface supporting Level 3 is installed, and the printer starts with “AUX I/F = On”.
"*5": Displayed only when a USB external device with D4 support is connected, and “USB Menu” - “USB I/F = On”.
"*6": Displayed only when the PS3 module is installed.
"*7": Not displayed on the panel. Can be set with EJL.
"*8": This item is for display only and cannot be modified.

STATUS MENU

Displayed when a warning occurs. It appears for all warnings that have occurred when SelecType is activated.

manuals4you.com

TRAY MENU

Table 1-38.

Item	Setting value (Underlined value is default)
MP Tray Size	**A4***1, A3, A5, B4, B5, **LT***1, HLT, LGL, GLT, GLG, B, EXE, F4, MON, C10, DL, C6, IB5
LC1 Size*2	A4, A3, A5*5, B4, B5*5, LT, HLT*6, LGL, GLG, B, EXE*6
LC2 Size*2, *3, *4	A4, A3, B4, B5, LT, LGL, GLG, B
LC3 Size*2, *3	A4, A3, B4, B5, LT, LGL, GLG, B
LC4 Size*2, *3	A4, A3, B4, B5, LT, LGL, GLG, B
MP Type	**Plain**, SemiThk, Letterhead, Recycled, Color, Trnsprncy, Labels
LC1 Type	**Plain**, SemiThk, Letterhead, Recycled, Color
LC2 Type*3, *4	**Plain**, SemiThk, Letterhead, Recycled, Color
LC3 Type*3	**Plain**, SemiThk, Letterhead, Recycled, Color
LC4 Type*3	**Plain**, SemiThk, Letterhead, Recycled, Color

Note "*1": LT is the default value of the Letter specification controller, and A4 is the default value of the A4 specification controller.

"*2": This item is for display only and cannot be modified.

"*3": Displayed only when the optional 1,500-sheet paper cassette unit is installed. Only paper size is displayed.

"*4": Displayed only when the optional 500-sheet paper cassette unit is installed. Only paper size is displayed.

"*5": B5 and A5 in LC1 can be detected by only B5 specification mechanical controller (default).

"*6": EXE and HLT in LC1 can be detected by only EXE specification mechanical controller (special).

EMULATION MENU

Table 1-39.

Item	Setting value (Underlined value is default)
Parallel	**Auto**, LJ4, ESCP2, FX, I239X, PS3*1, GL2, P5C*3
USB	**Auto**, LJ4, ESCP2, FX, I239X, PS3*1, GL2, P5C*3
Network	**Auto**, LJ4, ESCP2, FX, I239X, PS3*1, GL2, P5C*3
AUX*2	**Auto**, LJ4, ESCP2, FX, I239X, PS3*1, GL2, P5C*3

Note "*1": Displayed only when the Adobe PostScript3 ROM module is installed.

"*2": Displayed only when Type-B host interface is installed.

"*3": Displayed only when the P5C Emulation ROM module is installed.

PRINTING MENU

Table 1-40.

Item	Setting value (Underlined value is default)
Page size	**A4** *1, A3, A5, B4, B5, **LT** *1, HLT, LGL, GLT, GLG, B, EXE, F4, MON, C10, DL, C6, IB5, CTM*2
Wide A4	**Off**, On
Orientation	**Port, Land**
Resolution	**600**, 300
RITech	**On, Off**
Toner Save	**Off**, On
Image Optimum	**Auto**, Off, On
Top Offset	-150.0 to **0.0** to 150.0mm step 0.5mm
Left Offset	-150.0 to **0.0** to 150.0mm step 0.5mm
T Offset B	-150.0 to **0.0** to 150.0mm step 0.5mm
L Offset B	-150.0 to **0.0** to 150.0mm step 0.5mm

Note "*1": LT is the default value of the Letter specification controller. A4 is the default value of the A4 specification controller.

"*2": For CTM (user defined) size (width x height) min: 90 x 98mm, max: 304.8 x 1,200mm.

SETUP MENU

Table 1-41.

Item	Setting value (Underlined value is default)
Lang	**English,** Francais, Deutsch, ITALIANO, ESPANOL, SVENSKA, Dansk, Nederl., SUOMI, Portugues
(Lang)	Francais
(Sprache)	Deutsch
(LINGUA)	ITALIANO
(LENG)	ESPANOL
(SPRAK)	SVENSKA
(Sprog)	Dansk
(Taal)	Nederl.
(KIELI)	SUOMI
(Ling.)	Portugues
Time Out	0, 5 to **60** to 300 step 1
Paper source	**Auto**, MP, LC1, LC2*1, *2, LC3*1, LC4*1
Out Bin*3	**Face-down**, Face-up*3
MP Mode	**Normal**, Last
Manual Feed	**Off**, 1st Page, EachPage
Copies	**1** - 999
Quantity*4	**1** - 999
Duplex*5	**Off**, On
Binding*5	**Long Edge**, Short Edge
Start Page*5	**Front**, Back
Paper Type	**Normal**, SemiThk, Thick, Thick N, ExtraThk, Trnsprnc, Coated
Page Side	**Front**, Back
Skip Blank Page*6	**Off**, On
Auto Eject Page	**Off**, On
Size Ignore	**Off**, On
Auto Cont	**Off**, On
Page Protect	**Auto**, On
LCD Contrast	0 - **8** - 15
Panel Lock*7	**Off**, On

Note "*1": Displayed and selectable only when the optional 1,500-sheet paper cassette unit is installed.

"*2": Displayed and selectable only when the optional 500-sheet paper cassette unit is installed.

"*3": Displayed only when the face-up unit is installed.

"*4": Not displayed on the panel. Can be set with EJL and PJL. Not saved in NVRAM.

"*5": Displayed only when the duplex unit is installed.
Duplex paper sizes are A4, A3, A5, B4, B5, LT, HLT, LGL, GLT, GLG, B, EXE, F4 only, and other sizes use simplex printing.

"*6": Valid in the PCL5e and ESC/Page, ESC/P2, FX, and I239X modes.

"*7": Not displayed. Not printed on the Status Sheet. Can be set with EJL and EpsonNet WebAssist etc.

COLOR REGIST MENU

Table 1-42.

Item	Setting value (Underlined value is default)
C	L-750, C-750, R-750 to **L0, C0, R0** to L750, C750, R750 step 1
M	L-750, C-750, R-750 to **L0, C0, R0** to L750, C750, R750 step 1
Y	L-750, C-750, R-750 to **L0, C0, R0** to L750, C750, R750 step 1

RESET MENU

Table 1-43.

Item	Setting value
Clear Warning	---
Clear All Warnings	---
Reset	---
Reset All	---
SelecType Init	---

manuals4you.com

QUICK PRINT JOBMENU*1

Table 1-44.

Item	Setting value
User	xxxxxxxxxxxxxx
Job*2	xxxxxxxxxxxxxxx
Copies*3	1 to 999
Delete*3, *4	---

Note "*1": This menu is not displayed when none of Verify Job, Re-print Job, or Stored Job is registered.

"*2": This item is displayed in the User display when Value (User name) is selected and the [Enter] button is pressed.

"*3": This item is displayed, selectable, and executable in Job when Value (Job name) is selected and the [Enter] button is pressed. Exits the SelecType mode after execution.

"*4": Job is displayed again after Delete is executed. User is displayed when no jobs are registered.
Exits SelecType when there are no users.

CONFIDENTIAL JOB MENU*1

Table 1-45.

Item	Setting value
User	xxxxxxxxxxxxxx
Enter Password*2	XXXX
Job*3	xxxxxxxxxxxxxx
Copies*4	1 to 999
Delete*4, *5	---

Note "*1": This menu is not displayed when no Confidential Job is registered.

"*2": This item is displayed in User when Value (User name) is selected and the [Enter] button is pressed.
Passwords are entered using the 1 [Back], 2 [Up], 3 [Enter], and 4 [Down] buttons.

"*3": After the password is entered in the Enter Password display, if it matches a job, this item is displayed.

"*4": This item is displayed, selectable, and executable in Job when Value (Job name) is selected and the [Enter] button is pressed. Exits the SelecType mode after execution.

"*5": Job is displayed again after Delete is executed. User is displayed when no jobs are registered.
Exits SelecType when there are no users.

PARALLEL MENU*1

Table 1-46.

Item	Setting value (Underlined value is default)
Parallel I/F	**On**, Off
Speed	**Fast**, Normal
Bi-D	Nibble, **ECP**, Off
Buffer Size	**Normal**, Maximum, Minimum

Note "*1": After this item is changed, the setting value takes effect after a warm boot or after the power is turned on again.
While it is reflected in the Status Sheet and EJL read-back, the actual change takes effect after a warm boot or after the power is turned on again.

USB MENU

Table 1-47.

Item	Setting value (Underlined value is default)
USB I/F*1	**On**, Off
USB Speed*1	**HS**, FS
USB ExtI/FConfg*2	**No**, Yes
Get IPAddress*3	Panel, Auto, PING
IP*3, *4, *5	0.0.0.0 to 255.255.255.255
SM*3	0.0.0.0 to 255.255.255.255
GW*3	0.0.0.0 to 255.255.255.255
NetWare*3	On, Off
AppleTalk*3	On, Off
MS Network*3	On, Off
Rendezvous*3	On, Off
USB Ext I/F Init*3	---
Buffer Size*1	**Normal**, Maximum, Minimum

Note "*1": After this item is changed, the setting value takes effect after a warm boot or after the power is turned on again. While it is reflected in the Status Sheet and EJL read-back, the actual change takes effect after a warm boot or after the power is turned on again.

"*2": Displayed only when a USB external device with D4 support is connected. Changed to “USB Config = No” automatically when exiting the panel settings.

"*3": Displayed only when a USB external device with D4 support is connected, and “USB Config = Yes”.
Content of the display depends on the USB external device settings.

"*4": Displayed only when “Get IPAddress = Auto”. Cannot be changed.

"*5": When Get IPAddress is changed from “Panel” or “PING” to “Auto”, the panel setting values are saved.
Then when “Auto” is changed to “Panel” or “PING”, the saved setting values are displayed.
192.168.192.168 if the settings are not made from the panel.

NETWORK MENU*1

Table 1-48.

Item	Setting value (Underlined value is default)
Network I/F	**On**, Off
Network Config	**No**, Yes
Get IPAddress*2	Panel, **Auto**, PING
IP*2, *3	0.0.0.0 to **192.168.192.168** to 255.255.255.255
SM*2	0.0.0.0 to **255.255.255.0** to 255.255.255.255
GW*2	0.0.0.0 to **255.255.255.255** to 255.255.255.255
NetWare*2	**On**, Off
AppleTalk*2	**On**, Off
MS Network*2	**On**, Off
Rendezvous*2	**On**, Off
Link Speed*2	**Auto**, 100 Full, 100 Half, 10 Full, 10 Half
Buffer Size	**Normal**, Maximum, Minimum

Note "*1": After this item is changed, the setting value takes effect after a warm boot or after the power is turned on again. While it is reflected in the Status Sheet and EJL read-back, the actual change takes effect after a warm boot or after the power is turned on again.

"*2": Displayed and selectable only when “Network Config = Yes”

"*3": The actual valid value is displayed (but cannot be changed) when Get IPAddress = Auto.
When “Get IPAddress = Auto” is changed to “Panel” or “PING”, the former value set for “Panel” or “PING” is displayed.
When Get IPAddress = Auto, IP Address is not shown on the Status Sheet.

manuals4you.com

AUX MENU*1, *2

Table 1-49.

Item	Setting value (Underlined value is default)
AUX I/F	**On**, Off
AUX Config*3	**No**, Yes
Get IPAddress*3, *4	Panel, Auto, PING
IP *3, *4, *5	0.0.0.0 to 255.255.255.255
SM*3, *4	0.0.0.0 to 255.255.255.255
GW*3, *4	0.0.0.0 to 255.255.255.255
NetWare*3, *4	On, Off
AppleTalk*3, *4	On, Off
MS Network*3, *4	On, Off
Rendezvous*3, *4, *6	On, Off
AUX Init*3, *4	---
Buffer Size	**Normal**, Maximum, Minimum

Note "*1": After this item is changed, the setting value takes effect after a warm boot or after the power is turned on again. While it is reflected in the Status Sheet and EJL read-back, the actual change takes effect after a warm boot or after the power is turned on again.

"*2": Displayed only when a Type-B host interface is installed.

"*3": Displayed and selectable or executable when a Type-B host interface supporting Level 3 is installed. When the printer is ready to print, “AUX Config” returns automatically to “No”.

"*4": Displayed and selectable or executable when “AUX Config = Yes” is selected.
The setting is enabled when the printer is ready to print and the network card is restarted. For this reason, once the setting value is changed, executing “AUX Status Sheet” on the Test Print menu before the panel setting mode is exited results in the setting value before the change being used for printing.
Not printed on Printer Status Sheet

"*5": The actual valid value is displayed (but cannot be changed) when “Get IPAddress = Auto”.
When “Get IPAddress = Auto” is changed to “Panel” or “PING”, the former value set for “Panel” or “PING” is displayed.

"*6": Displayed and can be set when Type-B supporting Rendezvous is installed.

ESC/PAGE MENU*1

Table 1-50.

Item	Setting value (Underlined value is default)
Auto CR	**On**, Off
Auto FF	**On**, Off
CR Function	**CR**, CR+LF
LF Function	**CR+LF**, LF
FF Function	**CR+FF**, FF
Error Code	**Ignore**, Space
Avoid Error	**Off**, On
PGI	**On**, Off
TriColorSpace	**Normal**, sRGB
CM Media Type	**Off**, Opt1, Opt2
Process Mode	**1**, 2

Note "*1": Not displayed on the panel and the Status Sheet. Can be set with EJL.

LJ4 MENU

Table 1-51.

Item	Setting value (Underlined value is default)
FontSource	**Resident**, Download*1, ROM A*2
Font Number	**0** to available (Max 65535)
Pitch*3	0.44 to **10.00** to 99.99 cpi step 0.01cpi
Height*3	4.00 to **12.00** to 999.75 pt. step 0.25 pt.
SymSet	**IBM-US**, Roman-8, Roman-9, ECM94-1, 8859-2 ISO, 8859-9 ISO, 8859-10ISO, 8859-15ISO, PcBlt775, IBM-DN, PcMultiling, PcE.Europe, PcTk437, PcEur858, Pc1004, WiAnsi, WiE.Europe, WiTurkish, WiBALT, DeskTop, PsText, VeInternati, VeUS, MsPublishin, Math-8, PsMath, VeMath, PiFont, Legal, UK, ANSI ASCII, Swedis2, Italian, Spanish, German, Norweg1, French2, Windows, McText, PcIcelandic, PcLt774, PcTurk1, PcPortugues, PcEt850, PcTurk2, PcCanFrench, PcSl437, PcNordic, 8859-3 ISO, 8859-4 ISO, WiBaltic, WiEstonian, WiLatvian, Mazowia, CodeMJK, BpBRASCII, BpAbicomp, PcGk437, PcGk851, PcGk869, 8859-7 ISO, WiGreek, Europe3, PcCy855, PcCy866, PcLt866, PcUkr866, PcLit771, 8859-5 ISO, WiCyrillic, Bulgarian, Hebrew7, 8859-8 ISO, Hebrew8, PcHe862, Arabic8, PcAr864, 8859-6 ISO, OCR A, OCR B, Pc866Cyr, Pc866Ukr, WinCyr, ISOCyr, Pc8Grk, Pc851Grk, WinGrk, ISOGrk, Greek8, Pc862Heb, Pc864Ara, HPWARA
Form	5 to **60***4 to **64***4 to 128 Lines
Source SymSet*5	0 to **277** to 3199
Dest SymSet	0 to **277** to 3199
CR Function	**CR**, CR+LF
LF Function	**LF**, CR+LF
Tray Assign	4, **4K**, 5S

Note "*1": Displayed only when there is download font.

"*2": Displayed only when an optional font is installed in the ROM socket.

"*3": One of them is displayed, depending on the type of font selected. Fixed pitch font is “Pitch” and proportional font is “Height”. For bitmap fonts, neither is displayed. Both “Pitch” and “Height” may be displayed. (when “Font Source” or “Font Number” is changed when PCL5 is not started internally)

"*4": 60 when A4/LT configuration is LT, and 64 when it is A4.

"*5": When the “Value” of “SymSet” is changed and when the font specified by “Font Number” does not have its “Symbol Set”, this results in “Font Source = Resident” and “Font Number = 0”. Therefore, to print using this “Symbol Set”, the “Value” of “Font Source” and “Font Number” must be set to the font supporting this “Symbol Set”.

GL2 MENU

Table 1-52.

Item	Setting value (Underlined value is default)
GLMode	**LJ4GL2**, GLlike
Scale	**Off**, A0, A1, A2, A3
Origin	**Corner**, Center
Pen	**Pen0**, Pen1, Pen2*1, Pen3*1, Pen4*1, Pen5*1, Pen6*1
End	**Butt**, Square, Triangular, Round
Join	**Mitered**, Miteredbeveled, Triangular, Round, Beveled, None
Pen0	0.05 to **0.35** to 5.00mm step0.05mm
Pen1	0.05 to **0.35** to 5.00mm step0.05mm
Pen2*1	0.05 to **0.35** to 5.00mm step0.05mm
Pen3*1	0.05 to **0.35** to 5.00mm step0.05mm
Pen4*1	0.05 to **0.35** to 5.00mm step0.05mm
Pen5*1	0.05 to **0.35** to 5.00mm step0.05mm
Pen6*1	0.05 to **0.35** to 5.00mm step0.05mm

Note "*1": Displayed only in the GLlike mode.

manuals4you.com

PS3 MENU*1

Table 1-53.

Item	Setting value (Underlined value is default)
Error Sheet	**Off**, On
Coloration	**Color**, Mono, TrueCol.
Image Protect	**Off**, On

Note "*1": Displayed only when PS3 is installed.

ESCP2 MENU

Table 1-54.

Item	Setting value (Underlined value is default)
Font	**Courier**, Prestige, Roman, Sans serif, Roman T, Orator S, Sans H, Script, OCR A, OCR B
Pitch	**10cpi**, 12cpi, 15cpi, Prop.
Condensed	**Off**, On
T.Margin	0.40 to **0.50** to 1.50 inch step 0.05 inch
Text	1 to **62***1 to **66***1 to available (Max:132) Lines
CGTable	**PcUSA**, Italic, PcMultilin, PcPortugue, PcCanFrenc, PcNordic, PcTurkish2, PcIcelandic, PcE.Europe, BpBRASCII, BpAbicomp, Roman-8, PcEur858, ISO Latin1, 8859-15ISO, PcSl437, PcTurkish1, 8859-9 ISO, Mazowia, CodeMJK, PcGk437, PcGk851, PcGk869, 8859-7 ISO, PcCy855, PcCy866, PcUkr866, PcLit771, Bulgarian, Hebrew7, Hebrew8, PcHe862, PcAr864, PcAr864Ara, PcAr720, PcLit774, Estonia, ISO Latin2, PcLat866
Country	**USA**, France, Germany, UK, Denmark, Sweden, Italy, Spain1, Japan, Norway, Denmark2, Spain2, LatinAmeric, Korea, Legal
Auto CR	**On**, Off
Auto LF	**Off**, On
Bit Image	**Dark**, Light, BarCode
ZeroChar	**0**, ϕ

Note "*1": 62 when A4/LT configuration is LT, and 66 when it is A4.

FX MENU

Table 1-55.

Item	Setting value (Underlined value is default)
Font	**Courier**, Prestige, Roman, Sans serif, Script, Orator S, OCR A, OCR B
Pitch	**10cpi**, 12cpi, 15cpi, Prop.
Condensed	**Off**, On
T.Margin	0.40 to **0.50** to 1.50 inch step 0.05 inch
Text	1 to **62***1 to **66***1 to available (Max:132) Lines
CGTable	**PcUSA**, Italic, PcMultilin, PcPortugue, PcCanFrenc, PcNordic, PcTurkish2, PcIcelandic, PcE.Europe, BpBRASCII, BpAbicomp, Roman-8, PcEur858, ISO Latin1, 8859-15ISO
Country	**USA**, France, Germany, UK, Denmark, Sweden, Italy, Spain1, Japan, Norway, Denmark2, Spain2, LatinAmeric
Auto CR	**On**, Off
Auto LF	**Off**, On
Bit Image	**Dark**, Light, BarCode
ZeroChar	**0**, ϕ

Note "*1": 62 when A4/LT configuration is LT, and 66 when it is A4.

manuals4you.com

I239X MENU

Table 1-56.

Item	Setting value (Underlined value is default)
Font	**Courier**, Prestige, Gothic, Orator, Script, Presentor, Sans serif
Pitch	**10cpi**, 12cpi, 15cpi, 17cpi, 20cpi, 24cpi, Prop.
Code Page	**437**, 850, 858, 860, 863, 865
T.Margin	0.30 to **0.40** to 1.50 inch step 0.05 inch
Text	1 to **63***1 to **67***1 to available (Max:132) Lines
Auto CR	**Off**, On
Auto LF	**Off**, On
Alt. Graphics	**Off**, On
Bit Image	**Dark**, Light
ZeroChar	**0**, ϕ
	1*2, **2***2

Note "*1": 63 when A4/LT configuration is LT, and 67 when it is A4.

"*2": 1 when A4/LT configuration is LT, and 2 when it is A4.

SUPPORT MENU*1

Table 1-57.

Item	Setting value (Underlined value is default)
HDD Format*2	---
PS3 HDD Init*3	---
Sleep Mode	**Enable***4, Disable

Note "*1": Displayed only when the “Support Mode” has been activated by a hidden operation when the power is turned on.
If HDD not installed, Support Menu will not be activated.

"*2": Displayed and executable when a HDD is installed.

"*3": Displayed and executable when PS3 and a HDD is installed.

"*4": The time that the printer shifts to the sleep mode is 45 minutes.

PRINTER ADJUST MENU*1

Table 1-58.

Item	Setting value (Underlined value is default)
Cleaning	---
Feed Offset*2	-3.5 to **0.0** to 3.5 step 0.5mm
Scan Offset*2	-3.5 to **0.0** to 3.5 step 0.5mm
Feed Offset2*2	-3.5 to **0.0** to 3.5 step 0.5mm
Scan Offset2*2	-3.5 to **0.0** to 3.5 step 0.5mm

Note "*1": Displayed only when the “Support Mode” has been activated by a hidden operation when the power is turned on.
This menu is not localized.
Do not perform operations that result in errors (opening and closing covers etc.) when using this menu. Do not send print data.

"*2": If this setting value is changed, the printer reboots after the setting is changed and exits the menu.

manuals4you.com

MAINTENANCE MENU*1

CAUTION

Before using this function, refer to the instructions given in "1.15.3 Description of Menus and Settings" *(p.64)*.

Table 1-59.

Item	Setting value (Underlined value is default)
Engine Status Sheet	---
Print Log Report	---
Configuration Sheet	---
Color Regist Check*2	---
Y±Xxx M±Xxx K±Xxx C±Xxx*3	---
Color Regist Warn ?*4	---
Reset Fuser Counter*5	---
Reset IDT Counter*5	---
Reset BTR Counter*5	---
Reset C DvlpCounter*5	---
Reset M DvlpCounter*5	---
Reset Y DvlpCounter*5	---
Reset K DvlpCounter*5	---
Sensor Assy TP*8	0 to 16 step 1
C Motor Disp*8	128 to 192 step 1
M Motor Disp*8	128 to 192 step 1
Y Motor Disp*8	128 to 192 step 1
K Motor Disp*8	128 to 192 step 1
Power Cleaning*5	---
C Toner Admix*6	**1** to 5 step 1
M Toner Admix*6	**1** to 5 step 1
Y Toner Admix*6	**1** to 5 step 1
K Toner Admix*6	**1** to 5 step 1
Feed Control*7	0 to **5** to 12 step 1

Table 1-59.

Item	Setting value (Underlined value is default)
Fuser*7	0 to **5** to 12 step 1
Transfer*7	0 to **5** to 12 step 1
Clear Error Log	---

Note "*1": Displayed only when the "Maintenance Mode" has been activated by a hidden operation when the power is turned on. Always displayed in English irrespective of the Setup Menu Lang setting.

"*2": When the [Enter] button is pressed after the Color Regist Check settings, measurement of the disparity in the sub-scanning direction starts. During measurement, the setting is displayed blinking. After measurement, the printer reboots if adjustment is not necessary.

"*3": Displayed if adjustment is necessary after measurement of the disparity in the sub-scanning direction.
± is the turning direction of the adjusting screw. Xxx is the amount of adjustment.
When the [Enter] button is pressed after adjustment (with the physical screw), measurement of the disparity starts and the setting in*2 is displayed blinking.

"*4": Displayed if an error related to adjustment occurs during (after) measurement of the disparity in the sub-scanning direction.
? is the code value for error information related to adjustment.
When the [Enter] button is pressed, measurement of the disparity starts (initial start), and the setting in*2 is displayed blinking.

"*5": Pressing the [Enter] button reboots. The setting values are saved by the engine.

"*6": Changing the setting and pressing the [Enter] button reboots when admix finishes. The setting values are not saved.

"*7": Changing the setting and pressing the [Enter] button reboots after changing the settings. The setting values are saved.
Do not use these functions for on-site services.

"*8": Even if changing the setting and pressing the [Enter] button, printer does not reboot. The setting values are saved in the engine.

USER SETTING ITEMS OTHER THAN IN THE SETTING MENU

The following is a list of user settings not included in the Menu.
These items are not cleared with Initialization in the Initialization Menu.

Table 1-60.

Item	Setting value	Default Value	Setting Method
PrinterName	32-byte character string	AL-C9100*	EJL, PrinterName command
Device ID MFG	32-byte character string	(Undefined)	EJL
Device ID MDL	32-byte character string	(Undefined)	EJL
Device ID DES	32-byte character string	(Undefined)	EJL
Device ID CID	32-byte character string	(Undefined)	EJL

manuals4you.com

1.15.3 Description of Menus and Settings

This section describes items in the specification specific to AcuLaser C9100.

INFORMATION MENU

- Color Regist Sheet (Refer to "1.21 Color Registration Adjustment Sheet" *(p.82)*.)
  Prints a sheet for adjustment of color registration (main scanning direction). Color registration (main scanning direction) corrects the start position, the overall scale factor and left/right scale factor of each of the colors Y, M, C with regard to K in the main scanning direction. Using this sheet, visually check the disparity between K and the other 3 colors, enter the disparity as a number in C, M, and Y of the Color Regist Menu, and repeat the adjustment until the printout and settings match. Refer to "Setup Menu" *(p.55)*.

- C, M, Y, K Toner
  Displays the remaining amount of the following toners in 7 levels: C (cyan), M (magenta), Y (yellow), and K (black). (Display only, for read-only).

E******	F	:100%	≥	toner remaining	>	83%
E*****	F	: 83%	≥	toner remaining	>	66%
E****	F	: 66%	≥	toner remaining	>	50%
E***	F	: 50%	≥	toner remaining	>	33%
E**	F	: 33%	≥	toner remaining	>	16%
E*	F	: 16%	≥	toner remaining	>	0%
E	F	:		toner remaining	=	0%

  Toner remaining uses dispense time managed by the engine, with the current rate of use computed from the end value. Reset automatically when a new toner cartridge is installed.

- Photocon
  Displays the life of the Photoconductor unit in 7 levels. (Display only, for read-only).

E******	F	:100%	≥	Photoconductor life	>	83%
E*****	F	: 83%	≥	Photoconductor life	>	66%
E****	F	: 66%	≥	Photoconductor life	>	50%
E***	F	: 50%	≥	Photoconductor life	>	33%
E**	F	: 33%	≥	Photoconductor life	>	16%
E*	F	: 16%	≥	Photoconductor life	>	0%
E	F	:		Photoconductor life	=	0%

  The current rate of use is computed from the end value of Print Volume and IDT motor Cycle time read from the engine, and is displayed based on the level of the lowest item. Reset automatically when a new Photoconductor unit is installed.

TRAY MENU

- MP Tray Size, LC1/LC2/LC3/LC3/LC4 Size
  Specifies the paper size for the tray. Refer to "1.23 Paper Handling Algorithm" *(p.84)*.

NOTE: *User-defined sizes range from 90.00mm x 98.00 (min) to 304.80mm x 1,200.00mm (max).*

- MP/LC1/LC2/LC3/LC4 Type
  The paper types for MP Tray and LC1, 2, 3, 4 are set. Refer to "1.23 Paper Handling Algorithm" *(p.84)*.
  - Plain : Ordinary copy paper used for copiers, etc.
  - SemiThk : Color Laser Paper (J paper) etc.
  - Letterhead : Letter paper
  - Recycled : Recycled paper
  - Color : Paper colored all over, e.g. colored bond paper
  - Trnsprncy : Transparent sheet for laser printer
  - Labels : Label paper for laser printer or copier

SETUP MENU

- Paper Source
  Selects a paper source when Paper Type = Normal, SemiThk.
  If Paper Type = Thick, ExtraThk, Trnsprnc, or Coated, paper is always fed from the MP tray. Refer to "1.23 Paper Handling Algorithm" *(p.84)*.

- Paper Type
  Set the print speed, CM, etc. according to the paper type used. Refer to "1.23 Paper Handling Algorithm" *(p.84)*.
  - Normal : Ordinary copy paper used for copiers (P paper), recycled paper etc.
  - SemiThk : Color Laser Paper (J paper), coated paper etc.
  - Thick : Thick paper (106g/m^2 to 169g/m^2)
  - Thick N : Small size thick paper. Postcards etc.
  - ExtraThk : For particularly thick paper (170g/m^2 to 216g/m^2)
  - Trnsprnc : Transparency
  - Coated : Glossy coated paper

COLOR REGIST MENU

- C, M, Y
  Adjusts (color registration settings) color registration (the disparity of the colors Y, M, C with regard to K in the main scanning direction).
  - C = L setting (Cyan Left), C setting (Cyan Center), R setting (Cyan Right)
  - M = L setting (Magenta Left), C setting (Magenta Center), R setting (Magenta Right)
  - Y = L setting (Yellow Left), C setting (Yellow Center), R setting (Yellow Right)

NOTE: *Setting value (x): -750 to 0 (default) to 750 1 step (10 steps by holding the button down)*
x is the detection chart of the Color Registration Adjustment Sheet.

For the adjustment procedure, refer to "5.2.1.2 Adjustment of starting position in main-scanning direction" *(p.464)*.

RESET MENU

- SelecType Init
  Initializes the setting values of the panel (returns them to the factory defaults).
  Parallel Menu, AUX Menu, Lang, C, M, Y, K Toner, Photocon, Total Pages, Color Pages, B/W Pages, and LCD Contrast are not initialized. The Calibration Table is not initialized, either.

PARALLEL MENU

- Speed
  Sets the ACK width.
  - Fast = 1 µS (default)
  - Normal = 6 µS

PRINTER ADJUST MENU

- Cleaning
  Cleans the transfer unit (IDT UNIT) of the printer.
  Perform cleaning when the printed paper is frequently soiled with toner.

manuals4you.com

MAINTENANCE MENU

This menu is only displayed and selectable in the Maintenance Mode, which is started using a hidden operation when the power is turned on.
Basically, these settings are for use by service personnel.
During maintenance, print the engine status sheet from the Maintenance Menu to grasp how various consumables and periodic replacement parts are used.

CAUTION

- **This setting menu is used by the service engineer for maintenance. Do not disclose it to the user.**
- **The followings are the function for exceptional situation. Do not use these functions for on-site services because printing might not be executed normally.**
  - **Feed Control**
  - **Fuser**
  - **Transfer**

☐ Engine Status Sheet
Pressing the [Enter] button starts printing the Engine Status Sheet. If there is data remaining in the printer, paper is output. Always check first in the normal mode (any mode other than the Maintenance Mode) that there are no engine related service calls before entering the Maintenance Mode and pressing [Enter]. The sheet is printed using the current setting values for RITech, toner save, and resolution, while other settings use the factory defaults. After printing the User Default settings are not changed. During printing, the LCD information display flashes. The printed Engine Status Sheet indicates the count values of each unit of the engine.

NOTE: *Refer to* "6.4 Sheet for servicing" *(p.487)*.

☐ Print Log Report
Pressing the [Enter] button starts printing the Print Log Report. If there is data remaining in the printer, paper is output. Always check first in the normal mode (any mode other than the Maintenance Mode) that there are no engine related service calls before entering the Maintenance Mode and pressing [Enter]. The sheet is printed using the current setting values for RITech, toner save, and resolution, while other settings use the factory defaults. After printing the User Default settings are not changed. During printing, the LCD information display flashes. The Print Log Report is always printed in English regardless of the setting of Lang in Setup Menu.

NOTE: *Refer to* "6.4 Sheet for servicing" *(p.487)*.

☐ Configuration Sheet (Refer to "1.22 Configuration Sheet" *(p.83)*.)
This sheet is used for production line, but this can be also used as color registration check.

☐ Color Regist Check
Corrects the sub-scanning direction start position and corrects image skew. Color shift is detected by the sensor and is adjusted with the physical adjusting screw (ROS adjusting screw). The mechanical controller produces the pattern.
This must be performed when replacing the IDT or ROS.
Refer to "5.2.1.1 Correction of starting position in sub-scanning direction" *(p.463)*.

NOTE: *Cannot be executed during power saving.*

☐ Y ± Xxx M ± Xxx K ± Xxx C ± Xxx
Displayed if adjustment is necessary after measurement of the disparity in the sub-scanning direction.
When the [Enter] button is pressed after adjustment (with the physical screw), measurement of the disparity starts (continues).
Reboot with the [Back] button or [Start/Stop] button. (The [up] and [down] buttons are ignored.)
Refer to "5.2.1.1 Correction of starting position in sub-scanning direction" *(p.463)*.

- Color Regist Warn ?
  Displayed if an error related to adjustment occurs during (after) measurement of the disparity in the sub-scanning direction.
  When the [Enter] button is pressed, measurement of the disparity starts (initial start).
  Reboot with the [Back] button or [Start/Stop] button. (The [up] and [down] buttons are ignored.)

  ?: The code value for error information related to adjustment.

  - 2: Skew Fine Compensation is NG (3 times over) 02h
  - 3: RC Sample Block Warning B-OUT 03h
  - 4: RC Sample Block Warning B-IN 04h
  - 5: RC Sample Block Warning A2-OUT 05h
  - 6: RC Sample Block Warning A2-IN 06h

- Reset Fuser Counter
  Resets the level counter of the Fuser unit. The counter must be reset after the Fuser unit is replaced with a new one.

  NOTE: *Cannot be executed during power saving.*

- Reset IDT Counter
  Resets the level counter of the Intermediate transfer unit (IDT). The counter must be reset after the Intermediate transfer unit is replaced with a new one.

  NOTE: *Cannot be executed during power saving.*

- Reset BTR Counter
  Resets the level counter of the Transfer unit (BTR). The counter must be reset after the Transfer unit is replaced with a new one.

  NOTE: *Cannot be executed during power saving.*

- Reset C DvlpCounter
  Resets the level counter of Development unit C. The counter must be reset after Development unit C is replaced with a new one.

  NOTE: *Cannot be executed during power saving.*

- Reset M DvlpCounter
  Resets the level counter of Development unit M. The counter must be reset after Development unit M is replaced with a new one.

  NOTE: *Cannot be executed during power saving.*

- Reset Y DvlpCounter
  Resets the level counter of Development unit Y. The counter must be reset after Development unit Y is replaced with a new one.

  NOTE: *Cannot be executed during power saving.*

- Reset K DvlpCounter
  Resets the level counter of Development unit K. The counter must be reset after Development unit K is replaced with a new one.

  NOTE: *Cannot be executed during power saving.*

- Sensor Assy TP
  Set the individual temperature correction value (writing of NV value) of SENSOR ASSY TP.
  When replaced the SENSOR ASSY TP with a new one, be sure to make the setting by the correction value described on the new one. The value displayed on the panel is the current value.

  NOTE: *The writing of the correction value cannot be done during the sleep mode.*
  New setting value will be reflected at the next power-on.

- C,M,Y,K Motor Disp
  Set the individual rotational speed correction value (writing of NV value) of the MOTOR DISP for each color.
  When replaced the MOTOR DISP with a new one, be sure to make the setting by the correction value described on the new one. The value displayed on the panel is the current value.

  NOTE: *The writing of the correction value cannot be done during the sleep mode.*
  New setting value will be reflected at the next power-on.

manuals4you.com

- Power Cleaning
  Forcibly ejects toner and cleans the Transfer unit.
  Perform cleaning when print quality is poor such as the whole surface of the printed paper being soiled with toner when the printer is used in high temperature or high humidity.

  NOTE: *Cannot be executed during power saving.*

CAUTION

This function is not executed unless the inside of the printer is judged in the specified high-temperature and high-humidity status by the engine.

- C, M, Y, K Toner Admix
  Forcibly supplies toner. Perform admix to fill the toner supply tubes after replacement and so on.
  The value defines the number of times for performing admix operation, and a selectable value is 1 to 5.

  NOTE: *Cannot be executed during power saving.*

CHECK POINT

When the toner supply tubes are replaced, toner is supplied into the tubes by executing Admix four times.

- Clear Error Log
  Clear error log list stored for display on Engine Status Sheet.
  Performing this operation reboots the printer.

1.15.4 Special Operations

LIST OF OPERATING FUNCTIONS

The following is a list of special operating functions supported by this printer.

CAUTION

Do not make these functions (except hex dump, Support mode, and panel setting value initialization) available to users.

Table 1-61. List of Operating Functions

Function	Operating procedure
Hex Dump	Turn on the power while pressing [Start/Stop] button.
Support Mode	Turn on the power while pressing [Down] button.
Initialization of EEPROM	Turn on the power while pressing [Start/Stop] + [Cancel Job] + [Back] buttons.
Initialization of panel settings	Turn on the power while pressing [Cancel Job] button.
Forced erase of Flash ROM module	Turn on the power while pressing [Cancel Job] + [Up] + [Down] + [Enter] buttons.
Update program ROM	Turn on the power while pressing [Start/Stop] + [Cancel Job] + [Down] buttons.
Copy ROM module	Turn on the power while pressing [Printable] + [Cancel Job] + [Enter] buttons.
Maintenance Mode	Turn on the power while pressing [Back] + [Up] + [Down] + [Enter] buttons.
Update engine program ROM	Turn on the power while pressing [Start/Stop] + [Cancel Job] + [Up] + [Down] buttons.
RAM check of all sectors	Turn on the power while pressing [Start/Stop] + [Back] + [Up] + [Enter] buttons.
Reset CPU when a service call occurs	Press [Cancel Job] + [Back] + [Up] + [Down] + [Enter] buttons when a service call error occurs.
Display detailed information when a service call occurs	Press [Cancel Job] + [Back] + [Enter] buttons when a service call error occurs.
Print an error sheet	Press [Enter] button after resetting the CPU when a service call error occurs

UNIQUE FUNCTIONS

The following lists items in the specifications specific to this printer.

- ☐ EEPROM initialization
  - ■ Items cleared when the EEPROM is initialized
    - Total Pages
    - Color Pages
    - Each replacement count
    - Total Pages on the Status Sheet
    - Color Pages on the Status Sheet
    - B/W Pages on the Status Sheet
    - Calibration table
  - ■ The following items are stored on the engine side and are not cleared when the EEPROM is initialized
    - The levels of the toner, Photoconductor unit, Waste toner collector, Intermediate transfer unit, Transfer unit, Fuser unit and each Development unit
    - The levels of the Photoconductor unit
    - The levels of the Waste toner collector
    - The levels of the Intermediate transfer unit
    - The levels of the Transfer unit
    - The levels of the Fuser unit
    - The levels of the each Development unit
    - Total Pages (A4) on the Engine Status Sheet
- ☐ RAM Check of all sectors
  In a normal RAM check (when the power is turned on), to save time only the first 64KB is checked fully, while subsequent sections are only checked in every 128KB block.
  Use this mode if the former all RAM sector RAM check is necessary.

manuals4you.com

1.16 Printer Status

1.16.1 List of Printer Messages

The following is a list of messages displayed by the printer.

Table 1-62. List of Printer Messages

Display (English)	Class	Error LED status	Status code
---	Status	---	---
Service Req Cffff	Service call error	Blinking (All LEDs blink simultaneously)	6000
Service Req Eggg	Service call error	Blinking (All LEDs blink simultaneously)	6001 to 6999
Formatting HDD	Status	---	---
Optional RAM Error	Error	---	---
ROM CHECK	Status	---	---
RAM CHECK	Status	---	---
HDD CHECK	Status	---	---
Self Test	Status	---	---
Reset All	Status	---	1004
Reset	Status	---	1004
Cancel All Print Job*2	Status	---	1003
Cancel Print Job*2	Status	---	1003
Unable Clear Error	Status	---	---
Check Duplex P-Size	Error	Blinking 2	4229
Check Transparency	Error	On	4021
Jam W W W W*1	Error	On	4234*4
Wrong Toner uuuu*10	Error	On	4237
NonGenuineToner uuuu	Error	Blinking 2	4241 to 4255
Install uuuu TnrCart	Error	On	4235*5
Install Photocondctr	Error	On	4235*5
Install Waste T Box	Error	On	4235*5
Wrong Photoconductor	Error	On	4237

Table 1-62. List of Printer Messages

Display (English)	Class	Error LED status	Status code
Replace Toner uuuu	Error	On	4236*5
Replace Waste T Box	Error	On	4236*5
w w w w Open*7	Error	On	4239*5
Turn Paper sss	Error	On	4013
Manual Feed sss*9	Error	Blinking 2	1013
Can’t Print Duplex	Error	Blinking 1	3005
Paper Out sssss tttt	Error	On	4010
Paper Set ssss tttt	Error	Blinking 1	3003
Print Overrun	Error	Blinking 1	3000
Mem Overflow	Error	Blinking 1	3001
Duplex Mem Overflow	Error	Blinking 1	3004
Invalid HDD	Error	On	4202
Invalid N/W Module	Error	On	4240
Invalid PS3	Error	On	4201
Invalid P5C	Error	On	4256
Invalid AUX I/F Card	Error	On	4014
Invalid ROM A	Error	On	4003
Invalid ROM B	Error	On	4003
Write Error ROM A	Error	On	4006
Write Error ROM P	Error	On	4006
Reset to Save	(Status)	---	---
Writing ROM A	Status	---	1005
Writing ROM P	Status	---	1005
Menus Locked	Warning	---	---
(Panel Setting)	---	---	1001
Worn IDT Unit	Warning	---	2571*6
Worn uuuu Dev Unit	Warning	---	2571*6
Hard Disk full	Warning	---	2569
PS3 Hard Disk full	Warning	---	2561
Can’t Print	Warning	---	2072
Collate Disabled	Warning	---	2013
Check Paper Size	Warning	---	2004

Table 1-62. List of Printer Messages

Display (English)	Class	Error LED status	Status code
Image Optimum	Warning	---	2002
Check Paper Type	Warning	---	2008
Outbin Select Error	Warning	---	2009
Need Memory	Warning	---	2003
Format Error ROM A	Warning	---	2000
Format Error ROM B	Warning	---	2000
Form Feed	Status	---	1008
---	---	---	1010
Warming Up	Status	---	1006
Calibrating Printer	Status	---	1014
Offline*8	Status	---	1001
Cancel Print Job*3	Status	---	1003
uuuu Toner Low	Warning	---	2571*6
Worn Photoconductor	Warning	---	2571*6
Waste T BoxNearfull	Warning	---	2571*6
Worn Fuser	Warning	---	2571*6
Worn IDT Unit	Warning	---	2571*6
Worn Transfer Unit	Warning	---	2571*6
Worn uuuu Dev Unit	Warning	---	2571*6
Sleep*8	Status	---	1007
NonGenuine Toner	Warning	---	2571
Ready*8	Status	---	1000
---	Status		1009
---	Status		1002
---	Status		1012

Note "*1": W W W W = B, D, E, C1, C2, C3, C4

"*2": Cancel Print Job and Cancel All Print Job using the operation panel.

"*3": Cancel Print Job using the host.

"*4": For detailed information on responding to composite errors, refer to the print status area. Refer to "Jam wwww *(p.73)*".

"*5": For detailed information on responding to composite errors, refer to the print status area.

"*6": For detailed information on responding to consumable warning status, refer to the relevant area.

The bit allocation is as follows.

Bit	Warning status
0	Worn Photoconductor
1	Waste T BoxNearfull
3	Worn Fuser
4	Worn Transfer Unit
6	K Toner Low
7	C Toner Low
8	M Toner Low
9	Y Toner Low
10	Worn K Dev Unit
11	Worn C Dev Unit
12	Worn M Dev Unit
13	Worn Y Dev Unit
14	NonGenuine Toner
15	Worn IDT Unit

"*7": w w w w = A, B, D, E

"*8": Toner remaining is added.
Displays the remaining toner, right aligned, in the order of K, C, M, Y in 7 levels.

"*9": The appropriate value among those for Paper Size in the panel settings is displayed.

"*10": uuuu indicates CMYK and can be displayed simultaneously, but do not occur simultaneously because of the engine characteristics.

manuals4you.com

1.16.2 Status Messages and Troubleshooting

This section describes functions specific to this printer.

CALIBRATING PRINTER

- Explanation
  Indicates that printer (engine) is in the following conditions.
  - The process control is in execution.
  - Engine is writing the data to the CRUM.

SLEEP

- Explanation
  Printer (engine) is saving electricity.
  The Sleep Mode setting is supported by the STANDBY TIME command (non-disclosed) of the EJL.
  The minimum value for this engine is 5 minutes. When the setting is less than 5 minutes, it is changed to 5 minutes.
  The setting defaults to 45 minutes.

  When the HDD unit or Type-B is connected, the standby capacity increases (since the mechanical controller off function cannot be used). Also, with normal standby (using REMOTEX), the engine status cannot be acquired since during standby the mechanical controller is off. Consequently, the engine status is the status before standby (stored in the controller).

1.16.3 Error Messages and Troubleshooting

This section describes functions specific to this printer.

Check Transparency

- Explanation
  Transparency is not specified, but media other than transparency is fed. Consequently, a paper jam occurred.
- Remedy
  - Remove the media from the MP Tray.
  - Remove the jammed media from the MP Tray side.
  - Open and close Cover B.

  Load the correct media to start printing again from where the jam occurred.

Jam wwww

- Explanation
  A paper jam occurred at the position displayed.
- Remedy
  Remove the jammed paper and close the covers. Printing resumes from the jammed page.

Table 1-63. Jam Errors in Corresponding Cover Positions

Error message	detail	Remedy
Jam B	A paper jam occurred inside the main unit of the printer.	Open Cover B, remove the jammed paper, and close Cover B to clear the error.
Jam E	A paper jam occurred in the feed unit of the lower additional cassette unit.	Open Cover E, remove the jammed paper, and close Cover E to clear the error.
Jam B, C1	A paper jam occurred due to a paper feed error in Cassette 1.	Open Cover B or Cassette 1, remove the jammed paper, and close the unit to clear the error.
Jam E, C2	A paper jam occurred due to a paper feed error in Cassette 2.	Open Cover E or Cassette 2, remove the jammed paper, and close the unit to clear the error.
Jam E, C3	A paper jam occurred due to a paper feed error in Cassette 3.	Open Cover E or Cassette 3, remove the jammed paper, and close the unit to clear the error.
Jam E, C4	A paper jam occurred due to a paper feed error in Cassette 4.	Open Cover E or Cassette 4, remove the jammed paper, and close the unit to clear the error.
Jam B, D	A paper jam occurred at the duplex unit.	Open Cover B or Cassette D, remove the jammed paper, and close the unit to clear the error.

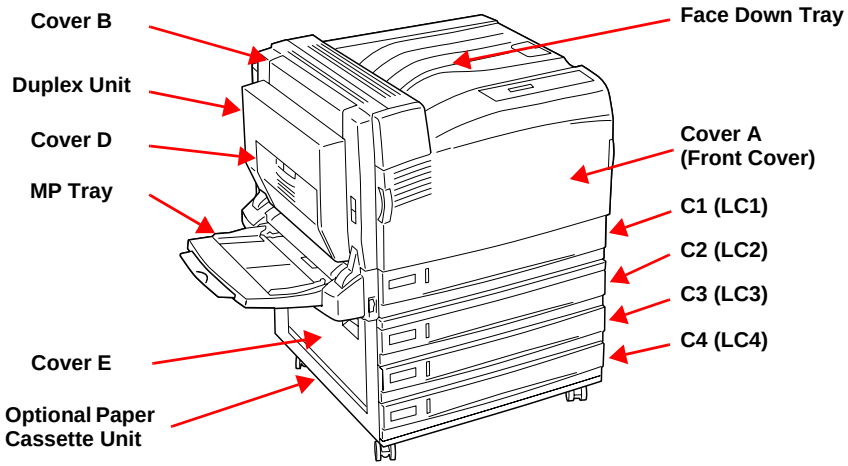

manuals4you.com

Install uuuu TnrCatr

NOTE: *uuuu = CMYK*

- Explanation
  The Toner Cartridge for the designated color is not installed.
- Remedy
  Open Cover A (front cover) and install the Toner Cartridge indicated. The error is canceled.

Install Photocondctr

- Explanation
  The Photoconductor unit is not installed. Or it is not installed correctly.
- Remedy
  Open Cover A (front cover), install the Photoconductor unit or re-install it, and close the cover. The error is canceled automatically.

Install Waste T Box

- Explanation
  The Waste toner collector is not installed. Or it is not installed correctly.
- Remedy
  Open Cover A (front cover), install the Waste toner collector or re-install it, and close the cover. The error is canceled automatically.

Replace Photocondctr

- Explanation
  The wrong Photoconductor unit is installed.
- Remedy
  Open Cover A (front cover), install the correct Photoconductor unit, and close the cover. The error is canceled automatically.

Replace Toner uuuu

NOTE: *uuuu = CMYK*

- Explanation
  The engine detects the toner end of a color, and printing stops.
- Remedy
  Open Cover A (front cover), replace the Toner Cartridge for which the error is displayed with a new one, and close the cover. The error is canceled automatically.

Outbin Select Error

- Explanation
  The selection of outbin was ignored and the paper was output to face down tray, because of the limitation of face up tray.

  Restrictions:

  1. Face up tray was specified with following paper size
     MON, C10, DL, C6, IB5
  2. Custom paper size that was shorter than 135.0mm
     (paper feed direction)

Replace Waste T Box

- Explanation
  The engine detects that the Waste toner collector is full, and printing stops.
- Remedy
  Open Cover A (front cover), replace the Waste toner collector with a new one, and close the cover. The error is canceled automatically.

w w w w Open

NOTE: *w w w w = A, B, D, E*

- Explanation
  A cover is open.
- Remedy
  Close the Cover. The error is canceled.

Invalid N/W Module

- Explanation
  Although no network program exists, a network program for a different model is written.
  (The status of each interface before the error occurred is maintained.)
- Remedy
  Update the network program for this printer.

1.16.4 Warning Messages and Troubleshooting

This section describes functions specific to this printer.

uuuu Toner Low

- Explanation
  When the level of each toner (C, M, Y, K) is low (toner end with continuous printing of about 1,000 sheets of A4 5%), this warning message is displayed.
  When the “Replace Toner uuuu” error appears, the unit cannot be used. Install a new Toner Cartridge.

Worn Photoconductor

- Explanation
  When the service life of the Photoconductor unit is near its end (rate of use about 95%), this warning message is displayed. The service life of the Photoconductor unit is calculated by the engine.
  When the “Replace Photocondctr” error appears, the unit cannot be used. Install a new Photoconductor unit.

Waste T BoxNearfull

- Explanation
  When the Waste toner collector is nearly full, (Waste toner collector replacement with continuous printing of about 1,000 sheets of A4 5%), this warning message is displayed. The Waste toner collector full is calculated by the waste toner collector detection function of the engine.
  When the “Replace Waste T Box” error appears, the unit cannot be used. Install a new Waste toner collector.

Worn Fuser

- Explanation
  When the service life of the Fuser unit is near its end (end of service life with continuous printing of about 1,000 sheets of A4 5%), this warning message is displayed. The service life of the Fuser unit is calculated by the engine.
  While it can still be used, it is desirable to replace the unit.

Worn IDT Unit

- Explanation
  When the service life of the Intermediate transfer unit (IDT) is near its end (end of service life with continuous printing of about 1,000 sheets of A4 5%), this warning message is displayed. The service life of the Intermediate transfer unit is calculated by the engine.
  While it can still be used, it is desirable to replace the unit.

Worn Transfer Unit

- Explanation
  When the service life of the Transfer unit (BTR) is near its end (end of service life with continuous printing of about 1,000 sheets of A4 5%), this warning message is displayed. The service life of the Transfer unit is calculated by the engine.
  While it can still be used, it is desirable to replace the unit.

Worn uuuu Dev Unit

- Explanation
  When each Development unit (C, M, Y, K) is near the end of its service life (end of service life with continuous printing of about 1,000 sheets of A4 5%), this warning message is displayed.
  While it can still be used, it is desirable to replace the unit.

Outbin Select Error

- Explanation
  Due to the output paper (face up) unit limitations, the selected paper output bin is unavailable and the paper is output to a different paper output unit (face down).

  Restrictions:

  1. When face up paper output is specified and the following regular paper sizes are specified.
     MON, C10, DL, C5, C6
  2. When irregular paper size is specified and the length of the feed direction is less than 135.0mm.

manuals4you.com

1.16.5 Service Call Error Messages

This section explains the service call error messages of this printer. (For details, refer to Chapter 3 "TROUBLESHOOTING" *(p.147)*.)

ENGINE-RELATED SERVICE CALL ERRORS

Table 1-64.

Error category e	Error code fff	Explanation
E	050	ROS error
E	051	Fuser unit error
E	052	NV-RAM error
E	053	Development unit error
E	054	Fuser fan error
E	055	LV fan error
E	056	Mechanical controller firmware error
E	057	PAGEC time-out
E	086	ADC sensor error
E	142	Additional Cassette 2 error
E	143	Additional Cassette 3 error
E	144	Additional Cassette 4 error
E	115	Additional Cassette communication error
E	998	Engine communication error

CONTROLLER-RELATED SERVICE CALL ERRORS

The model specific new service calls are as follows.

NOTE: *Controller related errors are C or D errors.*

Table 1-65.

Error category e	Error code ffff	Explanation
C	1600	Video hardware error (SRAM diagnostic error)

1.17 Increasing the RAM

When the memory is insufficient, the printer displays the following error messages.

- Mem Overflow
- Image Optimum
- Need Memory
- Duplex Mem Overflow

The following methods can be used to clear the errors.

- Expand the memory.
- Set the resolution to 300 dpi.
- Reduce the size of the receive buffer.
- Set unused interfaces to Off.

manuals4you.com

1.18 Handling Precautions

1.18.1 Precautions When Turning Off the Power

This printer is equipped internally with nonvolatile memory (E^2PROM). This nonvolatile memory preserves the settings for printer functions. If the power is cut off during a write to the nonvolatile memory, the contents of the nonvolatile memory cannot be guaranteed. Therefore, when the power is turned on again, or when Reset All is executed, the panel setting values may return to the defaults, or a Service Call Error may occur.

Also, while the printer can be connected to a HDD, if the power is cut off when data is being written to the HDD, the contents of the HDD cannot be guaranteed and HDD errors may occur.

Therefore, the power must not be cut off in the following cases when data is being written to the nonvolatile memory and HDD.

- ☐ From the time the power is turned on until the Ready LED lights up continuously
- ☐ When the Ready LED is blinking
- ☐ When the printer is printing (while the paper feed motor is operating)
  To stop printing, set the printer offline, or perform Cancel Job
- ☐ When the Data LED is on or is blinking
- ☐ When the calibrating printer message is displayed

1.18.2 Precautions for High Temperature Parts

Since the fuser unit inside the printer becomes very hot, be sure not to touch it when opening the covers to resolve paper jams, etc.

1.19 Status Sheet

This section explains the Status Sheet of this printer. A print example of the Status Sheet is shown in Figure 1-13 *(p.80)*.
The language of the printed Status Sheet changes in accordance with the selected Language.
The printout example is this case uses English.

NETWORK MENU

The IP, SM, and GW addresses are printed only when GetIPAddress = Panel, but are not printed when Auto is selected. If this setting value is changed, the IP address to be used at the next startup is printed. (The IP address currently in use is printed on the Network Status Sheet.) NetWare, AppleTalk, Rendezvous, and Link Speed are printed.

INFORMATION

Gives the Name (English only) (36 digits), Remaining Amount (10 digits), Warning (20 digits), and Model Number (30 digits) of consumables that can be replaced by the user.
“Needed soon” is added when the amount reaches the level where a warning occurs.

Table 1-66.

Name	Part Numbers
Toner Cartridge Cyan	0197
Toner Cartridge Magenta	0196
Toner Cartridge Yellow	0195
Toner Cartridge Black	0198
Photoconductor Unit	1105
Waste Toner Collector	0194

INFORMATION ON OPTIONS INSTALLED

1. RAM DIMM : Added to Installed Memory and Available Memory.
2. Type-B I/F : AUX is added to Installed Interface.
3. Lower Cassette : Lower Cassettes 2, 3, 4 are added to Other Options.
4. HDD : Hard Disk xGB is added to Other Options. If there is a decimal part, up to the first decimal place is indicated.
5. PS3 : Adobe PostScript 3 is added to Installed Emulation. The 5 digit version preceding white space is added to Firmware Revision. Order is same as Installed Emulation.
6. P5C : P5C is added to Installed Emulation. The 5 digit version preceding white space is added to Firmware Revision. Order is same as Installed Emulation

INFORMATION AT THE BOTTOM

1. Firmware version in DDYM format beginning with IA.
2. Type of code ROM device.
   - *: Flash, space: Mask
3. Version of CMTD (Color Matching Table Data) with 4 digits beginning with A. @ is only included when the optional ROM version CMTD is installed in the ROM slot.
4. Version of mechanical controller of the engine main unit with 10 numbers beginning with MC.
   (Refer to “6.4 Sheet for servicing” *(p.487)*.)
5. USB ID (28PXXXXXXXXXXXXXX).
6. The latest connection status of the USB communication mode.
   - H: HS, F: FS, space: No USB connection
7. USB communication mode
   - D: D4 compliant device connected, space: non D4 compliant device
8. Type-B level
   - 3: L3 TYPEB, space: other than L3

manuals4you.com

9. IEEE1284 negotiation results.
   - e: ECP, n: Nibble, space: Compatibility
10. JC followed by a 6-digit number, indicating the number of jams.
11. IC followed by numbers, indicating the number of Toner Cartridge replacements for each color (xxxxxxxxxxxx) and number of error recoveries (yyyyyyyyyyyy).
    - xxx and yyy follow the order C, M, Y, K.
      xxx and yyy are separated by spaces.

NOTE: *The PS and P5C version is included in the Firmware Revision.*

COLOR CALIBRATION INFORMATION

1. G: Increase Gradation, D: Increase Definition, 600: 600 dpi. Depending on the combination, 600 dpi, Increase Gradation calibration is indicated, and this is displayed only when calibration data is saved in the EEPROM.
2. MMMM: month, DD: day, YYYY: year, HH: hour, MM: minute indicating the date that the calibration table is created.

NOTE: *This function is provided in the utility for Adobe PostScript 3 ROM module.*

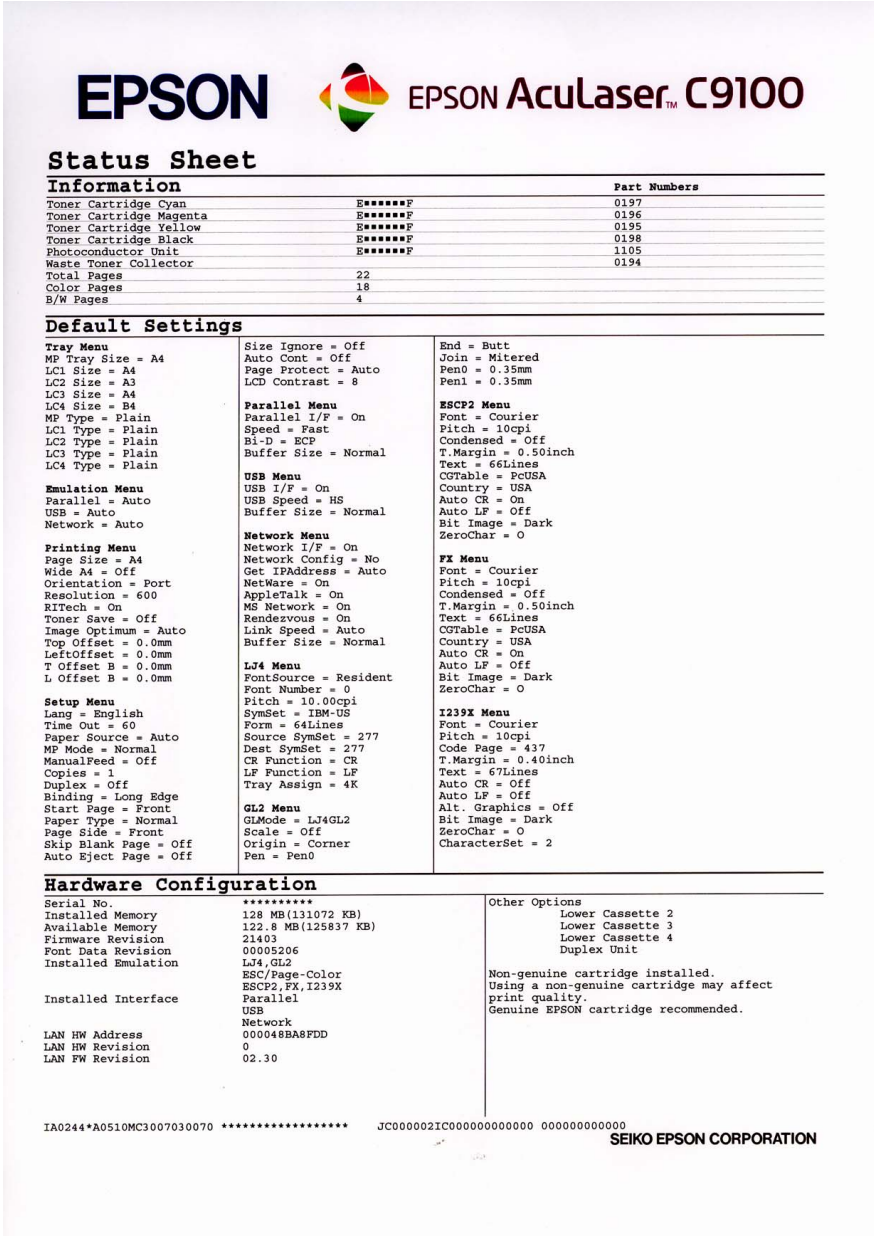

EPSON EPSON AcuLaser C9100

Status Sheet

Information

		Part Numbers
Toner Cartridge Cyan	E■■■■■■F	0197
Toner Cartridge Magenta	E■■■■■■F	0196
Toner Cartridge Yellow	E■■■■■■F	0195
Toner Cartridge Black	E■■■■■■F	0198
Photoconductor Unit	E■■■■■■F	1105
Waste Toner Collector		0194
Total Pages	22	
Color Pages	18	
B/W Pages	4	

Default Settings

Tray Menu
MP Tray Size = A4
LC1 Size = A4
LC2 Size = A3
LC3 Size = A4
LC4 Size = B4
MP Type = Plain
LC1 Type = Plain
LC2 Type = Plain
LC3 Type = Plain
LC4 Type = Plain

Emulation Menu
Parallel = Auto
USB = Auto
Network = Auto

Printing Menu
Page Size = A4
Wide A4 = Off
Orientation = Port
Resolution = 600
RITech = On
Toner Save = Off
Image Optimum = Auto
Top Offset = 0.0mm
LeftOffset = 0.0mm
T Offset B = 0.0mm
L Offset B = 0.0mm

Setup Menu
Lang = English
Time Out = 60
Paper Source = Auto
MP Mode = Normal
ManualFeed = Off
Copies = 1
Duplex = Off
Binding = Long Edge
Start Page = Front
Paper Type = Normal
Page Side = Front
Skip Blank Page = Off
Auto Eject Page = Off
Size Ignore = Off
Auto Cont = Off
Page Protect = Auto
LCD Contrast = 8

Parallel Menu
Parallel I/F = On
Speed = Fast
Bi-D = ECP
Buffer Size = Normal

USB Menu
USB I/F = On
USB Speed = HS
Buffer Size = Normal

Network Menu
Network I/F = On
Network Config = No
Get IPAddress = Auto
NetWare = On
AppleTalk = On
MS Network = On
Rendezvous = On
Link Speed = Auto
Buffer Size = Normal

LJ4 Menu
FontSource = Resident
Font Number = 0
Pitch = 10.00cpi
SymSet = IBM-US
Form = 64Lines
Source SymSet = 277
Dest SymSet = 277
CR Function = CR
LF Function = LF
Tray Assign = 4K

GL2 Menu
GLMode = LJ4GL2
Scale = Off
Origin = Corner
Pen = Pen0
End = Butt
Join = Mitered
Pen0 = 0.35mm
Pen1 = 0.35mm

ESCP2 Menu
Font = Courier
Pitch = 10cpi
Condensed = Off
T.Margin = 0.50inch
Text = 66Lines
CGTable = PcUSA
Country = USA
Auto CR = On
Auto LF = Off
Bit Image = Dark
ZeroChar = O

FX Menu
Font = Courier
Pitch = 10cpi
Condensed = Off
T.Margin = 0.50inch
Text = 66Lines
CGTable = PcUSA
Country = USA
Auto CR = On
Auto LF = Off
Bit Image = Dark
ZeroChar = O

I239X Menu
Font = Courier
Pitch = 10cpi
Code Page = 437
T.Margin = 0.40inch
Text = 67Lines
Auto CR = Off
Auto LF = Off
Alt. Graphics = Off
Bit Image = Dark
ZeroChar = O
CharacterSet = 2

Hardware Configuration

Serial No.	**********
Installed Memory	128 MB(131072 KB)
Available Memory	122.8 MB(125837 KB)
Firmware Revision	21403
Font Data Revision	00005206
Installed Emulation	LJ4,GL2 ESC/Page-Color ESCP2,FX,I239X
Installed Interface	Parallel USB Network
LAN HW Address	000048BA8FDD
LAN HW Revision	0
LAN FW Revision	02.30

Other Options
Lower Cassette 2
Lower Cassette 3
Lower Cassette 4
Duplex Unit

Non-genuine cartridge installed.
Using a non-genuine cartridge may affect print quality.
Genuine EPSON cartridge recommended.

IA0244*A0510MC3007030070 ********** JC000002IC000000000000 000000000000

SEIKO EPSON CORPORATION

Figure 1-13. Status Sheet

1.20 Engine Status Sheet

CAUTION

Do not disclose this information to the user.

It can be output from the Maintenance Menu. Refer to Chapter 6 "MAINTENANCE" *(p.477)* for the Engine Status Sheet.

manuals4you.com

1.21 Color Registration Adjustment Sheet

This is a production master sheet for adjustment of color registration (main scanning direction).
An example of the Color Registration Adjustment Sheet is shown below. (For details, refer to Chapter 5 "ADJUSTMENT" *(p.458)*.)

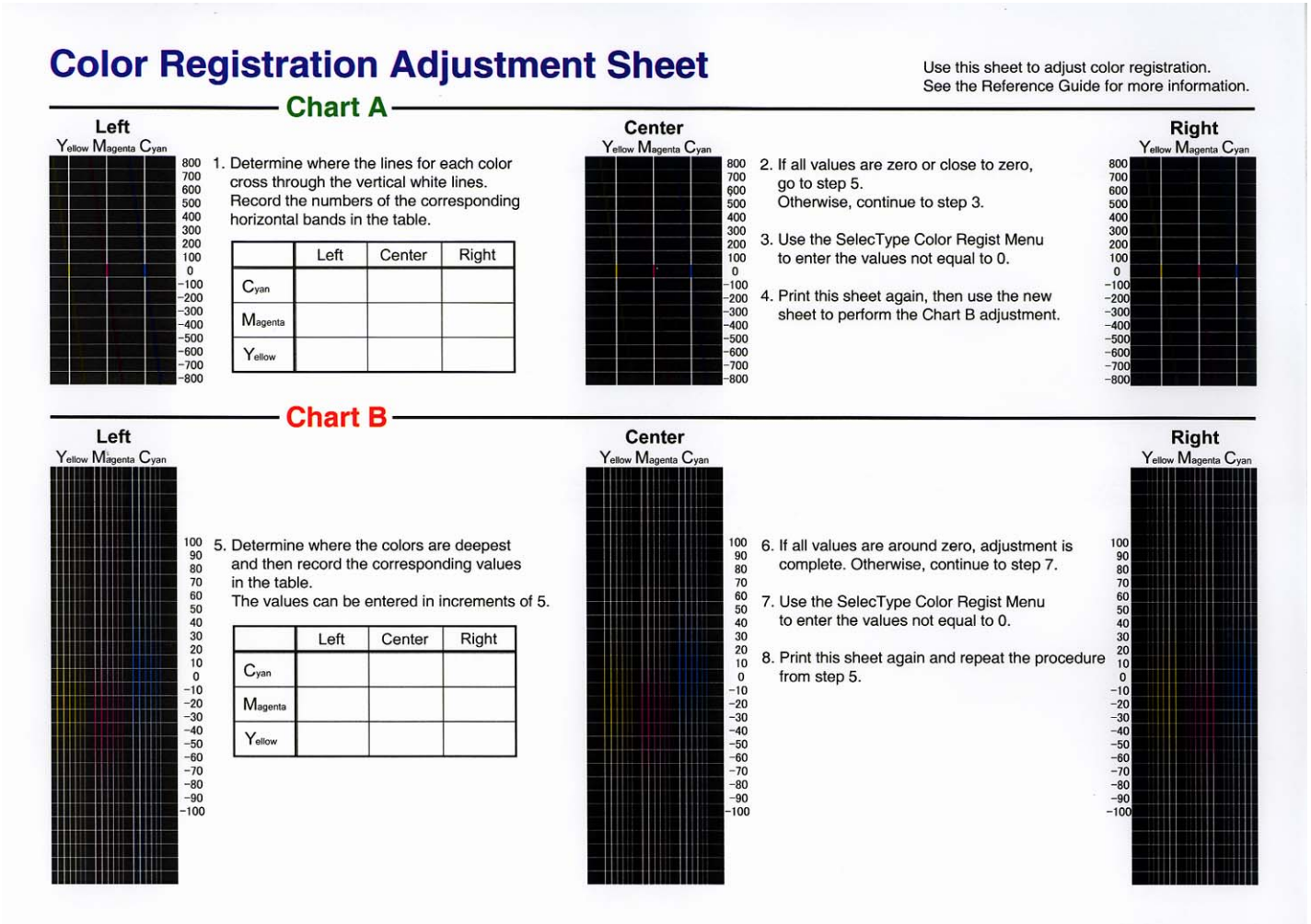

Color Registration Adjustment Sheet

Use this sheet to adjust color registration.
See the Reference Guide for more information.

Chart A

Left / Center / Right

Yellow Magenta Cyan

800 700 600 500 400 300 200 100 0 −100 −200 −300 −400 −500 −600 −700 −800

1. Determine where the lines for each color cross through the vertical white lines. Record the numbers of the corresponding horizontal bands in the table.

	Left	Center	Right
Cyan			
Magenta			
Yellow			

2. If all values are zero or close to zero, go to step 5. Otherwise, continue to step 3.
3. Use the SelecType Color Regist Menu to enter the values not equal to 0.
4. Print this sheet again, then use the new sheet to perform the Chart B adjustment.

Chart B

Left / Center / Right

Yellow Magenta Cyan

100 90 80 70 60 50 40 30 20 10 0 −10 −20 −30 −40 −50 −60 −70 −80 −90 −100

5. Determine where the colors are deepest and then record the corresponding values in the table. The values can be entered in increments of 5.

	Left	Center	Right
Cyan			
Magenta			
Yellow			

6. If all values are around zero, adjustment is complete. Otherwise, continue to step 7.
7. Use the SelecType Color Regist Menu to enter the values not equal to 0.
8. Print this sheet again and repeat the procedure from step 5.

Figure 1-14. Color Registration Adjustment Sheet

1.22 Configuration Sheet

This is a sheet for adjustment of color registration (main scanning direction). It can also be used for checking color registration.
An example of the Configuration Sheet is shown below. (For details, refer to Chapter 5 "ADJUSTMENT" *(p.458)*.)

Figure 1-15. Configuration Sheet

manuals4you.com

1.23 Paper Handling Algorithm

The relationship between paper type, type and size is shown below.

Table 1-67. Engine control, CM

Paper size	Paper type	EJL side	Paper feed	Type of paper specified by the driver (host)	Tray or cassette 1- 4 Type *2	Engine control (Video Media Type)	CM
Envelope*1	---	---	---	---	---	Envelope	Plain paper
Other than the above	Plain paper	Front	Automatic	Specified	Plain paper, Letterhead, Recycled, paper, Colored paper	Plain Paper 2	Refer to P85, "CM 1"
					High quality paper	Fine Paper	Refer to P85, "CM 1"
					Transparency	OHP	Refer to P85, "CM 1"
					Labels	Label 2	Refer to P85, "CM 1"
				Not specified	---	Plain Paper 2	Refer to P85, "CM 2"
			Other than automatic	---	---	Plain Paper 2	Refer to P85, "CM 2"
		Back	Automatic	Specified	Plain paper, Letterhead, Recycled, paper, Colored paper	Plain Paper 2 Back	Refer to P85, "CM 1"
					High quality paper	Plain Paper Back	Refer to P85, "CM 1"
					Transparency	OHP	Refer to P85, "CM 1"
					Labels	Label 2	Refer to P85, "CM 1"
				Not specified	---	Plain Paper 2 Back	Refer to P85, "CM 2"
			Other than automatic	---	---	Plain Paper 2 Back	Refer to P85, "CM 2"
	High quality paper	Front	---	---	---	Fine Paper	Plain paper
		Back	---	---	---	Fine Paper Back	Plain paper
	Thick paper	Front	---	---	---	Thick Paper 1	Plain paper
		Back	---	---	---	Thick Paper 1 Back	Plain paper
	Special thick paper	Front	---	---	---	User Mode	Plain paper
		Back	---	---	---	User Mode Back	Plain paper
	Thick small	Front	---	---	---	Post Card	Plain paper
		Back	---	---	---	Post Card Back	Plain paper
	Transparency	-	---	---	---	OHP	OHP
	Coated paper	Front	---	---	---	Coated Paper 1	Plain paper
		Back	---	---	---	Coated Paper1 Back	Plain paper

Note "*1": MON, C10, DL, C6, IB5

"*2": The paper type actually supplied, set in the panel for the feeder.

Table 1-68. CM 1

CM Media Type	Tray or cassette 1-4 Type*1	CM
Off	Plain paper, High quality paper, Letterhead, Recycled paper, Colored paper, Labels	Plain paper
	Transparency	OHP
Option 1	---	Option 1
Option 2	---	Option 2

Note "*1": Refer to the "1.2.2 Printer Basic Specifications" *(p23)* for the printing speed.

Table 1-69. CM 2

CM Media Type	CM
Off	Plain paper
Option 1	Option 1
Option 2	Option 2

PAPER FEED

Table 1-70. Paper feed

Paper size	Paper type	Paper source
MON, C10, DL, C6, IB5, User defined size	---	MP tray
---	Thick paper, Special thick paper, Thick small paper, Transparency, Coated paper	MP tray

Note : In cases other than above, the paper source is determined by an algorithm predetermined by the type of paper specified by the paper source and driver (host), and tray or cassette 1-4 type.

AUTOMATIC DUPLEX

Table 1-71. Automatic duplex

Paper size	Paper type	Paper source
A4, A3, A5, B4, B5, LT, HLT, LGL, GLT, GLG, B, EXE, F4	Plain paper, High quality paper	Possible

Note 1: In cases other than above, automatic duplex is not possible.

2: With automatic duplex printing, Side = Back is ignored if set, and printing is as for Side = Front.

manuals4you.com

CHAPTER

2

OPERATING PRINCIPLES

2.1 Print Process

2.1.1 Overview

This printer is a “Full color laser printer” that uses the principle of electrophotographic recording. Each YMCK color (yellow, magenta, cyan, black) has its own special drum and developer that are used in tandem, three Intermediate Data Transfer rollers are coordinated (2 IDT 1 rollers, 1 IDT 2 roller), and at the end of the process the layered color toner images produce a full color print.

The major steps of the print process are described below.

(1) Charging : The drum surfaces are charged with electricity.

(2) Exposure : Image areas are exposed on drums with laser radiation.

(3) Developing : Image areas on drums are developed with toner.

(4) Primary transfer : The toner image on drums is transferred to transfer rollers (IDT1).

(5) Secondary transfer : The toner images on primary transfer rollers (IDT 1) are transferred to the secondary transfer roller (IDT 2).

(6) Cleaning : Primary transfer rollers (IDT 1) are cleaned.

(7) Tertiary transfer : The complete four-color toner image on the secondary transfer roller (IDT 2) is transferred to the paper.

(8) Cleaning : Secondary transfer roller (IDT 2) is cleaned.

(9) Electrical discharge : The electrical charge of the paper is discharged.

(10) Fusing : Toner on the paper is fixed with heat and pressure.

(11) Cleaning : Residual toner on the drums and transfer rollers is collected.

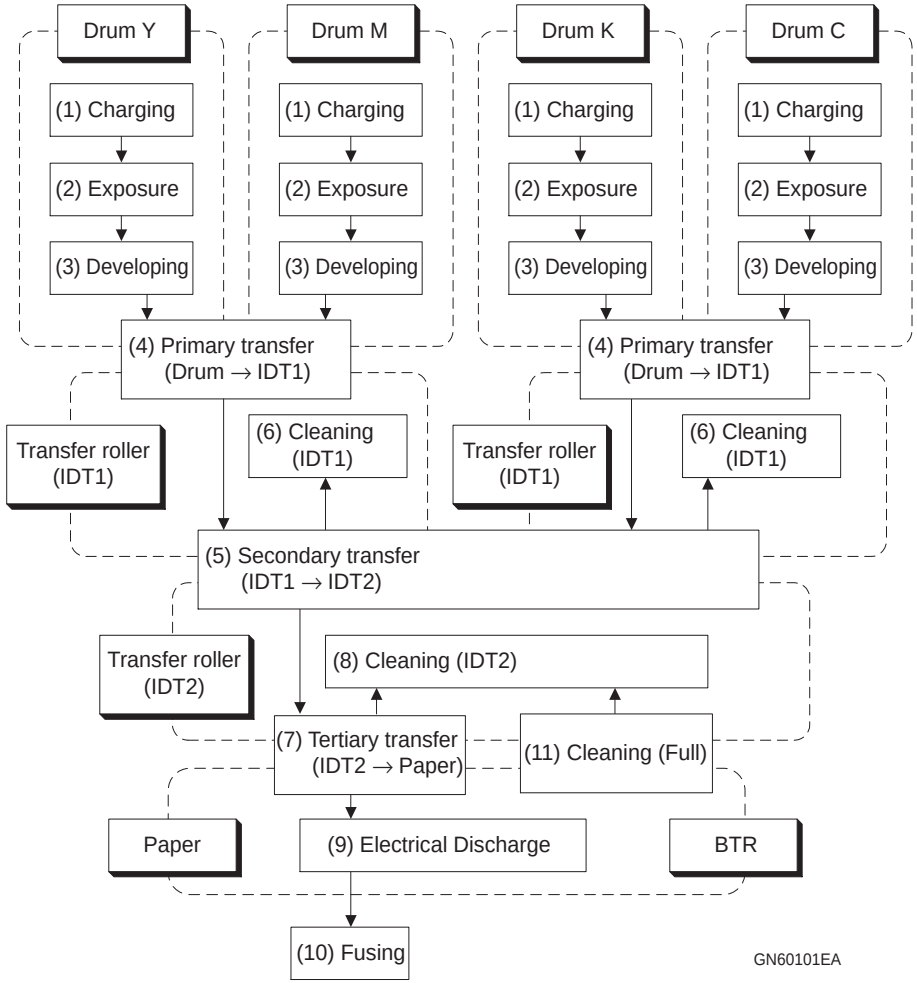

Figure 2-1. Print Process Overview

manuals4you.com

2.1.2 Print Process Diagram

The diagram below illustrates the entire print process.

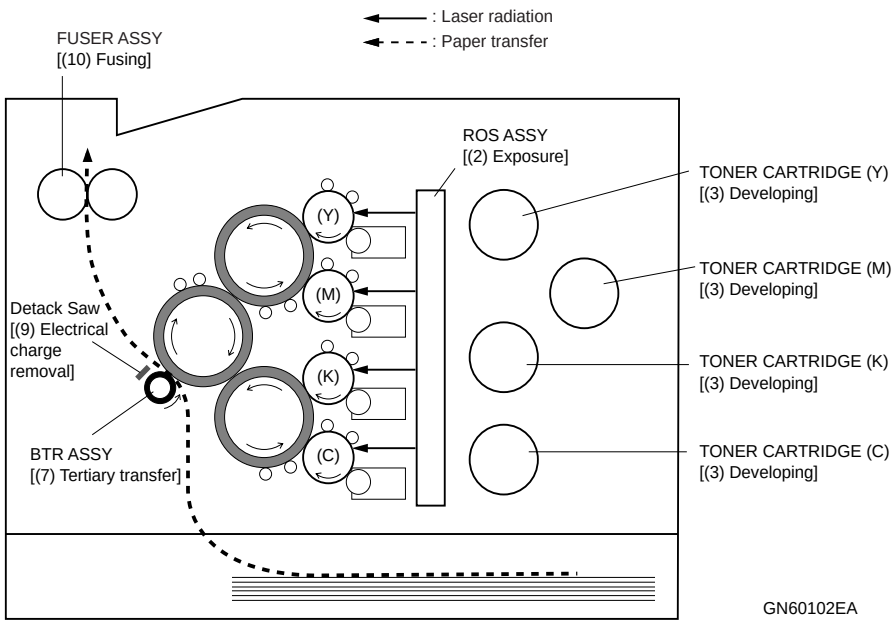

Figure 2-2. All major components for feeding paper

All major components of the printing process are consolidated in the IDT UNIT, as shown in the diagram below.

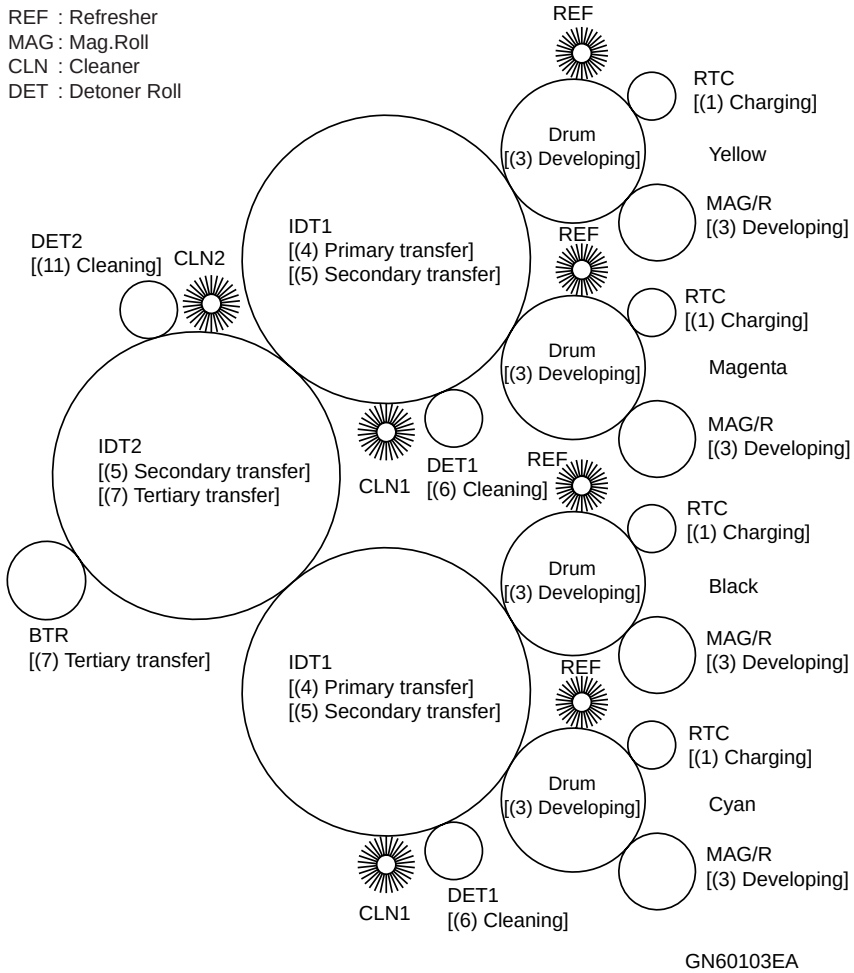

Figure 2-3. Print Process-Related Components

2.1.3 Technical Explanation

Supplementary explanation for the (10) Fusing and (11) Cleaning in the major steps are given below.

2.1.3.1 Fusing

At the “Fusing” process, toner is fixed on paper with heat and pressure.

The toner image that is transferred to the paper by IDT 2 can be easily smudged by even a light touch of a finger, so the toner image is fixed to the paper by the FUSER UNIT.
With the Heater Lamp as its heat source, the Heat Roll melts the toner, then components inside the Belt opposite the Heat Roll applies pressure to the paper and the toner is fixed in place.

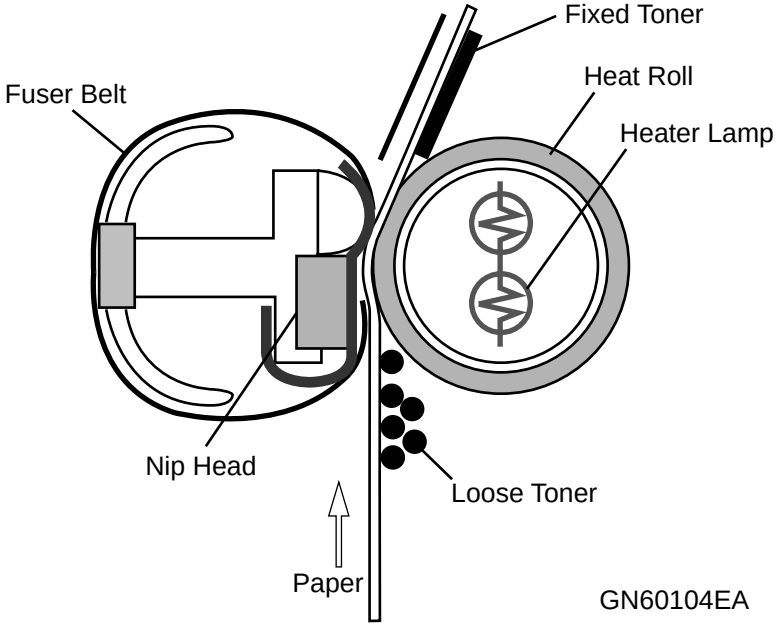

Figure 2-4. Fusing

manuals4you.com

2.1.3.2 Cleaning (Full)

Toner that is not transferred during printing is retained on the Refresher (brush shape), Cleaner1 and Cleaner2, then at the Cleaning Cycle process, the retained toner is cleaned out and absorbed to Detoner Roll to be collected in the Waste Toner Box.

There are two types of Cleaning Cycle; one is a straight polarity cleaning that collects toner with an opposite electrical charge on, and the other is an opposite polarity cleaning that collects toner with a straight polarity.

- Output Voltage Polarity during Cleaning
  The output voltage polarity for each component during printing, straight polarity cleaning and opposite polarity cleaning are shown in the following table.

Table 2-1. The List of Output Voltage Polarity at the Cleaning

	RTC	REF	IDT1	IDT2	BTR	DET1	DET2	CLN1/ CLN2
During Printing	–	–	+	+	+	+	0	+
During Straight Polarity Cleaning	–	–	+	+	–	0	+	0
During Opposite Polarity Cleaning	0	0	–	–	+	–	0	0

- During Printing

When transferring toner on the Drum to IDT1, opposite polarity (plus) toner that could not be transferred and returned to the Drum is retained in the Refresher.

When transferring toner on the IDT1 to IDT2, straight polarity (minus) toner that could not be transferred is retained in the Cleaner1. Toner that changed to opposite polarity (plus) is absorbed by the Detoner Roll1 and collected in the Waste Toner Box. When transferring toner on the IDT2 to paper, straight polarity (minus) toner that could not be transferred is absorbed by the Detoner Roll2 and collected in the Waste Toner Box. Toner that could not be absorbed by the Detoner Roll2 is retained in the Cleaner2.

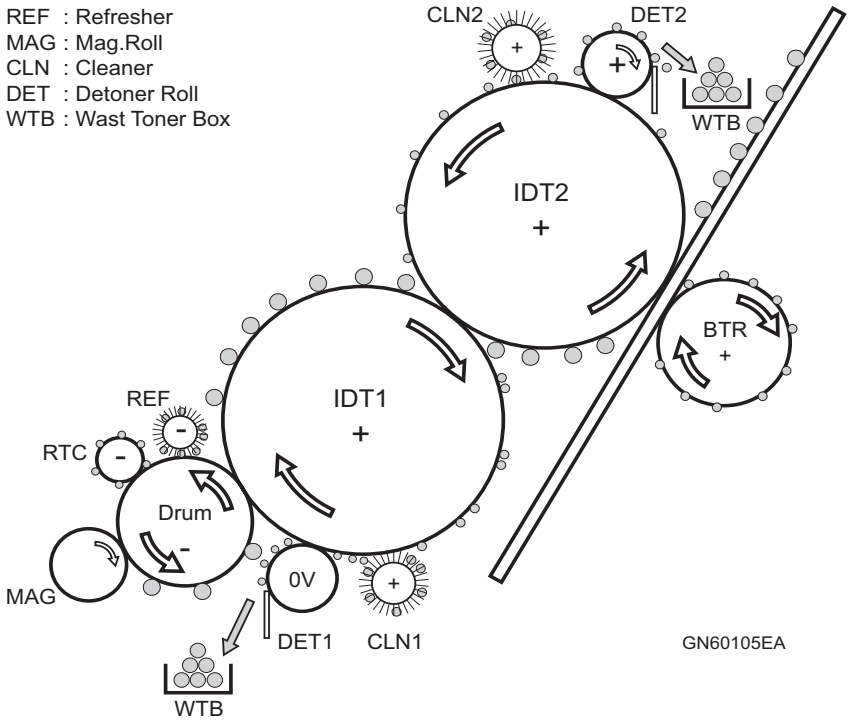

Figure 2-5. Cleaning Steps during Printing

☐ Straight Polarity Cleaning

Collects straight polarity (minus) toner that is retained in brushes and BTR. Let the voltage of each roll polarize as shown in the following figure to transfer toner, that is retained in the Cleaner1 and Cleaner2, and that adheres to BTR, to IDT1 and IDT2, and collect the toner in the Waste Toner Box by Detoner Roll1 and Detoner Roll2. Toner that is retained in the Cleaner1 is, as the process during printing, transferred to IDT1 and then IDT2, and then absorbed by the Detoner Roll2 to be collected in the Waste Toner Box . To Toner that adheres to BTR is also transferred to IDT2, and absorbed by the Detoner Roll2 to be collected in the Waste Toner Box.

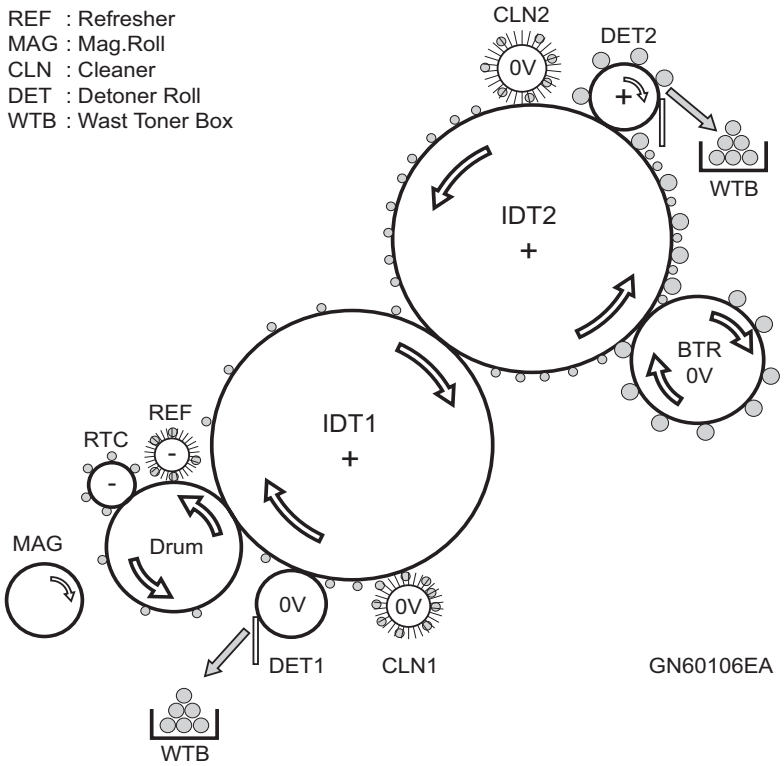

Figure 2-6. Steps of Straight Polarity Cleaning

☐ Opposite Polarity Cleaning

Collects opposite polarity (plus) toner that is retained in brushes and BTR. Let the voltage of each roll polarize as shown in the following figure to collect toner with straight polarity that is retained in the Refresher.
Toner that is retained in the Refresher is, as the process during printing, transferred to IDT1 and then IDT2, and then absorbed by the Detoner Roll2 to be collected in the Waste Toner Box . To Toner that could not be transferred from IDT1 to IDT2 is absorbed by the Detoner Roll1 to be collected in the Waste Toner Box.

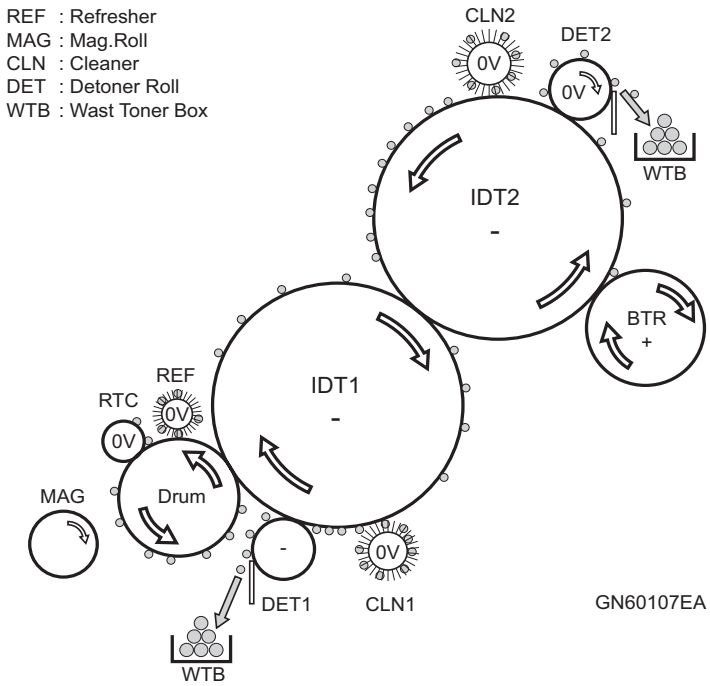

Figure 2-7. Steps of Opposite Polarity Cleaning

manuals4you.com

2.2 Flow of Print Data

2.2.1 Data Flow

Print data (electric signal) from the Printer Controller follows the flow shown below to become a print image.

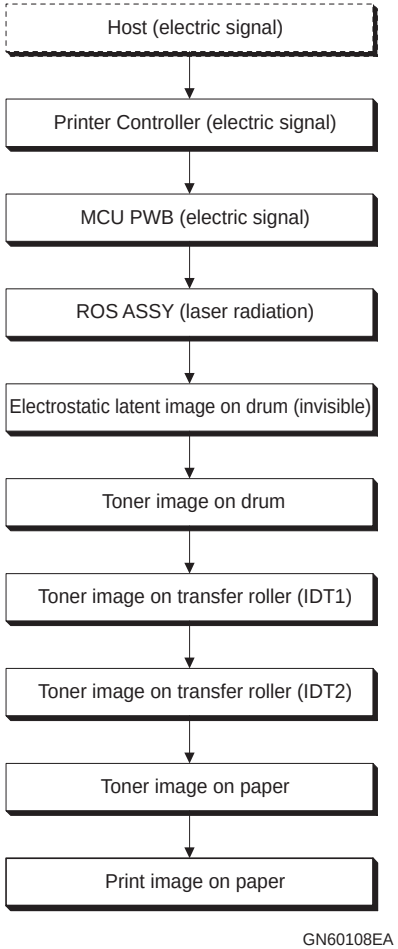

Figure 2-8. Overview of Producing Print Image

2.3 Drive Transmission Path

Drive transmission path from each motor is given below.

2.3.1 DRIVE ASSY MAIN

2.3.1.1 DRIVE ASSY MAIN → DEVE UNIT

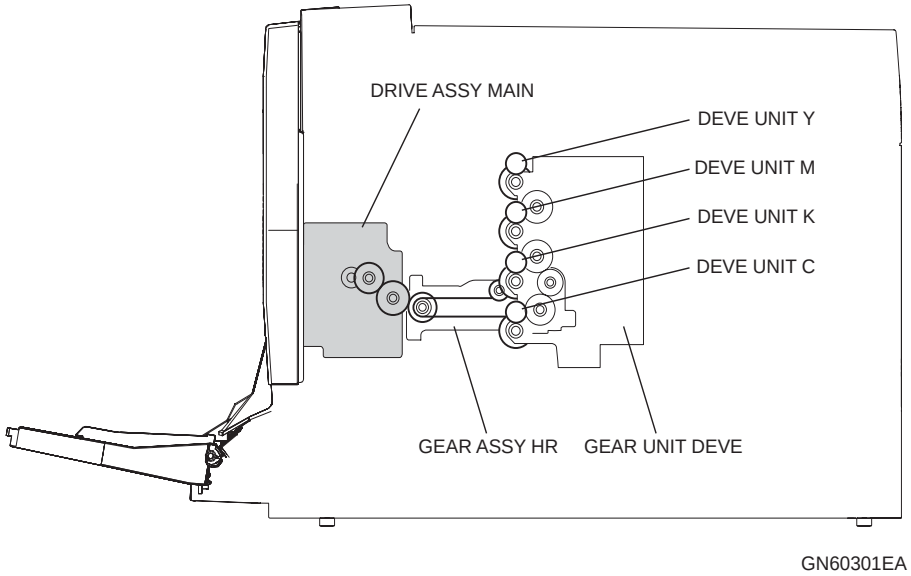

Figure 2-9. Diagram of Drive Transmission Path

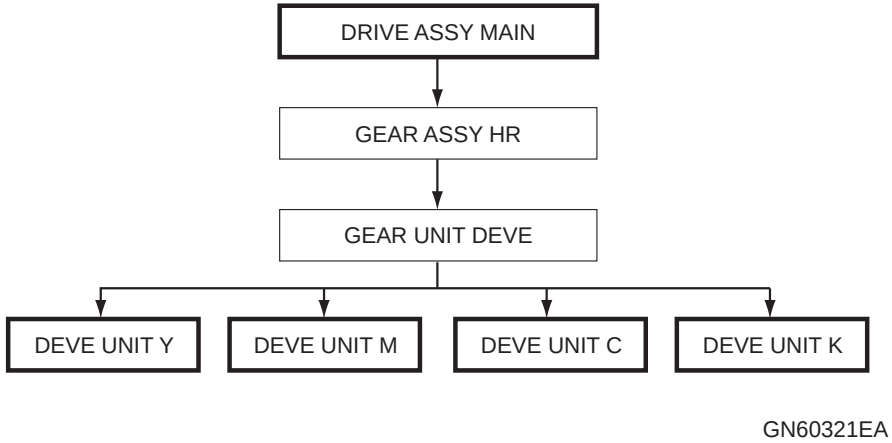

Figure 2-10. Drive Transmission Flow

manuals4you.com

2.3.1.2 DRIVE ASSY MAIN → Fuser unit/TRANSPORT EXIT ASSY/PH MAIN ASSY/CHUTE ASSY FUT

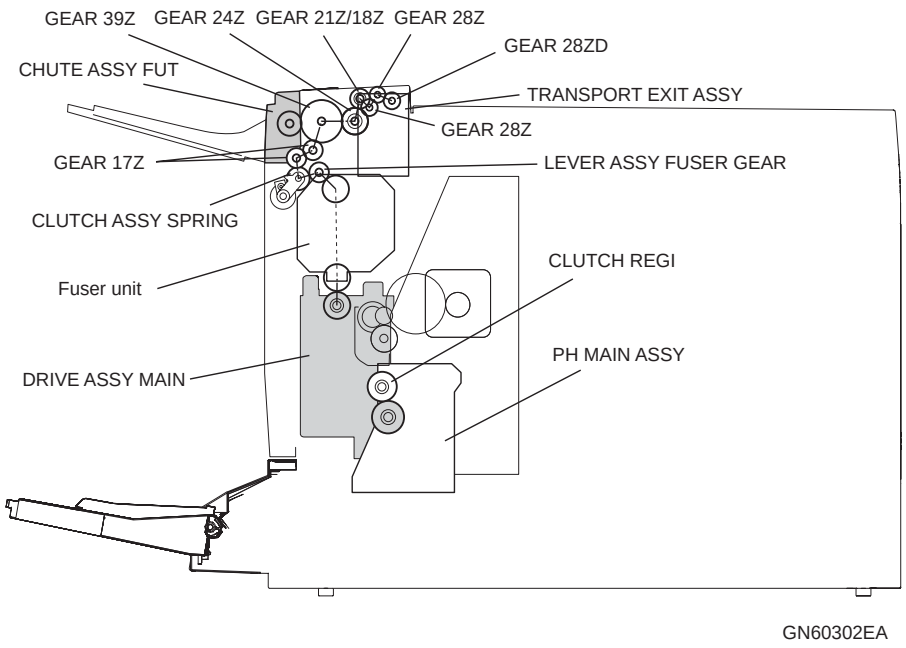

Figure 2-11. Diagram of Drive Transmission Path

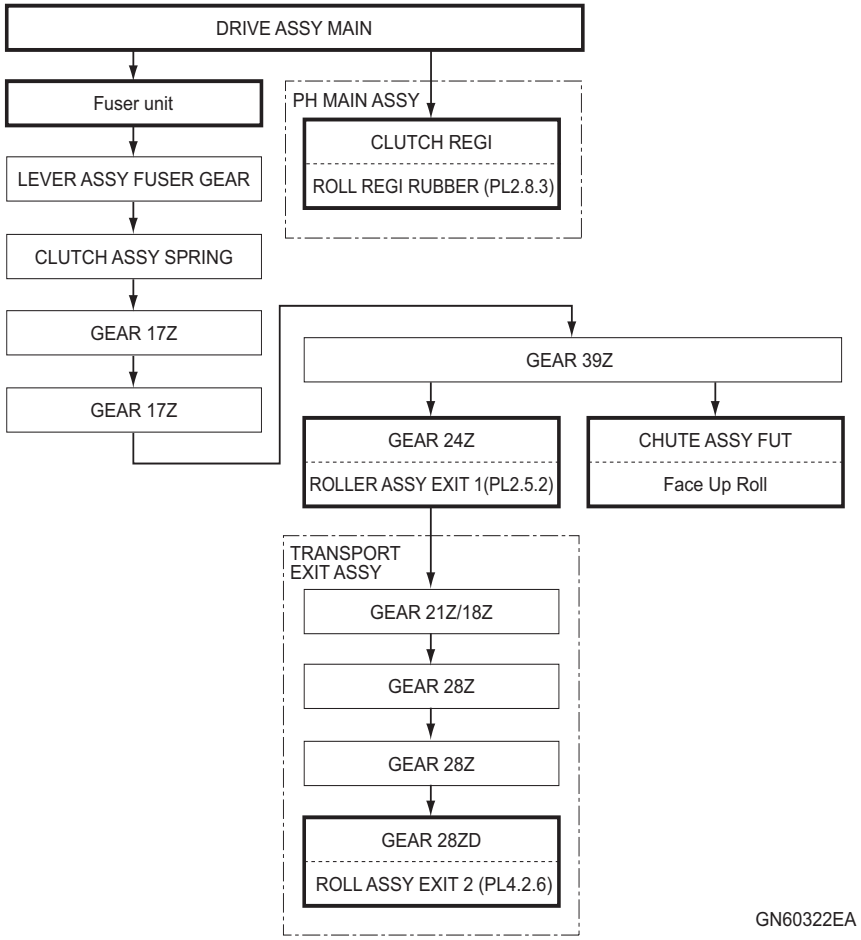

Figure 2-12. Drive Transmission Flow

2.3.1.3 DRIVE ASSY MAIN → MSI

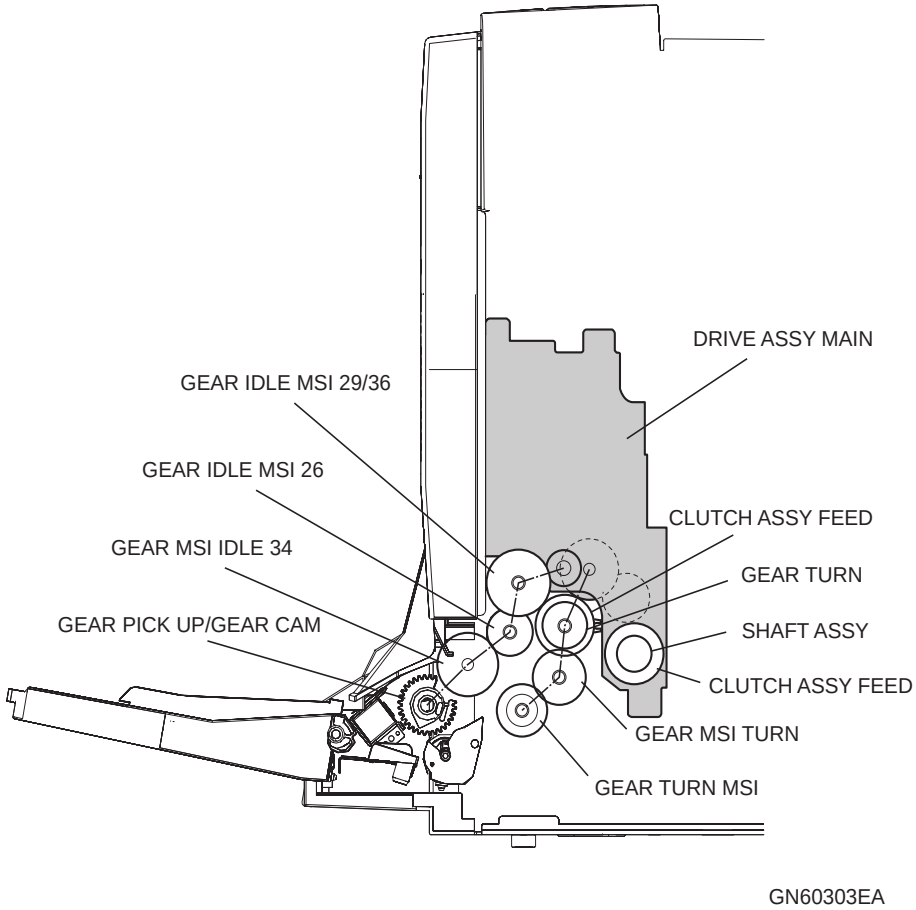

Figure 2-13. Diagram of Drive Transmission Path

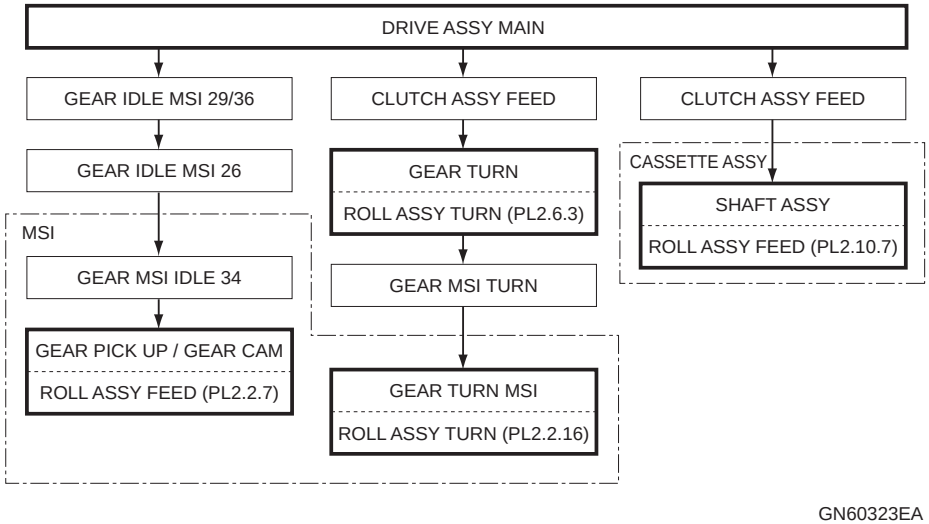

Figure 2-14. Drive Transmission Flow

manuals4you.com

2.3.2 DRIVE ASSY PR

2.3.2.1 DRIVE ASSY PR → IDT UNIT/Photoconductor unit/BTR UNIT ASSY

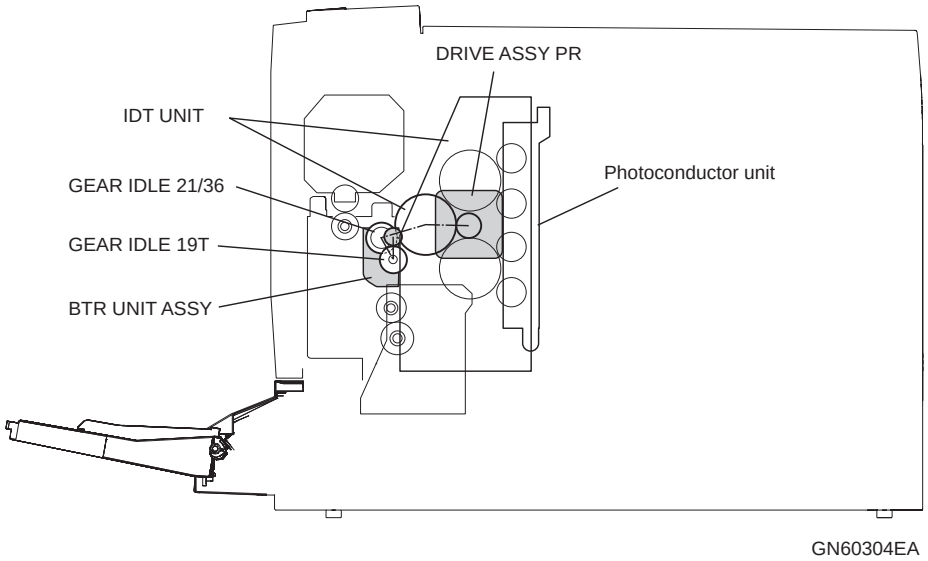

Figure 2-15. Diagram of Drive Transmission Path

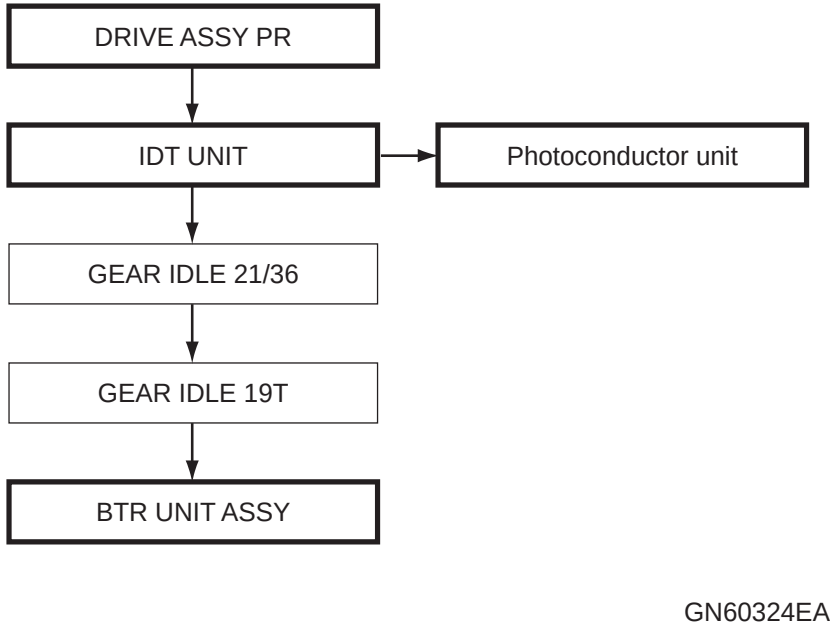

Figure 2-16. Drive Transmission Flow

2.3.3 DUPLEX ASSY

2.3.3.1 EXIT MOTOR → TRANSPORT EXIT ASSY

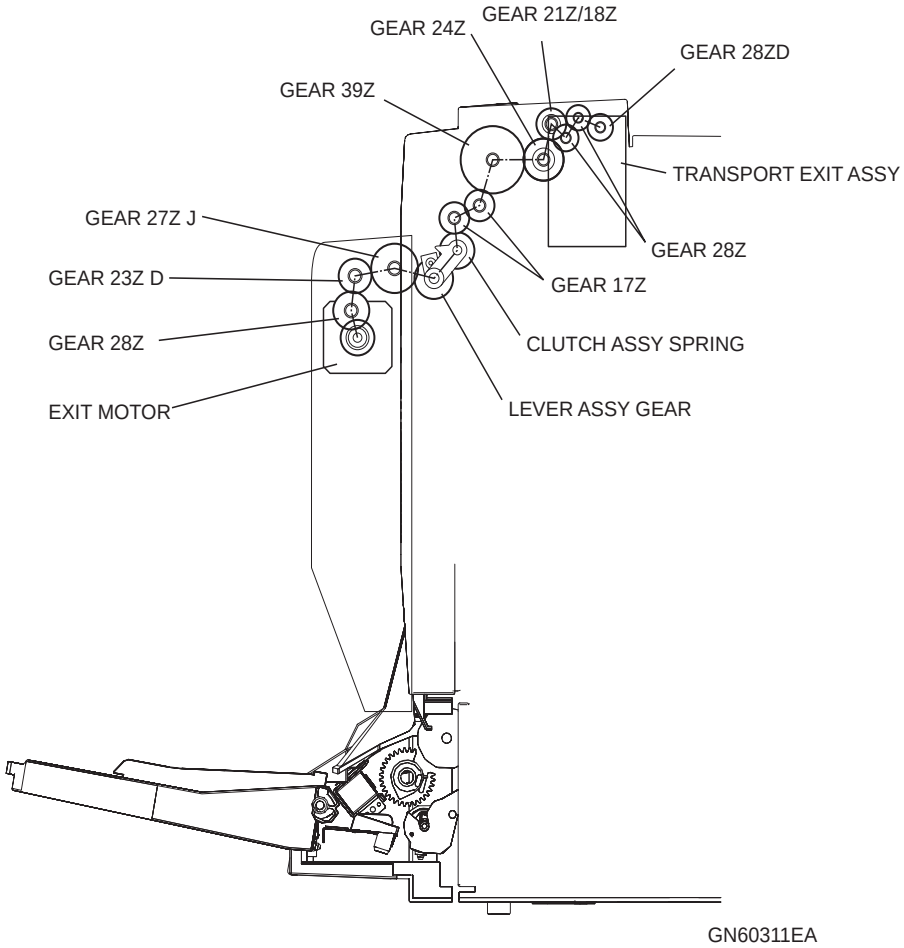

Figure 2-17. Drive Transmission Path

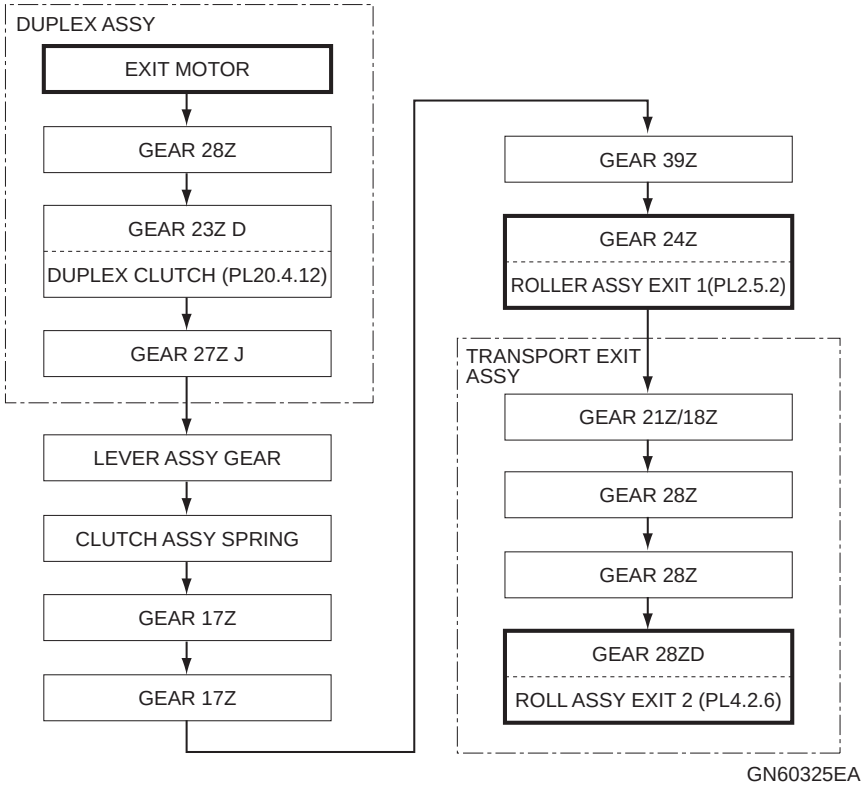

Figure 2-18. Drive Transmission Flow

manuals4you.com

2.3.3.2 DUPLEX MOTOR

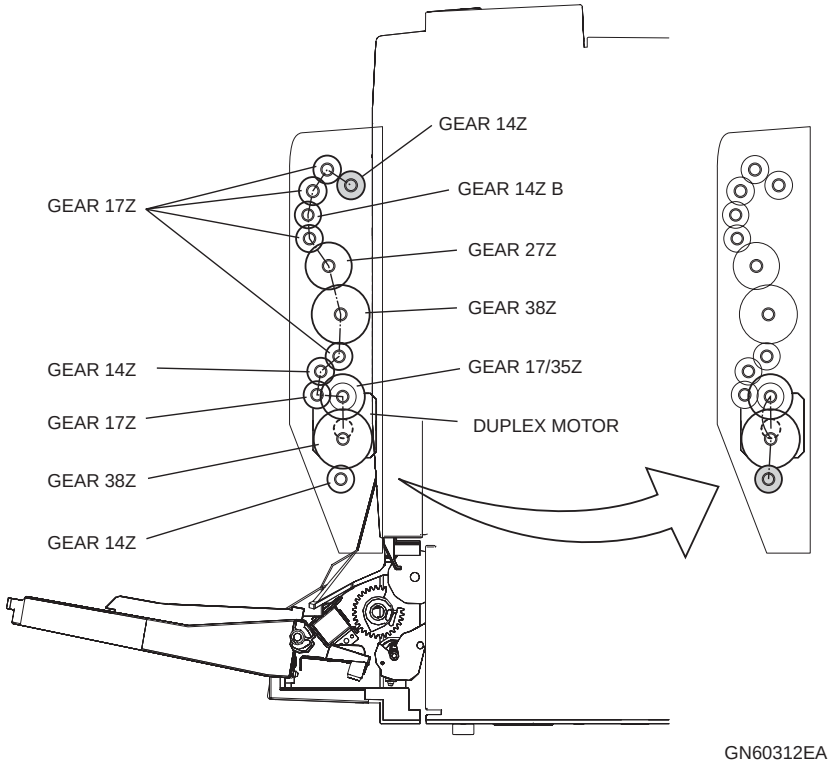

Figure 2-19. Drive Transmission Path

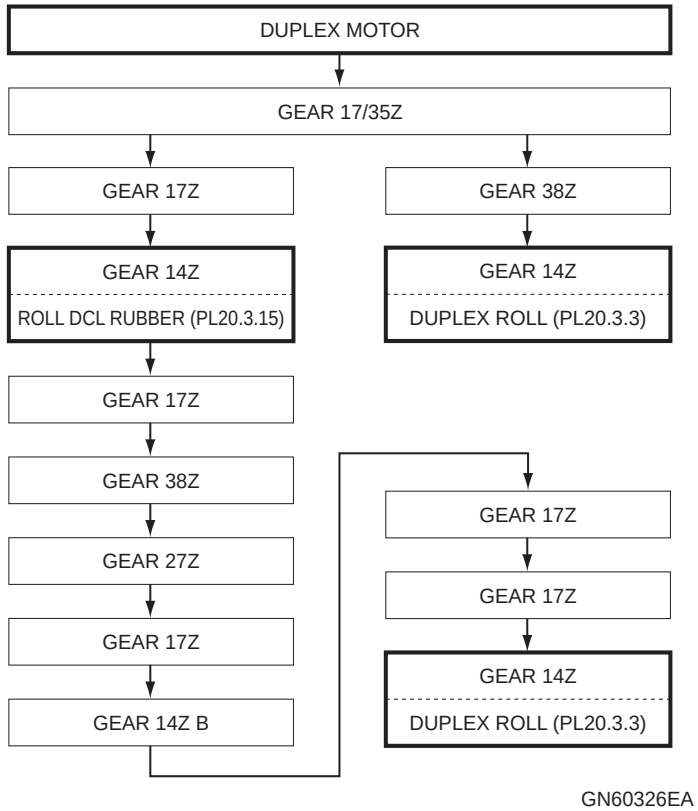

Figure 2-20. Drive Transmission Flow

2.3.4 3 Tray Module

2.3.4.1 TRAY FEED/LIFT MOTOR → TRAY ASSY

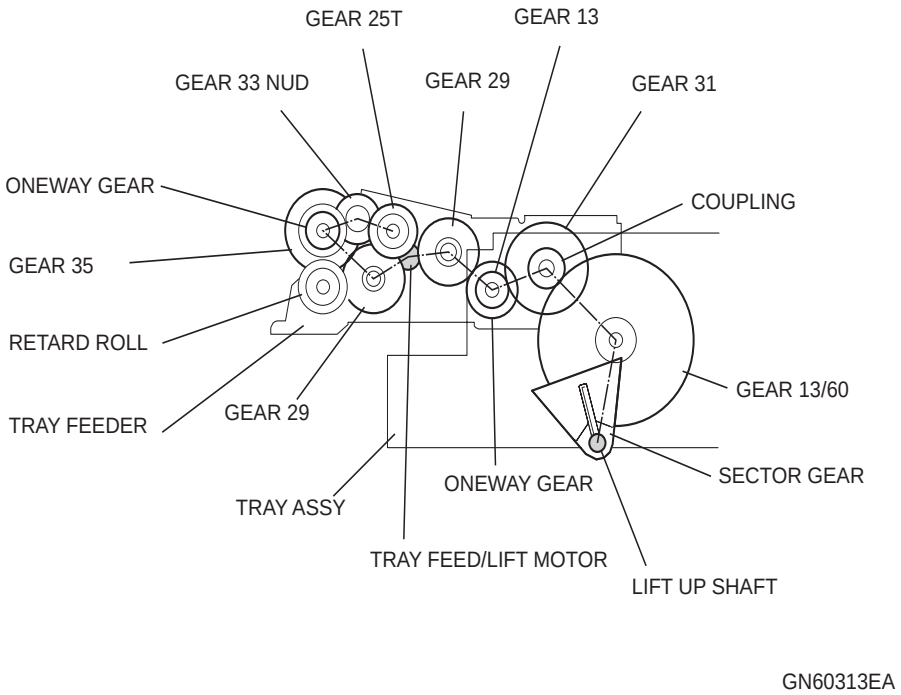

Figure 2-21. Drive Transmission Path

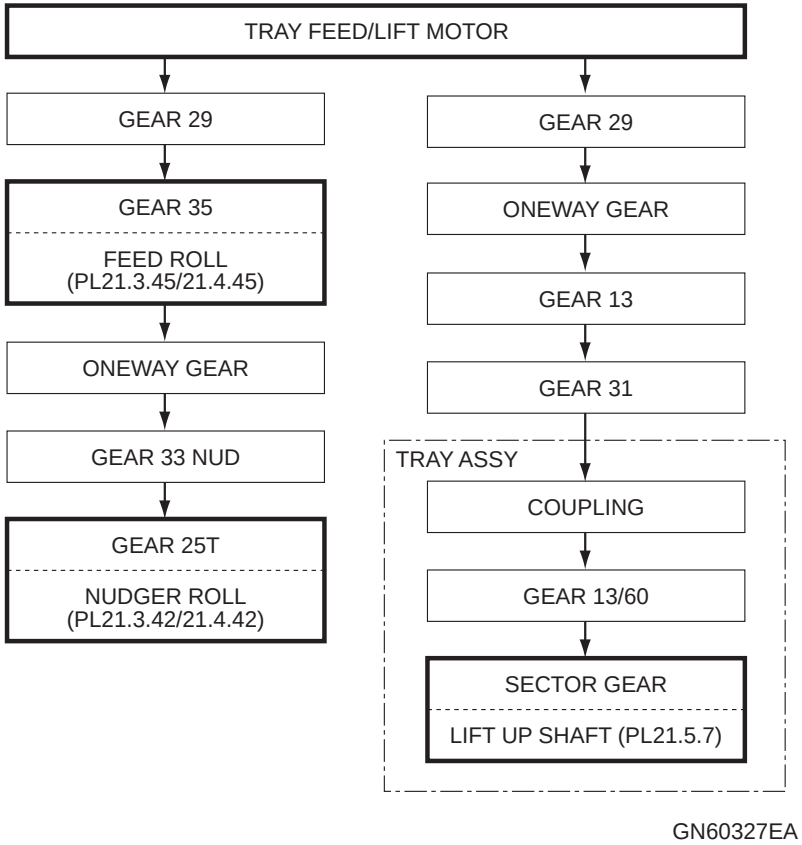

Figure 2-22. Drive Transmission Flow

manuals4you.com

2.3.4.2 MOTOR ASSY 3TM

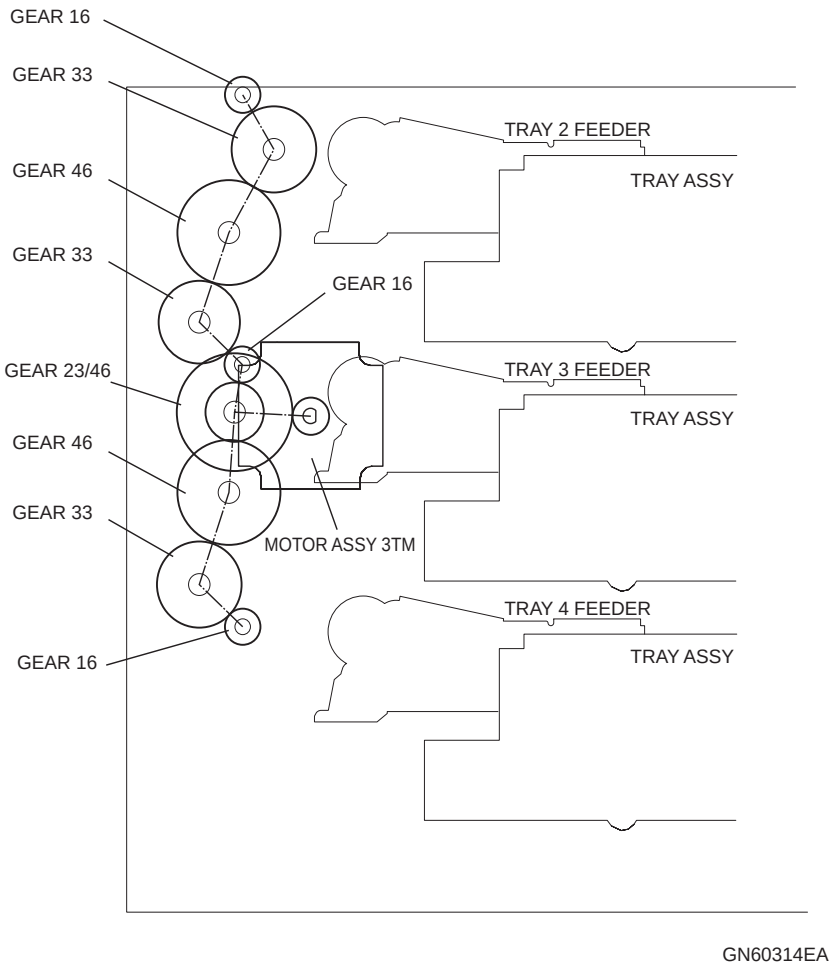

Figure 2-23. Drive Transmission Path

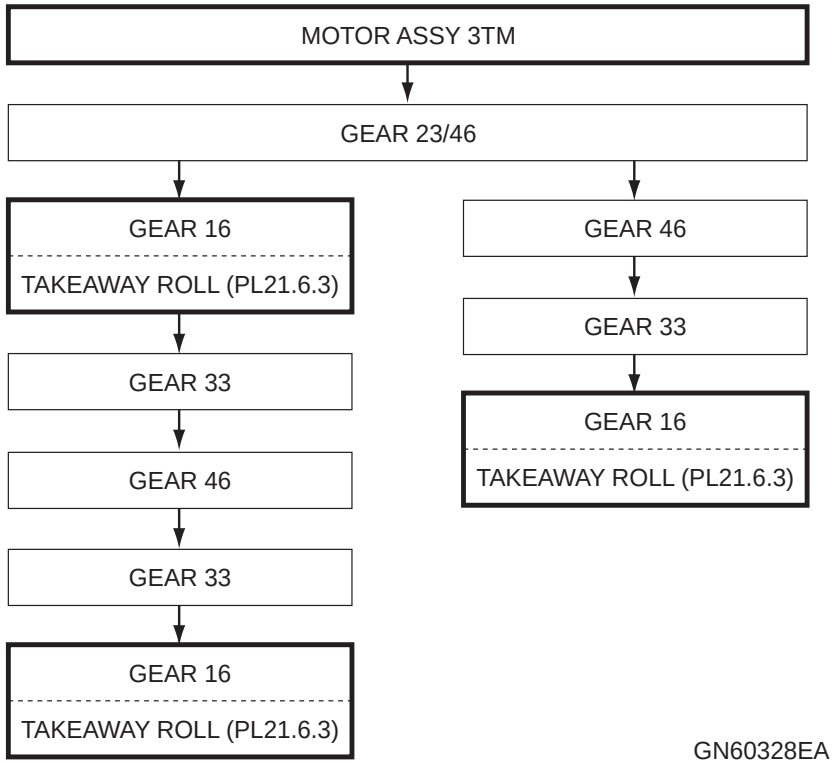

Figure 2-24. Drive Transmission Flow

manuals4you.com

2.3.5 Single Tray Module

2.3.5.1 TRAY FEED/LIFT MOTOR → TRAY ASSY

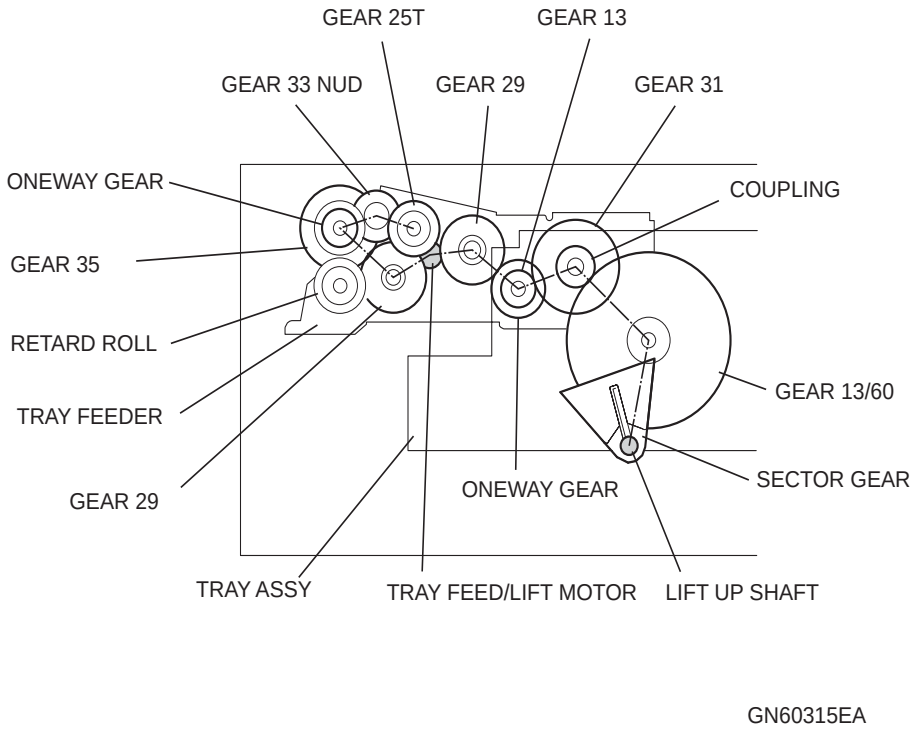

Figure 2-25. Drive Transmission Path

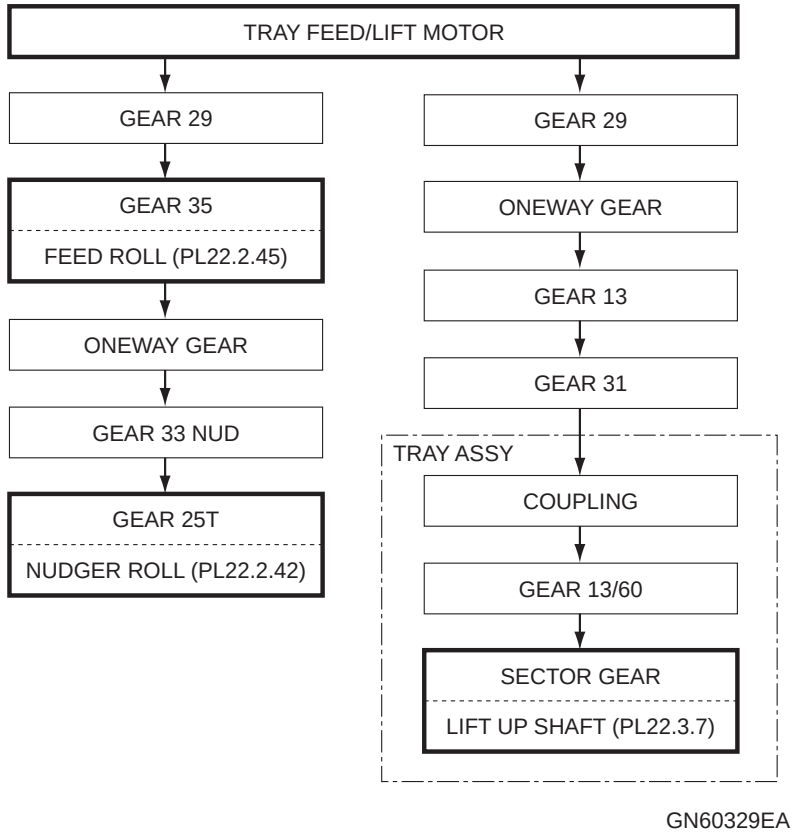

Figure 2-26. Drive Transmission Flow

manuals4you.com

2.3.5.2 MOTOR ASSY STM

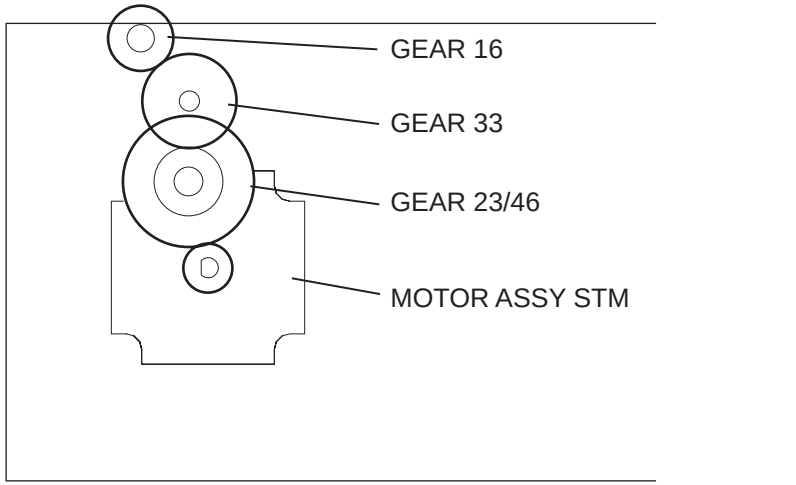

GN60316EA

Figure 2-27. Drive Transmission Path

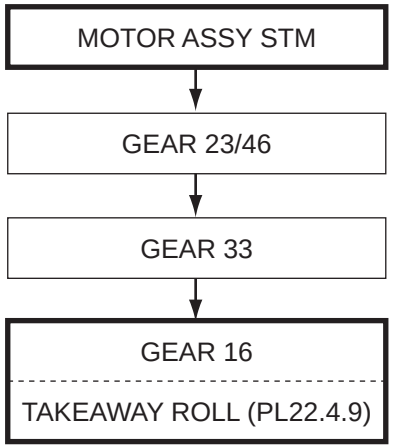

GN60330EA

Figure 2-28. Drive Transmission Flow

2.4 Feeding Paper

2.4.1 Paper Feed Path Layout

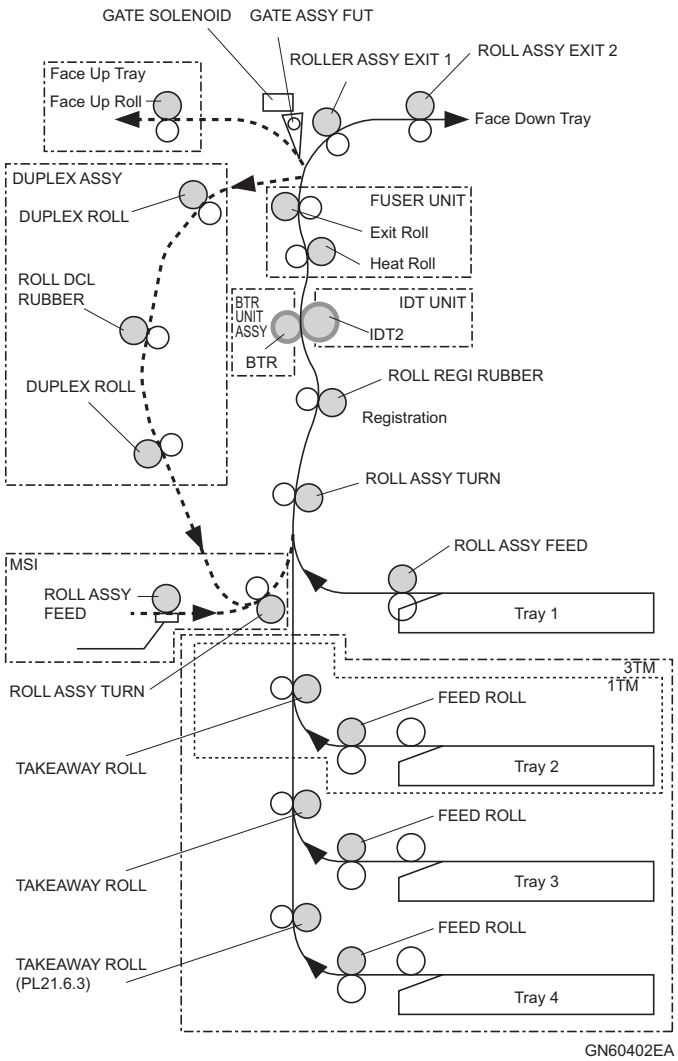

Figure 2-29. Paper Feed Path Layout

2.4.2 Paper Feed Path

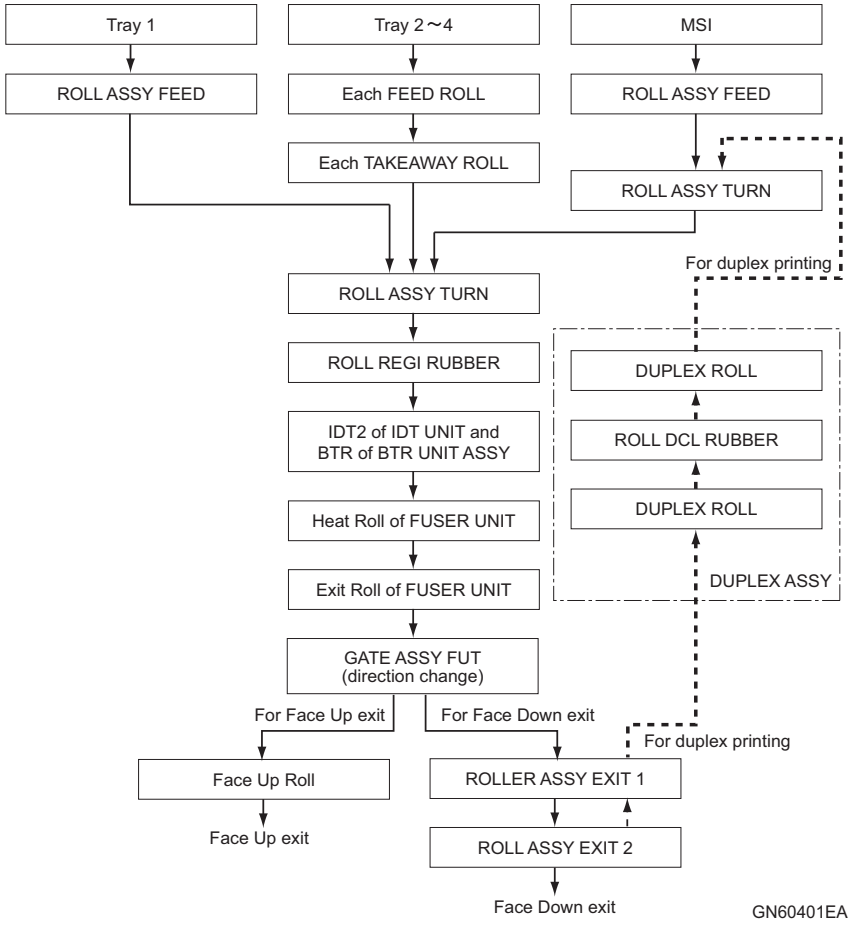

Figure 2-30. Paper Feed Path

manuals4you.com

2.5 Main Functions of Print Process

2.5.1 Main Structure and Functions

- Expose a laser beam image data on each charged color drum by raster scanning, and form an electrostatic latent image.
- Develop the electrostatic latent image to each color (Y,M,C,K) with toner.
- Transfer the yellow (Y) and magenta (M) toner images on the drums to the upper IDT1 (Intermediate Drum Transfer1) one by one, and transfer the black (K) and cyan (C) images on the drums to the lower IDT1 one by one (Primary Transfer).
- The toner image (Y+M) on the upper IDT1 and that (K+C) on the lower IDT1 are transferred and layered on IDT2 (Secondary transfer).
- The toner image on the IDT2 is transferred on paper (Tertiary transfer). And the following functions are carried out during doing the above processes.
- Operation of collecting remaining toner from the Drum and IDT.
- Controls the density of toner and light intensity for exposure.
- Detects the time to replace each component.

2.5.1.1 Part Name and the Functions

- Drum
  The surface is electrostatically-charged evenly. At the Exposing process, eliminate the charge on the image area and forms electronic concavity and convexity (latent image).
- REF (Refresher)
  Retain remaining toner (cleaning) when doing Primary transfer (Drum to IDT1), eliminate product made by discharge and help to charge.
- RTC (Rubber Tube Charger)
  Charge the surface of the Drum evenly.
- MAG (Mag. Roll)
  Develop an electrostatic latent image with toner.
- IDT1 (Intermediate Drum Transfer 1)
  Layers two toner images of the two Drums (Primary transfer). On each IDT1, two colors (toner) are combined.
- CLN1 (Cleaner1)
  Retain toner with straight polarity on each IDT1 (IDT1 Cleaning).
- DET1 (Detoner Roll1)
  Collects toner with opposite polarity and reverse flow (IDT1 Cleaning).
- CLN2 (Cleaner2)
  Retain toner as final; toner that could not be collected by Detoner Roll2. (IDT2 Cleaning)
- DET2 (Detoner Roll2)
  Collects toner on IDT2 and last toner that could not be transferred. (IDT2 Cleaning)
- IDT2 (Intermediate Drum Transfer2)
  Layers the two toner images on IDT1 and transfer them to IDT2 (Secondary transfer). Four color toner images are combined on IDT2.
- BTR (Bias Transfer Roll)
  Transfers the toner image on IDT2 to paper, and feeds the paper to the Fuser.

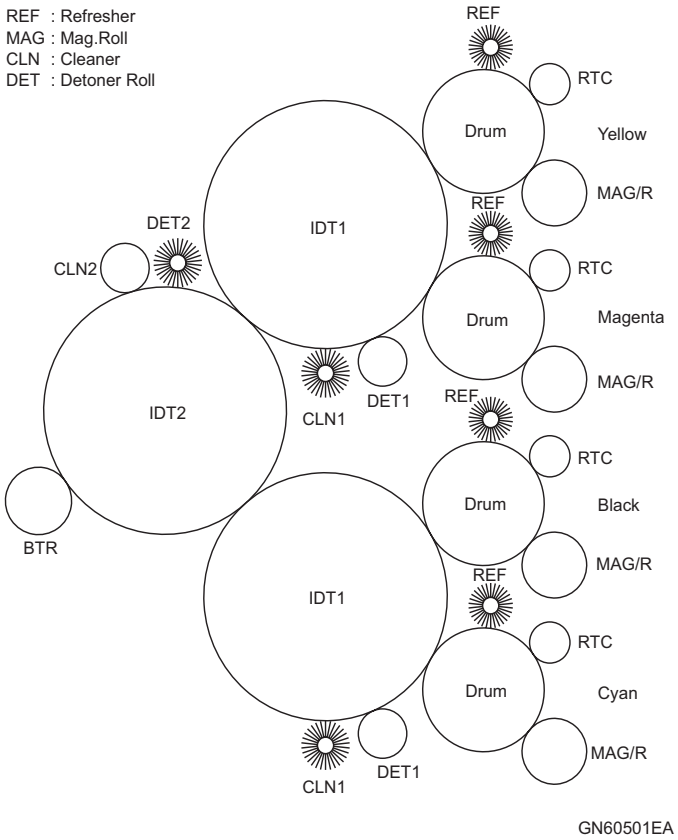

Figure 2-31. Print Process-Related Components

manuals4you.com

2.5.2 Drum

The followings are explanations about control of charging photoconductor, and control of detecting replacing time and so on.

2.5.2.1 Part Name and the Functions

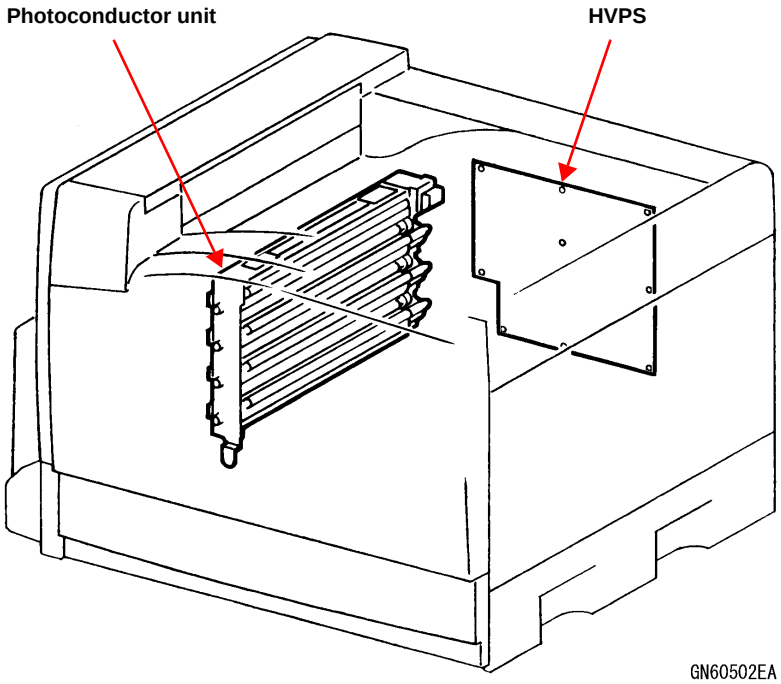

Figure 2-32. Major Components of Drum

- Photoconductor unit
  The unit consists of 4 Drums (Yellow, Magenta, Cyan, Black), RTC, Refresher and CRUM PWB.
- HVPS (High Voltage Power Supply)
  Generates output power to be supplied to each of four (Yellow, Magenta, Cyan, Black) RTC and Refresher, and for Development bias, IDT1, IDT2, Cleaner1, Cleaner2, Detoner Roll1, Detoner Roll2, BTR and DTS (Detack Saw).

2.5.2.2 Charging Control

Charges the surface of Drum evenly before exposing an image.

- RTC
  RTC is a conductive roll. Discharge voltage is supplied to RTC from HVPS, and the RTC discharges with minus DC voltage. By the discharging, the surface of Drum is charged evenly. RTC always contacts with Drum and moves together with the Drum.
- Refresher
  Refresher is a conductive brush and receives minus DC voltage from HVPS to collect toner with opposite polarity that is returned to Drum through IDT1. And eliminates product made by discharging.
- Timing of Charge
  When Fuser and RTC are in Ready status, supplying voltage to four RTCs and charging operation for all colors starts after receiving a print command and preparing for specified time. And charging Refresher is also done almost simultaneously.
- Charging Voltage
  Charging voltage is determined depending on the temperature and humidity in the machine.

2.5.2.3 Drum CRU Control

The Photoconductor unit of the printer is a consumable that requires users to replace. The time of replacing Drum is detected by number of copies and cumulative time of rotation of DRIVE ASSY PR. The number of copies are counted in terms of A4LEF size.

- Count Up
  The number of copies are counted in terms of A4LEF size.
  The time of rotation of DRIVE ASSY PR is counted each time it rotates at 8 msec (full speed) or 16 msec (half speed).
- Near-End Detection
  Detects Near-End state when the number of copies or the cumulative time of DRIVE ASSY PR rotation reaches specified value.
- Life Detection
  Stops printing when the number of copies or the cumulative time of DRIVE ASSY PR rotation reaches specified value.

2.5.3 ROS

ROS (Raster Output Scanner) emits LD (Laser Diode) according to the image data and an electrostatic latent image is formed on the Drum surface by Laser Beam Raster Scanning.

CAUTION

Since the ROS requires high mechanical precision, do not make any internal adjustments. In case of ROS ASSY failure, replace the whole assembly. After replacing ROS ASSY, make Color Registration adjustments. (Refer to "5.2.1 Color Registration Adjustment"*(p462)*)

2.5.3.1 Part Name and the Functions

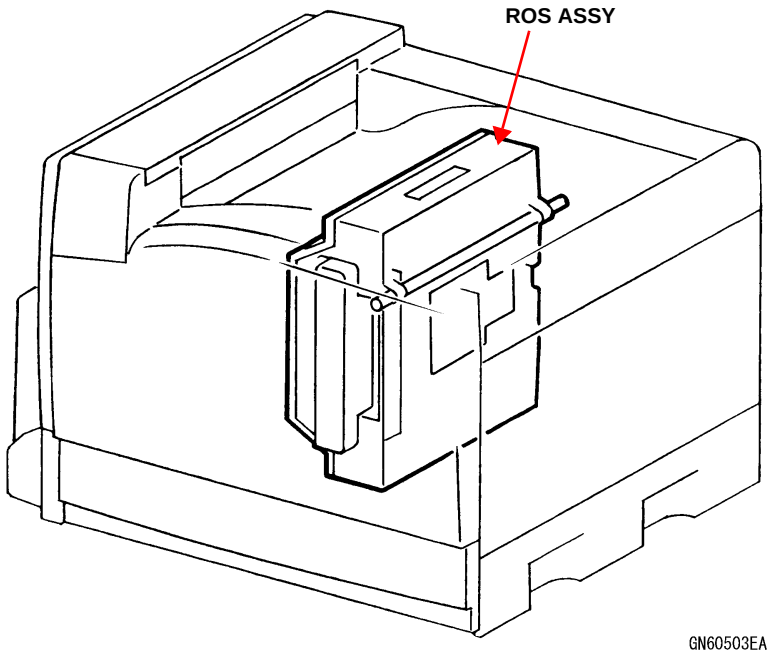

Figure 2-33. Major Components of ROS

- ROS ASSY (Raster Output Scanner Assy)
  This ASSY includes LDD PWB, ROS Motor, SOS PWB (Y,M), SOS PWB (K,C) for each of four colors (Yellow, Magenta, Cyan, Black).

manuals4you.com

2.5.4 Development

The followings are explanations about the mechanism of electrostatic latent image development and the mechanism of toner supply from Toner Cartridge to the developing machine.

2.5.4.1 Part Name and the Functions

- MOTOR ASSY TRACKING
  The four developing machines for Yellow, Magenta, Cyan and Black are away from each Drum. When developing, the four developing machines get touch with each Drum (there is narrowest gaps though) by driving the motor.
- SENSOR ASSY TRACKING
  Detects that the developing machines contacts with Drums.
- Toner Cartridges (Y, M, C, K)
  The internal parts of Toner Cartridge consist of Agitators to agitate and supply toner.
- MOTOR DISP (Y, M, C, K)
  This is a DC motor that drives the Agitator in Toner Cartridge and the Auger connected to the Cartridge to supply toner to Deve Housing.

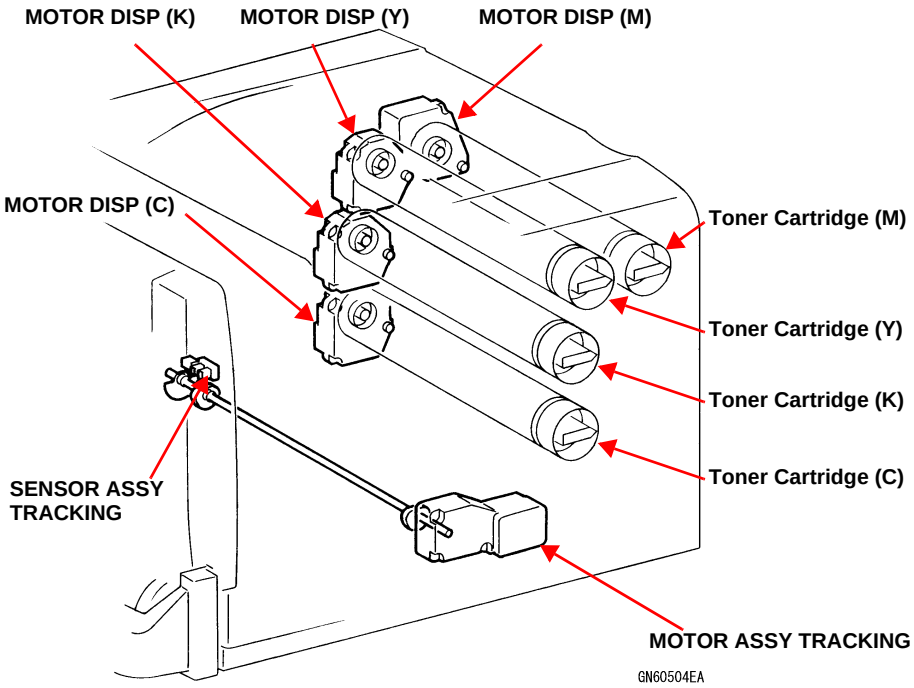

Figure 2-34. Development-Related Components

2.5.4.2 Development Operation

Toner that is supplied from Toner Cartridge to inside of Deve Housing is absorbed by Mag. Roll. By biasing the rotating Mag. Roll, toner on the Mag. Roll is attracted to an electrostatic latent image on Drum surface and the image is formed with the toner on the Drum. The developing operation is done for each color.
Mag. Rolls for each color are driven by DRIVE ASSY MAIN.

- ☐ Contact Operation of Developing Machine with Drum
  1. When the developing process starts, SHAFT ASSY TRACKING rotates by MOTOR ASSY TRACKING drive.
  2. The four colors developing machines push up Front Retract and Rear Retract, and come close to Drums of each color.
  3. The semicircular shield that is attached to SHAFT ASSY TRACKING rotates together with the shaft so that the SENSOR ASSY TRACKING shields light and the position of the developing machine is detected by the SENSOR ASSY TRACKING.
  4. SENSOR ASSY TRACKING detects the contact position of developing machines and Drums, and the Retract position.
  5. Developing machine contacts with Drum during printing.
  6. Developing machine goes away from Drum.
- ☐ Control of Development Bias
  Development Bias outputs AC voltage as soon as minus DC voltage is output to each developer of Yellow, Magenta, Cyan and Black. The setting values of the Development Bias are determined according to detected values by SENSOR HUM TE (Environment sensor).
  Turning the Development Bias on and off is done for four colors simultaneously.

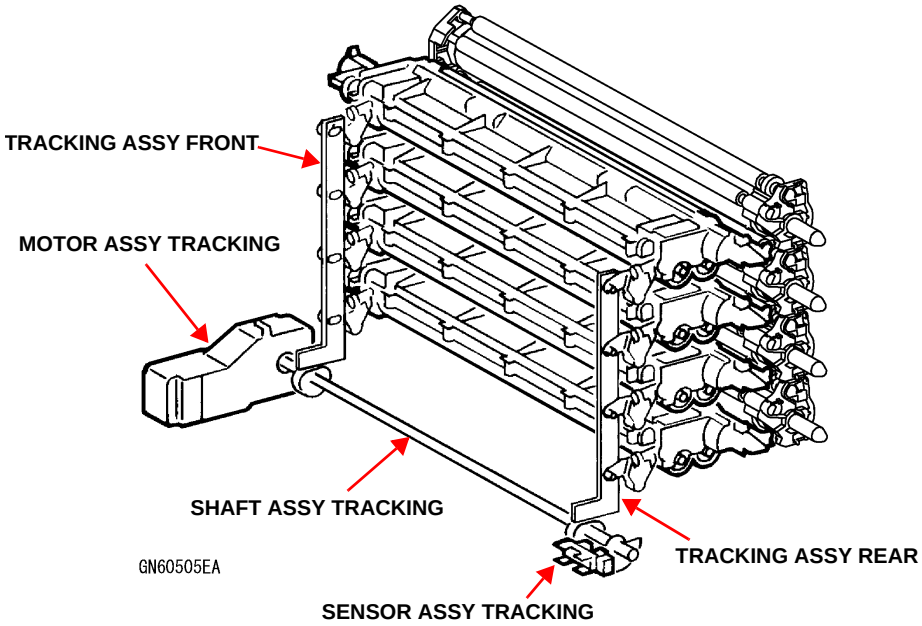

Figure 2-35. Developing Operation-Related Components

manuals4you.com

2.5.4.3 Toner supply to Developing machine

MOTOR DISP for each color rotates for the time specified by Toner Dispense Control and supply toner to Deve Housing while Mag. Roll is rotating by DRIVE ASSY MAIN drive. MOTOR DISP drives Agitator in Toner Cartridge and Auger connected to the Cartridge, and delivers toner to inside of Deve Housing.

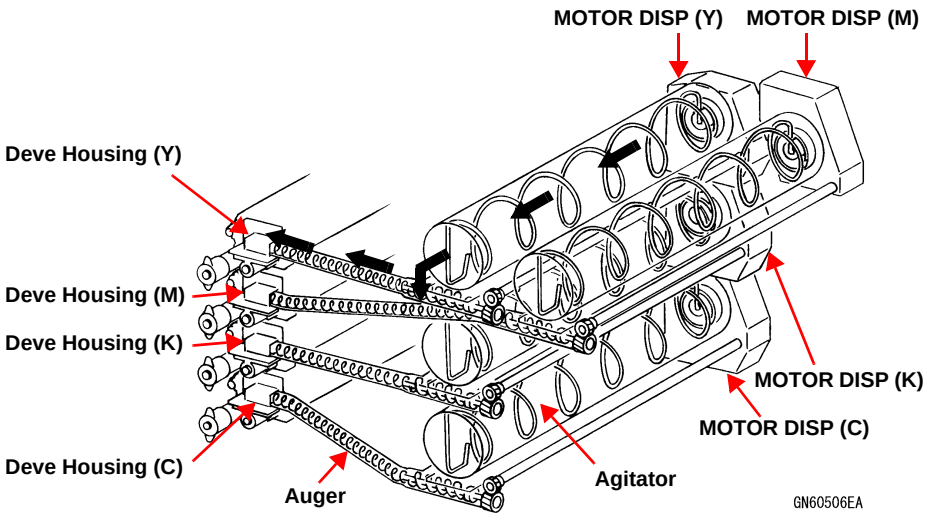

Figure 2-36. Toner Supply Path to Developing machine

- MOTOR DISP
  MOTOR DISP has variation in rotation speed. Corrects the variation by writing numeric value on the sticker attached to the motor into NVM.

Table 2-2. NVM address of Correction Value for Rotation Speed

Replacement Parts	NVM address
MOTOR DISP (Y)	0686
MOTOR DISP (M)	0687
MOTOR DISP (C)	0688
MOTOR DISP (K)	0689

- Trickle Developing
  This printer adopts a trickle developing system.
  The trickle developing system supplies toner to Deve Housing together with a small amount of fresh carrier to eject the deteriorated developer in Deve Housing. This keeps replacing the deteriorated developer with new carrier to stabilize the charging performance of the developer, eliminating the developer replacement work.
  Since Toner Cartridge of this printer consists of toner and a small amount of carrier, the deteriorated developer ejected by normal dispensing operation is collected by toner collection space.

2.5.4.4 Deteriorated developer ejecting operation

Toner is circulated through Deve Housing by Auger. When new toner is supplied together with fresh carrier from Toner Cartridge, the excess developer that has deteriorated is ejected from the ejection port provided in the front side end of Deve Housing and is automatically collected into Toner Collection Box.

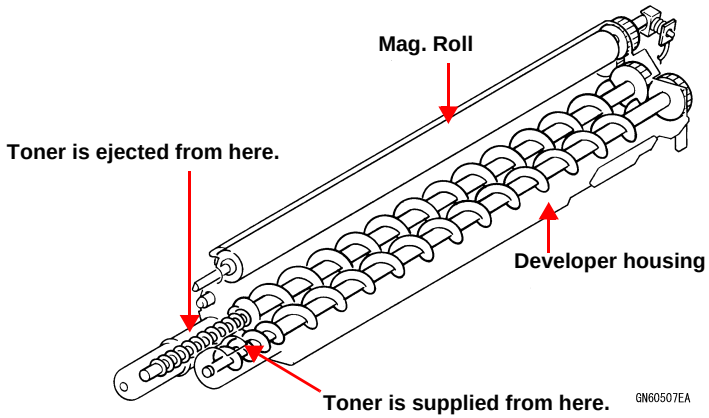

Figure 2-37. Components Related to Ejection of Deteriorated Developer

2.5.4.5 Detection of DEVE UNIT Replacement

The time of replacing DEVE Unit is detected only by cumulative time of DRIVE ASSY MAIN rotation, and the time is counted when the ASSY rotation generates physical torque. It is not depends on number of copies.

2.5.5 Print and Detachment

The print system applies IDT (Intermediate Drum Transfer). The print process consists of; Primary transfer that transfers toner image on Drum to IDT1, Secondary transfer that transfers the toner image on IDT1 to IDT2, and Tertiary transfer that transfers the toner image on IDT2 to paper.

2.5.5.1 Part Name and the Functions

- IDT UNIT
  This unit is transfer unit that consists of IDT1 (x2), Cleaner1 (x2), Detoner Roll1 (x2), IDT2, Cleaner2 and Detoner Roll2.
- BTR UNIT ASSY
  This ASSY consists of BTR, DTS (De Tack Saw). Transfers toner image on IDT2 and also eliminate electricity on the transferred paper.
- POP SENSOR
  This is a photo sensor that detects detachment of paper from BTR.

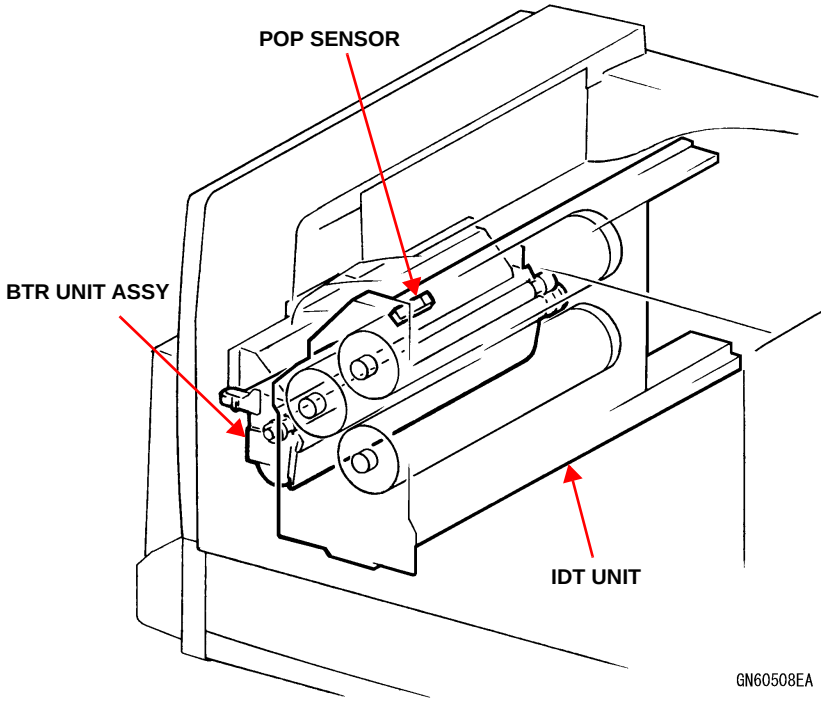

Figure 2-38. Print and Detachment-Related Components

manuals4you.com

2.5.5.2 Overview of Transferring System

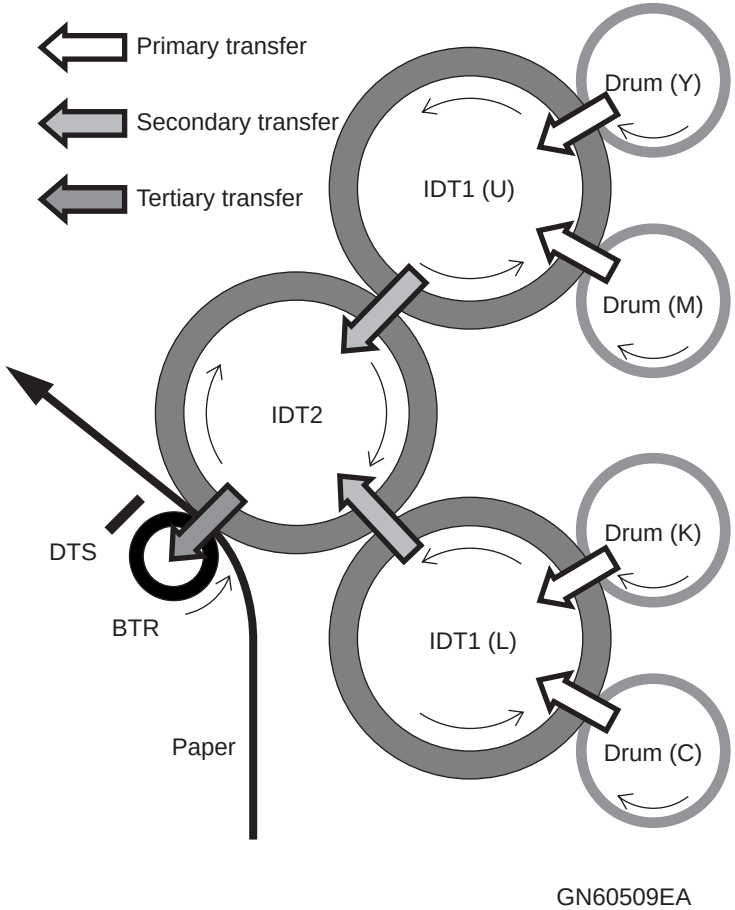

Figure 2-39. Overview of Transferring System

2.5.5.3 Primary Transfer

Transfers toner images on each color Drum to two IDT1s.
Transfers Yellow and Magenta images to upper IDT1 (U), and Black and Cyan images to lower IDT1 Magenta and Cyan are transferred first because they are assigned to the lower side of IDT1.

- IDT1
  IDT1 is a conductive roll and receives voltage for charge from HVPS.
  IDT1 is charged with plus DC voltage during printing, and charged with minus DC voltage during cleaning.

CAUTION

Since the surface of IDT is covered by a thin film, if you push it hard, the film may be damaged and become unrecoverable, so handle it with care.

- Principle of Transfer
  A toner image on the Drum surface is drawn to IDT1 by the static electricity that works between the surface potential of Drum and surface potential of IDT1, the shearing force developed by the surface speed difference between Drum and IDT1, and the potential difference between Drum and IDT1.

  (1) Primary transfer of Magenta

  (2) Residual image of Magenta after Primary transfer

  (3) Primary transferred images of Magenta and Yellow

  (4) Residual image of Yellow after Primary transfer and Re-transfer of Magenta

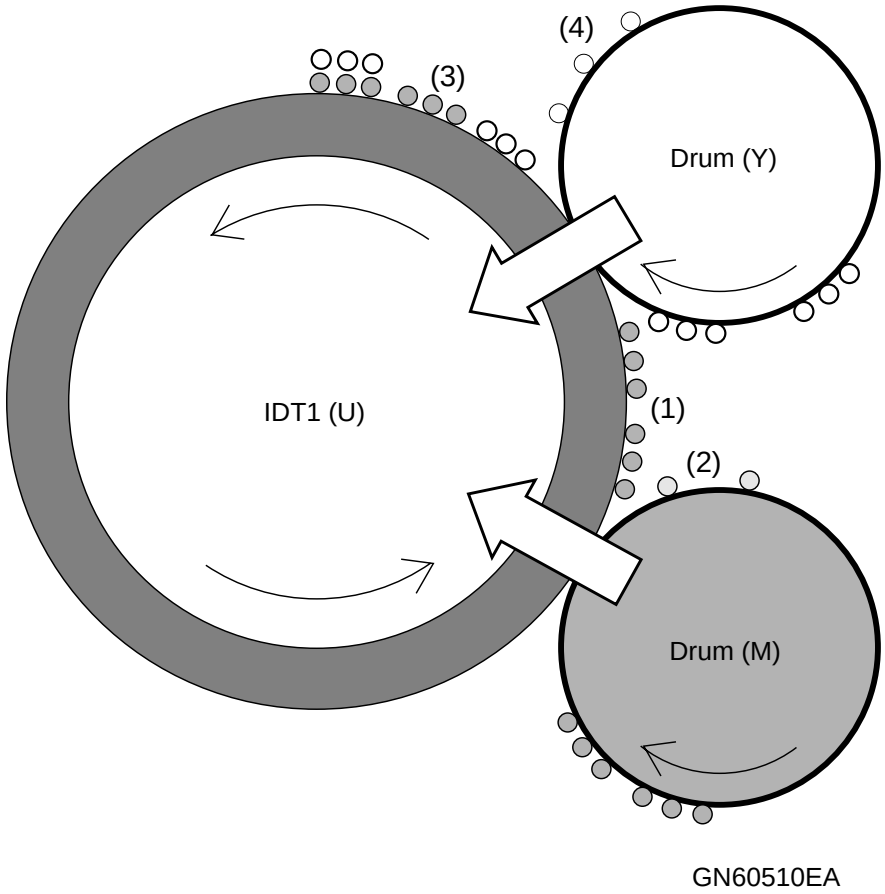

Figure 2-40. Primary Transfer

manuals4you.com

2.5.5.4 Secondary Transfer

Transfers toner image formed on IDT1 (U) and IDT1 (L) to IDT2. The image on the upper IDT1 (U) (Yellow + Magenta) is transferred first, and then the image on IDT1 (L) (Black + Cyan) is transferred on the first one.

- IDT2
  IDT2 is charged with plus DC voltage during printing, and charged with minus DC voltage during cleaning by voltage from HVPS.
- Principle of Transfer
  Electrostatic force between the surface potential of IDT1 and that of IDT2 transfers toner image to IDT2 from IDT1.
  The surface potential of IDT2 is higher than that of IDT1 during printing so that the toner image is attracted to IDT2 from IDT1.

  (3) Primary transferred images of Magenta and Yellow

  (5) Primary transferred images of Cyan and Black

  (6) Secondary transferred images of Magenta and Yellow

  (7) Residual images of Magenta and Yellow after Secondary transfer

  (8) Secondary transferred images of all colors

  (9) Residual images of Cyan and Black after Secondary transfer, and Re-transfer of Yellow

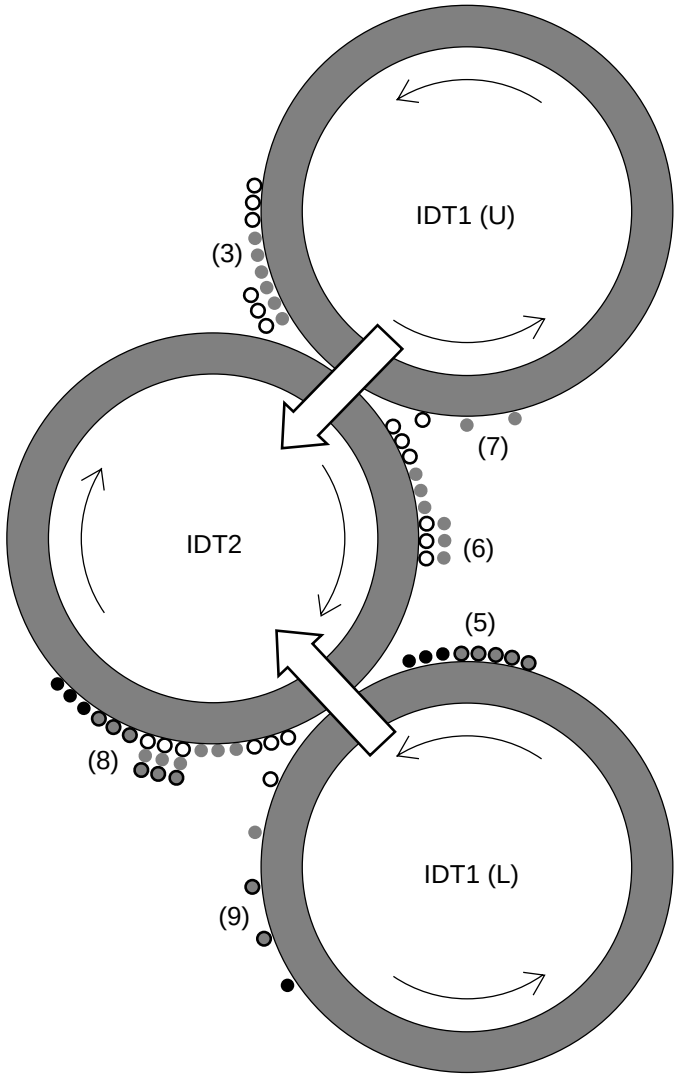

GN60511EA

Figure 2-41. Secondary Transfer

2.5.5.5 Tertiary transfer

Transfers toner image formed on the surface of IDT2 to paper by BTR.

- BTR
  BTR is a conductive roll that applies a plus DC voltage during printing, and applies a minus DC voltage during cleaning by voltage supplied from HVPS.
- Principle of Transfer
  Applies a voltage to BTR that contacts with the reverse side of paper to charge paper, and by the electrostatic force caused between the surface potential of IDT2 and paper, transfers the toner image on IDT2 to paper. During printing, surface potential of paper is higher than that of IDT2. The potential difference causes the phenomenon that the toner image is attracted to paper.

  (8) Secondary transferred images of all colors

  (10) Tertiary transferred images of all colors

  (11) Residual images of all colors after Tertiary transfer

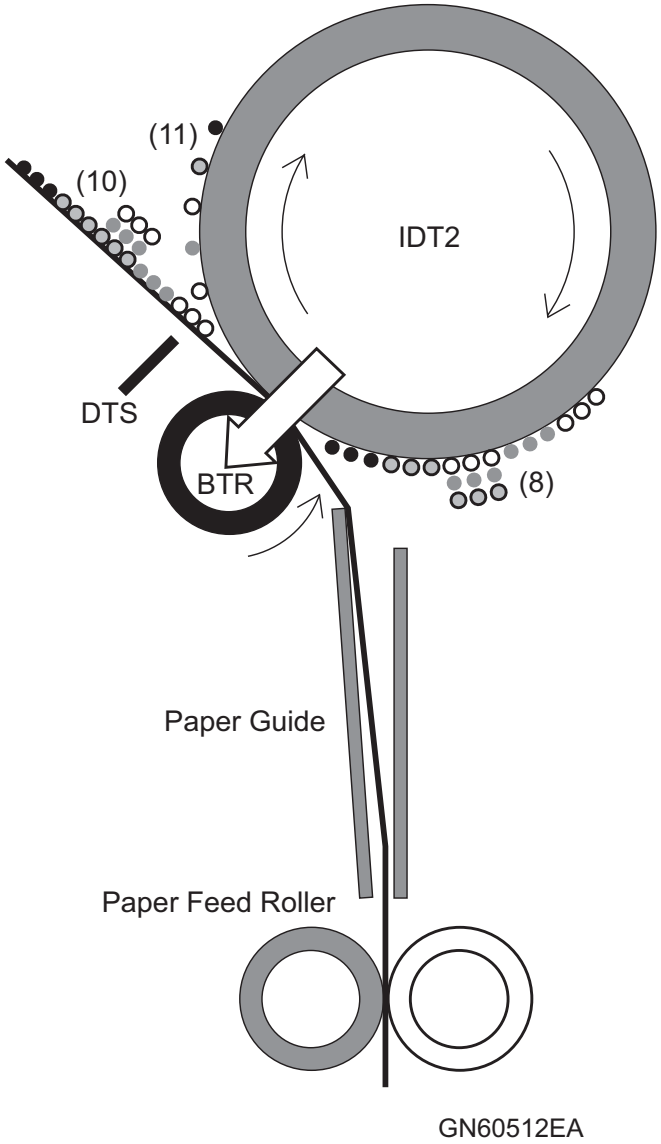

Figure 2-42. Tertiary transfer

manuals4you.com

2.5.5.6 Detachment and Electrical Discharge

The electrical charge on the surface of the backside of the paper is eliminated (reduced) by DTS (De Tack Saw) in BTR UNIT and discharging cloth, and the paper is detached from IDT2.

- Electrical discharge
  Electrical discharging of paper is done by DTS and discharging cloth.
  DTS applies a minus DC voltage by a voltage from HVPS, and discharge.
  Next, discharges the plus charge of paper after tertiary transfer, and eliminates the charge of paper surface evenly.
- Detachment
  To detach paper that is sticking to IDT2 by electrostatic force, use the following three forces.
  - Tension of paper
  - Neutralization of paper charge by DTS (reduction of electrostatic force)
  - Detachment force by Nip shape

2.5.5.7 Detection of Replacing IDT and BTR

The time of replacing IDT and BTR is detected by number of copies and cumulative rotation time of DRIVE ASSY PR.

- Count Up
  - The number of copies are counted in terms of A4LEF size.
  - The time of rotation of DRIVE ASSY PR is counted each time it rotates at 8 msec (full speed) or 16 msec (half speed).
- IDT UNIT Warning Detection
  Detects Warning state when the number of copies or the cumulative time of DRIVE ASSY PR rotation reaches specified value.
- BTR UNIT ASSY Warning Detection
  Detects Warning state when the number of copies or the cumulative time of DRIVE ASSY PR rotation reaches specified value.

2.5.6 Collecting Toner

The followings are explanations about the Cleaning mechanism of Drum and IDT, and the mechanism of collecting toner.

2.5.6.1 Part Name and the Functions

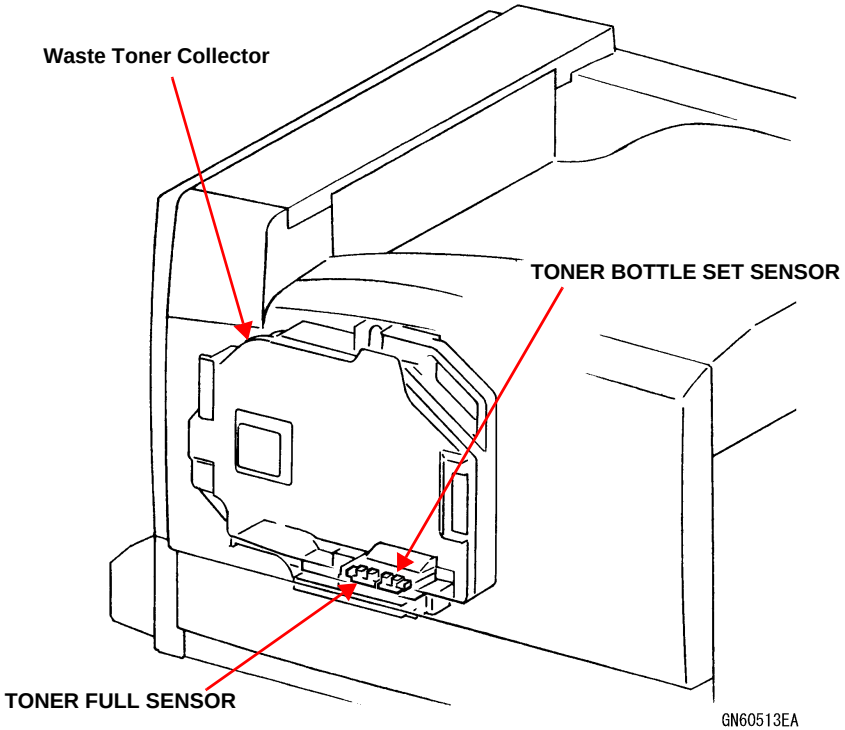

Figure 2-43. Collecting Toner-Related Components

- TONER FULL SENSOR
  This is a photo sensor that detects full status of the Waste Toner Collector (Cartridge to collect toner).
- TONER BOTTLE SET SENSOR
  This sensor detects that Waste Toner Collector is set in the printer.

2.5.6.2 IDT Cleaning Mechanism

- Cleaner
  Cleaner (ESB: Electro-Static Brush) is a conductive brush that discharges plus DC voltage by a voltage from HVPS.
- Detoner Roll
  Detoner Roll is a metal roll and receives a voltage from HVPS.
  Detoner Roll1 discharges minus DC voltage, and Detoner Roll2 discharges plus DC voltage.

manuals4you.com

2.5.6.3 Principle of Cleaning

Toner that is not transferred during printing is retained on the Refresher (brush shape), Cleaner1 and Cleaner2, then at the Cleaning Cycle process, the retained toner is output and absorbed to Detoner Roll to be cleaned out by scraper.
The cleaned out toner is collected in Waste Toner Collector by Auger.

- Timing of Cleaning
  When turning the printer's power on, each Cleaning is done by the set of Straight Polarity Cleaning and Opposite Polarity Cleaning.

  The timing of each Cleaning is given below.

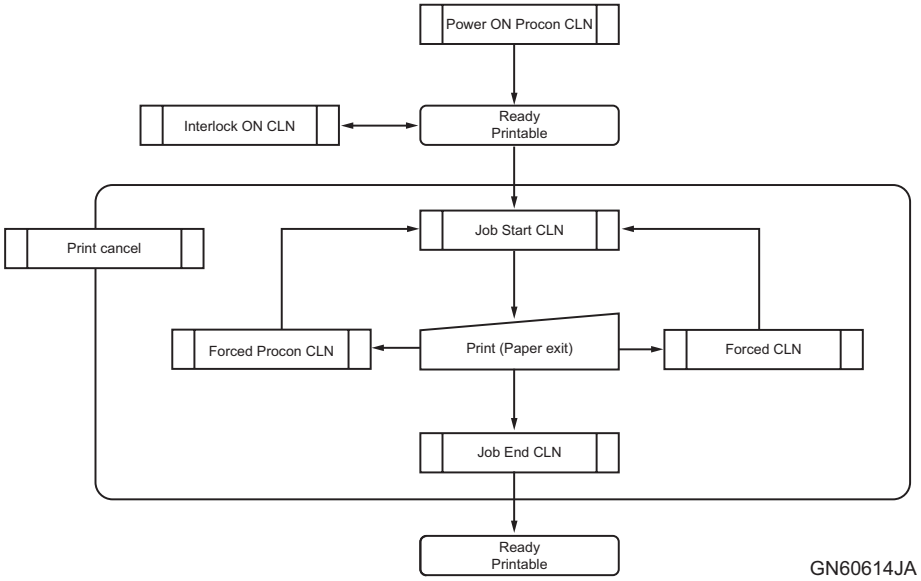

Figure 2-44. Timing of Cleaning

- Power ON Procon CLN
  Do the Cleaning at power-on, and when recovering from sleep mode. Clean the toner with charge decreased and patch image created by Process Control.
- Forced CLN at High Temperature and High Humidity
  This CLN is done together with Power On Procon CLN automatically when the printer detects high temperature and humidity such as at power-on first in the morning.Under high temperature and humidity circumstances, re-transfer tend to occur because the charge of developer is low (and depending on how the printer was used on the previous day, toner density may have been increased). Expel toner forcibly to decrease the toner density and prevent re-transfer.
- Interlock ON CLN
  This CLN is done when close (open → close) the INTERLOCK SWITCH. Clean out remaining toner on IDT and Drum when the printer stops (when open and close the INTERLOCK).
- Print Control
  Cleaning during printing operation is done at the time of starting and finishing printing.
  Depending on number of copies, the cleaning mode is changed.
- Job Start CLN
  This CLN is done at the start of print job. Unlike the Straight and Opposite Polarity Cleaning, this CLN takes only a few seconds to control transfer electric current and prepare Drum surface potential.
- Forced Procon CLN
  When the print job is more than 100 copies, the job is interrupted every time 100 copies made and the CLN is done together with Process Control.
- Forced CLN
  Interrupt print job and execute cleaning every time the specified number of copies made (the number is preset according to the circumstance).
- Job End CLN
  This CLN is done every time a job is finished.

2.5.6.4 Transfer and Cleaning Voltage

Controls the supply voltage to RTC, Refresher, IDT1, IDT2, BTR, Detoner Roll1, Detoner Roll2, Cleaner1 and Cleaner2.

The output voltage for each component is adjusted according to the temp and humidity inside the machine. Depending on combinations of temp and humidity, 9 patterns of output voltage are preset.

2.5.6.5 Detection of Full status of Collecting Toner Cartridge

The full status of the Cartridge is detected by TONER FULL SENSOR and Pixel Count.

When toner pile up to the upper area of the sensor, the toner flow in the area and detected by TONER FULL SENSOR.

- Near-End Detection
  - "Waste T BoxNearfull"

    Displayed when the TONER FULL SENSOR detects toner during DRIVE ASSY PR is rotating.
- Life Detection
  - "Replace Waste T Box"

    After Near-End is detected, this status is detected when toner reaches the specified value by pixel count.
- Detection of Waste Toner Collector Replacement
  The error is canceled when toner absence is detected by TONER FULL SENSOR immediately after FRONT COVER OPEN SENSOR is closed after replacement of Waste Toner Collector.
  In this case, DRIVE ASSY PR need not be rotating.

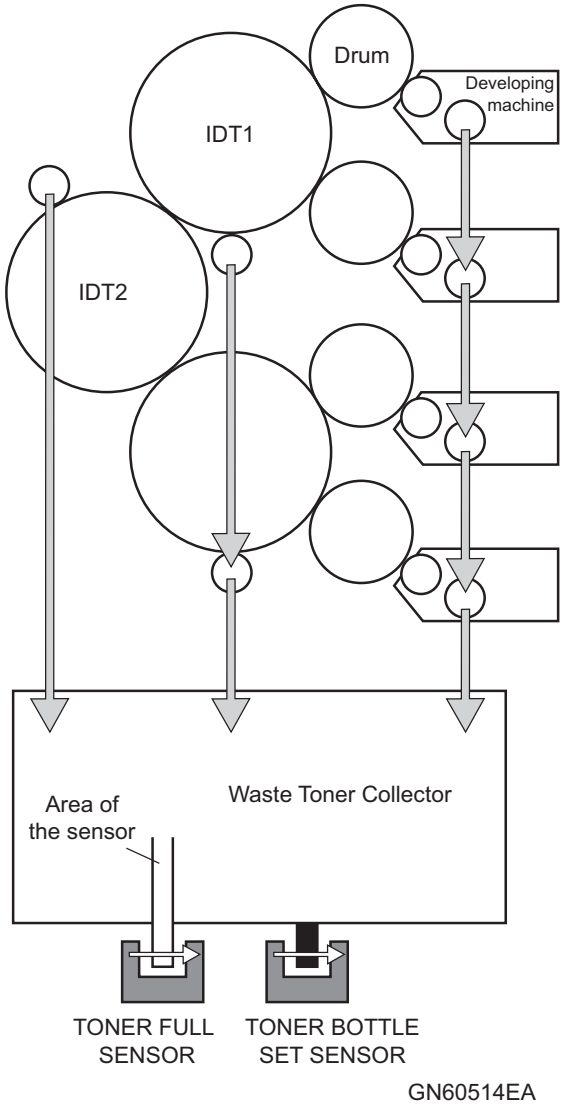

Figure 2-45. Flow of Full status Detection of Waste Toner Collector

manuals4you.com

2.5.7 Process Control

This function operates to prevent variation in image quality due to temperature and humidity changes and changes with time so that the printer can provide stable quality. Since the printer is not equipped with a sensor for toner empty, the Toner Empty Detection is done by the Process Control.

The followings are explanations about control of ROS's LD light volume, supply of toner and Toner Empty Detection.

- SENSOR ASSY MOB ADC
  This is a photo sensor that reads toner density of an image formed on IDT2. At the light emitting and receiving area of ADC Sensor, there is a shutter that incorporates solenoid to open and close the shutter.
- SENSOR HUM TE
  Measures temperature and humidity of inside the printer.

2.5.7.1 Density of Image

The density of image is measured by SENSOR ASSY MOB ADC, that reads density of patch image on IDT2.

2.5.7.2 Electric Potential Control

Calculates Deve Bias, RTC Bias and ROS LD light volume.

2.5.7.3 Part Name and the Functions

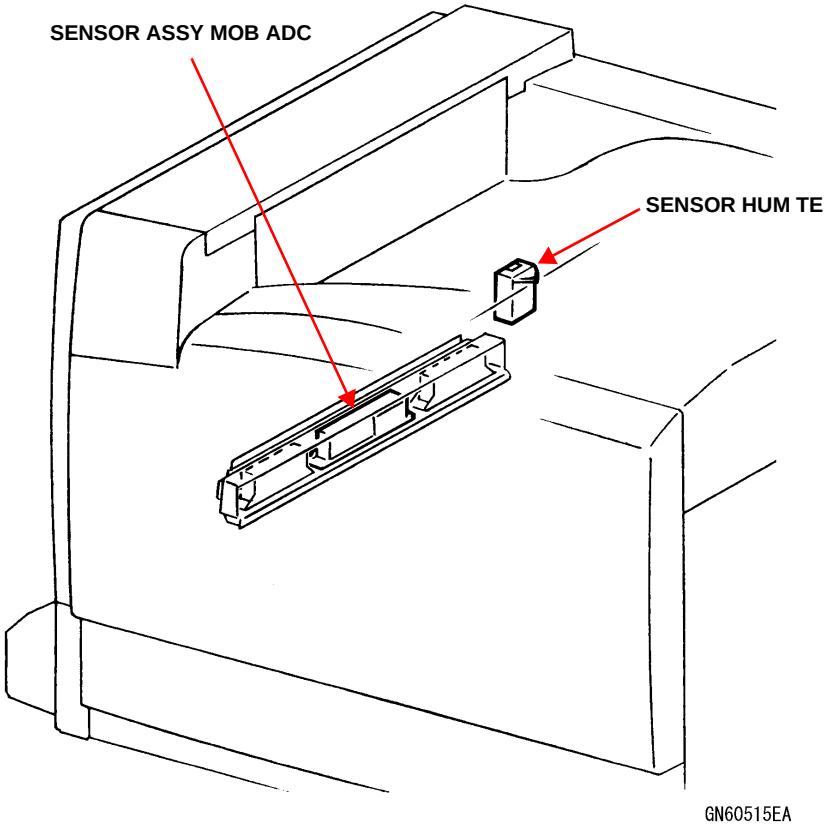

Figure 2-46. Process Control-Related Components

2.5.7.4 Toner Dispense Control

This function, powered by MOTOR DISP, controls amount of toner that is supplied to Developer Housing from Toner Cartridge to maintain toner density at set point. MOTOR DISP drives only when printing (during Deve Motor is rotating).

- Timer Dispense
  DISP drive is controlled by “Timer Disp driving” that is recorded in NVM for each color. The “Timer Disp time” that is calculated from the counter value of each one copy is added to “Buffer Disp time” that manages rotation time of MOTOR DISP.
- ICDC Dispense
  Controls MOTOR DISP drive according to number of pixels (Pixel Count) of each color’s image data.
  Counts number of pixels of each color’s image data page-by-page, and calculates Toner Dispense time (ICDC Disp time) from the counted number.
  The “ICDC Disp time” that is calculated from the counter value of each one copy is added to “Buffer Disp time” that manages rotation time of MOTOR DISP.
- ADC + ICD Control
  ADC Dispense, controlled by patch image, calculates driving time of MOTOR DISP from the output value of ADC Sensor. This is called “ADC Disp time”.
  The “ADC Disp time” and “ICDC Disp time” described in the previous clause are added to “Buffer Disp time”.
- Drive Control of MOTOR DISP
  Since the rotating time of MOTOR DISP is stored in the “Buffer Disp time”, the control during printing is same in any Dispense mode.

2.5.7.5 Toner Empty Detection

Toner Empty Detection is done with control that determines empty status of Toner Cartridge for each color, and with control that detects Toner Cartridge replacement.

- Toner Empty Determination
  The printer is not equipped with a sensor that detects remaining toner inside the Toner Cartridge, so the remaining amount is determined by the integrated value of MOTOR DISP rotating time. IOT reads Dispense time of toner by RDLIFE command from the printer controller, and update the value when MOTOR DISP rotates (It writes the update value to NVM when MOTOR DISP stops).
- Life Detection
  Detects the life when one of the following conditions is satisfied.
  - When the rotating time of each color’s MOTOR DISP exceeds the “Shut Down threshold” in Toner Cartridge.
  - When toner density becomes lower than the specified value by patch control, and can not be increased by rotating MOTOR DISP forcibly.
- Detection of Toner Cartridge Replacement
  Reads data in Toner Cartridge at power-on and when closing Front Cover. When Toner Empty Detection status flag indicates that toner is not empty, it detects Toner Cartridge Replacement.

manuals4you.com

2.5.8 Fusing of Toner

This section explains the mechanism that applies heats and pressure to the image not yet fused to fuse toner onto paper.

2.5.8.1 Part Name and the Functions

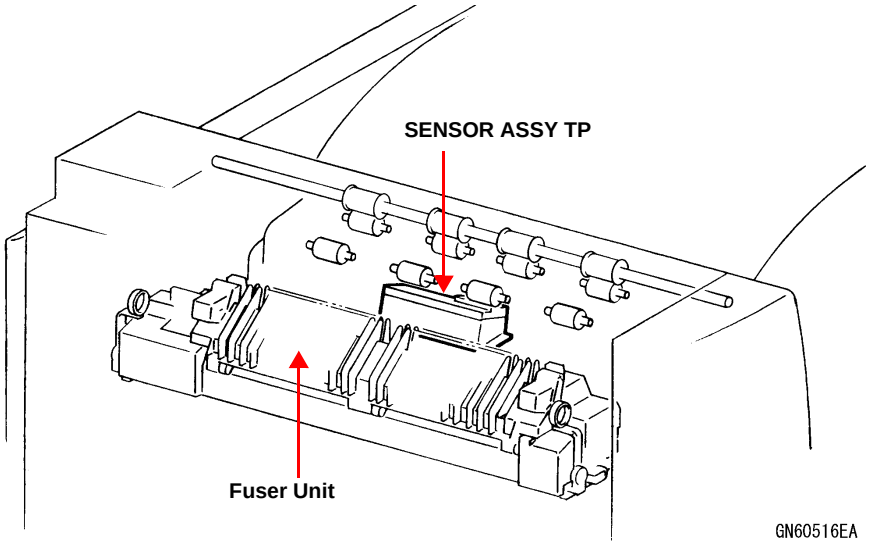

Figure 2-47. Components Related to Toner Fusing

- Fuser Unit
  Fuser Unit that includes Heat Roll, Heater Rod, Thermostat, Thermistor and FUSER EXIT SENSOR.
- SENSOR ASSY TP (Thermopile Sensor)
  ON/OFF of Main Heater Rod and Sub Heater Rod is controlled (MCU PWB) by the non-contact infrared sensor that monitors the surface temperature of the Heat Roll center area (paper passage area).

2.5.8.2 Details of Fuser Unit

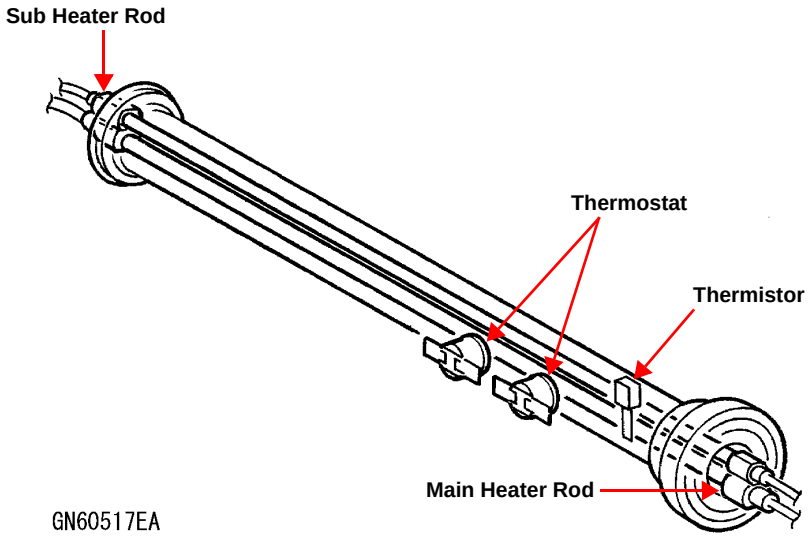

Figure 2-48. Detail Drawing of Fuser Unit

- Main Heater Rod
  Heating element to heats whole Heat Roll.
- Sub Heater Rod
  Heating element to heats the center part of Heat Roll.
- Thermostat
  When the temperature of Heat Roll rises higher than the constant temperature, shuts down the circuit of Main Heater Rod and Sub Heater Rod.
- Thermistor
  Monitors surface temperature of rear side of Heat Roll (surface that does not contact with paper), and controls ON and OFF of Main Heater Rod and Sub Heater Rod (by MCU PWB).

2.5.8.3 Thermopile and Wiper Solenoid

SENSOR ASSY consists of Thermopile Sensor and Wiper Solenoid as shown in the following figure.

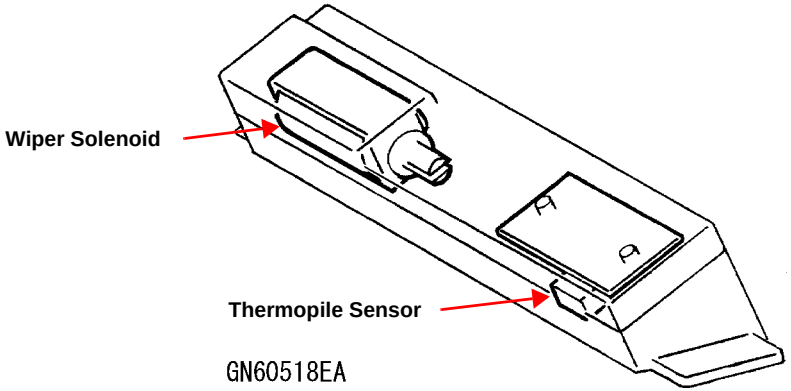

Figure 2-49. Detail Drawing of Thermopile and Wiper Solenoid

Wiper Solenoid is a mechanism to clean filters. Operates two times when detected temperature is lower than the specified temperature.
After finishing the cleaning sequence, compares temperature detected by Thermopile Sensor with temperature detected by Thermistor.

2.5.8.4 Fuser Configuration

Fuser has not a pressure roll, and has a Fuser Belt instead.
By DRIVE ASSY MAIN drive, Heat Roll rotates and Fuser Belt follows Heat Roll by the friction.

The inside of Fuser Belt is as shown in the following figure, and Belt and Heat Roll are nipped by the pressure application system in Belt.

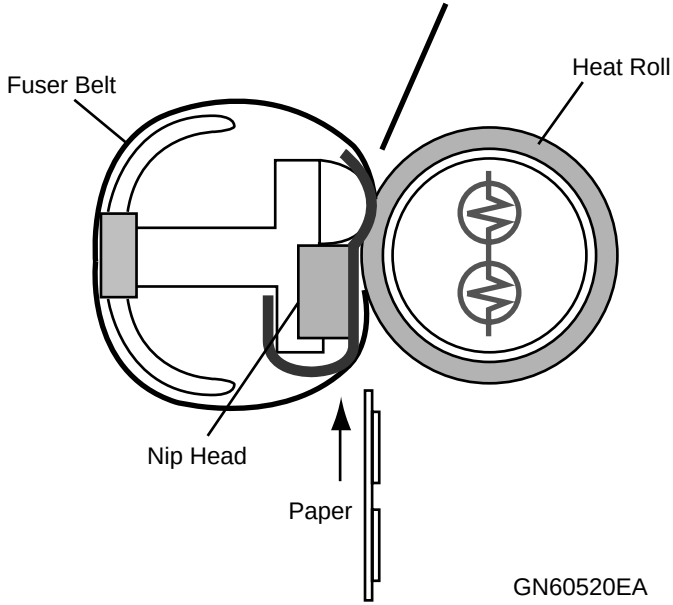

Figure 2-50. Overview of Fuser Configuration

2.5.8.5 Overview of Fuser's Temperature Control

Fuser has five statuses; Wait, Ready, Stand By, Run and Sleep, that changes depending on surface temperature of Fuser and the machine status.
Temperature control, other than cleaning sequence determination, is done with the temperature detected by Thermopile Sensor.
The controlled temperature is preset according to paper type and paper size.

manuals4you.com

2.5.8.6 Method of Monitoring Temp

Fuser's temperature is detected by Thermopile Sensor and Thermistor. Thermistor calculates an A/D conversion value from the measured thermistor resistor value, and calculates the temperature corresponding to that A/D conversion value to detect the temperature. Also, MCU PWB controls to switch between wire breakage detection and temperature detection at regular intervals. At the time of temperature detection, temperature detection by Thermopile Sensor is also executed.

2.5.8.7 Heater Rod Control

- Main/Sub Heater Switching
  In Run status, switching operation between Main Heater Rod and Sub Heater Rod is done according to paper size as followings (In other than Run status, use only Main Heater Rod).
  - Paper width ≤ 236.7 mm
    To improve a temperature distribution in the H/R shaft direction, the heater operation switches when the difference between the temperature detected by Thermistor and that detected by Thermopile Sensor reaches a certain level.
  - 236.7 mm > Paper width
    Controlled only by Sub Heater Rod.
- ON and OFF of Heater Rod
  Heater Rods are turned ON/OFF by comparing the temperature detected by Thermopile Sensor and the target temperature in the corresponding status at the time of temperature detection (at intervals of 80 msec).

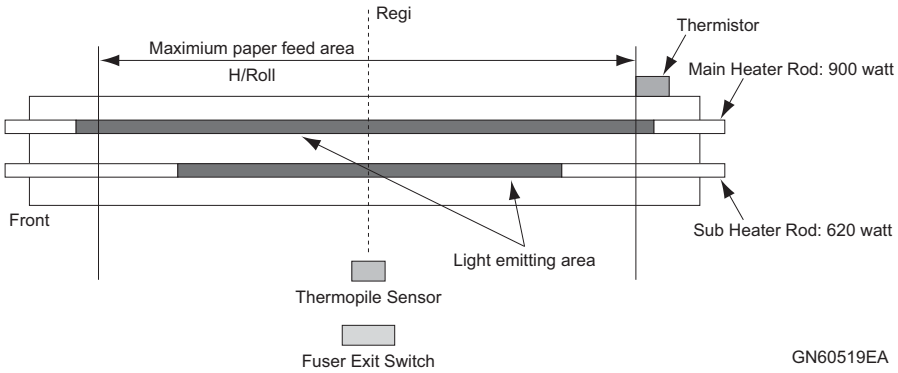

Figure 2-51. ON/OFF Areas of Heater Rods

2.5.8.8 Detection of Fuser Unit Replacement

The time of replacing Fuser Unit is detected according to number of copies.

- Count Up
  The number of copies are counted in terms of A4LEF size.
- FUSER UNIT Warning Detection
  Detects Warning status when number of copies reaches the specified value.

2.5.9 Paper Feed

The followings are explanations about Paper Feed and Fan.

2.5.9.1 Part Name and the Functions

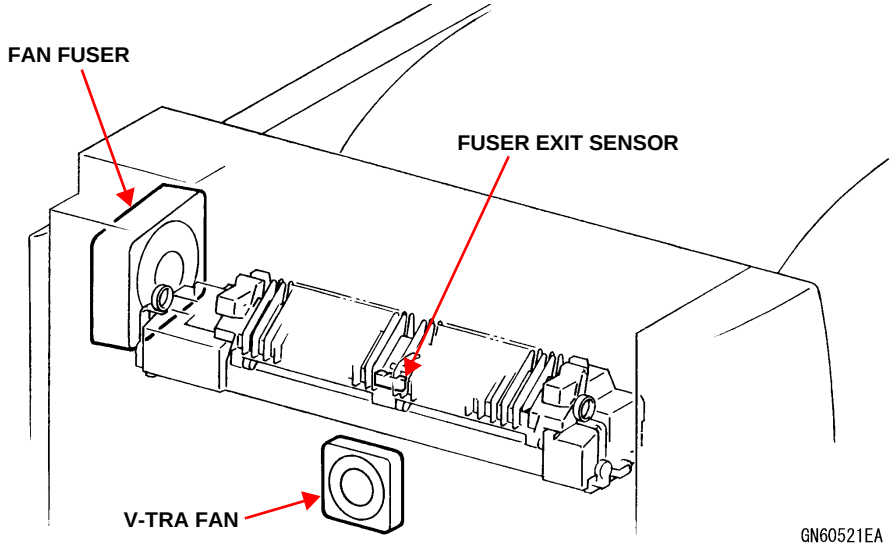

Figure 2-52. Paper Feed-Related Components

- FAN FUSER
  Discharges hot-air around Fuser to outside the machine.
- V-TRA FAN
  Paper that unfixed toner image is transferred by BTR is absorbed to V Transport, and then fed to Fuser stably.
- FUSER EXIT SENSOR
  This is a switch to detect that paper went through the Fuser.

2.5.9.2 Ejection of Finished Print

Finished print that comes out from Fuser is monitored by FUSER EXIT SENSOR and delivered to Exit part. Then, the print is fed to Face Down Tray or Face Up Tray from Invert part.

manuals4you.com

2.6 Paper Feed Mechanism

Explanations about parts that make up the Paper Feed Mechanism; their names, position, functions and operating outline.
The main functions are detecting size of each Tray, lifting up Tray, Paper Feed operation and Paper Feed-related operations at power-on.

1. DRIVE ASSY MAIN
2. Tray2 FEED/LIFT MOTOR
3. Tray3 FEED/LIFT MOTOR
4. Tray4 FEED/LIFT MOTOR
5. MOTOR ASSY 3TM
6. CLUTCH ASSY FEED
7. CLUTCH ASSY FEED
8. CLUTCH REGI
9. GATE SOLENOID
10. MSI SOLENOID ASSY
11. EXIT MOTOR
12. DUPLEX MOTOR
13. Tray1 SWITCH ASSY SIZE
14. Tray2 PAPER SIZE SENSOR
15. Tray3 PAPER SIZE SENSOR
16. Tray4 PAPER SIZE SENSOR
17. Tray1 LEVEL SENSOR 1/2
18. Tray2 LEVEL SENSOR
19. Tray3 LEVEL SENSOR
20. Tray4 LEVEL SENSOR
21. Tray1 NO PAPER SENSOR
22. Tray2 NO PAPER SENSOR
23. Tray3 NO PAPER SENSOR
24. Tray4 NO PAPER SENSOR
25. TAKEAWAY SENSOR
26. Tray3 FEED OUT SENSOR
27. Tray4 FEED OUT SENSOR
28. SENSOR REGI
29. OHP SENSOR
30. POP SENSOR
31. FUSER EXIT SENSOR
32. DUPLEX SENSOR
33. MSI NO PAPER SENSOR

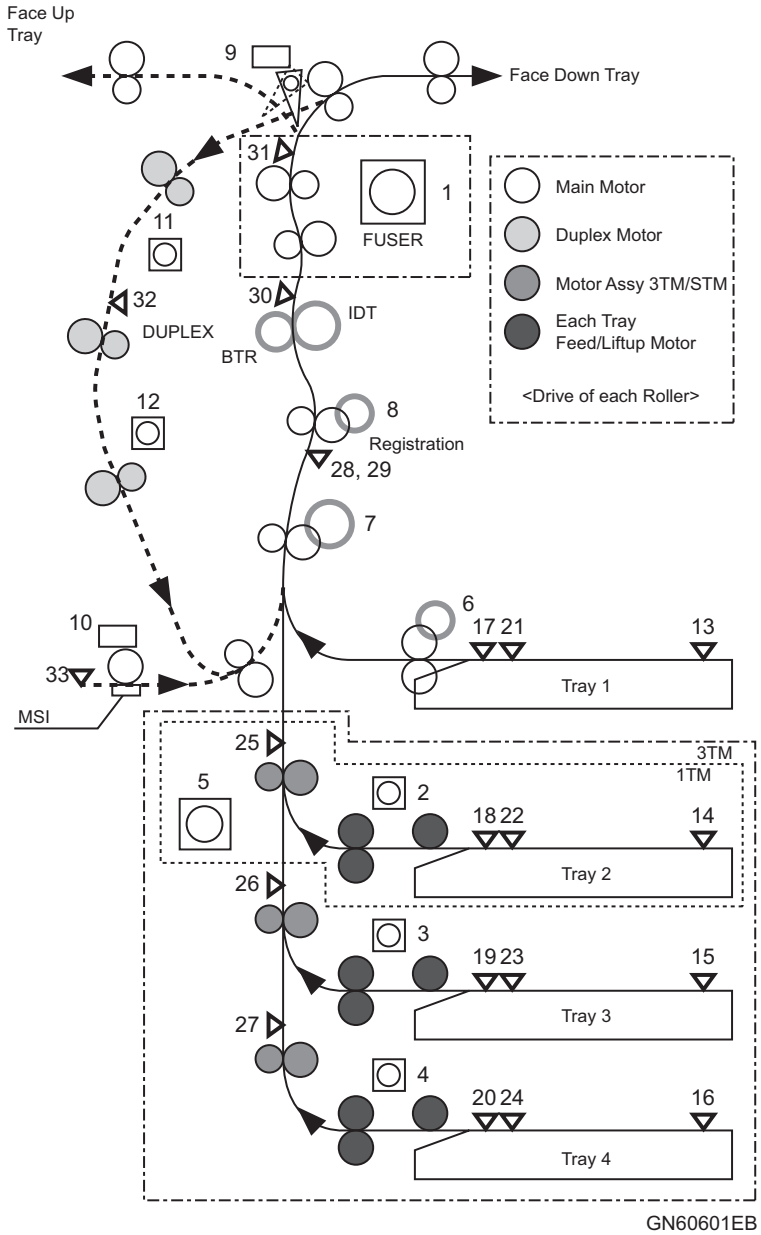

Figure 2-53. Paper Feed Mechanism Diagram

2.6.1 Paper Tray

In addition to the Tray1 supplied with the printer, a Tray (500) or Tray (1500) can be added.

2.6.1.1 Specifications of Tray

The Tray1 supplied with the printer and the additional Trays (500 or 1500) differ in structure.

- Tray1 (supplied with the printer) (CASSETTE ASSY)
  - Supported Paper Size
    Auto-detects the following sizes; A3 SEF, B4 SEF, A4 LEF, B5 LEF, A5 LEF and 8.5 x 11” (Letter size). And also supports undefined size.
  - Capacity
    550 sheets of standard-size paper, or less than 54mm.
  - Paper basic weight
    60 to 216g/m^2
- Tray2 to 4 (additional tray (500) / additional tray (500 x 3)) (TRAY ASSY)
  - Supported Paper Size
    Auto-detects the following sizes; A3 SEF, B4 SEF, A4 LEF, B5 LEF and 8.5 x 11” (Letter size). And also supports undefined size.
  - Capacity
    550 sheets of standard-size paper, or less than 54mm.
  - Paper basic weight
    60 to 169g/m^2
- Manual Paper Feed Tray (MSI)
  - Supported Paper Size
    No auto size detection. Support the minimum size to the maximum size.
    The minimum size (W90 x L98.4mm)
    The maximum size (W304.8 x L1200mm)
  - Capacity
    180 sheets of standard-size paper, or less than 15 mm (In case of Letter or A4 size)
    100 sheets of standard-size paper, or less than 10mm (In case of exceeding A4 size)
  - Paper basic weight
    60 to 216g/m^2

manuals4you.com

2.6.1.2 Part Name and the Functions

☐ Tray1

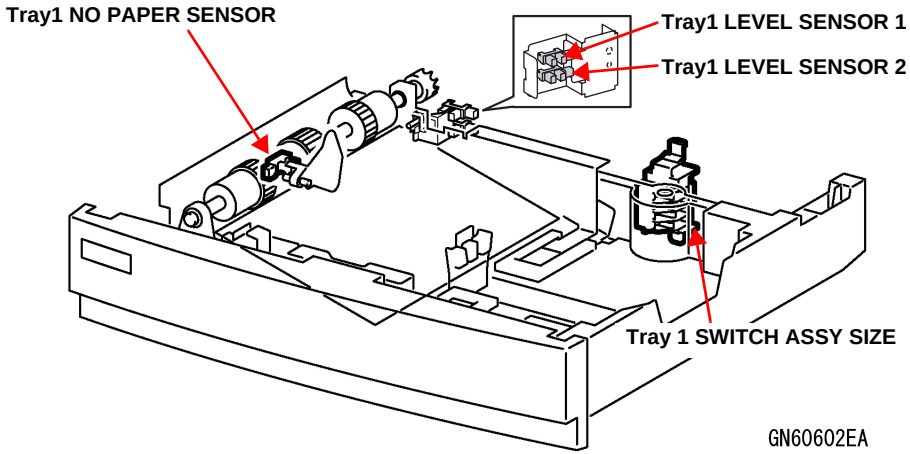

Figure 2-54. Major Components of Tray1

- SWITCH ASSY SIZE
  Detects attachment of Tray and paper size.
  Detects paper size depending on ON or OFF status of four Size Switches.
- Tray1 NO PAPER SENSOR
  Detects paper presence in Tray. Not only when turning the power on and inserting Tray, the sensor monitors paper presence all the time.
- Tray1 LEVEL SENSOR 1/2
  Detects remaining amount of paper in Tray. Not only when turning the power on and inserting Tray, the sensor monitors paper presence all the time.
  The following table shows the relationship between the sensor and remaining amount of paper.

Table 2-3. Statuses of Remaining amount of Paper and Sensor

Remaining amount of Paper (number of sheets)*	LEVEL SENSOR 1	LEVEL SENSOR 2
0~125	OFF	OFF
125~250	ON	OFF
250~375	ON	ON
375~500	OFF	ON

Note "*": The remaining amount of paper is approximate quantity (standard-size paper)

☐ Tray 2 to 4

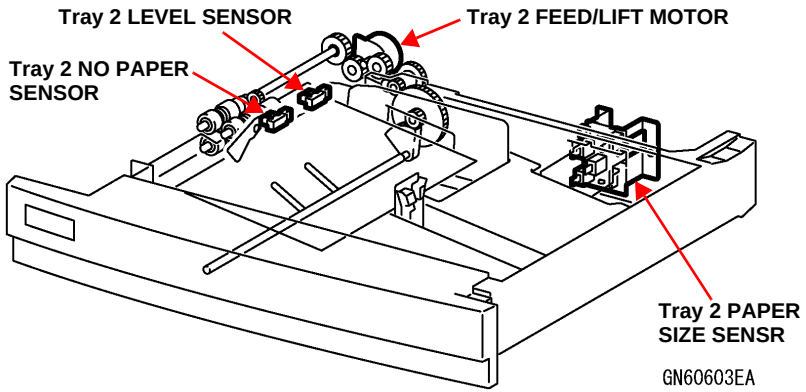

Figure 2-55. Major Components of Tray2 to 4

- Tray2-4 PAPER SIZE SENSOR
  Detects attachment of Tray and paper size.
  Detects paper size by a voltage according to combined value of resistance made by ON or OFF status of four Size Switches.
- Tray2-4 NO PAPER SENSOR
  Detects paper presence in Tray. Not only when turning the power on and inserting Tray, the sensor monitors paper presence all the time.
- Tray2-4 LEVEL SENSOR
  Detects that paper in Tray is lifted up to the position to be fed.
- Tray2-4 FEED/LIFT MOTOR
  The motor is a stepping motor, which can rotate normally and reversely. By rotating counterclockwise, and through gear, rotates Shaft to lift up BOTTOM PLATE. And by rotating clockwise, drives NUDGER ROLL and ROLL ASSY FEED.

- Manual Paper Feed Tray

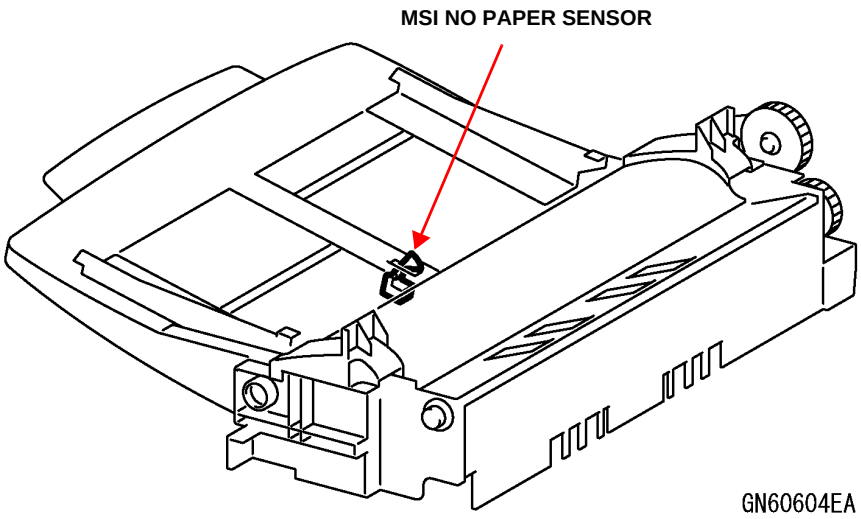

Figure 2-56. Major Components of Manual Paper Feed Tray

- MSI NO PAPER SENSOR
  Detects paper presence in Manual Paper Feed Tray. Not only at power-on, the sensor monitors paper presence all the time.

2.6.1.3 Lifting Up Tray

- Standard Tray (Tray1)
  PLATE ASSY BOTTON of Standard Tray1 is designed to lift up when inserting Tray, and lift down when pulling out Tray. A spring is attached to the bottom of PLATE ASSY BOTTON to lift up the bottom when paper decrease in numbers so that paper can be fed.

- Additional Tray (Tray2 to 4)
  Tray2 to 4; Additional Trays (500) and (1500) lift up BOTTOM PLATE to the position that paper can be fed by counterclockwise rotation of FEED/LEFT MOTOR. Detects the lift-up status of BOTTOM PLATE when TRAY LEVEL SENSOR blocks off the light.
  BOTTOM PLATE is lifted down when pulling out Tray because the gear becomes free at the same time of pulling Tray.
  Each FEED/LIFT MOTOR detects TRAY FALL status and stops operating when TRAY LEVEL SENSOR does not turn on for 6 seconds after the motors starts to rotate counterclockwise.
  Lift-Up operation of each Tray is done separately (not at the same time).

  The timing of Lift-Up is as follows.

  - At power-on
  - When closing INTER LOCK
  - When inserting Tray
  - During feeding paper

  TRAY LEVEL SENSOR is always monitored during feeding paper. When TRAY LEVEL SENSOR is detected as “OFF”, determines the status that cannot feed next paper. Since FEED/LIFT MOTOR is rotating clockwise during feeding paper, it rotates counterclockwise for specified time to do Lift-Up operation after the specified time elapsed from when feeding operation stops.

manuals4you.com

2.6.1.4 Detection of Paper Size

All Trays can detects paper size by positioning End Guide according to paper size. When the Guide is moved, an actuator attached to the Tray moves together to press Tray1 SWITCH ASSY SIZE, or Switch (1 to 4) of Tray2,3,4 PAPER SIZE SENSOR. By the ON or OFF status of those Switches, paper size can be detected. And also Tray presence is detected by the status (all Switches are OFF).

- Standard Tray (Tray1)
  Tray1 SWITCH ASSY SIZE, comprising four Switches, generates ON or OFF signal. The combination of the signals is used to detect paper size by MCU PWB. The following table shows the relationship between the ON or OFF statuses and paper size.

Table 2-4. Statuses of Paper Size and Switches (Tray1)

Paper Size	S1	S2	S3	S4
No Tray	OFF	OFF	OFF	OFF
A3 SEF	OFF	ON	ON	OFF
B4 SEF	OFF	ON	OFF	OFF
8.5" x 11" LEF	ON	OFF	ON	OFF
A4 LEF	ON	ON	ON	OFF
B5 LEF	ON	ON	OFF	OFF
A5 LEF	ON	ON	OFF	ON

- Additional Tray (Tray2 to 4)
  Tray2,3,4, comprising four Switches, are designed to output a voltage according to combined value of resistance that changes by each Switch's ON or OFF status. Paper size is detected by the voltage.The following table shows the relationship between the ON or OFF statuses, Output voltage and paper size.

Table 2-5. Statuses of Paper Size and Switches (Tray2 to 4)

Paper Size	S1	S2	S3	S4	Voltage (V)
No Tray	OFF	OFF	OFF	OFF	3.04
A3 SEF	OFF	OFF	ON	OFF	2.65
B4 SEF	ON	OFF	OFF	ON	1.21
8.5" x 11" LEF	ON	ON	OFF	ON	0.40
A4 LEF	ON	ON	ON	OFF	0.20
B5 LEF	OFF	ON	OFF	ON	2.03

2.6.1.5 Detection of Remaining Amount of Paper

Tray1 has a LINK GG (on front of it) and Tray2,3,4 have PAPER LEVEL MONITOR (on front of each of them) to display the remaining amount of paper mechanically.
LINK GG or PAPER LEVEL MONITOR moves together with BOTTOM PLATE. When a low paper condition develops, LINK GG or PAPER LEVEL MONITOR rises on its BOTTOM PLATE side and lowers on its Tray front side. This operation allows the remaining amount of paper to be roughly detected.

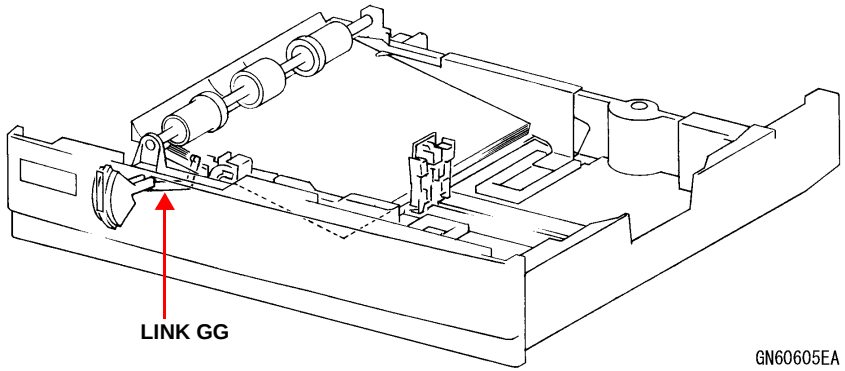

Figure 2-57. Components related to Detection of Remaining Amount of Paper

2.6.2 Paper Feed

The followings are explanations about paper feeding from each Tray and Manual Paper Feed Tray. The picked-up paper is pushed against Regi Roll to stop it once. The rear-end of the stopping paper is transported by Transport Roll to form a paper loop in order to correct paper skew.

2.6.2.1 Part Name and the Functions

- CLUTCH ASSY FEED
  By the excitation of this Clutch, driving of DRIVE ASSY MAIN is transmitted to ROLL ASSY FEED.
- MSI SOLENOID ASSY
  When the solenoid excites, the stopper is pressed and the lever on SHAFT ASSY PICK UP is unlocked to enable paper feeding from MSI.
- OHP SENSOR
  Detects media for OHP.
- CLUTCH ASSY FEED
  By the excitation of this Clutch, driving of DRIVE ASSY MAIN is transmitted to ROLL ASSY TURN.
- CLUTCH REGI
  By the excitation of this Clutch, driving of DRIVE ASSY MAIN is transmitted to ROLL REGI RUBBER.
- SENSOR REGI
  Located right before ROLL REGI RUBBER, SENSOR monitors whether paper exists in the Registration area or not to detect Sensor Regi ON JAM.

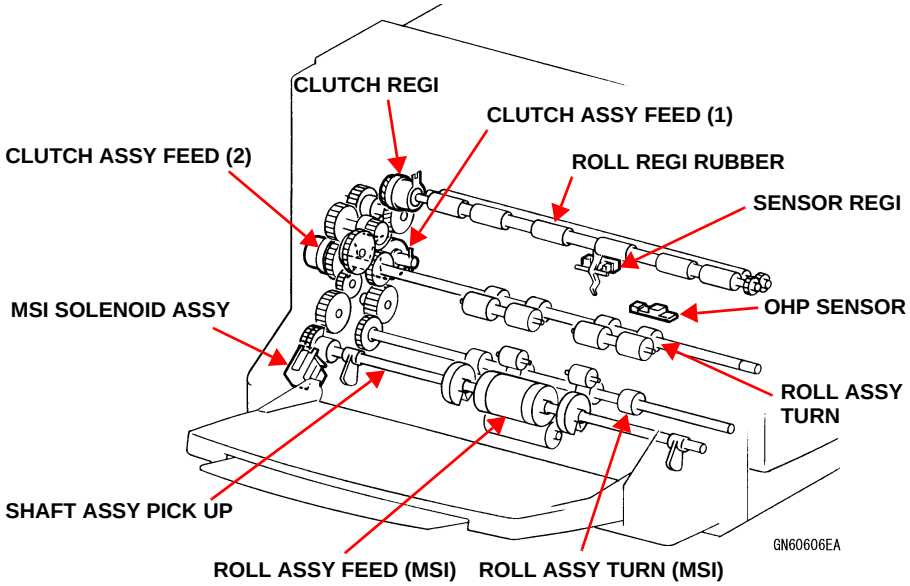

Figure 2-58. Paper Feed-Related Components 1

manuals4you.com

- MOTOR ASSY 3TM
  This motor drives TAKEAWAY ROLL2, TAKEAWAY ROLL3 and TAKEAWAY ROLL4.
- TAKEAWAY SENSOR
  This sensor, located immediately posterior to TAKEAWAY ROLL2, detects paper that passes through.
- Tray3 FEED OUT SENSOR
  This sensor, located immediately posterior to TAKEAWAY ROLL3, detects paper that passes through.
- Tray4 FEED OUT SENSOR
  This sensor, located immediately posterior to TAKEAWAY ROLL4, detects paper that passes through.

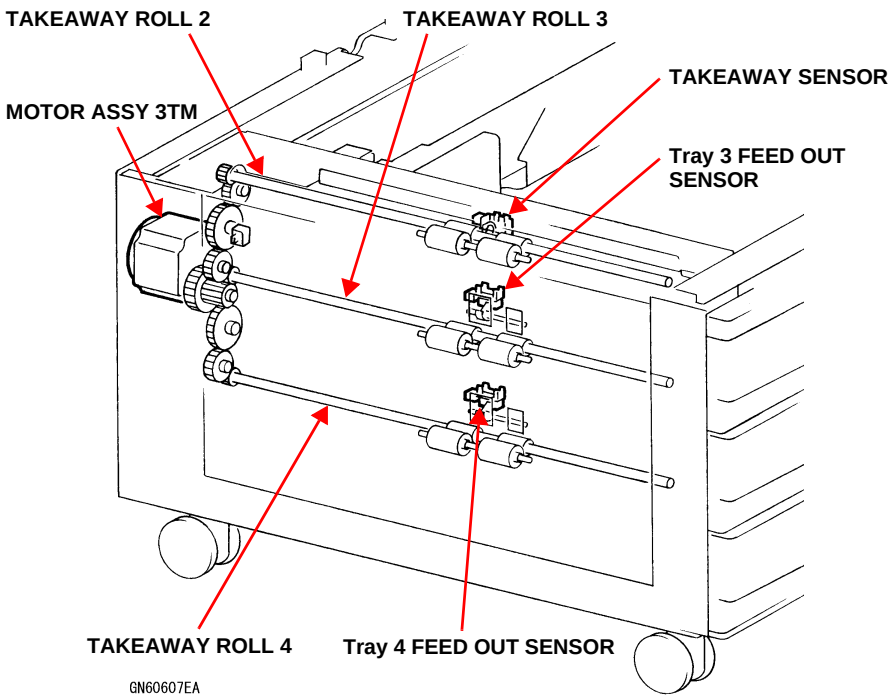

Figure 2-59. Paper Feed-Related Components 2

2.6.2.2 Paper Feed to Registration

The following diagram shows the layout of paper feeding path to Registrations of Tray1, Manual Paper Feed Tray and Additional Tray (1500).

Descriptions about feeding operation are given below.

- Feeding from Tray1
  As soon as a printing job is started, CLUTCH ASSY FEED becomes ON, and paper is fed by ROLL ASSY FEED that is driven by DRIVE ASSY MAIN. Simultaneously, driving of DRIVE ASSY MAIN is transmitted to ROLL ASSY TURN to feed the paper to ROLL REGI RUBBER.
  After SENSOR REGI detects a leading edge of paper, CLUTCH ASSY FEED becomes OFF in the meantime (End of feeding).
- Feeding from Tray2, 3, 4
  Feeding operation from additional Trays is made up Pre Feed and Main Feed.
  The feeding operation from any Trays is basically same. Here, takes up feeding operation from Tray2 as an example.
- Pre Feed
  Pre Feed is an operation that stops paper fed from Tray momently to correct variations of feeding.
  As soon as a printing job is started, Tray2 FEED/LIFT MOTOR rotates clockwise, then FEED ROLL and NUDGER ROLL are rotated to feed paper. When TAKEAWAY SENSOR detects a leading edge of paper, Tray2 FEED/LIFT MOTOR stops. After the paper is fed inside the printer, MOTOR ASSY 3TM/STM drives TAKE AWAY ROLL2 to feed paper. When MOTOR ASSY 3TM/STM has already been driving for foregoing paper, the motor speeds up.
  When TAKE AWAY SENSOR detects a leading edge of paper, MOTOR ASSY 3TM/STM stops.
- Feeding
  Operations to feed paper inside the printer after finishing Pre Feed.
  After MOTOR ASSY 3TM/STM started to drive, it deaccelerates.
  TAKEAWAY ROLL2 starts to rotate to feed paper.
  When SENSOR REGI detects a leading edge of paper, MOTOR ASSY 3TM/STM stops for the meantime (end of feeding). MOTOR ASSY 3TM/STM does not stop when the next paper is fed before TAKEAWAY SENSOR detects back-end of foregoing paper.

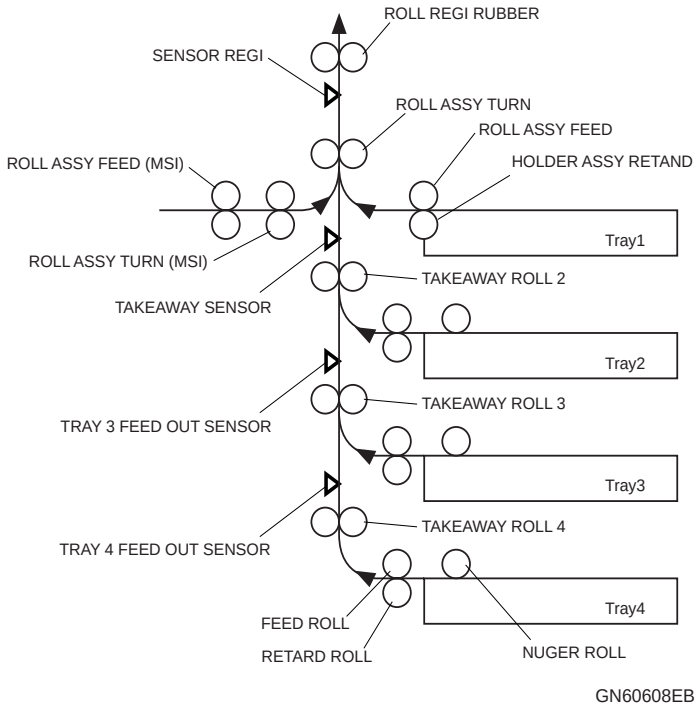

Figure 2-60. Schematic View of Feeding to Registration

manuals4you.com

- Manual Paper Feed Tray
  Paper feeding from Manual Paper Feed Tray is done one by one beginning at the top by the friction of MSI ROLL ASSY FEED.
  After a lapse of the specified time from the time of starting print, MSI SOLENOID ASSY and CLUTCH ASSY FEED become ON to transmit driving of DRIVE ASSY MAIN to MSI ROLL ASSY FEED, MSI ROLL ASSY TURN and ROLL ASSY TURN. MSI ROLL ASSY FEED rotates to feed paper, then the paper passes through ROLL ASSY TURN and goes to Resist Roll part.

  GEAR PICK UP and GEAR CAM for MSI ROLL ASSY FEED have a notch to shut down the driving force after one revolution so that rotation of MSI ROLL ASSY FEED is stopped. By the above operations, paper is fed one by one. When SENSOR REGI detects a leading edge of paper, CLUTCH ASSY FEED becomes OFF for the meantime (end of feeding).

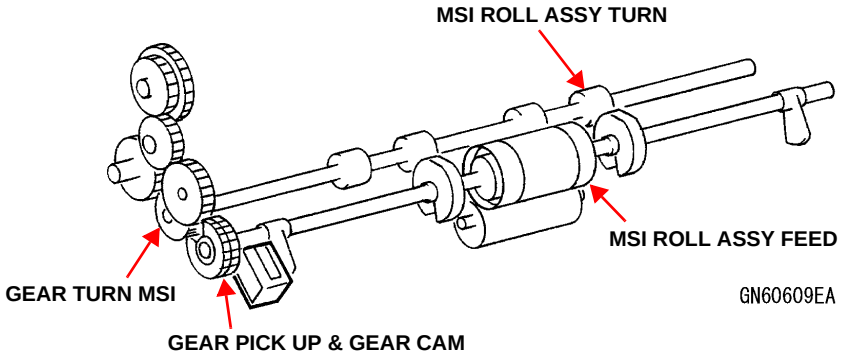

Figure 2-61. Components related to Paper Feed from Manual Paper Feed Tray

2.6.2.3 OHP SENSOR

The printer does not support transparency with white margins. If the transparency with white margins is fed, it will coil around the Fuser roll and get stuck.
OHP SENSOR, located before the Registration, detects transparency with white margins to stop the print job immediately and display an error message “Check Transparency”.

The OHP SENSOR is a reflective photo sensor that detects media type by the reflection from the media. When feeding a sheet of normal white paper, the sensor keeps reflecting while the sheet is passing through. And for the transparency with white margins, the reflecting time become shorter because the sensor reflects only while the white margin area passing through. According to the time, OHP SENSOR can detect transparency.
In case of transparency without white margins, the sensor does not reflect at all.

2.6.2.4 Feeding from Registration

SENSOR REGI detects a leading edge of paper that is fed from any one of Trays, and let the paper stop at ROLL REGI RUBBER for a moment to correct skew of the paper.

After correcting skew, CLUNTCH REGI becomes ON and ROLL REGI RUBBER starts to rotate by driving of DRIVE ASSY MAIN to feed paper. CLUNTCH REGI turns OFF after a specified time from when SENSOR REGI detects the posterior end. Then the paper passes through the Registration and ROLL REGI RUBBER stops.

2.6.3 Ejection of Paper

The followings are explanations about paper feeding operation from Fuser to Face Down Tray, Side Tray and Duplex.

- GATE SOLENOID
  This solenoid is used to switch a gate for paper ejection between Side Tray and Face Down Tray.
- DUPLEX SENSOR
  This sensor detects paper that passes through Duplex part.
- DUPLEX COVER OPEN SWITCH
  This switch detects opening and closing of Duplex Cover.
- EXIT MOTOR
  This is a stepping motor that rotates counterclockwise to pull the paper in Duplex part.
- DUPLEX MOTOR
  This is a stepping motor that drives DUPLEX Roll1, DUPLEX Roll2 and DE CURLER ROLL.
- DUPLEX CLUTCH
  By exciting this clutch, rotates EXIT ROLL1 reversely to pull the paper in Duplex part.

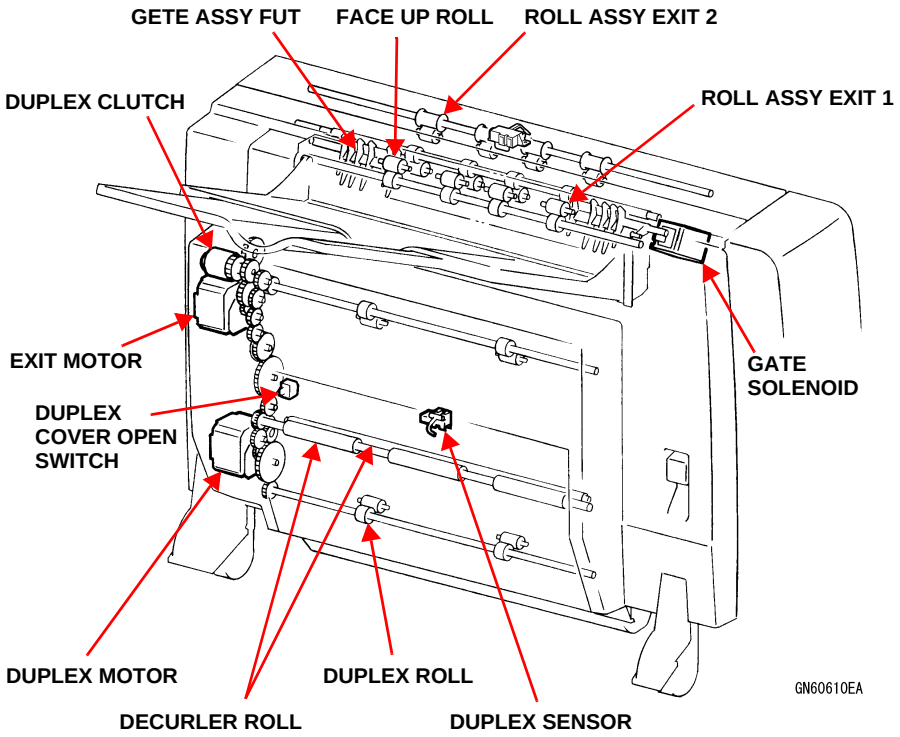

Figure 2-62. Paper Ejection-Related Components

manuals4you.com

manuals4you.com

2.6.3.1 Paper Feeding to Tray

Paper that passes through Fuser is fed to Face Down Tray or Face Up Exit Unit (option).

GATEAWAY FUT switches by GATE SOLENOID to change the feeding direction as shown in the following diagram. When Face Up Exit Unit is not installed, GATEAWAY FUT is opened only for Face Down Tray direction. ROLL ASSY EXIT1 and ROLL ASSY EXIT2 work to feed paper to Face Down Tray. To Face Up Tray, Face Up Roll does.

The Rolls are driven by DRIVE ASSY MAIN and after 1.5 seconds from the time that FUSER EXIT SENSOR detects back-end of paper, the assy stops and paper is ejected to Tray.

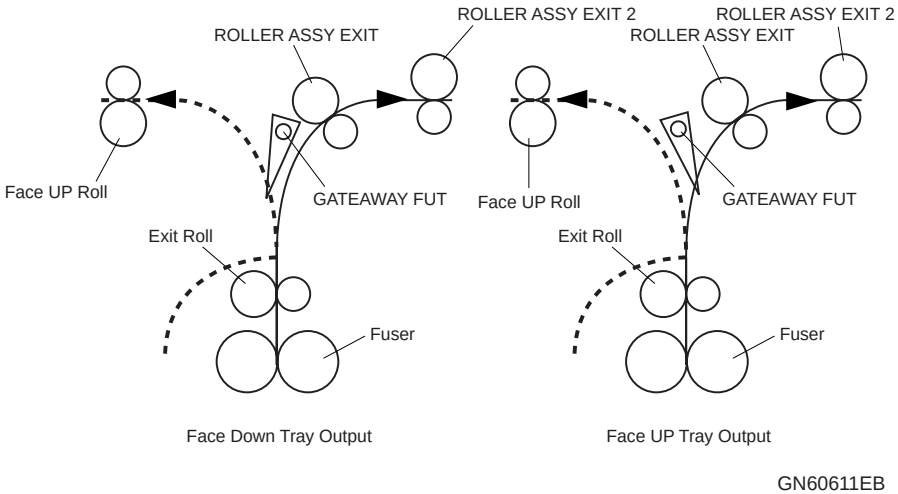

Figure 2-63. Paper Feeding Path to Tray

2.6.3.2 Duplex Printing

Optional Duplex Printing Unit can be installed to the printer to enable duplex printing.

For duplex printing, back side of paper is printed first and when the paper comes out from Fuser Unit, DUPLEX CLUTCH becomes ON to cut the driving force from DRIVEN ASSY MAIN to ROLLER ASSY EXIT1. At that time, leading edge of the paper protrudes from Down Tray momentarily.
Then EXIT MOTOR turns to ON and ROLLER ASSY EXIT rotates reversely to feed paper, from its back-end, to Duplex unit.
When switched ON, DUPLEX MOTOR drives DUPLEX ROLL and ROLL DCL RUBBER to transfer paper. DUPLEX MOTOR switches OFF when the predetermined time elapses after paper is detected by DUPLEX SENSOR.

The paper that has passed through Duplex Unit is turned over and returns to MSI ROLL ASSY TURN. From here on, its front side is printed in the same way as in feeding from MSI.

Two-sided printing and ejection of paper in units of one piece (1-piece patch control) or sequential printing as shown in the figure (2.5-piece patch control) is available as duplex printing according to the paper size. 2.5-piece patch control is available for the paper sizes of A4LEF and Letter LEF, and 1-piece patch control for the other paper sizes.

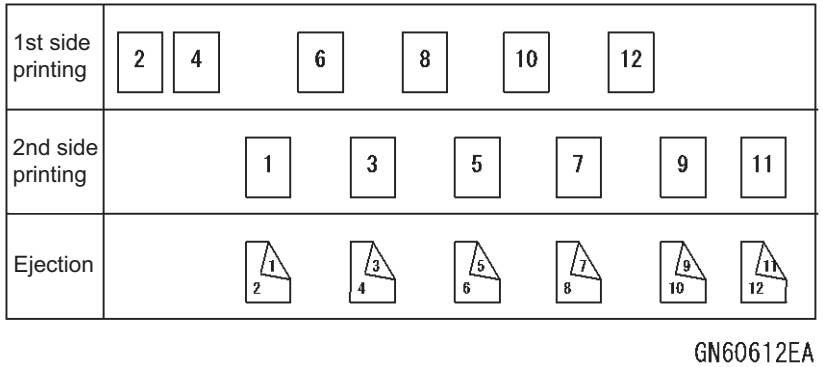

Figure 2-64. Printing Sequence for 2.5-piece Batch Control

2.7 Electrical Circuitry and Control

2.7.1 Low-voltage Power Supply

2.7.1.1 Part Name and the Functions

- Main Power Switch
  This switch supplies/shuts off the main power. It turns ON/OFF the switch of MAIN POWER SWITCH & INLET by LINK.
- LVPS
  Creates +3.3VDC and +5VDC used by ESS and +3.3VDC, +5VDC and +24VDC used by the printer from the main power supply.
- FAN LV
  This Fan exhausts heat from LVPS and the whole rear side of the machine.

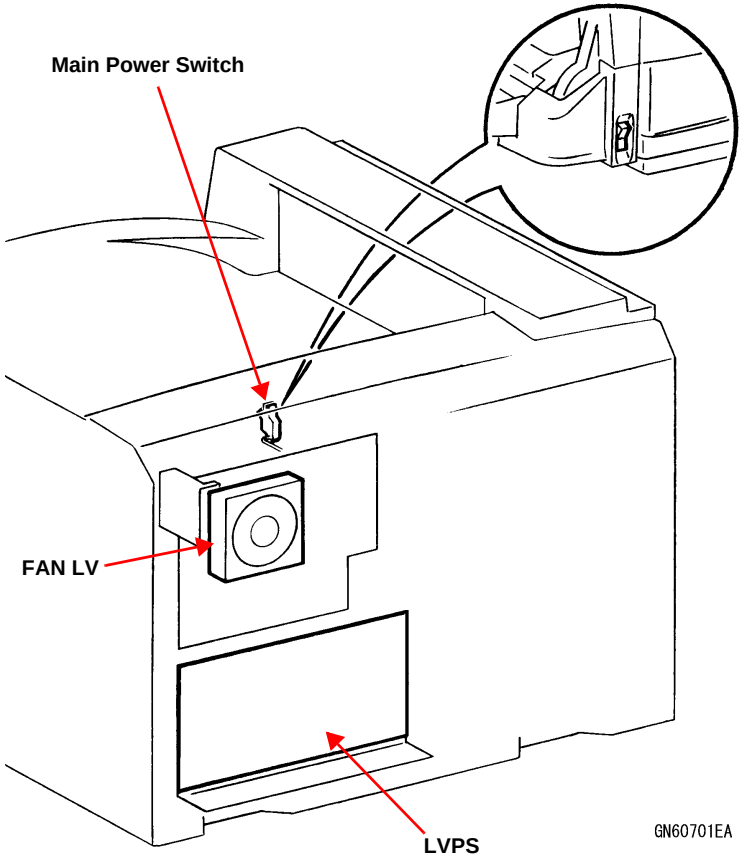

Figure 2-65. Power Supply-Related Components

manuals4you.com

2.7.1.2 Power Supply Control

Turning Main Power Switch ON supplies LVPS with the main power introduced from the commercial power supply. LVPS creates DC voltages of +3.3VDC, +5VDC and +24VDC and supplies them to ESS PWB and MCU PWB.

When Main Power Switch is turned ON, the printer becomes ready to print (ready status). As the ready status, the printer has Standby Mode and Low Power Mode. When the printer receives no print data for 120 minutes in Standby Mode, it shifts to Low Power Mode. When the printer receives no print data in the ready status for 45 minutes at the setting of “Sleep Mode = Enable” in the support menu, it shifts to Sleep Mode.
In Sleep Mode, ESS PWB outputs the LVPS SLEEP (H) signal to turn OFF +3.3VDC, +5VDC and +24VDC supplied from LVPS to MCU PWB. At this time, +3.3VDC supplied to ESS PWB is maintained ON. Sleep Mode is canceled when print data is received, and returns to Standby Mode in about 30 seconds. At this time, the LVPS SLEEP (H) signal is output to resume the supply of +3.3VDC, +5VDC and +24VDC from LVPS to MCU PWB.

The following table indicates the printer status in each mode.

Table 2-6. Printer Status in Each Mode

	During printing	Standby Mode	Low Power Mode	Sleep Mode
Panel display	---	Ready	Ready	Sleep
Fuser System (Fuser)	Held at operating temperature	Held at standby temperature	Held at about 100°C	Halt
Exposure System (ROS)	Operating	Halt	Halt	Halt
Recording System (Drum, IDT)	Operating	Halt	Halt	Halt
Fuser FAN	Running at high speed	Running at low speed	Running at low speed	Halt
LVPS FAN	Running at high speed	Running at low speed	Running at low speed	Halt

Table 2-7. Transitional Status

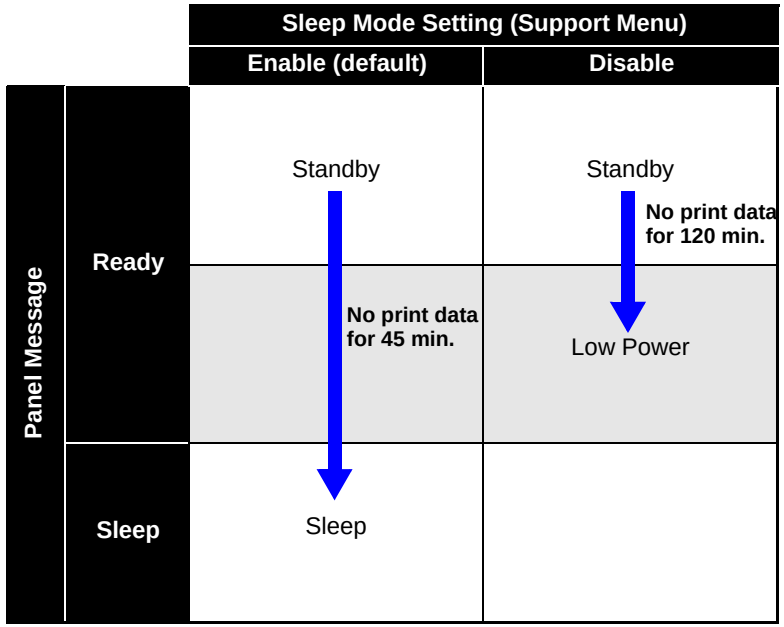

2.7.2 INTER LOCK

2.7.2.1 Part Name and the Functions

- FRONT COVER OPEN SENSOR
  When Front Cover opens, FRONT COVER OPEN SENSOR turns OFF to cut off +5VDC supplied to each color LDD PWB of ROS.
- INTERLOCK SWITCH
  When Left Cover of the printer main unit opens, INTERLOCK SWITCH turns OFF to cut off +24VDC supplied to DRIVE ASSY MAIN, HVPS, GATE SOLENOID and DUPLEX PWB.
- LH COVER INTL SW
  When Left Cover of the Additional Tray opens, LH COVER INTL SW turns OFF.

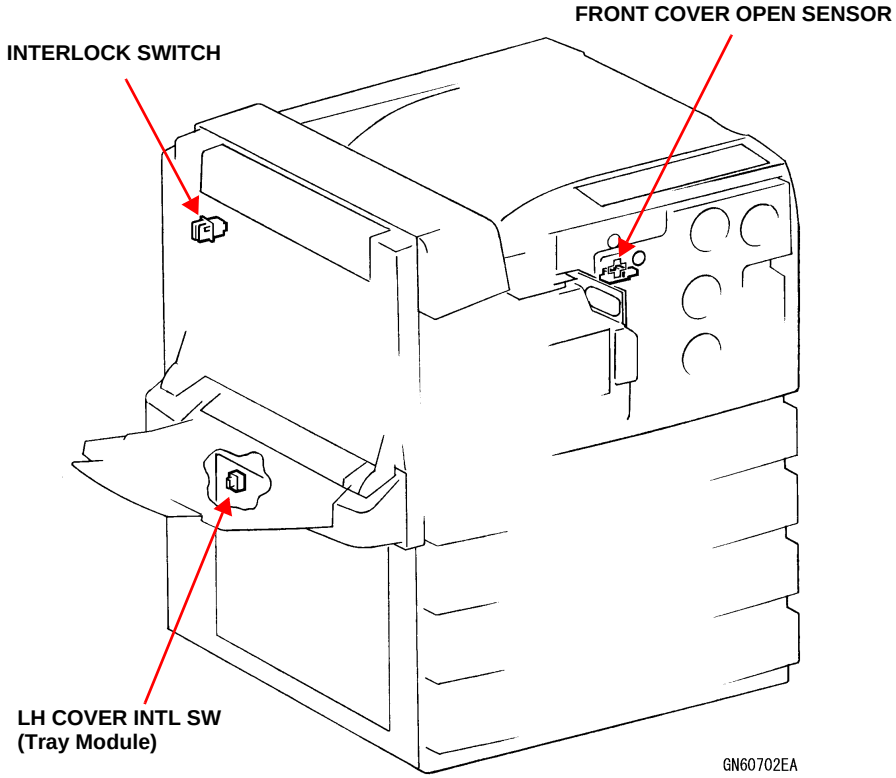

Figure 2-66. INTERLOCK-Related Components

manuals4you.com

2.7.3 Drives

2.7.3.1 Part Name and the Functions

- DRIVE ASSY (main motor)
  DRIVE ASSY MAIN is a DC brushless motor that drives Paper Feed Mechanism, Developer and Fuser.
- DRIVE ASSY (process motor)
  DRIVE ASSY PR is a DC servo motor that drives BTR, IDT and Drum.

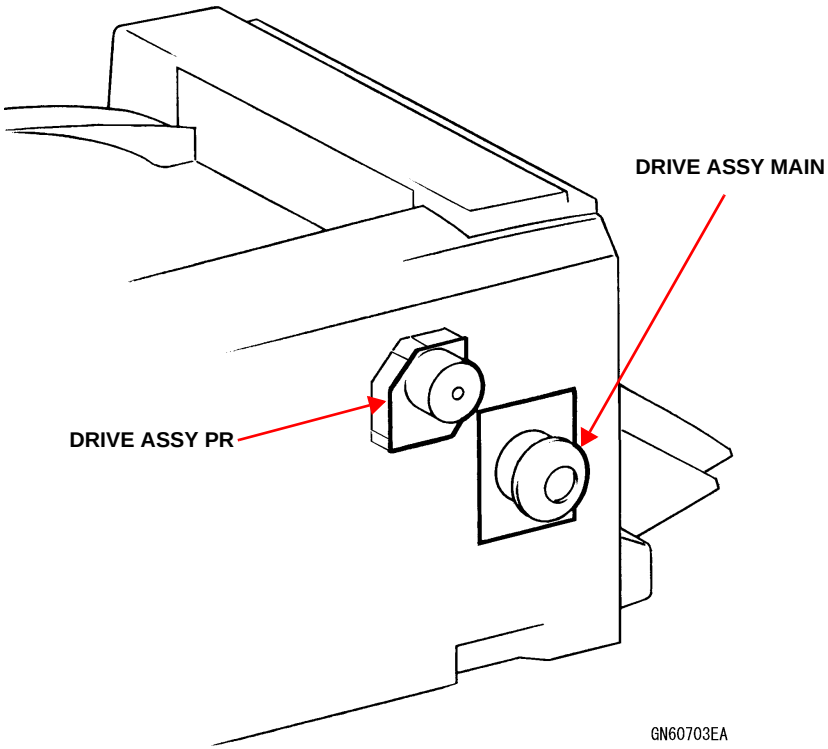

Figure 2-67. Major Components of Drum

2.7.3.2 Motor Speed Control

The DRIVE ASSY MAIN and DRIVE ASSY PR speeds are changed between full speed and 1/2 speed by the HIGH SPEED signal. The motor speeds change depending on the paper type. The relationships between paper types and motor speeds are as indicated below.

Table 2-8. Paper Types and Motor Speeds

Paper type	Printing mode	
	Simplex printing	Auto duplex
Plain paper	Full speed	Full speed
Recycled paper	Full speed	Full speed
Slightly thick paper	Full speed	Full speed
Thick paper	Half speed	---
Extremely thick paper	Half speed	---
Label	Half speed	---
Envelope	Half speed	---
Coated paper 1	Half speed	---
Coated paper 2	Half speed	---
Postcard	Half speed	---
Plain paper (reverse side)	Full speed	---
Recycled paper (reverse side)	Full speed	---
Slightly thick paper (reverse side)	Full speed	---
Thick paper (reverse side) mode	Half speed	---
Extremely thick paper (reverse side) mode	Half speed	---
Coated paper 1 (reverse side) mode	Half speed	---
Coated paper 2 (reverse side) mode	Half speed	---
Postcard (reverse side) mode	Half speed	---

2.7.3.3 DRIVE ASSY MAIN (main motor) Speed Control

DRIVE ASSY MAIN rotates in either forward or reverse direction. It rotates in forward direction normally, but rotates in reverse direction when it finishes warm-up, job or process control or stops due to an error. When DRIVE ASSY MAIN stops, Developer is retracted by MOTOR ASSY TRACKING. At this time, IDT cannot be removed since IDT and Drive Gear are engaged. Therefore, disengage them by driving DRIVE ASSY MAIN in reverse direction.

2.7.3.4 Motor-driven Parts

The following table indicates Motors in the printer and the parts driven by Motors. (Refer to "2.3 Drive Transmission Path" *(p.93)*.)

Table 2-9. Motor-driven Parts

Motor No.	Motor	Driven Part
1	DRIVE ASSY MAIN	DEVE UNIT
		Fuser Unit
		MSI
		Tray1 ROLL ASSY FEED
		ROLL ASSY TURN
		ROLL REGI RUBBER
		ROLLER ASSY EXIT1
		ROLL ASSY EXIT2
		FACE UP ROLL
2	DRIVE ASSY PR	IDT UNIT
		Photoconductor Unit (Driven from IDT Gear)
		BTR
3	ROS Motor	Polygon Mirror
4	Tray2 FEED/LIFT MOTOR	Feed & Lift Up (Tray2)
5	Tray3 FEED/LIFT MOTOR	Feed & Lift Up (Tray3)
6	Tray4 FEED/LIFT MOTOR	Feed & Lift Up (Tray4)
7	MOTOR ASSY 3TM/STM	TAKE AWAY ROLL2
		TAKE AWAY ROLL3
		TAKE AWAY ROLL4
8	MOTOR ASSY TRACKING	Retract Shaft

Table 2-9. Motor-driven Parts

Motor No.	Motor	Driven Part
9	MOTOR DISP (Y)	Toner Dispense Auger (Y)
10	MOTOR DISP (M)	Toner Dispense Auger (M)
11	MOTOR DISP (C)	Toner Dispense Auger (C)
12	MOTOR DISP (K)	Toner Dispense Auger (K)
13	EXIT MOTOR	ROLLER ASSY EXIT1
		ROLL ASSY EXIT2
14	DUPLEX MOTOR	DUPLEX ROLL1
		ROLL DCL RUBBER
		DUPLEX ROLL2

manuals4you.com

2.8 Various Detection Mechanisms

The following table lists various detection mechanisms.

MAIN UNIT

Table 2-10. Sensors

Unit	Detection Item	Detection Method	Remarks	Reference
Photo-conductor unit	New product	Memory chip	Match with password/ID code	p.106
	Cartridge installed	Memory chip	---	
	Level	PV value and DRIVE ASSY PR cumulative operating time	---	
	ID check	Memory chip	---	
Toner Cartridge	New product	Memory chip	---	p.120
	Cartridge installed	Memory chip	---	
	ID check	Memory chip	---	
	Amount remaining	Mechanical controller, software counter & patch detection	Back calculation from life counter	
	Color	Memory chip + Physical mechanism	Structure where projections prevent installing the wrong color	
Development Unit	New product	Reset counter	---	---
	Level	DRIVE ASSY MAIN cumulative operating time	---	

Table 2-10. Sensors

Unit	Detection Item	Detection Method	Remarks	Reference
Transfer Unit	New product	Reset counter	---	p.116
	Level	PV value and DRIVE ASSY PR cumulative operating time	---	
IDT Unit	New product	Reset counter	---	p.116
	Level	PV value and DRIVE ASSY PR cumulative operating time	---	
Fuser Unit	New product	Reset counter	---	p.124
	Installed or not	Closed circuit signal from the fuser	Also serves as thermistor open circuit detector	
	Level	PV value	---	
Waste Toner Box	New product	Photo Sensor	Regarded as a new product until the photosensor comes on, even if it contains waste toner	p.119
	Installed or not	Photo Sensor	This sensor is different from the new product and near end sensors	
MP Tray	Out of paper	Actuator + Photo Sensor	---	p.127

Table 2-10. Sensors

Unit	Detection Item	Detection Method	Remarks	Reference
Standard cassette	Cassette installed	Contact switch	---	p.127
	Paper size	Contact switch	Gives the Paper Size Code. Combined with detection of a cassette	
	Remaining paper	Photo Sensor + Physical mechanism	---	
	Out of paper	Actuator + Photo Sensor	---	
Printer main unit	Level	Life Counter (PV value)	---	---

OPTIONS

Unit	Detection Item	Detection Method	Remarks	Reference
500-sheet paper cassette unit	Installed or not	Contact switch		p.127
	Paper size	Contact switch	Gives the Paper Size Code. Different from detection of a cassette	
	Remaining paper	Tray lift up operating time + Physical mechanism		
	Out of paper	Actuator + Photo Sensor		
1500-sheet paper cassette unit	Installed or not	Contact switch		p.127
	Paper size	Contact switch	Gives the Paper Size Code. Different from detection of a cassette	
	Remaining paper	Tray lift up operating time + Physical mechanism		
	Out of paper	Actuator + Photo Sensor		
Duplex Printing Unit	Installed or not	Energization by connectors		---
Face Up Tray	Installed or not	Energization by connectors		---

manuals4you.com

2.9 Electric Circuit Operation Principle

2.9.1 Main Features

- Engine specifications : A3, Color/Monochrome, 600/300dpi
- Engine speed : 24ppm (color/monochrome)
- CPU : New RISC CPU (PowerPC750FX (600MHz))
- ASIC : Enhanced ASIC is equipped (FMV, FAIO).
- Memory : PC2700 (DDR333) high speed memory (DDR SODIMM (333MHz, CL=2.5)
- RAM : Standard RAM 128 MB
  Expandable to a maximum of 1,024 MB with additional RAM
- Clock : 166.6MHz
- Standard I/F : Parallel
  USB (2.0HS, D4 support)
  10Base-T/100Base-TX
- HDD : High-capacity hard disc (40 GB and so on) is available

2.9.2 Outline Specifications

The followings shows the outline specifications of the controller.

Table 2-11. List of Controller Outline Specifications

Item	Contents	
CPU	Device	PowerPC 750FX-600
	Clock for internal operation	583.1MHz (166.66MHz *Multiplied by 3.5)
ASIC	Memory ASIC	FMV
	Video ASIC	+E06A54WA (For CPU-FMV I/F)
	I/O ASIC	FAIO
Clock	Clock driver	HD151TS311 (Differential)
	System clock	166.6MHz
	SSCG modulation rate	-0.5% (Clock center value = 166.1835MHz)
Reset	Reset IC	M51957BFP
ROM	Connector Specifications	90pin DIMM
	Device capacity	C533PROG (C565WW) (AssyNo.2088529) • Code + IPL + Font: FLASH 8MB
	Fonts	For overseas
	Number of slots for extended ROM	2 slots
	Optional ROM	• Adobe PostScript 3 • PCL5C
EEPROM	Specifications	256 Kbit serial
	Device	M95256

Table 2-11. List of Controller Outline Specifications

Item	Contents	
DDR SDRAM	Specifications	PC2700 (DDR333) CL=2.5 JEDEC-compliant, non-Registered, 64 bit bus (commercial item)
	Connector Specifications	200pin SODIMM (Normal/Reverse)
	Standard SDRAM capacity	128MB
	Number of SDRAM slots	2 slots (including 1 standard slot)
	Available SDRAM capacity to be installed (Per DIMM)	128/256/512MB
	SDRAM maximum capacity	1GB [How to change the maximum capacity to 1GB] Change the standard slot to 512MB DIMM, and add 512MB DIMM to the extension slot.
Video	EVCLK PLL output -FMV input	Dynamic change
	PLLMCLK Oscillator output -PLL input	80.55814 MHz (individual input for each Y, M, C and K is not required)
	PDCLK FMV output -PWM input	Dynamic change
Control Panel	Specifications C565PNL	SIC63408 Panel • No backlight • LCD (120dot x 8dot) • 6 switches • 3 LEDs
	Operation system	EPL N7000-compatible
Parallel	Specifications	IEEE1284-compliant
	Transceiver	None

Table 2-11. List of Controller Outline Specifications

Item	Contents	
USB	Specifications	USB 2.0-compliant
	Transceiver	Built-in FAIO
	Clock	12MHz (Multiplied by 40)
	Board	Integrated with MAIN
Type-B	Number of channels	1 channel
	Standard of Consumption Current	800mA
IDE	HDD Unit	Conform to LP-8100/LP-8700/LP-8700PS3 (LPHD: 40 GB) Support Multiword DMA (Ultra DMA is not supported)
Onboard Network	Specifications	Network board SE-NIC-B82 (2085196-00)
	MAC/PHY chip	
	Clock	
	Transformer	
	Board	Separate board
Power Supply	5.0V/1.5A	Supplied from engine
	3.3V/9.5A	Supplied from engine
	2.5V/3A	Down from 3.3 V
	1.5V/3A	Down from 3.3 V
	1.45V/8A	Down from 3.3 V
	1.25V/1A	Down from 2.5 V
	5V/0.2A	Rise from 3.3 V
Debug Environment	Serial Board Via Type B	
Number of board layers	Six layers	

manuals4you.com

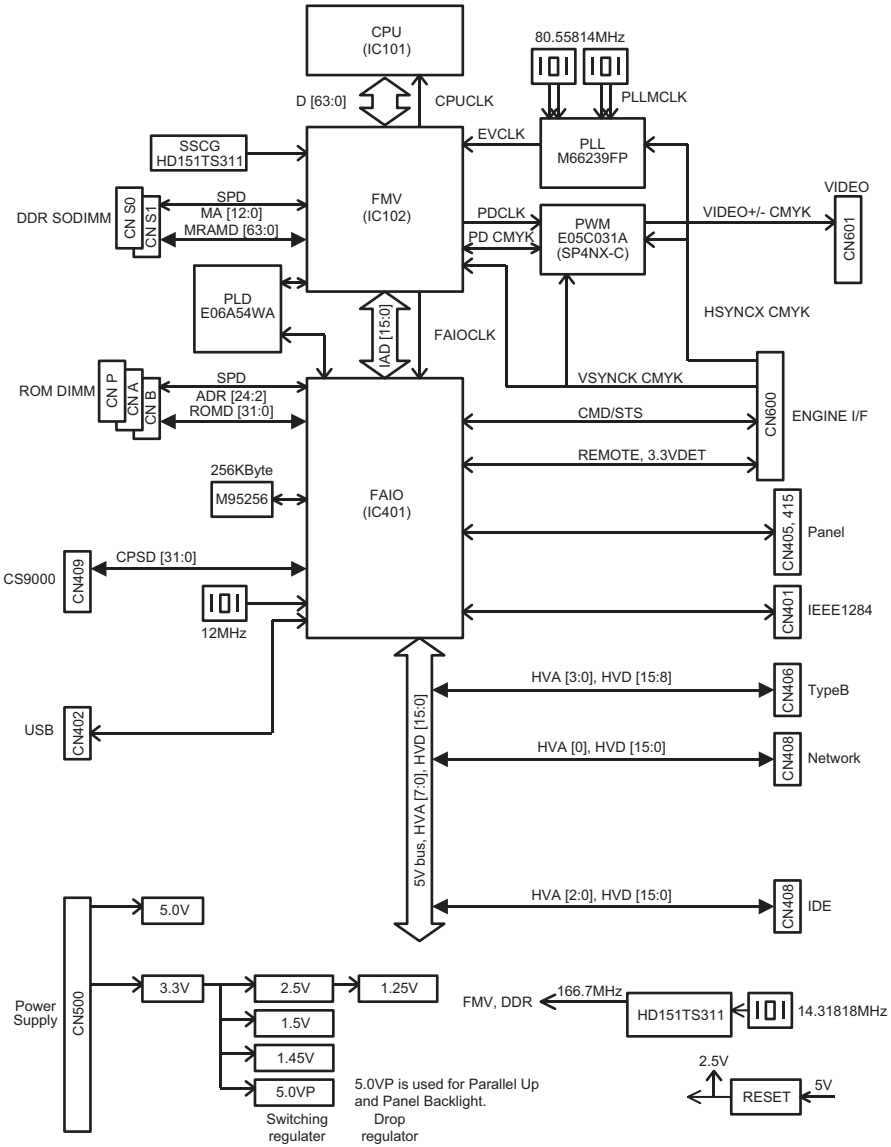

Figure 2-68. Circuitry Block Diagram

CHAPTER

3

TROUBLESHOOTING

manuals4you.com

3.1 Procedure for Troubleshooting

After confirming the problem and carrying out preliminary checks, you should take advantage of FIP (Fault Isolation Procedure), and the information in "Chapter 2: OPERATING PRINCIPLES" and "7.2 Wiring Diagrams and Signal Information" *(p.513)* to troubleshoot efficiently.

3.1.1 Procedure for Troubleshooting

Perform troubleshooting work according to the following flowchart.

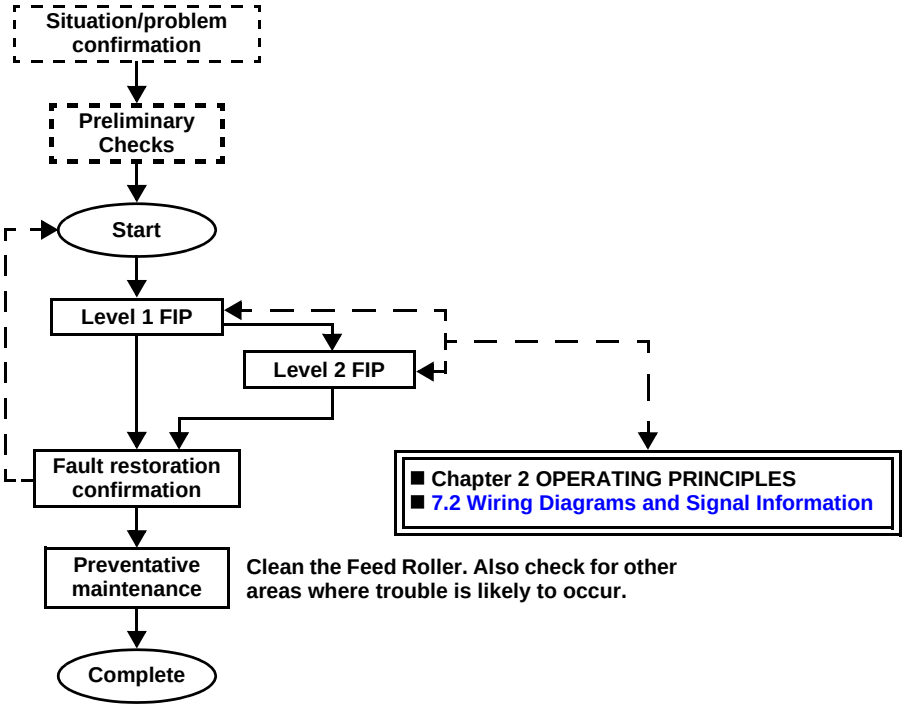

Figure 3-1. Procedure for Troubleshooting

3.1.2 Preliminary Checks

Before starting troubleshooting, be sure to verify that the following conditions are all met.

1. The power supply voltage must be within the specification limits. (Measure the voltage at the wall socket.)
2. The POWER CORD must be free from damage, short circuit or breakage, or mis-wiring in the POWER CORD.
3. The printer must be grounded properly.
4. The printer should not be located in a place where it can be exposed to too high or low temperature, too high or low humidity, or abrupt temperature change.
5. The printer should not be located near waterworks, near humidifiers, near heaters or near flames, in a dusty atmosphere or in a place where the printer can be exposed to blast from an air conditioner.
6. The printer should not be located in a place where volatile or inflammable gases are produced.
7. The printer should not be located in a place where it can be exposed to direct rays of the sun.
8. The printer must be located in a well-ventilated place.
9. The printer must be placed on a strong and steady level table (without an inclination larger than 5 degrees).
10. The paper used must conform to the specification. (The standard paper is recommended.)
11. There is no error in handling of the printer.
12. The Regular Replacement Parts must have been replaced every time their respective specified numbers of sheets had been printed.

3.1.3 Precautions in Performing Work

1. Be sure to unplug the POWER CORD before starting troubleshooting work except when turning power ON is needed.

WARNING

Never touch any live parts unnecessarily when power is on. The power switch/inlet part of the LVPS is alive even when the power switch is turned OFF. Take care not to touch any live parts.

2. If you perform work with the power turned ON, covers removed and the interlock and safety switches turned ON, be sure to disconnect the ROS ASSY connector (P/J111), except when its connection is required.

WARNING

If you perform work with the power turned ON, covers removed and the interlock and safety switches turned ON, there is danger of laser radiation being emitted from the ROS ASSY. Be sure to disconnect the ROS ASSY connector (P/J111), except when its connection is required.

3. If you perform work with the power turned ON, covers removed and the interlock switches turned ON, use care to avoid possible injury by a high voltage from HVPS.

WARNING

If you perform work with the power ON, covers removed and the interlock switches turned ON, be sure not to touch the HVPS and parts where output a high voltage to avoid possible injury.

4. When you touch any surface which can become hot, take care not to suffer a burn.
5. Wear a wrist strap to discharge static electricity from the human body, whenever possible.

3.1.4 Precautions When Using FIP

1. The troubleshooting method described here assumes there is no malfunction in the printer controller (BOARD ASSY, MAIN). If you can not fix a problem even by following the troubleshooting procedure, you are advised to replace the printer controller with a normal one and then follow the same procedure.
   If you can not recover the printer from the trouble even with the printer controller replaced, replace the “Initial check” and related parts with new ones in order one by one and repeat operation checks.
2. Some normal components may be required as troubleshooting tools to identify the cause of the trouble. You are advised to have a spare MCU PWB, HVPS, and Photoconductor unit.
3. Make “Initial check” in FIP on the easily done level.
4. Check not only the “Initial check” but also their components and related parts.
5. Be sure to unplug the POWER CORD before starting troubleshooting work except when turning power ON is needed.
   With the power cord connected, never touch any live parts unnecessarily.
6. Conventions used to represent connectors are as follows.
   - P/J12 : Connector (P/J12) with the Plug and Jack connected to each other.
   - P12* : Plug of the connector (P/J12) with the Plug and Jack disconnected from each other. (This does not apply to direct connection to a circuit board.)
   - J12* : Jack of the connector (P/J12) with the Plug and Jack disconnected from each other. (This does not apply to direct connection to a circuit board.)

NOTE *: *Unless otherwise specified, measure the voltage with the Plug and Jack connected to each other.*

7. When “P/J1-2 ↔ P/J3-4”, for instance, is referred to in any diagnosis item, make measurement by placing the positive (+) probe of your meter on the pin 2 of P/J1 and the negative (-) probe on the pin 4 of P/J3.
8. When “P/J1 ↔ P/J2”, for instance, is referred to in any diagnosis item, make measurement between every pair of terminals of the P/J1 and P/J2 by consulting “7.2 Wiring Diagrams and Signal Information” *(p.513)*.

manuals4you.com

9. When “P/J1-2 ↔ P/J3-4”, for instance, is referred to in any diagnosis item for voltage measurement, the negative terminal “P/J3-4” is always of AG (Analog Ground), SG (Signal Ground) or RTN (Return).
   Therefore, first make certain that actually there is continuity between AGs, between SGs and between RTNs. Then you are allowed to connect the negative (-) probe of your meter not to “P/J3-4PIN” but to another AG, SG or RTN pin.
   However, AG, SG and RTN are not all of the same level, so you must be careful not to confuse them.
10. When measuring voltages, the terminal surfaces (every other one near you or away from you) at the side of the connector must be used in some cases. The terminal surface is small. Using a tester with slender probes, be sure to bring the probes into contact with the respective terminal surfaces correctly, especially take care when bringing the probe into contact with the terminal surface away from you.
11. Measure the voltage with the Photoconductor unit, IDT UNIT, FUSER UNIT, BTR UNIT ASSY and paper tray mounted, with the COVER HIGH ASSY TOP and COVER ASSY FRONT closed and with the power turned ON, as long as these conditions do not obstruct the measuring work.
12. All voltage values given in the FIP are approximate values. Actually measured values different somewhat from, but deemed close to, the given values should be accepted.
13. Remember that FIP do not provide any description on removal of parts which are supposed to be always removed, and work operations which are supposed to be done, to perform servicing work indicated in diagnosis items.
14. “Replacement” referred to in the FIP items lists the parts which can be the source of the trouble and signifies that the parts or the assemblies (HIGH ASSY) containing those parts should be replaced with normal ones one by one and checking should be repeated.
15. In the FIP, the first-level of the paper trays of the printer is called “Tray 1”, and the first level of the optional FEEDER UNIT is called “Tray 2”, and the second level called “Tray 3”, and the third level called “Tray 4”.
16. FIP may contain descriptions that distinguish between certain specifications. Be sure to follow such instructions properly to remedy the problem.

manuals4you.com

3.1.5 Warming-Up Flowchart At Power-ON

The following shows a warming-up operation flowchart of the printer from when power is switched on until printing can be done ([Ready] is displayed).

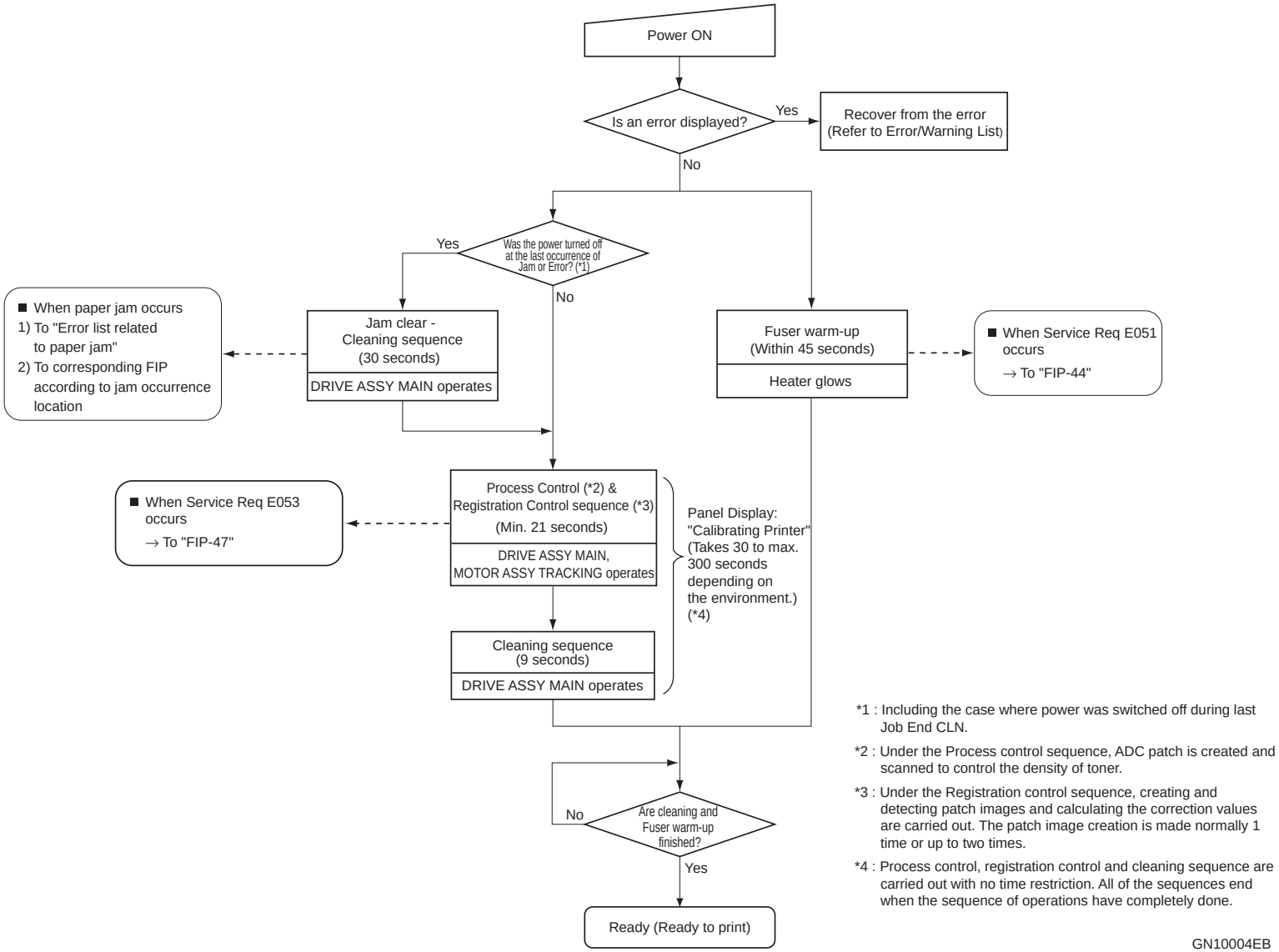

Figure 3-2. Flowchart

manuals4you.com

3.2 Level 1 FIP

3.2.1 Level 1 FIP

The Level 1 FIP is the first step to take in diagnosing problems. The Level 1 FIP involves identifying error codes and other trouble symptoms, and is intended as a guide for proceeding to the troubleshooting procedures in Level 2.

3.2.2 Level 1 FIP Flowchart

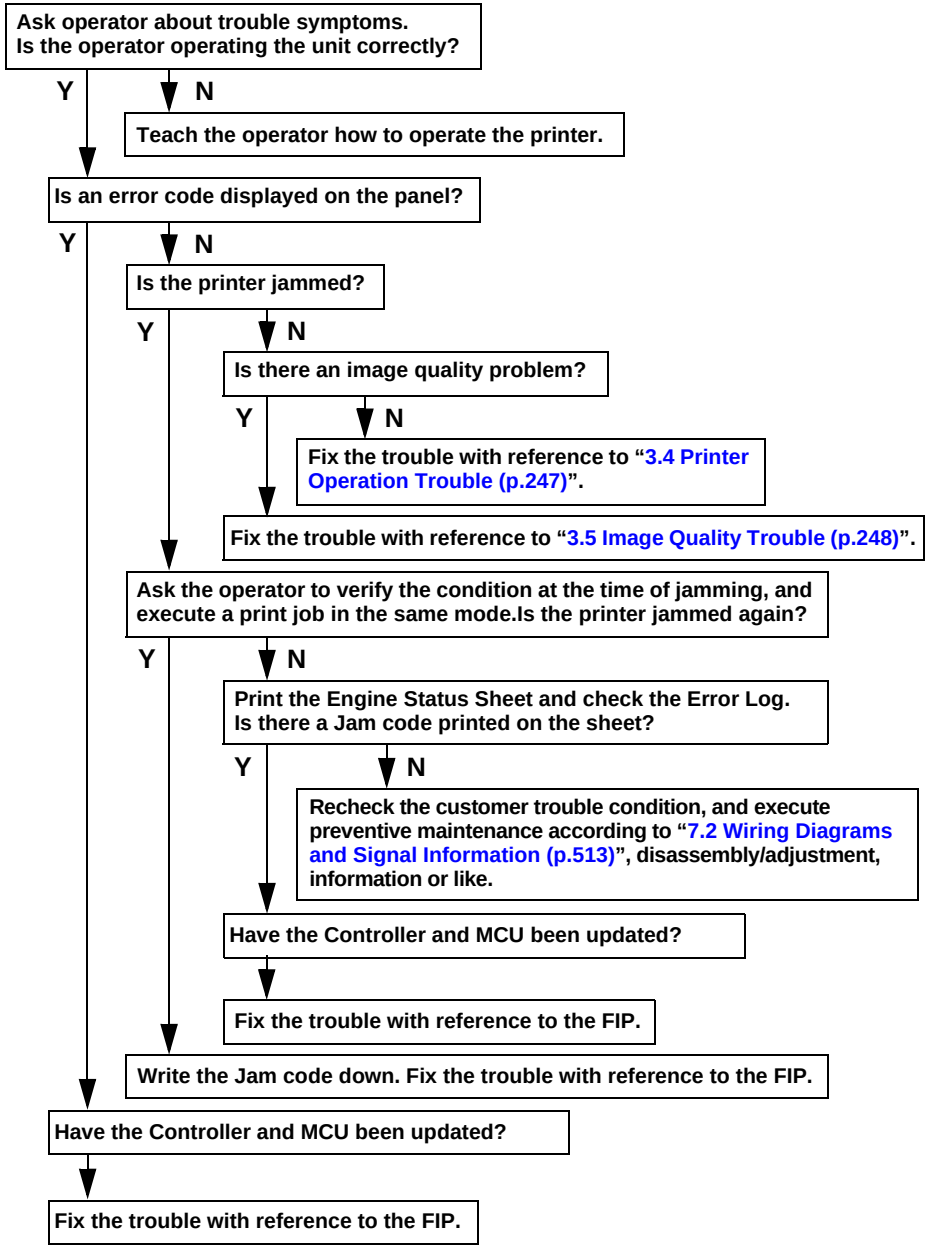

3.3 Level 2 FIP

3.3.1 Level 2 FIP

The Level 2 FIP includes the procedures for diagnosing problems by classifying them according to error codes and other trouble symptoms.
The method of problem diagnosis allow the causes of problems to be located quickly by following the procedures indicated in the FIP or the checking procedures.

3.3.2 List of Errors and Warnings

NOTE: *Reference Detailed Connection Wiring Diagrams indicate* "7.2 Wiring Diagrams and Signal Information" *(p.513).*

ERROR LIST RELATED TO PAPER JAM

Paper Jam is classified into 7 types (A to F) according to the location of the failure. And each of the 7 types Paper Jam is broken down into multiple jam errors according to the part caused the failure.

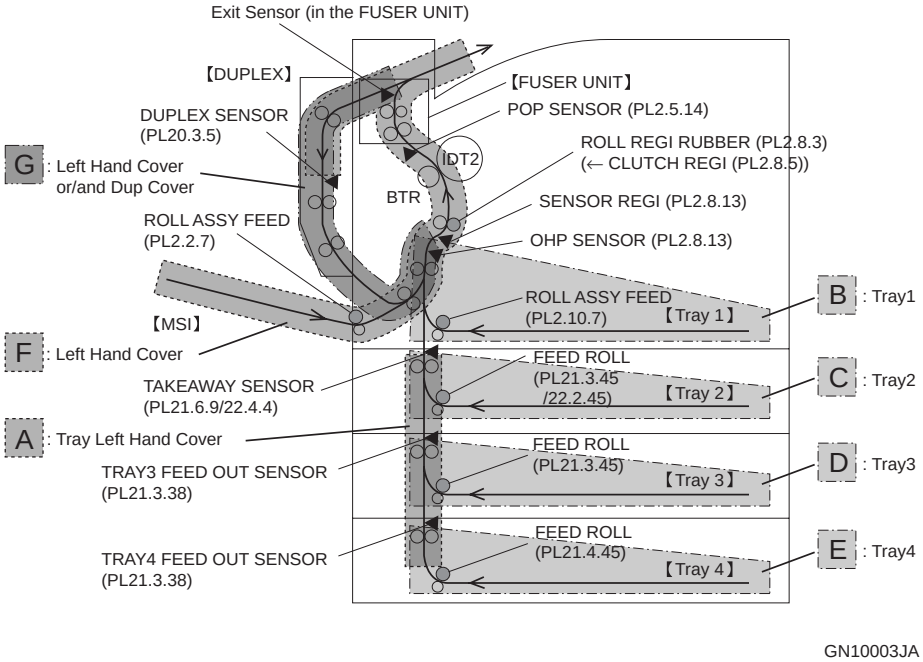

Figure 3-3. Location of Failure and the Part caused the Failure

manuals4you.com

Table 3-1. Error List of Paper Jam

Classification	Panel Message	Errors	Location of failure	FIP	Reference Detailed Connection Diagram
			Part caused the failure		
Error	Jam E, C2	Even after a lapse of specified time from starting to feed paper from Tray2, TAKEAWAY SENSOR of Tray2 does not detect paper.	C Tray2 (Feed) to TAKEAWAY SENSOR	O11 *(p.219)*	CH6.4 *(p.538)*
	Jam E, C3	Even after a lapse of specified time from starting to feed paper from Tray3, TRAY FEED OUT SENSOR of Tray3 does not detect paper.	D Tray3 (Feed) to TRAY3 FEED OUT SENSOR	O12 *(p.220)*	CH6.4 *(p.538)*
	Jam E, C4	Even after a lapse of specified time from starting to feed paper from Tray4, TRAY FEED OUT SENSOR of Tray4 does not detect paper.	E Tray4 (Feed) to TRAY4 FEED OUT SENSOR	O13 *(p.221)*	CH6.4 *(p.538)*
	Jam E	Even after a lapse of specified time from when the Feed Out Sensor 3 or 4 detected paper, TAKEAWAY SENSOR does not detect paper.	A TRAY3/4 FEED OUT SENSOR to TAKEAWAY SENSOR	O24 *(p.238)*	CH6.4 *(p.538)*
	Jam B, C1	Even after a lapse of specified time from starting to feed paper from Tray1, SENSOR REGI does not detect paper.	B Tray1 (Feed) to SENSOR REGI	19 *(p.184)*	CH6.1 *(p.535)*
	Jam B, D	Even after a lapse of specified time from starting to feed paper from Duplex, SENSOR REGI does not detect paper.	G Paper turnover - SENSOR REGI	O27 *(p.241)*	CH6.7 *(p.541)*
		Even after a lapse of specified time from paper turnover, DUPLEX SENSOR does not detect paper.	F Paper turnover - DUPLEX SENSOR	O28 *(p.242)*	CH8.3 *(p.560)* CH8.4 *(p.561)*

Table 3-1. Error List of Paper Jam

Classification	Panel Message	Errors	Location of failure	FIP	Reference Detailed Connection Diagram
			Part caused the failure		
Error	Jam B	Even after a lapse of specified time from when REGI Clutch turned ON, paper does not pass through SENSOR REGI (it not turns OFF).	F SENSOR REGI to ROLL REGI RUBBER	20 *(p.186)*	CH6.7 *(p.541)*
		Even after a lapse of time from when REGI Clutch turned ON, POP SENSOR does not detect paper.	F ROLL REGI RUBBER to POP SENSOR	40 *(p.199)*	CH7.12 *(p.553)*
		Even after a lapse of time from when POP SENSOR turned ON, Exit Sensor of Fuser unit does not detect paper.	F ROLL REGI RUBBER to Exit Sensor	41 *(p.201)*	---
		After a lapse of specified time from when Exit Sensor of Fuser unit detected a leading edge of paper, paper does not pass through Exit Sensor of Fuser unit.	F SENSOR REGI to Exit Sensor	42 *(p.203)*	---
		Exit Sensor of Fuser unit turned OFF in a shorter time than the specified time (too early) after Exit Sensor of Fuser unit detected a leading edge of paper.	F Exit Sensor	43 *(p.205)*	---
		Even after a lapse of specified time from starting to feed paper from MSI, SENSOR REGI does not detect paper.	F MSI (Feed) to SENSOR REGI	18 *(p.183)*	CH6.2 *(p.536)*
		Even after a lapse of specified time from when starting to feed paper from Tray2 to 4, SENSOR REGI does not detect paper.	F Tray2, 3, 4 (Feed) to SENSOR REGI	O25 *(p.239)*	CH6.7 *(p.541)*

manuals4you.com

OTHER ERRORS AND WARNINGS

Table 3-2. List of Errors and Warnings

Classification	Panel Message	Errors	FIP	Reference Detailed Connection Diagram
Warnings	Check Paper Size	The length (sub scan direction) of the paper that was fed from the Tray1, was measured by SENSOR REGI and found that the length is different from the specified length.	14 *(p.177)*	CH6.7 *(p.541)*
		The length (sub scan direction) of the paper that was fed from the Tray2, was measured by SENSOR REGI and found that the length is different from the specified length.	O18 *(p.229)*	CH6.7 *(p.541)*
		The length (sub scan direction) of the paper that was fed from the Tray3, was measured by SENSOR REGI and found that the length is different from the specified length.	O19 *(p.231)*	CH6.7 *(p.541)*
		The length (sub scan direction) of the paper that was fed from the Tray4, was measured by SENSOR REGI and found that the length is different from the specified length.	O20 *(p.233)*	CH6.7 *(p.541)*
		The length (sub scan direction) of the paper that was fed from the MSI, was measured by SENSOR REGI and found that the length is different from the specified length.	15 *(p.179)*	CH6.7 *(p.541)*
	Y Toner Low	Run short of Yellow Toner.	23 *(p.189)*	---
	M Toner Low	Run short of Magenta Toner.	23 *(p.189)*	---
	C Toner Low	Run short of Cyan Toner.	24 *(p.190)*	---
	K Toner Low	Run short of Black Toner.	24 *(p.190)*	---
	Worn Photoconductor	It is about time to replace the Photoconductor unit because number of copies or cumulative rotation time of PR Motor reached to the specified value.	26 *(p.191)*	---
	Waste T BoxNearfull	It is about time to replace the Toner Collection Bottle.	22 *(p.189)*	CH7.16 *(p.557)*
	Worn C Dev Unit	It is about time to replace the Cyan DEVE UNIT.	25 *(p.190)*	---
	Worn M Dev Unit	It is about time to replace the Magenta DEVE UNIT.	25 *(p.190)*	---
	Worn Y Dev Unit	It is about time to replace the Yellow DEVE UNIT.	25 *(p.190)*	---
	Worn K Dev Unit	It is about time to replace the Yellow DEVE UNIT.	25 *(p.190)*	---
	Worn IDT Unit	It is about time to replace the IDT UNIT because number of copies or cumulative rotation time of PR Motor reached to the specified value.	27 *(p.191)*	---
	Worn Transfer Unit	It is about time to replace the BTR UNIT ASSY because number of copies or cumulative rotation time of PR Motor reached to the specified value.	28 *(p.191)*	---
	Worn Fuser	It is about time to replace the Fuser unit.	46 *(p.208)*	---
	Color Regist Warn 6	The specified number of valid sample blocks was not reached when A2 patch was detected. (In side)	29 *(p.192)*	CH7.8 *(p.549)*
	Color Regist Warn 5	The specified number of valid sample blocks was not reached when A2 patch was detected. (Out side)	29 *(p.192)*	CH7.9 *(p.550)*

Table 3-2. List of Errors and Warnings

Classification	Panel Message	Errors	FIP	Reference Detailed Connection Diagram
Warnings	Color Regist Warn 4	The specified number of valid sample blocks was not reached when B patch was detected. (In side)	30 *(p.193)*	CH7.10 *(p.551)*
	Color Regist Warn 3	The specified number of valid sample blocks was not reached when B patch was detected. (Out side)	30 *(p.193)*	CH7.11 *(p.552)*
	Color Regist Warn 2	Failed to correct skew specified times continuously.	31 *(p.194)*	---

manuals4you.com

Table 3-2. List of Errors and Warnings

Classification	Panel Message	Errors	FIP	Reference Detailed Connection Diagram
Error	Open B	The L/H ASSY is open.	1 *(p.164)*	CH1.2 *(p.520)*
	Open A	The COVER ASSY FRONT is open.	2 *(p.164)*	CH1.2 *(p.520)*
	Open E	The LEFT COVER 3TM/STM is open.	O1 *(p.211)*	CH1.4 *(p.522)*
	Open D	The DUPLEX COVER is open.	O26 *(p.240)*	CH8.4 *(p.561)*
	Paper Set Casette 1 tttt	The Tray 1 is not set.	4 *(p.165)*	CH5.1 *(p.526)*
	Paper Set Casette 2 tttt	The Tray 2 is not set.	O2 *(p.211)*	CH5.2 *(p.527)*
	Paper Set Casette 3 tttt	The Tray 3 is not set.	O3 *(p.212)*	CH5.3 *(p.528)*
	Paper Set Casette 4 tttt	The Tray 4 is not set.	O4 *(p.212)*	CH5.4 *(p.529)*
	Paper Out Casette 1 tttt	There is no paper left in Tray 1.	5 *(p.166)*	CH5.5 *(p.530)*
	Paper Out Casette 2 tttt	There is no paper left in Tray 2.	O5 *(p.213)*	CH5.6 *(p.531)*
	Paper Out Casette 3 tttt	There is no paper left in Tray 3.	O6 *(p.214)*	CH5.7 *(p.532)*
	Paper Out Casette 4 tttt	There is no paper left in Tray 4.	O7 *(p.215)*	CH5.8 *(p.533)*
	Paper Out Tray tttt	There is no paper left in Manual Feeding Tray.	6 *(p.167)*	CH5.9 *(p.534)*
	Paper Set Casette 1 tttt	The paper type or size that is set for the print job is different from that in the Tray1.	7 *(p.168)*	CH5.1 *(p.526)*
	Paper Set Casette 2 tttt	The paper type or size that is set for the print job is different from that in the Tray2.	O8 *(p.216)*	CH5.2 *(p.527)*
	Paper Set Casette 3 tttt	The paper type or size that is set for the print job is different from that in the Tray3.	O9 *(p.217)*	CH5.3 *(p.528)*
	Paper Set Casette 4 tttt	The paper type or size that is set for the print job is different from that in the Tray4.	O10 *(p.218)*	CH5.4 *(p.529)*
	Paper Out sssss tttt	Run out of paper that is required for the print job.	8 *(p.169)*	---
	Paper Set ssss tttt	There is no paper found matching the criteria (paper type, size, direction) specified.	9 *(p.172)*	---
	Paper Set Tray tttt	Feeding paper from the Manual Feeding Tray is interrupted for any reason.	10 *(p.174)*	---
	Check Transparency	When standard paper is specified for the print job, OHP media is detected after starting to feed from the Tray1.	16 *(p.181)*	CH6.3 *(p.537)*
		When standard paper is specified for the print job, OHP media is detected after starting to feed from the Tray2.	O21 *(p.235)*	CH6.3 *(p.537)*
		When standard paper is specified for the print job, OHP media is detected after starting to feed from the Tray3.	O22 *(p.236)*	CH6.3 *(p.537)*
		When standard paper is specified for the print job, OHP media is detected after starting to feed from the Tray4.	O23 *(p.237)*	CH6.3 *(p.537)*
		When standard paper is specified for the print job, OHP media is detected after starting to feed from the Tray5.	17 *(p.182)*	CH6.3 *(p.537)*

Table 3-2. List of Errors and Warnings

Classification	Panel Message	Errors	FIP	Reference Detailed Connection Diagram
Error	Replace Toner Y	The cumulative rotation time of Toner Dispense Motor (Y) reaches the specified time and the Yellow Toner is emptied.	34 *(p.196)*	---
	Replace Toner M	The cumulative rotation time of Toner Dispense Motor (M) reaches the specified time and the Magenta Toner is emptied.	34 *(p.196)*	---
	Replace Toner C	The cumulative rotation time of Toner Dispense Motor (C) reaches the specified time and the Cyan Toner is emptied.	35 *(p.196)*	---
	Replace Toner K	The cumulative rotation time of Toner Dispense Motor (K) reaches the specified time and the Black Toner is emptied.	35 *(p.196)*	---
	Install Y TnrCart	The Toner Cartridge (Y) is not set.	38 *(p.197)*	CH7.7 *(p.548)*
	Install M TnrCart	The Toner Cartridge (M) is not set.	38 *(p.197)*	CH7.7 *(p.548)*
	Install C TnrCart	The Toner Cartridge (C) is not set.	39 *(p.198)*	CH7.7 *(p.548)*
	Install K TnrCart	The Toner Cartridge (K) is not set.	39 *(p.198)*	CH7.7 *(p.548)*
	NonGenuineToner Y	The ID of the Toner Cartridge (Y) is different from the ID stored in the NVM of the IOT.	32 *(p.195)*	---
	NonGenuineToner M	The ID of the Toner Cartridge (M) is different from the ID stored in the NVM of the IOT.	32 *(p.195)*	---
	NonGenuineToner C	The ID of the Toner Cartridge (C) is different from the ID stored in the NVM of the IOT.	33 *(p.195)*	---
	NonGenuineToner K	The ID of the Toner Cartridge (K) is different from the ID stored in the NVM of the IOT.	33 *(p.195)*	---
	Install Photoconductor	The Photoconductor unit is not set.	37 *(p.197)*	---
	Wrong Photoconductor	The type of the Photoconductor unit does not match.	37 *(p.197)*	---
	Replace Waste T Box	The Waste Toner Collector is full.	22 *(p.189)*	CH7.16 *(p.557)*
	Install Waste T Box	The Waste Toner Collector is not set.	36 *(p.196)*	CH7.16 *(p.557)*

manuals4you.com

3.3.3 Service Call Errors

NOTE: *Reference Detailed Connection Wiring Diagrams indicate* "7.2 Wiring Diagrams and Signal Information" *(p.513).*

Table 3-3. Service Call Errors List

Classification	Panel Message	Errors	FIP	Reference Detailed Connection Diagram
Engine Related (E)	E050	ROS error The ROS Motor speed did not reach the normal speed continuously for 15 seconds during Warm Up or for 2 seconds during Run.	13 *(p.176)*	---
	E051	Fuser unit error An error, such as Thermistor wire breakage, overheat or low temperature, occurred. • Fuser Low Temp Fail 2 (STS1) : The temperature detected by the Thermistor fell below 80 degrees three consecutive times. • Fuser Warm Up Fail : The temperature detected by the Thermopile does not reach the Ready temperature within 45 seconds after a Wait status. • Fuser Thermistor wire breakage (STS1) : The wire breakage of the Thermistor was detected three consecutive times. • Fuser Over Heat Fail 2 (STS1) : The temperature detected by the Thermistor exceeded 230 degrees three consecutive times. • Fuser Lamp Fail 2 : During Standby, SSR (in LVPS) was ON continuously for 10 seconds. • Fuser Lamp Fail 1 : During Run, SSR (in LVPS) was ON continuously for 60 seconds. • Fuser Low Temp Fail 1 (Thermopile) : Fuser Low Temp Fail 1 (Thermopile) • Fuser Over Heat Fail 1 (Thermopile) : The temperature detected by the Thermopile exceeded 230 degrees three consecutive times. • Thermopile NG : The check temperature during Thermopile cleaning became abnormal.	44 *(p.206)*	---
	E052	NV-RAM error • Normal read/write from/to NVM (EEPROM) on the MCU PWB cannot be performed. • The MCU PWB (or X-ROM PWB) was replaced in error.	12 *(p.175)*	---
	E053	Development Unit error When Deve is brought into contact or separated, ON/OFF of the SENSOR ASSY TRACKING could not be confirmed within 2 sec after the MOTOR ASSY TRACKING was started.	47 *(p.209)*	CH7.3 *(p.544)*
	E054	Fuser Fan error The revolution speed of FAN FUSER or FAN LV has not reached to the specified value.	45 *(p.208)*	CH1.3 *(p.521)*
	E055	LV Fan error The revolution speed of FAN LV is abnormal.	3 *(p.165)*	CH1.3 *(p.521)*

Table 3-3. Service Call Errors List

Classi-fica-tion	Panel Message	Errors	FIP	Reference Detailed Connection Diagram
Engine Errors (E)	E056	Mechanical controller firmware error An error occurred within the MCU PWB.	11 *(p.174)*	---
	E057	PAGEC time-out When printing, a communication error between the controller and the MCU PWB occurred.	48 *(p.210)*	---
	E086	ADC sensor error Wire breakage or fault of ADC Sensor	21 *(p.188)*	CH7.8 *(p.549)*
	E142	Additional Cassette 2 error After a lapse of the specified time from when the Tray2 started lifting up, TRAY LEVEL SENSOR of Tray2 does not turn ON (does not become H).	O15 *(p.223)*	CH5.6 *(p.531)*
	E143	Additional Cassette 3 error After a lapse of the specified time from when the Tray3 started lifting up, TRAY LEVEL SENSOR of Tray3 does not turn ON (does not become H).	O16 *(p.225)*	CH5.7 *(p.532)*
	E144	Additional Cassette 4 error After a lapse of the specified time from when the Tray4 started lifting up, TRAY LEVEL SENSOR of Tray4 does not turn ON (does not become H).	O17 *(p.227)*	CH5.8 *(p.533)*
	E115	Additional Cassette communication error The communication between the MCU PWB and the Option Trays (STM, 3TM) cannot be made.	O14 *(p.222)*	CH1.1 *(p.519)* CH2.1 *(p.523)*
	E998	Engine communication error A communication error between the controller and the MCU PWB via the Video I/F occurred.	49 *(p.210)*	---

manuals4you.com

Table 3-3. Service Call Errors List

Classi-fica-tion	Panel Message	Errors	FIP	Reference Detailed Connection Diagram
Controller Related (C)	C0017	CPU error (Interrupt exception)	C1 (p.244)	---
	C0088	CPU error (System call exception)	C1 (p.244)	---
	C0089	CPU error (Break point exception)	C1 (p.244)	---
	C0091	CPU error (Disabled floating-point exception)	C1 (p.244)	---
	C0300	CPU error (Reserved (undefined) exception)	C1 (p.244)	---
	C0301	CPU error (Machine check exception)	C1 (p.244)	---
	C0302	CPU error (Data access exception)	C1 (p.244)	---
	C0303	CPU error (Instruction access exception)	C1 (p.244)	---
	C0304	CPU error (Alignment exception)	C1 (p.244)	---
	C0305	CPU error (Program exception)	C1 (p.244)	---
	C0306	CPU error (Trace exception)	C1 (p.244)	---
	C0307	CPU error (Performance monitor exception)	C1 (p.244)	---
	C0308	CPU error (System administration interrupt exception)	C1 (p.244)	---
	C0309	CPU error (Temperature management interrupt exception)	C1 (p.244)	---
	C0800	IPL error (Controller defective)	C1 (p.244)	---
	C0998	Engine communication error (Only when powering on)	C1 (p.244)	---
	C0999	No Engine Flash ROM program data	C2 (p.244)	---
	C1002	Standard RAM error (When the standard size is not determined, etc.)	C2 (p.244)	---
	C1010	Verify error	C2 (p.244)	---
	C1020	RAM error (Slot 0)	C4 (p.245)	---
	C1021	RAM error (Slot 1)	C4 (p.245)	---
	C1100	ROM checksum error (bit 16 to 31) (Font)	C2 (p.244)	---
	C1101	ROM checksum Error (bit 16 to 31) (Font)	C2 (p.244)	---
	C1120	ROM checksum Error (bit 0 to 7) (Program)	C2 (p.244)	---
	C1121	ROM checksum Error (bit 8 to 15) (Program)	C2 (p.244)	---
	C1122	ROM checksum Error (bit 16 to 23) (Program)	C2 (p.244)	---
	C1123	ROM checksum error (bit 24 to 31) (Program)	C2 (p.244)	---
	C1180	Optional ROM module A checksum error	C3 (p.245)	---

Table 3-3. Service Call Errors List

Classi-fica-tion	Panel Message	Errors	FIP	Reference Detailed Connection Diagram
Controller Related (C)	C1181	Optional ROM module B checksum error	C3 *(p.245)*	---
	C1185	Unsupported ROM module	C3 *(p.245)*	---
	C1200	EEPROM write error	C5 *(p.246)*	---
	C1210	EEPROM write count limit	C5 *(p.246)*	---
	C1400	Engine initialization malfunction	C1 *(p.244)*	---
	C1500	CCNV hardware error	C1 *(p.244)*	---
	C1550	Compression SRAM initialization hardware error	C1 *(p.244)*	---
	C1600	Video hardware error (SRAM diagnostic error)	C1 *(p.244)*	---
	C1800	DIMM SPD error	C1 *(p.244)*	---
	C1999	Other hardware error	C1 *(p.244)*	---
	C2000	Software error	C6 *(p.246)*	---

manuals4you.com

3.3.4 FIP

FIP-1

- Panel Message
  - Open B
- Possible parts that caused the error
  - INTERLOCK SWITCH
  - LVPS
  - HARNESS ASSY R-BTM
  - MCU PWB
- TROUBLESHOOTING

Step	Action and Question	Yes	No
1	**Check of INTERLOCK SWITCH** 1. Disconnect the P/J10A of the LVPS. 2. While pressing and releasing the lever of the INTERLOCK SWITCH, check continuity between J10A-1 and J10A-3. **Is there continuity between J10A-1 and P/J10A-3 when the INTERLOCK SWITCH is pressed and discontinuity when it is released?**	To Step 2	Replace the INTERLOCK SWITCH *(p.306)*
2	**Continuity check of HARNESS ASSY R-BTM** 1. Disconnect the P/J101 of the LVPS. 2. Remove the P/J10 of the MCU PWB. 3. Check if the following wiring have continuity. J101-1 ↔ J10-20 J101-2 ↔ J10-19 **Do all of the wiring have continuity?**	To Step 3	Replace the HARNESS ASSY R-BTM
3	**Check of LVPS** 1. Replace the LVPS. 2. Turn the main power on. **Does the error occur?**	Replace the MCU PWB *(p.382)*	Problem solved

FIP-2

- Panel Message
  - Open A
- Possible parts that caused the error
  - FRONT COVER OPEN SENSOR
  - MCU PWB
  - HARNESS ASSY F-SNR
- TROUBLESHOOTING

Step	Action and Question	Yes	No
1	**Check the connection of FRONT COVER OPEN SENSOR** Check the connection of J223 of HARNESS ASSY F-SNR. **Make certain that FRONT COVER OPEN SENSOR is connected correctly.**	To Step 2	Reinstall the FRONT COVER OPEN SENSOR
2	**Continuity check of HARNESS ASSY F-SNR** 1. Disconnect the J223 of the FRONT COVER OPEN SENSOR. 2. Remove the P/J22 of the MCU PWB. 3. Check if the following wiring have continuity. J223-3 ↔ J22-6 J223-2 ↔ J22-7 J223-1 ↔ J22-8 **Do all of the wiring have continuity?**	To Step 3	Replace the HARNESS ASSY F-SNR
3	**Check of FRONT COVER OPEN SENSOR** 1. Replace the FRONT COVER OPEN SENSOR. *(p.304)* 2. Turn the main power on. **Does the error occur?**	Replace the MCU PWB *(p.382)*	Problem solved

FIP-3

- Panel Message
  - Service Req E055
- Possible parts that caused the error
  - FAN LV
  - LVPS
  - HARNESS ASSY R-BTM
  - MCU PWB
- TROUBLESHOOTING

Step	Action and Question	Yes	No
1	**Operation check of the FAN LV** Turn the main power on. **Does FAN LV rotates normally?**	Problem solved	To Step 2
2	**Power Supply for FAN LV** 1. Check that the FAN LV is connected properly. 2. Check the voltage between P/J105-1 and P/J105-3. **The voltage between P/J105-1 and P/J105-3 is 24 VDC?**	To Step 3	Replace the LVPS
3	**Check the signal of FAN LV (FAN ALARM)** Check the voltage between P/J105-2 and GND. **The voltage between P/J105-2 and GND is 3.3 VDC?**	To Step 4	Replace the MCU PWB *(p.382)*
4	**Continuity check of HARNESS ASSY R-BTM** 1. Disconnect the P/J101 of the LVPS. 2. Remove the P/J10 of the MCU PWB. 3. Check if the following wiring have continuity. J101-8 ↔ P10-13 J101-6 ↔ P10-15 J101-5 ↔ P10-16 **Do all of the wiring have continuity?**	Replace the LV *(p.370)*	Replace the HARNESS ASSY R-BTM

FIP-4

- Panel Message
  - Paper Set Casette 1 tttt
- Possible parts that caused the error
  - HARNESS ASSY P-SIZE
  - SWITCH ASSY SIZE
  - MCU PWB
- TROUBLESHOOTING

Step	Action and Question	Yes	No
1	**Reinserting Tray1** Eject the Tray1 and reinsert it. **Does the error occur?**	To Step 2	Problem solved
2	**Check of HARNESS ASSY P-SIZE** 1. Disconnect the J292 of the SWITCH ASSY SIZE. 2. Remove the P/J29 of the MCU PWB. 3. Check if the following wiring have continuity. J292-1 ↔ J29-8 J292-2 ↔ J29-7 J292-3 ↔ J29-6 J292-4 ↔ J29-5 J292-5 ↔ J29-4 **Do all of the wiring have continuity?**	To Step 3	Replace the HARNESS ASSY P-SIZE
3	**Check of SWITCH ASSY SIZE** 1. Replace the SWITCH ASSY SIZE. *(p.344)* 2. Turn the main power on. **Does the error occur?**	Replace the MCU PWB *(p.382)*	Problem solved

manuals4you.com

FIP-5

- ☐ Panel Message
  - ■ Paper Out Casette 1 tttt
- ☐ Possible parts that caused the error
  - ■ HARNESS ASSY NO PAPER
  - ■ HARNESS ASSY F-SNR
  - ■ NO PAPER SENSOR
  - ■ MCU PWB
- ☐ TROUBLESHOOTING

Step	Action and Question	Yes	No
1	**Paper presence** Check the paper in the Tray1. **Is there any paper left?**	To Step 2	Supply paper
2	**Check of HARNESS ASSY NO PAPER** 1. Disconnect the J226 of the NO PAPER SENSOR. 2. Disconnect the relay connector P/J221 of the HARNESS ASSY F-SNR. 3. Check if the following wiring have continuity. J226-1 ↔ J221-3 J226-2 ↔ J221-2 J226-3 ↔ J221-1 **Do all of the wiring have continuity?**	To Step 3	Replace the HARNESS ASSY NO PAPER
3	**Check of HARNESS ASSY F-SNR** 1. Remove the P/J22 of the MCU PWB. 2. Disconnect the relay connector P/J221 of the HARNESS ASSY F-SNR. 3. Check if the following wiring have continuity. J22-1 ↔ P221-3 J22-2 ↔ P221-2 J22-3 ↔ P221-1 **Do all of the wiring have continuity?**	To Step 4	Replace the HARNESS ASSY F-SNR
4	**Check of NO PAPER SENSOR** 1. Replace the NO PAPER SENSOR. 2. Turn the main power on. **Does the error occur?**	Replace the MCU PWB *(p.382)*	Problem solved

FIP-6

- ☐ Panel Message
  - ■ Paper Out Tray tttt
- ☐ Possible parts that caused the error
  - ■ MSI NO PAPER SENSOR
  - ■ HARNESS ASSY R-BTM
  - ■ HARNESS ASSY N/P
  - ■ MCU PWB
- ☐ TROUBLESHOOTING

Step	Action and Question	Yes	No
1	**Paper presence** Check the paper in the MSI. **Is there any paper left in the MSI?**	To Step 2	Supply paper
2	**Check of HARNESS ASSY N/P** 1. Disconnect the J23A2 of the MSI No Paper Sensor. 2. Disconnect the relay connector P/J23A1 of the HARNESS ASSY R-BTM. 3. Check if the following wiring have continuity. J23A2-1 ↔ P23A1-3 J23A2-2 ↔ P23A1-2 J23A2-3 ↔ P23A1-1 **Do all of the wiring have continuity?**	To Step 3	Replace the HARNESS ASSY N/P
3	**Check of HARNESS ASSY R-BTM** 1. Disconnect the P/J23 of the MCU PWB. 2. Disconnect the relay connector P/J23A1 of the HARNESS ASSY R-BTM. 3. Check if the following wiring have continuity. J23-A1 ↔ J23A1-3 J23-A2 ↔ J23A1-2 J23-A3 ↔ J23A1-1 **Do all of the wiring have continuity?**	To Step 4	Replace the HARNESS ASSY R-BTM
4	**Check of MSI NO PAPER SENSOR** 1. Replace the MSI NO PAPER SENSOR. 2. Turn the main power on. **Does the error occur?**	Replace the MCU PWB *(p.382)*	Problem solved

manuals4you.com

FIP-7

- ☐ Panel Message
  - ■ Paper Set Casette 1 tttt
- ☐ Possible parts that caused the error
  - ■ HARNESS ASSY P-SIZE
  - ■ MCU PWB
  - ■ SWITCH ASSY SIZE
- ☐ TROUBLESHOOTING

Step	Action and Question	Yes	No
1	**Check of Paper Size** Check if the paper size corresponds with the size specified by GUIDE ASSY END and GUIDE SIDE ASSY F of Tray1, or with the size specified by the driver of the computer. CAUTION ! **Securely match the GUIDE END and GUIDE SIDE FRONT in the following procedure.** **1. Match the inverted delta symbols of the GUIDE ASSY END and TRAY.** **2. Push in the GUIDE ASSY END bottom, and load paper flatly to the end. (*When the amount of paper is small, paper may not be loaded flatly as it is pushed by the GUIDE ASSY END. In this case, the paper may be bent. Do not shift the GUIDE ASSY END matched in Step 1.)**	To Step 2	Change the paper or change the paper size setting

Step	Action and Question	Yes	No
1 **(continued from previous page)**	**3. Match the inverted delta symbols of the GUIDE SIDE ASSY F and PLATE ASSY BOTTOM.** 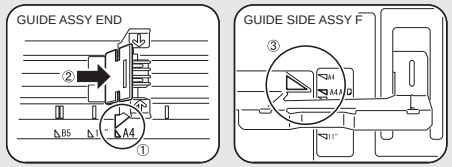 **Does the paper size setting correspond with the using paper?**	To Step 2	Change the paper or change the paper size setting
2	**Check of HARNESS ASSY P-SIZE** 1. Disconnect the J292 of the SWITCH ASSY SIZE. 2. Disconnect the P/J29 of the MCU PWB. 3. Check if the following wiring have continuity. J292-1 ↔ J29-8 J292-2 ↔ J29-7 J292-3 ↔ J29-6 J292-4 ↔ J29-5 J292-5 ↔ J29-4 **Do all of the wiring have continuity?**	To Step 3	Replace the HARNESS ASSY P-SIZE
3	**Check of SWITCH ASSY SIZE** 1. Replace the SWITCH ASSY SIZE. *(p.344)* 2. Print the image that has a problem, or execute test print. **Does the error occur?**	Replace the MCU PWB *(p.382)*	Problem solved

FIP-8

- Panel Message
  - Paper Out sssss tttt
- Possible parts that caused the error
  - HARNESS ASSY NO PAPER
  - HARNESS ASSY F-SNR
  - NO PAPER SENSOR
  - HARNESS ASSY 3TM
  - HARNESS ASSY STM
  - TRAY NO PAPER SENSOR
  - HARNESS ASSY SNR
  - PWB ASSY 3TM/STM
  - MCU PWB
- TROUBLESHOOTING

Step	Action and Question	Yes	No
1	**Paper presence** Check the paper in all trays. **Is there any paper left in all trays?**	To Step 2	Supply paper
2	**Check of HARNESS ASSY NO PAPER** 1. Disconnect the J226 of the NO PAPER SENSOR. 2. Disconnect the relay connector P/J221 of the HARNESS ASSY F-SNR. 3. Check if the following wiring have continuity. J226-1 ↔ J221-3 J226-2 ↔ J221-2 J226-3 ↔ J221-1 **Do all of the wiring have continuity?**	To Step 3	Replace the HARNESS ASSY NO PAPE
3	**Check of HARNESS ASSY F-SNR** 1. Disconnect the J22 of the MCU PWB. 2. Disconnect the relay connector P/J221 of the HARNESS ASSY F-SNR. 3. Check if the following wiring have continuity. J22-1 ↔ P221-3 J22-2 ↔ P221-2 J22-3 ↔ P221-1 **Do all of the wiring have continuity?**	To Step 4	Replace the HARNESS ASSY F-SNR
4	**Check of NO PAPER SENSOR** 1. Replace the NO PAPER SENSOR. 2. Turn the main power on. **Does the error occur?**	To Step 5	Problem solved
5	**Check the HARNESS ASSY SNR of Tray2** 1. Disconnect the J106 of the TRAY NO PAPER SENSOR. 2. Disconnect the relay connector P/J617 of the HARNESS ASSY SNR. 3. Check if the following wiring have continuity. J106-1 ↔ J617-9 J106-2 ↔ J617-8 J106-3 ↔ J617-7 **Do all of the wiring have continuity?**	To Step 6	Replace the HARNESS ASSY SNR

manuals4you.com

Step	Action and Question	Yes	No
6	**Check the HARNESS ASSY 3TM and the HARNESS ASSY STM of Tray2** 1. Disconnect the J547 of the PWB ASSY 3TM/STM. 2. Disconnect the relay connector P/J670 of the HARNESS ASSY F-SNR. 3. Check if the following wiring have continuity. J547-9 ↔ P670-4 J547-8 ↔ P670-5 J547-7 ↔ P670-6 **Do all of the wiring have continuity?**	To Step 7	Replace the HARNESS ASSY 3TM/ HARNESS ASSY
7	**Check of the TRAY NO PAPER SENSOR of Tray 2** 1. Replace the TRAY NO PAPER SENSOR of Tray 2 2. Turn the main power on. **Does the error occur?**	To Step 8	Problem solved
8	**Check the HARNESS ASSY SNR of Tray3** 1. Remove the J106 of TRAY NO PAPER SENSOR of Tray3. 2. Disconnect the relay connector P/J617 of the HARNESS ASSY SNR. 3. Check if the following wiring have continuity. J106-1 ↔ J617-9 J106-2 ↔ J617-8 J106-3 ↔ J617-7 **Do all of the wiring have continuity?**	To Step 9	Replace the HARNESS ASSY SNR

Step	Action and Question	Yes	No
9	**Check the HARNESS ASSY 3TM of Tray3** 1. Disconnect the J549 of the PWB ASSY 3TM. 2. Disconnect the relay connector P/J672 of the HARNESS ASSY SNR. 3. Check if the following wiring have continuity. J549-B9 ↔ P672-4 J549-B8 ↔ P672-5 J549-B7 ↔ P672-6 **Do all of the wiring have continuity?**	To Step 10	Replace the HARNESS ASSY 3TM
10	**Check of the TRAY NO PAPER SENSOR of Tray 3** 1. Replace the TRAY NO PAPER SENSOR of Tray3. 2. Turn the main power on. **Does the error occur?**	To Step 11	Problem solved
11	**Check of the HARNESS ASSY SNR of Tray4** 1. Disconnect the J106 of the Tray 4. 2. Disconnect the relay connector P/J617 of the HARNESS ASSY SNR. 3. Check if the following wiring have continuity. J106-1 ↔ J617-9 J106-2 ↔ J617-8 J106-3 ↔ J617-7 **Do all of the wiring have continuity?**	To Step 12	Replace the HARNESS ASSY SNR

Step	Action and Question	Yes	No
12	**Check the HARNESS ASSY 3TM of Tray4** 1. Disconnect the J549 of the PWB ASSY 3TM. 2. Disconnect the relay connector P/J674 of the HARNESS ASSY SNR. 3. Check if the following wiring have continuity. J549-A9 ↔ P674-4 J549-A8 ↔ P674-5 J549-A7 ↔ P674-6 **Do all of the wiring have continuity?**	To Step 13	Replace the HARNESS ASSY 3TM
13	**Check of the TRAY NO PAPER SENSOR of Tray 4** 1. Replace the TRAY NO PAPER SENSOR of Tray 4. *(p.435)* 2. Turn the main power on. **Does the error occur?**	To Step 14	Problem solved
14	**Check of PWB ASSY 3TM/STM** 1. Replace the PWB ASSY 3TM/STM. *(p.448)*/*(p.452)* 2. Turn the main power on. **Does the error occur?**	Replace the MCU PWB *(p.382)*	Problem solved

manuals4you.com

FIP-9

- ☐ Panel Message
  - ■ Paper Set ssss tttt
- ☐ Possible parts that caused the error
  - ■ SWITCH ASSY SIZE
  - ■ HARNESS ASSY P-SIZE
  - ■ PAPER SIZE SENSOR
  - ■ HARNESS ASSY 3TM
  - ■ HARNESS ASSY STM
  - ■ MCU PWB
  - ■ PWB ASSY 3TM/STM
- ☐ TROUBLESHOOTING

Step	Action and Question	Yes	No
1	**Check of Paper Size** Check if the paper size that is set in each Tray corresponds with the size specified by GUIDE END and GUIDE SIDE FRONT, or with the size specified by the driver of the computer. CAUTION ! **Securely match the GUIDE END and GUIDE SIDE FRONT in the following procedure.** ■ **In the case of Tray 1** **1. Match the inverted delta symbols of the GUIDE ASSY END and TRAY.** **2. Push in the GUIDE ASSY END bottom, and load paper flatly to the end. (*When the amount of paper is small, paper may not be loaded flatly as it is pushed by the GUIDE ASSY END. In this case, the paper may be bent. Do not shift the GUIDE ASSY END matched in Step 1.)**	To Step 2	Change the paper or change the paper size setting

Step	Action and Question	Yes	No
1 **(continued from previous page)**	**3. Match the inverted delta symbols of the GUIDE SIDE ASSY F and PLATE ASSY BOTTOM.** 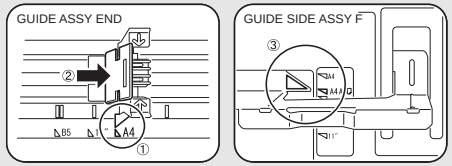 GN10001EA ■ **In the case of Tray 2 to 4** **1. Match the inverted delta symbols of the END GUIDE ASSY and BOTTOM PLATE.** **2. Match the inverted delta symbols of the FRONT SIDE GUIDE and BOTTOM PLATE.** 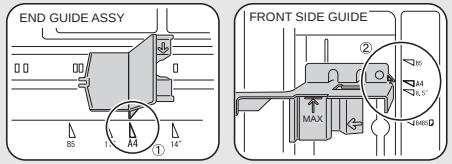 **Does the paper size setting correspond with the using paper?**	To Step 2	Change the paper or change the paper size setting
2	**Check of HARNESS ASSY P-SIZE** 1. Disconnect the J292 of the SWITCH ASSY SIZE. 2. Remove P/J29 of MCU PWB. 3. Check if the following wiring have continuity. J292-1 ↔ J29-8 J292-2 ↔ J29-7 J292-3 ↔ J29-6 J292-4 ↔ J29-5 J292-5 ↔ J29-4 **Do all of the wiring have continuity?**	To Step 3	Replace the HARNESS ASSY P-SIZE

Step	Action and Question	Yes	No
3	**Check of SWITCH ASSY SIZE** 1. Replace the SWITCH ASSY SIZE. *(p.344)* 2. Turn the main power on. **Does the error occur?**	To Step 4	Problem solved
4	**Check of the HARNESS ASSY 3TM and the HARNESS ASSY STM of Tray2** 1. Disconnect the J816 of the PAPER SIZE SENSOR of the Tray2. 2. Disconnect the P/J546 of the PWB ASSY 3TM/PWB ASSY STM. 3. Check if the following wiring have continuity. J816-1 ↔ J546-3 J816-2 ↔ J546-2 J816-3 ↔ J546-1 **Do all of the wiring have continuity?**	To Step 5	Replace the HARNESS ASSY 3TM/ HARNESS ASSY STM
5	**Check of PAPER SIZE SENSOR of Tray2** 1. Replace the TRAY NO PAPER SENSOR of Tray 2 *(p.436)* 2. Turn the main power on. **Does the error occur?**	To Step 6	Problem solved
6	**Check of the HARNESS ASSY 3TM of Tray3** 1. Disconnect the J820 of the PAPER SIZE SENSOR of the Tray 3. 2. Disconnect the P/J548 of the PWB ASSY 3TM. 3. Check if the following wiring have continuity. J820-1 ↔ J548-12 J820-2 ↔ J548-11 J820-3 ↔ J548-10 **Do all of the wiring have continuity?**	To Step 7	Replace the HARNESS ASSY 3TM

Step	Action and Question	Yes	No
7	**Check of PAPER SIZE SENSOR of Tray3** 1. Replace the TRAY NO PAPER SENSOR of Tray 3 *(p.436)* 2. Turn the main power on. **Does the error occur?**	To Step 8	Problem solved
8	**Check of the HARNESS ASSY 3TM of Tray4** 1. Remove the J824 of the PAPER SIZE SENSOR of the Tray3. 2. Disconnect the P/J548 of the PWB ASSY 3TM. 3. Check if the following wiring have continuity. J824-1 ↔ J548-12 J824-2 ↔ J548-11 J824-3 ↔ J548-10 **Do all of the wiring have continuity?**	To Step 9	Replace the HARNESS ASSY 3TM
9	**Check of PAPER SIZE SENSOR of Tray4** 1. Replace the TRAY NO PAPER SENSOR of Tray 3 *(p.436)* 2. Turn the main power on. **Does the error occur?**	To Step 8	Problem solved
10	**Check of PWB ASSY 3TM/STM** 1. Replace PWB ASSY 3TM/ STM.*(p.448)* /*(p.452)* 2. Turn the main power on. **Does the error occur?**	Replace the MCU PWB *(p.382)*	Problem solved

manuals4you.com

FIP-10

- Panel Message
  - Paper Set Tray tttt
- Possible parts that caused the error
  - MCU PWB
- TROUBLESHOOTING

Step	Action and Question	Yes	No
1	**Does the paper in the MSI correspond with the specified size, direction and type by the printer driver?**	To Step 2	Set the paper properly.
2	**Check of the paper feed path from the MSI** Check the paper feed path from the MSI. **Is there any foreign matter inside the path.**	Remove the foreign matter.	Replace the MCU PWB *(p.382)*

FIP-11

- Panel Message
  - Service Req E056
- Possible parts that caused the error
  - MCU PWB
- TROUBLESHOOTING

Step	Action and Question	Yes	No
1	**Check of MCU PWB** Turn the main power off and then back on. **Does the error occurs again after the power is turned on?**	Replace the MCU PWB *(p.382)*	Problem solved

FIP-12

- ☐ Panel Message
  - ■ Service Req E052
- ☐ Possible parts that caused the error
  - ■ MCU PWB
  - ■ X-ROM PWB
- ☐ TROUBLESHOOTING

Step	Action and Question	Yes	No
1	**Check of the MCU PWB** Turn the main power off and then back on. **Does the error occur again after the power is turned on?**	To Step 2	Problem solved
2	**Check of the MCU PWB** Turn the main power on and off several times. **Does the error occur?**	To Step 3	Problem solved
3	**Replacement of the EEPROM** Replace the EEPROM on the MCU PWB. *(p.382)* **Does the error occur?**	To Step 4	Make adjustments that are indicated by adjustment icons.
4	**Replacement of the MCU PWB** After putting the removed EEPROM back to the place, replace the MCU PWB. *(p.382)* **Does the error occur?**	Put the removed MCU PWB back and then replace the X-ROM PWB. *(p.382)*	Problem solved

CAUTION

Do not replace both the EEPROM and X-ROM PWB at one time. Doing so makes the printer unable to start up. When have replaced one of them, the stored data will be downloaded to the newly installed one from the other. (From EEPROM to X-ROM PWB, or From X-ROM PWB to EEPROM) Therefore, when replacing the EEPROM or the X-ROM PWB, be sure about the followings.

- ■ **When replacing EEPROM:**
  X-ROM PWB and MCU PWB should be those that originally come with the printer.
- ■ **When replacing X-ROM PWB:**
  EEPROM and MCU PWB should be those that originally come with the printer.

ADJUSTMENT REQUIRED

Be sure to perform the followings after replacing the EEPROM.
"5.1.2 Part/unit-based adjustment items" *(p.460)*

- ■ **Color Registration Adjustment**
- ■ **Writing correction values of the followings**
  - **Sensor Assy TP**
  - **Motor Disp (for 4 colors)**

manuals4you.com

FIP-13

- Panel Message
  - Service Req E050
- Possible parts that caused the error
  - HARNESS ASSY ROS
  - MCU PWB
  - ROS ASSY
- TROUBLESHOOTING

Step	Action and Question	Yes	No
1	**Continuity check of HARNESS ASSY ANTENNA** 1. Disconnect the P/J12 of the MCU PWB. 2. Disconnect the P/J120 of the ROS ASSY. 3. Check if the following wiring have continuity. J12-3 ↔ J120-12 J12-4 ↔ J120-11 J12-5 ↔ J120-10 **Do all of the wiring have continuity?**	To Step 2	Replace the HARNESS ASSY ROS
2	**Power supply check of ROS Motor** Check the voltage between the P/J12-1 and P/J12-2 of the MCU PWB. **Is the voltage between P/J12-1 and P/J12-2 24 VDC?**	To Step 3	Replace the MCU PWB *(p.382)*
3	**Check of ROS ASSY** 1. Replace the ROS ASSY. 2. Turn the main power on. **Does the error occur?**	Replace the MCU PWB *(p.382)*	Problem solved

FIP-14

- ☐ Panel Message
  - ■ Check Paper Size
- ☐ Possible parts that caused the error
  - ■ SENSOR REGI
  - ■ HARNESS ASSY REGI
  - ■ HARNESS ASSY R-BTM
  - ■ CLUTCH REGI
  - ■ MCU PWB
- ☐ TROUBLESHOOTING

Step	Action and Question	Yes	No
1	**Check of Paper Size** Check if the paper size corresponds with the size specified by GUIDE ASSY END and GUIDE SIDE ASSY F of Tray1, or with the size specified by the driver of the computer.	To Step 2	Change the paper or change the paper size setting

Step	Action and Question	Yes	No
1 (continued from left column)	CAUTION **Securely match the GUIDE ASSY END and GUIDE SIDE ASSY F in the following procedure.** **1. Match the inverted delta symbols of the GUIDE ASSY END and TRAY.** **2. Push in the GUIDE ASSY END bottom, and load paper flatly to the end. (*When the amount of paper is small, paper may not be loaded flatly as it is pushed by the GUIDE ASSY END. In this case, the paper may be bent. Do not shift the GUIDE ASSY END matched in Step 1.)** **3. Match the inverted delta symbols of the GUIDE SIDE ASSY F and PLATE ASSY BOTTOM.** 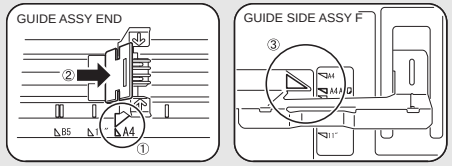 GN10001EA **Does the paper size setting correspond with the using paper?**	To Step 2	Change the paper or change the paper size setting
2	**Check of Paper Feed Roll for damage** Check the Paper Feed Roll for abrasion and damage. **Does the Paper Feed Roll rotate normally?**	To Step 3	Replace the failed part with a new one.
3	**Check of Paper Feed Gear for damage** Check the Paper Feed Gears for abrasion and damage. **Do the Paper Feed Gears rotate normally?**	To Step 4	Replace the failed part with a new one.

manuals4you.com

Step	Action and Question	Yes	No
4	**Continuity check of HARNESS ASSY REGI** 1. Disconnect the relay connector P/J23A6 of the HARNESS ASSY REGI. 2. Disconnect the J23A8 of the SENSOR REGI. 3. Check if the following wiring have continuity. J23A6-4 ↔ J23A8-3 J23A6-5 ↔ J23A8-2 J23A6-6 ↔ J23A8-1 **Do all of the wiring have continuity?**	To Step 5	Replace the HARNESS ASSY REGI
5	**Continuity check of HARNESS ASSY R-BTM** 1. Disconnect the P/J23 of the MCU PWB. 2. Disconnect the relay connector P/J23A6 of the HARNESS ASSY R-BTM. 3. Check if the following wiring have continuity. P23A6-5 ↔ J23-A13 P23A6-4 ↔ J23-A14 P23A6-3 ↔ J23-A15 **Do all of the wiring have continuity?**	To Step 6	Replace the HARNESS ASSY R-BTM
6	**Check of SENSOR REGI** 1. Replace the SENSOR REGI. *(p.340)* 2. Execute the test print. **Does the error occur?**	To Step 7	Problem solved

Step	Action and Question	Yes	No
7	**Continuity check of HARNESS ASSY REGI** 1. Disconnect the relay connector P/J23A6 of the HARNESS ASSY REGI. 2. Disconnect the relay connector P/J23A9 of the CLUTCH REGI. 3. Check if the following wiring have continuity. J23A6-7 ↔ P23A9-2 J23A6-8 ↔ P23A9-1 **Do all of the wiring have continuity?**	To Step 8	Replace the HARNESS ASSY REGI
8	**Continuity check of HARNESS ASSY R-BTM** 1. Disconnect the P/J23 of the MCU PWB. 2. Disconnect the relay connector P/J23A6 of the HARNESS ASSY R-BTM. 3. Check if the following wiring have continuity. P23A6-2 ↔ J23-A16 P23A6-1 ↔ J23-A17 **Do all of the wiring have continuity?**	To Step 9	Replace the HARNESS ASSY R-BTM
9	**Check of CLUTCH REGI** 1. Replace the CLUTCH REGI. *(p.338)* 2. Execute the test print. **Does the error occur?**	Replace the MCU PWB *(p.382)*	Problem solved

FIP-15

- ☐ Panel Message
  - ■ Check Paper Size
- ☐ Possible parts that caused the error
  - ■ SENSOR REGI
  - ■ HARNESS ASSY REGI
  - ■ HARNESS ASSY R-BTM
  - ■ CLUTCH REGI
  - ■ MCU PWB
- ☐ TROUBLESHOOTING

Step	Action and Question	Yes	No
1	**Check of Paper Size** Check if the paper in the MSI corresponds with the specified size and direction by the driver of the computer. **Does the paper size setting correspond with the using paper?**	To Step 2	Change the paper or change the paper size setting
2	**Check of Paper Feed Roll for damage** Check the Paper Feed Roll for abrasion and damage. **Does the Paper Feed Roll rotate normally?**	To Step 3	Replace the failed part with a new one.
3	**Check of Paper Feed Gear for damage** Check the Paper Feed Gears for abrasion and damage. **Do the Paper Feed Gears rotate normally?**	To Step 4	Replace the failed part with a new one.
4	**Continuity check of HARNESS ASSY REGI** 1. Disconnect the relay connector P/J23A6 of the HARNESS ASSY REGI. 2. Disconnect the J23A8 of the SENSOR REGI. 3. Check if the following wiring have continuity. J23A6-4 ↔ J23A8-3 J23A6-5 ↔ J23A8-2 J23A6-6 ↔ J23A8-1 **Do all of the wiring have continuity?**	To Step 5	Replace the HARNESS ASSY REGI
5	**Continuity check of HARNESS ASSY R-BTM** 1. Disconnect the P/J23 of the MCU PWB. 2. Disconnect the relay connector P/J23A6 of the HARNESS ASSY R-BTM. 3. Check if the following wiring have continuity. P23A6-5 ↔ J23-A13 P23A6-4 ↔ J23-A14 P23A6-3 ↔ J23-A15 **Do all of the wiring have continuity?**	To Step 6	Replace the HARNESS ASSY R-BTM
6	**Check of SENSOR REGI** 1. Replace the SENSOR REGI. *(p.340)* 2. Execute the test print. **Does the error occur?**	To Step 7	Problem solved

manuals4you.com

Step	Action and Question	Yes	No
7	**Continuity check of HARNESS ASSY REGI** 1. Disconnect the relay connector P/J23A6 of the HARNESS ASSY REGI. 2. Disconnect the relay connector P/J23A9 of the CLUTCH REGI. 3. Check if the following wiring have continuity. J23A6-7 ↔ P23A9-2 J23A6-8 ↔ P23A9-1 **Do all of the wiring have continuity?**	To Step 8	Replace the HARNESS ASSY REGI
8	**Continuity check of HARNESS ASSY R-BTM** 1. Disconnect the P/J23 of the MCU PWB. 2. Disconnect the relay connector P/J23A6 of the HARNESS ASSY R-BTM. 3. Check if the following wiring have continuity. P23A6-2 ↔ J23-A16 P23A6-1 ↔ J23-A17 **Do all of the wiring have continuity?**	To Step 9	Replace the HARNESS ASSY R-BTM
9	**Check of CLUTCH REGI** 1. Replace the CLUTCH REGI. *(p.338)* 2. Execute the test print. **Does the error occur?**	Replace the MCU PWB *(p.382)*	Problem solved

FIP-16

- ☐ Panel Message
  - ■ Check Transparency
- ☐ Possible parts that caused the error
  - ■ HARNESS ASSY REGI
  - ■ HARNESS ASSY R-BTM
  - ■ OHP SENSOR
  - ■ MCU PWB
- ☐ TROUBLESHOOTING

Step	Action and Question	Yes	No
1	**Check of Paper** Check the transparency in the Tray 1. **Do the transparency in the Tray 1 has no white margins?**	To Step 2	Replace the transparency with one that has no white margins.
2	**Continuity check of HARNESS ASSY REGI1.** 1. Remove the relay connector P/J23A6 of the HARNESS ASSY REGI. 2. Remove the J23A8 of the SENSOR REGI. 3. Check if the following wiring have continuity. J23A6-1 ↔ J23A7-3 J23A6-2 ↔ J23A7-2 J23A6-3 ↔ J23A7-1 **Do all of the wiring have continuity?**	To Step 3	Replace the HARNESS ASSY REGI
3	**Continuity check of HARNESS ASSY R-BTM1.** 1. Remove the P/J23 of the MCU PWB. 2. Remove the relay connector P/J23A6 of the HARNESS ASSY R-BTM. 3. Check if the following wiring have continuity. P23A6-8 ↔ J23-A10 P23A6-7 ↔ J23-A11 P23A6-6 ↔ J23-A12 **Do all of the wiring have continuity?**	To Step 4	Replace the HARNESS ASSY R-BTM.
4	**Check of OHP SENSOR** 1. Replace the OHP SENSOR. *(p.340)* 2. Print the job that failed to print. Or do a test print. **Does the error occur?**	Replace the MCU PWB *(p.382)*	Problem solved

manuals4you.com

FIP-17

- ☐ Panel Message
  - ■ Check Transparency
- ☐ Possible parts that caused the error
  - ■ HARNESS ASSY REGI
  - ■ HARNESS ASSY R-BTM
  - ■ OHP SENSOR
  - ■ MCU PWB
- ☐ TROUBLESHOOTING

Step	Action and Question	Yes	No
1	**Check of Paper** Check the transparency in the Tray that is specified and used. **Do the transparency in the Tray has no white margins?**	To Step 2	Replace the transparency with one that has no white margins.
2	**Continuity check of HARNESS ASSY REGI1.** 1. Remove the relay connector P/J23A6 of the HARNESS ASSY REGI. 2. Remove the J23A8 of the SENSOR REGI. 3. Check if the following wiring have continuity. J23A6-1 ↔ J23A7-3 J23A6-2 ↔ J23A7-2 J23A6-3 ↔ J23A7-1 **Do all of the wiring have continuity?**	To Step 3	Replace the HARNESS ASSY REGI
3	**Continuity check of HARNESS ASSY R-BTM1.** 1. Remove the P/J23 of the MCU PWB. 2. Remove the relay connector P/J23A6 of the HARNESS ASSY R-BTM. 3. Check if the following wiring have continuity. P23A6-8 ↔ J23-A10 P23A6-7 ↔ J23-A11 P23A6-6 ↔ J23-A12 **Do all of the wiring have continuity?**	To Step 4	Replace the HARNESS ASSY R-BTM.
4	**Check of OHP SENSOR** 1. Replace the OHP SENSOR. *(p.340)* 2. Print the job that failed to print. Or do a test print. **Does the error occur?**	Replace the MCU PWB *(p.382)*	Problem solved

FIP-18

- ☐ Panel Message
  - ■ Jam B
- ☐ Possible parts that caused the error
  - ■ ROLL ASSY FEED
  - ■ SENSOR REGI
  - ■ HARNESS ASSY N/P
  - ■ SOLENOID ASSY
  - ■ HARNESS ASSY REGI
  - ■ HARNESS ASSY R-BTM
  - ■ MCU PWB
- ☐ TROUBLESHOOTING

Step	Action and Question	Yes	No
1	**Operation check of the ROLL ASSY FEED** 1. Make sure that the ROLL ASSY FEED is installed securely. 2. Check the ROLL ASSY FEED for abrasion. **Does the ROLL ASSY FEED turn smoothly?**	To Step 2	Replace the KIT ROLL MSI *(p.312)*
2	**Check of the HARNESS ASSY N/P** 1. Disconnect the P/J23 of the MCU PWB. 2. Disconnect the relay connector P/J23A3 of the HARNESS ASSY R-BTM. 3. Check if the following wiring have continuity. P23A3-2 ↔ J23-A4 P23A3-1 ↔ J23-A5 **Do all of the wiring have continuity?**	To Step 3	Replace the HARNESS ASSY N/P
3	**Check of SOLENOID ASSY** 1. Replace the SOLENOID ASSY. *(p.316)* 2. Print the image that has a problem, or execute test print. **Does the error occur?**	To Step 4	Problem solved
4	**Continuity check of HARNESS ASSY REGI** 1. Disconnect the relay connector P/J23A6 of the HARNESS ASSY REGI. 2. Disconnect the J23A8 of the SENSOR REGI. 3. Check if the following wiring have continuity. J23A6-4 ↔ J23A8-3 J23A6-5 ↔ J23A8-2 J23A6-6 ↔ J23A8-1 **Do all of the wiring have continuity?**	To Step 5	Replace the HARNESS ASSY REGI
5	**Continuity check of HARNESS ASSY R-BTM** 1. Disconnect the P/J23 of the MCU PWB. 2. Disconnect the relay connector P/J23A6 of the HARNESS ASSY R-BTM. 3. Check if the following wiring have continuity. P23A6-5 ↔ J23-A13 P23A6-4 ↔ J23-A14 P23A6-3 ↔ J23-A15 **Do all of the wiring have continuity?**	To Step 6	Replace the HARNESS ASSY R-BTM
6	**Check of SENSOR REGI** 1. Replace the SENSOR REGI. *(p.340)* 2. Print the image that has a problem, or execute test print. **Does the error occur?**	Replace the MCU PWB *(p.382)*	Problem solved

manuals4you.com

FIP-19

- ☐ Panel Message
  - ■ Jam B, C1
- ☐ Possible parts that caused the error
  - ■ ROLL ASSY FEED
  - ■ HARNESS ASSY R-BTM
  - ■ CLUTCH ASSY FEED
  - ■ HARNESS ASSY REGI
  - ■ SENSOR REGI
  - ■ MCU PWB
- ☐ TROUBLESHOOTING

Step	Action and Question	Yes	No
1	**Operation check of the ROLL ASSY FEED** 1. Make sure that the ROLL ASSY FEED is installed securely. 2. Check the ROLL ASSY FEED for abrasion. **Does the ROLL ASSY FEED turn smoothly?**	To Step 2	Replace the ROLL ASSY FEED. *(p.312)*
2	**Check of the paper feed path** Check the paper feed path of the Tray1. **Are burrs and foreign matter absent in the paper feed path?**	To Step 3	Remove foreign matter.
3	**Check of Paper Feed Roll for damage** Check the Paper Feed Roll for abrasion and damage. **Does the Paper Feed Roll rotate normally?**	To Step 4	Replace the failed part with a new one.
4	**Continuity check of HARNESS ASSY R-BTM** 1. Disconnect the P/J23 of the MCU PWB. 2. Disconnect the relay connector P/J23A5 of the HARNESS ASSY R-BTM. 3. Check if the following wiring have continuity. P23A5-2 ↔ J23-A8 P23A5-1 ↔ J23-A9 **Do all of the wiring have continuity?**	To Step 5	Replace the HARNESS ASSY R-BTM
5	**Check of CLUTCH ASSY FEED** 1. Replace the CLUTCH ASSY FEED. *(p.355)* 2. Print the image that has a problem, or execute test print. **Does the error occur?**	To Step 6	Problem solved
6	**Continuity check of HARNESS ASSY REGI** 1. Disconnect the relay connector P/J23A6 of the HARNESS ASSY REGI. 2. Disconnect the J23A8 of the SENSOR REGI. 3. Check if the following wiring have continuity. J23A6-4 ↔ J23A8-3 J23A6-5 ↔ J23A8-2 J23A6-6 ↔ J23A8-1 **Do all of the wiring have continuity?**	To Step 7	Replace the HARNESS ASSY REGI

Step	Action and Question	Yes	No
7	**Continuity check of HARNESS ASSY R-BTM** 1. Disconnect the P/J23 of the MCU PWB. 2. Disconnect the relay connector P/J23A6 of the HARNESS ASSY R-BTM. 3. Check if the following wiring have continuity. P23A6-5 ↔ J23-A13 P23A6-4 ↔ J23-A14 P23A6-3 ↔ J23-A15 **Do all of the wiring have continuity?**	To Step 8	Replace the HARNESS ASSY R-BTM
8	**Check of SENSOR REGI** 1. Replace the SENSOR REGI. *(p.340)* 2. Print the image that has a problem, or execute test print. **Does the error occur?**	Replace the MCU PWB *(p.382)*	Problem solved

manuals4you.com

FIP-20

- ☐ Panel Message
  - ■ Jam B
- ☐ Possible parts that caused the error
  - ■ ROLL REGI RUBBER
  - ■ BTR UNIT ASSY
  - ■ IDT UNIT
  - ■ Fuser unit
  - ■ HARNESS ASSY R-BTM
  - ■ CLUTCH ASSY FEED
  - ■ HARNESS ASSY REGI
  - ■ SENSOR REGI
  - ■ MCU PWB
- ☐ TROUBLESHOOTING

Step	Action and Question	Yes	No
1	**Rotation check of ROLL REGI RUBBER** Check the ROLL REGI RUBBER for slip and abrasion. **Does the ROLL REGI RUBBER turn smoothly?**	To Step 2	Replace the ROLL REGI RUBBER *(p.338)*
2	**Check of the paper feed path** Check the paper feed path of all Trays. **Are burrs and foreign matter absent in the paper feed path?**	To Step 3	Remove foreign matter.
3	**Check of BTR UNIT ASSY feed path** Check the BTR UNIT ASSY for slip and abrasion. **Does the BTR UNIT ASSY feed paper smoothly?**	To Step 4	Replace the BTR UNIT ASSY. *(p.305)*
4	**Check of IDT UNIT feed path** Check the IDT UNIT for slip and abrasion. **Does the IDT UNIT feed paper smoothly?**	To Step 5	Replace the IDT UNIT *(p.386)*
5	**Check of BTR UNIT ASSY Drive Gear for damage** Check the BTR UNIT ASSY Drive Gear for abrasion and damage. **Does the BTR UNIT ASSY Drive Gear operate properly?**	To Step 6	Replace the BTR UNIT ASSY. *(p.305)*
6	**Check of Fuser unit Drive Gear for damage** Check the Fuser unit Drive Gear for abrasion and damage. **Does the Fuser unit Drive Gear operate properly?**	To Step 7	Replace the Fuser unit. *(p.361)*
7	**Check of Paper Feed Roll for damage** Check the Paper Feed Roll of Tray 1 for abrasion and damage. **Does the Paper Feed Roll rotate normally?**	To Step 8	Replace the failed part with a new one.
8	**Continuity check of HARNESS ASSY R-BTM** 1. Disconnect the P/J23 of the MCU PWB. 2. Disconnect the relay connector P/J23A5 of the HARNESS ASSY R-BTM. 3. Check if the following wiring have continuity. P23A5-2 ↔ J23-A8 P23A5-1 ↔ J23-A9 **Do all of the wiring have continuity?**	To Step 9	Replace the HARNESS ASSY R-BTM
9	**Check of CLUTCH ASSY FEED** 1. Replace the CLUTCH ASSY FEED. *(p.355)* 2. Print the image that has a problem, or execute test print. **Does the error occur?**	To Step 10	Problem solved

Step	Action and Question	Yes	No
10	**Continuity check of HARNESS ASSY REGI** 1. Disconnect the relay connector P/J23A6 of the HARNESS ASSY REGI. 2. Disconnect the J23A8 of the SENSOR REGI. 3. Check if the following wiring have continuity. J23A6-4 ↔ J23A8-3 J23A6-5 ↔ J23A8-2 J23A6-6 ↔ J23A8-1 **Do all of the wiring have continuity?**	To Step 11	Replace the HARNESS ASSY REGI
11	**Continuity check of HARNESS ASSY R-BTM** 1. Disconnect the P/J23 of the MCU PWB. 2. Disconnect the relay connector P/J23A6 of the HARNESS ASSY R-BTM. 3. Check if the following wiring have continuity. P23A6-5 ↔ J23-A13 P23A6-4 ↔ J23-A14 P23A6-3 ↔ J23-A15 **Do all of the wiring have continuity?**	To Step 12	Replace the HARNESS ASSY R-BTM
12	**Check of SENSOR REGI** 1. Replace the SENSOR REGI. *(p.340)* 2. Print the image that has a problem, or execute test print. **Does the error occur?**	Replace the MCU PWB *(p.382)*	Problem solved

manuals4you.com

FIP-21

- ☐ Panel Message
  - ■ Service Req E086
- ☐ Possible parts that caused the error
  - ■ HARNESS ASSY REGI
  - ■ HARNESS ASSY R-BTM
  - ■ SENSOR ASSY MOB ADC
  - ■ MCU PWB
- ☐ TROUBLESHOOTING

Step	Action and Question	Yes	No
1	**Check of IDT2** Check if paper stick to and coil around the IDT2. **Is there any paper that is sticking to and coiling around it?**	Remove the paper with attention to avoid any damage to the IDT2.	To Step 2
2	**Check of SENSOR ASSY MOB ADC** Check the SENSOR ASSY MOB ADC for any foreign matter and check if jammed paper cover and interfere the sensor operation. **Is it normal?**	To Step 3	Remove the foreign matter or jammed paper.
3	**Continuity check of HARNESS ASSY REGI** 1. Disconnect the relay connector P/J271 of the HARNESS ASSY REGI. 2. Disconnect the relay connector P272 of the SENSOR ASSY MOB ADC. 3. Check if the following wiring have continuity. P272-16 ↔ J271-1 P272-15 ↔ J271-2 P272-14 ↔ J271-3 P272-13 ↔ J271-4 P272-12 ↔ J271-5 P272-11 ↔ J271-6 P272-10 ↔ J271-7 P272-9 ↔ J271-8 **Do all of the wiring have continuity?**	To Step 2	Replace the HARNESS ASSY REGI
4	**Continuity check of HARNESS ASSY R-BTM** 1. Remove the P/J27 of the MCU PWB. 2. Disconnect the relay connector P/J271 of the HARNESS ASSY R-BTM. 3. Check if the following wiring have continuity. J27-8 ↔ P271-9 J27-7 ↔ P271-10 J27-6 ↔ P271-11 J27-5 ↔ P271-12 J27-4 ↔ P271-13 J27-3 ↔ P271-14 J27-2 ↔ P271-15 J27-1 ↔ P271-16 **Do all of the wiring have continuity?**	To Step 3	Replace the HARNESS ASSY R-BTM
5	**Check of SENSOR ASSY MOB ADC** 1. Replace the SENSOR ASSY MOB ADC. *(p.337)* 2. Turn the main power on. **Does the error occur?**	Replace the MCU PWB *(p.382)*	Problem solved

FIP-22

- Panel Message
  - Waste T BoxNearfull
  - Replace Waste T Box
- Possible parts that caused the error
  - Waste Toner Box
  - HARNESS ASSY F-SNR
  - TONER FULL SENSOR
  - MCU PWB
- TROUBLESHOOTING

Step	Action and Question	Yes	No
1	**Check of Waste Toner Box** 1. Replace the Waste Toner Box. 2. Turn the main power on. **Does the error occur?**	To Step 2	Problem solved
2	**Continuity check of ASSY F-SNR** 1. Remove the J22 of the MCU PWB. 2. Disconnect the J225 of the TONER FULL SENSOR. 3. Check if the following wiring have continuity. J22-14 ↔ J225-1 J22-13 ↔ J225-2 J22-12 ↔ J225-3 **Do all of the wiring have continuity?**	To Step 3	Replace the HARNESS ASSY F-SNR
3	**Check of TONER FULL SENSOR** 1. Replace the TONER FULL SENSOR. *(p.384)* 2. Turn the main power on. **Does the error occur?**	Replace the MCU PWB *(p.382)*	Problem solved

FIP-23

- Panel Message
  - Y Toner Low
  - M Toner Low
- Possible parts that caused the error
  - Toner Cartridge M
  - Toner Cartridge Y
  - HARNESS ASSY ANTENNA
  - ANTENNA YM
  - MCU PWB
- TROUBLESHOOTING

Step	Action and Question	Yes	No
1	**Check of Toner Cartridge** 1. Replace the corresponding Toner Cartridge. 2. Turn the main power on. **Does the error occur?**	To Step 2	Problem solved
2	**Continuity check of HARNESS ASSY ANTENNA** 1. Disconnect the P/J18 of the MCU PWB. 2. Disconnect the J182 of the ANTENA YM. 3. Check if the following wiring have continuity. J18-4 ↔ J182-1 J18-3 ↔ J182-2 **Do all of the wiring have continuity?**	To Step 3	Replace the HARNESS ASSY ANTENNA
3	**Check of ANTENNA YM** 1. Replace the ANTENNA YM. *(p.401)* 2. Turn the main power on. **Does the error occur?**	Replace the MCU PWB *(p.382)*	Problem solved

manuals4you.com

FIP-24

- Panel Message
  - C Toner Low
  - K Toner Low
- Possible parts that caused the error
  - Toner Cartridge C
  - Toner Cartridge K
  - HARNESS ASSY ANTENNA
  - ANTENNA CK
  - MCU PWB
- TROUBLESHOOTING

Step	Action and Question	Yes	No
1	**Check of Toner Cartridge** 1. Replace the corresponding Toner Cartridge. 2. Turn the main power on. **Does the error occur?**	To Step 2	Problem solved
2	**Continuity check of HARNESS ASSY ANTENNA** 1. Disconnect the P/J18 of the MCU PWB. 2. Disconnect the J181 of the ANTENA CK. 3. Check if the following wiring have continuity. J18-2 ↔ J181-1 J18-1 ↔ J181-2 **Do all of the wiring have continuity?**	To Step 3	Replace the HARNESS ASSY ANTENNA
3	**Check of ANTENNA YM** 1. Replace the ANTENNA CK. *(p.401)* 2. Turn the main power on. **Does the error occur?**	Replace the MCU PWB *(p.382)*	Problem solved

FIP-25

- Panel Message
  - Worn C Dev Unit
  - Worn M Dev Unit
  - Worn Y Dev Unit
  - Worn K Dev Unit
- Possible parts that caused the error
  - DEVE Unit C
  - DEVE Unit K
  - DEVE Unit M
  - DEVE Unit Y
  - MCU PWB
- TROUBLESHOOTING

Step	Action and Question	Yes	No
1	**Check of DEVE UNIT** 1. Replace the corresponding DEVE Unit. *(p.392)* 2. Turn the main power on. **Does the error occur?**	Replace the MCU PWB *(p.382)*	Problem solved

manuals4you.com

FIP-26

- Panel Message
  - Worn Photoconductor
- Possible parts that caused the error
  - Photoconductor unit
  - MCU PWB
- TROUBLESHOOTING

Step	Action and Question	Yes	No
1	**Check of Photoconductor unit** 1. Replace the Photoconductor unit. *(p.386)* 2. Turn the main power on. **Does the error occur?**	Replace the MCU PWB *(p.382)*	Problem solved

FIP-27

- Panel Message
  - Worn IDT Unit
- Possible parts that caused the error
  - IDT UNIT
  - MCU PWB
- TROUBLESHOOTING

Step	Action and Question	Yes	No
1	**Check of IDT UNIT** 1. Replace the IDT UNIT. *(p.386)* 2. Turn the main power on. **Does the error occur?**	Replace the MCU PWB *(p.382)*	Problem solved

FIP-28

- Panel Message
  - Worn Transfer Unit
- Possible parts that caused the error
  - BTR UNIT ASSY
  - MCU PWB
- TROUBLESHOOTING

Step	Action and Question	Yes	No
1	**Check of BTR UNIT ASSY** 1. Replace the BTR UNIT ASSY. *(p.305)* 2. Turn the main power on. **Does the error occur?**	Replace the MCU PWB *(p.382)*	Problem solved

manuals4you.com

FIP-29

- ☐ Panel Message
  - ■ Color Regist Warn 5
  - ■ Color Regist Warn 6
- ☐ Possible parts that caused the error
  - ■ HARNESS ASSY REGI
  - ■ IDT UNIT
  - ■ SENSOR ASSY MOB ADC
  - ■ MCU PWB
  - ■ HARNESS ASSY R-BTM
- ☐ TROUBLESHOOTING

Step	Action and Question	Yes	No
1	**Check of density** Visually check the density of each color. **Is an adequate density attained?**	To Step 2	Replace the MCU PWB *(p.382)*
2	**Continuity check of HARNESS ASSY REGI** 1. Disconnect the relay connector P/J271 of the HARNESS ASSY REGI. 2. Disconnect the relay connector P272 of the SENSOR ASSY MOB ADC. 3. Check if the following wiring have continuity. P272-16 ↔ J271-1 P272-15 ↔ J271-2 P272-14 ↔ J271-3 P272-13 ↔ J271-4 P272-12 ↔ J271-5 P272-11 ↔ J271-6 P272-10 ↔ J271-7 P272-9 ↔ J271-8 **Do all of the wiring have continuity?**	To Step 3	Replace the HARNESS ASSY REGI
3	**Continuity check of HARNESS ASSY R-BTM** 1. Remove the P/J27 of the MCU PWB.		
3	2. Disconnect the relay connector P/J271 of the HARNESS ASSY R-BTM. 3. Check if the following wiring have continuity. J27-8 ↔ P271-9 J27-7 ↔ P271-10 J27-6 ↔ P271-11 J27-5 ↔ P271-12 J27-4 ↔ P271-13 J27-3 ↔ P271-14 J27-2 ↔ P271-15 J27-1 ↔ P271-16 **Do all of the wiring have continuity?**	To Step 4	Replace the HARNESS ASSY R-BTM
4	**Check of SENSOR ASSY MOB ADC** Check the shutter of the SENSOR ASSY MOB ADC. **Does the shutter of the SENSOR ASSY MOB ADC operate properly?**	To Step 5	Replace the SENSOR ASSY MOB ADC *(p.337)*
5	**Check of SENSOR ASSY MOB ADC** 1. Replace the SENSOR ASSY MOB ADC. *(p.337)* 2. Print the image that has a problem, or execute test print. **Does the error occur?**	To Step 6	Problem solved
6	**Check of IDT UNIT for damage** Check the surface on the IDT UNIT. **Is the IDT UNIT surface damaged, dirty or whitish?**	Replace the IDT UNIT *(p.386)*	To Step 7
7	**Check of IDT UNIT gear** Check the gear adhesion of the IDT UNIT. **Is the IDT UNIT gear peeled?**	Replace the IDT UNIT *(p.386)*	To Step 8
8	**Check of IDT UNIT** 1. Replace the IDT UNIT. *(p.386)* 2. Print the image that has a problem, or execute test print. **Does the error occur?**	Replace the MCU PWB *(p.382)*	Problem solved

FIP-30

- ☐ Panel Message
  - ■ Color Regist Warn 3
  - ■ Color Regist Warn 4
- ☐ Possible parts that caused the error
  - ■ HARNESS ASSY REGI
  - ■ SENSOR ASSY MOB ADC
  - ■ HARNESS ASSY R-BTM
  - ■ IDT UNIT
  - ■ MCU PWB
- ☐ TROUBLESHOOTING

Step	Action and Question	Yes	No
1	**Check of density** Visually check the density of each color. **Is an adequate density attained?**	To Step 2	Replace the MCU PWB *(p.382)*
2	**Continuity check of HARNESS ASSY REGI** 1. Disconnect the relay connector P/J271 of the HARNESS ASSY REGI. 2. Disconnect the relay connector P272 of the SENSOR ASSY MOB ADC. 3. Check if the following wiring have continuity. P272-16 ↔ J271-1 P272-15 ↔ J271-2 P272-14 ↔ J271-3 P272-13 ↔ J271-4 P272-12 ↔ J271-5 P272-11 ↔ J271-6 P272-10 ↔ J271-7 P272-9 ↔ J271-8 **Do all of the wiring have continuity?**	To Step 3	Replace the HARNESS ASSY REGI
3	**Continuity check of HARNESS ASSY R-BTM** 1. Remove the P/J27 of the MCU PWB. 2. Disconnect the relay connector P/J271 of the HARNESS ASSY R-BTM. 3. Check if the following wiring have continuity. J27-8 ↔ P271-9 J27-7 ↔ P271-10 J27-6 ↔ P271-11 J27-5 ↔ P271-12 J27-4 ↔ P271-13 J27-3 ↔ P271-14 J27-2 ↔ P271-15 J27-1 ↔ P271-16 **Do all of the wiring have continuity?**	To Step 4	Replace the HARNESS ASSY R-BTM
4	**Check of SENSOR ASSY MOB ADC** Check the shutter of the SENSOR ASSY MOB ADC. **Does the shutter of the SENSOR ASSY MOB ADC operate properly?**	To Step 5	Replace the SENSOR ASSY MOB ADC *(p.337)*
5	**Check of SENSOR ASSY MOB ADC** 1. Replace the SENSOR ASSY MOB ADC. *(p.337)* 2. Print the image that has a problem, or execute test print. **Does the error occur?**	To Step 6	Problem solved
6	**Check of IDT UNIT for damage** Check the area mounted with the Registration Control Patch on the IDT UNIT. **Is the area mounted with the Registration Control Patch on the IDT UNIT damaged, dirty or whitish?**	Replace the IDT UNIT *(p.386)*	To Step 7

manuals4you.com

Step	Action and Question	Yes	No
7	**Check of IDT UNIT gear** Check the gear adhesion of the IDT UNIT. **Is the IDT UNIT gear peeled?**	Replace the IDT UNIT *(p.386)*	To Step 8
8	**Check of IDT UNIT** 1. Replace the IDT UNIT. *(p.386)* 2. Print the image that has a problem, or execute test print. **Does the error occur?**	Replace the MCU PWB *(p.382)*	Problem solved

FIP-31

- ☐ Panel Message
  - ■ Color Regist Warn 2
- ☐ Possible parts that caused the error
  - ■ ROS ASSY
  - ■ MCU PWB
- ☐ TROUBLESHOOTING

Step	Action and Question	Yes	No
1	**Execution of "Correction of starting position in sub-scanning direction"** Press the [Enter] switch to re-execute "Correction of starting position in sub-scanning direction". **Does the error occur?**	Proceed to Step 2 if the error occurs after correction is repeated several times.	Problem solved
2	**Check of ROS ASSY and execution of "Correction of starting position in sub-scanning direction"** 1. Reinstall the ROS ASSY. 2. Execute "Correction of starting position in sub-scanning direction". **Does the error occur?**	To Step 3	Problem solved
3	**Check of ROS ASSY and execution of "Correction of starting position in sub-scanning direction"** 1. Replace the ROS ASSY. 2. Execute "Correction of starting position in sub-scanning direction". **Does the error occur?**	Replace the MCU PWB *(p.382)*	Problem solved

FIP-32

- Panel Message
  - NonGenuineToner Y
  - NonGenuineToner M
- Possible parts that caused the error
  - Toner Cartridge M
  - Toner Cartridge Y
  - HARNESS ASSY ANTENNA
  - ANTENNA YM
  - MCU PWB
- TROUBLESHOOTING

Step	Action and Question	Yes	No
1	**Check of Toner Cartridge** 1. Replace the corresponding Toner Cartridge. 2. Turn the main power on. **Does the error occur?**	To Step 2	Problem solved
2	**Continuity check of HARNESS ASSY ANTENNA** 1. Disconnect the P/J18 of the MCU PWB. 2. Disconnect the J182 of the ANTENA YM. 3. Check if the following wiring have continuity. J18-4 ↔ J182-1 J18-3 ↔ J182-2 **Do all of the wiring have continuity?**	To Step 3	Replace the HARNESS ASSY ANTENNA
3	**Check of ANTENNA YM** 1. Replace the ANTENNA YM. *(p.401)* 2. Turn the main power on. **Does the error occur?**	Replace the MCU PWB *(p.382)*	Problem solved

FIP-33

- Panel Message
  - NonGenuineToner C
  - NonGenuineToner K
- Possible parts that caused the error
  - Toner Cartridge C
  - Toner Cartridge K
  - HARNESS ASSY ANTENNA
  - ANTENNA CK
  - MCU PWB
- TROUBLESHOOTING

Step	Action and Question	Yes	No
1	**Check of Toner Cartridge** 1. Replace the corresponding Toner Cartridge. 2. Turn the main power on. **Does the error occur?**	To Step 2	Problem solved
2	**Continuity check of HARNESS ASSY ANTENNA** 1. Disconnect the P/J18 of the MCU PWB. 2. Disconnect the J181 of the ANTENA CK. 3. Check if the following wiring have continuity. J18-2 ↔ J181-1 J18-1 ↔ J181-2 **Do all of the wiring have continuity?**	To Step 3	Replace the HARNESS ASSY ANTENNA
3	**Check of ANTENNA YM** 1. Replace the ANTENNA CK. *(p.401)* 2. Turn the main power on. **Does the error occur?**	Replace the MCU PWB *(p.382)*	Problem solved

manuals4you.com

FIP-34

- Panel Message
  - Replace Toner Y
  - Replace Toner M
- Possible parts that caused the error
  - Toner Cartridge M
  - Toner Cartridge Y
  - MCU PWB
- TROUBLESHOOTING

Step	Action and Question	Yes	No
1	**Check of Toner Cartridge** Check the corresponding Toner Cartridge. **Is there enough toner left?**	Replace the MCU PWB *(p.382)*	Replace the correspond-ing Toner Cartridge.

FIP-35

- Panel Message
  - Replace Toner C
  - Replace Toner K
- Possible parts that caused the error
  - Toner Cartridge C
  - Toner Cartridge K
  - MCU PWB
- TROUBLESHOOTING

Step	Action and Question	Yes	No
1	**Check of Toner Cartridge** Check the corresponding Toner Cartridge. **Is there enough toner left?**	Replace the MCU PWB *(p.382)*	Replace the correspond-ing Toner Cartridge.

FIP-36

- Panel Message
  - Install Waste T Box
- Possible parts that caused the error
  - WASTE TONER COLLECTOR
  - HARNESS ASSY F-SNR
  - TONER BOTTLE SET SENSOR
  - MCU PWB
- TROUBLESHOOTING

Step	Action and Question	Yes	No
1	**Check of Waste Toner Box** 1. Make sure that the WASTE TONER COLLECTOR is securely set. 2. Turn the main power on. **Does the error occur?**	To Step 2	Problem solved
2	**Continuity check of ASSY F-SNR** 1. Disconnect the J22 of the MCU PWB. 2. Disconnect the J224 of the TONER BOTTLE SET SENSOR. 3. Check if the following wiring have continuity. J22-11 ↔ J224-1 J22-10 ↔ J224-2 J22-9 ↔ J224-3 **Do all of the wiring have continuity?**	To Step 3	Replace the HARNESS ASSY F-SNR
3	**Check of TONER BOTTLE SET SENSOR** 1. Replace the TONER BOTTLE SET SENSOR. *(p.384)* 2. Turn the main power on. **Does the error occur?**	Replace the MCU PWB *(p.382)*	Problem solved

FIP-37

- Panel Message
  - Install Photoconductor
  - Wrong Photoconductor
- Possible parts that caused the error
  - Photoconductor unit
  - HARNESS ASSY CRUM
  - MCU PWB
- TROUBLESHOOTING

Step	Action and Question	Yes	No
1	**Check of Photoconductor unit** 1. Make sure that the Photoconductor unit has been set. 2. Turn the main power on. **Does the error occur?**	To Step 2	Problem solved
2	**Continuity check of HARNESS ASSY CRUM** 1. Disconnect the J20 of the MCU PWB. 2. Disconnect the J201 of the TERMINAL ASSY PHD. 3. Check if the following wiring have continuity. J20-5 ↔ J201-2 J20-4 ↔ J201-3 J20-3 ↔ J201-4 J20-2 ↔ J201-5 **Do all of the wiring have continuity?**	To Step 3	Replace the HARNESS ASSY CRUM
3	**Check of Photoconductor unit** 1. Replace the Photoconductor unit. *(p.386)* 2. Turn the main power on. **Does the error occur?**	Replace the MCU PWB *(p.382)*	Problem solved

FIP-38

- Panel Message
  - Install Y TnrCart
  - Install M TnrCart
- Possible parts that caused the error
  - Toner Cartridge M
  - Toner Cartridge Y
  - HARNESS ASSY ANTENNA
  - ANTENNA YM
  - MCU PWB
- TROUBLESHOOTING

Step	Action and Question	Yes	No
1	**Check of Toner Cartridge** 1. Make sure that the corresponding Toner Cartridge has been set. 2. Turn the main power on. **Does the error occur?**	To Step 2	Problem solved
2	**Check of noise sources** Check for noise sources, such as a note PC and a CR display, within 50cm around the printer. **Is there any electronic equipment that generates noise around the printer?**	Separate the electronic equipment and printer more than 50cm.	To step 3
3	**Continuity check of HARNESS ASSY ANTENNA** 1. Disconnect the P/J18 of the MCU PWB. 2. Disconnect the J182 of the ANTENA YM. 3. Check if the following wiring have continuity. J18-4 ↔ J182-1 J18-3 ↔ J182-2 **Do all of the wiring have continuity?**	To step 4	Replace the HARNESS ASSY ANTENNA
4	**Check of ANTENNA YM** 1. Replace the ANTENNA YM. *(p.401)* 2. Turn the main power on. **Does the error occur?**	Replace the MCU PWB *(p.382)*	Problem solved

manuals4you.com

FIP-39

- Panel Message
  - Install C TnrCart
  - Install K TnrCart
- Possible parts that caused the error
  - Toner Cartridge C
  - Toner Cartridge K
  - HARNESS ASSY ANTENNA
  - ANTENNA CK
  - MCU PWB
- TROUBLESHOOTING

Step	Action and Question	Yes	No
1	**Check of Toner Cartridge** 1. Make sure that the corresponding Toner Cartridge has been set. 2. Turn the main power on. **Does the error occur?**	To Step 2	Problem solved
2	**Check of noise sources** Check for noise sources, such as a note PC and a CR display, within 50cm around the printer. **Is there any electronic equipment that generates noise around the printer?**	Separate the electronic equipment and printer more than 50cm.	To step 3
3	**Continuity check of HARNESS ASSY ANTENNA** 1. Disconnect the P/J18 of the MCU PWB. 2. Disconnect the J181 of the ANTENA CK. 3. Check if the following wiring have continuity. J18-2 ↔ J181-1 J18-1 ↔ J181-2 **Do all of the wiring have continuity?**	To Step 3	Replace the HARNESS ASSY ANTENNA
4	**Check of ANTENNA YM** 1. Replace the ANTENNA CK. *(p.401)* 2. Turn the main power on. **Does the error occur?**	Replace the MCU PWB *(p.382)*	Problem solved

FIP-40

- ☐ Panel Message
  - ■ Jam B
- ☐ Possible parts that caused the error
  - ■ IDT UNIT
  - ■ BTR UNIT ASSY
  - ■ HARNESS ASSY HVLH
  - ■ HARNESS ASSY R-BTM
  - ■ HVPS
  - ■ HARNESS ASSY R-TOP1
  - ■ POP SENSOR
  - ■ MCU PWB
- ☐ TROUBLESHOOTING

Step	Action and Question	Yes	No
1	**Check of IDT UNIT** Check IDT2 of the IDT UNIT. **Is there any paper that is sticking to and coiling around the IDT2 in the IDT UNIT?**	Remove the paper	To Step 2
2	**Check of BTR UNIT ASSY** Check the BTR UNIT ASSY. **Check the BTR UNIT ASSY roll and gear for errors.**	To Step 3	Replace the BTR UNIT ASSY *(p.305)*
3	**Contact check of HARNESS ASSY HVLH** Check P/J135 of the HARNESS ASSY HVLH. **Is J135 of the HARNESS ASSY HVLH securely inserted in P135 of the HVPS?**	To Step 4	Reconnect the connector.
4	**Continuity check of HARNESS ASSY R-BTM** 1. Disconnect the P13 of the MCU PWB. 2. Disconnect the J131 of the MHARNESS ASSY R-BTM. 3. Check if the following wiring have continuity. P13-A13 ↔ J131-B9 P13-A10 ↔ J131-B3 P13-B9 ↔ J131-A4 **Do all of the wiring have continuity?**	To Step 5	Replace the HARNESS ASSY R-BTM
5	**Check of HVPS** 1. Replace the HVPS. *(p.371)* 2. Turn the main power on. **Does the error occur?**	To Step 6	Problem solved
6	**Continuity check of HARNESS ASSY R-BTM** 1. Disconnect the P23 of the MCU PWB. 2. Disconnect the relay connector P/J23B3 of the HARNESS ASSY LH. 3. Check if the following wiring have continuity. J23-B12 ↔ P23B3-6 J23-B11 ↔ P23B3-7 J23-B10 ↔ P23B3-8 **Do all of the wiring have continuity?**	To Step 7	Replace the HARNESS ASSY R-BTM

manuals4you.com

Step	Action and Question	Yes	No
7	**Continuity check of HARNESS ASSY R-TOP1** 1. Disconnect the relay connector P/J23B3 of the HARNESS ASSY LH. 2. Disconnect the J23B5 of the POP SENSOR. 3. Check if the following wiring have continuity. J23B3-6 ↔ J23B5-1 J23B3-5 ↔ J23B5-2 J23B3-4 ↔ J23B5-3 **Do all of the wiring have continuity?**	To Step 8	Replace the HARNESS ASSY LH
8	**Check of POP SENSOR** 1. Replace the POP SENSOR. *(p.325)* 2. Turn the main power on. **Does the error occur?**	Replace the MCU PWB *(p.382)*	Problem solved

FIP-41

- ☐ Panel Message
  - ■ Jam B
- ☐ Possible parts that caused the error
  - ■ HARNESS ASSY R-TOP1
  - ■ Fuser unit
  - ■ HARNESS ASSY R-BTM
  - ■ HARNESS ASSY LH
  - ■ V-TRA FAN
  - ■ MCU PWB
- ☐ TROUBLESHOOTING

Step	Action and Question	Yes	No
1	**Check of the paper feed path** Check the paper feed path. **Are burrs and foreign matter absent in the paper feed path?**	To Step 2	Remove foreign matter.
2	**Check of Paper Feed Roll for damage** Check the Paper Feed Roll for abrasion and damage. **Does the Paper Feed Roll rotate normally?**	To Step 3	Replace the failing part.
3	**Continuity check of HARNESS ASSY R-TOP1** 1. Disconnect the P/J15 of the MCU PWB. 2. Disconnect the relay connector (FUSER DRAWER CONNECTOR) P/J154 of the Fuser unit. 3. Check if the following wiring have continuity. J15-B1 ↔ J154-7 J15-B2 ↔ J154-6 J15-B3 ↔ J154-5 **Do all of the wiring have continuity?**	To Step 4	Replace the HARNESS ASSY R-TOP1
4	**Power supply to EXIT SENSOR of Fuser unit** 1. Make sure that the Fuser unit is correctly connected. 2. Check the voltage between J154-A1 and J154-A3. **Is the voltage 3.3 VDC between J154-A1 and J154-A3?**	To Step 5	Replace the Fuser unit *(p.361)*
5	**Continuity check of HARNESS ASSY R-BTM** 1. Disconnect the P/J23 of the MCU PWB. 2. Disconnect the relay connector P/J23B3 of the HARNESS ASSY R-BTM. 3. Check if the following wiring have continuity. J23-B7 ↔ P23B3-11 J23-B8 ↔ P23B3-10 J23-B9 ↔ P23B3-9 **Do all of the wiring have continuity?**	To Step 6	Replace the HARNESS ASSY R-BTM
6	**Continuity check of HARNESS ASSY LH** 1. Disconnect the relay connector P/J23B3 of the HARNESS ASSY LH. 2. Disconnect the relay connector P/J23B4 of the V-TRA FAN. 3. Check if the following wiring have continuity. J23B3-1 ↔ J23B4-2 J23B3-2 ↔ J23B4-1 **Do all of the wiring have continuity?**	To Step 7	Replace the HARNESS ASSY LH
7	**Operation check of the V-TRA FAN** Turn the main power on. **Does the V-TRA FAN operate normally?**	Problem solved	To Step 8

manuals4you.com

Step	Action and Question	Yes	No
8	**Power supply to the V-TRA FAN** 1. Make sure that the V-TRA FAN is correctly connected. 2. Check the voltage between J23B4-2 and J23B4-1. **Is the voltage 24 VDC between J23B4-2 and J23B4-1?**	To Step 9	Replace the MCU PWB *(p.382)*
9	**Check of V-TRA FAN** 1. Replace the V-TRA FAN. *(p.324)* 2. Turn the main power on. **Does the V-TRA FAN operate normally?**	Problem solved	Replace the V-TRA FAN *(p.324)*

FIP-42

- ☐ Panel Message
  - ■ Jam B
- ☐ Possible parts that caused the error
  - ■ HARNESS ASSY R-TOP1
  - ■ Fuser unit
  - ■ HARNESS ASSY R-BTM
  - ■ HARNESS ASSY LH
  - ■ V-TRA FAN
  - ■ MCU PWB
- ☐ TROUBLESHOOTING

Step	Action and Question	Yes	No
1	**Check of Heat Roll** Check the Heat Roll of the Fuser unit. **Is the Heat Roll wound with paper?**	Remove the paper	To Step 2
2	**Check of the paper feed path** Check the paper feed path. **Are burrs and foreign matter absent in the paper feed path?**	To Step 3	Remove foreign matter.
3	**Continuity check of HARNESS ASSY R-TOP1** 1. Disconnect the P/J15 of the MCU PWB. 2. Disconnect the relay connector (FUSER DRAWER CONNECTOR) P/J154 of the Fuser unit. 3. Check if the following wiring have continuity. J15-B1 ↔ J154-7 J15-B2 ↔ J154-6 J15-B3 ↔ J154-5 **Do all of the wiring have continuity?**	To Step 4	Replace the HARNESS ASSY R-TOP1
4	**Power supply to EXIT SENSOR of Fuser unit** 1. Make sure that the Fuser unit is correctly connected. 2. Check the voltage between J154-A1 and J154-A3. **Is the voltage 3.3 VDC between J154-A1 and J154-A3?**	To Step 5	Replace the Fuser unit *(p.361)*
5	**Continuity check of HARNESS ASSY R-BTM** 1. Disconnect the P/J23 of the MCU PWB. 2. Disconnect the relay connector P/J23B3 of the HARNESS ASSY R-BTM. 3. Check if the following wiring have continuity. J23-B7 ↔ P23B3-11 J23-B8 ↔ P23B3-10 J23-B9 ↔ P23B3-9 **Do all of the wiring have continuity?**	To Step 6	Replace the HARNESS ASSY R-BTM
6	**Continuity check of HARNESS ASSY LH** 1. Disconnect the relay connector P/J23B3 of the HARNESS ASSY LH. 2. Disconnect the relay connector P/J23B4 of the V-TRA FAN. 3. Check if the following wiring have continuity. J23B3-1 ↔ J23B4-2 J23B3-2 ↔ J23B4-1 **Do all of the wiring have continuity?**	To Step 7	Replace the HARNESS ASSY LH
7	**Operation check of the V-TRA FAN** Turn the main power on. **Does the V-TRA FAN operate normally?**	Problem solved	To Step 8

manuals4you.com

Step	Action and Question	Yes	No
8	**Power supply to the V-TRA FAN** 1. Make sure that the V-TRA FAN is correctly connected. 2. Check the voltage between J23B4-2 and J23B4-1. **Is the voltage 24 VDC between J23B4-2 and J23B4-1?**	To Step 9	Replace the MCU PWB *(p.382)*
9	**Check of V-TRA FAN** 1. Replace the V-TRA FAN. *(p.324)* 2. Turn the main power on. **Does the V-TRA FAN operate normally?**	Problem solved	Replace the V-TRA FAN *(p.324)*

FIP-43

- ☐ Panel Message
  - ■ Jam B
- ☐ Possible parts that caused the error
  - ■ HARNESS ASSY R-TOP1
  - ■ MCU PWB
  - ■ Fuser unit
- ☐ TROUBLESHOOTING

Step	Action and Question	Yes	No
1	**Check of Exit Roll** Check the Exit Roll of the Fuser unit. **Is the Exit Roll wound with paper?**	Remove the paper	To Step 2
2	**Check of the paper feed path** Check the paper feed path. **Are burrs and foreign matter absent in the paper feed path?**	To Step 3	Remove foreign matter.
3	**Continuity check of HARNESS ASSY R-TOP1** 1. Disconnect the P/J15 of the MCU PWB. 2. Disconnect the relay connector (FUSER DRAWER CONNECTOR) P/J154 of the Fuser unit. 3. Check if the following wiring have continuity. J15-B1 ↔ J154-7 J15-B2 ↔ J154-6 J15-B3 ↔ J154-5 **Do all of the wiring have continuity?**	To Step 4	Replace the HARNESS ASSY R-TOP1
4	**Power supply to EXIT SENSOR of Fuser unit** 1. Make sure that the Fuser unit is correctly connected. 2. Check the voltage between J154-A1 and J154-A3. **Is the voltage 3.3 VDC between J154-A1 and J154-A3?**	To Step 5	Replace the MCU PWB *(p.382)*
5	**Check of Fuser unit** 1. Replace the Fuser unit. *(p.361)* 2. Print the image that has a problem, or execute test print. **Does the error occur?**	Replace the MCU PWB *(p.382)*	Problem solved

manuals4you.com

FIP-44

- ☐ Panel Message
  - ■ Service Req E051
- ☐ Possible parts that caused the error
  - ■ HARNESS ASSY R-TOP1
  - ■ SENSOR ASSY TP
  - ■ Fuser unit
  - ■ FUSER DRAWER CONNECTOR
  - ■ HARNESS ASSY R-BTM
  - ■ LVPS
  - ■ MCU PWB
- ☐ TROUBLESHOOTING

Step	Action and Question	Yes	No
1	**Check of Heat Roll** Check the Heat Roll of the Fuser unit. **Is the Heat Roll wound with paper?**	Remove the paper	To Step 2
2	**Continuity check of HARNESS ASSY R-TOP1** 1. Disconnect the P/J15 of the MCU PWB. 2. Disconnect J151 and P/J153 of the SENSOR ASSY TP and P/J154 of the FUSER DRAWER CONNECTOR. 3. Check if the following wiring have continuity. J15-A1 ↔ J151-4 J15-A2 ↔ J151-3 J15-A3 ↔ J151-2 J15-A4 ↔ J151-1 J15-A9 ↔ P153-2 J15-A10 ↔ P153-1 J15-B1 ↔ J154-7 J15-B2 ↔ J154-6 J15-B3 ↔ J154-5 J15-B4 ↔ J154-4 J15-B5 ↔ J154-3 J15-B6 ↔ J154-2 J15-B7 ↔ J154-1 **Do all of the wiring have continuity?**	To Step 3	Replace the HARNESS ASSY R-TOP1
3	**Power supply to Thermopile of SENSOR ASSY TP** 1. Make sure that the SENSOR ASSY TP is correctly connected. 2. Check the voltage between J151-2 and J151-4. **Is the voltage 5 VDC between P151-2 and P151-4?**	To Step 4	Replace the SENSOR ASSY TP *(p.362)*

Step	Action and Question	Yes	No
4	**Power supply to Wiper Solenoid of SENSOR ASSY TP** 1. Make sure that the SENSOR ASSY TP is correctly connected. 2. Check the voltage between J153-1 and J153-2. **Is the voltage 24 VDC between P153-1 and P153-2?**	To Step 5	Replace the SENSOR ASSY TP *(p.362)*
5	**Check of Thermistor of Fuser unit** 1. Turn the main power on. 2. Check whether the error is displayed immediately or right after a short warm-up. **Does the error still occur?**	To Step 6	Problem solved
6	**Continuity check of FUSER DRAWER CONNECTOR** 1. Disconnect the P/J103 of the LVPS 2. Disconnect the P/J158 of the FUSER DRAWER CONNECTOR 3. Check if the following wiring have continuity. J103-5 ↔ J158-2 J103-3 ↔ J158-1 J103-1 ↔ J158-4 **Do all of the wiring have continuity?**	To Step 7	Replace the FUSER DRAWER CONNECTOR
7	**Check of Fuser unit** 1. Replace the Fuser unit. *(p.361)* WARNING **Wait until the Fuser unit cools, and then start work.** 2. Turn the main power on. **Does the error occur?**	To Step 8	Problem solved

Step	Action and Question	Yes	No
8	**Continuity check of HARNESS ASSY R-BTM** 1. Disconnect P/J10 of MCU PWB. 2. Disconnect P/J101 of LVPS. 3. Check if the following wiring have continuity. J10-12 ↔ J151-9 J10-11 ↔ J151-10 **Do all of the wiring have continuity?**	To Step 9	Replace the HARNESS ASSY R-BTM
9	**Check of LVPS** 1. Replace the LVPS. *(p.373)* 2. Turn the main power on. **Does the error occur?**	Replace the MCU PWB *(p.382)*	Problem solved

manuals4you.com

FIP-45

- Panel Message
  - Service Req E054
- Possible parts that caused the error
  - FAN FUSER
  - HARNESS ASSY R-TOP1
  - LVPS
  - MCU PWB
- TROUBLESHOOTING

Step	Action and Question	Yes	No
1	**Operation check of the FAN FUSER** Turn the main power on. **Does the FAN FUSER rotate properly without occurrence of an error?**	Problem solved	To Step 2
2	**Continuity check of HARNESS ASSY R-TOP1** 1. Disconnect the P/J104 of the LVPS. 2. Disconnect the relay connector P/J1041 of the FAN FUSER. 3. Check if the following wiring have continuity. J104-1 ↔ J1041-3 J104-2 ↔ J1041-2 J104-3 ↔ J1041-1 **Do all of the wiring have continuity?**	To Step 3	Replace the HARNESS ASSY TOP1
3	**Power supply to the FAN FUSER** 1. Make sure that the FAN FUSER is correctly connected. 2. Check the voltage between J1041-1 and J1041-3. **Is the voltage 24 VDC between J1041-1 and J1041-3?**	To Step 4	Replace the FAN FUSER *(p.369)*
4	**Check of FAN FUSER signal (FAN ALARM)** Check continuity between P1041-2 and P1041-3. **Do all of the wiring have continuity?**	To Step 5	Replace the FAN FUSER *(p.369)*
5	**Continuity check of HARNESS ASSY R-BTM** 1. Disconnect the P/J101 of the LVPS. 2. Disconnect P/J10 of MCU PWB. 3. Check if the following wiring have continuity. J101-7 ↔ P10-14 **Do all of the wiring have continuity?**	To Step 6	Replace the HARNESS ASSY R-BTM
6	**Check of LVPS** 1. Replace the LVPS. *(p.373)* 2. Turn the main power on. **Does the error occur?**	Replace the MCU PWB *(p.382)*	Problem solved

FIP-46

- Panel Message
  - Worn Fuser
- Possible parts that caused the error
  - Fuser unit
  - MCU PWB
- TROUBLESHOOTING

Step	Action and Question	Yes	No
1	**Check of Fuser unit assy** 1. Replace the Fuser unit. *(p.361)* 2. Turn the main power on. **Does the error occur?**	Replace the MCU PWB *(p.382)*	Problem solved

FIP-47

- Panel Message
  - Service Req E053
- Possible parts that caused the error
  - MOTOR ASSY TRACKING
  - HARNESS ASSY DISP
  - HARNESS ASSY P-SIZE
  - SENSOR ASSY TRACKING
  - MCU PWB
- TROUBLESHOOTING

Step	Action and Question	Yes	No
1	**Check of MOTOR ASSY TRACKING** 1. Remove the COVER ASSY REAR. 2. Turn the main power on. 3. During warming-up operation of the printer, check the rotation of the blocking plate of the SHAFT ASSY TRACKING from the SENSOR ASSY TRACKING mounting section. **Can you confirm that the SHAFT ASSY TRACKING turns?**	To Step 3	To Step 2
2	**Continuity check of HARNESS ASSY DISP** 1. Disconnect the P/J22 of the MCU PWB. 2. Disconnect the J222 of the MOTOR ASSY TRACKING. 3. Check if the following wiring have continuity. J22-4 ↔ J222-1 J22-5 ↔ J222-2 **Do all of the wiring have continuity?**	Replace the MOTOR ASSY TRACKING	Replace the HARNESS ASSY DISP
3	**Continuity check of HARNESS ASSY P-SIZE** 1. Disconnect the P/J29 of the MCU PWB. 2. Disconnect the J291 of the SENSOR ASSY TRACKING. 3. Check if the following wiring have continuity. J29-1 ↔ J291-3 J29-2 ↔ J291-2 J29-3 ↔ J291-1 **Do all of the wiring have continuity?**	To Step 4	Replace the HARNESS ASSY P-SIZE
4	**Check of SENSOR ASSY TRACKING** 1. Replace the SENSOR ASSY TRACKING. 2. Turn the main power on. **Does the error occur?**	Replace the MCU PWB *(p.382)*	Problem solved

manuals4you.com

FIP-48

- Panel Message
  - Service Req E057
- Possible parts that caused the error
  - FLAT CABLE ESS-MCU
  - BOARD ASSY, MAIN
- TROUBLESHOOTING

Step	Action and Question	Yes	No
1	**Check of Controller** 1. Power on or power off the main power several times. **Does the error occur?**	To Step 2	Problem solved
2	**Continuity check of FLAT CABLE ESS-MCU** 1. Disconnect the P/J14 of the MCU PWB. 2. Disconnect the CN600 of the BOARD ASSY, MAIN. 3. Check each wiring for continuity. **Do all of the wiring have continuity?**	Replace the BOARD ASSY, MAIN	Replace the FLAT CABLE ESS-MCU

FIP-49

- Panel Message
  - Service Req E998
- Possible parts that caused the error
  - FLAT CABLE ESS-MCU
  - MCU PWB
  - BOARD ASSY, MAIN
- TROUBLESHOOTING

Step	Action and Question	Yes	No
1	**Check of MCU PWB firmware version** Check the firmware version of the MCU PWB. **Is the version updated?**	To Step 2	Update the firmware and proceed to Step 2.
2	**Check of Controller firmware version** Check the firmware version of the Controller. **Is the version updated?**	To Step 3	Update the firmware.
3	**Continuity check of FLAT CABLE ESS-MCU** 1. Disconnect the P/J14 of the MCU PWB. 2. Disconnect the CN600 of the BOARD ASSY, MAIN. 3. Check each wiring for continuity. **Do all of the wiring have continuity?**	To Step 4	Replace the FLAT CABLE ESS-MCU
4	**Replacement of BOARD ASSY, MAIN** Replace the BOARD ASSY MAIN. **Does the error occur?**	Replace the MCU PWB *(p.382)*	Problem solved

Option Single Tray Module/3 Tray Module

FIP-O1

- Panel Message
  - Open E
- Possible parts that caused the error
  - LH COVER INTL SW
  - HARNESS ASSY 3TM
  - PWB ASSY 3TM/STM
  - HARNESS ASSY STM
- TROUBLESHOOTING

Step	Action and Question	Yes	No
1	**Continuity check of HARNESS ASSY 3TM/STM** 1. Disconnect the J812 of the LH COVER INTL SW. 2. Disconnect the P/J546 of the PWB ASSY 3TM/STM. 3. Check if the following wiring have continuity. J812-1 ↔ J546-8 J812-2 ↔ J546-7 **Do all of the wiring have continuity?**	To Step 2	Replace the HARNESS ASSY 3TM/STM
2	**Check of LH COVER INTL SW** 1. Check the connection of the LH COVER INTL SW. 2. While pushing and releasing the LH COVER INTL SW, check continuity between J546-7 and J546-8. **Is there continuity between P/J546-7 and P/J546-8 when the LH COVER INTL SW is pressed and discontinuity when it is released?**	Replace the PWB ASSY 3TM/STM *(p.448)*/ *(p.452)*	Replace the LH COVER INTL SW *(p.445)*

FIP-O2

- Panel Message
  - Paper Set Casette 2 tttt
- Possible parts that caused the error
  - HARNESS ASSY 3TM/STM
  - PWB ASSY 3TM/STM
  - PAPER SIZE SENSOR
- TROUBLESHOOTING

Step	Action and Question	Yes	No
1	**Reinserting Tray2** Eject the Tray2 and reinsert it. **Does the error occur?**	To Step 2	Problem solved
2	**Check of HARNESS ASSY 3TM/STM** 1. Disconnect the J816 of the Tray 2 Paper Size Switch. 2. Disconnect the P/J546 of the PWB ASSY 3TM/STM. 3. Check if the following wiring have continuity. J816-1 ↔ J546-3 J816-2 ↔ J546-2 J816-3 ↔ J546-1 **Do all of the wiring have continuity?**	To Step 3	Replace the HARNESS ASSY 3TM/STM
3	**Check of PAPER SIZE SENSOR** 1. Replace the PAPER SIZE SENSOR. *(p.436)* 2. Turn the main power on. **Does the error occur?**	Replace the PWB ASSY 3TM/STM *(p.448)*/ *(p.452)*	Problem solved

Note "*": For the 3 Tray Module, replace the PAPER SIZE SENSOR with the one of another tray and make this check.

manuals4you.com

FIP-O3

- Panel Message
  - Paper Set Casette 3 tttt
- Possible parts that caused the error
  - HARNESS ASSY 3TM
  - PWB ASSY 3TM
  - PAPER SIZE SENSOR
- TROUBLESHOOTING

Step	Action and Question	Yes	No
1	**Reinserting Tray3** Eject the Tray3 and reinsert it. **Does the error occur?**	To Step 2	Problem solved
2	**Check of HARNESS ASSY 3TM** 1. Disconnect the J820 of the PAPER SIZE SENSOR. 2. Disconnect the P/J548 of the PWB ASSY 3TM. 3. Check if the following wiring have continuity. J820-1 ↔ J548-12 J820-2 ↔ J548-11 J820-3 ↔ J548-10 **Do all of the wiring have continuity?**	To Step 3	Replace the HARNESS ASSY 3TM
3	**Check of PAPER SIZE SENSOR** 1. Replace the PAPER SIZE SENSOR. *(p.436) 2. Turn the main power on. **Does the error occur?**	Replace the PWB ASSY 3TM (p.448)	Problem solved

Note "*": For the 3 Tray Module, replace the PAPER SIZE SENSOR with the one of another tray and make this check.

FIP-O4

- Panel Message
  - Paper Set Casette 4 tttt
- Possible parts that caused the error
  - HARNESS ASSY 3TM
  - PWB ASSY 3TM
  - PAPER SIZE SENSOR
- TROUBLESHOOTING

Step	Action and Question	Yes	No
1	**Reinserting Tray4** Eject the Tray4 and reinsert it. **Does the error occur?**	To Step 2	Problem solved
2	**Check of HARNESS ASSY 3TM** 1. Disconnect the J824 of the PAPER SIZE SENSOR. 2. Disconnect the P/J548 of the PWB ASSY 3TM. 3. Check if the following wiring have continuity. J824-1 ↔ J548-6 J824-2 ↔ J548-5 J824-3 ↔ J548-4 **Do all of the wiring have continuity?**	To Step 3	Replace the HARNESS ASSY 3TM
3	**Check of PAPER SIZE SENSOR** 1. Replace the PAPER SIZE SENSOR. *(p.436) 2. Turn the main power on. **Does the error occur?**	Replace the PWB ASSY 3TM (p.448)	Problem solved

Note "*": For the 3 Tray Module, replace the PAPER SIZE SENSOR with the one of another tray and make this check.

FIP-O5

- ☐ Panel Message
  - ■ Paper Out Casette 2 tttt
- ☐ Possible parts that caused the error
  - ■ HARNESS ASSY SNR
  - ■ HARNESS ASSY 3TM/STM
  - ■ PWB ASSY 3TM/STM
  - ■ TRAY NO PAPER SENSOR
- ☐ TROUBLESHOOTING

Step	Action and Question	Yes	No
1	**Paper presence** Check the paper in the Tray2. **Is there paper in the Tray 2?**	To Step 2	Supply paper
2	**Check of HARNESS ASSY SNR** 1. Disconnect the J106 of the TRAY NO PAPER SENSOR. 2. Disconnect the relay connector P/J617 of the HARNESS ASSY 3TM/STMR. 3. Check if the following wiring have continuity. J106-1 ↔ J617-9 J106-2 ↔ J617-8 J106-3 ↔ J617-7 **Do all of the wiring have continuity?**	To Step 3	Replace the HARNESS ASSY SNR
3	**Check of HARNESS ASSY 3TM/STM** 1. Disconnect the J547 of the PWB ASSY 3TM/STM. 2. Disconnect the relay connector P/J670 of the HARNESS ASSY 3TM/STM. 3. Check if the following wiring have continuity. J547-9 ↔ P670-4 J547-8 ↔ P670-5 J547-7 ↔ P670-6 **Do all of the wiring have continuity?**	To Step 4	Replace the HARNESS ASSY 3TM/STM
4	**Check of TRAY NO PAPER SENSOR** 1. Replace the TRAY NO PAPER SENSOR. *(p.439)* 2. Turn the main power on. **Does the error occur?**	Replace the PWB ASSY 3TM/STM *(p.448)*/ *(p.452)*	Problem solved

manuals4you.com

FIP-O6

- ☐ Panel Message
  - ■ Paper Out Casette 3 tttt
- ☐ Possible parts that caused the error
  - ■ HARNESS ASSY SNR
  - ■ HARNESS ASSY 3TM
  - ■ TRAY NO PAPER SENSOR
  - ■ PWB ASSY 3TM
- ☐ TROUBLESHOOTING

Step	Action and Question	Yes	No
1	**Paper presence** Check the paper in the Tray3. **Is there paper in the Tray 3?**	To Step 2	Supply paper
2	**Check of HARNESS ASSY SNR** 1. Disconnect the J106 of the TRAY NO PAPER SENSOR. 2. Disconnect the relay connector P/J617 of the HARNESS ASSY 3TM. 3. Check if the following wiring have continuity. J106-1 ↔ J617-9 J106-2 ↔ J617-8 J106-3 ↔ J617-7 **Do all of the wiring have continuity?**	To Step 3	Replace the HARNESS ASSY SNR
3	**Check of HARNESS ASSY 3TM** 1. Disconnect the J549 of the PWB ASSY 3TM/STM. 2. Disconnect the relay connector P/J672 of the HARNESS ASSY 3TM. 3. Check if the following wiring have continuity. J549-B9 ↔ P672-4 J549-B8 ↔ P672-5 J549-B7 ↔ P672-6 **Do all of the wiring have continuity?**	To Step 4	Replace the HARNESS ASSY 3TM
4	**Check of TRAY NO PAPER SENSOR** 1. Replace the TRAY NO PAPER SENSOR. *(p.439)* 2. Turn the main power on. **Does the error occur?**	Replace the PWB ASSY 3TM *(p.448)*	Problem solved

FIP-O7

- ☐ Panel Message
  - ■ Paper Out Casette 4 tttt
- ☐ Possible parts that caused the error
  - ■ HARNESS ASSY SNR
  - ■ HARNESS ASSY 3TM
  - ■ TRAY NO PAPER SENSOR
  - ■ PWB ASSY 3TM
- ☐ TROUBLESHOOTING

Step	Action and Question	Yes	No
1	**Paper presence** Check the paper in the Tray4. **Is there paper in the Tray 4?**	To Step 2	Supply paper
2	**Check of HARNESS ASSY SNR** 1. Disconnect the J106 of the Tray 4 No Paper Sensor. 2. Disconnect the relay connector P/J617 of the HARNESS ASSY 3TM. 3. Check if the following wiring have continuity. J106-1 ↔ J617-9 J106-2 ↔ J617-8 J106-3 ↔ J617-7 **Do all of the wiring have continuity?**	To Step 3	Replace the HARNESS ASSY SNR
3	**Check of HARNESS ASSY 3TM** 1. Disconnect the J549 of the PWB ASSY 3TM/STM. 2. Disconnect the relay connector P/J674 of the HARNESS ASSY 3TM. 3. Check if the following wiring have continuity. J549-A9 ↔ P674-4 J549-A8 ↔ P674-5 J549-A7 ↔ P674-6 **Do all of the wiring have continuity?**	To Step 4	Replace the HARNESS ASSY 3TM
4	**Check of TRAY NO PAPER SENSOR** 1. Replace the TRAY NO PAPER SENSOR. *(p.439)* 2. Turn the main power on. **Does the error occur?**	Replace the PWB ASSY 3TM *(p.448)*	Problem solved

manuals4you.com

FIP-O8

- ☐ Panel Message
  - ■ Paper Set Casette 2 tttt
- ☐ Possible parts that caused the error
  - ■ HARNESS ASSY 3TM/STM
  - ■ PWB ASSY 3TM/STM
  - ■ PAPER SIZE SENSOR
- ☐ TROUBLESHOOTING

Step	Action and Question	Yes	No
1	**Check of Paper Size** Check if the paper in the Tray2 correspond with the specified paper size by END GUIDE ASSY and FRONT SIDE GUIDE, or with the specified size by the driver of the computer. CAUTION **Securely match the END GUIDE ASSY and FRONT SIDE GUIDE in the following procedure.** **1. Match the inverted delta symbols of the END GUIDE ASSY and BOTTOM PLATE.** **2. Match the inverted delta symbols of the FRONT SIDE GUIDE and BOTTOM PLATE.** 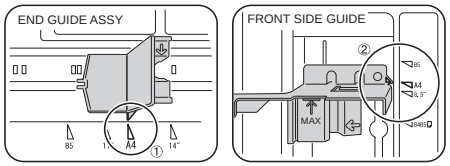 **Does the paper size setting correspond with the using paper?**	To Step 2	Change the paper or change the paper size setting

Step	Action and Question	Yes	No
2	**Check of HARNESS ASSY 3TM** 1. Disconnect the J816 of the PAPER SIZE SENSOR. 2. Disconnect the P/J546 of the MCU PWB. 3. Check if the following wiring have continuity. J816-1 ↔ J546-3 J816-2 ↔ J546-2 J816-3 ↔ J546-1 **Do all of the wiring have continuity?**	To Step 3	Replace the HARNESS ASSY 3TM
3	**Check of PAPER SIZE SENSOR** 1. Replace the PAPER SIZE SENSOR. *(p.436)* 2. Print the image that has a problem, or execute test print. **Does the error occur?**	Replace the PWB ASSY 3TM/STM *(p.448)*/ *(p.452)*	Problem solved

FIP-O9

- ☐ Panel Message
  - ■ Paper Set Casette 3 tttt
- ☐ Possible parts that caused the error
  - ■ HARNESS ASSY 3TM
  - ■ PWB ASSY 3TM
  - ■ PAPER SIZE SENSOR
- ☐ TROUBLESHOOTING

Step	Action and Question	Yes	No
1	**Check of Paper Size** Check if the paper in the Tray3 correspond with the specified paper size by END GUIDE ASSY and FRONT SIDE GUIDE, or with the specified size by the driver of the computer. CAUTION ! **Securely match the END GUIDE ASSY and FRONT SIDE GUIDE in the following procedure.** **1. Match the inverted delta symbols of the END GUIDE ASSY and BOTTOM PLATE.** **2. Match the inverted delta symbols of the FRONT SIDE GUIDE and BOTTOM PLATE.** 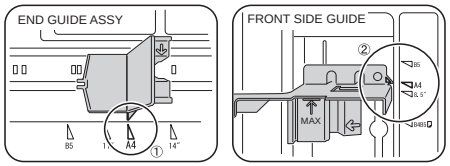 **Does the paper size setting correspond with the using paper?**	To Step 2	Change the paper or change the paper size setting

Step	Action and Question	Yes	No
2	**Check of HARNESS ASSY 3TM** 1. Disconnect the J820 of the PAPER SIZE SENSOR. 2. Disconnect the P/J548 of the MCU PWB. 3. Check if the following wiring have continuity. J820-1 ↔ J548-12 J820-2 ↔ J548-11 J820-3 ↔ J548-10 **Do all of the wiring have continuity?**	To Step 3	Replace the HARNESS ASSY 3TM
3	**Check of PAPER SIZE SENSOR** 1. Replace the PAPER SIZE SENSOR. *(p.436)* 2. Print the image that has a problem, or execute test print. **Does the error occur?**	Replace the PWB ASSY 3TM *(p.448)*	Problem solved

manuals4you.com

FIP-O10

- ☐ Panel Message
  - ■ Paper Set Casette 4 tttt
- ☐ Possible parts that caused the error
  - ■ HARNESS ASSY 3TM
  - ■ PWB ASSY 3TM
  - ■ PAPER SIZE SENSOR
- ☐ TROUBLESHOOTING

Step	Action and Question	Yes	No
1	**Check of Paper Size** Check if the paper in the Tray4 correspond with the specified paper size by END GUIDE ASSY and FRONT SIDE GUIDE, or with the specified size by the driver of the computer. CAUTION ! **Securely match the END GUIDE ASSY and FRONT SIDE GUIDE in the following procedure.** **1. Match the inverted delta symbols of the END GUIDE ASSY and BOTTOM PLATE.** **2. Match the inverted delta symbols of the FRONT SIDE GUIDE and BOTTOM PLATE.** 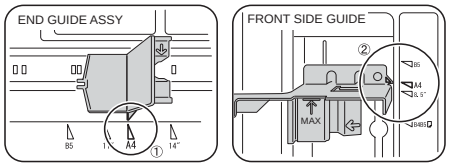 **Does the paper size setting correspond with the using paper?**	To Step 2	Change the paper or change the paper size setting

Step	Action and Question	Yes	No
2	**Check of HARNESS ASSY 3TM** 1. Disconnect the J824 of the PAPER SIZE SENSOR. 2. Disconnect the P/J548 of the MCU PWB. 3. Check if the following wiring have continuity. J824-1 ↔ J548-6 J824-2 ↔ J548-5 J824-3 ↔ J548-4 **Do all of the wiring have continuity?**	To Step 3	Replace the HARNESS ASSY 3TM
3	**Check of PAPER SIZE SENSOR** 1. Replace the PAPER SIZE SENSOR. *(p.436)* 2. Print the image that has a problem, or execute test print. **Does the error occur?**	Replace the PWB ASSY 3TM *(p.448)*	Problem solved

FIP-O11

- ☐ Panel Message
  - ■ Jam E, C2
- ☐ Possible parts that caused the error
  - ■ FEED ROLL
  - ■ HARNESS ASSY TA
  - ■ HARNESS ASSY 3TM
  - ■ TAKEAWAY SENSOR
  - ■ PWB ASSY 3TM/STM
- ☐ TROUBLESHOOTING

Step	Action and Question	Yes	No
1	**Operation check of the FEED ROLL** 1. Make sure that the FEED ROLL is securely installed. 2. Check the FEED ROLL for abrasion. **Does the FEED ROLL turn smoothly?**	To Step 2	Replace the FEED ROLL *(p.437)*
2	**Continuity check of HARNESS ASSY TA** 1. Disconnect the J830 of the TAKEAWAY SENSOR. 2. Disconnect the relay connector P/J840 of the HARNESS ASSY 3TM. 3. Check if the following wiring have continuity. J830-1 ↔ J840-3 J830-2 ↔ J840-2 J830-3 ↔ J840-1 **Do all of the wiring have continuity?**	To Step 3	Replace the HARNESS ASSY TA
3	**Continuity check of HARNESS ASSY 3TM** 1. Disconnect the relay connector P/J840 of the HARNESS ASSY 3TM. 2. Disconnect the J546 of the PWB ASSY 3TM. 3. Check if the following wiring have continuity. P840-1 ↔ J546-6 P840-2 ↔ J546-5 P840-3 ↔ J546-4 **Do all of the wiring have continuity?**	To Step 4	Replace the HARNESS ASSY 3TM
4	**Check of TAKEAWAY SENSOR** 1. Replace the TAKEAWAY SENSOR. *(p.445)* 2. Print the image that has a problem, or execute test print. **Does the error occur?**	Replace the PWB ASSY 3TM/STM *(p.448)*/ *(p.452)*	Problem solved

manuals4you.com

FIP-O12

- ☐ Panel Message
  - ■ Jam E, C3
- ☐ Possible parts that caused the error
  - ■ FEED ROLL
  - ■ HARNESS ASSY F/O
  - ■ HARNESS ASSY 3TM
  - ■ TRAY FEED OUT SENSOR
  - ■ PWB ASSY 3TM
- ☐ TROUBLESHOOTING

Step	Action and Question	Yes	No
1	**Operation check of the FEED ROLL** 1. Make sure that the FEED ROLL is securely installed. 2. Check the FEED ROLL for abrasion. **Does the FEED ROLL turn smoothly?**	To Step 2	Replace the FEED ROLL *(p.437)*
2	**Continuity check of HARNESS ASSY F/O** 1. Disconnect the J821 of the TRAY FEED OUT SENSOR. 2. Disconnect the relay connector P/J841 of the HARNESS ASSY 3TM. 3. Check if the following wiring have continuity. J821-1 ↔ J841-3 J821-2 ↔ J841-2 J821-3 ↔ J841-1 **Do all of the wiring have continuity?**	To Step 3	Replace the HARNESS ASSY F/O
3	**Continuity check of HARNESS ASSY 3TM** 1. Disconnect the relay connector P/J841 of the HARNESS ASSY 3TM. 2. Disconnect the J548 of the PWB ASSY 3TM. 3. Check if the following wiring have continuity. P841-1 ↔ J548-9 P841-2 ↔ J548-8 P841-3 ↔ J548-7 **Do all of the wiring have continuity?**	To Step 4	Replace the HARNESS ASSY 3TM
4	**Check of TRAY FEED OUT SENSOR** 1. Replace the TRAY FEED OUT SENSOR. *(p.441)* 2. Print the image that has a problem, or execute test print. **Does the error occur?**	Replace the PWB ASSY 3TM *(p.448)*	Problem solved

FIP-O13

- ☐ Panel Message
  - ■ Jam E, C4
- ☐ Possible parts that caused the error
  - ■ FEED ROLL
  - ■ HARNESS ASSY F/O
  - ■ HARNESS ASSY 3TM
  - ■ TRAY FEED OUT SENSOR
  - ■ PWB ASSY 3TM
- ☐ TROUBLESHOOTING

Step	Action and Question	Yes	No
1	**Operation check of the FEED ROLL** 1. Make sure that the FEED ROLL is securely installed. 2. Check the FEED ROLL for abrasion. **Does the FEED ROLL turn smoothly?**	To Step 2	Replace the FEED ROLL *(p.437)*
2	**Continuity check of HARNESS ASSY F/O** 1. Disconnect the J821 of the TRAY FEED OUT SENSOR. 2. Disconnect the relay connector P/J842 of the HARNESS ASSY 3TM. 3. Check if the following wiring have continuity. J821-1 ↔ J842-3 J821-2 ↔ J842-2 J821-3 ↔ J842-1 **Do all of the wiring have continuity?**	To Step 3	Replace the HARNESS ASSY F/O
3	**Continuity check of HARNESS ASSY 3TM** 1. Disconnect the relay connector P/J841 of the HARNESS ASSY 3TM. 2. Disconnect the J548 of the PWB ASSY 3TM. 3. Check if the following wiring have continuity. P842-1 ↔ J548-3 P842-2 ↔ J548-2 P842-3 ↔ J548-1 **Do all of the wiring have continuity?**	To Step 4	Replace the HARNESS ASSY 3TM
4	**Check of TRAY FEED OUT SENSOR** 1. Replace the TRAY FEED OUT SENSOR. *(p.441)* 2. Print the image that has a problem, or execute test print. **Does the error occur?**	Replace the PWB ASSY 3TM *(p.448)*	Problem solved

manuals4you.com

FIP-O14

- ☐ Panel Message
  - ■ Service Req E115
- ☐ Possible parts that caused the error
  - ■ HARNESS ASSY 3TM/STM
  - ■ HARNESS ASSY R-BTM
  - ■ PWB ASSY 3TM/STM
  - ■ MCU PWB
- ☐ TROUBLESHOOTING

Step	Action and Question	Yes	No
1	**Connection check of connectors** 1. Make sure that the Connector (J541) of the HARNESS ASSY 3TM/STM is securely connected to the Connector (P541) of the PWB ASSY 3TM/STM. 2. Make sure that the Connector (J251) of the HARNESS ASSY 3TM/STM is securely connected to the Connector (P251) of the HARNESS ASSY R-BTM. 3. Make sure that the Connector (J25) of the HARNESS ASSY R-BTM is securely connected to the Connector (P25) of the MCB PWB. **Does the error occur?**	To Step 2	Problem solved
2	**Continuity check of HARNESS ASSY 3TM/STM** 1. Disconnect the relay connector P/J251 of the HARNESS ASSY 3TM/STM. 2. Disconnect the J541 of the PWB ASSY 3TM/STM. 3. Check if the following wiring have continuity. J251-1 ↔ J541-10 J251-2 ↔ J541-9 J251-4 ↔ J541-7 J251-5 ↔ J541-6 J251-6 ↔ J541-5 **Do all of the wiring have continuity?**	To Step 3	Replace the HARNESS ASSY 3TM/STM
3	**Continuity check of HARNESS ASSY R-BTM** 1. Disconnect the relay connector P/J251 of the PWB ASSY 3TM/STM. 2. Disconnect the J25 of the MCU PWB. 3. Check if the following wiring have continuity. P251-1 ↔ J25-1 P251-2 ↔ J25-2 P251-4 ↔ J25-4 P251-5 ↔ J25-5 P251-6 ↔ J25-6 **Do all of the wiring have continuity?**	Replace the PWB ASSY 3TM/STM *(p.448)*/ *(p.452)*	Replace the HARNESS ASSY R-BTM

FIP-O15

- ☐ Panel Message
  - ■ Service Req E142
- ☐ Possible parts that caused the error
  - ■ TRAY FEED/LIFT MOTOR
  - ■ ACTUATOR SNR
  - ■ HARNESS ASSY SNR
  - ■ HARNESS ASSY 3TM
  - ■ TRAY LEVEL SENSOR
  - ■ PWB ASSY 3TM/STM
- ☐ TROUBLESHOOTING

Step	Action and Question	Yes	No
1	**TRAY FEED/LIFT MOTOR installation check** **Are TRAY FEED/LIFT MOTOR and GEAR 29 installed correctly?**	To Step 2	Remove and reinstall the failing part.
2	**Operation check of the TRAY FEED/ LIFT MOTOR** 1. Make sure that the TRAY FEED/ LIFT MOTOR operates properly. 2. Check the rotation of each gear. **Do TRAY FEED/LIFT MOTOR and each gear rotate properly?**	To Step 3	Replace the TRAY FEED/ LIFT MOTOR *(p.443)*
3	**Check of ACTUATOR SNR for damage** Check the ACUATOR SNR for bending or damage. **Is the ACTUATOR SNR installed correctly?**	To Step 4	Remove and reinstall the failing part.
4	**Continuity check of HARNESS ASSY SNR** 1. Disconnect the relay connector P670/J617 of the HARNESS ASSY SNR. 2. Disconnect the J205 of the TRAY FEED/LIFT MOTOR. 3. Check if the following wiring have continuity. J617-6 ↔ J205-1 J617-5 ↔ J205-2 J617-4 ↔ J205-3 J617-3 ↔ J205-4 J617-2 ↔ J205-5 J617-1 ↔ J205-6 **Do all of the wiring have continuity?**	To Step 5	Replace the HARNESS ASSY SNR
5	**Continuity check of HARNESS ASSY 3TM/STM** 1. Disconnect the J547 of the PWB ASSY 3TM/STM. 2. Disconnect the relay connector P670/J617 of the HARNESS ASSY 3TM/STM. 3. Check if the following wiring have continuity. J547-6 ↔ P670-7 J547-5 ↔ P670-8 J547-4 ↔ P670-9 J547-3 ↔ P670-10 J547-2 ↔ P670-11 J547-1 ↔ P670-12 **Do all of the wiring have continuity?**	To Step 6	Replace the HARNESS ASSY 3TM/ STM

manuals4you.com

Step	Action and Question	Yes	No
6	**Installation check of TRAY LEVEL SENSOR** Check the installation of the TRAY LEVEL SENSOR. **Is the TRAY LEVEL SENSOR installed correctly?**	To Step 7	Remove and reinstall the TRAY LEVEL SENSOR.
7	**Continuity check of HARNESS ASSY SNR** 1. Disconnect the relay connector P670/J617 of the HARNESS ASSY SNR. 2. Disconnect the J108 of the TRAY LEVEL SENSOR. 3. Check if the following wiring have continuity. J617-12 ↔ J108-1 J617-11 ↔ J108-2 J617-10 ↔ J108-3 **Do all of the wiring have continuity?**	To Step 8	Replace the HARNESS ASSY SNR
8	**Continuity check of HARNESS ASSY 3TM** 1. Disconnect the J547 of the PWB ASSY 3TM/STM. 2. Disconnect the relay connector P670/J617 of the HARNESS ASSY 3TM/STM. 3. Check if the following wiring have continuity. J547-12 ↔ P670-1 J547-11 ↔ P670-2 J547-10 ↔ P670-3 **Do all of the wiring have continuity?**	To Step 9	Replace the HARNESS ASSY 3TM/STM
9	**Check of TRAY LEVEL SENSOR** 1. Replace the TRAY LEVEL SENSOR. *(p.440)* 2. Turn the main power on. **Does the error occur?**	Replace the PWB ASSY 3TM/STM *(p.448)*/ *(p.452)*	Problem solved

FIP-O16

- ☐ Panel Message
  - ■ Service Req E143
- ☐ Possible parts that caused the error
  - ■ TRAY FEED/LIFT MOTOR
  - ■ ACTUATOR SNR
  - ■ HARNESS ASSY SNR
  - ■ HARNESS ASSY 3TM
  - ■ TRAY LEVEL SENSOR
  - ■ PWB ASSY 3TM
- ☐ TROUBLESHOOTING

Step	Action and Question	Yes	No
1	**TRAY FEED/LIFT MOTOR installation check** **Are TRAY FEED/LIFT MOTOR and GEAR 29 installed correctly?**	To Step 2	Remove and reinstall the failing part.
2	**Operation check of the TRAY FEED/ LIFT MOTOR** 1. Make sure that the TRAY FEED/ LIFT MOTOR operates properly. 2. Check the rotation of each gear. **Do TRAY FEED/LIFT MOTOR and each gear rotate properly?**	To Step 3	Replace the TRAY FEED/ LIFT MOTOR *(p.443)*
3	**Check of ACTUATOR SNR for damage** Check the ACUATOR SNR for bending or damage. **Is the ACTUATOR SNR installed correctly?**	To Step 4	Remove and reinstall the failing part.
4	**Continuity check of HARNESS ASSY SNR** 1. Disconnect the relay connector P672/J617 of the HARNESS ASSY SNR. 2. Disconnect the J205 of the TRAY FEED/LIFT MOTOR. 3. Check if the following wiring have continuity. J617-6 ↔ J205-1 J617-5 ↔ J205-2 J617-4 ↔ J205-3 J617-3 ↔ J205-4 J617-2 ↔ J205-5 J617-1 ↔ J205-6 **Do all of the wiring have continuity?**	To Step 5	Replace the HARNESS ASSY SNR
5	**Continuity check of HARNESS ASSY 3TM** 1. Disconnect the J549B of the PWB ASSY 3TM. 2. Disconnect the relay connector P672/J617 of the HARNESS ASSY 3TM. 3. Check if the following wiring have continuity. J549B-6 ↔ P672-7 J549B-5 ↔ P672-8 J549B-4 ↔ P672-9 J549B-3 ↔ P672-10 J549B-2 ↔ P672-11 J549B-1 ↔ P672-12 **Do all of the wiring have continuity?**	To Step 6	Replace the HARNESS ASSY 3TM

manuals4you.com

Step	Action and Question	Yes	No
6	**Installation check of TRAY LEVEL SENSOR** Check the installation of the TRAY LEVEL SENSOR. **Is the TRAY LEVEL SENSOR installed correctly?**	To Step 7	Remove and reinstall the TRAY LEVEL SENSOR.
7	**Continuity check of HARNESS ASSY SNR** 1. Disconnect the relay connector P672/J617 of the HARNESS ASSY SNR. 2. Disconnect the J108 of the TRAY LEVEL SENSOR. 3. Check if the following wiring have continuity. J617-12 ↔ J108-1 J617-11 ↔ J108-2 J617-10 ↔ J108-3 **Do all of the wiring have continuity?**	To Step 8	Replace the HARNESS ASSY SNR
8	**Continuity check of HARNESS ASSY 3TM** 1. Disconnect the J549B of the PWB ASSY 3TM. 2. Disconnect the relay connector P672/J617 of the HARNESS ASSY 3TM. 3. Check if the following wiring have continuity. J549B-12 ↔ P672-1 J549B-11 ↔ P672-2 J549B-10 ↔ P672-3 **Do all of the wiring have continuity?**	To Step 9	Replace the HARNESS ASSY 3TM
9	**Check of TRAY LEVEL SENSOR** 1. Replace the TRAY LEVEL SENSOR. *(p.440)* 2. Turn the main power on. **Does the error occur?**	Replace the PWB ASSY 3TM *(p.448)*	Problem solved

FIP-O17

- ☐ Panel Message
  - ■ Service Req E144
- ☐ Possible parts that caused the error
  - ■ TRAY FEED/LIFT MOTOR
  - ■ ACTUATOR SNR
  - ■ HARNESS ASSY SNR
  - ■ HARNESS ASSY 3TM
  - ■ TRAY LEVEL SENSOR
  - ■ PWB ASSY 3TM
- ☐ TROUBLESHOOTING

Step	Action and Question	Yes	No
1	**TRAY FEED/LIFT MOTOR installation check** **Are TRAY FEED/LIFT MOTOR and GEAR 29 installed correctly?**	To Step 2	Remove and reinstall the failing part.
2	**Operation check of the TRAY FEED/ LIFT MOTOR** 1. Make sure that the TRAY FEED/ LIFT MOTOR operates properly. 2. Check the rotation of each gear. **Do TRAY FEED/LIFT MOTOR and each gear rotate properly?**	To Step 3	Replace the TRAY FEED/ LIFT MOTOR *(p.443)*
3	**Check of ACTUATOR SNR for damage** Check the ACUATOR SNR for bending or damage. **Is the ACTUATOR SNR installed correctly?**	To Step 4	Remove and reinstall the failing part.
4	**Continuity check of HARNESS ASSY SNR** 1. Disconnect the relay connector P674/J617 of the HARNESS ASSY SNR. 2. Disconnect the J205 of the TRAY FEED/LIFT MOTOR. 3. Check if the following wiring have continuity. J617-6 ↔ J205-1 J617-5 ↔ J205-2 J617-4 ↔ J205-3 J617-3 ↔ J205-4 J617-2 ↔ J205-5 J617-1 ↔ J205-6 **Do all of the wiring have continuity?**	To Step 5	Replace the HARNESS ASSY SNR
5	**Continuity check of HARNESS ASSY 3TM** 1. Disconnect the J549A of the PWB ASSY 3TM. 2. Disconnect the relay connector P674/J617 of the HARNESS ASSY 3TM. 3. Check if the following wiring have continuity. J549A-6 ↔ P674-7 J549A-5 ↔ P674-8 J549A-4 ↔ P674-9 J549A-3 ↔ P674-10 J549A-2 ↔ P674-11 J549A-1 ↔ P674-12 **Do all of the wiring have continuity?**	To Step 6	Replace the HARNESS ASSY 3TM

manuals4you.com

Step	Action and Question	Yes	No
6	**Installation check of TRAY LEVEL SENSOR** Check the installation of the TRAY LEVEL SENSOR. **Is the TRAY LEVEL SENSOR installed correctly?**	To Step 7	Remove and reinstall the TRAY LEVEL SENSOR.
7	**Continuity check of HARNESS ASSY SNR** 1. Disconnect the relay connector P674/J617 of the HARNESS ASSY SNR. 2. Disconnect the J108 of the TRAY LEVEL SENSOR. 3. Check if the following wiring have continuity. J617-12 ↔ J108-1 J617-11 ↔ J108-2 J617-10 ↔ J108-3 **Do all of the wiring have continuity?**	To Step 8	Replace the HARNESS ASSY SNR
8	**Continuity check of HARNESS ASSY 3TM** 1. Disconnect the J549A of the PWB ASSY 3TM. 2. Disconnect the relay connector P674/J617 of the HARNESS ASSY 3TM. 3. Check if the following wiring have continuity. J549A-12 ↔ P674-1 J549A-11 ↔ P674-2 J549A-10 ↔ P674-3 **Do all of the wiring have continuity?**	To Step 9	Replace the HARNESS ASSY 3TM
9	**Check of TRAY LEVEL SENSOR** 1. Replace the TRAY LEVEL SENSOR. *(p.440)* 2. Turn the main power on. **Does the error occur?**	Replace the PWB ASSY 3TM *(p.448)*	Problem solved

FIP-O18

- ☐ Panel Message
  - ■ Check Paper Size
- ☐ Possible parts that caused the error
  - ■ HARNESS ASSY REGI
  - ■ HARNESS ASSY R-BTM
  - ■ SENSOR REGI
  - ■ CLUTCH REGI
  - ■ MCU PWB
- ☐ TROUBLESHOOTING

Step	Action and Question	Yes	No
1	**Check of Paper Size** Check if the paper in the Tray2 correspond with the specified paper size by END GUIDE ASSY and FRONT SIDE GUIDE, or with the specified size by the driver of the computer. CAUTION ! **Securely match the END GUIDE ASSY and FRONT SIDE GUIDE in the following procedure.** **1. Match the inverted delta symbols of the END GUIDE ASSY and BOTTOM PLATE.** **2. Match the inverted delta symbols of the FRONT SIDE GUIDE and BOTTOM PLATE.** 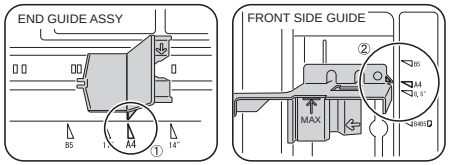 **Does the paper size setting correspond with the using paper?**	To Step 2	Change the paper or change the paper size setting
2	**Check of Paper Feed Roll for damage** Check the Paper Feed Roll for abrasion and damage. **Does the Paper Feed Roll rotate normally?**	To Step 3	Replace the failed part with a new one.
3	**Check of Paper Feed Gear for damage** Check the Paper Feed Gears for abrasion and damage. **Do the Paper Feed Gears rotate normally?**	To Step 4	Replace the failed part with a new one.
4	**Continuity check of HARNESS ASSY REGI** 1. Disconnect the relay connector P/J23A6 of the HARNESS ASSY REGI. 2. Disconnect the J23A8 of the SENSOR REGI. 3. Check if the following wiring have continuity. J23A6-4 ↔ J23A8-3 J23A6-5 ↔ J23A8-2 J23A6-6 ↔ J23A8-1 **Do all of the wiring have continuity?**	To Step 5	Replace the HARNESS ASSY REGI
5	**Continuity check of HARNESS ASSY R-BTM** 1. Disconnect the P/J23 of the MCU PWB. 2. Disconnect the relay connector P/J23A6 of the HARNESS ASSY R-BTM. 3. Check if the following wiring have continuity. P23A6-5 ↔ J23-A13 P23A6-4 ↔ J23-A14 P23A6-3 ↔ J23-A15 **Do all of the wiring have continuity?**	To Step 6	Replace the HARNESS ASSY R-BTM

manuals4you.com

Step	Action and Question	Yes	No
6	**Check of SENSOR REGI** 1. Replace the SENSOR REGI. *(p.340)* 2. Turn the main power on. **Does the error occur?**	To Step 7	Problem solved
7	**Continuity check of HARNESS ASSY REGI** 1. Disconnect the relay connector P/J23A6 of the HARNESS ASSY REGI. 2. Disconnect the relay connector P/J23A9 of the CLUTCH REGI. 3. Check if the following wiring have continuity. J23A6-7 ↔ P23A9-2 J23A6-8 ↔ P23A9-1 **Do all of the wiring have continuity?**	To Step 8	Replace the HARNESS ASSY REGI
8	**Continuity check of HARNESS ASSY R-BTM** 1. Disconnect the P/J23 of the MCU PWB. 2. Disconnect the relay connector P/J23A6 of the HARNESS ASSY R-BTM. 3. Check if the following wiring have continuity. P23A6-2 ↔ J23-A16 P23A6-1 ↔ J23-A17 **Do all of the wiring have continuity?**	To Step 9	Replace the HARNESS ASSY R-BTM
9	**Check of CLUTCH REGI** 1. Replace the CLUTCH REGI. *(p.338)* 2. Print the image that has a problem, or execute test print. **Does the error occur?**	Replace the MCU PWB *(p.382)*	Problem solved

FIP-O19

- ☐ Panel Message
  - ■ Check Paper Size
- ☐ Possible parts that caused the error
  - ■ HARNESS ASSY REGI
  - ■ HARNESS ASSY R-BTM
  - ■ SENSOR REGI
  - ■ CLUTCH REGI
  - ■ MCU PWB
- ☐ TROUBLESHOOTING

Step	Action and Question	Yes	No
1	**Check of Paper Size** Check if the paper in the Tray3 correspond with the specified paper size by END GUIDE ASSY and FRONT SIDE GUIDE, or with the specified size by the driver of the computer. CAUTION **Securely match the END GUIDE ASSY and FRONT SIDE GUIDE in the following procedure.** **1. Match the inverted delta symbols of the END GUIDE ASSY and BOTTOM PLATE.** **2. Match the inverted delta symbols of the FRONT SIDE GUIDE and BOTTOM PLATE.** 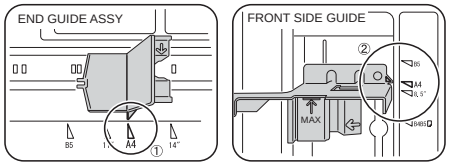 **Does the paper size setting correspond with the using paper?**	To Step 2	Change the paper or change the paper size setting
2	**Check of Paper Feed Roll for damage** Check the Paper Feed Roll for abrasion and damage. **Does the Paper Feed Roll rotate normally?**	To Step 3	Replace the failed part with a new one.
3	**Check of Paper Feed Gear for damage** Check the Paper Feed Gears for abrasion and damage. **Do the Paper Feed Gears rotate normally?**	To Step 4	Replace the failed part with a new one.
4	**Continuity check of HARNESS ASSY REGI** 1. Disconnect the relay connector P/J23A6 of the HARNESS ASSY REGI. 2. Disconnect the J23A8 of the SENSOR REGI. 3. Check if the following wiring have continuity. J23A6-4 ↔ J23A8-3 J23A6-5 ↔ J23A8-2 J23A6-6 ↔ J23A8-1 **Do all of the wiring have continuity?**	To Step 5	Replace the HARNESS ASSY REGI
5	**Continuity check of HARNESS ASSY R-BTM** 1. Disconnect the P/J23 of the MCU PWB. 2. Disconnect the relay connector P/J23A6 of the HARNESS ASSY R-BTM. 3. Check if the following wiring have continuity. P23A6-5 ↔ J23-A13 P23A6-4 ↔ J23-A14 P23A6-3 ↔ J23-A15 **Do all of the wiring have continuity?**	To Step 6	Replace the HARNESS ASSY R-BTM

manuals4you.com

Step	Action and Question	Yes	No
6	**Check of SENSOR REGI** 1. Replace the SENSOR REGI. *(p.338)* 2. Turn the main power on. **Does the error occur?**	To Step 7	Problem solved
7	**Continuity check of HARNESS ASSY REGI** 1. Disconnect the relay connector P/J23A6 of the HARNESS ASSY REGI. 2. Disconnect the relay connector P/J23A9 of the CLUTCH REGI. 3. Check if the following wiring have continuity. J23A6-7 ↔ P23A9-2 J23A6-8 ↔ P23A9-1 **Do all of the wiring have continuity?**	To Step 8	Replace the HARNESS ASSY REGI
8	**Continuity check of HARNESS ASSY R-BTM** 1. Disconnect the P/J23 of the MCU PWB. 2. Disconnect the relay connector P/J23A6 of the HARNESS ASSY R-BTM. 3. Check if the following wiring have continuity. P23A6-2 ↔ J23-A16 P23A6-1 ↔ J23-A17 **Do all of the wiring have continuity?**	To Step 9	Replace the HARNESS ASSY R-BTM
9	**Check of CLUTCH REGI** 1. Replace the CLUTCH REGI. *(p.338)* 2. Print the image that has a problem, or execute test print. **Does the error occur?**	Replace the MCU PWB *(p.382)*	Problem solved

manuals4you.com

FIP-O20

- ☐ Panel Message
  - ■ Check Paper Size
- ☐ Possible parts that caused the error
  - ■ HARNESS ASSY REGI
  - ■ HARNESS ASSY R-BTM
  - ■ SENSOR REGI
  - ■ CLUTCH REGI
  - ■ MCU PWB
- ☐ TROUBLESHOOTING

Step	Action and Question	Yes	No
1	**Check of Paper Size** Check if the paper in the Tray4 correspond with the specified paper size by END GUIDE ASSY and FRONT SIDE GUIDE, or with the specified size by the driver of the computer. CAUTION **Securely match the END GUIDE ASSY and FRONT SIDE GUIDE in the following procedure.** **1. Match the inverted delta symbols of the END GUIDE ASSY and BOTTOM PLATE.** **2. Match the inverted delta symbols of the FRONT SIDE GUIDE and BOTTOM PLATE.** 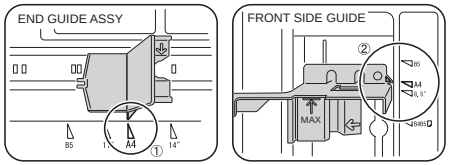 **Does the paper size setting correspond with the using paper?**	To Step 2	Change the paper or change the paper size setting
2	**Check of Paper Feed Roll for damage** Check the Paper Feed Roll for abrasion and damage. **Does the Paper Feed Roll rotate normally?**	To Step 3	Replace the failed part with a new one.
3	**Check of Paper Feed Gear for damage** Check the Paper Feed Gears for abrasion and damage. **Do the Paper Feed Gears rotate normally?**	To Step 4	Replace the failed part with a new one.
4	**Continuity check of HARNESS ASSY REGI** 1. Disconnect the relay connector P/J23A6 of the HARNESS ASSY REGI. 2. Disconnect the J23A8 of the SENSOR REGI. 3. Check if the following wiring have continuity. J23A6-4 ↔ J23A8-3 J23A6-5 ↔ J23A8-2 J23A6-6 ↔ J23A8-1 **Do all of the wiring have continuity?**	To Step 5	Replace the HARNESS ASSY REGI
5	**Continuity check of HARNESS ASSY R-BTM** 1. Disconnect the P/J23 of the MCU PWB. 2. Disconnect the relay connector P/J23A6 of the HARNESS ASSY R-BTM. 3. Check if the following wiring have continuity. P23A6-5 ↔ J23-A13 P23A6-4 ↔ J23-A14 P23A6-3 ↔ J23-A15 **Do all of the wiring have continuity?**	To Step 6	Replace the HARNESS ASSY R-BTM

manuals4you.com

Step	Action and Question	Yes	No
6	**Check of SENSOR REGI** 1. Replace the SENSOR REGI. *(p.338)* 2. Turn the main power on. **Does the error occur?**	To Step 7	Problem solved
7	**Continuity check of HARNESS ASSY REGI** 1. Disconnect the relay connector P/J23A6 of the HARNESS ASSY REGI. 2. Disconnect the relay connector P/J23A9 of the CLUTCH REGI. 3. Check if the following wiring have continuity. J23A6-7 ↔ P23A9-2 J23A6-8 ↔ P23A9-1 **Do all of the wiring have continuity?**	To Step 8	Replace the HARNESS ASSY REGI
8	**Continuity check of HARNESS ASSY R-BTM** 1. Disconnect the P/J23 of the MCU PWB. 2. Disconnect the relay connector P/J23A6 of the HARNESS ASSY R-BTM. 3. Check if the following wiring have continuity. P23A6-2 ↔ J23-A16 P23A6-1 ↔ J23-A17 **Do all of the wiring have continuity?**	To Step 9	Replace the HARNESS ASSY R-BTM
9	**Check of CLUTCH REGI** 1. Replace the CLUTCH REGI. *(p.338)* 2. Print the image that has a problem, or execute test print. **Does the error occur?**	Replace the MCU PWB *(p.382)*	Problem solved

FIP-O21

- ☐ Panel Message
  - ■ Check Transparency
- ☐ Possible parts that caused the error
  - ■ HARNESS ASSY REGI
  - ■ HARNESS ASSY R-BTM
  - ■ OHP SENSOR
  - ■ MCU PWB
- ☐ TROUBLESHOOTING

Step	Action and Question	Yes	No
1	**Check of Paper** Check the transparency in the Tray 2. **Do the transparency in the Tray 2 has no white margins?**	To Step 2	Replace the transparency with one that has no white margins.
2	**Continuity check of HARNESS ASSY REGI1.** 1. Remove the relay connector P/J23A6 of the HARNESS ASSY REGI. 2. Remove the J23A8 of the SENSOR REGI. 3. Check if the following wiring have continuity. J23A6-1 ↔ J23A7-3 J23A6-2 ↔ J23A7-2 J23A6-3 ↔ J23A7-1 **Do all of the wiring have continuity?**	To Step 3	Replace the HARNESS ASSY REGI
3	**Continuity check of HARNESS ASSY R-BTM1.** 1. Remove the P/J23 of the MCU PWB. 2. Remove the relay connector P/J23A6 of the HARNESS ASSY R-BTM. 3. Check if the following wiring have continuity. P23A6-8 ↔ J23-A10 P23A6-7 ↔ J23-A11 P23A6-6 ↔ J23-A12 **Do all of the wiring have continuity?**	To Step 4	Replace the HARNESS ASSY R-BTM.
4	**Check of OHP SENSOR** 1. Replace the OHP SENSOR. *(p.340)* 2. Print the job that failed to print. Or do a test print. **Does the error occur?**	Replace the MCU PWB *(p.382)*	Problem solved

manuals4you.com

FIP-O22

- ☐ Panel Message
  - ■ Check Transparency
- ☐ Possible parts that caused the error
  - ■ HARNESS ASSY REGI
  - ■ HARNESS ASSY R-BTM
  - ■ OHP SENSOR
  - ■ MCU PWB
- ☐ TROUBLESHOOTING

Step	Action and Question	Yes	No
1	**Check of Paper** Check the transparency in the Tray 3. **Do the transparency in the Tray 3 has no white margins?**	To Step 2	Replace the transparency with one that has no white margins.
2	**Continuity check of HARNESS ASSY REGI1.** 1. Remove the relay connector P/J23A6 of the HARNESS ASSY REGI. 2. Remove the J23A8 of the SENSOR REGI. 3. Check if the following wiring have continuity. J23A6-1 ↔ J23A7-3 J23A6-2 ↔ J23A7-2 J23A6-3 ↔ J23A7-1 **Do all of the wiring have continuity?**	To Step 3	Replace the HARNESS ASSY REGI
3	**Continuity check of HARNESS ASSY R-BTM1.** 1. Remove the P/J23 of the MCU PWB. 2. Remove the relay connector P/J23A6 of the HARNESS ASSY R-BTM. 3. Check if the following wiring have continuity. P23A6-8 ↔ J23-A10 P23A6-7 ↔ J23-A11 P23A6-6 ↔ J23-A12 **Do all of the wiring have continuity?**	To Step 4	Replace the HARNESS ASSY R-BTM.
4	**Check of OHP SENSOR** 1. Replace the OHP SENSOR. *(p.340)* 2. Print the job that failed to print. Or do a test print. **Does the error occur?**	Replace the MCU PWB *(p.382)*	Problem solved

FIP-O23

- ☐ Panel Message
  - ■ Check Transparency
- ☐ Possible parts that caused the error
  - ■ HARNESS ASSY REGI
  - ■ HARNESS ASSY R-BTM
  - ■ OHP SENSOR
  - ■ MCU PWB
- ☐ TROUBLESHOOTING

Step	Action and Question	Yes	No
1	**Check of Paper** Check the transparency in the Tray 4. **Do the transparency in the Tray 4 has no white margins?**	To Step 2	Replace the transparency with one that has no white margins.
2	**Continuity check of HARNESS ASSY REGI1.** 1. Remove the relay connector P/J23A6 of the HARNESS ASSY REGI. 2. Remove the J23A8 of the SENSOR REGI. 3. Check if the following wiring have continuity. J23A6-1 ↔ J23A7-3 J23A6-2 ↔ J23A7-2 J23A6-3 ↔ J23A7-1 **Do all of the wiring have continuity?**	To Step 3	Replace the HARNESS ASSY REGI
3	**Continuity check of HARNESS ASSY R-BTM1.** 1. Remove the P/J23 of the MCU PWB. 2. Remove the relay connector P/J23A6 of the HARNESS ASSY R-BTM. 3. Check if the following wiring have continuity. P23A6-8 ↔ J23-A10 P23A6-7 ↔ J23-A11 P23A6-6 ↔ J23-A12 **Do all of the wiring have continuity?**	To Step 4	Replace the HARNESS ASSY R-BTM.
4	**Check of OHP SENSOR** 1. Replace the OHP SENSOR. *(p.340)* 2. Print the job that failed to print. Or do a test print. **Does the error occur?**	Replace the MCU PWB *(p.382)*	Problem solved

manuals4you.com

FIP-O24

- ☐ Panel Message
  - ■ Jam E
- ☐ Possible parts that caused the error
  - ■ TAKEAWAY SENSOR
  - ■ HARNESS ASSY TA
  - ■ HARNESS ASSY 3TM
  - ■ PWB ASSY 3TM
- ☐ TROUBLESHOOTING

Step	Action and Question	Yes	No
1	**Check of the paper feed path** Check the paper feed path. **Are burrs and foreign matter absent in the paper feed path?**	To Step 2	Remove foreign matter.
2	**Check of Paper Feed Roll for damage** Check the Paper Feed Roll for abrasion and damage. **Does the Paper Feed Roll rotate normally?**	To Step 3	Replace the failed part with a new one.
3	**Check of TAKEAWAY SENSOR Actuator for damage** Check the ACUATOR SNR for bending or damage. **Is the Actuator of the TAKEAWAY SENSOR installed correctly?**	To Step 4	Replace the ACTUATOR SNR *(p.439)*
4	**Continuity check of HARNESS ASSY TA** 1. Disconnect the J830 of the TAKEAWAY SENSOR. 2. Disconnect the relay connector P/J840 of the HARNESS ASSY 3TM. 3. Check if the following wiring have continuity. J830-1 ↔ J840-3 J830-2 ↔ J840-2 J830-3 ↔ J840-1 **Do all of the wiring have continuity?**	To Step 5	Replace the HARNESS ASSY TA
5	**Continuity check of HARNESS ASSY 3TM** 1. Disconnect the relay connector P/J840 of the HARNESS ASSY 3TM. 2. Disconnect the J546 of the PWB ASSY 3TM. 3. Check if the following wiring have continuity. P840-1 ↔ J546-6 P840-2 ↔ J546-5 P840-3 ↔ J546-4 **Do all of the wiring have continuity?**	To Step 6	Replace the HARNESS ASSY 3TM
6	**Check of TAKEAWAY SENSOR** 1. Replace the TAKEAWAY SENSOR. *(p.445)* 2. Print the image that has a problem, or execute test print. **Does the error occur?**	Replace the PWB ASSY 3TM *(p.448)*	Problem solved

FIP-O25

- ☐ Panel Message
  - ■ Jam E
- ☐ Possible parts that caused the error
  - ■ FEED ROLL
  - ■ HARNESS ASSY REGI
  - ■ HARNESS ASSY R-BTM
  - ■ SENSOR REGI
  - ■ MCU PWB
- ☐ TROUBLESHOOTING

Step	Action and Question	Yes	No
1	**Operation check of the FEED ROLL** 1. Make sure that the FEED ROLL is securely installed. 2. Check the FEED ROLL for abrasion. **Does the FEED ROLL turn smoothly?**	To Step 2	Replace the FEED ROLL *(p.437)*
2	**Check of the paper feed path** Check the paper feed paths of Tray 2 to Tray 4. **Are burrs and foreign matter absent in the paper feed path?**	To Step 3	Remove foreign matter.
3	**Check of Paper Feed Roll for damage** Check the Paper Feed Rolls of Tray 2 to Tray 4 for abrasion and damage. **Does the Paper Feed Roll rotate normally?**	To Step 4	Replace the failed part with a new one.
4	**Continuity check of HARNESS ASSY REGI** 1. Disconnect the relay connector P/J23A6 of the HARNESS ASSY REGI. 2. Disconnect the J23A8 of the SENSOR REGI. 3. Check if the following wiring have continuity. J23A6-4 ↔ J23A8-3 J23A6-5 ↔ J23A8-2 J23A6-6 ↔ J23A8-1 **Do all of the wiring have continuity?**	To Step 5	Replace the HARNESS ASSY REGI
5	**Continuity check of HARNESS ASSY R-BTM** 1. Disconnect the P/J23 of the MCU PWB. 2. Disconnect the relay connector P/J23A6 of the HARNESS ASSY R-BTM. 3. Check if the following wiring have continuity. P23A6-5 ↔ J23-A13 P23A6-4 ↔ J23-A14 P23A6-3 ↔ J23-A15 **Do all of the wiring have continuity?**	To Step 6	Replace the HARNESS ASSY R-BTM
6	**Check of SENSOR REGI** 1. Replace the SENSOR REGI.*(p.340)* 2. Print the image that has a problem, or execute test print. **Does the error occur?**	Replace the MCU PWB *(p.382)*	Problem solved

manuals4you.com

Option Duplex

FIP-O26

- ☐ Panel Message
  - ■ Open D
- ☐ Possible parts that caused the error
  - ■ DUPLEX COVER OPEN SWITCH
  - ■ HARNESS ASSY DUP
  - ■ HARNESS ASSY MAIN
  - ■ HARNESS ASSY R-BTM
  - ■ DUPLEX PWB
  - ■ MCU PWB
- ☐ TROUBLESHOOTING

Step	Action and Question	Yes	No
1	**Check of DUPLEX COVER OPEN SWITCH** 1. Disconnect the J3621 of the Duplex Cover Open Switch. 2. Check continuity between J3621-1 and J3621-2. **Do all of the wiring have continuity?**	To Step 2	Replace the DUPLEX COVER OPEN SWITCH *(p.424)*
2	**Check of HARNESS ASSY DUP** 1. Disconnect the P/J362 of the DUPLEX PWB. 2. Disconnect the J3621 of the DUPLEX COVER OPEN SWITCH. 3. Check if the following wiring have continuity. J362-1 ↔ J3621-2 J362-2 ↔ J3621-1 **Do all of the wiring have continuity?**	To Step 3	Replace the HARNESS ASSY DUP
3	**Check of HARNESS ASSY MAIN** 1. Disconnect the P/J365 of the DUPLEX PWB. 2. Disconnect the relay connector P/J261 of the HARNESS ASSY MAIN. 3. Check if the following wiring have continuity. J365-10 ↔ J261-B2 J365-9 ↔ J261-B3 **Do all of the wiring have continuity?**	To Step 4	Replace the HARNESS ASSY MAIN
4	**Check of HARNESS ASSY R-BTM** 1. Disconnect the J26 of the MCU PWB. 2. Disconnect the relay connector P/J261 of the HARNESS ASSY MAIN. 3. Check if the following wiring have continuity. J26-13 ↔ P261-B10 J26-14 ↔ P261-B9 **Do all of the wiring have continuity?**	To Step 5	Replace the HARNESS ASSY R-BTM
5	**Check of DUPLEX PWB** 1. Replace the DUPLEX PWB. *(p.419)* 2. Turn the main power on. **Does the error occur?**	Replace the MCU PWB *(p.382)*	Problem solved

FIP-O27

- ☐ Panel Message
  - ■ Jam B, D
- ☐ Possible parts that caused the error
  - ■ DUPLEX ASSY
  - ■ HARNESS ASSY REGI
  - ■ HARNESS ASSY R-BTM
  - ■ SENSOR REGI
  - ■ MCU PWB
- ☐ TROUBLESHOOTING

Step	Action and Question	Yes	No
1	**Installation check of DUPLEX ASSY** 1. Check the installation of the DUPLEX ASSY. 2. Perform Test Print by Duplex printing. **Does the error occur?**	To Step 2	Problem solved
2	**Check of the paper feed path** Check the paper feed path of the DUPLEX ASSY. **Are burrs and foreign matter absent in the paper feed path?**	To Step 3	Remove foreign matter.
3	**Check of Paper Feed Roll for damage** Check the Paper Feed Roll of the DUPLEX ASSY for abrasion and damage. **Does the Paper Feed Roll rotate normally?**	To Step 4	Replace the failed part with a new one.
4	**Continuity check of HARNESS ASSY REGI** 1. Disconnect the relay connector P/J23A6 of the HARNESS ASSY REGI. 2. Disconnect the J23A8 of the SENSOR REGI. 3. Check if the following wiring have continuity. J23A6-4 ↔ J23A8-3 J23A6-5 ↔ J23A8-2 J23A6-6 ↔ J23A8-1 **Do all of the wiring have continuity?**	To Step 5	Replace the HARNESS ASSY REGI
5	**Continuity check of HARNESS ASSY R-BTM** 1. Disconnect the P/J23 of the MCU PWB. 2. Disconnect the relay connector P/J23A6 of the HARNESS ASSY R-BTM. 3. Check if the following wiring have continuity. P23A6-5 ↔ J23-A13 P23A6-4 ↔ J23-A14 P23A6-3 ↔ J23-A15 **Do all of the wiring have continuity?**	To Step 6	Replace the HARNESS ASSY R-BTM
6	**Check of SENSOR REGI** 1. Replace the SENSOR REGI. *(p.340)* 2. Print the image that has a problem, or execute test print. **Does the error occur?**	Replace the MCU PWB *(p.382)*	Problem solved

manuals4you.com

FIP-O28

- ☐ Panel Message
  - ■ Jam B, D
- ☐ Possible parts that caused the error
  - ■ DUPLEX ASSY
  - ■ GATE DUPLEX
  - ■ GUIDE DUP IN
  - ■ DUPLEX ROLL
  - ■ HARNESS ASSY DUP
  - ■ DUPLEX PWB
  - ■ DUPLEX SENSOR
  - ■ DUPLEX CLUTCH
  - ■ DUPLEX MOTOR
  - ■ EXIT MOTOR
  - ■ MCU PWB
  - ■ HARNESS ASSY MAIN
  - ■ HARNESS ASSY R-BTM
- ☐ TROUBLESHOOTING

Step	Action and Question	Yes	No
1	**Check of the paper feed path** Check the paper feed path of the DUPLEX ASSY. **Are burrs and foreign matter absent in the paper feed path?**	To Step 2	Remove foreign matter.
2	**Check of Paper Feed Roll for damage** Check the Paper Feed Roll of the DUPLEX ASSY for abrasion and damage. **Does the Paper Feed Roll rotate normally?**	To Step 3	Replace the failed part with a new one.
3	**Check of Paper Feed Roll Drive Gear** 1. Is the Paper Feed Roll Drive Gear of the DUPLEX ASSY engaged? 2. Check the Paper Feed Roll Drive Gear of the DUPLEX ASSY for abrasion and damage. **Does the Paper Feed Roll rotate normally?**	To Step 4	Replace the failed part with a new one.
4	**Check of GATE DUPLEX for damage** Check the GATE DUPLEX for damage. **Is paper fed properly?**	To Step 5	Replace the GATE DUPLEX *(p.423)*
5	**Check of GUIDE DUP IN for damage** Check the GATE DUP IN for damage. **Is paper fed properly?**	To Step 6	Replace the GUIDE DUP IN *(p.418)*
6	**Check of DUPLEX ROLL for damage** Check the DUPLEX ROLL for abrasion and damage. **Does the DUPLEX ROLL operate normally?**	To Step 7	Replace the DUPLEX ROLL *(p.421)*
7	**Continuity check of HARNESS ASSY DUP** 1. Disconnect the P/J362 of the DUPLEX PWB. 2. Disconnect the J3622 of the DUPLEX SENSOR. 3. Check if the following wiring have continuity. J362-3 ↔ J3622-3 J362-4 ↔ J3622-2 J362-5 ↔ J3622-1 **Do all of the wiring have continuity?**	To Step 8	Replace the HARNESS ASSY DUP
8	**Power supply to the DUPLEX SENSOR** 1. Make sure that the DUPLEX SENSOR is correctly connected. 2. Check the voltage between J362-3 and J362-1. **Is the voltage 3.3 VDC between J362-3 and J362-1?**	To Step 9	Replace the DUPLEX SENSOR *(p.424)*

Step	Action and Question	Yes	No
9	**Power supply to the DUPLEX CLUTCH** 1. Make sure that the DUPLEX CLUTCH is correctly connected. 2. Check the voltage between J364-2 and J364-1. **Is the voltage 24 VDC between J364-2 and J364-1?**	To Step 10	Replace the DUPLEX CLUTCH *(p.428)*
10	**Operation check of the DUPLEX MOTOR** 1. Check the installation of the DUPLEX MOTOR. 2. Make sure that the DUPLEX MOTOR operates properly. 3. Print the image that has a problem, or execute test print. **Does the DUPLEX MOTOR operate normally?**	To Step 11	Replace the DUPLEX MOTOR *(p.428)*
11	**Operation check of the EXIT MOTOR** 1. Check the installation of the EXIT MOTOR. 2. Make sure that the EXIT MOTOR operates properly. 3. Print the image that has a problem, or execute test print. **Does the EXIT MOTOR operate normally?**	Replace the MCU PWB *(p.382)*	Replace the EXIT MOTOR *(p.428)*

manuals4you.com

Controller

CHECK POINT

Since a controller-related service call error may occur due to the print data structure sent by the host/application, make operation check while simultaneously changing the operating environment, print data, etc.

FIP-C1

☐ Panel Message

- Service Req C0017
- Service Req C0088
- Service Req C0089
- Service Req C0091
- Service Req C0300
- Service Req C0301
- Service Req C0302
- Service Req C0303
- Service Req C0304
- Service Req C0305
- Service Req C0306
- Service Req C0307
- Service Req C0308
- Service Req C0309
- Service Req C0800
- Service Req C0998
- Service Req C1400
- Service Req C1500
- Service Req C1550
- Service Req C1600
- Service Req C1800
- Service Req C1999

☐ Possible parts that caused the error

- BOARD ASSY, MAIN

☐ TROUBLESHOOTING

Step	Action and Question	Yes	No
1	**External noise** 1. Check the surrounding of the printer for electrical equipment. 2. Disconnect all cables connected to the printer, except the AC cable, and make operation check. **Does the error occur?**	Replace the BOARD ASSY, MAIN *(p.375)*	Problem solved

FIP-C2

☐ Panel Message

- Service Req C0999
- Service Req C1002
- Service Req C1010
- Service Req C1100
- Service Req C1101
- Service Req C1120
- Service Req C1121
- Service Req C1122
- Service Req C1123

☐ Possible parts that caused the error

- BOARD ASSY, MAIN
- Standard ROM-DIMM

☐ TROUBLESHOOTING

Step	Action and Question	Yes	No
1	**Check of Standard ROM-DIMM** 1. Check whether the installed ROM-DIMM is the specified one and is securely connected. (Remove it once and reinstall it again.) **Does the error occur?**	To Step 2	Problem solved
2	**Replace the Standard ROM-DIMM** 1. Replace the Standard ROM-DIMM. **Does the error occur?**	To Step 3	Problem solved
3	**External noise** 1. Check the surrounding of the printer for electrical equipment. 2. Disconnect all cables connected to the printer, except the AC cable, and make operation check. **Does the error occur?**	Replace the BOARD ASSY, MAIN *(p.375)*	Problem solved

FIP-C3

- Panel Message
  - Service Req C1180
  - Service Req C1181
  - Service Req C1185
- Possible parts that caused the error
  - BOARD ASSY, MAIN
  - Option ROM-DIMM
- TROUBLESHOOTING

Step	Action and Question	Yes	No
1	**Check the Option ROM-DIMM** Check whether the installed ROM-DIMM is the specified one and is securely connected. (Remove it once and reinstall it again.) **Does the error occur?**	To Step 2	Problem solved
2	**Replace the Option ROM-DIMM** 1. Replace the Standard ROM-DIMM. **Does the error occur?**	To Step 3	Problem solved
3	**External noise** 1. Check the surrounding of the printer for electrical equipment. 2. Disconnect all cables connected to the printer, except the AC cable, and make operation check. **Does the error occur?**	Replace the BOARD ASSY, MAIN *(p.375)*	Problem solved

FIP-C4

- Panel Message
  - Service Req C1020
  - Service Req C1021
- Possible parts that caused the error
  - BOARD ASSY, MAIN
  - RAM-DIMM
- TROUBLESHOOTING

Step	Action and Question	Yes	No
1	**Check of RAM-DIMM** Check whether the installed RAM-DIMM is the specified one and is securely connected. (Remove it once and reinstall it again.) **Does the error occur?**	To Step 2	Problem solved
2	**Replace the RAM-DIMM** 1. Replace the Standard RAM-DIMM. **Does the error occur?**	To Step 3	Problem solved
3	**External noise** 1. Check the surrounding of the printer for electrical equipment. 2. Disconnect all cables connected to the printer, except the AC cable, and make operation check. **Does the error occur?**	Replace the BOARD ASSY, MAIN *(p.375)*	Problem solved

CHECK POINT

As the RAM-DIMM, use the EPSON-original 200-pin SODIMM.

manuals4you.com

FIP-C5

- Panel Message
  - Service Req C1200
  - Service Req C1210
- Possible parts that caused the error
  - BOARD ASSY, MAIN
- TROUBLESHOOTING

Step	Action and Question	Yes	No
1	**Check of EEPROM** Initialize the EEPROM. Refer to EEPROM initialization *(p69)* **Does the error occur?**	To Step 2	Problem solved
2	**External noise** 1. Check the surrounding of the printer for electrical equipment. 2. Disconnect all cables connected to the printer, except the AC cable, and make operation check. **Does the error occur?**	Replace the BOARD ASSY, MAIN *(p.375)*	Problem solved

FIP-C6

- Panel Message
  - Service Req C2000
- Possible parts that caused the error
  - BOARD ASSY, MAIN
- TROUBLESHOOTING

Step	Action and Question	Yes	No
1	**Check of host PC** Restart the host PC. **Does the error occur?**	To Step 2	Problem solved
2	**Check of Printer Driver** Reinstall the Printer Driver. **Does the error occur?**	To Step 3	Problem solved
3	**External noise** 1. Check the surrounding of the printer for electrical equipment. 2. Disconnect all cables connected to the printer, except the AC cable, and make operation check. **Does the error occur?**	Replace the BOARD ASSY, MAIN *(p.375)*	Problem solved

3.4 Printer Operation Trouble

The operation trouble FIP describes the following problems.

- FIP-F1 power is not switched on

FIP-F1

☐ Possible parts that caused the error

- MAIN POWER SWITCH&INLET
- BOARD ASSY, MAIN
- LVPS

☐ TROUBLESHOOTING

Step	Action and Question	Yes	No
1	**Power Cord** Check continuity of the Power Cord. **Does the Power Cord have normal continuity?**	To Step 2	Replace the Power Cord
2	**AC power source** Check the voltage of the AC power source. **Is the voltage of the AC power source nearly the rated AC voltage ± 10%.**	To Step 3	Request the user to improve the power supply.
3	**Check of MAIN POWER SWITCH&INLET** Is the LINK securely attached to the MAIN POWER SWITCH & INLET?	To Step 4	Correct.
4	**Check of MAIN POWER SWITCH&INLET** Replace the MAIN POWER SWITCH&INLET. **Is power switched on?**	Problem solved	To Step 5
5	**Check of LVPS** Replace the LVPS. *(p.373)* **Is power switched on?**	Problem solved	Replace the BOARD ASSY, MAIN *(p.375)*

manuals4you.com

3.5 Image Quality Trouble

3.5.1 Image Quality Troubleshooting Entry Chart

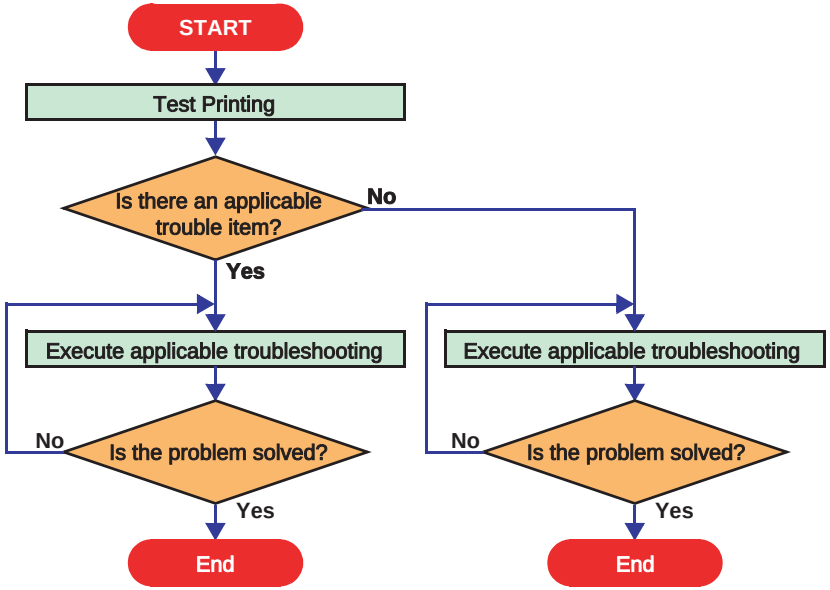

Figure 3-4. Image Quality Troubleshooting Entry Chart

3.5.2 Image Quality FIP

CAUTION

This FIP assumes that the printer controller is normal. However, executing test print with the engine alone allows easy judgment of whether the problem, except the phenomenon that cannot be confirmed by test print, is a printer controller side fault or an engine side fault.

- **Test print executed with the engine alone is normal → Printer controller side fault**
- **Test print executed with the engine alone is also abnormal → Engine side fault**

If there may be something wrong with the printer controller, replace the printer controller and interface cable with properly functioning ones and see if that works.
If the problem continues to occur, check the host side and perform troubleshooting efficiently using the following image Quality FIPs according to a description of the problem.

To perform troubleshootings for picture quality problems effectively, print images on A4 or A3 sized paper and determine the exact cause of the trouble referring to the “Image Quality FIP” on the next page.

If the failure cannot be restored to normal by the image quality FIP, check using the image quality FIP again, then check by replacing the **“Possible parts that caused the error”** in the image quality FIP in due order, and also perform troubleshooting using “7.2 Wiring Diagrams and Signal Information” *(p513)*, etc.

manuals4you.com

The image quality FIP describes the following typical image quality problems.

- FIP-P1 Stain (Afterimage/fogging)
- FIP-P2 Light image
- FIP-P3 White paper
- FIP-P4 Partial white paper/low density
- FIP-P5 Halftone oblique streaks
- FIP-P6 BCO (Beads carryover)
- FIP-P7 Grit
- FIP-P8 White streaks
- FIP-P9 25mm-pitch oblique steaks
- FIP-P10 25mm-pitch density unevenness
- FIP-P11 Registration misalignment (Sub scanning direction)
- FIP-P12 Registration misalignment (Main scanning direction)
- FIP-P13 Primary transfer ghost (yellow remaining in red)
- FIP-P14 Secondary color fringes (Toner fly-off around images)
- FIP-P15 Wash Out (Deteriorated grains in image)
- FIP-P16 Halftone 189mm-pitch horizontal streaks
- FIP-P17 Halftone 189mm/236mm-pitch horizontal streaks
- FIP-P18 Halftone trailing edge 10 to 14mm horizontal streak
- FIP-P19 Scales
- FIP-P20 Trailing edge 7mm image distortion
- FIP-P21 Density unevenness (50 to 52mm pitch)
- FIP-P22 Secondary transfer trouble (without color tones) and ghosts
- FIP-P23 Tertiary transfer trouble (without color tones) and ghosts
- FIP-P24 Halftone 189/205mm-pitch horizontal streaks
- FIP-P25 Round seals
- FIP-P26 9mm-pitch process direction white streaks
- FIP-P27 White streaks in halftone intersecting area
- FIP-P28 Secondary color density unevenness
- FIP-P29 Wrinkles (When paper passes through Fuser)
- FIP-P30 Wrinkles (Paper skew during Simplex feeding)
- FIP-P31 Wrinkles (Paper skew during Duplex feeding)
- FIP-P32 Wrinkles (Paper leading edge running against Exit Transport)
- FIP-P33 Halftone process direction grids
- FIP-P34 Fingerprint marks
- FIP-P35 Dirty spots/colored spots (31mm pitch)
- FIP-P36 Ghosts (94mm pitch)
- FIP-P37 Dirty streaks in process direction (random)
- FIP-P38 Magenta light/Magenta toner fly-off
- FIP-P39 Overall Cyan fogging
- FIP-P40 Density unevenness/Faint color (31mm pitch)
- FIP-P41 Cyan ghost (189mm pitch)

3.5.3 Periodic Image Trouble Occurrence Pitches

If such a problem as horizontal streaks or spots occurs at fixed intervals, it may be caused by the specific roll. In such a case, the problem may be solved easily by measuring the trouble intervals on a test print and checking the relationships with the following pitches.

CHECK POINT

The image trouble interval does not always match the circumference of the roll.

IMAGE TROUBLE CAUSE JUDGMENT LISTS

Table 3-4. Trouble Occurrence Pitches (Sub Scanning)

Sub Scanning Pitch	Part	Unit to Be Replaced	Related FIP
25	Magnet Roll	DEVE UNIT	FIP-10
31	RTC	Photoconductor unit	FIP-35
50 ~ 52	BTR	BTR UNIT ASSY	FIP-21
37	Detoner Roll	IDT UNIT	---
52	Drum Refresher	Photoconductor unit	---
84	Heat Roll	Fuser unit	---
93 ~ 94	Drum OPC or IDT 1	Photoconductor unit or IDT UNIT	FIP-13 FIP-36
110	IDT Cleaning Brush	IDT UNIT	---
189 ~ 190	IDT 1 or Drum OPC	IDT UNIT or Photoconductor unit	FIP-17 FIP-22 FIP-24
189 ~ 190	IDT 2 or BTR	IDT UNIT or Photoconductor unit	FIP-16 FIP-23
205	IDT 1	IDT UNIT	FIP-24
236	IDT 2	IDT UNIT	FIP-17

Table 3-5. Trouble Occurrence Pitches (Main Scanning)

Main Scanning Pitch	Part	Unit to Be Replaced	Related FIP
9	DTS cover	BTR UNIT ASSY	FIP-26

OUTSIDE DIAMETER AND INTERVAL OF EACH ROLL

Table 3-6. Outside Diameter and Interval of Each Roll

Roller	Circumference	Interval
Magnet Roll	16mm	50mm
RTC (Photoconductor unit)	10mm	31mm
BTR (BTR UNIT ASSY)	16.4mm	50 ~ 52mm
Detoner Roll (IDT UNIT)	12mm	37mm
Drum Refresher (Photoconductor unit)	11mm	35mm
Drum OPC (Photoconductor unit)	30.1mm	93 ~ 94mm
IDT Cleaning Brush (IDT UNIT)	12mm	37mm
IDT 1 (IDT UNIT)	60.3mm	189 ~ 190mm
IDT 2 (IDT UNIT)	60.1mm	189 ~ 190mm

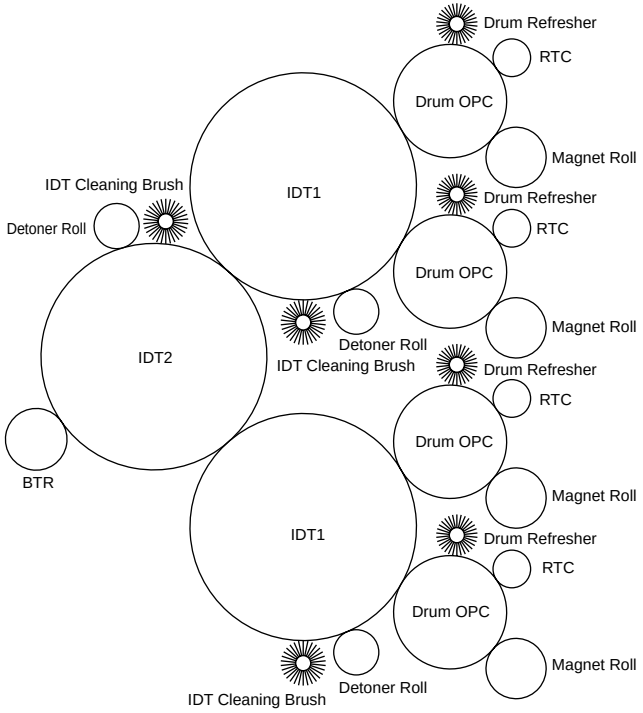

Figure 3-5. Roll Layout Diagram

manuals4you.com

3.5.4 Test Print (IOT Test Pattern Print)

3.5.4.1 What is IOT Test Pattern Print?

For engine operation checking, an MCU PWB built-in sample (YMCK grid/ slope pattern) that does not pass through the controller is output. When no problem occurs in this print pattern, a possible cause is a controller side (Board Assy, Main) fault.

3.5.4.2 Printing Procedure of IOT Test Pattern Print

1. Remove the COVER ASSY RIGHT. *(p298)*
2. Place A4LEF paper on the Tray 1 and switch power on.
   The cleaning cycle (process control) starts.

WARNING

During the cleaning cycle, never touch the energized areas and drive areas.

CAUTION

In the following step, never short the pattern with the other cores, on-board printed surfaces, etc.

3. After the cleaning cycle is complete, short the unmounted pattern R699 (on CN600) on the controller board with the tip of a mini-screwdriver (flat-blade).

CHECK POINT

Test print can also be executed by removing the controller board and shorting the unmounted pattern (TPRINT/P14 bottom left) for IOT Test Pattern Print on the MCU PWB. (Refer to "Figure 3-7. MCU PWB Short Circuit Location".)

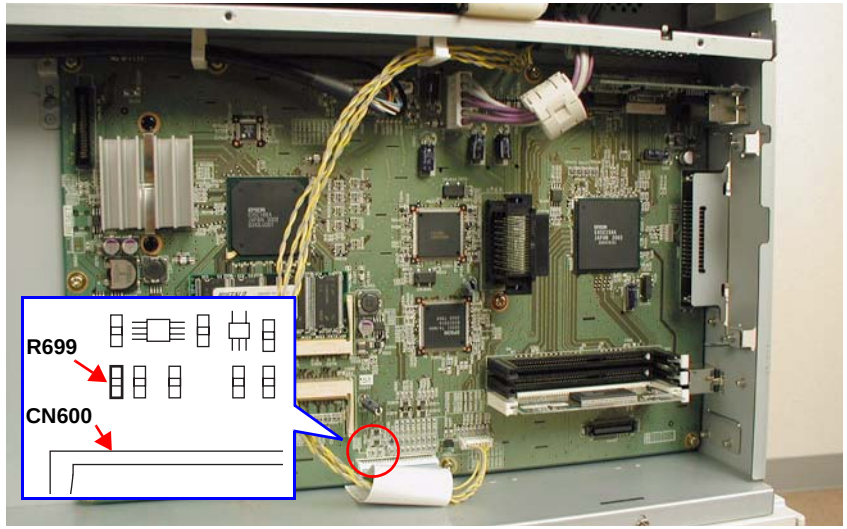

Figure 3-6. Short Circuit Location

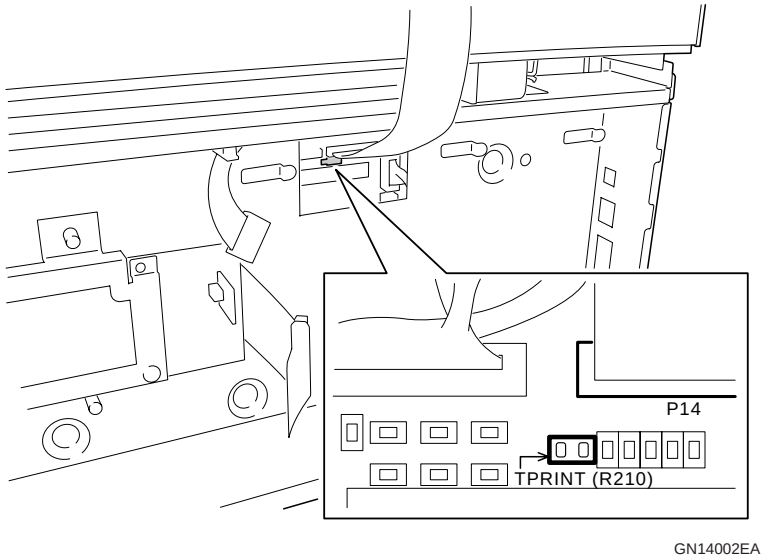

Figure 3-7. MCU PWB Short Circuit Location

4. When you have confirmed the print starting sound of the engine after a short circuit, clear the short circuit. Print one sheet of the MCU PWB built-in sample (YMCK grid/slope pattern) in the one-sided mode.

CAUTION

- **Print is not started if no paper is loaded in the Tray 1.**
- **Printing operation is not started if the engine is in an error state.**

5. To confirm continuous printing, execute the short state continuously.
6. Install the COVER ASSY RIGHT. *(p298)*

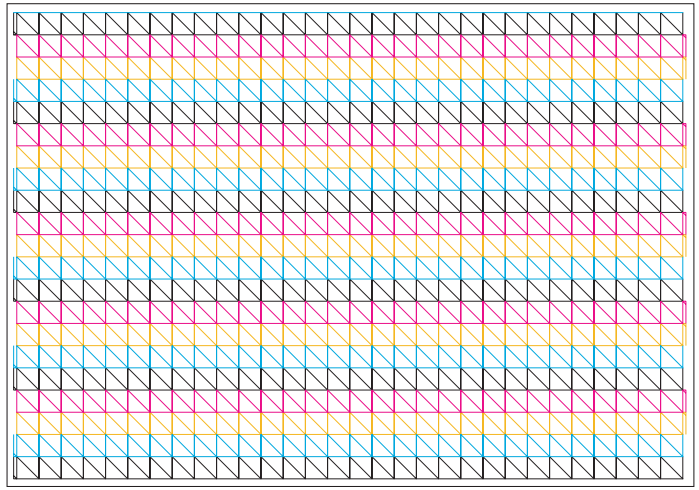

GN14003EA

Figure 3-8. YMCK Grid/Slope Pattern

manuals4you.com

3.5.5 FIP

FIP-P1 STAIN (AFTERIMAGE/FOGGING)

- Problems

  The printed surface is stained.

- Possible parts that caused the error
  - IDT UNIT

Before starting troubleshooting, check if the paper feed path. Make sure that there is no foreign matter, such as staples, paperclips and paper scraps, in the feed path.

Step	Action and Question	Yes	No
1	**IDT UNIT** Enter the Support Mode, and execute [Cleaning] from the Printer Adjust Menu. **Was the trouble fixed?**	Problem solved	To step 2
2	**IDT UNIT** Enter the Maintenance Mode, and execute [Power Cleaning] from the Maintenance Menu. * [Power Cleaning] does not function unless the temperature and humidity in the engine are in the specified states. **Was the trouble fixed?**	Problem solved	Replace the IDT UNIT

FIP-P2 Light image

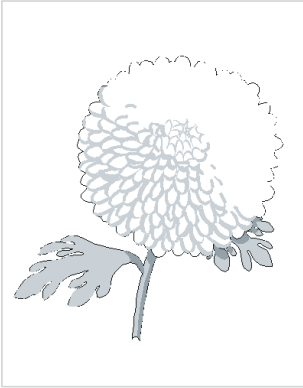

GN14004EA

- ☐ Problems

  The image density is low as a whole.

- ☐ Possible parts that caused the error
  - Toner Cartridge (C/K/M/Y)
  - GEAR ASSY HR
  - GEAR UNIT DEVE
  - MOTOR ASSY TRACKING
  - TRACKING ASSY REAR
  - TRACKING ASSY FRONT
  - Photoconductor unit
  - HVPS
  - IDT UNIT
  - BTR UNIT ASSY
  - ROS ASSY
  - DEVE UNIT K (C,M,Y)
  - MCU PWB
  - BOARD ASSY, MAIN

Before starting troubleshooting, check the printer paper feed path. Make sure that there is no foreign matter, such as staples, paperclips and paper scraps, in the feed path.

Step	Action and Question	Yes	No
1	**Continuous printing** Have more than 3,000 copies been printed continuously?	Leave the printer unoperated for more than 6 hours before restarting the job.	To Step 2
2	**Paper condition** 1. Set new dry recommended paper. 2. Print the image that has a problem, or execute test print. **Is image density normal?**	Replace the MAIN BOARD, ASSY *(p.375)*	To Step 3
3	**Toner Cartridge (C/K/M/Y)** **Is there enough toner in the Toner Cartridge?**	To Step 4	Replace the Toner Cartridge
4	**GEAR ASSY HR/GEAR UNIT DEVE** **Does the GEAR ASSY HR/GEAR UNIT DEVE drive properly?**	To Step 5	Replace the GEAR ASSY HR/GEAR HIGH ASSY DEVE *(p.406)*/ *(p.411)*
5	**TRACKING ASSY FRONT/REAR** **Does the TRACKING ASSY FRONT/ REAR operate properly?**	To Step 6	Replace the MOTOR ASSY TRACKING/ TRACKING ASSY REAR/ TRACKING ASSY FRONT *(p.408)*/ *(p.411)*/ *(p.407)*
6	**Grounding of Photoconductor unit** Check the grounding circuit of the Photoconductor unit. (Check the high-voltage lead wire to the Photoconductor unit - IDT Unit - BTR UNIT ASSY.) **Is the grounding of the Photoconductor unit normal?**	To Step 7	Repair the faulty grounding area.

manuals4you.com

Step	Action and Question	Yes	No
7	**HVPS** 1. Replace the HVPS. *(p.371)* 2. Print the image that has a problem, or execute test print. **Was the trouble fixed?**	Problem solved	To Step 8
8	**Photoconductor unit** 1. Replace the Photoconductor unit. *(p.386)* 2. Print the image that has a problem, or execute test print. **Was the trouble fixed?**	Problem solved	To Step 9
9	**IDT UNIT** 1. Replace the IDT UNIT. *(p.386)* 2. Print the image that has a problem, or execute test print. **Was the trouble fixed?**	Problem solved	To Step 10
10	**BTR UNIT ASSY** 1. Replace the BTR UNIT ASSY. *(p.305)* 2. Print the image that has a problem, or execute test print. **Was the trouble fixed?**	Problem solved	To Step 11
11	**ROS ASSY** 1. Replace the ROS ASSY. *(p.357)* 2. Print the image that has a problem, or execute test print. **Was the trouble fixed?**	Problem solved	To Step 12
12	**DEVE UNIT (C/M/Y/K)** 1. Replace the DEVE UNIT. *(p.392)* 2. Print the image that has a problem, or execute test print. **Was the trouble fixed?**	Problem solved	To Step 13

Step	Action and Question	Yes	No
13	**MCU PWB** 1. Replace the MCU PWB. *(p.382)* 2. Print the image that has a problem, or execute test print. CAUTION **The MCU PWB built-in sample that does not pass through the controller can be output by shorting TP on the BOARD ASSY, MAIN with a screwdriver or similar tool. When no problem occurs in the MCU PWB built-in sample, a possible cause is a BOARD ASSY, MAIN fault. *(p.252)*** **Was the trouble fixed?**	Problem solved	Replace the MAIN BOARD, ASSY *(p.375)*

FIP-P3 White paper

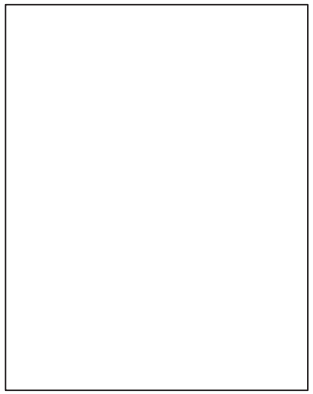

GN14005EA

- Problems

  The whole paper is printed in completely white.

- Possible parts that caused the error
  - Toner Cartridge (C/K/M/Y)
  - GEAR ASSY HR
  - GEAR UNIT DEVE
  - MOTOR ASSY TRACKING
  - TRACKING ASSY REAR
  - TRACKING ASSY FRONT
  - Photoconductor unit
  - HVPS
  - IDT UNIT
  - BTR UNIT ASSY
  - ROS ASSY
  - MCU PWB
  - BOARD ASSY, MAIN

Before starting troubleshooting, check the printer paper feed path. Make sure that there is no foreign matter, such as staples, paperclips and paper scraps, in the feed path.

Step	Action and Question	Yes	No
1	**Paper condition** 1. Set new dry recommended paper. 2. Print the image that has a problem, or execute test print. **Is image density normal?**	Replace the MAIN BOARD, ASSY *(p.375)*	To Step 2
2	**Toner Cartridge (C/K/M/Y)** **Is there enough toner in the Toner Cartridge?**	To Step 3	Replace the Toner Cartridge
3	**GEAR ASSY HR/GEAR UNIT DEVE** **Does the GEAR ASSY HR/GEAR UNIT DEVE drive properly?**	To Step 4	Replace the GEAR ASSY HR/GEAR HIGH ASSY DEVE *(p.406)*/ *(p.411)*
4	**TRACKING ASSY FRONT/REAR** **Does the TRACKING ASSY FRONT/ REAR operate properly?**	To Step 5	Replace the MOTOR ASSY TRACKING/ TRACKING ASSY REAR/ TRACKING ASSY FRONT *(p.408)*/ *(p.411)*/ *(p.407)*
5	**Grounding of Photoconductor unit** Check the grounding circuit of the Photoconductor unit. (Check the high-voltage lead wire to the Photoconductor unit - IDT Unit - BTR UNIT ASSY.) **Is the grounding of the Photoconductor unit normal?**	To Step 6	Repair the faulty grounding area.
6	**HVPS** 1. Replace the HVPS. *(p.371)* 2. Print the image that has a problem, or execute test print. **Was the trouble fixed?**	Problem solved	To Step 7
7	**Photoconductor unit** 1. Replace the Photoconductor unit. *(p.386)* 2. Print the image that has a problem, or execute test print. **Was the trouble fixed?**	Problem solved	To Step 8

manuals4you.com

Step	Action and Question	Yes	No
8	**IDT UNIT** 1. Replace the IDT UNIT. *(p.386)* 2. Print the image that has a problem, or execute test print. **Was the trouble fixed?**	Problem solved	To Step 9
9	**BTR UNIT ASSY** 1. Replace the BTR UNIT ASSY. *(p.305)* 2. Print the image that has a problem, or execute test print. **Was the trouble fixed?**	Problem solved	To Step 10
10	**ROS ASSY** 1. Replace the ROS ASSY. *(p.357)* 2. Print the image that has a problem, or execute test print. **Was the trouble fixed?**	Problem solved	To Step 11
11	**MCU PWB** 1. Replace the MCU PWB. *(p.382)* 2. Print the image that has a problem, or execute test print. CAUTION ! **The MCU PWB built-in sample that does not pass through the BOARD ASSY, MAIN can be output by shorting TP on the MCU PWB with a screwdriver or similar tool. When no problem occurs in the MCU PWB built-in sample, a possible cause is a BOARD ASSY, MAIN fault.** **Was the trouble fixed?**	Problem solved	Replace the BOARD ASSY, MAIN *(p.375)*

FIP-P4 Partial white paper/low density

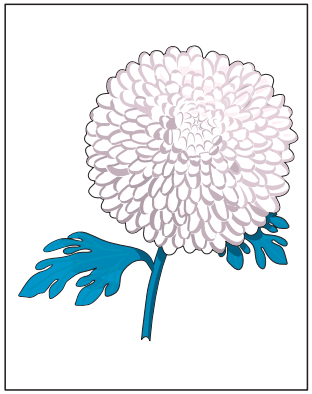

GN14030EA

- Problems

  Any of the Y, M, C and K colors is light, or is not printed at all.

- Possible parts that caused the error
  - AUGER (C/K/M/Y)
  - MOTOR DISP (C/K/Y/M)
  - TONER DISPENSER ASSY
  - DEVE UNIT K (C,M,Y)
  - ROS ASSY
  - MCU PWB
  - BOARD ASSY, MAIN
  - Photoconductor unit
  - IDT UNIT
  - BTR UNIT ASSY

CAUTION

Be careful of the following when installing the KIT HEATER ASSY or KIT HEATER DELE ASSY.

- **Power consumption is increased by the heater.**
- **Set to the power-saving mode since the MCU PWB life will shorten with power on for 24 hours.**
- **Safety precautions are required to prevent Thermostat off, etc.**

Before starting troubleshooting, check the printer paper feed path. Make sure that there is no foreign matter, such as staples, paperclips and paper scraps, in the feed path.

Step	Action and Question	Yes	No
1	**Paper condition** 1. Load new, dry, recommended paper since moistened paper may result in low density. 2. Print the image that has a problem, or execute test print. **Is image density normal?**	Problem solved	To Step 2
2	**Environmental factors** Check the environmental factors such as temperature around the printer in the morning. If the temperature is much higher than the recommended level, advise the user to change it. **Is it possible to use the printer under the recommended environment?**	If the printer does not return to normal even under the recom-mended environment, go to Step 3.	Install the KIT HEATER DELE ASSY. *(p.358)*
3	**AUGER (C/K/M/Y)** 1. Replace the AUGER of the corresponding color. *(p.397)* 2. Print the image that has a problem, or execute test print. **Was the trouble fixed?**	Problem solved	To step 4
4	**MOTOR DISP (C/K/Y/M)** 1. Replace the MOTOR DISP of the corresponding color. *(p.399)* 2. Print the image that has a problem, or execute test print. **Was the trouble fixed?**	Problem solved	To step 5
5	**TONER DISPENSER ASSY** 1. Replace the TONER DISPENSER ASSY. *(p.389)* 2. Print the image that has a problem, or execute test print. **Was the trouble fixed?**	Problem solved	To step 6
6	**DEVE UNIT K (C,M,Y)** 1. Replace the DEVE UNIT of the corresponding color. *(p.392)* 2. Print the image that has a problem, or execute test print. **Was the trouble fixed?**	Problem solved	To step 7

manuals4you.com

Step	Action and Question	Yes	No
7	**ROS ASSY** 1. Wipe off the contamination and foreign matter of the ROS window of the corresponding color. 2. Print the image that has a problem, or execute test print. **Was the trouble fixed?**	Problem solved	To step 8
8	**ROS ASSY** 1. Replace the ROS ASSY. *(p.357)* 2. Print the image that has a problem, or execute test print. **Was the trouble fixed?**	Problem solved	To step 9
9	**MCU PWB** 1. Replace the MCU PWB. *(p.382)* 2. Print the image that has a problem, or execute test print. CAUTION ! **The MCU PWB built-in sample that does not pass through the BOARD ASSY, MAIN can be output by shorting TP on the MCU PWB with a screwdriver or similar tool. When no problem occurs in the MCU PWB built-in sample, a possible cause is a BOARD ASSY, MAIN fault.** **Was the trouble fixed?**	Problem solved	To step 10
10	**BOARD ASSY, MAIN** 1. Replace the BOARD ASSY MAIN. *(p.375)* 2. Print the image that has a problem, or execute test print. **Was the trouble fixed?**	Problem solved	To step 11

Step	Action and Question	Yes	No
11	**Grounding of Photoconductor unit** Check the grounding circuit of the Photoconductor unit. (Check the high-voltage lead wire to the Photoconductor unit - IDT Unit - BTR UNIT ASSY.) **Are the grounding and high-voltage lead wire of the Photoconductor unit normal?**	Problem solved	Repair the faulty grounding area.

FIP-P5 Halftone oblique streaks

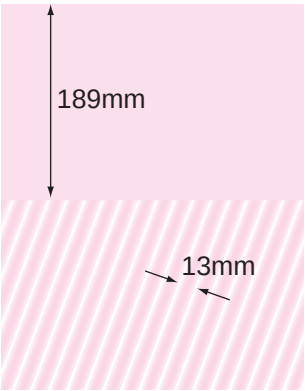

GN14031EA

- Problems

  At the time of overall halftone (HT) printing, obliquely streaked density unevenness occurs at intervals of 13mm to 14mm in the area more than 189mm after the leading edge of paper. (This problem may occur at and after the leading edge of paper.)

- Possible parts that caused the error
  - Photoconductor unit
  - DEVE UNIT K (C,M,Y)

Before starting troubleshooting, check the printer paper feed path. Make sure that there is no foreign matter, such as staples, paperclips and paper scraps, in the feed path.

Step	Action and Question	Yes	No
1	**T/V increase and IDT surface coating** 1. Run about 100 pieces of A3 paper to prompt toner consumption to increase T/V (Tribo Value: Toner charging amount) and coat the ITD surface. 2. Print the image that has a problem, or execute test print. **Was the trouble fixed?**	Problem solved	Replace the Photo-conductor unit *(p.386)*. If the fogging occurs, replace the DEVE UNIT *(p.392)*.

FIP-P6 BCO (Beads carryover)

- Problems

  White spots (beads carryover in image) occur in a halftone (HT) or solid image, or the carrier itself is developed in the background other than the image. Also, when touched by hand, the printed surface feels rough.

- Possible parts that caused the error
  - DEVE UNIT K (C,M,Y)

Before starting troubleshooting, check the printer paper feed path. Make sure that there is no foreign matter, such as staples, paperclips and paper scraps, in the feed path.

Step	Action and Question	Yes	No
1	**Environmental factors** Check the environmental factors such as temperature around the printer in the morning. If the temperature is much higher than the recommended level, advise the user to change it. **Did the printer return to normal under the recommended environment?**	Problem solved	To Step 2
2	**DEVE UNIT K (C,M,Y)** 1. Replace the DEVE UNIT. *(p.392)* 2. Print the image that has a problem, or execute test print. **Was the trouble fixed?**	Problem solved	—

manuals4you.com

FIP-P7 Grit

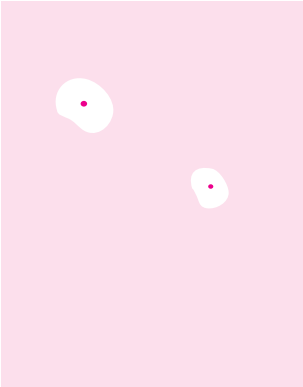

GN14032EA

- Problems

  White patches occur in a halftone (HT), solid or similar image. In many cases, toner appears to stick in the center of the white patch.

- Possible parts that caused the error
  - TONER DISPENSER ASSY
  - DEVE UNIT K (C/K/M/Y)
  - Toner Cartridge (C/K/M/Y)

Before starting troubleshooting, check the printer paper feed path. Make sure that there is no foreign matter, such as staples, paperclips and paper scraps, in the feed path.

Step	Action and Question	Yes	No
1	**TONER DISPENSER ASSY** 1. Replace the TONER DISPENSER ASSY. *(p.389)* 2. Print the image that has a problem, or execute test print. **Was the trouble fixed?**	Problem solved	To step 2
2	**DEVE UNIT K (C,M,Y)** 1. Replace the DEVE UNIT. *(p.392)* 2. Print the image that has a problem, or execute test print. **Was the trouble fixed?**	Problem solved	Replace the Toner Cartridge

FIP-P8 White streaks

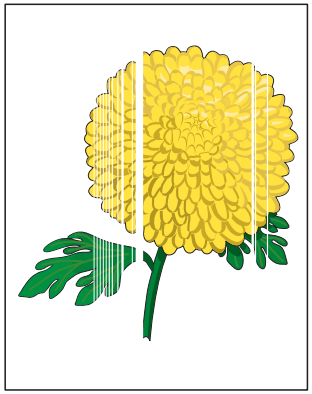

GN14010EA

- ☐ Problems

  White patches occur in the halftone or sold image area in the paper feeding direction.

- ☐ Possible parts that caused the error
  - DEVE UNIT K (C,M,Y)
  - ROS ASSY
  - IDT UNIT
  - Photoconductor Unit
  - Fuser unit

Before starting troubleshooting, check the printer paper feed path. Make sure that there is no foreign matter, such as staples, paperclips and paper scraps, in the feed path.

Step	Action and Question	Yes	No
1	**DEVE UNIT K (C,M,Y)** 1. Replace the DEVE UNIT. *(p.392)* 2. Print the image that has a problem, or execute test print. **Was the trouble fixed?**	Problem solved	To step 2
2	**Between DEVE UNIT Top Cover and ROS seal glass** Check for contamination or obstacles between the DEVE UNIT Top Cover and ROS seal glass. **Are obstacles absent?**	To step 3	Clean the area between the DEVE UNIT Top Cover and ROS seal glass.
3	**IDT UNIT** 1. Replace the IDT UNIT. *(p.386)* 2. Print the image that has a problem, or execute test print. **Was the trouble fixed?**	Problem solved	To step 4
4	**Photoconductor unit** 1. Replace the Photoconductor unit. *(p.386)* 2. Print the image that has a problem, or execute test print. **Was the trouble fixed?**	Problem solved	Replace the Fuser unit *(p.361)*

manuals4you.com

FIP-P9 25mm-pitch oblique steaks

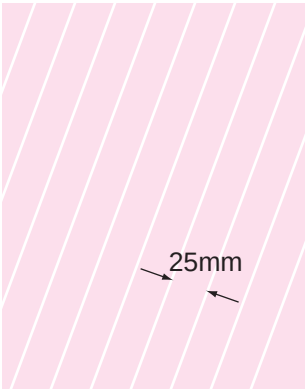

GN14033EA

- Problems

  Oblique streaks occur at intervals of 25mm in a halftone or solid image.

- Possible parts that caused the error
  - DEVE UNIT K (C,M,Y)

Before starting troubleshooting, check the printer paper feed path. Make sure that there is no foreign matter, such as staples, paperclips and paper scraps, in the feed path.

Step	Action and Question	Yes	No
1	**DEVE UNIT K (C,M,Y)** 1. Replace the DEVE UNIT. *(p.392)* 2. Print the image that has a problem, or execute test print. **Was the trouble fixed?**	Problem solved	To step 2
2	**Printer main unit** 1. Correct the tilting of the printer. (Rear/Front: Within 5mm Left/Right: Within 10mm) 2. Print the image that has a problem, or execute test print. **Was the trouble fixed?**	Problem solved	—

FIP-P10 25mm-pitch density unevenness

- Problems

  Density unevenness occurs at intervals of about 25mm in a halftone or solid image.

- Possible parts that caused the error
  - DEVE UNIT K (C,M,Y)

Before starting troubleshooting, check the printer paper feed path. Make sure that there is no foreign matter, such as staples, paperclips and paper scraps, in the feed path.

Step	Action and Question	Yes	No
1	**DEVE UNIT K (C,M,Y)** 1. Replace the DEVE UNIT. *(p.392)* 2. Print the image that has a problem, or execute test print. **Was the trouble fixed?**	Problem solved	—

FIP-P11 Registration misalignment (Sub scanning direction)

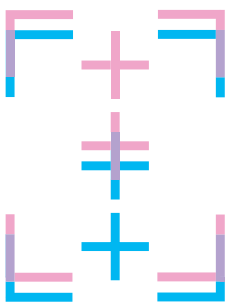

Scanning position misalignment

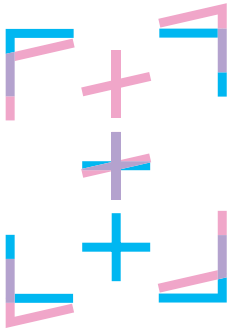

Skew

☐ Problems

Scanning position misalignment or skew occurs in the sub scanning direction.

Before starting troubleshooting, check the printer paper feed path. Make sure that there is no foreign matter, such as staples, paperclips and paper scraps, in the feed path.

Step	Action and Question	Yes	No
1	**Color Registration Adjustment** Execute “Correction of starting position in sub-scanning direction”. *(p.463)* **Was the trouble fixed?**	Problem solved	—

FIP-P12 Registration misalignment (Main scanning direction)

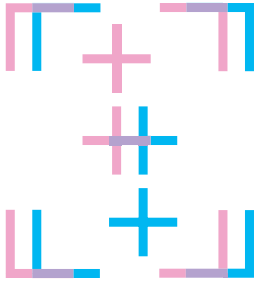

Scanning position misalignment

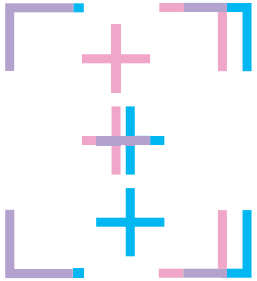

Full magnification misalignment

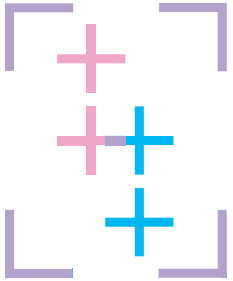

Left-to-right magnification misalignment

☐ Problems

Scanning position misalignment, full magnification misalignment or left-to-right magnification misalignment occurs in the main scanning direction.

Before starting troubleshooting, check the printer paper feed path. Make sure that there is no foreign matter, such as staples, paperclips and paper scraps, in the feed path.

Step	Action and Question	Yes	No
1	**Color Registration Adjustment** Execute “Adjustment of starting position in main-scanning direction”. *(p.464)* **Was the trouble fixed?**	Problem solved	—

manuals4you.com

FIP-P13 Primary transfer ghost (yellow remaining in red)

GN14013E

☐ Problems

A Yellow color character occurs as a ghost after the 93 to 94mm pitch (one round of Drum) of the Red color. It also occurs in the vertical line/horizontal line of Red and PK (Process Black). Normally, it does not occur in a Black character or single-color solid patch.

☐ Possible parts that caused the error

- Photoconductor unit
- IDT UNIT
- HVPS
- DEVE UNIT Y
- DEVE UNIT M
- HARNESS ASSY IDT
- SRG CONT IDT

Before starting troubleshooting, check the printer paper feed path. Make sure that there is no foreign matter, such as staples, paperclips and paper scraps, in the feed path.

Step	Action and Question	Yes	No
1	**Photoconductor unit/IDT UNIT** 1. Reinstall the Photoconductor unit and ITD UNIT. *(p.386)* 2. Print the image that has a problem, or execute test print. **Was the trouble fixed?**	Problem solved	Replace the Photoconductor unit and IDT UNIT *(p.386)*
2	**IDT1** 1. Check the insertion of the power supply connector of ITD1 (P/J134 of HVPS). 2. Check the contact of the IDT1 Shaft and power supply plate (SRG CONT IDT). **Does the problem still occur?**	Problem solved	To Step 3
3	**HVPS** 1. Replace the HVPS. *(p.371)* 2. Print the image that has a problem, or execute test print. **Was the trouble fixed?**	Problem solved	Replace the DEVE Unit Y or DEVE Unit M *(p.392)*

FIP-P14 Secondary color fringes (Toner fly-off around images)

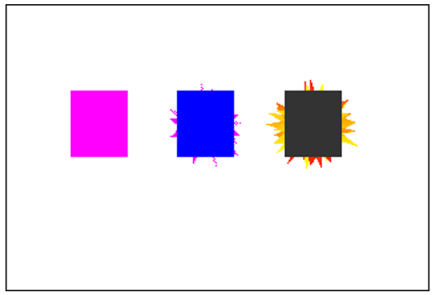

☐ Problems

Toner flies off around solid images (it does not occur in the case of a single color). The toner of the upper layer flies off more (Yellow or Magenta). This problem is likely to occur in Solid 2 (second side) of Duplex, and if Solid 1 (first side) is a highly colored screen at that time, it will further be a stress condition.

☐ Possible parts that caused the error

- BTR UNIT ASSY
- DEVE UNIT K (C,M,Y)

Before starting troubleshooting, check the printer paper feed path. Make sure that there is no foreign matter, such as staples, paperclips and paper scraps, in the feed path.

Step	Action and Question	Yes	No
1	**BTR UNIT ASSY** 1. Replace the BTR UNIT ASSY. *(p.305)* 2. Print the image that has a problem, or execute test print. **Was the trouble fixed?**	Problem solved	To Step 2
2	**DEVE UNIT K (C,M,Y)** 1. Replace the DEVE UNIT. *(p.392)* 2. Print the image that has a problem, or execute test print. **Was the trouble fixed?**	Problem solved	To Step 3
3	**Paper** 1. Replace the paper. 2. Print the image that has a problem, or execute test print. **Was the trouble fixed?**	Problem solved	—

manuals4you.com

FIP-P15 Wash Out (Deteriorated grains in image)

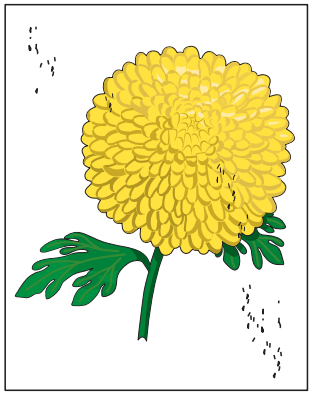

GN14015EA

- Problems

  Grains in a solid image are deteriorated.
  Grains look like patterns.

- Possible parts that caused the error
  - DEVE UNIT K (C,M,Y)

Before starting troubleshooting, check the printer paper feed path. Make sure that there is no foreign matter, such as staples, paperclips and paper scraps, in the feed path.

Step	Action and Question	Yes	No
1	**DEVE UNIT K (C,M,Y)** 1. Replace the DEVE UNIT of the corresponding color. *(p.392)* 2. Print the image that has a problem, or execute test print. **Was the trouble fixed?**	Problem solved	To Step 2
2	**Paper** 1. Replace the paper. 2. Print the image that has a problem, or execute test print. **Was the trouble fixed?**	Problem solved	—

FIP-P16 Halftone 189mm-pitch horizontal streaks

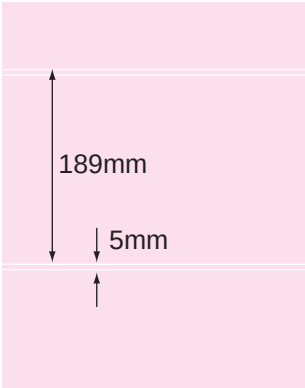

GN14017EA

☐ Problems

Horizontal streaks occur at intervals of 189mm in a halftone. There are the following horizontal streak types.

- Type A: Horizontal streak of about 5mm width
- Type B: Two horizontal streaks spaced about 5mm
- Type C: Type B where the upper one is extremely conspicuous.

In Type A, the overall BTR-IDT2 Nip width becomes conspicuous as a horizontal band. In Types B and C, the borders of a Nip width are wrinkled and become conspicuous as horizontal lines.

☐ Possible parts that caused the error

- IDT UNIT
- BTR UNIT ASSY

CAUTION

This problem may occur if the LH ASSY is opened/closed with the printer powered off and the printer is then not powered on after the work is finished to perform warming-up operation.
On the next day, horizontal steaks may become lighter and inconspicuous on the print. Basically, most of the horizontal streaks will gradually show the sign of recovery and disappear. Do not replace the IDT UNIT immediately, but wait for some time and check again. When the parts must be replaced, replace them in order of IDT UNIT and BTR UNIT ASSY. (The problem will be resolved by merely replacing the IDT UNIT.)

Before starting troubleshooting, check the printer paper feed path. Make sure that there is no foreign matter, such as staples, paperclips and paper scraps, in the feed path.

Step	Action and Question	Yes	No
1	**IDT UNIT** 1. Replace the IDT UNIT. *(p.386)* 2. Print the image that has a problem, or execute test print. **Was the trouble fixed?**	Problem solved	To Step 2
2	**BTR UNIT ASSY** 1. Replace the BTR UNIT ASSY. *(p.305)* 2. Print the image that has a problem, or execute test print. **Was the trouble fixed?**	Problem solved	—

manuals4you.com

FIP-P17 Halftone 189mm/236mm-pitch horizontal streaks

☐ Problems

189mm- or 236mm-pitch horizontal steaks occur. 189mm-pitch streaks occur when the colors are the same. In a Black/Cyan halftone, the horizontal streaks of Black and Cyan are spaced about 236mm.

☐ Possible parts that caused the error

- IDT UNIT

Before starting troubleshooting, check the printer paper feed path. Make sure that there is no foreign matter, such as staples, paperclips and paper scraps, in the feed path.

Step	Action and Question	Yes	No
1	**Tooth tips of IDT2 Rear outside gear, inside gear and IDT1 Rear side gear** 1. If foreign matter has stuck, remove it being careful not to damage the tooth tips. 2. If the gear tooth tip is damaged, e.g. dented or scratched, replace the IDT UNIT. 3. Print the image that has a problem, or execute test print. **Was the trouble fixed?**	Problem solved	Replace the IDT UNIT *(p.386)*

FIP-P18 Halftone trailing edge 10 to 14mm horizontal streak

GN14034EA

☐ Problems

A horizontal steak occurs about 10 to 14mm from the trailing edge of a halftone. It length is not fixed.

☐ Possible parts that caused the error

- SENSOR ASSY MOB ADC
- BTR UNIT ASSY

Before starting troubleshooting, check the printer paper feed path. Make sure that there is no foreign matter, such as staples, paperclips and paper scraps, in the feed path.

Step	Action and Question	Yes	No
1	**SENSOR ASSY MOB ADC** 1. Reinstall the SENSOR ASSY MOB ADC. 2. Replace the SENSOR ASSY MOB ADC. 3. Print the image that has a problem, or execute test print. **Was the trouble fixed?**	Problem solved	Replace the BTR UNIT ASSY *(p.305)*

FIP-P19 Scales

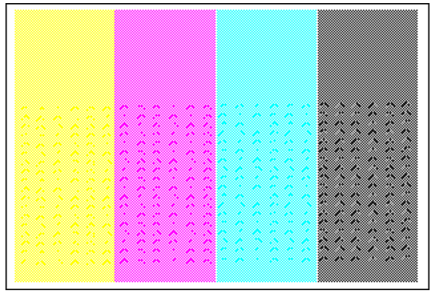

- Problems

  Scale-shaped toner fly-off occurs in halftones (regardless of the colors). Scales often occur in the vertical direction (paper feeding direction). Scale-shaped toner fly-off nearly matches the pitch of the DTS blade.

- Possible parts that caused the error
  - BTR UNIT ASSY

Before starting troubleshooting, check the printer paper feed path. Make sure that there is no foreign matter, such as staples, paperclips and paper scraps, in the feed path.

Step	Action and Question	Yes	No
1	**BTR UNIT ASSY** 1. Replace the BTR UNIT ASSY. *(p.305)* 2. Print the image that has a problem, or execute test print. **Was the trouble fixed?**	Problem solved	To Step 2
2	**Paper** 1. Replace the paper. 2. Print the image that has a problem, or execute test print. **Was the trouble fixed?**	Problem solved	—

FIP-P20 Trailing edge 7mm image distortion

GN14035EA

- Problems

  Image distortion occurs about 7mm from the trailing edge of paper. (Image distortion results in a horizontal streak in the case of halftone, or a thick and smeared image in the case of characters or lines.)

- Possible parts that caused the error
  - BTR UNIT ASSY

Before starting troubleshooting, check the printer paper feed path. Make sure that there is no foreign matter, such as staples, paperclips and paper scraps, in the feed path.

Step	Action and Question	Yes	No
1	**BTR UNIT ASSY** 1. Replace the BTR UNIT ASSY. *(p.305)* 2. Print the image that has a problem, or execute test print. **Was the trouble fixed?**	Problem solved	—

manuals4you.com

FIP-P21 Density unevenness (50 to 52mm pitch)

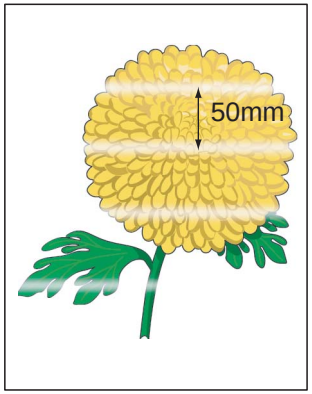

GN14036EA

- Problems

  Density unevenness of 50 to 52mm-pitch occurs. It is often light colored, but is sometimes highly colored.

- Possible parts that caused the error
  - BTR UNIT ASSY

Before starting troubleshooting, check the printer paper feed path. Make sure that there is no foreign matter, such as staples, paperclips and paper scraps, in the feed path.

Step	Action and Question	Yes	No
1	**BTR UNIT ASSY** 1. Wipe the BTR surface with a damp cloth that was squeezed tightly, and then wipe it with a dry cloth. CAUTION **Do not use the drum cleaner.** 2. Print the image that has a problem, or execute test print. **Was the trouble fixed?**	Problem solved	Replace the BTR UNIT ASSY *(p.305)*

manuals4you.com

FIP-P22 Secondary transfer trouble (without color tones) and ghosts

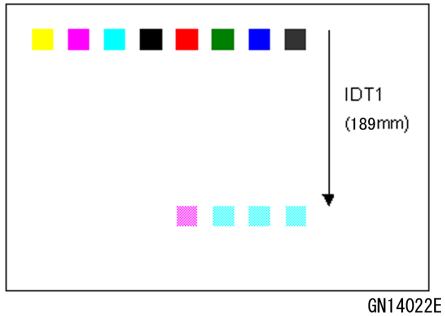

☐ Problems

Color reproduction trouble occurs in the secondary and tertiary colors, i.e. Red → Color without Magenta (Yellow), Green → Color without Cyan (Yellow), Blue → Color without Cyan (Magenta), CK (composite black) → Color without Cyan (Red). At the same time, ghosts may occur after a 189mm pitch (one round of IDT). In this case, the color tones of the ghosts are Red → Magenta, Green → Cyan, Blue → Cyan, and CK → Cyan.

☐ Possible parts that caused the error

- HVPS
- IDT UNIT
- DRIVE ASSY PR (DRIVE ASSY PR (Harness to HVPS and plate to IDT2 Shaft)
- TERMINAL ASSY PHD

Before starting troubleshooting, check the printer paper feed path. Make sure that there is no foreign matter, such as staples, paperclips and paper scraps, in the feed path.

Step	Action and Question	Yes	No
1	**IDT2** 1. Check the insertion of the power supply connector of ITD2 (P/J133 of HVPS). 2. Check the contact of the IDT2 Shaft and power supply plate (DRIVE ASSY PR). 3. Print the image that has a problem, or execute test print. **Was the trouble fixed?**	Problem solved	To Step 2
2	**HVPS** 1. Replace the HVPS. *(p.371)* 2. Print the image that has a problem, or execute test print. **Was the trouble fixed?**	Problem solved	To Step 3
3	**IDT1** 1. Check the operation of the power supply pin on the IDT1 cleaner main unit side. (Check that the pin is not retracted) 2. Print the image that has a problem, or execute test print. **Was the trouble fixed?**	Problem solved	Replace the IDT UNIT *(p.386)*

manuals4you.com

FIP-P23 Tertiary transfer trouble (without color tones) and ghosts

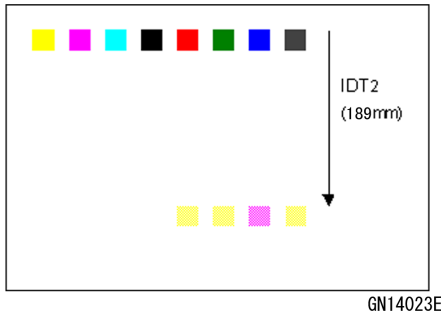

☐ Problems

Color reproduction trouble occurs in the secondary and tertiary colors, i.e. Red → Color without Yellow (Magenta), Green → Color without Yellow (Cyan), Blue → Color without Magenta (Cyan), CK (composite black) → Color without Yellow (Red). At the same time, ghosts may occur after a 189mm pitch (one round of IDT). In this case, the color tones of the ghosts are Red → Yellow, Green → Yellow, Blue → Magenta, and CK → Yellow.

☐ Possible parts that caused the error

- BTR UNIT ASSY
- IDT UNIT
- DRIVE ASSY PR (Harness to HVPS)
- HARNESS ASSY HVLH

Before starting troubleshooting, check the printer paper feed path. Make sure that there is no foreign matter, such as staples, paperclips and paper scraps, in the feed path.

Step	Action and Question	Yes	No
1	**BTR UNIT ASSY** 1. Check the installation states of the BTR UNIT ASSY parts. 2. Print the image that has a problem, or execute test print. **Was the trouble fixed?**	To Step 2	Replace the BTR UNIT ASSY *(p.305)*
2	**IDT UNIT** 1. Check the installation states of the IDT UNIT parts. 2. Print the image that has a problem, or execute test print. **Was the trouble fixed?**	To Step 3	Replace the IDT UNIT *(p.386)*
3	**BTR UNIT ASSY** 1. Check the insertion of the power supply connectors of BTR (P/J135, T401 of HVPS). 2. Check the contact of the BTR power supply pin (main unit side) and power supply plate (Unit side). 3. Print the image that has a problem, or execute test print. **Was the trouble fixed?**	To Step 4	Replace the HVPS *(p.371)*
4	**IDT2** 1. Check the operation of the power supply pin on the IDT2 cleaner main unit side. (Check that the pin is not retracted) 2. Print the image that has a problem, or execute test print. **Was the trouble fixed?**	Problem solved	Replace the IDT UNIT *(p.386)*

FIP-P24 Halftone 189/205mm-pitch horizontal streaks

GN14024EA

- Problems

  189mm- or 205mm-pitch horizontal steaks occur. 189mm-pitch streaks occur when the colors are the same. In a Black/Cyan halftone, the horizontal streaks of Black and Cyan are spaced about 205mm. Light-colored horizontal steaks occur simultaneously about 40mm before the horizontal streak of Black and also about 56mm before the horizontal streak of Cyan.

- Possible parts that caused the error
  - IDT UNIT

Before starting troubleshooting, check the printer paper feed path. Make sure that there is no foreign matter, such as staples, paperclips and paper scraps, in the feed path.

Step	Action and Question	Yes	No
1	**Tooth tips of IDT1 Front side gear** 1. If foreign matter has stuck, remove it being careful not to damage the tooth tips. 2. If the gear tooth tip is damaged, e.g. dented or scratched, replace the IDT UNIT. 3. Print the image that has a problem, or execute test print. **Was the trouble fixed?**	Problem solved	Replace the IDT UNIT *(p.386)*

manuals4you.com

FIP-P25 Round seals

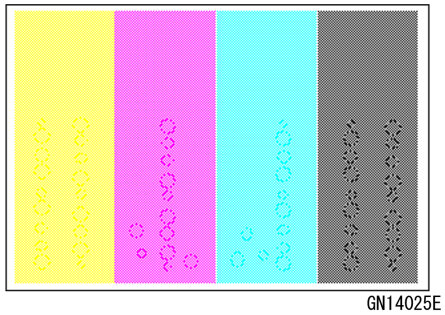

☐ Problems

Round seal-shaped toner fly-off patterns (regardless of colors) occur in halftones. They often occur in the vertical direction (paper feeding direction). The positions where they occur are divided into two: Random position and position corresponding to the rib position of the paper guide (Transport Chute) at BTR top.

☐ Causes

- The eliminator cloth is applied in improper position (Check that the projection amount is 3.5±0.5mm).
- The mylar sheet at DTS Cover top (on eliminator cloth) is applied in improper position.
- The DTS Cover is installed improperly.
- Low humidity

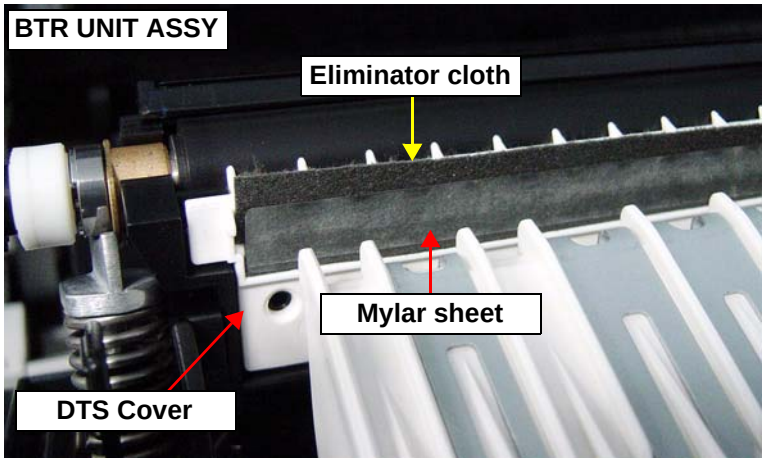

☐ Possible parts that caused the error

- BTR UNIT ASSY

Before starting troubleshooting, check the printer paper feed path. Make sure that there is no foreign matter, such as staples, paperclips and paper scraps, in the feed path.

Step	Action and Question	Yes	No
1	**BTR UNIT ASSY** 1. Replace the BTR UNIT ASSY. *(p.305)* 2. Print the image that has a problem, or execute test print. **Was the trouble fixed?**	Problem solved	To Step 2
2	**Paper** 1. Replace the paper. 2. Print the image that has a problem, or execute test print. **Was the trouble fixed?**	Problem solved	—

FIP-P26 9mm-pitch process direction white streaks

☐ Problems

White streaks occur in the paper feeding direction at intervals of 9mm. They occur more in the first half of paper than in the later half.

☐ Possible parts that caused the error

■ BTR UNIT ASSY

Before starting troubleshooting, check the printer paper feed path. Make sure that there is no foreign matter, such as staples, paperclips and paper scraps, in the feed path.

Step	Action and Question	Yes	No
1	**BTR UNIT ASSY** 1. Replace the BTR UNIT ASSY. *(p.305)* 2. Print the image that has a problem, or execute test print. **Was the trouble fixed?**	Problem solved	To Step 2
2	**Paper** 1. Replace the paper. 2. Print the image that has a problem, or execute test print. **Was the trouble fixed?**	Problem solved	—

FIP-P27 White streaks in halftone intersecting area

☐ Problems

White streaks occur in the area where the vertical band and horizontal band of a PK (process black) halftone cross. (189mm from the image leading edge of the vertical band)

☐ Possible parts that caused the error

■ DEVE UNIT K (C,M,Y)

Before starting troubleshooting, check the printer paper feed path. Make sure that there is no foreign matter, such as staples, paperclips and paper scraps, in the feed path.

Step	Action and Question	Yes	No
1	**DEVE UNIT K (C,M,Y)** 1. Replace the DEVE UNIT. *(p.392)* 2. Print the image that has a problem, or execute test print. **Was the trouble fixed?**	Problem solved	To step 2
2	**Paper** 1. Replace the paper. 2. Print the image that has a problem, or execute test print. **Was the trouble fixed?**	Problem solved	—

manuals4you.com

FIP-P28 Secondary color density unevenness

☐ Problems

When an overall Blue (Cyan 100% + Magenta 100%) pattern is formed on thick paper, mottled density unevenness occurs.

☐ Possible parts that caused the error

- BTR UNIT ASSY
- DEVE UNIT K (C,M,Y)

Before starting troubleshooting, check the printer paper feed path. Make sure that there is no foreign matter, such as staples, paperclips and paper scraps, in the feed path.

Step	Action and Question	Yes	No
1	**BTR UNIT ASSY** 1. Replace the BTR UNIT ASSY. *(p.305)* 2. Print the image that has a problem, or execute test print. **Was the trouble fixed?**	Problem solved	To Step 2
2	**DEVE UNIT K (C,M,Y)** 1. Replace the DEVE UNIT. *(p.392)* 2. Print the image that has a problem, or execute test print. **Was the trouble fixed?**	Problem solved	To Step 3
3	**Paper** 1. Replace the paper. 2. Print the image that has a problem, or execute test print. **Was the trouble fixed?**	Problem solved	—

FIP-P29 Wrinkles (When paper passes through Fuser)

☐ Problems

Wrinkles occur when paper passes through the Fuser.

☐ Possible parts that caused the error

- Fuser unit

Before starting troubleshooting, check the printer paper feed path. Make sure that there is no foreign matter, such as staples, paperclips and paper scraps, in the feed path.

Step	Action and Question	Yes	No
1	**Check of paper loading orientation and paper type** 1. Change the paper loading orientation. 2. Use the recommended paper. **Was the trouble fixed?**	Problem solved	To Step 2
2	**Fuser unit** 1. Replace the Fuser unit. *(p.361)* 2. Print the image that has a problem, or execute test print. **Was the trouble fixed?**	Problem solved	—

FIP-P30 Wrinkles (Paper skew during Simplex feeding)

☐ Problems

Wrinkles occur (with abnormal noise such as crunch during run) due to paper skew during Simplex feeding.

☐ Possible parts that caused the error

- CASSETTE ASSY
- TRAY ASSY
- MSI TRAY
- PH MAIN ASSY
- BTR UNIT ASSY

Before starting troubleshooting, check the printer paper feed path. Make sure that there is no foreign matter, such as staples, paperclips and paper scraps, in the feed path.

Step	Action and Question	Yes	No
1	**Check of paper loading orientation and paper type** 1. Change the paper loading orientation. 2. Use the recommended paper. **Was the trouble fixed?**	Problem solved	To Step 2
2	**Tray1/Tray2-4/Tray2** 1. Replace Tray 1 or Tray 2-4. 2. Print the image that has a problem, or execute test print. **Was the trouble fixed?**	Problem solved	To Step 3
3	**MSI** 1. Replace the MSI. *(p.310)* 2. Print the image that has a problem, or execute test print. **Was the trouble fixed?**	Problem solved	To Step 4
4	**PH MAIN ASSY** 1. Replace the PH MAIN ASSY. *(p.332)* 2. Print the image that has a problem, or execute test print. **Was the trouble fixed?**	Problem solved	Replace the BTR UNIT ASSY *(p.305)*

manuals4you.com

FIP-P31 Wrinkles (Paper skew during Duplex feeding)

☐ Problems

Wrinkles occur (with abnormal noise such as crunch during run) due to paper skew during Duplex feeding.

☐ Possible parts that caused the error

- TRANSPORT EXIT ASSY
- CHUTE TRANS
- LH ASSY
- BTR UNIT ASSY
- DUPLEX ASSY

Before starting troubleshooting, check the printer paper feed path. Make sure that there is no foreign matter, such as staples, paperclips and paper scraps, in the feed path.

Step	Action and Question	Yes	No
1	**Check of paper loading orientation and paper type** 1. Change the paper loading orientation. 2. Use the recommended paper. **Was the trouble fixed?**	Problem solved	To Step 2
2	**TRANSPORT EXIT ASSY** 1. Replace the TRANSPORT EXIT ASSY. *(p.362)* 2. Print the image that has a problem, or execute test print. **Was the trouble fixed?**	Problem solved	To Step 3
3	**CHUTE TRANS** 1. Replace the CHUTE TRANS. *(p.324)* 2. Print the image that has a problem, or execute test print. **Was the trouble fixed?**	To Step 4	Replace the LH ASSY *(p.307)*
4	**BTR UNIT ASSY** 1. Replace the BTR UNIT ASSY. *(p.305)* 2. Print the image that has a problem, or execute test print. **Was the trouble fixed?**	Problem solved	Replace the DUPLEX ASSY *(p.414)*

FIP-P32 Wrinkles (Paper leading edge running against Exit Transport)

☐ Problems

When paper is output face-down, it is wrinkled as its leading edge runs against the Exit Transport.

☐ Possible parts that caused the error

- TRANSPORT EXIT ASSY
- GATE ASSY FUT
- LH ASSY
- BTR UNIT ASSY

Before starting troubleshooting, check the printer paper feed path. Make sure that there is no foreign matter, such as staples, paperclips and paper scraps, in the feed path.

Step	Action and Question	Yes	No
1	**Check of paper loading orientation and paper type** 1. Change the paper loading orientation. 2. Use the recommended paper. **Was the trouble fixed?**	Problem solved	To Step 2
2	**TRANSPORT EXIT ASSY** 1. Replace the TRANSPORT EXIT ASSY. *(p.362)* 2. Print the image that has a problem, or execute test print. **Was the trouble fixed?**	Problem solved	To Step 3
3	**GATE ASSY FUT** 1. Check the shape or position of the GATE ASSY FUT. **Is the shape or position of the GATE ASSY FUT normal?**	To Step 4	Replace the GATE ASSY FUT *(p.329)*
4	**LH ASSY** 1. Replace the LH ASSY. *(p.307)* 2. Print the image that has a problem, or execute test print. **Was the trouble fixed?**	Problem solved	Replace the BTR UNIT ASSY *(p.305)*

manuals4you.com

FIP-P33 Halftone process direction grids

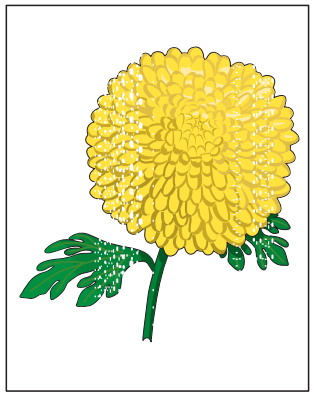

GN14016EA

- Problems

  Spotty white patches occur in the paper feeding direction in a halftone.

- Remedial kit
  - KIT HEATER ASSY
  - KIT HEATER DELE ASSY

CAUTION

Be careful of the following when installing the KIT HEATER ASSY or KIT HEATER DELE ASSY.

- **Power consumption is increased by the heater (at sleep mode: 4W ~ 20W).**
- **Set to the power-saving mode since the MCU PWB life will shorten with power on for 24 hours.**
- **Safety precautions are required to prevent Thermostat off, etc.**

Before starting troubleshooting, check the printer paper feed path. Make sure that there is no foreign matter, such as staples, paperclips and paper scraps, in the feed path.

Step	Action and Question	Yes	No
1	♦Proceed to Step 2 when the KIT HEATER ASSY or KIT HEATER DELE ASSY has already been installed. **Check of printer operating environment** Check the environment first in the morning. If humidity is high, it is advised to operate the printer in the recommended environment. **Can the printer be operated in the recommended environment?**	If improvement is not made in the recommended environment, proceed to the other white patch-related FIP.	Install the KIT HEATER ASSY, and go to Step 3.
2	**Failure of KIT HEATER ASSY or KIT HEATER DELE ASSY** 1. Wait for more than 15 minutes after power-on. 2. Remove the CASSETE ASSY, and touch the area around the SEAL SCREW stuck on the sheet metal of the main unit frame to make sure that it is warm. **Is the area around the SEAL SCREW of the main unit frame warm?**	To Step 3	Replace the KIT HEATER ASSY or the KIT HEATER DELE ASSY *(p.358)*
3	**Test print** Print the image that has a problem, or execute test print. **Was the trouble fixed?**	Problem solved	To FIP related to other white patches

FIP-P34 Fingerprint marks

GN14037EA

- ☐ Problems

  Fingerprint marks occur in an image due to the sebum stuck on paper. They are especially conspicuous in the K color.

- ☐ Possible parts that caused the error
  - ■ Paper

Before starting troubleshooting, check the printer paper feed path. Make sure that there is no foreign matter, such as staples, paperclips and paper scraps, in the feed path.

Step	Action and Question	Yes	No
1	**Paper** 1. Replace the paper. CAUTION ! **Load paper, being careful not to touch the transfer side of the paper (manual feed: bottom side, cassette: top side) with your hands.** 2. Print the image that has a problem, or execute test print. **Was the trouble fixed?**	Problem solved	---

FIP-P35 Dirty spots/colored spots (31mm pitch)

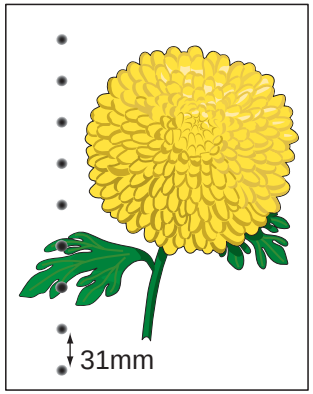

GN14038EA

- ☐ Problems

  31mm pitch, dirty or colored spots occur.

- ☐ Possible parts that caused the error
  - ■ Photoconductor unit

Before starting troubleshooting, check the printer paper feed path. Make sure that there is no foreign matter, such as staples, paperclips and paper scraps, in the feed path.

Step	Action and Question	Yes	No
1	**IDT UNIT** Enter the Support Mode, and execute [Cleaning] from the Printer Adjust Menu. **Was the trouble fixed?**	Problem solved	To step 2
2	**RTC Roll in Photoconductor unit** Check the RTC Roll surface. **Is there foreign matter, deformation or damage on the RTC Roll surface?**	If there is any foreign matter, remove it with a dry swab. If the surface is deformed or damaged, replace the Photoconductor unit.	---

manuals4you.com

FIP-P36 Ghosts (94mm pitch)

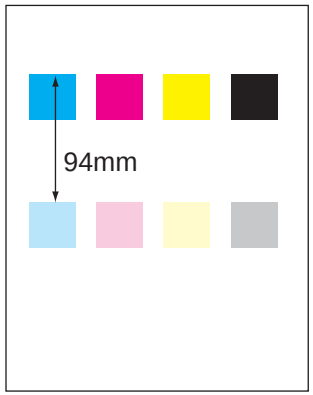

GN14018EA

- Problems

  Ghosts occur at 93 to 94mm pitch (one round of Drum).

- Possible parts that caused the error
  - Photoconductor unit
  - HVPS

Before starting troubleshooting, check the printer paper feed path. Make sure that there is no foreign matter, such as staples, paperclips and paper scraps, in the feed path.

Step	Action and Question	Yes	No
1	**Environmental factors** Check the environmental factors such as temperature around the printer in the morning. If the temperature is much higher than the recommended level, advise the user to change it. **Did the printer return to normal under the recommended environment?**	Problem solved	To Step 2
2	**Output terminals to Photoconductor unit on HVPS rear side** 1. Grind the output terminals on the HVPS rear side with sandpaper. 2. Install the HVPS after making sure that the output terminal on the HVPS rear side make proper contact with the spring on the Photoconductor unit side. 3. Print the image that has a problem, or execute test print. **Was the trouble fixed?**	Problem solved	Replace the HVPS *(p.371)*

FIP-P37 Dirty streaks in process direction (random)

☐ Problems

Dirty streaks occur randomly in the paper feeding direction. They are likely to occur in continuous printing at low temperatures.

☐ Possible parts that caused the error

- IDT UNIT
- HVPS

Before starting troubleshooting, check the printer paper feed path. Make sure that there is no foreign matter, such as staples, paperclips and paper scraps, in the feed path.

Step	Action and Question	Yes	No
1	**IDT UNIT** 1. Enter the Support Mode, and execute [Cleaning] from the Printer Adjust Menu. 2. Print the image that has a problem, or execute test print. **Was the trouble fixed?**	Problem solved	If improvement is not made by executing Step 1 several times, proceed to Step 2.
2	**Output terminals to Photoconductor unit on HVPS rear side** 1. Grind the output terminals on the HVPS rear side with sandpaper. 2. Install the HVPS after making sure that the output terminal on the HVPS rear side make proper contact with the spring on the Photoconductor unit side. 3. Print the image that has a problem, or execute test print. **Was the trouble fixed?**	Problem solved	Replace the IDT UNIT *(p.386)*

manuals4you.com

FIP-P38 Magenta light/Magenta toner fly-off

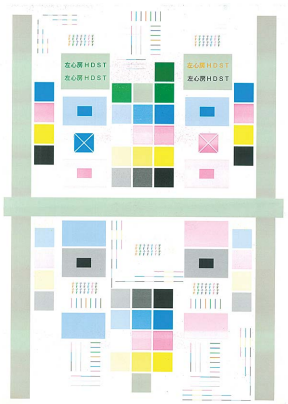

GN14039EA

☐ Problems

Magenta becomes light as a whole due to occurrence of horizontal streaks or color unevenness in Magenta. Also, the Magenta toner flies off. These problems arise due to poor contact of the output terminal “F” on the HVPS rear side.

☐ Possible parts that caused the error

- Photoconductor unit
- HVPS

[Output terminal layout on HVPS rear side]

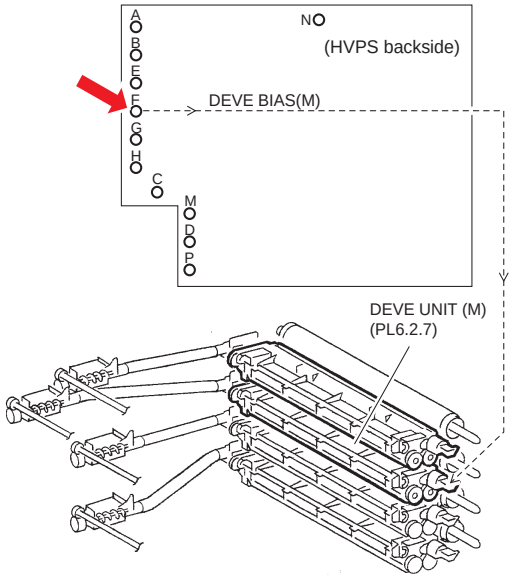

GN14047EA

Before starting troubleshooting, check the printer paper feed path. Make sure that there is no foreign matter, such as staples, paperclips and paper scraps, in the feed path.

Step	Action and Question	Yes	No
1	**Output terminal to Photoconductor unit on HVPS rear side** 1. Grind the output terminal “F” on the HVPS rear side with sandpaper. 2. Install the HVPS after making sure that the output terminal “F” on the HVPS rear side make proper contact with the spring on the Photoconductor unit side. 3. Print the image that has a problem, or execute test print. **Was the trouble fixed?**	Problem solved	Replace the HVPS *(p.371)*

FIP-P39 Overall Cyan fogging

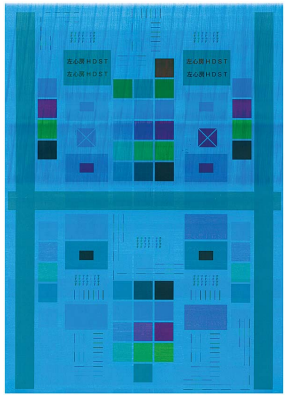

GN14041EA

- Problems

  High-colored fogging of Cyan occurs all over the paper. This program arises due to poor contact of the output terminal “D” on the HVPS rear side.

- Possible parts that caused the error
  - Photoconductor unit
  - HVPS

[Output terminal layout on HVPS rear side]

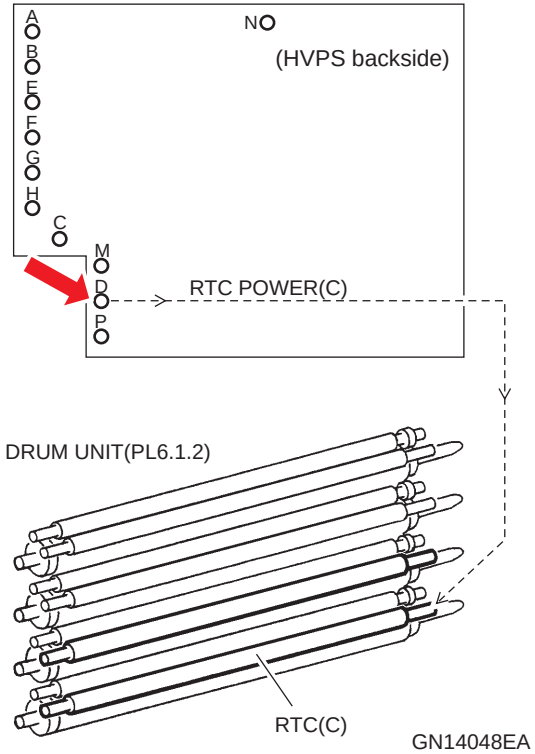

GN14048EA

Before starting troubleshooting, check the printer paper feed path. Make sure that there is no foreign matter, such as staples, paperclips and paper scraps, in the feed path.

Step	Action and Question	Yes	No
1	**Output terminal to Photoconductor unit on HVPS rear side** 1. Grind the output terminal “D” on the HVPS rear side with sandpaper. 2. Install the HVPS after making sure that the output terminal “D” on the HVPS rear side make proper contact with the spring on the Photoconductor unit side. 3. Print the image that has a problem, or execute test print. **Was the trouble fixed?**	Problem solved	Replace the HVPS *(p.371)*

manuals4you.com

FIP-P40 Density unevenness/Faint color (31mm pitch)

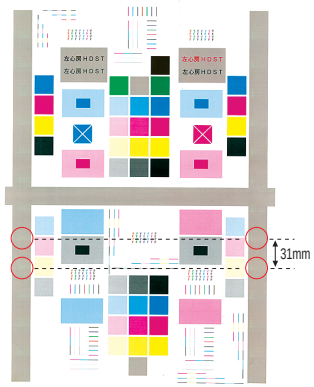

GN14042EA

☐ Problems

Density unevenness or faint color caused by Magenta occurs with 31mm pitches in the paper feeding direction. This program arises due to poor contact of the output terminal "P" on the HVPS rear side. Unevenness or faint color becomes inconspicuous on the second and later prints.

☐ Possible parts that caused the error

- Photoconductor unit
- HVPS

[Output terminal layout on HVPS rear side]

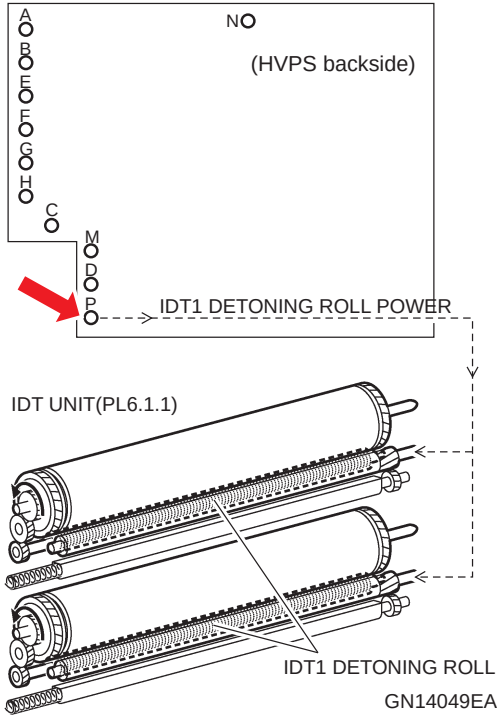

GN14049EA

Before starting troubleshooting, check the printer paper feed path. Make sure that there is no foreign matter, such as staples, paperclips and paper scraps, in the feed path.

Step	Action and Question	Yes	No
1	**Output terminal to Photoconductor unit on HVPS rear side** 1. Grind the output terminal "P" on the HVPS rear side with sandpaper. 2. Install the HVPS after making sure that the output terminal "P" on the HVPS rear side make proper contact with the spring on the Photoconductor unit side. 3. Print the image that has a problem, or execute test print. **Was the trouble fixed?**	Problem solved	Replace the HVPS *(p.371)*

manuals4you.com

FIP-P41 Cyan ghost (189mm pitch)

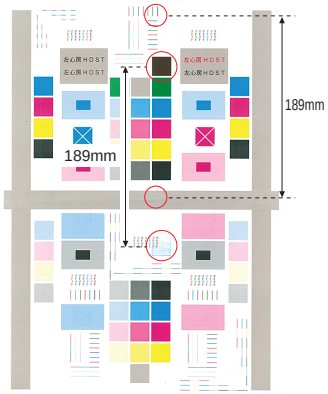

GN14044EA

☐ Problems

Cyan ghosts occur with 189mm pitches. This program arises in the area where CMYK are layered. It arises due to poor contact of the output terminal “N” on the HVPS rear side.

☐ Possible parts that caused the error

- Photoconductor unit
- HVPS

[Output terminal layout on HVPS rear side]

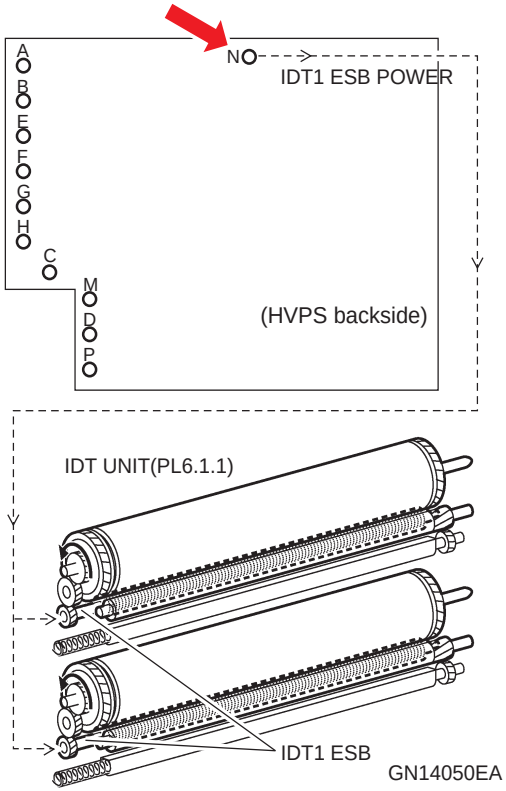

GN14050EA

Before starting troubleshooting, check the printer paper feed path. Make sure that there is no foreign matter, such as staples, paperclips and paper scraps, in the feed path.

Step	Action and Question	Yes	No
1	**Output terminal to Photoconductor unit on HVPS rear side** 1. Grind the output terminal “N” on the HVPS rear side with sandpaper. 2. Install the HVPS after making sure that the output terminal “N” on the HVPS rear side make proper contact with the spring on the Photoconductor unit side. 3. Print the image that has a problem, or execute test print. **Was the trouble fixed?**	Problem solved	Replace the HVPS *(p.371)*

manuals4you.com

3.6 Appendix

This printer cannot identify the faulty motor from the panel message. This section provides the information for identifying the faulty motor on the main motors “DRIVE ASSY MAIN” and “DRIVE ASSY PR”. Refer to “3.1.5 Warming-Up Flowchart At Power-ON” *(p.151)*.
For the other motors, refer to Chapetr 2 “OPERATING PRINCIPLES”.

DRIVE TRANSMISSION PARTS

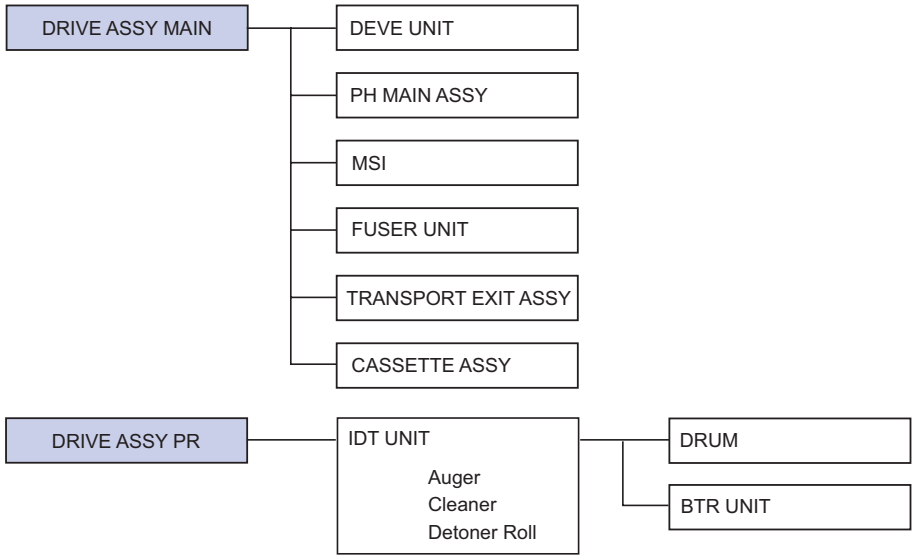

Figure 3-9. Drive Transmission Parts

WIRING DIAGRAM

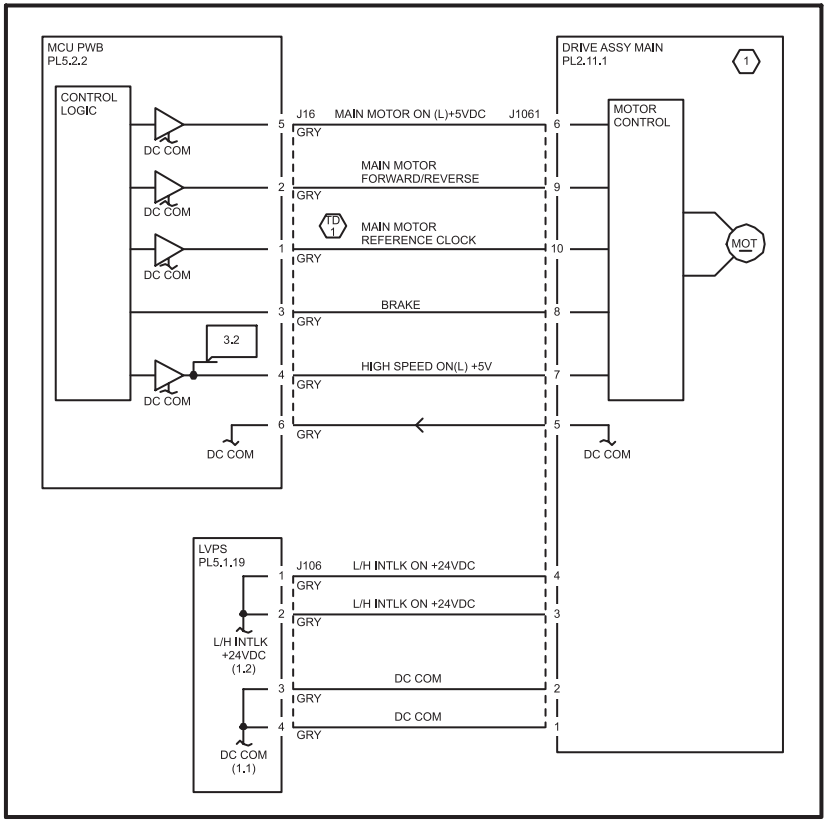

NOTE:

1 Main Motor runs in reverse rotation direction when it finishes Warm Up, JOB or process control or it stops due to fault occurrence.
IDT Unit and Drive Gear are disengaged by this reverse rotation, and IDT Unit can be removed.

TD 1 Test Point: Between Main Motor J1061-10 (+) and GND (-)
Voltage approx. +1.6VDC, frequency approx. 1.4KHz

Figure 3-10. DRIVE ASSY MAIN

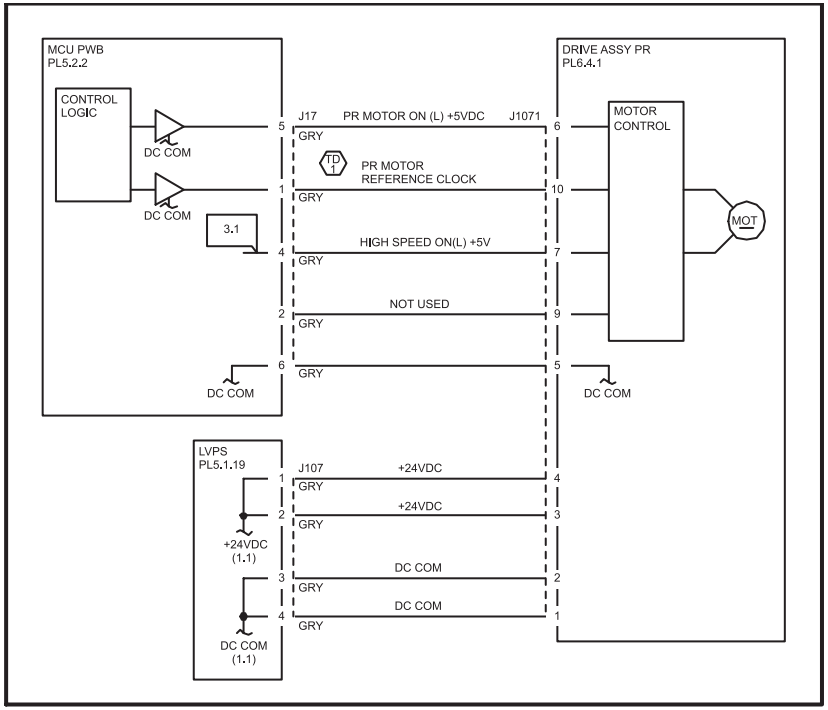

TD 1 Test Point: Between PR Motor J1071-10 (+) and GND (-)
When Motor is ON (normal speed), the voltage should be approx. +1.6VDC, and the frequency approx. 1.5KHz.

Figure 3-11. DRIVE ASSY PR

TROUBLE MODE

Table 3-7. Trouble mode

State	Phenomenon	DRIVE ASSY MAIN	DRIVE ASSY PR
Runaway	Paper jam	Paper cannot run	---
	Image quality	Expansion in process direction	Expansion in process direction
	Abnormal noise	Noise increase	Noise increase
Rotation unreached	Image quality	Reduction in process direction	Reduction in process direction

manuals4you.com

CHAPTER

4

DISASSEMBLY AND ASSEMBLY

4.1 Overview

This section describes procedures for disassembling the main components of the product.

Unless otherwise specified, disassembly units or components can be reassembled by reversing the disassembly procedure.

Things, if not strictly observed, that could result in injury or loss of life are described under the heading “Warning”.

Precautions for any disassembly or assembly procedures are described under the heading “CAUTION”.

Chips for disassembling procedures are described under the heading “CHECK POINT”.

If the assembling procedure is different from the reversed procedure of the disassembling, the procedure is described under the heading “REASSEMBLY”.

Any adjustments required after disassembling the units are described under the heading “ADJUSTMENT REQUIRED”.

When you have to remove any units or parts that are not described in this chapter, refer to the exploded diagrams in the appendix.

Consult Exploded Diagrams *(p.562)* in Appendix when you remove or disassemble any unit or component for which disassembly procedure is not described in this manual.

Read precautions described in the next section before starting.

4.1.1 Precautions

See the precautions given under the heading “WARNING” and “CAUTION” in the following column when disassembling or assembling the product.

WARNING

- **Disconnect the power cable before disassembling or assembling the printer. If you need to work on the printer with power applied, strictly follow the instructions in this manual.**
- **Always wear gloves for disassembly and reassembly to avoid injury from sharp metal edges.**
- **To protect sensitive microprocessors and circuitry, use static discharge equipment, such as anti-static wrist straps, when accessing internal components.**
- **Avoid exposing yourself to the laser beam to prevent injury (blindness).**
- **When you perform maintenance or service of the laser printer, never open any cover on which a warning label about laser beam is affixed.**
- **Understand how the laser beam functions and take maximum precautions not to injure yourself or anyone around you.**
- **The Fuser unit and other high-temperature parts remain at hazardous temperature for a certain period of time even after stop of operation and turning off of the power. To prevent suffering a burn, be sure to wait after power turning off until the temperature of the parts cool down to a safe level, and then start working on the printer.**
- **To avoid dust explosion or ignition, never bring any consumables close to flame or throw them into fire.**
- **When developer or oil stuck to your skin or clothes, wipe it off with a dry cloth carefully and wash it away with water completely.**

manuals4you.com

WARNING

- Take great care not to put developer or toner contained in the consumables into your mouth or eye or not to inhale it.
  Take due care that no one around you put developer or toner into the mouth or eye or inhale it. (Spread a sheet of paper inside and around the printer to prevent soiling.)
- Since there are many different screws, use them in correct positions. Be extremely careful of differentiating between the screws for resin and those for sheet metal. If the screw for resin is mistaken for the screw for sheet metal, its threads will be broken, leading to a crushed screw hole or trouble.
- Do not pick up the dropped toner with a vacuum cleaner (for home use). To do so may cause the sucked toner particles to catch fire by sparks of the electric contacts. If the toner has dropped on the floor, etc., clean it with a broom or wipe it with a cloth moistened with neural detergent. If it is necessary to clean a lot of dropped toner with a cleaner, use a cleaner exclusively designed for toner.

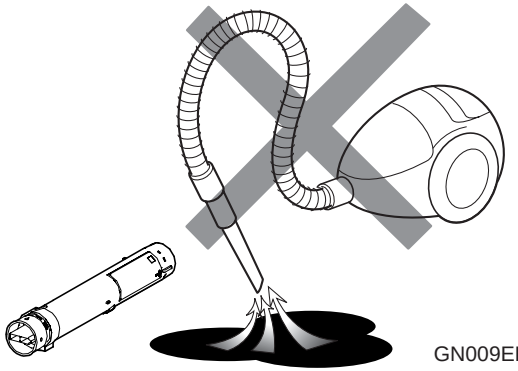

GN009EB

CAUTION

- Use only recommended tools for disassembling, assembling or adjusting the printer.
- Apply lubricants and adhesives as specified.
- Make the specified adjustments when you disassemble the printer. (Refer to Chapter 5 for details.)
- Remove the Cassette Assy, WASTE TONER COLLECTOR (p.295), Photoconductor unit (p.386) and IDT UNIT (p.386), and place them in a place where they will not interfere with your work. (Depending on the area of disassembly/reassembly, however, they may be kept installed if they need not be removed for work.)

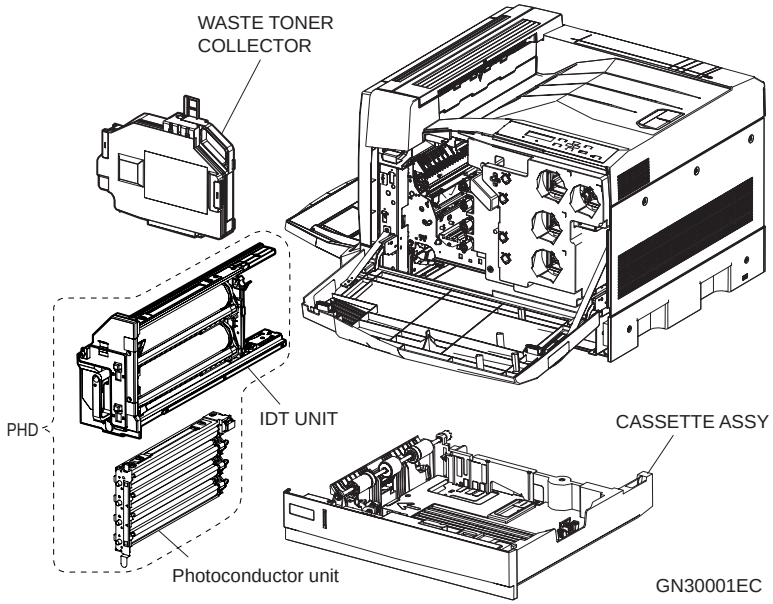

CAUTION

When the IDT UNIT has been removed, the LH Assy cannot be closed unless the Hook of the Stopper Assy IDT is pulled up by your finger as shown below to release the Stopper. In addition, the IDT UNIT must not be installed or removed with the LH ASSY closed. *(p.386)*

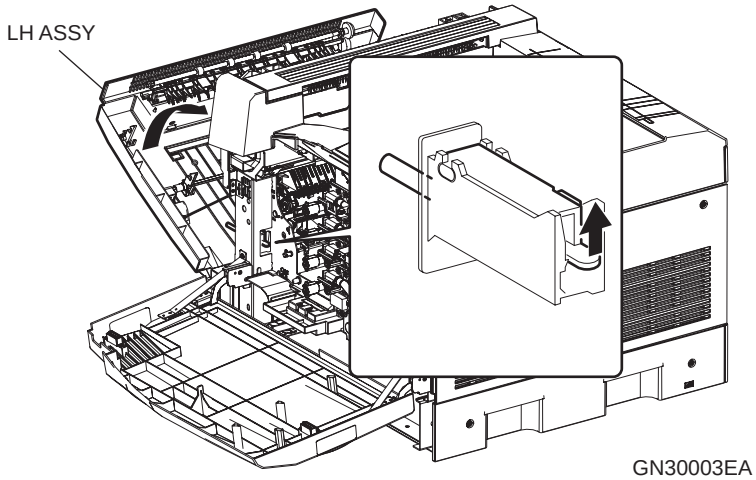

HOW TO REMOVE THE WASTE TONER COLLECTOR

1. Hold the left and right handles (positions in Figure 4-1) of the WASTE TONER COLLECTOR and pull out the WASTE TONER COLLECTOR.

CAUTION

Be sure to store the removed WASTE TONER COLLECTOR in a standing position, and take care not to give it impact or topple it over (to prevent mis-detection of full toner). Also, do not peel off the seal of the WASTE TONER COLLECTOR. To do so will leak the recovered toner.

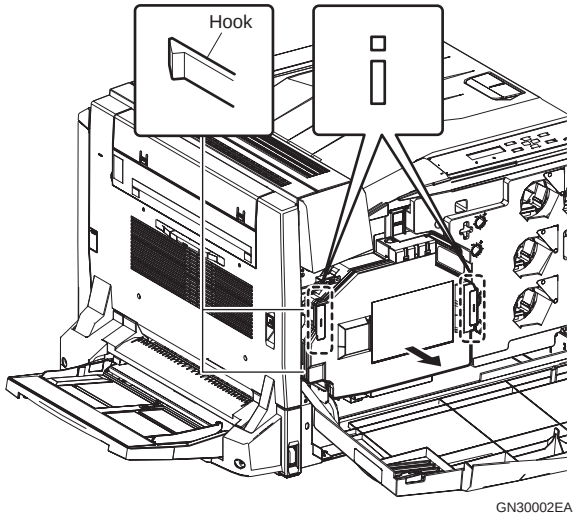

Figure 4-1. Removing the WASTE TONER COLLECTOR

manuals4you.com

4.1.2 Used Screw List

Note : Use the tapping screw for resin in the portion marked “TAP” in the screw installation position of the board, sheet metal or like.

Table 4-1. Used Screw List

No	Type	Application	Shape	Identification	Precautions
1	Screw for resin Gold tapping	Resin 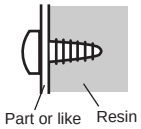	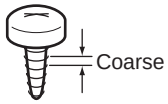	• Gold • Threads are coarser than those of the sheet metal type. • Threads are tapered.	Since the screw has a self-tapping function, its threads will be broken if the screw is inserted and tightened diagonally.
2	Screw for resin Black flanged tapping	Resin 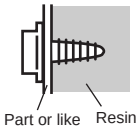	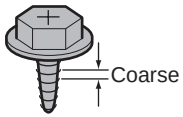	• Black • Flanged • Threads are coarser than those of the sheet metal type. • Threads are tapered.	Since the screw has a self-tapping function, its threads will be broken if the screw is inserted and tightened diagonally.
3	Screw for sheet metal Silver flanged	Sheet metal 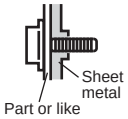	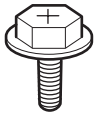	• Silver • Flanged • Threads are slightly tapered.	Since the screw has a self-tapping function, its threads will be broken if the screw is inserted and tightened diagonally.
4	Screw for sheet metal Silver	Sheet metal 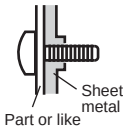	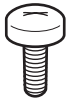	• Silver • Threads are slightly tapered.	Since the screw has a self-tapping function, its threads will be broken if the screw is inserted and tightened diagonally.
5	Screw for sheet metal Silver	Sheet metal 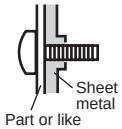		• Silver • Threads have equal diameter.	
6	Screw for sheet metal Gold flanged	Sheet metal 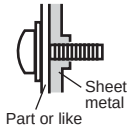	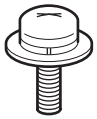	• Gold • Threads have equal diameter.	
7	Screw for sheet metal Black flanged	Sheet metal 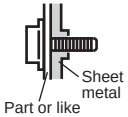	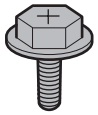	• Black • Flanged • Threads are slightly tapered.	Since the screw has a self-tapping function, its threads will be broken if the screw is inserted and tightened diagonally.

4.1.3 Tools

Use only specified tools to avoid damaging the printer.

Name	Commercial Availability	Code
Phillips screwdriver No. 1	Available	B743800100
Slotted screwdriver	Available	B743000100
Cutting pliers	Available	B740400100

4.1.4 Disassembly and Reassembly Procedure

This section describes the removal and reinstallation procedures of the main parts in 10 categories of the printer items.

Category	Disassembly/Reassembly Reference Page (Section No.)
Cover	*p.298 (4.2)*
Paper Transport	*p.305 (4.3)*
ROS	*p.357 (4.4)*
Fuser and Exit Transport	*p.361 (4.5)*
Electrical	*p.368 (4.6)*
Deve. and Xero.	*p.384 (4.7)*
Duplex and Side Tray	*p.414 (4.8)*
3 Tray Module	*p.431 (4.9)*
Single Tray Module	*p.450 (4.10)*
Tray Assy	*p.454 (4.11)*

CHECK POINT

- **Some parts are listed as spare parts but not mentioned in disassembly/assembly procedure. Therefore, look carefully how they are installed before you removing them.**
- **All options are to be removed before servicing, as a rule. However, you can leave them installed if their removal is not necessary.**

4.1.4.1 About Description of Procedure

- Directions are described as mentioned below.
  - Front : Front side viewing the printer toward its front side
  - Rear : Rear side viewing the printer toward its front side
  - Left : Left hand side viewing the printer toward its front side
  - Right : Right hand side viewing the printer toward its front side

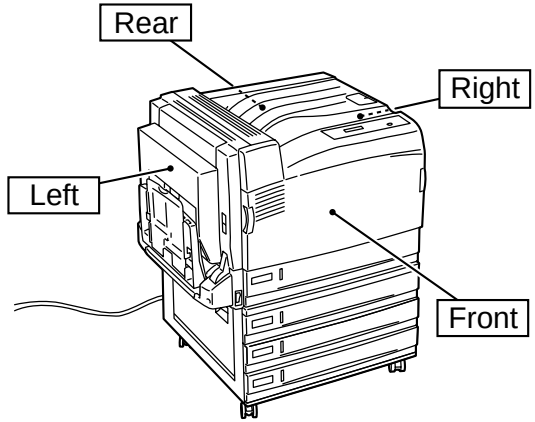

GN30004EA

Figure 4-2. Directions

- Screws are mentioned with descriptions including “(mounting location, color, feature, thread part length, and so on)”.
- Unless otherwise specified, it is assumed that a Phillips screwdriver is used to loosen and remove the screws in the sketches.
- If black arrows are shown with numbers, they show the order to act for the step.
- White arrows (FRONT) in the drawings show the front side of the printer.
- For the location of the connector (P/J), refer to “APPENDIX” *(p.496)*.

manuals4you.com

4.2 Cover

4.2.1 COVER ASSY RIGHT, COVER ASSY FRONT

REMOVAL

1. Remove the three screws (silver, 14mm) that secure the COVER ASSY RIGHT, and slide and remove the COVER ASSY RIGHT to the Rear side.
2. Open the COVER ASSY FRONT.
3. Remove the two screws (black, flanged tapping, 6mm) that secure the RIGHT SUPPORT and LEFT SUPPORT.
4. While holding the COVER ASSY FRONT, remove the two screws (black, flanged tapping, 8mm) that secure the PLATE HINGEs, and remove the COVER ASSY FRONT.

REINSTALLATION

1. Secure the COVER ASSY FRONT to the left and right PLATE HINGEs with the two screws (black, flanged tapping, 8mm).
2. Secure the RIGHT SUPPORT and LEFT SUPPORT to the COVER ASSY FRONT with the two screws (black, flanged tapping, 6mm).
3. Close the COVER ASSY FRONT.
4. Fit the three Hooks of the COVER ASSY RIGHT, slide the COVER ASSY RIGHT to the Front side, and secure it with the three screws (silver, 14mm).

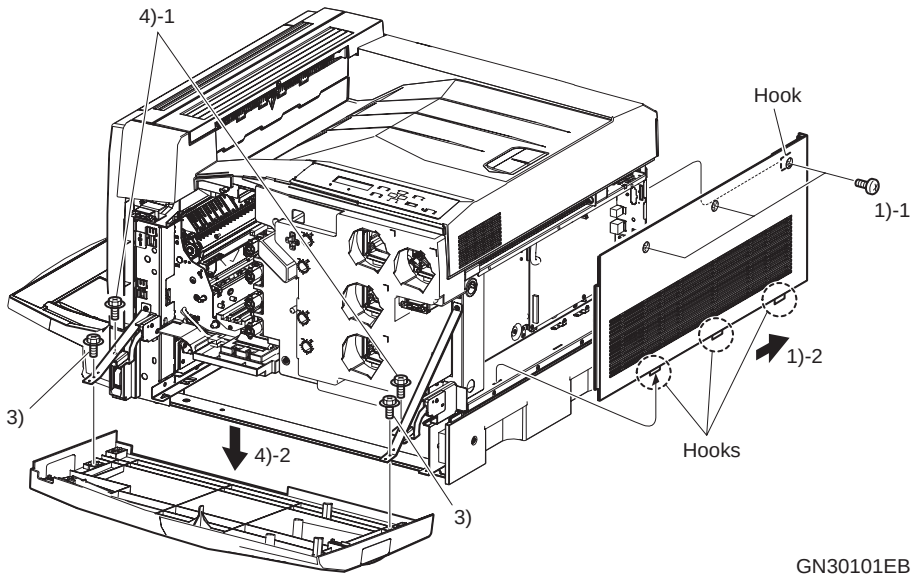

Figure 4-3. Removing the COVER ASSY RIGHT and COVER ASSY FRONT

4.2.2 COVER HIGH ASSY TOP, CONTROL PANEL

REMOVAL

1. Open the COVER ASSY FRONT.
2. Remove the two Front side screws (silver, flanged, 8mm) and three Rear side screws (silver, flanged, 8mm) that secure the COVER HIGH ASSY TOP.
3. Open the LH ASSY and lift the COVER HIGH ASSY TOP.

CAUTION

Since the COVER HIGH ASSY TOP is connected to the main unit by the HARNESS ASSY PANEL, do not separate it from the main unit too far.

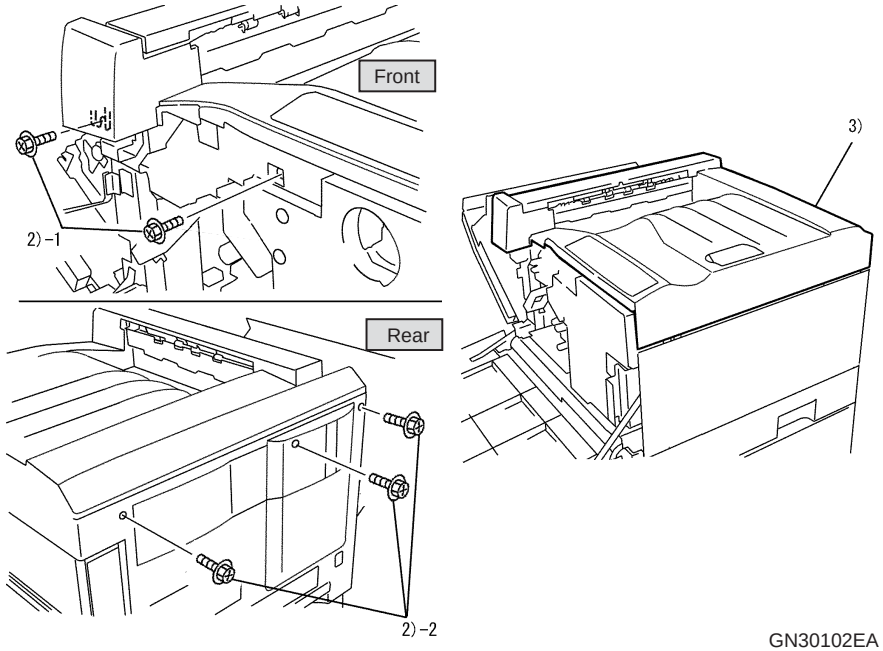

Figure 4-4. Removing the COVER HIGH ASSY TOP and CONTROL PANEL (1)

manuals4you.com

4. Release the two Hooks of the CONTROL PANEL, and remove the CONTROL PANEL from the COVER HIGH ASSY TOP.
5. Disconnect the Grounding cable from the Plate of the CONTROL PANEL.
6. Disconnect the Harness from the Connector (CN1) of the CONTROL PANEL.
7. Remove the COVER HIGH ASSY TOP.

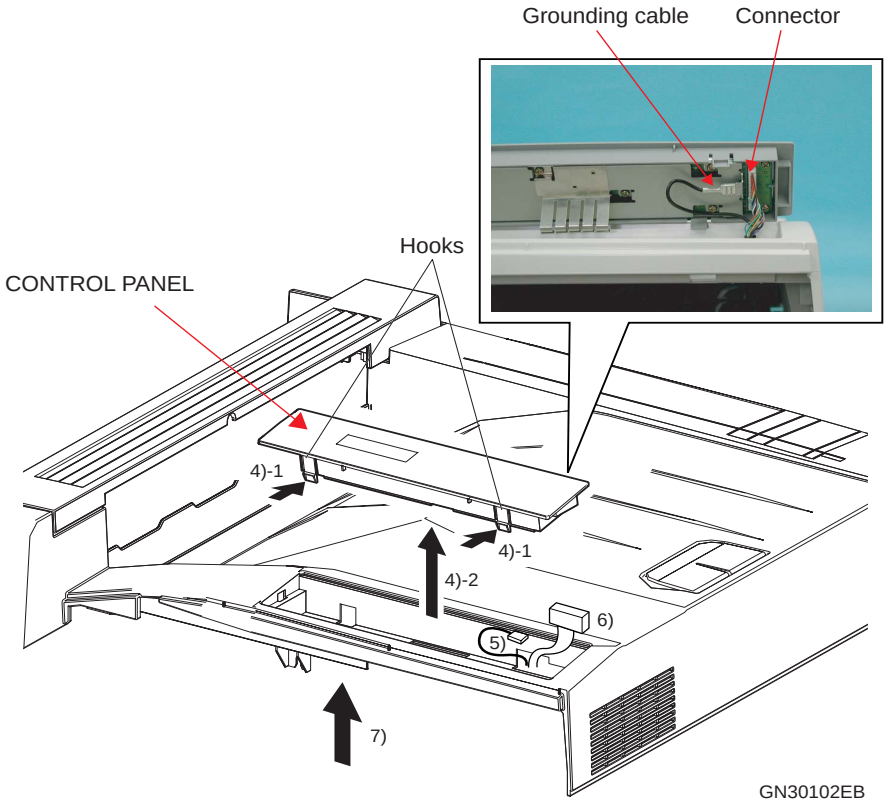

Figure 4-5. Removing the COVER HIGH ASSY TOP and CONTROL PANEL (2)

REINSTALLATION

1. Connect the Grounding cable to the Plate of the CONTROL PANEL.
2. Connect the HARNESS ASSY PANEL to the Connector (CN1) of the CONTROL PANEL.

CAUTION

1. Route the Grounding cable as shown in Figure 4-6 to prevent it from being pinched between the CONTROL PANEL Hooks and COVER HIGH ASSY TOP.

3. Match the four Hooks of the CONTROL PANEL with the COVER HIGH ASSY TOP, and install the CONTROL PANEL.
4. Secure the COVER HIGH ASSY TOP with the two Front side screws (silver, flanged, 8mm) and two Rear side screws (silver, flanged, 8mm), and close the LH ASSY.

CAUTION

2. When the IDT UNIT has been removed, the LH ASSY cannot be closed unless the STOPPER ASSY IDT is released. "4.1.1 Precautions" *(p.293)*

3. When you opened/closed the LH ASSY with the printer powered off, be sure to power on the printer after the work is finished to warm it up. Failure to do so may cause problems in print quality. (Refer to "3.3.4 FIP-P16" *(p.181)*)

5. Close the COVER ASSY FRONT.

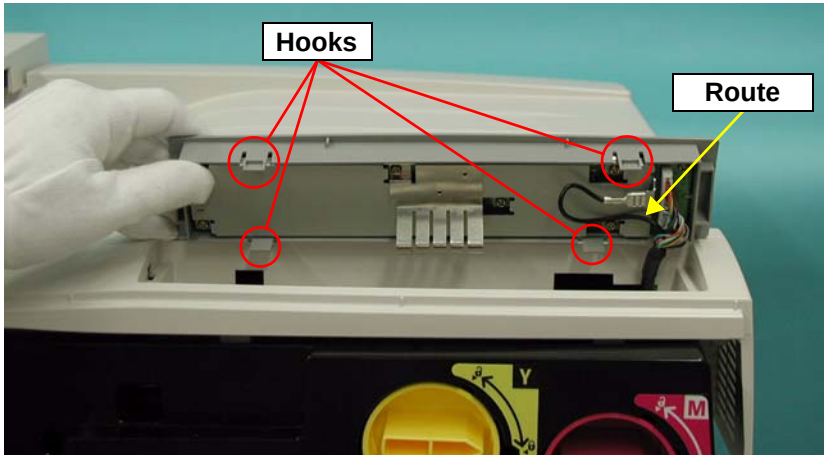

Figure 4-6. Installing the COVER HIGH ASSY TOP and CONTROL PANEL

manuals4you.com

4.2.3 COVER ASSY REAR, COVER RH LOW

REMOVAL

1. While pushing and releasing the three Hooks, remove the COVER CONNECT (Option) *(p.431,450)*, and disconnect the Harness of the Tray Module from the Connector (P/J251).
2. Remove the six screws (silver, flanged, 8mm) that secure the COVER ASSY REAR, and remove the COVER ASSY REAR.
3. Remove the two screws (silver, flanged, 8mm) that secure the COVER RH LOW, and slide and remove the COVER RH LOW to the Rear side.

REINSTALLATION

1. Secure the COVER RH LOW with the two screws (silver, flanged, 8mm).
2. Secure the COVER ASSY REAR with the six screws (silver, flanged, 8mm).
3. Connect the Connector (J251) of the HARNESS ASSY 3TM/STM of the Tray Module to the Connector (P251) of the HARNESS ASSY R-BTM, match the three Hooks, and install the COVER CONNECT (Option) *(p.431,450).*

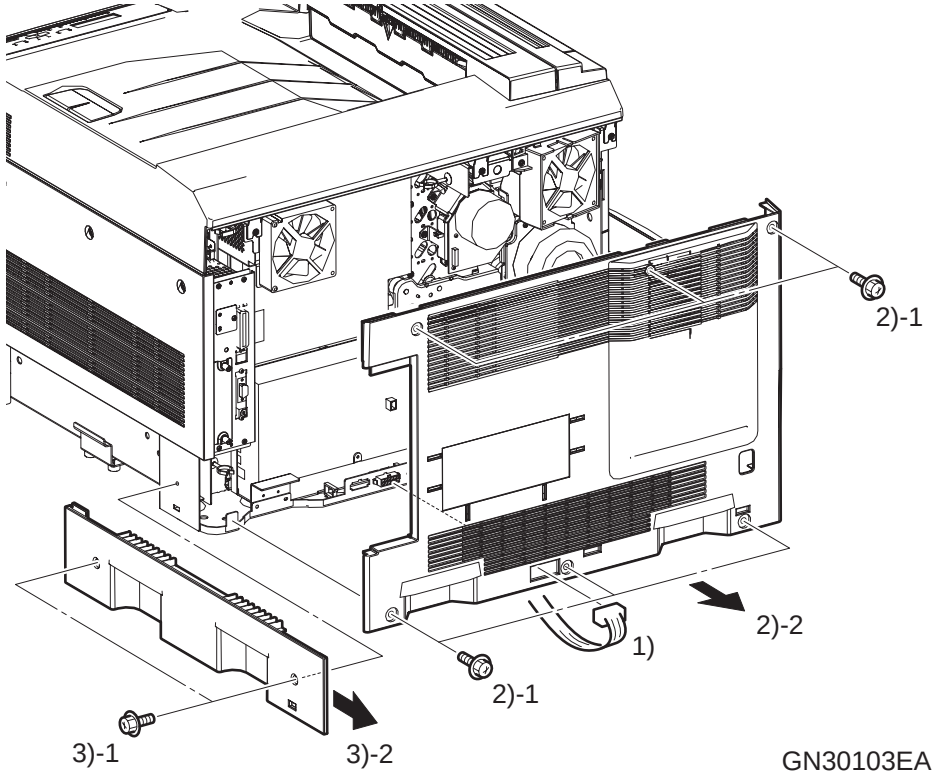

Figure 4-7. Removing the COVER ASSY REAR and COVER RH LOW

4.2.4 COVER FRONT LH LOW, COVER REAR LH LOW

REMOVAL

1. Remove the one screw (silver, flanged, 8mm) that secures the COVER FRONT LH LOW, release the one Hook, and remove the COVER FRONT LH LOW.
2. Remove the one screw (silver, flanged, 8mm) that secures the COVER REAR LH LOW, and remove the COVER REAR LH LOW.

REINSTALLATION

1. Secure the COVER REAR LH LOW with the one screw (silver, flanged, 8mm).
2. Secure the COVER FRONT LH LOW with the one screw (silver, flanged, 8mm).

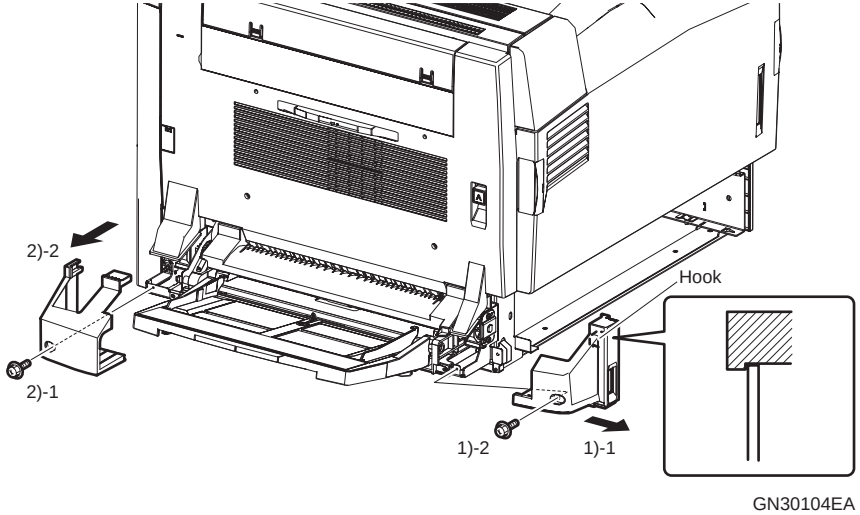

Figure 4-8. Removing the COVER FRONT LH LOW and COVER REAR LH LOW

manuals4you.com

4.2.5 FRONT COVER OPEN SENSOR

REMOVAL

1. Remove the COVER ASSY INNER. (p.413)
2. Peel off the SPACER SENSOR that secures the Hooks of the FRONT COVER OPEN SENSOR on the rear side of the BRACKET SENSOR.
3. Disconnect the Harness from the Connector (P/J223) of the FRONT COVER OPEN SENSOR, release the three Hooks, and remove the FRONT COVER OPEN SENSOR from the BRACKET SENSOR.

REINSTALLATION

1. Match the three Hooks to the BRACKET SENSOR, install the FRONT COVER OPEN SENSOR, and connect the Connector (J223) of the HARNESS ASSY F-SNR.
2. Apply the SPACER SENSOR to the rear side of the BRACKET SENSOR with the supplied double-faced tape so that the Hooks of the FRONT COVER OPEN SENSOR do not come off.

CAUTION

Apply the SPACER SENSOR to prevent the SENSOR Hooks from moving away and coming off toward the inside. Completely clean the application surface to remove oil, contamination, etc.

3. Install the COVER ASSY INNER. (p.413)

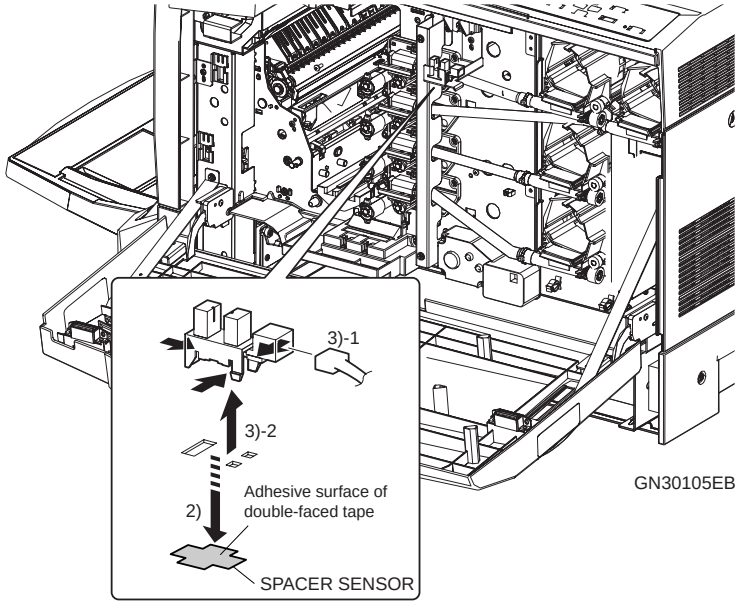

Figure 4-9. Removing the FRONT COVER OPEN SENSOR

4.3 Paper Transport

4.3.1 BTR UNIT ASSY

REMOVAL

1. Open the LH ASSY.
2. Grip and release the two Hooks of the BTR UNIT ASSY, rotate the BTR UNIT ASSY around the Hinges, and remove the BTR UNIT ASSY upward.

REINSTALLATION

1. Install the BTR UNIT ASSY, starting with its Hinges, and securely engage the two Hooks.
2. Release the Hook of the STOPPER ASSY IDT, and close the LH ASSY.

CAUTION

1. **When the IDT UNIT has been removed, the LH ASSY cannot be closed unless the STOPPER ASSY IDT is released. "4.1.1 Precautions" *(p.293)***
2. **When you opened/closed the LH ASSY with the printer powered off, be sure to power on the printer after the work is finished to warm it up. Failure to do so may cause problems in print quality. (Refer to "3.3.4 FIP-P16" *(p.181)*)**

ADJUSTMENT REQUIRED

After replacing the BTR UNIT ASSY, execute the following.
"5.1.2 Part/unit-based adjustment items" *(p.460)*

- **Life counter clear**

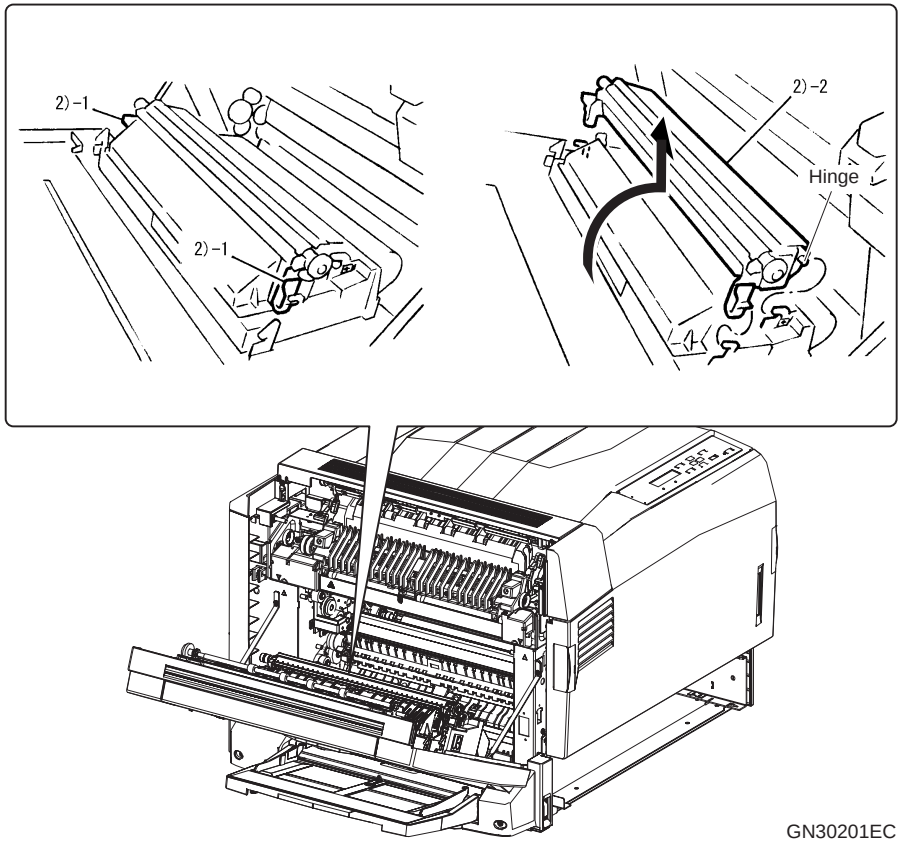

Figure 4-10. Removing the BTR UNIT ASSY

manuals4you.com

4.3.2 INTERLOCK SWITCH

REMOVAL

1. Remove the COVER ASSY REAR. *(p.302)*
2. Open the LH ASSY.
3. Disconnect the Harness from the Connector (P/J10B1) of the INTERLOCK SWITCH.
4. Release the four Hooks of the INTERLOCK SWITCH, and pull and remove the INTERLOCK SWITCH.

REINSTALLATION

1. Match and install the four Hooks of the INTERLOCK SWITCH to the main unit Frame.
2. Connect the Connector (J10B1) of the HARNESS ASSY R-TOP1 to the Connector (P10B1) of the INTERLOCK SWITCH.

CAUTION

1. The Connectors of the INTERLOCK SW and HARNESS ASSY R-TOP1 have no vertical orientations of connection. Connect them, referring to the figure.

3. Release the Hook of the STOPPER ASSY IDT, and close the LH ASSY.

CAUTION

2. When the IDT UNIT has been removed, the LH ASSY cannot be closed unless the STOPPER ASSY IDT is released. "4.1.1 Precautions" *(p.293)*

3. When you opened/closed the LH ASSY with the printer powered off, be sure to power on the printer after the work is finished to warm it up. Failure to do so may cause problems in print quality. (Refer to "3.3.4 FIP-P16" *(p.181)*)

4. Install the COVER ASSY REAR. *(p.302)*

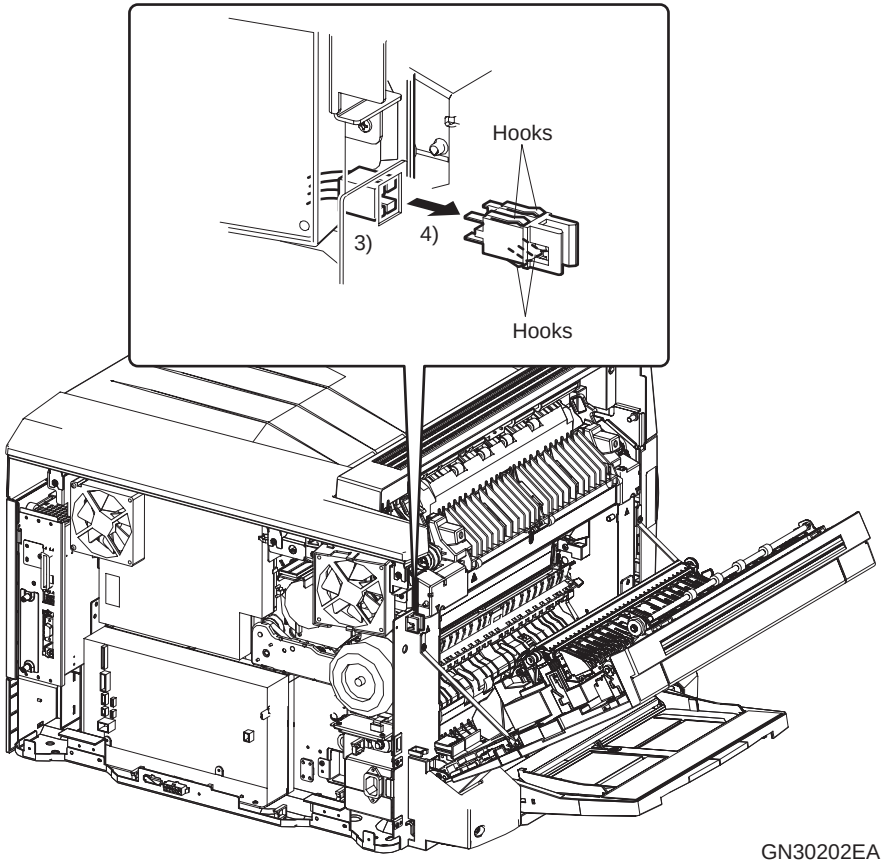

Figure 4-11. Removing the INTERLOCK SWITCH

4.3.3 LH ASSY

REMOVAL

1. Remove the DUPLEX ASSY (option). (p.414)
2. Remove the COVER FRONT LH LOW and COVER REAR LH LOW. (p.303)
3. Open the LH ASSY.
4. Remove the BTR UNIT ASSY. (p.305)
5. Remove the COVER ASSY REAR. (p.302)
6. Disconnect the Harness from the Connectors (P/J135) (T401) of the HVPS.
7. Remove the HARNESS ASSY HVLH from the nine Clamps.
8. Disconnect the Harness from the Relay Connector (P/J261) of the DUPLEX.
9. Remove the Relay Connector (P/J23B3) of the LH ASSY, and remove the Harness from the Clamp.

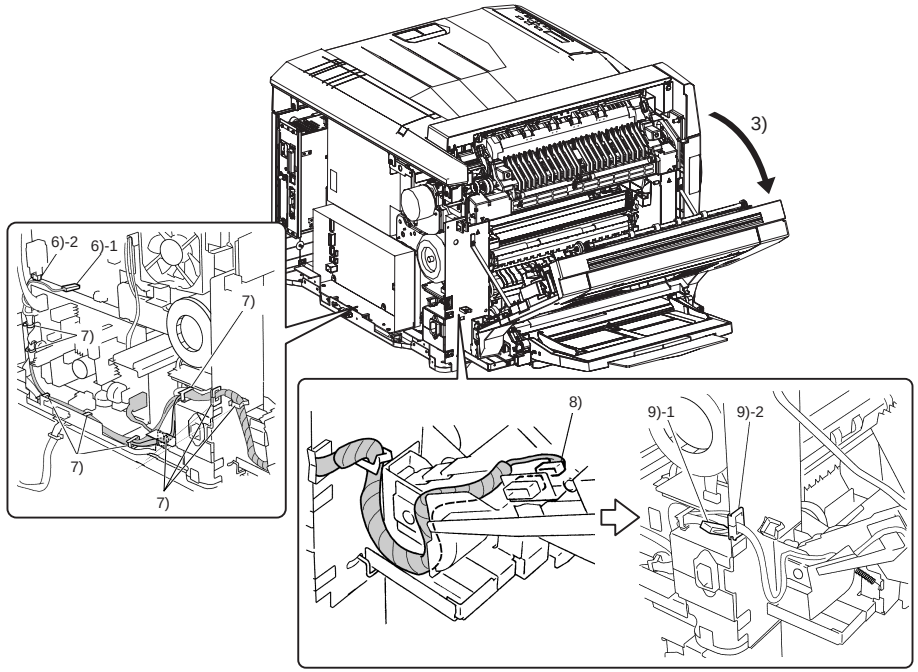

GN30203EC

Figure 4-12. Removing the LH ASSY (1)

manuals4you.com

10. Remove the two screws (black, flanged, 6mm) that secure the Rear side BRACKET PIN LH.
11. Release the Earth Wire from the Clamp, and remove the Rear side BRACKET PIN LH.
12. Remove the two screws (black, flanged, 6mm) that secure the SUPPORT L/Hs, and remove the front and rear SUPPORT L/Hs.
13. Remove the two screws (black, flanged, 6mm) that secure the Front side BRACKET PIN LH, and remove the BRACKET PIN LH.
14. Release the Hook of the STOPPER ASSY IDT, and close the LH ASSY.

CAUTION

1. **When the IDT UNIT has been removed, the LH ASSY cannot be closed unless the STOPPER ASSY IDT is released.** **"4.1.1 Precautions" *(p.293)***

15. While holding the LH ASSY, pull out the Front side and Rear side Pins.
16. Pull the Lever of the HANDLE ASSY LH to release the latch, and remove the LH ASSY.

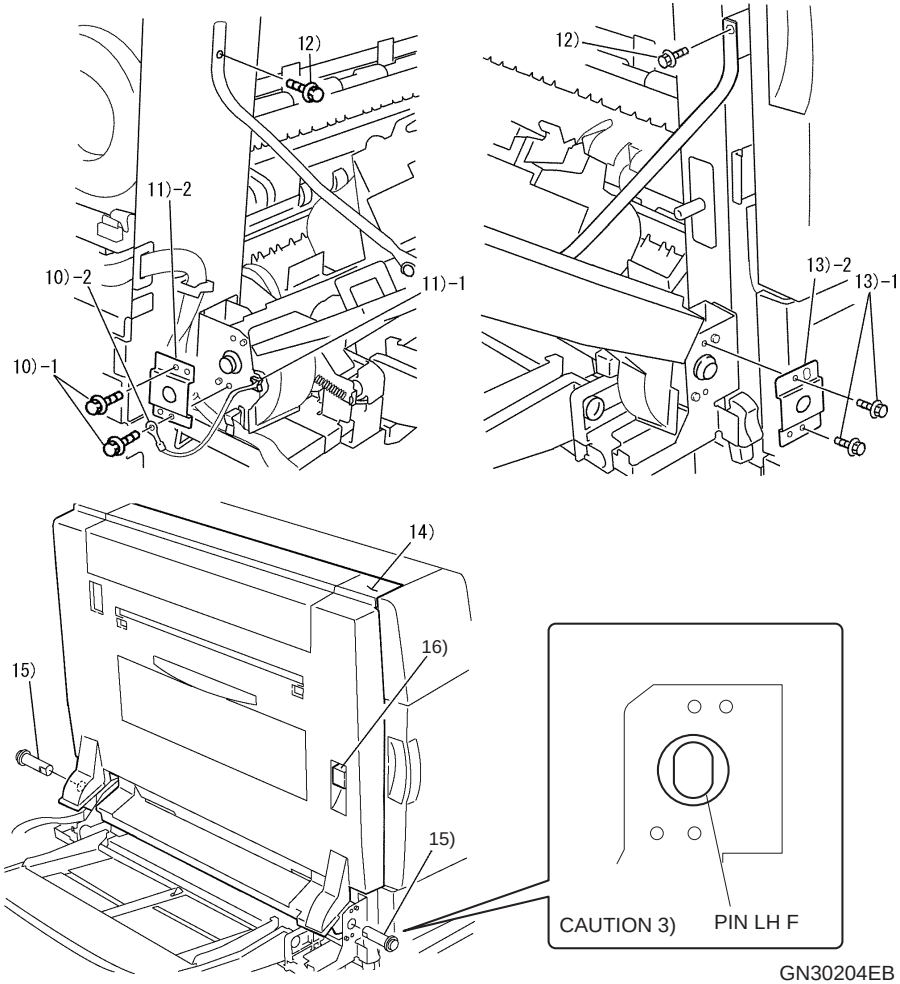

Figure 4-13. Removing the LH ASSY (2)

REINSTALLATION

CAUTION

2. When the IDT UNIT has been removed, the LH ASSY cannot be closed unless the STOPPER ASSY IDT is released. "4.1.1 Precautions" *(p.293)*

1. Raise the Lever of the HANDLE ASSY LHs, and install the LH ASSY to the main unit.
2. Fit the Front side and Rear side Pins.

CAUTION

3. Fit the Pins as far as they will go, being careful of the orientations of their notches (surface D).

3. Open the LH ASSY.
4. Secure the Front side BRACKET PIN LH with the two screws (black, flanged, 6mm).
5. Secure the front and rear SUPPORT L/Hs with the two screws (black, flanged, 6mm).
6. Secure the Earth Wire to the Clamp, and secure the Rear side BRACKET PIN LH with the two screws (black, flanged, 6mm) by tightening it together with the Earth Wire.
7. Connect the Relay Connector (J23B3) of the LH ASSY to the Connector (P23B3) of the HARNESS ASSY R-BTM, and secure the HARNESS ASSY R-BTM to the Clamp.
8. Connect the Relay Connector (J261) of the DUPLEX to the Connector (P261) of the HARNESS ASSY R-BTM.
9. Secure the HARNESS ASSY HVLH to the nine Clamps.
10. Connect the Connectors (J135) (T401) of the HARNESS ASSY HVLH to the Connectors (P135) (T401) of the HVPS.
11. Install the COVER ASSY REAR. *(p.302)*
12. Install the BTR UNIT ASSY. *(p.305)*
13. Release the Hook of the STOPPER ASSY IDT, and close the LH ASSY.

CAUTION

4. When the IDT UNIT has been removed, the LH ASSY cannot be closed unless the STOPPER ASSY IDT is released. "4.1.1 Precautions" *(p.293)*
5. When you opened/closed the LH ASSY with the printer powered off, be sure to power on the printer after the work is finished to warm it up. Failure to do so may cause problems in print quality. (Refer to "3.3.4 FIP-P16" *(p.181)*)

14. Install the COVER FRONT LH LOW and COVER REAR LH LOW. *(p.303)*
15. Install the DUPLEX ASSY. (Option) *(p.414)*

manuals4you.com

4.3.4 MSI, ROLL ASSY TURN

REMOVAL

CAUTION

1. **During work, be careful not to damage the Chute surface of the COVER CHUTE MSI.**

☐ MSI

1. Remove the DUPLEX ASSY (Option). *(p.414)*
2. Remove the COVER FRONT LH LOW and COVER REAR LH LOW. *(p.303)*
3. Remove the COVER ASSY REAR. *(p.302)*
4. Disconnect the Harness from the Connector (P/J23A3) of the SOLENOID ASSY and the Connector (P/J23A1) of the MSI NO PAPER SENSOR.
5. Open the LH ASSY about 15cm as shown in Figure 4-14.
6. Remove the two screws (silver, flanged, 8mm) that secure the MSI, and remove the MSI from the main unit in the direction of arrow.

☐ ROLL ASSY TURN

7. Turn the MSI upside down, remove the two E Rings that secure both ends of the ROLL ASSY TURN, and remove the two BEARINGs and GEAR TURN MSIs.
8. BY avoiding the FRAME ASSY MSI as shown by the arrow in Figure 4-14, remove the ROLL ASSY TURN.

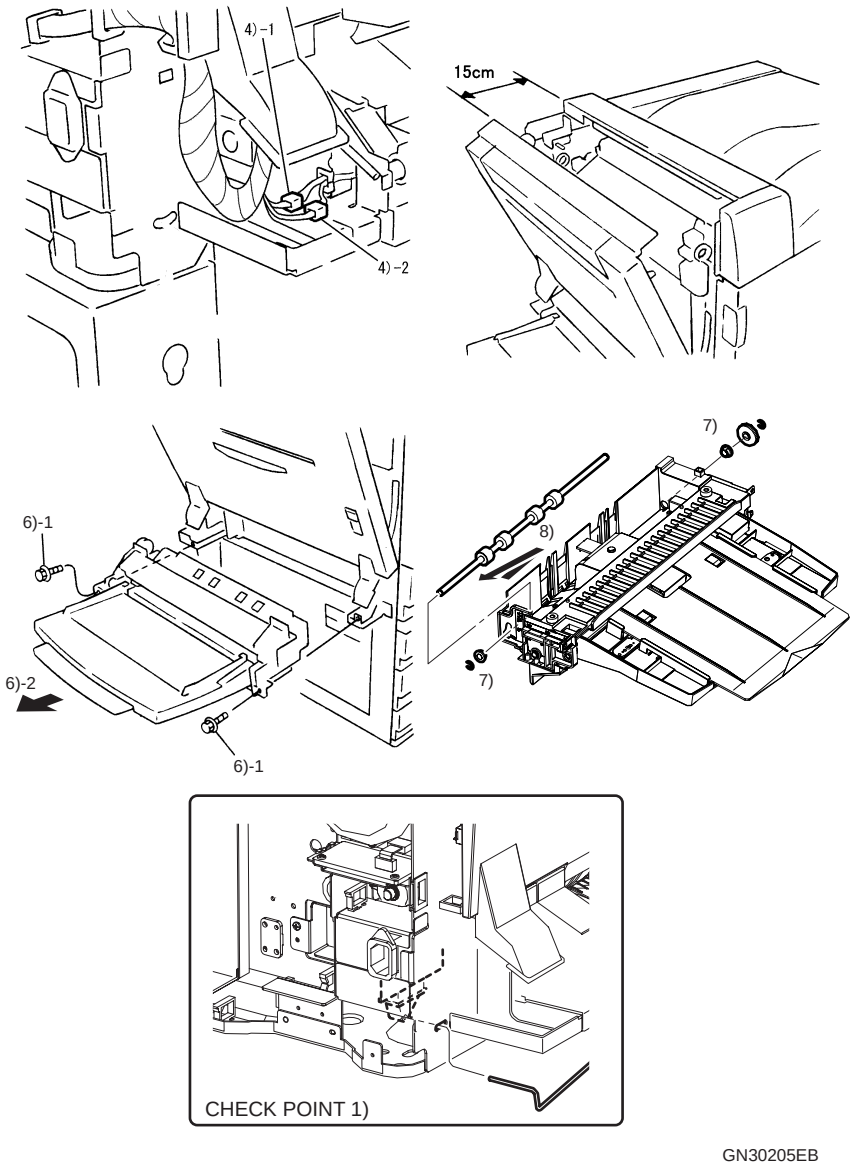

Figure 4-14. Removing the MSI and ROLL ASSY TURN

REINSTALLATION

☐ ROLL ASSY TURN

1. Install the LINK of the MAIN POWER SWITCH & INLET.

CHECK POINT

1. Since the installation hole of the INLET, where the LINK will be inserted, is dark, use a flashlight or remove the COVER ASSY REAR to do your work.

2. Insert the ROLL ASSY TURN from the opposite side of the GEAR TURN MSIs, and set it to the FRAME ASSY MSI.
3. Secure the two BEARINGs and GEAR TURN MSIs to both ends of the ROLL ASSY TURN with the E Rings.

☐ MSI

4. With the LH ASSY opened about 15cm, secure the MSI with the two screws (silver, flanged, 8mm).
5. Release the Hook of the STOPPER ASSY IDT, and close the LH ASSY.

CAUTION

2. When the IDT UNIT has been removed, the LH ASSY cannot be closed unless the STOPPER ASSY IDT is released. "4.1.1 Precautions" *(p.293)*

3. When you opened/closed the LH ASSY with the printer powered off, be sure to power on the printer after the work is finished to warm it up. Failure to do so may cause problems in print quality. (Refer to "3.3.4 FIP-P16" *(p.181)*)

6. Connect the Connector (J23A23) of the SOLENOID ASSY to the Connector (P23A3) of the HARNESS ASSY R-BTM.
7. Connect the Connector (P23A1) of the MSI NO PAPER SENSOR to the Connector (J23A1) of the HARNESS ASSY R-BTM.
8. Install the COVER ASSY REAR. *(p.302)*
9. Install the COVER FRONT LH LOW and COVER REAR LH LOW. *(p.303)*
10. Install the DUPLEX ASSY. (Option) *(p.414)*

CHECK POINT

2. By turning ON/OFF the Power Switch on front side, make sure that the Rear side MAIN POWER SWTICH & INLET clicks and turns on/off in synchronization with the motion of the LINK.

manuals4you.com

4.3.5 ROLL ASSY FEED ENV, ROLL ASSY FEED, HOLDER ASSY RETARD, SPRING RETARD

CAUTION

1. **When replacing the ROLL ASSY FEED ENV, ROLL ASSY FEED and HOLDER ASSY RETARD, replace them simultaneously since they reach the end of their useful life at the same time.**
2. **During work, be careful not to damage the Chute surface of the COVER CHUTE MSI.**

REMOVAL

1. Remove the DUPLEX ASSY (Option). *(p.414)*
2. Remove the COVER FRONT LH LOW and COVER REAR LH LOW. *(p.303)*
3. Remove the COVER ASSY REAR. *(p.302)*
4. Remove the MSI from the main unit. *(p.310)*
5. Remove the two screws (gold, tapping, 8mm) that secure the COVER CHUTE MSI, and remove the COVER CHUTE MSI.
6. Turn the SHAFT ASSY PICK UP in the direction of arrow until it reaches the position where the ROLL ASSY FEED ENVs can be removed easily, extend the opening of the ROLL ASSY FEED ENV, remove the Boss from the SHAFT ASSY PICK UP, and remove the two ROLL ASSY FEED ENVs.
7. Release the one Hook of the ROLL CORE, and move the ROLL CORE in the direction of arrow.
8. Remove the ROLL ASSY FEED from the Spring Pin of the SHAFT ASSY PICK UP.
9. Release the one Hook of the ROLL CORE, and move the ROLL CORE in the direction of arrow.
10. Move the Spacer in the direction of arrow.
11. Lower the PLATE ASSY BOTTOM.
12. Open the Stud in the direction of arrow, and remove the HOLDER ASSY RETARD.

CAUTION

3. **Be careful not to lose the SPRING RETARD attached to the HOLDER ASSY RETARD.**

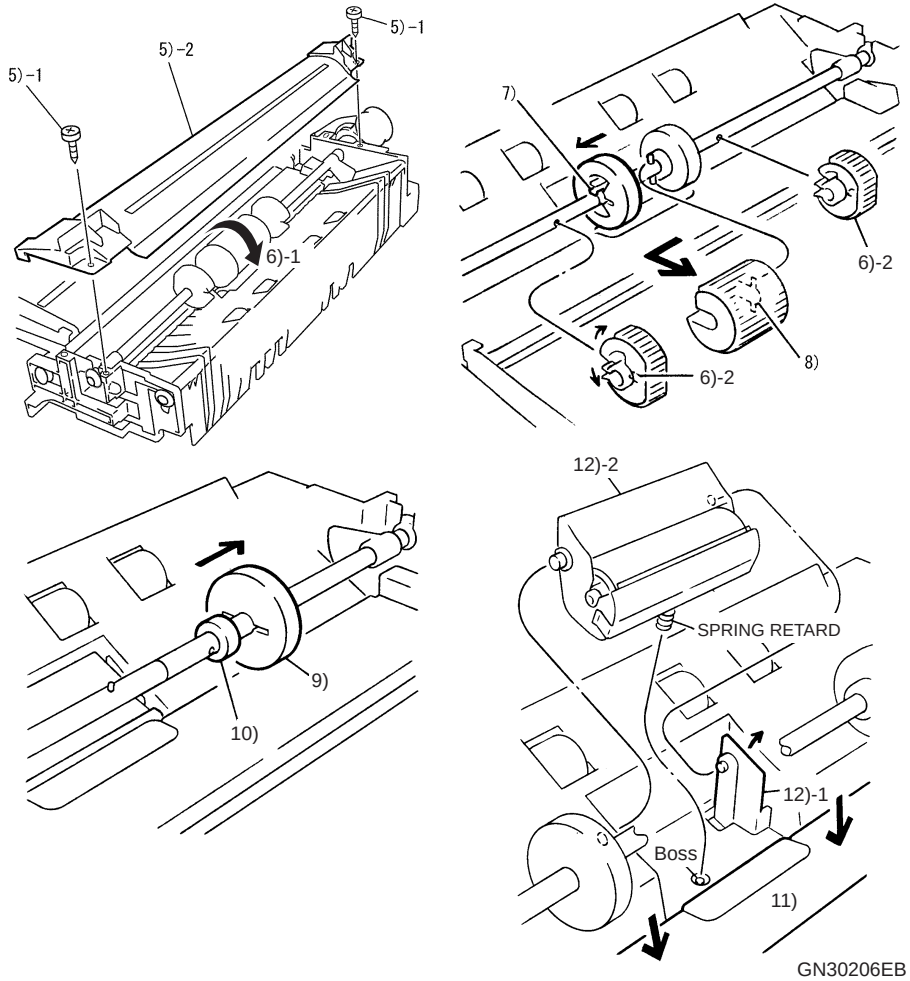

Figure 4-15. Removing the ROLL ASSY FEED ENV, ROLL ASSY FEED, HOLDER ASSY RETARD and SPRING RETARD

REINSTALLATION

1. Lower the PLATE ASSY BOTTOM, open the Stud, and install the HOLDER ASSY RETARD.

CHECK POINT

When installing the HOLDER ASSY RETARD, match the SPRING RETARD with the Boss of the FRAME ASSY MSI securely.

2. Move the Spacer.
3. Match the ROLL ASSY FEED to the Spring Pin of the SHAFT ASSY PICK UP, and install it securely.
4. Move the left and right ROLL COREs to the inside, respectively, fit the Hooks, and secure them to the SHAFT ASSY PICK UP.
5. Extend the opening of the ROLL ASSY FEED ENV, match the Boss to the hole of the SHAFT ASSY PICK UP, and install the two ROLL ASSY FEED ENVs.
6. Secure the COVER CHUTE MSI with the two screws (gold, tapping, 8mm).
7. Install the MSI to the main unit. *(p.310)*
8. Install the COVER ASSY REAR. *(p.302)*
9. Install the COVER FRONT LH LOW and COVER REAR LH LOW. *(p.303)*
10. Install the DUPLEX ASSY. (Option) *(p.414)*

manuals4you.com

4.3.6 PLATE ASSY BOTTOM, SPRING PICK UP, GEAR PICK UP, GEAR CAM

REMOVAL

CAUTION

1. During work, be careful not to damage the Chute surface of the COVER CHUTE MSI.

1. Remove the DUPLEX ASSY (Option). *(p.414)*
2. Remove the COVER FRONT LH LOW and COVER REAR LH LOW. *(p.303)*
3. Remove the COVER ASSY REAR. *(p.302)*
4. Remove the MSI from the main unit. *(p.310)*
5. Remove the two screws (gold, tapping, 8mm) that secure the COVER CHUTE MSI, and remove the COVER CHUTE MSI.
6. Remove the SPRING PICK UP.

CAUTION

2. To prevent the SPRING PICK UP from being lost, do not remove only one side but release both Hooks and store them.

7. Release the one Hook of the GEAR PICK UP, and remove the GEAR PICK UP.
8. Remove the GEAR CAM (together with the SPRING GEAR CAM and STOPPER LEVER).
9. Remove the E Ring that secures the BEARING (black) located on the SOLENOID ASSY side, and while holding down the LEVER GEAR, remove the BEARING.
10. Remove the E Ring that secures the BEARING (gold), and remove the BEARING
11. Remove the SHAFT ASSY PICK UP.
12. Lift and remove the PLATE ASSY BOTTOM.

CAUTION

3. Since the two SPRING N/Fs are freed, be careful not to lose them.

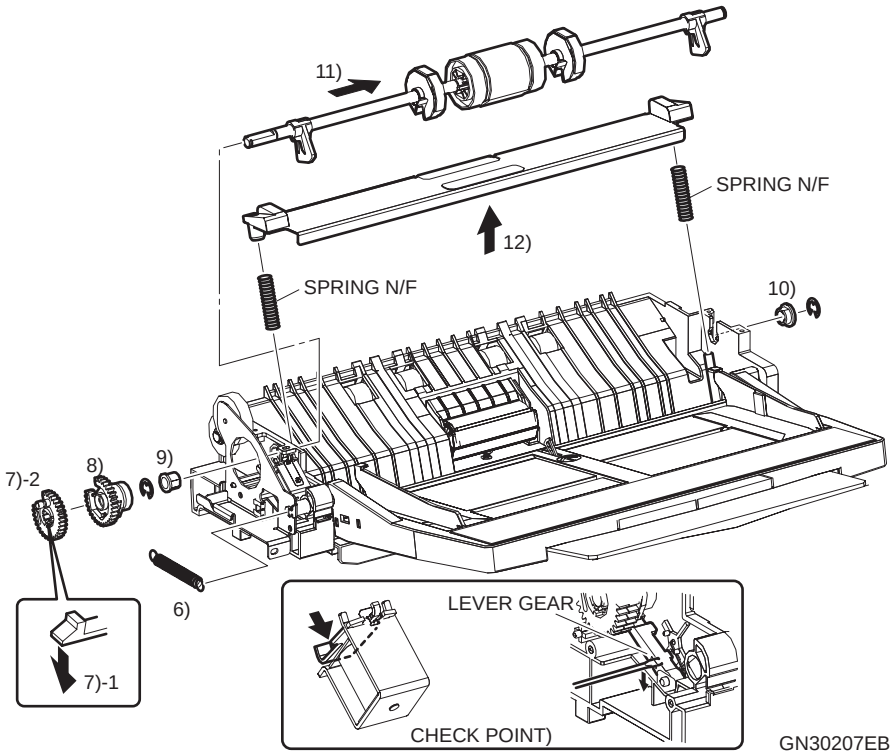

Figure 4-16. Removing the PLATE ASSY BOTTOM, SPRING PICK UP, GEAR PICK UP and GEAR CAM

REINSTALLATION

1. Install the PLATE ASSY BOTTOM so that its left and right Bosses are fitted into the SPRING N/Fs.
2. Install the SHAFT ASSY PICK UP.
3. Secure the BEARING (gold) with the E Ring.
4. Secure the BEARING (black) located on the SOLENOID ASSY side with the E Ring.
5. Install the GEAR CAM (together with the SPRING GEAR CAM and STOPPER LEVER).

CHECK POINT

When installing the GEAR CAM, push the SOLENOID ASSY Lever and LEVER GEAR and simultaneously match the D cut surface of the Shaft.

6. Match the one Hook of the GEAR PICK UP, and install the GEAR PICK UP.
7. Install the SPRING PICK UP.
8. Secure the COVER CHUTE MSI with the two screws (gold, tapping, 8mm).
9. Install the MSI to the main unit. *(p.310)*
10. Install the COVER ASSY REAR. *(p.302)*
11. Install the COVER FRONT LH LOW and COVER REAR LH LOW. *(p.303)*
12. Install the DUPLEX ASSY. (Option) *(p.414)*

manuals4you.com

4.3.7 SOLENOID ASSY

CAUTION

1. **During work, be careful not to damage the Chute surface of the COVER CHUTE MSI.**

REMOVAL

1. Remove the DUPLEX ASSY (Option). *(p.414)*
2. Remove the COVER FRONT LH LOW and COVER REAR LH LOW. *(p.303)*
3. Remove the COVER ASSY REAR. *(p.302)*
4. Remove the MSI from the main unit. *(p.310)*
5. Remove the Harness from the Clamp of the PLATE ASSY.
6. Remove the one screw (gold, tapping, 6mm) that secures the SOLDNOID ASSY, and while pushing down the LEVER GEAR, remove the SOLENOID ASSY.

REINSTALLATION

1. Secure the SOLENOID ASSY with the one screw (gold, tapping, 6mm).
2. Secure the Harness of the SOLENOID ASSY to the Clamp.
3. Install the MSI to the main unit. *(p.310)*
4. Install the COVER ASSY REAR. *(p.302)*
5. Install the COVER FRONT LH LOW and COVER REAR LH LOW. *(p.303)*
6. Install the DUPLEX ASSY. (Option) *(p.414)*

CAUTION

2. **When the IDT UNIT has been removed, the LH ASSY cannot be closed unless the STOPPER ASSY IDT is released. "4.1.1 Precautions" *(p.293)***
3. **When you opened/closed the LH ASSY with the printer powered off, be sure to power on the printer after the work is finished to warm it up. Failure to do so may cause problems in print quality. (Refer to "3.3.4 FIP-P16" *(p.181)*)**

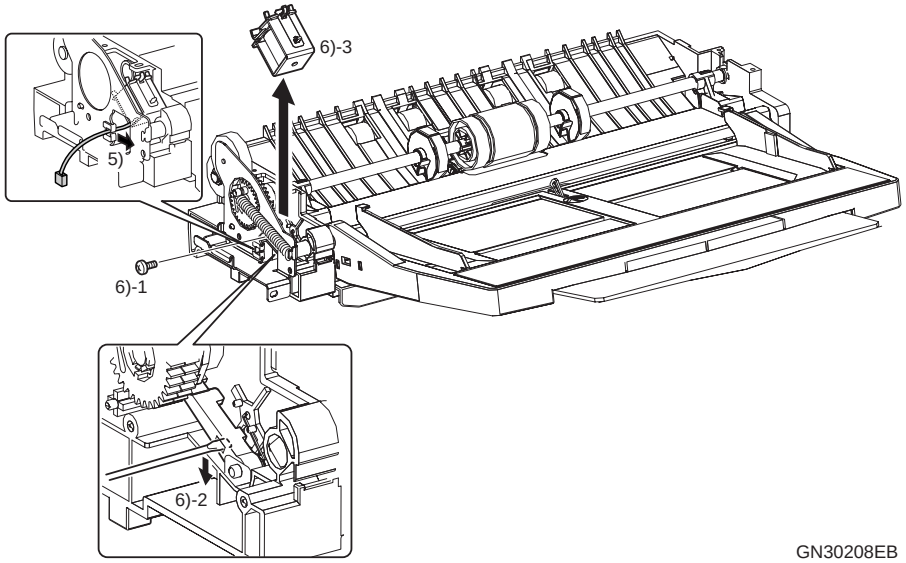

Figure 4-17. Removing the SOLENOID ASSY

4.3.8 MSI TRAY

CAUTION

1. **During work, be careful not to damage the Chute surface of the COVER CHUTE MSI.**

REMOVAL

1. Remove the DUPLEX ASSY (Option). *(p.414)*
2. Remove the COVER FRONT LH LOW and COVER REAR LH LOW. *(p.303)*
3. Remove the COVER ASSY REAR. *(p.302)*
4. Remove the MSI from the main unit. *(p.310)*
5. Remove the SPRING PICK UP.
6. Remove the two screws (gold, tapping, 8mm) that secure the PLATE ASSY, and remove the PLATE ASSY.
7. Remove the Harness from the Clamp of the PLATE ASSY.
8. Lower the PLATE ASSY BOTTOM, and remove the MSI TRAY exercising care not to peel the Pad.
9. Remove the Harness from the groove of the FRAME ASSY MSI.

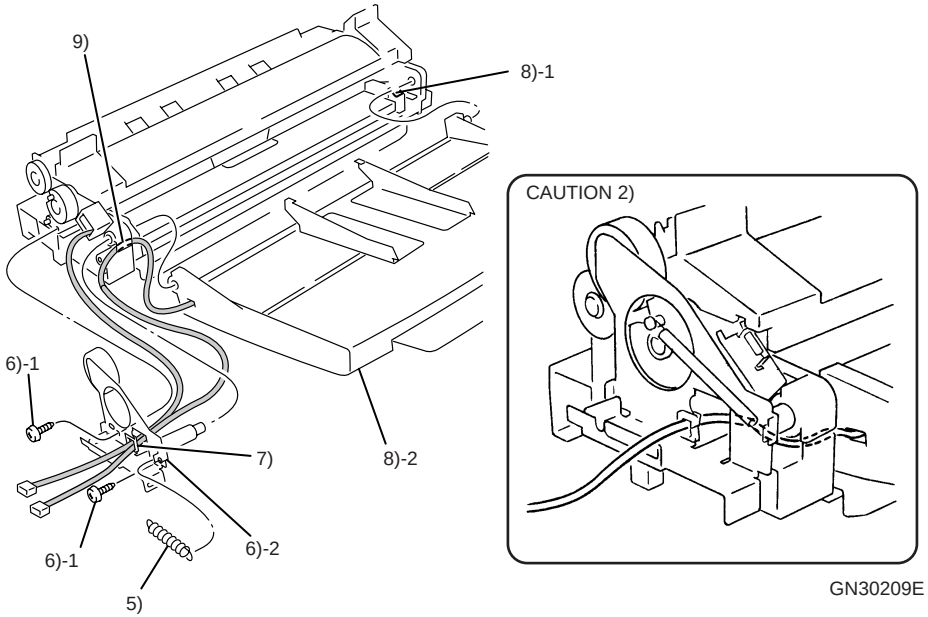

Figure 4-18. Removing the MSI TRAY

manuals4you.com

REINSTALLATION

1. Lower the PLATE ASSY BOTTOM, and install the MSI TRAY exercising care not to peel the Pad.
2. Pass the HARNESS ASSY N/P into the groove of the FRAME ASSY MSI, and secure it to the Clamp of the PLATE ASSY.

CAUTION

2. Route the Harness of the MSI TRAY as shown in Figure 4-18.

3. Secure the PLATE ASSY with the two screws (gold, tapping, 8mm).
4. Install the SPRING PICK UP.
5. Install the MSI to the main unit. *(p.310)*
6. Install the COVER ASSY REAR. *(p.302)*
7. Install the COVER FRONT LH LOW and COVER REAR LH LOW. *(p.303)*
8. Install the DUPLEX ASSY. (Option) *(p.414)*

4.3.9 MSI NO PAPER SENSOR

CAUTION

1. During work, be careful not to damage the Chute surface of the COVER CHUTE MSI.

REMOVAL

1. Raise the MSI TRAY, and pull out the TRAY EXTENT.
2. Release the three Hooks of the COVER SENSOR, release the one Boss with a flat-blade screwdriver or similar tool, and remove the COVER SENSOR.
3. Peel the SPACER SENSOR that secures the Hook of the MSI NO PAPER SENSOR on the rear side of the TRAY BASE.
4. Disconnect the Harness from the Connector (P/J23A2) of the MSI NO PAPER SENSOR.
5. Release the four Hooks of the MSI NO PAPER SENSOR, and remove the MSI NO PAPER SENSOR.

REINSTALLATION

1. Match the four Hooks, and install the MSI NO PAPER SENSOR.
2. Connect the Connector (J23A2) of the HARNESS ASSY N/P to the Connector (P23A2) of the MSI NO PAPER SENSOR.
3. Apply the SPACER SENSOR with the supplied double-faced tape on the rear side of the TRAY BASE so that the Hooks of the MSI NO PAPER SENSOR do not come off.

CAUTION

2. Apply the SPACER SENSOR to prevent the SENSOR Hooks from moving away and coming off toward the inside. Completely clean the application surface to remove oil, contamination, etc.

4. Match the three Hooks and one Boss, and install the COVER SENSOR.
5. Lower the MSI TRAY.

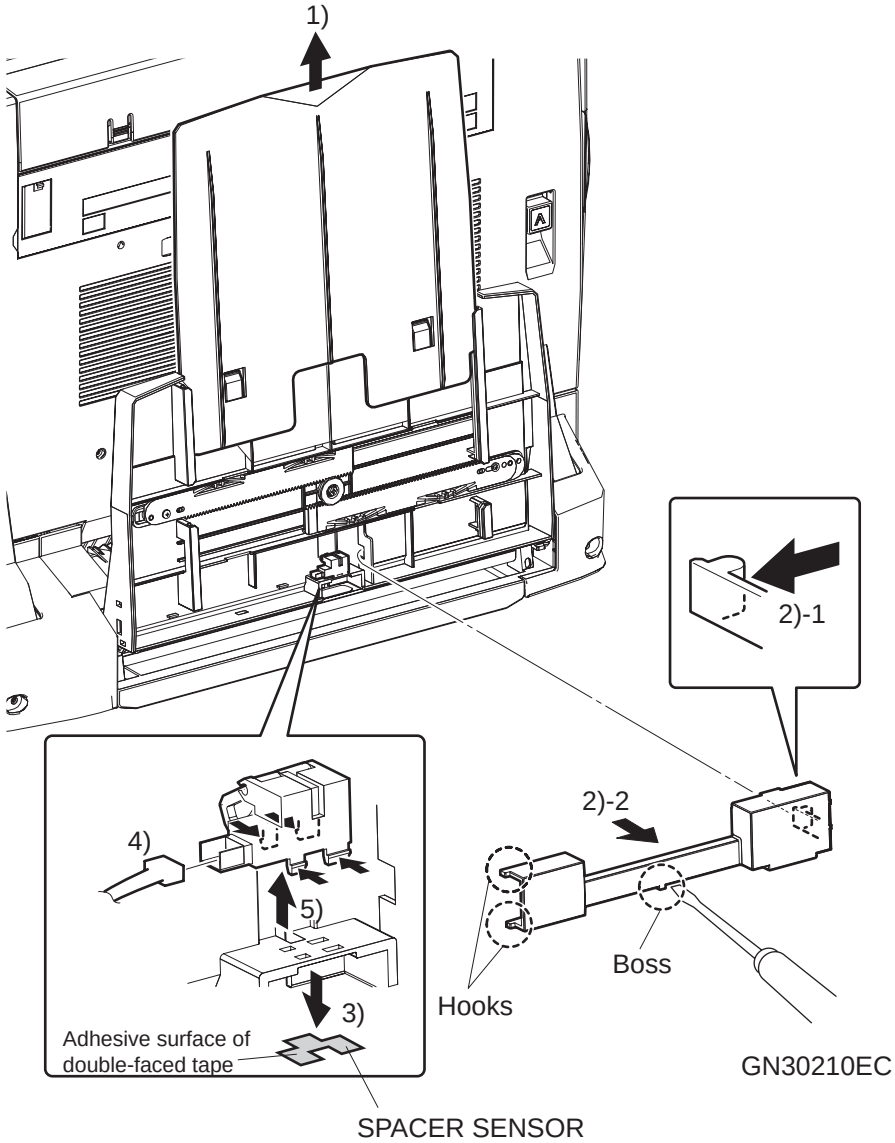

Figure 4-19. Removing the MSI NO PAPER SENSOR

manuals4you.com

4.3.10 GUIDE SIDE FRONT, GUIDE SIDE REAR

REMOVAL

1. Raise the MSI TRAY, and pull out the TRAY EXTENT.
2. Remove the one screw (silver, flanged tapping, 8mm) that secures the RACK GEAR located on the GUIDE SIDE FRONT side, remove the RACK GEAR, and remove the GUIDE SIDE FRONT.
3. Remove the one screw (silver, flanged tapping, 8mm) that secures the RACK GEAR located on the GUIDE SIDE REAR side, remove the RACK GEAR, and remove the GUIDE SIDE REAR.

REINSTALLATION

CAUTION

Install the GUIDE SIDE FRONT and GUIDE SIDE REAR, with the two GUIDE SIDE FRONT/REAR shifted toward the inside.

1. Secure the RACK GEAR located on the GUIDE SIDE REAR side with the one screw (silver, flanged tapping, 8mm), and install the GUIDE SIDE REAR.
2. Secure the RACK GEAR located on the GUIDE SIDE FRONT side with the one screw (silver, flanged tapping, 8mm), and install the GUIDE SIDE FRONT.
3. Lower the MSI TRAY.

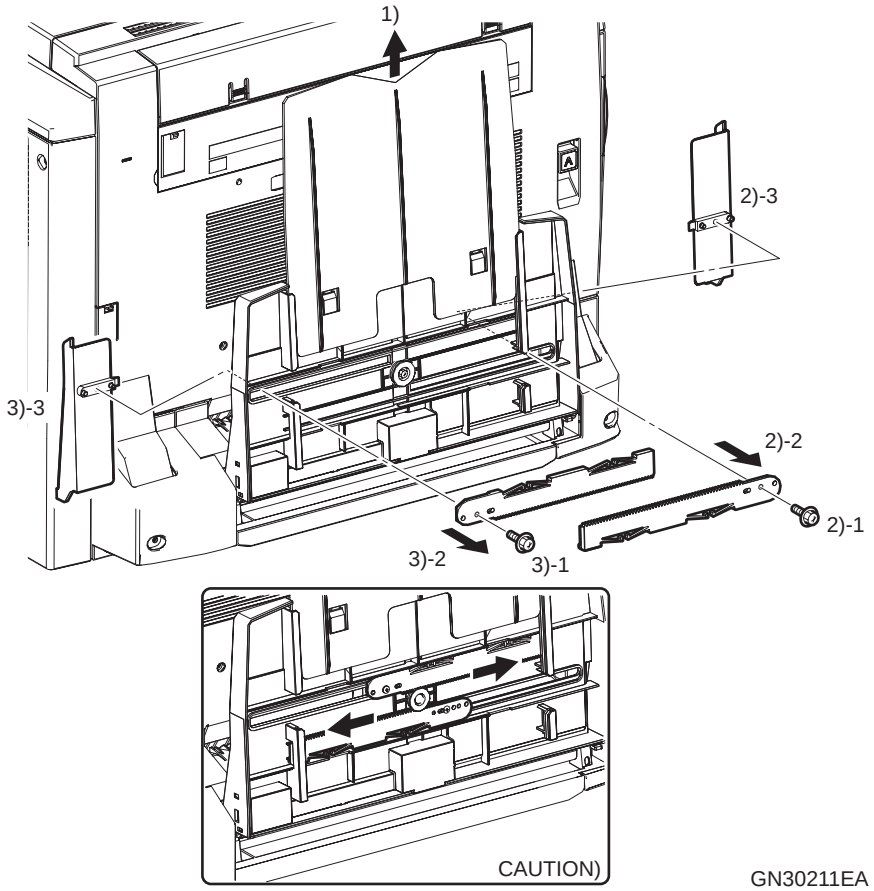

Figure 4-20. Removing the GUIDE SIDE FRONT and GUIDE SIDE REAR

4.3.11 CAP FUT, COVER EXIT

REMOVAL

1. Remove the DUPLEX ASSY (Option). (p.414)
2. Remove the COVER FRONT LH LOW and COVER REAR LH LOW. (p.303)
3. Release the two Hooks of the CAP FUT, and remove the CAP FUT.
4. Pull the Lever of the HANDLE ASSY LH to release the latch, and slightly open the LH ASSY.
5. Remove the two screws (silver, flanged tapping, 8mm) that secure the COVER EXIT.
6. Lift the COVER EXIT to release the three Hooks, and remove the COVER EXIT.

REINSTALLATION

1. Securely engage the three Hooks of the COVER EXIT with the Frame, and install the COVER EXIT.
2. Secure the COVER EXIT with the two screws (silver, flanged tapping, 8mm).
3. Match the two Hooks of the CAP FUT with the grooves of the COVER EXIT, and install the CAP FUT.
4. Install the COVER FRONT LH LOW and COVER REAR LH LOW. (p.303)
5. Install the DUPLEX ASSY. (Option) (p.414)

CAUTION

After installing the COVER EXIT, make sure that the three Hooks of the COVER EXIT are securely inserted.

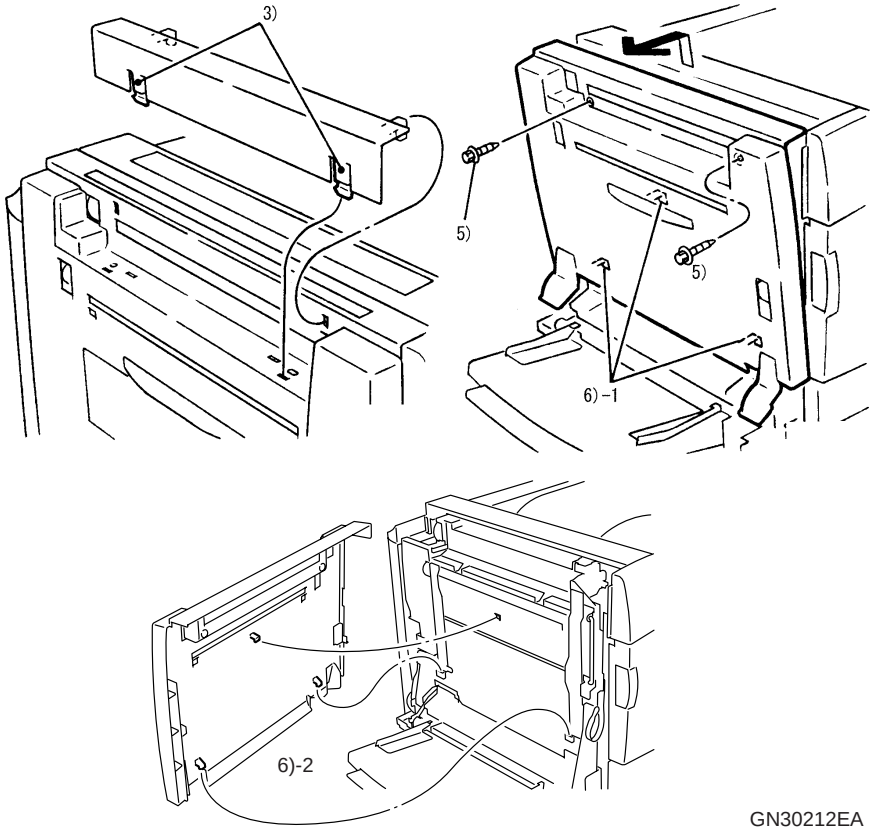

Figure 4-21. Removing the CAP FUT and COVER EXIT

manuals4you.com

4.3.12 HANDLE ASSY L/H, WIRE ASSY GND

REMOVAL

1. Remove the DUPLEX ASSY (Option). *(p.414)*
2. Remove the COVER FRONT LH LOW and COVER REAR LH LOW. *(p.303)*
3. Remove the CAP FUT and COVER EXIT. *(p.321)*
4. Open the LH ASSY.
5. Release the two bottom Hooks and one top Hook of the two upper HOLDER LATCHes, respectively, and remove the two HOLDER LATCHes together with the LATCH EXITs and LINK LATCH EXITs.
6. Remove the two screws (black, flanged tapping, 8mm: The lower side is tightened together with the WIRE ASSY GND) that secure the PLATE TIE R.
7. Remove the one screw (silver, 6mm) that tightens the BRACKET CONNECTOR D and three Harness Terminals together to the PLATE TIE R, and pull and remove the PLATE TIE R.

CHECK POINT

When it cannot be removed easily, loosen the screw (gold, tapping, 8mm) that secures the BRACKET CONNECTOR D to the LH ASSY in advance.

CAUTION

1. The WIRE ASSY GND is freed by executing the following step.

8. Remove the three screws (black, flanged tapping, 8mm: The lower side is tightened together with the GND) that secure the PLATE TIE F, and remove the PLATE TIE F.
9. Pull up the Opening/Closing Lever of the HANDLE ASSY L/H toward you.
10. Release the two bottom Hooks and one top Hook of the two lower HOLDER LATCHes, respectively, and remove the two HOLDER LATCHes.
11. Remove the HANDLE ASSY L/H.

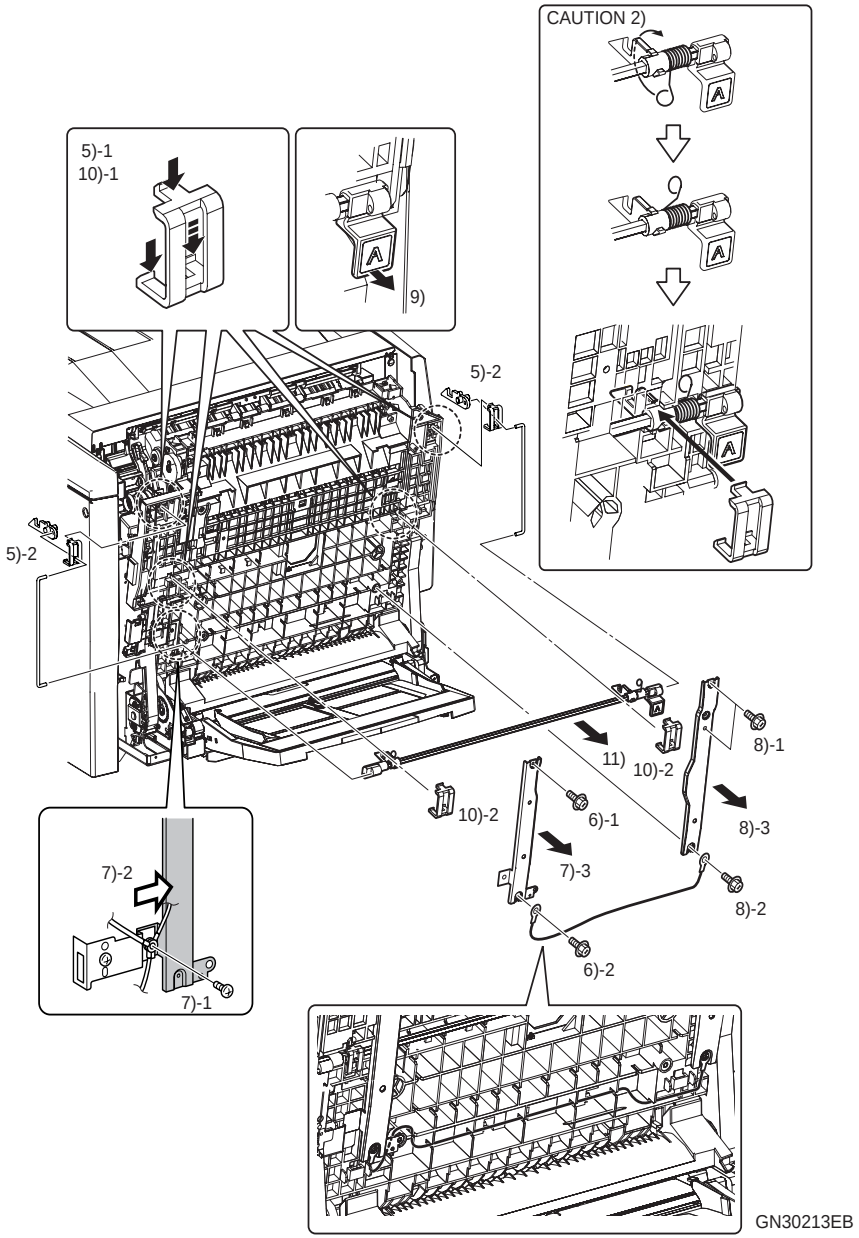

Figure 4-22. Removing the HANDLE ASSY L/H and WIRE ASSY GND

REINSTALLATION

1. Set the HANDLE ASSY L/H.

CAUTION

2. When installing the HANDLE ASSY L/H, note the orientation of the Spring

2. Match the one top Hook and two bottom Hooks of the two lower HOLDER LATCHes, and install the two HOLDER LATCHes.

CAUTION

3. When installing the HOLDER LATCH, fit the top Hook first and then fit the bottom Hooks.

3. Install the PLATE TIE F, and tighten and secure the PLATE TIE F together with the WIRE ASSY GND with the three screws (black, flanged tapping, 8mm).
4. Insert and install the PLATE TIE R between the BRACKET CONNECTOR D and LH ASSY, and tighten the BRACKET CONNECTOR D and three Harness Terminals to the PLATE TIE R with the one screw (silver, 6mm).

CAUTION

4. When you have loosened the screw (gold, tapping, 8mm) that secures the BRACKET CONNECTOR D to the LH ASSY, remember to tighten this screw.

5. Tighten and secure the PLATE TIE R together with the WIRE ASSY GND with the two screws (black, flanged tapping, 8mm).
6. Hold the LATCH EXIT, HOLDER LATCH and LINK LATCH EXIT in the installation positions, match the one top Hook and two bottom Hooks of the HOLDER LATCH, and install the two upper HOLDER LATCHes.

CAUTION

5. When installing the HOLDER LATCH, fit the top Hook first and then fit the bottom Hooks.

7. Release the Hook of the STOPPER ASSY IDT, and close the LH ASSY.

CAUTION

6. When the IDT UNIT has been removed, the LH ASSY cannot be closed unless the STOPPER ASSY IDT is released. "4.1.1 Precautions" *(p.293)*

7. When you opened/closed the LH ASSY with the printer powered off, be sure to power on the printer after the work is finished to warm it up. Failure to do so may cause problems in print quality. (Refer to "3.3.4 FIP-P16" *(p.181)*)

8. Install the CAP FUT and COVER EXIT. *(p.321)*
9. Install the COVER FRONT LH LOW and COVER REAR LH LOW. *(p.303)*
10. Install the DUPLEX ASSY. (Option) *(p.414)*

manuals4you.com

4.3.13 CHUTE TRANS, V-TRA FAN

REMOVAL

1. Open the LH ASSY.
2. Remove the BTR UNIT ASSY. *(p.305)*
3. Disconnect the Harness from the Connector (P/J23B4) of the V-TRA FAN.
4. Remove the two screws (gold, tapping, 8mm) that secure the CHUTE TRANS, and remove the CHUTE TRANS mounted with the V-TRA FAN.
5. Remove the two screws (gold, tapping, 25mm) that secure the V-TRA FAN, and remove the V-TRA FAN and DUCT COVER from the CHUTE TRANS.
6. Release the four Hooks of the CHUTE TRANS INLET, and remove the CHUTE TRANS INLET from the CHUTE TRANS.

REINSTALLATION

1. Match the four Hooks of the CHUTE TRANS INLET, and install the CHUTE TRANS INLET to the CHUTE TRANS.
2. Install the V-TRA FAN to the CHUTE TRANS together with the DUCT COVER with the two screws (gold, tapping, 25mm).
3. Connect the Connector (P23B4) of the V-TRA FAN to the Connector (J23B4) of the HARNESS ASSY LH.
4. Secure the CHUTE TRANS INLET and V-TRA FAN with the two screws (gold, tapping, 8mm).
5. Install the BTR UNIT ASSY. *(p.305)*
6. Release the Hook of the STOPPER ASSY IDT, and close the LH ASSY.

CAUTION

1. **When the IDT UNIT has been removed, the LH ASSY cannot be closed unless the STOPPER ASSY IDT is released. "4.1.1 Precautions" *(p.293)***
2. **When you opened/closed the LH ASSY with the printer powered off, be sure to power on the printer after the work is finished to warm it up. Failure to do so may cause problems in print quality. (Refer to "3.3.4 FIP-P16" *(p.181)*)**

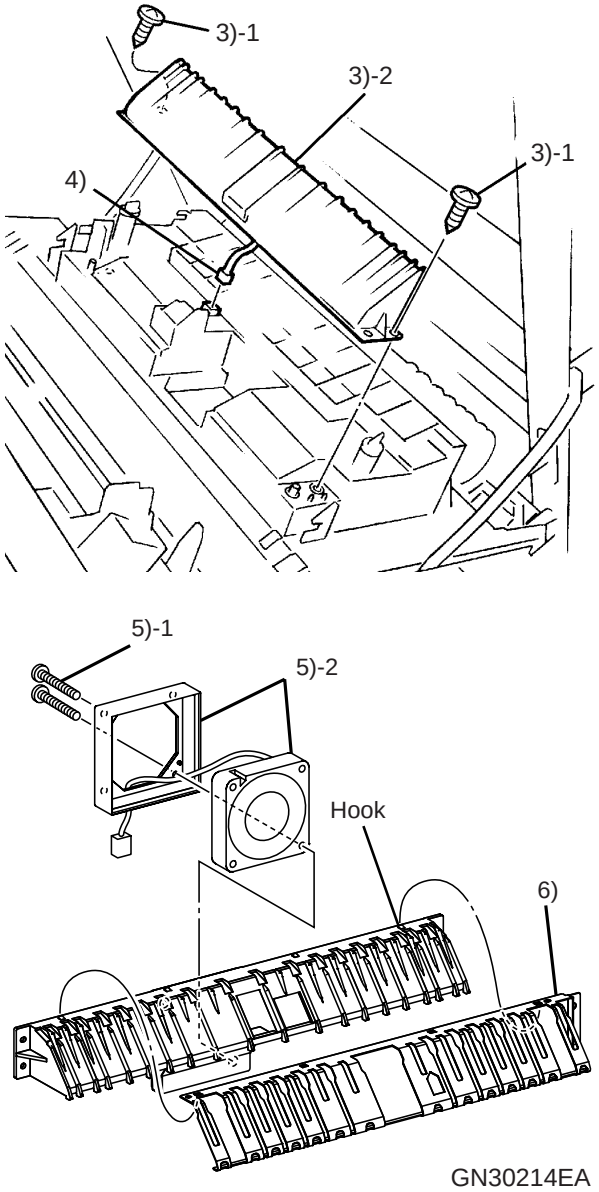

Figure 4-23. Removing the CHUTE TRANS and V-TRA FAN

4.3.14 POP SENSOR

REMOVAL

1. Open the LH ASSY.
2. Remove the BTR UNIT ASSY. (p.305)
3. Remove the CHUTE TRANS mounted with the CHUTE TRANS INLET and V-TRA FAN. (p.324)
4. Disconnect the Harness from the Connector (P/J23B5) of the POP SENSOR.
5. Release the Hook, and remove the POP SENSOR.

REINSTALLATION

1. Match the Hook, and install the POP SENSOR.
2. Connect the Connector (J23B5) of the HARNESS ASSY LH to the Connector (P23B5) of the POP SENSOR.
3. Install the CHUTE TRANS mounted with the CHUTE TRANS INLET and V-TRA FAN. (p.324)
4. Install the BTR UNIT ASSY. (p.305)
5. Release the Hook of the STOPPER ASSY IDT, and close the LH ASSY.

CAUTION

1. **When the IDT UNIT has been removed, the LH ASSY cannot be closed unless the STOPPER ASSY IDT is released. "4.1.1 Precautions" (p.293)**
2. **When you opened/closed the LH ASSY with the printer powered off, be sure to power on the printer after the work is finished to warm it up. Failure to do so may cause problems in print quality. (Refer to "3.3.4 FIP-P16" (p.181))**

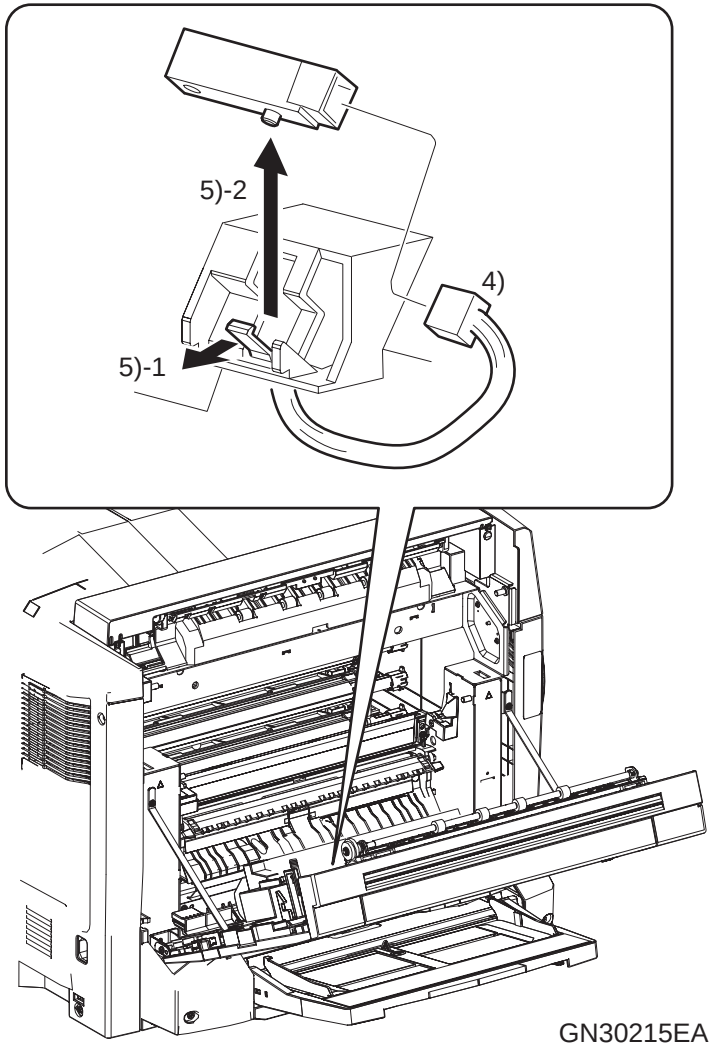

Figure 4-24. Removing the POP SENSOR

manuals4you.com

4.3.15 ROLL PINCH TURN, SPRING TURN

REMOVAL

1. Remove the DUPLEX ASSY (Option). *(p.414)*
2. Remove the COVER FRONT LH LOW and COVER REAR LH LOW. *(p.303)*
3. Remove the CAP FUT and COVER EXIT. *(p.321)*
4. Remove the MSI from the main unit. *(p.310)*
5. Remove the front and rear screws (black, flanged, 6mm) that secure the SUPPORT L/Hs.
6. Release the two Hooks of the HUSING SPRING TURN, and remove the HUSING SPRING TURN and SPRING TURN on one side.
7. Remove the ROLL PINCH TURN.

REINSTALLATION

1. Install the ROLL PINCH TURN.
2. Match the two Hooks of the HUSING SPRING TURN, and install the removed SPRING TURN and HUSING SPRING TURN.
3. Secure the front and rear SUPPORT L/Hs with the screws (black, flanged, 6mm).
4. Install the MSI to the main unit. *(p.310)*
5. Install the CAP FUT and COVER EXIT. *(p.321)*
6. Install the COVER FRONT LH LOW and COVER REAR LH LOW. *(p.303)*
7. Install the DUPLEX ASSY. (Option) *(p.414)*

CAUTION

1. **When the IDT UNIT has been removed, the LH ASSY cannot be closed unless the STOPPER ASSY IDT is released. "4.1.1 Precautions" *(p.293)***
2. **When you opened/closed the LH ASSY with the printer powered off, be sure to power on the printer after the work is finished to warm it up. Failure to do so may cause problems in print quality. (Refer to "3.3.4 FIP-P16" *(p.181)*)**

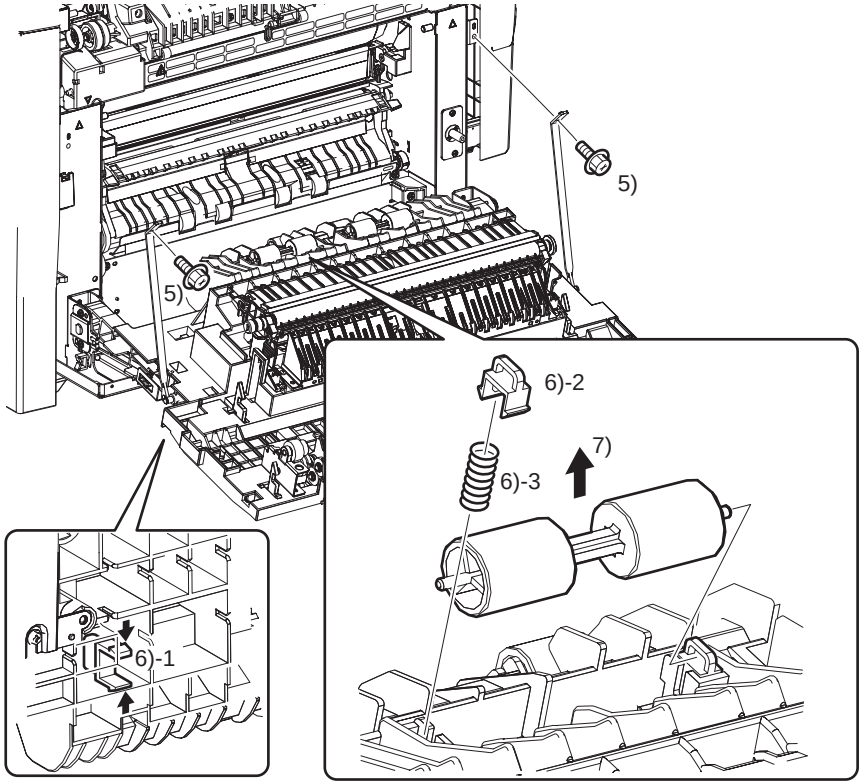

GN30216EA

Figure 4-25. Removing the ROLL PINCH TURN and SPRING TURN

4.3.16 KIT CHUTE TRANS

REMOVAL

1. Open the LH ASSY.
2. Remove the Fuser unit. *(p.361)*
3. Remove the one screw (gold, tapping, 8mm) that secures the KIT CHUTE TRANS, slide the KIT CHUTE TRANS to the front side, and remove it.

REINSTALLATION

1. Match the KIT CHUTE TRANS to the Rear side Boss, and secure it with the one screw (gold, tapping, 8mm).
2. Install the Fuser Unit. *(p.361)*
3. Release the Hook of the STOPPER ASSY IDT, and close the LH ASSY.

CAUTION

1. **When the IDT UNIT has been removed, the LH ASSY cannot be closed unless the STOPPER ASSY IDT is released. "4.1.1 Precautions" *(p.293)***
2. **When you opened/closed the LH ASSY with the printer powered off, be sure to power on the printer after the work is finished to warm it up. Failure to do so may cause problems in print quality. (Refer to "3.3.4 FIP-P16" *(p.181)*)**

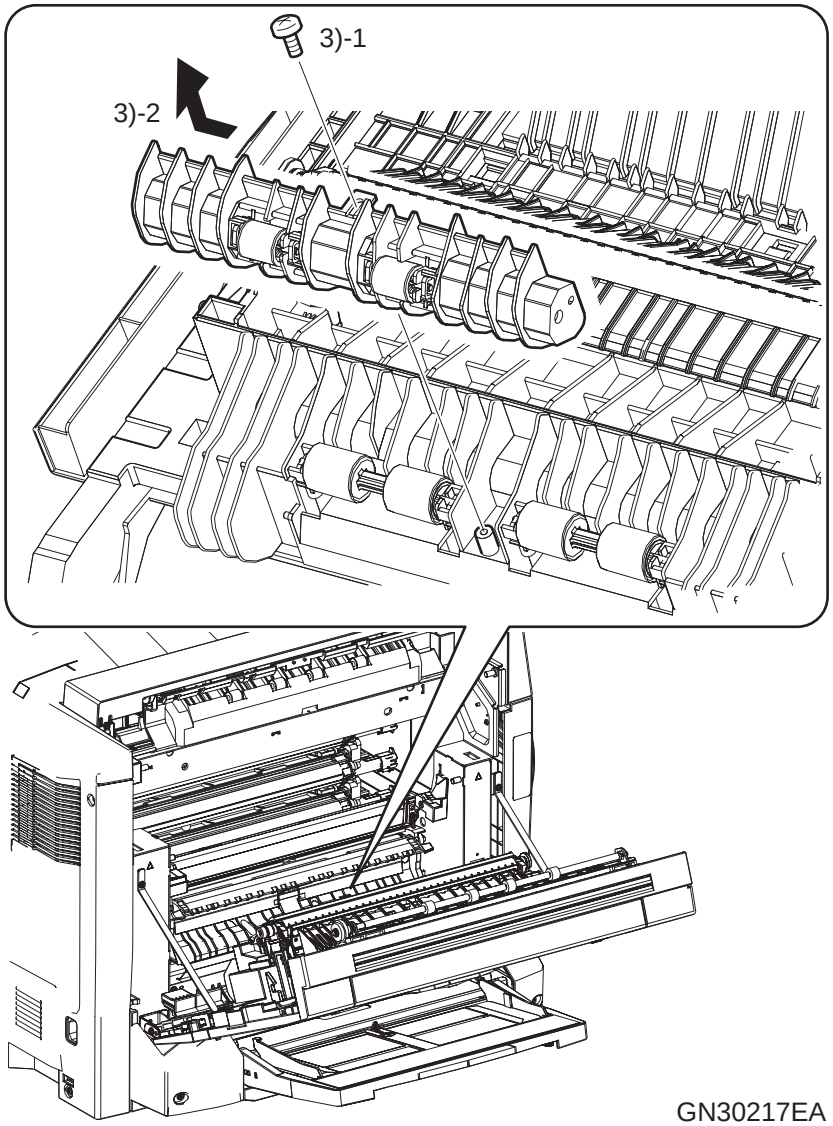

Figure 4-26. Removing the KIT CHUTE TRANS

manuals4you.com

4.3.17 ROLLER ASSY EXIT 1

REMOVAL

1. Open the LH ASSY.
2. Remove the E Ring located on the Rear side of the ROLLER ASSY EXIT 1, and remove the GEAR 24Z.
3. Remove the BEARING 6 (gold), release the two Hooks of the BEARING OCT, and remove the BEARING OCT.
4. Slide the ROLLER ASSY EXIT 1 to the Front side, and remove it to the Rear side.

CAUTION

1. When removing/installing the ROLLER ASSY EXIT 1, be careful not to lose the SPACER.

REINSTALLATION

1. Install the ROLLER ASSY EXIT 1 together with the SPACER.

CAUTION

2. When removing/installing the ROLLER ASSY EXIT 1, be careful not to lose the SPACER.

2. Match the two Hooks of the BEARING OCT, fit the BEARING OCT, and fit the BEARING 6 (gold).
3. Secure the Rear side of the ROLLER ASSY EXIT 1 with the E Ring.
4. Release the Hook of the STOPPER ASSY IDT, and close the LH ASSY.

CAUTION

3. When the IDT UNIT has been removed, the LH ASSY cannot be closed unless the STOPPER ASSY IDT is released. "4.1.1 Precautions" *(p.293)*

4. When you opened/closed the LH ASSY with the printer powered off, be sure to power on the printer after the work is finished to warm it up. Failure to do so may cause problems in print quality. (Refer to "3.3.4 FIP-P16" *(p.181)*)

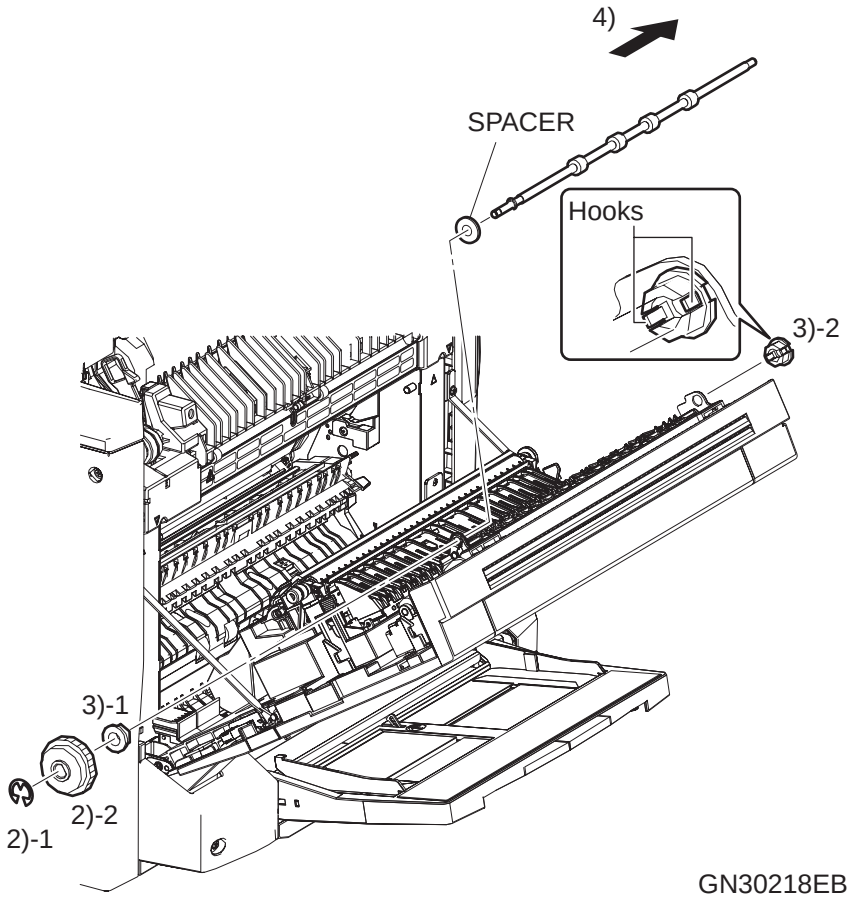

Figure 4-27. Removing the ROLLER ASSY EXIT 1

4.3.18 GATE ASSY FUT

REMOVAL

1. Remove the DUPLEX ASSY (Option). *(p.414)*
2. Remove the COVER FRONT LH LOW and COVER REAR LH LOW. *(p.303)*
3. Remove the CAP FUT and COVER EXIT. *(p.321)*
4. Open the LH ASSY.
5. Remove the ROLL ASSY EXIT 1. *(p.328)*
6. Remove the SPRING GATE.
7. Bend the GATE ASSY FUT, and remove it from the Rear side shaft support.

REINSTALLATION

1. Insert the Front side of the GATE ASSY FUT, and bend and install it into the Rear side shaft support.
2. Fit the SPRING GATE.
3. Install the ROLLER ASSY EXIT 1. *(p.328)*
4. Release the Hook of the STOPPER ASSY IDT, and close the LH ASSY.

CAUTION

1. **When the IDT UNIT has been removed, the LH ASSY cannot be closed unless the STOPPER ASSY IDT is released. "4.1.1 Precautions" *(p.293)***
2. **When you opened/closed the LH ASSY with the printer powered off, be sure to power on the printer after the work is finished to warm it up. Failure to do so may cause problems in print quality. (Refer to "3.3.4 FIP-P16" *(p.181)*)**

5. Install the CAP FUT and COVER EXIT. *(p.321)*
6. Install the COVER FRONT LH LOW and COVER REAR LH LOW. *(p.303)*
7. Install the DUPLEX ASSY. (Option) *(p.414)*

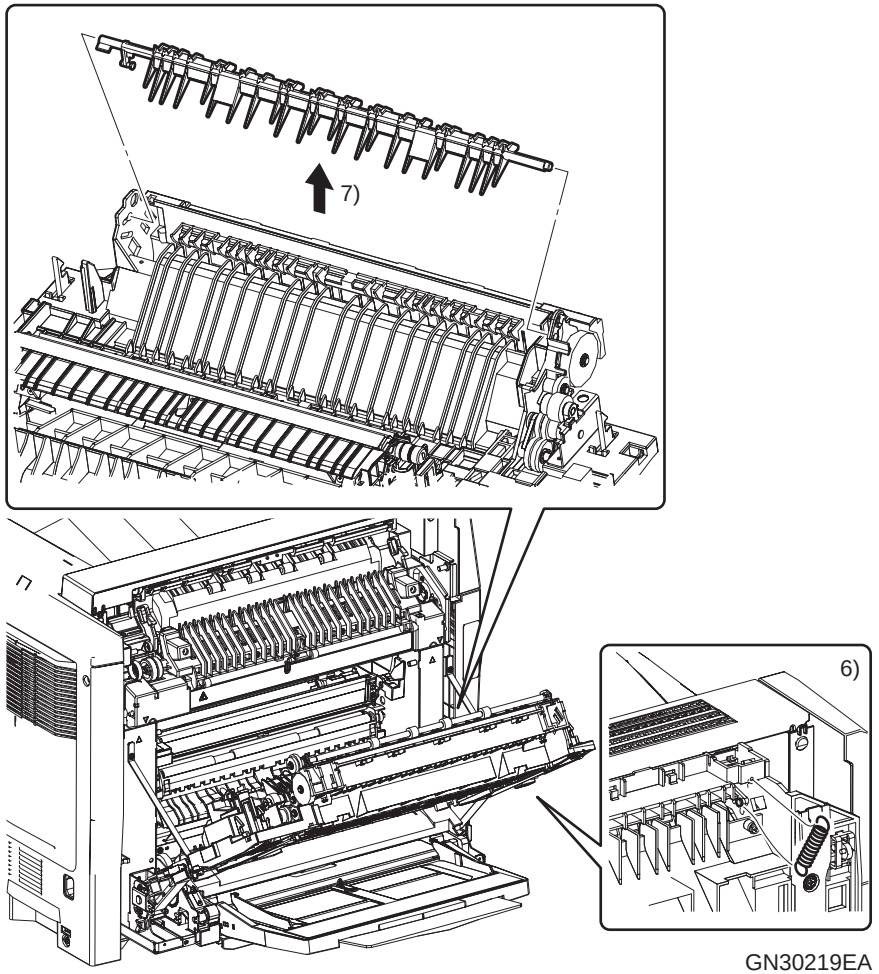

Figure 4-28. Removing the GATE ASSY FUT

manuals4you.com

4.3.19 CLUTCH ASSY SPRING

REMOVAL

1. Remove the DUPLEX ASSY (Option). *(p.414)*
2. Remove the COVER FRONT LH LOW and COVER REAR LH LOW. *(p.303)*
3. Remove the CAP FUT and COVER EXIT. *(p.321)*
4. Remove the SPRING GEAR C/G.
5. Open the LH ASSY.
6. Remove the two screws (gold, tapping, 8mm) that secure the BRACKET ASSY LEVER, and remove the BRACKET ASSY LEVER.
7. Remove the E Ring that secures the LEVER ASSY GEAR, and pull and remove the LEVER ASSY GEAR and CLUTCH ASSY SPRING from the Shaft.

REINSTALLATION

1. Install the LEVER ASSY GEAR and CLUTCH ASSY SPRING to the Shaft of the BRACKET ASSY LEVER, and secure the LEVER ASSY GEAR with the E Ring.

CAUTION

1. When installing the LEVER ASSY GEAR and CLUTCH ASSY SPRING, note their orientations of installation.

2. Secure the BRACKET ASSY LEVER with the two screws (gold, tapping, 8mm).
3. Release the Hook of the STOPPER ASSY IDT, and close the LH ASSY.

CAUTION

2. When the IDT UNIT has been removed, the LH ASSY cannot be closed unless the STOPPER ASSY IDT is released. "4.1.1 Precautions" *(p.293)*

3. When you opened/closed the LH ASSY with the printer powered off, be sure to power on the printer after the work is finished to warm it up. Failure to do so may cause problems in print quality. (Refer to "3.3.4 FIP-P16" *(p.181)*)

4. Install the SPRING GEAR C/G.
5. Install the CAP FUT and COVER EXIT. *(p.321)*
6. Install the COVER FRONT LH LOW and COVER REAR LH LOW. *(p.303)*
7. Install the DUPLEX ASSY. (Option) *(p.414)*

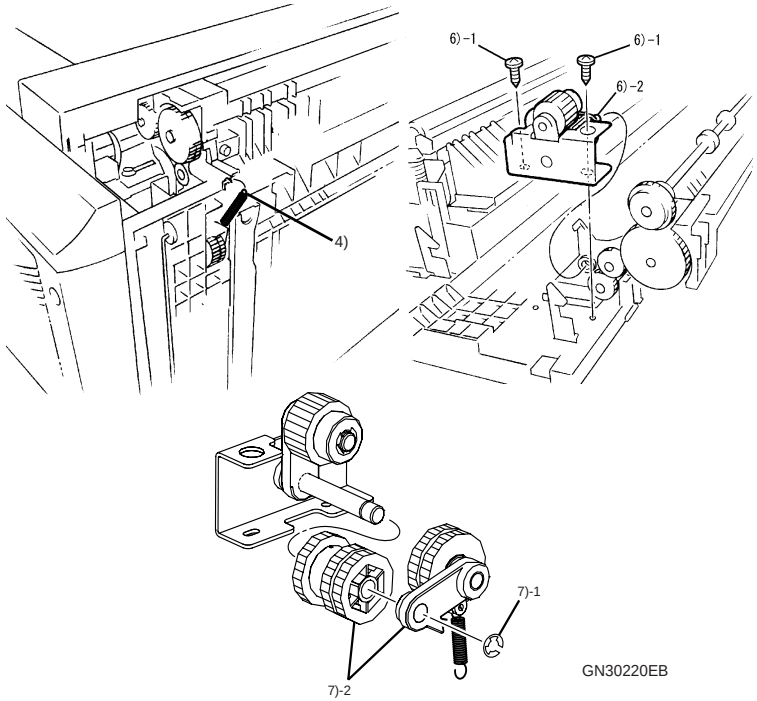

Figure 4-29. Removing the CLUTCH ASSY SPRING

4.3.20 CHUTE FUT UP

REMOVAL

1. Remove the DUPLEX ASSY (Option). *(p.414)*
2. Remove the COVER FRONT LH LOW and COVER REAR LH LOW. *(p.303)*
3. Remove the CAP FUT and COVER EXIT. *(p.321)*
4. Open the LH ASSY.
5. Remove the ROLLER ASSY EXIT 1. *(p.328)*
6. Remove the GATE ASSY FUT. *(p.329)*
7. Remove the three screws (gold, tapping, 8mm) that secure the CHUTE FUT UP, and remove the CHUTE FUT UP.

REINSTALLATION

1. Secure the CHUTE FUT UP with the three screws (gold, tapping, 8mm).
2. Install the GATE ASSY FUT. *(p.329)*
3. Install the ROLLER ASSY EXIT 1. *(p.328)*
4. Release the Hook of the STOPPER ASSY IDT, and close the LH ASSY.

CAUTION

1. **When the IDT UNIT has been removed, the LH ASSY cannot be closed unless the STOPPER ASSY IDT is released. "4.1.1 Precautions" *(p.293)***
2. **When you opened/closed the LH ASSY with the printer powered off, be sure to power on the printer after the work is finished to warm it up. Failure to do so may cause problems in print quality. (Refer to "3.3.4 FIP-P16" *(p.181)*)**

5. Install the CAP FUT and COVER EXIT. *(p.321)*
6. Install the COVER FRONT LH LOW and COVER REAR LH LOW. *(p.303)*
7. Install the DUPLEX ASSY. (Option) *(p.414)*

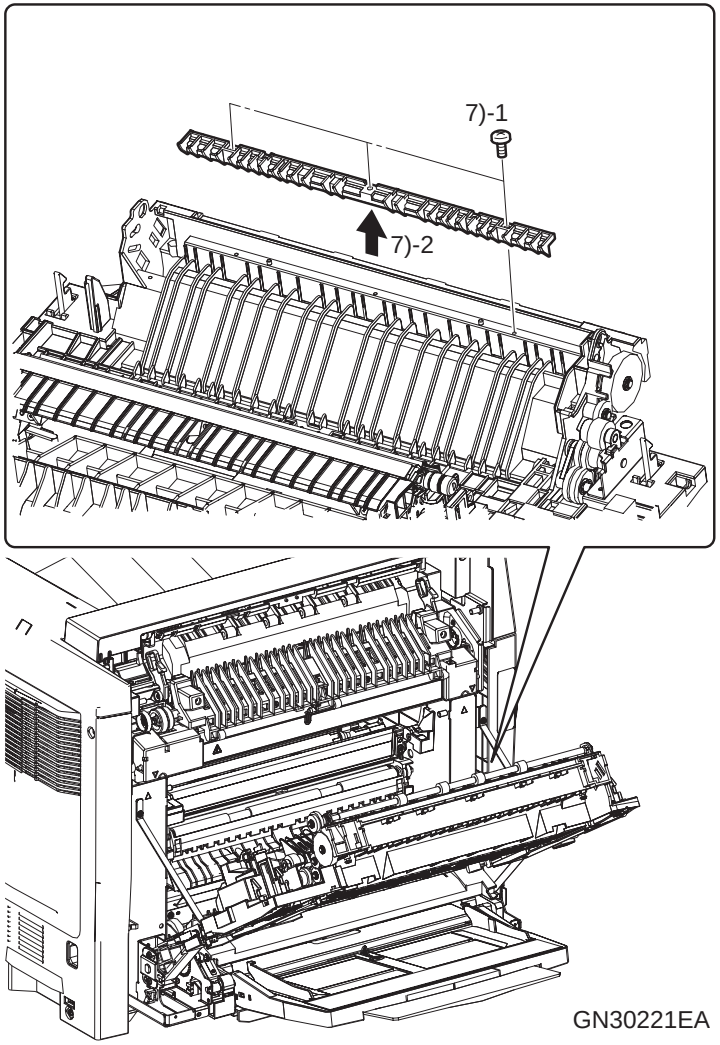

Figure 4-30. Removing the CHUTE FUT UP

manuals4you.com

4.3.21 PH MAIN ASSY

REMOVAL

1. Remove the COVER FRONT LH LOW and COVER REAR LH LOW. *(p.303)*
2. Remove the MSI from the main unit. *(p.310)*
3. Open the COVER ASSY FRONT and LH ASSY.
4. Remove the two screws (black, flanged, 6mm) that secure the front and rear SUPPORT L/Hs. *(p.307)*
5. Remove the SENSOR ASSY MOB ADC. *(p.337)*
6. Remove the COVER ASSY REAR. *(p.302)*
7. Disconnect the Harness from the Relay Connector (P/J23A6) of the OHP SENSOR and the Relay Connector (P/J271) of the SENSOR ASSY MOB ADC.
8. Remove the one screw (silver, flanged, 8mm) that secures the WIRE ASSY REGI.
9. Raise the CHUTE PH.
10. Remove the four screws (gold, 30mm) that secure the PH MAIN ASSY.
11. Release the HARNESS ASSY REGI from the Clamp, pull off the Connector from the bushing hole of the main unit, and remove the PH MAIN ASSY.

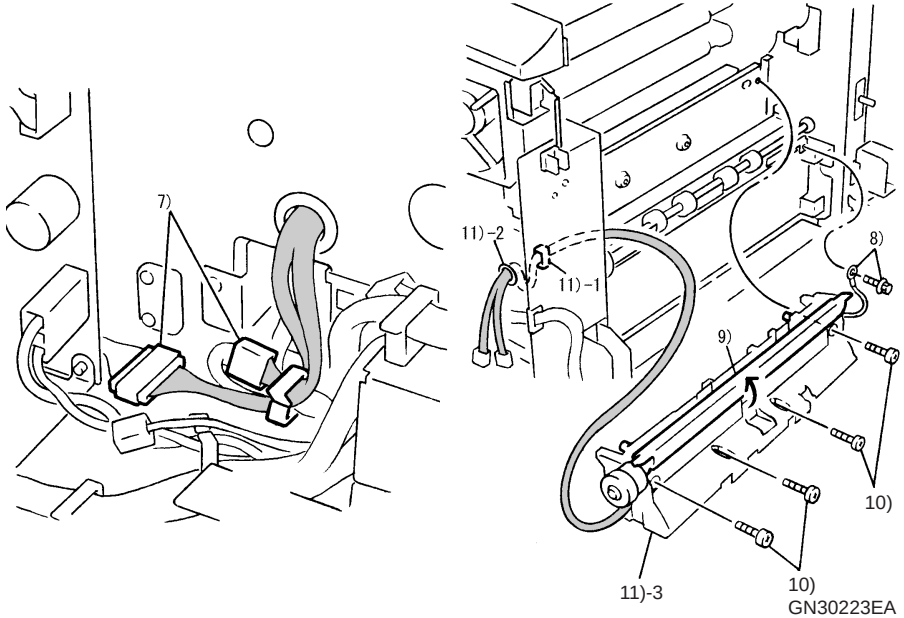

Figure 4-31. Removing the PH MAIN ASSY

REINSTALLATION

1. Remove the CASSETTE ASSY.
2. Put your hand into the main unit from where the CASSETTE ASSY was removed, and pass the Connector of the HARNESS ASSY REGI into the bushing hole of the main unit.
3. Secure the Harness of the HARNESS ASSY REGI to the Clamp.
4. Raise the CHUTE PH.
5. Secure the PH MAIN ASSY with the four screws (gold, 30mm).
6. Secure the WIRER ASSY REGI to the FRAME PH MAIN with the one screw (silver, flanged, 8mm).
7. Connect the Connector (J23A6) of the HARNESS ASSY REGI of the OHP SENSOR to the Connector (P23A6) of the HARNESS ASSY R-BTM.
8. Connect the Connector (J271) of the HARNESS ASSY REGI of the SENSOR ASSY MOB ADC to the Connector (P271) of the HARNESS ASSY R-BTM.
9. Install the COVER ASSY REAR. *(p.302)*
10. Install the SENSOR ASSY MOB ADC. *(p.337)*
11. Secure the front and rear SUPPORT L/Hs with the two screws (black, flanged, 6mm). *(p.307)*
12. Close the COVER ASSY FRONT, release the Hook of the STOPPER ASSY IDT, and close the LH ASSY.

CAUTION

1. **When the IDT UNIT has been removed, the LH ASSY cannot be closed unless the STOPPER ASSY IDT is released. "4.1.1 Precautions" *(p.293)***
2. **When you opened/closed the LH ASSY with the printer powered off, be sure to power on the printer after the work is finished to warm it up. Failure to do so may cause problems in print quality. (Refer to "3.3.4 FIP-P16" *(p.181)*)**

13. Install the MSI to the main unit. *(p.310)*
14. Install the COVER FRONT LH LOW and COVER REAR LH LOW. *(p.303)*
15. Install the CASSETTE ASSY.

manuals4you.com

4.3.22 BEARING ONEWAY, CLUTCH ASSY FEED, ROLL ASSY TURN

REMOVAL

1. Remove the DUPLEX ASSY (Option). *(p.414)*
2. Remove the COVER FRONT LH LOW and COVER REAR LH LOW. *(p.303)*
3. Remove the MSI from the main unit. *(p.310)*
4. Remove the COVER EXIT. *(p.321)*
5. Open the COVER ASSY FRONT.
6. Remove the SENSOR ASSY MOB ADC. *(p.337)*
7. Remove the GEAR ASSY HR. *(p.406)*
8. Remove the DRIVE ASSY MAIN. *(p.353)*
9. Remove the PH MAIN ASSY. *(p.332)*
10. Remove the four screws (black, flanged tapping, 8mm) and one screw (gold, flanged, 6mm) that secure the CHUTE ASSY LOWER, and remove the CHUTE ASSY LOWER.
11. Remove the one screw (black, flanged tapping, 8mm) that secures the CHUTE, and remove the CHUTE.
12. Disconnect the Connector (P/J23A4) of the CHUTE ASSY FEED, and remove the Harness from the Clamp.

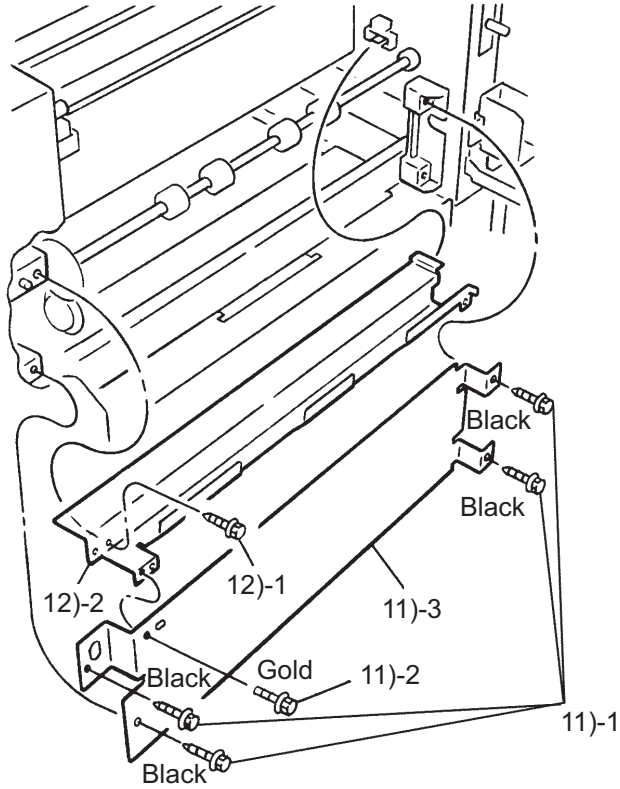

Figure 4-32. Removing the BEARING ONEWAY, CLUTCH ASSY FEED and ROLL ASSY TURN (1)

manuals4you.com

13. Remove the three screws (silver, 6mm) that secure the BRACKET SW, and remove the BRACKET SW and BRACKET.
14. Remove the E Ring that secures the CLUTCH ASSY FEED located on the Rear side, and remove the CLUTCH ASSY FEED.

CAUTION

1. In the following step, note that the Washer may not be slid as it is stuck in the groove of the E Ring on the Shaft.

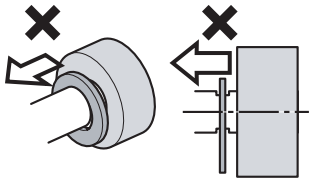

15. Remove the E Ring that secures the BEARING ONEWAY located on the Front side, and slide the Washer and BEARING ONEWAY to the Rear side (Rubber Roll side).
16. Slide the ROLL ASSY TURN to the Front side, and remove the ROLL ASSY TURN.
17. From the ROLL ASSY TURN, remove the BEARING ONEWAY and NYLON WASHER and the BEARING-6 and GEAR TURN.

CAUTION

2. The BEARING ONEWAY turns only in the direction of the arrow.

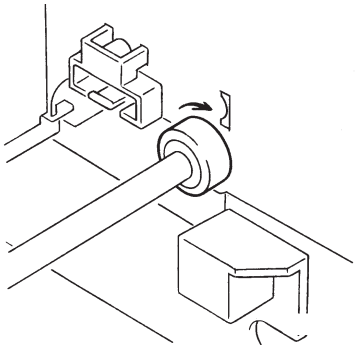

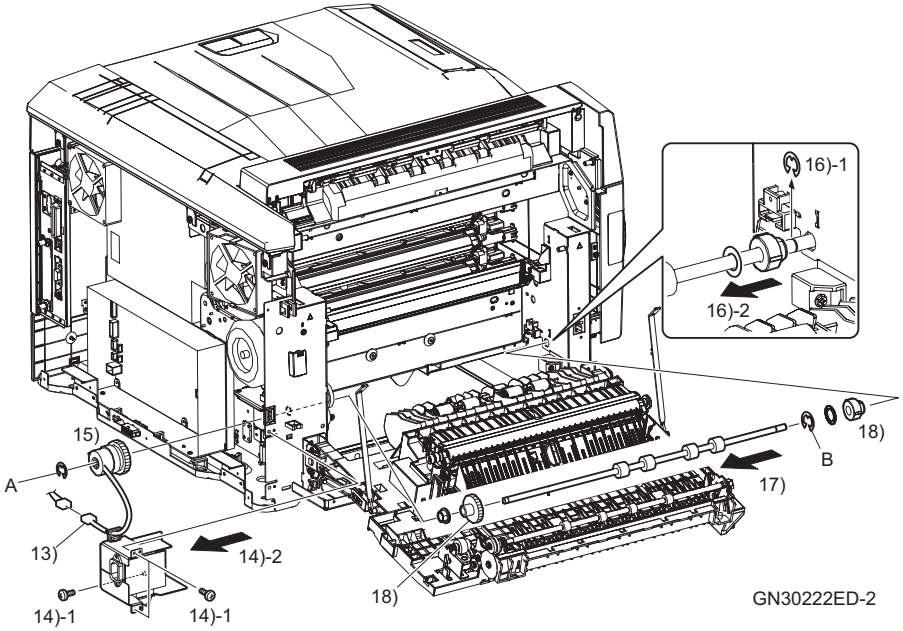

Figure 4-33. Removing the BEARING ONEWAY, CLUTCH ASSY FEED and ROLL ASSY TURN (2)

manuals4you.com

REINSTALLATION

1. Install the BEARING ONEWAY and NYLON WASHER on the Front side of the ROLL ASSY TURN, and install the GEAR TURN and BEARING-6 on the Rear side of the ROLL ASSY TURN.
2. Install the ROLL ASSY TURN to the main unit Frame from the Rear side.
3. Slide the NYLON WASHER and BEARING ONEWAY to the Front side, and secure the BEARING ONEWAY with the E Ring.

CAUTION

3. Note that the E Ring that secures the CLUTCH ASSY FEED and the E Ring that secures the BEARING ONEWAY differ in thickness.

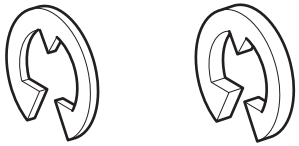

4. Install the CLUTCH ASSY FEED on the Rear side, and secure it with the E Ring.
5. Secure the BRACKET SW with the three screws (silver, 6mm).
6. Connect the Connector (J23A4) of the CHUTE ASSY FEED to the Connector (P23A4) of the HARNESS ASSY R-BTM.
7. Secure the CHUTE with the one screw (black, flanged tapping, 8mm).
8. Secure the CHUTE ASSY LOWER with the four screws (black, flanged tapping, 8mm) and one screw (gold, flanged, 6mm).
9. Install the PH MAIN ASSY. *(p.332)*
10. Install the DRIVE ASSY MAIN. *(p.353)*
11. Install the GEAR ASSY HR. *(p.406)*
12. Install the SENSOR ASSY MOB ADC. *(p.337)*
13. Close the COVER ASSY FRONT.
14. Install the COVER EXIT.*(p.321)*
15. Install the MSI to the main unit. *(p.310)*
16. Install the COVER FRONT LH LOW and COVER REAR LH LOW. *(p.303)*
17. Install the DUPLEX ASSY. (Option) *(p.414)*

4.3.23 SENSOR ASSY MOB ADC

REMOVAL

1. Open the COVER ASSY FRONT and LH ASSY.
2. Remove the one screw (silver, 6mm) that secures the Earth Wire, and remove the SENSOR ASSY MOB ADC.
3. Remove the one screw (silver, 6mm) that secures the SENSOR ASSY MOB ADC, and remove the SENSOR ASSY MOB ADC.
4. Disconnect the Relay Connector (P/J272) of the SENSOR ASSY MOB ADC.

REINSTALLATION

1. Connect the Relay Connector (J272) of the SENSOR ASSY MOB ADC to the Connector (P272) of the HARNESS ASSY REGI.
2. Secure the SENSOR ASSY MOB ADC with one screw (silver, 6mm).
3. Secure the Earth Wire to the SENSOR ASSY MOB ADC with one screw (silver, 6mm).
4. Close the COVER ASSY FRONT, release the Hook of the STOPPER ASSY IDT, and close the LH ASSY.

CAUTION

1. **When the IDT UNIT has been removed, the LH ASSY cannot be closed unless the STOPPER ASSY IDT is released. "4.1.1 Precautions" *(p.293)***
2. **When you opened/closed the LH ASSY with the printer powered off, be sure to power on the printer after the work is finished to warm it up. Failure to do so may cause problems in print quality. (Refer to "3.3.4 FIP-P16" *(p.181)*)**

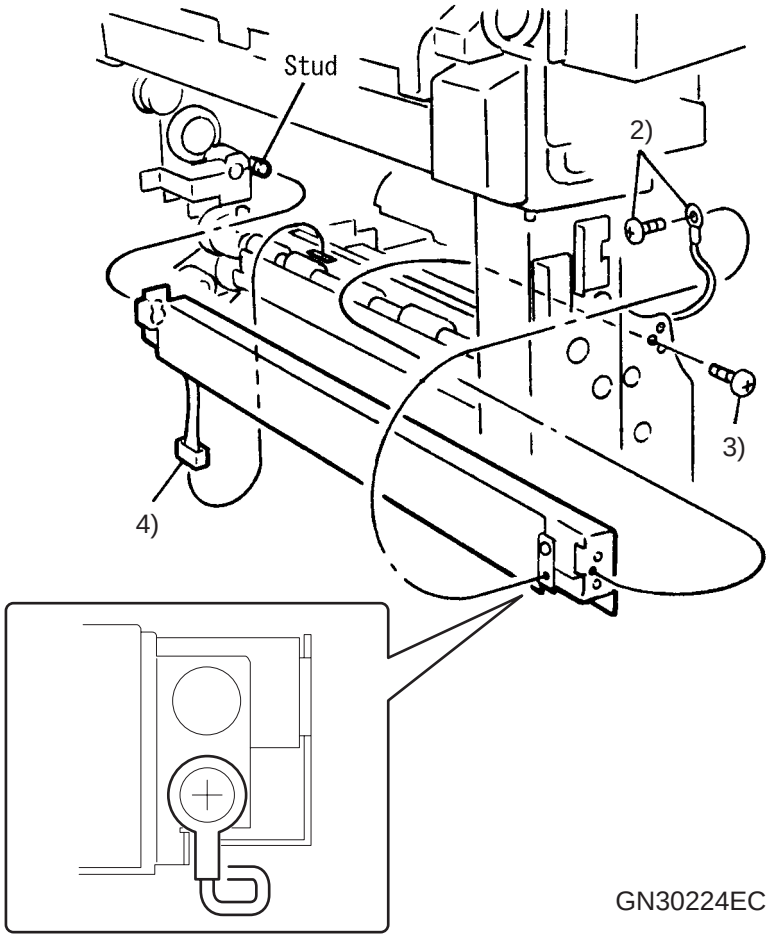

Figure 4-34. Removing the SENSOR ASSY MOB ADC

manuals4you.com

4.3.24 CLUTCH REGI, CHUTE PH

REMOVAL

1. Remove the COVER FRONT LH LOW and COVER REAR LH LOW. *(p.303)*
2. Remove the MSI from the main unit. *(p.310)*
3. Open the COVER ASSY FRONT and LH ASSY.
4. Remove the two screws (black, flanged, 6mm) that secure the front and rear SUPPORT L/Hs. *(p.307)*
5. Remove the SENSOR ASSY MOB ADC. *(p.337)*
6. Remove the COVER ASSY REAR. *(p.302)*
7. Remove the PH MAIN ASSY. *(p.332)*
8. Remove the E Ring that secures the CLUTCH REGI.
9. Disconnect the Harness from the Connector (P/J23A9) of the CLUTCH REGI, and remove the CLUTCH REGI.
10. Release the one Hook of the GEAR REGI, and remove the GEAR REGI.
11. Remove the BEARING RUBBER F (gold) and BEARING RUBBER R (black), and remove the ROLL REGI RUBBER and CLUTCH PH.

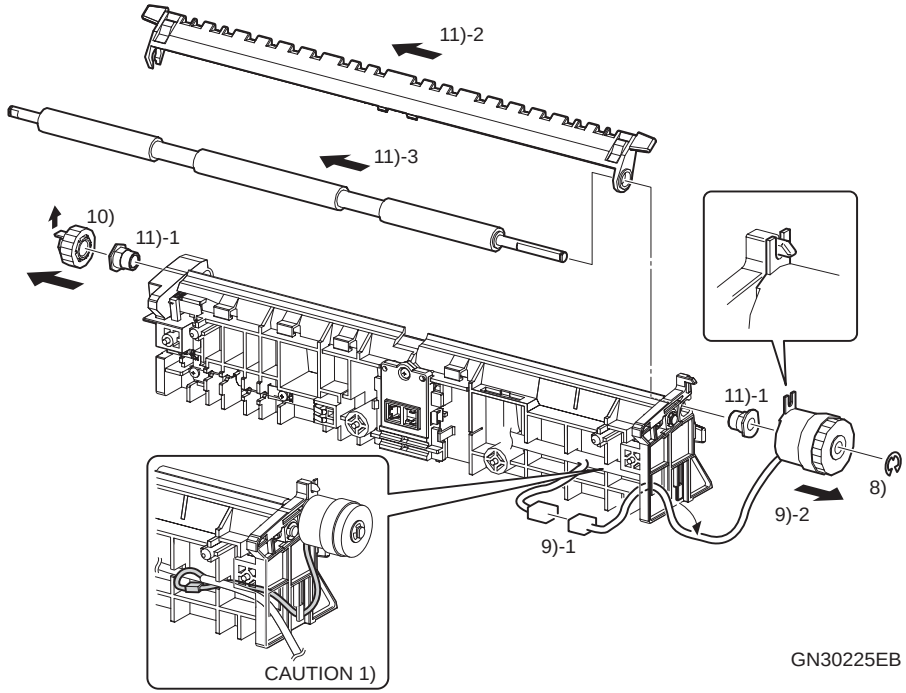

Figure 4-35. Removing the CLUTCH REGI and CHUTE PH

REINSTALLATION

1. Install the ROLL REGI RUBBER and CLUTCH PH, and install the BEARING RUBBER F (gold) and BEARING RUBBER R (black).
2. Match the one Hook of the GEAR REGI, and install the GEAR REGI.
3. Install the CLUTCH REGI, and connect the Connector (J23A9) of the HARNESS ASSY REGI to the Connector (P23A9) of the CLUTCH REGI.

CAUTION

1. Route the Harness of the CLUTCH REGI as shown in Figure 4-35.

4. Secure the CLUTCH REGI with the E Ring.
5. Install the PH MAIN ASSY. *(p.332)*
6. Install the COVER ASSY REAR. *(p.302)*
7. Install the SENSOR ASSY MOB ADC. *(p.337)*
8. Secure the front and rear SUPPORT L/Hs with the two screws (black, flanged, 6mm). *(p.307)*
9. Close the COVER ASSY FRONT, release the Hook of the STOPPER ASSY IDT, and close the LH ASSY.

CAUTION

2. When the IDT UNIT has been removed, the LH ASSY cannot be closed unless the STOPPER ASSY IDT is released. "4.1.1 Precautions" *(p.293)*

3. When you opened/closed the LH ASSY with the printer powered off, be sure to power on the printer after the work is finished to warm it up. Failure to do so may cause problems in print quality. (Refer to "3.3.4 FIP-P16" *(p.181)*)

10. Install the MSI to the main unit. *(p.310)*
11. Install the COVER FRONT LH LOW and COVER REAR LH LOW. *(p.303)*

manuals4you.com

4.3.25 ACTUATOR REGI, SENSOR REGI, OHP SENSOR

REMOVAL

1. Remove the COVER FRONT LH LOW and COVER REAR LH LOW. *(p.303)*
2. Remove the MSI from the main unit. *(p.310)*
3. Open the COVER ASSY FRONT and LH ASSY.
4. Remove the two screws (black, flanged, 6mm) that secure the front and rear SUPPORT L/Hs. *(p.307)*
5. Remove the SENSOR ASSY MOB ADC. *(p.337)*
6. Remove the COVER ASSY REAR. *(p.302)*
7. Remove the PH MAIN ASSY. *(p.332)*
8. Remove the one screw (gold, tapping, 8mm) that secures the BRKT SNR REGI.
9. Release the two Hooks of the BRKT SNR REGI, and remove the BRKT SNR REGI.
10. Disconnect the Harness from the Connector (P/J23A8) of the SENSOR REGI.
11. Release the three Hooks of the SENSOR REGI, and remove the SENSOR REGI from the BRKT SNR REGI.

CAUTION

1. **Before starting the following step, check the installation condition of the SPRING SNR REGI. Also be careful not to deform or lose the SPRING SNR REGI.**

12. After turning the ACTUATOR REGI until its Actuator section is almost perpendicular, shift and move away the Shaft in the direction of arrow, and remove the ACTUATOR REGI together with the SPRING SNR REGI.
13. Remove the one screw (gold, tapping, 8mm) that secures the BRKT SNR OHP, and leave the BRKT SNR OHP suspended.
14. Disconnect the Harness from the Connector (P/J23A7) of the OHP SENSOR.
15. Remove the one screw (silver, 6mm) that secures the OHP SENSOR, and remove the OHP SENSOR from the BRKT SNR OHP.

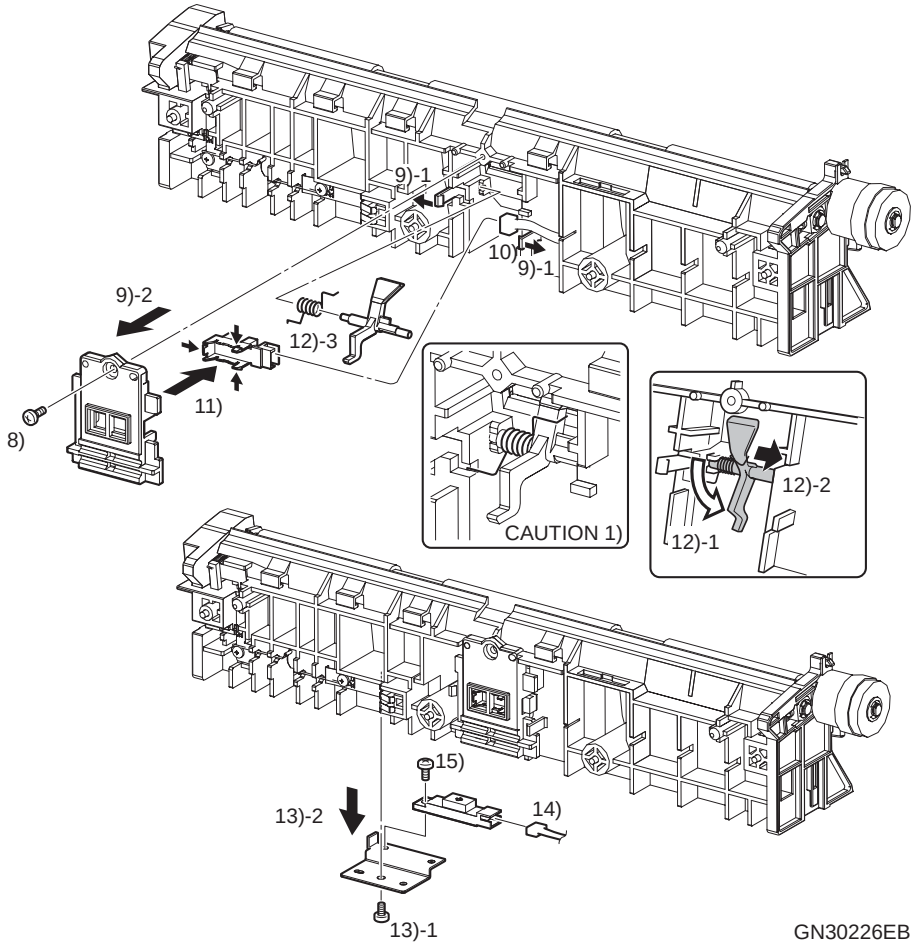

Figure 4-36. Removing the ACTUATOR REGI, SENSOR REGI and OHP SENSOR

REINSTALLATION

1. Secure the OHP SENSOR to the BRKT SNR OHP with the one screw (silver, 6mm).
2. Connect the Connector (J23A7) of the HARNESS ASSY REGI to the Connector (P23A7) of the OHP SENSOR.
3. Secure the BRKT SNR OHP with the one screw (gold, tapping, 8mm).
4. Install the SPRING SNR REGI to the ACTUATOR REGI as shown in Figure 4-36, and while holding the ACTUATOR REGI so that its Actuator section is almost perpendicular, install the ACTUATOR REGI to the PH MAIN ASSY from the right-hand side Shaft.
5. Match the three Hooks of the SENSOR REGI, and install the BRKT SENSOR REGI.
6. Connect the Connector (J23A8) of the HARNESS ASSY REGI to the Connector (P/J23A8) of the SENSOR REGI.
7. Match the two Hooks of the BRKT SNR REGI, and install the BRKT SNR REGI.
8. Secure the BRKT SNR REGI with the one screw (gold, tapping, 8mm).
9. Install the PH MAIN ASSY. *(p.332)*
10. Install the COVER ASSY REAR. *(p.302)*
11. Install the SENSOR ASSY MOB ADC. *(p.337)*
12. Secure the front and rear SUPPORT L/Hs with the two screws (black, flanged, 6mm). *(p.307)*
13. Close the COVER ASSY FRONT, release the Hook of the STOPPER ASSY IDT, and close the LH ASSY.

CAUTION

2. **When the IDT UNIT has been removed, the LH ASSY cannot be closed unless the STOPPER ASSY IDT is released. "4.1.1 Precautions" *(p.293)***
3. **When you opened/closed the LH ASSY with the printer powered off, be sure to power on the printer after the work is finished to warm it up. Failure to do so may cause problems in print quality. (Refer to "3.3.4 FIP-P16" *(p.181)*)**

14. Install the MSI to the main unit. *(p.310)*
15. Install the COVER FRONT LH LOW and COVER REAR LH LOW. *(p.303)*

manuals4you.com

4.3.26 LEVEL SENSOR 1, LEVEL SENSOR 2

REMOVAL

1. Remove the COVER ASSY REAR. (p.302)
2. Remove the one screw (silver, 6mm) that secures the BRACKET.
3. Disconnect the Harness from the Connector (P/J23B1) of the LEVEL SENSOR 1 and the Connector (P/J23B2) of the LEVEL SENSOR 2.
4. Release the projection from the notch of the BRACKET, and remove the BRACKET.
5. On the rear surface of the BRACKET, peel the two SPACER SENSORs that secure the Hooks of the LEVEL SENSOR 1 and LEVEL SENSOR 2.
6. Release the Hooks of the LEVEL SENSOR 1 and LEVEL SENSOR 2, and remove the LEVEL SENSOR 1 and LEVEL SENSOR 2.

REINSTALLATION

1. Match the Hooks of the LEVEL SENSOR 1 and LEVEL SENSOR 2, and install the LEVEL SENSOR 1 and LEVEL SENSOR 2.
2. Apply the two SPACER SENSORs to the rear surface of the BRACKET with the supplied double-faced tape so that the Hooks of the LEVEL SENSOR 1 and LEVEL SENSOR 2 do not come off.

CAUTION

1. Apply the SPACER SENSORs to prevent the SENSOR Hooks from moving away and coming off toward the inside. Completely clean the application surface to remove oil, contamination, etc.

3. Match the projection with the notch of the BRACKET, and install the BRACKET.
4. Connect the Connectors (J23B1)(J23B2) of the HARNESS ASSY R-BTM to the Connector (P23B1) of the LEVEL SENSOR 1 and the Connector (P23B2) of the LEVEL SENSOR 2.

CAUTION

2. Connect the Harness tagged “B” to the Sensor marked “B” (LEVEL SENSOR 2) on the BRACKET.

5. Secure the BRACKET with the one screw (silver, 6mm).
6. Install the COVER ASSY REAR. (p.302)

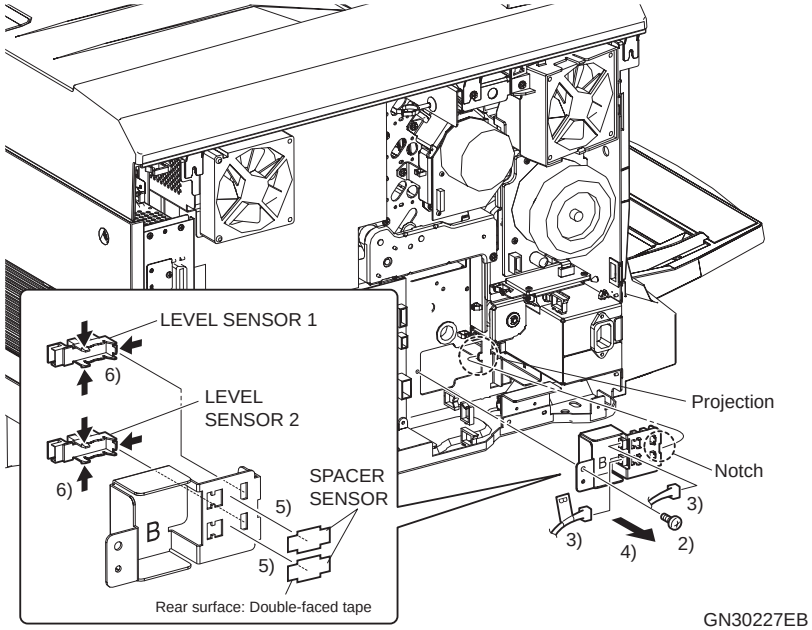

Figure 4-37. Removing the LEVEL SENSOR 1 and LEVEL SENSOR 2

4.3.27 NO PAPER SENSOR, SENSOR ASSY PAPER

REMOVAL

1. Remove the CASSETTE ASSY.
2. Open the COVER ASSY FRONT.
3. Remove the two screws (silver, flanged, 8mm) that secure the COVER SNR WBOX, and remove the COVER SNR WBOX.
4. Disconnect the Harness from the Relay Connector (P/J221) of the SENSOR ASSY PAPER.
5. Release the two Hooks in front of the HOLDER N/P, and pull and remove the SENSOR ASSY PAPER toward you.
6. Remove the ACTUATOR NO PAPER, release the three Hooks of the NO PAPER SENSOR, and remove the NO PAPER SENSOR.

REINSTALLATION

1. Match the three Hooks of the NO PAPER SENSOR, install the NO PAPER SENSOR, and fit the ACTUATOR NO PAPER.
2. Match the two Hooks in front of the HOLDER N/P, and install the SENSOR ASSY PAPER.

CAUTION

1. **When installing the SENSOR ASSY PAPER, hitch the Rear side Hook first.**
2. **After installing the SENSOR ASSY PAPER, make sure that the Rear side Hook of the HOLDER N/P is securely inserted in the main unit Frame and that the ACTUATOR NO PAPER operates without fail by touching them.**

3. Connect the Connector (P221) of the HARNESS ASSY F-SNR to the Connector (J221) of the HARNESS ASSY NO PAPER of the SENSOR ASSY PAPER.
4. Secure the COVER SNR WBOX with the two screws (silver, flanged, 8mm).
5. Close the COVER ASSY FRONT.
6. Install the CASSETTE ASSY.

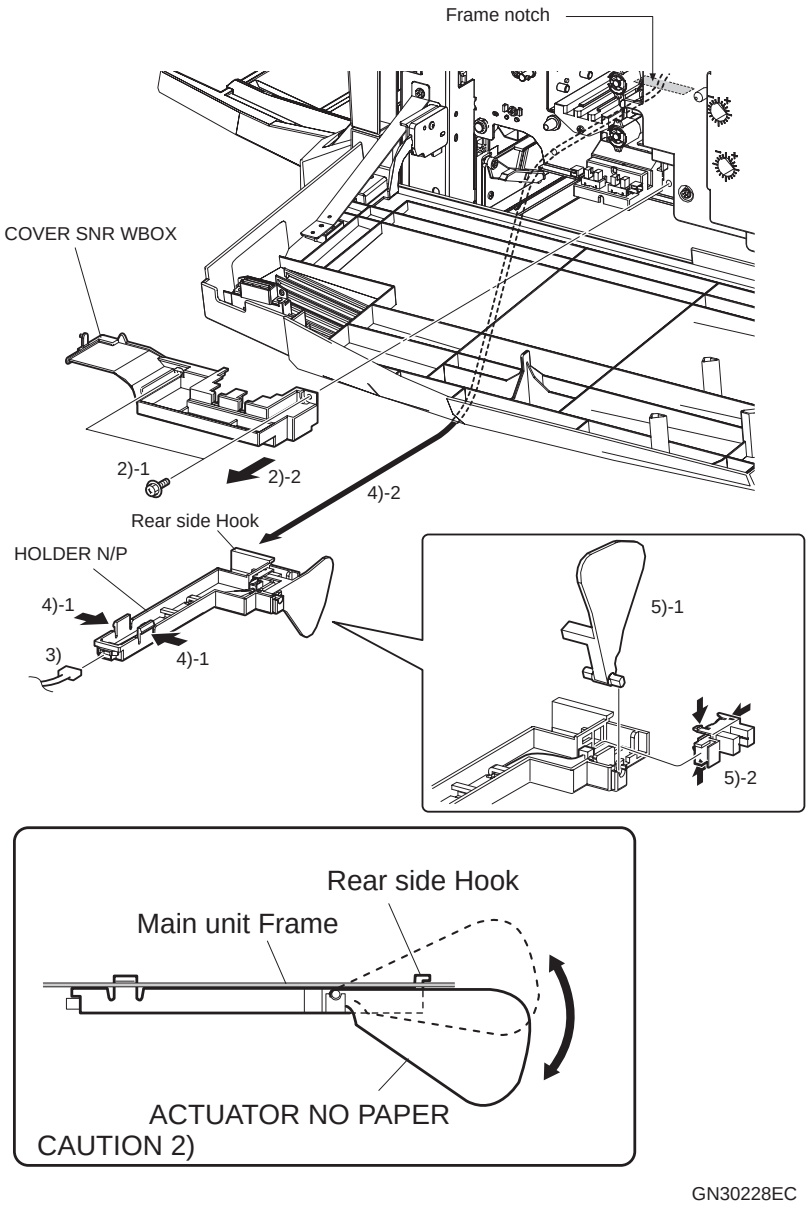

Figure 4-38. Removing the NO PAPER SENSOR and SENSOR ASSY PAPER

manuals4you.com

4.3.28 SWITCH ASSY SIZE, SENSOR ASSY TRACKING

REMOVAL

1. Remove the COVER ASSY REAR. (p.302)
2. Remove the LVPS. (p.373)
3. Disconnect the Harness from the Connector (P/J292) of the SWITCH ASSY SIZE.
4. Release the Hook at top of the SWITCH ASSY SIZE, and remove the SWITCH ASSY SIZE.
5. Disconnect the Harness from the Connector (P/J291) of the SENSOR ASSY TRACKING.
6. Remove the one screw (silver, 6mm) that secures the SENSOR ASSY TRACKING, and remove the SENSOR ASSY TRACKING.

REINSTALLATION

1. Secure the SENSOR ASSY TRACKING with the one screw (silver, 6mm).
2. Connect the Connector (J291) of the HARNESS ASSY P-SIZE to the Connector (P291) of the SENSOR ASSY TRACKING.

CAUTION

1. Hitch the Harness on the SENSOR ASSY TRACKING as shown in Figure 4-39.

3. Match the Hook at top of the SWITCH ASSY SIZE, and install the SWITCH ASSY SIZE.
4. Connect the Connector (J292) of the HARNESS ASSY P-SIZE to the Connector (P292) of the SWITCH ASSY SIZE.

CAUTION

2. Hitch the Harness on the SWITCH ASSY SIZE as shown in Figure 4-39.

5. Install the LVPS. (p.373)
6. Install the COVER ASSY REAR. (p.302)

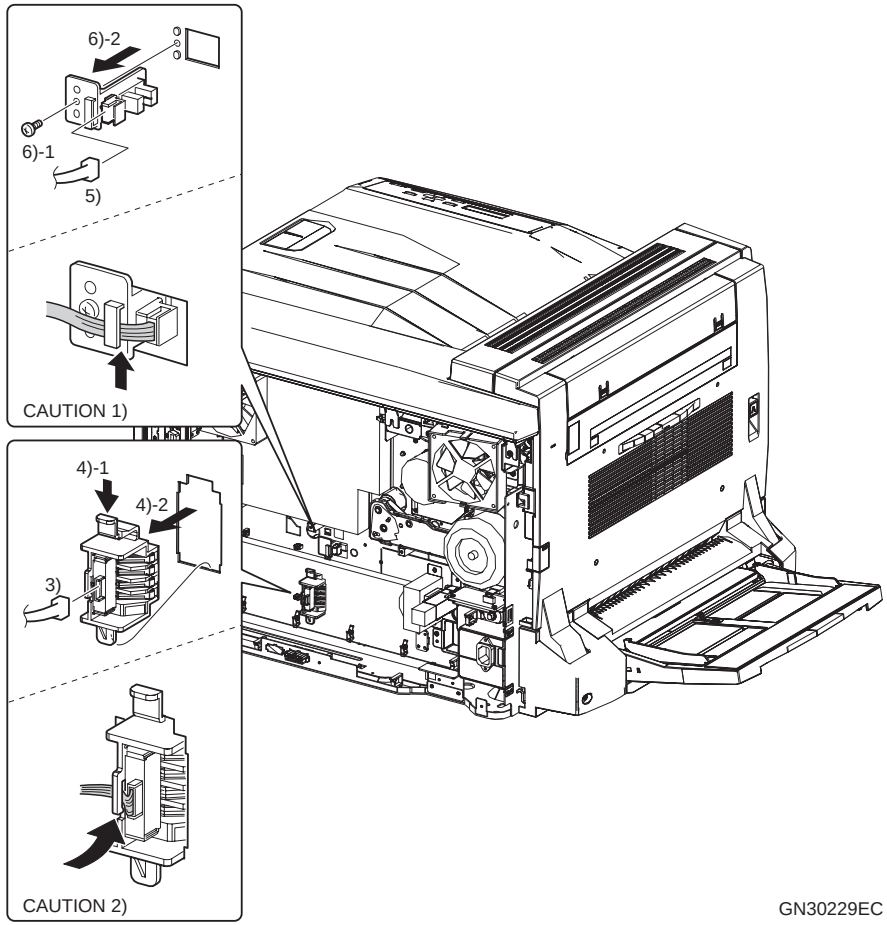

Figure 4-39. Removing the SWITCH ASSY SIZE and SENSOR ASSY TRACKING

4.3.29 SHAFT ASSY, ROLL ASSY FEED, ROLL ASSY SIDE

CAUTION

1. **When replacing the ROLL ASSY FEED/ROLL ASSY SIDE, replace them simultaneously with the HOLDER ASSY RETARD since they reach the end of their useful life at the same time.**

REMOVAL

1. Remove the CASSETTE ASSY.
2. Remove the E Ring that secures the BEARING-8 from the SHAFT ASSY, and remove the BEARING-8.
3. Remove the E Ring that secures the front side ROLL ASSY SIDE, and take off the ROLL ASSY SIDE.
4. Remove the E Ring that secures the ROLL ASSY FEED, and turn and take off the ROLL ASSY FEED, being careful not to bring it into contact with the Crimp Pins attached to the SHAFT ASSY.
5. Remove the E Ring that secures the far side ROLL ASSY SIDE, and turn and take off the ROLL ASSY SIDE, being careful not to bring it into contact with the Crimp Pins attached to the SHAFT ASSY.
6. Take off the SHAFT ASSY by turning it, being careful not to bring the crimping pins attached to the SHAFT ASSY into contact with the hole of TRAY.

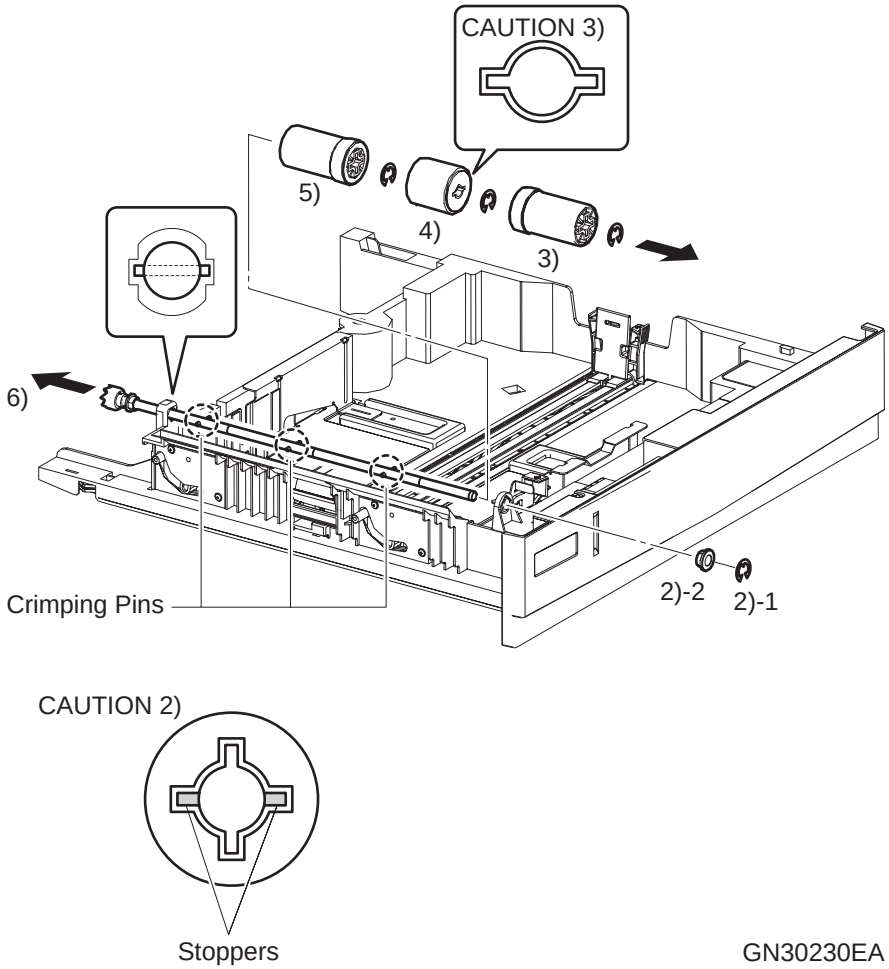

Figure 4-40. Removing the SHAFT ASSY, ROLL ASSY FEED and ROLL ASSY SIDE

manuals4you.com

REINSTALLATION

CAUTION

2. Each ROLL has Stoppers in the cross groove. When installing it, pass each Roll by turning it to prevent the Stoppers from making contact with the crimping pins of the SHAFT ASSY. In the installation position, turn each ROLL so that the crimping pins of the SHAFT ASSY stop at the Stoppers in the groove.

1. While turning the SHAFT ASSY to prevent the crimping pins attached to the SHAFT ASSY from making contact with the hole of TRAY, pass the SHAFT ASSY from the far side of the Tray.
2. While turning the Rear side ROLL ASSY SIDE to prevent it from making contact with the crimping pins attached to the SHAFT ASSY, install the ROLL ASSY SIDE and secure it with the E Ring.
3. While turning the ROLL ASSY FEED to prevent it from making contact with the crimping pins attached to the SHAFT ASSY, install the ROLL ASSY FEED and secure it with the E Ring.

CAUTION

3. When installing the ROLL ASSY FEED, note its orientation.

4. Install the Front side ROLL ASSY SIDE, and secure it with the E Ring.
5. Install the Bearing-8, and secure it to the Shaft Assy with the E Ring.
6. Install the CASSETTE ASSY.

4.3.30 HOLDER ASSY RETARD

CAUTION

1. When replacing the HOLDER ASSY RETARD, replace it simultaneously with the ROLL ASSY FEED and ROLL ASSY SIDE since they reach the end of their useful life at the same time.

REMOVAL

1. Remove the CASSETTE ASSY.
2. Remove the SHAFT ASSY. (p.345)
3. Push the LEVER RETAD in the direction of arrow.

CAUTION

2. In the following step, be careful not to lose the Spring of the HOLDER ASSY RETARD.

4. While pushing the left and right Studs to the inside, remove the HOLDER ASSY RETARD.

REINSTALLATION

1. While pushing the left and right Studs to the inside, install the HOLDER ASSY RETARD.

CAUTION

3. When installing the HOLDER ASSY RETARD, securely press its Spring against the Boss of the TRAY, push the LEVER RETARD in, and make sure that the Hook fits into the recess of the HOLDER ASSY RETARD.

2. Install the SHAFT ASSY. (p.345)

CAUTION

4. Make certain that the ROLL ASSY FEED and HLLDER ASSY RETARD are not making contact. If they are making contact, reconfirm the above “CAUTION 3”.

3. Install the CASSETTE ASSY.

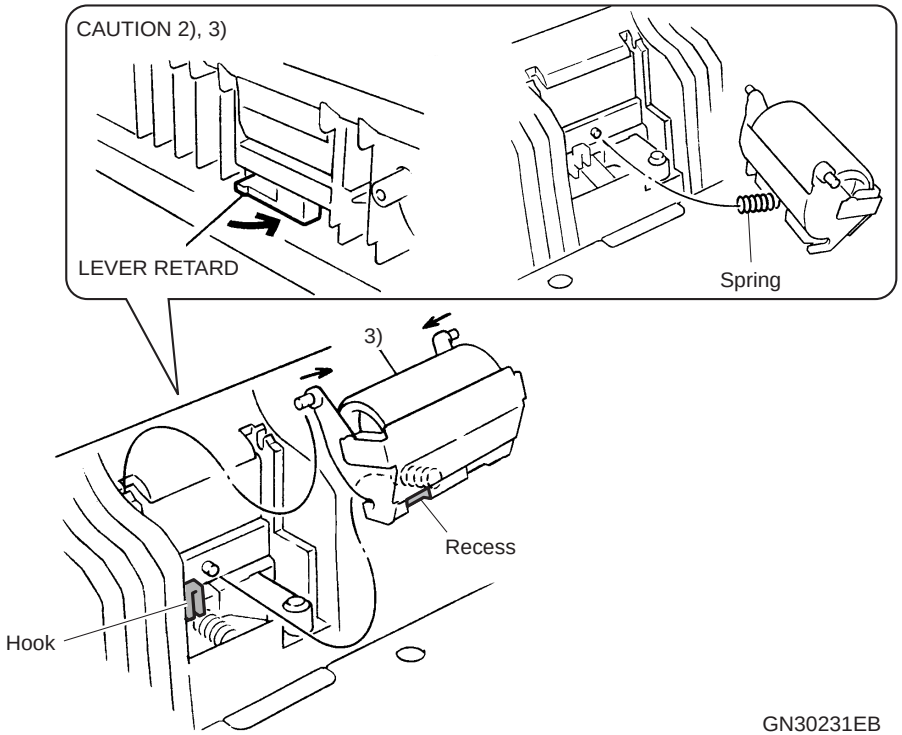

Figure 4-41. Removing the HOLDER ASSY RETARD

manuals4you.com

4.3.31 CAM SIZE, PIN LOCKING, GEAR IDLE

REMOVAL

1. Remove the CASSETTE ASSY.
2. Move the GUIDE ASSY END to the position in Figure 4-42 (17" position).
3. Remove the one screw (black, flanged tapping, 6mm) that secures the GEAR IDLE, and remove the GEAR IDLE.

CAUTION

In the following step, gently remove the PIN LOCKING using a mini screwdriver or similar tool so that the PIN LOCKING is not deformed.

4. Remove the PIN LOCKING, and remove the CAM SIZE.

REINSTALLATION

1. Match the hole of the TRAY with the hole of the GEAR SECTOR.
2. Move the GUIDE ASSY END to the position in Figure 4-42 (17" position), and match the hole of the CAM SIZE with the U groove of the TRAY.
3. Secure the CAM SIZE with the PIN LOCKING.
4. Secure the GEAR IDLE with the one screw (black, flanged tapping, 6mm).
5. Install the CASSETTE ASSY.

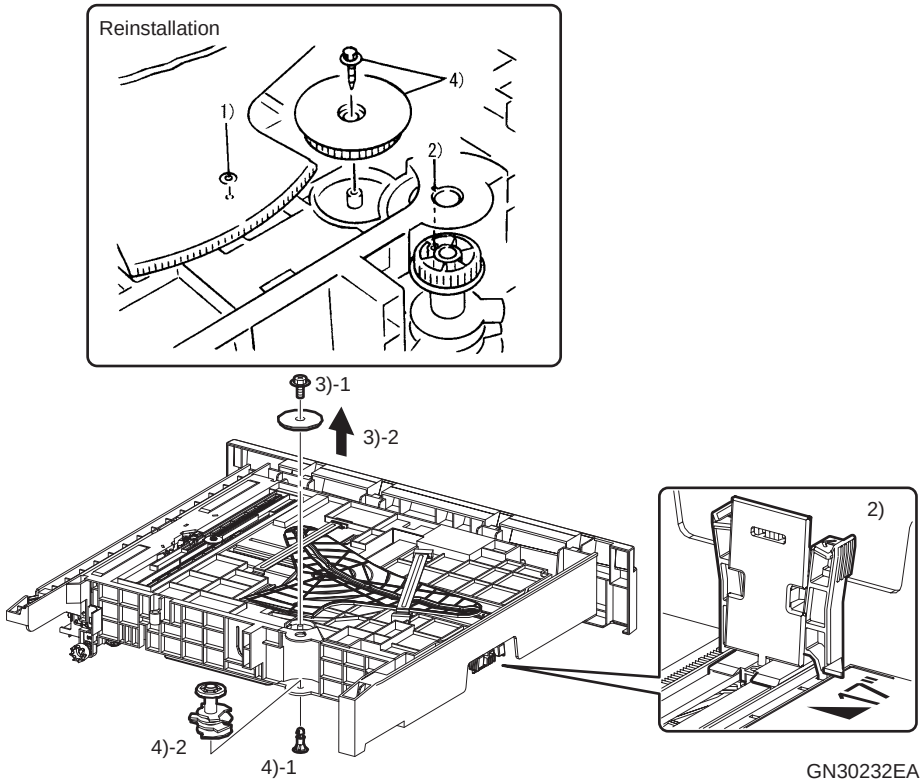

Figure 4-42. Removing the CAM SIZE, PIN LOCKING and GEAR IDLE

4.3.32 GUIDE ASSY END

REMOVAL

1. Remove the CASSETTE ASSY.
2. Move the GUIDE ASSY END to the position in Figure 4-43 (17" position).
3. Remove the one screw (black, flanged tapping, 10mm) that secures the GUIDE ASSY END, and remove the GUIDE ASSY END.

REINSTALLATION

1. In the position in Figure 4-43 (17" position), secure the GUIDE ASSY END with the one screw (black, flanged tapping, 10mm).
2. Install the CASSETTE ASSY.

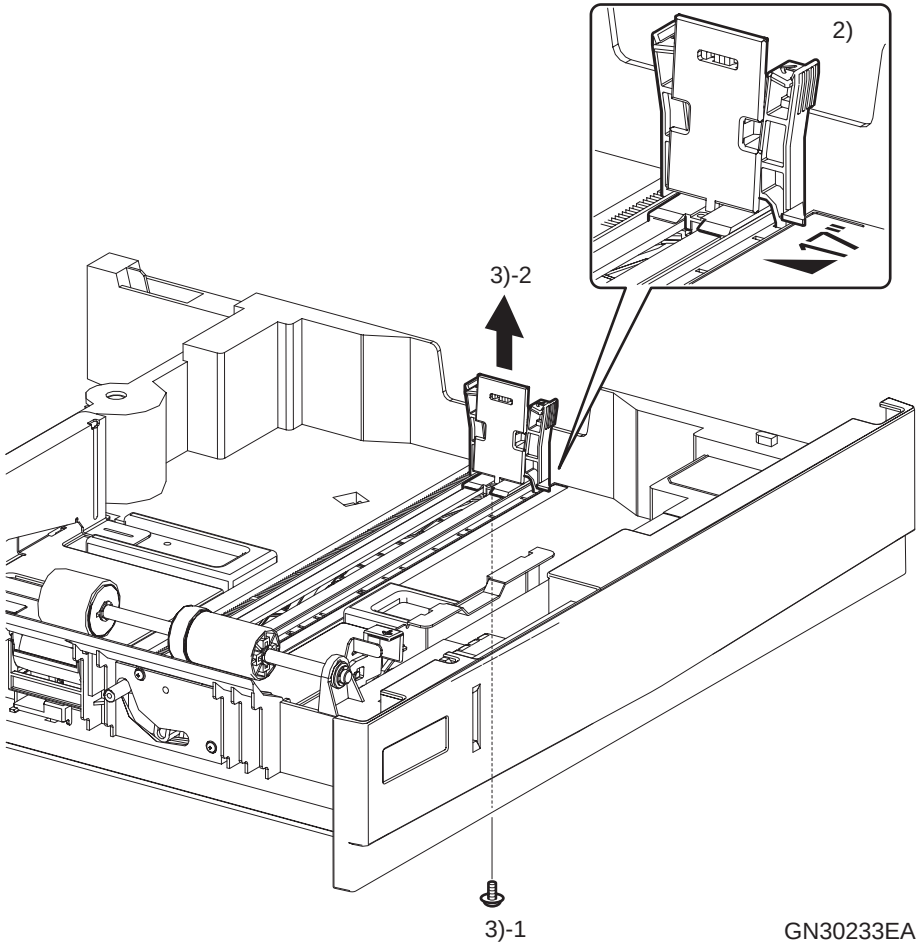

Figure 4-43. Removing the GUIDE ASSY END

manuals4you.com

4.3.33 GUIDE ASSY SIDE R, GUIDE ASSY SIDE F

REMOVAL

1. Remove the CASSETTE ASSY.
2. Move away the GUIDE ASSY SIDE R and GUIDE ASSY SIDE F to the positions where the Bosses of the RACK GEARs are visible.

CAUTION

1. Do not move them away fully since the Front side RACK GEAR cannot be removed in Step 4.

3. Remove the one screw (black, flanged tapping, 6mm) that secures the PINION GEAR on the Bottom side of the Tray, and remove the PINION GEAR.
4. While pushing the Bosses of the RACK GEARs from the Top side of the Tray, slide the RACK GEARs, and remove the RACK GEARs from the GUIDE ASSY SIDE R and GUIDE ASSY SIDE F.

CAUTION

2. In the following step, be sure to hold down the PLATE ASSY BOTTOM while putting the knobs of ARM FRONT and ARM REAR down (unlocking) since the PLATE ASSY BOTTOM pops up.

5. Lower the ARM FRONT and ARM REAR, and raise the PLATE ASSY BOTTOM.
6. Slide and remove the GUIDE ASSY SIDE R and GUIDE ASSY SIDE F.

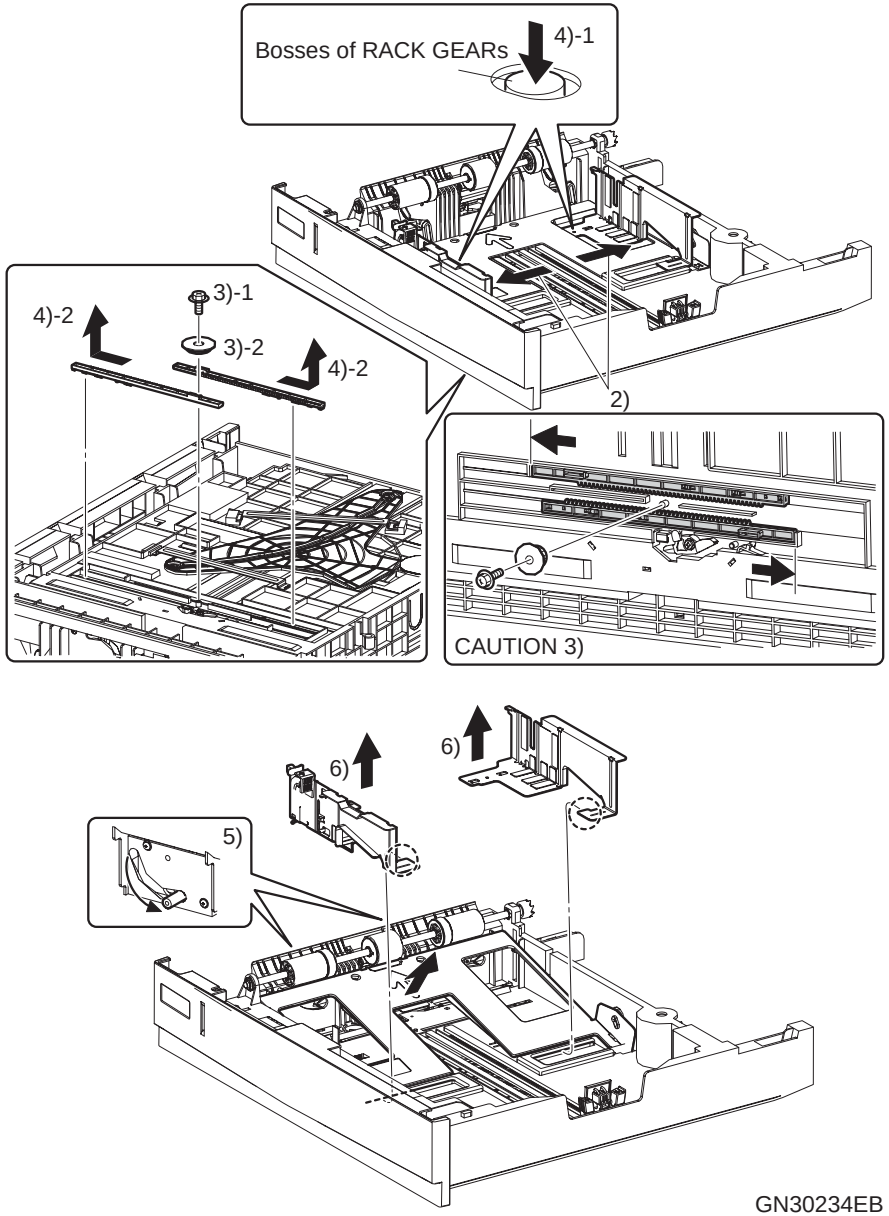

Figure 4-44. Removing the GUIDE ASSY SIDE R and GUIDE ASSY SIDE F

REINSTALLATION

1. Slide and install the GUIDE ASSY SIDE R and GUIDE ASSY SIDE F.
2. Lower the PLATE ASSY BOTTOM.

CAUTION

3. When installing the GUIDE ASSY SIDE R and GUIDE ASSY SIDE F, install the PINION GEAR with the two GUIDE ASSY SIDE F/R matched on the inside.

3. Install the RACK GEARs to the GUIDE ASSY SIDE R and GUIDE ASSY SIDE F.
4. On the Bottom side of the Tray, secure the PINION GEAR with the one screw (black, flanged tapping, 6mm).
5. Install the CASSETTE ASSY.

manuals4you.com

4.3.34 ACTUATOR N/E

REMOVAL

1. Remove the CASSETTE ASSY.
2. Grip and push the Hooks of the ACTUATOR N/E to the inside, and remove the ACTUATOR N/E.

REINSTALLATION

1. Install the ACTUATOR N/E with the PLATE ASSY BOTTOM lowered.
2. Install the CASSETTE ASSY.

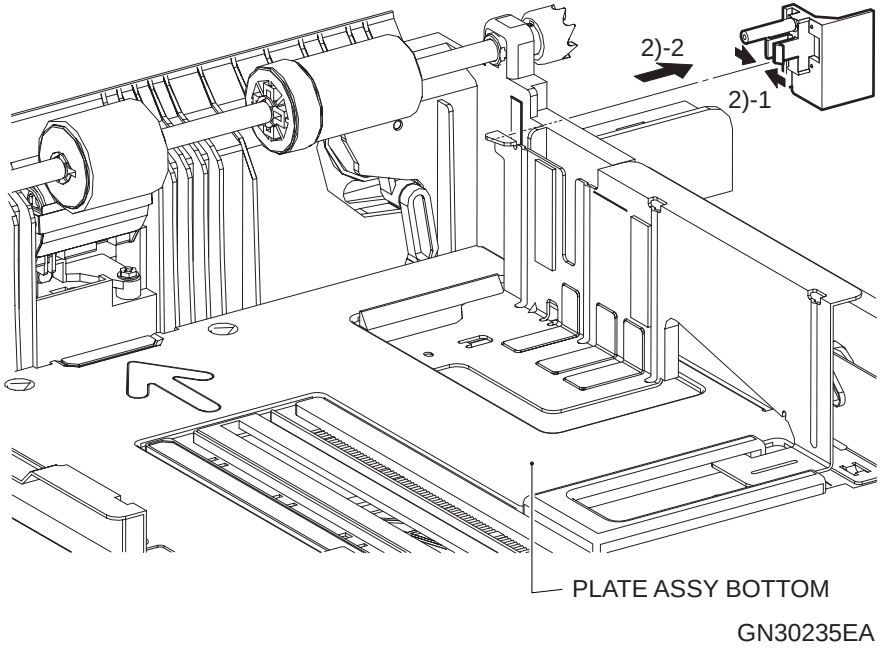

Figure 4-45. Removing the ACTUATOR N/E

manuals4you.com

4.3.35 DRIVE ASSY MAIN

REMOVAL

1. Remove the COVER ASSY REAR. (p.302)
2. Remove the GEAR ASSY HR. (p.406)
3. Open the LH ASSY.
4. Lower the Rear side Lever Handle of the Fuser unit.
5. Disconnect the Connector (P/J1061) of the DRIVE ASSY MAIN, and remove the Harness from the Clamp.
6. Disconnect the Connector (P/J23A5) of the CLUTCH ASSY FEED, and remove the Harness from the Clamp.
7. Remove the four screws (gold, flanged, 6mm) that secure the DRIVE ASSY MAIN, remove from the Clamp the Harness that comes from the INLET, and remove the DRIVE ASSY MAIN.

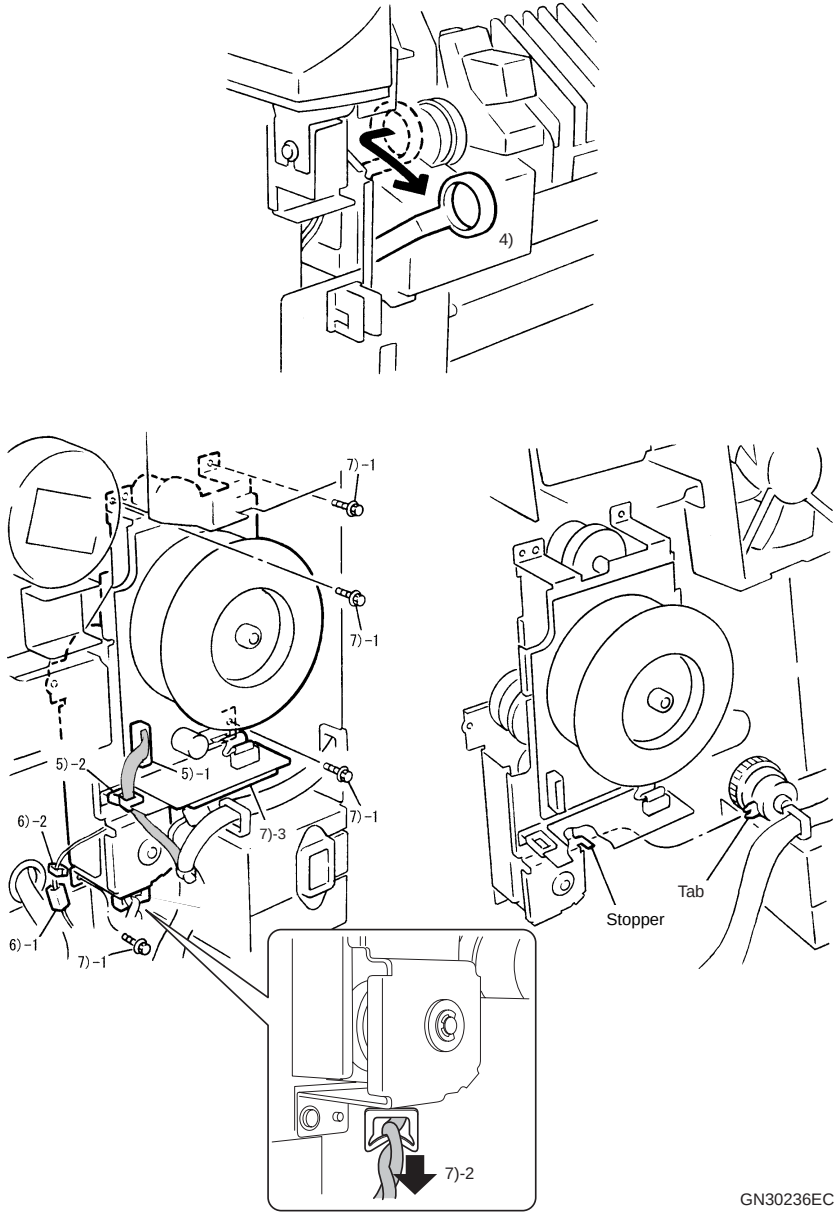

Figure 4-46. Removing the DRIVE ASSY MAIN

manuals4you.com

REINSTALLATION

1. Install the DRIVE ASSY MAIN with the four screws (gold, flanged, 6mm), and secure to the Clamp the Harness that comes from the INLET.

CAUTION

1. Install the DRIVE ASSY MAIN after matching the Stopper of the DRIVE ASSY MAIN to the Tab of the CLUTCH ASSY FEED as shown in Figure 4-46.

2. Secure the Harness of the CLUTCH ASSY FEED to the Clamp, and connect the Connector (J23A5) of the CLUTCH ASSY FEED to the Connector (P23A5) of the HARNESS ASSY R-BTM.
3. Secure the HARNESS ASSY R-BTM of the DRIVE ASSY MAIN to the Clamp, and connect the Connector (J1061) of the HARNESS ASSY R-BTM to the Connector (P1061) of the DRIVE ASSY MAIN.
4. Raise the Rear side Lever Handle of the Fuser unit.
5. Release the Hook of the STOPPER ASSY IDT, and close the LH ASSY.

CAUTION

2. When the IDT UNIT has been removed, the LH ASSY cannot be closed unless the STOPPER ASSY IDT is released. "4.1.1 Precautions" *(p.293)*

3. When you opened/closed the LH ASSY with the printer powered off, be sure to power on the printer after the work is finished to warm it up. Failure to do so may cause problems in print quality. (Refer to "3.3.4 FIP-P16" *(p.181)*)

6. Install the GEAR ASSY HR. *(p.406)*
7. Install the COVER ASSY REAR. *(p.302)*

4.3.36 CLUTCH ASSY FEED

REMOVAL

1. Remove the COVER ASSY REAR. (p.302)
2. Remove the GEAR ASSY HR. (p.406)
3. Open the LH ASSY.
4. Remove the DRIVE ASSY MAIN. (p.353)
5. Remove the E Ring that secures the BEARING-SLIDE, and remove the BEARING-SLIDE, BEARING-8 and SHAFT ASSY CLUTCH.
6. Turn the DRIVE ASSY MAIN clockwise to rotate the CLUTCH ASSY FEED, and remove the CLUTCH ASSY FEED.

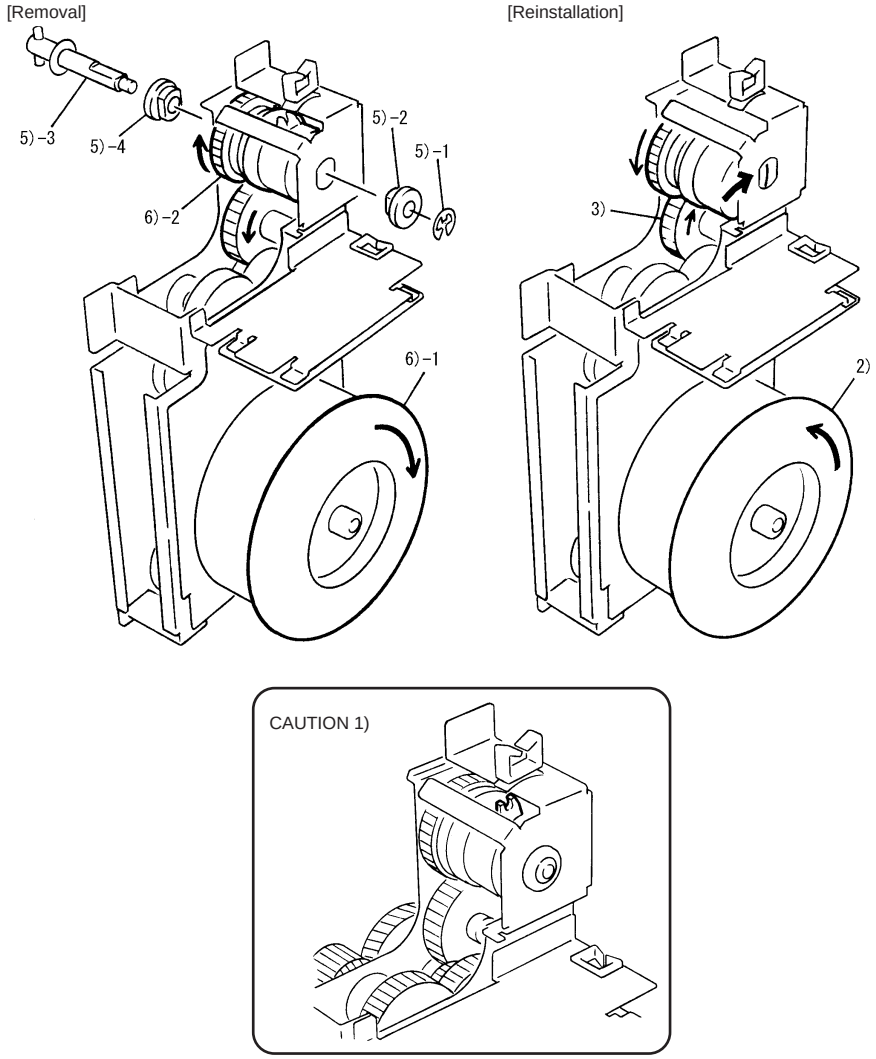

Figure 4-47. Removing the CLUTCH ASSY FEED

manuals4you.com

REINSTALLATION

1. Engage the Gears of the CLUTCH ASSY FEED.
2. Turn the DRIVE ASSY MAIN counterclockwise.
3. Rotate the Gear of the CLUTCH ASSY FEED, and fit the CLUTCH ASSY FEED.

CAUTION

1. Install the Tab of the CLUTCH ASSY FEED in the position shown in Figure 4-47.

4. Install the SHAFT ASSY CLUTCH, BEARING-8 and BEARING-SLIDE in this order and secure them with the E Ring.
5. Install the DRIVE ASSY MAIN. *(p.353)*
6. Release the Hook of the STOPPER ASSY IDT, and close the LH ASSY.

CAUTION

2. When the IDT UNIT has been removed, the LH ASSY cannot be closed unless the STOPPER ASSY IDT is released. "4.1.1 Precautions" *(p.293)*

3. When you opened/closed the LH ASSY with the printer powered off, be sure to power on the printer after the work is finished to warm it up. Failure to do so may cause problems in print quality. (Refer to "3.3.4 FIP-P16" *(p.181)*)

7. Install the GEAR ASSY HR. *(p.406)*
8. Install the COVER ASSY REAR. *(p.302)*

4.4 ROS

4.4.1 ROS ASSY

REMOVAL

1. Open the COVER ASSY FRONT, and remove the COVER ASSY RIGHT. *(p.298)*
2. Remove the COVER HIGH ASSY TOP. *(p.299)*
3. Remove the two screws (silver, 6mm) that secure the BRACKET ROS COVER, and remove the BRACKET ROS COVER.
4. Disconnect the Harness from the three Relay Connectors (P/J111) (P/J120) (P/J1431) of the ROS ASSY.
5. Remove the two SCREW ROSs and SPRING ROSs.
6. Remove the ROS ASSY along the Front side in the direction of arrow.

REINSTALLATION

1. Install the ROS ASSY along the Front side.

CAUTION

When installing the ROS ASSY, insert it along the Front side and match the ROS ASSY hole and Positioning Pin. After installation, make sure that the ROS ASSY is not loose.

2. Insert the SCREW ROSs into the SPRING ROSs, and secure the ROS ASSY with the SCREW ROSs.
3. Connect the Relay Connectors (P111) and (P120) of the ROS ASSY to the Connectors (J111) and (J120) of the HARNESS ASSY ROS, and connect the Relay Connector (P1431) of the ROS ASSY to the Connector (J1431) of the HARNESS ASSY ESS-ROS.
4. Secure the BRACKET ROS COVER with the two screws (silver, 6mm).
5. Install the COVER HIGH ASSY TOP. *(p.299)*
6. Close the COVER ASSY FRONT, and install the COVER ASSY RIGHT. *(p.298)*

ADJUSTMENT REQUIRED

After replacing the ROS ASSY, execute the following.
"5.1.2 Part/unit-based adjustment items" *(p.460)*
- **Color Registration Adjustment**

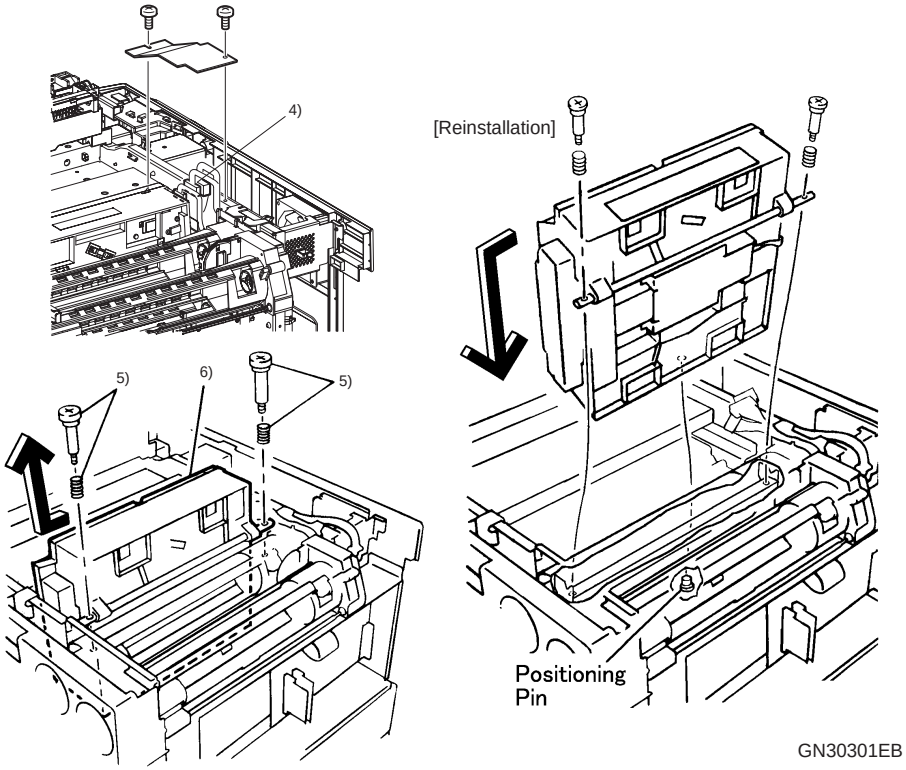

Figure 4-48. Removing the ROS ASSY

manuals4you.com

4.4.2 KIT HEATER ASSY, KIT HEATER DELE ASSY

REMOVAL

1. Remove the SEAL SCREW.

CAUTION

1. Completely remove the adhesive.

2. Open the COVER ASSY FRONT, and remove the COVER ASSY RIGHT. *(p.298)*
3. Remove the COVER HIGH ASSY TOP. *(p.299)*
4. Remove the ROS ASSY. *(p.357)*
5. Remove the LVPS. *(p.373)*
6. Cut off the two BANDs that tie the Harness of the Thermostat together with the Harness of the FUSER DRAWER CONNECTOR, and release the Harness of the Thermostat.
7. Loosen the one screw that secures the Rear side of the TARNSPORT EXIT ASSY, lift the TARNSPORT EXIT ASSY, move away the Harness of the Thermostat, and tighten the screw to secure the TARNSPORT EXIT ASSY.

CAUTION

2. Be careful not to get the Harness of the SENSOR ASSY TP pinched under the TARNSPORT EXIT ASSY.

8. Peel off the Tape, and peel and remove the Thermostat from the main unit Frame.

CAUTION

3. Completely remove the adhesive.

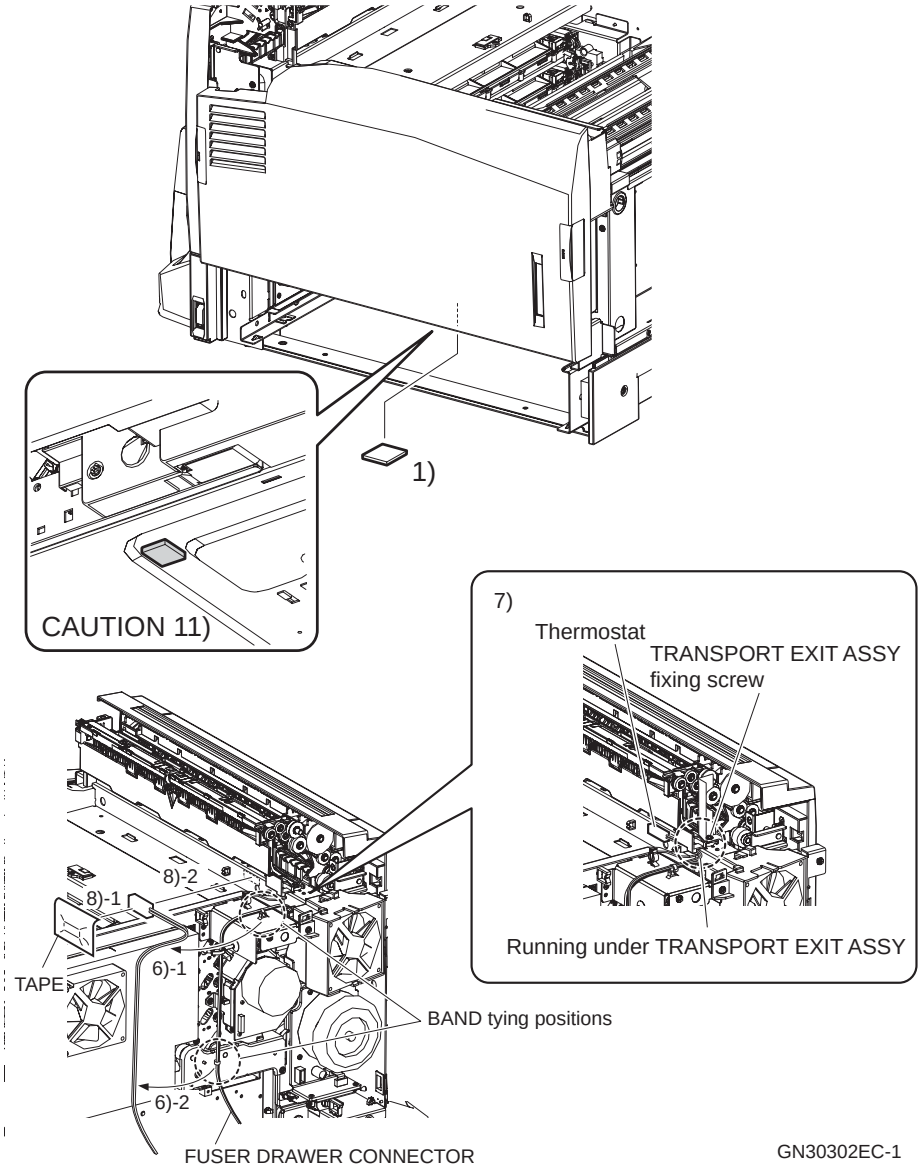

Figure 4-49. Removing the KIT HEATER ASSY and KIT HEATER DELE ASSY (1)

9. Disconnect the WIRE ASSY HEAT from the Connector (J102) of the MAIN POWER SWITCH & INLET and the Connector of the HEATER ASSY/ HEATER ASSY DELE, and release and remove it from the CLAMP CKN-10.
10. Remove the CLAMP CKN-10.
11. Release the Harness of the HEATER ASSY/HEATER ASSY DELE from the four Clamps, and draw the Connectors and Thermostat (KIT HEATER DELE only) from the Bush into the main unit.
12. Remove the four Clamps and one Bush.
13. Remove the two screws (black, flanged, 6mm), and remove the HEATER ASSY/HEATER ASSY DELE.

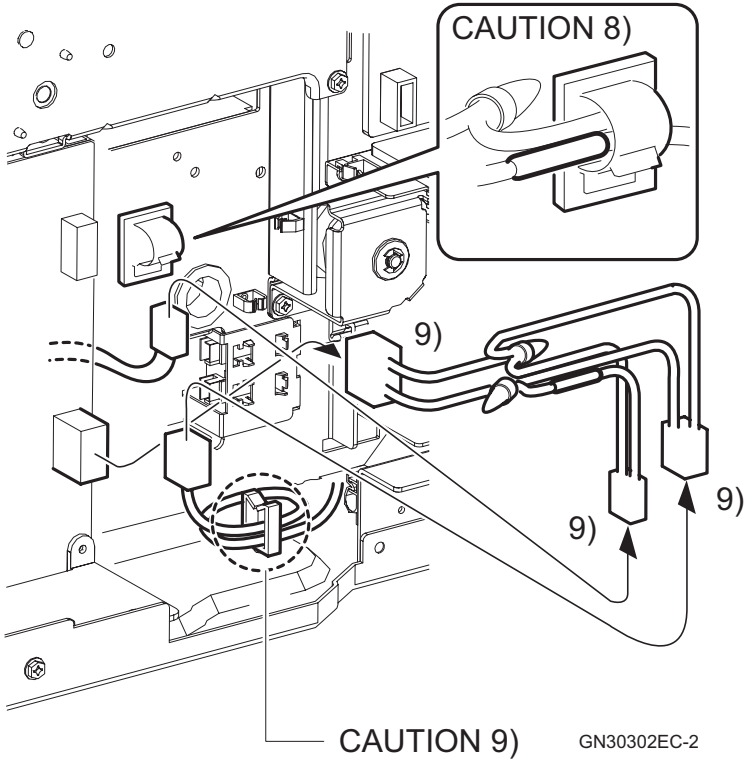

Figure 4-50. Removing the KIT HEATER ASSY and KIT HEATER DELE ASSY (2)

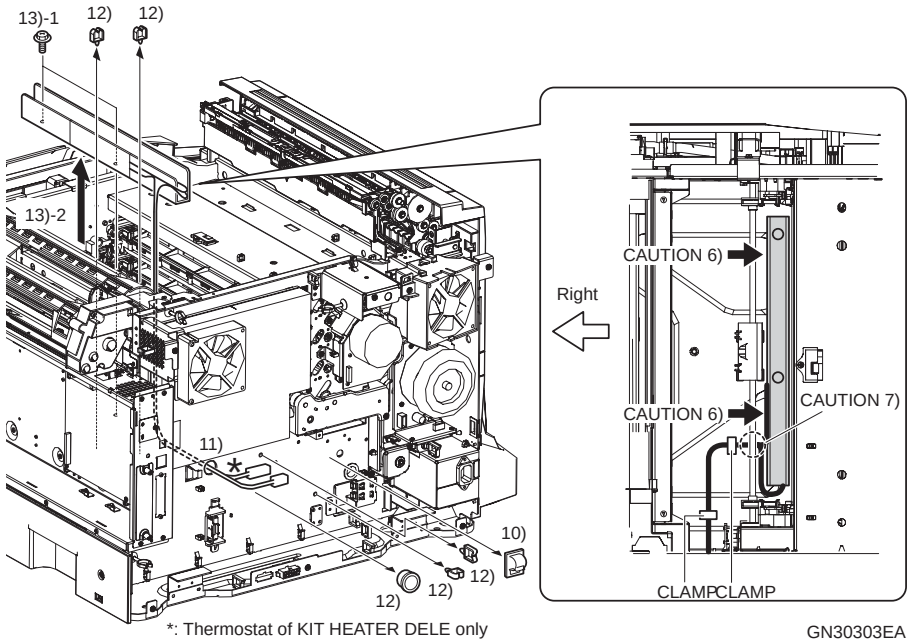

Figure 4-51. Removing the KIT HEATER ASSY and KIT HEATER DELE ASSY (3)

manuals4you.com

REINSTALLATION

CAUTION

4. Take the following cautions for installation of the KIT HEATER ASSY or KIT HEATER DELE ASSY.
- **The Heater increases power consumption.**
- **Select the power saving mode (Support Menu: Sleep Mode=Enable) because keeping power on for 24 hours will shorten the service life of the MCU PWB.**
- **Safety precautions are required to prevent Thermostat off, etc.**

5. When the part is installed for the first time, execute Steps 2) to 5) in "Removal" and then carry out the following procedure.

1. Secure the HEATER ASSY/HEATER ASSY DELE with the two screws (black, flanged, 6mm).

CAUTION

6. Secure the part while pushing it tightly in the direction of arrow.

7. Run the Harness of the HEATER ASSY/HEATER ASSY DELE under the SHAFT ASSY TRACKING.

2. Fit the Clamps in two places of the main unit Frame bottom and in two places of the Rear side, and install the BUSH in the round hole of the Rear from the Rear side.
3. Pass the Harness of the HEATER ASSY/HEATER ASSY DELE into the BUSH, pull out the Connectors and Thermostat (KIT HEATER DELE only) to the Rear side of the main unit, and secure the Harness to the four Clamps.
4. Apply the CLAMP CKN-10 to the Rear side in the position shown in Figure 4-51.
5. Connect the WIRE ASSY HEAT to the Connector (J102) of the MAIN POWER SWITCH & INLET and the Connector of the HEATER ASSY/ HEATER ASSY DELE, and secure it to the CLAMP CKN-10.

CAUTION

8. To avoid wire breakage, do not forcibly bend both ends of the Fuse of the WIRE ASSY HEAT.

9. Wind the Harness of the MAIN POWER SWITCH & INLET twice around the CLAPM WS-2NS to adjust its length.

CHECK POINT

Steps 6) to 9) are executed only when the KIT HEATER DELE ASSY is installed.

6. In the position of main unit Frame shown in Figure 4-49, apply the Thermostat with the supplied double-faced tape.
7. Apply the Tape to cover the entire Thermostat.
8. Loosen the one screw that secures the Rear side of the TRANSPORT EXIT ASSY, lift the TRANSPORT EXIT ASSY, pass the Harness of the Thermostat between the TRANSPORT EXIT ASSY and main unit Frame like the Harness of the SENSOR ASSY TP, and tighten the screw to secure the TRANSPORT EXIT ASSY.

CAUTION

10. Be careful not to get the Harness pinched under the TARNSPORT EXIT ASSY.

9. As shown in Figure 4-49, tie the Harness of the Thermostat to the Harness of the FUSER DRAWER CONNECTOR with two BANDs.
10. Install the LVPS *(p.373)*, and connect the Connector of the WIRE ASSY HEAT to the Connector (P102) of the LVPS.
11. Install the ROS ASSY. *(p.357)*
12. Install the COVER HIGH ASSY TOP. *(p.299)*
13. Close the COVER ASSY FRONT, and install the COVER ASSY RIGHT. *(p.298)*
14. Apply the SEAL SCREW to the HEATER ASSY/HEATER ASSY DELE fixing screw tip (Front side only) in the Top Plate of the CASSETTE ASSY Entry.

CAUTION

11. As shown in Figure 4-49, put the entire surface of the SEAL SCREW into the recess of the Top Plate.

12. After installation, switch power on, wait for more than 15 minutes, touch the main unit Frame around the SEAL SCREW through the CASSETTE ASSY Entry, and make sure that it is warm (the HEATER ASSY/HEATER ASSY DELE is operating properly).

4.5 Fuser and Exit Transport

4.5.1 Fuser unit

CAUTION

1. **Since the Fuser unit becomes hot, start your work after it has thoroughly cooled off.**

REMOVAL

1. Open the LH ASSY.
2. Lower the black Lever Handles (Front/Rear), and release the Fuser unit from the Boss.
3. Remove the Fuser Unit in the direction of arrow.

CAUTION

2. **When holding the Fuser Unit, hold the green Lever Handles.**

REINSTALLATION

1. Match the Boss of the Fuser unit with the hole of the Frame, and install the Fuser unit.

CAUTION

3. **Make sure that the FUSER DRAWER CONNECTOR is securely inserted.**

2. Raise the Lever Handles (Front/Rear), and secure the Fuser unit.
3. Release the Hook of the STOPPER ASSY IDT, and close the LH ASSY.

CAUTION

4. **When the IDT UNIT has been removed, the LH ASSY cannot be closed unless the STOPPER ASSY IDT is released. "4.1.1 Precautions" *(p.293)***
5. **When you opened/closed the LH ASSY with the printer powered off, be sure to power on the printer after the work is finished to warm it up. Failure to do so may cause problems in print quality. (Refer to "3.3.4 FIP-P16" *(p.181)*)**

ADJUSTMENT REQUIRED

After replacing the Fuser unit, execute the following.
"5.1.2 Part/unit-based adjustment items" *(p.460)*

- **Life counter clear**

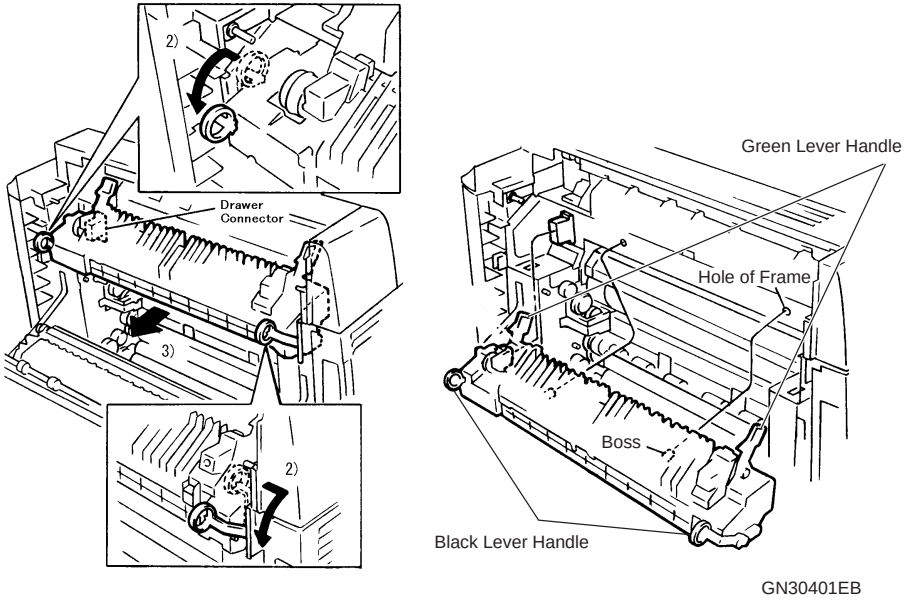

Figure 4-52. Removing the Fuser unit

manuals4you.com

4.5.2 TRANSPORT EXIT ASSY, SENSOR ASSY TP

REMOVAL

1. Open the LH ASSY.

CAUTION

1. Since the Fuser unit becomes hot, start your work after it has thoroughly cooled off.

2. Remove the Fuser unit. *(p.361)*
3. Release the two Hooks of the COVER EXIT TOP, and remove the COVER EXIT TOP.
4. Remove the one screw (silver, flanged, 12mm) that secures the BRACKET EXIT, and remove the BRACKET EXIT.
5. Remove the one screw (gold, 8mm) that secures the TRANSPORT EXIT ASSY.
6. Release the Hook of the TRANSPORT EXIT ASSY, and remove the TRANSPORT EXIT ASSY.
7. Remove the one screw (silver, 6mm) that secures the SENSOR ASSY TP.
8. Disconnect the Harness from the Connectors (P/J151) (P/J153) of the SENSOR ASSY TP, and remove the SENSOR ASSY TP.

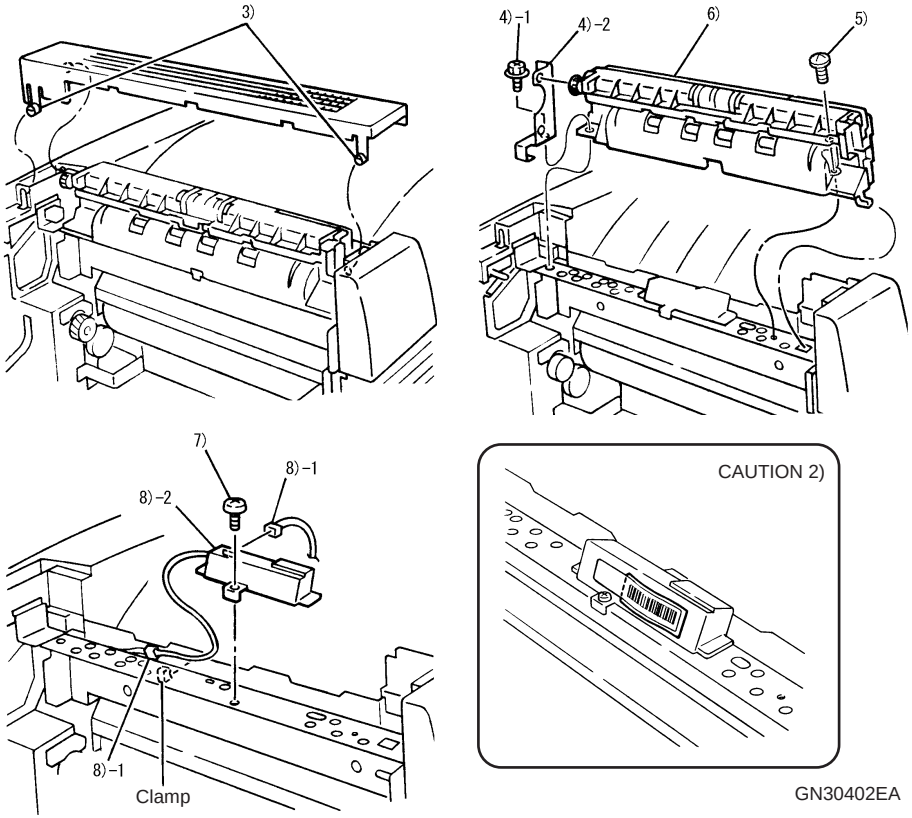

Figure 4-53. Removing the TRANSPORT EXIT ASSY and SENSOR ASSY TP

REINSTALLATION

CAUTION

2. When a new SENSOR ASSY TP has been installed, tear off the bar code side of the applied label. As a correction value, write the value in the least significant two digits given under the bar code of the separated stub.

1. Connect the Connectors (J151) (J153) of the HAFRNESS ASSY R-TOP1 to the Connectors (P151) (P153) of the SENSOR ASSY TP.
2. Secure the SENSOR ASSY TP with the one screw (silver, 6mm).
3. Match the Hook of the TRANSPORT EXIT ASSY, and install the TRANSPORT EXIT ASSY.
4. Secure the TRANSPORT EXIT ASSY with the one screw (gold, 8mm).
5. Install the BRACKET EXIT together with the TRANSPORT EXIT ASSY with the one screw (silver, flanged, 12mm).
6. Match the two Hooks of the COVER EXIT TOP, and install the COVER EXIT TOP.
7. Install the Fuser Unit. *(p.361)*
8. Release the Hook of the STOPPER ASSY IDT, and close the LH ASSY.

CAUTION

3. When the IDT UNIT has been removed, the LH ASSY cannot be closed unless the STOPPER ASSY IDT is released. "4.1.1 Precautions" *(p.293)*

4. When you opened/closed the LH ASSY with the printer powered off, be sure to power on the printer after the work is finished to warm it up. Failure to do so may cause problems in print quality. (Refer to "3.3.4 FIP-P16" *(p.181)*)

ADJUSTMENT REQUIRED

After replacing the SENSOR ASSY TP, execute the following.
"5.1.2 Part/unit-based adjustment items" *(p.460)*

- **Write adjustment value**
  When a new SENSOR ASSY TP has been installed, tear off the bar code side of the applied label. As a correction value, write the value in the least significant two digits given under the bar code of the separated stub.

manuals4you.com

4.5.3 ROLL ASSY EXIT 2

REMOVAL

1. Open the LH ASSY.

CAUTION

1. Since the Fuser unit becomes hot, start your work after it has thoroughly cooled off.

2. Remove the Fuser unit. *(p.361)*
3. Remove the TRANSPORT EXIT ASSY. *(p.362)*
4. Remove the two screws (gold, tapping, 8mm) that secure the KIT CHUTE EXIT UP.
5. Release the two Hooks of the KIT CHUTE EXIT UP, and remove the KIT CHUTE EXIT UP.
6. Remove the E Ring that secures the GEAR 28Z, and take off the GEAR 28Z.
7. Remove the E Ring that secures the GEAR 28Z D, and take off the GEAR 28Z D and BEARING 6.
8. Remove the E Ring that secures the SPACER, and slide and remove the ROLL ASSY EXIT 2 to the SPACER side.

CAUTION

2. Since the BEARING 6 is freed, be careful not to lose it.

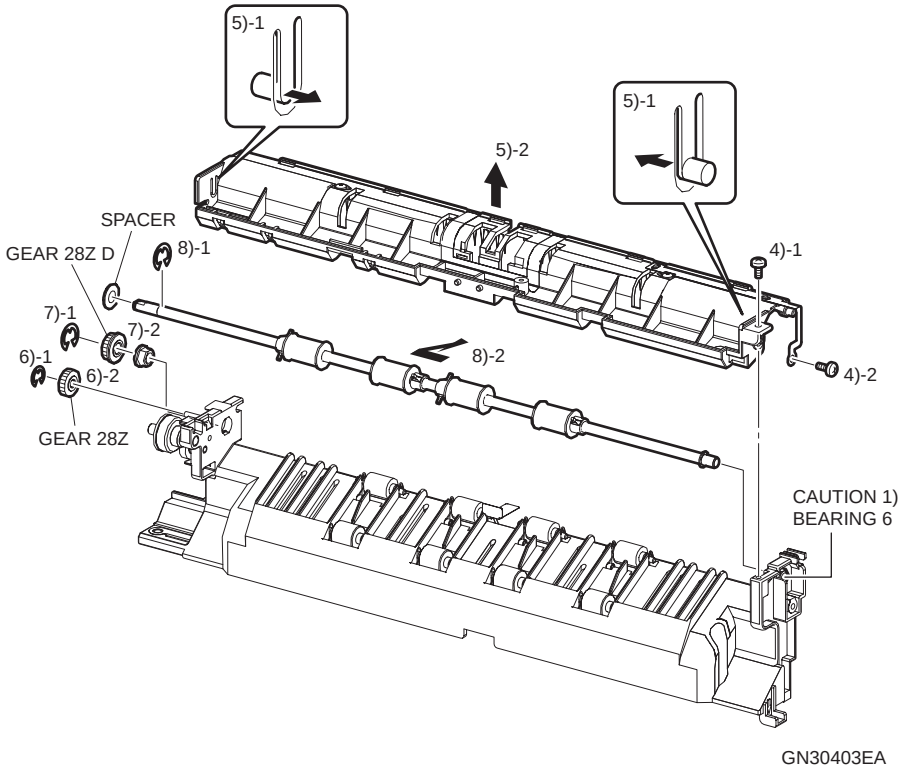

Figure 4-54. Removing the ROLL ASSY EXIT 2

REINSTALLATION

1. Install the ROLL ASSY EXIT 2 from the SPACER side and secure the SPACER with the E Ring.

CAUTION

3. When installing the GEAR 28Z D, note the orientation of the GEAR 28Z D.

2. Fit the GEAR 28Z D and BEARING 6, and secure the GEAR 28Z D with the E Ring.
3. Fit the GEAR 28Z, and secure the GEAR 28Z with the E Ring.
4. Match the two Hooks of the KIT CHUTE EXIT UP, and install the KIT CHUTE EXIT UP.
5. Secure the KIT CHUTE EXIT UP with the two screws (gold, tapping, 8mm).
6. Install the TRANSPORT EXIT ASSY.*(p.362)*
7. Install the Fuser Unit. *(p.361)*
8. Release the Hook of the STOPPER ASSY IDT, and close the LH ASSY.

CAUTION

4. When the IDT UNIT has been removed, the LH ASSY cannot be closed unless the STOPPER ASSY IDT is released. "4.1.1 Precautions" *(p.293)*

5. When you opened/closed the LH ASSY with the printer powered off, be sure to power on the printer after the work is finished to warm it up. Failure to do so may cause problems in print quality. (Refer to "3.3.4 FIP-P16" *(p.181)*)

manuals4you.com

4.5.4 FUSER DRAWER CONNECTOR

REMOVAL

1. Open the COVER ASSY FRONT.
2. Remove the COVER ASSY REAR. (p.302)
3. Remove the COVER HIGH ASSY TOP. (p.299)

CAUTION

1. **Since the Fuser unit becomes hot, start your work after it has thoroughly cooled off.**

4. Remove the Fuser unit. (p.361)
5. Remove the FAN FUSER. (p.369)
6. Remove the two screws (black, flanged, 8mm) that secure the DUCT FUSER, and remove the DUCT FUSER.
7. Disconnect the Harness from the Connector of the LVPS.
8. Release the two Cable Bands, and remove the Harness from the two Clamps.
9. After releasing the Left side Hook with a mini flat-blade screwdriver, also release the Right side Hook, and remove the FUSER DRAWER CONNECTOR.
10. Disconnect the Harness from the Connector (P/J158) of the FUSER DRAWER CONNECTOR.

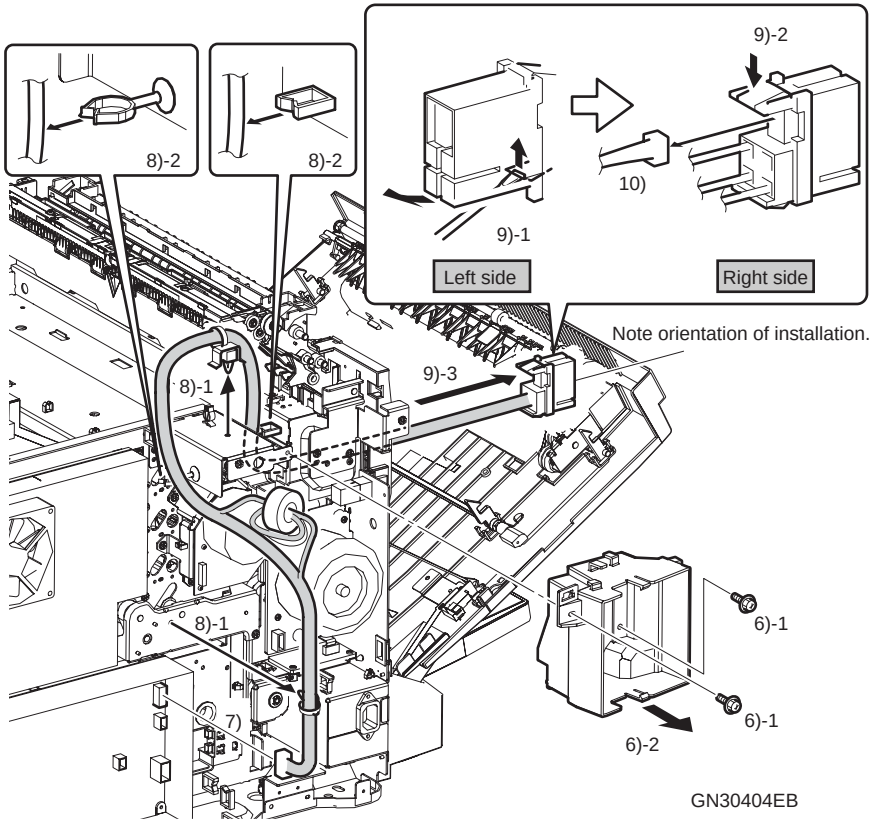

Figure 4-55. Removing the FUSER DRAWER CONNECTOR

REINSTALLATION

1. Connect the Harness to the Connector (P/J158) of the FUSER DRAWER CONNECTOR.
2. Match the two Hooks, and install the FUSER DRAWER CONNECTOR.

CAUTION

2. Note the orientation of installing the FUSER DRAWER CONNECTOR.

3. Secure the two Cable Bands, and secure the Harness to the two Clamps.
4. Connect the Connector (J103) of the FUSER DRAWER CONNECTOR to the Connector (P103) of the LVPS.
5. Secure the DUCT FUSER with the three screws (black, flanged, 8mm).
6. Install the FAN FUSER. *(p.369)*
7. Install the Fuser Unit. *(p.361)*
8. Install the COVER HIGH ASSY TOP. *(p.299)*
9. Install the COVER ASSY REAR. *(p.302)*
10. Close the COVER ASSY FRONT.

manuals4you.com

4.6 Electrical

4.6.1 SENSOR HUM TE

REMOVAL

1. Remove the COVER HIGH ASSY TOP. (p.299)
2. Remove the one screw (silver, 6mm) that secures the HOLDER SENSOR, and remove the HOLDER SENSOR.
3. Release the two Hooks of the SENSOR HUM TE, and remove the SENSOR HUM TE from the HOLDER SENSOR.
4. Disconnect the Harness from the Connector (P/J152) of the SENSOR HUM TE.

REINSTALLATION

1. Connect the Connector (J152) of the HARNESS ASSY R-TOP1 to the Connector (P152) of the SENSOR HUM TE.
2. Match the two Hooks of the SENSOR HUM TE, and install the SENSOR HUM TE to the HOLDER SENSOR.
3. Secure the HOLDER SENSOR with the one screw (silver, 6mm).
4. Install the COVER HIGH ASSY TOP. (p.299)

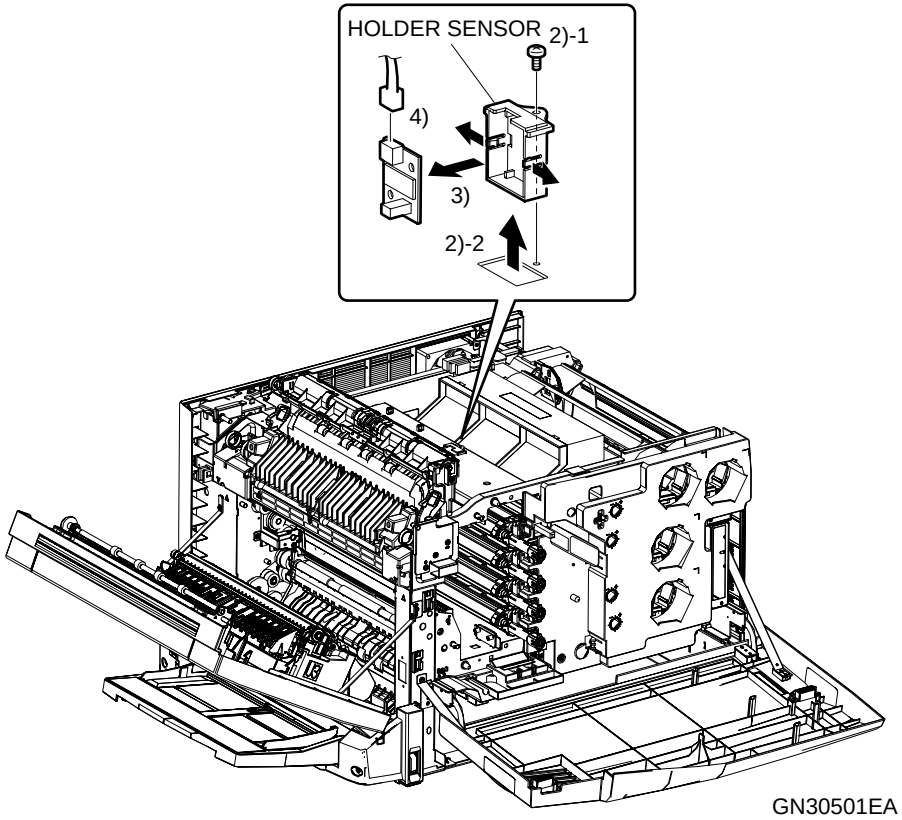

Figure 4-56. Removing the SENSOR HUM TE

4.6.2 FAN FUSER

REMOVAL

1. Open the COVER ASSY FRONT.
2. Remove the COVER ASSY REAR. (p.302)
3. Remove the COVER HIGH ASSY TOP. (p.299)
4. Disconnect the Harness from the Connector (P/J1041) of the FAN FUSER.
5. Release the two Hooks of the FAN FUSER, and remove the FAN FUSER from the DUCT FUSER.

REINSTALLATION

CAUTION

1. When installing the FAN FUSER, note the orientation of the FAN FUSER.

1. Match the two Hooks of the FAN FUSER to the DUCT FUSER, and install the FAN FUSER.

CAUTION

2. After installation, make sure that the two Hooks engage the FAN FUSER securely.

2. Connect the Connector (J1041) of the HARNESS ASSY R-TOP1 to the Connector (P1041) of the FAN FUSER.
3. Install the COVER HIGH ASSY TOP. (p.299)
4. Install the COVER ASSY REAR. (p.302)
5. Close the COVER ASSY FRONT.

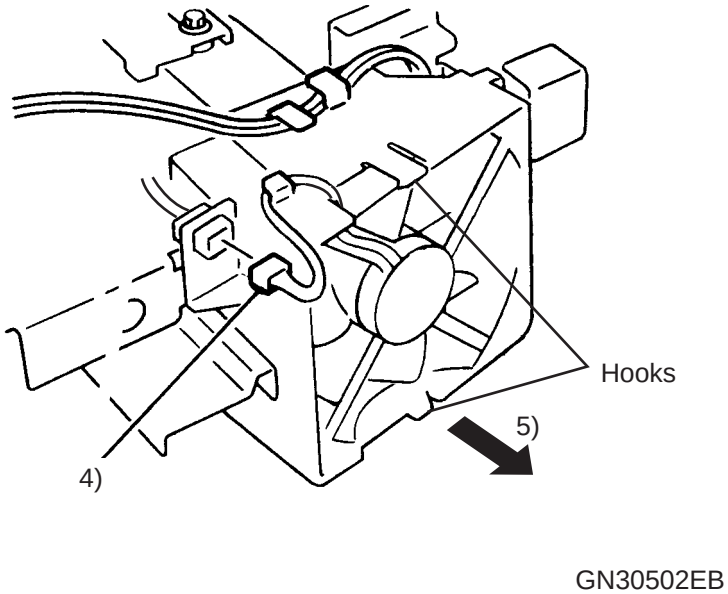

Figure 4-57. Removing the FAN FUSER

manuals4you.com

4.6.3 FAN LV

REMOVAL

1. Open the COVER ASSY FRONT.
2. Remove the COVER ASSY REAR. (p.302)
3. Remove the COVER HIGH ASSY TOP. (p.299)
4. Disconnect the Harness from the Connector (P/J105) of the LVPS.
5. Remove the two SCREW FANs that secure the FAN LV, and remove the FAN LV.

REINSTALLATION

1. Match the Notch of the FAN LV with the Tab of the Fan Bracket, and secure the FAN LV with the two SCREW FANs.
2. Route the Harness of the LVPS as shown in Figure 4-58, and connect the Connector (J105) of the FAN LV to the Connector (P105) of the LVPS.
3. Install the COVER HIGH ASSY TOP. (p.299)
4. Install the COVER ASSY REAR. (p.302)
5. Close the COVER ASSY FRONT.

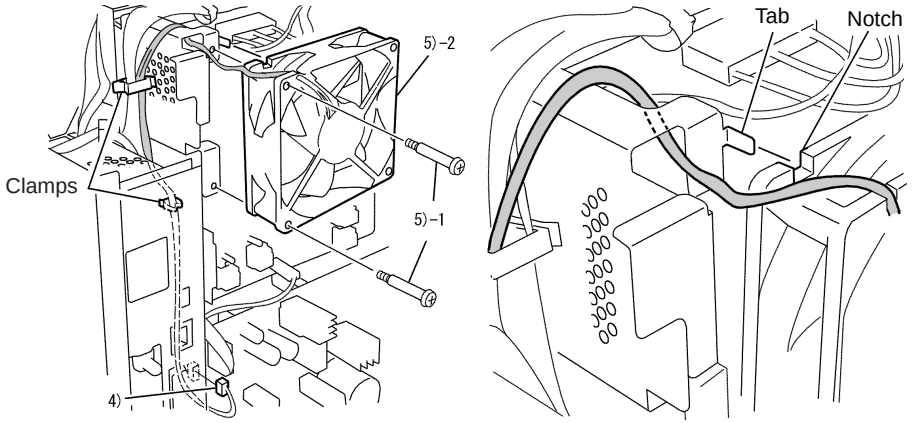

Figure 4-58. Removing the FAN LV

4.6.4 HVPS

REMOVAL

1. Open the COVER ASSY FRONT.
2. Remove the COVER ASSY REAR. (p.302)
3. Remove the COVER HIGH ASSY TOP. (p.299)
4. Remove the FAN LV. (p.370)
5. Disconnect the Harnesses from the six Connectors (P/J131) (P/J132) (P/J133) (P/J134) (P/J135) (T401) of the HVPS, and release the Harnesses from the Clamp on the HVPS.
6. Remove the five screws (silver, 6mm) and four screws (gold, tapping, 8mm) that secure the HVPS.
7. Release the two Hooks of the HVPS, and remove the HVPS from the two Bosses.

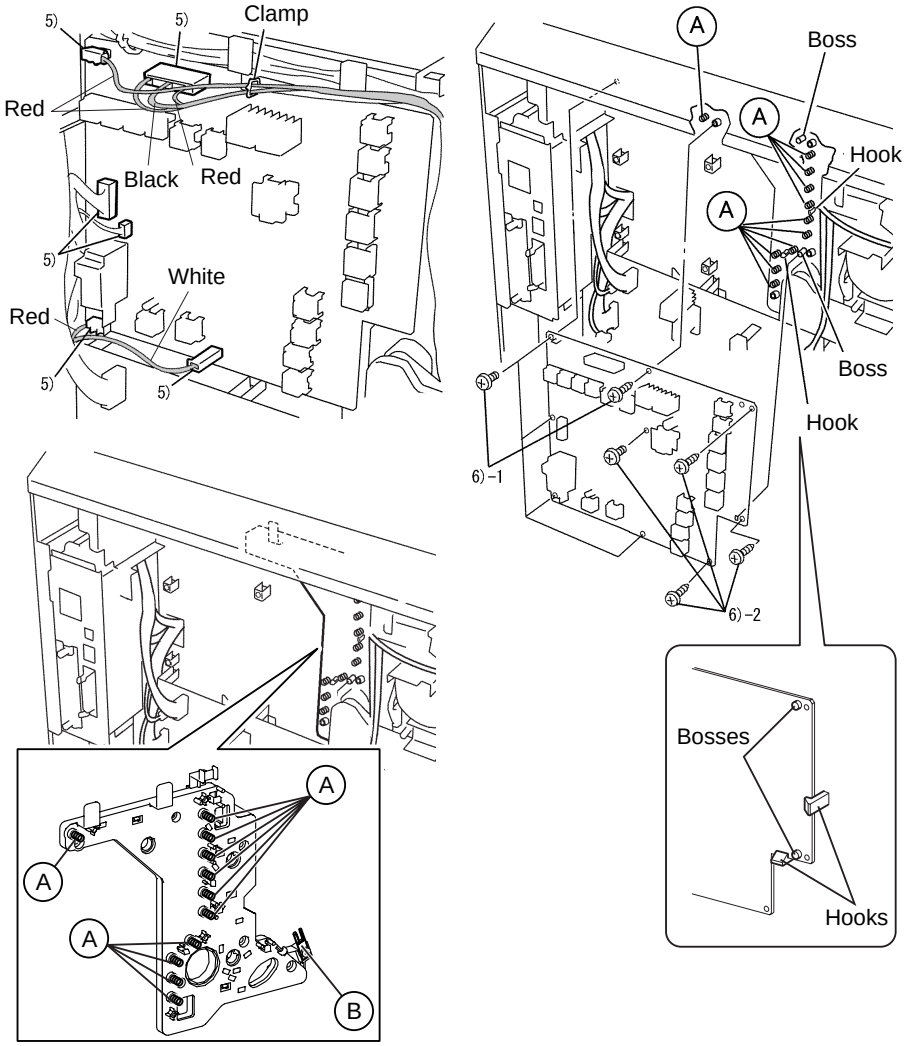

GN30504EB

Figure 4-59. Removing the HVPS

manuals4you.com

REINSTALLATION

CAUTION

1. Before installing the HVPS, make certain that the Bias Springs (A in Figure 4-59) and Plate Spring (B in Figure 4-59) of the main unit Frame are not deformed. Also be careful not to deform them during installation.

1. Fit the HVPS into the two Bosses, and fit the two Hooks.
2. Secure the HVPS with the five screws (silver, 6mm) and four screws (gold, tapping, 8mm).

CAUTION

2. Use the screws (gold, tapping, 8mm) in the holes marked "TAP" on the Board.

3. Connect the Connectors (J131) (J132) of the HARNESS ASSY R-BTM to the Connectors (P131) (P132) of the HVPS.
   Connect the Connector (J133) of the DRIVE ASSY PR to the Connector (P133) of the HVPS, connect the Connector (J134) of the HARNESS ASSY IDT to the Connector (P134) of the HVPS, and secure the Harnesses to the Clamp on the HVPS.
   Connect the Connectors (J135) (T401) of the HARNESS ASSY HVLH to the Connectors (P135) (T401) of the HVPS.
4. Install the FAN LV. *(p.370)*
5. Install the COVER HIGH ASSY TOP. *(p.299)*
6. Install the COVER ASSY REAR. *(p.302)*
7. Close the COVER ASSY FRONT.

CAUTION

3. If the Connectors on the HVPS are not connected securely, the following faults will occur. Securely connect the Connectors when installing the HVPS.

Table 4-2. Symptoms that appear when connectors are disconnected

Connector No.	Connection Target	Symptom
P/J131	MCU PWB	Paper printed in blank.
P/J132	LVPS	Paper printed in blank.
P/J133	IDT UNIT	Paper edge gets dirty.
P/J134	IDT UNIT	Printed slightly light.
P/J135	BTR UNIT ASSY	Can be printed. BTR may be wound with paper depending on environment.
P/J133 or P/J134	IDT UNIT	Ghosts appear and print colors get intense.
T401	BTR UNIT ASSY	Printed light.

4.6.5 LVPS & MAIN POWER SWITCH

REMOVAL

1. Remove the COVER ASSY REAR. (p.302)
2. Disconnect the Harnesses from the ten Connectors (P/J101) (P/J106) (P/J107) (P/J102) (P/J10A) (P/J104) (P/J105) (P/J108) (P/J103) (P/J109) of the LVPS.
3. Remove the upper three screws (silver, 6mm) and lower three screws (gold, flanged, 6mm) that secure the LVPS, and remove the LVPS from the Tab.
4. Remove the COVER REAR LH LOW. (p.303)
5. Remove the LINK of the MAIN POWER SWITCH & INLET.
6. Release the Harness from the Clamp.
7. Remove the three screws (silver, 6mm) that secure the BRACKET SW, and remove the BRACKET SW.
8. Remove the two screws (gold, flat, 8mm) that secure the MAIN POWER SWITCH & INLET.
9. Remove the one screw (silver, with toothed washer, 4mm) that secures the Earth Wire.
10. Release the Harness from the Clamp, and remove the MAIN POWER SWITCH & INLET.

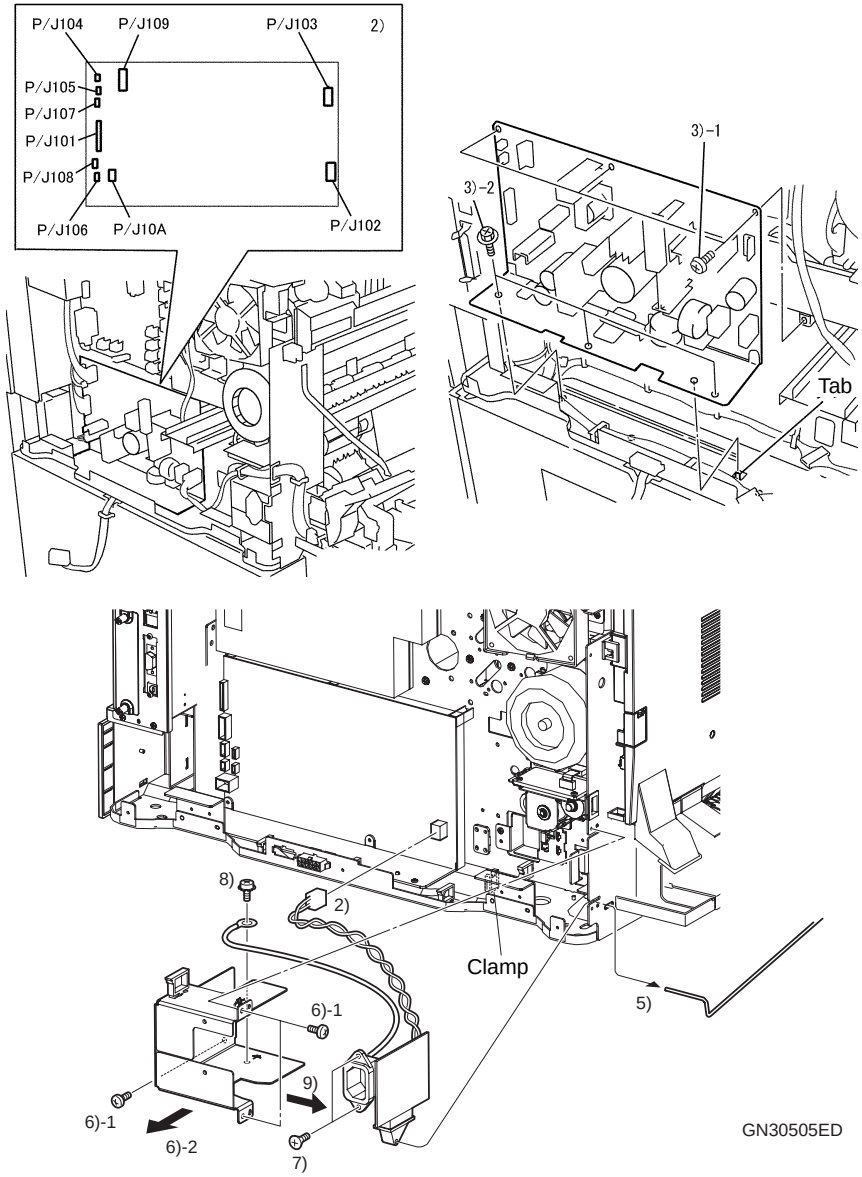

Figure 4-60. Removing the LVPS and MAIN POWER SWITCH

manuals4you.com

REINSTALLATION

1. Connect the Connector (J102) of the MAIN POWER SWITCH & INLET to the Connector (P102) of the LVPS, and secure the Harness to the Clamp.
2. Secure the MAIN POWER SWITCH & INLET with the two screws (gold, flat, 8mm).
3. Secure the Earth Wire with the one screw (silver, with toothed washer, 4mm).
4. Secure the BRACKET SW with the three screws (silver, 6mm).
5. Fit the LINK of the MAIN POWER SWITCH & INLET.
6. Install the COVER REAR LH LOW. *(p.303)*
7. Match the Tab of the LVPS, and secure the LVPS with the three screws (silver, 6mm) and three screws (gold, flanged, 6mm).
8. Connect the Connectors (J101) (J106) (J108) of the HARNESS ASSY R-BTM to the Connectors (P101) (P106) (P108) of the LVPS.
   Connect the Connectors (J107) (J10A) (J104) of the HARNESS ASSY R-TOP1 to the Connectors (P107) (P10A) (P104) of the LVPS.
   Connect the Connector (J105) of the FAN LV to the Connector (P105) of the LVPS.
   Connect the Connector (J103) of the FUSER DRAWER CONNECTOR to the Connector (P103) of the LVPS.
   Connect the Connector (J109) of the HARNESS ASSY ESS-LVPS to the Connector (P109) of the LVPS.
9. Secure the Harness with the Clamp.
10. Install the COVER ASSY REAR. *(p.302)*

CAUTION

If the Connectors on the LVPS are not connected securely, the following faults will occur. Securely connect the Connectors when installing the LVPS.

Table 4-3. Symptoms that appear when connectors are disconnected

Connector No.	Connection Target	Symptom
P/J101	MCU PWB	Not started.
P/J102	MAIN POWER SWITCH & INLET	Power not switched on.
P/J103	Fuser unit	“Service Req E051” occurs.
P/J104	FUSER FAN	“Service Req E054” occurs.
P/J105	LVPS FAN	“Service Req E055” occurs.
P/J106	DRIVE ASSY MAIN	During printing, the paper feeding system does not operate, resulting in a paper jam.
P/J107	DRICE ASSY PR	During printing, the BTR does not rotate, resulting in a paper jam inside the LH ASSY.
P/J108	HVPS	Paper printed in blank.
P/J109	BOARD ASSY, MAIN	CONTROL PANEL is not displayed.
P/J10A	INTERLOCK SWITCH	Cover A is not closed completely.

4.6.6 BOARD ASSY, MAIN

REMOVAL

CAUTION

1. **Use a wrist band to protect the BOARD ASSY, MAIN from static damage. If a wrist band is unavailable, touch a metal part before starting your work to discharge static electricity from inside your body.**
2. **Be careful not to get injured by the solder on the back of the Board.**

1. Remove the COVER ASSY RIGHT. *(p.298)*
2. Disconnect the Harnesses from the four Connectors (CN405, CN415) (CN500) (CN600) (CN601) of the BOARD ASSY, MAIN.

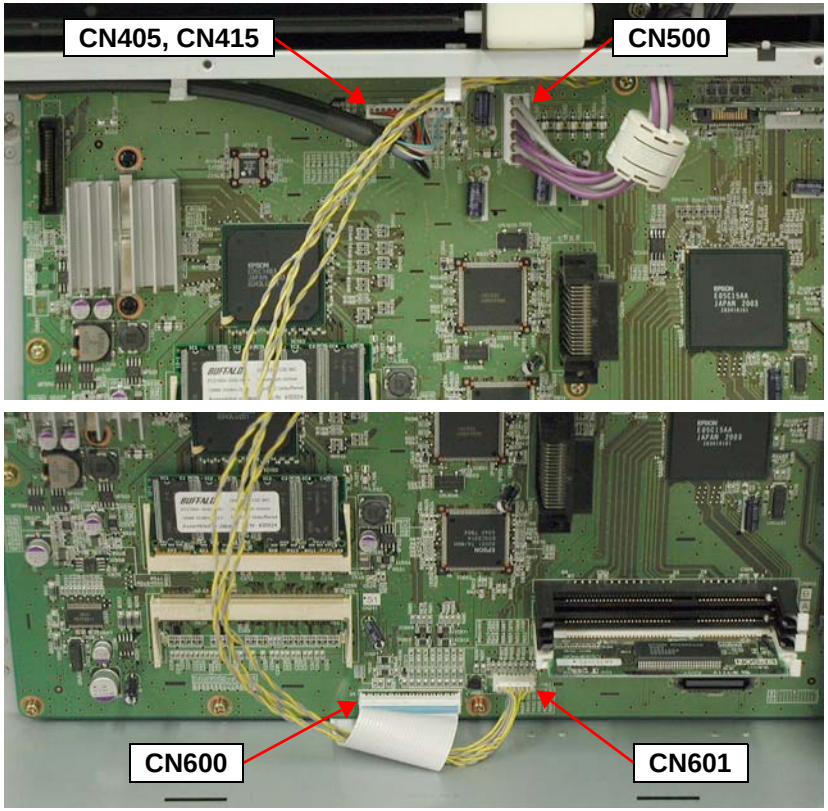

Figure 4-61. Removing the BOARD ASSY, MAIN (1)

manuals4you.com

3. Remove the five screws (silver, 6mm) and ten screws (gold, 8mm) that secure the BOARD ASSY, MAIN.
4. Slide the BOARD ASSY, MAIN to the left, move away the Parallel I/F Connector from the ESS BOX, and remove the BOARD ASSY, MAIN.

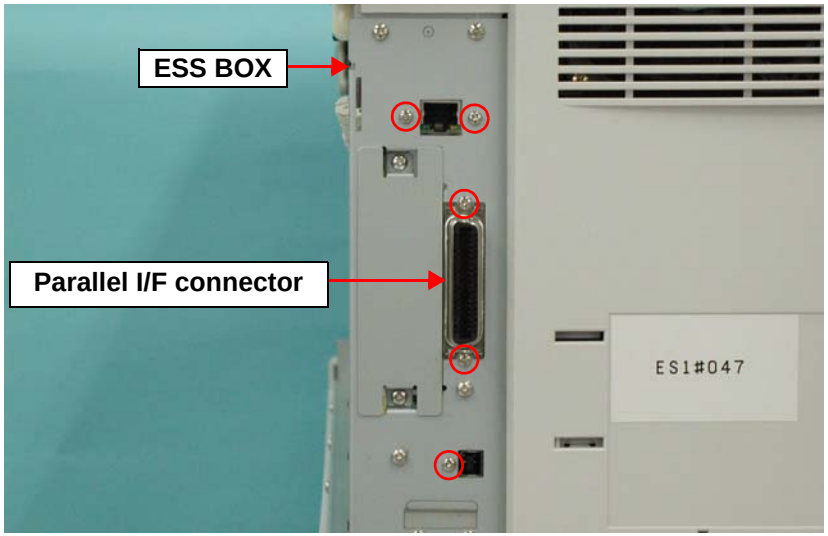

Figure 4-62. Removing the BOARD ASSY, MAIN (2)

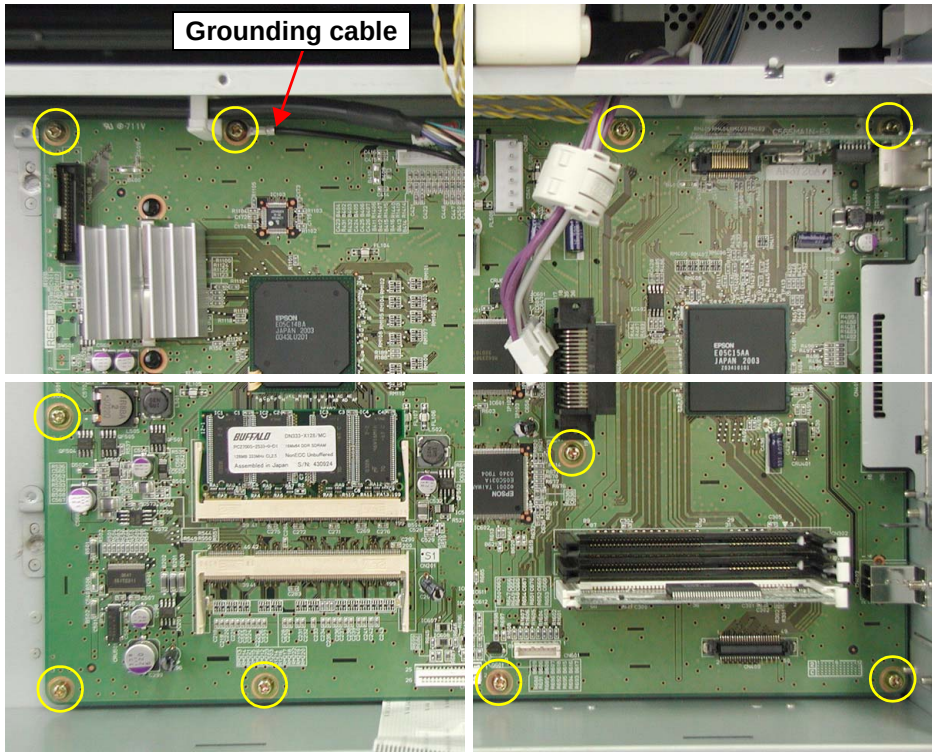

Figure 4-63. Removing the BOARD ASSY, MAIN (3)

REINSTALLATION

1. Secure the BOARD ASSY, MAIN with the five screws (silver, 6mm) and nine screws (gold, 8mm).
2. Secure the Grounding cable of the Control Panel with the one screw (gold, 8mm).
3. Connect the Connector (CN500) of the HARNESS ESS-LVPS to the Connector (CN500) of the BOARD ASSY, MAIN.
   Connect the Connector (CN405, CN415) of the Control Panel to the Connector (CN405) of the BOARD ASSY, MAIN.
   Connect the Connector (CN600) of the FLAT CABLE ESS-MCU to the Connector (CN600) of the BOARD ASSY, MAIN.
   Connect the Connector (CN601) of the HARNESS ESS-ROS to the Connector (CN601) of the BOARD ASSY, MAIN.
4. Install the COVER ASSY RIGHT. *(p.298)*

ADJUSTMENT REQUIRED

After replacing the BOARD ASSY, MAIN, execute the following.
"5.1.2 Part/unit-based adjustment items" *(p.460)*
- **Write USB ID**

CAUTION

3. **Fogging will occur if you forget connecting the Harness (CN601) from the ROS ASSY. If fogging has occurred, pass several ten pieces of white paper to remove the contamination sticking to the Drum.**
4. **The printer will not start if you power it on without connecting the Harness (CN600).**
5. **If the Connectors on the BOARD ASSY, MAIN are not connected securely, the following faults will occur. Securely connect the Connectors when installing the BOARD ASSY, MAIN.**

Table 4-4. Symptoms That Appear when Connectors Are Disconnected

Connector No.	Connection Target	Symptom
CN500	LVPS	CONTROL PANEL is not displayed.
CN405	CONTROL PANEL	CONTROL PANEL is not displayed.
CN600	MCU PWB	"Service Req C0998" occurs.
CN601	ROS ASSY	Paper printed in blank.

manuals4you.com

4.6.7 ESS BOX

REMOVAL

1. Open the COVER ASSY FRONT.
2. Remove the COVER ASSY INNER. (p.413)
3. Remove the COVER ASSY RIGHT. (p.298)
4. Remove the COVER HIGH ASSY TOP. (p.299)
5. Remove the BOARD ASSY, MAIN. (p.375)
6. Release the HARNESS ASSY PANEL from the two Clamps, and pull it out of the round hole.
7. Remove the Ferrite core from the HARNESS ESS-LVPS.
8. Release the HARNESS ESS-LVPS from the one Clamp, and pull it out of the square hole.

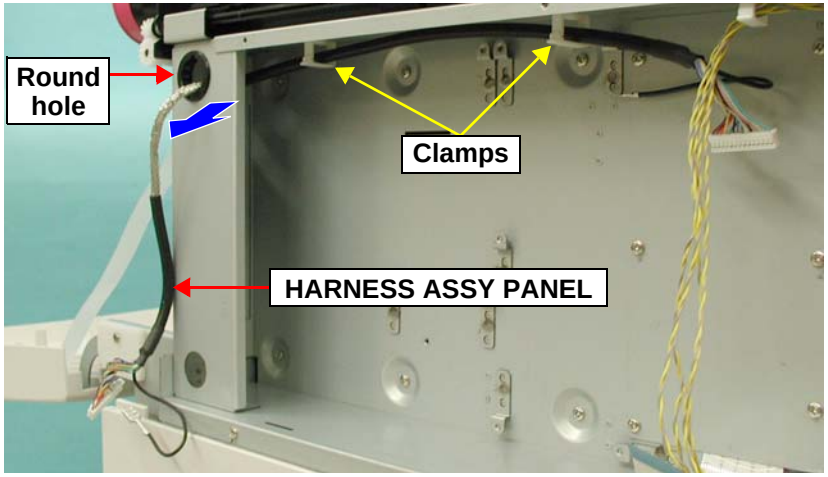

Figure 4-64. Removing the HARNESS ASSY PANEL

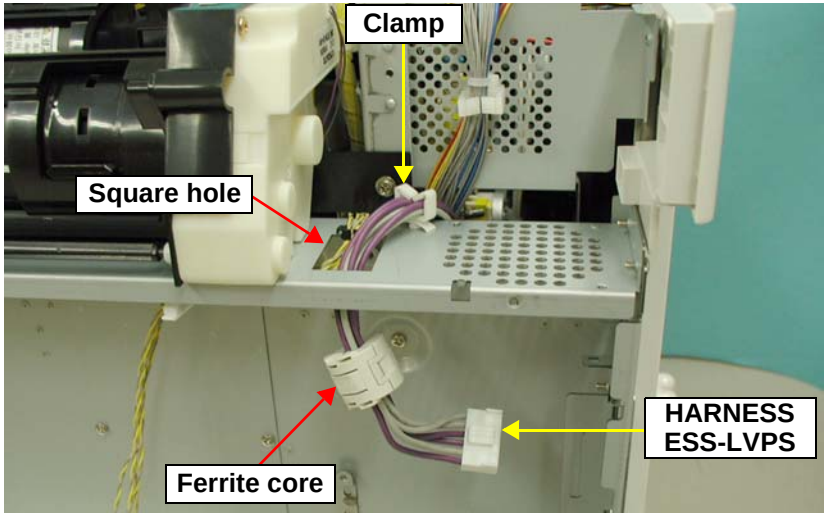

Figure 4-65. Releasing the HARNESS ESS-LVPS

9. Release the HARNESS ESS-ROS from the two Clamps, and pull it out of the square hole.
10. Remove the six screws (silver, 6mm) that secure the PLATE WP CABLE, and remove the PLATE WP CABLE.

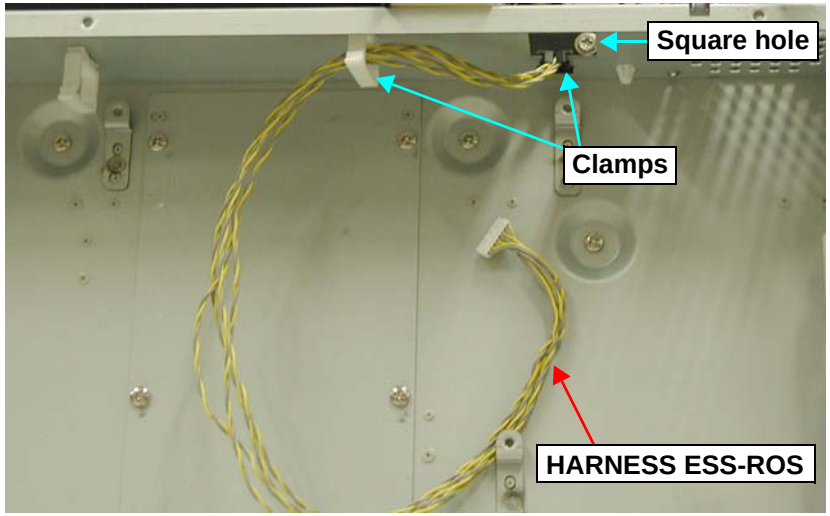

Figure 4-66. Releasing the HARNESS ESS-ROS

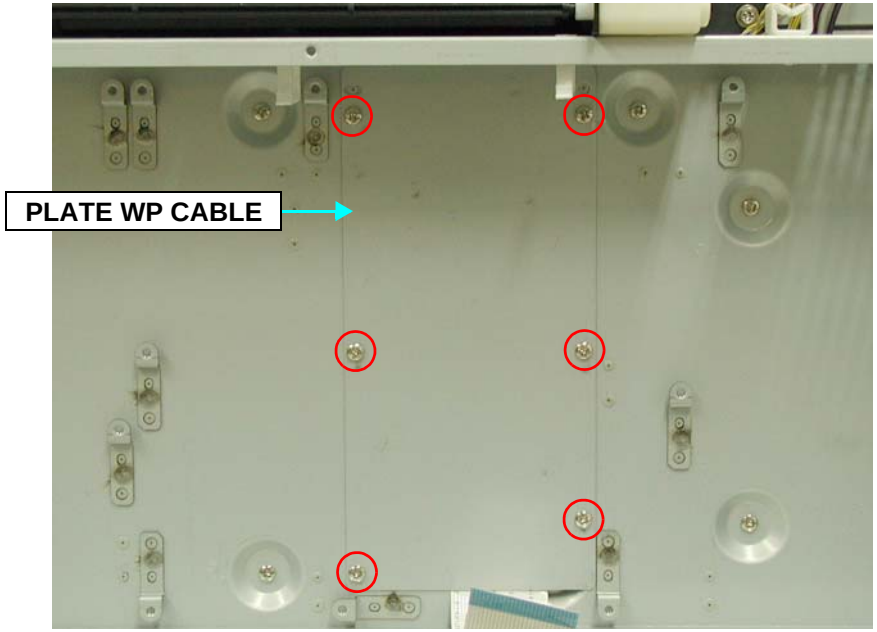

Figure 4-67. Removing the PLATE WP CABLE

manuals4you.com

11. Remove the five screws (silver, 6mm) that secure the SHIELD ASSY CRUM, and remove the SHIELD ASSY CRUM.
12. On the Front side, remove the one screw (silver, 6mm) that secures the ESS BOX and the one screw (silver, flanged, 8mm) that secures the RIGHT SUPPORT and WIRE EARTH.
13. On the Right side, remove the fourteen screws (silver, 6mm) that secure the ESS BOX, and remove the ESS BOX.

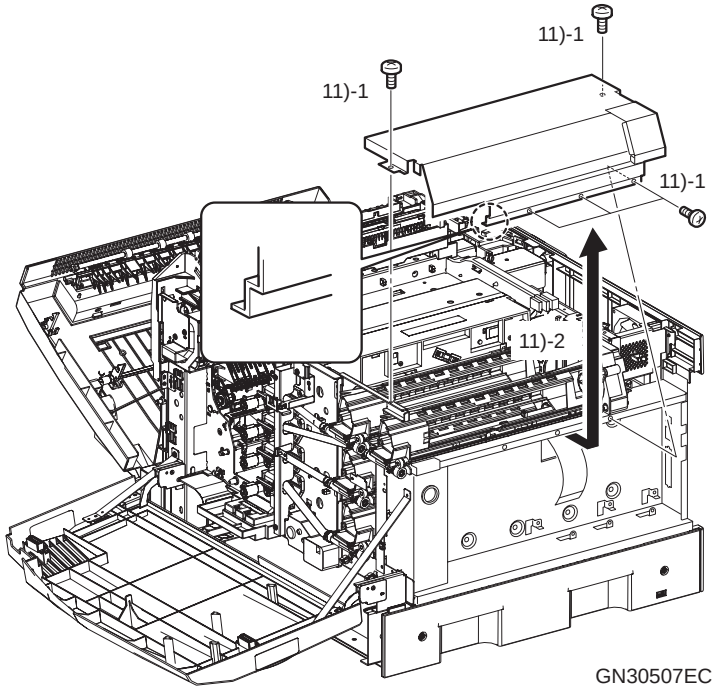

Figure 4-68. Removing the SHIELD ASSY CRUM

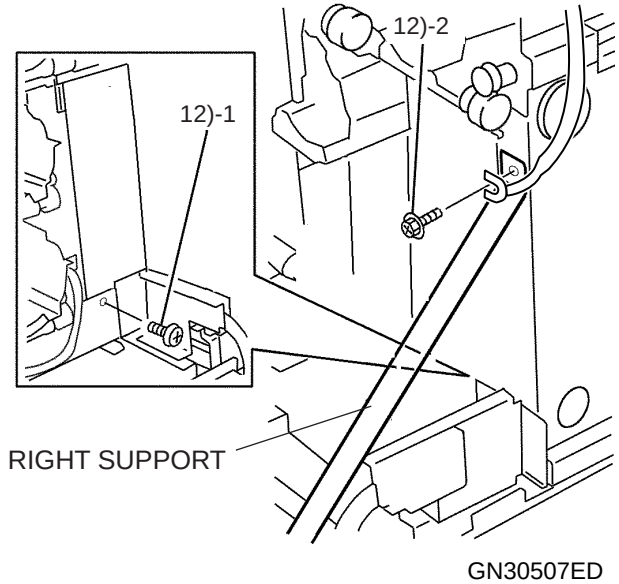

Figure 4-69. Removing the ESS BOX (1)

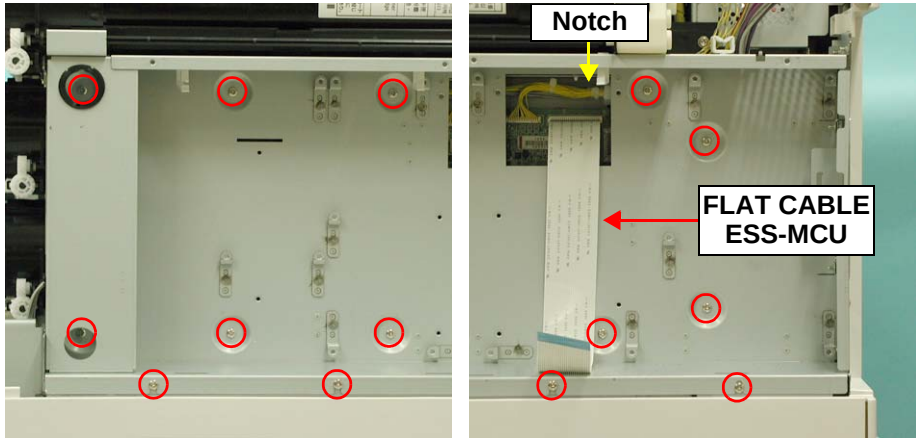

Figure 4-70. Removing the ESS BOX (2)

REINSTALLATION

1. On the Right side, pass the FLAT CABLE ESS-MCU into the notch of the ESS BOX, and secure the ESS BOX with the fourteen screws (silver, 6mm).
2. On the Front side, secure the ESS BOX with the one screw (silver, 6mm), and secure the RIGHT SUPPORT and WIRE EARTH to the ESS BOX with the one screw (silver, flanged, 8mm).
3. Secure the SHIELD ASSY CRUM with the five screws (silver, 6mm).
4. Secure the PLATE WP CABLE with the six screws (silver, 6mm).

CAUTION

Match the two Bosses of the ESS BOX with the two Positioning Holes of the ESS BOX.

Figure 4-71. Installing the PLATE WP CABLE

5. Pass the HARNESS ESS-ROS into the square hole, and secure it to the two Clamps.
6. Pass the HARNESS ESS-LVPS into the square hole, and secure it to the two Clamps.
7. Install the Ferrite core to the HARNESS ESS-LVPS.
8. Pass the HARNESS ASSY PANEL into the round hole, and secure it to the two Clamps.
9. Install the BOARD ASSY, MAIN. *(p.375)*
10. Install the COVER HIGH ASSY TOP. *(p.299)*
11. Install the COVER ASSY RIGHT. *(p.298)*
12. Install the COVER ASSY INNER. *(p.413)*
13. Close the COVER ASSY FRONT.

manuals4you.com

4.6.8 MCU PWB, X-ROM PWB

REMOVAL

CAUTION

1. **Do not replace the MCU PWB and X-ROM PWB simultaneously.**
2. **Use a wrist band to protect the PWBs from static damage. If a wrist band is unavailable, touch a metal part before starting your work to discharge static electricity from inside your body.**
3. **Be careful not to get injured by the solder on the back of the Board.**

CHECK POINT

When replacing the MCU PWB, remove the EEPROM from the old MCU PWB and install it on the new MCU PWB before use.

1. Open the COVER ASSY FRONT.
2. Remove the COVER ASSY INNER. *(p.413)*
3. Remove the COVER ASSY RIGHT. *(p.298)*
4. Remove the COVER HIGH ASSY TOP. *(p.299)*
5. Remove the BOARD ASSY, MAIN. *(p.375)*
6. Remove the ESS BOX. *(p.378)*
7. Remove the X-ROM PWB from the PWB Support.
8. Disconnect the X-ROM PWB from the Connector (P/J19) of the MCU PWB.
9. Disconnect the FLAT CABLE ESS-MCU from the Connector (P/J14) of the MCU PWB.
10. Disconnect the Harnesses from the sixteen Connectors (P/J18) (P/J17) (P/J11) (P/J12) (P/J15) (P/J23) (P/J26) (P/J10) (P/J29) (P/J16) (P/J13) (P/J25) (P/J20) (P/J22) (P/J27) (P/J21) of the MCU PWB.
11. Remove the four screws (silver, 6mm) that secure the MCU PWB, and remove the MCU PWB.
12. Remove the EEPROM from the MCU PWB.

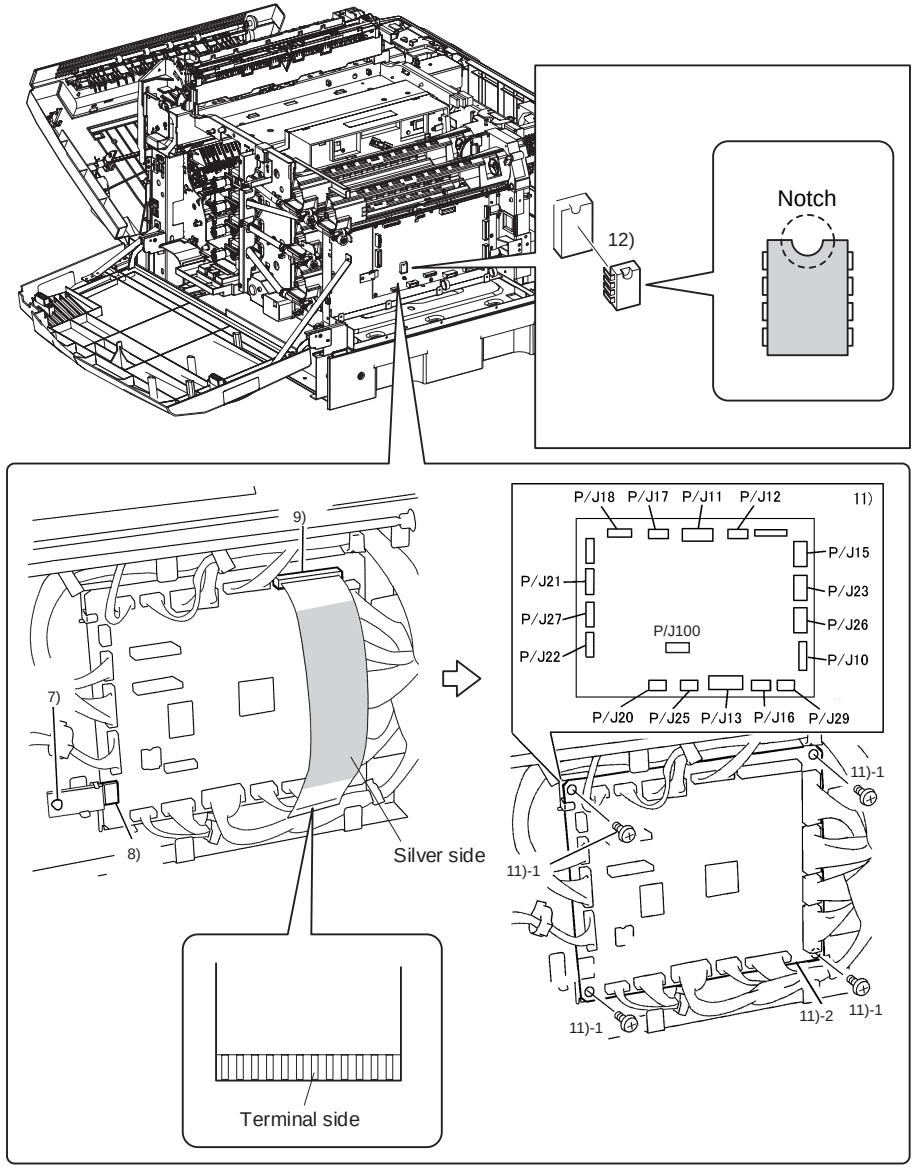

GN30508EC

Figure 4-72. Removing the MCU PWB and X-ROM PWB

REINSTALLATION

1. Secure the MCU PWB with the four screws (silver, 6mm).
2. Connect the Connector (J18) of the HARNESS ASSY ANTENNA to the Connector (P18) of the MCU PWB.
   Connect the Connectors (J11) (J12) of the HARNESS ASSY ROS to the Connectors (P11) (P12) of the MCU PWB.
   Connect the Connectors (J15) (J17) of the HARNESS ASSY R-TOP1 to the Connectors (P15) (P17) of the MCU PWB.
   Connect the Connectors (J23) (J26) (J10) (J16) (J13) (J25) (J27) of the HARNESS ASSY R-BTM to the Connectors (P23) (P26) (P10) (P16) (P13) (P25) (P27) of the MCU PWB.
   Connect the Connector (J29) of the HARNESS ASSY P-SIZE to the Connector (P29) of the MCU PWB.
   Connect the Connector (J20) of the HARNESS ASSY CRUM to the Connector (P20) of the MCU PWB.
   Connect the Connector (J22) of the HARNESS ASSY F-SNR to the Connector (P22) of the MCU PWB.
   Connect the Connector (J21) of the HARNESS ASSY DISP to the Connector (P21) of the MCU PWB.
3. Connect the Flat Terminal (J14) of the FLAT CABLE ESS-MCU to the Connector (P/14) of the MCU PWB.
4. Connect the Connector (J19) of the X-ROM to the Connector (P19) of the MCU PWB.
5. Secure the X-ROM PWB with the PWB Support.
6. Install the ESS BOX. *(p.378)*
7. Install the BOARD ASSY, MAIN. *(p.375)*
8. Install the COVER HIGH ASSY TOP. *(p.299)*
9. Install the COVER ASSY RIGHT. *(p.298)*
10. Install the COVER ASSY INNER. *(p.413)*
11. Close the COVER ASSY FRONT.

CAUTION

4. If the Connectors on the MCU PWB are not connected securely, the following faults will occur. Securely connect the Connectors when installing the MCU PWB.

Table 4-5. Symptoms that appear when connectors are disconnected

Connector No.	Connection Target	Symptom
P/J10	LVPS	Not started.
P/J11	ROS ASSY	“Service Req E050” occurs.
P/J12	ROS ASSY	“Service Req E050” occurs.
P/J13	HVPS	Paper is printed in blank.
P/J14	BOARD ASSY, MAIN	“Service Req C0998” occurs.
P/J15	Fuser unit, etc.	“Service Req E051” occurs.
P/J16	DRIVE ASSY MAIN	During printing, the paper feeding system does not operate, resulting in a paper jam.
P/J17	DRIVE ASSY PR	During printing, the BTR does not rotate, resulting in a paper jam inside the LH ASSY.
P/J18	ANTENNA CK ANTENNA YM	“Install uuuu TnrCart” occurs.
P/J19	X-ROM PWB	“Service Req E053” occurs.
P/J20	IDT UNIT (PWBA CRUM)	“Replace Photocondctr” occurs.
P/J21	MOTOR DISP Y/M/C/K	---
P/J22	MOTOR ASSY TRACKING, etc.	“Service Req E051” occurs.
P/J23	Each Sensor, Clutch, etc.	Not started.
P/J25	Additional Tray	Additional cassette is not recognized.
P/J29	SENSOR ASSY TRACKING, etc.	“Service Req E053” occurs.
U10	EEPROM	“Service Req E052” occurs.

manuals4you.com

4.7 Deve. And Xero.

4.7.1 TONER FULL SENSOR, TONER BOTTLE SET SENSOR

REMOVAL

1. Remove the CASSETTE ASSY.
2. Open the COVER ASSY FRONT.
3. Remove the two screws (silver, flanged, 8mm) that secure the COVER SNR WBOX, remove the Snap from the main unit Frame, and remove the COVER SNR WBOX.
4. On the rear surface of the BRKT SNR WBOX, peel off the two SPACER SENSORs that secure the Hooks of the TONER FULL SENSOR and TONER BOTTOLE SET SENSOR.
5. Release the three Hooks of the TONER FULL SENSOR, and remove the TONER FULL SENSOR.
6. Disconnect the Harness from the Connector (P/J224) of the TONER BOTTOLE SET SENSOR.
7. Release the three Hooks of the TONER BOTTOLE SET SENSOR, and remove the TONER BOTTOLE SET SENSOR.

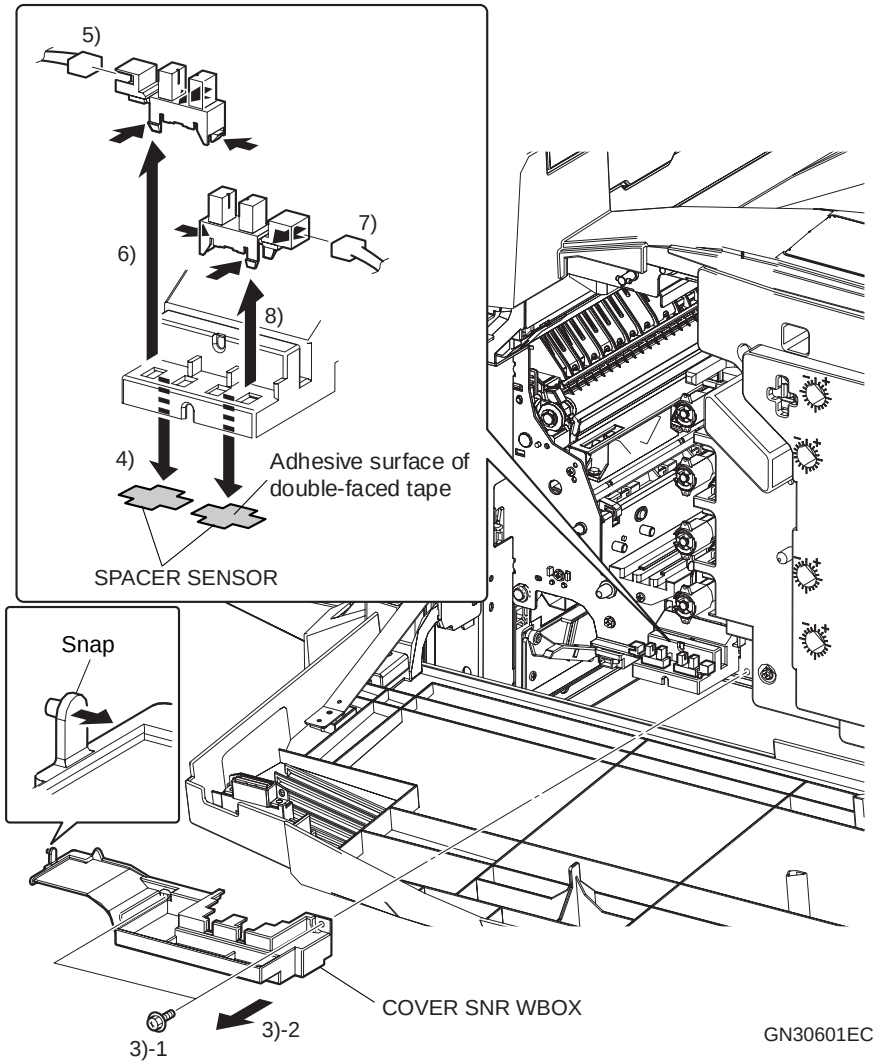

Figure 4-73. Removing the TONER FULL SENSOR and TONER BOTTLE SET SENSOR

REINSTALLATION

1. Match the three Hooks of the TONER BOTTOLE SET SENSOR, and install the TONER BOTTOLE SET SENSOR.
2. Connect the Connector (J224) of the HARNESS ASSY F-SNR to the Connector (P224) of the TONER BOTTOLE SET SENSOR.
3. Match the three Hooks of the TONER FULL SENSOR, and install the TONER FULL SENSOR.
4. Connect the Connector (J225) of the HARNESS ASSY F-SNR to the Connector (P225: Blue) of the TONER FULL SENSOR.
5. On the rear surface of the BRKT SNR WBOX, apply the two SPACER SENSORs with the supplied double-faced tape so that the Hooks of the TONER FULL SENSOR and TONER BOTTOLE SET SENSOR do not come off.

CAUTION

Apply the SPACER SENSORs to prevent the SENSOR Hooks from moving away and coming off toward the inside. Completely clean the application surface to remove oil, contamination, etc.

6. Fit the Snap into the main unit Frame, and secure the COVER SNR WBOX with the two screws (silver, flanged, 8mm).
7. Close the COVER ASSY FRONT.
8. Install the CASSETTE ASSY.

manuals4you.com

4.7.2 IDT UNIT, Photoconductor unit

REMOVAL

1. Open the COVER ASSY FRONT and LH ASSY.
2. While pulling the Latch inside the Handle in the direction of arrow, turn the Handle to the bottom position.
3. Pull the Handle, and pull out the IDT UNIT slowly until it stops securely.

CAUTION

1. Before removing the IDT UNIT, be sure to remove the Photoconductor unit.

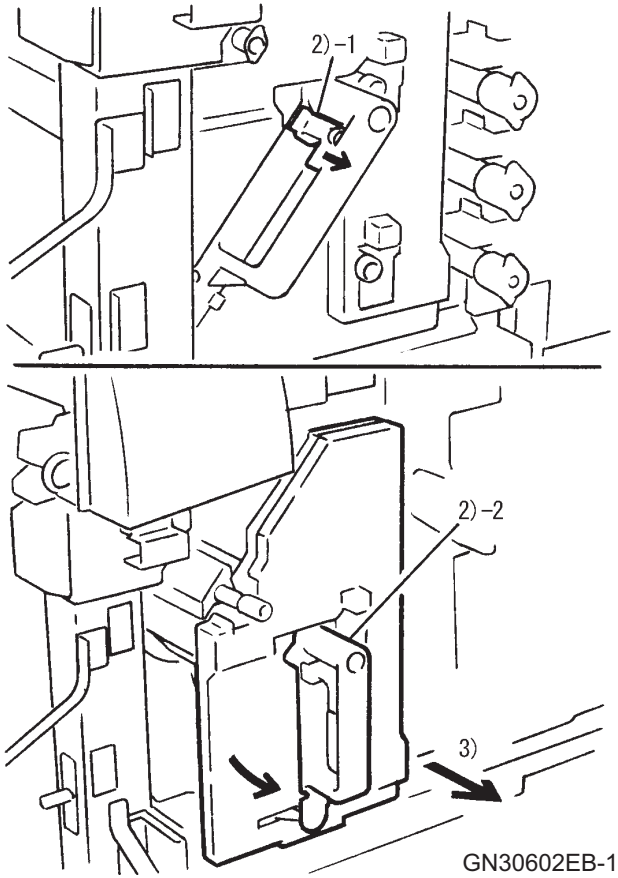

Figure 4-74. Removing the IDT UNIT and Photoconductor unit (1)

manuals4you.com

4. Gently lift the Band (orange) of the Photoconductor unit, and remove the Photoconductor unit.

CAUTION

2. Since the Roll surfaces of the Photoconductor unit are close to the floor, put the removed Photoconductor unit on a level place. Place it with the RTC Rolls up as shown below.

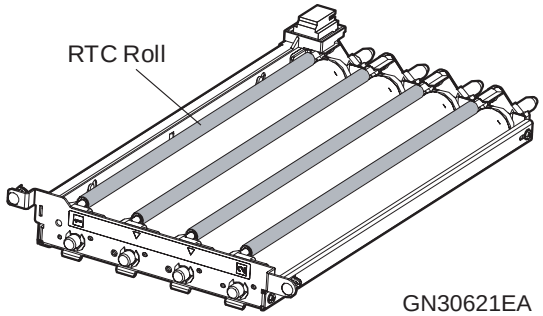

3. Handle the IDT UIT and Photoconductor unit carefully.
- **Be sure to protect the surfaces so that they are not exposed to direct sunlight and strong light.**
- **Do not touch the Roll surfaces of the IDT UIT and Photoconductor unit with your hands or tools. Also, do not cough or sneeze at the Roll surfaces.**

5. Move the Lever of the IDT UNIT in the direction of arrow, release the Stopper (creamy white), and holding the Band (black) of the IDT UNIT, pull out the IDT UNIT slowly.

CAUTION

4. Since the IDT UNIT is heavy, take it out slowly, being careful not to drop it.

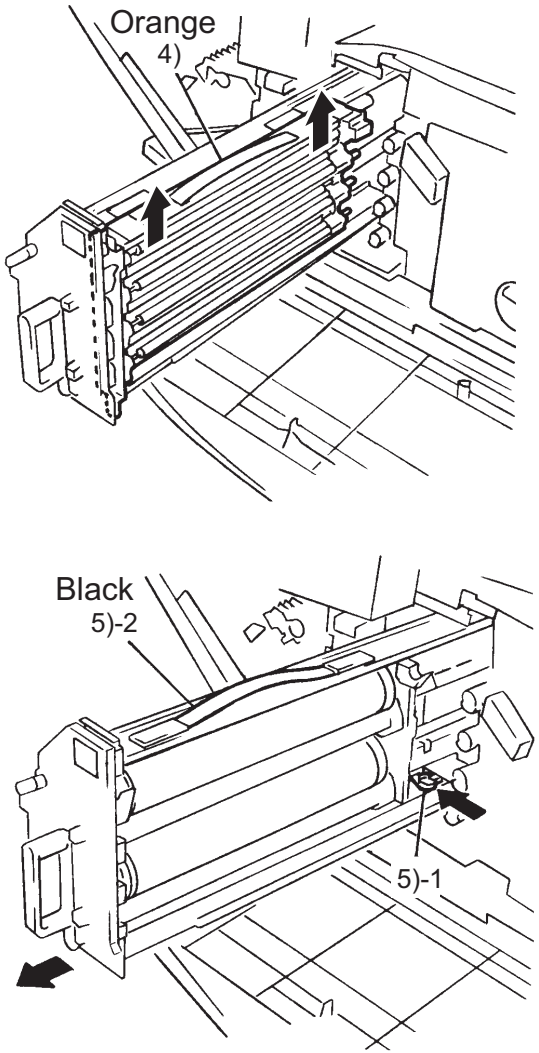

Figure 4-75. Removing the IDT UNIT and Photoconductor unit (2)

manuals4you.com

REINSTALLATION

CAUTION

5. Be sure to do the following work with the LH ASSY open.

1. Make sure that the LH ASSY is open, confirm the positions of the IDT Guide and IDT Frame, and holing the Band (black) of the IDT UNIT, push in the IDT UNIT.

CAUTION

6. When replacing the IDT UNIT with a new one, make certain that the Stopper is retracted. If the Stopper has come out, move the Lever to retract the Stopper.

2. Match the Guide of the IDT UNIT with the Shaft of the Photoconductor unit, and securely install the Photoconductor unit.

CAUTION

7. In the following step, operate the Handle after the lock is released by securely pushing the IDT UNIT as far as it will go.

3. Holding the Handle of the ITD UNIT, push in the IDT UNIT slowly and surely as far as it will go.
4. Return the Handle of the IDT UNIT.
5. Close the COVER ASSY FRONT, release the Hook of the STOPPER ASSY IDT, and close the LH ASSY.

CAUTION

8. When you opened/closed the LH ASSY with the printer powered off, be sure to power on the printer after the work is finished to warm it up. Failure to do so may cause problems in print quality. (Refer to "3.3.4 FIP-P16" *(p.181)*)

ADJUSTMENT REQUIRED

- ☐ **After replacing the IDT UNIT, execute the following.**
  "5.1.2 Part/unit-based adjustment items" *(p.460)*
  - ■ **Life counter clear**
  - ■ **Color Registration Adjustment**
- ☐ **After replacing the Photoconductor unit, execute the following.**
  "5.1.2 Part/unit-based adjustment items" *(p.460)*
  - ■ **Color Registration Adjustment**

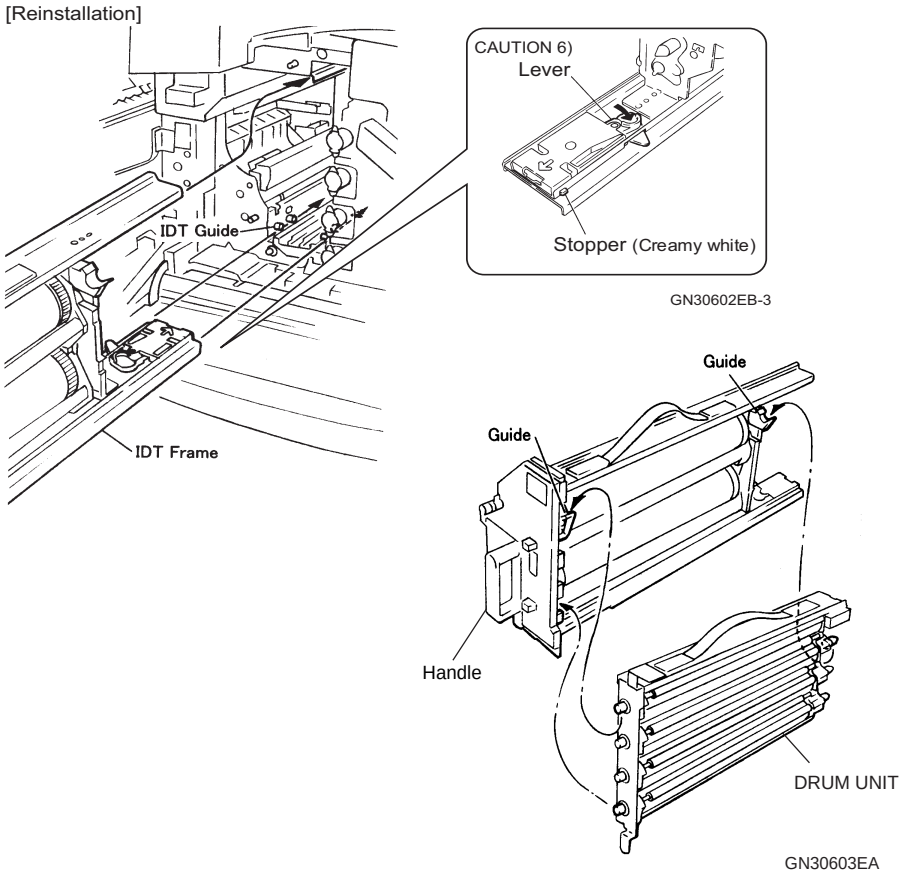

Figure 4-76. Installing the IDT UNIT and Photoconductor unit

4.7.3 TONER DISPENSER ASSY

REMOVAL

1. Open the COVER ASSY FRONT.
2. Remove the COVER ASSY INNER. (p.413)
3. Remove the COVER ASSY RIGHT. (p.298)
4. Remove the COVER HIGH ASSY TOP. (p.299)
5. Remove the BOARD ASSY, MAIN. (p.375)
6. Remove the ESS BOX. (p.378)
7. Disconnect the Harnesses from the fourteen Connectors (P/J17) (P/J11) (P/J12) (P/J15) (P/J23) (P/J26) (P/J10) (P/J29) (P/J16) (P/J13) (P/J25) (P/J20) (P/J22) (P/J27) of the MCU PWB.
8. Remove the Harnesses from the eight Clamps, and remove the Harnesses from the FLAME MCU.
9. Remove the Toner Cartridges (Y/M/C/K).
10. Remove the four screws (silver, 6mm) that secure the FRAME TIE FRONT, and remove the FRAME TIE FRONT.
11. Spread folded paper in the position in Figure 4-77.
12. Slide the Shutters in the direction of arrow until they stop to close the Shutters (Y/M/C/K).
13. Remove the one screw (black, tapping, flanged, 8mm) that secures each Auger (Y/M/C/K), and remove the Auger (Y/M/C/K).
14. Block the drain port of each Auger (Y/M/C/K) with paper, and tape it.

CAUTION

1. Do not stick the adhesive of the tape to the drain port.

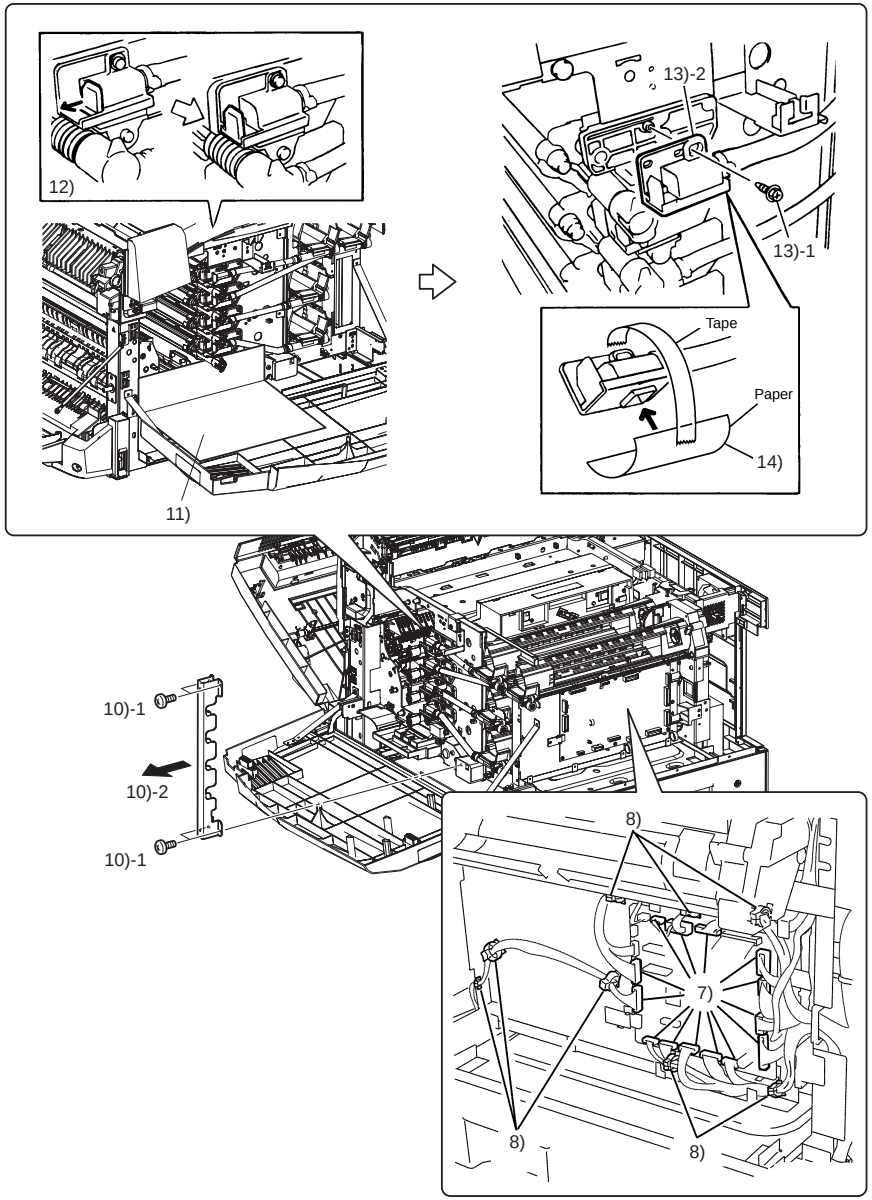

GN30604EC

Figure 4-77. Removing the TONER DISPENSER ASSY (1)

manuals4you.com

15. Remove the HARNESS ASSY ROS from the two Harness hooks of the TONER DISPENSER ASSY.
16. Remove the three screws (silver, 6mm) and three screws (silver, flanged, 8mm) that secure the TONER DISPENSER ASSY.
17. Slide the TONER DISPENSER ASSY in the direction of arrow, remove the two Rear side Hooks from the square holes, and remove the TONER DISPENSER ASSY.
18. Remove the screw (silver, 6mm) that secures the WIRE EARTH, and remove the WIRE EARTH.

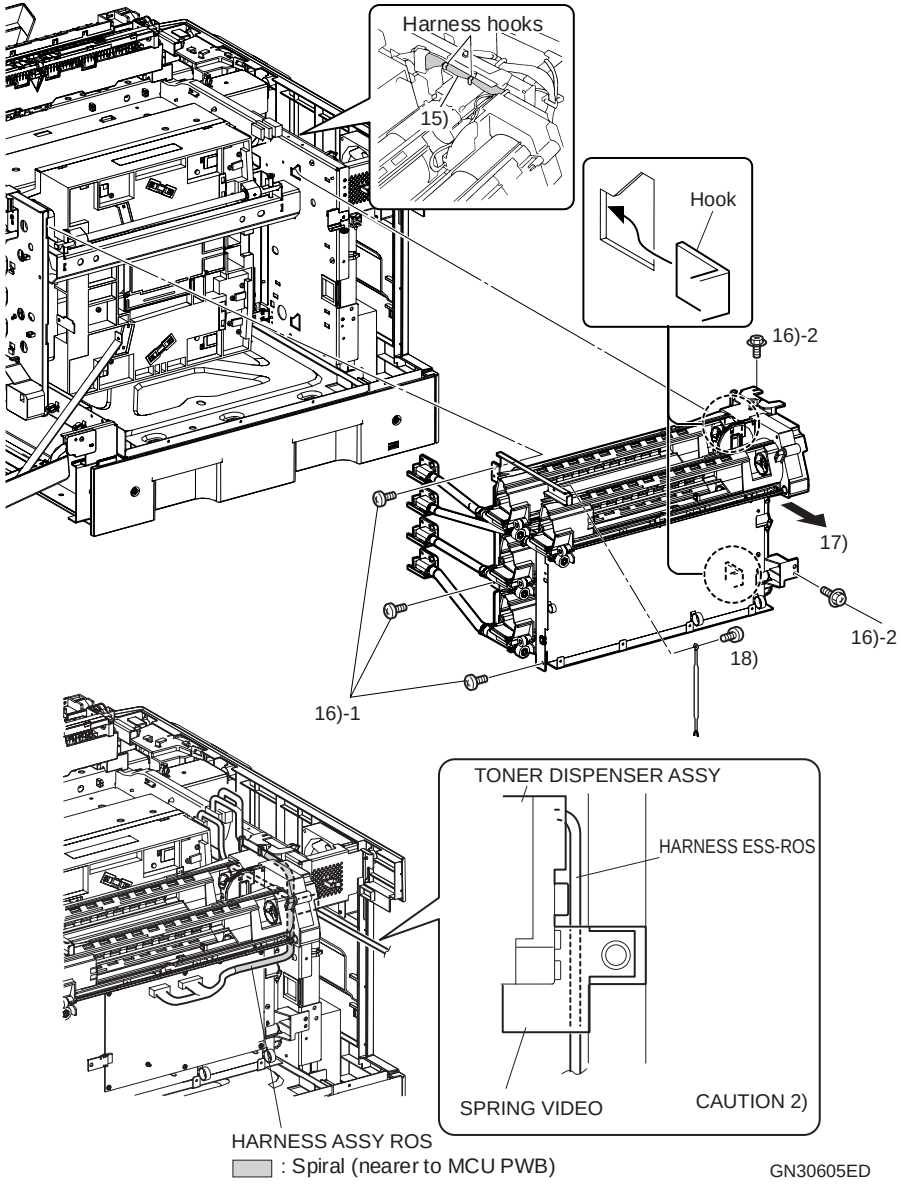

Figure 4-78. Removing the TONER DISPENSER ASSY (2)

REINSTALLATION

1. Secure the WIRE EARTH with the screw (silver, 6mm).
2. Match the two Rear side Hooks of the TONER DISPENSER ASSY to the square holes, and install the TONER DISPENSER ASSY.

CAUTION

2. When installing the TONER DISPENSER ASSY, refer to Figure 4-78, route the HARNESS ESS-ROS into the far side of the TONER DISPENSER ASSY, and being careful not to get it pinched by the TONER DISPENSER ASSY.

3. Secure the TONER DISPENSER ASSY with the three screws (silver, 6mm) and three screws (silver, flanged, 8mm).
4. Secure the HARNESS ASSY ROS to the two Harness hooks.

CAUTION

3. The Spiral-wound side of the HARNESS ASSY ROS is the MCU PWB side.

5. Remove the paper that blocks the drain port of each Auger (Y/M/C/K).

CAUTION

4. Do not stick the adhesive of the tape to the drain port.

6. Secure each Auger (Y/M/C/K) with the one screw (black, tapping, flanged, 8mm).
7. Slide open the Shutters to the original positions.

CAUTION

5. Open the Shutters (Y/M/C/K) without fail. If they are not open, the COVER ASSY INNER cannot be installed in Step 17.

8. Remove the spread paper.
9. Secure the FRAME TIE FRONT with the four screws (silver, 6mm).
10. Install the Toner Cartridges (Y/M/C/K).
11. Secure the Harnesses to the eight Clamps.
12. Connect the Connectors (J17) (J15) of the HARNESS ASSY R-TOP1 to the Connectors (P17) (P15) of the MCU PWB.
    Connect the Connectors (J11) (J12) of the HARNESS ASSY ROS to the Connectors (P11) (P12) of the MCU PWB.
    Connect the Connectors (J23) (J26) (J10) (J16) (J13) (J25) (J27) of the HARNESS ASSY R-BTM to the Connectors (P23) (P26) (P10) (P16) (P13) (P25) (P27) of the MCU PWB.
    Connect the Connector (J29) of the HARNESS ASSY P-SIZE to the Connector (P29) of the MCU PWB.
    Connect the Connector (J20) of the HARNESS ASSY CRUM to the Connector (P20) of the MCU PWB.
    Connect the Connector (J22) of the HARNESS ASSY F-SNR to the Connector (P22) of the MCU PWB.
13. Install the ESS BOX. *(p.378)*
14. Install the BOARD ASSY, MAIN. *(p.375)*
15. Install the COVER HIGH ASSY TOP. *(p.299)*
16. Install the COVER ASSY RIGHT. *(p.298)*
17. Install the COVER ASSY INNER. *(p.413)*
18. Close the COVER ASSY FRONT.

manuals4you.com

4.7.4 DEVE UNIT K (C, M, Y)

REMOVAL

CHECK POINT

When removing the DEVE HOLDERs and DEVE UNITs, work can be done easier by removing them in order of Y, M, K and C from top to bottom.

CAUTION

1. The DEVE UNIT can be replaced color by color. However, the DEVE UNIT C cannot be removed unless the DEVE UNIT (K) is removed first (to avoid the projection of the main unit Frame).

1. Open the COVER ASSY FRONT.
2. Remove the COVER ASSY INNER. *(p.413)*
3. Open the LH ASSY.
4. Remove the four screws (silver, 6mm) that secure the FRAME TIE FRONT, and remove the FRAME TIE FRONT.

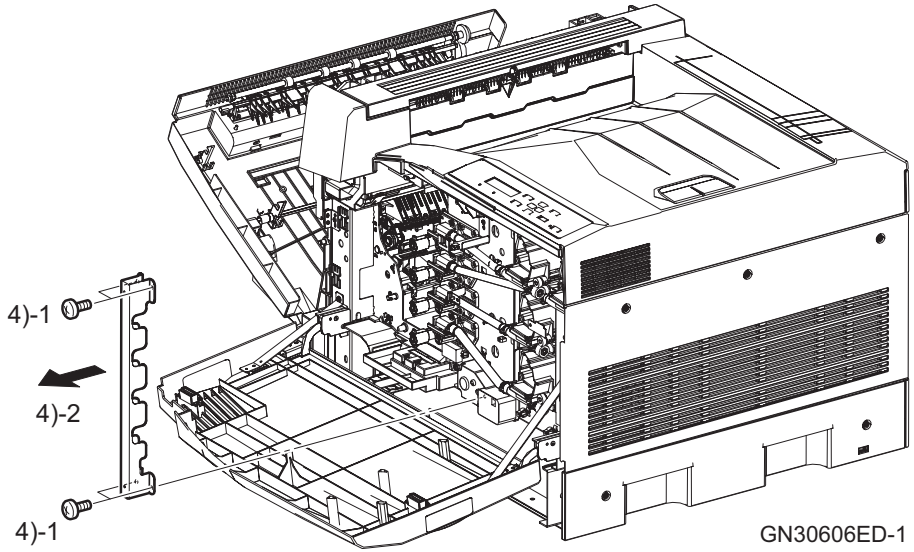

Figure 4-79. Removing the DEVE UNIT K (C, M, Y) (1)

5. Spread folded paper in the position in Figure 4-80.
6. Slide the Shutters in the direction of arrow until they stop to close the Shutters (Y/M/C/K).
7. Remove the one screw (black, tapping, flanged, 8mm) that secures each Auger (Y/M/C/K), and remove the Auger (Y/M/C/K).
8. Block the drain port of each Auger (Y/M/C/K) with paper, and tape it.

CAUTION

2. Do not stick the adhesive of the tape to the drain port.
3. Do not touch the Rolls of the DEVE UNITs. When removing the DEVE UNIT (Y), do not bump the Roll against the sheet metal of the main unit Frame.

9. Remove the three screws (silver, 6mm) that secure the DEVE UNIT (Y), and while pulling the DEVE HOLDER and DEVE UNIT (Y) toward you, remove and place them on the paper.
10. Similarly, remove the DEVE HOLDERs and DEVE UNITs (M/K/C) in due order.

CAUTION

4. Remove the DEVE HOLDERs and DEVE UNITs in order of Y, M, K and C from top to bottom.

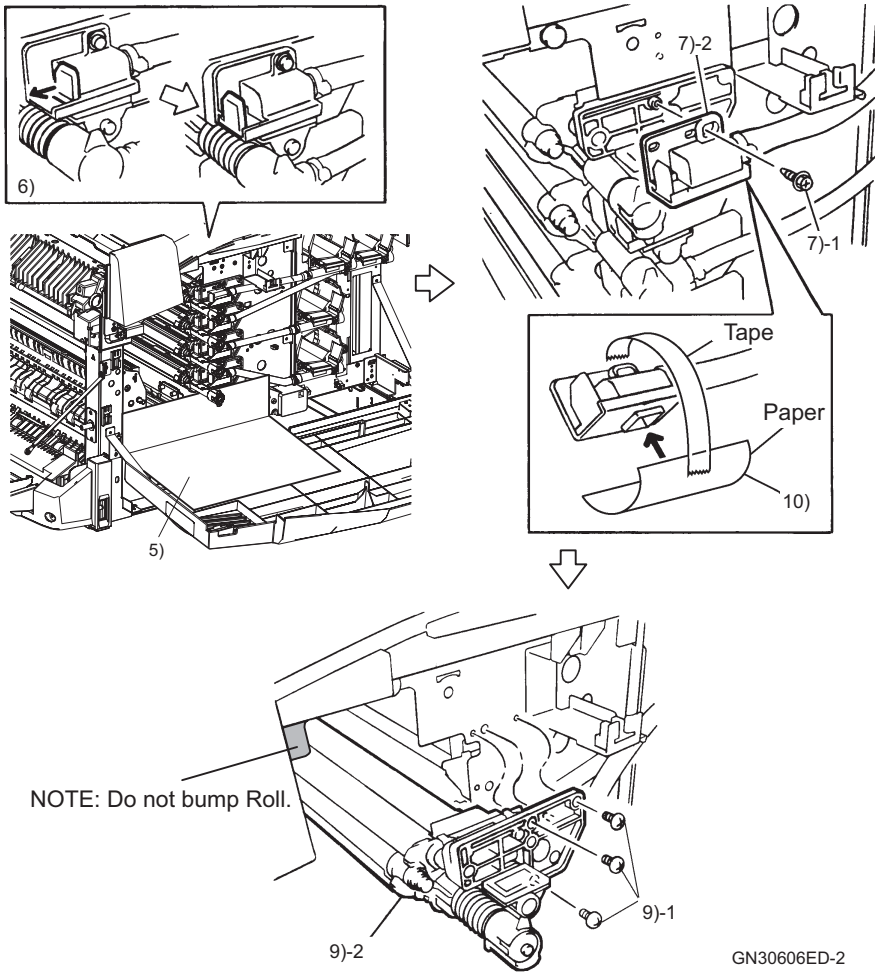

Figure 4-80. Removing the DEVE UNIT K (C, M, Y) (2)

manuals4you.com

REINSTALLATION

CAUTION

5. **Install the DEVE HOLDERs and DEVE UNITs in order of C, K, M and Y from bottom to top.**
6. **Only when installing a new DEVE UNIT, execute the following Steps 1), 2).**
   When not replacing the DEVE UNIT with a new one, start from Step 3).
   "SPRING SHUTTER" and "SPRING ASSY SUB" are packed with the service part "DEVE UNIT".
7. **Do not tilt the DEVE UNIT unnecessarily. If it is tilted, toner will drop from the Toner Supply Port and/or Toner Ejection Port. If toner has dropped, install the DEVE UNIT after cleaning.**
8. **Be sure to remove the Cap of the Toner Supply Port. If the DEVE UNIT is installed with the Cap fitted, the Cap may enter the DEVE UNIT, causing abnormal printing operation.**

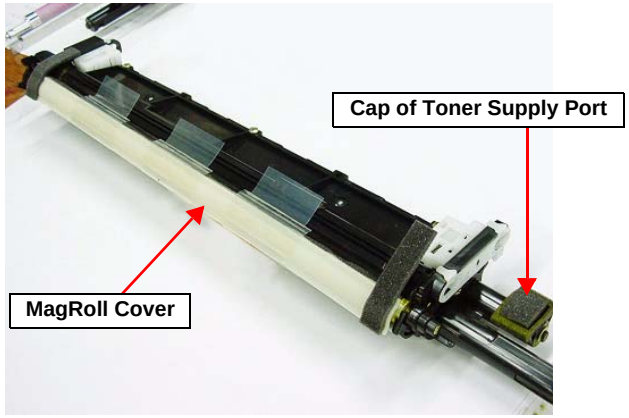

1. Place the DEVE UNIT in a horizontal position, and install the SPRING SHUTTER.
2. Match and fit the Latch of the SHUTTER ASSY SUB to the groove of the DEVE UNIT.

CAUTION

9. **Push the SHUTTER ASSY SUB, and make sure that it comes back by the force of the SPRING SHUTTER.**

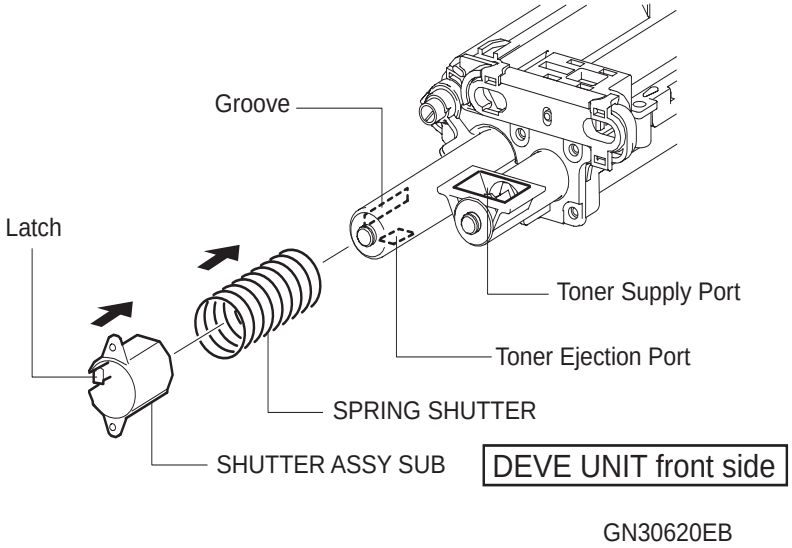

Figure 4-81. Installing the DEVE UNIT K (C, M, Y) (1)

3. Slowly insert the DEVE UNIT(C), and securely install the far side Pin.

CHECK POINT

The Pin inserting position can be easily checked by illuminating the position with a penlight.

CAUTION

10. When installing the DEVE HOLDER, match the two Pins of the DEVE HOLDER with the holes of the DEVE UNIT (C), and match the two Bosses of the DEVE HOLDER with the holes of the Frame.

4. Secure the DEVE HOLDER to the DEVE UNIT (C) with the three screws (silver, 6mm).
5. Similarly, install the DEVE HOLDERs and DEVE UNITs (K/M/Y) in due order.

CAUTION

11. When installing the DEVE UNIT (K/M/Y), insert it by sliding it along the upper groove of the already installed DEVE UNIT.

6. Remove the paper that blocks the drain port of each Auger (Y/M/C/K).

CAUTION

12. Do not stick the adhesive of the tape to the drain port.

7. Secure each Auger (Y/M/C/K) with the one screw (black, tapping, flanged, 8mm).
8. Slide open the Shutters to the original positions.

CAUTION

13. Open the Shutter (Y/M/C/K) without fail. Unless the Shutter (Y/M/C/K) is open, the COVER ASSY INNER cannot be installed in Step 12.

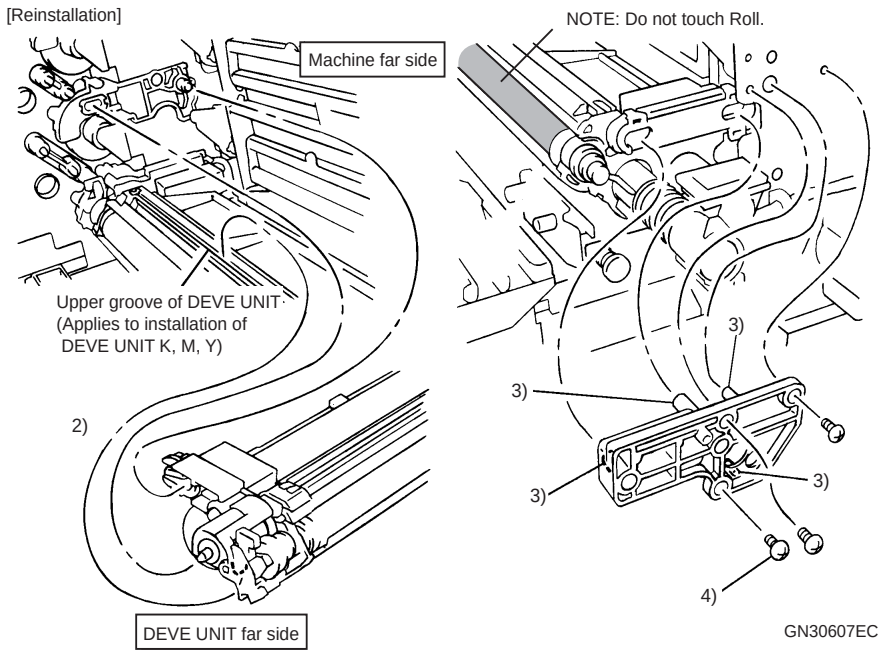

Figure 4-82. Installing the DEVE UNIT K (C, M, Y) (2)

manuals4you.com

9. Remove the spread paper.
10. Secure the FRAME TIE FRONT with the four screws (silver, 6mm).
11. Release the Hook of the STOPPER ASSY IDT, and close the LH ASSY.

CAUTION

14. When the IDT UNIT has been removed, the LH ASSY cannot be closed unless the STOPPER ASSY IDT is released. "4.1.1 Precautions" *(p.293)*

15. When you opened/closed the LH ASSY with the printer powered off, be sure to power on the printer after the work is finished to warm it up. Failure to do so may cause problems in print quality. (Refer to "3.3.4 FIP-P16" *(p.181)*)

12. Install the COVER ASSY INNER. *(p.413)*
13. Close the COVER ASSY FRONT.

ADJUSTMENT REQUIRED

After replacing the DEVE UNIT, execute the following.
"5.1.2 Part/unit-based adjustment items" *(p.460)*

- **Life counter clear**

4.7.5 AUGER (Y/M/C/K)

REMOVAL

1. Open the COVER ASSY FRONT.
2. Remove the COVER ASSY INNER. *(p.413)*
3. Open the LH ASSY.
4. Remove the four screws (silver, 6mm) that secure the FRAME TIE FRONT, and remove the FRAME TIE FRONT.
5. Slide the Shutters in the direction of arrow until they stop to close the Shutters (Y/M/C/K).
6. Remove the one screw (black, flanged tapping, 8mm) and one screw (gold, tapping, 8mm) that secure the target AUGER, and remove the AUGER.
7. Place the removed AUGER on paper.
8. Remove the SHUTTER HSG.

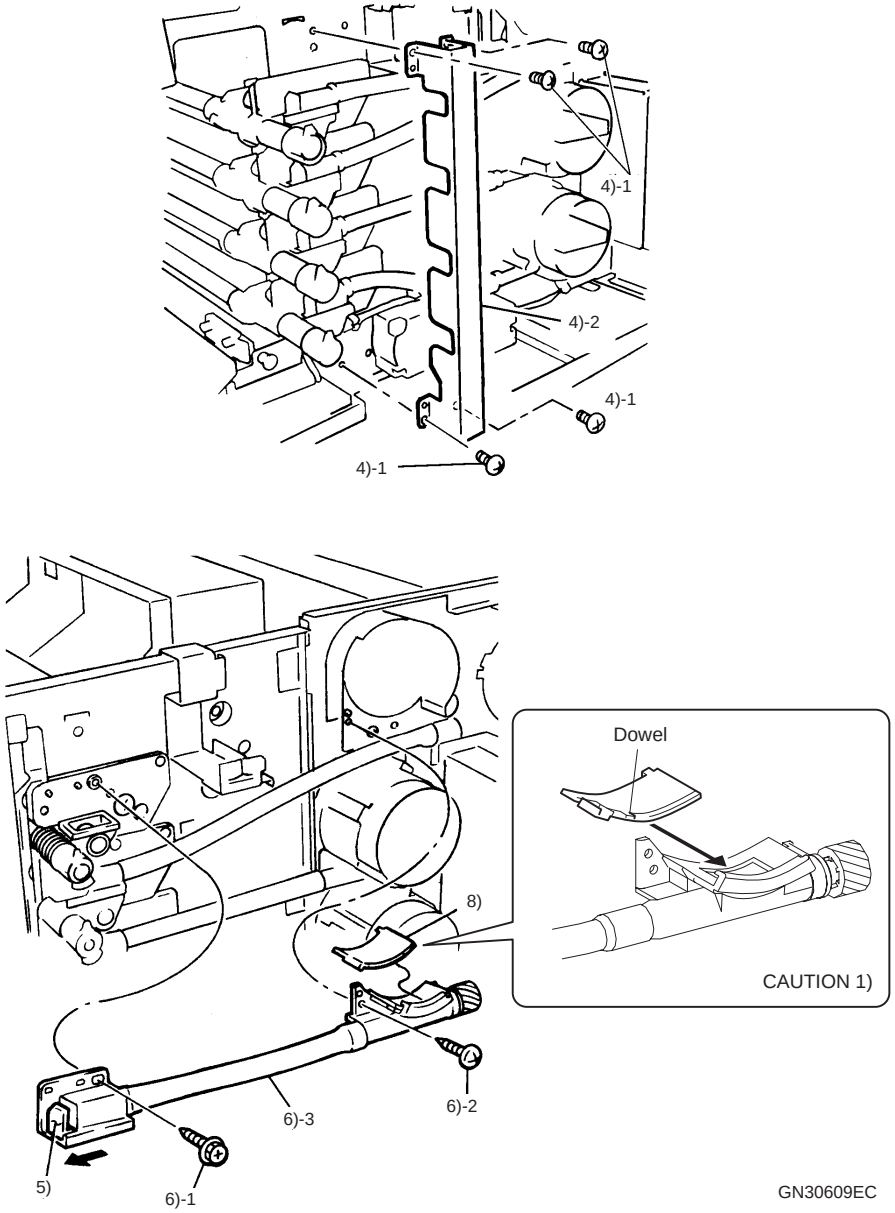

Figure 4-83. Removing the AUGER (Y/M/C/K)

manuals4you.com

REINSTALLATION

1. Install the SHUTTER HSG to the AUGER, and secure the AUGER with the one screw (black, flanged tapping, 8mm) and one screw (gold, tapping, 8mm).

CAUTION

1. Securely push the Dowel of the SHUTTER HSG into the AUGER.

2. Slide open the Shutters to the original positions.
3. Secure the FRAME TIE FRONT with the four screws (silver, 6mm).
4. Release the Hook of the STOPPER ASSY IDT, and close the LH ASSY.

CAUTION

2. When the IDT UNIT has been removed, the LH ASSY cannot be closed unless the STOPPER ASSY IDT is released. "4.1.1 Precautions" *(p.293)*

3. When you opened/closed the LH ASSY with the printer powered off, be sure to power on the printer after the work is finished to warm it up. Failure to do so may cause problems in print quality. (Refer to "3.3.4 FIP-P16" *(p.181)*)

5. Install the COVER ASSY INNER. *(p.413)*
6. Close the COVER ASSY FRONT.

ADJUSTMENT REQUIRED

After changing the AUGER, execute the following according to the replaced color. "6.3.1 Maintenance Menu Items" *(p.483)*

- **Toner Admix (maintenance mode)**

4.7.6 MOTOR DISP (Y/M/C/K)

REMOVAL

1. Open the COVER ASSY FRONT.
2. Remove the COVER ASSY INNER. (p.413)
3. Remove the COVER ASSY RIGHT. (p.298)
4. Remove the COVER HIGH ASSY TOP. (p.299)
5. Remove the BOARD ASSY, MAIN. (p.375)
6. Remove the ESS BOX. (p.378)
7. Remove the TONER DISPENSER ASSY. (p.389)
8. Place the removed TONER DISPENSER ASSY on paper.
9. Disconnect the Harness from the Connector (P/J214) of the MOTOR DISP (K).
10. Remove the three screws (gold, tapping, 22mm) that secure the MOTOR DISP (K), and remove the MOTOR DISP (K).
11. Similarly, remove the other MOTOR DISPs (Y/M/C).

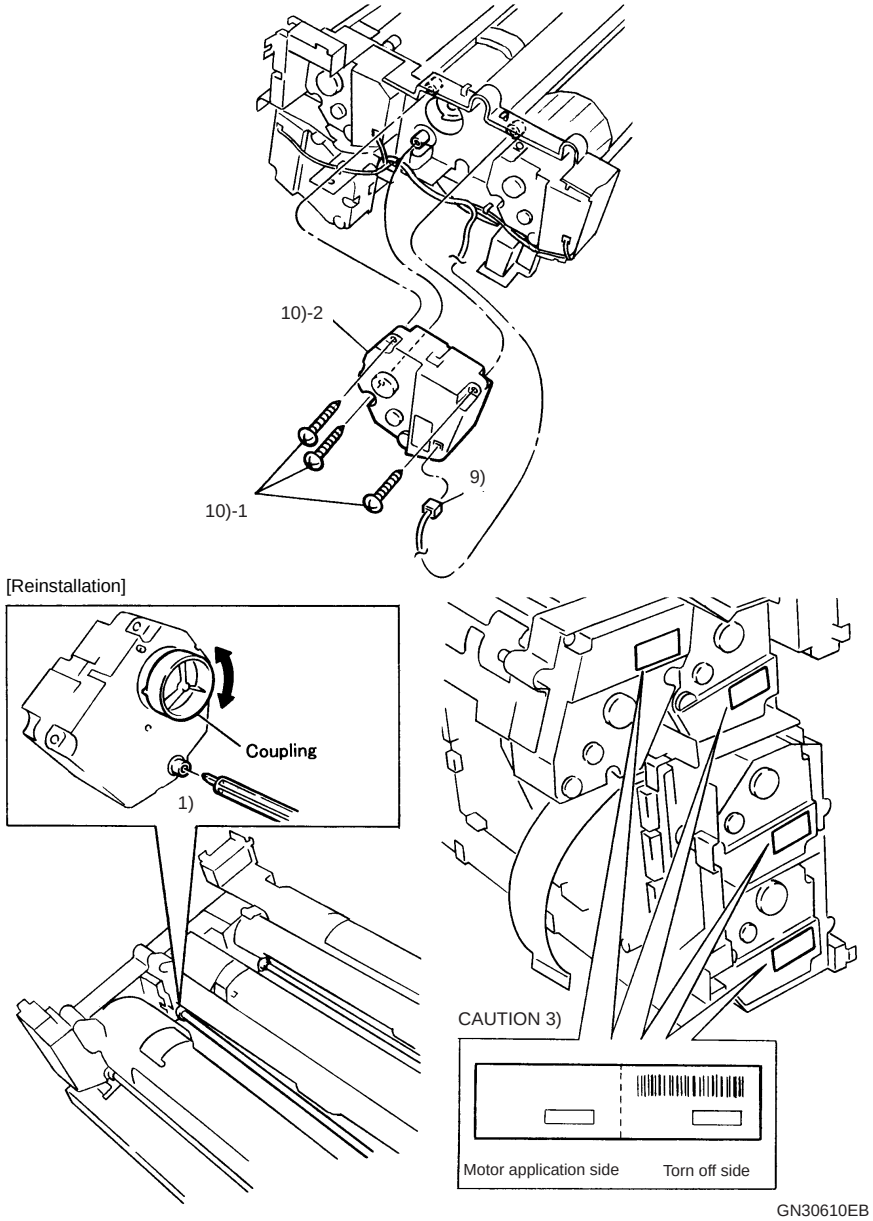

Figure 4-84. Removing the MOTOR DISP (Y/M/C/K)

manuals4you.com

REINSTALLATION

CAUTION

1. In the following step, visually check that the SHAFT DRIVE DISP is securely installed. To visually check the Output Shaft of the MOTOR DISP (K), the ANTENNA CK must be removed.

1. Turn the Coupling of the MOTOR DISP (K), match the orientation of the Output Shaft of the MOTOR DISP (K) with that of the cut surface of the SHAFT DRIVE DISP, and install the MOTOR DISP (K).
2. Remove the ANTENNA CK *(p.397)*, and visually check that the SHAFT DRIVE DISP is installed.
3. Secure the MOTOR DISP (K) with the three screws (gold, tapping, 22mm), and install the ANTENNA CK.
4. Connect the Connector (P214) of the MOTOR DISP (K) to the Connector (J214) of the HARNESS ASSY DISP.
5. Similarly, install the other MOTOR DISPs (Y/M/C).

CAUTION

2. After installing all MOTOR DISPs, visually check again that the cut surface of the SHAFT DRIVE DISP is inserted in the Output Shaft of the MOTOR DISP.
Turn the SHAFT DRIVE DISP, and make certain that the MOTOR DISP rotates.
3. After installation, tear off the bar code side of the label applied to the new MOTOR DISP.

6. Install the TONER DISPENSER ASSY. *(p.389)*
7. Install the ESS BOX. *(p.378)*
8. Install the BOARD ASSY, MAIN. *(p.375)*
9. Install the COVER HIGH ASSY TOP. *(p.299)*
10. Install the COVER ASSY RIGHT. *(p.298)*
11. Install the COVER ASSY INNER. *(p.413)*
12. Close the COVER ASSY FRONT.

ADJUSTMENT REQUIRED

After replacing the MOTOR DISP, execute the following.
"5.1.2 Part/unit-based adjustment items" *(p.460)*

- **Write adjustment value**
  When you have installed a new MOTOR DISP, tear off the bar code side of the applied label. As a correction value, write the 3-digit value between "*"s given under the barcode of the separated stub.

4.7.7 ANTENNA CK, ANTENNA YM

REMOVAL

1. Open the COVER ASSY FRONT.
2. Remove the COVER ASSY INNER. *(p.413)*
3. Remove the COVER ASSY RIGHT. *(p.298)*
4. Remove the COVER HIGH ASSY TOP. *(p.299)*
5. Remove the BOARD ASSY, MAIN. *(p.375)*
6. Remove the ESS BOX. *(p.378)*
7. Remove the TONER DISPENSER ASSY. *(p.389)*
8. Remove the MOTOR DISP (K). *(p.399)*

CAUTION

1. When removing the ANTENNA CK, be sure to remove the MOTOR DISP (K).

9. Release the four Hooks of the ANTENNA CK.
10. Disconnect the Harness from the Connector (P/J181) of the ANTENNA CK, and remove the ANTENNA CK.

CAUTION

2. If the Harness is strained, loosen it and disconnect the Connector.

11. Similarly, remove the MOTOR DISP (Y) and MOTOR DISP (M). *(p.399)*

CAUTION

3. When removing the ANTENNA YM, be sure to remove the MOTOR DISP (Y) and MOTOR DISP (M).

12. Release the four Hooks of the ANTENNA YM.
13. Disconnect the Harness from the Connector (P/J182) of the ANTENNA YM, and remove the ANTENNA YM.

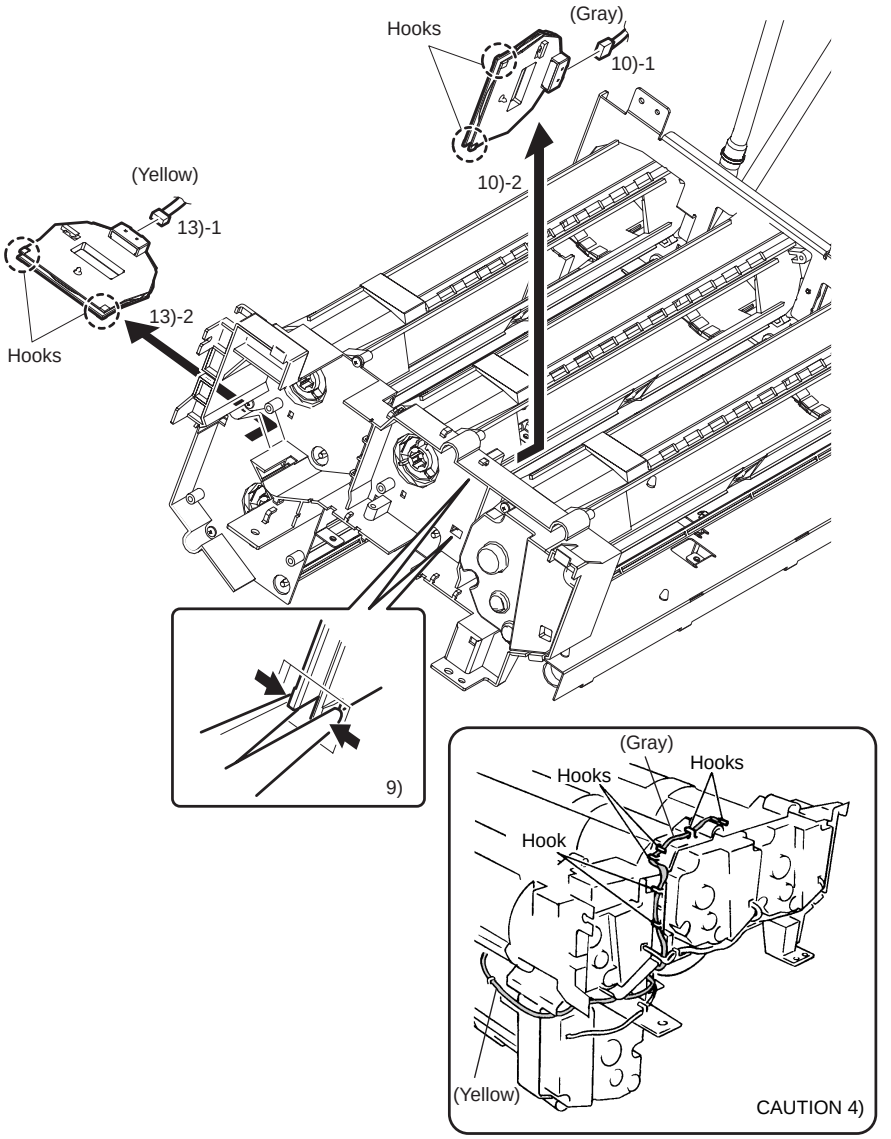

GN30611EB

Figure 4-85. Removing the ANTENNA CK and ANTENNA YM

manuals4you.com

REINSTALLATION

CAUTION

4. Refer to Figure 4-85 for routing of the Harness.

1. Connect the Connector (J182) of the ANTENNA YM to the Connector (P182) of the HARNESS ASSY ANTENNA (yellow).
2. Match the four Hooks of ANTENNA YM, and secure the ANTENNA YM.
3. Install the MOTOR DISP (Y) and MOTOR DISP (M). *(p.399)*
4. Connect the Connector (P181) of the ANTENNA CK to the Connector (J181) of the HARNESS ASSY ANTENNA (gray).
5. Match the four Hooks of ANTENNA CK, and secure the ANTENNA CK.
6. Install the MOTOR DISP (K). *(p.399)*
7. Install the TONER DISPENSER ASSY. *(p.389)*
8. Install the ESS BOX. *(p.378)*
9. Install the BOARD ASSY, MAIN. *(p.375)*
10. Install the COVER HIGH ASSY TOP. *(p.299)*
11. Install the COVER ASSY RIGHT. *(p.298)*
12. Install the COVER ASSY INNER. *(p.413)*
13. Close the COVER ASSY FRONT.

4.7.8 HSG-CTRG (Y/M/C/K)

REMOVAL

1. Open the COVER ASSY FRONT.
2. Remove the COVER ASSY INNER. (p.413)
3. Remove the COVER ASSY RIGHT. (p.298)
4. Remove the COVER HIGH ASSY TOP. (p.299)
5. Remove the BOARD ASSY, MAIN. (p.375)
6. Remove the ESS BOX. (p.378)
7. Remove the TONER DISPENSER ASSY, and put it with its Right side down. (p.389)
8. Remove the one screw (gold, tapping, 8mm) that secures the target AUGER (Y/M/C/K), and remove the AUGER. (p.397)
9. Place the removed AUGER on paper.
10. Remove the one screw (silver, flanged, 6mm) and two screws (gold, tapping, 8mm) that secure the target HSG-CTRG (Y/M/C/K), and remove the HSG-CTRG.

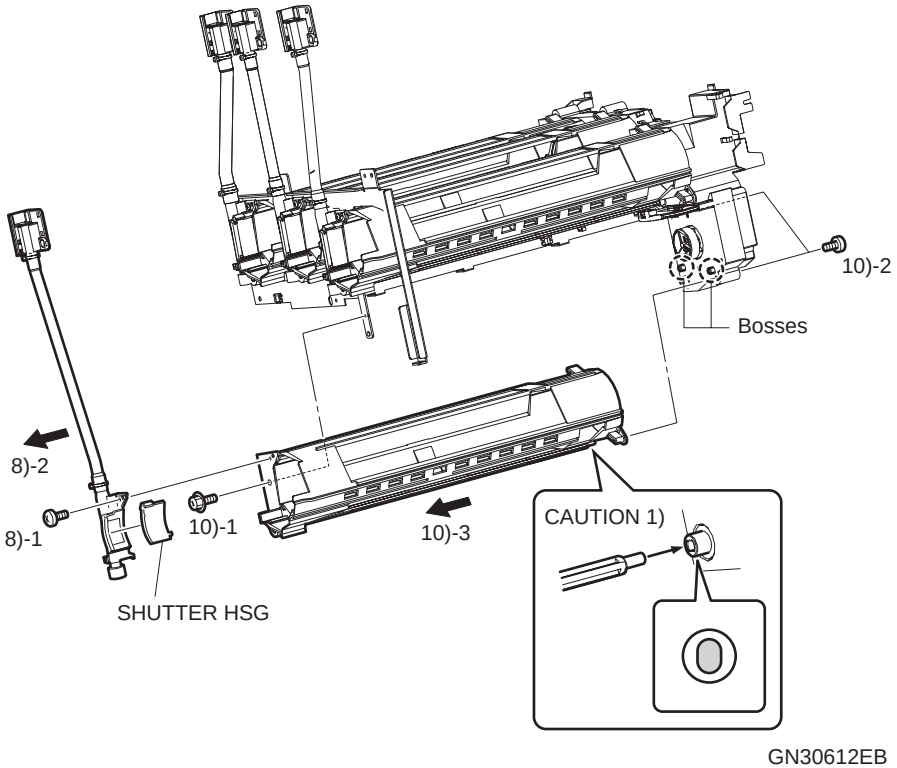

Figure 4-86. Removing the HSG-CTRG (Y/M/C/K)

manuals4you.com

REINSTALLATION

CAUTION

1. When installing the HSG-CTRG, match the SHAFT DRIVE DISP with the Output Shaft of the MOTOR DISP.

1. Secure the target HSG-CTRG (Y/M/C/K) to the TONER DISPENSER ASSY with the one screw (silver, flanged, 6mm) and two screws (gold, tapping, 8mm).
2. Secure the target AUGER (Y/M/C/K) with the one screw (gold, tapping, 8mm). *(p.397)*

CAUTION

2. After assembling, make sure that the Latch of the AUGER (Y/M/C/K) is securely inserted in the HSG-CTRG (Y/M/C/K). A print error may occur if there is a gap between the AUGER (Y/M/C/K) and HSG-CTRG.

3. Install the TONER DISPENSER ASSY. *(p.389)*
4. Install the ESS BOX. *(p.378)*
5. Install the BOARD ASSY, MAIN. *(p.375)*
6. Install the COVER HIGH ASSY TOP. *(p.299)*
7. Install the COVER ASSY RIGHT. *(p.298)*
8. Install the COVER ASSY INNER. *(p.413)*
9. Close the COVER ASSY FRONT.

4.7.9 DRIVE ASSY PR

CAUTION

This Motor drives the IDT UNIT, Photoconductor unit and BTR UNIT ASSY. Handle it with extreme care to protect it against impact. If it is dropped, for example, the print quality will be affected.

REMOVAL

1. Remove the COVER ASSY REAR. *(p.302)*
2. Disconnect the Connector (P1071) of the HARNESS ASSY R-TOP1 from the DRIVE ASSY PR, and disconnect the Connector (P/J133) of the HARNESS ASSY R-BTM from the HVPS.
3. Remove the Harness from the one Clamp and two Hooks.
4. Remove the six screws (black, flanged, 6mm) that secure the DRIVE ASSY PR, and remove the DRIVE ASSY PR.

REINSTALLATION

1. Secure the DRIVE ASSY PR with the six screws (black, flanged, 6mm).
2. Secure the Harness to the one Clamp and two Hooks.
3. Connect the Connector (P1071) of the HARNESS ASSY R-TOP1 to Connector (J1071) of the DRIVE ASSY PR. Connect the Connector (J133) of the HARNESS ASSY R-BTM to the Connector (P133) of the HVPS.
4. Install the COVER ASSY REAR. *(p.302)*

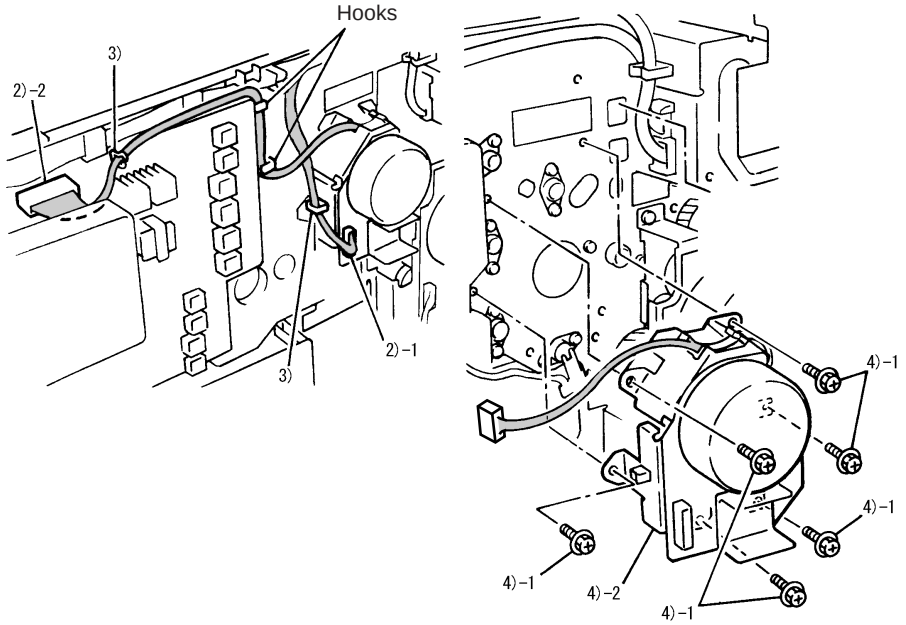

Figure 4-87. Removing the DRIVE ASSY PR

manuals4you.com

4.7.10 GEAR ASSY HR

REMOVAL

1. Remove the COVER ASSY REAR. (p.302)
2. Disconnect the Harness from the Connector (P/J103) of the LVPS.
3. Remove the three screws (black, flanged, 6mm) that secure the GEAR ASSY HR, and remove the GEAR ASSY HR.
4. Remove the Cable Band from the GEAR ASSY HR.

REINSTALLATION

1. Secure the GEAR ASSY HR with the three screws (black, flanged, 6mm).
2. Secure the Cable Band to the GEAR ASSY HR.
3. Connect the Connector (J103) of the FUSER DRAWER CONNECTOR to the Connector (P103) of the LVPS.
4. Install the COVER ASSY REAR. (p.302)

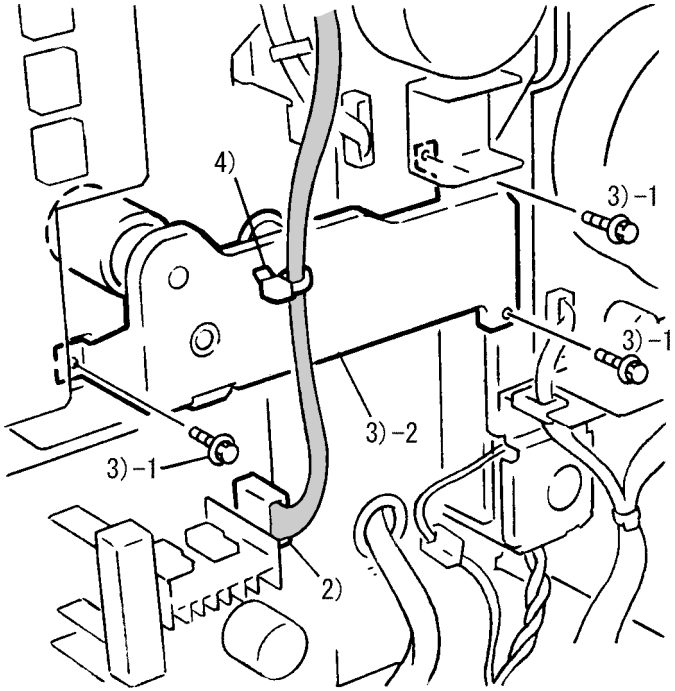

GN30614EA

Figure 4-88. Removing the GEAR ASSY HR

4.7.11 TRACKING ASSY FRONT

REMOVAL

1. Open the COVER ASSY FRONT.
2. Remove the COVER ASSY INNER. *(p.413)*
3. Open the LH ASSY.
4. Remove the COVER HIGH ASSY TOP. *(p.299)*
5. Remove the ROS ASSY. *(p.357)*
6. Remove the DEVE UNIT K (C, M, Y). *(p.392)*
7. Remove the one screw (gold, 25mm) that secures the MOTOR ASSY TRACKING.
8. Remove the three screws (gold, tapping, 8mm) that secure the TRACKING ASSY FRONT.
9. While pushing and releasing the Boss from the hole in the direction of arrow, release the two Hooks from the square holes in the direction of arrow, and remove the TRACKING ASSY FRONT.

REINSTALLATION

1. Match the two Hooks of the TRACKING ASSY FRONT with the square holes, secure the Boss to the hole, and install the TRACKING ASSY FRONT.
2. Secure the TRACKING ASSY FRONT with the three screws (gold, tapping, 8mm).
3. Install the one screw (gold, 25mm) that tightens the MOTOR ASSY TRACKING.
4. Install the DEVE UNIT K (C, M, Y). *(p.392)*
5. Install the ROS ASSY. *(p.357)*
6. Install the COVER HIGH ASSY TOP. *(p.299)*
7. Release the Hook of the STOPPER ASSY IDT, and close the LH ASSY.

CAUTION

1. **When the IDT UNIT has been removed, the LH ASSY cannot be closed unless the STOPPER ASSY IDT is released. "4.1.1 Precautions" *(p.293)***
2. **When you opened/closed the LH ASSY with the printer powered off, be sure to power on the printer after the work is finished to warm it up. Failure to do so may cause problems in print quality. (Refer to "3.3.4 FIP-P16" *(p.181)*)**

8. Install the COVER ASSY INNER. *(p.413)*
9. Close the COVER ASSY FRONT.

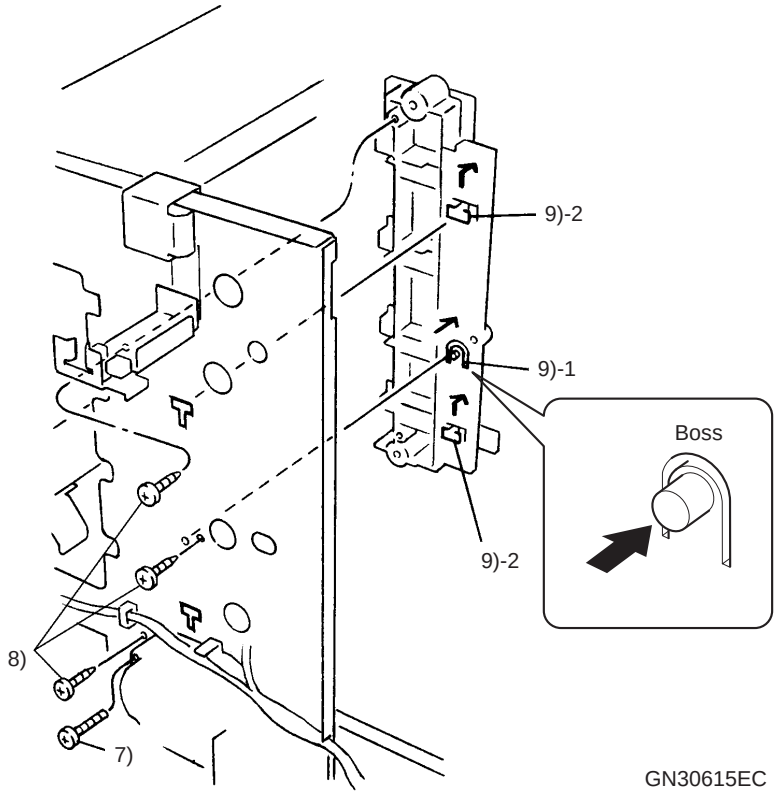

Figure 4-89. Removing the TRACKING ASSY FRONT

manuals4you.com

4.7.12 MOTOR ASSY TRACKING

REMOVAL

1. Open the COVER ASSY FRONT.
2. Remove the COVER ASSY INNER. *(p.413)*
3. Disconnect the Harness from the Connector (P/J222) of the MOTOR ASSY TRACKING.
4. Remove the three screws (gold, 25mm) that secure the MOTOR ASSY TRACKING, and remove the MOTOR ASSY TRACKING.

CAUTION

1. When removing the MOTOR ASSY TRACKING, be sure to replace it mounted with the Photoconductor unit and IDT UNIT.

REINSTALLATION

CAUTION

2. After replacing the MOTOR ASSY TRACKING, do not remove/install the Photoconductor unit and IDT UNIT before switching power on/off. If the Shaft rotates accidentally, the DEVE UNIT moves to the Photoconductor unit side, and if the IDT UNIT is removed/installed in this state, the Photoconductor unit and ID UNIT may interfere, resulting in damage.

1. Match the orientation of the hole in the MOTOR ASSY TRACKING with the D cut surface of the Shaft, and while rotating the MOTOR ASSY TRACKING in the direction of arrow, set it to the correct position.
2. Secure the MOTOR ASSY TRACKING with the three screws (gold, 25mm).
3. Connect the Connector (P222) of the MOTOR ASSY TRACKING to the Connector (J222) of the HARNESS ASSY F-SNR.
4. Install the COVER ASSY INNER. *(p.413)*
5. Close the COVER ASSY FRONT.

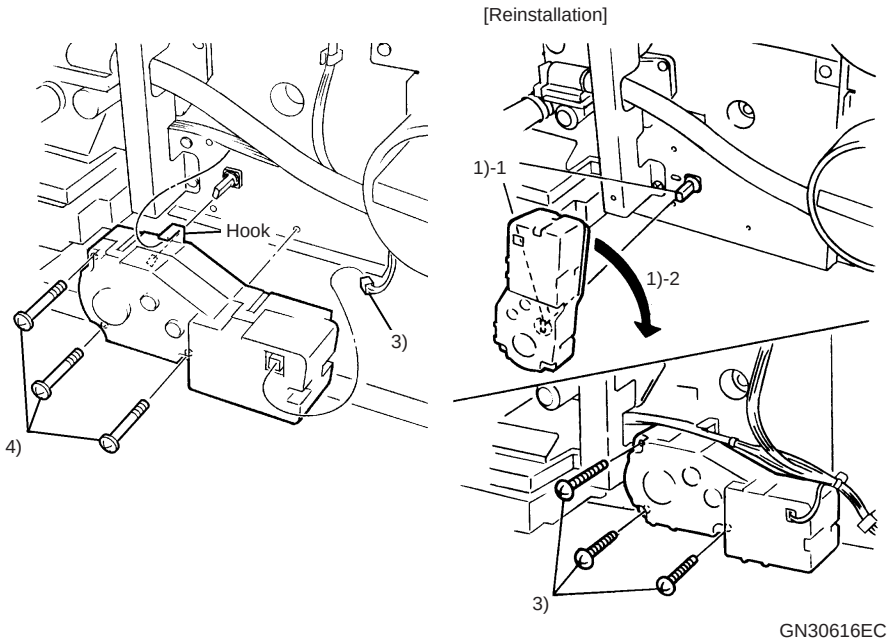

Figure 4-90. Removing the MOTOR ASSY TRACKING

4.7.13 SHAFT ASSY TRACKING

REMOVAL

1. Open the COVER ASSY FRONT.
2. Remove the COVER ASSY INNER. *(p.413)*
3. Open the LH ASSY.
4. Remove the COVER HIGH ASSY TOP. *(p.299)*
5. Remove the ROS ASSY. *(p.357)*
6. Remove the MOTOR ASSY TRACKING. *(p.408)*
7. Remove the COVER ASSY REAR. *(p.302)*
8. Remove the LVPS. *(p.373)*
9. Remove the one screw (silver, 6mm) that secures the SENSOR ASSY TRACKING, and pull out the SENSOR ASSY TRACKING.
10. Remove the Rear side E Ring that secures the SHAFT ASSY TRACKING, and remove the BEARING SLEEVE PLA.
11. Remove the Front side E Ring that secures the SHAFT ASSY TRACKING, and remove the BEARING SLEEVE PLA.
12. While releasing the Hook of the GUIDE ROS, slide and remove the GUIDE ROS in the direction of arrow.
13. While lifting the TRACKING ASSY FRONT as shown in Figure 4-91, remove the SHAFT ASSY TRACKING.

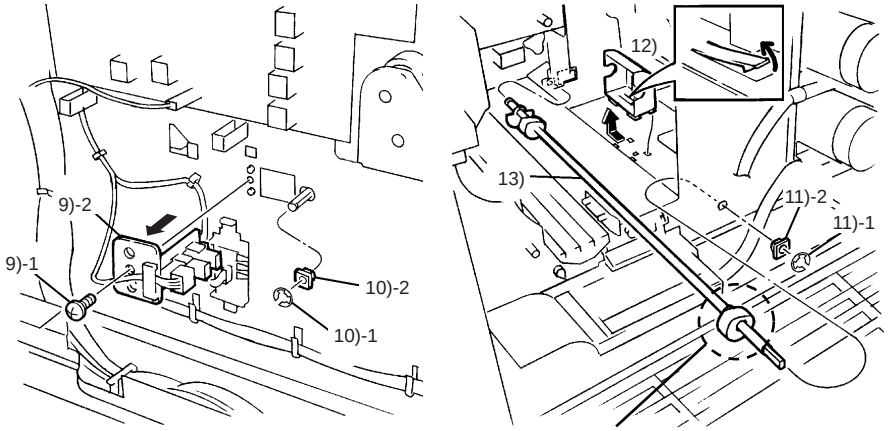

NOTE: Face downward

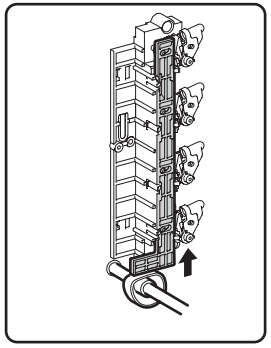

GN30617EB

Figure 4-91. Removing the SHAFT ASSY TRACKING

manuals4you.com

REINSTALLATION

1. Insert the SHAFT ASSY TRACKING into the Frame of the main unit.

CAUTION

1. When installing the SHAFT ASSY TRACKING, be sure to place the raised portion of the Cam to downward. Placing it to upward result in printing with messy blot and damaging the Drum.

2. Match the Hook of the GUIDE ROS, and secure the GUIDE ROS.
3. Install the BEARING SLEEVE PLA to the Front side of the SHAFT ASSY TRACKING, and secure it with E Ring.
4. Install the BEARING SLEEVE PLA to the Rear side of the SHAFT ASSY TRACKING, and secure it with E Ring.
5. Secure the SENSOR ASSY TRACKING with the one screw (silver, 6mm).
6. Install the LVPS. *(p.373)*
7. Install the MOTOR ASSY TRACKING. *(p.408)*
8. Install the ROS ASSY. *(p.357)*
9. Install the COVER HIGH ASSY TOP. *(p.299)*
10. Install the COVER ASSY REAR. *(p.302)*
11. Release the Hook of the STOPPER ASSY IDT, and close the LH ASSY.

CAUTION

2. When the IDT UNIT has been removed, the LH ASSY cannot be closed unless the STOPPER ASSY IDT is released. "4.1.1 Precautions" *(p.293)*

3. When you opened/closed the LH ASSY with the printer powered off, be sure to power on the printer after the work is finished to warm it up. Failure to do so may cause problems in print quality. (Refer to "3.3.4 FIP-P16" *(p.181)*)

12. Install the COVER ASSY INNER. *(p.413)*
13. Close the COVER ASSY FRONT.

4.7.14 GEAR HIGH ASSY DEVE

REMOVAL

1. Open the COVER ASSY FRONT.
2. Remove the COVER ASSY INNER. *(p.413)*
3. Open the LH ASSY.
4. Remove the COVER ASSY REAR. *(p.302)*
5. Remove the COVER HIGH ASSY TOP. *(p.299)*
6. Remove the ROS ASSY. *(p.357)*
7. Remove the DEVE UNIT K (C, M, Y). *(p.392)*
8. Remove the FAN LV. *(p.370)*
9. Remove the HVPS. *(p.371)*
10. Disconnect the Harness from the Connector (P/J103) of the LVPS.
11. Remove the GEAR ASSY HR. *(p.406)*
12. Remove the Harness of the DRIVE ASSY PR from the two Hooks.
13. Remove the Harness (yellow) of the HARNESS ASSY CRUM from the Clamp.

CAUTION

1. **Since the HARNESS ASSY CRUM is kept connected to the TERMINAL ASSY PHD, take care not to move it too far away.**

14. Remove the six screws (silver, 8mm) that secure the TERMINAL ASSY PHD.
15. Remove the Harness from the Hook, and remove the TERMINAL ASSY PHD.
16. Remove the four screws (gold, tapping, 8mm) and five screws (black, flanged, 6mm) that secure the GEAR UNIT DEVE.
17. Lift the GEAR HIGH ASSY DEVE, and release and remove it from the Tab.

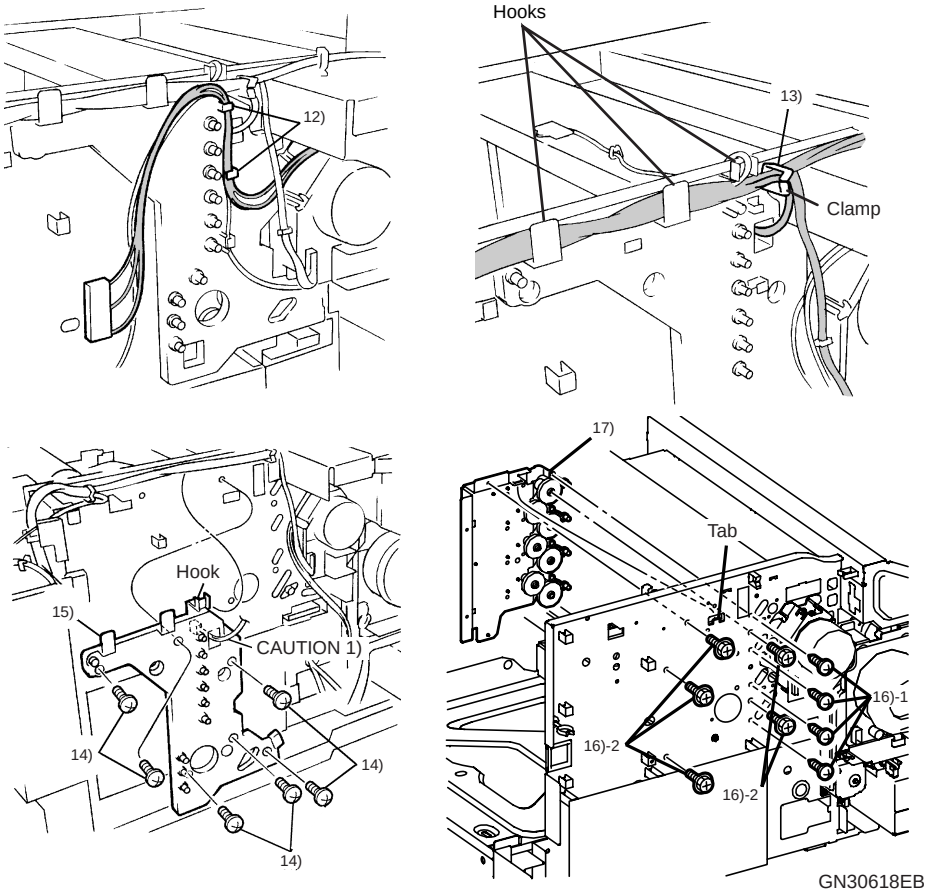

Figure 4-92. Removing the GEAR HIGH ASSY DEVE

manuals4you.com

REINSTALLATION

CAUTION

2. Since the HARNESS ASSY CRUM is kept connected to the TERMINAL ASSY PHD, take care not to move it too far away.

1. Fit the GEAR HIGH ASSY DEVE into the Tab, and secure it with the four screws (gold, tapping, 8mm) and five screws (black, flanged, 6mm).

CAUTION

3. When installing GEAR HIGH ASSY DEVE, install the four screws (gold, tapping, 8mm) in the positions marked "TAP" on the Frame.

2. Install the TERMINAL ASSY PHD, and secure the Harness to the Clamps and Hooks.
3. Secure the TERMINAL ASSY PHD with the six screws (silver, 8mm).
4. Secure the HARNESS ASSY CRUM to the Clamp.
5. Secure the HARNESS ASSY R-TOP1 of the DRIVE ASSY PR to the two Hooks.
6. Install the GEAR ASSY HR. *(p.406)*
7. Connect the Harness (J103), which comes from the FUSER DRAWER CONNECTOR, to the Connector (P103) of the LVPS.
8. Install the HVPS. *(p.371)*
9. Install the FAN LV. *(p.370)*
10. Install the DEVE UNIT K (C, M, Y). *(p.392)*
11. Install the ROS ASSY. *(p.357)*
12. Install the COVER HIGH ASSY TOP. *(p.299)*
13. Install the COVER ASSY REAR. *(p.302)*
14. Release the Hook of the STOPPER ASSY IDT, and close the LH ASSY.

CAUTION

4. When the IDT UNIT has been removed, the LH ASSY cannot be closed unless the STOPPER ASSY IDT is released. "4.1.1 Precautions" *(p.293)*

5. When you opened/closed the LH ASSY with the printer powered off, be sure to power on the printer after the work is finished to warm it up. Failure to do so may cause problems in print quality. (Refer to "3.3.4 FIP-P16" *(p.181)*)

15. Install the COVER ASSY INNER. *(p.413)*
16. Close the COVER ASSY FRONT.
17. Install the HARNESS ASSY.

4.7.15 COVER ASSY INNER

REMOVAL

1. Open the COVER ASSY FRONT.
2. Remove the five screws (silver, flanged, 8mm) that secure the COVER ASSY INNER, and remove the COVER ASSY INNER.

REINSTALLATION

1. Secure the COVER ASSY INNER with the five screws (silver, flanged, 8mm).
2. Close the COVER ASSY FRONT.

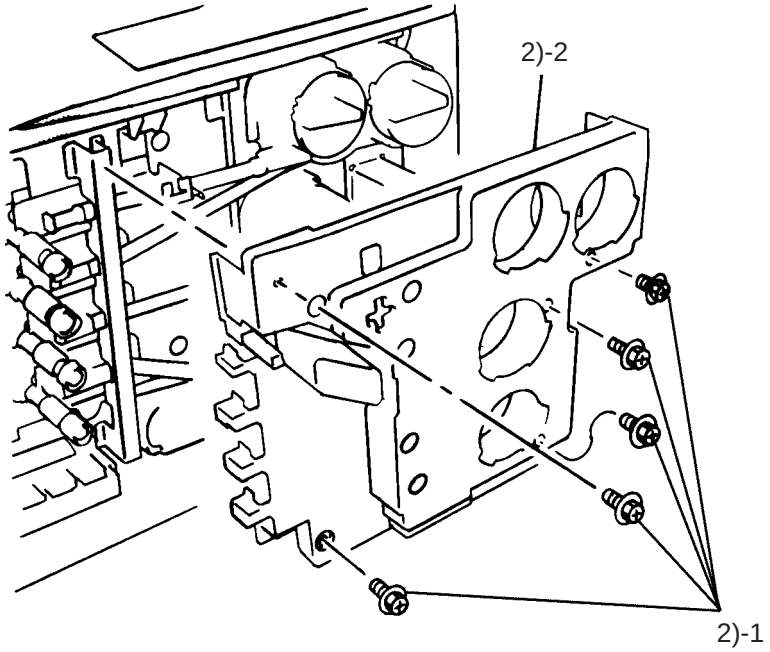

Figure 4-93. Removing the COVER ASSY INNER

manuals4you.com

4.8 Duplex and Side Tray

4.8.1 DUPLEX ASSY

REMOVAL

1. Release the Hook of the CAP CONNECTOR DUP, and remove the CAP CONNECTOR DUP.
2. Open the LH ASSY.
3. Disconnect the Relay Connector (P/J261) of the DUPLEX ASSY, release the Hook of the STOPPER ASSY IDT, and close the LH ASSY.

CAUTION

1. **When the IDT UNIT has been removed, the LH ASSY cannot be closed unless the STOPPER ASSY IDT is released.** **"4.1.1 Precautions" *(p.293)***

4. Open the DUPLEX COVER, and loosen the two KNOB SCREWs.
5. Remove the two Hooks from the square holes, and remove the DUPLEX ASSY.

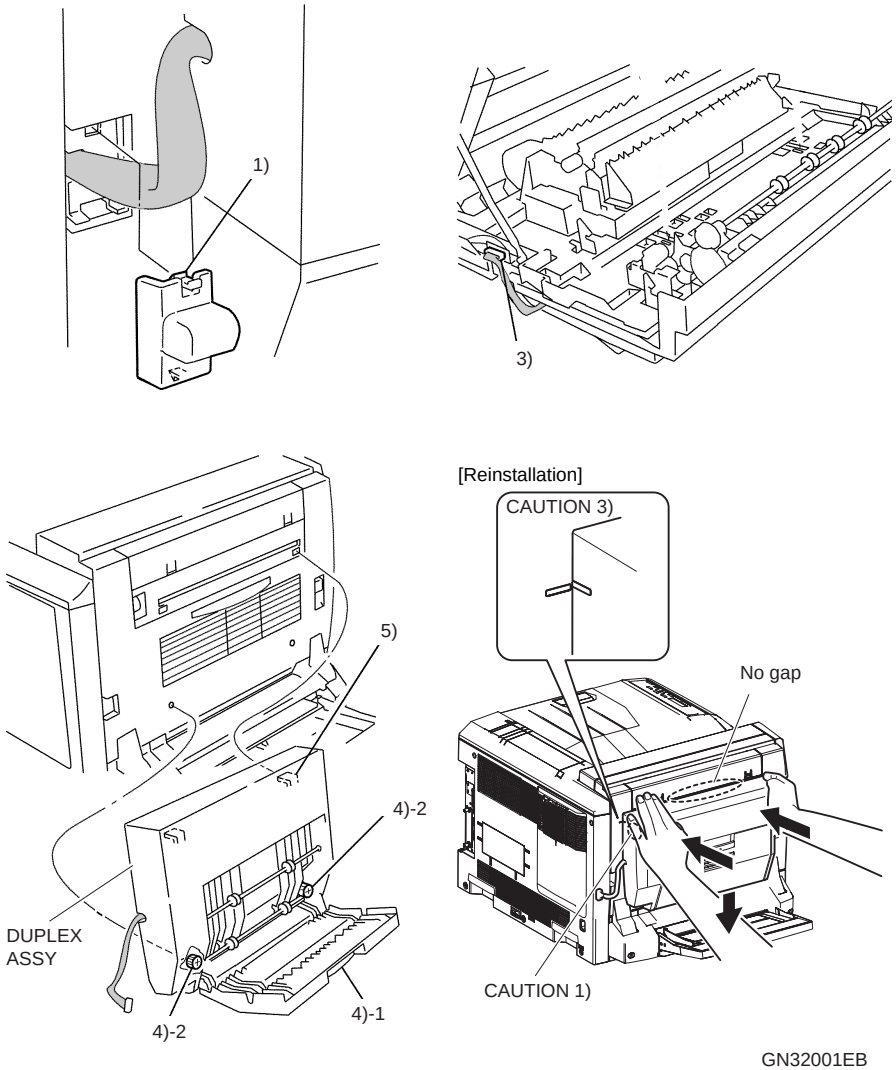

Figure 4-94. Removing and Reinstalling the DUPLEX ASSY

REINSTALLATION

1. Match the two Hooks to the square holes, and install the DUPLEX ASSY.

CAUTION

2. As shown in Figure 4-94, install the DUPLEX ASSY by pushing it down while pressing it against the main unit. Especially press its left side so that the GEAR 27Z J of the DUPLEX ASSY and the LEVER ASSY GEAR of the main unit engage securely.
3. After installing the DUPLEX ASSY, make sure that there is no gap between the DUPLEX ASSY and main unit top and that the lines match.

2. Tighten the two KNOB SCREWs, and close the DUPLEX COVER.
3. Open the LH ASSY, and connect the Connector (P261) of the HARNESS ASSY R-BTM to the Connector (J261) of the HARNESS ASSY MAIN.
4. Release the Hook of the STOPPER ASSY IDT, and close the LH ASSY.

CAUTION

4. When the IDT UNIT has been removed, the LH ASSY cannot be closed unless the STOPPER ASSY IDT is released. "4.1.1 Precautions" *(p.293)*
5. When you opened/closed the LH ASSY with the printer powered off, be sure to power on the printer after the work is finished to warm it up. Failure to do so may cause problems in print quality. (Refer to "3.3.4 FIP-P16" *(p.181)*)

5. Match the Hook of the CAP CONNECTOR DUP, and install the CAP CONNECTOR DUP.

manuals4you.com

4.8.2 TRAY ASSY EXIT, CHUTE ASSY FUT

REMOVAL

1. Release the two Hooks of TRAY ASSY EXIT, and remove the TRAY ASSY EXIT.
2. Push and release the two Hooks of the CHUTE ASSY FUT, and while lifting the CHUTE ASSY FUT, release the two Catches.

REINSTALLATION

1. Insert the two upper Catches of the CHUTE ASSY FUT, and push and install the CHUTE ASSY FUT from above.
2. Match the two Hooks of TRAY ASSY EXIT to the holes, and insert and install the TRAY ASSY EXIT.

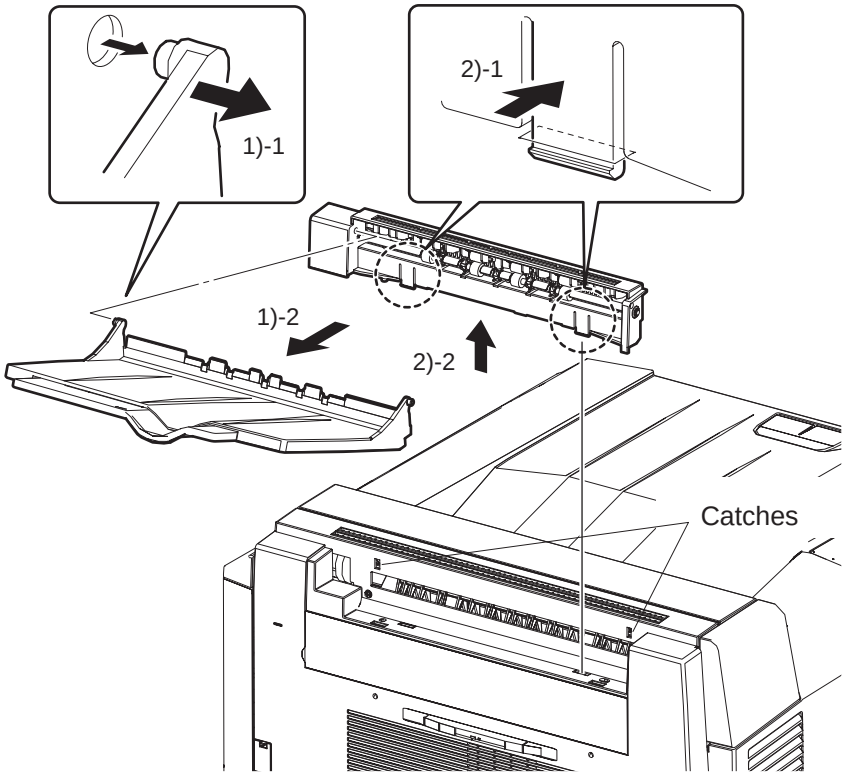

Figure 4-95. Removing the TRAY ASSY EXIT and CHUTE ASSY FUT

4.8.3 GATE SOLENOID

REMOVAL

1. Open the LH ASSY.
2. Disconnect the Connector (P/J23B6) of the GATE SOLENOID.
3. Release the upper Hook of the GATE SOLENOID, and remove the GATE SOLENOID using the lower Hook as a support.

REINSTALLATION

1. Match the lower Hook of the GATE SOLENOID, fit the upper Hook, and install the GATE SOLENOID.
2. Connect the Connector (P23B6) of the HARNESS ASSY R-BTM to the Connector (J23B6) of the GATE SOLENOID.
3. Release the Hook of the STOPPER ASSY IDT, and close the LH ASSY.

CAUTION

1. **When the IDT UNIT has been removed, the LH ASSY cannot be closed unless the STOPPER ASSY IDT is released. "4.1.1 Precautions" *(p.293)***
2. **When you opened/closed the LH ASSY with the printer powered off, be sure to power on the printer after the work is finished to warm it up. Failure to do so may cause problems in print quality. (Refer to "3.3.4 FIP-P16" *(p.181)*)**

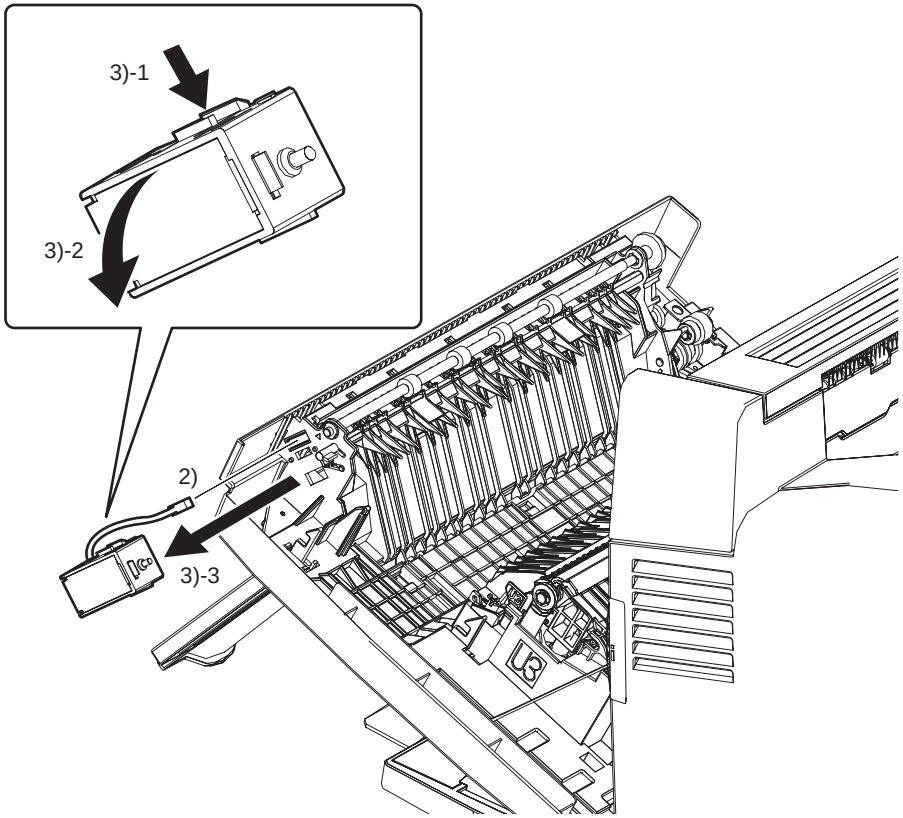

GN32003EA

Figure 4-96. Removing the GATE SOLENOID

manuals4you.com

4.8.4 GUIDE DUP IN, DUPLEX FRAME COVER

REMOVAL

1. Remove the DUPLEX ASSY. (p.414)
2. Remove the one screw (gold, tapping, 8mm) that secures the GUIDE DUP IN.
3. Remove the one Boss of the GUIDE DUP IN, and remove the GUIDE DUP IN.
4. Remove the four screws (gold, tapping, 8mm) that secure the DUPLEX FRAME COVER, and lift and remove the DUPLEX FRAME ASSY.

REINSTALLATION

1. Secure the DUPLEX FRAME ASSY to the DUPLEX FRAME COVER with the four screws (gold, tapping, 8mm).

CAUTION

Match and fit the two Positioning Latches of the DUPLEX FRAME COVER.

2. Match the one Boss of the GUIDE DUP IN, and install the GUIDE DUP IN.
3. Secure the GUIDE DUP IN with the one screw (gold, tapping, 8mm).
4. Install the DUPLEX ASSY. (p.414)

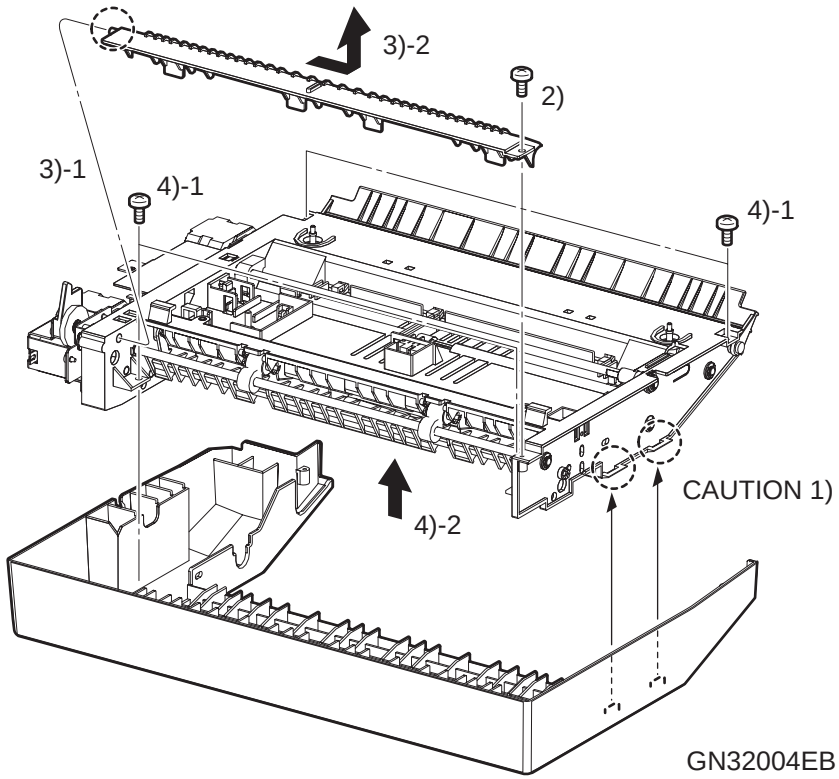

Figure 4-97. Removing the GUIDE DUP IN and DUPLEX FRAME COVER

4.8.5 DUPLEX PWB

REMOVAL

1. Remove the DUPLEX ASSY. (p.414)
2. Remove the GUIDE DUP IN and DUPLEX FRAME COVER. (p.418)
3. Remove the Clamp of the HARNESS ASSY MAIN from the BRKT ASSY DUP, and disconnect the Harnesses from the five Connectors (P/J361) (P/J362) (P/J363) (P/J364) (P/J36) of the DUPLEX PWB.
4. Remove the two screws (black, 6mm) that secure the DUPLEX PWB.
5. Remove the DUPLEX PWB from the PWB SUPPORT.

REINSTALLATION

1. Install the DUPLEX PWB to the PWB SUPPORT.
2. Secure the DUPLEX PWB with the two screws (black, 6mm).
3. Connect the Connector (J361) of the EXIT MOTOR to the Connector (P361) of the DUPLEX PWB.
   Connect the Connectors (J362) (J363) of the HARNESS ASSY DUP to the Connectors (P362) (P363) of the DUPLEX PWB.
   Connect the Connector (J364) of the DUPLEX CLUTCH to the Connector (P364) of the DUPLEX PWB.
   Connect the Connector (J36) of the HARNESS ASSY MAIN to the Connector (P36) of the DUPLEX PWB, and secure the Clamp of the HARNESS ASSY MAIN to the BRKT ASSY DUP.
4. Install the GUIDE DUP IN and DUPLEX FRAME COVER. (p.418)
5. Install the DUPLEX ASSY. (p.414)

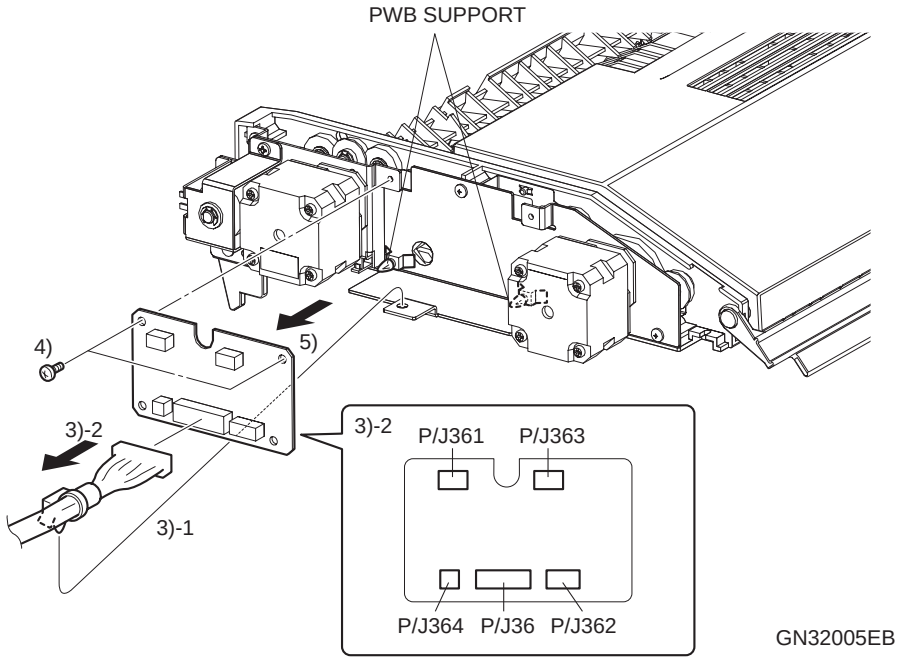

Figure 4-98. Removing the DUPLEX PWB

manuals4you.com

4.8.6 DUPLEX DRIVE

REMOVAL

1. Remove the DUPLEX ASSY. (p.414)
2. Remove the GUIDE DUP IN and DUPLEX FRAME COVER. (p.418)
3. Remove the DUPLEX PWB. (p.419)
4. Remove the five screws (gold, tapping, 8mm) that secure the DUPLEX DRIVE.
5. While removing the DUPLEX DRIVE toward you, pull the Harness out of the hole of the BRKT ASSY DUP, and remove the DUPLEX DRIVE.

REINSTALLATION

1. Pass the Harness into the hole of the BRKT ASSY DUP, and install the DUPLEX DRIVE.
2. Secure the DUPLEX DRIVE with the five screws (gold, tapping, 8mm).
3. Install the DUPLEX PWB. (p.419)
4. Install the GUIDE DUP IN and DUPLEX FRAME COVER. (p.418)
5. Install the DUPLEX ASSY. (p.414)

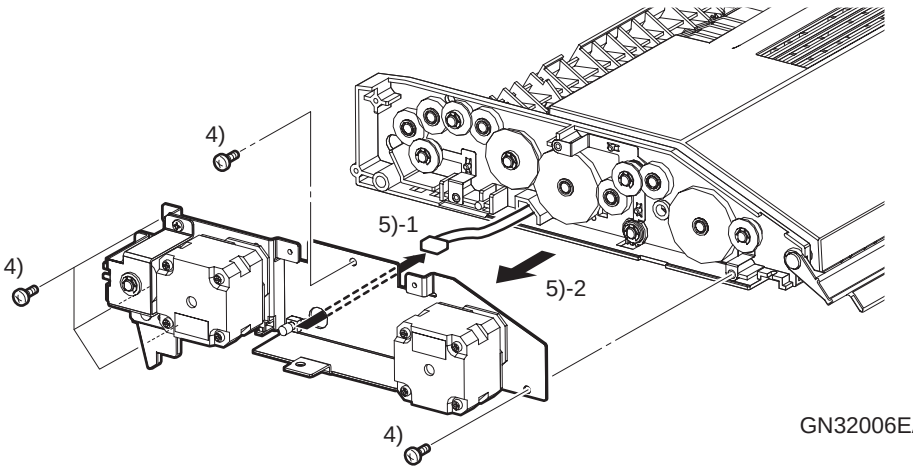

Figure 4-99. Removing the DUPLEX DRIVE

manuals4you.com

4.8.7 DUPLEX ROLL

REMOVAL

1. Remove the DUPLEX ASSY. (p.414)
2. Remove the GUIDE DUP IN and DUPLEX FRAME COVER. (p.418)
3. Disconnect the Connector (P/J362) of the DUPLEX PWB, and remove the DUPLEX DRIVE mounted with the DUPLEX PWB. (p.419, p.420)

CAUTION

1. Since the GEAR 17Z is freed in the following step, be careful not to lose it.

4. Remove the E Ring that secures the GEAR 14Z, and remove the GEAR 14Z and BEARING-6.
5. Remove E Ring that secures the BEARING-6, and remove the BEARING-6.
6. Remove the upper DUPLEX ROLL.
7. Open the DUPLEX COVER.

CAUTION

2. Since the GEAR 38Z is freed in the following step, be careful not to lose it.

8. Remove the E Ring that secures the GEAR 14Z and remove the GEAR 14Z and BEARING-6.
9. Remove E Ring that secures the BEARING-6, and remove the BEARING-6.
10. Remove the lower DUPLEX ROLL.

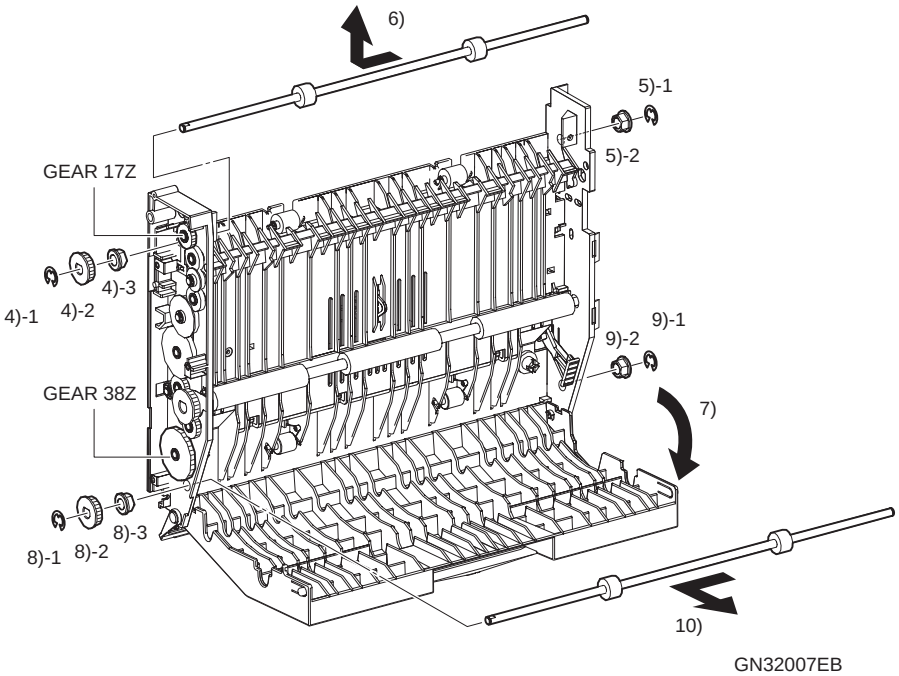

Figure 4-100. Removing the DUPLEX ROLL

manuals4you.com

REINSTALLATION

1. Install the lower DUPLEX ROLL.
2. Install the GEAR 14Z and BEARING-6, and secure the GEAR 14Z with the E Ring.
3. Install the BEARING-6, and secure the BEARING-6 with the E Ring.
4. Close the DUPLEX COVER.
5. Install the upper DUPLEX ROLL.
6. Install the GEAR 14Z and BEARING-6, and secure the GEAR 14Z with the E Ring.
7. Install the BEARING-6, and secure the BEARING-6 with the E Ring.
8. Install the DUPLEX DRIVE, and connect the Connector (J362) of the HARNESS ASSY DUP to the Connector (P362) of the DUPLEX PWB. *(p.419, p.420)*
9. Install the GUIDE DUP IN and DUPLEX FRAME COVER. *(p.418)*
10. Install the DUPLEX ASSY. *(p.414)*

4.8.8 GATE DUPLEX

REMOVAL

1. Remove the DUPLEX ASSY. (p.414)
2. Remove the GUIDE DUP IN and DUPLEX FRAME COVER. (p.418)
3. Remove the one screw (silver, flanged tapping, 12mm) that secures the GATE DUPLEX.
4. Remove the one Boss located on the screw side, and remove the GATE DUPLEX.

REINSTALLATION

1. Match the Bosses at both ends, and install the GATE DUPLEX.
2. Match and install the one screw (silver, flanged tapping, 12mm) to the hole of the GATE DUPLEX as shown in Figure 4-101, and secure the GATE DUPLEX.
3. Install the GUIDE DUP IN and DUPLEX FRAME COVER. (p.418)
4. Install the DUPLEX ASSY. (p.414)

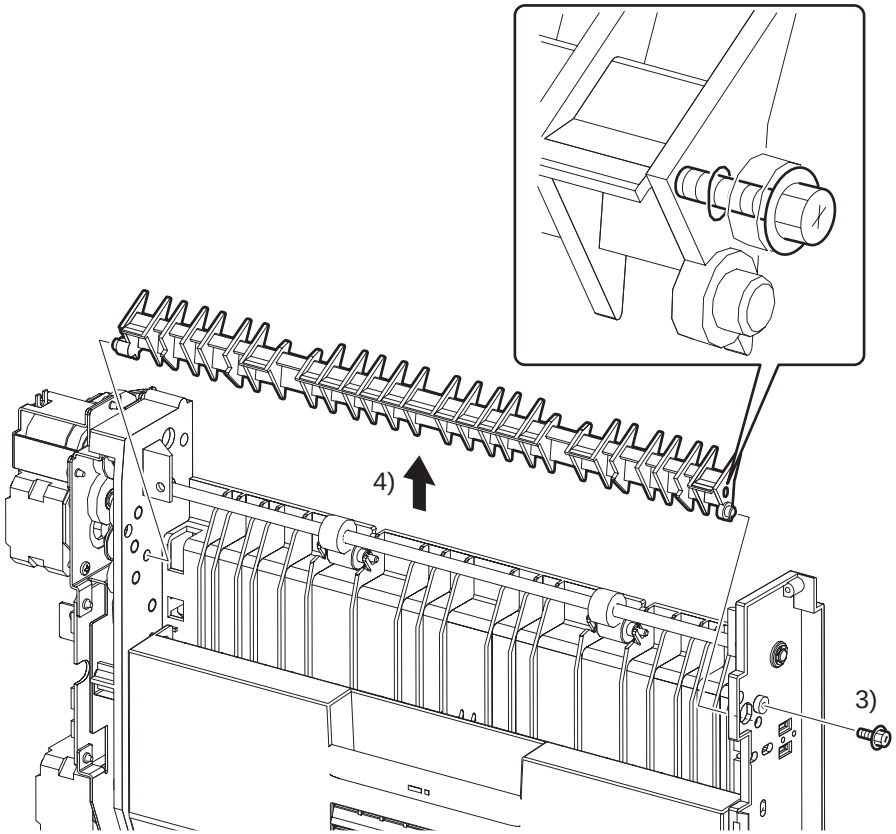

GN32008EA

Figure 4-101. Removing the GATE DUPLEX

manuals4you.com

4.8.9 DUPLEX SENSOR, DUPLEX COVER OPEN SWITCH

REMOVAL

1. Remove the DUPLEX ASSY. (p.414)
2. Remove the GUIDE DUP IN and DUPLEX FRAME COVER. (p.418)
3. Disconnect the Connector (P/J362) of the DUPLEX PWB, and remove the DUPLEX DRIVE mounted with the DUPLEX PWB. (p.420)
4. Disconnect the Harness from the Connector (P/J3622) of the DUPLEX SENSOR.
5. Peel off the SPACER SENSOR that secures the Hooks of the DUPLEX SENSOR on the rear side of the DUPLEX FRAME ASSY.
6. Release the four Hooks of the DUPLEX SENSOR, and remove the DUPLEX SENSOR.
7. While holding the DUPLEX COVER OPEN SWITCH with your fingers, disconnect the Harness from the Connector (P/J3621).
8. Remove the E Ring that secures the GEAR 27Z, and remove the GAER 27Z and GEAR 38Z.
9. Peel off the SPACER ASSY SWITCH that secures the Hook of the DUPLEX COVER OPEN SWITCH on the side face of the DUPLEX FRAME ASSY.
10. Release the two Hooks of the DUPLEX COVER OPEN SWITCH, and remove the DUPLEX COVER OPEN SWITCH.

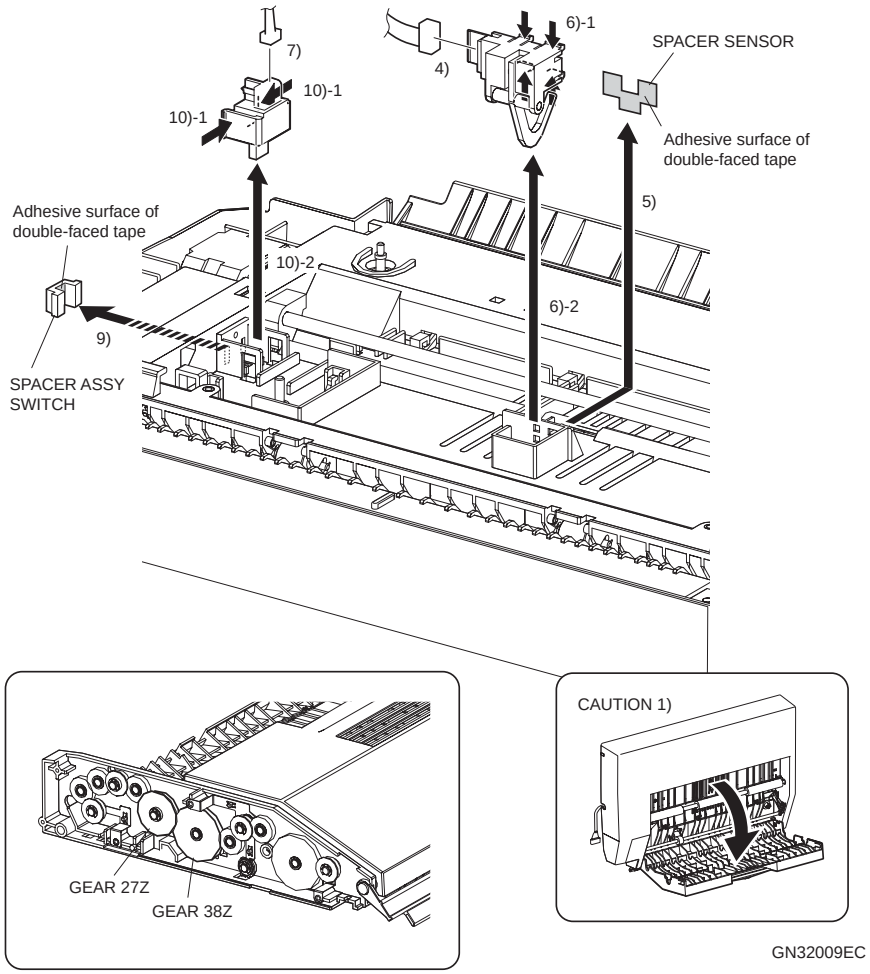

Figure 4-102. Removing the DUPLEX SENSOR and DUPLEX COVER OPEN SWITCH

REINSTALLATION

CAUTION

1. Install the DUPLEX COVER OPEN SWITCH with the DUPLEX COVER open.

1. Match the two Hooks of the DUPLEX COVER OPEN SWITCH, and install the DUPLEX COVER OPEN SWITCH.
2. From the side face of the DUPLEX FRAME ASSY, apply the SPACER ASSY SWITCH with the supplied double-faced tape so that the Hooks of the DUPLEX COVER OPEN SWITCH do not come off.

CAUTION

2. Apply the SPACER ASSY SWITCH to prevent the Sensor Hooks from moving away and coming off toward the inside. Completely clean the application surface to remove oil, contamination, etc.

3. Install the GEAR 38Z and GAER 27Z to the DUPLEX FRAME ASSY, and secure the GEAR 27Z with the E Ring.
4. Connect the Connector (J3621) of the HARNESS ASSY DUP to the Connector (P3621) of the DUPLEX COVER OPEN SWITCH.
5. Match the four Hooks of the DUPLEX SENSOR, and install the DUPLEX SENSOR.
6. Apply the SPACER SENSOR to the rear side of the DUPLEX FRAME ASSY with the supplied double-faced tape so that the Hooks of the DUPLEX SENSOR do not come off.

CAUTION

3. Apply the SPACER SENSOR to prevent the Sensor Hooks from moving away and coming off toward the inside. Completely clean the application surface to remove oil, contamination, etc.

7. Connect the Connector (J3622) of the HARNESS ASSY DUP to the Connector (P3622) of the DUPLEX SENSOR. (*p.419, p.420*)
8. Install the DUPLEX ASSY. *(p.414)*

manuals4you.com

4.8.10 ROLL DCL RUBBER

REMOVAL

1. Remove the DUPLEX ASSY. *(p.414)*
2. Remove the GUIDE DUP IN and DUPLEX FRAME COVER. *(p.418)*
3. Disconnect the Connector (P/J362) of the DUPLEX PWB, and remove the DUPLEX DRIVE mounted with the DUPLEX PWB. *(p.419, p.420)*
4. Open the DUPLEX COVER.

CAUTION

Since the two GEAR 17Zs are freed in the following step, be careful not to lose them.

5. Remove the E Ring that secures the GEAR 14Z, and remove the GEAR 14Z and BEARING.
6. Remove E Ring that secures the BEARING, and remove the BEARING.
7. Remove the ROLL DCL RUBBER.

REINSTALLATION

1. Install the ROLL DCL RUBBER.
2. Install the front BEARING, and secure it with the E Ring.
3. Install the GEAR 14Z and BEARING, and secure the GEAR 14Z with the E Ring.
4. Close the DUPLEX COVER.
5. Install the DUPLEX DRIVE, and connect the Connector (J362) of the HARNESS ASSY DUP to the Connector (P362) of the DUPLEX PWB. *(p.419, p.420)*
6. Install the GUIDE DUP IN and DUPLEX FRAME COVER. *(p.418)*
7. Install the DUPLEX ASSY. *(p.414)*

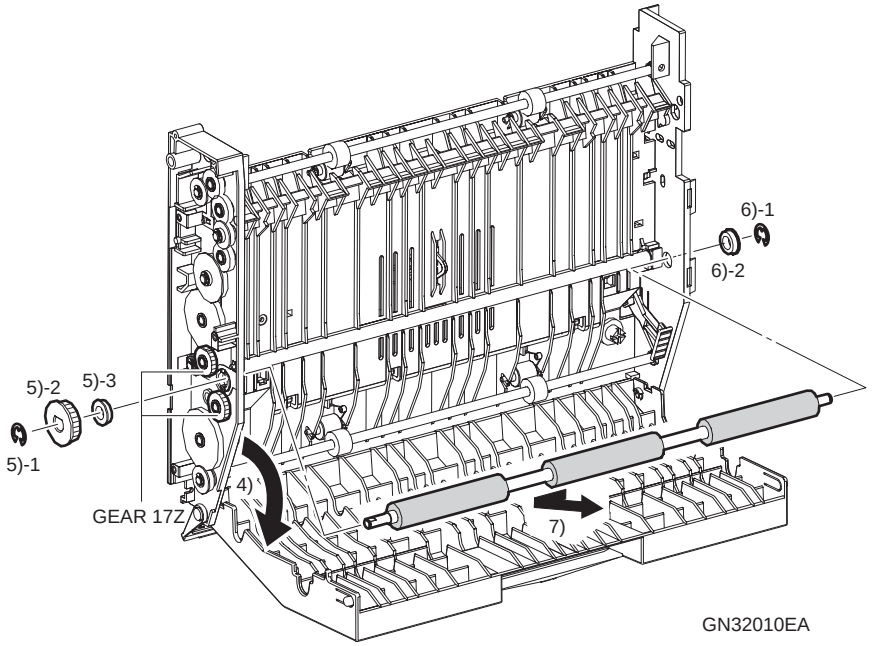

Figure 4-103. Removing the ROLL DCL RUBBER

4.8.11 CAM DCL, LEVER DCL

REMOVAL

1. Remove the DUPLEX ASSY. (p.414)
2. Remove the GUIDE DUP IN and DUPLEX FRAME COVER. (p.418)
3. Disconnect the Connector (P/J362) of the DUPLEX PWB, and remove the DUPLEX DRIVE mounted with the DUPLEX PWB. (p.419, p.420)
4. Remove E Ring that secures the BEARING-6, and remove the BEARING-6.
5. Remove E Ring that secures the BEARING-6, and remove the BEARING-6.
6. Slide the SHAFT DCL to the LEVER DCL side, and take off the SHAFT DCL mounted with the CAM DCL and LEVER DCL.
7. Remove the CAM DCL and LEVER DCL from the SHAFT DCL.

REINSTALLATION

CAUTION

Note the orientation of installing the CAM DCL.

1. Install the CAM DCL and LEVER DCL to the SHAFT DCL.
2. Insert the LEVER DCL first, and then install the SHAFT DCL.
3. Install the front and rear BEARING-6s and secure them with the E Rings.
4. Install the DUPLEX DRIVE, and connect the Connector (J362) of the HARNESS ASSY DUP to the Connector (P362) of the DUPLEX PWB. (p.419, p.420)
5. Install the GUIDE DUP IN and DUPLEX FRAME COVER. (p.418)
6. Install the DUPLEX ASSY. (p.414)

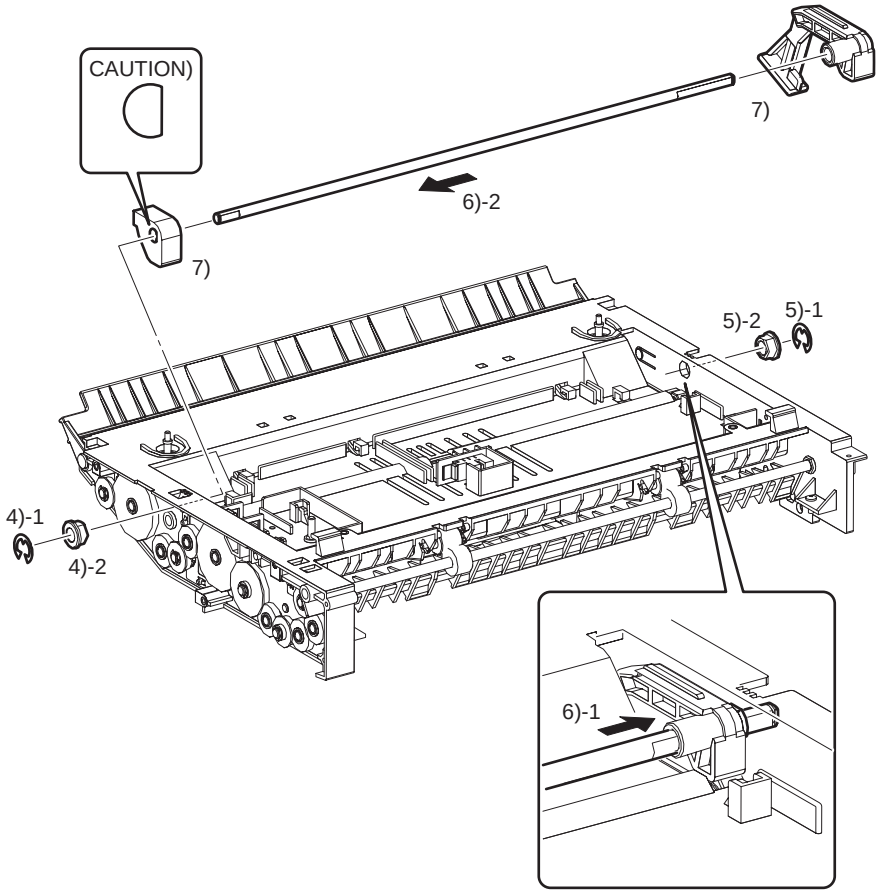

GN32011EA

Figure 4-104. Removing the CAM DCL and LEVER DCL

manuals4you.com

4.8.12 EXIT MOTOR, DUPLEX MOTOR, DUPLEX CLUTCH

REMOVAL

1. Remove the DUPLEX ASSY. (p.414)
2. Remove the GUIDE DUP IN and DUPLEX FRAME COVER. (p.418)
3. Disconnect the Connector (P/J362) of the DUPLEX PWB, and remove the DUPLEX DRIVE mounted with the DUPLEX PWB. (p.419, p.420)
4. Disconnect the Harness from the Connector (P/J363) of the DUPLEX PWB.
5. Remove the E Ring that secures the GEAR 17/35Z, and remove the GEAR 17/35Z.
6. Remove the two screws (silver, 6mm) that secure the DUPLEX MOTOR, and remove the DUPLEX MOTOR.
7. Disconnect the Harness from the Connector (P/J361) of the DUPLEX PWB.
8. Remove the two screws (silver, 6mm) that secure the EXIT MOTOR, and remove the EXIT MOTOR.
9. Remove the E Ring that secures the BRKT CLUTCH side BEARING-6, and remove the BEARING-6.
10. Disconnect the Harness from the Connector (P/J364) of the DUPLEX PWB.
11. Pull off the SHAFT CLUTCH mounted with the GEAR 23Z D and BEARING-6.
12. Remove the GEAR 28Z.
13. Remove the DUPLEX CLUTCH.

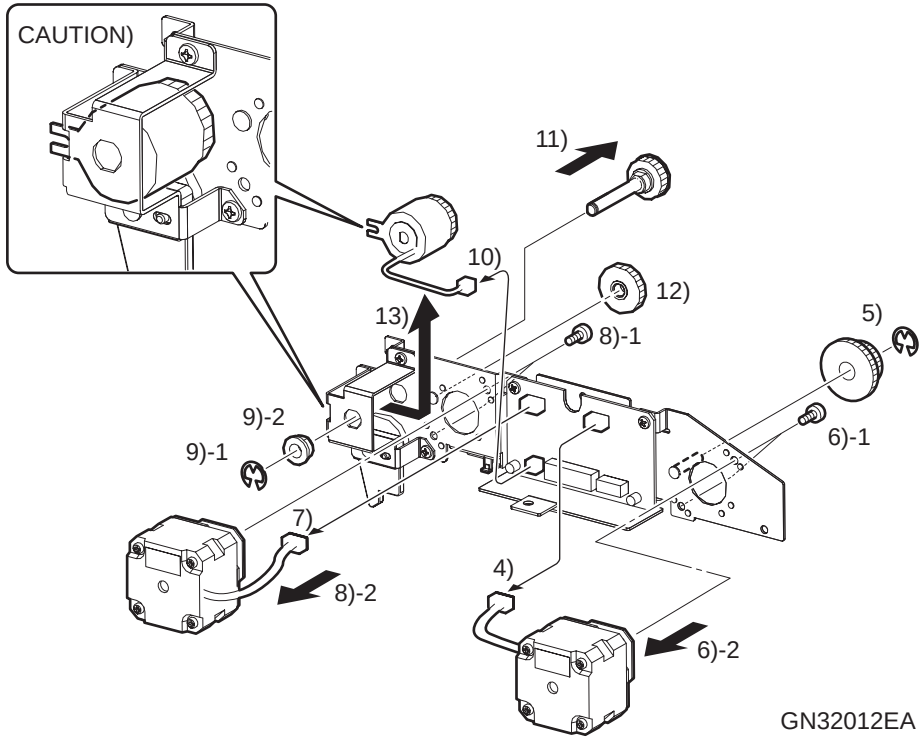

Figure 4-105. Removing the EXIT MOTOR, DUPLEX MOTOR and DUPLEX CLUTCH

REINSTALLATION

CAUTION

When installing the DUPLEX CLUTCH, insert the projection of the DUPLEX CLUTCH into the square hole of the BRKT CLUTCH.

1. Install the DUPLEX CLUTCH.
2. Connect the Connector (J364) of the DUPLEX CLUTCH to the Connector (P364) of the DUPLEX PWB.
3. Install the GEAR 28Z.
4. Install the SHAFT CLUTCH mounted with the GEAR 23Z D and BEARING-6.
5. Secure the BRKT CLUTCH side BEARING-6 with the E Ring.
6. Secure the EXIT MOTOR with the two screws (silver, 6mm).
7. Connect the Connector (J361) of the EXIT MOTOR to the Connector (P361) of the DUPLEX PWB.
8. Secure the DUPLEX MOTOR with the two screws (silver, 6mm).
9. Secure the GEAR 17/35Z with the E Ring.
10. Connect the Connector (J363) of the DUPLEX MOTOR to the Connector (P363) of the DUPLEX PWB.
11. Install the DUPLEX DRIVE, and connect the Connector (J362) of the HARNESS ASSY DUP to the Connector (P362) of the DUPLEX PWB. *(p.419, p.420)*
12. Install the GUIDE DUP IN and DUPLEX FRAME COVER. *(p.418)*
13. Install the DUPLEX ASSY. *(p.414)*

manuals4you.com

4.8.13 DUPLEX FRAME ASSY

REMOVAL

1. Remove the DUPLEX ASSY. (p.414)
2. Remove the GUIDE DUP IN and DUPLEX FRAME COVER. (p.418)
3. Disconnect the Connector (P/J362) of the DUPLEX PWB, and remove the DUPLEX DRIVE mounted with the DUPLEX PWB. (p.419, p.420)
4. Open the DUPLEX COVER, and remove the left and right KL Clips.
5. Pull off the left and right PIN DUPs, and remove the GUIDE DUP OUT and DUPLEX COVER from the DUPLEX FRAME ASSY.

REINSTALLATION

1. Secure the GUIDE DUP OUT and DUPLEX COVER to the DUPLEX FRAME ASSY with the two PIN DUPs.
2. Secure the two PIN DUPs with the KL Clips, and close the DUPLEX COVER.
3. Install the DUPLEX DRIVE, and connect the Connector (J362) of the HARNESS ASSY DUP to the Connector (P362) of the DUPLEX PWB. (p.419, p.420)
4. Install the GUIDE DUP IN and DUPLEX FRAME COVER. (p.418)
5. Install the DUPLEX ASSY. (p.414)

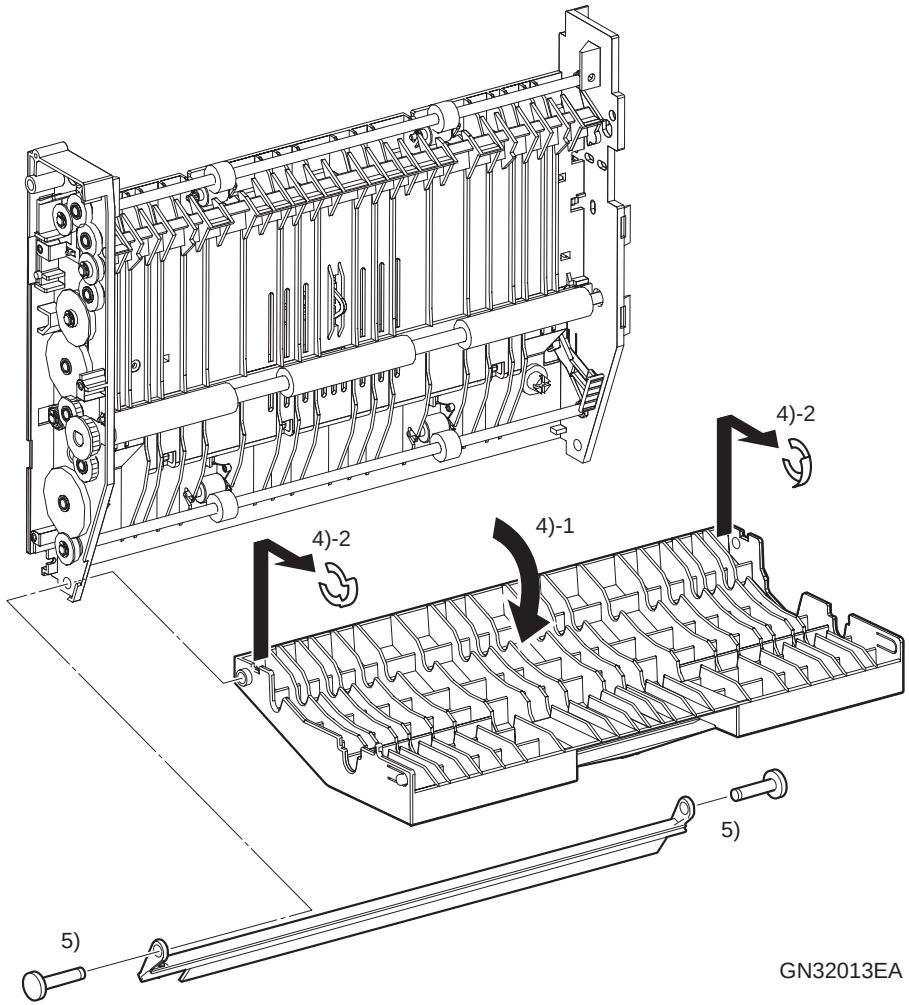

Figure 4-106. Removing the DUPLEX FRAME ASSY

4.9 3 Tray Module / Single Tray Module

4.9.1 3 Tray Module

REMOVAL

CAUTION

1. When removing the main unit, lift it by three persons.

1. Remove the TRAY ASSY 2 (paper cassette).
2. While pushing and releasing the three Hooks, remove the COVER CONNECT.
3. Disconnect the Connector (P/J251) located on the main unit Rear side.
4. Loosen the two SCREW HANDs.
5. Lift the main unit, and remove the 3 Tray Module.

REINSTALLATION

1. Install the Tray Module to the main unit.

CAUTION

2. When installing the 3 Tray Module, make sure that the three Positioning Pins are securely fitted in the main unit.

2. Secure the two SCREW HANDs.
3. Connect the Connector (P/J251) of the HARNESS ASSY 3TM to the HARNESS ASSY R-BTM Connector (P251) located on the main unit Rear side.
4. Match the three Hooks, and install the COVER CONNECT.
5. Install the TRAY ASSY 2 (paper cassette).

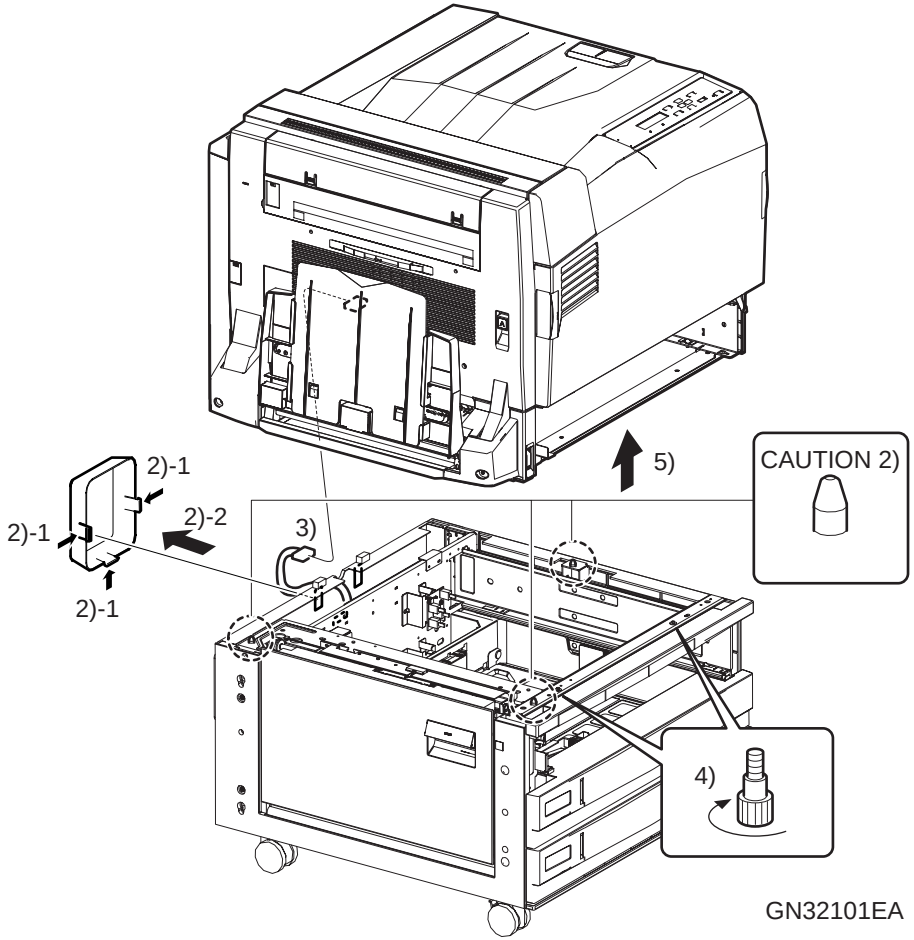

Figure 4-107. Removing the 3 Tray Module

manuals4you.com

4.9.2 FRONT UPPER COVER, RIGHT COVER, LEFT LOWER COVER, REAR COVER

REMOVAL

1. Remove the TRAY ASSY 2 (paper cassette).
2. Remove the two screws (silver, flanged, 8mm) that secure the FRONT UPPER COVER, and remove the FRONT UPPER COVER.
3. Remove the four screws (silver, flanged, 8mm) that secure the LEFT LOWER COVER, and leave the LEFT LOWER COVER free.
4. Open the LEFT COVER 3TM.
5. Remove the LEFT LOWER COVER.
6. Remove the four screws (silver, flanged, 8mm) that secure the RIGHT COVER, and remove the RIGHT COVER.
7. Remove the five screws (silver, flanged, 8mm) that secure the REAR COVER.
8. Remove the Harness from the Clamp of the REAR COVER, and remove the REAR COVER.

REINSTALLATION

1. Install the REAR COVER, and secure the Harness to the Clamp of the REAR COVER.
2. Secure the REAR COVER with the five screws (silver, flanged, 8mm).
3. Secure the RIGHT COVER with the four screws (silver, flanged, 8mm).
4. Install the LEFT LOWER COVER.
5. Close the LEFT COVER 3TM.
6. Secure the LEFT LOWER COVER with the four screws (silver, flanged, 8mm).
7. Secure the FRONT UPPER COVER with the two screws (silver, flanged, 8mm).
8. Install the TRAY ASSY 2 (paper cassette).

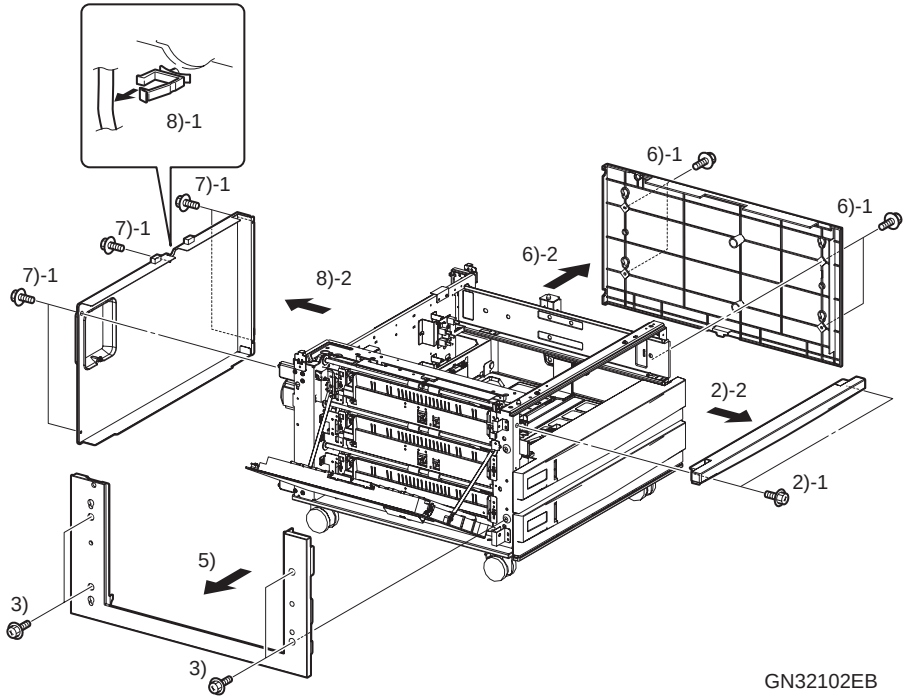

Figure 4-108. Removing the FRONT UPPER COVER, RIGHT COVER, LEFT LOWER COVER and REAR COVER

4.9.3 TRAY 2 FEEDER

REMOVAL

1. Remove the TRAY ASSY 2 (paper cassette).
2. Remove the LEFT LOWER COVER. (p.432)
3. Open the LEFT COVER 3TM.
4. Remove the one screw (black, flanged, 6mm) that secures the Latch Bracket, and remove the Latch Bracket.
5. Disconnect the two Connectors (P/J617) (P/J841) of the HARNESS ASSY 3TM, and remove the Harness from the Clamp.
6. Remove the two screws (black, flanged, 6mm) that secure the TRAY 2 FEEDER, slide the FRONT CHUTE in the direction of arrow, and pull out and remove the TRAY 2 FEEDER.

REINSTALLATION

1. Secure the TRAY 2 FEEDER with the two screws (black, flanged, 6mm).
2. Connect the Connector (J617) of the HARNESS ASSY SNR to the Connector (P670) of the HARNESS ASSY 3TM, connect the Connector (J841) of the HARNESS ASSY F/O to the Connector (P841) of the HARNESS ASSY 3TM, and secure the Harness to the Clamp.
3. Secure the Latch Bracket with the one screw (black, flanged, 6mm).
4. Close the LEFT COVER 3TM.
5. Install the LEFT LOWER COVER. (p.432)
6. Install the TRAY ASSY 2 (paper cassette).

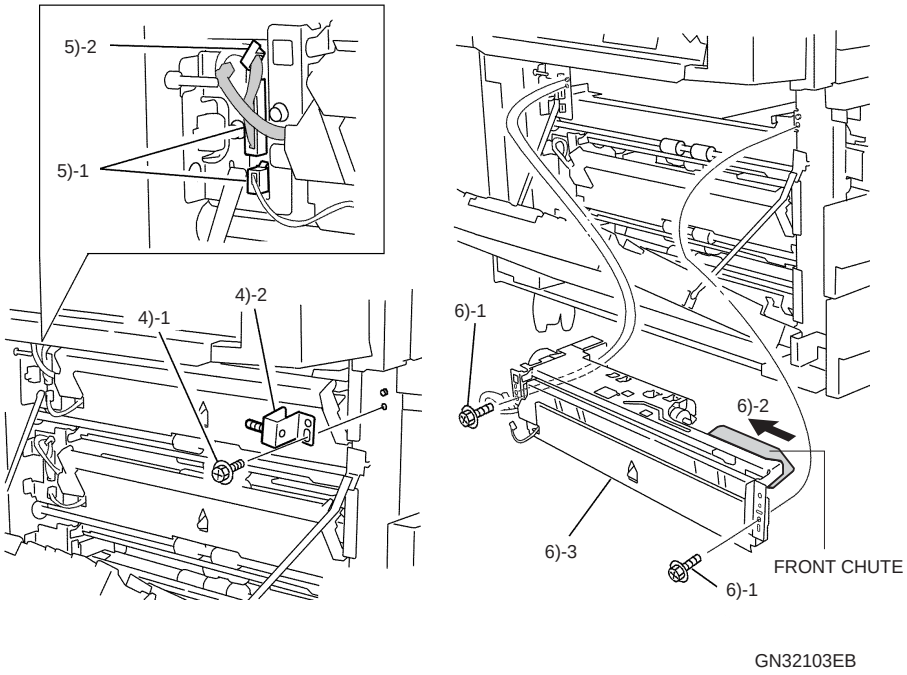

Figure 4-109. Removing the TRAY 2 FEEDER

manuals4you.com

4.9.4 TRAY 3 FEEDER

REMOVAL

1. Remove the TRAY ASSY 3 (paper cassette).
2. Open the LEFT COVER 3TM.
3. Disconnect the two Connectors (P/J617) (P/J842) of the HARNESS ASSY 3TM, and remove the Harness from the Clamp.
4. Remove the two screws (black, flanged, 6mm) that secure the TRAY 3 FEEDER, slide the FRONT CHUTE in the direction of arrow, and remove the TRAY 3 FEEDER.

REINSTALLATION

1. Secure the TRAY 3 FEEDER with the two screws (black, flanged, 6mm).
2. Connect the Connector (J617) of the HARNESS ASSY SNR to the Connector (P672) of the HARNESS ASSY 3TM, connect the Connector (J842) of the HARNESS ASSY F/O to the Connector (P842) of the HARNESS ASSY 3TM, and secure the Harness to the Clamp.
3. Close the LEFT COVER 3TM.
4. Install the TRAY ASSY 3 (paper cassette).

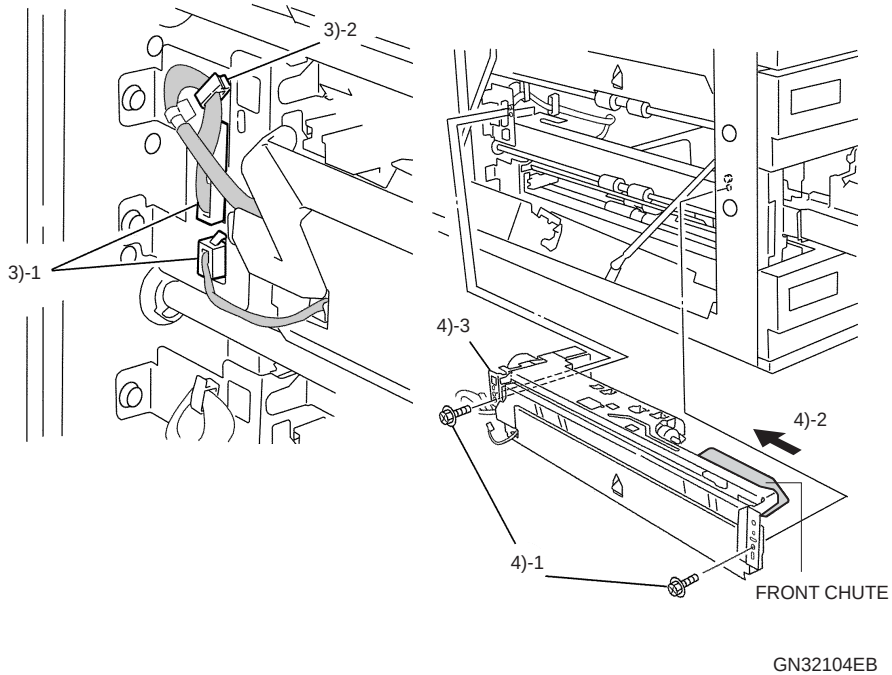

Figure 4-110. Removing the TRAY 3 FEEDER

4.9.5 TRAY 4 FEEDER

REMOVAL

1. Remove the TRAY ASSY 4 (paper cassette).
2. Open the LEFT COVER 3TM.
3. Disconnect the one Connector (P/J617) of the HARNESS ASSY 3TM, and remove the Harness from the Clamp.
4. Remove the two screws (black, flanged, 6mm) that secure the SUPPORT LH, and fully open the LEFT COVER 3TM.
5. Remove the two screws (black, flanged, 6mm) that secure the TRAY 4 FEEDER, slide the FRONT CHUTE in the direction of arrow, and remove the TRAY 4 FEEDER.

REINSTALLATION

1. Secure the TRAY 4 FEEDER with the two screws (black, flanged, 6mm).
2. Secure the SUPPORT LH with the two screws (black, flanged, 6mm).
3. Connect the Connector (J672) of the HARNESS ASSY SNR to the Connector (P672) of the HARNESS ASSY 3TM, and secure the Harness to the Clamp.
4. Close the LEFT COVER 3TM.
5. Install the TRAY ASSY 4 (paper cassette).

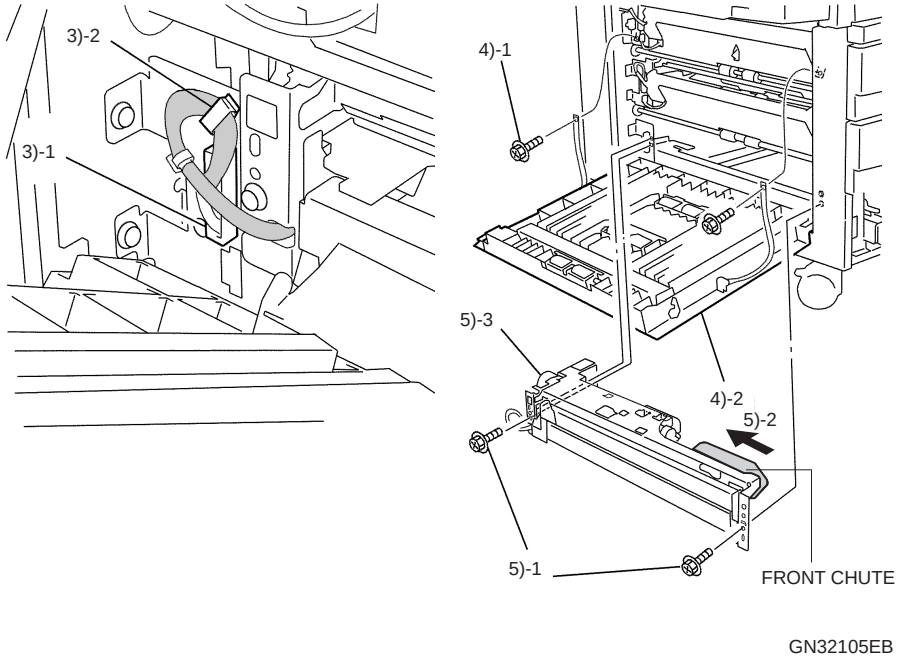

Figure 4-111. Removing the TRAY 4 FEEDER

manuals4you.com

4.9.6 PAPER SIZE SENSOR

REMOVAL

1. Remove the TRAY ASSY (2/3/4) (paper cassette).
2. Disconnect the Harness from the Connector (TRAY 2: P/J816, TRAY 3: P/J820, TRAY 4: P/J824) of the PAPER SIZE SENSOR.
3. Remove the one screw (black, flanged, 6mm) that secures the PAPER SIZE SENSOR, and remove the PAPER SIZE SENSOR.

REINSTALLATION

1. Secure the PAPER SIZE SENSOR with the one screw (black, flanged, 6mm).
2. Connect the Connector (TRAY 2: J816, TRAY 3: J820, TRAY 4: J824) of the HARNESS ASSY 3TM/STM to the Connector (TRAY 2: P816, TRAY 3: P820, TRAY 4: P824) of the PAPER SIZE SENSOR.
3. Install the TRAY ASSY (2/3/4) (paper cassette).

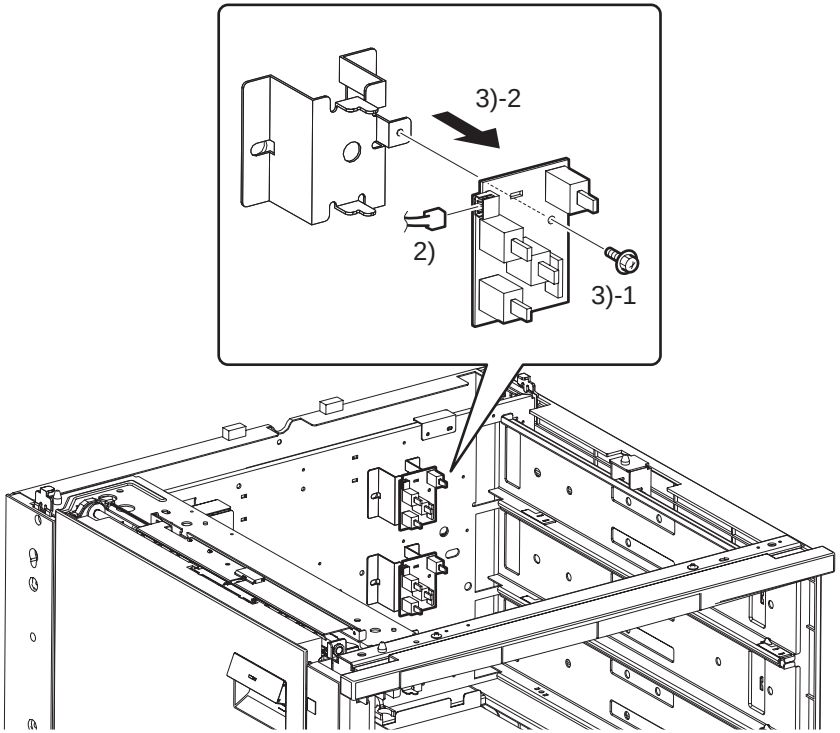

GN32106EA

Figure 4-112. Removing the PAPER SIZE SENSOR

justmanuals.com

4.9.7 KIT FEED/RETARD/NUDGER ROLL

REMOVAL

CAUTION

When replacing the FEED ROLL, RETARD ROLL and NUDGER ROLL, replace them simultaneously since they reach the end of their useful life at the same time.

1. Remove the TRAY ASSY (2/3/4) (paper cassette).
2. Release the one hook of the target RETARD ROLL, and remove the RETARD ROLL.
3. Release the one hook of the target NUDGER ROLL, and remove the NUDGER ROLL.
4. Release the one hook of the target FEED ROLL, and remove the FEED ROLL.

REINSTALLATION

1. Match the one hook of the FEED ROLL, and install the FEED ROLL.
2. Match the one hook of the NUDGER ROLL, and install the NUDGER ROLL.
3. Match the one hook of the RETARD ROLL, and install the RETARD ROLL.
4. Install the TRAY ASSY (2/3/4) (paper cassette).

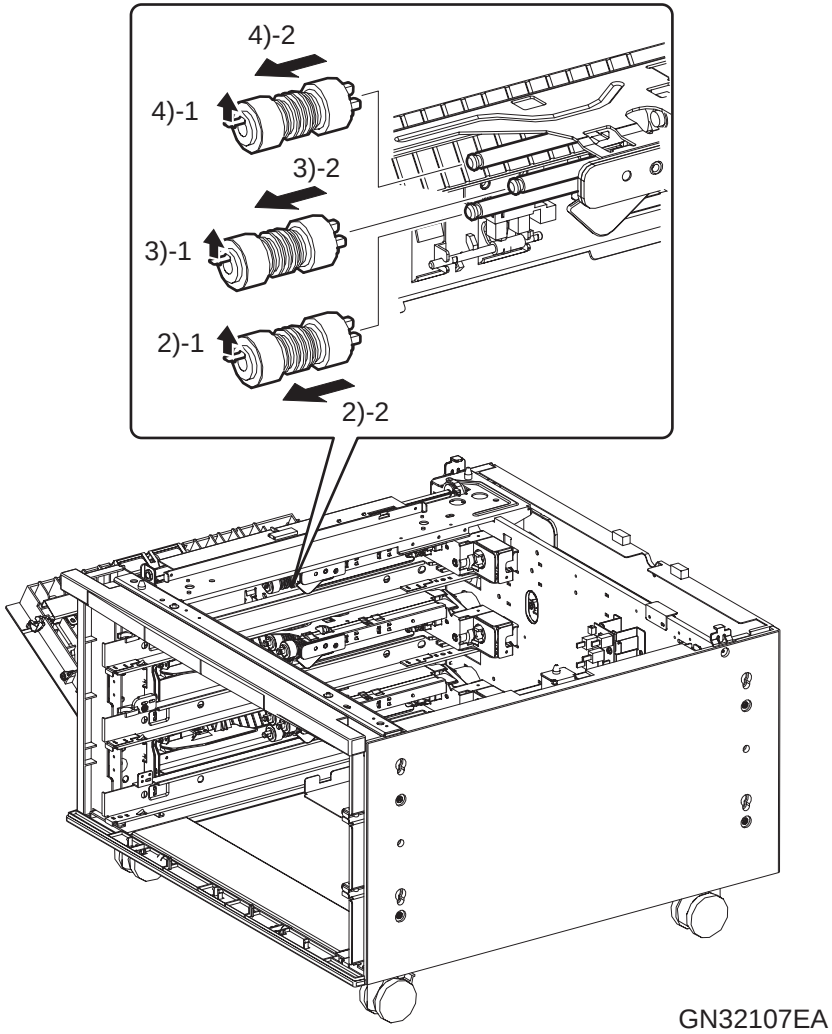

Figure 4-113. Removing the KIT FEED/RETARD/NUDGER ROLL

manuals4you.com

4.9.8 ONEWAY CLUTCH, ONEWAY GEAR, FRICTION CLUTCH

REMOVAL

1. Remove the TRAY ASSY (2/3/4) (paper cassette).
2. Remove the FEED ROLL. *(p.437)*

CAUTION

1. When removing the ONEWAY GEAR, be careful not to lose the GEAR 33 NUD.

3. Remove the target ONEWAY CLUTCH and ONEWAY GEAR.
4. Remove the RETARD ROLL. *(p.437)*
5. Remove the SPACER TM, and remove the target FRICTION CLUTCH.

REINSTALLATION

1. Install the FRICTION CLUTCH and SPACER TM.
2. Install the RETARD ROLL. *(p.437)*

CAUTION

2. At the time of installation, make sure that the GEAR 33 NUD is fitted.

3. Install ONEWAY CLUTCH and ONEWAY GEAR.
4. Install the FEED ROLL. *(p.437)*
5. Install the TRAY ASSY (2/3/4) (paper cassette).

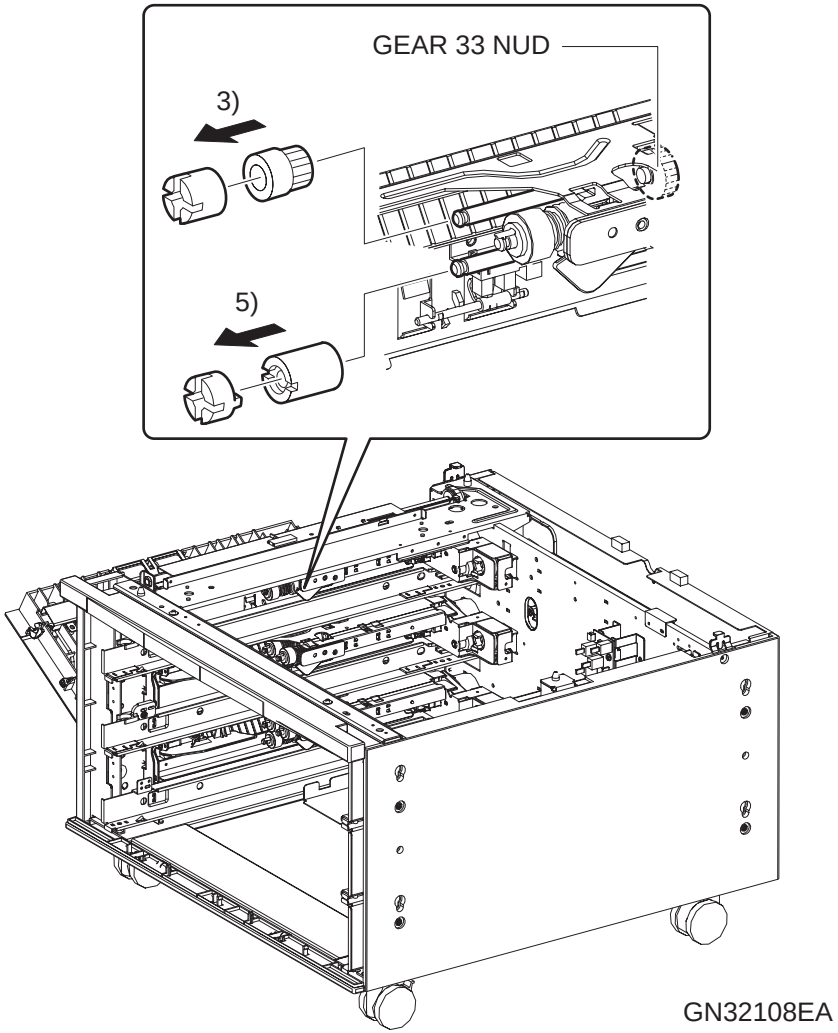

Figure 4-114. Removing the ONEWAY CLUTCH, ONEWAY GEAR and FRICTION CLUTCH

4.9.9 ACTUATOR SNR, TRAY NO PAPER SENSOR

REMOVAL

1. Remove the target TRAY FEEDER. *(p.433, p.434, p.435, p.453)*
2. Remove the ACTUATOR SNR.
3. Slightly lift the SUPPORT NUDGER, and release the three Hooks of the TRAY NO PAPER SENSOR.
4. Disconnect the Harness from the Connector (P/J106) of the TRAY NO PAPER SENSOR, and remove the TRAY NO PAPER SENSOR.

REINSTALLATION

1. Install the TRAY NO PAPER SENSOR, and connect the Connector (J106) of the HARNESS ASSY SNR to the Connector (P106) of the TRAY NO PAPER SENSOR.
2. Slightly lift the SUPPORT NUDGER, and match the three Hooks of the TRAY NO PAPER SENSOR.
3. Install the ACTUATOR SNR.
4. Install the TRAY FEEDER. *(p.433, p.434, p.435, p.453)*

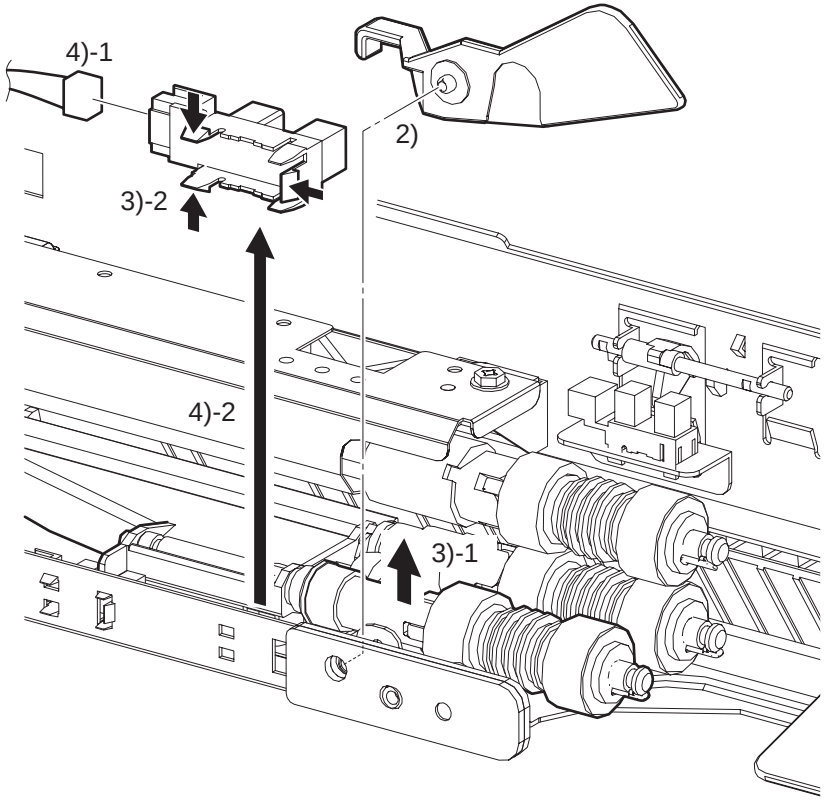

GN32109EA

Figure 4-115. Removing the ACTUATOR SNR and TRAY NO PAPER SENSOR

manuals4you.com

4.9.10 TRAY LEVEL SENSOR

REMOVAL

1. Remove the target TRAY FEEDER. *(p.433, p.434, p.435, p.453)*
2. Slightly lift the SUPPORT NUDGER, and release the three Hooks of the TRAY LEVEL SENSOR.
3. Disconnect the Harness from the Connector (P/J108) of the TRAY LEVEL SENSOR, and remove the TRAY LEVEL SENSOR.

REINSTALLATION

1. Install the TRAY LEVEL SENSOR, and connect the Connector (J108) of the HARNESS ASSY SNR to the Connector (P108) of the TRAY LEVEL SENSOR.
2. Slightly lift the SUPPORT NUDGER, and match the three Hooks of the TRAY LEVEL SENSOR.
3. Install the TRAY FEEDER. *(p.433, p.434, p.435, p.453)*

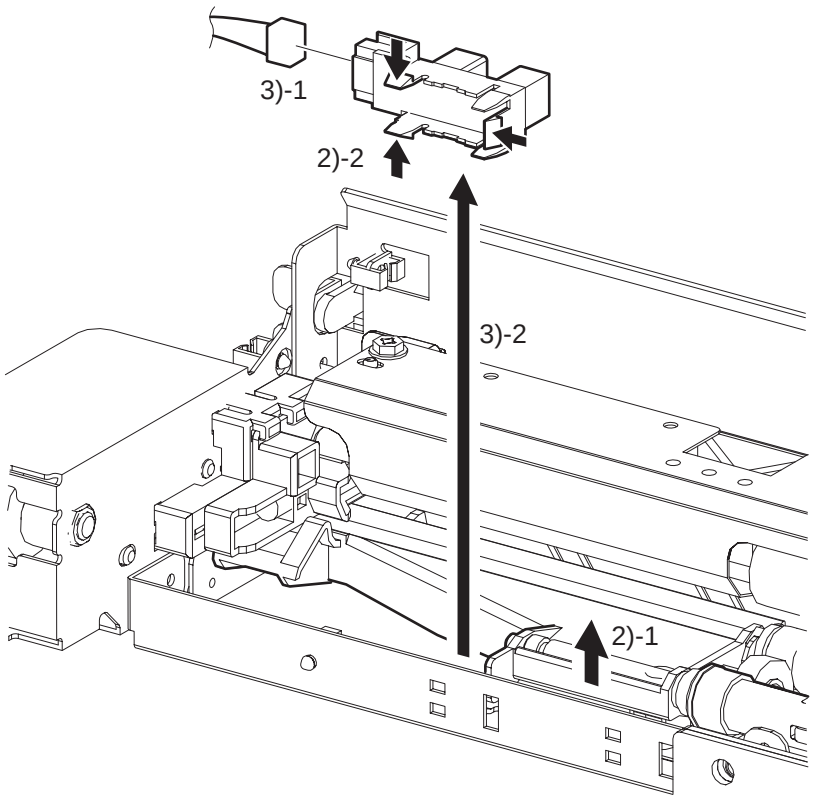

GN32110EA

Figure 4-116. Removing the TRAY LEVEL SENSOR

4.9.11 TRAY FEED OUT SENSOR

REMOVAL

1. Remove the target TRAY FEEDER. *(p.433, p.434, p.435, p.453)*
2. Remove the RETARD ROLL. *(p.437)*
3. Release the three Hooks of the TRAY FEED OUT SENSOR.
4. Disconnect the Harness from the Connector (P/J821) of the TRAY FEED OUT SENSOR, and remove the TRAY FEED OUT SENSOR.

REINSTALLATION

1. Connect the Connector (J821) of the HARNESS ASSY F/O to the Connector (P821) of the TRAY FEED OUT SENSOR.
2. Match the three Hooks of the TRAY FEED OUT SENSOR, and install TRAY FEED OUT SENSOR.
3. Install the RETARD ROLL. *(p.437)*
4. Install the TRAY 2 FEEDER/TRAY 3 FEEDER. *(p.433, p.434, p.435, p.453)*

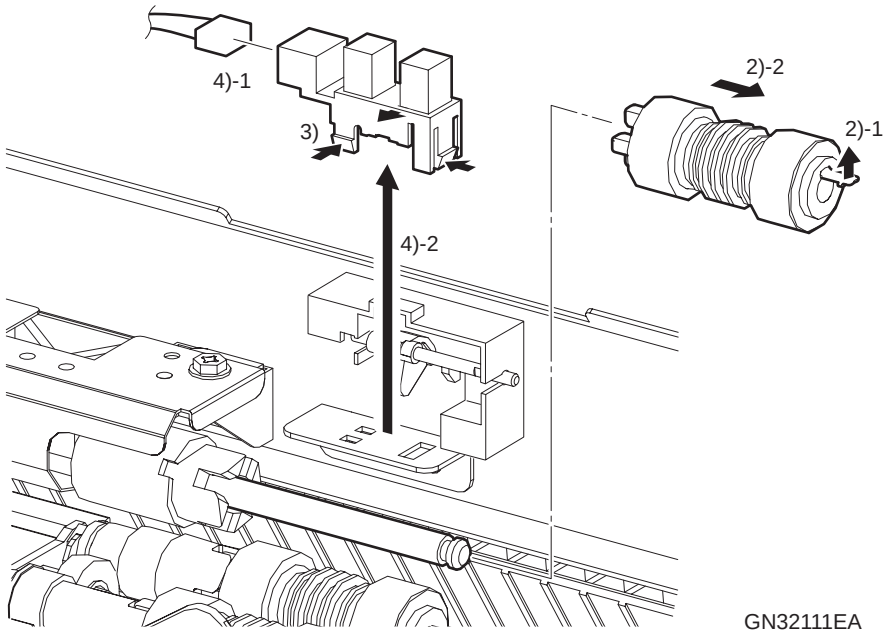

Figure 4-117. Removing the TRAY FEED OUT SENSOR

manuals4you.com

4.9.12 ACTUATOR

REMOVAL

1. Remove the target TRAY FEEDER. *(p.433, p.434, p.435, p.453)*
2. Remove the two screws (black, flanged, 6mm) that secure the ACTUATOR, and remove the ACTUATOR.

REINSTALLATION

1. Secure the ACTUATOR with the two screws (black, flanged, 6mm).
2. Install the TRAY FEEDER. *(p.433, p.434, p.435, p.453)*

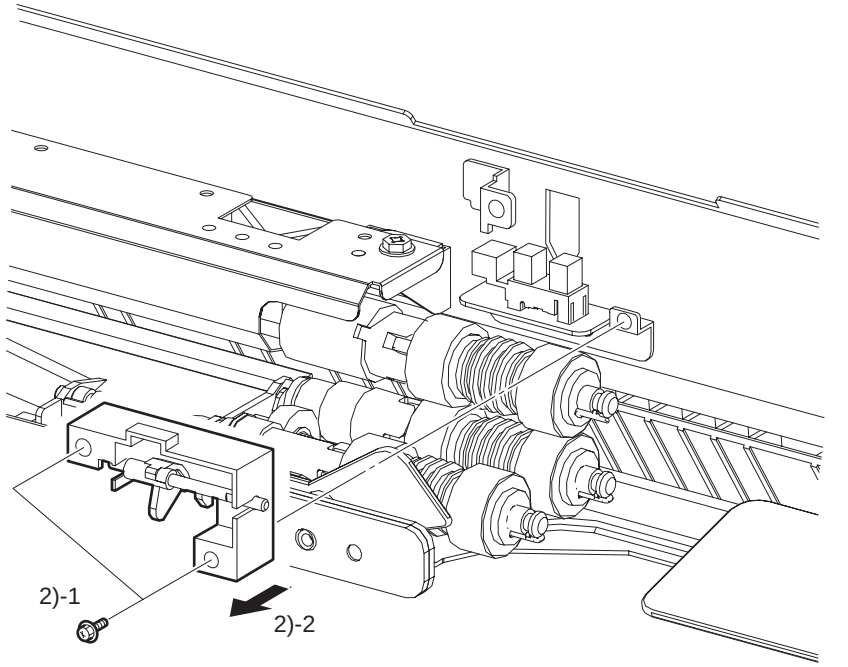

Figure 4-118. Removing the ACTUATOR

4.9.13 TRAY FEED/LIFT MOTOR

REMOVAL

1. Remove the target TRAY FEEDER. *(p.433, p.434, p.435, p.453)*
2. Release the Harness, which is connected to the TRAY LEVEL SENSOR, from the Clamps.
3. Remove the two screws (gold, 6mm) that secure the TRAY FEED/LIFT MOTOR.
4. Disconnect the Harness from the Connector (P/J205) of the TRAY FEED/LIFT MOTOR, and remove the TRAY FEED/LIFT MOTOR.

REINSTALLATION

1. Install the TRAY FEED/LIFT MOTOR, and connect the Connector (J205) of the HARNESS ASSY SNR to the Connector (P205) of the TRAY FEED/LIFT MOTOR.
2. Secure the TRAY FEED/LIFT MOTOR with the two screws (gold, 6mm).
3. Secure the Harness, which is connected to the TRAY LEVEL SENSOR, to the Clamps.
4. Install the TRAY FEEDER. *(p.433, p.434, p.435, p.453)*

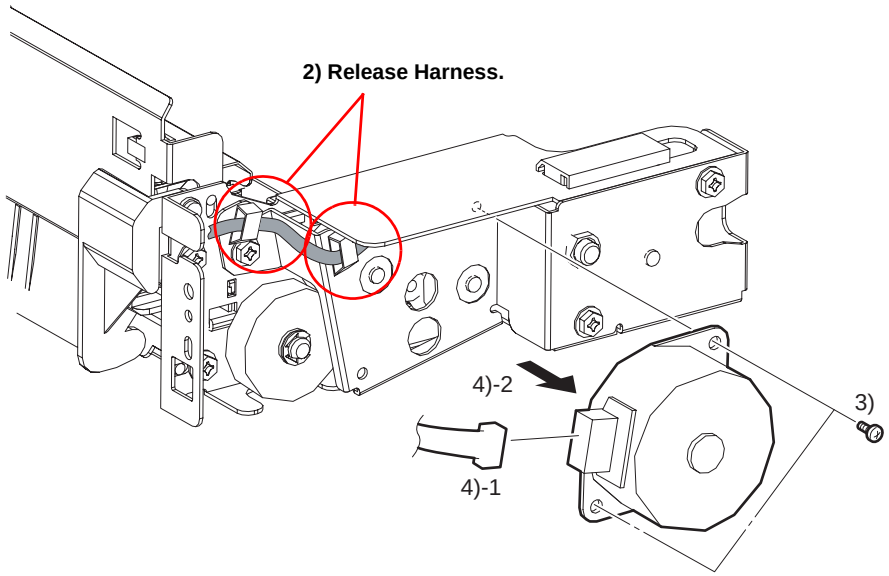

GN32113EA

Figure 4-119. Removing the TRAY FEED/LIFT MOTOR

manuals4you.com

4.9.14 TAKEAWAY ROLL ASSY

REMOVAL

1. Open the LEFT COVER 3TM.
2. Remove the K Clip that secures the BEARING TA.
3. After sliding the TAKEAWAY ROLL ASSY to the Rear side, remove it to the Front side.
4. Remove the BEARING-3.

REINSTALLATION

1. Install the BEARING-3.
2. Insert and install the TAKEAWAY ROLL ASSY from the Rear side.
3. Secure the BEARING TA with the K Clip.

CAUTION

Note the orientation of installing the BEARING TA.

4. Close the LEFT COVER 3TM.

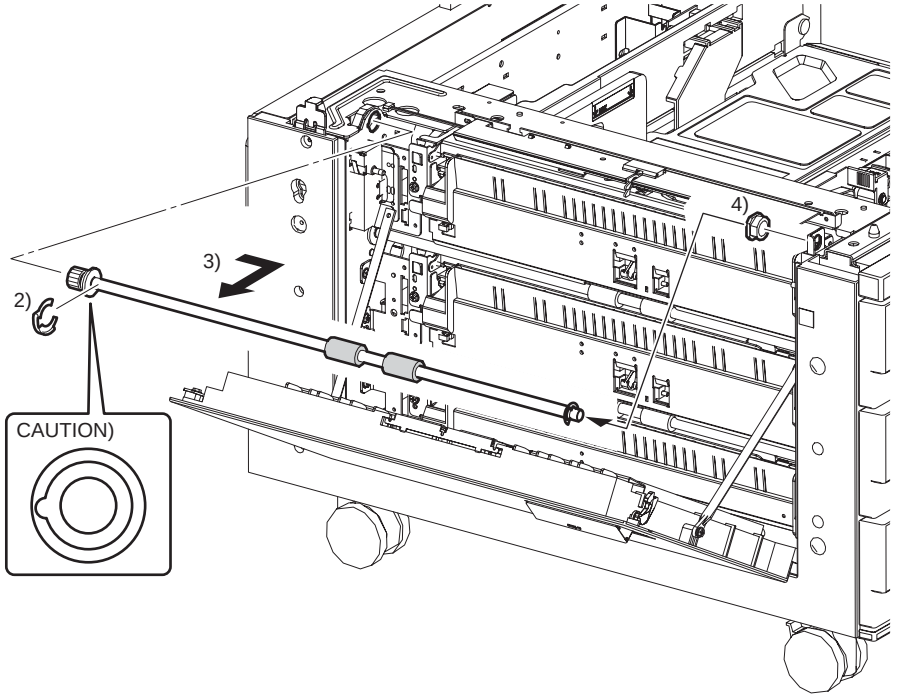

Figure 4-120. Removing the TAKEAWAY ROLL ASSY

4.9.15 TAKEAWAY SENSOR, LH COVER INTL SW

REMOVAL

1. Remove the TAKEAWAY ROLL ASSY. (p.444)
2. Open the LEFT COVER 3TM/STM.
3. Remove the two screws (black, flanged, 6mm) that secure the CHUTE MID, disconnect the Harness from the Connector (P/J840), and remove the CHUTE MID.
4. Release the two Hooks of the COVER TA SENSOR, and remove the COVER TA SENSOR.
5. Release the four Hooks of the TAKEWAY SENSOR.
6. Disconnect the Harness from the Connector (P/J830) of the TAKEWAY SENSOR, and remove the TAKEWAY SENSOR.
7. Grip and remove the two Hooks of the LH COVER INTL SW.
8. Disconnect the Harness from the Connector (P/J812) of the LH COVER INTL SW, and remove the LH COVER INTL SW.

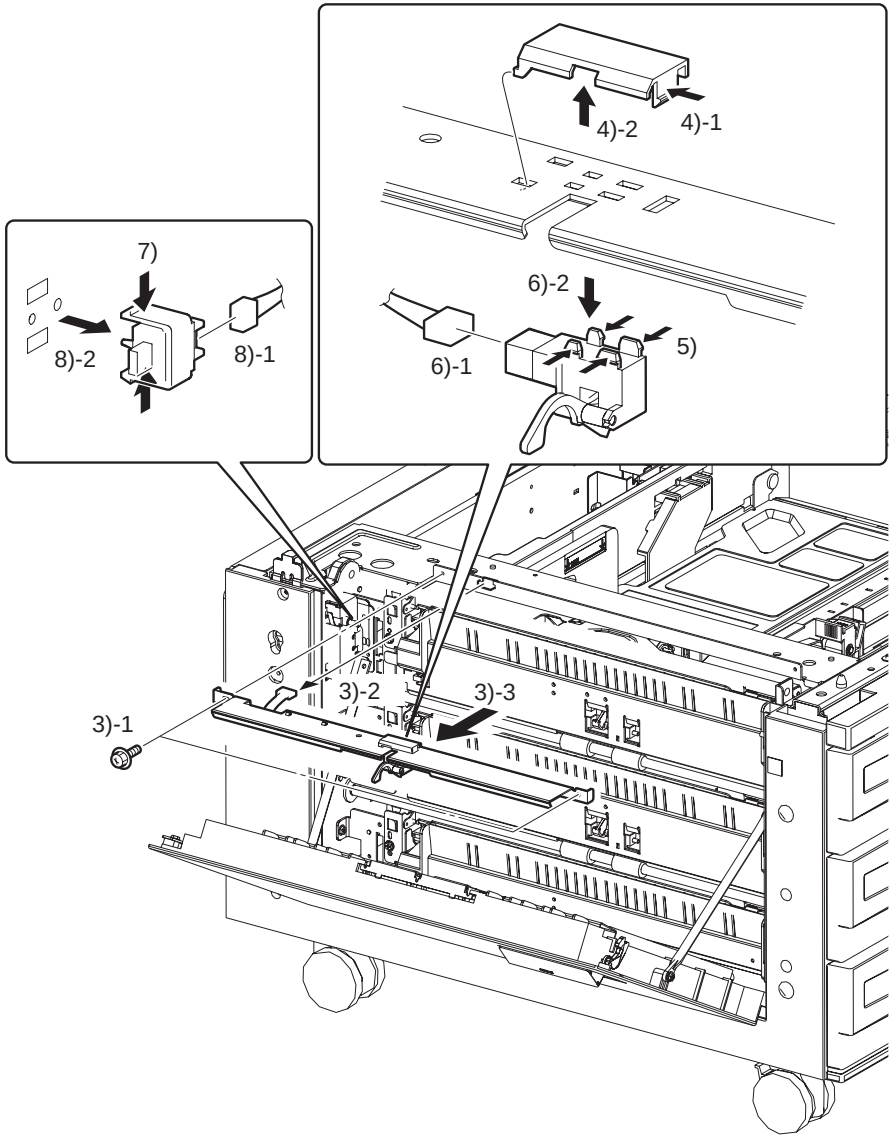

Figure 4-121. Removing the TAKEAWAY SENSOR and LH COVER INTL SW

manuals4you.com

REINSTALLATION

1. Match the two Hooks of the LH COVER INTL SW, and install the LH COVER INTL SW.
2. Connect the Connector (J812) of the HARNESS ASSY 3TM to the Connector (P812) of the LH COVER INTL SW.
3. Match the four Hooks of the TAKEWAY SENSOR, and install the TAKEWAY SENSOR.
4. Connect the Connector (J830) of the HARNESS ASSY TA to the Connector (P830) of the TAKEWAY SENSOR.
5. Match the two Hooks of the COVER TA SENSOR, and install the COVER TA SENSOR.
6. Connect the Connector (J840) of the HARNESS ASSY TA to the Connector (P840) of the HARNESS ASSY 3TM, and secure the CHUTE MID with the two screws (black, flanged, 6mm).
7. Close the LEFT COVER 3TM/STM.
8. Install the TAKEWAY ROLL ASSY to the main unit. *(p.450)*

4.9.16 LEFT COVER ASSY 3TM

REMOVAL

1. Remove the LEFT LOWER COVER. (p.432)
2. Open the LEFT COVER 3TM.
3. Remove the one screw (black, flanged, 6mm) that secures each SUPPORT LH.
4. Remove the one screw (black, flanged, 6mm) that secures the HINGE, and remove the HINGE.
5. Remove the LEFT COVER ASSY 3TM.

REINSTALLATION

1. Install the LEFT COVER ASSY 3TM.
2. Secure the HINGE with the one screw (black, flanged, 6mm).
3. Secure each SUPPORT LH with the one screw (black, flanged, 6mm).
4. Close the LEFT COVER 3TM.
5. Install the LEFT LOWER COVER. (p.432)

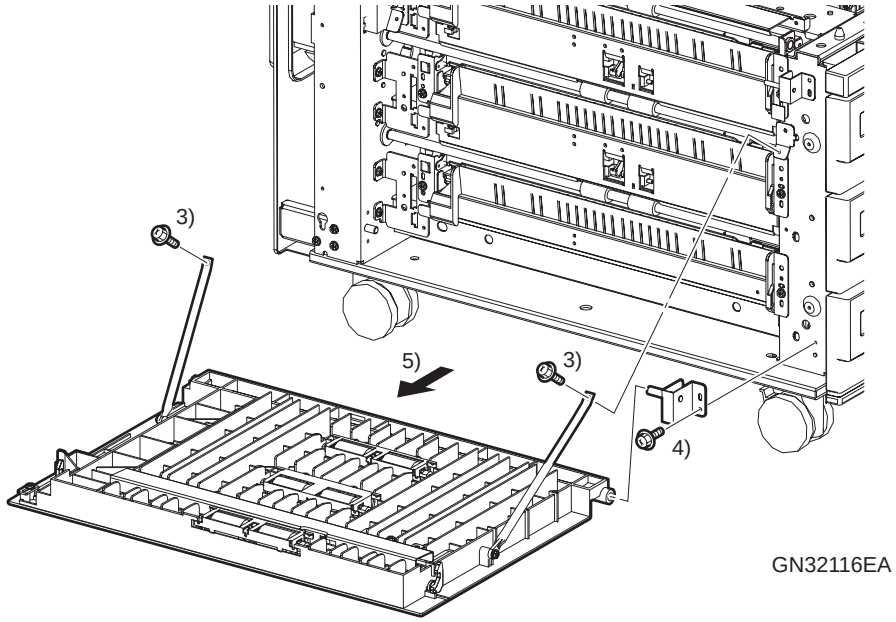

Figure 4-122. Removing the LEFT COVER ASSY 3TM

manuals4you.com

4.9.17 MOTOR ASSY 3TM, PWB ASSY 3TM

REMOVAL

1. Remove the REAR COVER. (p.432)
2. Disconnect the Harness from the Connector (P/J826) of the MOTOR ASSY 3TM.

CAUTION

When removing the MOTOR ASSY 3TM, be careful not to lose the GEAR 23/46 since it comes off.

3. Remove the three screws (black, flanged, 6mm) that secure the MOTOR ASSY 3TM, and remove the MOTOR ASSY 3TM.
4. Disconnect the Harnesses from the six Connectors (P/J546) (P/J541) (P/J552) (P/J547) (P/J548) (P/J549) of the PWB ASSY 3TM.
5. Remove the four screws (silver, flanged, 6mm) that secure the PWB ASSY 3TM, and remove the PWB ASSY 3TM.

REINSTALLATION

1. Install the PWB ASSY 3TM, and secure it with the four screws (silver, flanged, 6mm).
2. Connect the Connectors (J546) (J541) (J552) (J547) (J548) (J549) of the HARNESS ASSY 3TM to the Connectors (P546) (P541) (P552) (P547) (P548) (P549) of the PWB ASSY 3TM.
3. Secure the MOTOR ASSY 3TM with the three screws (black, flanged, 6mm).
4. Connect the Connector (P826) of the HARNESS ASSY 3TM to the Connector (J826) of the MOTOR ASSY 3TM.
5. Install the REAR COVER. (p.432)

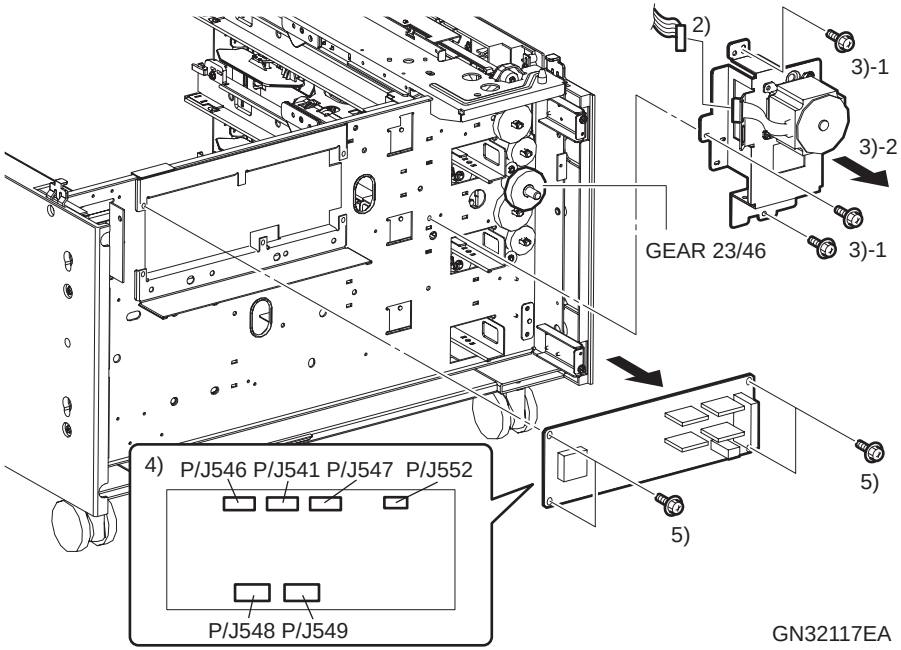

Figure 4-123. Removing the MOTOR ASSY 3TM and PWB ASSY 3TM

4.9.18 STOPPER TRAY FR

REMOVAL

1. Remove the TRAY ASSY (2/3/4) (paper cassette).
2. Remove the one screw (black, flanged, 8mm) that secures the target STOPPER TRAY FR, and remove the STOPPER TRAY FR.

REINSTALLATION

1. Secure the STOPPER TRAY FR with the one screw (black, flanged, 8mm).
2. Install the TRAY ASSY (2/3/4) (paper cassette).

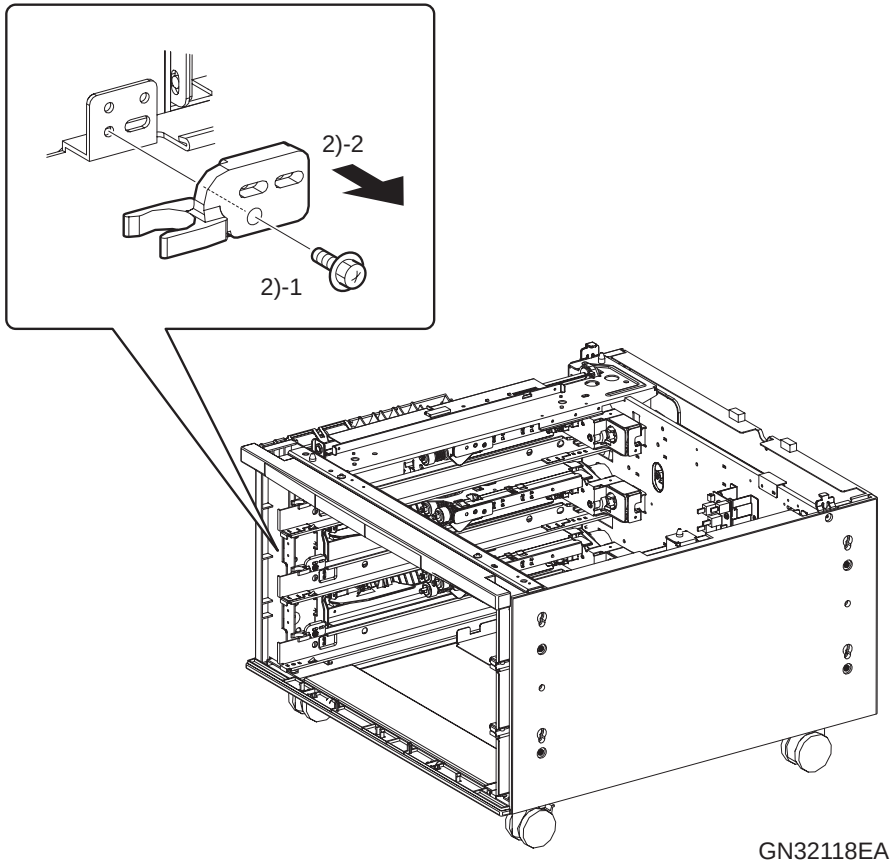

Figure 4-124. Removing the STOPPER TRAY FR

manuals4you.com

4.10 Single Tray Module

4.10.1 Single Tray Module

REMOVAL

CAUTION

1. When removing the main unit, lift it by three persons.

1. Remove the TRAY ASSY 2 (paper cassette).
2. Remove the JOINT STM.
3. While pushing and releasing the three Hooks, remove the COVER CONNECT.
4. Disconnect the Connector (P/J251) located on the main unit Rear side.
5. Loosen the two SCREW HEADs.
6. Lift the main unit, and remove the Single Tray Module.

REINSTALLATION

1. Install the Single Tray Module to the main unit.

CAUTION

2. When installing the Single Tray Module, make sure that the three Positioning Pins are securely fitted in the main unit.

2. Fix the two SCREW HEADs.
3. Connect the HARNESS ASSY R-BTM Connector (P251) located on the main unit Rear side to the Connector (J251) of the HARNESS ASSY STM.
4. Match the three Hooks, and install the COVER CONNECT.
5. Install the JOINT STM.
6. Install the TRAY ASSY 2 (paper cassette).

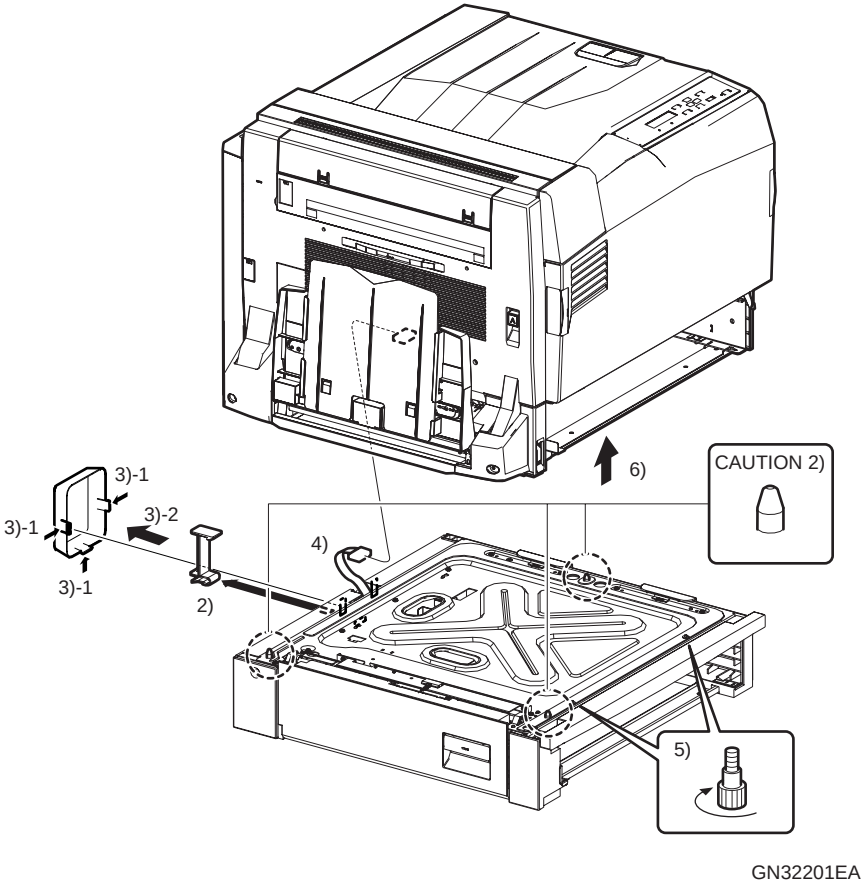

Figure 4-125. Removing the Single Tray Module

4.10.2 LEFT COVER ASSY STM

REMOVAL

1. Remove the three screws (silver, flanged, 8mm) that secure the REAR COVER, remove the Harness from the Clamp, and remove the REAR COVER.
2. Remove the one screw (black, flanged, 6mm) that secures the PIVOT BRACKET, and remove the PIVOT BRACKET.
3. Remove the LEFT COVER ASSY STM.

REINSTALLATION

1. Install the LEFT COVER ASSY STM.
2. Secure the PIVOT BRACKET with the one screw (black, flanged, 6mm).
3. Secure the Harness to the Clamp of the REAR COVER, and secure the REAR COVER with the three screws (silver, flanged, 8mm).

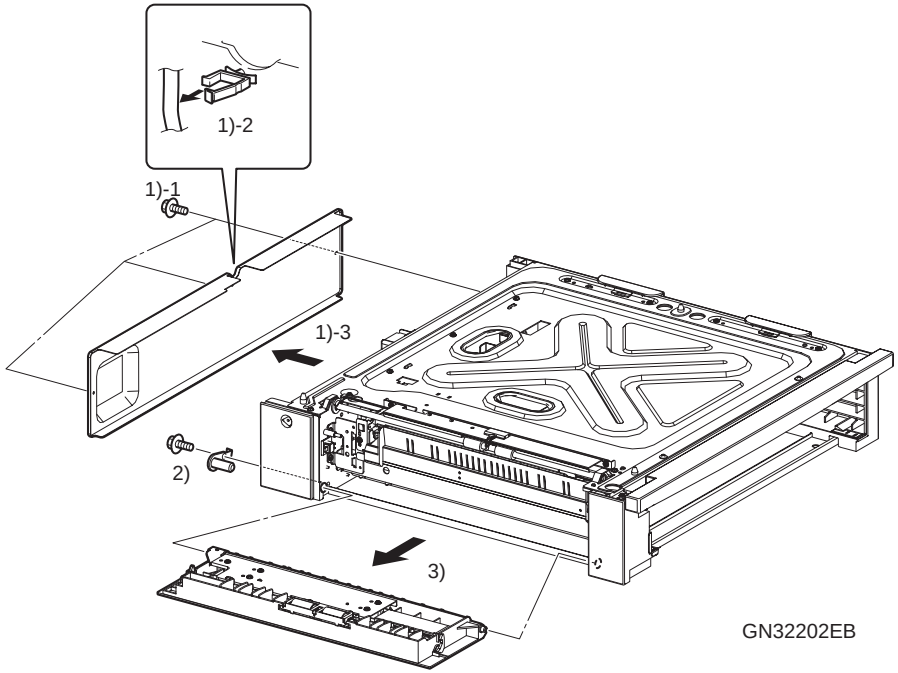

Figure 4-126. Removing the LEFT COVER ASSY STM

manuals4you.com

4.10.3 MOTOR ASSY STM, PWB ASSY STM

REMOVAL

1. Remove the three screws (silver, flanged, 8mm) that secure the REAR COVER, and remove the REAR COVER.
2. Disconnect the Harness from the Connector (P/J826) of the MOTOR ASSY STM.

CAUTION

When removing the MOTOR ASSY STM, be careful not to lose the GEAR 23/46 since it comes off.

3. Remove the three screws (black, flanged, 6mm) that secure the MOTOR ASSY STM, and remove the MOTOR ASSY STM.
4. Disconnect the Harnesses from the four Connectors (P/J546) (P/J541) (P/J552) (P/J547) of the PWB ASSY STM.
5. Remove the four screws (silver, flanged, 6mm) that secure the PWB ASSY STM, and remove the PWB ASSY STM.

REINSTALLATION

1. Install the PWB ASSY STM, and secure it with the four screws (silver, flanged, 6mm).
2. Connect the Connectors (J546) (J541) (J552) (J547) of the HARNESS ASSY STM to the Connectors (P546) (P541) (P552) (P547) of the PWB ASSY STM.
3. Secure the MOTOR ASSY STM with the three screws (black, flanged, 6mm).
4. Connect the Connector (P826) of the HARNESS ASSY STM to the Connector (J826) of the MOTOR ASSY STM.
5. Secure the REAR COVER with the three screws (silver, flanged, 8mm).

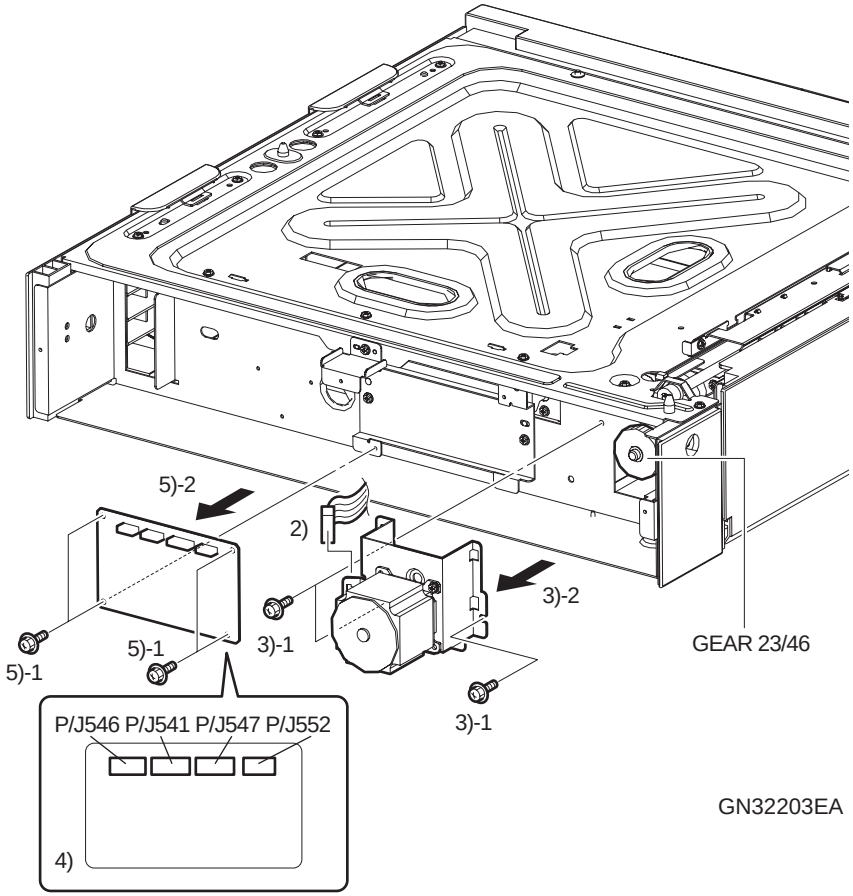

Figure 4-127. Removing the MOTOR ASSY STM and PWB ASSY STM

4.10.4 TRAY 4 FEEDER

REMOVAL

1. Remove the TRAY ASSY 2 (paper cassette).
2. Open the LEFT COVER STM.
3. Remove the one screw (black, flanged, 6mm) that secures the Latch Bracket, and remove the Latch Bracket.
4. Disconnect the Connector (P/J617) of the HARNESS ASSY STM, and remove the Harness from the Clamp.
5. Remove the two screws (black, flanged, 6mm) that secure the TRAY 4 FEEDER, slide the FRONT CHUTE in the direction of arrow, and pull out and remove the TRAY 4 FEEDER.

REINSTALLATION

1. Secure the TRAY 4 FEEDER with the two screws (black, flanged, 6mm).
2. Connect the Connector (J617) of the HARNESS ASSY SNR to the Connector (P670) of the HARNESS ASSY STM, and secure the Harness to the Clamp.
3. Secure the Latch Bracket with the one screw (black, flanged, 6mm).
4. Close the LEFT COVER STM.
5. Install the TRAY ASSY 2 (paper cassette).

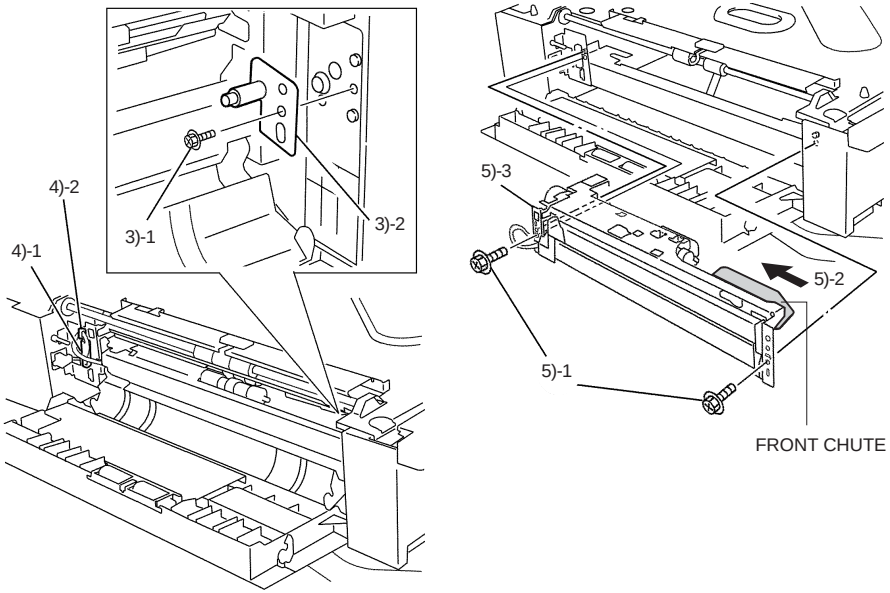

GN32204EB

Figure 4-128. Removing the TRAY 4 FEEDER

manuals4you.com

4.11 Tray Assy

4.11.1 LINK END

REMOVAL

1. Remove the TRAY ASSY (paper cassette).
2. Remove the one screw (black, flanged tapping, 8mm) that secures the LINK END.
3. While lifting the screw hole part of the LINK END, slide and remove the LINK END.

REINSTALLATION

1. Slide and install the LINK END, and match and install it into the screw hole part of the LINK END.
2. Secure the LINK END with the one screw (black, flanged tapping, 8mm).
3. Install the TRAY ASSY (paper cassette).

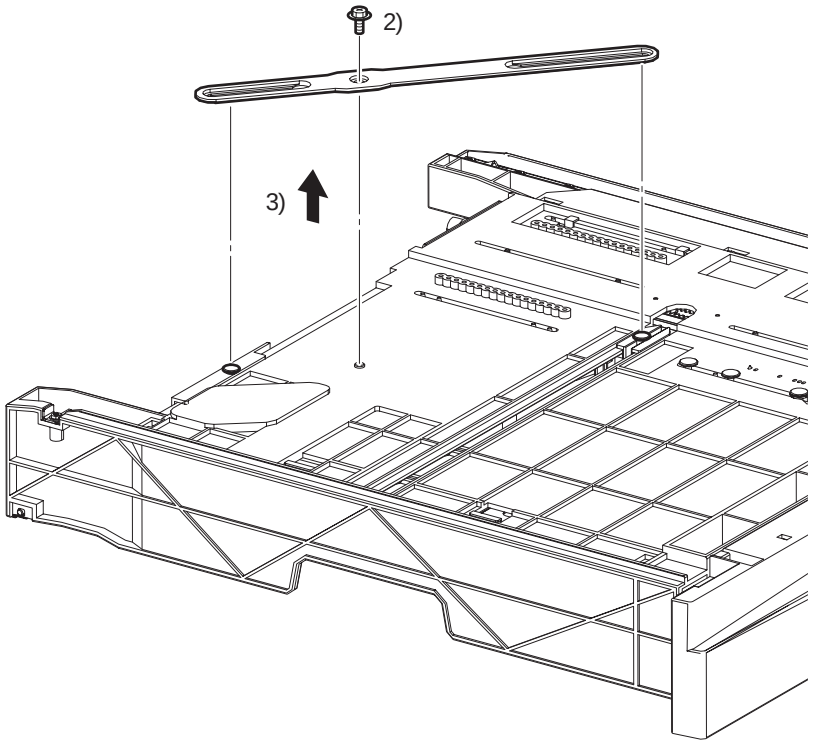

GN32301EA

Figure 4-129. Removing the LINK END

4.11.2 FRONT SIDE GUIDE, REAR SIDE GUIDE

REMOVAL

1. Remove the TRAY ASSY (paper cassette).
2. Remove the three screws (silver, 6mm) that secure the REAR SIDE GUIDE, and remove the REAR SIDE GUIDE.
3. Remove the two screws (silver, 6mm) that secure the FRONT SIDE GUIDE, and remove the FRONT SIDE GUIDE.

REINSTALLATION

1. Secure the FRONT SIDE GUIDE with the two screws (silver, 6mm).
2. Secure the REAR SIDE GUIDE with the three screws (silver, 6mm).
3. Install the TRAY ASSY (paper cassette).

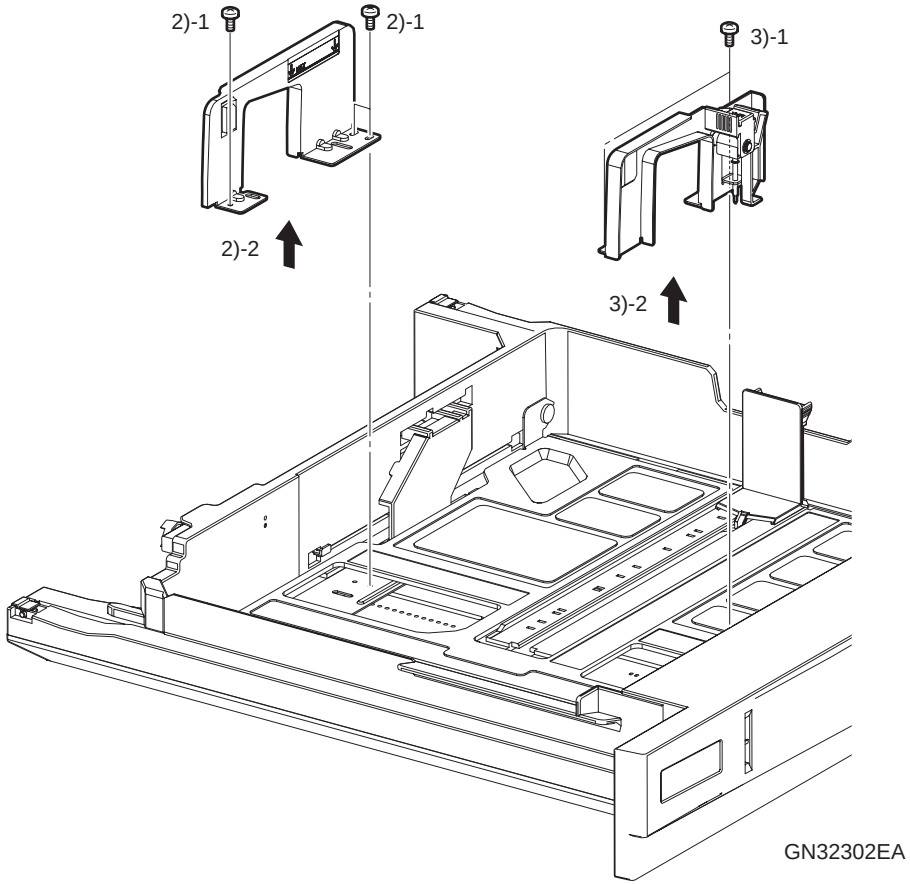

Figure 4-130. Removing the FRONT SIDE GUIDE and REAR SIDE GUIDE

manuals4you.com

4.11.3 END GUIDE ASSY

REMOVAL

1. Remove the TRAY ASSY (paper cassette).
2. Remove the LINK END. (p.454)
3. Remove the FRONT SIDE GUIDE and REAR SIDE GUIDE. (p.455)
4. Lift the BOTTOM PLATE 90° around the Hinges, and remove it from the Hinges.
5. Remove the two screws (black, flanged tapping, 8mm) that secure the two PINION GEARs, and remove the PINION GEARs.
6. Slide the FRONT SIDE GUIDE PLATE in the direction of arrow, remove the three Bosses, and lift and remove the FRONT SIDE GUIDE PLATE mounted with the RACK GEAR.
7. Slide the END GUIDE, and remove it from the notch hole of the BASE TRAY.

REINSTALLATION

1. Slide and install the END GUIDE, starting with the notch hole of the BASE TRAY.
2. Match and fit the three Bosses, and slide and install the FRONT SIDE GUIDE PLATE.

CAUTION

When installing the PINION GEARs, match the holes of the FRONT SIDE GUIDE PLATE and REAR SIDE GUIDE PLATE as shown in Figure 4-131, and install the PINION GEARs.

3. Secure the two PINION GEARs with the two screws (black, flanged tapping, 8mm).
4. Raise the BOTTOM PLATE 90°. In this state, fit the Hinges, and install the BOTTOM PLATE.
5. Install the FRONT SIDE GUIDE and REAR SIDE GUIDE. (p.455)
6. Install the LINK END. (p.454)
7. Install the TRAY ASSY (paper cassette).

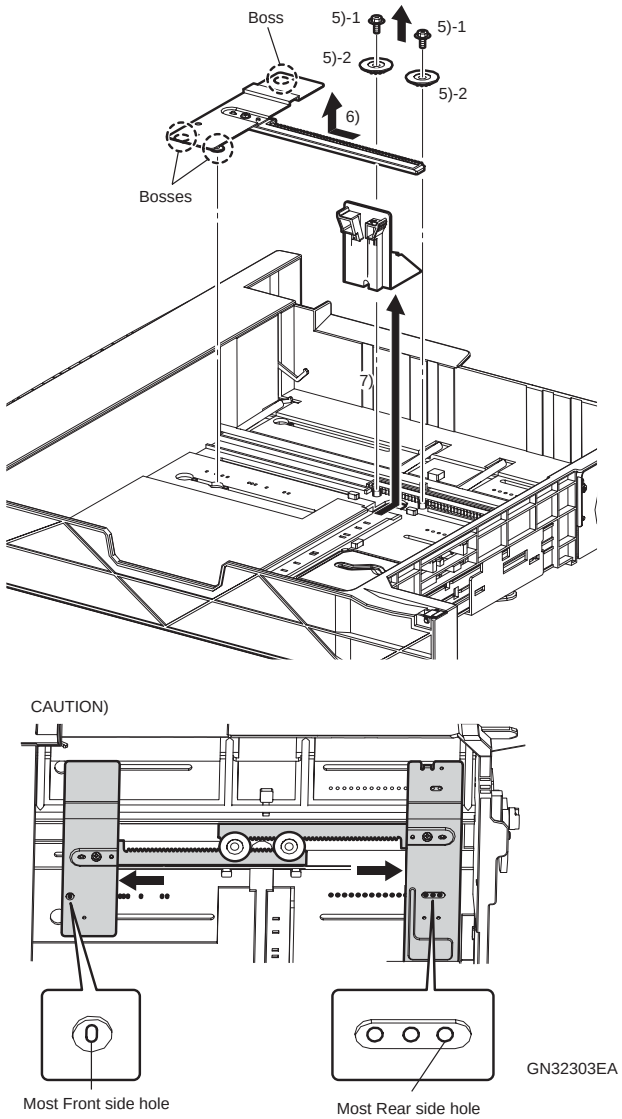

Figure 4-131. Removing the END GUIDE ASSY

4.11.4 SIDE GUIDE ACTUATOR

REMOVAL

1. Remove the TRAY ASSY (paper cassette).
2. Remove the LINK END. *(p.454)*
3. Remove the FRONT SIDE GUIDE and REAR SIDE GUIDE. *(p.455)*
4. Lift the BOTTOM PLATE 90° around the Hinges, and remove it from the Hinges.
5. Remove the two screws (black, flanged tapping, 8mm) that secure the two PINION GEARs, and remove the PINION GEARs.
6. Slide the REAR SIDE GUIDE PLATE mounted with the RACK GEAR to the Front side, move away and lift the Hook from the notch hole of the BASE TRAY, and remove the REAR SIDE GUIDE PLATE together with the SIDE GUIDE ACTUATOR.
7. Slide the SIDE GUIDE ACTUATOR to the Right side, and release the two Hooks from the notch holes of the BASE TRAY.
8. Remove the Boss of the REAR SIDE GUIDE PLATE from the notch hole of the SIDE GUIDE ACTUATOR.

REINSTALLATION

1. Fit the Boss of the REAR SIDE GUIDE PLATE, starting with the notch hole of the SIDE GUIDE ACTUATOR.
2. Match the two Hooks of the SIDE GUIDE ACTUATOR mounted with REAR SIDE GUIDE PLATE, and install the SIDE GUIDE ACTUATOR to the BASE TRAY.
3. Match and fit the Hook of the REAR SIDE GUIDE PLATE mounted with the RACK GEAR, and slide and install the REAR SIDE GUIDE PLATE.

CAUTION

When installing the PINION GEARs, match the holes of the FRONT SIDE GUIDE PLATE and REAR SIDE GUIDE PLATE as shown in "CAUTION" of Figure 4-131 in "4.11.3 END GUIDE ASSY" *(p.456)*, and install the PINION GEARs.

4. Secure the two PINION GEARs with the two screws (black, flanged tapping, 8mm).
5. Raise the BOTTOM PLATE 90°. In this state, fit the Hinges, and install the BOTTOM PLATE.
6. Install the FRONT SIDE GUIDE and REAR SIDE GUIDE. *(p.455)*
7. Install the LINK END. *(p.454)*
8. Install the TRAY ASSY (paper cassette).

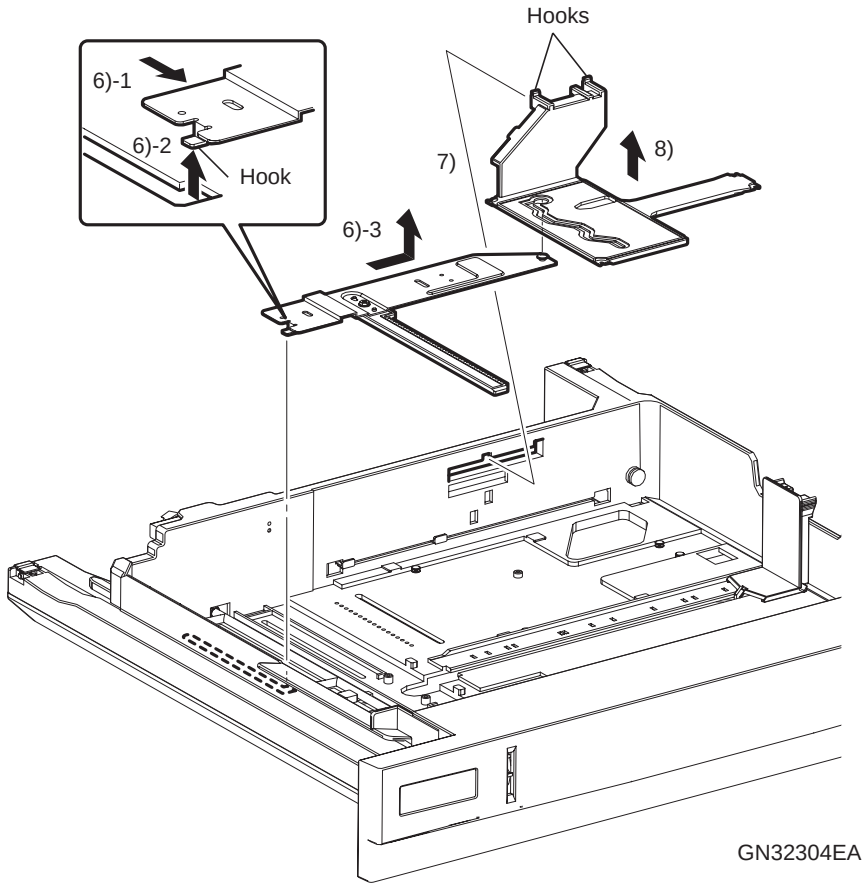

Figure 4-132. Removing the SIDE GUIDE ACTUATOR

manuals4you.com

CHAPTER

5

ADJUSTMENT

5.1 Overview

This chapter explains the adjustment necessary to maintain the functions and performance of the AcuLaser C9100.

5.1.1 Instructions

Before starting your adjustment work, always check the following instructions.

CAUTION

- **Refer to " 5.1.2 Part/unit-based adjustment items" (p.460), and start adjustment after confirming the corresponding adjustment items and execution orders of the replaced/removed parts and units.**
- **Start adjustment after fully checking the instructions given in the explanation area of each adjustment item. Incorrect work may interfere with the product operations and/or functions.**

manuals4you.com

5.1.2 Part/unit-based adjustment items

The following table indicates the adjustment items and counter clear items necessary when the specific unit is replaced or removed.

Table 5-1. Adjustment Item List

Repaired Part	Adjustment Item	Execution Timing	Adjustment Execution Means	Reference
Photoconductor unit	Adjustment of starting position in main-scanning direction	After replacement with new unit	Executed from the operation panel (Information Menu [Color Regist Sheet] + Color Regist Menu)	p.464
Fuser unit	Life counter clear	After replacement with new unit	Executed from the operation panel (Maintenance Menu [Reset Fuser Counter])	p.483
BTR UNIT ASSY (Transfer unit)	Life counter clear	After replacement with new unit	Executed from the operation panel (Maintenance Menu [Reset BTR Counter])	p.483
DEVE UNIT (Development unit)	Life counter clear	After replacement with new unit	Executed from the operation panel (Maintenance Menu [Reset X DvlpCounter])	p.483
IDT UNIT (Intermediate transfer unit)	Life counter clear	After replacement with new unit	Executed from the operation panel (Maintenance Menu [Reset IDT Counter])	p.483
	Correction of starting position in sub-scanning direction	After replacement with new unit	Executed from the operation panel (Maintenance Menu [Color Regist Check])	p.463
	Adjustment of starting position in main-scanning direction	After replacement with new unit	Executed from the operation panel (Information Menu [Color Regist Sheet] + Color Regist Menu)	p.464
ROS UNIT	Correction of starting position in sub-scanning direction	After replacement with new unit	Executed from the operation panel (Maintenance Menu [Color Regist Check])	p.463
	Adjustment of starting position in main-scanning direction	After replacement with new unit	Executed from the operation panel (Information Menu [Color Regist Sheet] + Color Regist Menu)	p.464
BOARD ASSY, MAIN	Writing USB ID	After replacement with new unit	Executed from the dedicated program	p.467
SENSOR ASSY TP	Writing correction value of SENSOR ASSY TP	After replacement with new unit	Execute from one of the followings • Executed from the dedicated program (PARAMSET.exe) • Executed from the operation panel (Maintenance Menu [Sensor Assy TP])	p.470
MOTOR DISP (Y/M/C/K)	Writing correction value of MOTOR DISP	After replacement with new unit	Execute from one of the followings • Executed from the dedicated program (PARAMSET.exe) • Executed from the operation panel (Maintenance Menu [(C/M/Y/K) Motor Disp])	p.471

Table 5-1. Adjustment Item List

Repaired Part	Adjustment Item	Execution Timing	Adjustment Execution Means	Reference
EEPROM of MCU PWB	Correction of starting position in sub-scanning direction	After replacement with new chip	Executed from the operation panel (Maintenance Menu [Color Regist Check])	p.463
	Adjustment of starting position in main-scanning direction	After replacement with new chip	Executed from the operation panel (Information Menu [Color Regist Sheet] + Color Regist Menu)	p.464
	Writing correction value of SENSOR ASSY TP	After replacement with new chip	Execute from one of the followings • Dedicated program (PARAMSET.exe) • Operation panel (Maintenance Menu [Sensor Assy TP])	p.470
	Writing correction value of MOTOR DISP (for 4 colors)	After replacement with new chip	Execute from one of the followings • Dedicated program (PARAMSET.exe) • Operation panel (Maintenance Menu [C (M,Y,K) Motor Disp])	p.471
—	Controller Firmware Update	—	Start the printer by performing special operation [Update program ROM], and send the firmware data from the PC.	p.472
—	MCU Firmware Update (+update NVRAM)	—	☐ MCU Firmware Start the printer by performing special operation [Update program ROM], and send the firmware data from the PC. ☐ NVRAM Send the parameter data from the PC.	p.475
—	Adjustment of starting position in main-scanning direction	After main unit transportation	Executed from the operation panel (Information Menu [Color Regist Sheet] + Color Regist Menu)	p.464

manuals4you.com

5.2 Adjustment

5.2.1 Color Registration Adjustment

When you have replaced the ROS UNIT, IDT UNIT or Photoconductor unit or transported the main unit, execute the following "Color Registration Adjustment".

1) Sub-scanning direction start position correction
2) Skew correction
3) Adjustment of starting position in main-scanning direction

The corresponding adjustment is indicated for each execution item.

Table 5-2. Color Registration Adjustment

Item	Adjustment Item	Instruction
Replacement of ROS UNIT	1), 2), 3)	Always make adjustment in order of 1) to 2) to 3).
Replacement of IDT UNIT	1), 2), 3)	
Replacement of Photoconductor unit	3)	
Transportation	3)	

CHECK POINT

When completed the Color Registration Adjustment, you can check the result of the adjustment by printing a “Configuration Sheet”.

5.2.1.1 Correction of starting position in sub-scanning direction

☐ Procedure

1. After reassembling the printer, install all consumables and similar parts to be ready to power the printer on.
2. Hold down the [Back], [Up], [Down] and [Enter] switches on the operation panel, and power on the printer to start the "MAINTENANCE MODE".
3. Select [Color Regist Check] from the "Maintenance Menu" in the panel setting menu, and press the [Enter] switch.
4. In the printer, sub-scanning direction start position correction (displacement measurement) starts.

CAUTION

If the "Color Regist Warn" message appears during measurement, press the [Enter] switch to execute measurement again.

5. After measurement is finished, whether skew correction must be made or not is automatically judged, and depending on its result, either of the following operations is performed.

■ Adjustment unnecessary: The printer automatically reboots and correction ends.

■ Adjustment necessary: "Y±Nnn M±Nnn K±Nnn C±Nnn" is displayed on the LCD screen of the operation panel. ⇒ To Step 6

CAUTION

In Step 6 below, open the Front Cover more than 1 second after "Y±Nnn M±Nnn K±Nnn C±Nnn" is displayed on the LCD screen.

6. Open the Front Cover, and turn the adjustment screw according to the display of the LCD screen to make skew correction.

Y±Nnn M±Nnn K±Nnn C±Nnn

- **"Y", "M", "K", "C" : "Colors" of adjustment target**
- **"±" : Adjustment screw turning direction ("+": Clockwise (CW), "-": Counterclockwise (CCW))**
- **"N" : Number of adjustment screw turns**
- **"nn" : Number of adjustment screw steps (0 to 39 steps) *40 steps = equivalent to one turn**

CAUTION

- **Turn the adjustment screw with a Nut driver that meet the following conditions.**
  - **Size : 5.5 mm**
  - **Shaft length: 90.0 mm or longer**
- **Fully check the LCD display data and make correct adjustment. (If you misidentify the adjusted colors or adjustment screw turning direction/amount, you may not be able to complete the adjustment.)**
- **Turn the adjustment screw within the specified number of turns. (Turning it unnecessarily may damage the adjustment mechanism in the ROS UNIT.)**
- **In Step 7 below, press the [Enter] switch more than 1 second after closing the Front Cover.**

7. Close the Front Cover and press the [Enter] switch.
   ⇒ Return to Step 4.

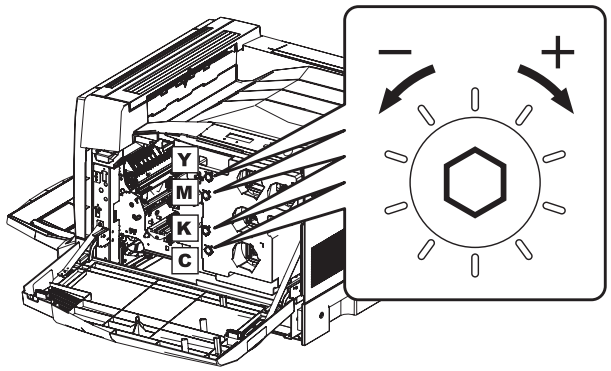

Figure 5-1. Sub-scanning direction start position correction/Skew correction

manuals4you.com

5.2.1.2 Adjustment of starting position in main-scanning direction

☐ Procedure

1. Select [Color Regist Sheet] from the "Information Menu", and press the [Enter] switch to print the Color Registration Adjustment Sheet.
2. Read the values (Left, Center, Right) of Chart A from the printed Color Registration Adjustment Sheet.
   Read the values at the points where the diagonal Yellow, Magenta and Cyan lines intersect the vertical white lines. (100 steps)

■ When all values are 0 : Check Chart B.
⇒ To Step 6

■ Other than 0 : Enter correction values.
⇒ To Step 3

3. Select the "Color Regist Menu" and press the [Enter] switch.
4. Set the read values.
   1) Press the [Up] or [Down] switch to select the color to be set, and press the [Enter] switch.
   2) Set the read Left, Center and Right values (set the Left value to L, the Center value to C, and the Right value to R). After setting the Right value, press the [Enter] switch.
   3) Return to 1) and then set another color.

5. After setting the correction values, print the Color Registration Adjustment Sheet again and read the values of Chart A.

■ When all values are 0 : Check Chart B.
⇒ To Step 6

■ Other than 0 : Enter correction values again.
⇒ To Step 3

6. Read the values (Left, Center, Right) of Chart B from the Color Registration Adjustment Sheet.
   Read the values at the points where Yellow, Magenta and Cyan are the most outstanding (where the printed colors are the deepest) (5 steps).

■ When all colors/all areas are near 0 (-10 to 10)
: Adjustment finished

■ Not near 0 : Enter correction values.
⇒ To Step 7

7. Select the "Color Regist Menu" and press the [Enter] switch.
8. Set the read values.
   1) Press the [Up] or [Down] switch to select the color to be set, and press the [Enter] switch.
   2) Set the read Left, Center and Right values (set the Left value to L, the Center value to C, and the Right value to R). After setting the Right value, press the [Enter] switch.
   3) Return to 1) and then set another color.

9. After setting the correction values, print the Color Registration Adjustment Sheet again and read the values of Chart B.

■ When all colors/all areas are near 0 : Adjustment finished

■ Not near 0 : Enter correction values.
⇒ To Step 6

CHECK POINT

When you press the [Enter] switch after setting the Right value, that value is read into the printer and the displayed value returns to 0 (the entered value is held in the printer).

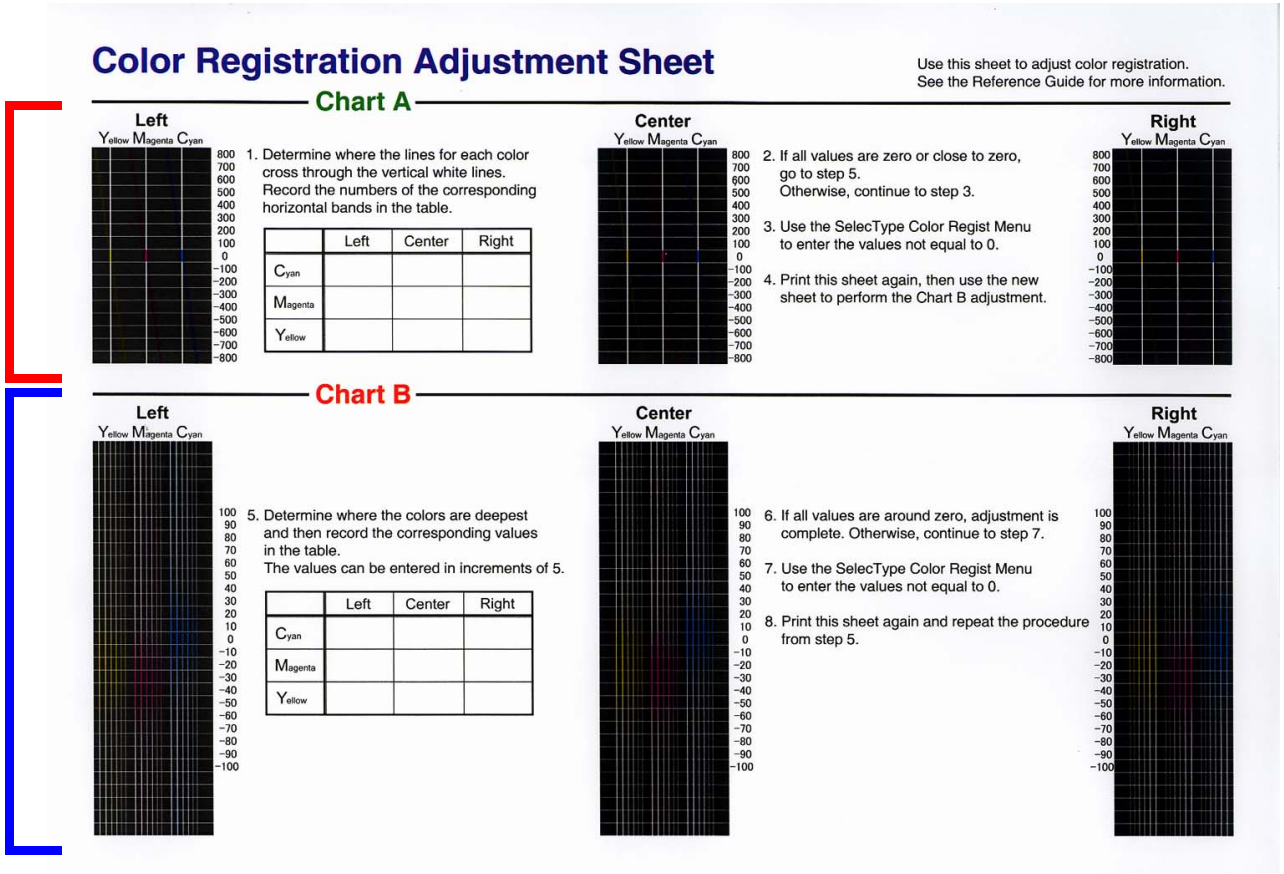

Color Registration Adjustment Sheet

Use this sheet to adjust color registration.
See the Reference Guide for more information.

Chart A

Left — Yellow Magenta Cyan

800 700 600 500 400 300 200 100 0 −100 −200 −300 −400 −500 −600 −700 −800

1. Determine where the lines for each color cross through the vertical white lines. Record the numbers of the corresponding horizontal bands in the table.

	Left	Center	Right
Cyan			
Magenta			
Yellow			

Center — Yellow Magenta Cyan

800 700 600 500 400 300 200 100 0 −100 −200 −300 −400 −500 −600 −700 −800

2. If all values are zero or close to zero, go to step 5. Otherwise, continue to step 3.
3. Use the SelecType Color Regist Menu to enter the values not equal to 0.
4. Print this sheet again, then use the new sheet to perform the Chart B adjustment.

Right — Yellow Magenta Cyan

800 700 600 500 400 300 200 100 0 −100 −200 −300 −400 −500 −600 −700 −800

Chart B

Left — Yellow Magenta Cyan

100 90 80 70 60 50 40 30 20 10 0 −10 −20 −30 −40 −50 −60 −70 −80 −90 −100

5. Determine where the colors are deepest and then record the corresponding values in the table. The values can be entered in increments of 5.

	Left	Center	Right
Cyan			
Magenta			
Yellow			

Center — Yellow Magenta Cyan

100 90 80 70 60 50 40 30 20 10 0 −10 −20 −30 −40 −50 −60 −70 −80 −90 −100

6. If all values are around zero, adjustment is complete. Otherwise, continue to step 7.
7. Use the SelecType Color Regist Menu to enter the values not equal to 0.
8. Print this sheet again and repeat the procedure from step 5.

Right — Yellow Magenta Cyan

100 90 80 70 60 50 40 30 20 10 0 −10 −20 −30 −40 −50 −60 −70 −80 −90 −100

Chart A

Chart B

Figure 5-2. Color Registration Adjustment Sheet

manuals4you.com

5.2.2 Color Registration Check

- Procedure

  Select the [Configuration Sheet] from the "Maintenance Menu" and press the [Enter] switch to print the Configuration Sheet.

- Check

  Check the printed Configuration Sheet and check the registration status in the main scanning direction and sub scanning direction.

  - Main-scanning direction
    Check the vertical lines for displacements in each color and each area (three areas in the left, center and right of paper).
  - Sub-scanning direction
    Check the horizontal lines for displacements in each area (two areas in the left and right of paper).

CAUTION

There are variations between the mechanisms that determine registration in the engine (limitation of physical accuracy). Hence, all registrations do not match completely.

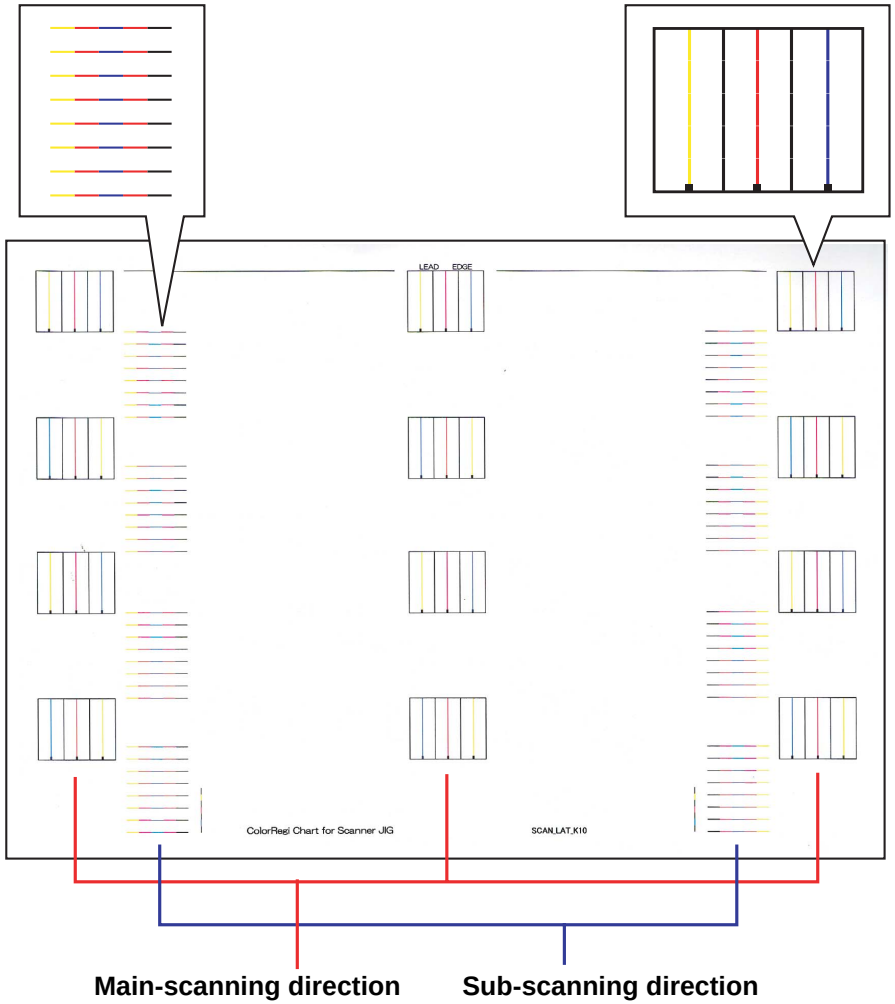

Figure 5-3. Configuration Sheet

5.2.3 Writing USB ID

AcuLaser C9100 is equipped with a USB interface as a standard feature. The PC connected to the printer via the USB interface identifies the printer by referring to the USB ID information specific to each printer. This USB ID information is stored on EEPROM on the BOARD ASSY, MAIN of the printer.

Therefore, you have to rewrite the ID information by the procedure described below when you have replaced the BOARD ASSY, MAIN with a new one.

The program for USB ID input and the supported operating environment are as follows:

- Program
  PagePrinter_Ver10E.exe
- Operating environment
  - OS:
    Windows95 OSR2.0 or later, Windows98, Windows Me or Windows 2000/XP
  - Port used:
    LPT1 ~ LPT3

5.2.3.1 Installing the Program and the Basic Operation

1. Copy a set of files related to USB-ID input program into a folder.

CAUTION

Be sure to store the setting information file (Setting.ini) in the same drive holder where the main program file is stored.

2. Double-click the program icon [ ] to start the program.
3. Select “AL-C9100” at the [Model Name].
4. Select the port used to connect the printer at the [Interface].

CHECK POINT

If you select “Auto selection”, connected printers are detected and communication with the first detected one start automatically. When connecting with 2 or more printers, specify the target port to avoid unexpected connection since the auto detection varies depending on the connection state.

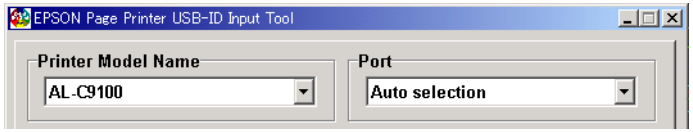

Figure 5-4. Basic Operation

manuals4you.com

5.2.3.2 Writing Method

The method of writing USB ID differs according to the condition of the main board. Referring to the following table, figure out what to do depending on the conditions. Follow the instructions shown in the program to do the writings.

Table 5-3. Writing Method

Condition of Main Board	Check of the previous ID	Writing Method (Button Name)	Descriptions
Communication is impossible between PC and the Main Board	The previous ID can be confirmed by a status sheet or something else that has been already printed out.	Store optional ID	Enter the previous ID to write it into the new Main Board.
	There is no way to confirm the previous ID.	Store auto-generated NEW ID	The program creates the ID automatically from the serial number of the printer and write it into the new Main Board.
Communication is possible between PC and the Main Board	(Can read the previous ID from the previous Main Board)	OLD ID Retrieval/ Restore	The program reads the previous ID from the previous Main Board and write it into the new Main Board.

☐ Store optional ID

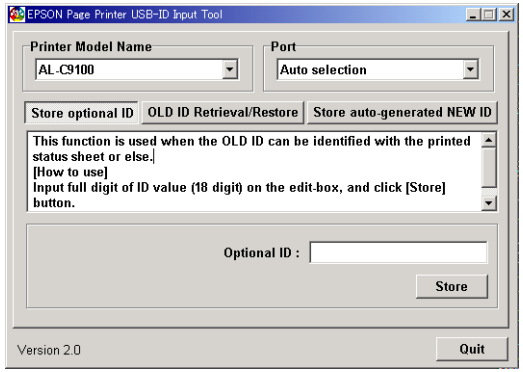

☐ OLD ID Retrieval/Restore

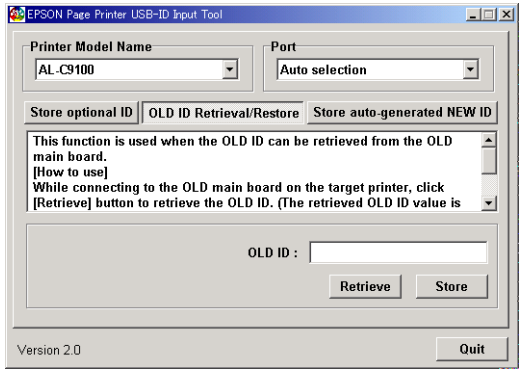

☐ Store auto-generated NEW ID

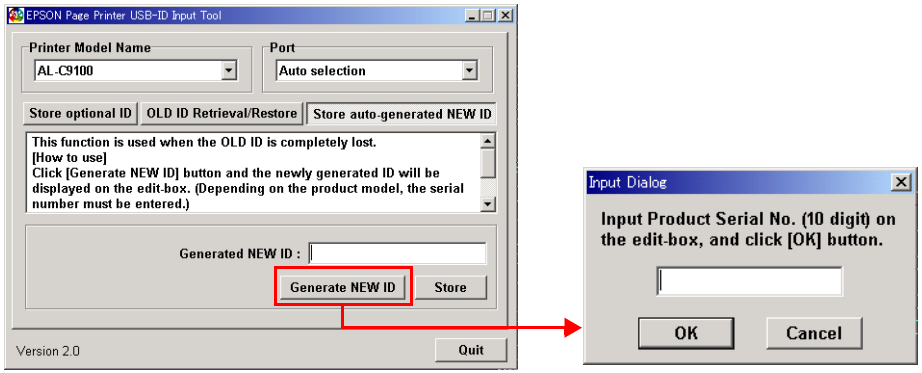

5.2.3.3 Confirming the Writing

When completed to write USB-ID, print a status sheet to confirm that the serial number printed on the sheet is identical to that on the label attached to the printer. (Refer to " 1.19 Status Sheet" *(p.79)*)

5.2.4 Writing adjustment value

The following parts have piece-to-piece variations. When replaced them, write the correction value to the NVRAM on the MCU to eliminate the variations.

- SENSOR ASSY TP

  The SENSOR ASSY TP has the variations in detecting temperature. It can be corrected by writing the value on the label attached to the sensor to the NVRAM.

- MOTOR DISP (Y/M/C/K)

  The MOTOR DISP has the variations in the speed of rotation. It can be corrected by writing the value on the label attached to the motor to the NVRAM.

5.2.4.1 Operating environment

The name and operating environment of the program for writing the adjustment values are as described below.

- Program

  PARAMSET.exe

- Operating environment
  - OS

    Windows98 SE, Windows Me, Windows 2000, Windows XP
  - Port used:

    LPT, USB

CAUTION

Windows 2000 cannot use the parallel port.

5.2.4.2 Installation Procedure for Program

Copy a set of files related to adjustment value input program into any folder.

5.2.4.3 Procedure for Program Operation

CAUTION

- **This program can not be executed together with EPSON Status Monitor. Be sure to terminate the EPSON Status Monitor before starting this program.**
- **If the power to the printer is turned off or the parallel cable is disconnected during running of the adjustment program, be sure to restart the program.**

1. Double-click the program icon to start the program.
2. Select the printer connection port.

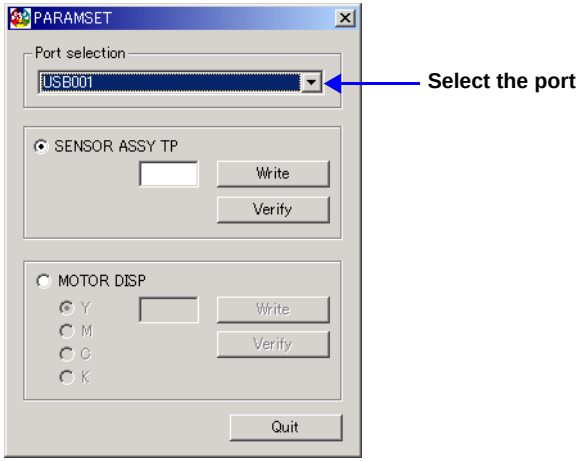

Figure 5-5. Port selection

manuals4you.com

5.2.4.4 Writing the SENSOR ASSY TP adjustment value

1. Install the SENSOR ASSY TP on the printer main unit, and tear off the stub (barcode side) of the label applied to the SENSOR.
2. After assembling the main unit, connect it to the PC and start the program.
3. Check "SENSOR ASSY TP".
4. Enter the last two digits of the four-digit value (correction value), which is indicated under the barcode of the stub, into the edit box.

CAUTION

When clicking the [Write] or [Verify] button as described in the following steps, the printer automatically starts warming up.
Make sure to confirm that the warm-up operation has completed before proceeding to the next step.

5. Click the [Write] button.
6. When writing is completed, a window appears to provide the notification of completion. Click the [OK] button.
7. Click the [Verify] button, make sure that the displayed value matches the entered value, and click the [OK] button.
8. To exit from the program, click the [Quit] button.

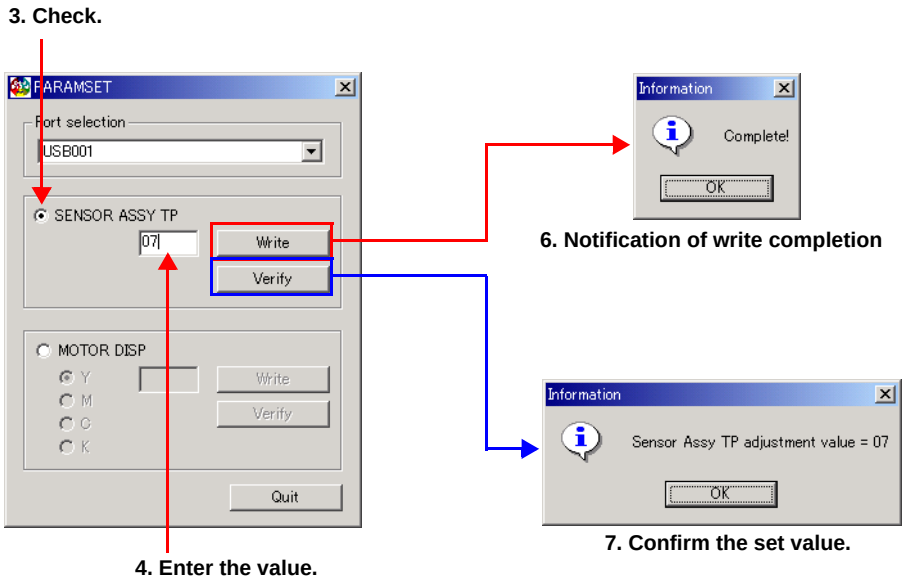

Figure 5-6. Writing the SENSOR ASSY TP adjustment value

5.2.4.5 Writing the MOTOR DISP adjustment value

1. Install the MOTOR DISP on the printer main unit, and tear off the stub (barcode side) of the label applied to the SENSOR.

CAUTION

When replacing two or more MOTOR DISPs simultaneously, write down the colors of the replaced motors on the stubs so that the replaced motors match the stubs.
(The three MOTOR DISPs other than K have the same shape.)

2. After assembling the main unit, connect it to the PC and start the program.
3. Check “MOTOR DISP”.
4. Check the motor color whose value will be entered.
5. Enter the three-digit value, which is indicated under the barcode of the stub and is enclosed by "*", into the edit box.

CAUTION

When clicking the [Write] or [Verify] button as described in the following steps, the printer automatically starts warming up.
Make sure to confirm that the warm-up operation has completed before proceeding to the next step.

6. Click the [Write] button.
7. When writing is completed, a window appears to provide the notification of completion. Click the [OK] button.
   Go back to Step 4 to write the adjustment value of the other color motor.
   Proceed to Step 8 to exit from the program.

CAUTION

To write the adjustment value of the other color motor, be sure to confirm that the printer has completed warm-up operation before writing the next value.

8. Click the [Verify] button, make sure that the displayed value matches the entered value, and click the [OK] button.
9. To exit from the program, click the [Quit] button.

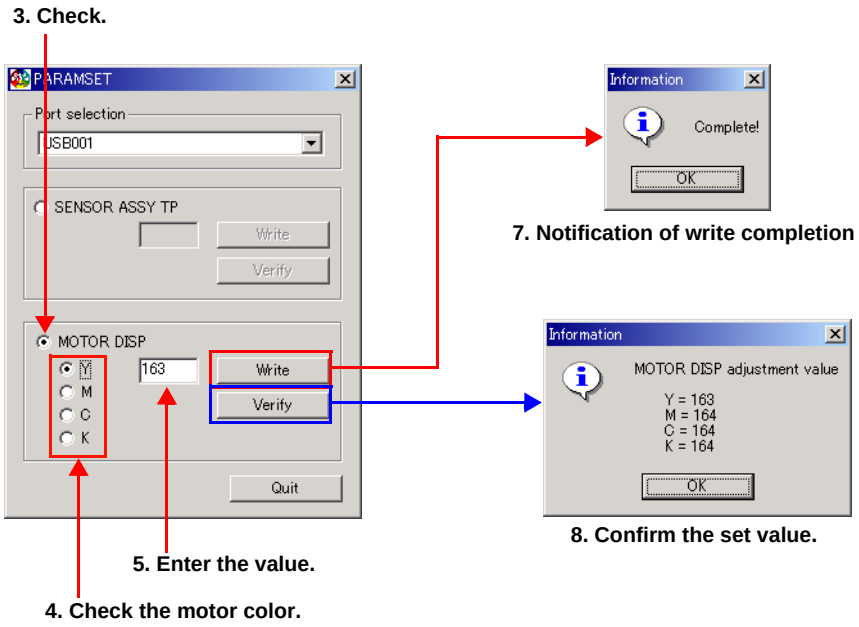

Figure 5-7. Writing the MOTOR DISP adjustment value

manuals4you.com

5.2.5 Controller Firmware Update

A firmware update can be performed in either of the following two methods.

- ☐ Transfer program updating data from the PC via the standard parallel interface.
- ☐ Copy from the master ROM Module where the latest firmware is installed.

This section also explains "Formatting the FLASH ROM Module" necessary when write fails during update or when a program is to be copied.

5.2.5.1 Updating the ROM using a standard parallel interface

NOTE: *The personal computer to be used should be able to send binary data from DOS prompt via a parallel interface.*

1. Print a status sheet, and make sure of current program version.
2. Turn the power off for both the printer and the PC, and then connect them with a parallel cable.

CAUTION

Disconnect all interface cables but the parallel cable in advance.

3. After powering on the PC, copy the program updating data (file name.CRB) to any route directory of the PC.
4. Turn on the printer while pressing the [Down], [Job Cancel] and [Start/Stop] switches.
5. The LCD panel of the printer will indicate the messages as follows:

   Program Device → Ver. xx.xx → Please Send Data

6. Check that the message "Please Send Data" is indicated on the LCD panel of the printer.
7. To transfer the program data file from the computer to the printer, type the command (shown below) on the DOS prompt (from the directory that has "****.crb") and press the ENTER key of the computer.

   copy␣/b␣file name.crb␣LPT1

8. The LCD panel of the printer will indicate the message as follow:

   OLD: xxxx NEW: xxxx

9. Press the [Enter] switch on the operation panel of the printer.
10. You see the messages changing as follow:

    Erasing Device → PRG FF XXXXC0

11. When the checksum is indicated on the LCD panel, the program has been downloaded. Confirm the checksum and power off the printer.
12. Turn the printer back on and print a status sheet.
13. Then referring to the status sheet you printed in step 1, check that the program firmware version was updated.

5.2.5.2 Updating by copying from the FLASH ROM Module

WHEN USING THE MASTER ROM MODULE + BLANK ROM MODULE

1. Power off the printer and disconnect the power cable from the receptacle.
2. Install the Master ROM Module, which contains the latest firmware, into Socket B of the "BOARD ASSY, MAIN".

NOTE: *Leave the ROM Module in the Socket P of the "BOARD ASSY, MAIN" as it is.*

3. Install the Blank ROM Module (ROM Module where program is written) into Socket A of the "BOARD ASSY, MAIN".
4. Connect the power cable to the printer, and turn on the printer while pressing the [Enter], [Cancel Job] and [Start/Stop] switches.

   RAM CHECK**MB

5. When RAM CHECK is finished, the following LCD message is displayed and the printer switches to the program ROM copy mode.

   ROM Copy Mode

6. Press the [Enter] switch and the LCD displays the following message.

   ROM B>A Copying □□□□

7. When copying is completed, the following message appears and the printer restarts.

   ROM B>A Copying End

8. Power off the printer and disconnect the power cable from the receptacle.
9. Remove the master ROM Module from the Socket B.
10. Remove the ROM Module of Socket P, and install the ROM Module of Socket A into Socket P.

WHEN USING ONLY THE MASTER ROM MODULE

1. Power off the printer and disconnect the power cable from the receptacle.
2. Remove the ROM Module installed in Socket P of the "BOARD ASSY, MAIN", and install it into Socket A.
3. Install the Master ROM Module into Socket P of the "BOARD ASSY, MAIN".
4. Connect the power cable to the printer, and turn on the printer while pressing the [Enter], [Cancel Job] and [Start/Stop] switches.

   RAM CHECK**MB

5. When RAM CHECK is finished, the following LCD message is displayed and the printer switches to the program ROM copy mode.

   ROM Copy Mode

6. Pressing the [Enter] switch displays the following message and executes copying.

   ROM B>A Copying □□□□

7. When copying is completed, the following message appears and the printer restarts.

   ROM B>A Copying End

8. Power off the printer and disconnect the power cable from the receptacle.
9. Remove the master ROM Module from the Socket P.
10. Remove the ROM Module of Socket A, and install it into Socket P.

manuals4you.com

5.2.5.3 Formatting the FLASH ROM Module

1. Install the ROM Module to be formatted to the Socket A of the "BOARD ASSY, MAIN".

NOTE: *Leave the ROM Module in the Socket P of the "BOARD ASSY, MAIN" as it is.*

2. Turn the printer on while pressing down the [Up], [Down], [Enter], and [Cancel Job] switches. (Keep the switches down until instructed to release them.)

   RAM CHECK**MB

   When RAM CHECK is finished, the printer switches to the program ROM format mode and the following message is displayed.

   ROM A ERASING

   At this point, release the switches, and then the following message appears.

   ROM A ERASING □□□□

3. After that, the following message appears and the ROM Module is formatted.

   ROM A ERASED

5.2.6 MCU Firmware Update

This section explains about MCU firmware (engine firmware) update.
This printer requires the NVRAM version to be matched with the MCU firmware version. Therefore, when updating the MCU firmware, also update the NVRAM values (parameters) on the MCU. After updating the MCU firmware, also update the NVRAM.

NOTE: *The personal computer to be used should be able to send binary data from DOS prompt via a parallel interface.*

5.2.6.1 MCU Firmware Update

1. Print a status sheet or engine status sheet, and check the current MCU firmware and NVRAM versions.
   (Refer to " 1.19 Status Sheet" *(p.79)*, " 6.4 Sheet for servicing" *(p.487)*)
2. Turn the power off for both the printer and the PC, and then connect them with a parallel cable.

CAUTION

Disconnect all interface cables except for the parallel cable in advance.

3. After powering on the PC, copy the program updating data (file name.MOT) to any route directory of the PC.
4. Turn on the printer while pressing the [Down], [Job Cancel] and [Start/Stop] switches.
5. The LCD panel of the printer will indicate the messages as follows:

   EngineFirmwareUpdate → EFU Ver. 100 → Please send EFU data

6. Check that the message "Please Send Data" is indicated on the LCD panel of the printer.
7. To transfer the program data file from the computer to the printer, type the command (shown below) on the DOS prompt and press the ENTER key of the computer.

   copy␣/b␣file name.mot␣LPT1

8. The LCD panel of the printer will indicate the message as follow:

   send size=********** → SEND SIZE=********** → Type:***** sum=****

CAUTION

In Step 9 below, press the [Enter] switch after making sure that the engine has completely stopped.

9. Press the [Enter] switch on the printer operation panel. This displays the following message and starts write.

   Writing:Size=******

10. When writing is completed, the following message appears and the printer automatically starts warm-up operation.

    TYPE:***** SUM=****

CAUTION

In Step 11 below, power off the printer after making sure that the engine has completely stopped.

11. Confirm the check sum and power off the printer.
12. Power on the printer again, and then update the NVRAM values.

manuals4you.com

5.2.6.2 Updating the NVAM values

1. Copy the NVRAM parameter data (file name.DCC) to any route directory of the PC.
2. Make certain that the LCD screen of the printer displays "Ready".
3. To transfer the program data file from the computer to the printer, type the command (shown below) on the DOS prompt and press the ENTER key of the computer.

   copy␣/b␣file name.dcc␣LPT1

4. When writing is completed, the printer automatically starts warm-up operation.
5. When "Ready" appears on the LCD screen of the printer, power off the printer.
6. After powering on the printer again, print a status sheet or engine status sheet.
7. Compare the status sheet or engine status sheet with the one printed in Step 1 of " 5.2.6.1 MCU Firmware Update" *(p.475)*, and confirm that the MCU firmware and NVRAM versions have been updated. (Refer to " 1.19 Status Sheet" *(p.79)*, " 6.4 Sheet for servicing" *(p.487)*)

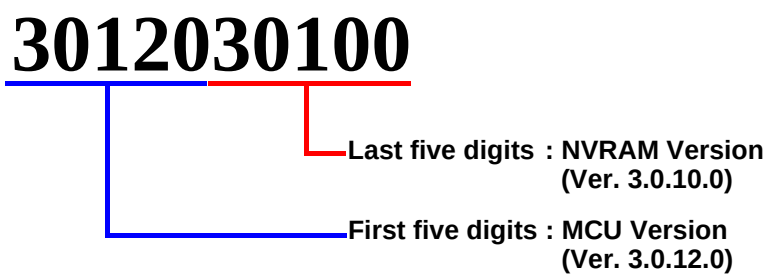

Figure 5-8. Version representation

CHAPTER

6

MAINTENANCE

manuals4you.com

6.1 Overview

This section gives information necessary for maintaining the printer in its optimum condition.
In maintenance and checks, never fail to observe the following precautions.

WARNING

- **To prevent an electric shock, burn, injury, etc., always turn off the power S/W of the main unit and disconnect the power plug before starting maintenance work. However, if it is inevitable to measure voltages with power on, for example, pay careful enough attention during work to avoid an electric shock.**
- **While the printer is operating, never inspect the drive areas such as the motor, sprockets and gears.**
- **Weight: Since this printer is heavy (about 55kg, consumables not included), it should be moved by three or more persons with their waists fully down.**
- **Safety devices: The safety devices provided to prevent accidents caused by equipment (fuse, INTERLOCK S/W) and the safety devices operated by the customer (panel, cover, etc.) should be given consideration to satisfy their safety functions.**
- **Immediately after the printer has stopped operating, do not touch the FUSER ASSY (Fuser unit) as it is hot.**
- **When you have finished your work and then connect the printer to the power supply to operate it, pay attention to the following points.**
  - **Be careful not to get your hands and clothes caught up in the rotating parts (various rollers and cooling fans) of the printer.**
  - **Never touch the electrical terminals and high-voltage components. (HVPS or LVPS unit, etc.)**
- **To avoid dust explosion or ignition, never bring any consumables close to flame or throw them into fire.**

WARNING

- **Take great care not to expose yourself to the laser beam; otherwise, you could suffer injury (blindness).**
- **When you perform maintenance or service of the laser printer, never open any cover on which a warning label about laser beam is affixed.**
- **Understand how the laser beam functions and take maximum precautions not to injure yourself or anyone around you.**
- **Before starting the maintenance work of the heated areas (Fuser unit, etc.) of the laser printer, always switch power off, disconnect the power plug, and then wait until the heated areas get cool as a general rule, in order to prevent a burn, injury, etc.**
- **This printer produces a laser beam when the following conditions are all satisfied.**
  - **The printer is “Ready” with its power S/W set to ON.**
  - **The INTERLOCK S/W is in the OFF position (the TOP COVER and FRONT COVER are closed).**
- **Do not pick up the dropped toner with a vacuum cleaner (for home use). To do so may cause the sucked toner particles to catch fire by sparks of the electric contacts. If the toner has dropped on the floor, etc., clean it with a broom or wipe it with a cloth moistened with neural detergent. If it is necessary to clean a lot of dropped toner with a cleaner, use a cleaner exclusively designed for toner.**

CAUTION

- Since this printer has many metal parts, beware of the frame edges and similar portions and be sure to wear gloves before starting your work.
- Do not disassemble the Toner Cartridge.
- Do not expose the Photoconductor unit to direct sunlight.
- Do not disassemble the ROS ASSY.
- Do not touch the onboard components by bare hands to prevent the ICs and other electrical components from being damaged by static electricity. (When necessary, wear an earth band or like.)
- To ensure safety and workability, use the specified tools.
- Do not turn off the power S/W until all motors stop completely.
- Should the printer be transported, use special-purpose packing material, pallet, etc.
- Do not use alcohol, paint thinner, or any other such solvents.

manuals4you.com

6.2 About On-site Servicing

This section explains the maintenance work to be done when you actually visit the printer installation place.
To prevent possible accidents during maintenance work, strictly observe the servicing warnings and cautions during servicing. You must not do dangerous work.

CAUTION

- **When it is necessary to transport the main unit, use special-purpose packing material, pallet, etc.**
- **Do not throw away the refuse and replaced parts/ consumables generated by the work at the customer without permission.**
- **Before starting your work, lay a drop cloth, paper or like to prevent toner from dropping.**

6.2.1 On-site Servicing Flowchart

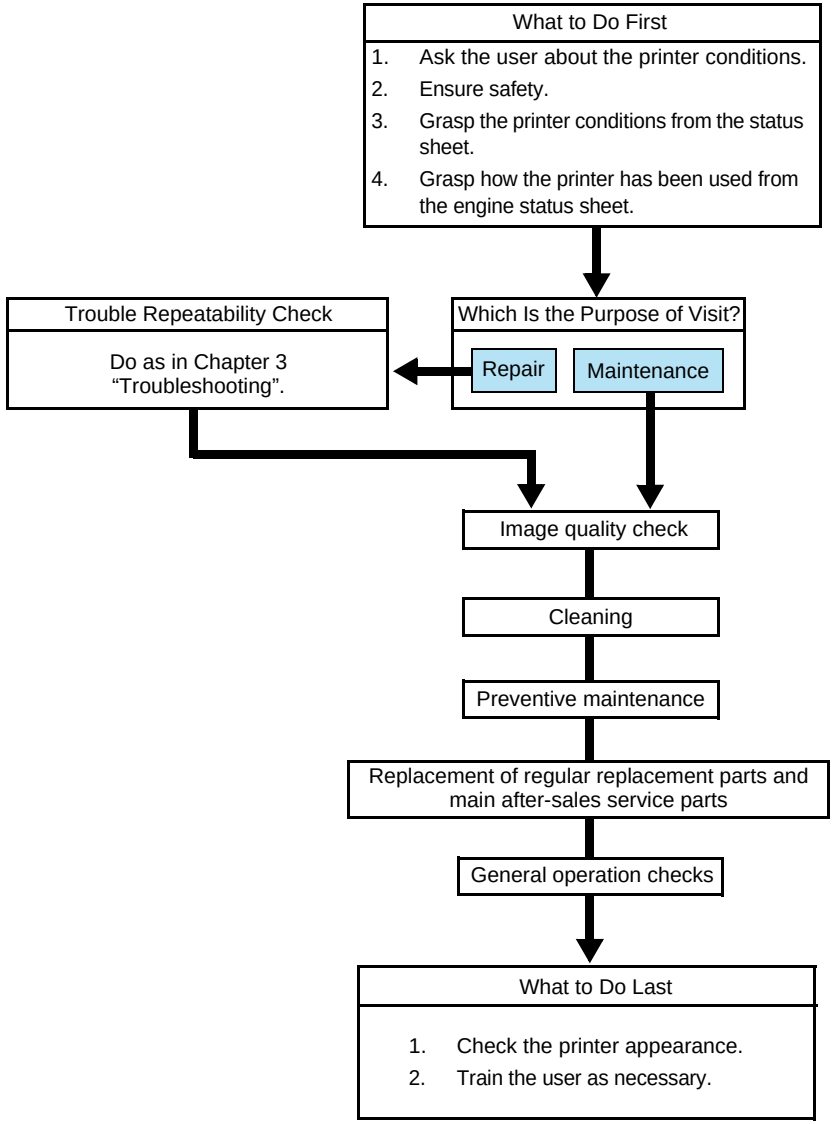

Figure 6-1. On-site Servicing Flowchart

6.2.2 Details of On-site Servicing

This section explains the details of on-site servicing.

WHAT TO DO FIRST

1. Ask the user about the printer conditions.
   - Frequency of paper feeding errors (jams)
   - How the printer has been used (paper type, printing frequency, environment, etc.)
   - Image quality status (front and back, separately)
2. Check how the power cord is plugged, damage to the cord and plug, etc. to ensure safety.
3. Print and check several status sheets to grasp the printer conditions.
4. Print the engine status sheet, and grasp the lives of the consumables, regular replacement parts and how the printer has been used.

TROUBLE REPEATABILITY CHECK

Do as in Chapter 3 “Troubleshooting”.

1. Refer to “3.2 Level 1 FIP” *(p.152)* or “3.3 Level 2 FIP” *(p.153)*, and confirm the trouble conditions and execute troubleshooting.
2. If a fatal image quality problem (all white, all black, etc.) has occurred due to an engine fault, do as in “3.5 Image Quality Trouble” *(p.248)*.

IMAGE QUALITY CHECK

1. Print the status sheet and confirm the image quality.

   <Image quality check items>
   - Color balance
   - Color shift
   - Density (color) unevenness
   - Low density repeatability problem
   - Others
2. If any of the above check items is abnormal:
   - Take corrective action in “3.5 Image Quality Trouble” *(p.248)* of Chapter 3 “TROUBLESHOOTING”.
   - Take corrective action in Chapter 5 “Adjustment”.

manuals4you.com

CLEANING

1. Check the paper path and remove paper dust and foreign matter. If any area is dirty, clean it with a brush, dry waste or like. Especially check the following.
   - Rollers and similar parts in the paper transport path

   NOTE: *When the parts are extremely dirty, clean them with a wet cloth, and then wipe them with a dry cloth. Be careful not to scratch the parts.*

2. Check the entire printer inside and remove dropped toner, paper dust and foreign matter. If any area is dirty, clean it with a brush, dry waste or like. Especially check the following.
   - Around the exhaust port
   - Around the Waste Toner Collector
   - Around the IDT UNIT
   - Around the DEVE UNIT

CAUTION

If the exhaust port or Fan is clogged, the temperature in the printer rises, causing a failure.

PREVENTIVE MAINTENANCE (CONSUMABLES/REGULAR REPLACEMENT PARTS)

Do preventive maintenance work to maintain the printer performance and prevent failures.

1. After completion of repair or maintenance, print several status sheets and check that there are no problems.
2. After completion of repair or maintenance, print the engine status sheet.

   NOTE: *The numbers of printed sheets are used as the guidelines of replacing the periodical replacement parts. Replace the periodical replacement parts as required.*

REPLACEMENT OF CONSUMABLES AND PERIODICAL REPLACEMENT PARTS

As required, refer to "6.5 Consumables and Periodical Replacement Parts" *(p.494)* and do replacement work.

GENERAL OPERATION CHECKS

After completion of servicing, check if the printer works normally. Print a status sheet and try out all methods below to print by sending data from a computer.

- Simplex printing
- Duplex printing
- Face-down output
- Face-up output

1. Make sure that there are no image quality problems.
2. Check the printer for paper loading error, unusual noise, etc.

WHAT TO DO LAST

1. Check the appearance of the printer.
2. As necessary, train the user to learn the handling methods, paper jam remedies, consumable replacement, etc.

6.3 Maintenance Menu

This menu is displayed and selectable only when a special operation is used when the power is turned on to enter the maintenance mode. Basically, this menu is a maintenance menu for use by service engineer.
At the time of maintenance, print the Engine Status Sheet from the Maintenance Menu and grasp the usage conditions of various Consumables and Periodical Replacement Parts.

CAUTION

- **This setting menu is used by the service engineer for maintenance. Do not disclose it to the user.**
- **The followings are the function for exceptional situation. Do not use these functions for on-site services because printing might not be executed normally.**
  - **Feed Control**
  - **Fuser**
  - **Transfer**

6.3.1 Maintenance Menu Items

This Setting Menu can be displayed and selected only when the printer is placed in the Maintenance Mode by special operation performed at power-on. When the power is then switched off once and on again, the Maintenance Menu is disappeared (the printer leaves the Maintenance Mode, i.e. shifts to the Normal Mode).

- Engine Status Sheet
  Pressing the [Enter] switch starts printing the engine status sheet. If data remains in the printer, paper is ejected.
  Always use the normal mode (not maintenance mode) to make sure there is no engine-related service call, and then enter the maintenance mode to perform this operation. For RIT, toner save, and resolution, their current values are printed; for others, their factory defaults are printed. Even when printing ends, the User Default environment (setting) does not change.
  While printing is in progress, the LCD flashes.
  The printed engine status sheet indicates the count values of each unit of the engine.

  NOTE: *Refer to* "6.4 Sheet for servicing" *(p.487)*.

- Print Log Report
  Pressing the [Enter] switch starts printing the Print Log Report. If there is data remaining in the printer, paper is output. Always check first in the normal mode (any mode other than the Maintenance Mode) that there are no engine related service calls before entering the Maintenance Mode and pressing Enter. The sheet is printed using the current setting values for RITech, toner save, and resolution, while other settings use the factory defaults. After printing the User Default settings are not changed. During printing, the LCD information display flashes. The Print Log Report is always printed in English regardless of the setting of Lang in Setup Menu.

- Configuration Sheet
  Prints a sheet (for lines) for adjustment of color registration (main scanning direction).

- Color Regist Check
  Corrects the sub-scanning direction start position and corrects skew. Color shift is detected by the sensor and is adjusted with the physical adjusting screw (ROS adjusting screw). The mechanical controller produces the pattern. This is performed when replacing the IDT or ROS. Refer to "5.2.1.1 Correction of starting position in sub-scanning direction" *(p.463)*.

  NOTE: *Cannot be executed during power saving.*

- Y ± Xxx M ± Xxx K ± Xxx C ± Xxx
  Displayed if adjustment is necessary after measurement of the disparity in the sub-scanning direction.
  When the [Enter] switch is pressed after adjustment (with the physical screw), measurement of the disparity starts (continues).
  Reboot with the [Back] switch or [Start/Stop] switch. (The [Up] and [Down] switches are ignored.) Refer to "5.2.1.1 Correction of starting position in sub-scanning direction" *(p.463)*.

manuals4you.com

manuals4you.com

- Color Regist Worn ?
  Displayed if an error related to adjustment occurs during (after) measurement of the disparity in the sub-scanning direction.
  When the [Enter] switch is pressed, measurement of the disparity starts (initial start).
  Reboot with the [Back] switch or [Start/Stop] switch. (The [Up] and [Down] switches are ignored.)
  - ?: The code value for error information related to adjustment.
    - 2: Skew Fine Compensation is NG (3 times over) 02h
    - 3: RC Sample Block Warning B-OUT 03h
    - 4: RC Sample Block Warning B-IN 04h
    - 5: RC Sample Block Warning A2-OUT 05h
    - 6: RC Sample Block Warning A2-IN 06h
- Reset Fuser Counter
  Resets the level counter of the Fuser unit. The counter must be reset after the Fuser unit is replaced with a new one.

  NOTE: *Cannot be executed during power saving.*
- Reset IDT Counter
  Resets the level counter of the IDT UNIT. The counter must be reset after the IDT UNIT is replaced with a new one.
  This is not performed in sleep mode.

  NOTE: *Cannot be executed during power saving.*
- Reset BTR Counter
  Resets the level counter of the BTR UNIT ASSY. The counter must be reset after the BTR UNIT ASSY is replaced with a new one.

  NOTE: *Cannot be executed during power saving.*
- Reset C DvlpCounter
  Resets the level counter of DEVE UNIT C. The counter must be reset after DEVE UNIT C is replaced with a new one.

  NOTE: *Cannot be executed during power saving.*
- Reset M DvlpCounter
  Resets the level counter of DEVE UNIT M. The counter must be reset after DEVE UNIT M is replaced with a new one.

  NOTE: *Cannot be executed during power saving.*
- Reset Y DvlpCounter
  Resets the level counter of DEVE UNIT Y. The counter must be reset after DEVE UNIT Y is replaced with a new one.

  NOTE: *Cannot be executed during power saving.*
- Reset K DvlpCounter
  Resets the level counter of DEVE UNIT K. The counter must be reset after DEVE UNIT K is replaced with a new one.

  NOTE: *Cannot be executed during power saving.*
- Sensor Assy TP
  Set the individual temperature correction value (writing of NV value) of SENSOR ASSY TP.
  When replaced the SENSOR ASSY TP with a new one, be sure to make the setting by the correction value described on the new one. The value displayed on the panel is the current value.

  NOTE: *The writing of the correction value cannot be done during the sleep mode.*
  New setting value will be reflected at the next power-on.
- C,M,Y,K Motor Disp
  Set the individual rotational speed correction value (writing of NV value) of the MOTOR DISP for each color.
  When replaced the MOTOR DISP with a new one, be sure to make the setting by the correction value described on the new one. The value displayed on the panel is the current value.

  NOTE: *The writing of the correction value cannot be done during the sleep mode.*
  New setting value will be reflected at the next power-on.
- Power Cleaning
  Forcibly ejects toner and cleans the transfer unit.
  Perform cleaning when print quality is poor such as the whole surface of the printed paper being soiled with toner when the printer is used in high temperatures or high humidity.

  NOTE: *Cannot be executed during power saving.*

CAUTION

This function is not executed unless the printer inside is judged by the Engine in the specified high temperature and high humidity status.

- C,M,Y,K Toner Admix
  Forcibly supplies toner. Perform admix to fill the toner supply tubes (Augers) after replacement and so on.
  The value defines the number of times for performing admix operation, and a selectable value is 1 to 5.

CHECK POINT

After replacing the toner supply tubes, execute Admix 4 times to supply the toner into the tubes.

- Clear Error Log
  Clear error log list stored for display on Engine Status Sheet.
  Performing this operation reboots the printer.

manuals4you.com

6.3.2 Entry into Maintenance Menu

1. Hold down the [Back], [Up], [Down] and [Enter] switches, and power on the printer.

   When the printer is powered on, all LEDs and LCD panel are lit and the following message is then displayed.
   (When “MAINTENANCE MODE” appears, release your hand from the switches.)

RAM CHECK **.*MB → **MAINTENANCE MODE** → **Ready**

2. Refer to the Maintenance Menu process flowchart in figure 6-3 and figure 6-3, and perform each function of the Maintenance Menu with the panel switches.

NOTE 1: *Disconnect all the Interface Cables in advance.*

2: *Engine-related service call errors are ignored when the Maintenance Mode starts. Before starting the printer in the Maintenance Mode and executing printing, make sure that no errors occur.*

3: *To exit from the Maintenance Menu, make sure that the engine is not operating and then turn off the Main Switch.*

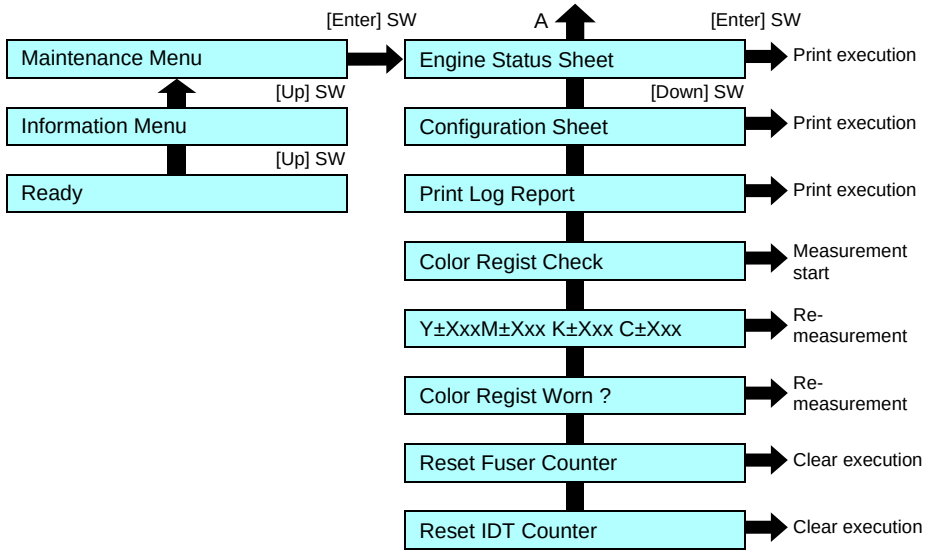

Figure 6-2. Maintenance Menu Process Flowchart

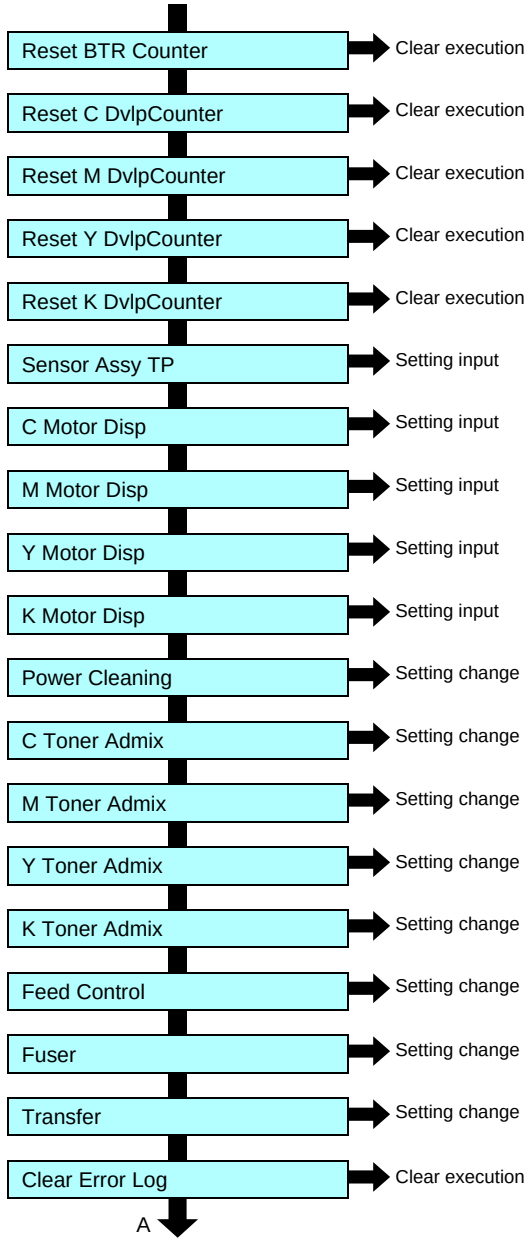

Figure 6-3. Maintenance Menu Process Flowchart

6.4 Sheet for servicing

CAUTION

The Engine Status Sheet and Print Log Report are used for maintenance to be performed by service engineer, and must not be disclosed to the users.

6.4.1 Engine Status Sheet Items

- Total Counts
  - Total Pages : Total printed pages. Not dependent on paper size.
  - Total Pages (A4) : Total printed pages. A4 horizontal size is counted as one page. (A3 is 2 pages)
  - Color Pages : Total color pages printed. Not dependent on paper size.
- Jam Counts : Number of jams.
- ET Cartridge
  - C Toner : Amount of C toner used.
    Dispense time, limit value
    Total dots
  - M Toner : Amount of M toner used.
    Dispense time, limit value
    Total dots
  - Y Toner : Amount of Y toner used.
    Dispense time, limit value
    Total dots
  - K Toner : Amount of K toner used.
    Dispense time, limit value
    Total dots
  - C Toner Change : Number of replacements of C toner.
    12K toner, 6K toner
  - M Toner Change : Number of replacements of M toner.
    12K toner, 6K toner
  - Y Toner Change : Number of replacements of Y toner.
    12K toner, 6K toner
  - K Toner Change : Number of replacements of K toner.
    15K toner, 7,500 toner
- Photoconductor : Level of photoconductor unit.
  IDT motor operating time,
  number of pages printed
  - Photoconductor Change
    : Number of replacements of photoconductor unit.
- Fuser : Level of Fuser unit.
  Number of pages printed
  - Fuser Change : Number of replacements of Fuser unit.
- IDT Unit : Level of IDT UNIT.
  IDT motor operating time, number of pages printed
  - IDT Unit Change : Number of replacements of IDT UNIT.
- Transfer Unit : Level of Transfer unit (BTR).
  IDT motor operating time, number of pages printed
  - Transfer Unit Change
    : Number of replacements of Transfer unit.

manuals4you.com

- Development Unit
  - C Development : Level of development unit C.
    PH motor operating time
  - M Development : Level of development unit M.
    PH motor operating time
  - Y Development : Level of development unit Y.
    PH motor operating time
  - K Development : Level of development unit K.
    PH motor operating time
  - C Development Change
    : Number of replacements of development unit C.
  - M Development Change
    : Number of replacements of development unit M.
  - Y Development Change
    : Number of replacements of development unit Y.
  - K Development Change
    : Number of replacements of development unit K.
- Feed Control : Paper handling setting value for special thick paper (User Mode).
- Fuser : Fuser temperature setting value for special thick paper (User Mode).
- Transfer : Transfer current setting value for special thick paper (User Mode).
- Power On : Number of times power is turned on.
- Sleep : Number of times printer returns from standby.
- Engine Version
  - MCU : Version and NVRAM version of the printer main unit MCU.
    - Upper 5 digits : MCU version (1 digit, 1 digit, 2 digits, 1 digit)
    - Lower 5 digits : Version of engine NVRAM (1 digit, 1 digit, 2 digits, 1 digit)

Note : Example: 3012030100 for MCU Ver3.0.12.0 and NVRAM Ver3.0.10.0.

- Error Log : Displays up to 20 of the latest panel messages, EJL status codes, Total Pages, and jam codes, paper size, paper type, date and time when errors occur.
  The latest item is displayed first. (sorted by total pages)
  Relevant errors are service errors (errors after printing is ready) and jams.
  If an error occurs with the same Total Pages that has already been recorded, then this error is not recorded.
  - Jam code:
    8-digit hexadecimal strings that show the location of jams as bit information.

Table 6-1. Jam code

2nd and 1st bytes		4th and 3rd bytes	
Code	Content	bit (31-16)	Content
0001	Tray1 Misfeed Jam	31	Duplex Refeed
0002	MSI Misfeed Jam	30	Tray 1 Misfeed
0003	Tray2 Misfeed Jam	29	MSI Misfeed
0004	Tray3 Misfeed Jam	28	Duplex SwitchBack
0005	Tray4 Misfeed Jam	27	Tray 2 Misfeed
0006	T/A Jam (Tray3, Tray4)	26	---
0008	Tray Module ReFeed Jam	25	---
0009	Duplex Refeed Jam	24	---
000A	OHP Jam	23	Remain at Dup Sensor
0010	Reg Out Jam	22	---
0020	POP In Jam	21	Remain at Exit Sensor
0040	Duplex Jam	20	Remain at POP Sensor
0100	Exit In Jam	19	Remain at Reg Sensor
0200	Exit Out Jam	18	Remain at T/A Module
0600	Exit Out early Jam	17	Remain Feed Out #3 (Tray 3 Misfeed)
		16	Remain Feed Out #4 (Tray 4 Misfeed)

- Paper size:

  Displayed on the panel in English.
- Paper type:

  Displayed for the media specified value specified in the engine.

Table 6-2. Paper type

Code	Specified media	Code	Specified media
0	Plain Paper1	12	Coated Paper2
1	Plain Paper2	13	User Mode
2	Recycle Paper	16	Plain Paper1 Back
3	Fine Paper	17	Plain Paper2 Back
4	Thick Paper1	18	Recycle Paper Back
5	Thick Paper2	19	Fine Paper Back
6	OHP	20	Thick Paper1 Back
7	Label1	21	Thick Paper2 Back
8	Label2	26	Coated Paper1 Back
9	Envelope	27	Post Card Back
10	Coated Paper1	28	Coated Paper2 Back
11	Post Card	29	User Mode Back

```
EPSON AL-C9100 Engine Status Sheet

Total Counts
   Total Pages                        1,642 pages
   Total Pages (A4)                   1,784 pages
   Color Pages                        1,475 pages
   Jam Counts                             6
ET Cartridge
   C Toner                          138,896 msec,            543,744 msec
                                    666,722
   M Toner                          219,976 msec,            564,224 msec
                                  1,039,790
   Y Toner                          234,378 msec,            502,784 msec
                                    954,934
   K Toner                          177,288 msec,            668,672 msec
                                  1,196,989
   C Toner Change                         3
   M Toner Change                         3
   Y Toner Change                         3
   K Toner Change                         3
Photoconductor                   19,482,624 msec,              1,784 pages
Photoconductor Change                     1
Fuser                                 1,784 pages
Fuser Change                              0
IDT Unit                         19,386,368 msec,              1,784 pages
IDT Unit Change                           0
Transfer Unit                    19,386,368 msec,              1,784 pages
Transfer Unit Change                      0
Development Unit
   C Development                  9,789,440 msec
   M Development                  9,789,440 msec
   Y Development                  9,789,440 msec
   K Development                  9,789,440 msec
   C Development Change                   0
   M Development Change                   0
   Y Development Change                   0
   K Development Change                   0
Feed Control                              5
Fuser                                     5
Transfer                                  5
CLN A                                     7
CLN B                                     0
CLN C                                     4
Power On                                 70
Sleep                                    27
Engine Version
   MCU                           3012030120

Error Log
   Panel Message          Code          Page      Jam  Size Type     Date  Time
   Jam B                  4234         1,632 00000002            --/--/-- --:--
   Jam B                  4234         1,408 00000002            --/--/-- --:--
   Jam B E                4234         1,152 00240020            --/--/-- --:--
   Jam E C3               4234           930 00000004    A4    1 --/--/-- --:--
   Service Req      E051  6051           835                     --/--/-- --:--
   Jam B                  4234           304 00000002   MON    9 --/--/-- --:--
   Jam B                  4234            78 00000100            --/--/-- --:--
```

Figure 6-4. Engine Status Sheet

manuals4you.com

6.4.1.1 List of information managed and methods of management

Table 6-3. List of information managed and methods of management

Information name		Count processing and storage location	Range	Unit	Count conditions	Clear conditions
Total Pages		Controller	0 to 99,999,999	pages	During printing	(EEPROM initialization)
Total Pages(A4)		Engine	0 to 99,999,999	pages	During printing	None
Color Pages		Controller	0 to 99,999,999	pages	During printing	(EEPROM initialization)
Jam Counts		Controller	0 to 100,000	-	When a jam occurs	(EEPROM initialization)
C Toner	Dispense time	Engine	0 to 2,147,483,647	msec	During printing	New C toner detected
	Limit value	Engine	(*1, *2)	msec	-	-
	Total dots	Controller	0 to 2,147,483,647	-	Around 4,000 dots	(EEPROM initialization)
M Toner	Dispense time	Engine	0 to 2,147,483,647	msec	During printing	New M toner detected
	Limit value	Engine	(*1, *3)	msec	-	-
	Total dots	Controller	0 to 2,147,483,647	-	Around 4,000 dots	(EEPROM initialization)
Y Toner	Dispense time	Engine	0 to 2,147,483,647	msec	During printing	New Y toner detected
	Limit value	Engine	(*1, *4)	msec	-	-
	Total dots	Controller	0 to 2,147,483,647	-	Around 4,000 dots	(EEPROM initialization)
K Toner	Dispense time	Engine	0 to 2,147,483,647	msec	During printing	New K toner detected
	Limit value	Engine	(*1, *5)	msec	-	-
	Total dots	Controller	0 to 2,147,483,647	-	Around 4,000 dots	(EEPROM initialization)
C Toner Change	12K toner	Controller	0 to 255		When new toner is detected	(EEPROM initialization)
	6K toner	Controller	0 to 255			(EEPROM initialization)
M Toner Change	12K toner	Controller	0 to 255			(EEPROM initialization)
	6K toner	Controller	0 to 255			(EEPROM initialization)
Y Toner Change	12K toner	Controller	0 to 255			(EEPROM initialization)
	6K toner	Controller	0 to 255			(EEPROM initialization)
K Toner Change	15K toner	Controller	0 to 255			(EEPROM initialization)
	7.5K toner	Controller	0 to 255			(EEPROM initialization)
Photoconductor	Operating time	Engine	0 to 2,147,483,647	msec	During printing	New photoconductor detected
	Number of pages printed	Engine	0 to 1,048,320	pages	During printing	New photoconductor detected
Photoconductor Change		Controller	0 to 255	Times	New photoconductor detected	(EEPROM initialization)
Fuser	Number of pages printed	Engine	0 to 1,048,320	Pages	During printing	Counter clear
Fuser Change		Controller	0 to 255	Times	Counter clear	(EEPROM initialization)
IDT Unit	Operating time	Engine	0 to 2,147,483,647	msec	During printing	Counter clear
	Number of pages printed	Engine	0 to 1,048,320	pages	During printing	Counter clear
IDT Unit Change		Controller	0 to 255	Times	Counter clear	(EEPROM initialization)

Table 6-3. List of information managed and methods of management

Information name		Count processing and storage location	Range	Unit	Count conditions	Clear conditions
Transfer Unit	Operating time	Engine	0 to 2,147,483,647	msec	During printing	Counter clear
	Number of pages printed	Engine	0 to 1,048,320	pages	During printing	Counter clear
Transfer Unit Change		Controller	0 to 255	Times	Counter clear	(EEPROM initialization)
C Development	Operating time	Engine	0 to 2,147,483,647	msec	During printing	Counter clear
M Development	Operating time	Engine	0 to 2,147,483,647	msec	During printing	Counter clear
Y Development	Operating time	Engine	0 to 2,147,483,647	msec	During printing	Counter clear
K Development	Operating time	Engine	0 to 2,147,483,647	msec	During printing	Counter clear
C Development Change		Controller	0 to 255	Times	Counter clear	(EEPROM initialization)
M Development Change		Controller	0 to 255	Times	Counter clear	(EEPROM initialization)
Y Development Change		Controller	0 to 255	Times	Counter clear	(EEPROM initialization)
K Development Change		Controller	0 to 255	Times	Counter clear	(EEPROM initialization)
Feed Control		Controller	0 to 12	-	-	(EEPROM initialization)
Fuser		Controller	0 to 12	-	-	(EEPROM initialization)
Transfer		Controller	0 to 12	-	-	(EEPROM initialization)
Power On (Times power is turned on)		Controller	0 to 99,999,999	Times	When the power is turned on	(EEPROM initialization)
Sleep (Number of recoveries from standby)		Controller	0 to 99,999,999	Times	When returning from standby	(EEPROM initialization)
MCU		Engine	-	-	-	-
Panel Message 1		Controller	-	-	When an error occurs	SelecType, (EEPROM initialization)
Error Code 1		Controller	-	-	When an error occurs	
Error Page 1		Controller	-	-	When an error occurs	
Jam Code 1		Controller	-	-	When an error occurs	
Page Size 1		Controller	-	-	When an error occurs	
Paper Type 1		Controller	-	-	When an error occurs	
Date, Time		Controller	-	-	When an error occurs	

Note : Values in parentheses in the Clear Condition column are cleared as a result. If a value exceeds its range, what is managed by the controller is not guaranteed.

Note "*1": The value is different for each engine model.

"*2": The value is different for each engine model.

"*3": 12K toner: 771584 to (1071616) to 1442304, 6K toner: 316928 to (523776) to 757248. The number in parentheses is the center value.

"*4": 12K toner: 832000 to (1144832) to 1533440, 6K toner: 359424 to (574946) to 821248. The number in parentheses is the center value.

"*5": 12K toner: 752128 to (1048064) to 1412608, 6K toner: 302080 to (506368) to 735744. The number in parentheses is the center value.

"*6": 15K toner: 1027584 to (1380352) to 1827840, 7.5K toner: 444416 to (677376) to 949248. The number in parentheses is the center value.

manuals4you.com

6.4.2 Print Log Report

- ☐ S/N : Serial number of main unit
- ☐ Date : yyyy/mm/dd hh:mm year/month/day hour : minute in local time
- ☐ Toner remain
  - ■ C Toner : Remain of C toner [%]
  - ■ M Toner : Remain of M toner [%]
  - ■ Y Toner : Remain of Y toner [%]
  - ■ K Toner : Remain of K toner [%]
- ☐ Print [pages]
  - ■ Total : Number of pages printed by paper size.
  - ■ Mono Simplex : Number of monochrome/simplex pages printed.
  - ■ Mono Duplex : Number of monochrome/duplex pages printed.
  - ■ Color Simplex : Number of color/simplex pages printed.
  - ■ Color Duplex : Number of color/duplex pages printed.
  - ■ Dummy : Number of duplex pages not actually printed. Paper sizes not supported for duplex printing are displayed as "---".
- ☐ Print of Mode : Number of pages printed by print mode
- ☐ Coverage Duty[%] : % of number of printed dots of total dots per page of each toner. Averaged for each printed page.
- ☐ Dots/1%[dots] : Number of dots when 1% of each toner is used. Updated with every reduction of 1%.
- ☐ Estimated [pages] : Estimated number of pages that can be print with remained toner. Estimated from "CoverageDuty[%]" & "Dots/1%[dots]"

EPSON AL-C9100 Print Log Report
S/N F6LZ060003

Toner Remain

C Toner	75 %
M Toner	62 %
Y Toner	54 %
K Toner	74 %

Print of papers [pages]

Paper	Total	Mono Simplex	Mono Duplex	Color Simplex	Color Duplex	Dummy
A4	1,346	93	3	1,008	242	3
A3	66	23	0	43	0	0
A5	10	6	0	4	0	0
B4	0	0	0	0	0	0
B5	6	6	0	0	0	0
LT	26	0	0	18	8	0
HLT	10	0	5	0	5	0
LGL	10	0	0	0	10	2
GLT	0	0	0	0	0	0
GLG	6	4	0	2	0	0
B	4	0	0	4	0	0
EXE	0	0	0	0	0	0
F4	2	0	0	2	0	0
MON	12	4	---	8	---	---
C10	10	3	---	7	---	---
DL	4	3	---	1	---	---
C6	6	0	---	6	---	---
IB5	6	4	---	2	---	---
CTM	14	0	---	14	---	---

Print of mode [pages]

Mode	Simplex	Duplex	Total
Mono	146	8	154
Color	1,119	265	1,384
Total	1,265	273	1,538

	C	M	Y	K
Coverage Duty[%]	0.5	0.7	2.2	2.7
Dots/1%[dots]	25,487	25,487	25,487	31,859
Estimate[pages]	44,075	26,025	7,212	10,030

Figure 6-5. Print Log Report Sheet

6.4.2.1 List of information managed and methods of management

Table 6-4. List of information managed and methods of management

Information name		Count processing and storage location	Range	Unit	Count conditions	Clear conditions
S/N		Controller	Xxxxxxxxxx	-	-	None
Date		Controller	-	-	-	At Power on
C Toner		Engine	0 to 100	%	During printing	Detection of new cartridge
M Toner		Engine	0 to 100	%	During printing	Detection of new cartridge
Y Toner		Engine	0 to 100	%	During printing	Detection of new cartridge
K Toner		Engine	0 to 100	%	During printing	Detection of new cartridge
Print[pages]	Total	Controller	0 to 99,999,999	pages	During printing	(EEPROM initialization)
	Mono Simplex	Controller	0 to 99,999,999	pages	During printing	(EEPROM initialization)
	Mono Duplex	Controller	0 to 99,999,999	pages	During printing	(EEPROM initialization)
	Color Simplex	Controller	0 to 99,999,999	pages	During printing	(EEPROM initialization)
	Color Duplex	Controller	0 to 99,999,999	pages	During printing	(EEPROM initialization)
	Dummy	Controller	0 to 99,999,999	pages	During printing	(EEPROM initialization)
CoverageDuty[%] C,M,Y,K		Controller	0 to 100.0	%	During printing	(EEPROM initialization)
Dots/1%[dots] C,M,Y,K		Controller	0 to 2,147,483,647	dots	During printing	(EEPROM initialization)

Note 1: Values in parentheses in the Clear Condition column are cleared as a result.

2: If a value exceeds its range, what is managed by the controller is not guaranteed.

manuals4you.com

6.5 Consumables and Periodical Replacement Parts

CAUTION

The print page-based service life values of the Consumables and Periodical Replacement Parts are guidelines. The number of printable pages changes depending on how they are printed. The number of printable pages decreases depending on the intermittent printing (where a few pages, one to several pages, are printed each time), paper size, paper orientation, thick paper printing, printed document, frequent power-on/off, etc. Hence, the number of printable pages of the consumables and periodical replacement parts may become less than a half depending on the operating conditions and environment of the user.

6.5.1 Consumables

Table 6-5. Information on Consumables

Part Name			Part Code	Life (Pages)	Service life indication	Part to Be Replaced at the Same Time	Remarks
Toner Cartridge	Black	Factory-installed cartridge	—	7,500	Replace Toner K	—	—
		Replacement cartridge	0198	15,000		—	
	Yellow	Factory-installed cartridge	—	6,000	Replace Toner Y	—	
		Replacement cartridge	0195	12,000		—	
	Magenta	Factory-installed cartridge	—	6,000	Replace Toner M	—	
		Replacement cartridge	0196	12,000		—	
	Cyan	Factory-installed cartridge	—	6,000	Replace Toner C	—	
		Replacement cartridge	0197	12,000		—	
Photoconductor unit			1105	30,000	Replace Photoconductor	Waste Toner Collector	The Photoconductor unit is packed with the Waste Toner Collector. After replacing the Photoconductor unit, then replace the Waste Toner Collector (simultaneous replacement). After replacement, perform “Adjustment of starting position in main-scanning direction”. (p 462)
Waste Toner Collector			0194	24,000	Replace Waste T Box	—	—

6.5.2 Regular Replacement Parts

Table 6-6. Maintenance Information on Regular Replacement Parts

Part Name		Part Code	Life (Pages)	Service life indication	Remedy after Replacement	Remarks
Fuser unit		2090242	100,000	Worn Fuser	Execute “Reset Fuser Counter” in the “Maintenance Menu” to reset the consumption counter.	Basically it is desired to replace the Fuser Unit although the printer can print about 1,000 pages after “Worn Fuser” is displayed.
BTR UNIT ASSY		1284914	100,000	Worn Transfer Unit	Execute “Reset BTR Counter” in the “Maintenance Menu” to reset the consumption counter.	Basically it is desired to replace the Fuser Unit although the printer can print about 1,000 pages after “Worn Transfer Unit” is displayed.
IDT UNIT		1285007	100,000	Worn IDT Unit	1. Execute “Reset IDT Counter” in the “Maintenance Menu” to reset the consumption counter. 2. Execute color registration adjustment. *(p 462)*	Basically it is desired to replace the Fuser Unit although the printer can print about 1,000 pages after “Worn IDT Unit” is displayed.
DEVE UNIT	C	1285013	300,000	Worn C Dev Unit	Execute “Reset K (Y/M/C) DvlpCounter” in the “Maintenance Menu” to reset the consumption counter.	Basically it is desired to replace the Fuser Unit although the printer can print about 1,000 pages after “Worn K (Y/M/C) Dev Unit” is displayed.
	K	1285014		Worn K Dev Unit		
	M	1285015		Worn M Dev Unit		
	Y	1285016		Worn Y Dev Unit		

manuals4you.com

CHAPTER

7

APPENDIX

7.1 Connectors

This section shows the connector locations of EPSON AcuLaser C9100. [P] and [J] represent “plug” and “jack”, respectively.

7.1.1 P/J Layout Diagram

IOT FRONT LOCATION

Table 7-1. IOT Front Location P/J List

Item No.	P/J No.	Description
1	J 155	N.C.
2	J 154	FUSER DRAWER CONNECTOR and HARNESS ASSY RTOP1
3	J 158	Connection inside FUSER DRAWER CONNECTOR
4	P/J 153	SENSOR ASSY TP and HARNESS ASSY R-TOP1
5	P/J 151	SENSOR ASSY TP and HARNESS ASSY R-TOP1
6	P/J 152	SENSOR HUM TE and HARNESS ASSY R-TOP1
7	P/J 223	FRONT COVER OPEN SENSOR and HARNESS ASSY F-SNR
8	P/J 710	CONTROL PANEL and HARNESS ASSY PANEL
9	P/J 222	MOTOR ASSY TRACKING and HARNESS ASSY F-SNR
10	P/J 224	TONER BOTTLE SET SENSOR and HARNESS ASSY F-SNR
11	P/J 225	TONER FULL SENSOR and HARNESS ASSY F-SNR
12	P/J 221	HARNESS ASSY DISP and HARNESS ASSY NO PAPER
13	P/J 226	NO PAPER SENSOR and HARNESS ASSY NO PAPER
14	J 10B1	INTERLOCK SWITCH and HARNESS ASSY R-TOP1

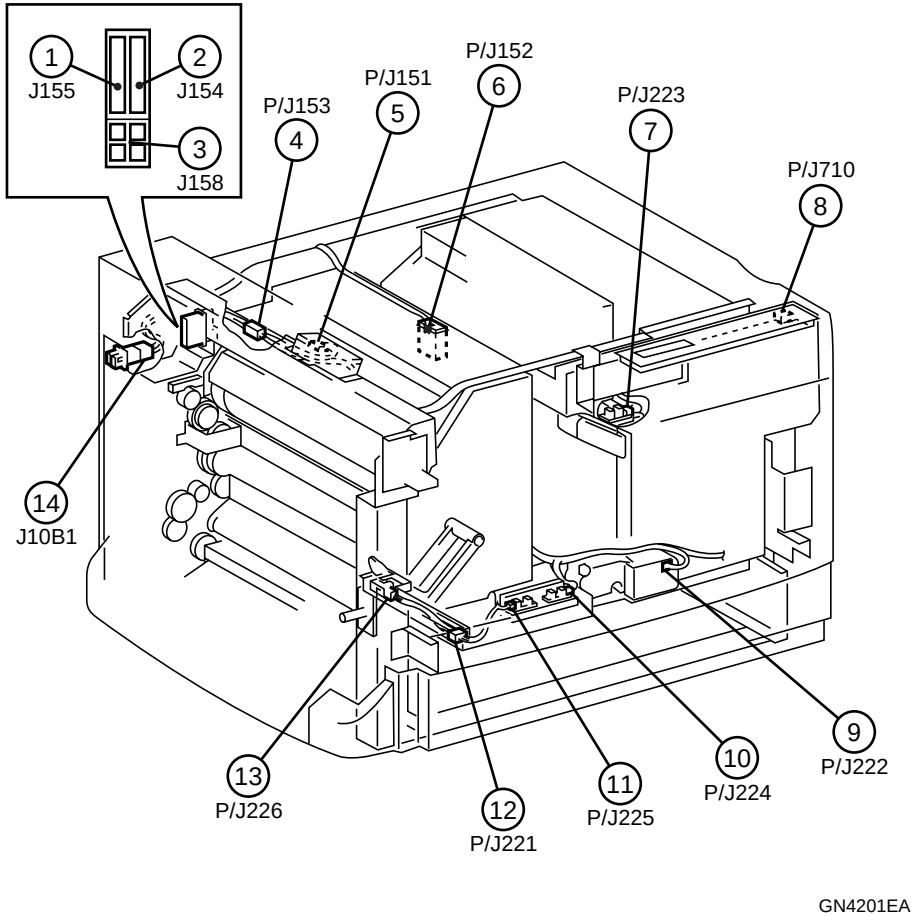

Figure 7-1. IOT Front Location P/J Layout Diagram

manuals4you.com

FUSER UNIT

Table 7-2. Fuser Unit P/J List

Item No.	P/J No.	Description
1	P 155	N.C.
2	P 154	FUSER DRAWER CONNECTOR and FUSER UNIT
3	P 158	FUSER DRAWER CONNECTOR and FUSER UNIT
4	P/J 157	Connection inside FUSER UNIT
5	P/J 159	Connection inside FUSER UNIT
6	P/J 156	Connection inside FUSER UNIT

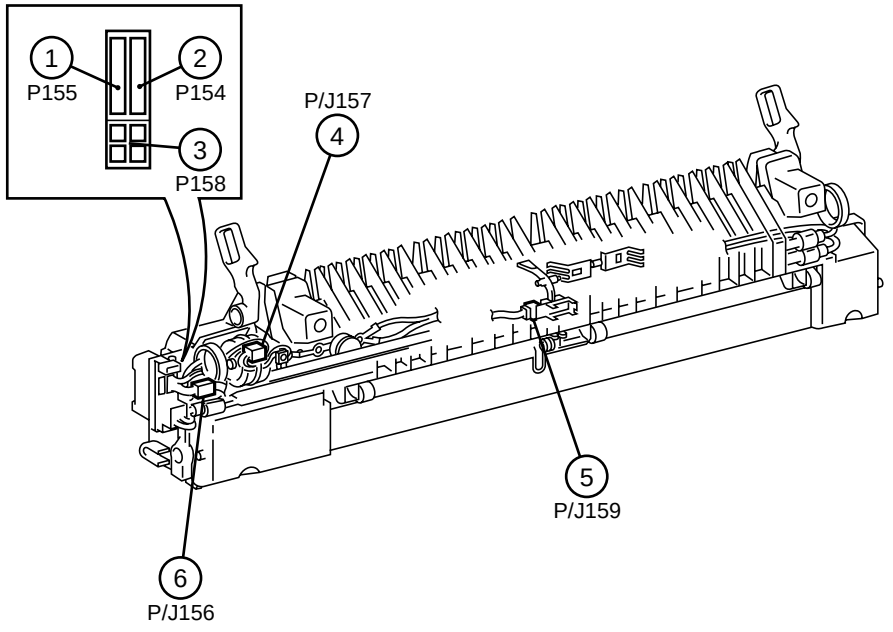

GN4202EA

Figure 7-2. Fuser Unit P/J Layout Diagram

REGI/MOB

Table 7-3. Regi/MOB P/J List

Item No.	P/J No.	Description
1	P/J 276	Connection inside SENSOR ASSY MOB ADC
2	P/J 272	SENSOR ASSY MOB ADC and HARNESS ASSY REGI
3	P/J 273	Connection inside SENSOR ASSY MOB ADC
4	P/J 274	Connection inside SENSOR ASSY MOB ADC
5	P/J 23A7	OHP SENSOR and HARNESS ASSY REGI
6	P/J 23A8	SENSOR REGI and HARNESS ASSY REGI
7	P/J 23A9	CLUTCH REGI and HARNESS ASSY REGI

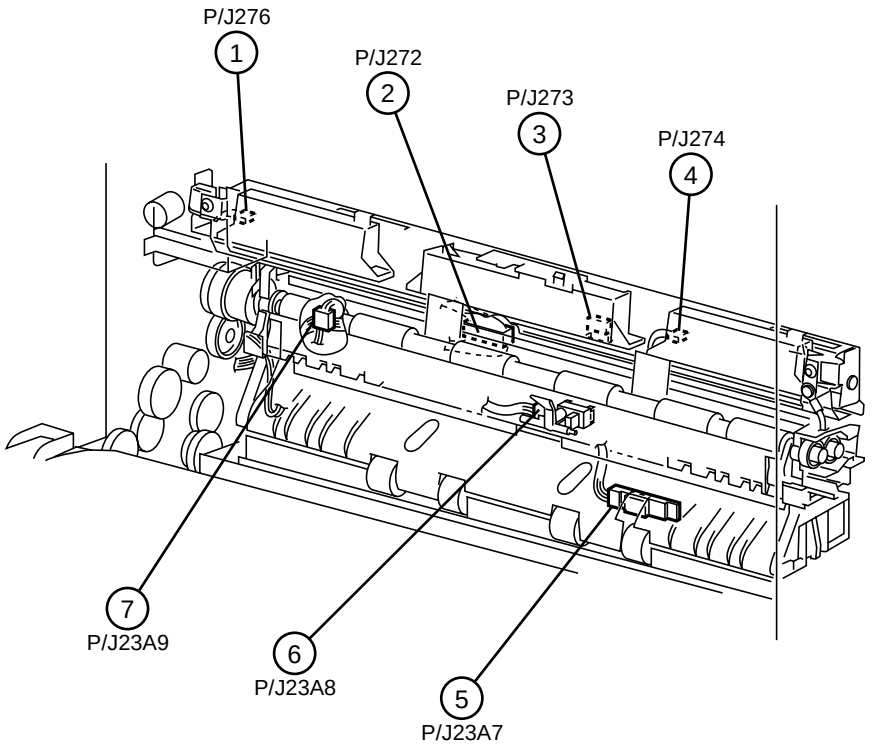

GN4203EA

Figure 7-3. Regi/MOB P/J Layout Diagram

manuals4you.com

DISPENSER UNIT

Table 7-4. Dispenser Unit P/J List

Item No.	P/J No.	Description
1	P/J 182	ANTENNA YM and HARNESS ASSY ANTENNA
2	P/J 212	MOTOR DISP M and HARNESS ASSY DISP
3	P/J 211	MOTOR DISP Y and HARNESS ASSY DISP
4	P/J 214	MOTOR DISP K and HARNESS ASSY DISP
5	P/J 213	MOTOR DISP C and HARNESS ASSY DISP
6	P/J 181	ANTENNA CK and HARNESS ASSY ANTENNA

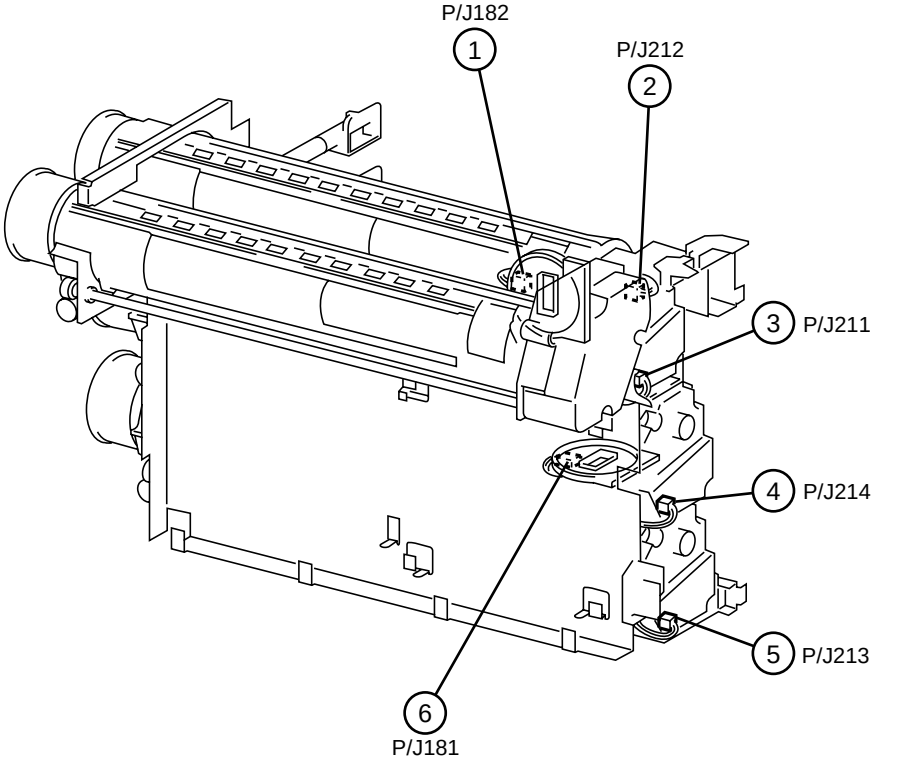

Figure 7-4. Dispenser Unit P/J Layout Diagram

MCU PWB

Table 7-5. MCU PWB P/J List

Item No.	P/J No.	Description
1	P/J 18	MCU PWB and HARNESS ASSY ANTENNA
2	P/J 17	MCU PWB and HARNESS ASSY R-TOP1
3	P/J 11	MCU PWB and HARNESS ASSY ROS
4	P/J 12	MCU PWB and HARNESS ASSY ROS
5	P/J 14	MCU PWB and FLAT CABLE ESS-MCU
6	P/J 15	MCU PWB and HARNESS ASSY R-TOP1
7	P/J 23	MCU PWB and HARNESS ASSY R-BTM
8	P/J 26	MCU PWB and HARNESS ASSY R-BTM
9	P/J 10	MCU PWB and HARNESS ASSY R-BTM
10	P/J 29	MCU PWB and HARNESS ASSY P-SIZE
11	P/J 16	MCU PWB and HARNESS ASSY R-BTM
12	P/J 13	MCU PWB and HARNESS ASSY R-BTM
13	P/J 25	MCU PWB and HARNESS ASSY R-BTM
14	P/J 20	MCU PWB and HARNESS ASSY CRUM
15	P/J 22	MCU PWB and HARNESS ASSY F-SNR
16	P/J 27	MCU PWB and HARNESS ASSY R-BTM
17	P/J 21	MCU PWB and HARNESS ASSY DISP
18	P 28	N.C.

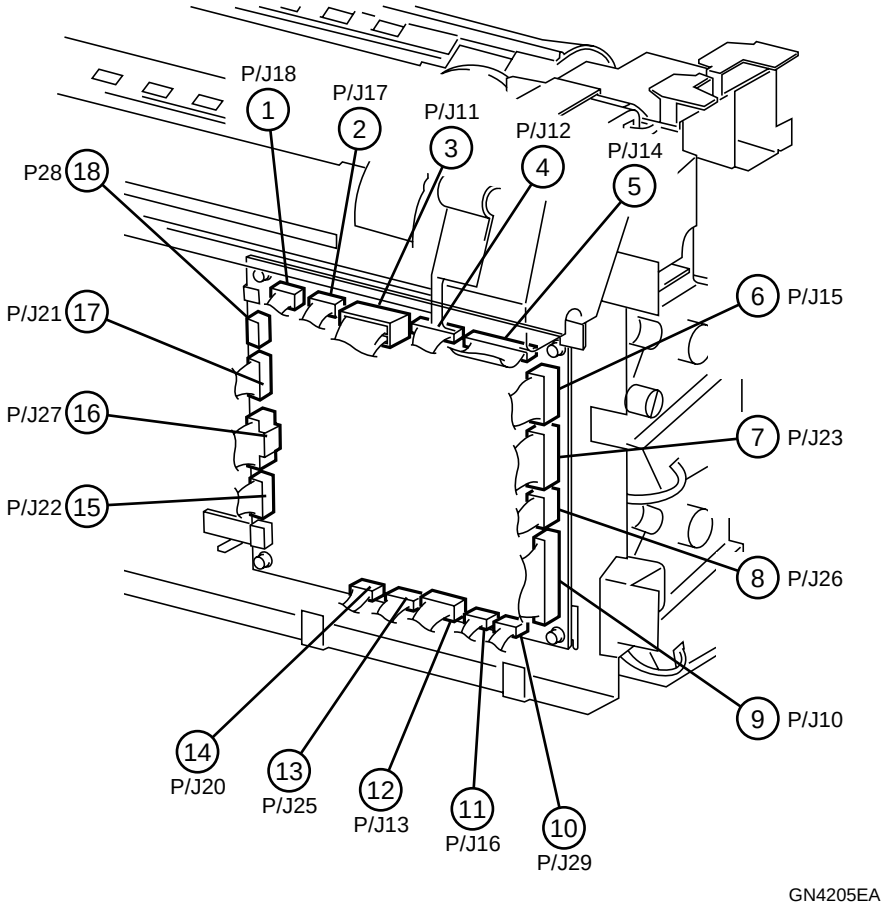

Figure 7-5. MCU PWB P/J Layout Diagram

manuals4you.com

IOT REAR LOCATION

Table 7-6. IOT Rear Location P/J List (1)

Item No.	P/J No.	Description
1	P/J 111	ROS ASSY and HARNESS ASSY ROS
2	P/J 120	ROS ASSY and HARNESS ASSY ROS
3	P/J 1431	ROS ASSY and HARNESS ASSY ESS-ROS
4	P/J 201B	DRUM UNIT and TERMINAL ASSY PHD
5	P/J 201A	Connection inside TERMINAL ASSY PHD
6	P/J 201	TERMINAL ASSY PHD and HARNESS ASSY CRUM
7	P/J 1071	DRIVE ASSY PR and HARNESS ASSY R-TOP1
8	P/J 1041	FAN FUSER and HARNESS ASSY R-TOP1
9	P/J 1061	DRIVE ASSY MAIN and HARNESS ASSY R-BTM
10	P/J 23A4	CLUTCH ASSY FEED and HARNESS ASSY R-BTM
11	P/J 23A5	CLUTCH ASSY FEED and HARNESS ASSY R-BTM
12	P/J 23B2	LEVEL SENSOR 2 and HARNESS ASSY R-BTM
13	P/J 23B1	LEVEL SENSOR 1 and HARNESS ASSY R-BTM
14	P/J 23A6	HARNESS ASSY REGI and HARNESS ASSY R-BTM
15	P/J 271	HARNESS ASSY R-BTM and HARNESS ASSY REGI
16	P 251	HARNESS ASSY R-BTM and HARNESS ASSY 3TM/STM
17	P/J 291	SENSOR ASSY TRACKING and HARNESS ASSY P-SIZE
18	P/J 292	SWICTH ASSY SIZE and HARNESS ASSY P-SIZE

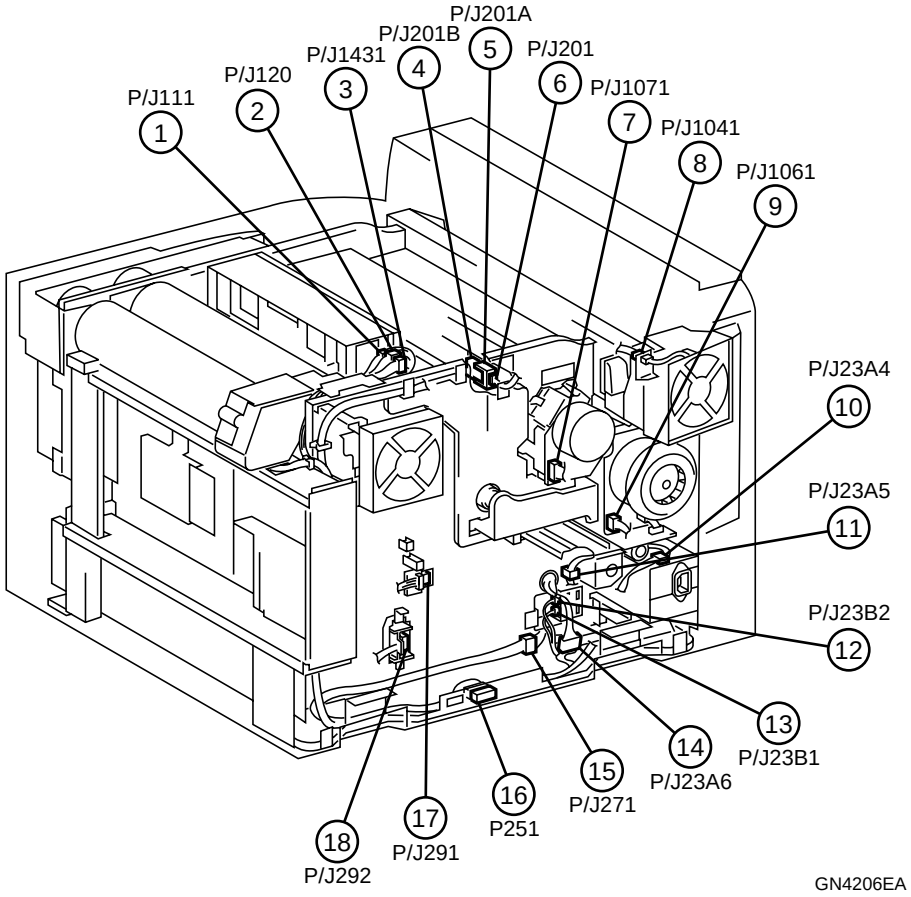

Figure 7-6. IOT Rear Location P/J Layout Diagram (1)

Table 7-7. IOT Rear Location P/J List (2)

Item No.	P/J No.	Description
1	P/J 134	HVPS and HARNESS ASSY IDT
2	P/J 133	HVPS and DRIVE ASSY PR (IDT)
3	P/J 103	LVPS and FUSER DRAWER CONNECTOR
4	P/J 102	LVPS and MAIN POWER SWITCH & INLET
5	P/J 135	HVPS and HARNESS ASSY HVLH
6	P/J 109	LVPS and HARNESS ESS-LVPS
7	P/J 10A	LVPS and HARNESS ASSY R-TOP1
8	P/J 106	LVPS and HARNESS ASSY R-BTM
9	P/J 108	LVPS and HARNESS ASSY R-BTM
10	P/J 101	LVPS and HARNESS ASSY R-BTM
11	P/J 107	LVPS and HARNESS ASSY R-TOP1
12	P/J 105	LVPS and FAN LV
13	P/J 104	LVPS and HARNESS ASSY R-TOP1
14	P/J 132	HVPS and HARNESS ASSY R-BTM
15	P/J 131	HVPS and HARNESS ASSY R-BTM
16	T401	HVPS and HARNESS ASSY HVLH

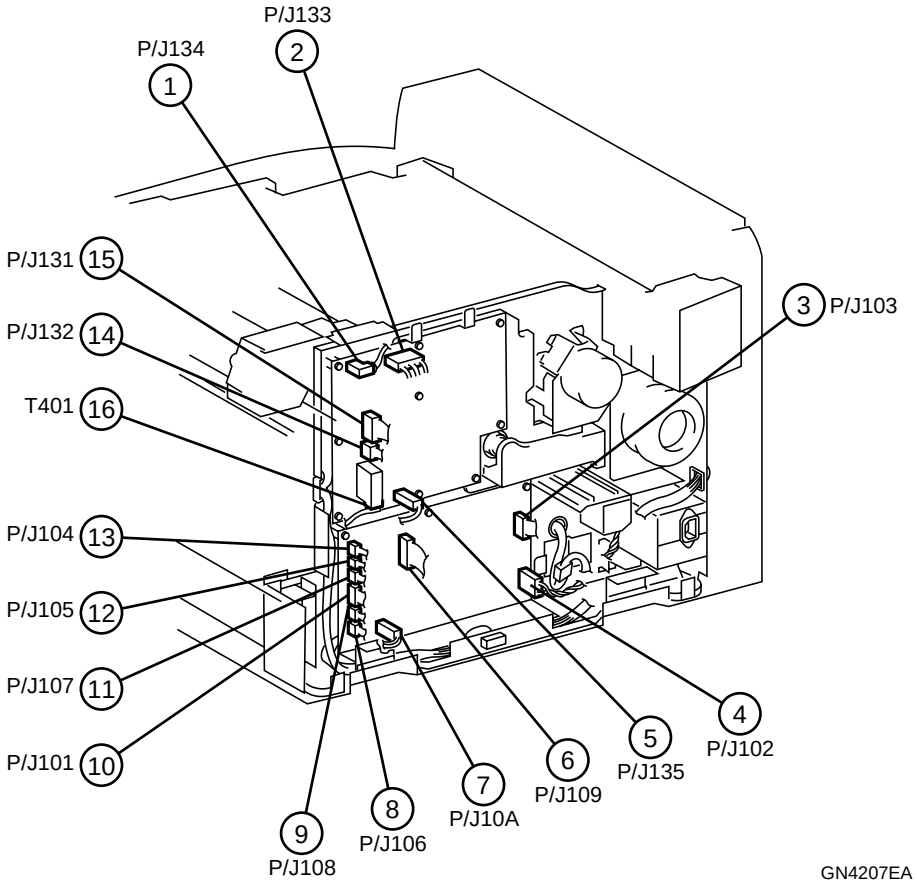

Figure 7-7. IOT Rear Location P/J Layout Diagram (2)

manuals4you.com

LH ASSY

Table 7-8. LH ASSY P/J List

Item No.	P/J No.	Description
1	P/J 23B6	GATE SOLENOID and HARNESS ASSY LH
2	P/J 23B4	V-TRA FAN and HARNESS ASSY LH
3	P/J 261	HARNESS ASSY R-BTM and HARNESS ASSY MAIN
4	P/J 23B5	POP SENSOR and HARNESS ASSY LH

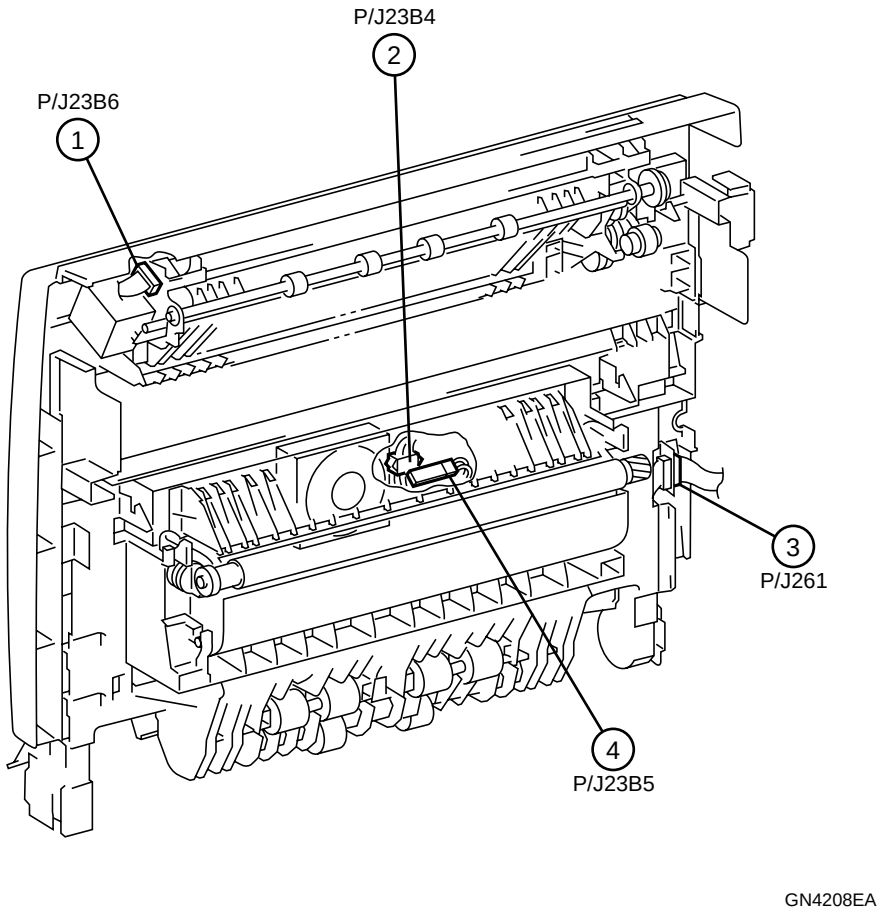

Figure 7-8. LH ASSY P/J Layout Diagram

DUPLEX

Table 7-9. Duplex P/J List

Item No.	P/J No.	Description
1	P/J 3622	DUPLEX SENSOR and HARNESS ASSY DUP
3	P/J 361	DUPLEX PWB and EXIT MOTOR
4	P/J 364	DUPLEX PWB and DUPLEX CLUTCH
5	P/J 363	DUPLEX PWB and DUPLEX MOTOR
5	P/J 3621	DUPLEX COVER OPEN SWITCH and HARNESS ASSY DUP
6	P/J 362	DUPLEX PWB and HARNESS ASSY DUP
7	P/J 36	DUPLEX PWB and HARNESS ASSY MAIN

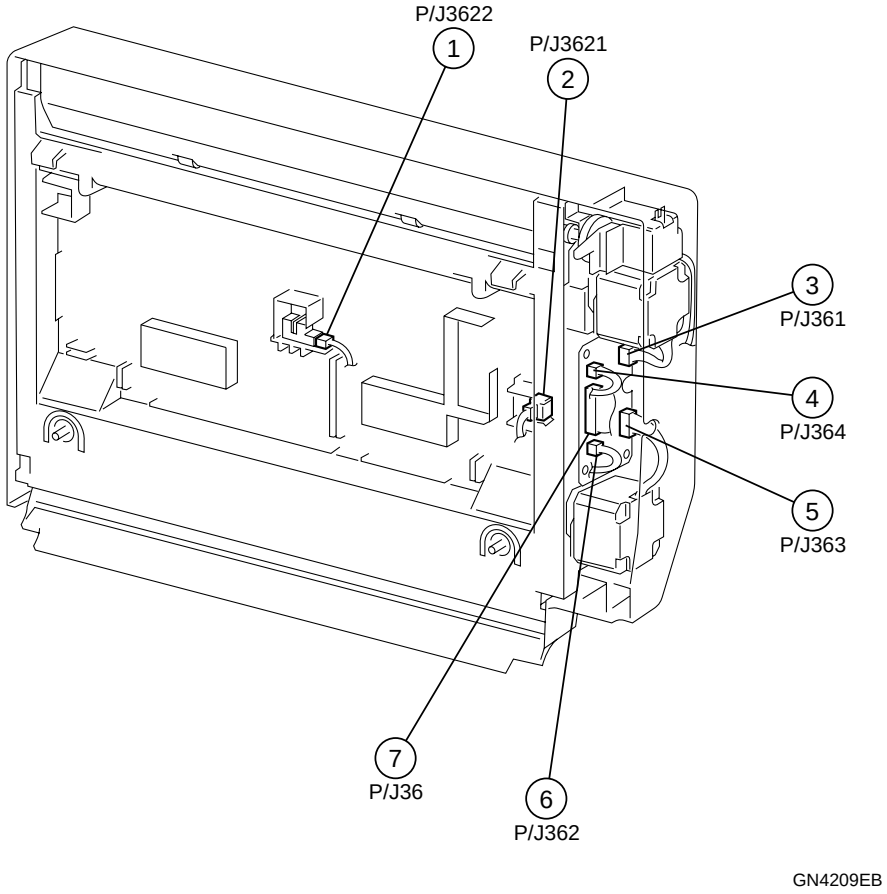

Figure 7-9. Duplex P/J Layout Diagram

manuals4you.com

MSI

Table 7-10. MSI P/J List

Item No.	P/J No.	Description
1	P/J 23B3	HARNESS ASSY R-BTM and HARNESS ASSY LH
2	P/J 23A3	SOLENOID ASSY and HARNESS ASSY R-BTM
3	P/J 23A2	MSI NO PAPER SENSOR and HARNESS ASSY N/P
4	P/J 23A1	HARNESS ASSY R-BTM and HARNESS ASSY N/P

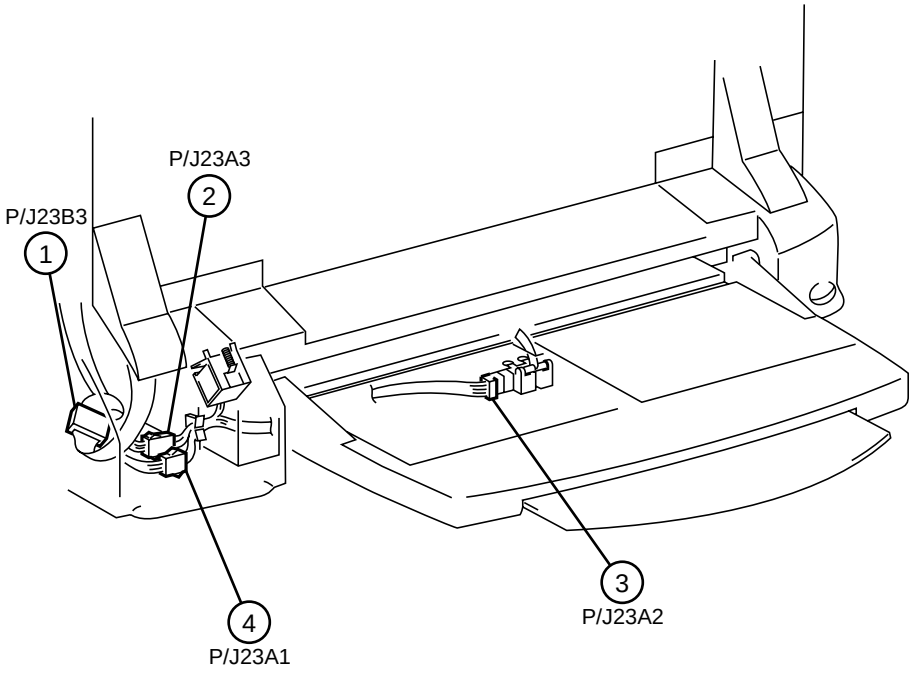

GN4210EA

Figure 7-10. MSI P/J Layout Diagram

ROS

Table 7-11. ROS P/J List

Item No.	P/J No.	Description
1	P/J 119	Connection inside ROS ASSY
2	P/J 113	Connection inside ROS ASSY
3	P/J 11B	Connection inside ROS ASSY
4	P/J 11C	Connection inside ROS ASSY
5	P/J 114	Connection inside ROS ASSY
6	P/J 116	Connection inside ROS ASSY
7	P/J 11E	Connection inside ROS ASSY
8	P/J 115	Connection inside ROS ASSY
9	P/J 11D	Connection inside ROS ASSY
10	P/J 112	Connection inside ROS ASSY
11	P/J 118	Connection inside ROS ASSY
12	P/J 11A	Connection inside ROS ASSY

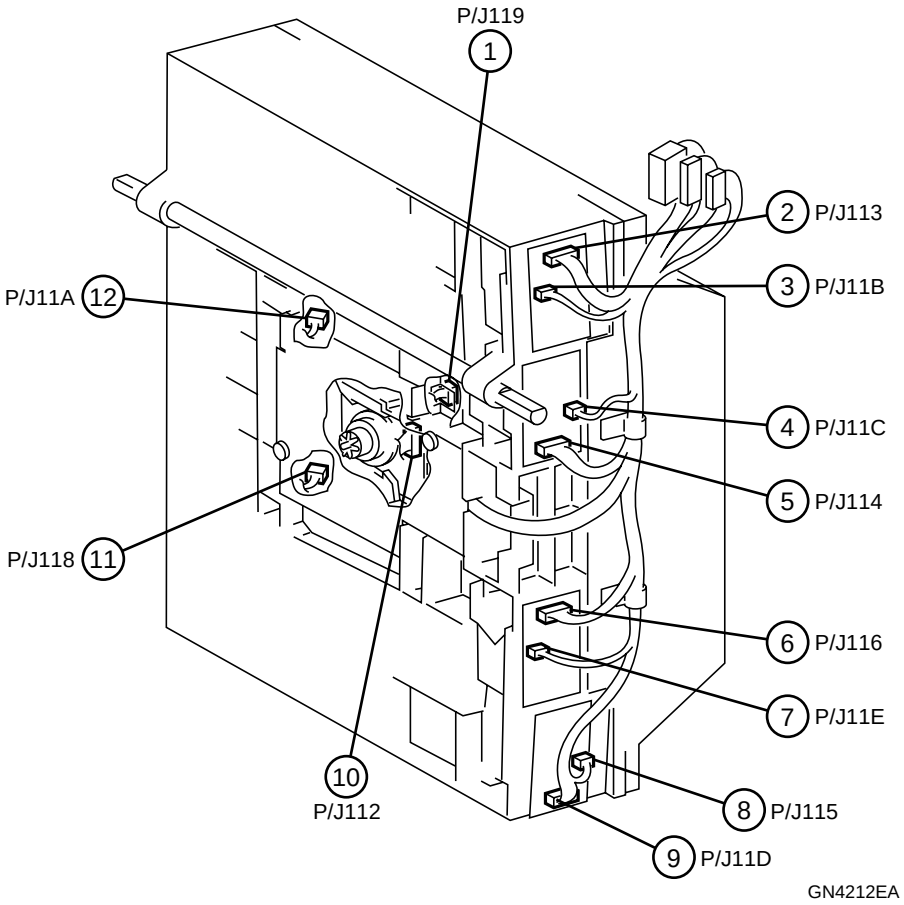

Figure 7-11. ROS P/J Layout Diagram

manuals4you.com

3TM FEEDER

Table 7-12. 3TM Feeder P/J List

Item No.	P/J No.	Description
1	P/J 205	TRAY FEED/LIFT MOTOR and HARNESS ASSY SNR
2	P/J 108	TRAY LEVEL SENSOR and HARNESS ASSY SNR
3	P/J 106	TRAY NO PAPER SENSOR and HARNESS ASSY SNR
4	P/J 821	PAPER SIZE SENSOR and HARNESS ASSY F/O
5	P/J 840	HARNESS ASSY TA and HARNESS ASSY 3TM
6	P/J 830	TAKEAWAY SENSOR and HARNESS ASSY TA
7	J 617	HARNESS ASSY SNR (→ To P/J 674)
7	P/J 674	HARNESS ASSY SNR and HARNESS ASSY 3TM
8	P/J 842	HARNESS ASSY F/O and HARNESS ASSY 3TM
9	J 617	HARNESS ASSY SNR (→ To P/J 672)
9	P/J 672	HARNESS ASSY SNR and HARNESS ASSY 3TM
10	P/J 841	HARNESS ASSY F/O and HARNESS ASSY 3TM
11	J 617	HARNESS ASSY SNR (→ To P/J 670)
11	P/J 670	HARNESS ASSY SNR and HARNESS ASSY 3TM
12	P/J 812	LH COVER INTL SW and HARNESS ASSY 3TM

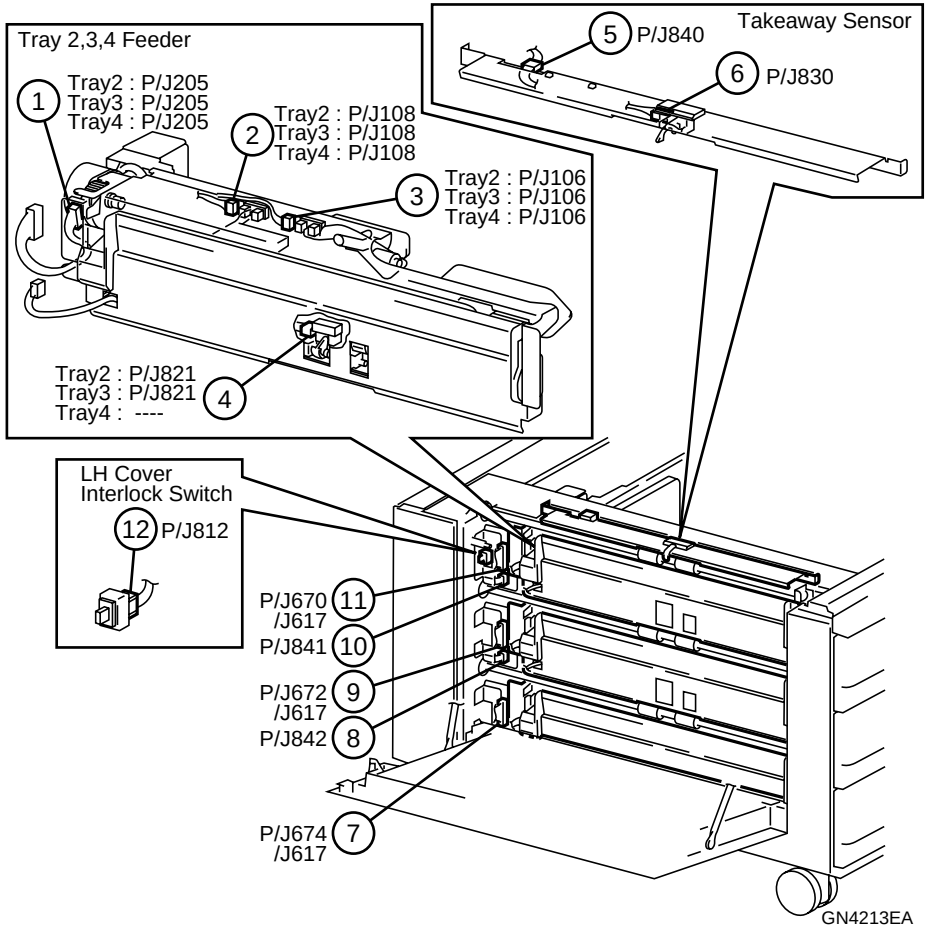

Figure 7-12. 3TM Feeder P/J Layout Diagram

3TM PAPER SIZE SWITCH

Table 7-13. 3TM Paper size Switch P/J List

Item No.	P/J No.	Description
1	P/J 816	PAPER SIZE SENSOR and HARNESS ASSY 3TM
2	P/J 820	PAPER SIZE SENSOR and HARNESS ASSY 3TM
3	P/J 824	PAPER SIZE SENSOR and HARNESS ASSY 3TM

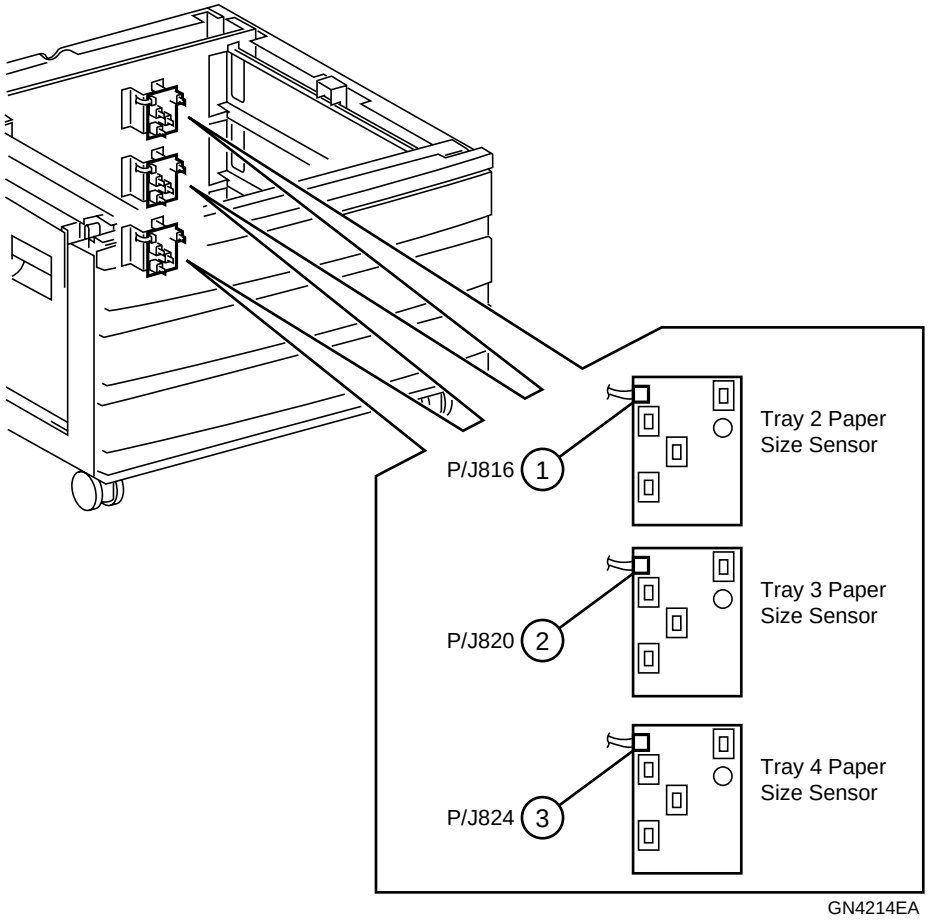

Figure 7-13. 3TM Paper size Switch P/J Layout Diagram

manuals4you.com

3TM REAR LOCATION

Table 7-14. 3TM Rear Location P/J List

Item No.	P/J No.	Description
1	P/J 546	PWB ASSY 3TM and HARNESS ASSY 3TM
2	P/J 541	PWB ASSY 3TM and HARNESS ASSY 3TM
3	P/J 547	PWB ASSY 3TM and HARNESS ASSY 3TM
4	J 251	HARNESS ASSY R-BTM and HARNESS ASSY 3TM
5	P/J 826	MOTOR ASSY 3TM and HARNESS ASSY 3TM
6	P/J 552	PWB ASSY 3TM and HARNESS ASSY 3TM
7	P/J 549	PWB ASSY 3TM and HARNESS ASSY 3TM
8	P/J 548	PWB ASSY 3TM and HARNESS ASSY 3TM

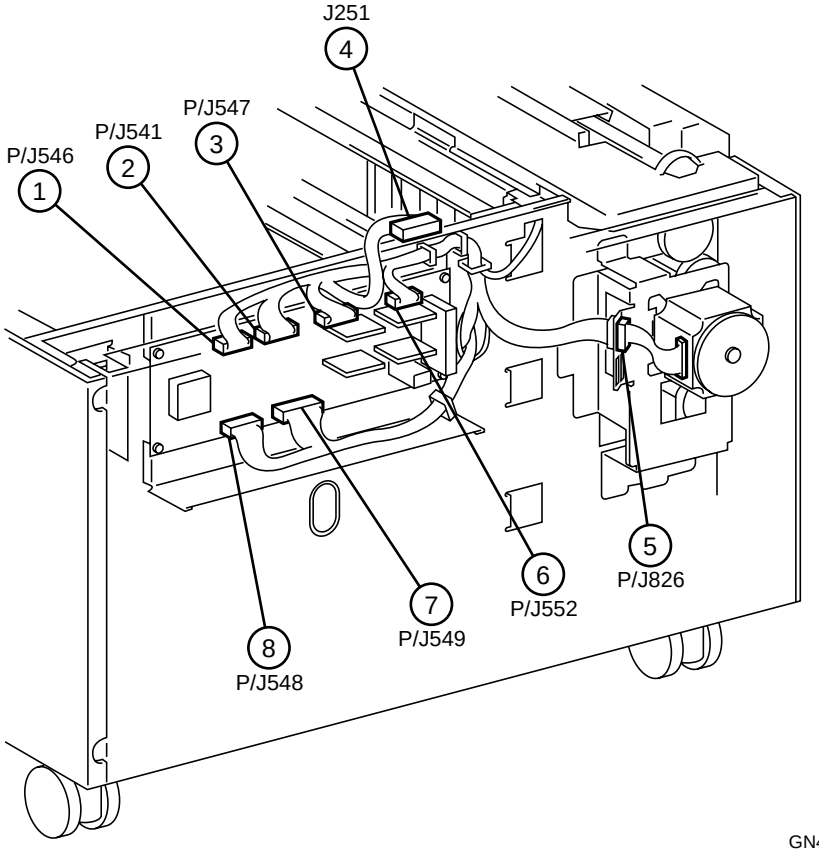

Figure 7-14. 3TM Rear Location P/J Layout Diagram

manuals4you.com

STM FEEDER

Table 7-15. STM Feeder P/J List

Item No.	P/J No.	Description
1	P/J 812	LH COVER INTL SW and HARNESS ASSY STM
2	P/J 816	PAPER SIZE SENSOR and HARNESS ASSY STM
3	P/J 840	HARNESS ASSY TA and HARNESS ASSY STM
4	P/J 830	TAKEAWAY SENSOR and HARNESS ASSY TA
5	J 617	HARNESS ASSY SNR (→ To P/J 670)
5	P/J 670	HARNESS ASSY SNR and HARNESS ASSY STM
6	P/J 106	TRAY NO PAPER SENSOR and HARNESS ASSY SNR
7	P/J 108	TRAY LEVEL SENSOR and HARNESS ASSY SNR
8	P/J 205	TRAY FEED/LIFT MOTOR and HARNESS ASSY SNR

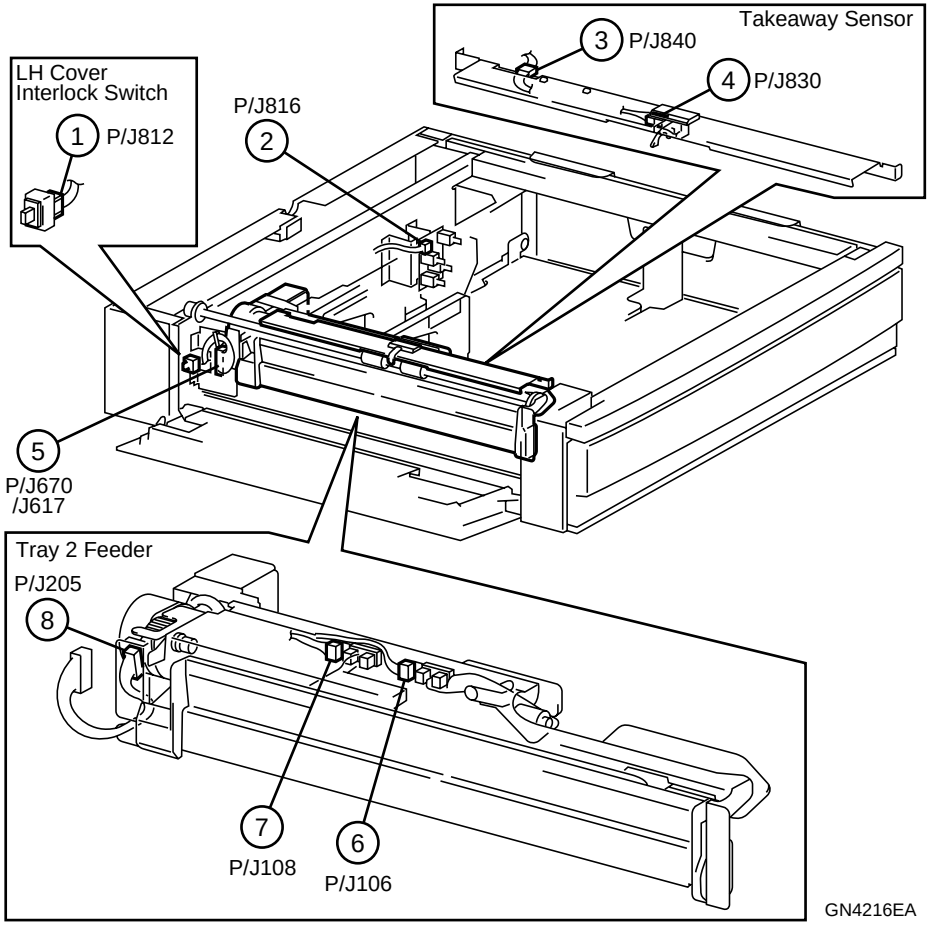

Figure 7-15. STM Feeder P/J Layout Diagram

manuals4you.com

STM REAR LOCATION

Table 7-16. STM Rear Location P/J List

Item No.	P/J No.	Description
1	J 251	HARNESS ASSY R-BTM and HARNESS ASSY STM
2	P/J 826	MOTOR ASSY STM and HARNESS ASSY STM
3	P/J 552	PWB ASSY STM and HARNESS ASSY STM
4	P/J 547	PWB ASSY STM and HARNESS ASSY STM
5	P/J 541	PWB ASSY STM and HARNESS ASSY STM
6	P/J 546	PWB ASSY STM and HARNESS ASSY STM

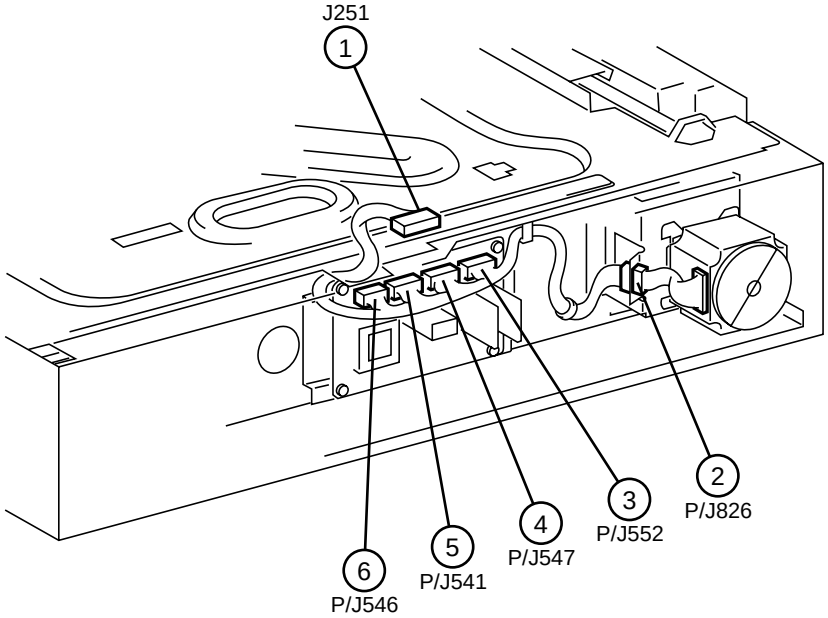

GN4217EA

Figure 7-16. STM Rear Location P/J Layout Diagram

7.2 Wiring Diagrams and Signal Information

Wiring Diagrams and Signal Information consist of "7.2.3 Overall Connection Wiring Diagrams *(p.516)*" and "7.2.4 Detailed Connection Wiring Diagrams *(p.519)*".

7.2.1 How to use Overall Connection Wiring Diagrams

[CH X, Y] in each connection indicates that the details of that connection wiring are described on the page of [CH X, Y] in Detailed Connection Wiring Diagram. (CH: Abbreviation for CHAIN)

The table below shows how to interpret the Overall Connection Wiring Diagrams.

	Represents connection of components by harness, wire, etc.
Harness Assy XXX PLX.Y.Z	Represents a harness name.
	Represents a harness branch.
B	Overall Connection Wiring Diagram shown on another page. Represents that it is connected to Ⓑ.
X X X	Represents a connector, with the connector No. (P/J XXX) shown inside.
POWER SUPPLY A PL X.Y.Z	Indicates a part, and represents a part name.

GN70001EA

manuals4you.com

7.2.2 How to use Detailed Connection Wiring Diagrams

7.2.2.1 Symbol explanations

Table 7-17. Wiring Diagram Symbols (Components Connection)

Symbol	Abbreviation
1	This symbol is normally attached when the note on the same page is to be referred to.
J2-5	This symbol represents a signal test point.
1.3	This symbol is attached to represent the source of an input to a function. In this case, the symbol indicates that the input comes from Group Function 3 of Chain 1.
6.1	This symbol is attached to represent the destination of an output from a function. In this case, the symbol indicates that the output goes to Group Function 1 of Chain 6.
A B A B	This symbol represents that signal lines are connected in the vertical direction.
	This symbol represents that a signal line is connected in the horizontal direction.
ZONE E3	This symbol indicates that the line continues to the Zone (E3) in the diagram.
ZONE E4	This symbol indicates that the line is continued from the Zone (E4) in the diagram.

Table 7-17. Wiring Diagram Symbols (Components Connection)

Symbol	Abbreviation
+5VDC (1.2 J2)	This symbol represents a power supply line output in Chain 1.
	This symbol represents that a signal flows from right to left in the direction opposite to an ordinary signal.
	This symbol represents a feedback signal.
	This symbol represents a mechanical connection to a part.
	This symbol represents a mechanical drive signal and a signal flowing direction.
	This symbol represents a document or paper and a flowing direction.
	This symbol represents a heat, light, air or similar signal and a flowing direction.
	This symbol represents that a wire is TWIST PAIR.

7.2.2.2 Signal names

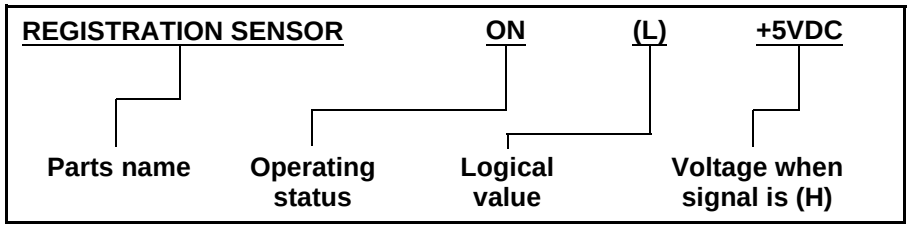

Figure 7-17. Signal Name Structure

The above indicates that this signal is (L) when REGISTRATION SENSOR has detected paper, and the signal is (H) and the voltage is +5VDC when REGISTRATION SENSOR has not detected paper.

7.2.2.3 DC voltage

Unless otherwise specified by Note or like, measure a DC voltage between the corresponding test point and Frame, and its voltage value should be within the following range.

Table 7-18. DC voltage

Voltage	Level	Range
+3.3VDC	(H)	+3.25 to +3.59VDC
+5VDC	(H)	+4.75 to +5.25VDC
+24VDC	(H)	+22.08 to +25.9VDC

7.2.2.4 Other explanations

- Voltage levels of parts

  The voltage levels (H/L) in Detailed Connection Wiring Diagrams are those actually measured by a tester.

- Meaning of abbreviation

  “DBL.PLUG” is an abbreviation for Double Plug.

- Wire colors

  In this printer, some wires are color-coded.

  The wire colors are indicated on the bottom of the signal lines by the following abbreviations.

Table 7-19. Wire colors

Abbreviation	Color
BRN	BROWN
RED	RED
ORN	ORANGE
YEL	YELLOW
GRN	GREEN
BLU	BLUE
VIO	VIOLET
GRY	GRAY
WHT	WHITE
BLK	BLACK
GN/YL	GREEN/YELLOW
PNK	PINK
SKY	SKY

manuals4you.com

7.2.3 Overall Connection Wiring Diagrams

CONNECTION WIRING DIAGRAM OF IOT

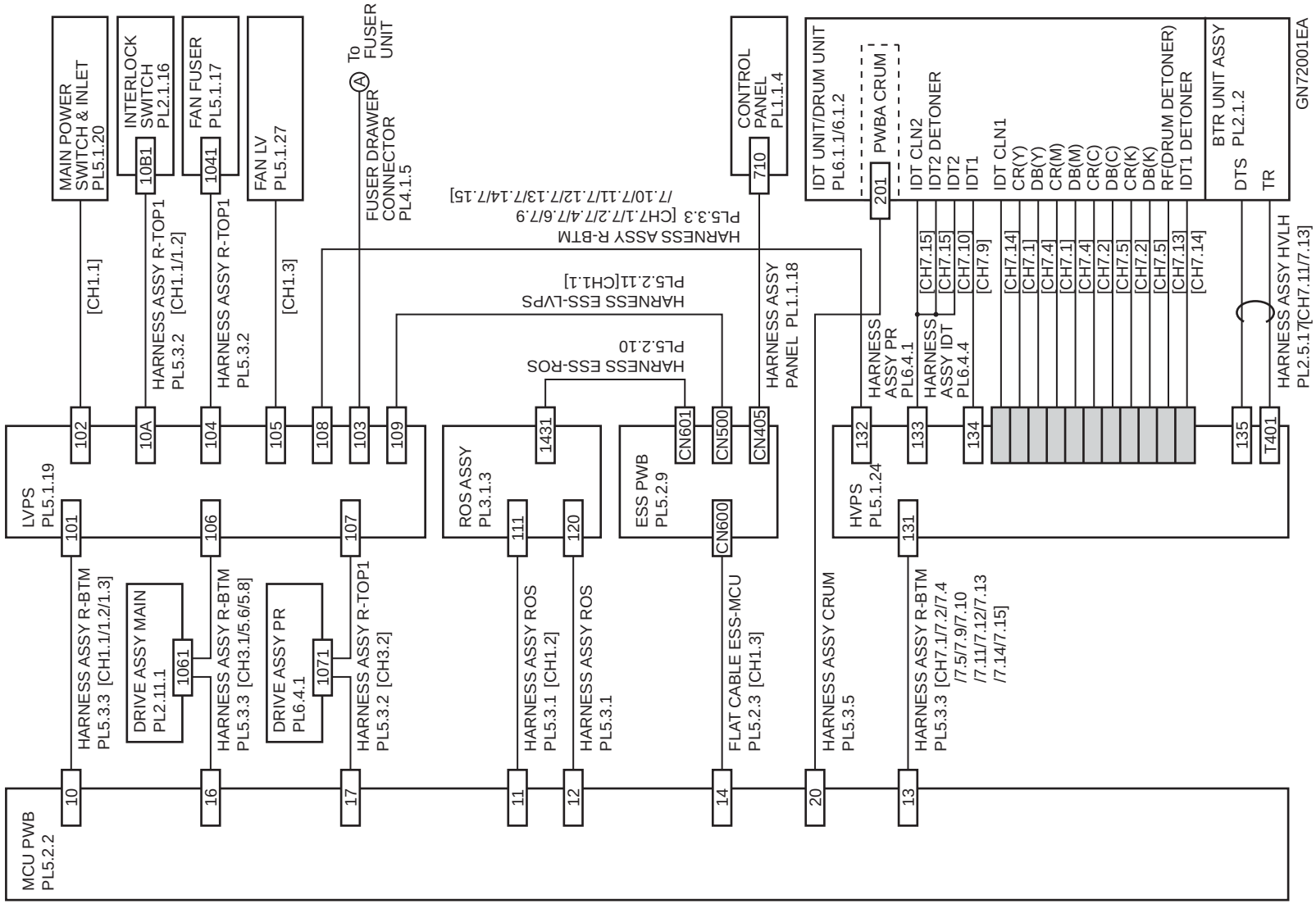

Figure 7-18. Connection Wiring Diagram of IOT (1)

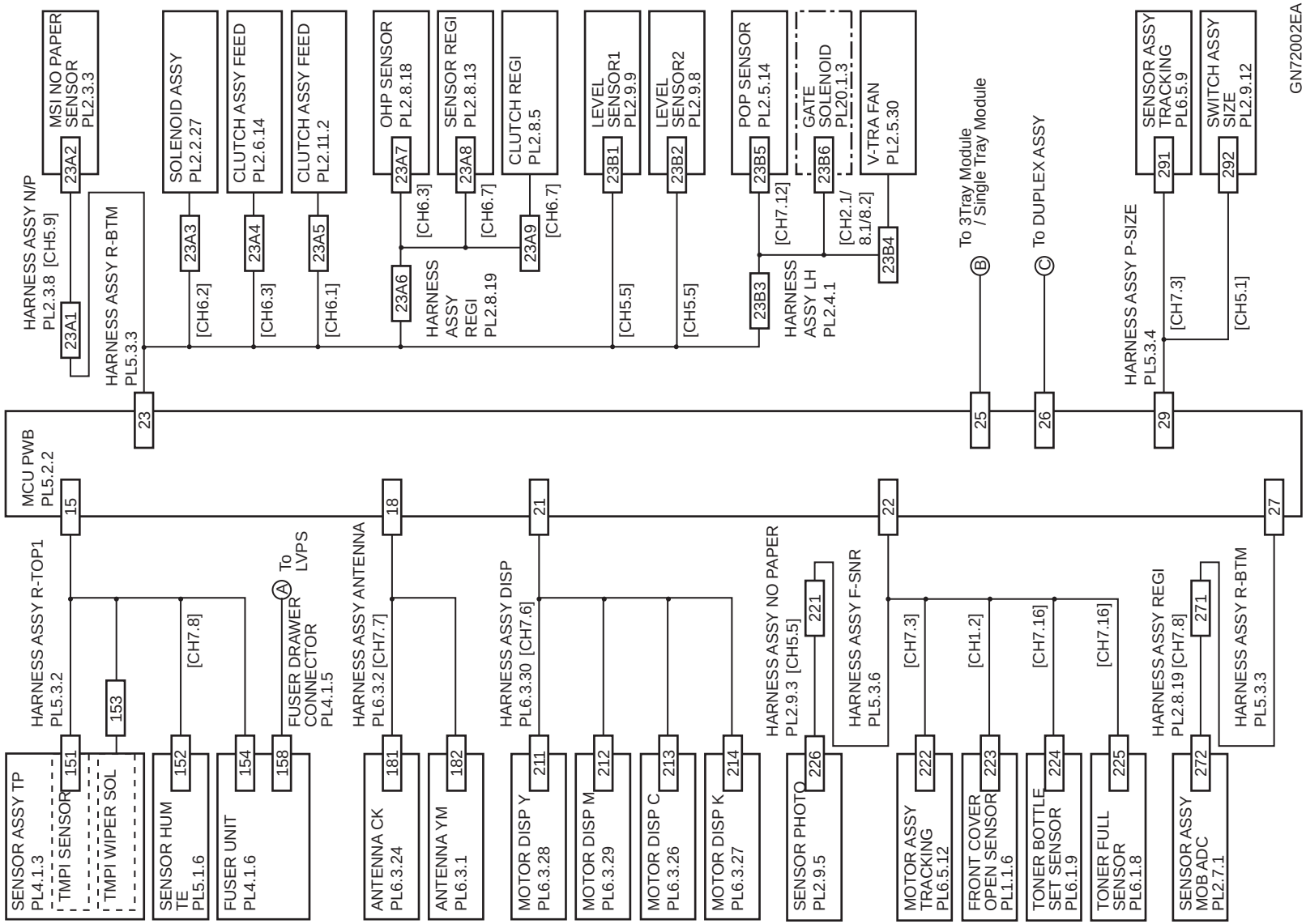

Figure 7-19. Connection Wiring Diagram of IOT (2)

manuals4you.com

CONNECTION WIRING DIAGRAM OF DUPLEX, SINGLE TRAY MODULE

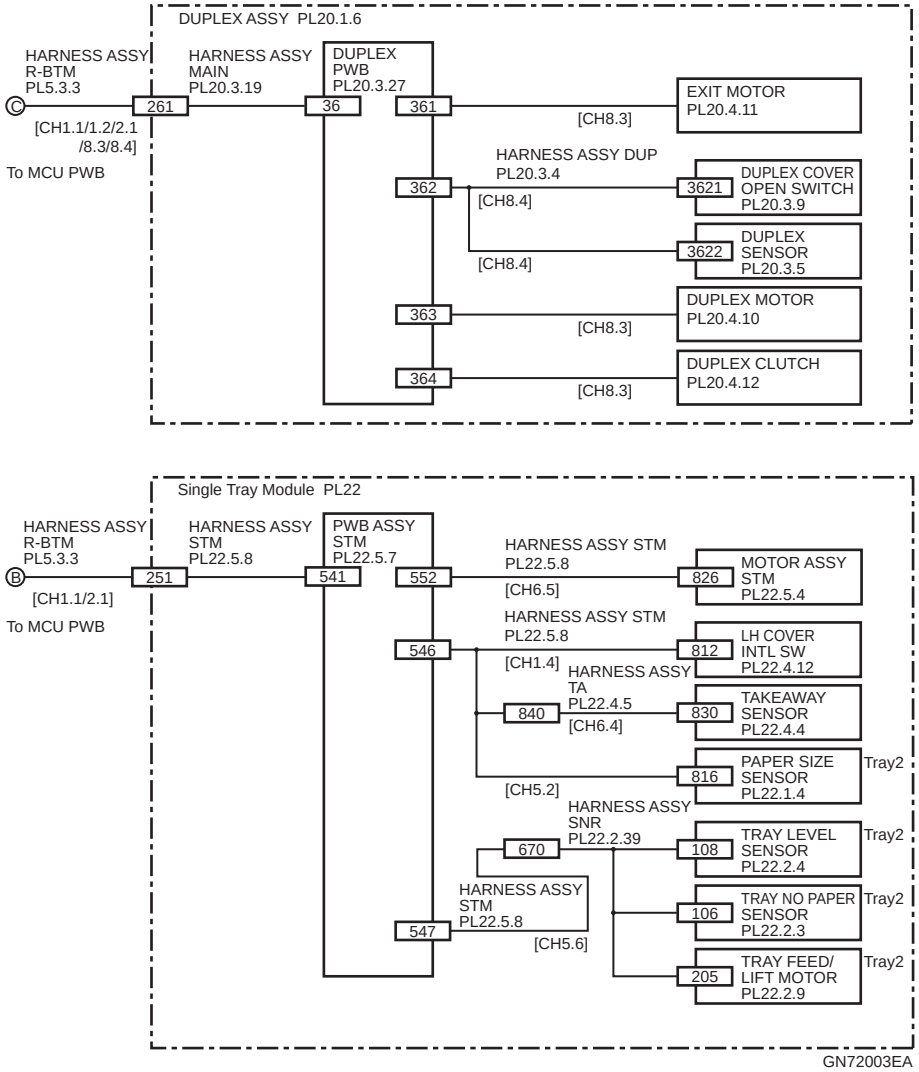

Figure 7-20. Connection Wiring Diagram of Duplex, Single Tray Module

CONNECTION WIRING DIAGRAM OF 3 TRAY MODULE

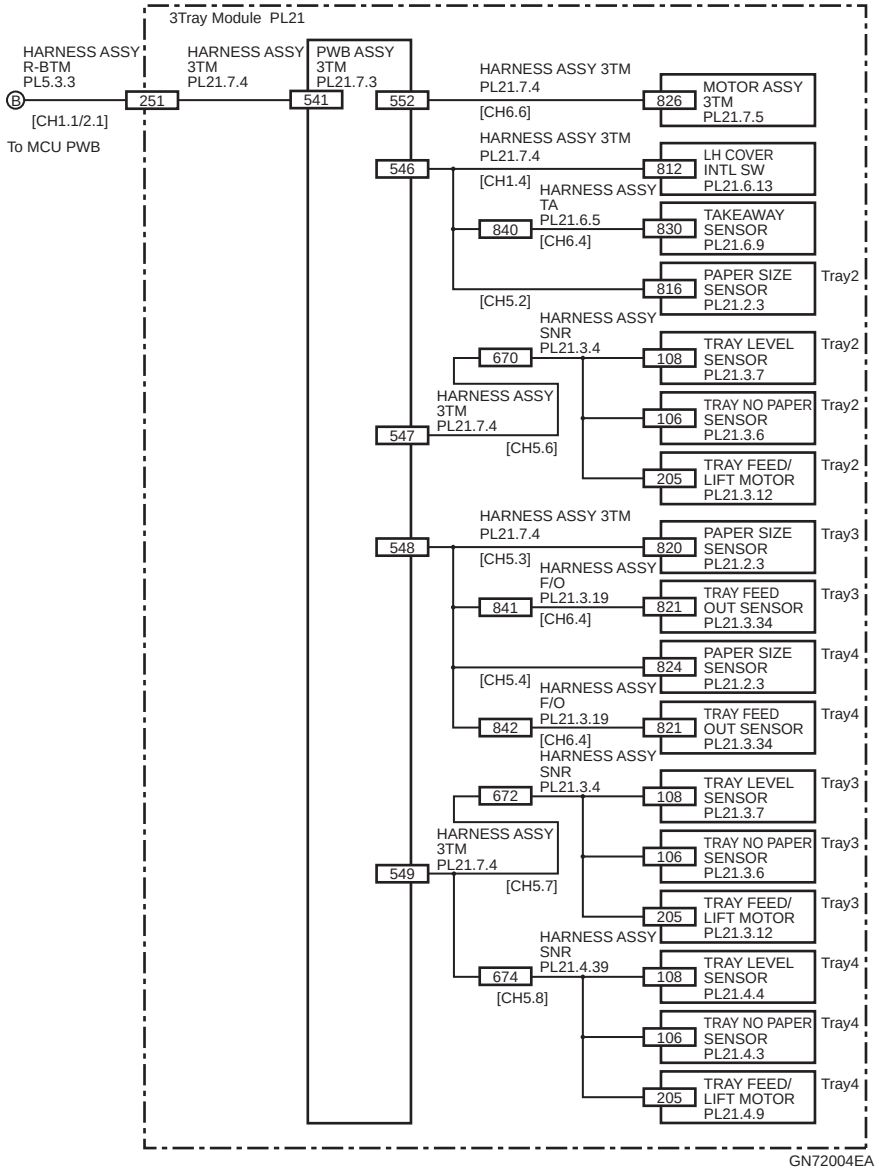

Figure 7-21. Connection Wiring Diagram of 3 Tray Module

7.2.4 Detailed Connection Wiring Diagrams

CH1.1 MAIN POWER ON AND DC POWER GENERATION

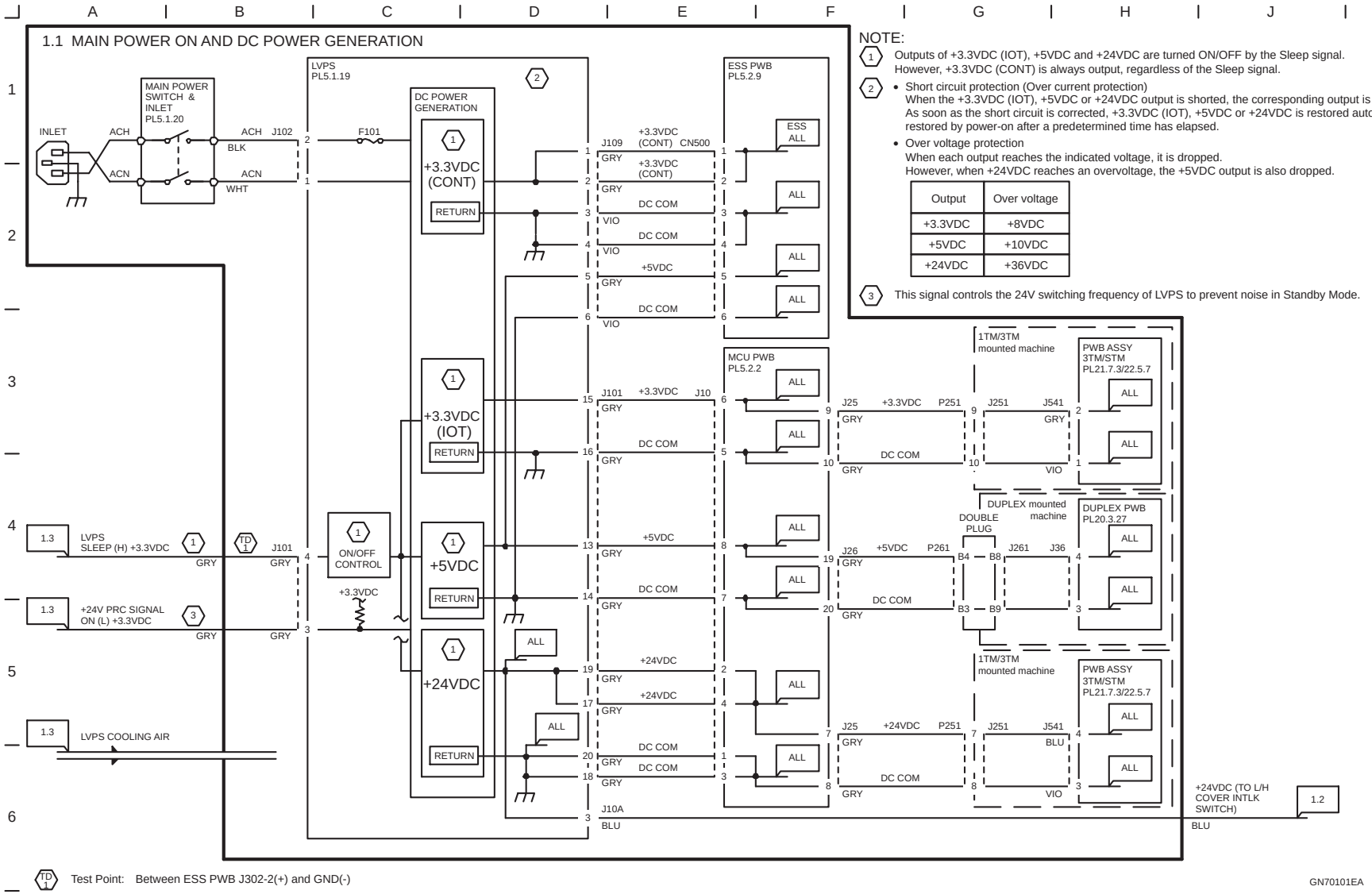

Figure 7-22. Detailed Connection Wiring Diagram (1)

manuals4you.com

CH1.2 POWER INTERLOCK SWITCHING

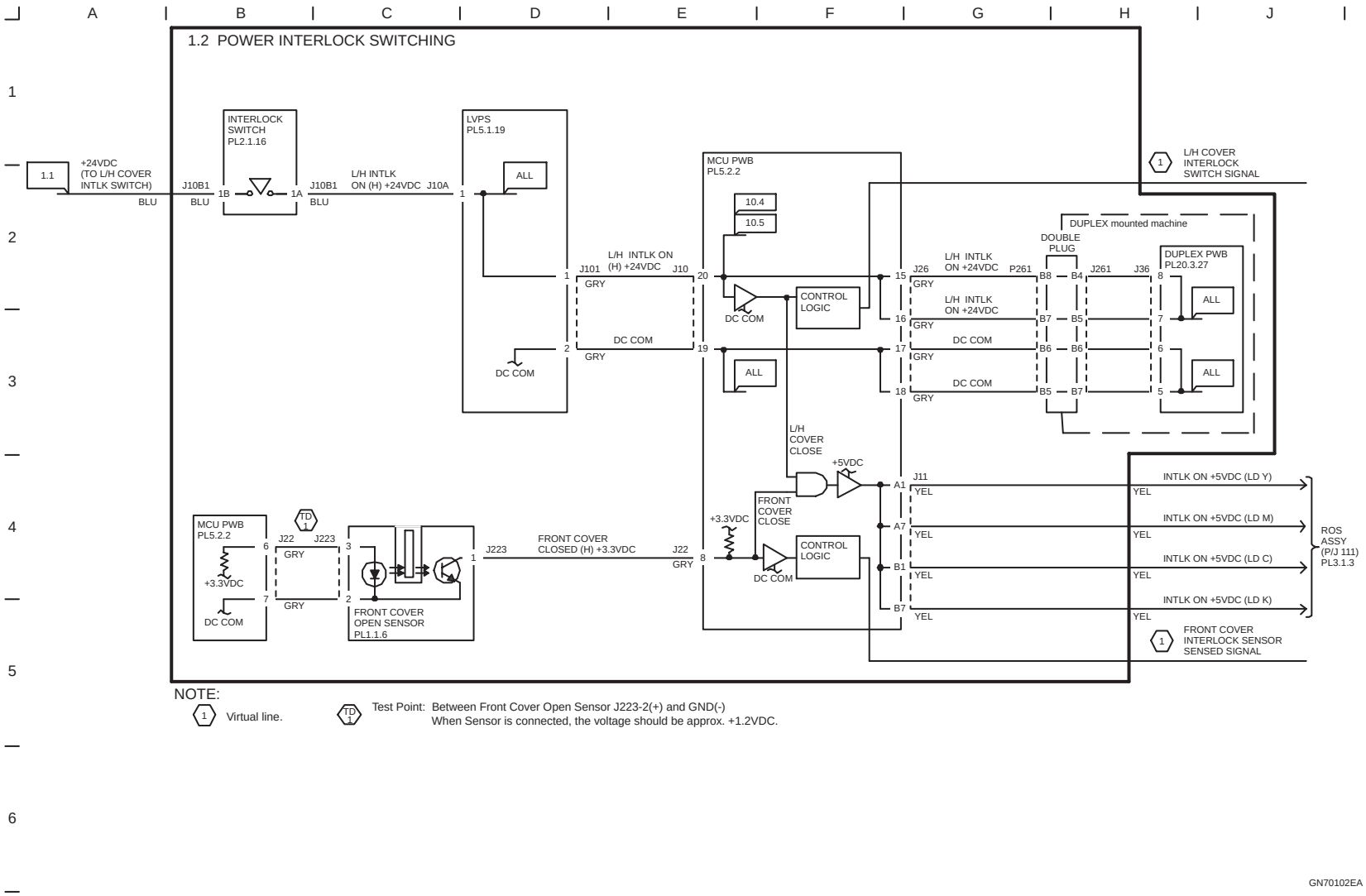

Figure 7-23. Detailed Connection Wiring Diagram (2)

CH1.3 LVPS CONTROL

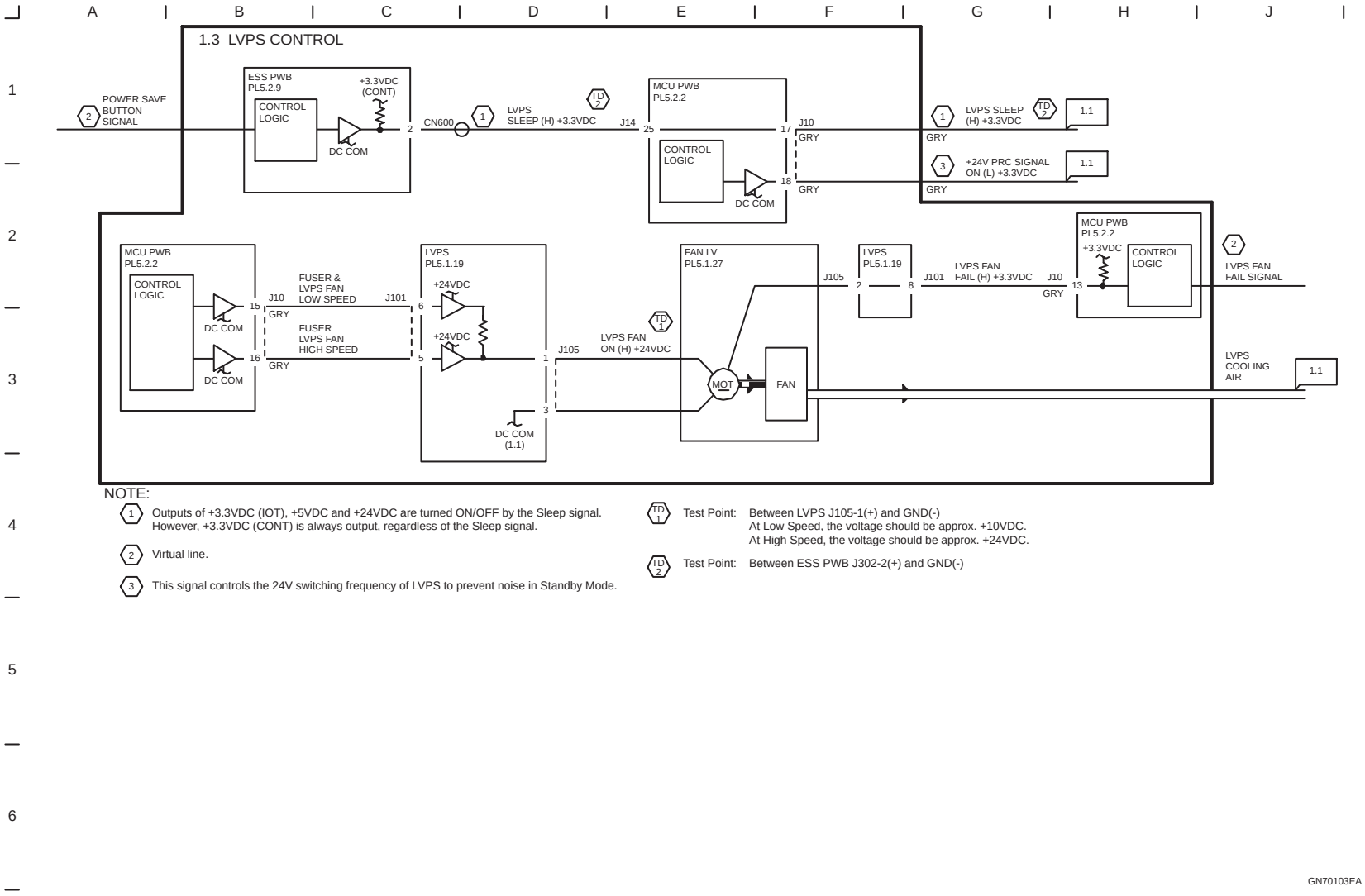

Figure 7-24. Detailed Connection Wiring Diagram (3)

manuals4you.com

CH1.4 TRAY MODULE INTERLOCK SWITCHING (1TM/3TM MOUNTED MACHINE)

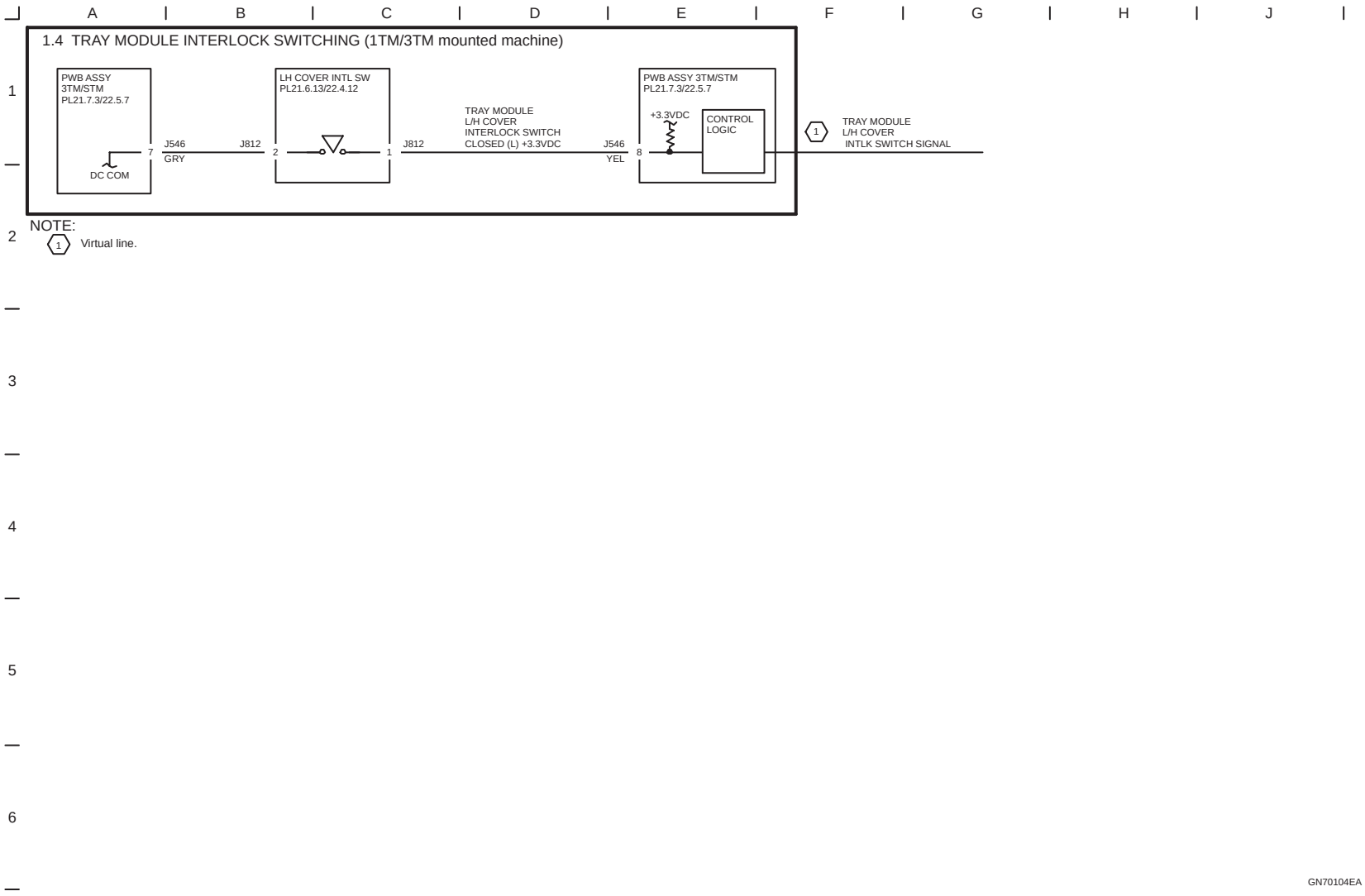

Figure 7-25. Detailed Connection Wiring Diagram (4)

CH2.1 OPTION DETECT

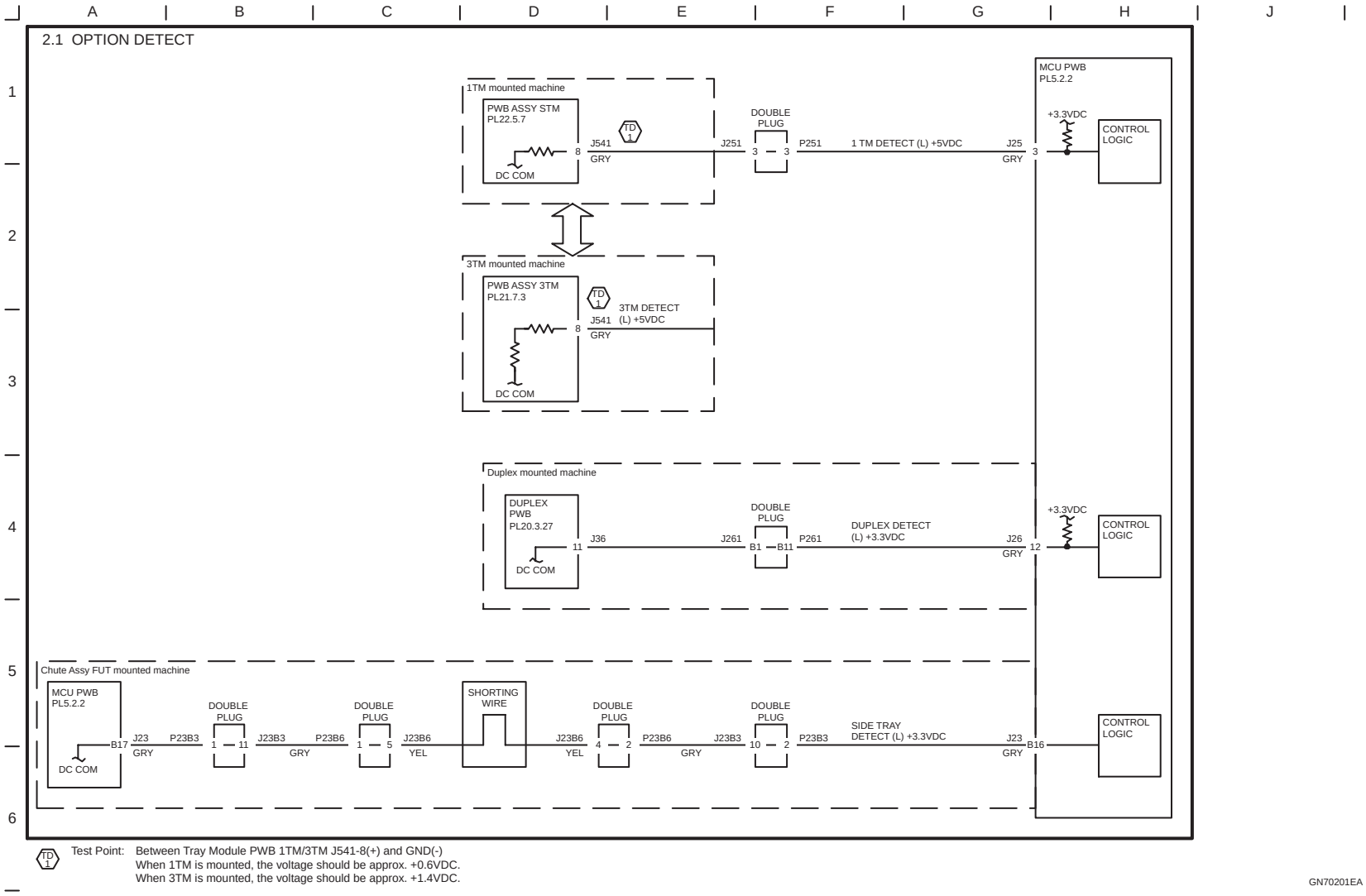

Figure 7-26. Detailed Connection Wiring Diagram (5)

manuals4you.com

CH3.1 MAIN DRIVE CONTROL

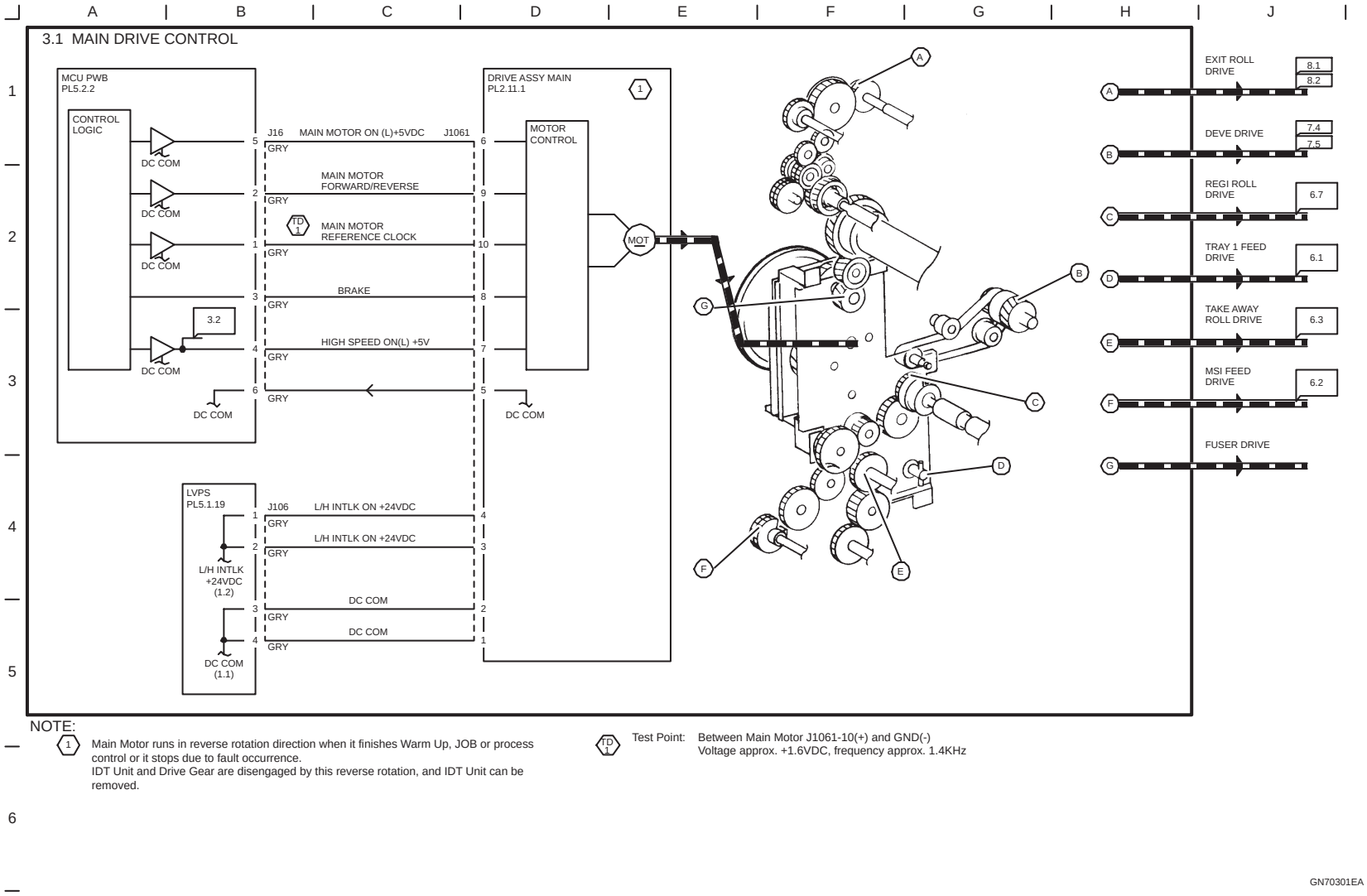

NOTE:

1 Main Motor runs in reverse rotation direction when it finishes Warm Up, JOB or process control or it stops due to fault occurrence.
IDT Unit and Drive Gear are disengaged by this reverse rotation, and IDT Unit can be removed.

TD 1 Test Point: Between Main Motor J1061-10(+) and GND(-)
Voltage approx. +1.6VDC, frequency approx. 1.4KHz

Figure 7-27. Detailed Connection Wiring Diagram (6)

CH3.2 PROCESS UNIT DRIVE CONTROL

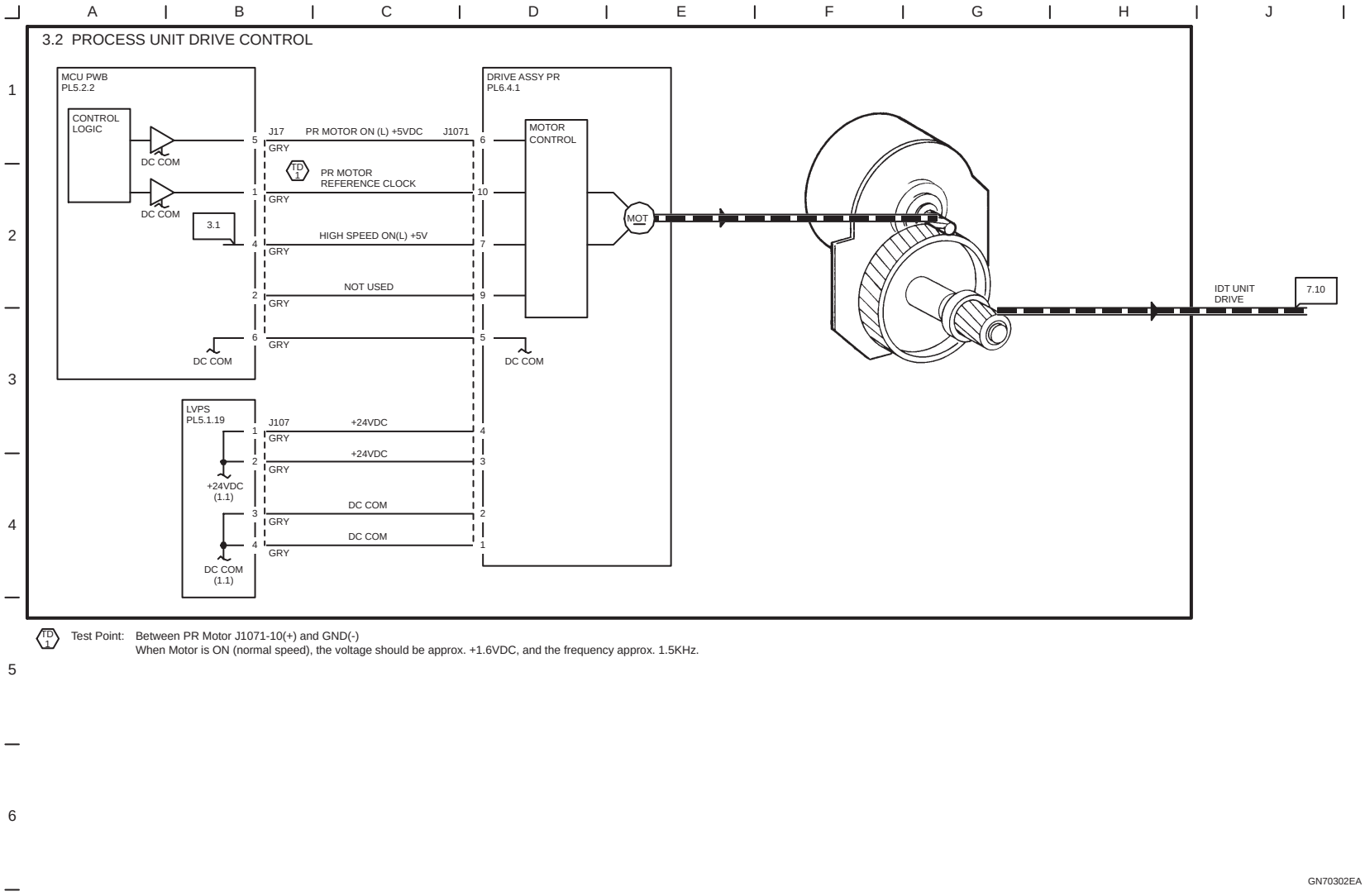

Figure 7-28. Detailed Connection Wiring Diagram (7)

manuals4you.com

CH5.1 TRAY 1 PAPER SIZE SENSING

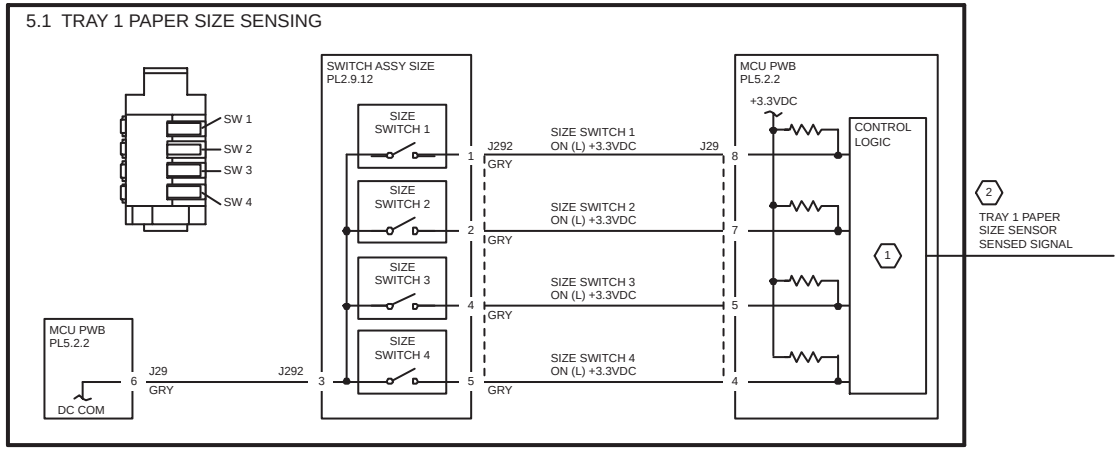

NOTE:

(1) Each paper size is determined by the combination of Size Switches 1 to 4. Refer to the following table for details. (2) Virtual line.

Paper Size	S1	S2	S3	S4
No Tray	OFF	OFF	OFF	OFF
11"X17"S	OFF	OFF	ON	OFF
A3S	OFF	ON	ON	OFF
B4S	OFF	ON	OFF	OFF
8.5"X14"S	OFF	ON	OFF	ON
8.5"X13"S	OFF	OFF	OFF	ON
A4S	OFF	OFF	ON	ON
8.5"X11"S	OFF	ON	ON	ON
B5S/8"X10"S	ON	OFF	ON	ON
8.5"X11"L	ON	OFF	ON	OFF
A4L	ON	ON	ON	OFF
B5L	ON	ON	OFF	OFF
A5L/5.5"X8.5"L	ON	ON	OFF	ON
COM-10	ON	OFF	OFF	ON
MONARCH	ON	OFF	OFF	OFF

GN70501EA

Figure 7-29. Detailed Connection Wiring Diagram (8)

CH5.2 TRAY 2 PAPER SIZE SENSING (1TM/3TM MOUNTED MACHINE)

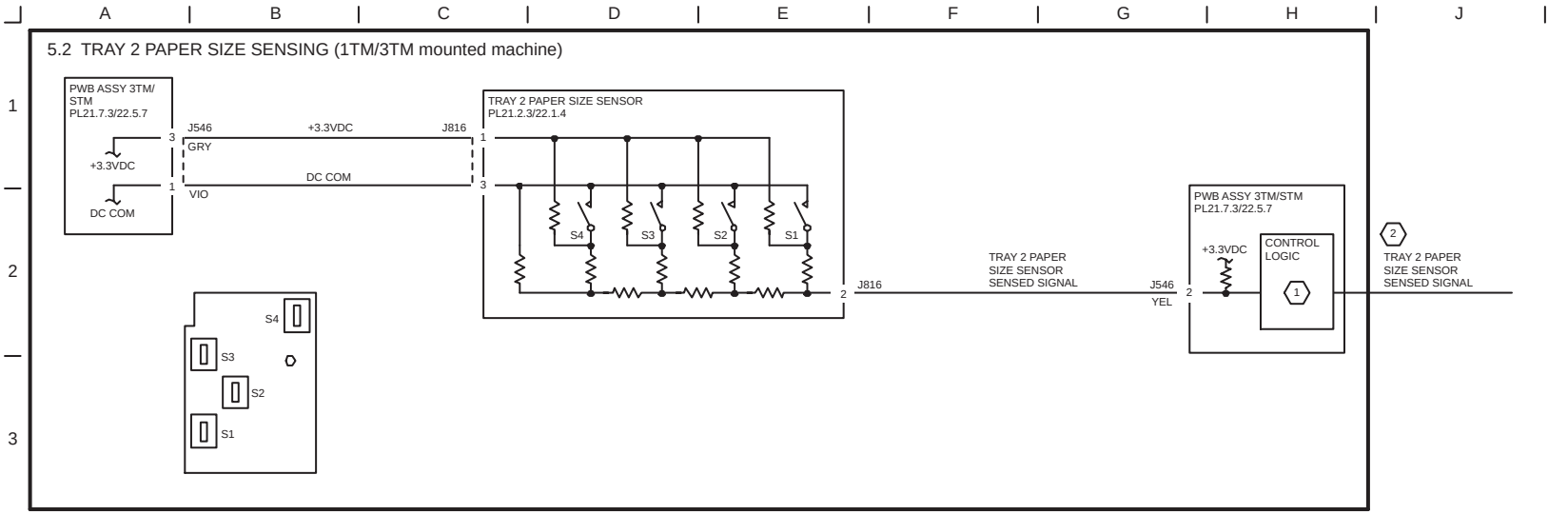

NOTE:

(1) The paper size is detected according to the voltage value that corresponds to the composite resistance value of Paper Size Sensor. The following table indicates the Switch ON/OFF patterns and voltage values corresponding to paper sizes.

(2) Virtual line.

Paper Size	S1	S2	S3	S4	Voltage (V) (J546-2)
No Tray	OFF	OFF	OFF	OFF	3.04
11"X17"S	OFF	OFF	OFF	ON	2.86
A3S	OFF	OFF	ON	OFF	2.65
8.5"X11"S	OFF	OFF	ON	ON	2.44
-	OFF	ON	OFF	OFF	2.23
B5L	OFF	ON	OFF	ON	2.03
B5S	OFF	ON	ON	OFF	1.82
A4S/8.5"X10"S	OFF	ON	ON	ON	1.61
-	ON	OFF	OFF	OFF	1.42
B4S	ON	OFF	OFF	ON	1.21
-	ON	OFF	ON	OFF	1.00
8.5"X14"S	ON	OFF	ON	ON	0.80
A5S/5.5"X8.5"	ON	ON	OFF	OFF	0.60
8.5"X11"L	ON	ON	OFF	ON	0.40
A4L	ON	ON	ON	OFF	0.20
8.5"X13"S	ON	ON	ON	ON	0.00

GN70502EA

Figure 7-30. Detailed Connection Wiring Diagram (9)

manuals4you.com

CH5.3 TRAY 3 PAPER SIZE SENSING (3TM MOUNTED MACHINE)

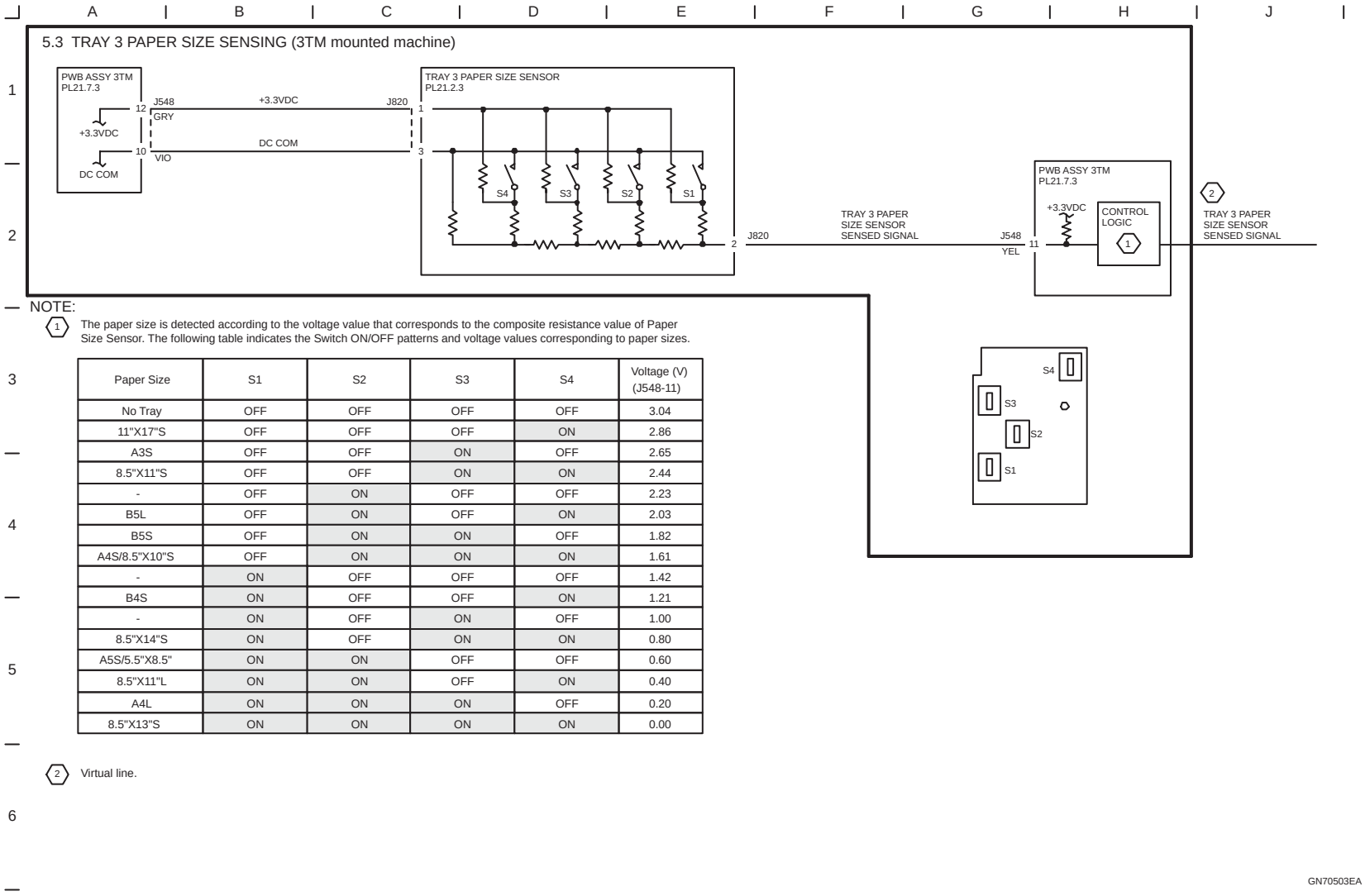

NOTE:

1 The paper size is detected according to the voltage value that corresponds to the composite resistance value of Paper Size Sensor. The following table indicates the Switch ON/OFF patterns and voltage values corresponding to paper sizes.

Paper Size	S1	S2	S3	S4	Voltage (V) (J548-11)
No Tray	OFF	OFF	OFF	OFF	3.04
11"X17"S	OFF	OFF	OFF	ON	2.86
A3S	OFF	OFF	ON	OFF	2.65
8.5"X11"S	OFF	OFF	ON	ON	2.44
-	OFF	ON	OFF	OFF	2.23
B5L	OFF	ON	OFF	ON	2.03
B5S	OFF	ON	ON	OFF	1.82
A4S/8.5"X10"S	OFF	ON	ON	ON	1.61
-	ON	OFF	OFF	OFF	1.42
B4S	ON	OFF	OFF	ON	1.21
-	ON	OFF	ON	OFF	1.00
8.5"X14"S	ON	OFF	ON	ON	0.80
A5S/5.5"X8.5"	ON	ON	OFF	OFF	0.60
8.5"X11"L	ON	ON	OFF	ON	0.40
A4L	ON	ON	ON	OFF	0.20
8.5"X13"S	ON	ON	ON	ON	0.00

2 Virtual line.

Figure 7-31. Detailed Connection Wiring Diagram (10)

CH5.4 TRAY 4 PAPER SIZE SENSING (3TM MOUNTED MACHINE)

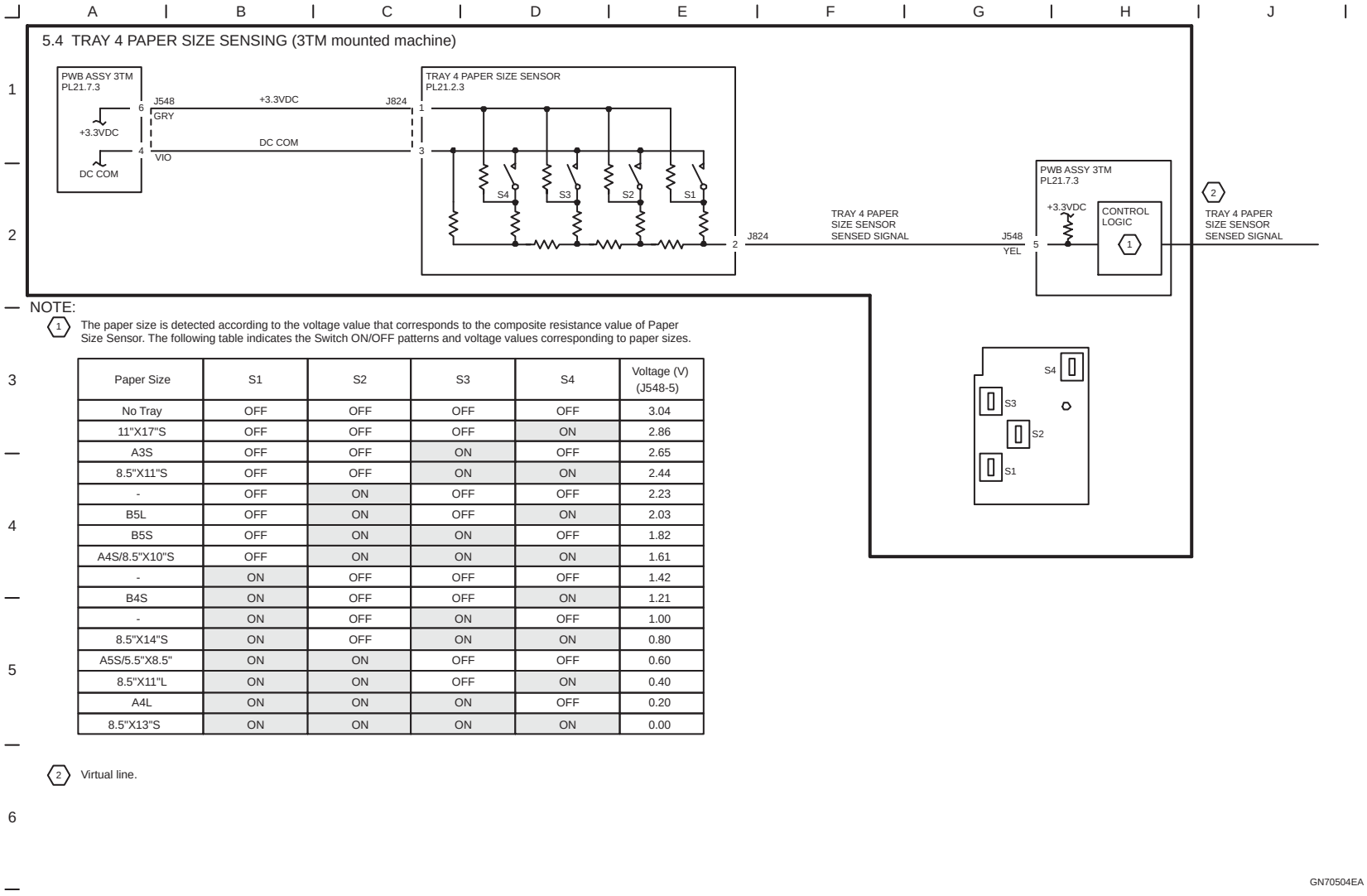

NOTE:

(1) The paper size is detected according to the voltage value that corresponds to the composite resistance value of Paper Size Sensor. The following table indicates the Switch ON/OFF patterns and voltage values corresponding to paper sizes.

Paper Size	S1	S2	S3	S4	Voltage (V) (J548-5)
No Tray	OFF	OFF	OFF	OFF	3.04
11"X17"S	OFF	OFF	OFF	ON	2.86
A3S	OFF	OFF	ON	OFF	2.65
8.5"X11"S	OFF	OFF	ON	ON	2.44
-	OFF	ON	OFF	OFF	2.23
B5L	OFF	ON	OFF	ON	2.03
B5S	OFF	ON	ON	OFF	1.82
A4S/8.5"X10"S	OFF	ON	ON	ON	1.61
-	ON	OFF	OFF	OFF	1.42
B4S	ON	OFF	OFF	ON	1.21
-	ON	OFF	ON	OFF	1.00
8.5"X14"S	ON	OFF	ON	ON	0.80
A5S/5.5"X8.5"	ON	ON	OFF	OFF	0.60
8.5"X11"L	ON	ON	OFF	ON	0.40
A4L	ON	ON	ON	OFF	0.20
8.5"X13"S	ON	ON	ON	ON	0.00

(2) Virtual line.

Figure 7-32. Detailed Connection Wiring Diagram (11)

manuals4you.com

CH5.5 TRAY 1 PAPER STACKING

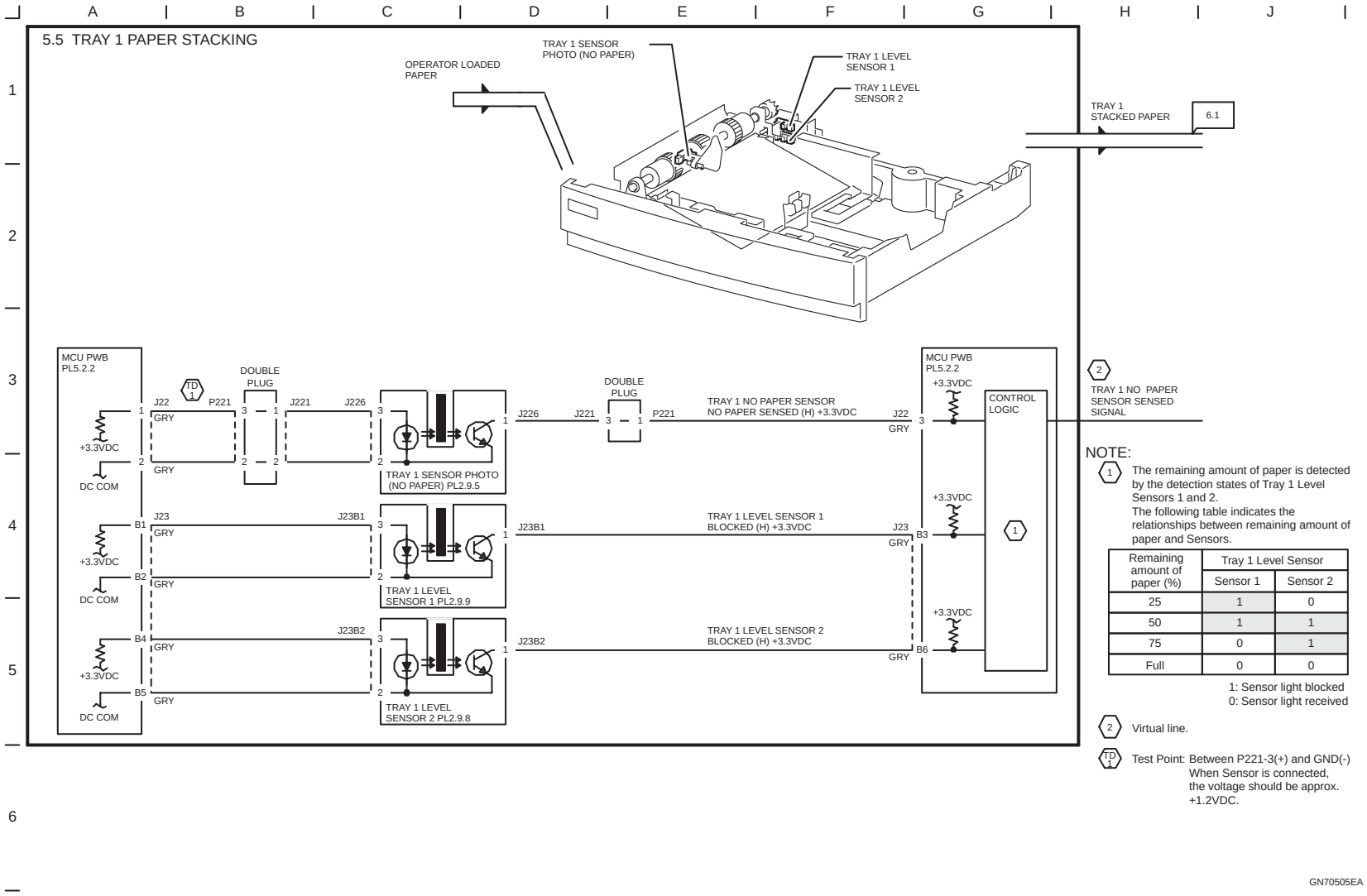

NOTE:

1 The remaining amount of paper is detected by the detection states of Tray 1 Level Sensors 1 and 2.
The following table indicates the relationships between remaining amount of paper and Sensors.

Remaining amount of paper (%)	Tray 1 Level Sensor	
	Sensor 1	Sensor 2
25	1	0
50	1	1
75	0	1
Full	0	0

1: Sensor light blocked
0: Sensor light received

2 Virtual line.

TD 1 Test Point: Between P221-3(+) and GND(-)
When Sensor is connected, the voltage should be approx. +1.2VDC.

Figure 7-33. Detailed Connection Wiring Diagram (12)

CH5.6 TRAY 2 PAPER STACKING (1TM/3TM MOUNTED MACHINE)

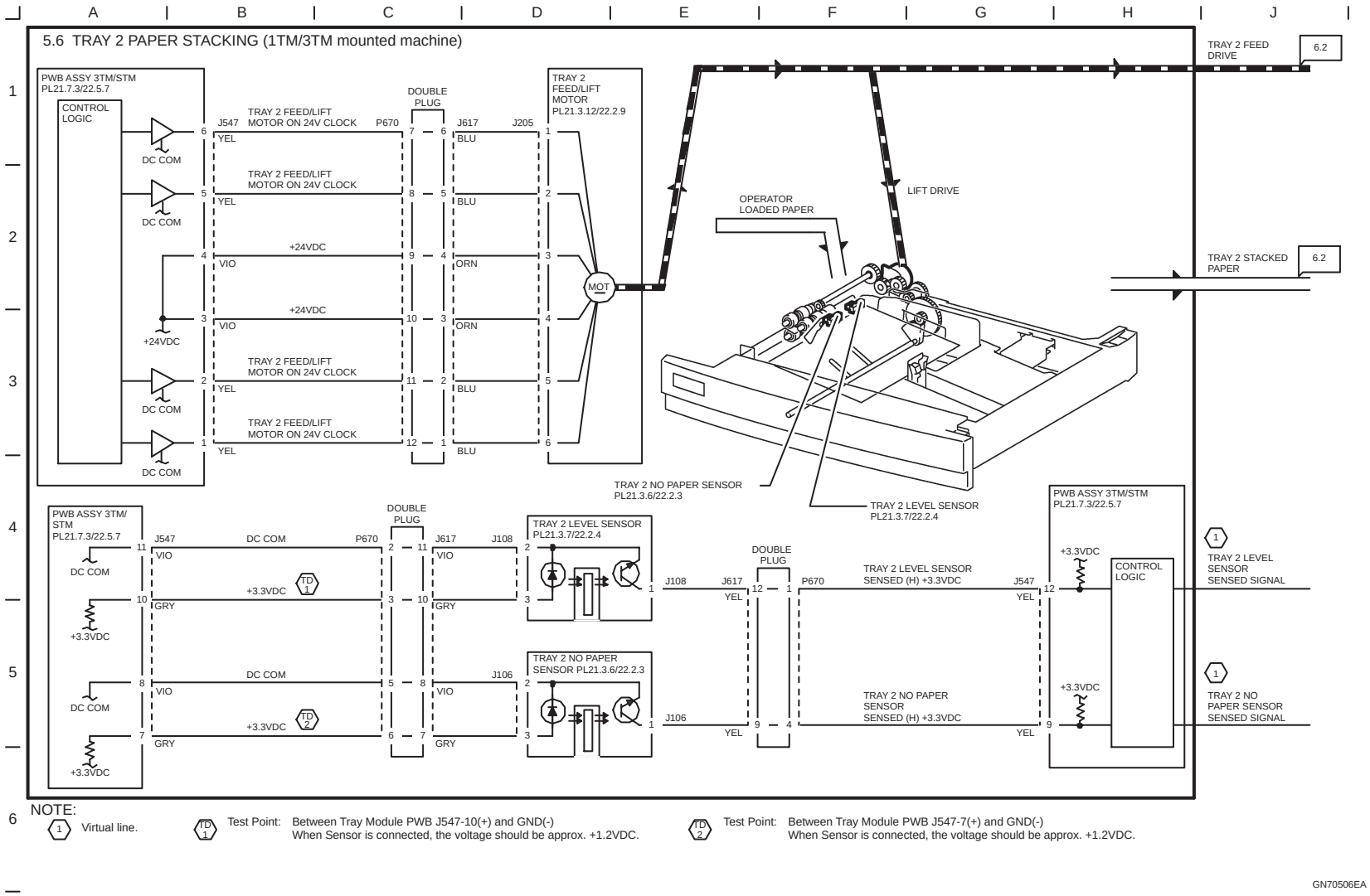

Figure 7-34. Detailed Connection Wiring Diagram (13)

manuals4you.com

CH5.7 TRAY 3 PAPER STACKING (3TM MOUNTED MACHINE)

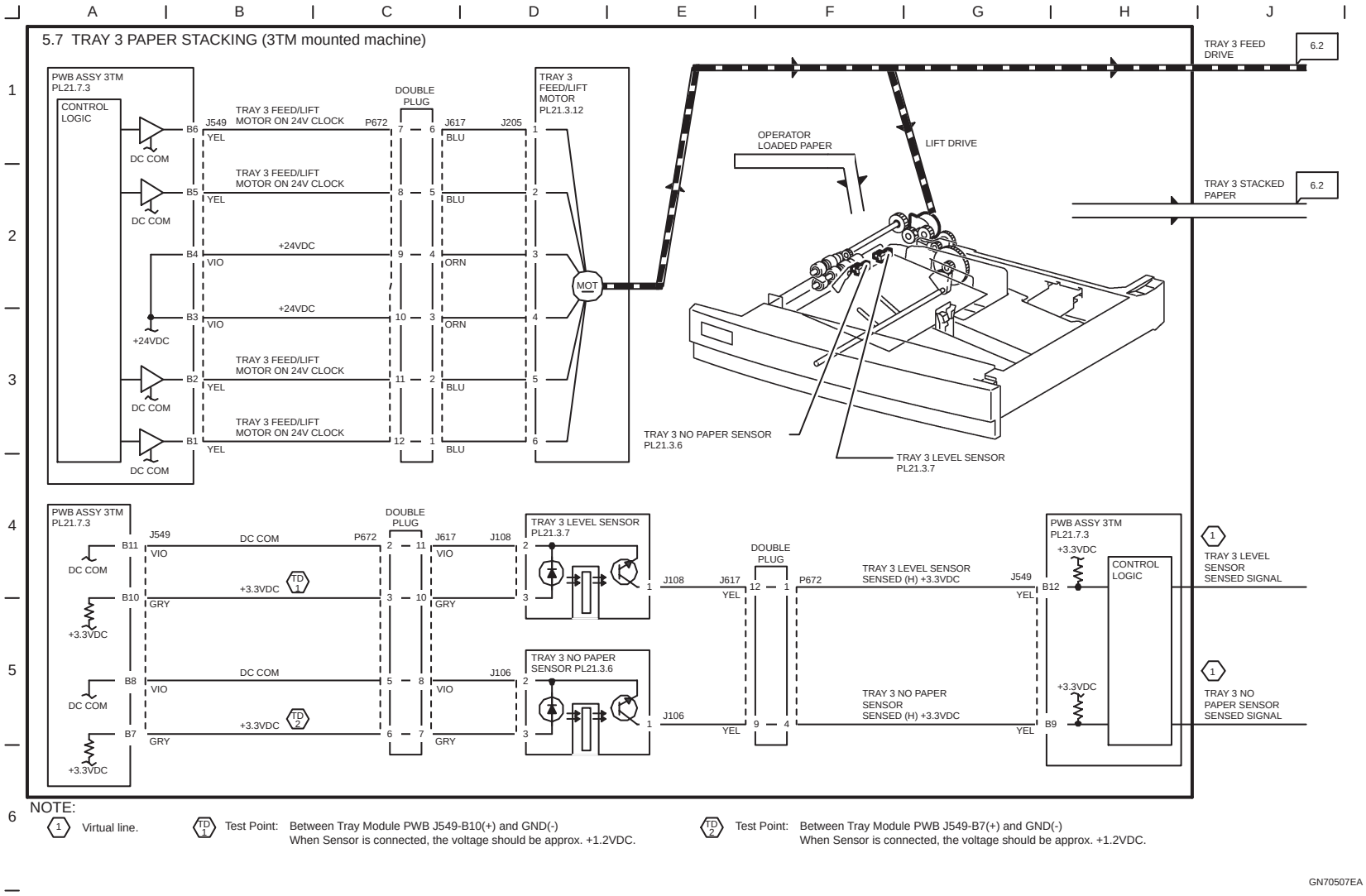

Figure 7-35. Detailed Connection Wiring Diagram (14)

CH5.8 TRAY 4 PAPER STACKING (3TM MOUNTED MACHINE)

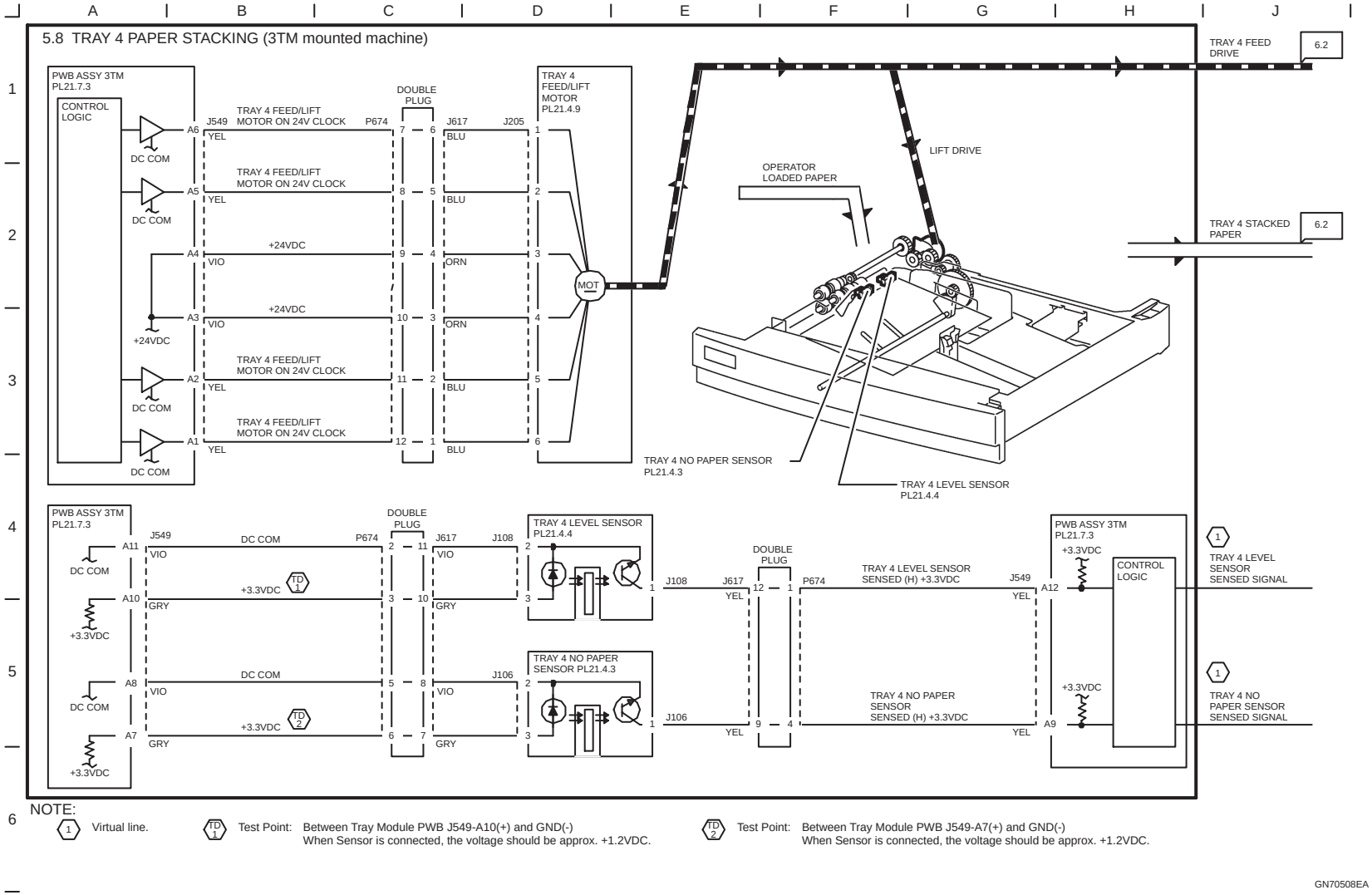

Figure 7-36. Detailed Connection Wiring Diagram (15)

manuals4you.com

CH5.9 MSI PAPER STACKING

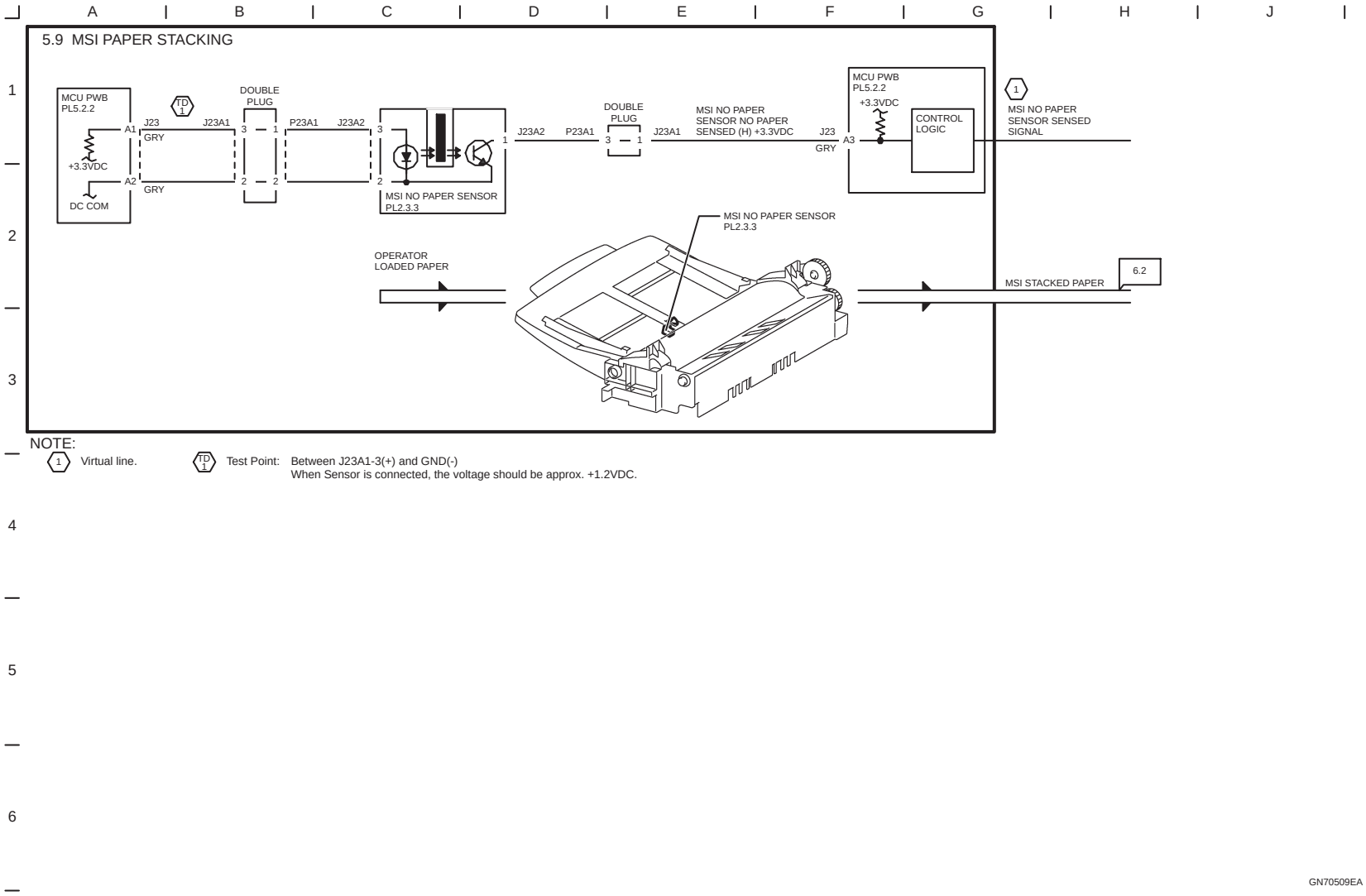

NOTE:
1 Virtual line.
TP 1 Test Point: Between J23A1-3(+) and GND(-)
When Sensor is connected, the voltage should be approx. +1.2VDC.

Figure 7-37. Detailed Connection Wiring Diagram (16)

CH6.1 TRAY 1 PAPER FEEDING

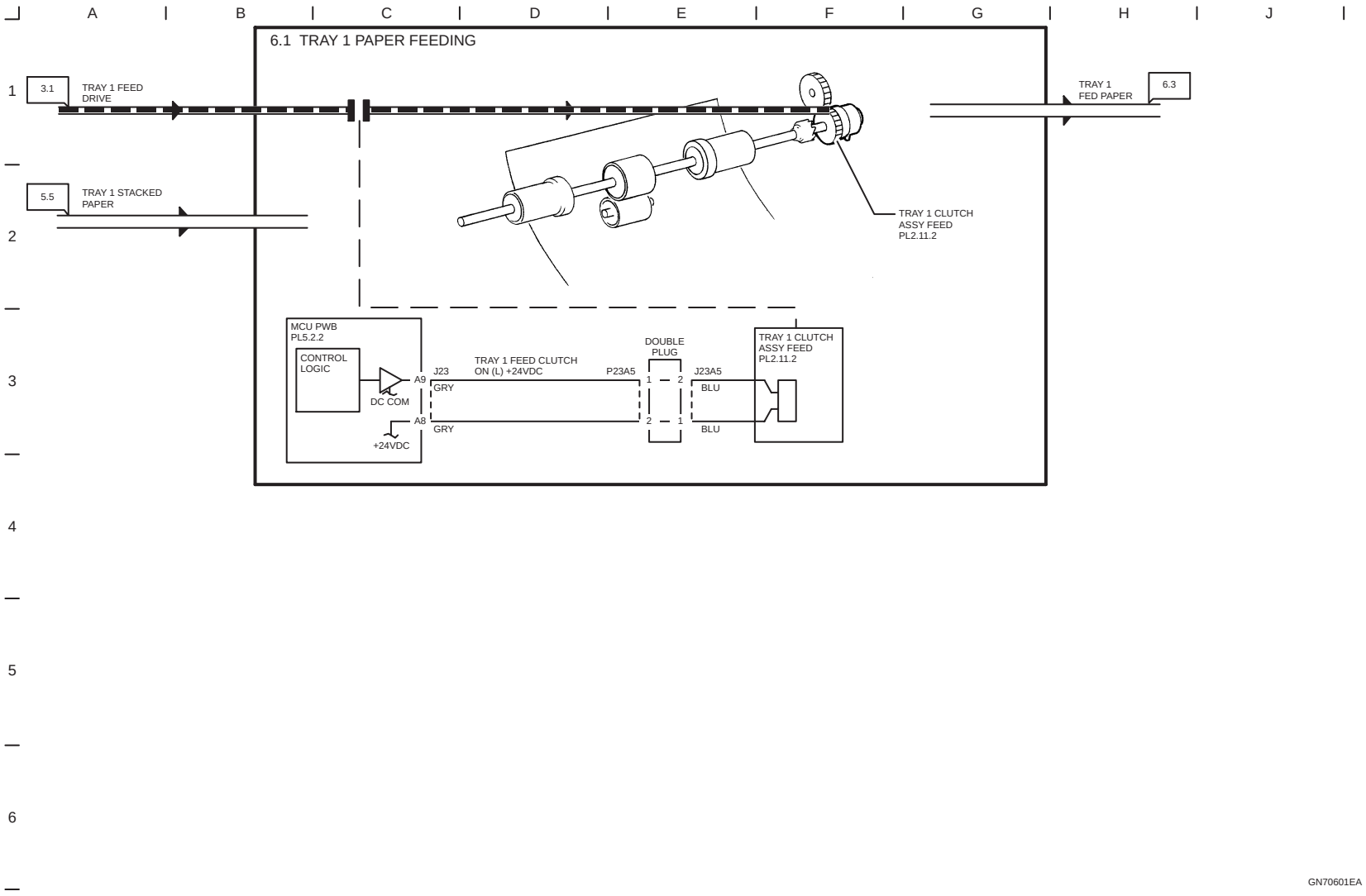

Figure 7-38. Detailed Connection Wiring Diagram (17)

manuals4you.com

CH6.2 TRAY 2 TO 4 AND MSI PAPER FEEDING

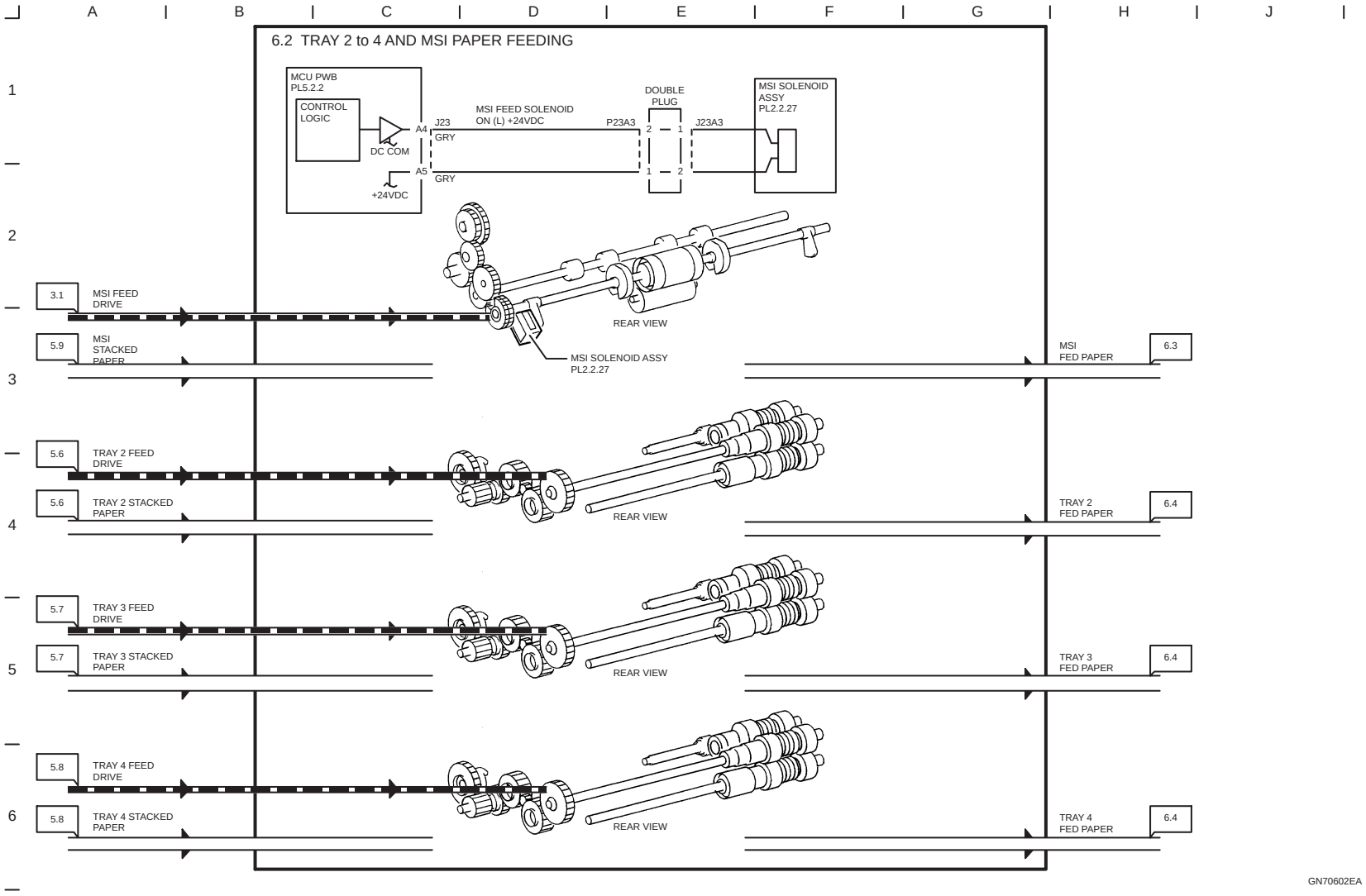

Figure 7-39. Detailed Connection Wiring Diagram (18)

CH6.3 IOT PAPER TRANSPORTATION

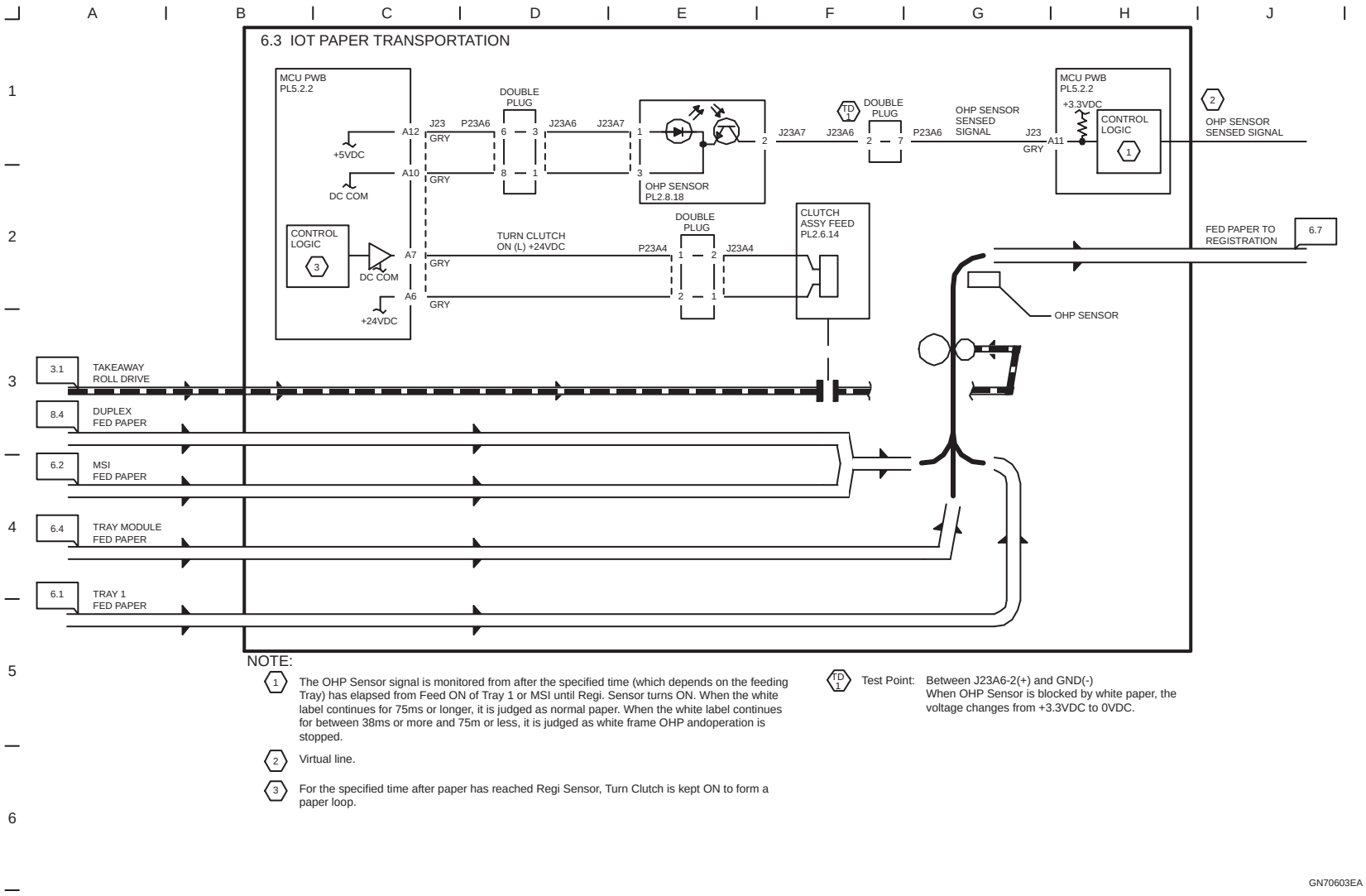

NOTE:

1. The OHP Sensor signal is monitored from after the specified time (which depends on the feeding Tray) has elapsed from Feed ON of Tray 1 or MSI until Regi. Sensor turns ON. When the white label continues for 75ms or longer, it is judged as normal paper. When the white label continues for between 38ms or more and 75m or less, it is judged as white frame OHP andoperation is stopped.
2. Virtual line.
3. For the specified time after paper has reached Regi Sensor, Turn Clutch is kept ON to form a paper loop.

TD 1 Test Point: Between J23A6-2(+) and GND(-)
When OHP Sensor is blocked by white paper, the voltage changes from +3.3VDC to 0VDC.

Figure 7-40. Detailed Connection Wiring Diagram (19)

manuals4you.com

CH6.4 TRAY MODULE PAPER TRANSPORTATION (1TM/3TM MOUNTED MACHINE)

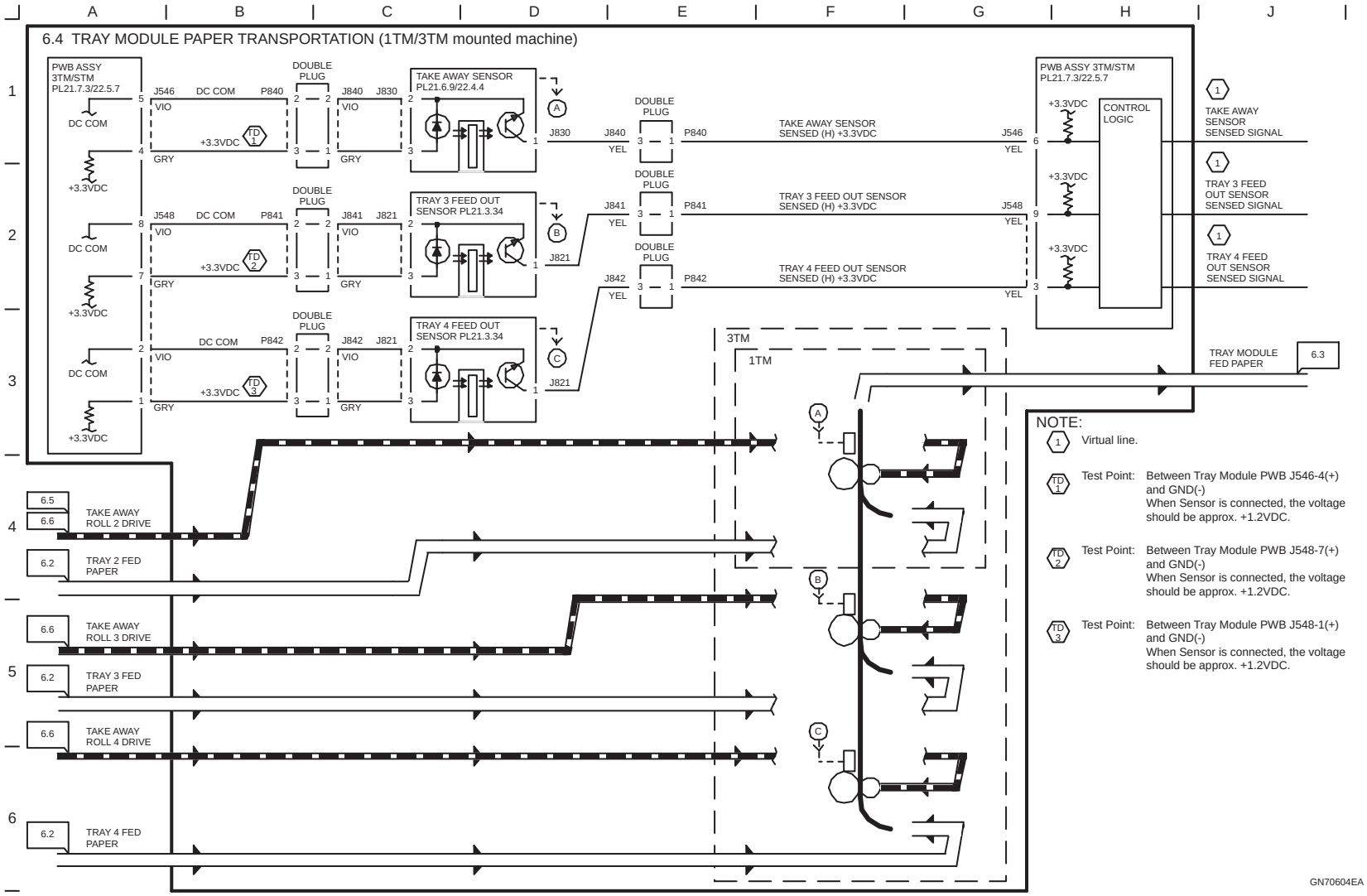

Figure 7-41. Detailed Connection Wiring Diagram (20)

CH6.5 TRAY MODULE PAPER TRANSPORT DRIVE CONTROL (1TM MOUNTED MACHINE)

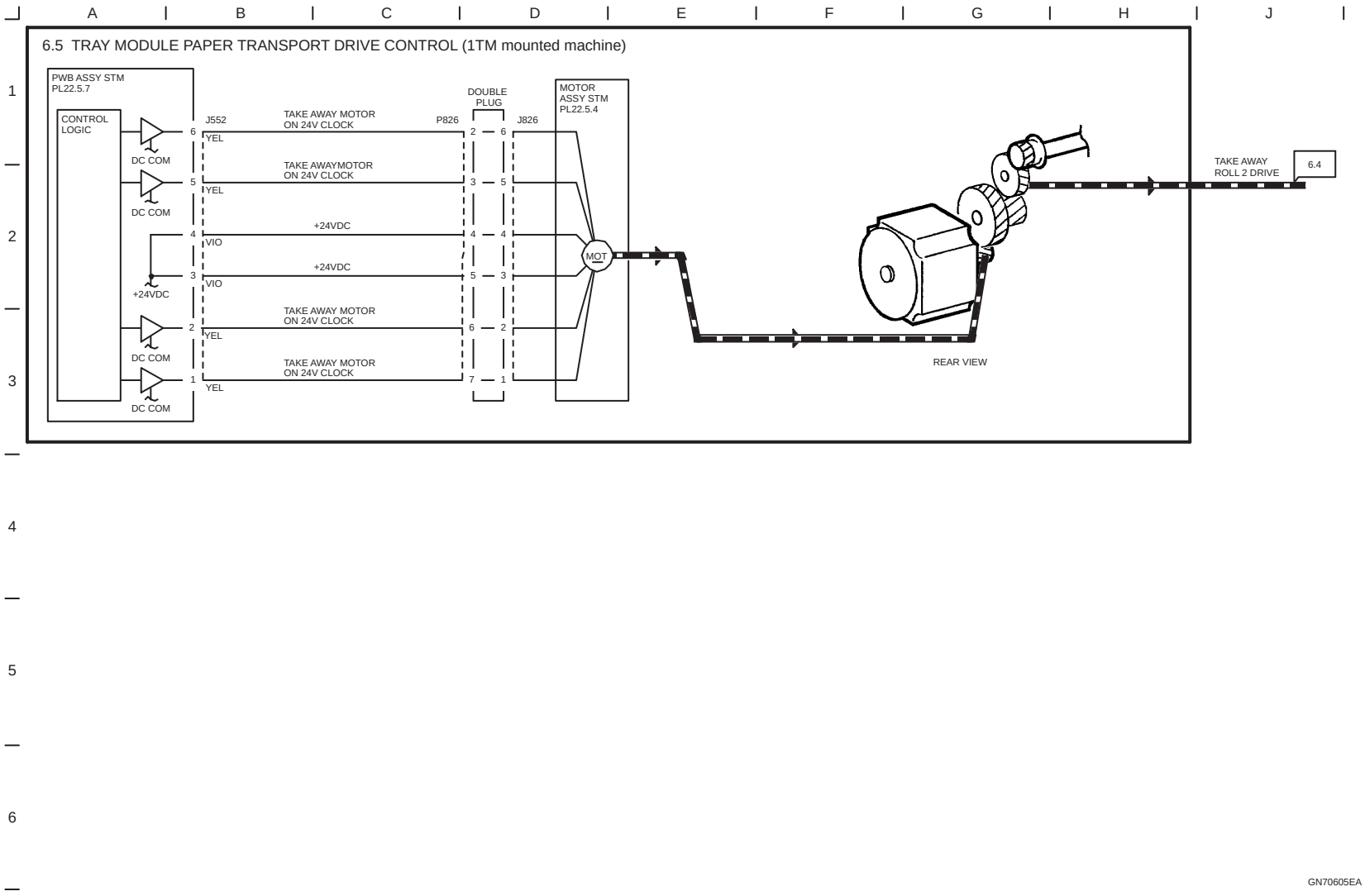

Figure 7-42. Detailed Connection Wiring Diagram (21)

manuals4you.com

CH6.6 TRAY MODULE PAPER TRANSPORT DRIVE CONTROL (3TM MOUNTED MACHINE)

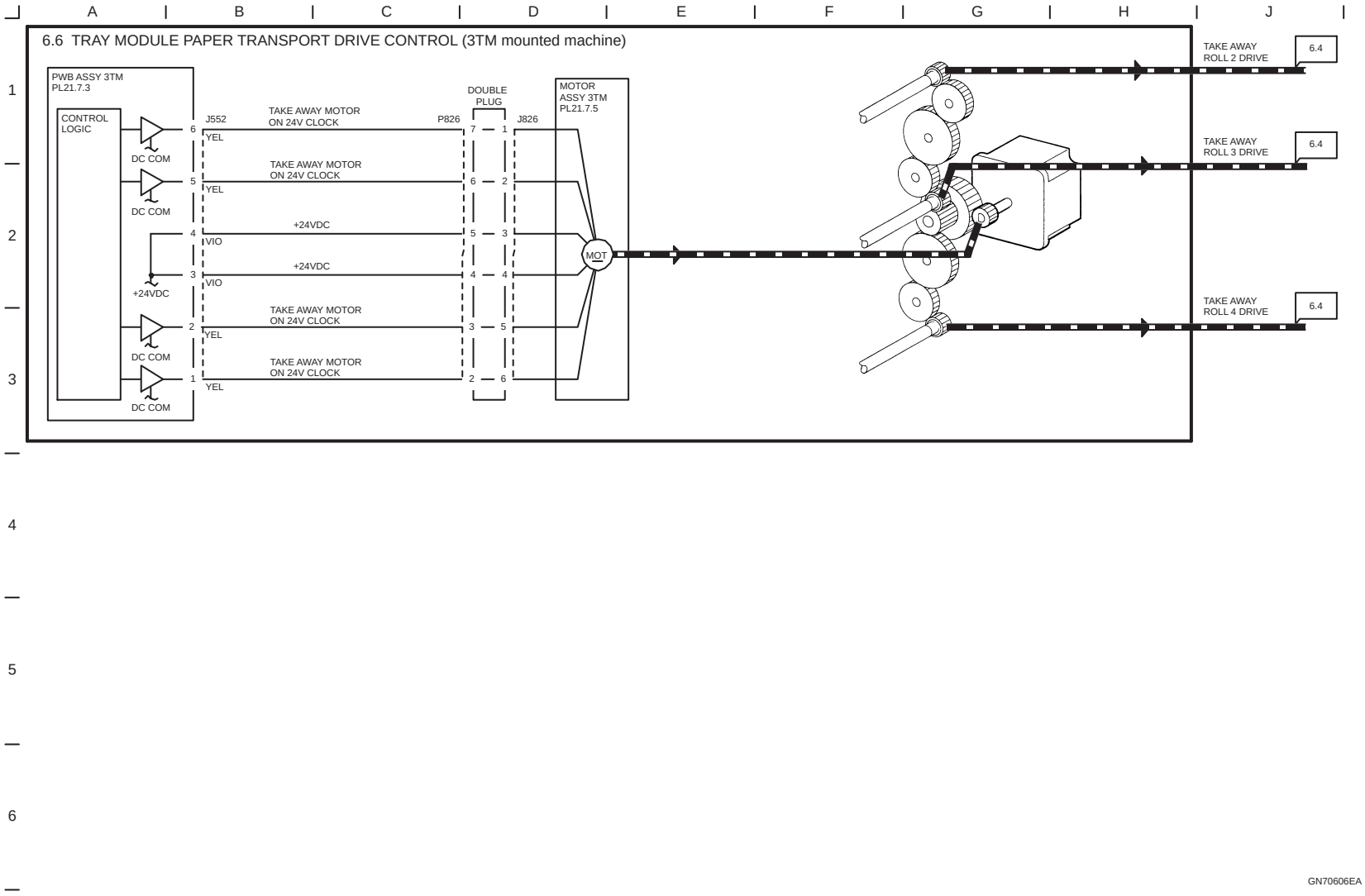

Figure 7-43. Detailed Connection Wiring Diagram (22)

CH6.7 REGISTRATION

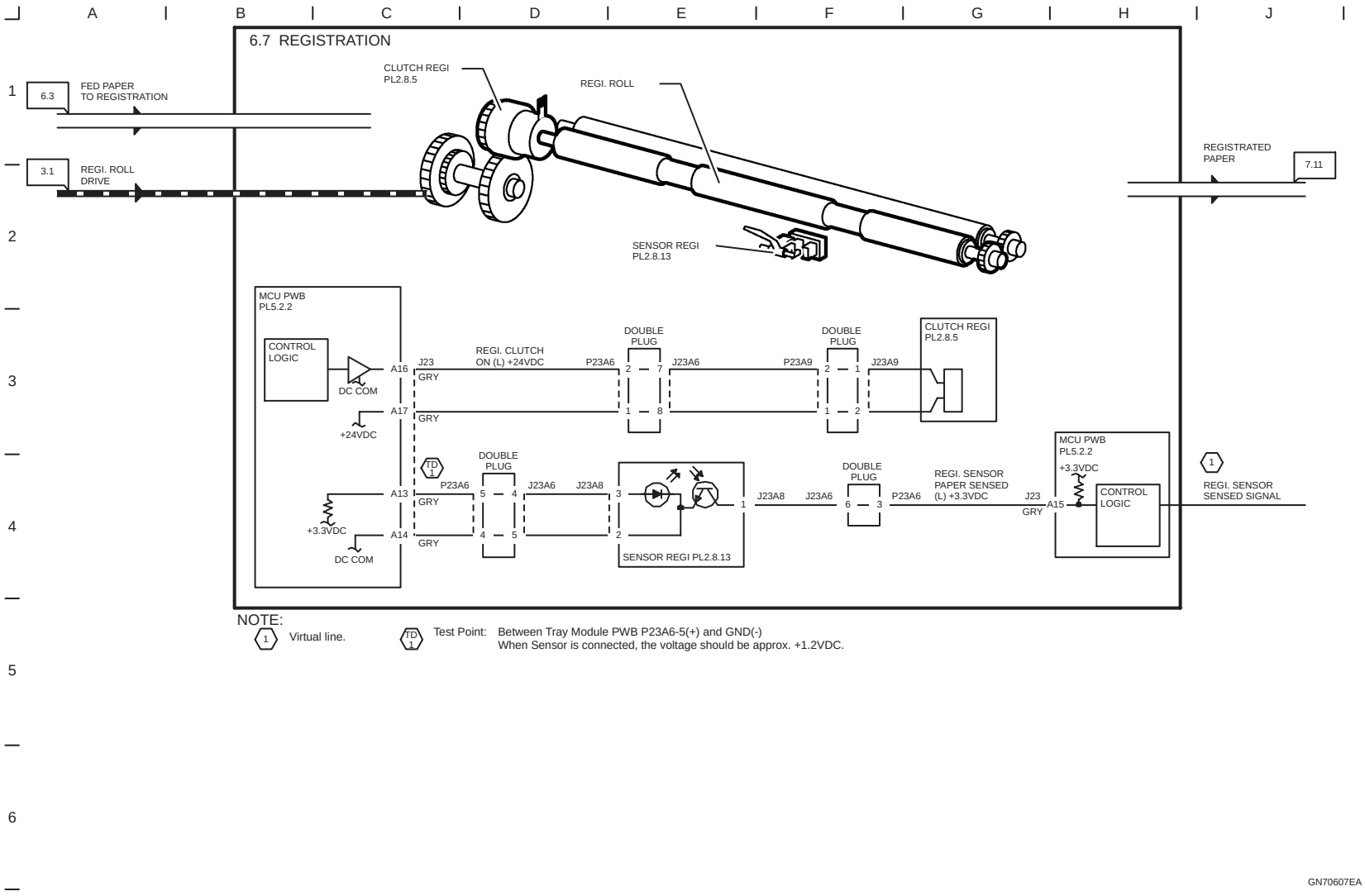

Figure 7-44. Detailed Connection Wiring Diagram (23)

manuals4you.com

CH7.1 CHARGING AND EXPOSURE (Y, M)

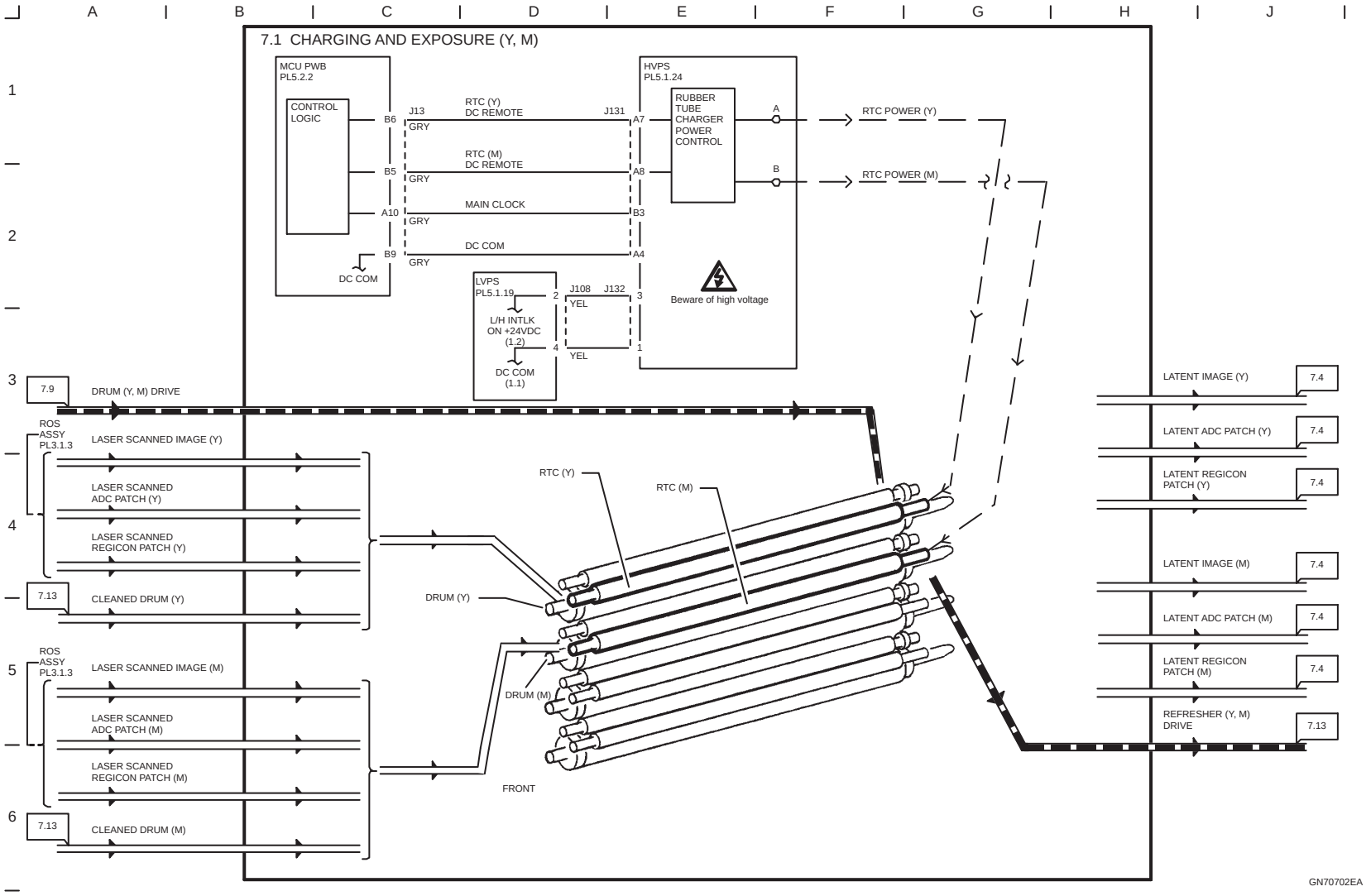

Figure 7-45. Detailed Connection Wiring Diagram (24)

CH7.2 CHARGING AND EXPOSURE (K, C)

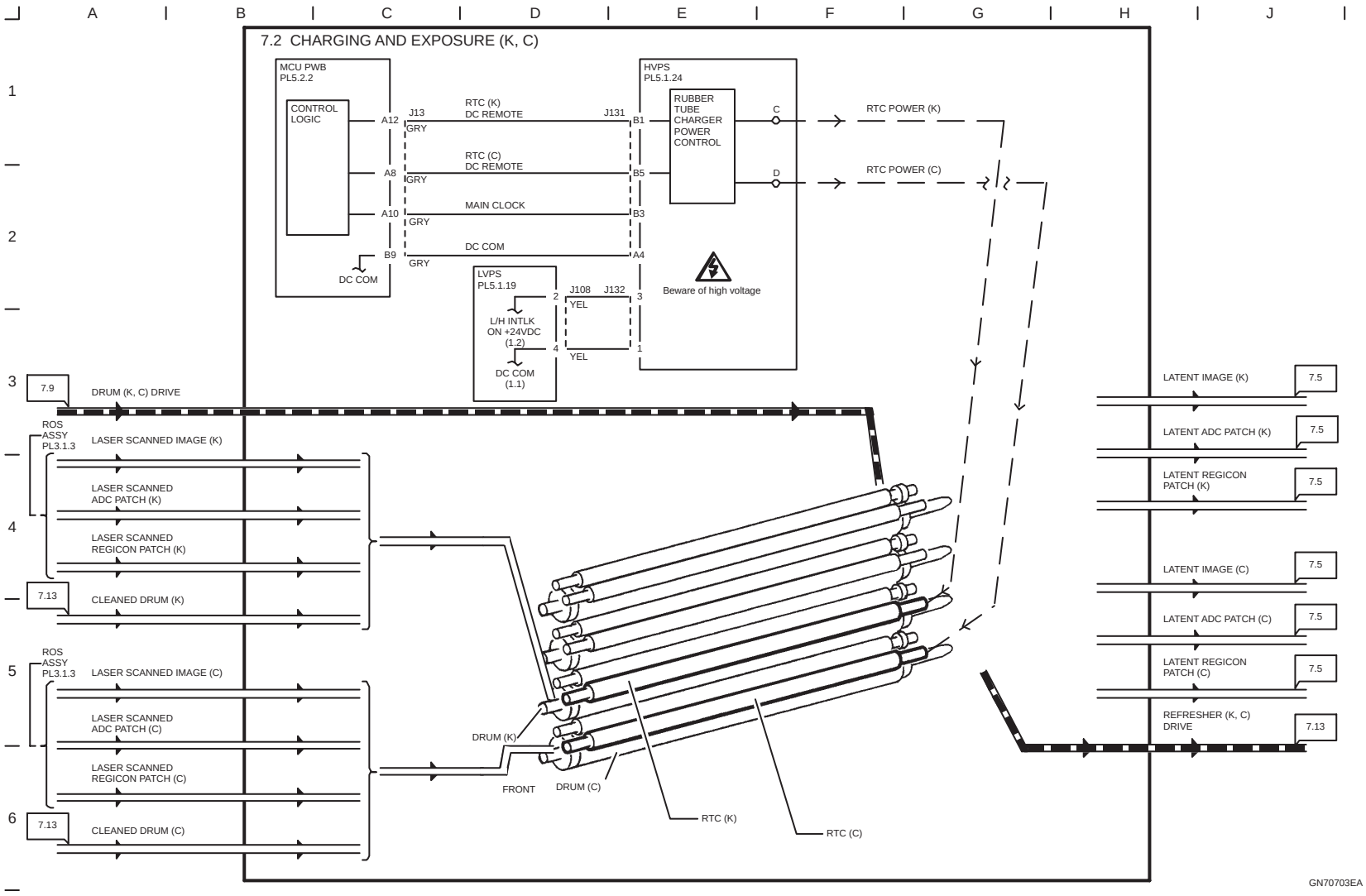

Figure 7-46. Detailed Connection Wiring Diagram (25)

manuals4you.com

CH7.3 DEVE TACKING CONTROL

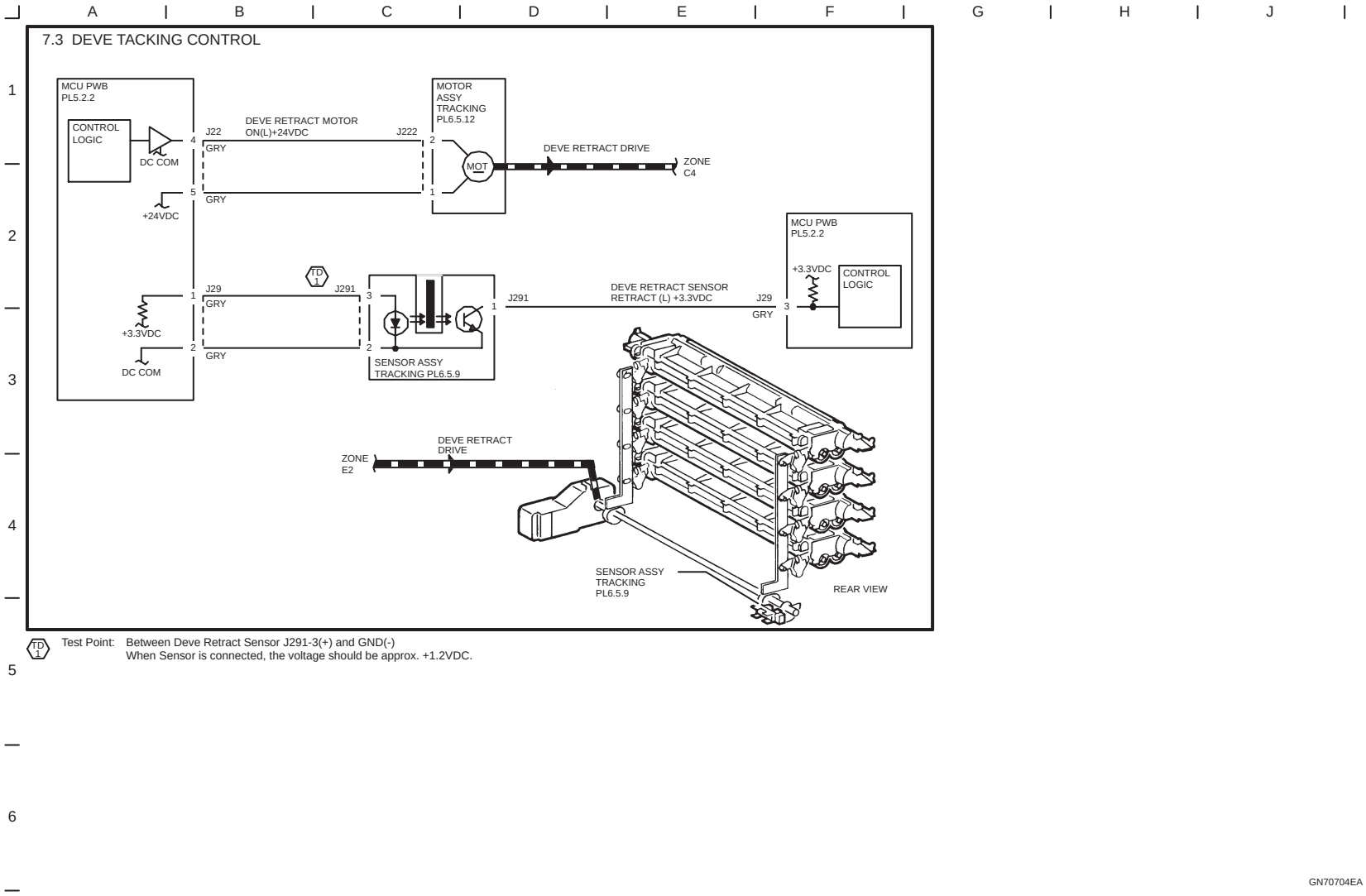

Figure 7-47. Detailed Connection Wiring Diagram (26)

CH7.4 DEVELOPMENT (Y, M)

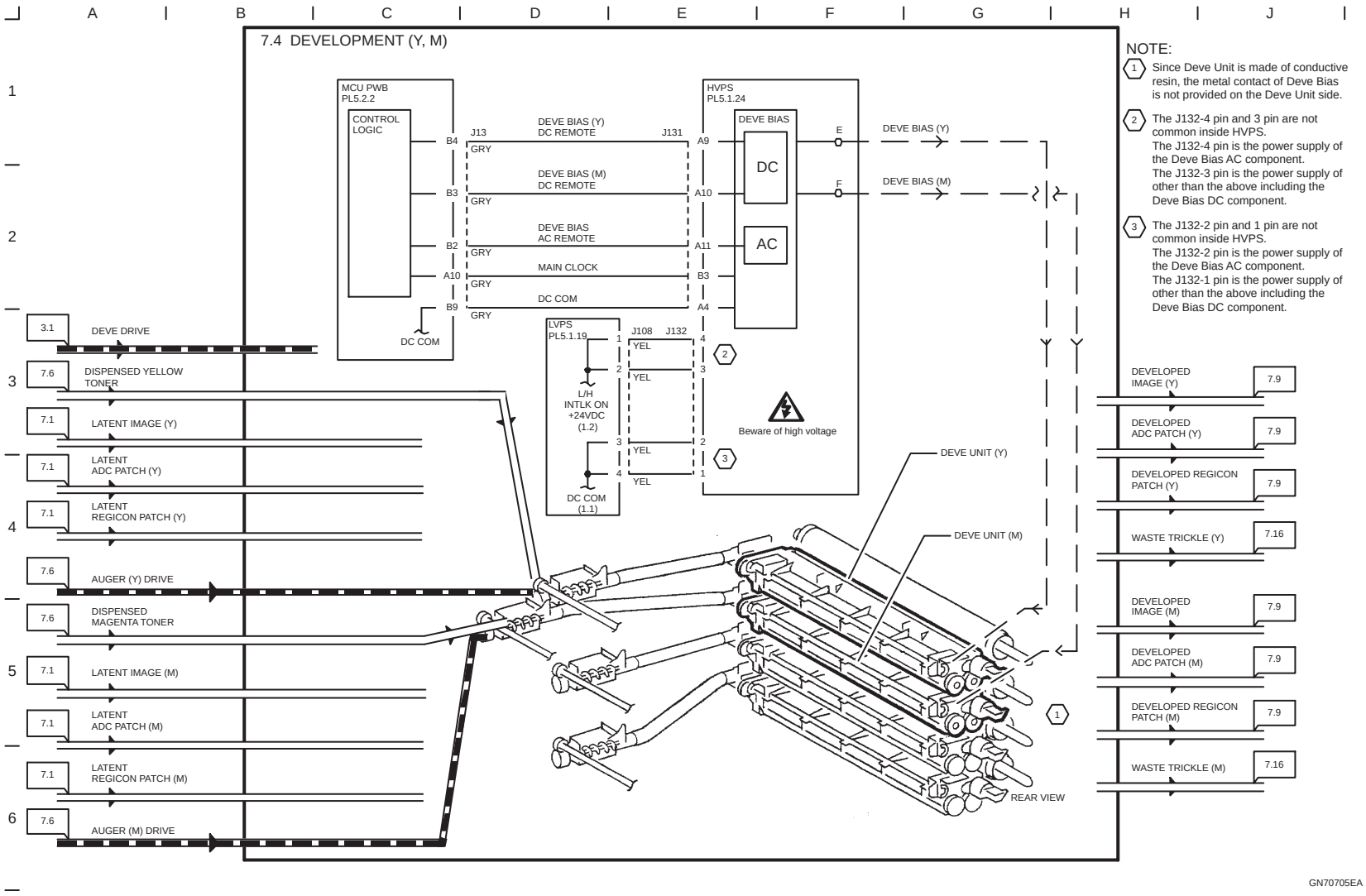

Figure 7-48. Detailed Connection Wiring Diagram (27)

manuals4you.com

CH7.5 DEVELOPMENT (K, C)

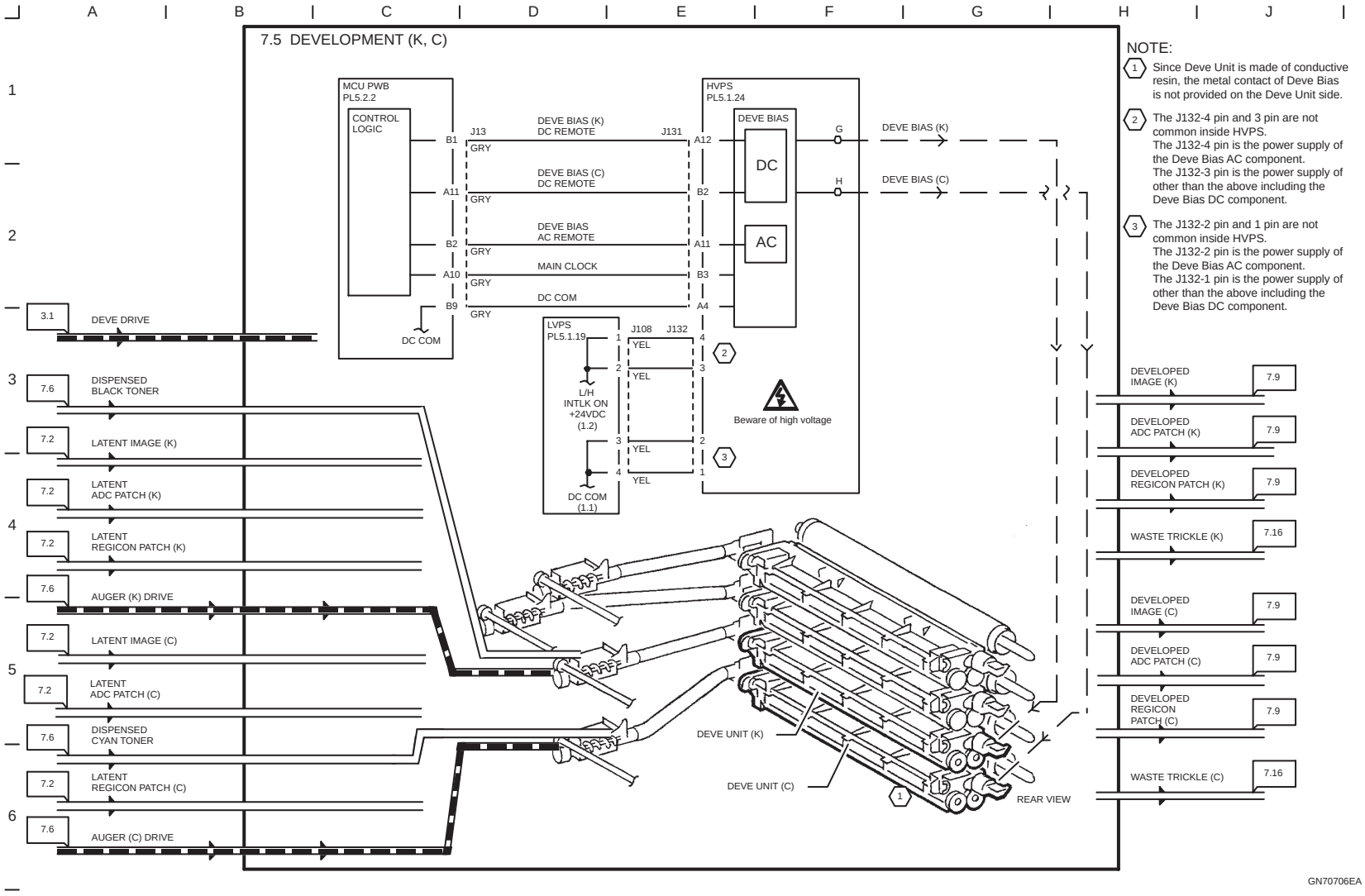

Figure 7-49. Detailed Connection Wiring Diagram (28)

CH7.6 TONER DISPENSE CONTROL

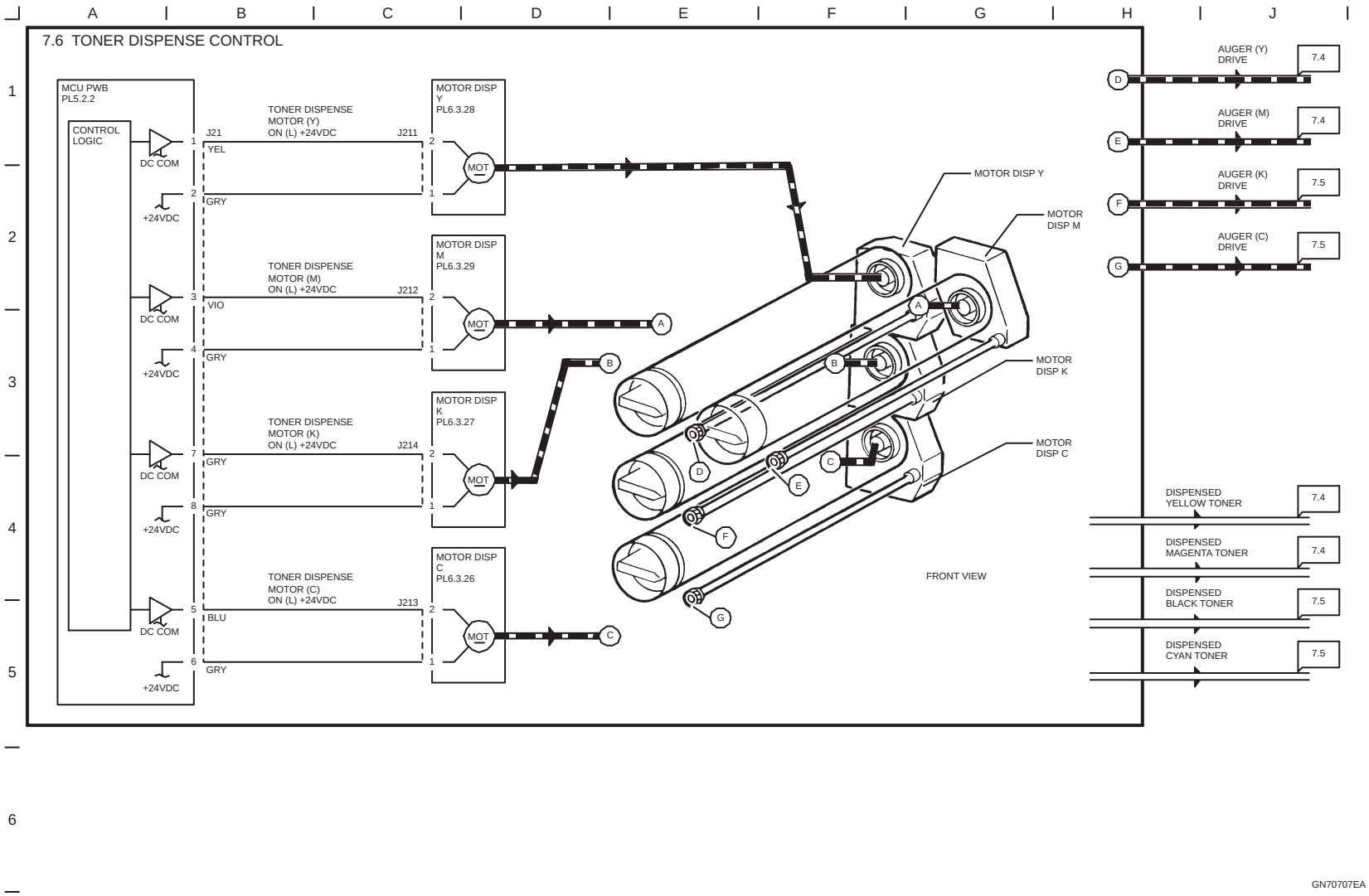

Figure 7-50. Detailed Connection Wiring Diagram (29)

manuals4you.com

CH7.7 TONER LIFE CONTROL

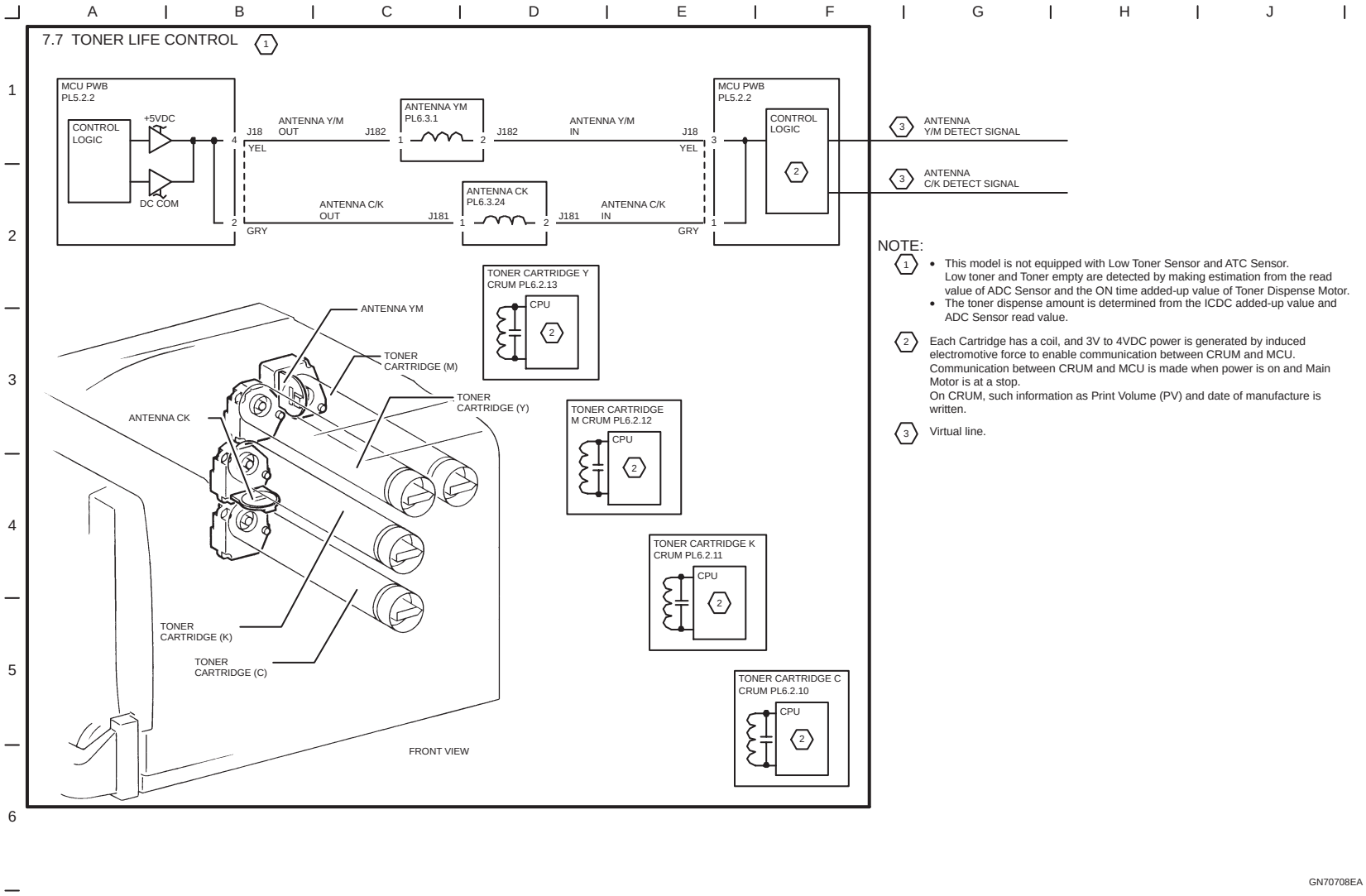

Figure 7-51. Detailed Connection Wiring Diagram (30)

manuals4you.com

CH7.8 ADC AND ENVIRONMENT SENSING

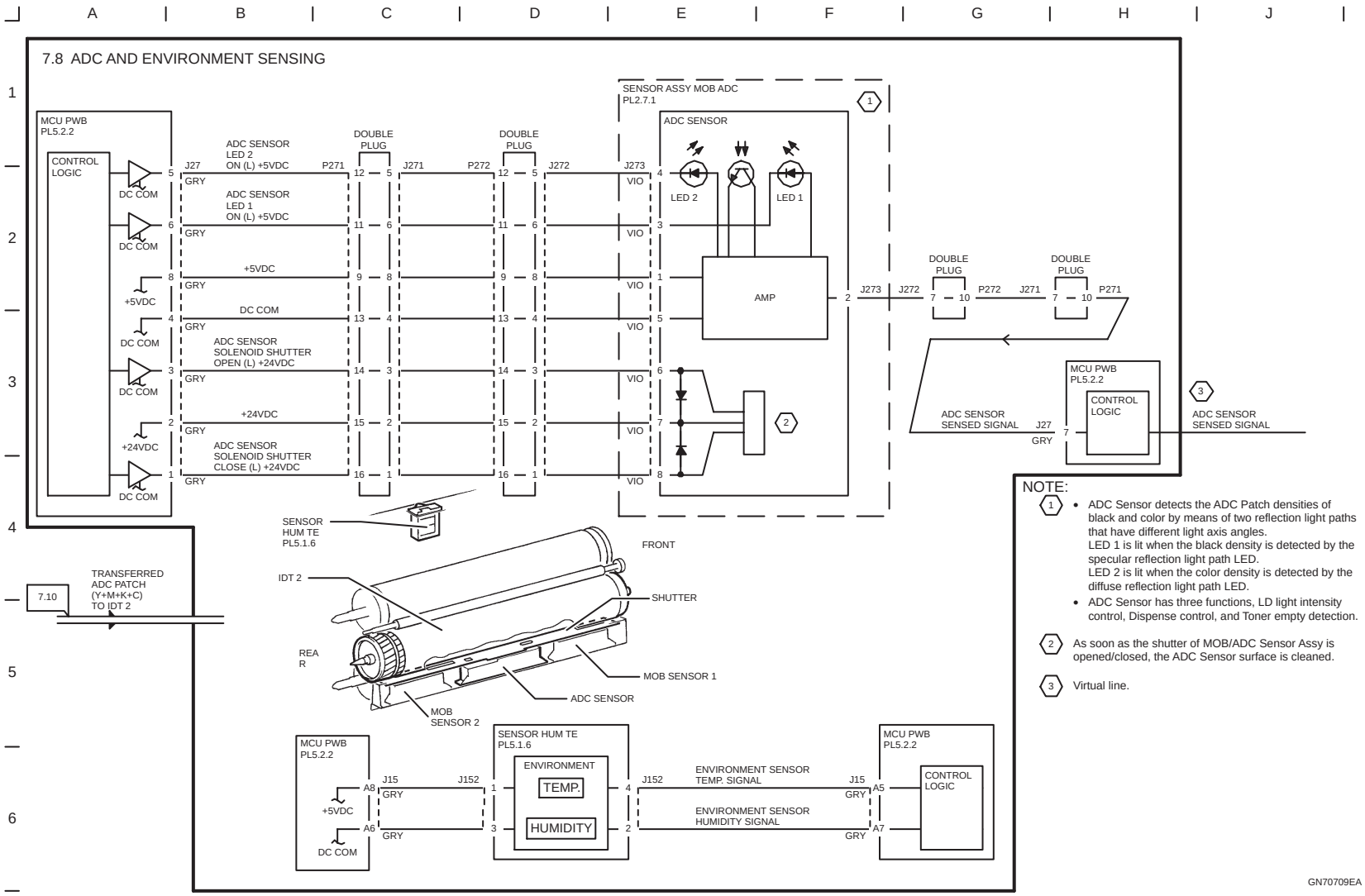

Figure 7-52. Detailed Connection Wiring Diagram (31)

manuals4you.com

CH7.9 IMAGE TRANSFER TO IDT 1

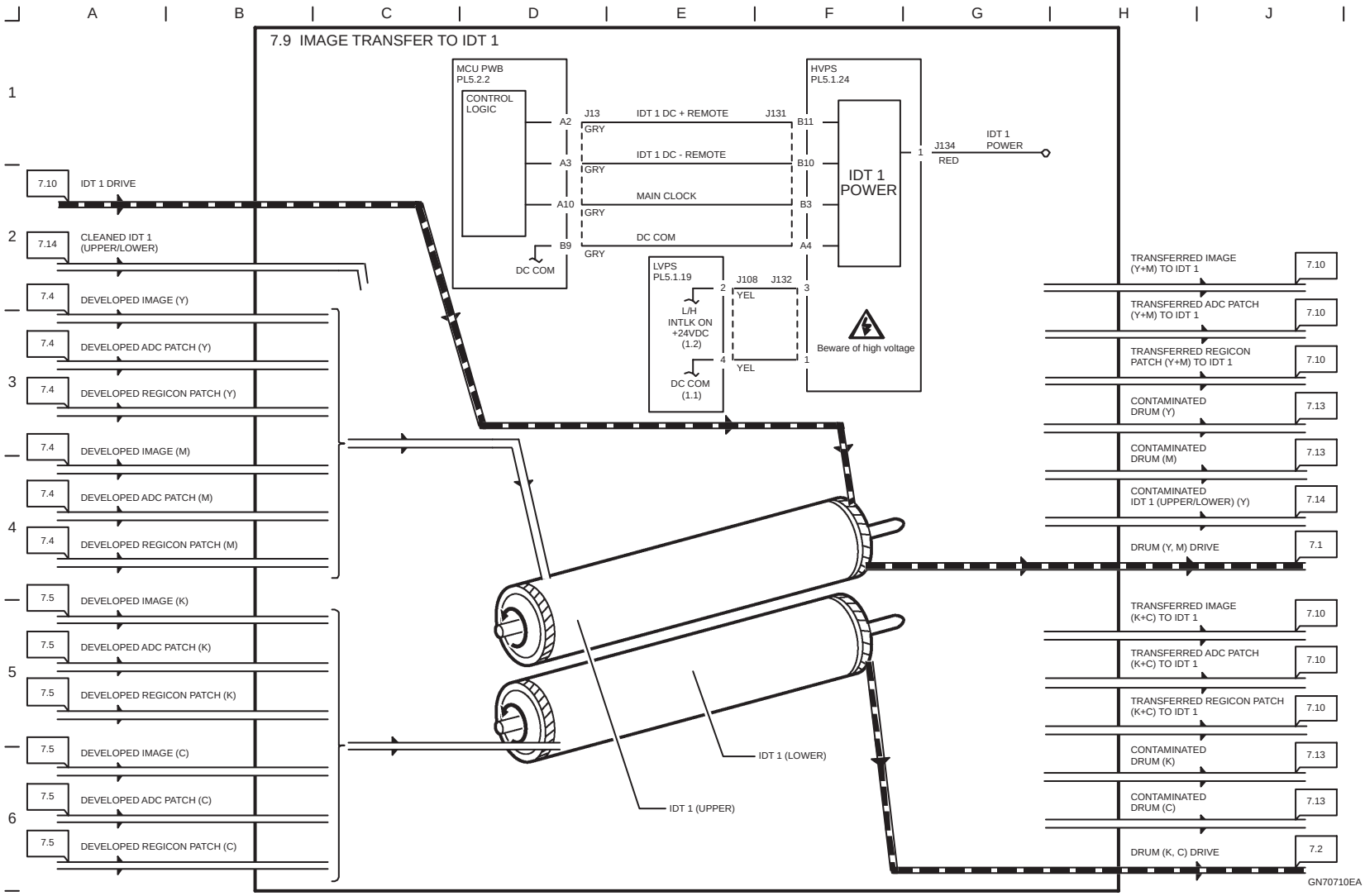

Figure 7-53. Detailed Connection Wiring Diagram (32)

CH7.10 IMAGE TRANSFER TO IDT 2

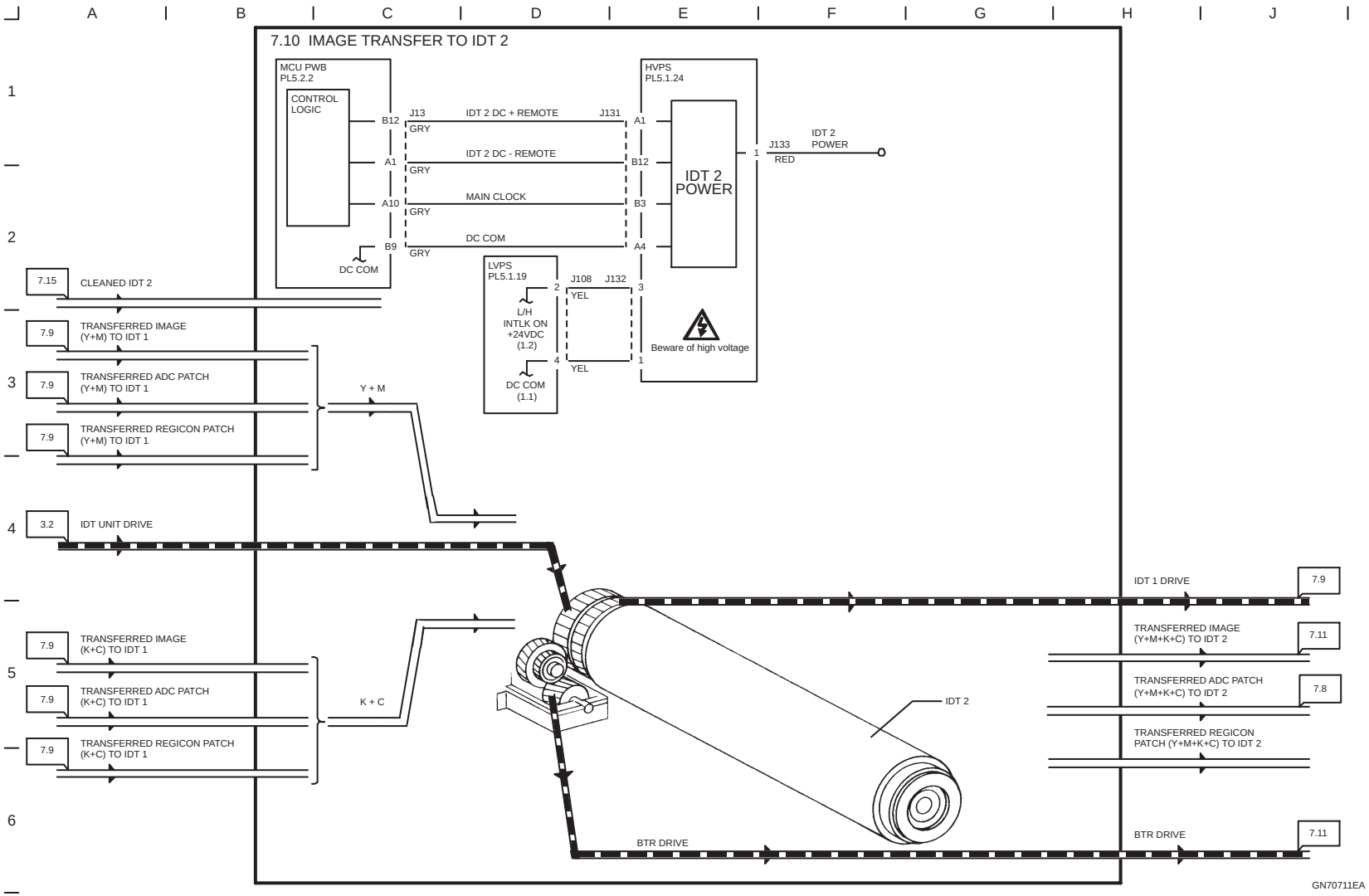

Figure 7-54. Detailed Connection Wiring Diagram (33)

manuals4you.com

CH7.11 IMAGE TRANSFER TO PAPER

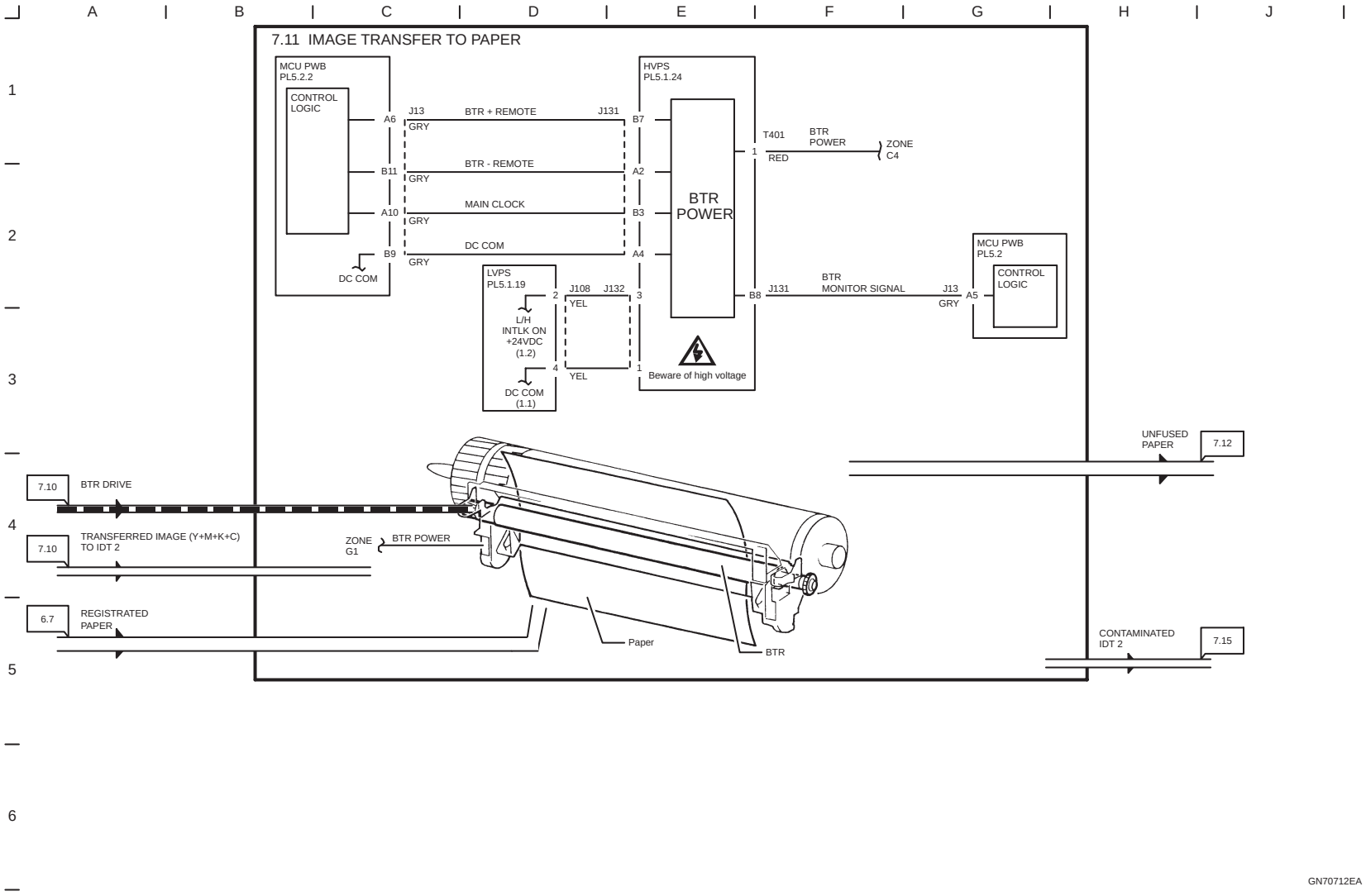

Figure 7-55. Detailed Connection Wiring Diagram (34)

CH7.12 STRIPPING

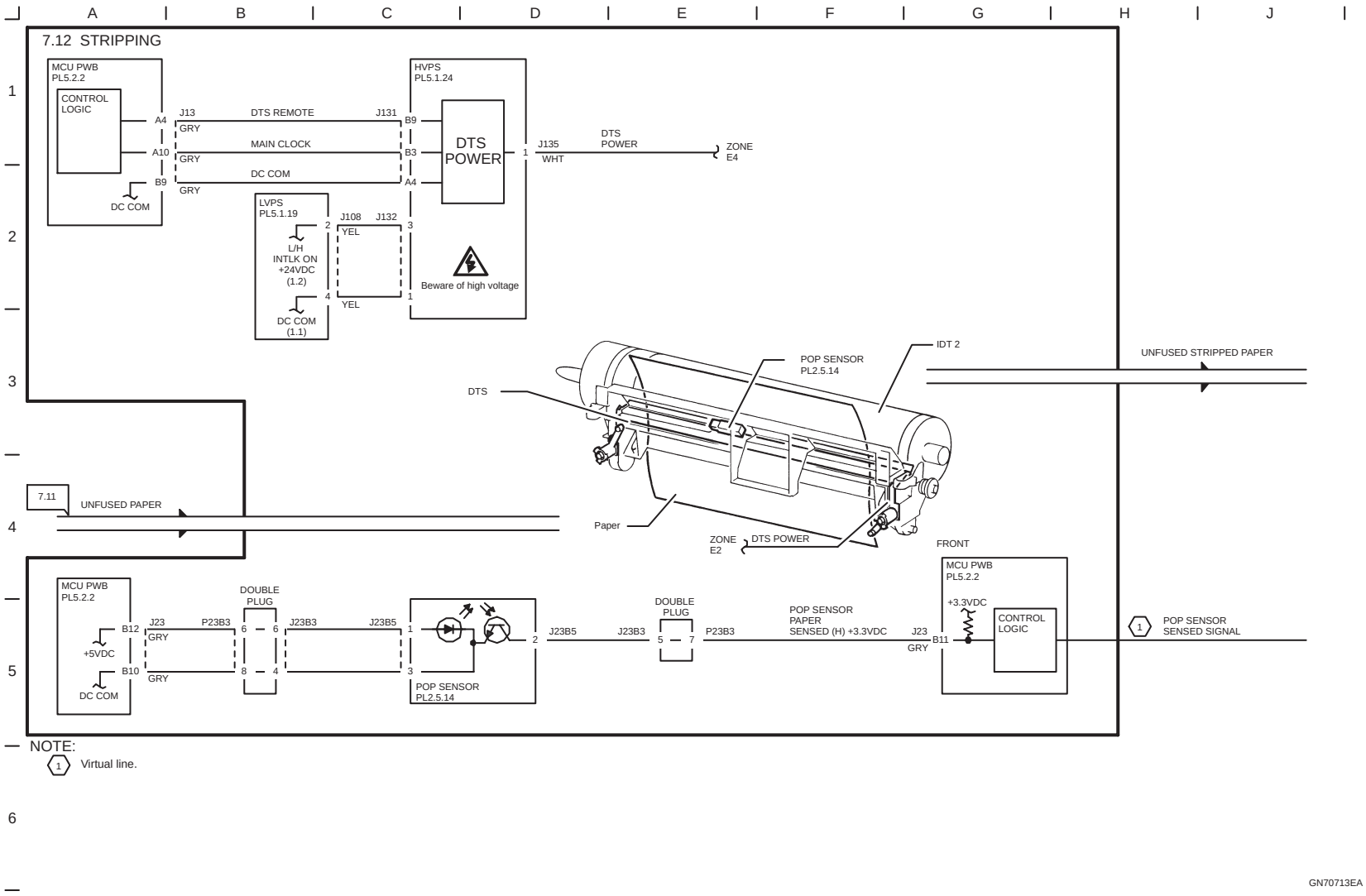

Figure 7-56. Detailed Connection Wiring Diagram (35)

manuals4you.com

CH7.13 DRUM CLEANING

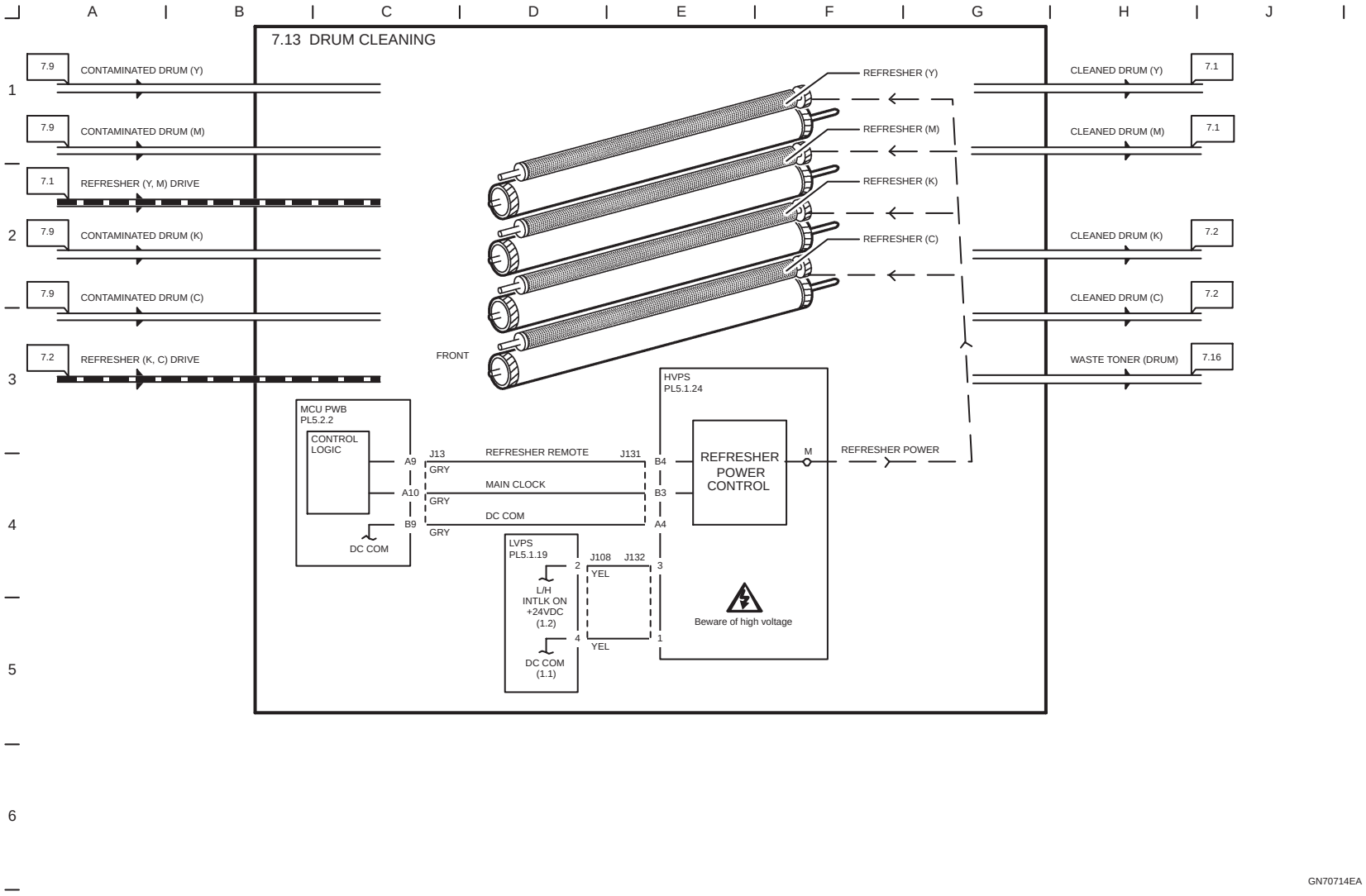

Figure 7-57. Detailed Connection Wiring Diagram (36)

CH7.14 IDT 1 CLEANING

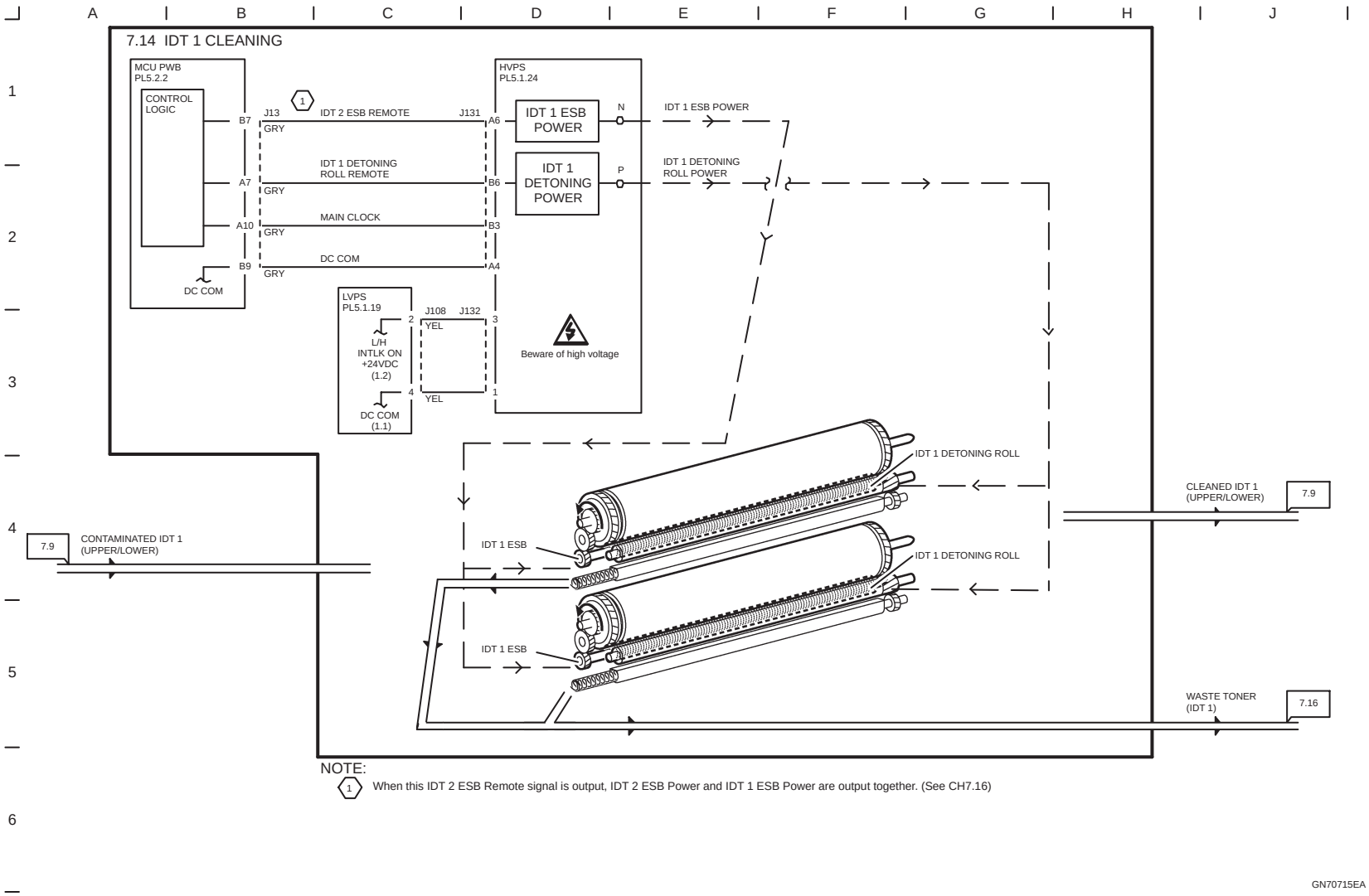

Figure 7-58. Detailed Connection Wiring Diagram (37)

manuals4you.com

CH7.15 IDT 2 CLEANING

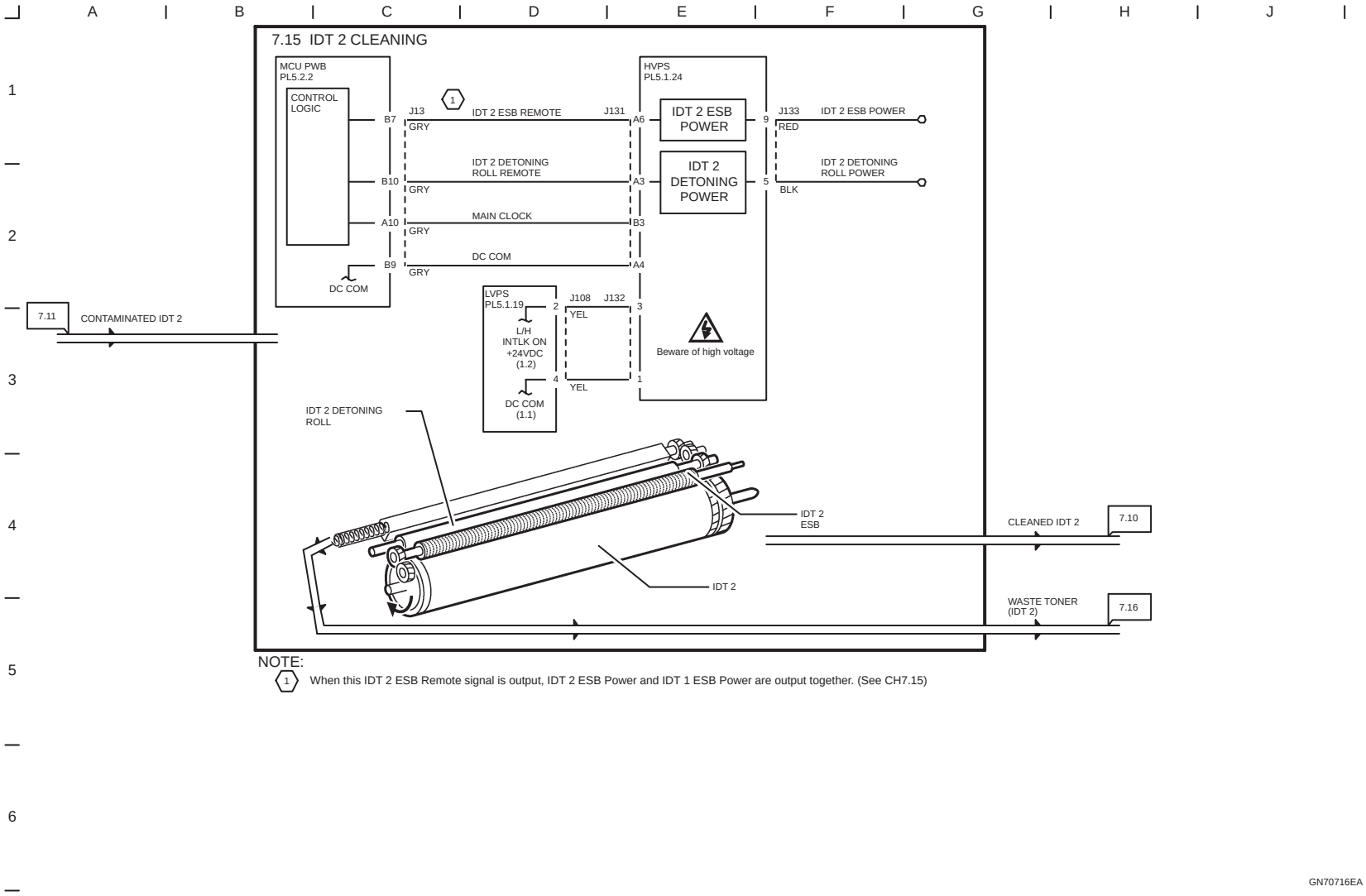

Figure 7-59. Detailed Connection Wiring Diagram (38)

CH7.16 WASTE TONER DISPOSAL

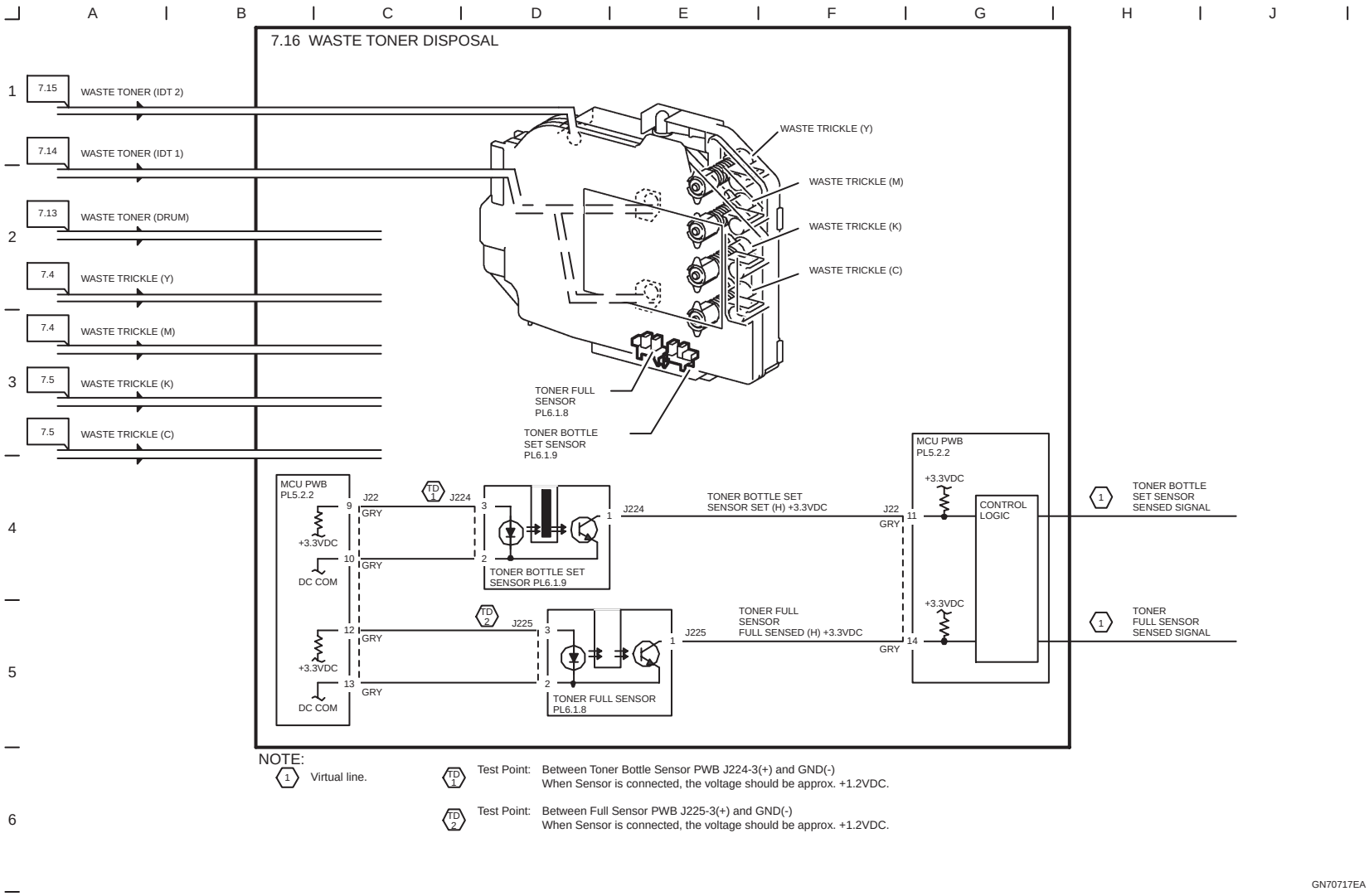

Figure 7-60. Detailed Connection Wiring Diagram (39)

manuals4you.com

CH8.1 COPY TRANSPORTATION (DUPLEX NON-MOUNTED MACHINE) (SIDE TRAY MOUNTED/NON-MOUNTED)

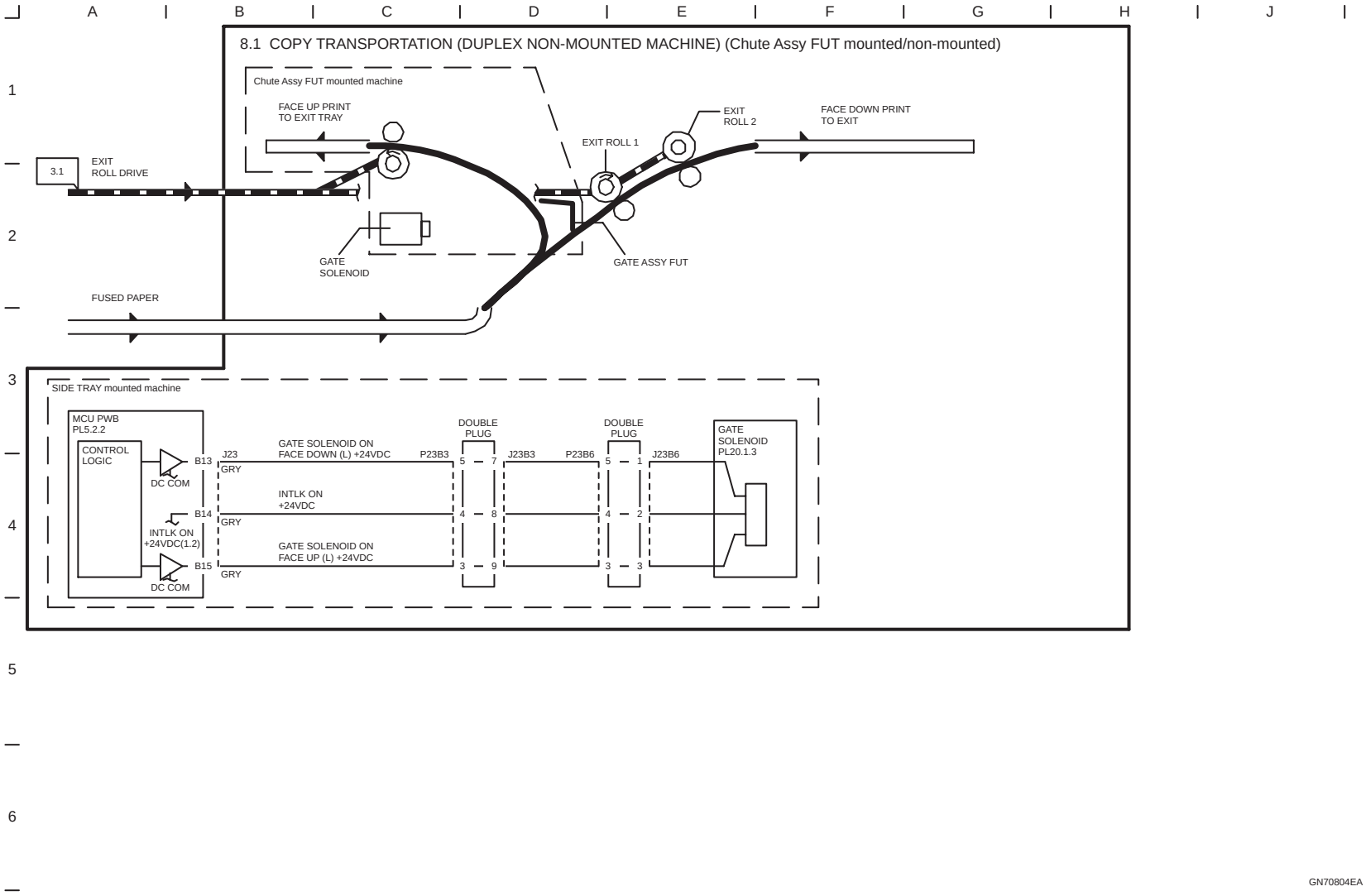

Figure 7-61. Detailed Connection Wiring Diagram (40)

CH8.2 COPY TRANSPORTATION (DUPLEX MOUNTED MACHINE) (SIDE TRAY MOUNTED/NON-MOUNTED)

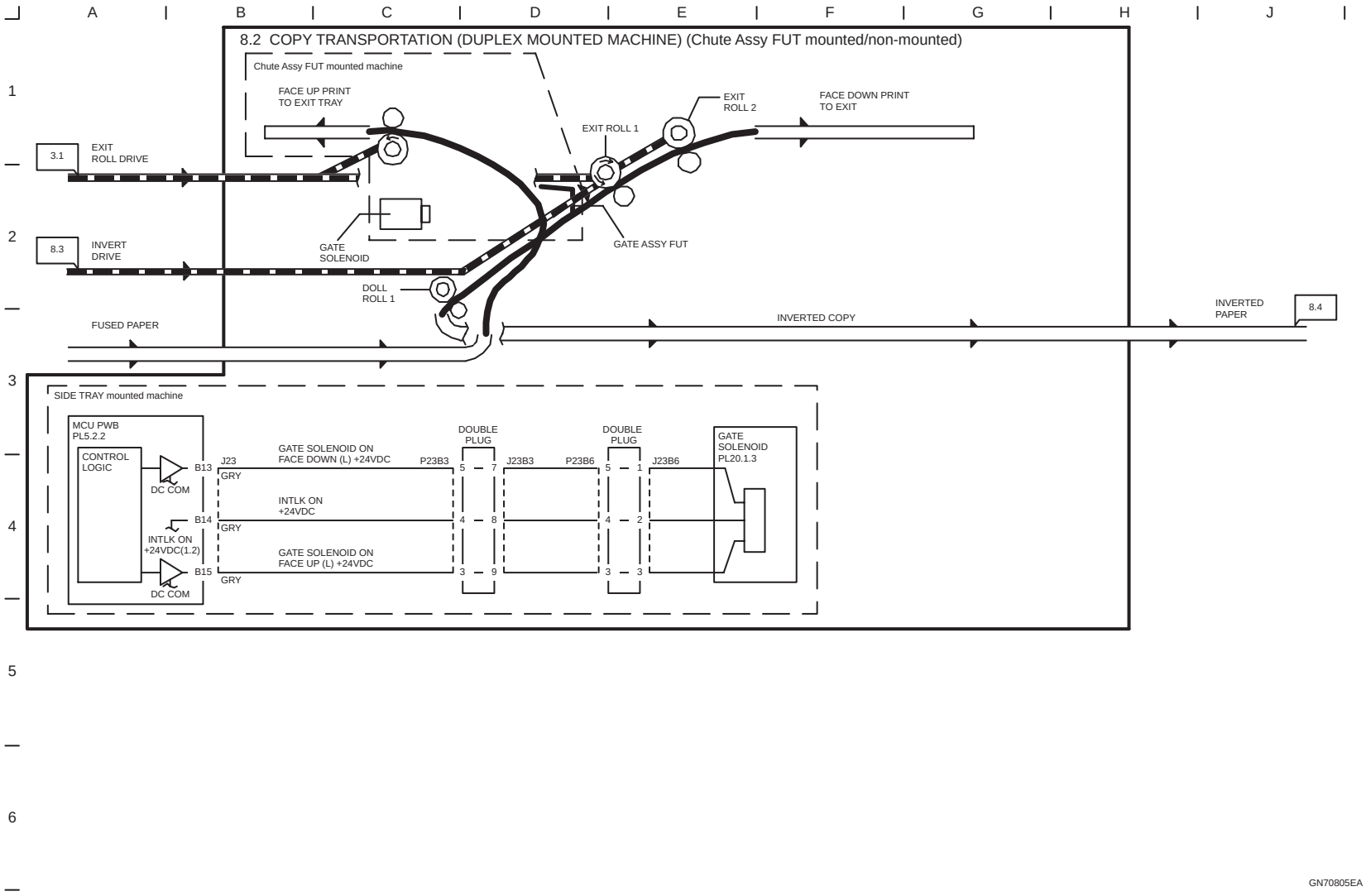

Figure 7-62. Detailed Connection Wiring Diagram (41)

manuals4you.com

CH8.3 DUPLEX DRIVE CONTROL (DUPLEX MOUNTED MACHINE)

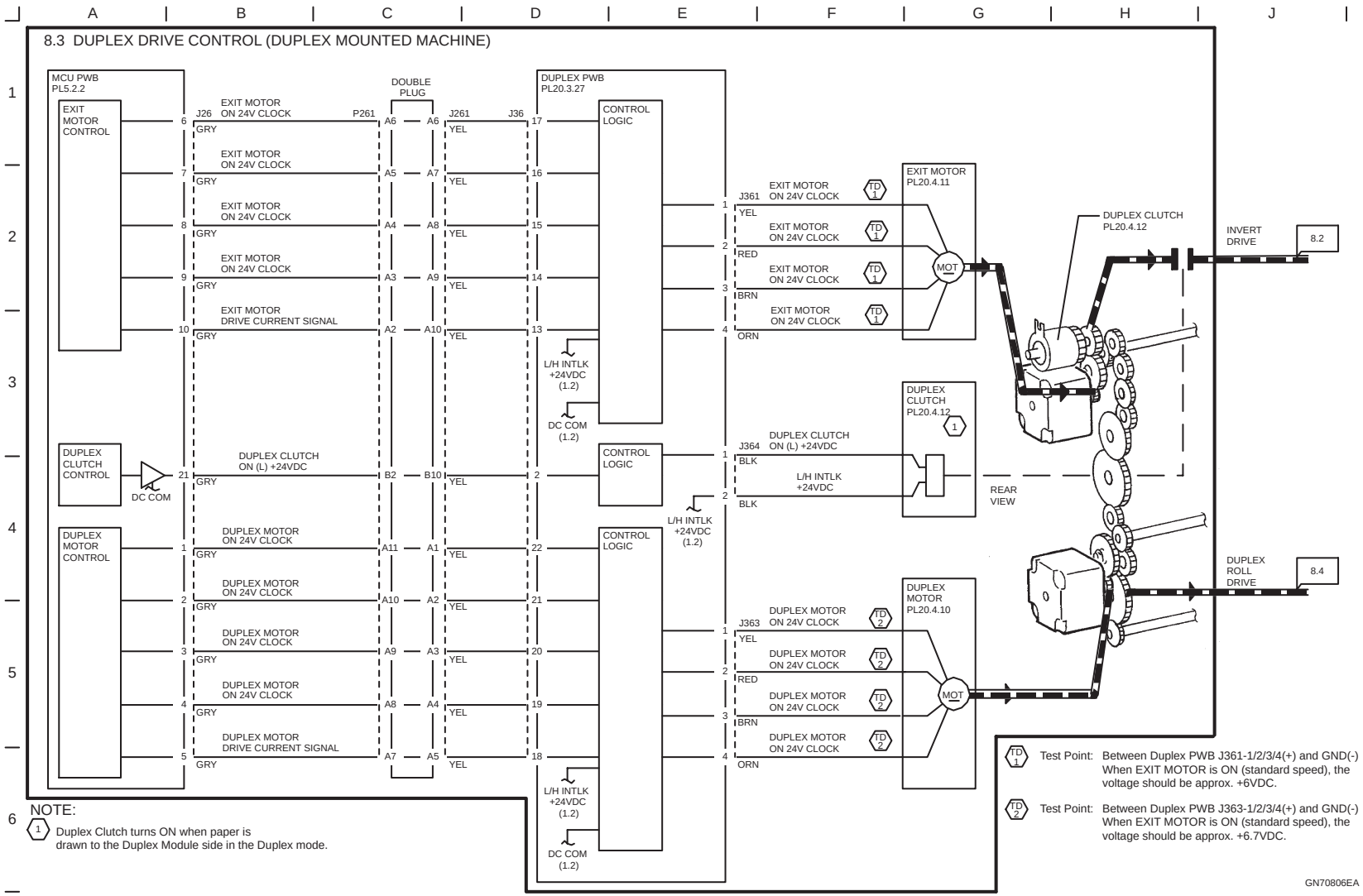

Figure 7-63. Detailed Connection Wiring Diagram (42)

CH8.4 DUPLEX PAPER TRANSPORTATION (DUPLEX MOUNTED MACHINE)

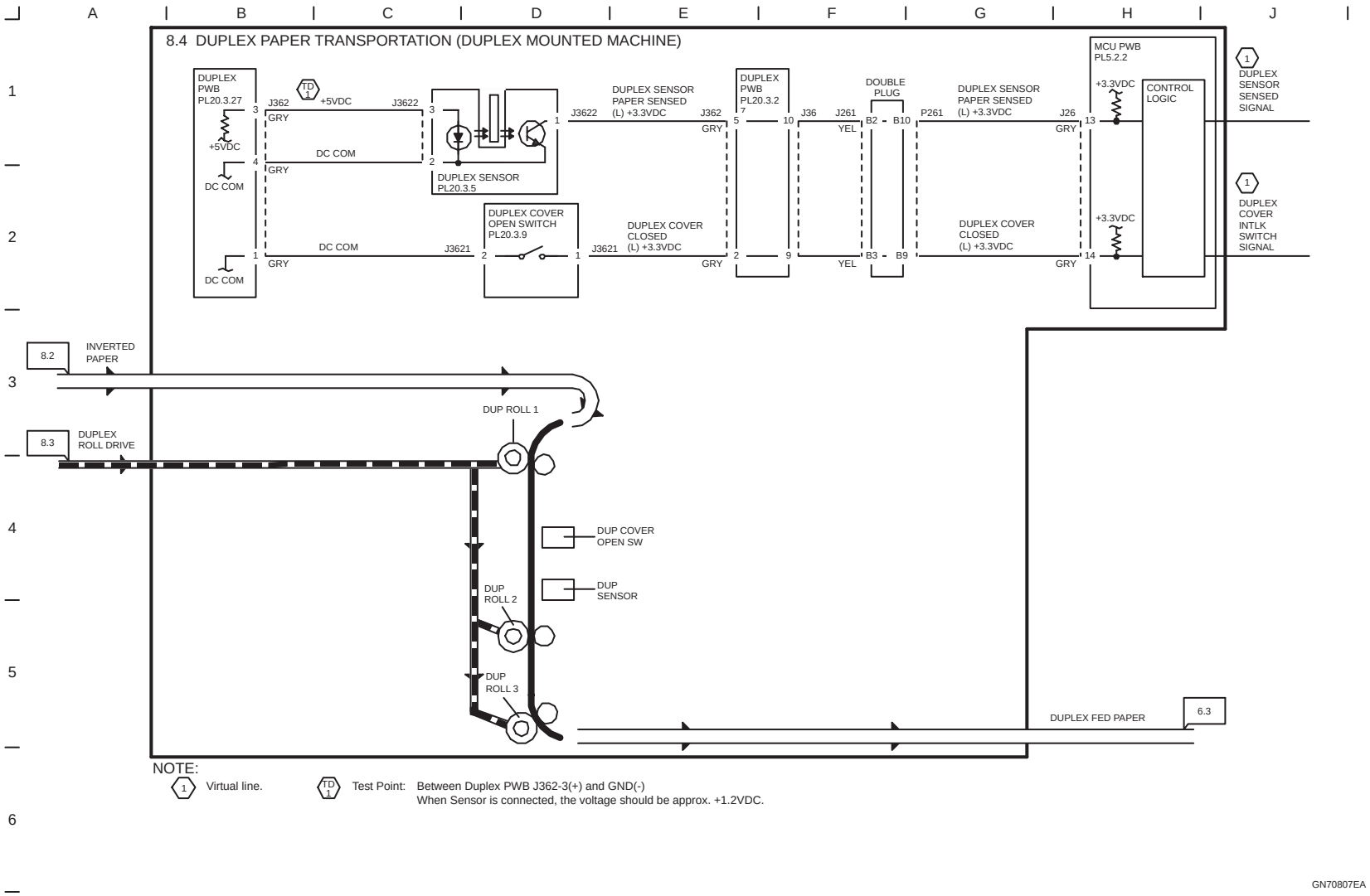

Figure 7-64. Detailed Connection Wiring Diagram (43)

manuals4you.com

7.3 Exploded Diagrams

The parts to which no reference number is assigned will not be available as after-sale service parts.

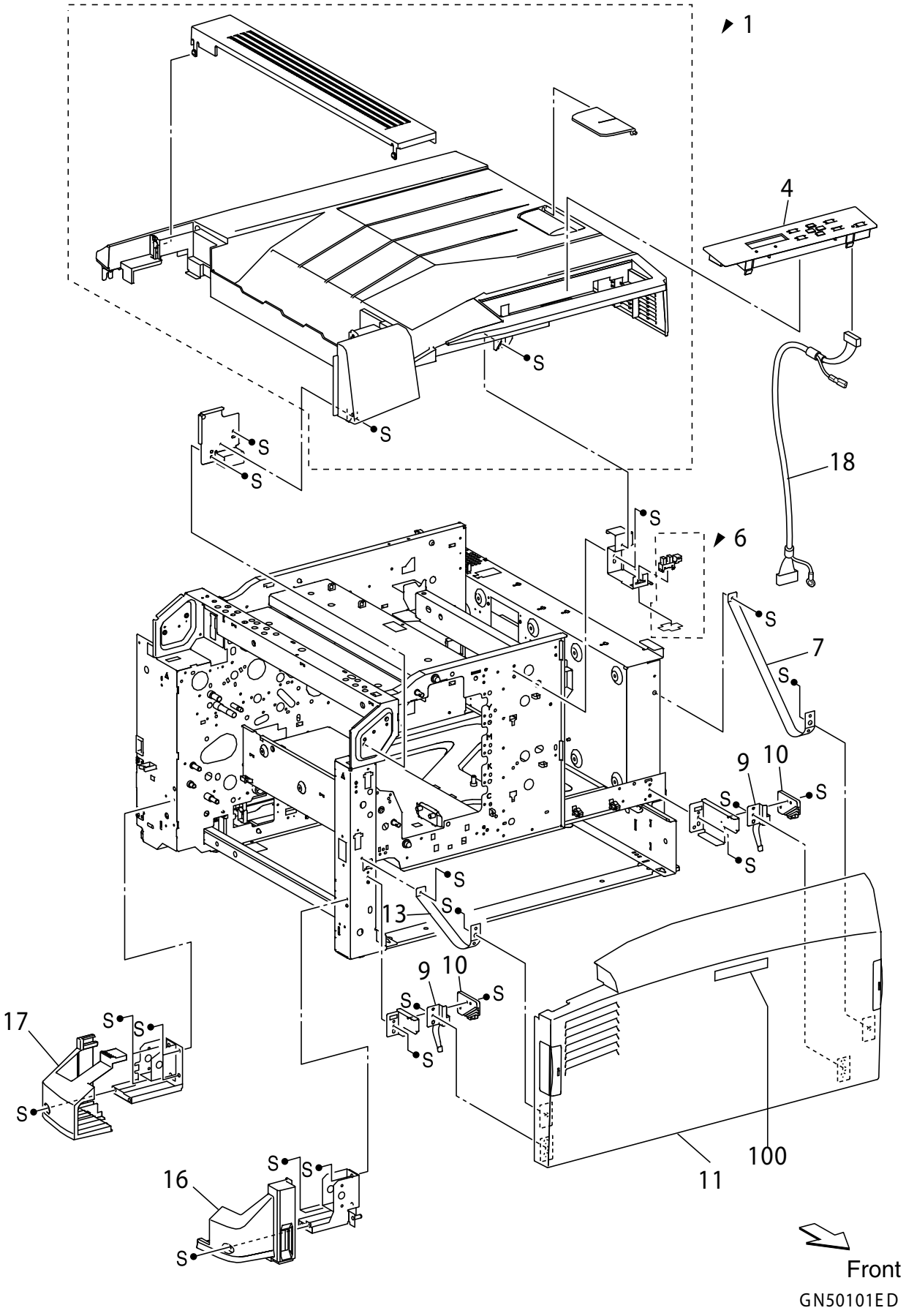

manuals4you.com

C565-CASE-002A

The parts to which no reference number is assigned will not be available as after-sale service parts.

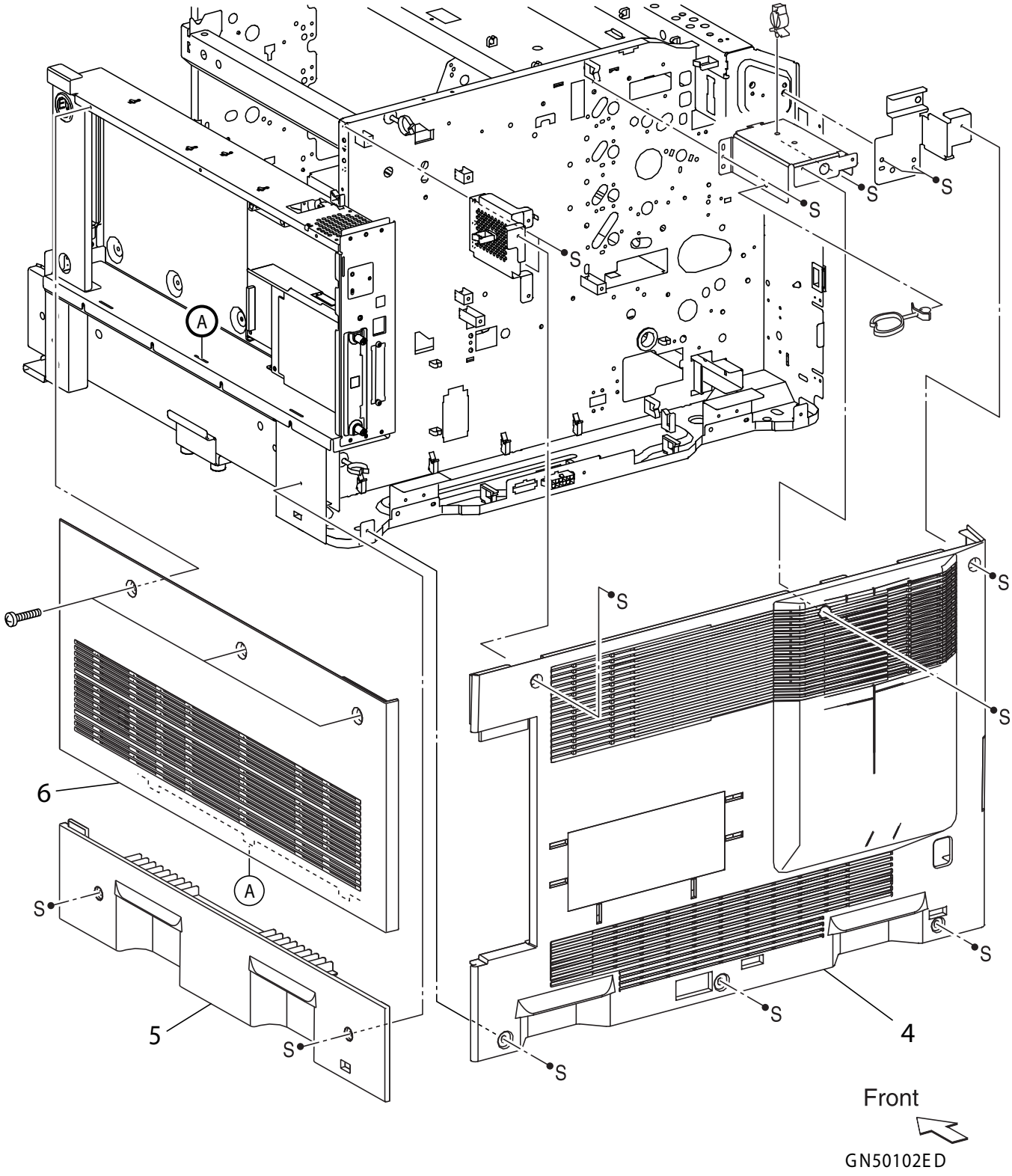

The parts to which no reference number is assigned will not be available as after-sale service parts.

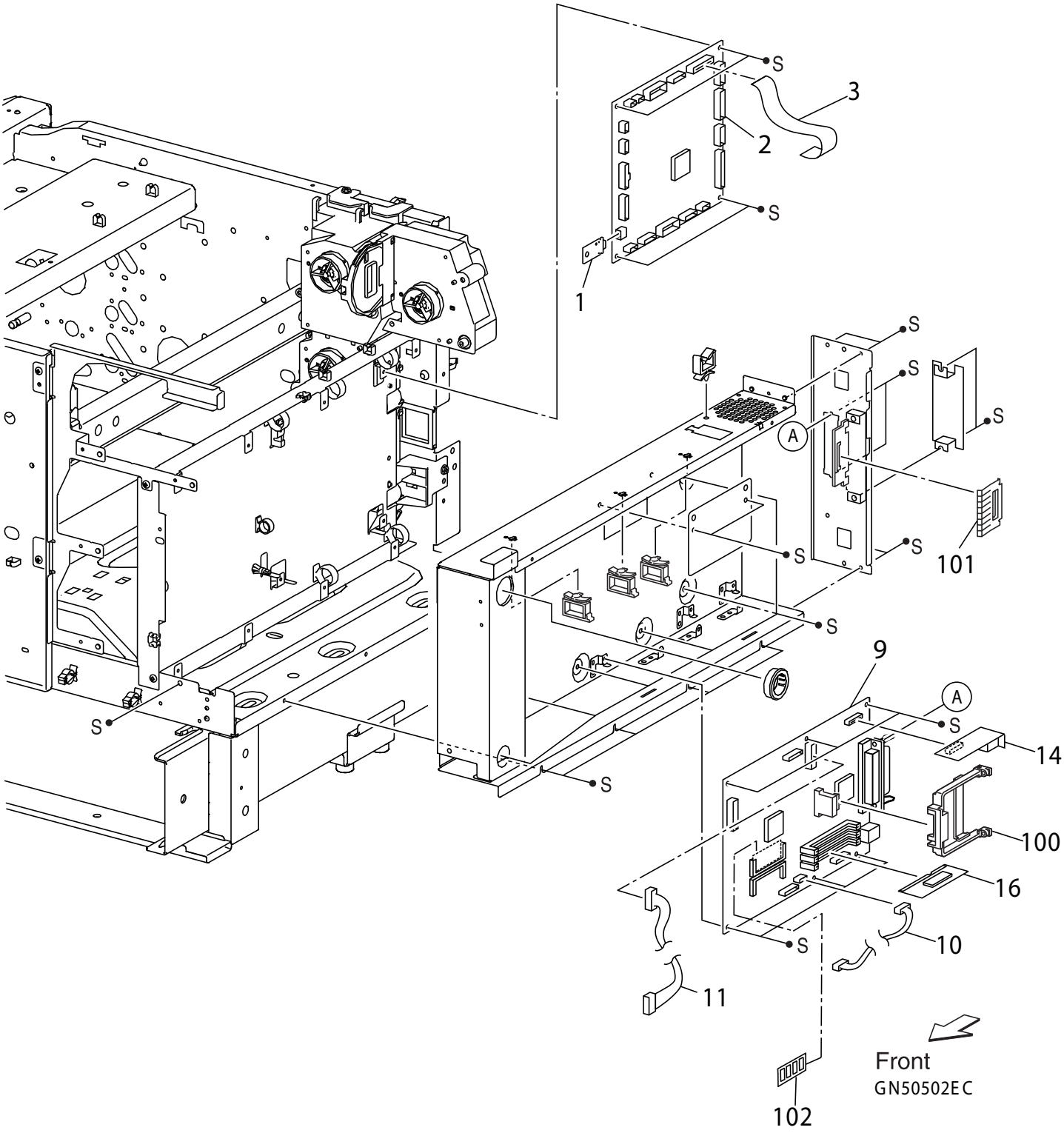

manuals4you.com

The parts to which no reference number is assigned will not be available as after-sale service parts.

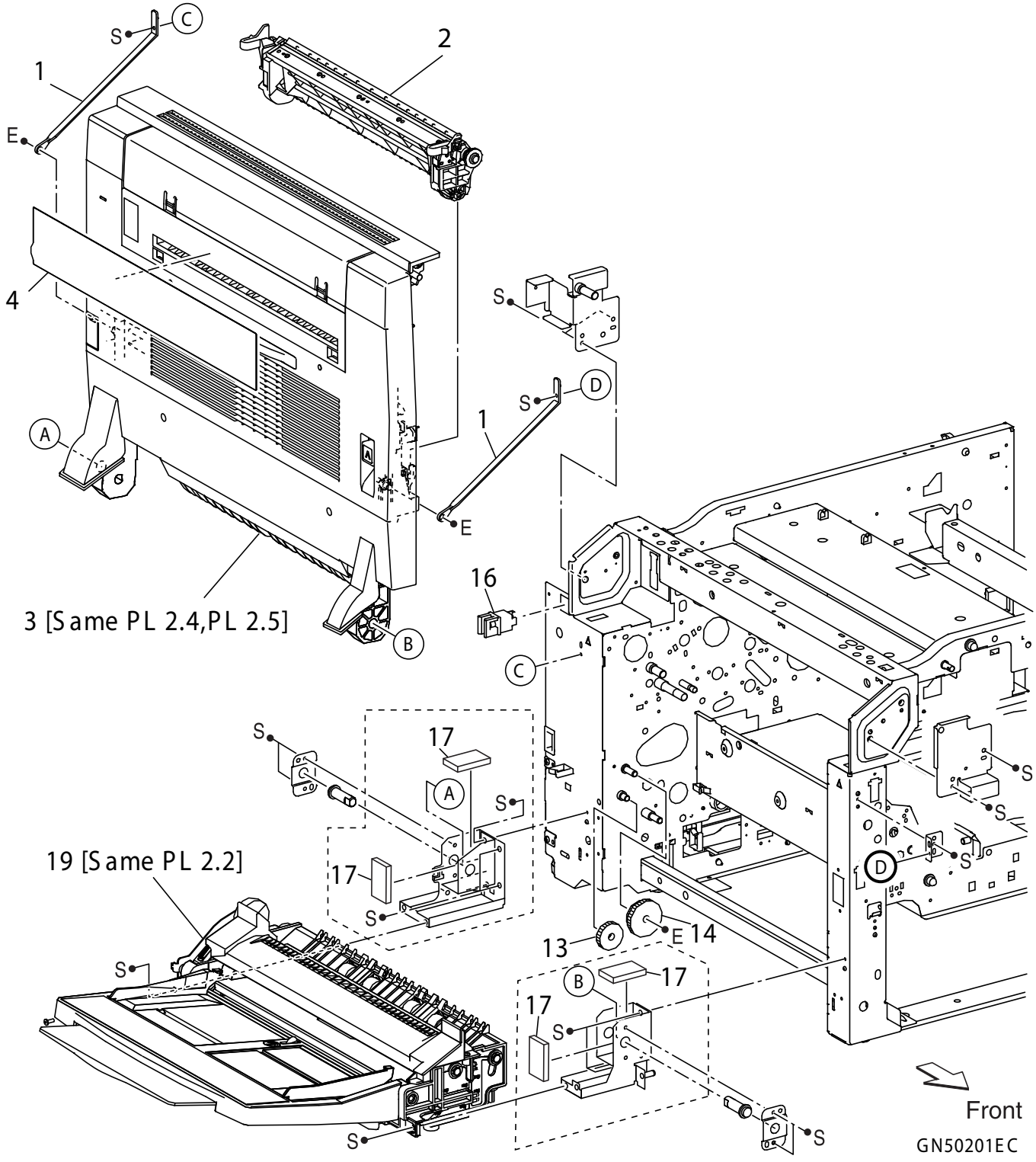

The parts to which no reference number is assigned will not be available as after-sale service parts.

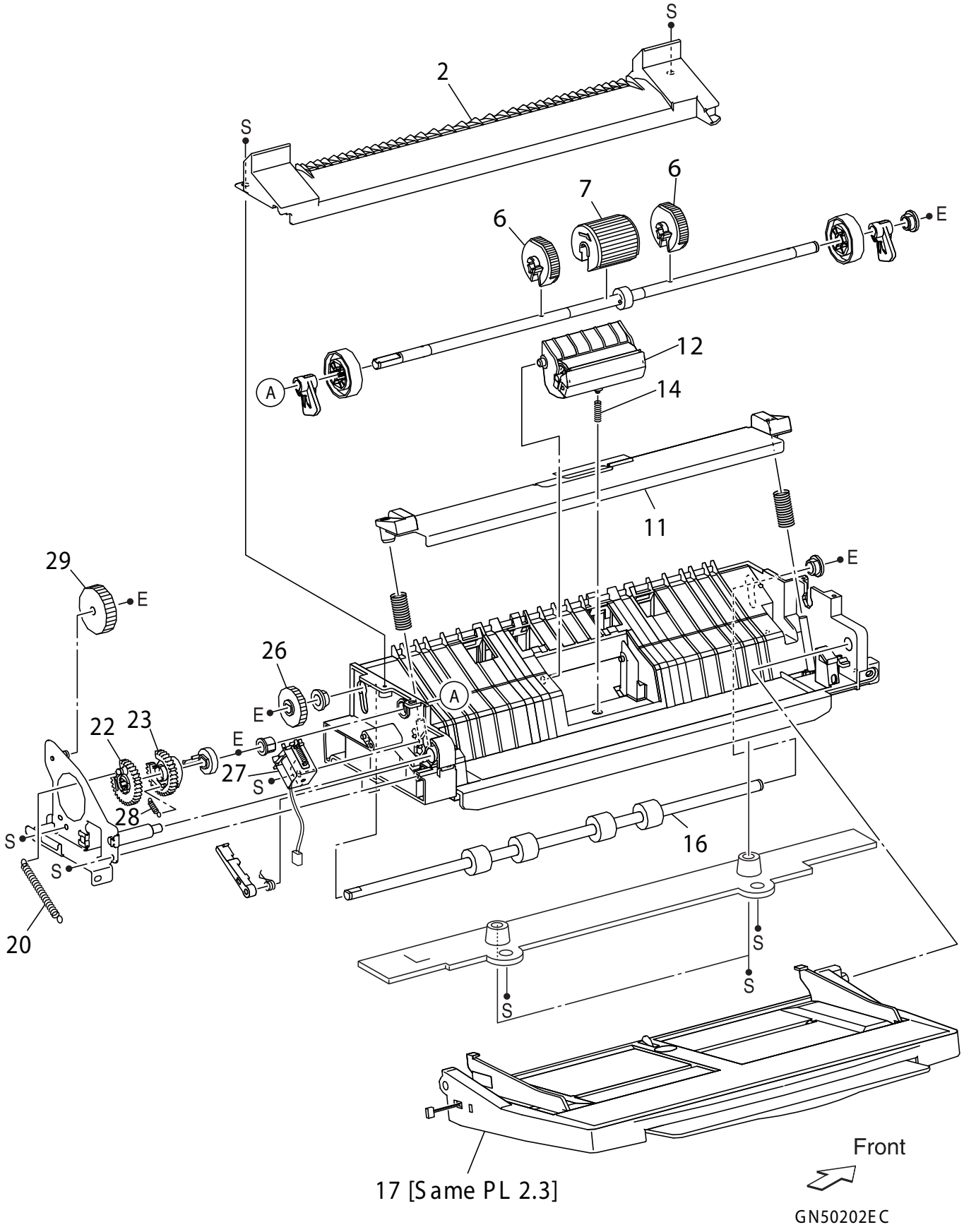

manuals4you.com

The parts to which no reference number is assigned will not be available as after-sale service parts.

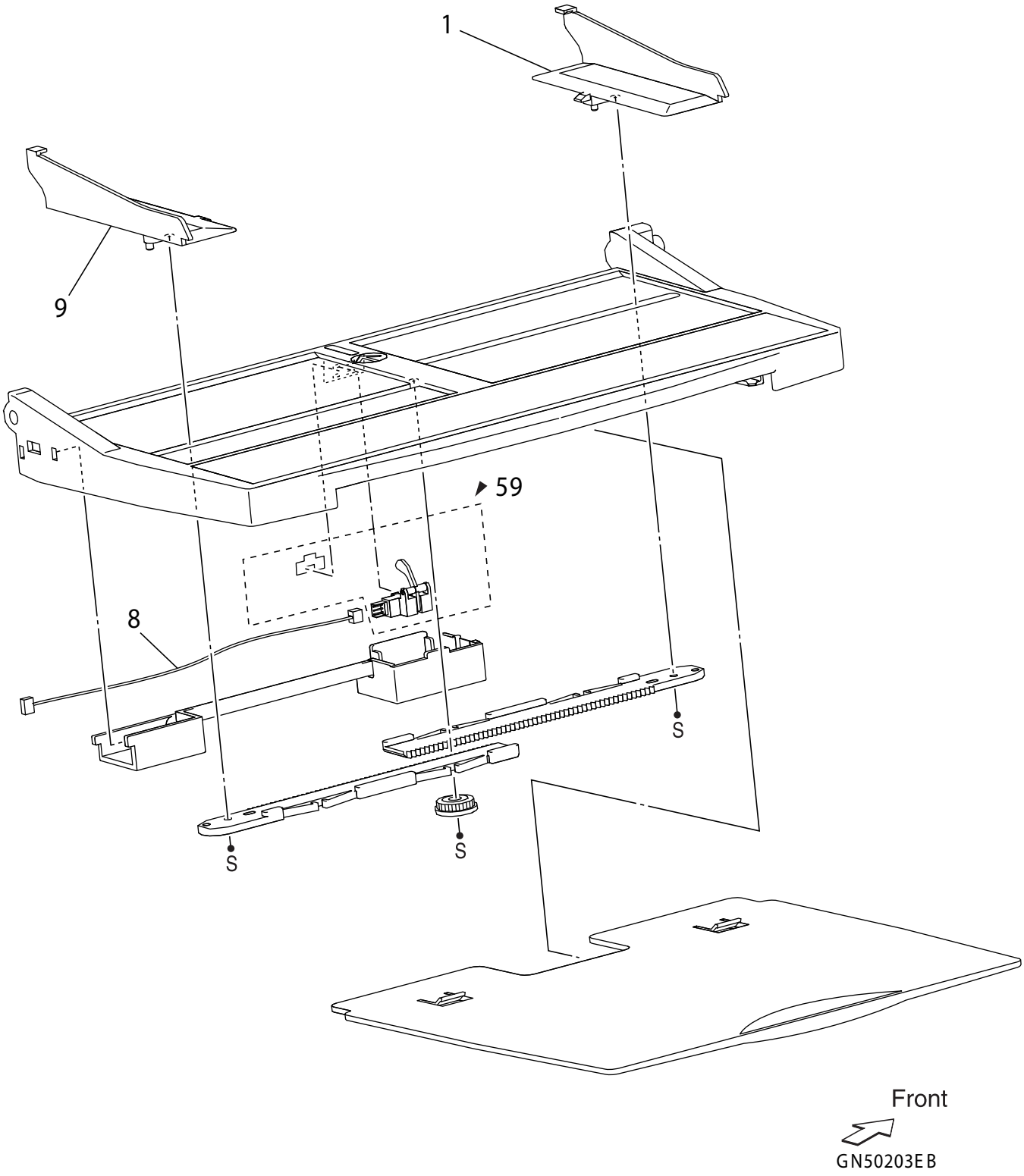

The parts to which no reference number is assigned will not be available as after-sale service parts.

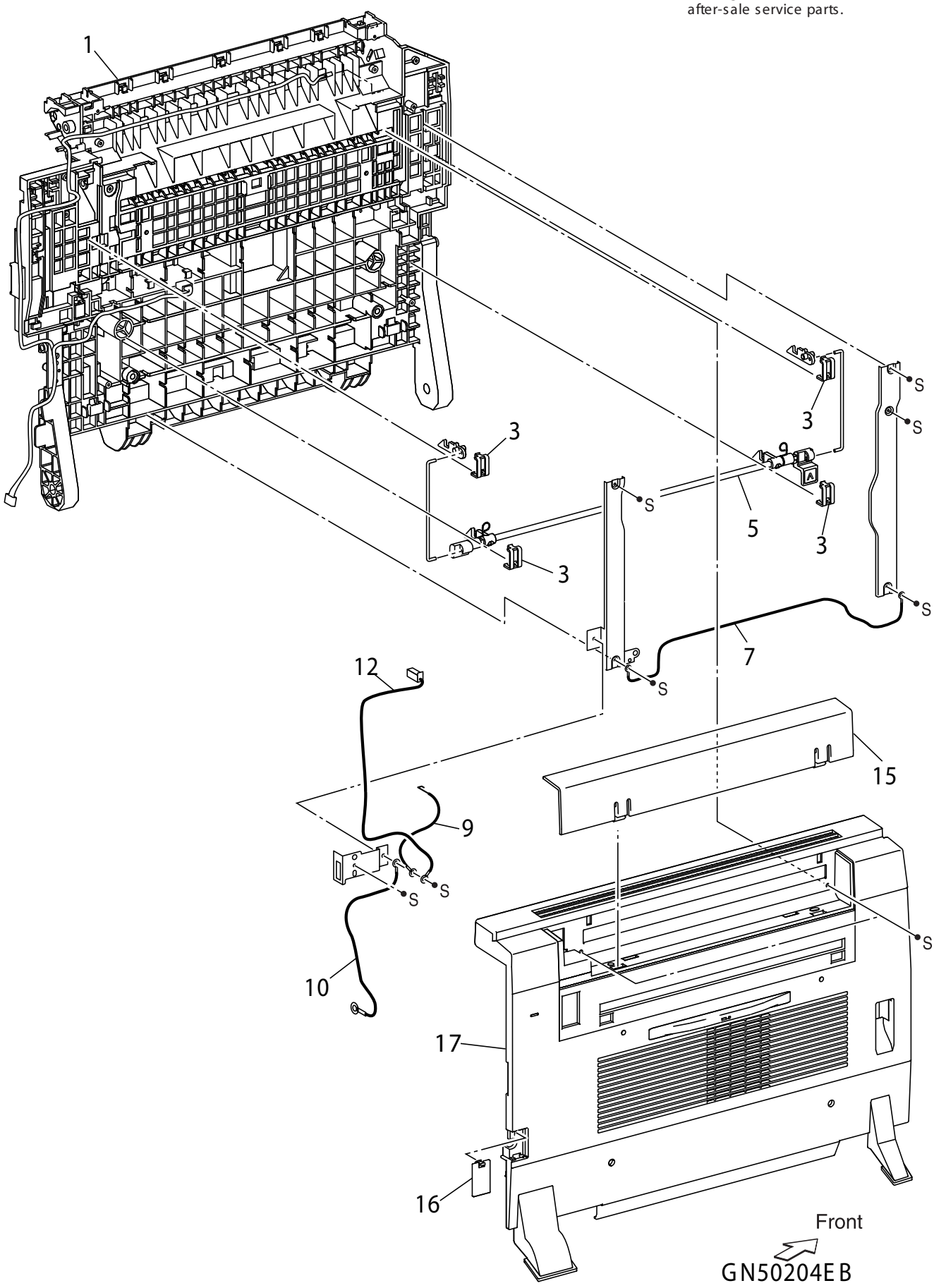

manuals4you.com

The parts to which no reference number is assigned will not be available as after-sale service parts.

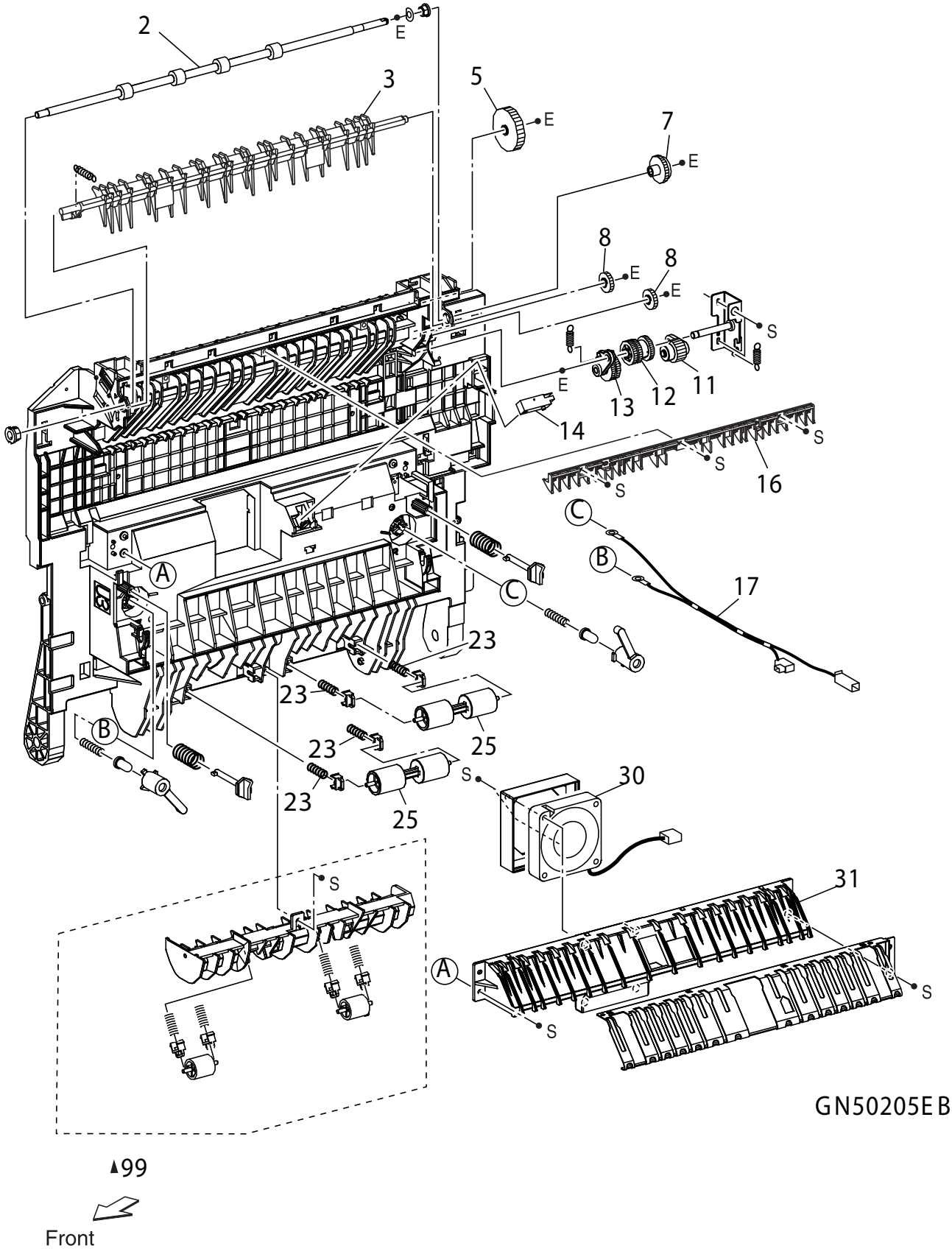

The parts to which no reference number is assigned will not be available as after-sale service parts.

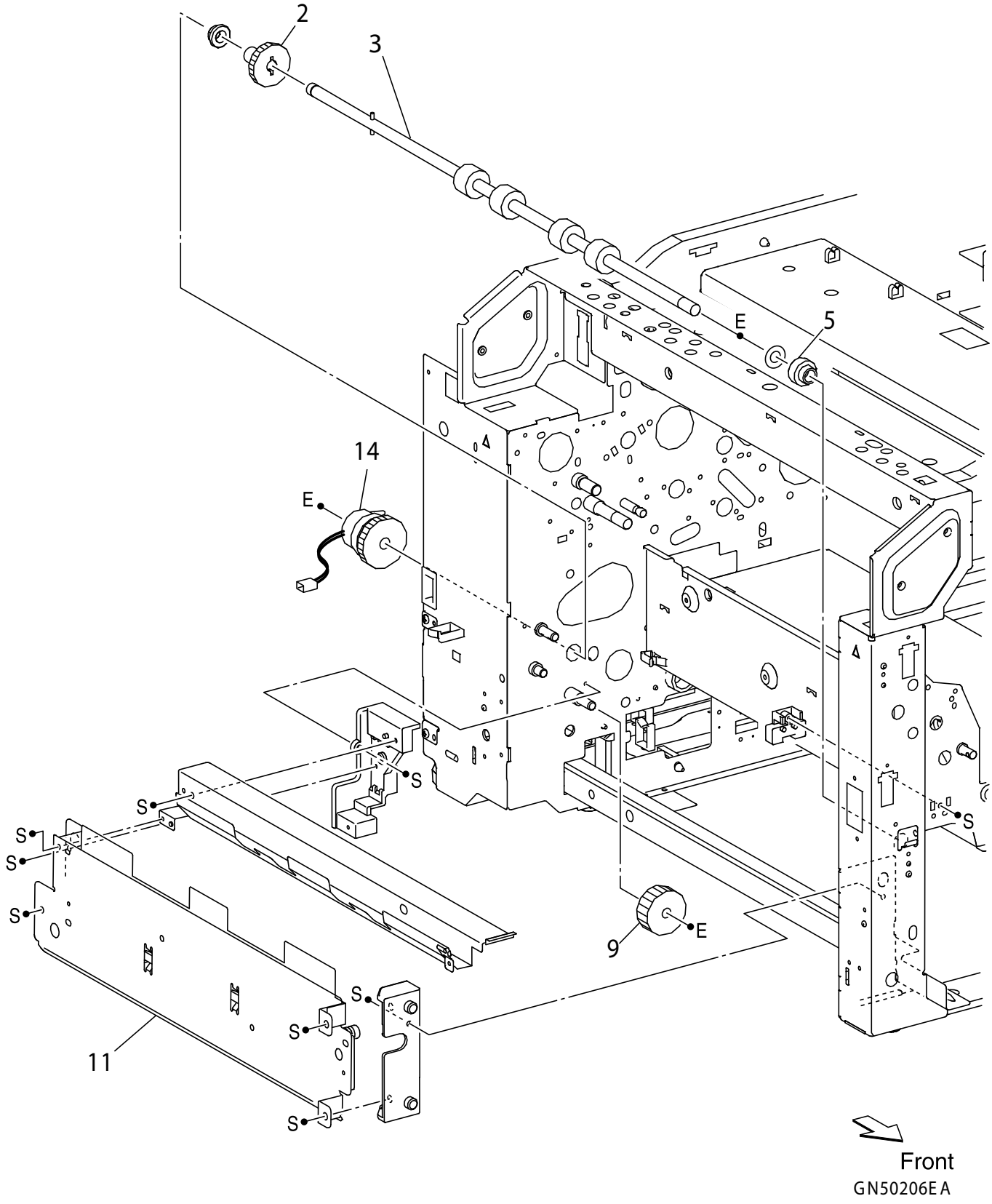

manuals4you.com

The parts to which no reference number is assigned will not be available as after-sale service parts.

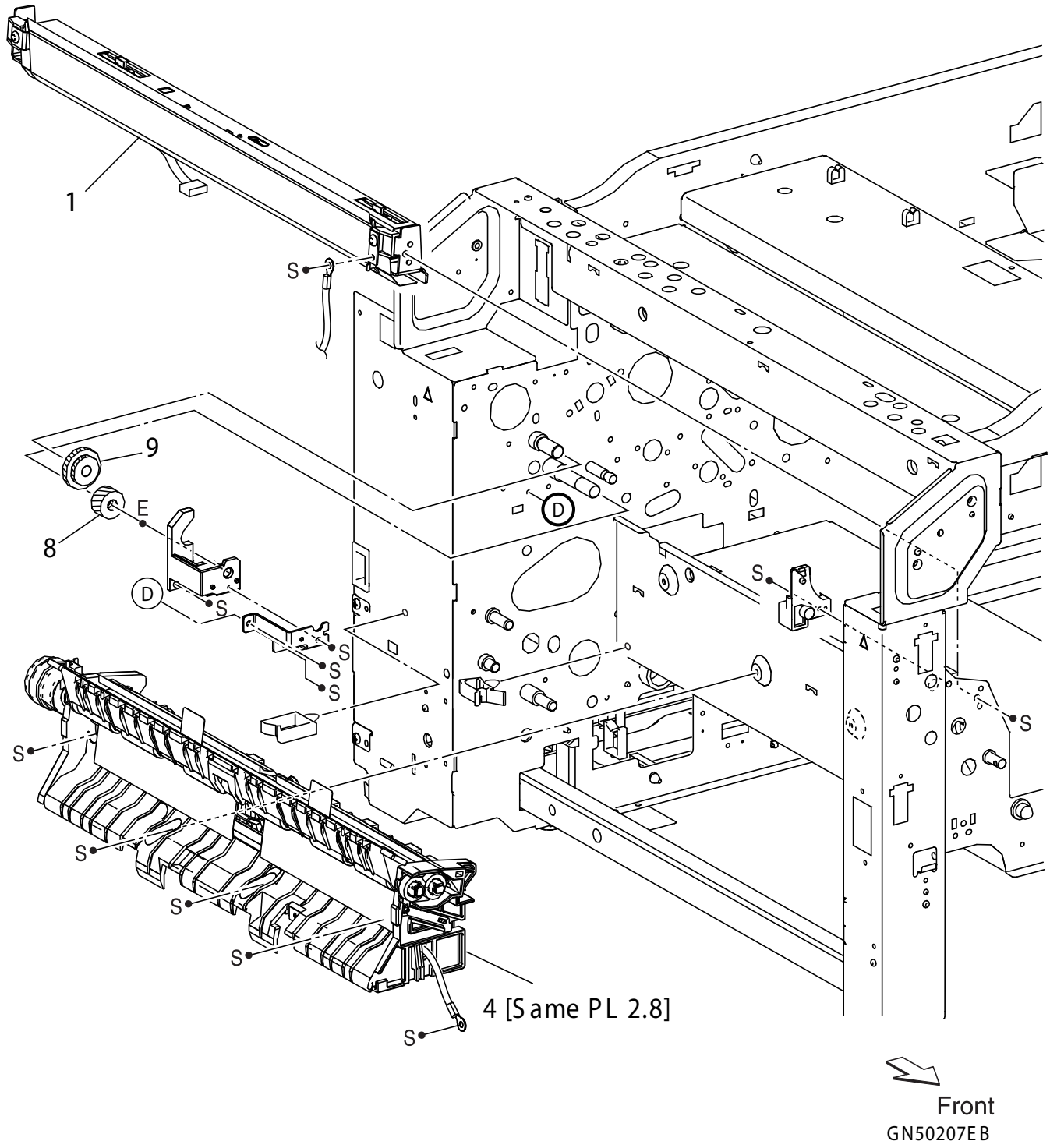

The parts to which no reference number is assigned will not be available as after-sale service parts.

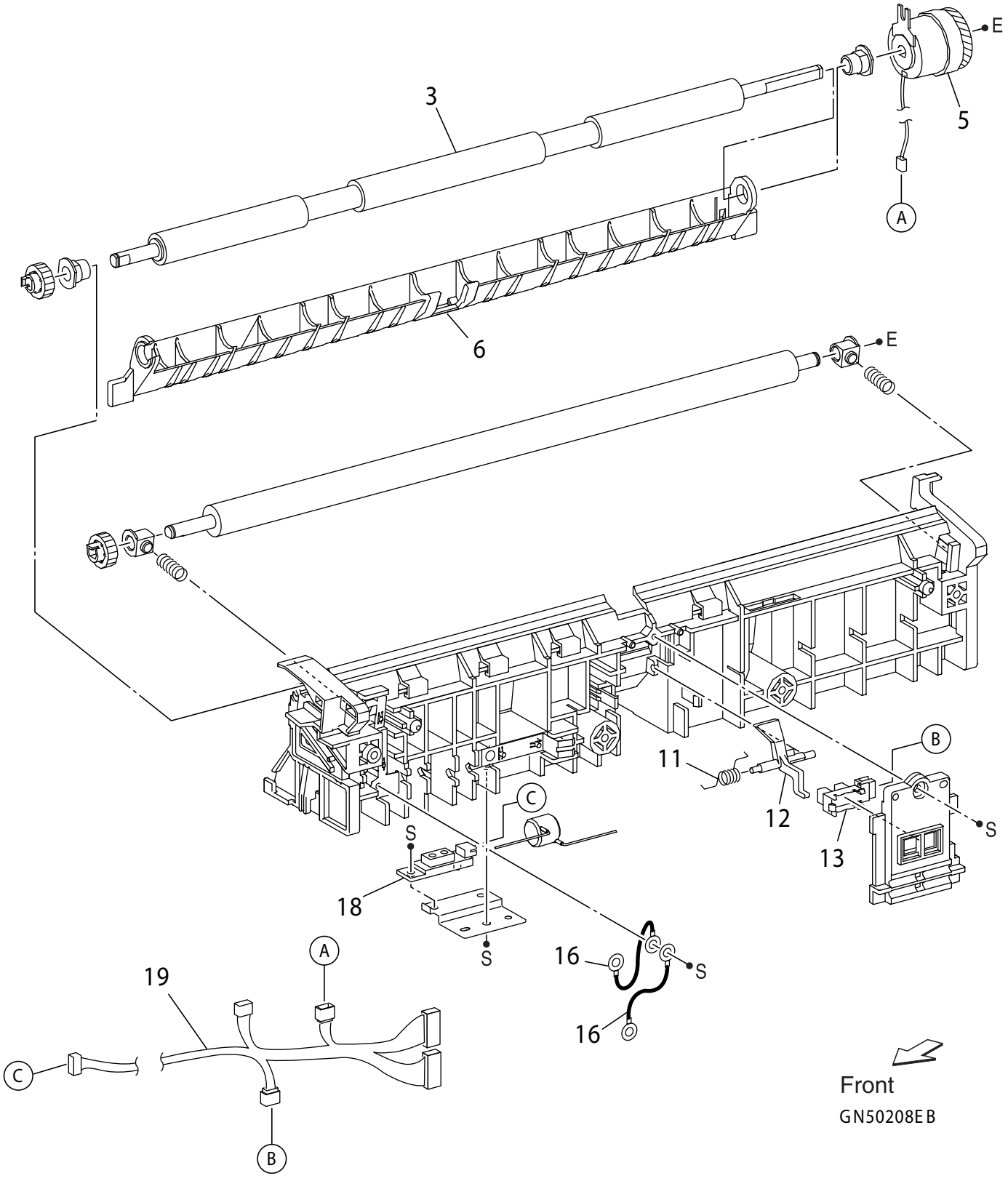

manuals4you.com

The parts to which no reference number is assigned will not be available as after-sale service parts.

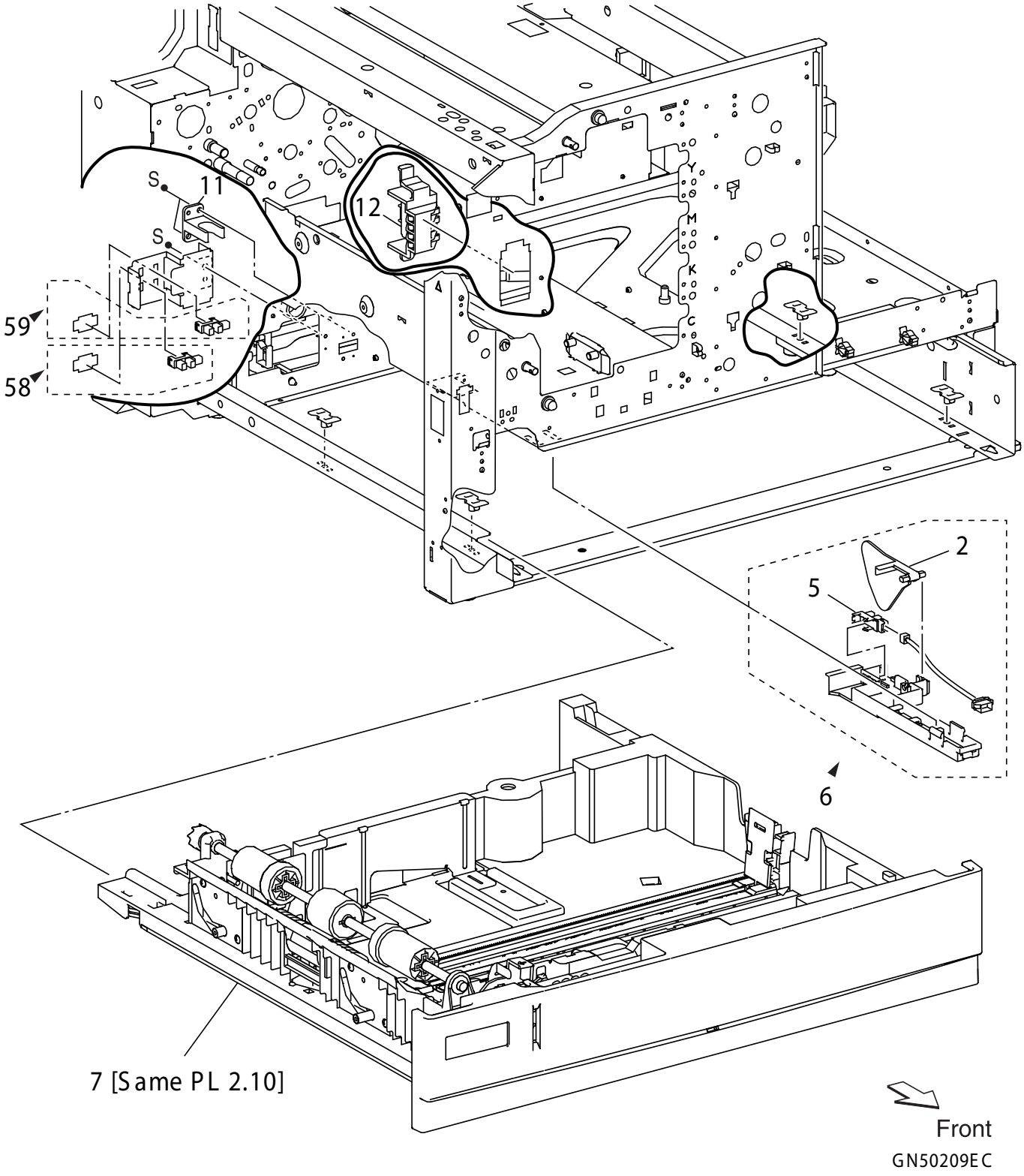

The parts to which no reference number is assigned will not be available as after-sale service parts.

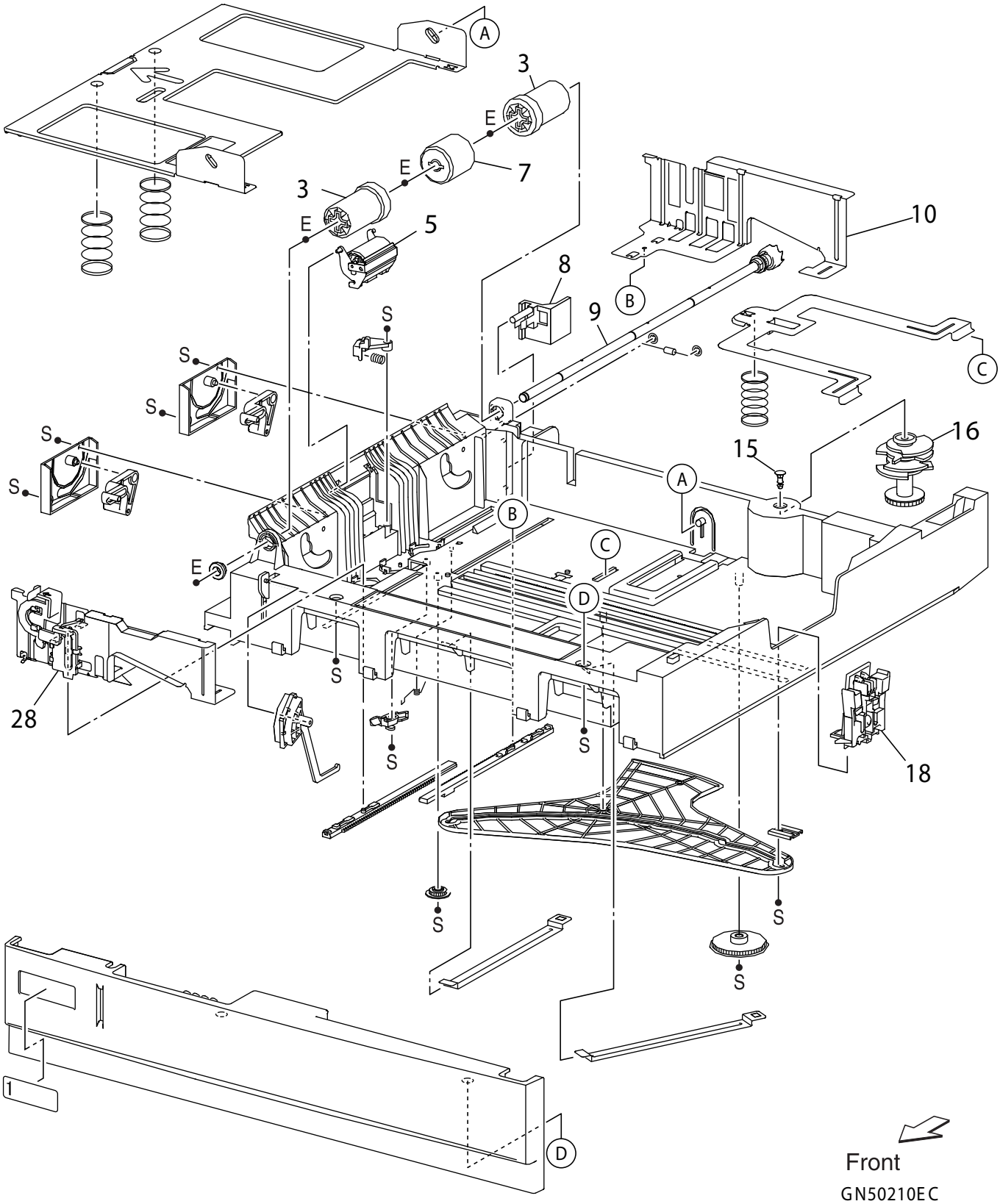

manuals4you.com

The parts to which no reference number is assigned will not be available as after-sale service parts.

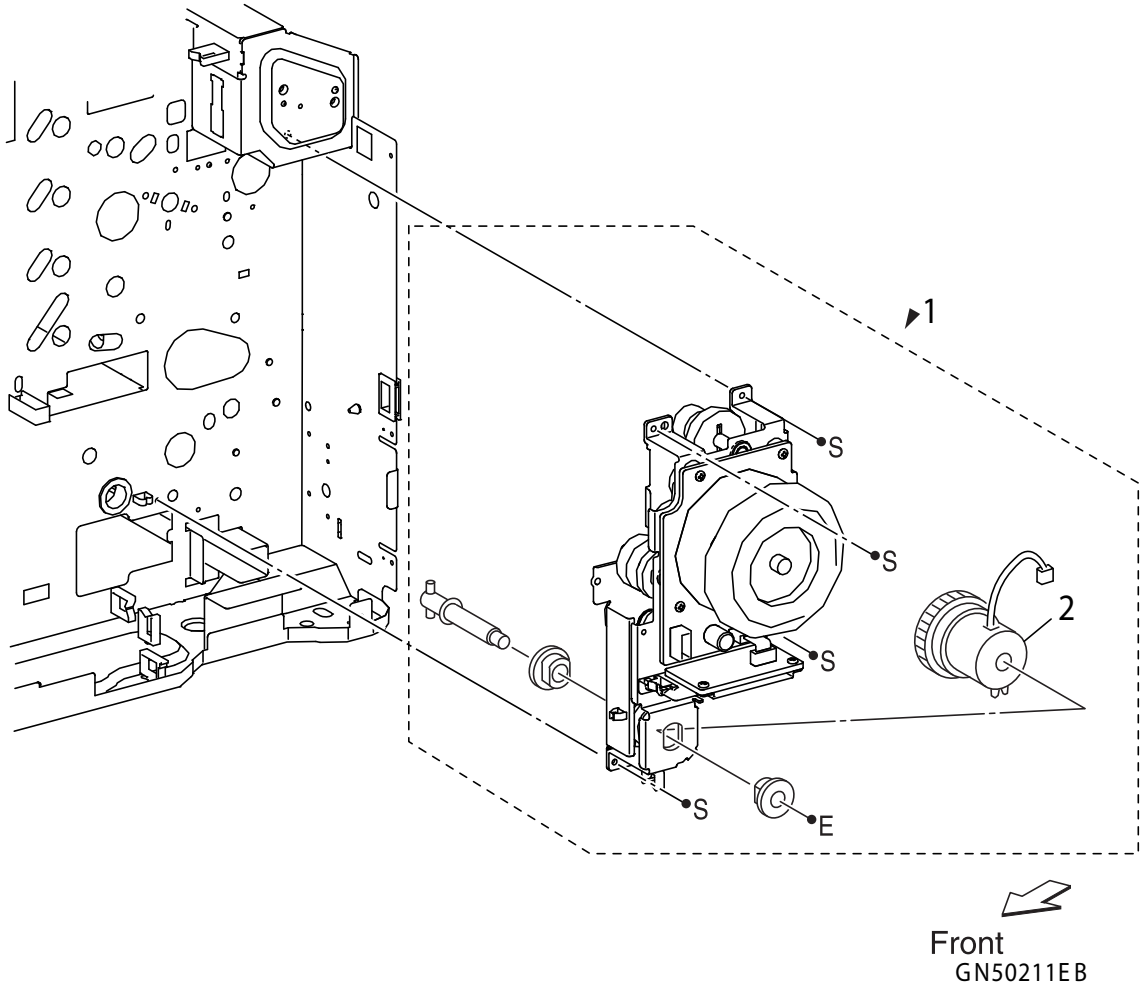

manuals4you.com

The parts to which no reference number is assigned will not be available as after-sale service parts.

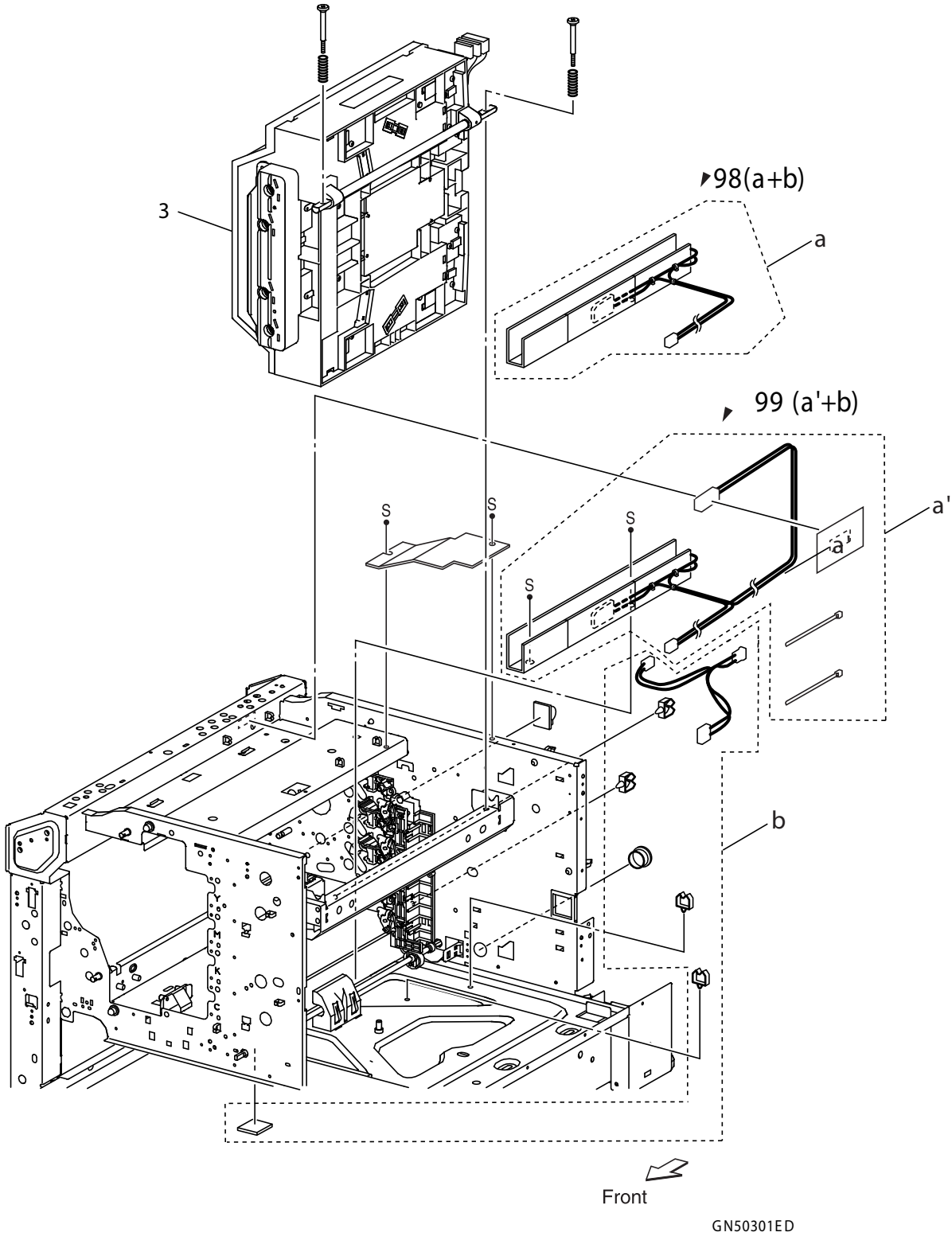

manuals4you.com

The parts to which no reference number is assigned will not be available as after-sale service parts.

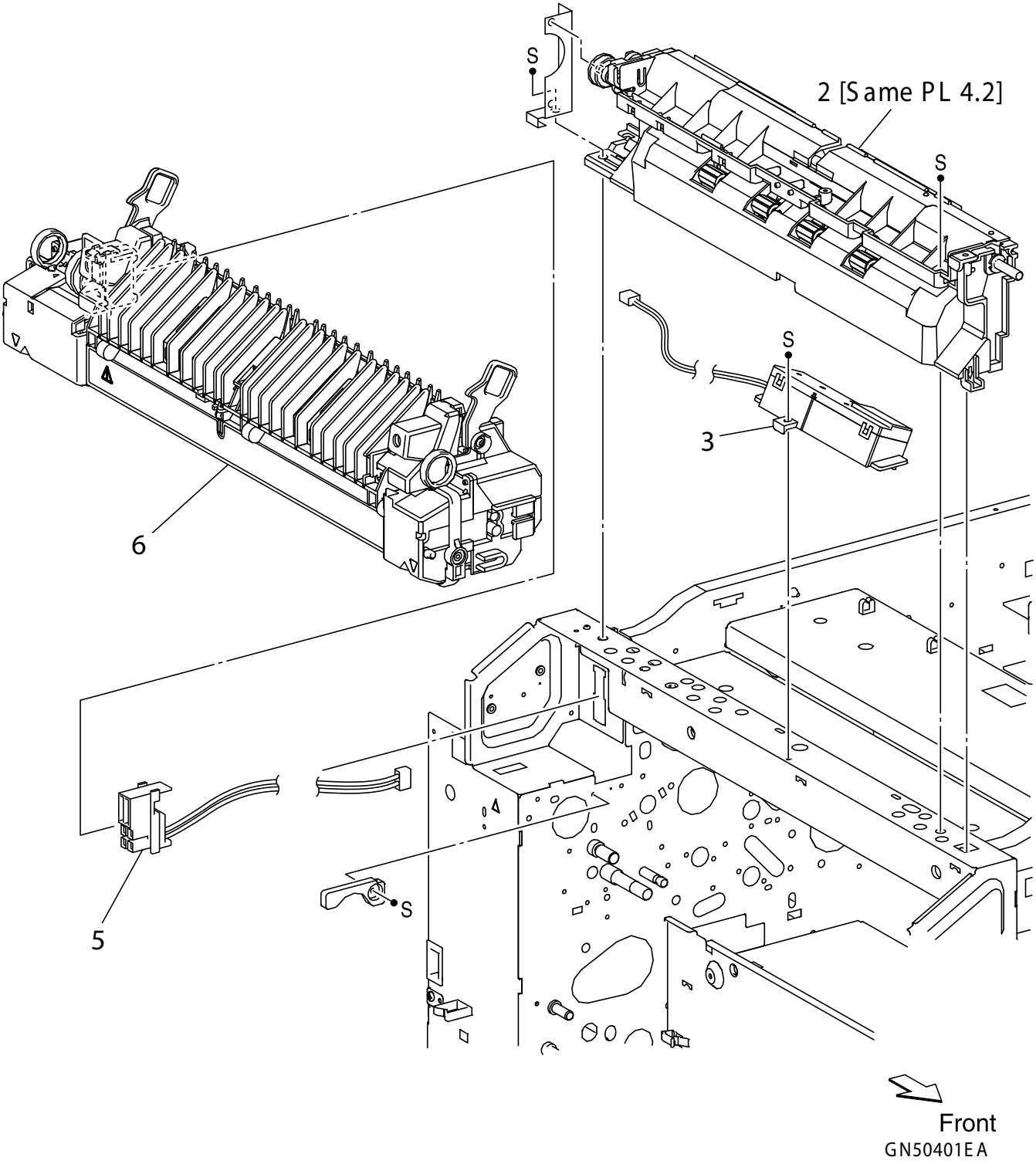

The parts to which no reference number is assigned will not be available as after-sale service parts.

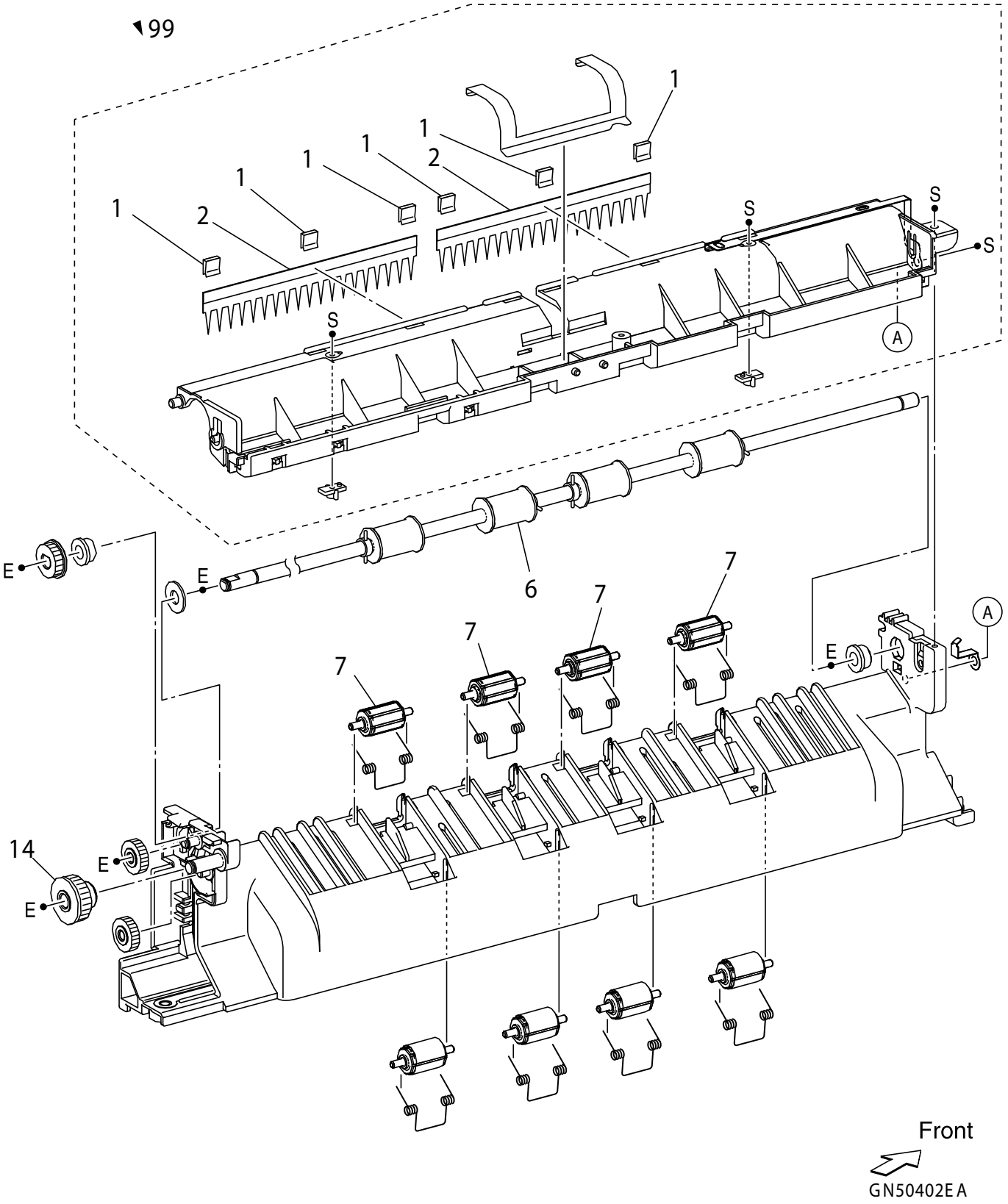

manuals4you.com

The parts to which no reference number is assigned will not be available as after-sale service parts.

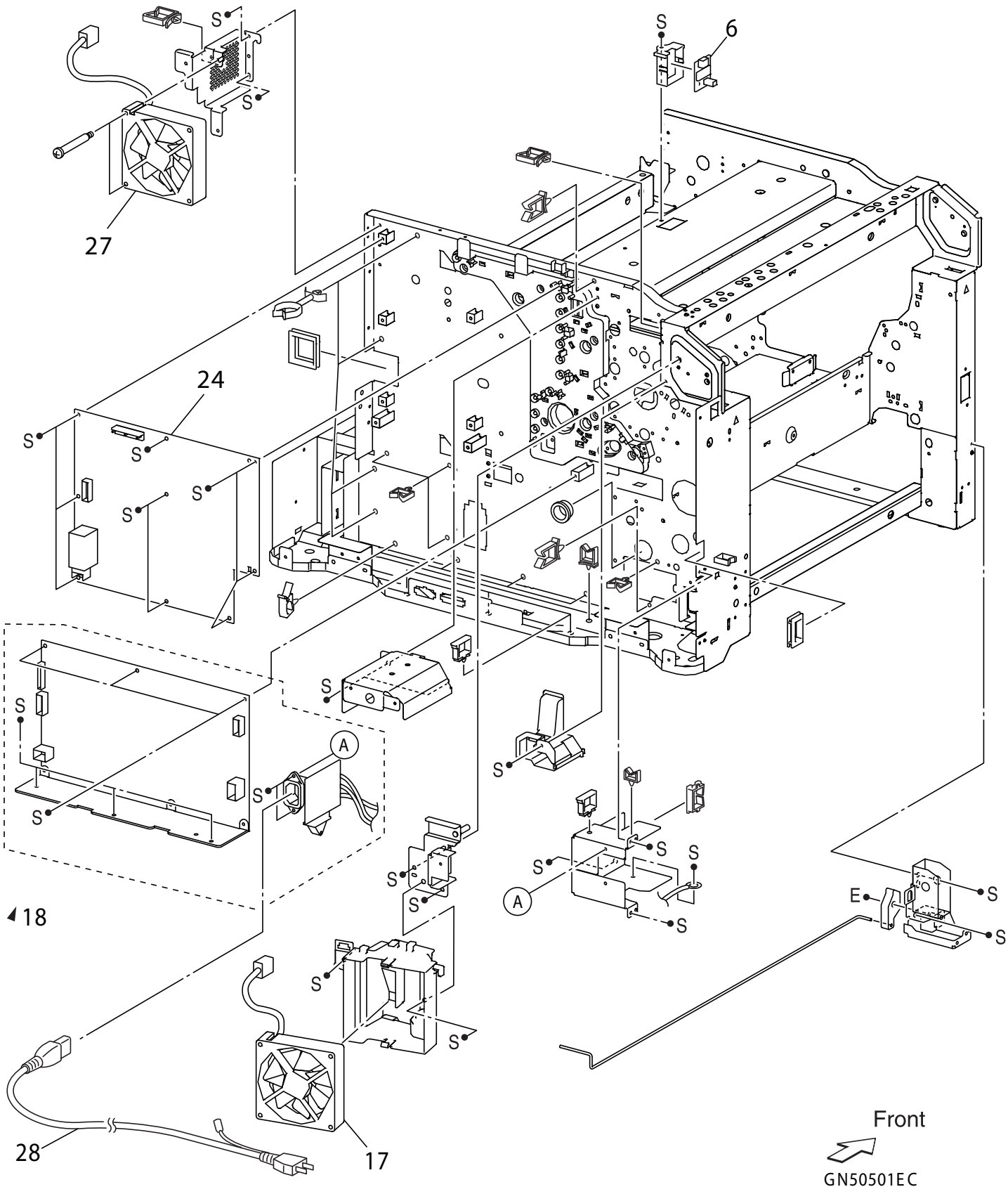

The parts to which no reference number is assigned will not be available as after-sale service parts.

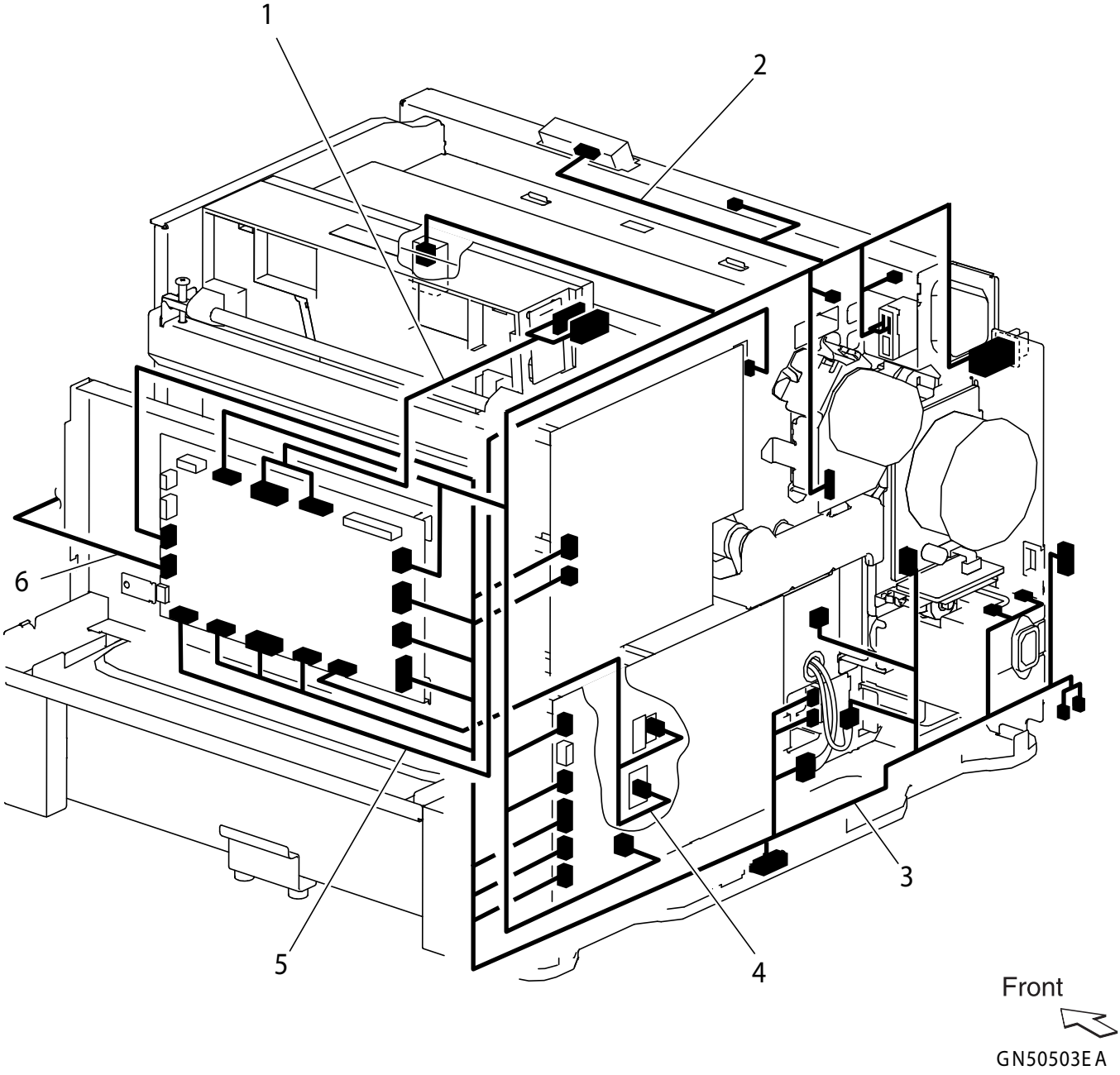

manuals4you.com

The parts to which no reference number is assigned will not be available as after-sale service parts.

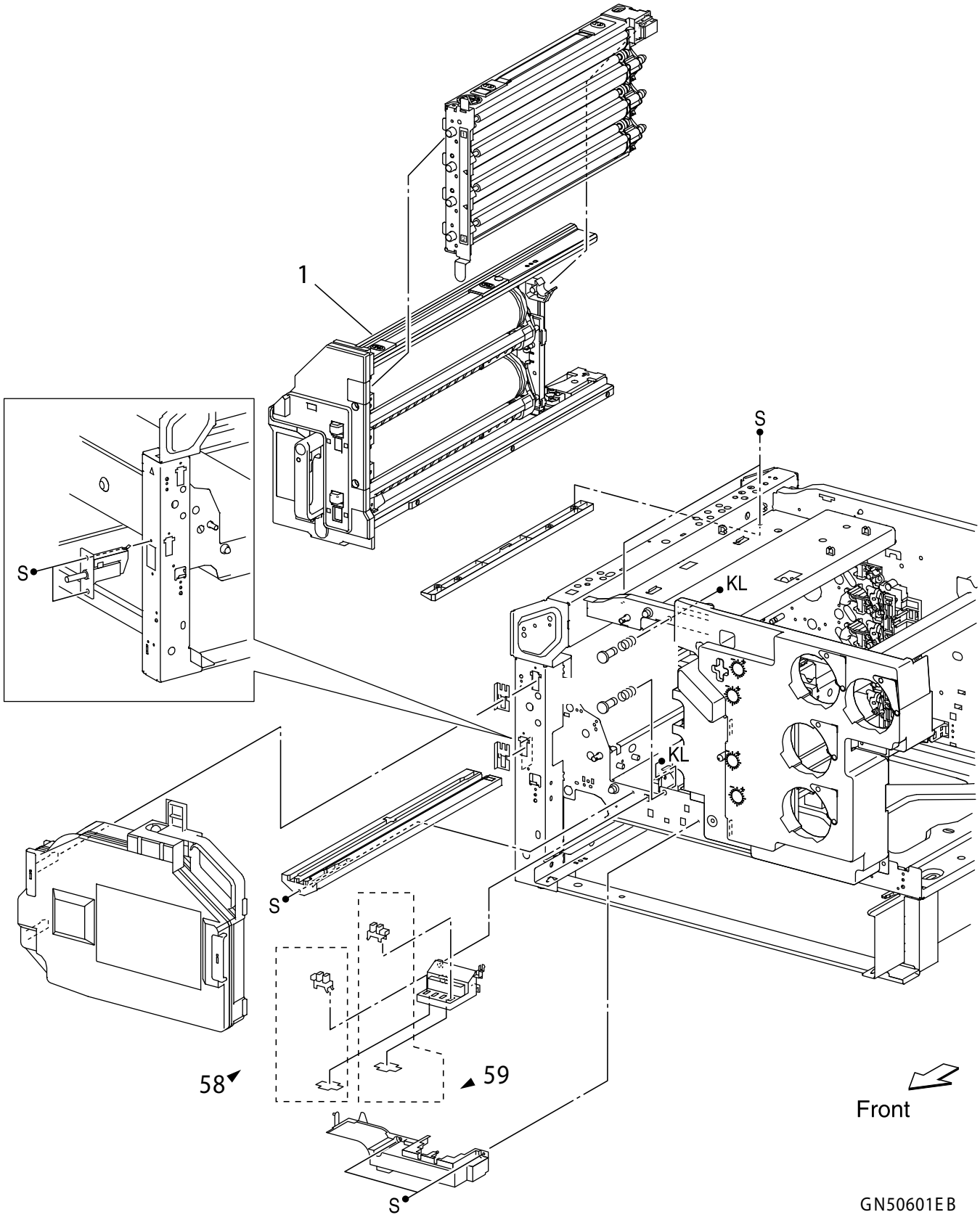

The parts to which no reference number is assigned will not be available as after-sale service parts.

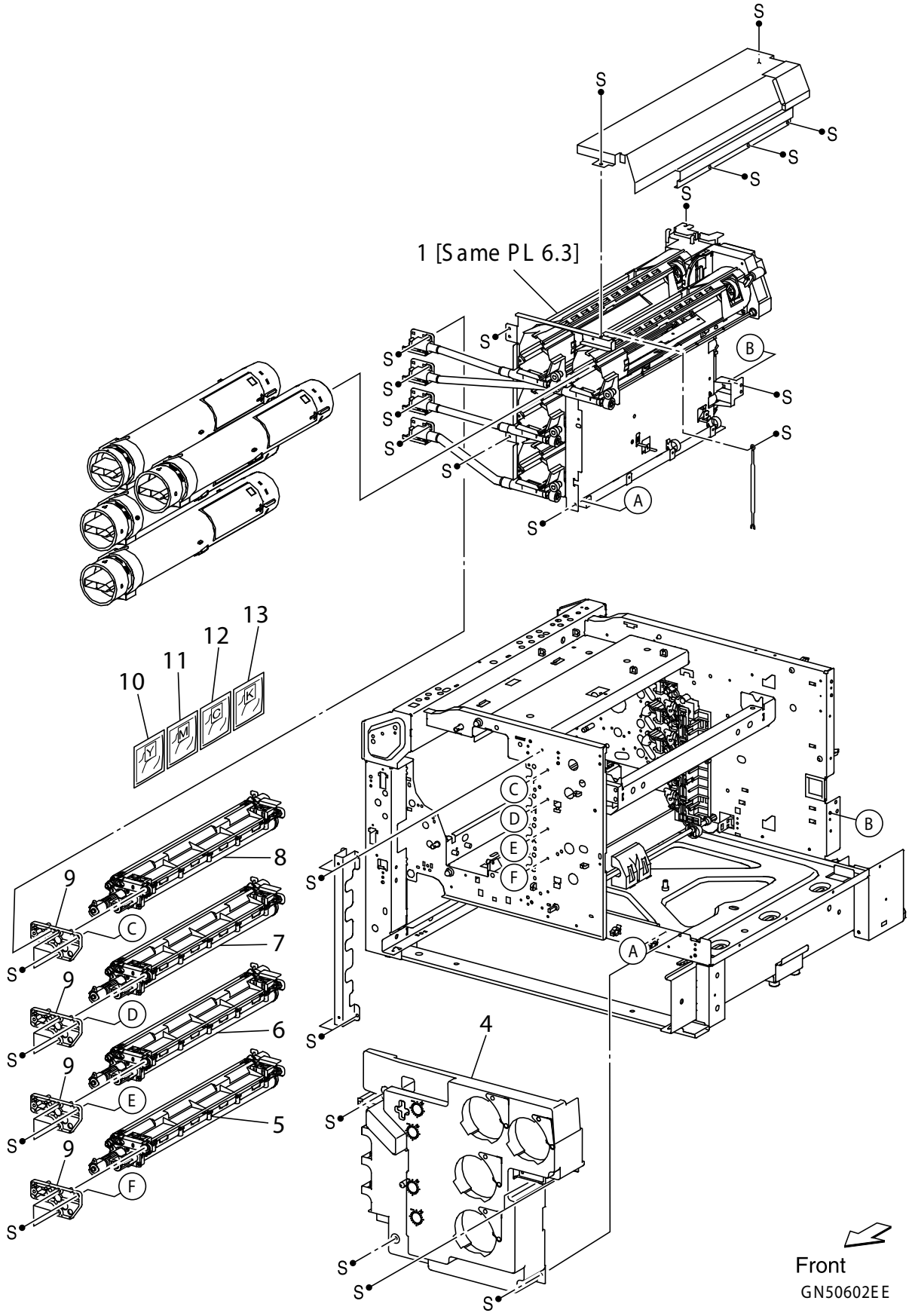

manuals4you.com

The parts to which no reference number is assigned will not be available as after-sale service parts.

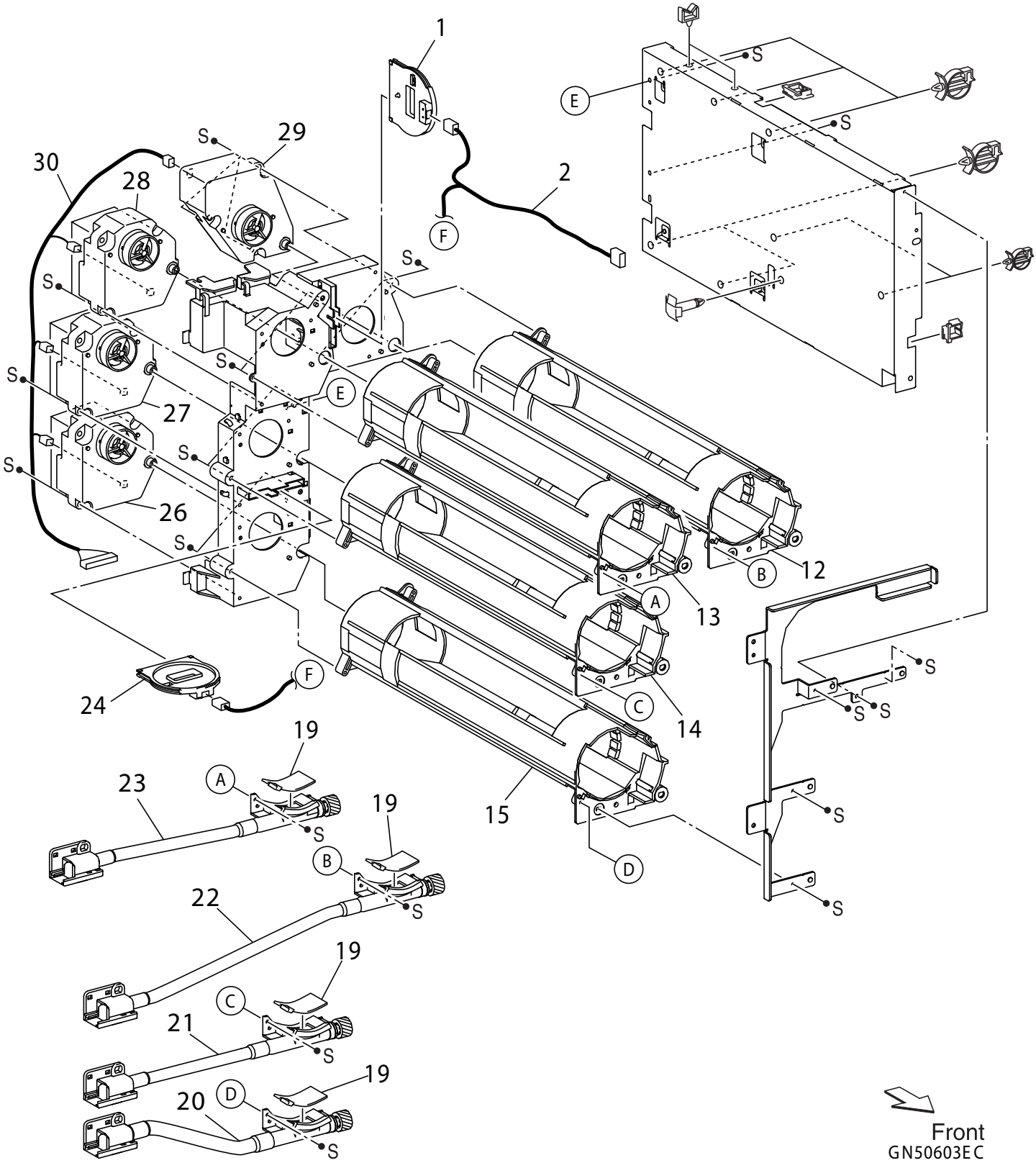

The parts to which no reference number is assigned will not be available as after-sale service parts.

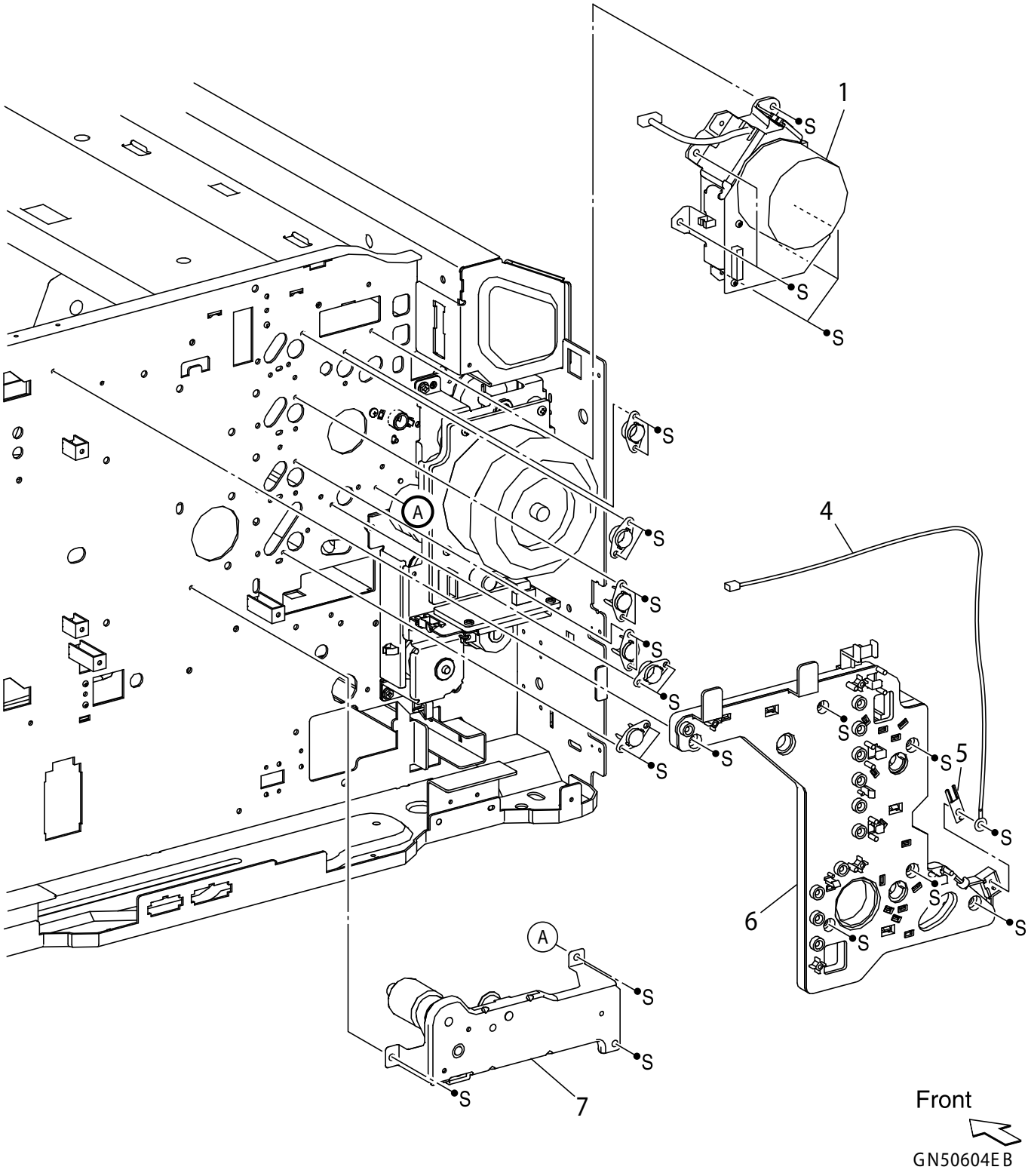

manuals4you.com

The parts to which no reference number is assigned will not be available as after-sale service parts.

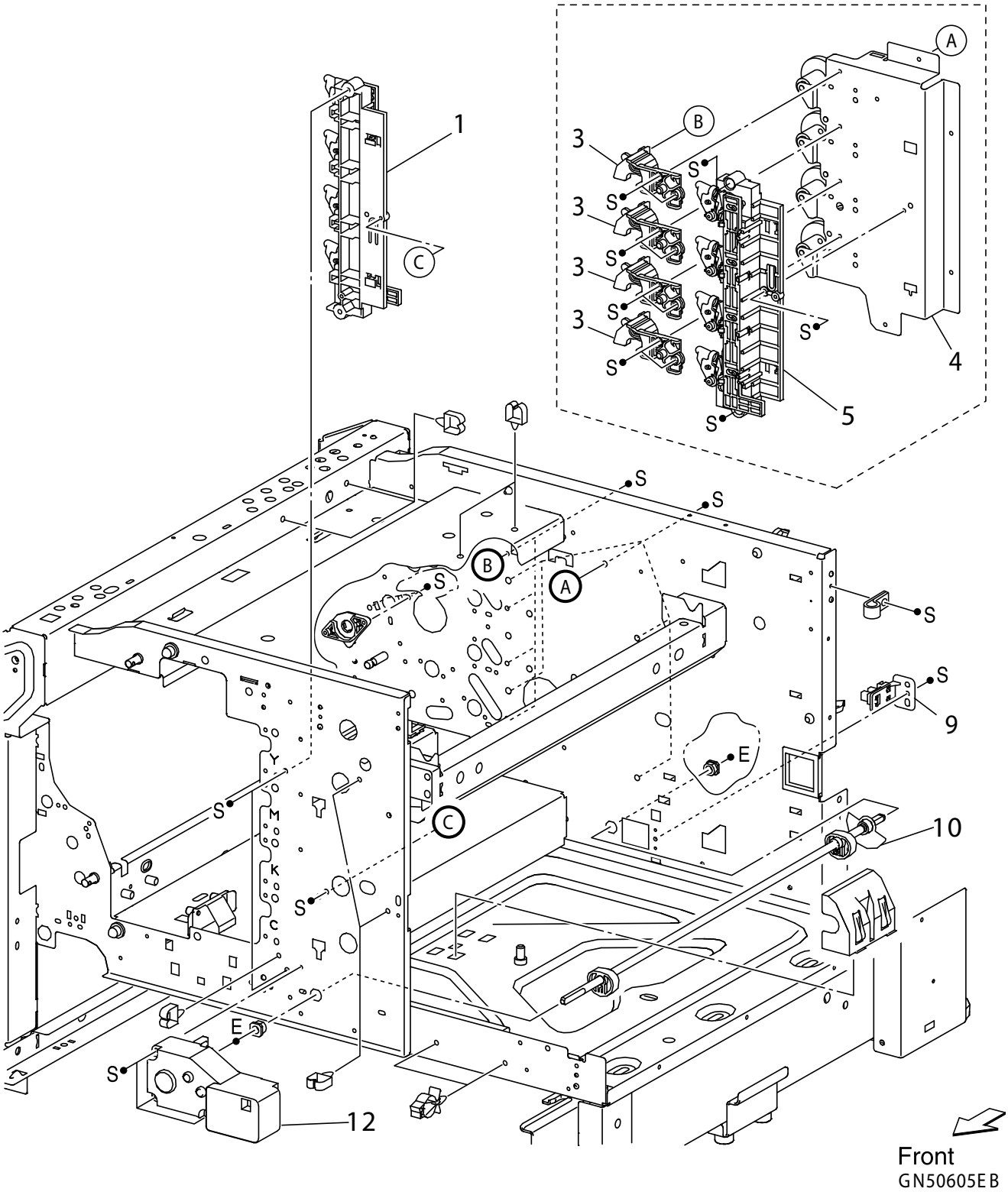

manuals4you.com

The parts to which no reference number is assigned will not be available as after-sale service parts.

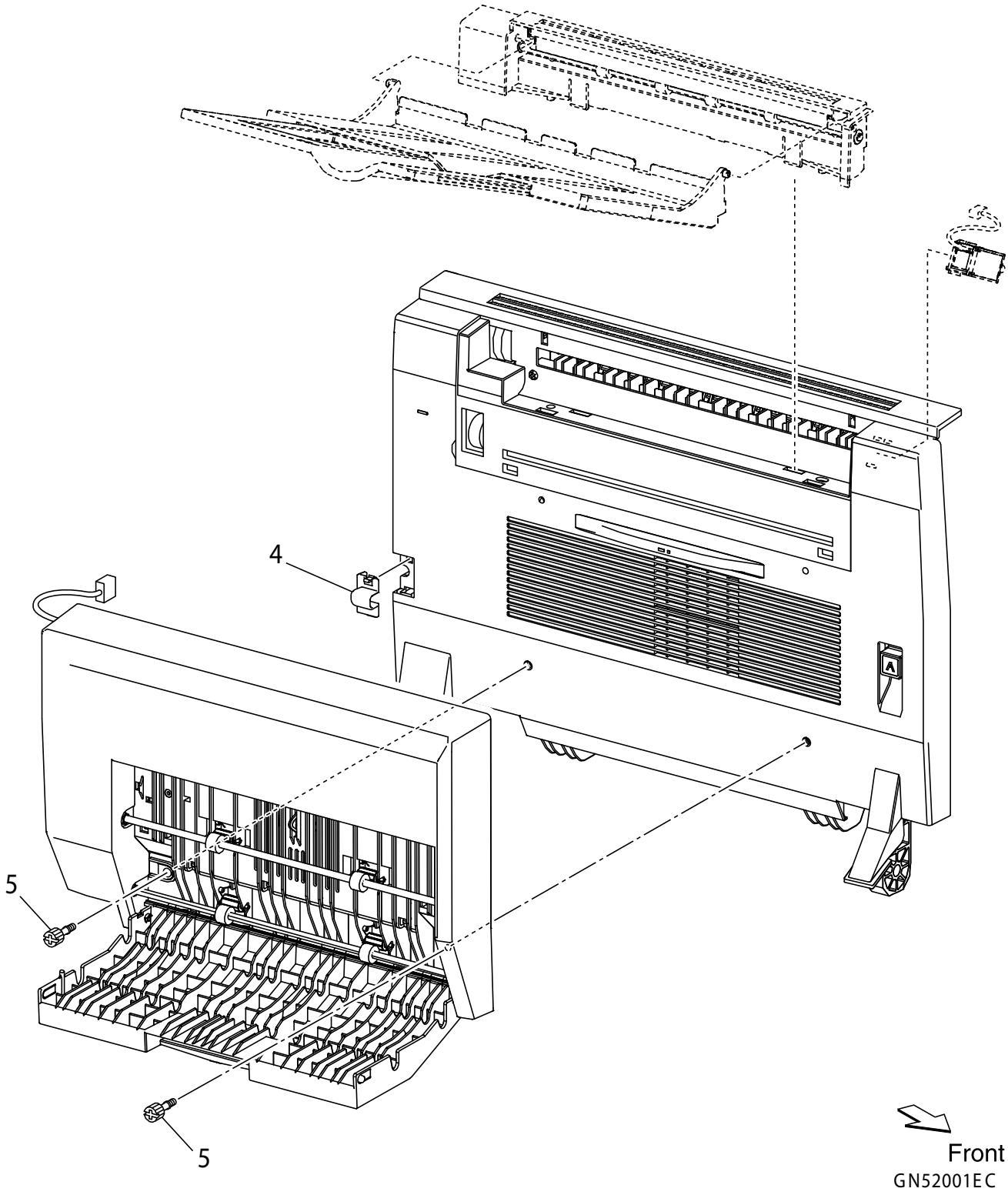

FOR DUPLEX UNIT NO.1-1 Rev.01

manuals4you.com

The parts to which no reference number is assigned will not be available as after-sale service parts.

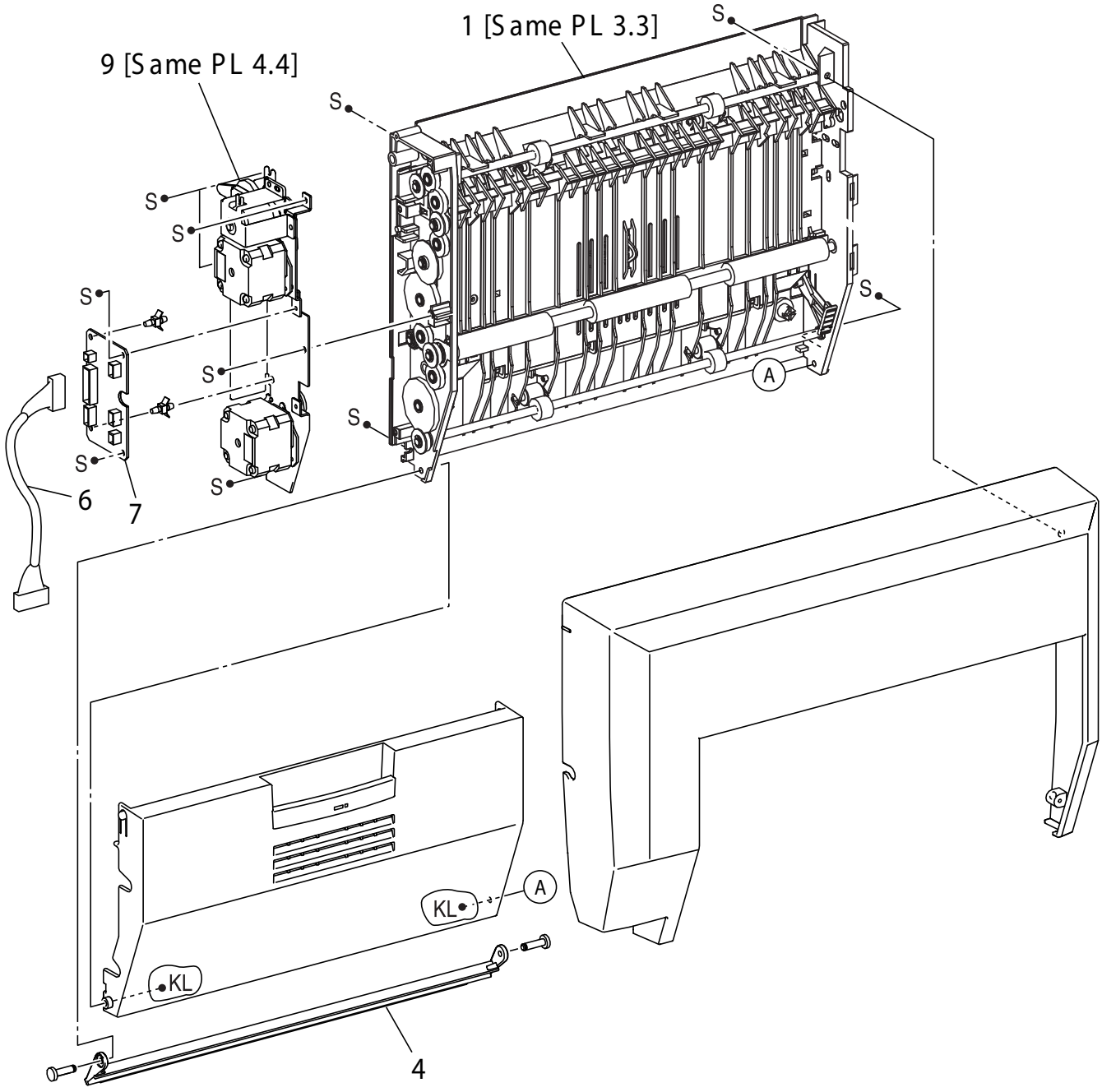

Front

GN52002EB

The parts to which no reference number is assigned will not be available as after-sale service parts.

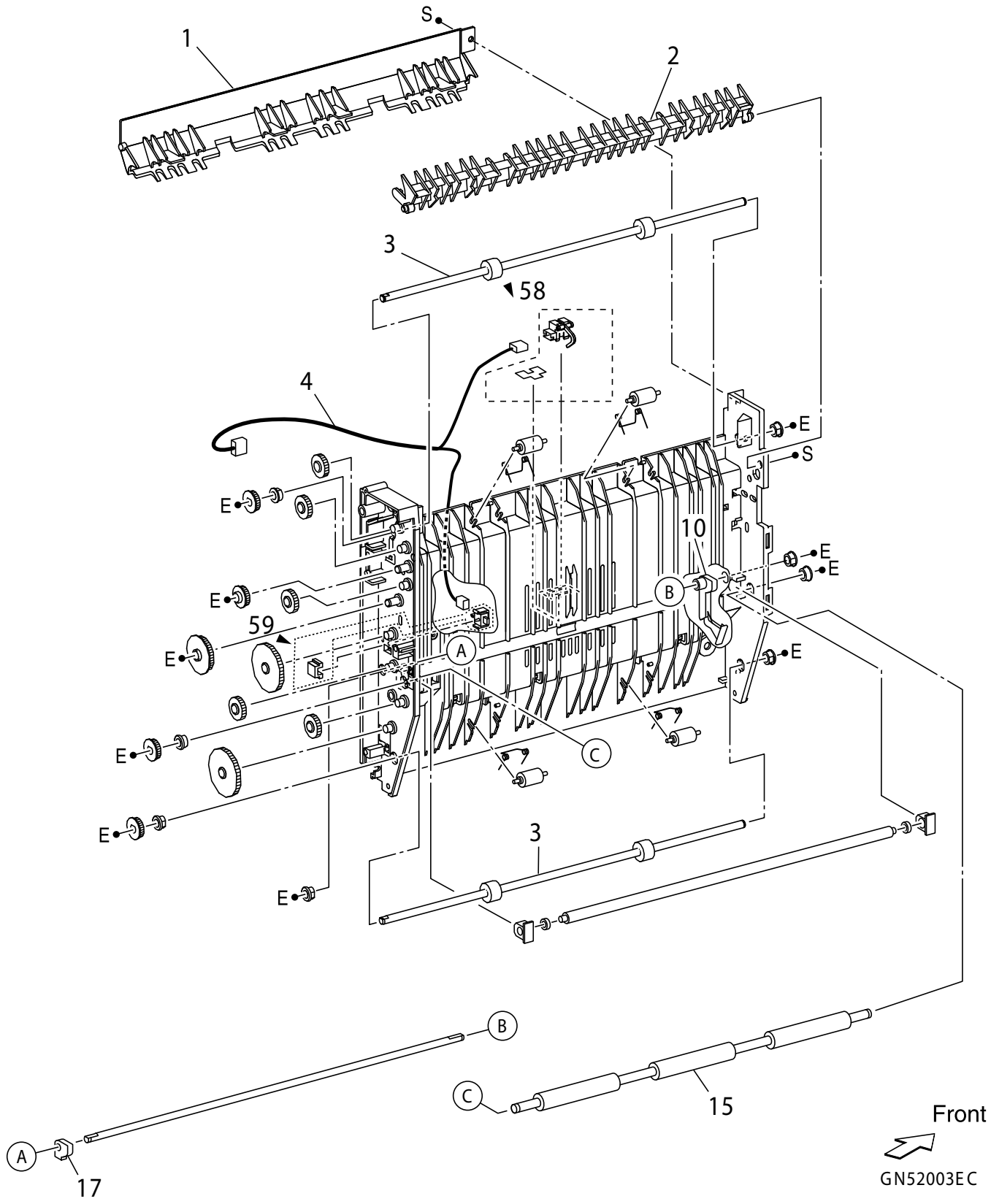

manuals4you.com

The parts to which no reference number is assigned will not be available as after-sale service parts.

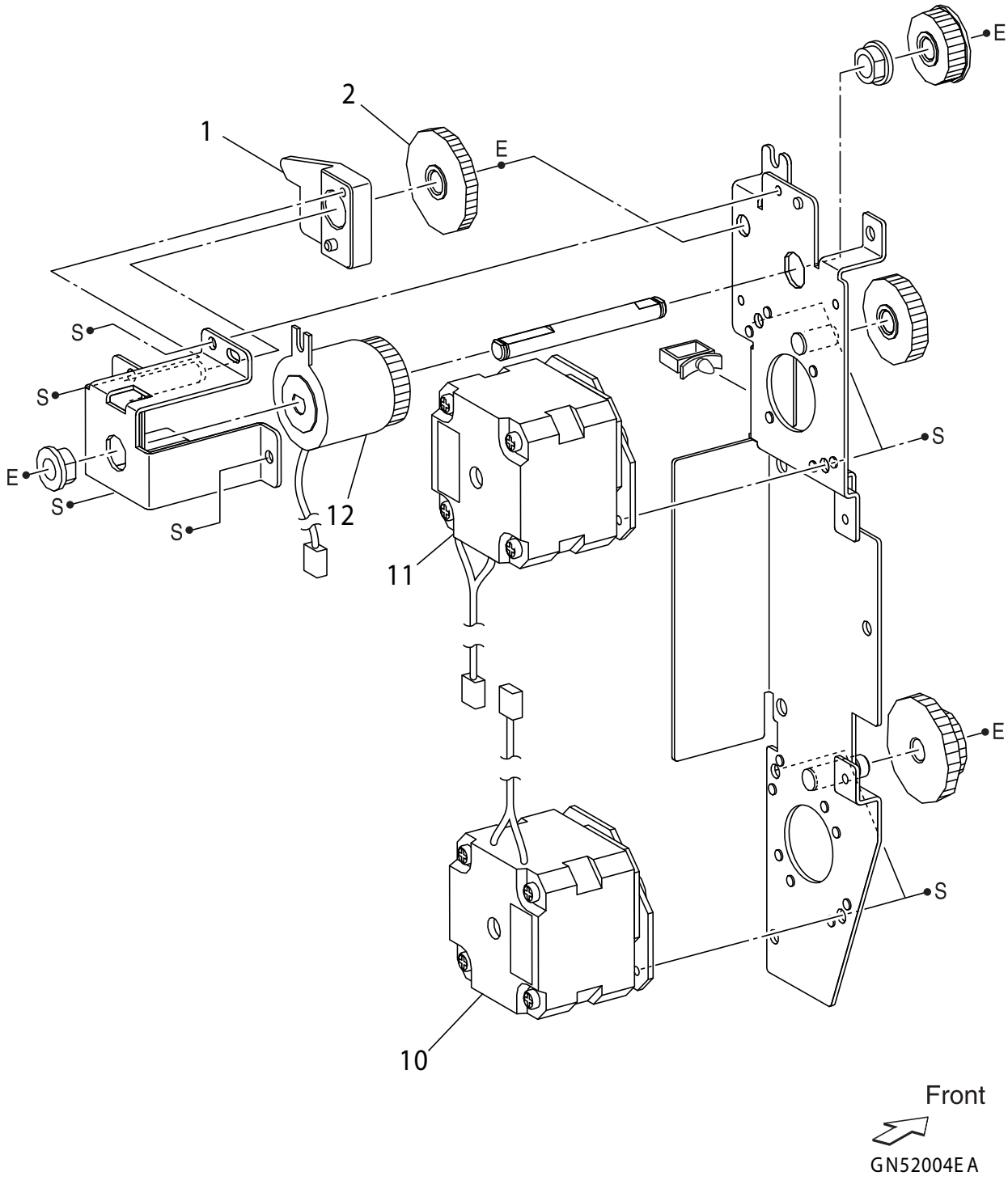

The parts to which no reference number is assigned will not be available as after-sale service parts.

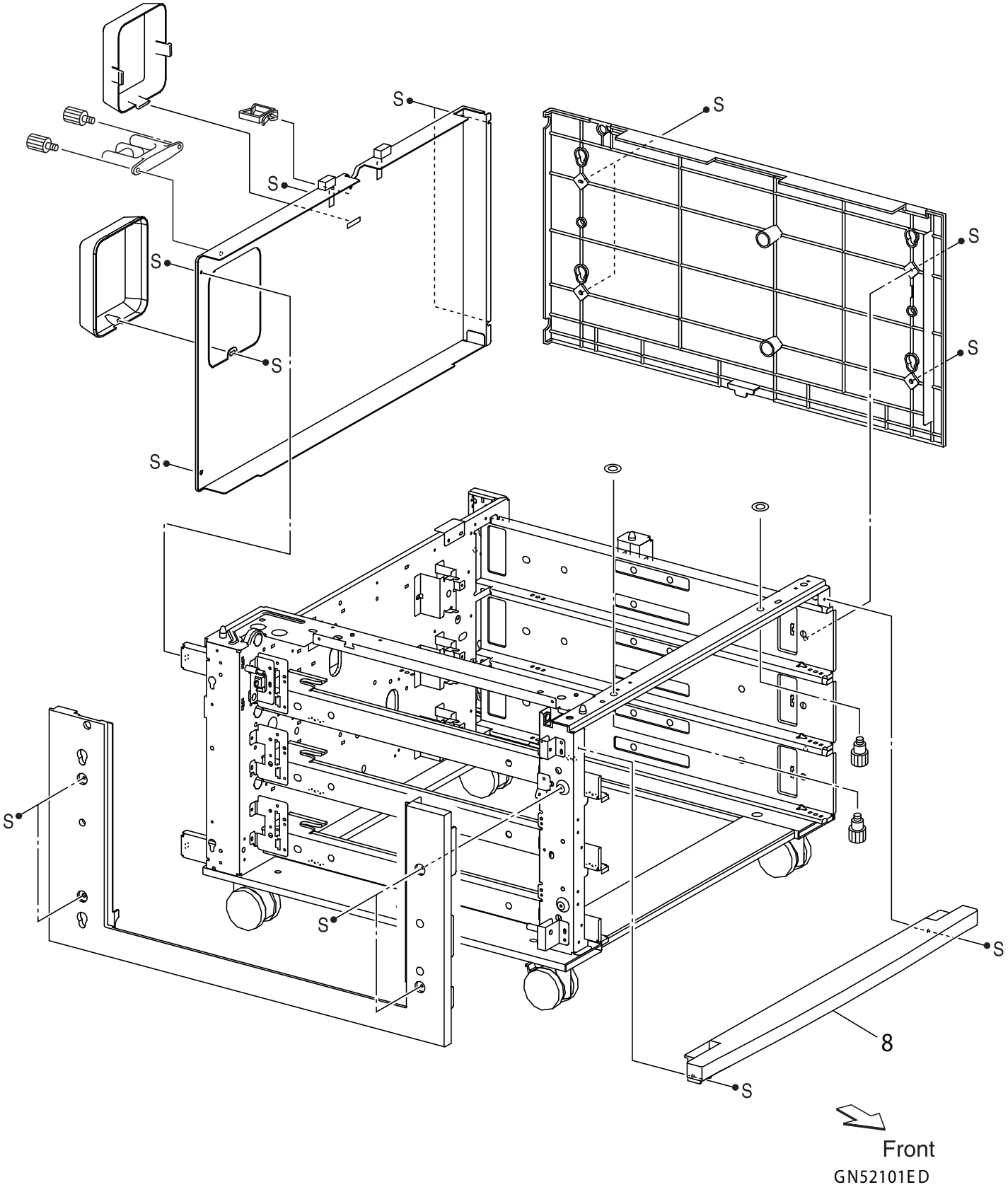

manuals4you.com

The parts to which no reference number is assigned will not be available as after-sale service parts.

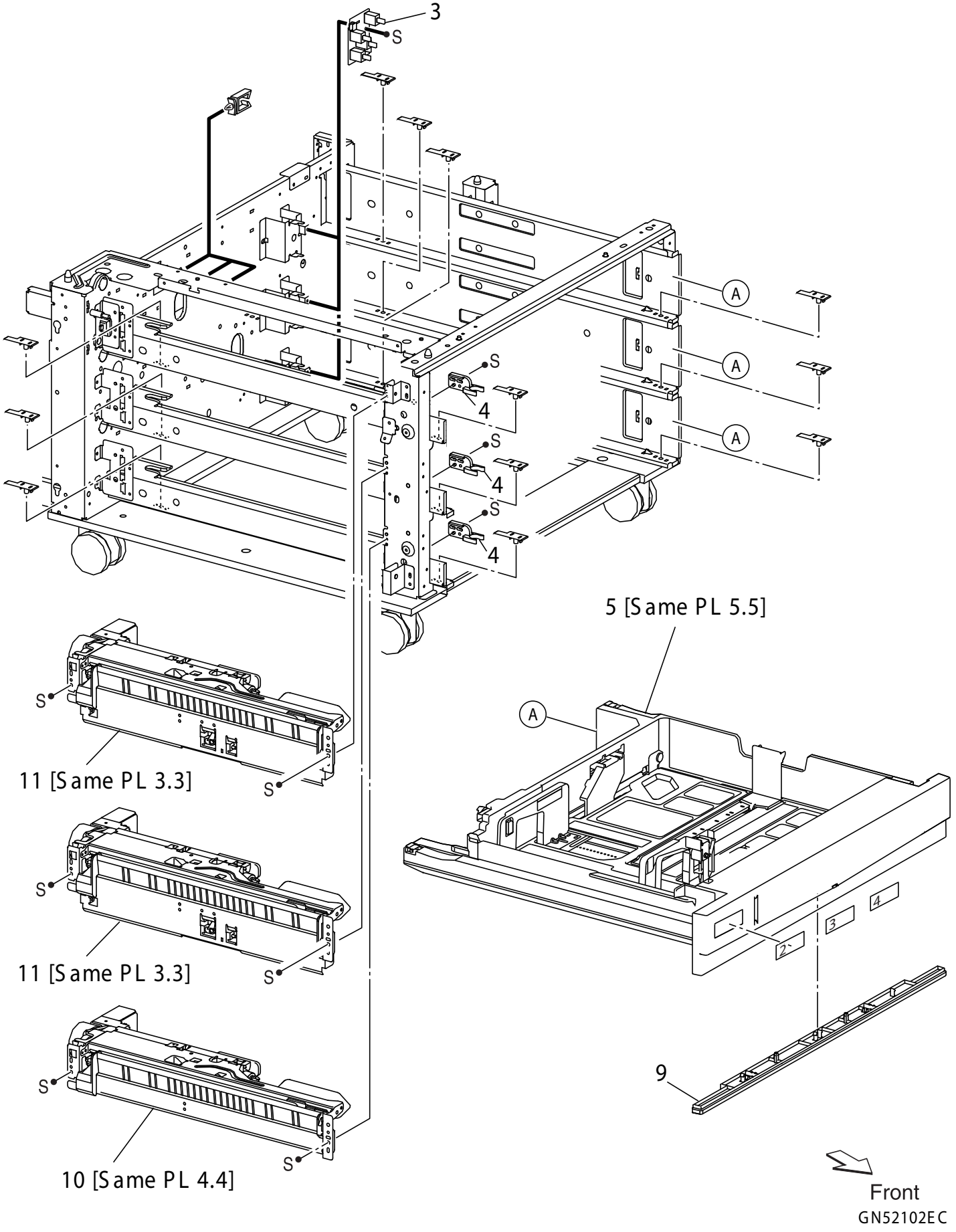

The parts to which no reference number is assigned will not be available as after-sale service parts.

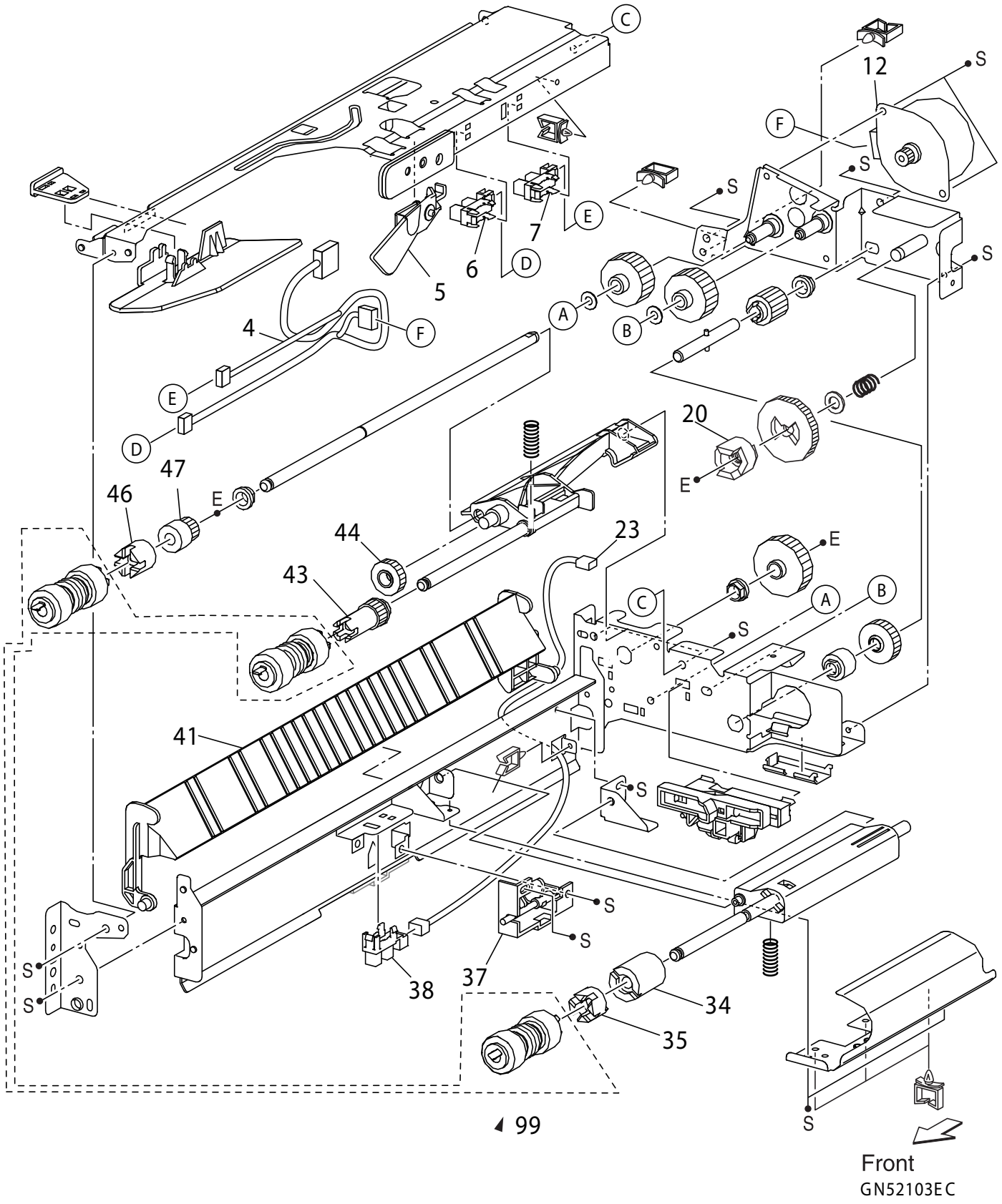

manuals4you.com

The parts to which no reference number is assigned will not be available as after-sale service parts.

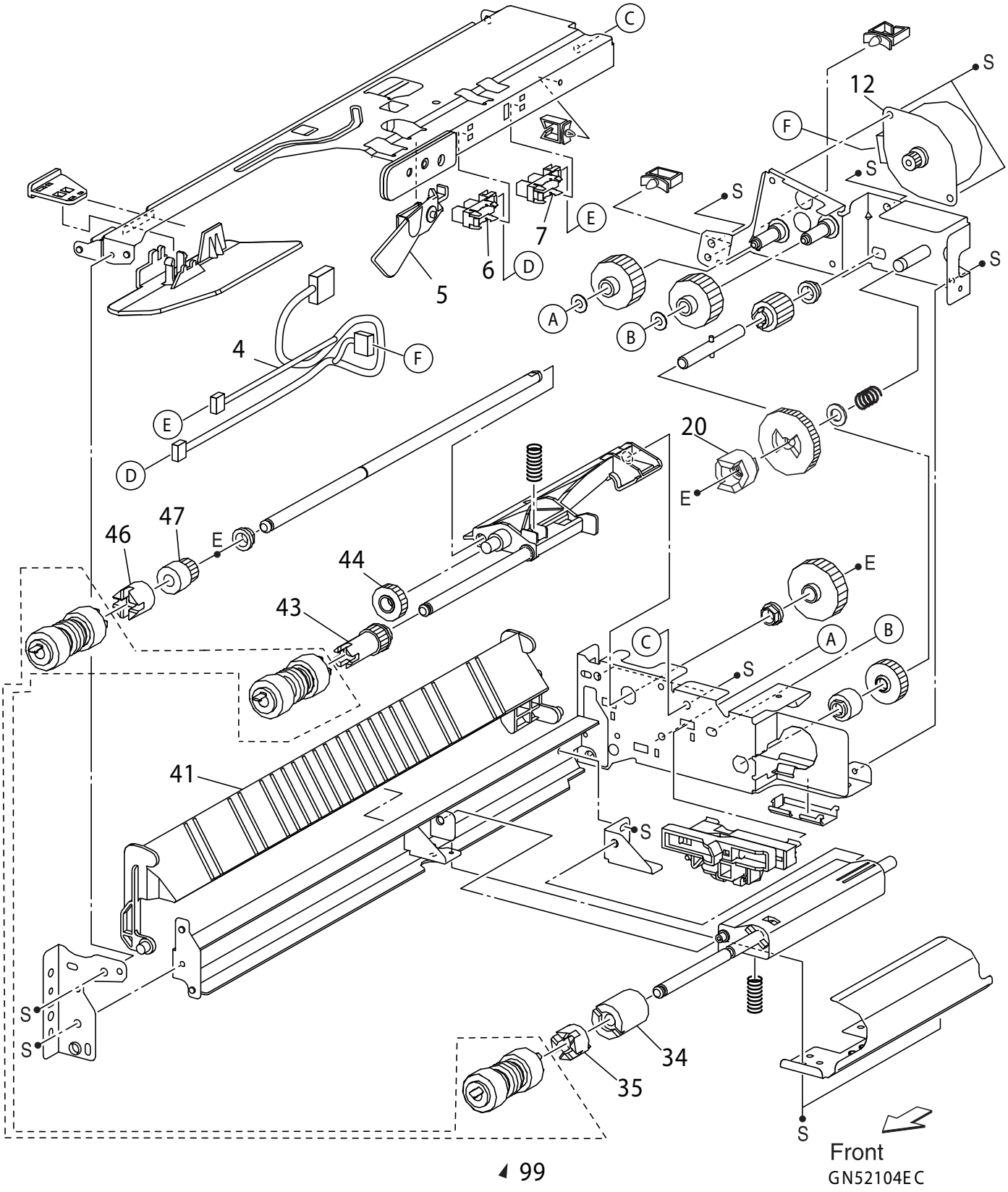

C802-OPTI-040A

The parts to which no reference number is assigned will not be available as after-sale service parts.

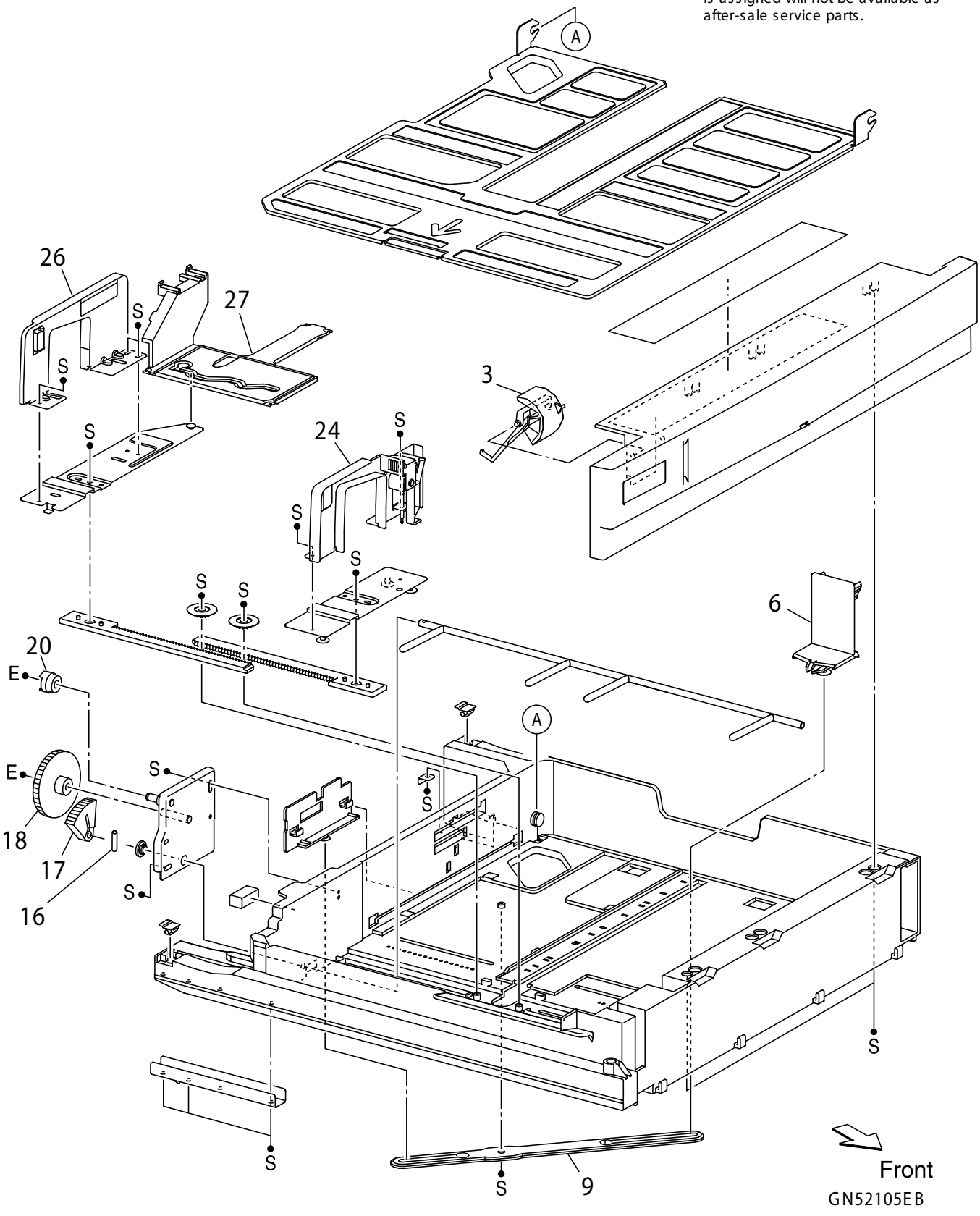

manuals4you.com

The parts to which no reference number is assigned will not be available as after-sale service parts.

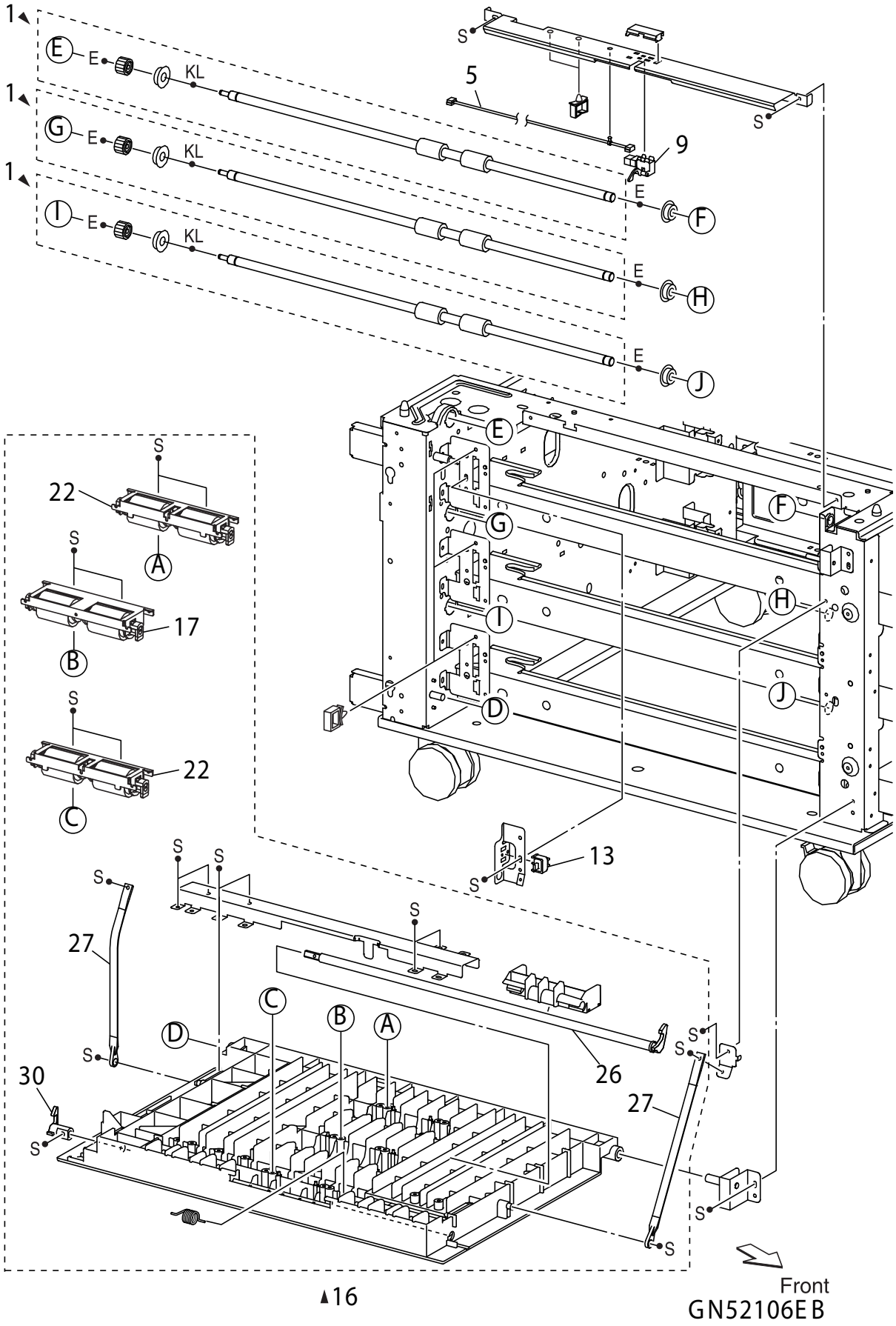

The parts to which no reference number is assigned will not be available as after-sale service parts.

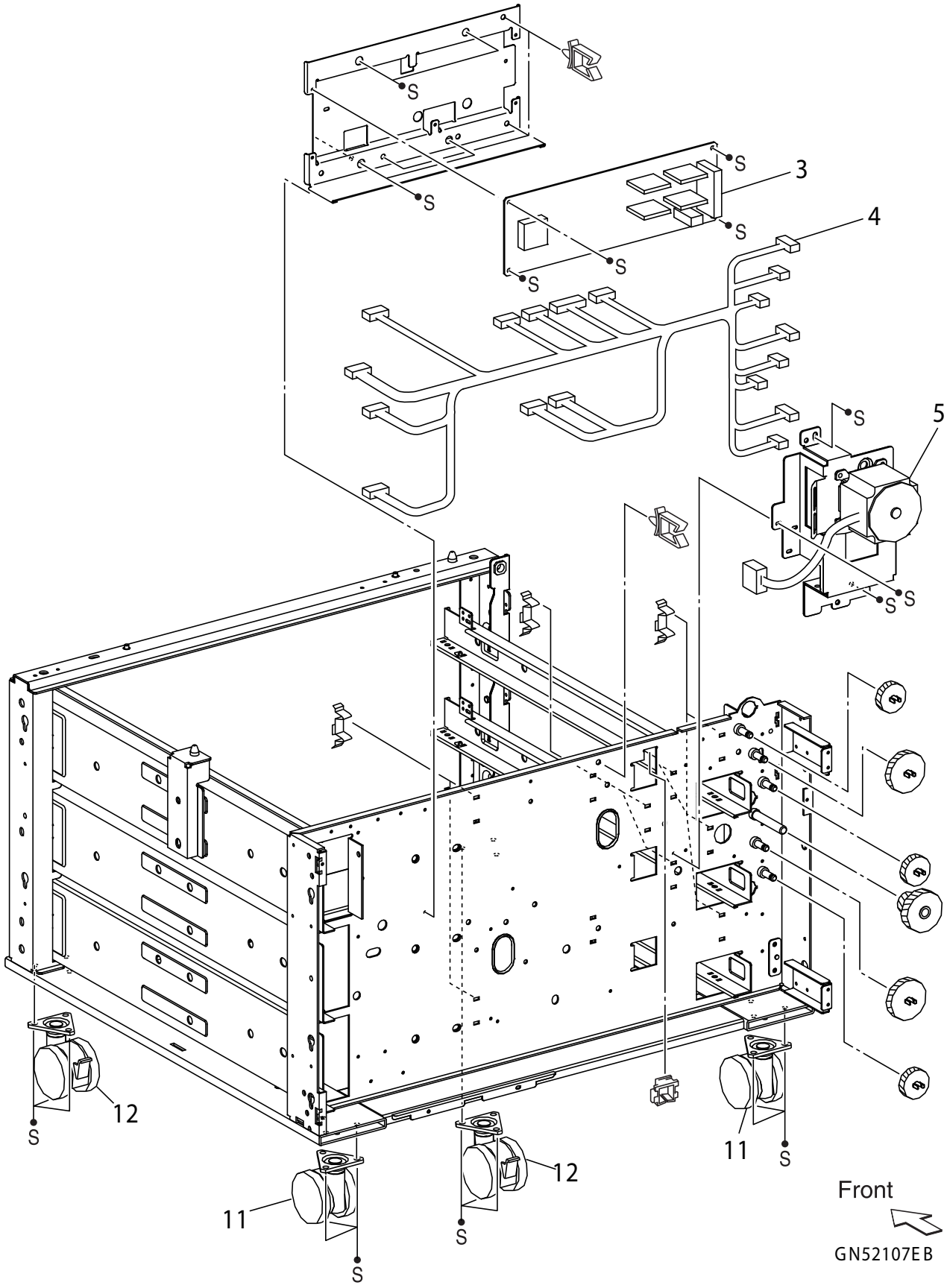

manuals4you.com

The parts to which no reference number is assigned will not be available as after-sale service parts.

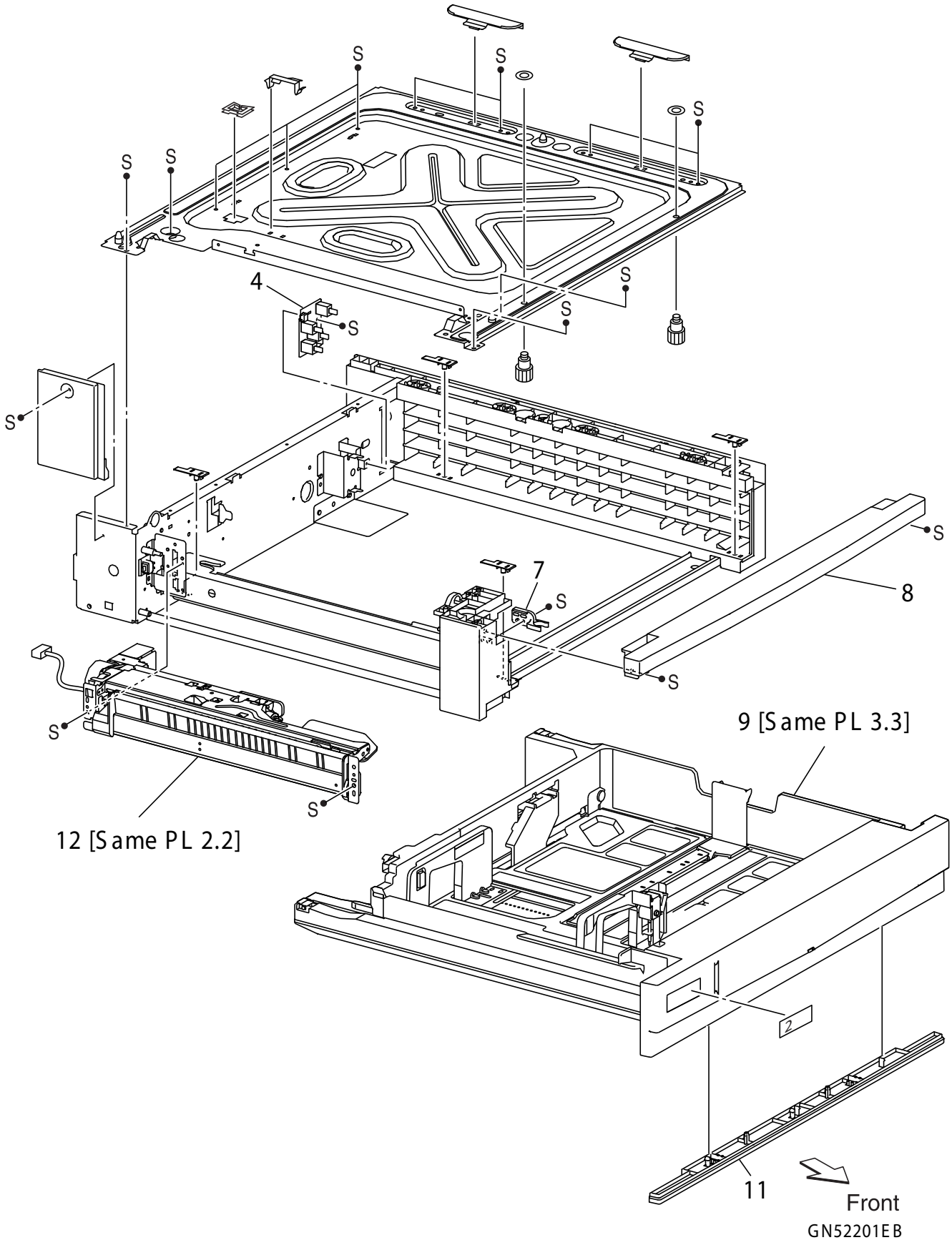

The parts to which no reference number is assigned will not be available as after-sale service parts.

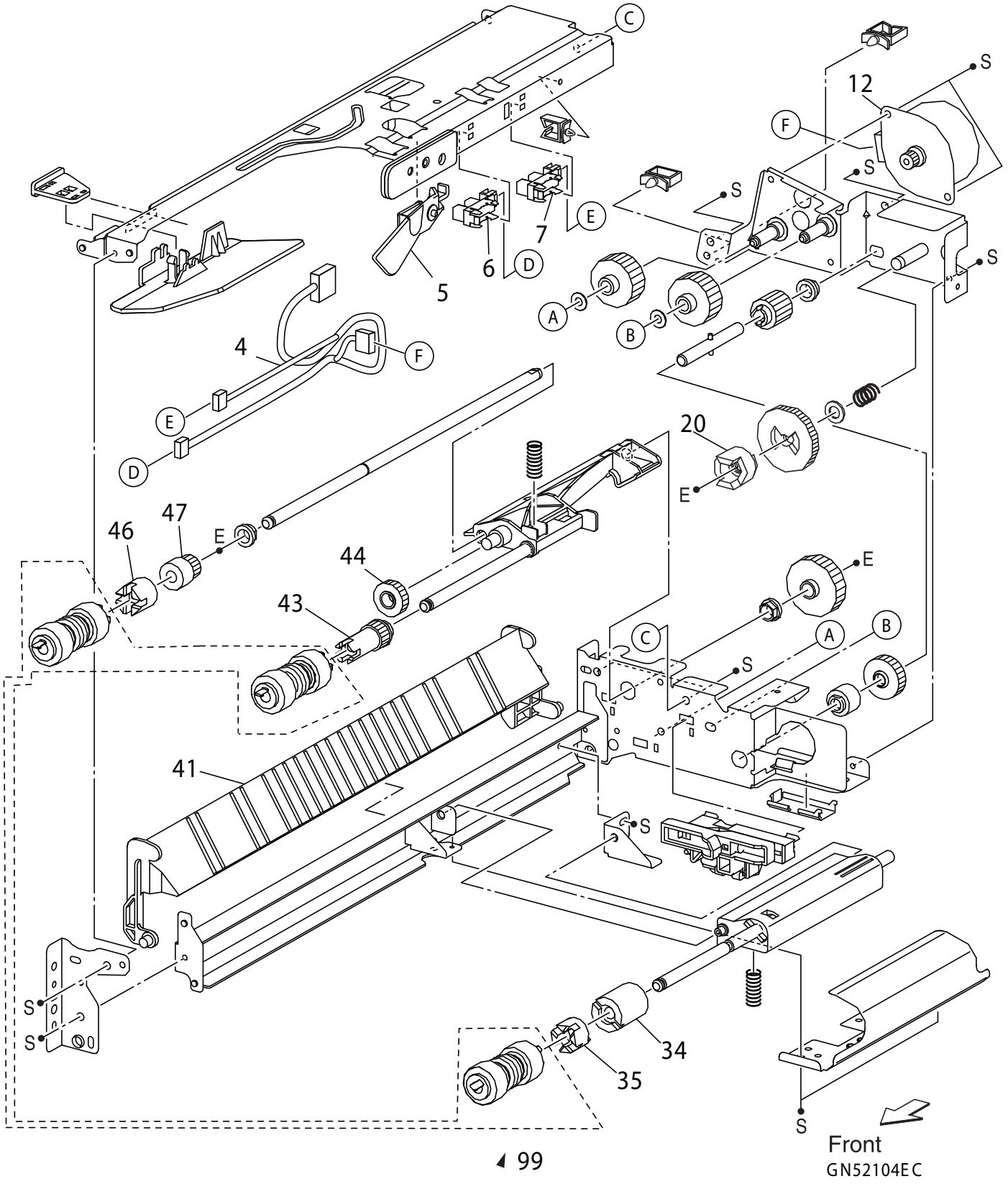

manuals4you.com

C802-OPTI-045A

The parts to which no reference number is assigned will not be available as after-sale service parts.

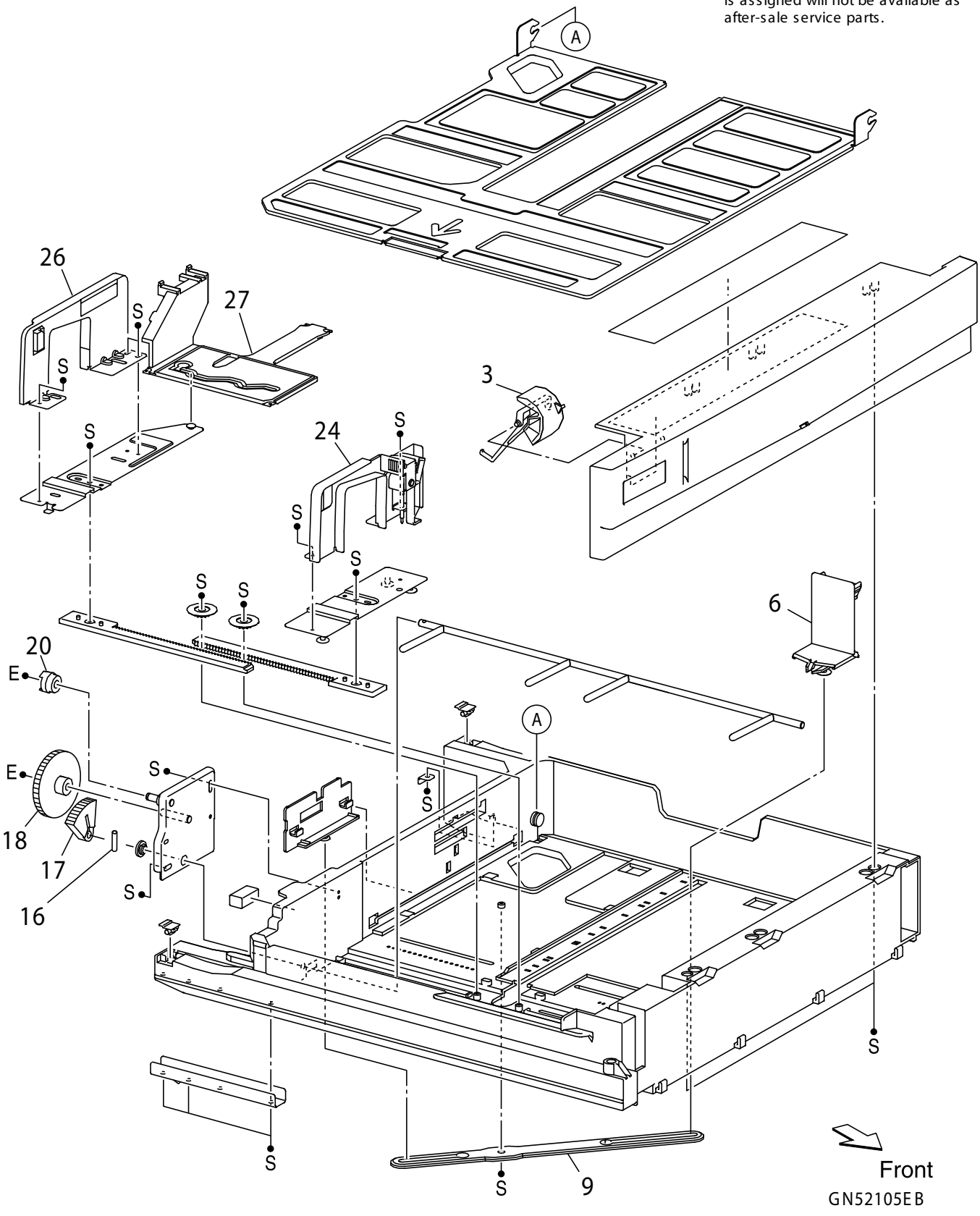

The parts to which no reference number is assigned will not be available as after-sale service parts.

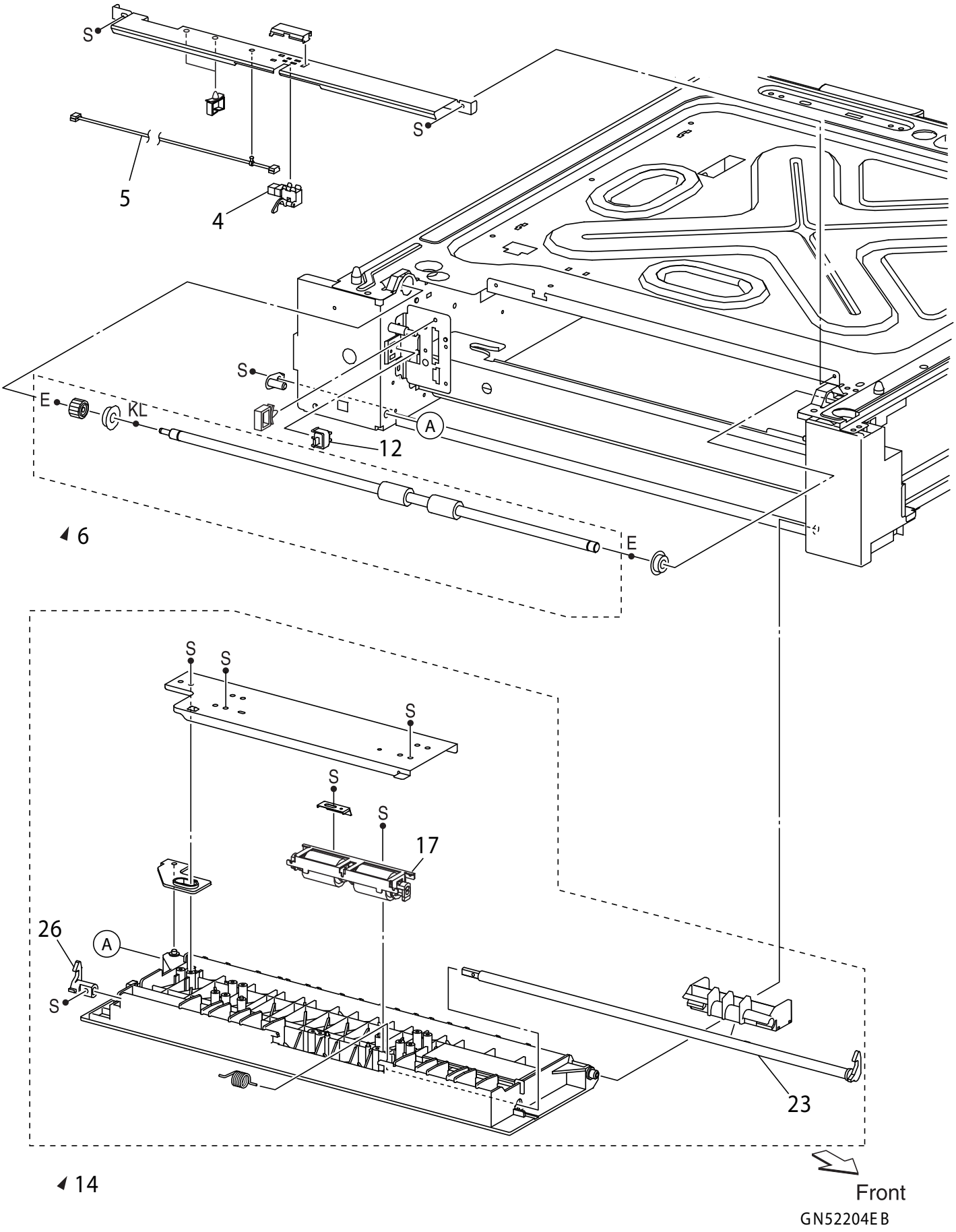

manuals4you.com

The parts to which no reference number is assigned will not be available as after-sale service parts.

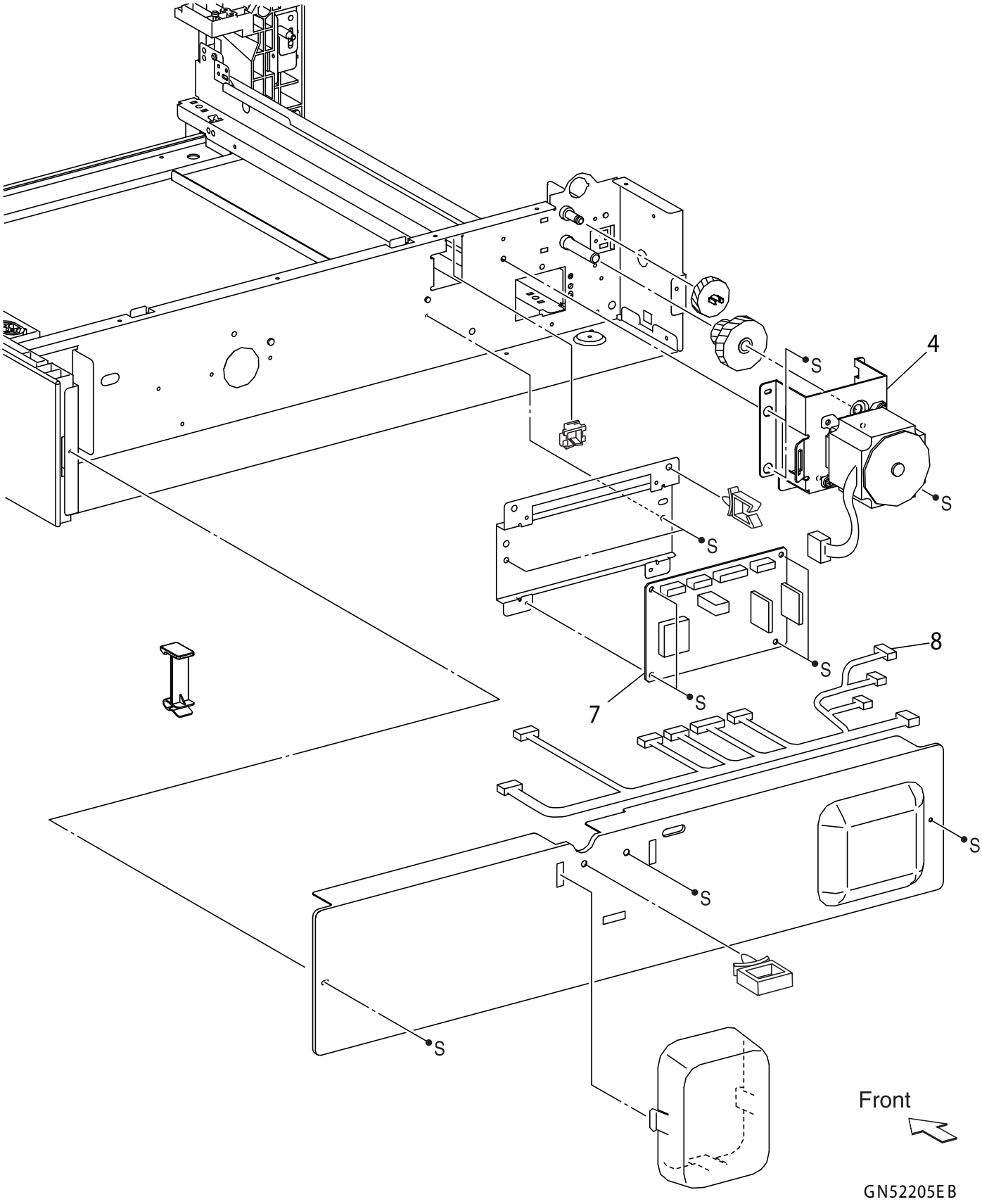

The parts to which no reference number is assigned will not be available as after-sale service parts.

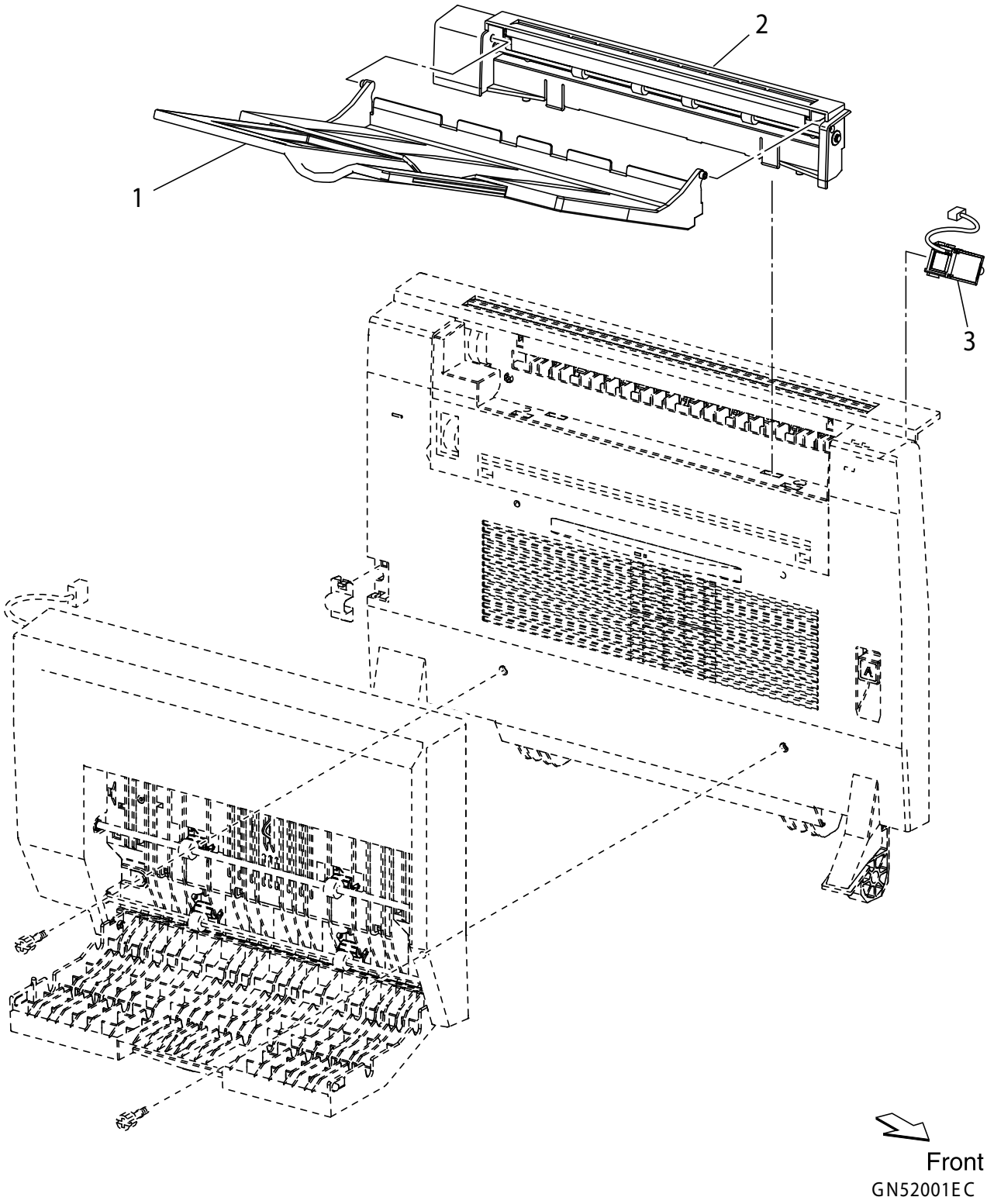

FOR FACE UP TRAY NO.1-1 Rev.01

manuals4you.com

7.4 Parts List

☐ Main Unit

Table 7-20. Main Unit

Ref.	Parts Name
01-01-01	COVER HIGH ASSY TOP
01-01-04	CONTROL PANEL
01-01-06	KIT TONER FULL SENSOR
01-01-07	RIGHT SUPPORT
01-01-09	PLATE HINGE
01-01-10	SUPPORT HINGE
01-01-100	“LOGO PLATE,17X68;C”
01-01-11	COVER ASSY FRONT
01-01-13	LEFT SUPPORT
01-01-16	COVER FRONT LH LOW
01-01-17	COVER REAR LH LOW
01-01-18	HARNESS
01-02-04	COVER ASSY REAR
01-02-05	COVER RH LOW
01-02-06	COVER ASSY RIGHT
05-02-01	X-ROM PWB
05-02-02	MCU PWB
05-02-03	FLAT CABLE ESS-MCU
05-02-09	“BOARD ASSY,MAIN”
05-02-10	HARNESS ESS-ROS
05-02-100	GUIDE RAIL
05-02-101	“GROUNDING SPRING,TYPE-B”
05-02-102	SDRAMDIMM
05-02-11	HARNESS ESS-LVPS
05-02-14	NETWORK BOARD
05-02-16	“BOARD ASSY.,MEMORY”
02-01-01	SUPPORT L/H
02-01-02	BTR UNIT ASSY
02-01-03	LH ASSY
02-01-04	BLIND LABEL
02-01-13	GEAR IDLE MSI 26

Table 7-20. Main Unit

Ref.	Parts Name
02-01-14	GEAR IDLE MSI 29/36
02-01-16	INTERLOCK SWITCH
02-01-17	PAD U
02-01-19	MSI
02-02-02	COVER CHUTE MSI
02-02-06	ROLL ASSY FEED ENV
02-02-07	ROLL ASSY FEED
02-02-11	PLATE ASSY BOTTOM
02-02-12	HOLDER ASSY RETARD
02-02-14	SPRING RETARD
02-02-16	ROLL ASSY TURN
02-02-17	MSI TRAY
02-02-20	SPRING PICK UP
02-02-22	GEAR PICK UP
02-02-23	GEAR CAM
02-02-26	GEAR TURN MSI
02-02-27	SOLENOID ASSY
02-02-28	SPRING GEAR CAM
02-02-29	GEAR MSI IDLE 34
02-03-01	GUIDE SIDE FRONT
02-03-08	HARNESS ASSY N/P
02-03-09	GUIDE SIDE REAR
02-03-59	KIT MSI NO PAPER SENSOR
02-04-01	HARNESS ASSY LH
02-04-03	HOLDER LATCH
02-04-05	HANDLE ASSY L/H
02-04-07	WIRE ASSY GND
02-04-09	WIRE ASSY INLET
02-04-10	WIRE ASSY FG
02-04-12	WIRE ASSY LH
02-04-15	CAP FUT
02-04-16	CAP CONNECTOR
02-04-17	COVER EXIT
02-05-02	ROLLER ASSY EXIT 1
02-05-03	GATE ASSY FUT

Table 7-20. Main Unit

Ref.	Parts Name
02-05-05	GEAR 39Z
02-05-07	GEAR 24Z
02-05-08	GEAR 17Z
02-05-11	LEVER ASSY FUSER GEAR
02-05-12	CLUTCH ASSY SPRING
02-05-13	LEVER ASSY GEAR
02-05-14	POP SENSOR
02-05-16	CHUTE FUT UP
02-05-17	HARNESS ASSY HVLH
02-05-23	SPRING TURN
02-05-25	ROLL PINCH TURN
02-05-30	V-TRA FAN
02-05-31	CHUTE TRANS
02-05-99	KIT CHUTE TRANS
02-06-02	GEAR TURN
02-06-03	ROLL ASSY TURN
02-06-05	BEARING ONEWAY
02-06-09	GEAR MSI TURN
02-06-11	CHUTE ASSY LOWER
02-06-14	CLUTCH ASSY FEED
02-07-01	SENSOR ASSY MOB ADC
02-07-04	PH MAIN ASSY
02-07-08	GEAR IDLE 30T
02-07-09	GEAR IDLE 26/36
02-08-03	ROLL REGI RUBBER
02-08-05	CLUTCH REGI
02-08-06	CHUTE PH
02-08-11	SPRING SNR REGI
02-08-12	ACUTUATOR REGI
02-08-13	E.R.M. SENSOR
02-08-16	WIRE ASSY REGI
02-08-18	OHP SENSOR
02-08-19	HARNESS ASSY REGI
02-09-02	ACTUATOR NO PAPER
02-09-05	E.R.M. SENSOR

Table 7-20. Main Unit

Ref.	Parts Name
02-09-06	SENSOR ASSY PAPER
02-09-07	CASSETTE ASSY
02-09-11	STOPPER TRAY
02-09-12	SWITCH ASSY SIZE
02-09-58	KIT LEVEL SENSOR
02-09-59	KIT LEVEL SENSOR
02-10-03	ROLL ASSY SIDE
02-10-05	HOLDER ASSY RETARD
02-10-07	ROLL ASSY FEED
02-10-08	ACTUATOR N/E
02-10-09	SHAFT ASSY
02-10-10	GUIDE ASSY SIDE R
02-10-15	LOCKING PIN
02-10-16	CAM SIZE
02-10-18	GUIDE ASSY END
02-10-28	GUIDE ASSY SIDE F
02-11-01	DRIVE ASSY MAIN
02-11-02	CLUTCH ASSY FEED
03-01-03	ROS ASSY
03-01-98	KIT HEATER ASSY
03-01-99	KIT HEATER DELE ASSY 220V
03-01-99	KIT HEATER DELE ASSY 230V
03-01-99	KIT HEATER DELE ASSY 240V
04-01-02	TRANSPORT EXIT ASSY
04-01-03	SENSOR ASSY TP
04-01-05	FUSER DRAWER CONNECTOR
04-01-06	FUSER UNIT
04-02-01	CLIP ELIMINATOR
04-02-02	ELIMINATOR
04-02-06	ROLL ASSY EXIT 2
04-02-07	ROLLER ASSY PINCH
04-02-14	GEAR 21Z/18Z
04-02-99	KIT CHUTE EXIT UP
05-01-06	ENVIRONMENT SENSOR
05-01-17	FAN FUSER

manuals4you.com

Table 7-20. Main Unit

Ref.	Parts Name
05-01-18	LVPS & MAIN POWER SWITCH
05-01-24	HVPS
05-01-27	FAN LV
05-01-28	POWER CABLE
05-01-28	POWER CABLE
05-03-01	HARNESS ASSY ROS
05-03-02	HARNESS ASSY R-TOP 1
05-03-03	HARNESS ASSY R-BTM
05-03-04	HARNESS ASSY P-SIZE
05-03-05	HARNESS ASSY CRUM
05-03-06	HARNESS ASSY F-SNR
06-01-01	IDT UNIT
06-01-58	KIT TONER FULL SENSOR
06-01-59	KIT TONER FULL SENSOR
06-02-01	TONER DISPENSER ASSY
06-02-04	COVER ASSY INNER
06-02-05	DEVE UNIT C
06-02-06	DEVE UNIT K
06-02-07	DEVE UNIT M
06-02-08	DEVE UNIT Y
06-02-09	DEVE HOLDER
06-02-10	DEVELOPER Y
06-02-11	DEVELOPER M
06-02-12	DEVELOPER C
06-02-13	DEVELOPER K
06-03-01	ANTENNA
06-03-02	HARNESS ASSY ANTENNA
06-03-12	HSG CTRG M
06-03-13	HSG CTRG Y
06-03-14	HSG CTRG K
06-03-15	HSG CTRG C
06-03-19	SHUTTER HSG
06-03-20	AUGER C
06-03-21	AUGER K
06-03-22	AUGER M

Table 7-20. Main Unit

Ref.	Parts Name
06-03-23	AUGER Y
06-03-24	ANTENNA
06-03-26	MOTOR DISP
06-03-27	MOTOR DISP
06-03-28	MOTOR DISP
06-03-29	MOTOR DISP M
06-03-30	HARNESS ASSY DISP
06-04-01	DRIVE ASSY PR
06-04-04	HARNESS ASSY IDT
06-04-06	TARMINAL ASSY PHD
06-04-07	GEAR ASSY HR
06-05-01	TRACKING ASSY FRONT
06-05-03	GUIDE IDLE DEVE ASSY
06-05-04	GEAR UNIT DEVE
06-05-05	TARCKING ASSY REAR
06-05-09	SENSOR ASSY TRACKING
06-05-10	SHAFT ASSY TRACKING
06-05-12	MOTOR ASSY TRACKING

☐ Duplex Unit

Table 7-21. Duplex Unit

Ref.	Parts Name
01-01-04	CAP CONNECTOR DUP
01-01-05	KNOB SCREW
02-02-01	DUPLEX FRAME ASSY
02-02-04	GUIDE DUP OUT
02-02-06	HARNESS ASSY MAIN
02-02-07	DUPLEX PWB
02-02-09	DUPLEX DRIVE
03-03-01	GUIDE DUP IN
03-03-02	GATE DUPLEX
03-03-03	DUPLEX ROLL
03-03-04	HARNESS ASSY DUP
03-03-10	LEVER DCL
03-03-15	ROLL DCL RUBBER
03-03-17	CAM DCL
03-03-58	KIT DUPLEX SENSOR
03-03-59	KIT DUPLEX COVER OPEN SWITCH
04-04-01	ARM GEAR
04-04-02	GEAR 27Z J
04-04-10	DUPLEX MOTOR
04-04-11	DUPLEX MOTOR
04-04-12	DUPLEX CLUTCH

manuals4you.com

☐ 560x3-Sheet Paper Cassette Unit

Table 7-22. 560x3-Sheet Paper Cassette Unit

Ref.	Parts Name
01-01-08	FRONT UPPER COVER
02-02-03	PAPER SIZE SENSOR
02-02-04	STOPPER TRAY F
02-02-05	TRAY ASSY
02-02-09	FRONT LOWER COVER
02-02-10	TRAY 4 FEEDER
02-02-11	TRAY 2-3 FEEDER
03-03-04	HARNESS ASSY SNR
03-03-05	ACTUATOR SNR
03-03-06	E.R.M. SENSOR
03-03-07	E.R.M. SENSOR
03-03-12	TRAY FEED/LIFT MOTOR
03-03-20	COUPLING-TM
03-03-23	HARNESS ASSY F/O
03-03-34	FRICTION CLUTCH
03-03-35	SPACER TM
03-03-37	ACTUATOR
03-03-38	E.R.M. SENSOR
03-03-41	CHUTE FEED OUT
03-03-43	GEAR 25T
03-03-44	GEAR 33 NUD
03-03-46	ONEWAY CLUTCH
03-03-47	ONEWAY GEAR
03-03-99	KIT FEED/RETARD/NUDGER
04-04-04	HARNESS ASSY SNR
04-04-05	ACTUATOR SNR
04-04-06	E.R.M. SENSOR
04-04-07	E.R.M. SENSOR
04-04-12	TRAY FEED/LIFT MOTOR
04-04-20	COUPLING-TM
04-04-34	FRICTION CLUTCH
04-04-35	SPACER TM
04-04-41	CHUTE FEED OUT

Table 7-22. 560x3-Sheet Paper Cassette Unit

Ref.	Parts Name
04-04-43	GEAR 25T
04-04-44	GEAR 33 NUD
04-04-46	ONEWAY CLUTCH
04-04-47	ONEWAY GEAR
04-04-99	KIT FEED/RETARD/NUDGER
05-05-03	PAPER LEVEL MONITOR
05-05-06	END GUIDE ASSY
05-05-09	LINK END
05-05-16	DOWEL PIN
05-05-17	STOPPER GEAR
05-05-18	GEAR 13/60
05-05-20	COUPLING
05-05-24	FRONT SIDE GUIDE
05-05-26	REAR SIDE GUIDE
05-05-27	SIDE GUIDE ACTUATOR
06-06-01	TAKEAWAY ROLL ASSY
06-06-05	HARNESS ASSY TA
06-06-09	TAKEAWAY SENSOR
06-06-13	EXIT CHUTE SWITCH
06-06-16	LEFT COVER ASSY 3TM
06-06-17	ROLL PINCH ASSY MID
06-06-22	ROLL PINCH ASSY
06-06-26	LATCH SHAFT
06-06-27	SUPPORT LH
06-06-30	HOOK
07-07-03	PWB ASSY 3TM
07-07-04	HARNESS ASSY 3TM
07-07-05	MOTOR ASSY 3TM
07-07-11	DOUBLE CASTER-R
07-07-12	DOUBLE CASTER-F

☐ 560-Sheet Paper Cassette Unit

Table 7-23. 560-Sheet Paper Cassette Unit

Ref.	Parts Name
01-01-04	PAPER SIZE SENSOR
01-01-07	STOPPER TRAY F
01-01-08	FRONT UPPER COVER
01-01-09	TRAY ASSY
01-01-11	FRONT LOWER COVER
01-01-12	TRAY 4 FEEDER
02-02-04	HARNESS ASSY SNR
02-02-05	ACTUATOR SNR
02-02-06	E.R.M. SENSOR
02-02-07	E.R.M. SENSOR
02-02-12	TRAY FEED/LIFT MOTOR
02-02-20	COUPLING-TM
02-02-34	FRICTION CLUTCH
02-02-35	SPACER TM
02-02-41	CHUTE FEED OUT
02-02-43	GEAR 25T
02-02-44	GEAR 33 NUD
02-02-46	ONEWAY CLUTCH
02-02-47	ONEWAY GEAR
02-02-99	KIT FEED/RETARD/NUDGER
03-03-03	PAPER LEVEL MONITOR
03-03-06	END GUIDE ASSY
03-03-09	LINK END
03-03-16	DOWEL PIN
03-03-17	STOPPER GEAR
03-03-18	GEAR 13/60
03-03-20	COUPLING
03-03-24	FRONT SIDE GUIDE
03-03-26	REAR SIDE GUIDE
03-03-27	SIDE GUIDE ACTUATOR
04-04-04	TAKEAWAY SENSOR
04-04-05	HARNESS ASSY TA
04-04-06	TAKEAWAY ROLL ASSY

Table 7-23. 560-Sheet Paper Cassette Unit

Ref.	Parts Name
04-04-12	EXIT CHUTE SWITCH
04-04-14	LEFT COVER ASSY STM
04-04-17	ROLL PINCH ASSY
04-04-23	LATCH SHAFT
04-04-26	HOOK
05-05-04	MOTOR ASSY STM
05-05-07	PWB ASSY STM
05-05-08	HARNESS ASSY STM

☐ Face-Up Tray

Table 7-24. Face-Up Tray

No.	Parts Name
01-01-01	TRAY ASSY EXIT
01-01-02	CHUTE ASSY FUT
01-01-03	GATE SOLENOID

manuals4you.com

7.5 Circuit Diagrams

This section shows electric control circuit diagrams of AcuLaser C9100.

- ☐ C565 MAIN Board (*p.611, p.612, p.613, p.614, p.615, p.616*)

manuals4you.com

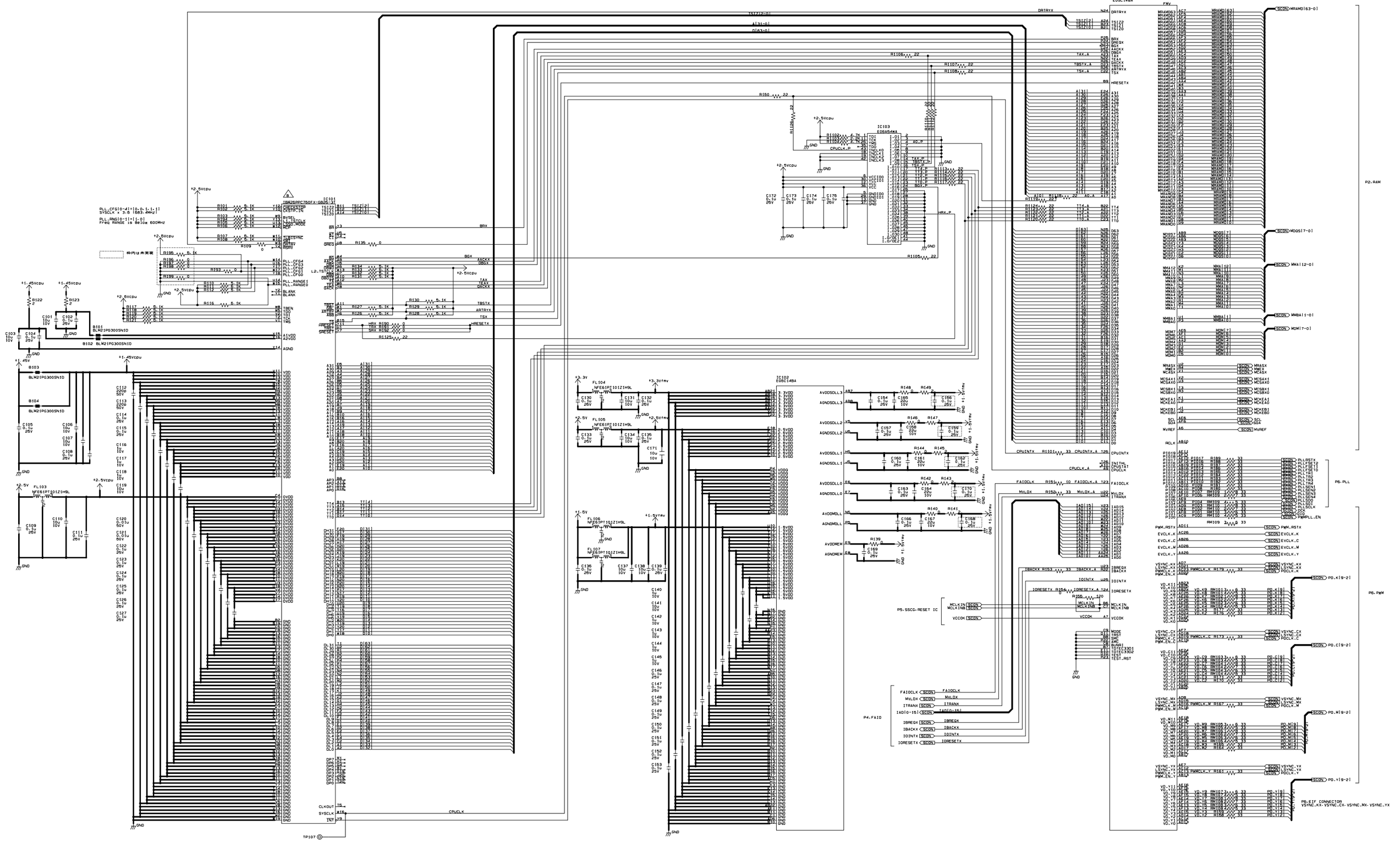

注）1: 内は、未実装

Model: LP-9800C / AcuLaser C9100
Board: C565MAIN BOARD
Sheet: 1 of 6
Rev. : B

manuals4you.com

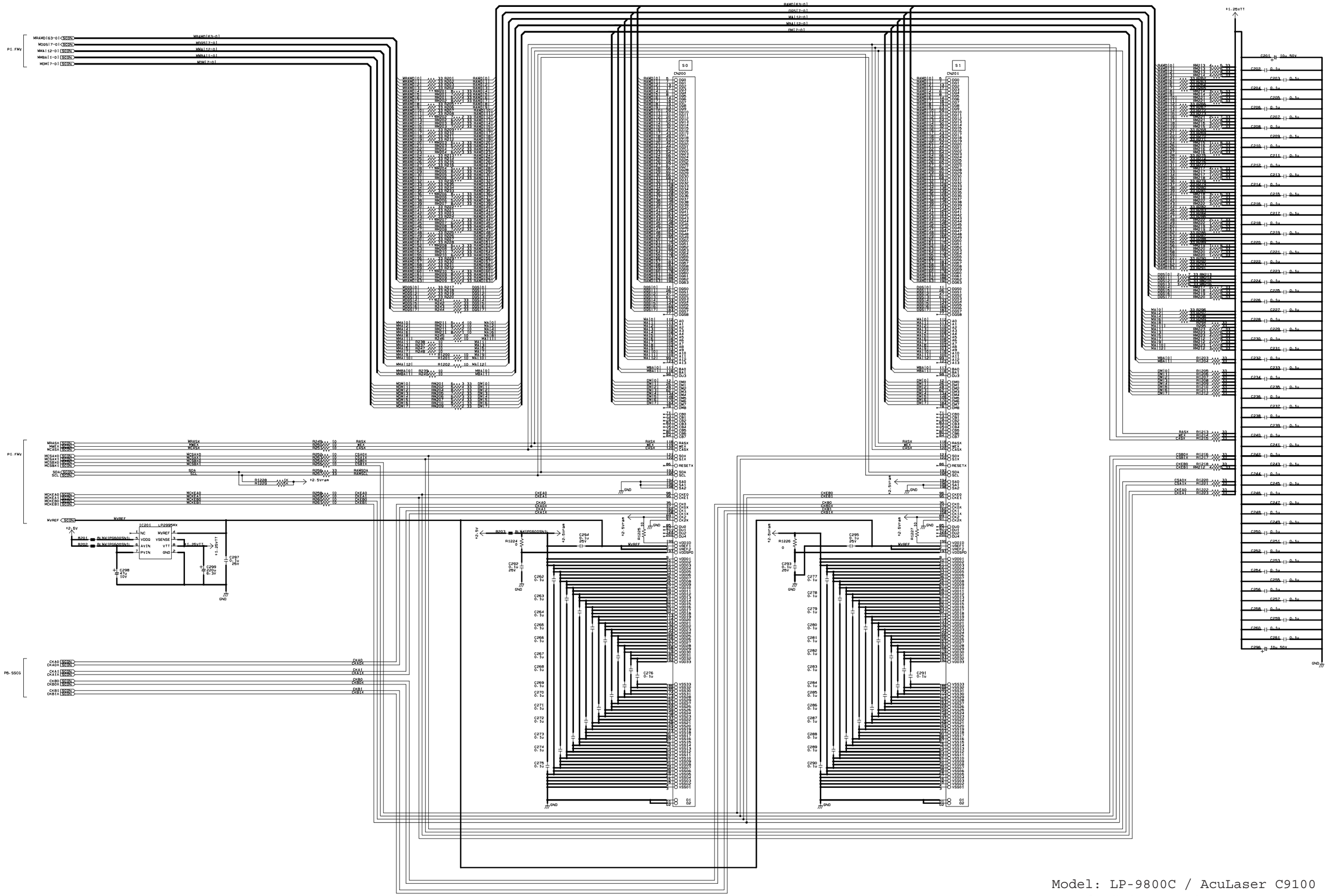

Model: LP-9800C / AcuLaser C9100
Board: C565MAIN BOARD
Sheet: 2 of 6
Rev. : B

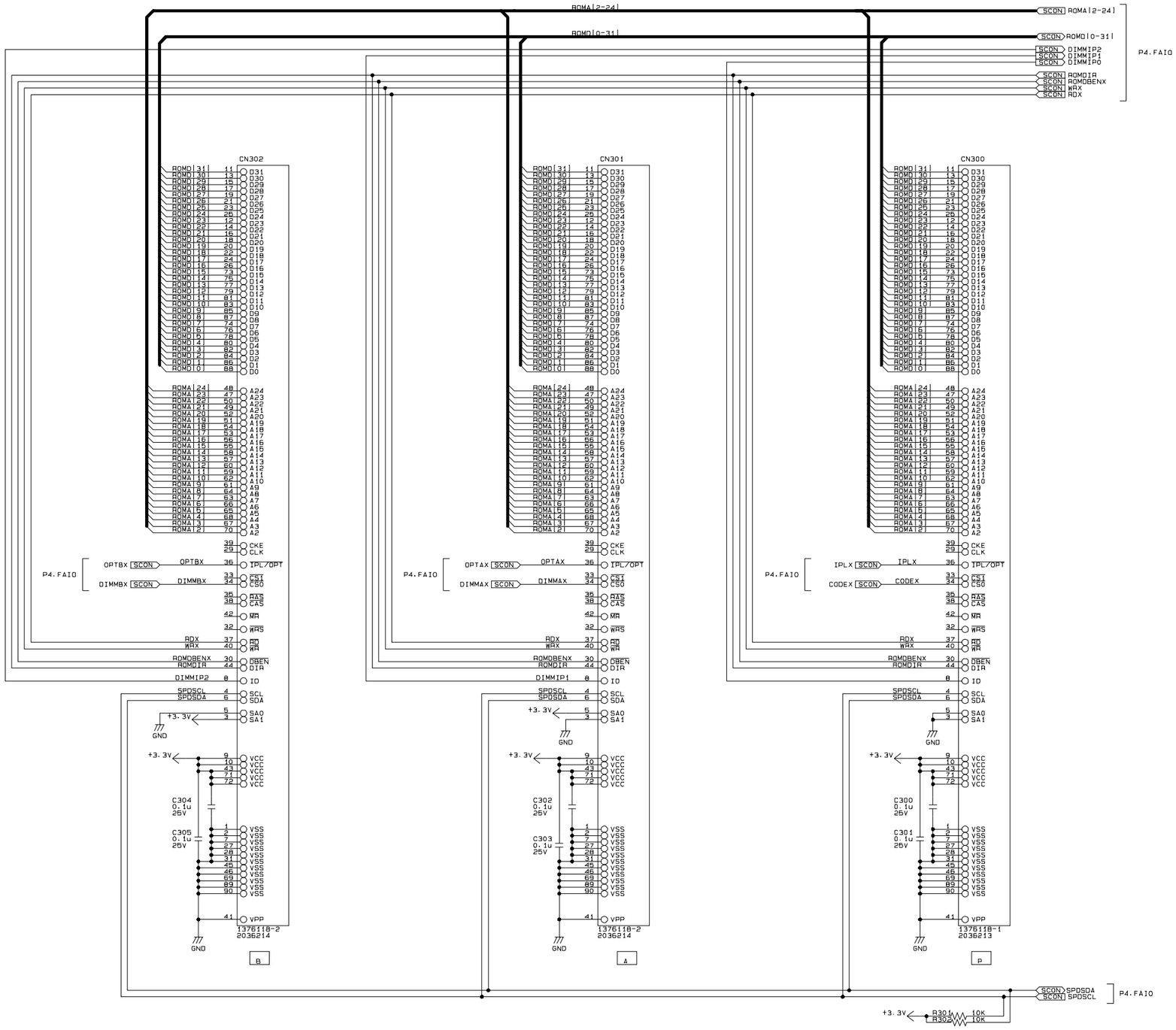

Model: LP-9800C / AcuLaser C9100
Board: C565MAIN BOARD
Sheet: 3 of 6
Rev. : B

manuals4you.com

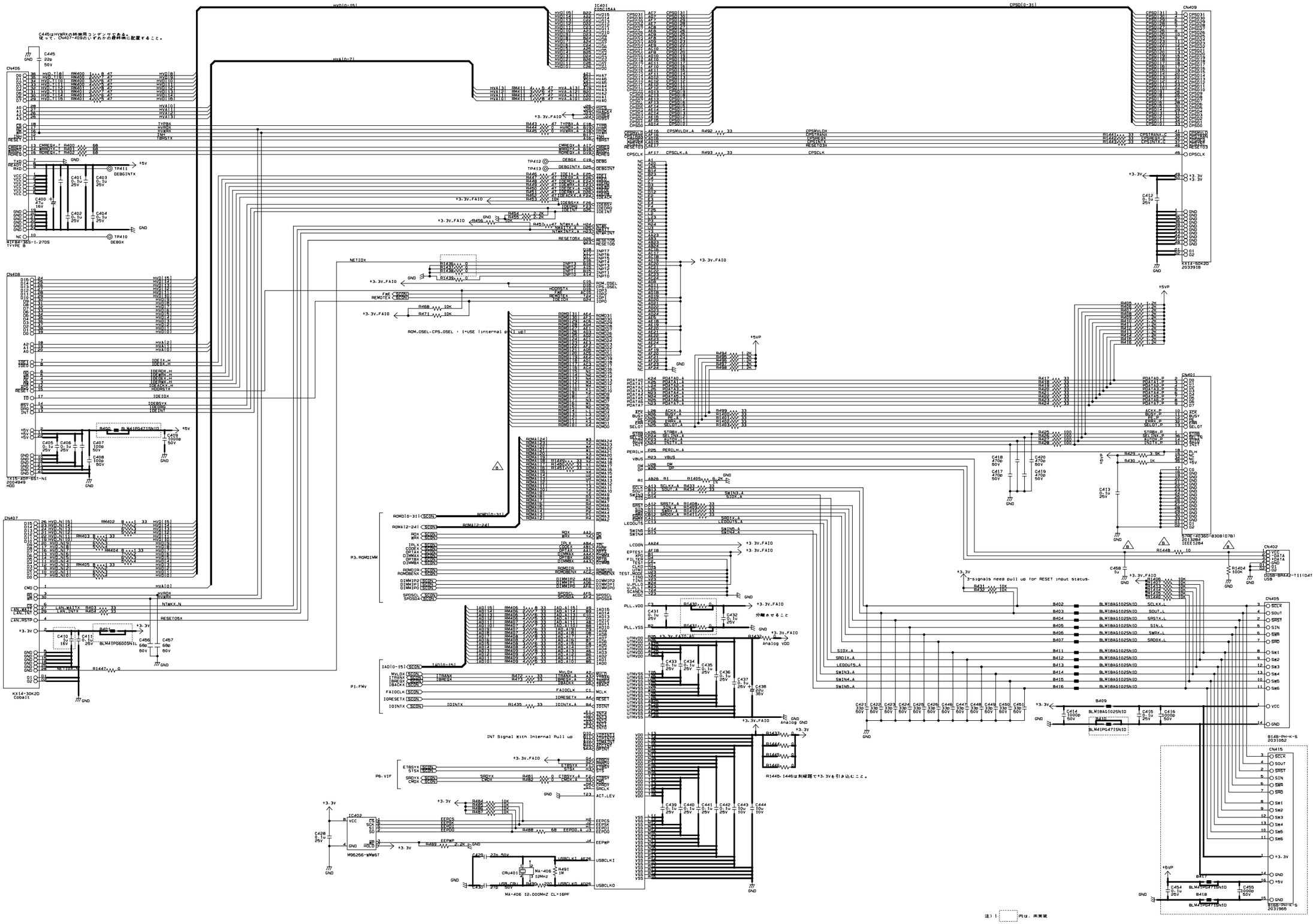

Model: LP-9800C / AcuLaser C9100
Board: C565MAIN BOARD
Sheet: 4 of 6
Rev. : B

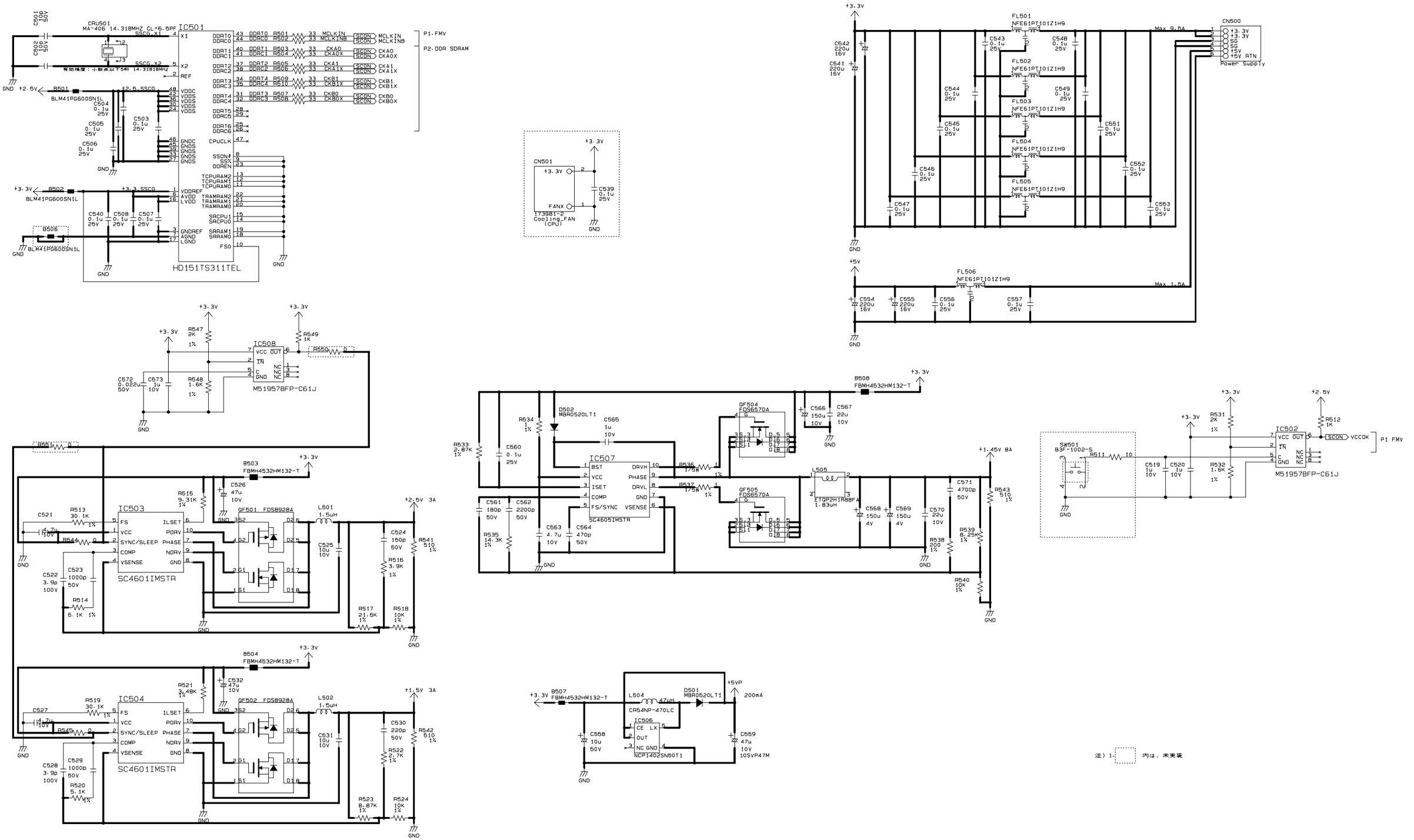

Model: LP-9800C / AcuLaser C9100
Board: C565MAIN BOARD
Sheet: 5 of 6
Rev. : B

manuals4you.com

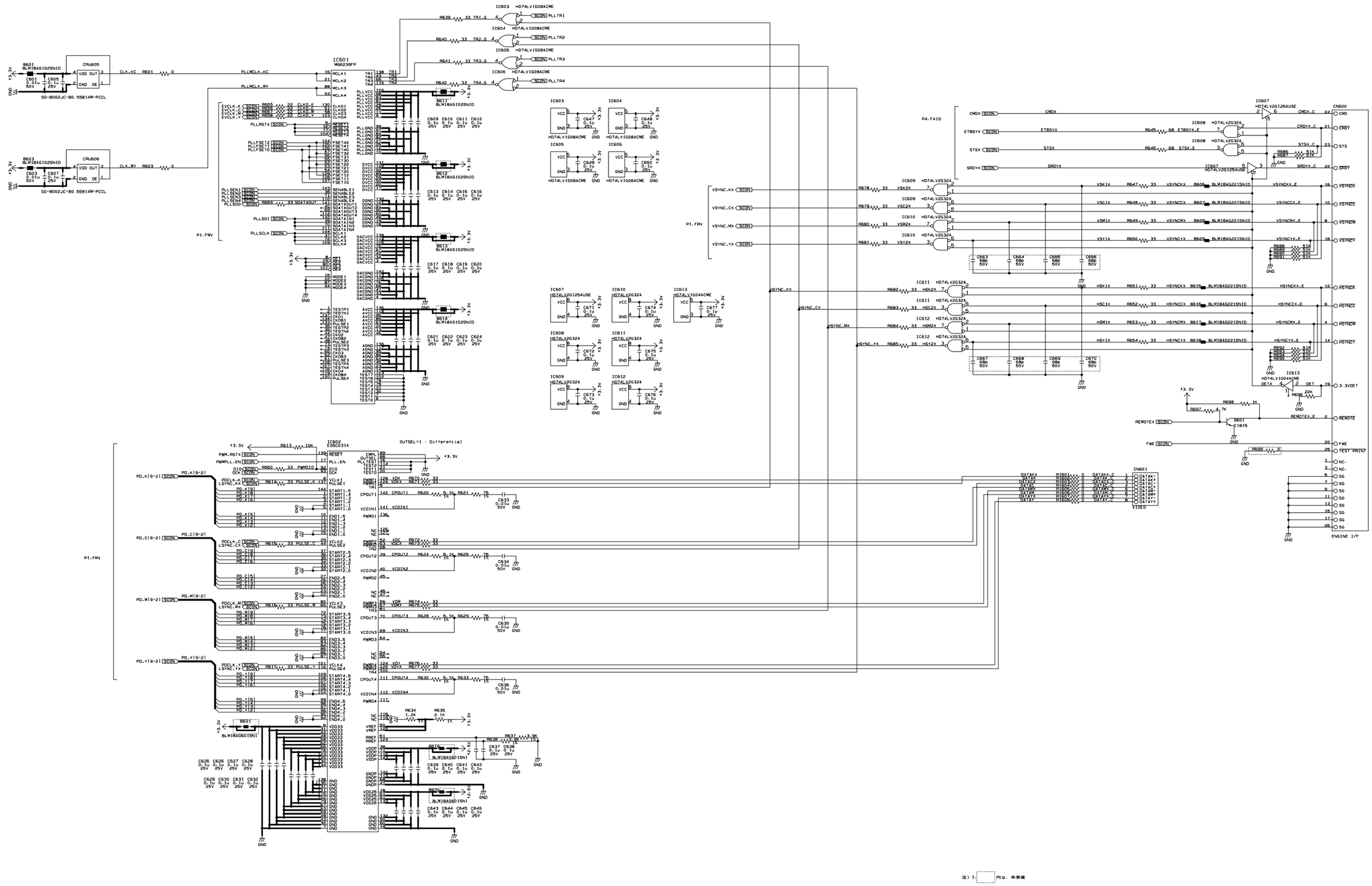

Model: LP-9800C / AcuLaser C9100
Board: C565MAIN BOARD
Sheet: 6 of 6
Rev. : B