KYOCERA

FS-C8520MFP
FS-C8525MFP

SERVICE MANUAL

TONER+
www.tonerplus.com.ua

Published in August 2012
842MY113
2MYSM063
Rev.3

CAUTION

RISK OF EXPLOSION IF BATTERY IS REPLACED BY AN INCORRECT TYPE. DISPOSE OF USED BATTERIES ACCORDING TO THE INSTRUCTIONS.

It may be illegal to dispose of this battery into the municipal waste stream. Check with your local solid waste officials for details in your area for proper disposal.

ATTENTION

IL Y A UN RISQUE D'EXPLOSION SI LA BATTERIE EST REMPLACEE PAR UN MODELE DE TYPE INCORRECT. METTRE AU REBUT LES BATTERIES UTILISEES SELON LES INSTRUCTIONS DONNEES.

Il peut être illégal de jeter les batteries dans des eaux d'égout municipales. Vérifiez avec les fonctionnaires municipaux de votre région pour les détails concernant des déchets solides et une mise au rebut appropriée.

TONER
www.tonerplus.com.ua

Revision history

Revision	Date	Replaced pages	Remarks
1	21 June 2012	Contents, 1-3-15, 1-3-95, 1-3-96, 1-4-35, 1-5-15	-
2	19 July 2012	Contents, 1-4-36, 2-4-10 to 20	-
3	20 August 2012	1-3-82, 1-3-146 to 1-3-148, 2-4-22	-

TONER
www.tonerplus.com.ua

This page is intentionally left blank.

TONER
www.tonerplus.com.ua

Safety precautions

This booklet provides safety warnings and precautions for our service personnel to ensure the safety of their customers, their machines as well as themselves during maintenance activities. Service personnel are advised to read this booklet carefully to familiarize themselves with the warnings and precautions described here before engaging in maintenance activities.

TONER
www.tonerplus.com.ua

Safety warnings and precautions

Various symbols are used to protect our service personnel and customers from physical danger and to prevent damage to their property. These symbols are described below:

⚠**DANGER:** High risk of serious bodily injury or death may result from insufficient attention to or incorrect compliance with warning messages using this symbol.

⚠**WARNING:** Serious bodily injury or death may result from insufficient attention to or incorrect compliance with warning messages using this symbol.

⚠**CAUTION:** Bodily injury or damage to property may result from insufficient attention to or incorrect compliance with warning messages using this symbol.

Symbols

The triangle (△) symbol indicates a warning including danger and caution. The specific point of attention is shown inside the symbol.

General warning.

Warning of risk of electric shock.

Warning of high temperature.

⃠ indicates a prohibited action. The specific prohibition is shown inside the symbol.

General prohibited action.

Disassembly prohibited.

● indicates that action is required. The specific action required is shown inside the symbol.

General action required.

Remove the power plug from the wall outlet.

Always ground the copier.

TONER
www.tonerplus.com.ua

1. Installation Precautions

⚠ WARNING

- Do not use a power supply with a voltage other than that specified. Avoid multiple connections to one outlet: they may cause fire or electric shock. When using an extension cable, always check that it is adequate for the rated current. .....

- Connect the ground wire to a suitable grounding point. Not grounding the copier may cause fire or electric shock. Connecting the earth wire to an object not approved for the purpose may cause explosion or electric shock. Never connect the ground cable to any of the following: gas pipes, lightning rods, ground cables for telephone lines and water pipes or faucets not approved by the proper authorities. .....

⚠ CAUTION:

- Do not place the copier on an infirm or angled surface: the copier may tip over, causing injury. .....

- Do not install the copier in a humid or dusty place. This may cause fire or electric shock. .....

- Do not install the copier near a radiator, heater, other heat source or near flammable material. This may cause fire. .....

- Allow sufficient space around the copier to allow the ventilation grills to keep the machine as cool as possible. Insufficient ventilation may cause heat buildup and poor copying performance. .....

- Always handle the machine by the correct locations when moving it. .....

- Always use anti-toppling and locking devices on copiers so equipped. Failure to do this may cause the copier to move unexpectedly or topple, leading to injury. .....

- Avoid inhaling toner or developer excessively. Protect the eyes. If toner or developer is accidentally ingested, drink a lot of water to dilute it in the stomach and obtain medical attention immediately. If it gets into the eyes, rinse immediately with copious amounts of water and obtain medical attention. .....

- Advice customers that they must always follow the safety warnings and precautions in the copier's instruction handbook. .....

TONER+
www.tonerplus.com.ua

2. Precautions for Maintenance

⚠WARNING

- Always remove the power plug from the wall outlet before starting machine disassembly.
- Always follow the procedures for maintenance described in the service manual and other related brochures.
- Under no circumstances attempt to bypass or disable safety features including safety mechanisms and protective circuits.
- Always use parts having the correct specifications.
- Always use the thermostat or thermal fuse specified in the service manual or other related brochure when replacing them. Using a piece of wire, for example, could lead to fire or other serious accident.
- When the service manual or other serious brochure specifies a distance or gap for installation of a part, always use the correct scale and measure carefully.
- Always check that the copier is correctly connected to an outlet with a ground connection.
- Check that the power cable covering is free of damage. Check that the power plug is dust-free. If it is dirty, clean it to remove the risk of fire or electric shock.
- Never attempt to disassemble the optical unit in machines using lasers. Leaking laser light may damage eyesight.
- Handle the charger sections with care. They are charged to high potentials and may cause electric shock if handled improperly.

⚠CAUTION

- Wear safe clothing. If wearing loose clothing or accessories such as ties, make sure they are safely secured so they will not be caught in rotating sections.
- Use utmost caution when working on a powered machine. Keep away from chains and belts.
- Handle the fixing section with care to avoid burns as it can be extremely hot.
- Check that the fixing unit thermistor, heat and press rollers are clean. Dirt on them can cause abnormally high temperatures.

TONER
www.tonerplus.com.ua

- Do not remove the ozone filter, if any, from the copier except for routine replacement. .....

- Do not pull on the AC power cord or connector wires on high-voltage components when removing them; always hold the plug itself. .....

- Do not route the power cable where it may be stood on or trapped. If necessary, protect it with a cable cover or other appropriate item. .....

- Treat the ends of the wire carefully when installing a new charger wire to avoid electric leaks. .....

- Remove toner completely from electronic components. .....

- Run wire harnesses carefully so that wires will not be trapped or damaged. .....

- After maintenance, always check that all the parts, screws, connectors and wires that were removed, have been refitted correctly. Special attention should be paid to any forgotten connector, trapped wire and missing screws. .....

- Check that all the caution labels that should be present on the machine according to the instruction handbook are clean and not peeling. Replace with new ones if necessary. .....

- Handle greases and solvents with care by following the instructions below: .....
  · Use only a small amount of solvent at a time, being careful not to spill. Wipe spills off completely.
  · Ventilate the room well while using grease or solvents.
  · Allow applied solvents to evaporate completely before refitting the covers or turning the power switch on.
  · Always wash hands afterwards.

- Never dispose of toner or toner bottles in fire. Toner may cause sparks when exposed directly to fire in a furnace, etc. .....

- Should smoke be seen coming from the copier, remove the power plug from the wall outlet immediately. .....

3. Miscellaneous

⚠WARNING

- Never attempt to heat the drum or expose it to any organic solvents such as alcohol, other than the specified refiner; it may generate toxic gas. .....

- Keep the machine away from flammable liquids, gases, and aerosols. A fire or an electric shock might occur. .....

TONER
www.tonerplus.com.ua

This page is intentionally left blank.

TONER+
www.tonerplus.com.ua

CONTENTS

1-1 Specifications

1-1-1 Specifications 1-1-1
1-1-2 Parts names 1-1-6
(1) Machine (front side) 1-1-6
(2) Machine (rear side) 1-1-8
(3) Operation panel 1-1-9
1-1-3 Machine cross section 1-1-10

1-2 Installation

1-2-1 Installation environment 1-2-1
1-2-2 Unpacking and installation 1-2-2
(1) Installation procedure 1-2-2
(2) Setting initial copy modes 1-2-13
1-2-3 Install the expansion memory (option) 1-2-14
1-2-4 Option composition 1-2-15

1-3 Maintenance Mode

1-3-1 Maintenance mode 1-3-1
(1) Executing a maintenance item 1-3-1
(2) Maintenance modes item list 1-3-2
(3) Contents of the maintenance mode items 1-3-10
1-3-2 Service mode 1-3-134
(1) Printing the service status page 1-3-134
(2) Executing a service mode 1-3-141
(3) Description of service mode 1-3-141

1-4 Troubleshooting

1-4-1 Paper misfeed detection 1-4-1
(1) Paper misfeed indication 1-4-1
(2) Paper misfeed detection component 1-4-2
1-4-2 Self-diagnostic function 1-4-9
(1) Self-diagnostic function 1-4-9
(2) Self-diagnostic codes 1-4-9
1-4-3 Image quality problems 1-4-37
(1) No image appears (entirely white). 1-4-38
(2) No image appears (entirely black). 1-4-38
(3) Image is too light. 1-4-39
(4) The background is colored. 1-4-39
(5) White streaks are printed vertically. 1-4-39
(6) Black streaks are printed vertically. 1-4-40
(7) Streaks are printed horizontally. 1-4-40
(8) One side of the print image is darker than the other. 1-4-40
(9) Spots are printed. 1-4-41
(10) Image is blurred. 1-4-41
(11) The leading edge of the image is consistently misaligned with the original. 1-4-41
(12) The leading edge of the image is sporadically misaligned with the original. 1-4-41
(13) Paper is wrinkled. 1-4-42
(14) Image is off-set. 1-4-42
(15) Part of image is missing. 1-4-42
(16) Fusing is loose 1-4-42

TONER
www.tonerplus.com

(17) Image is out of focus. 1-4-43
(18) Image center does not align with the original center. 1-4-43
1-4-4 Electric problems 1-4-44
1-4-5 Mechanical problems 1-4-51
1-4-6 Send error code 1-4-53
(1) Scan to SMB error codes 1-4-53
(2) Scan to FTP error codes 1-4-54
(3) Scan to E-mail error codes 1-4-55

1-5 Assembly and disassembly

1-5-1 Precautions for assembly and disassembly 1-5-1
(1) Precautions 1-5-1
(2) Drum unit 1-5-1
(3) Toner 1-5-1
(4) How to tell a genuine Kyocera Mita toner container 1-5-2
1-5-2 Outer covers 1-5-3
(1) Detaching and refitting the front cover 1-5-3
(2) Detaching and refitting the rear cover 1-5-5
(3) Detaching and refitting the inner tray 1-5-6
(4) Detaching and refitting the eject rear cover 1-5-8
1-5-3 Paper feed section 1-5-10
(1) Detaching and refitting the primary paper feed unit 1-5-10
(2) Detaching and refitting the MP paper feed roller and MP separation pad 1-5-11
(3) Detaching and refitting the registration roller 1-5-12
(4) Detaching and refitting the registration cleaner 1-5-13
(5) Detaching and refitting the MP tray 1-5-13
1-5-4 Developing section 1-5-14
(1) Detaching and refitting the developing unit 1-5-14
1-5-5 Drum section 1-5-16
(1) Detaching and refitting the drum unit 1-5-16
(2) Detaching and refitting the chager roller unit 1-5-16
1-5-6 Transfer/separation section 1-5-17
(1) Detaching and refitting the intermediate transfer unit 1-5-17
(2) Detaching and refitting the secondary transfer roller unit 1-5-17
1-5-7 Fuser section 1-5-18
(1) Detaching and refitting the fuser unit 1-5-18
1-5-8 Drive section 1-5-19
(1) Detaching and refitting the conveying motor 1-5-19
(2) Detaching and refitting the drive unit 1-5-19
1-5-9 Optical section 1-5-20
(1) Detaching and refitting the laser scanner unit 1-5-20
(2) Detaching and refitting the image scanner unit 1-5-21
(3) Detaching and refitting the LED unit 1-5-24
1-5-10 Document processor 1-5-26
(1) Detaching and refitting the document processor 1-5-26
(2) Detaching and refitting the DP paper feed roller and DP separation pulley 1-5-27
(3) Detaching and refitting the DP main PWB 1-5-29
1-5-11 PWBs 1-5-31
(1) Detaching and refitting the main PWB 1-5-31
(2) Detaching and refitting the engine PWB 1-5-32
(3) Detaching and refitting the power source PWB 1-5-33
(4) Detaching and refitting the operation panel PWB main 1-5-34
(5) Detaching and refitting the IH PWB 1-5-36

TONER
www.tonerplus.com.ua

1-5-12 Others 1-5-37
(1) Detaching and refitting the language sheet 1-5-37
(2) Detaching and refitting the conveying unit 1-5-38
(3) Detaching and refitting the imaging fan motor 1-5-40
(4) Direction of installing the principal fan motors 1-5-40

1-6 Requirements on PWB Replacement
1-6-1 Upgrading the firmware 1-6-1
1-6-2 Remarks on PWB replacement 1-6-3
(1) Engine PWB 1-6-3
(2) DP main PWB 1-6-3
(3) Main PWB 1-6-4

2-1 Mechanical Construction
2-1-1 Paper feed/conveying section 2-1-1
(1) Cassette paper feed section 2-1-1
(2) MP tray paper feed section 2-1-3
(3) Conveying section 2-1-4
2-1-2 Drum section 2-1-5
2-1-3 Developing section 2-1-7
2-1-4 Optical section 2-1-9
(1) Image scanner section 2-1-9
(2) Laser scanner section 2-1-11
2-1-5 Transfer/Separation section 2-1-13
(1) Intermediate transfer unit section 2-1-13
(2) Secondary transfer roller section 2-1-15
2-1-6 Fuser section 2-1-16
2-1-7 Eject/Feedshift section 2-1-18
2-1-8 Duplex conveying section 2-1-20
2-1-9 Document processor 2-1-22
(1) Original feed section 2-1-22
(2) Original conveying section 2-1-24
(3) Original switchback/eject sections 2-1-26

2-2 Electrical Parts Layout
2-2-1 Electrical parts layout 2-2-1
(1) PWBs 2-2-1
(2) Switches and sensors 2-2-4
(3) Motors 2-2-6
(4) Others 2-2-8

2-3 Operation of the PWBs
2-3-1 Main PWB 2-3-1
2-3-2 Engine PWB 2-3-7
2-3-3 Power source PWB 2-3-20
2-3-4 IH PWB 2-3-23
2-3-5 Operation panel PWB main 2-3-26
2-3-6 DP main PWB 2-3-31

TONER
www.tonerplus.com.ua

2-4 Appendixes

2-4-1 Appendixes 2-4-1
(1) Maintenance kits 2-4-1
(2) Repetitive defects gauge 2-4-2
(3) Firmware environment commands 2-4-3
(4) System Error (Fxxxx) Outline 2-4-10
(5) Chart of image adjustment procedures 2-4-21
(6) Wiring diagram 2-4-23

Installation Guide

PF-470/471 (Paper feeder)
DF-470/AK-470 (Document finisher)
FAX System(U)

TONER+
www.tonerplus.com.ua

1-1-1 Specifications

Machine

Item		Specifications			
		20ppm		25ppm	
Type		Desktop			
Printing method		Electrophotography by semiconductor laser, tandem (4) drum system			
Originals		Sheet, Book, 3-dimensional objects (maximum original size: A3/Ledger)			
Original feed system		Fixed			
Paper weight	Cassette	60 to 256 g/m² (Duplex: 60 to 220 g/m²)			
	MP tray	60 to 256 g/m², 230µm (Cardstock)			
Paper type	Cassette	Plain, Preprinted, Bond, Recycled, Vellum, Rough, Letter Head, Color, Pre-punched, Thick, High quality, Custom1 to 8 (Duplex: Same as simplex)			
	MP tray	Plain, Preprinted, Bond, Recycled, Vellum, Rough, Letter Head, Color, Pre-punched, Thick, High quality, Coated, Envelope, Cardstock, Transparency, Labels, Custom1 to 8			
Paper size	Cassette	A3, A4, A5, B4, B5, Ledger, Letter, Legal, Statement, Oficio II, Folio, 8K, 16K			
	MP tray	A3, A4, A5, A6, B4, B5, ISO B5, B6, Ledger, Letter, Legal, Statement, Executive, Oficio II, Folio, 8K, 16K, Envelope #10, Envelope #9, Envelope #6, Envelope Monarch, Envelope DL, Envelope C4, Envelope C5, Postcards, Return postcard, Youkei 2, Youkei 4, Custom			
Zoom level		Manual mode : 25 to 400%, 1% increments Auto mode : 400%, 200%, 141%, 122%, 115%, 86%, 81%, 70%, 50%, 25%			
Copying speed (Simplex) (When the DP is not used)		Color	B/W	Color	B/W
	A4/Letter	20 sheets/min	20 sheets/min	25 sheets/min	25 sheets/min
	A4R/LetterR	14 sheets/min	14 sheets/min	17 sheets/min	17 sheets/min
	A3/Ledger	8 sheets/min	10 sheets/min	9 sheets/min	13 sheets/min
	B4/Legal	9 sheets/min	10 sheets/min	10 sheets/min	13 sheets/min
	B5	20 sheets/min	20 sheets/min	25 sheets/min	25 sheets/min
	B5R	14 sheets/min	14 sheets/min	17 sheets/min	17 sheets/min
	A5R	10 sheets/min	10 sheets/min	13 sheets/min	13 sheets/min
Copying speed (Simplex) (When using the DP)	A4/Letter	20 sheets/min	20 sheets/min	20 sheets/min	20 sheets/min
	A4R/LetterR	14 sheets/min	14 sheets/min	14 sheets/min	14 sheets/min
	A3/Ledger	8 sheets/min	10 sheets/min	9 sheets/min	10 sheets/min
	B4/Legal	9 sheets/min	10 sheets/min	10 sheets/min	11 sheets/min
	B5	20 sheets/min	20 sheets/min	20 sheets/min	20 sheets/min
	B5R	14 sheets/min	14 sheets/min	16 sheets/min	16 sheets/min
	A5R	10 sheets/min	10 sheets/min	13 sheets/min	13 sheets/min

TONER
www.tonerplus.com.ua

Item		Specifications	
		20ppm	25ppm
First copy time (A4, feed from cassette)	When the DP is not used	B/W : 11.7 s or less Color : 13.6 s or less	B/W : 11.7 s or less Color : 13.6 s or less
	When using the DP	B/W : 12.7 s or less Color : 15.6 s or less	B/W : 11.7 s or less Color : 13.6 s or less
Warm-up time (22 °C/71.6 °F, 60% RH)		Power on : 55 s or less Low powermode : 10 s or less Sleep mode : 23 s or less	Power on : 45 s or less Low powermode : 10 s or less Sleep mode : 23 s or less
Paper capacity	Cassette	500 sheets (80g/m^2)	
	MP tray	100 sheets (80 g/m^2, plain paper, A4/Letter or less) 25 sheets (80 g/m^2, plain paper, A4/Letter or more)	
Output tray capacity		Inner tray : 250 sheets (80g/m^2) Job separator : 30 sheets (80g/m^2)	
Continuous copying		1 to 999 sheets	
Light source		White LED	
Scanning system		Flat bed scanning by CCD image sensor	
Photoconductor		OPC drum (diameter 30 mm)	
Image write system		Semiconductor laser:	
Charging system		Contact charger roller method	
Developer system		Touch down developing system Developer: 2-component Toner replenishing: Automatic from the toner container	
Transfer system		Primary: Transfer belt Secondary: Transfer roller	
Separation system		Small diameter separation, separation electrode	
Cleaning system		Counter blade cleaning	
Charge erasing system		Exposure by cleaning lamp (LED)	
Fusing system		One axis IH established method Heat source: IH inverter heating Abnormally high temperature protection devices: thermostat	
CPU		PowerPC464 (800MHz)	
Main memory	Standard	1.5 GB	
	Maximum	2.0 GB	
Interface	Standard	USB interface connector: 1 (USB Hi-speed) USB host: 2 (USB Hi-speed) Network interface: 1 (10BASE-T/100BASE-TX/1000BASE-T)	
	Option	eKUIO slot: 2	
Resolution		600 × 600 dpi	

TONER
www.tonerplus.com.ua

Item		Specifications	
		20ppm	25ppm
Operating environment	Temperature	10 to 32.5 °C/50 to 90.5 °F	
	Humidity	15 to 80% RH	
	Altitude	2,500 m/8,202 ft or less	
	Brightness	1,500 lux or less	
Dimensions (W × D × H)		590 × 590 × 748 mm / 23 1/4" × 23 1/4 "× 29 7/16"	
Weight		80 kg / 176.4 lb (with toner containers)	
Space required (W × D)		874× 590 mm / 34 7/16" × 23 1/4" (using MP tray)	
Power source		120 V AC, 60 Hz, more than 12.0 A 220 - 240 V AC, 50/60 Hz, more than 7.2 A	
Options		Paper feeder (single cassette), Paper feeder (double cassette), Document finisher, Network kit, Fax kit, Expanded memory, Card Authentication KIT	

Document processor

Item	Specifications
Original feed method	Automatic feed
Supported original types	Sheet originals
Original sizes	Maximum: A3/Ledger Minimum : A5/Statement
Original weights	Simplex: 45 to 160 g/m^2 Duplex : 50 to 120 g/m^2
Loading capacity	50 sheets (50 to 80 g/m^2) or less

TONER
www.tonerplus.com.ua

Printer

Item		Specifications			
		20ppm		25ppm	
		Color	B/W	Color	B/W
Printing speed (Simplex)	A4/Letter	20 sheets/min	20 sheets/min	25 sheets/min	25 sheets/min
	A4R/LetterR	14 sheets/min	14 sheets/min	17 sheets/min	17 sheets/min
	A3/Ledger	10 sheets/min	10 sheets/min	13 sheets/min	13 sheets/min
	B4/Legal	10 sheets/min	10 sheets/min	13 sheets/min	13 sheets/min
	B5	20 sheets/min	20 sheets/min	25 sheets/min	25 sheets/min
	B5R	14 sheets/min	14 sheets/min	17 sheets/min	17 sheets/min
	A5R	10 sheets/min	10 sheets/min	13 sheets/min	13 sheets/min
Printing speed (Duplex)	A4/Letter	19 sheets/min	19 sheets/min	23 sheets/min	23 sheets/min
	A4R/LetterR	7 sheets/min	7 sheets/min	9 sheets/min	9 sheets/min
	A3/Ledger	6 sheets/min	6 sheets/min	7 sheets/min	7 sheets/min
	B4/Legal	6sheets/min	6sheets/min	7 sheets/min	7 sheets/min
	B5	19 sheets/min	19 sheets/min	23 sheets/min	23 sheets/min
	B5R	7 sheets/min	7 sheets/min	9sheets/min	9sheets/min
	A5R	10 sheets/min	10 sheets/min	13 sheets/min	13 sheets/min
First print time (A4, feed from cassette)		B/W : 11.0 s or less Color : 14.0 s or less		B/W : 10.0 s or less Color : 12.0 s or less	
Resolution		600 × 600 dpi			
Operating system		Windows2000, WindowsXP(32bit), Windows XP Professional x64 Edition, Windows Server 2003 (32-Bit x86), Windows Server 2003 x64 Edition, Windows Vista x86 Edition, Windows Vista x64 Edition, Windows Server 2008 (32-Bit x86), Windows Server 2008 x64 Edition, Windows 7 (32-Bit x86), Windows 7 (64-Bit x64), Mac OS 9.x, Mac OS X			
System requirements		IBM PC/AT compatible CPU: Celeron 600 MHz or higher RAM: It is based on the recommend environment of each OS. HDD free space: 20 MB or more			
Page description language		PRESCRIBE			

TONER+
www.tonerplus.com.ua

Scanner

Item		Specifications
Operating system		Windows XP (32bit/64bit), Windows Vista (32bit/64bit), Windows 7 (32bit/64bit), Windows Server 2003 (32bit/64bit), Windows Server 2008 (32bit/64bit), Windows Server 2008 R2
Resolution		600 dpi, 400 dpi, 300 dpi, 200 dpi, 200 × 100dpi, 200 × 400dpi
File format		TIFF (JPEG6.0, tn2), JPEG, XPS, PDF (1.4, /A)
Scanning speed	**Simplex**	B/W : 40 images/min Color: 40 images/min (A4 landscape,300 dpi, Image quality: Text/Photo original)
	Duplex	B/W : 14 images/min Color : 14 images/min (A4 landscape, 300 dpi, Image quality: Text/Photo original)
Network protocol		TCP/IP
Transmission system		PC transmission SMB :Scan to PC FTP transmission FTP, FTP over SSL :Scan to FTP E-mail transmission SMTP :Scan to E-mail USB transmission USB :Scan to USB TWAIN SCAN TWAIN, WIA * WSDScan WSD-SCAN

* Available operating system: Windows Vista (32bit/64bit), Windows 7 (32bit/64bit),
Windows Server 2008 (32bit/64bit), Windows Server 2008 R2

NOTE: These specifications are subject to change without notice.

TONER
www.tonerplus.com.ua

1-1-2 Parts names

(1) Machine (front side)

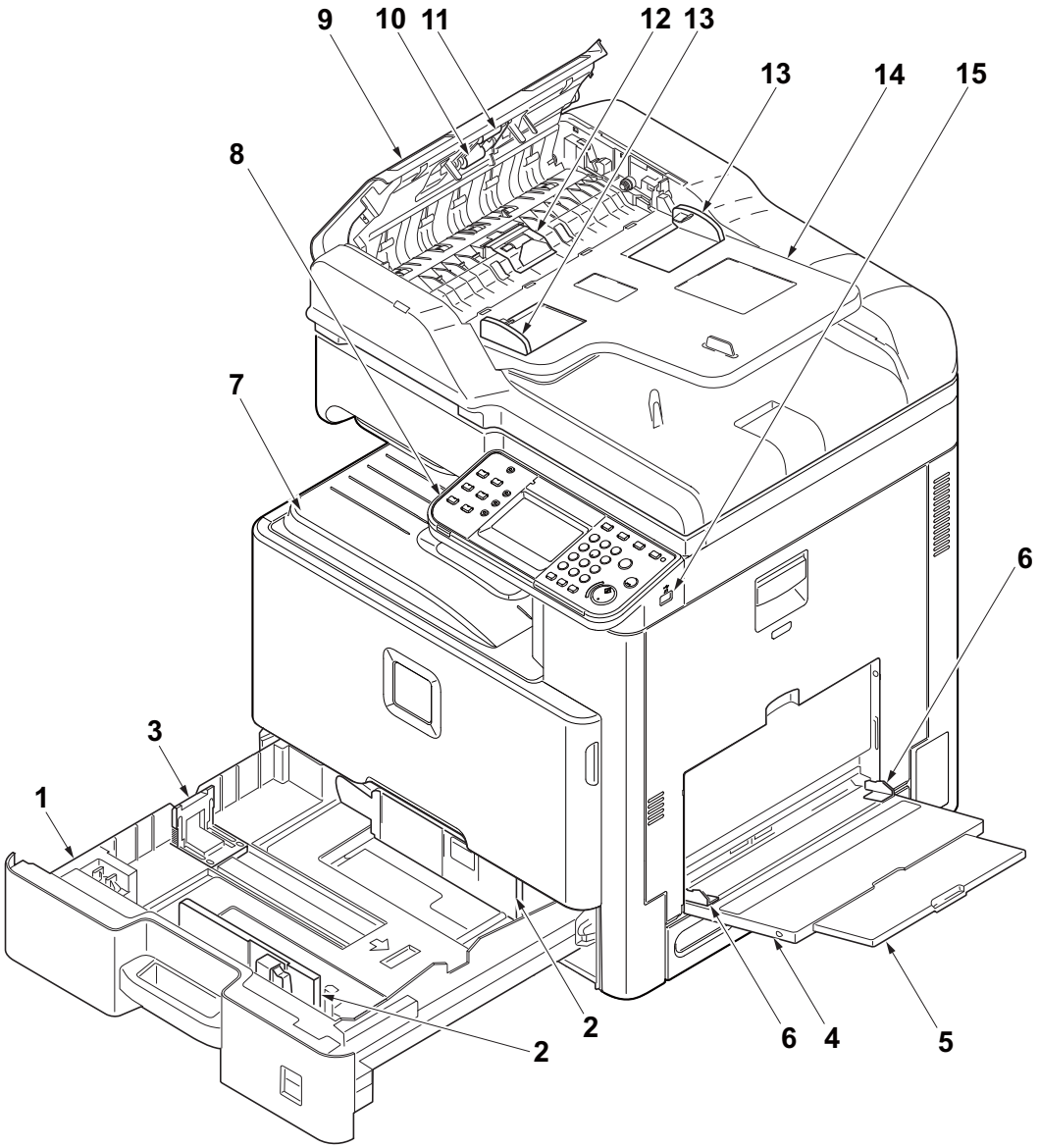

Figure 1-1-1

1. Cassette
2. Paper width guides
3. Paper length guide
4. MP (multi purpose) tray
5. MP tray extension
6. MP Paper width guides
7. Inner tray
8. Operation panel
9. DP top cover
10. DP paper feed roller
11. DP forwarding roller
12. DP separation pully
13. DP original width guides
14. Original table
15. USB memory slot

TONER+
www.tonerplus.com.ua

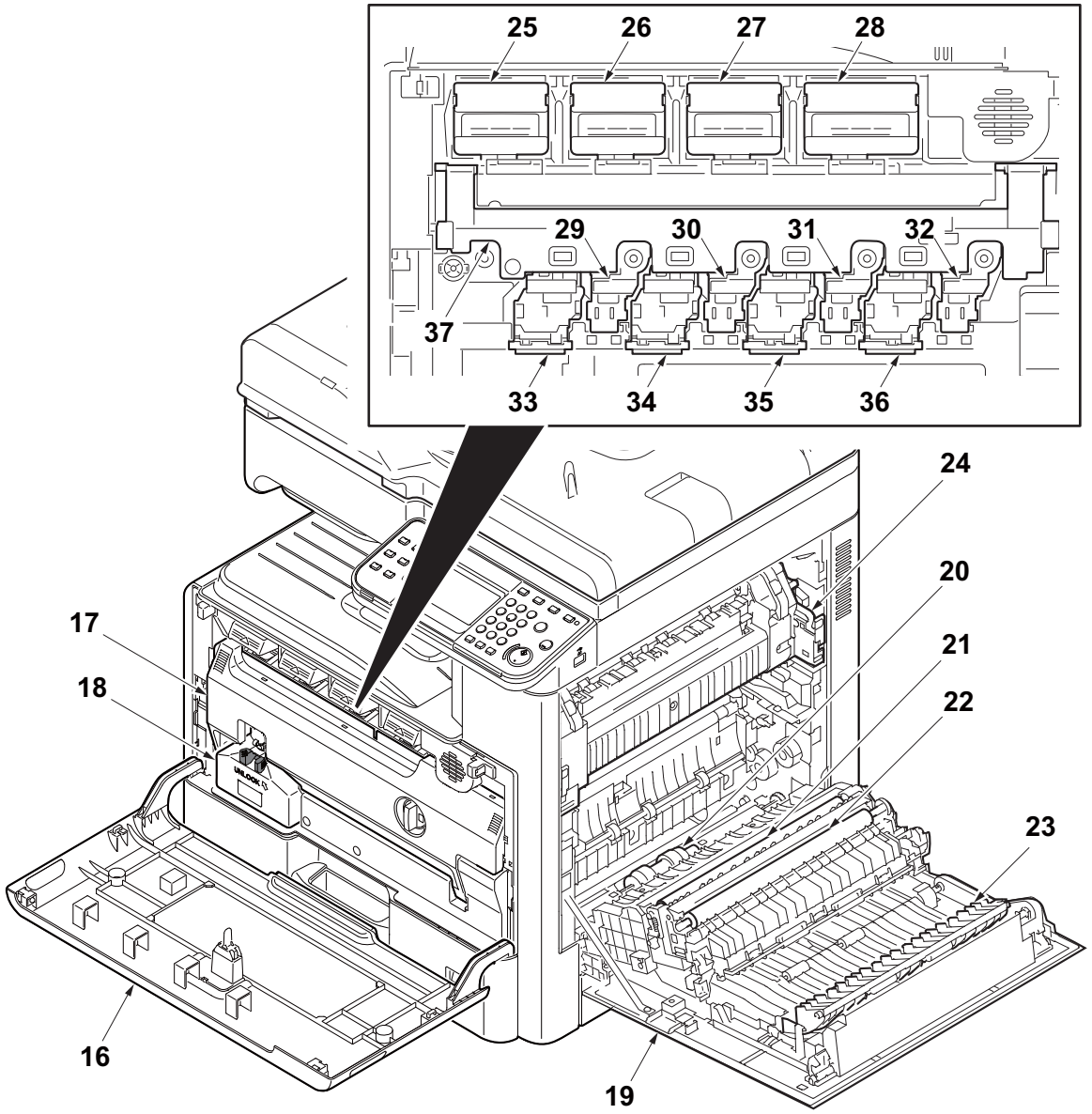

Figure 1-1-2

16. Front cover
17. Duct cover
18. Waste toner box
19. Right cover 1
20. MP paper feed roller
21. Right registration roller
22. Secondary transfer roller
23. Feed shift guide
24. Fuser unit
25. Toner container /Y
26. Toner container /C
27. Toner container /M
28. Toner container /K
29. Drum unit /Y
30. Drum unit /C
31. Drum unit /M
32. Drum unit /K
33. Developer unit /Y
34. Developer unit /C
35. Developer unit /M
36. Developer unit /K
37. Duct holder

TONER+
www.tonerplus.com.ua

(2) Machine (rear side)

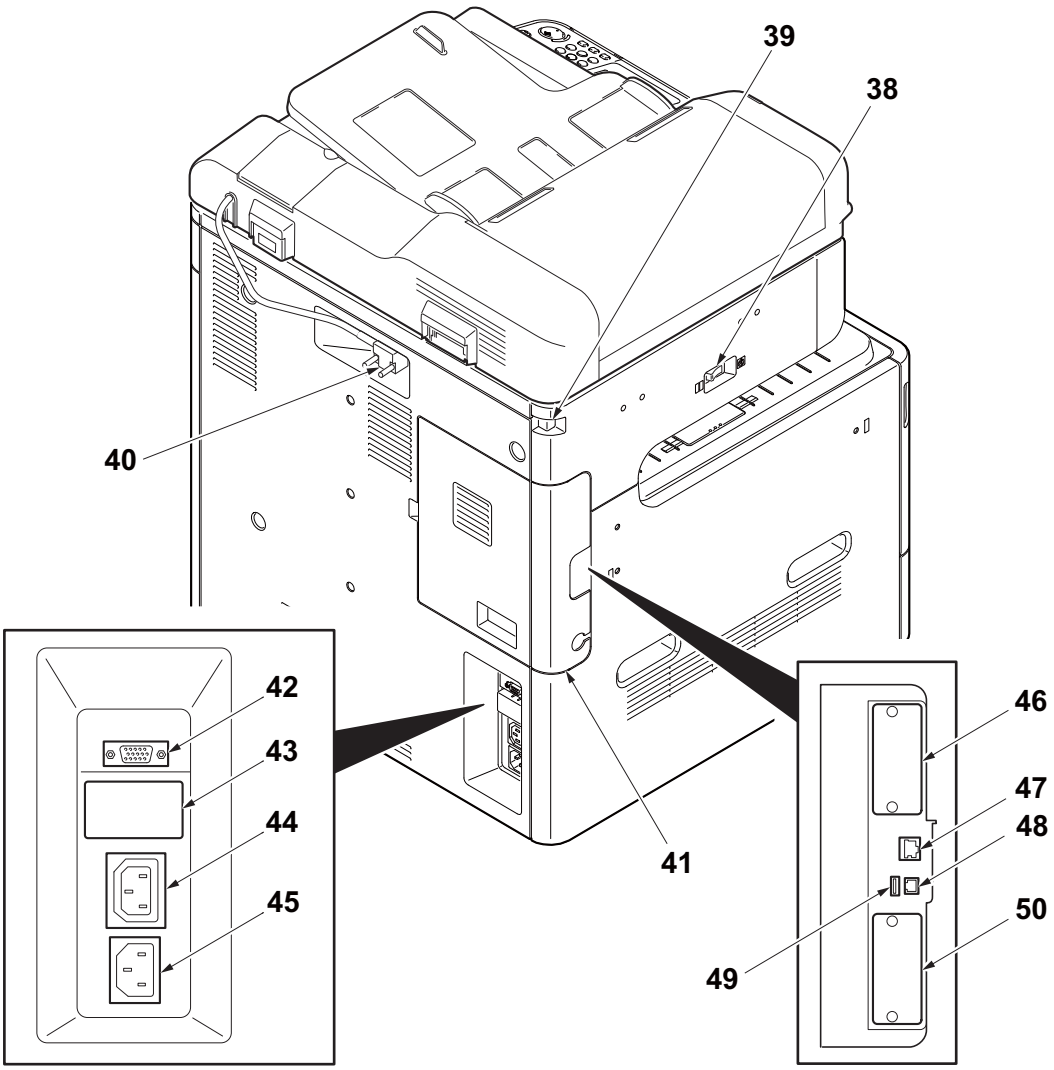

Figure 1-1-3

38. Main power switch
39. Scanner lock lever
40. DP interface connector
41. Controller box cover
42. DF interface connector
43. Cassette heater switch (cover)
44. Outlet connector
45. Inlet connector
46. Option interface slot 1
47. Network interface connector
48. USB port
49. USB interface connector
50. Option interface slot 2

TONER+
www.tonerplus.com.ua

(3) Operation panel

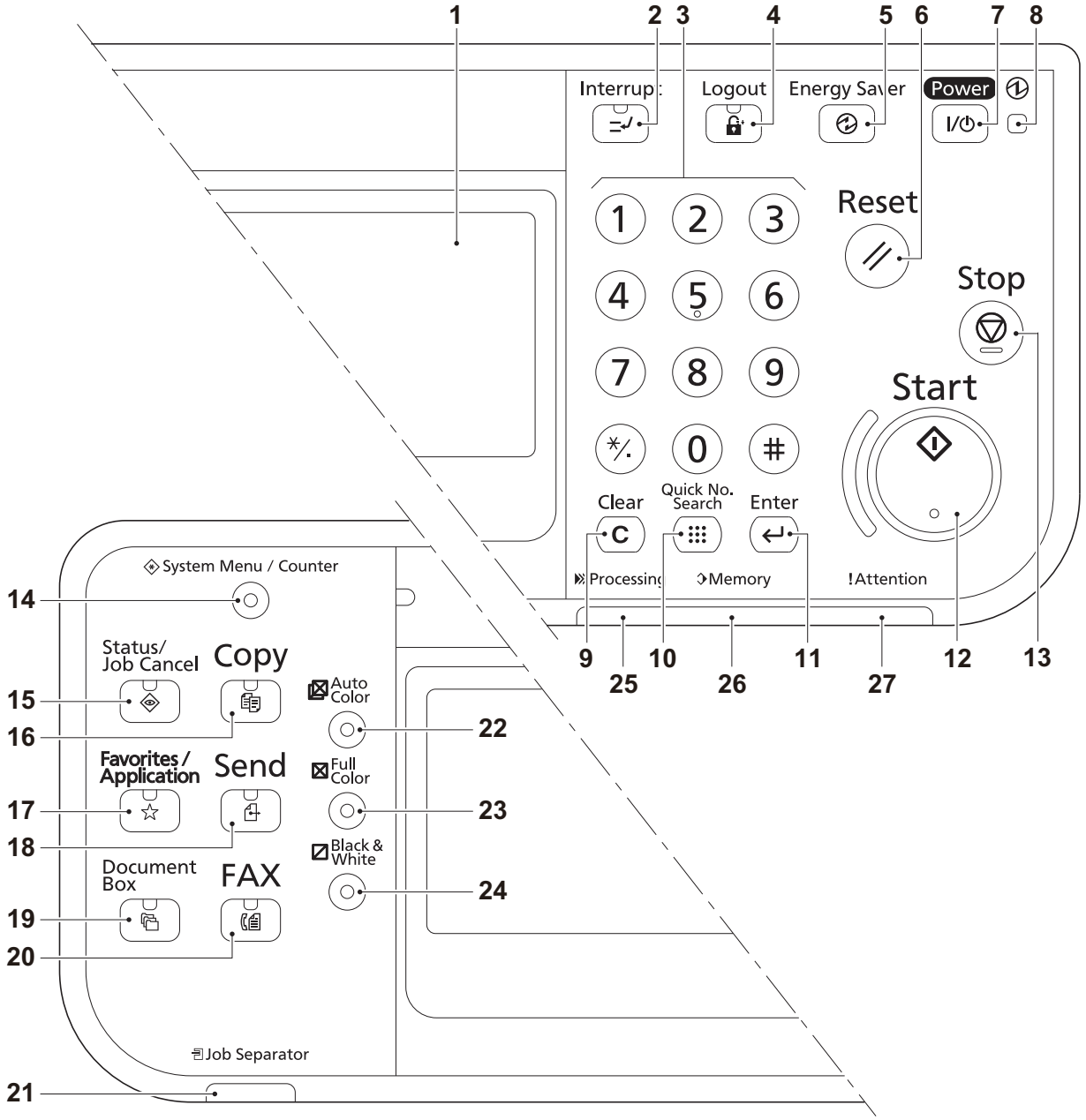

Figure 1-1-4

1. Message display
2. Interrupt key / LED
3. Numeric keys
4. Logout key / LED
5. Energy saver / LED
6. Reset key
7. Power key / LED
8. Main power LED
9. Clear key
10. Quick No.search key
11. Enter key
12. Start key / LED
13. Stop key
14. System menu/Counter key / LED
15. Status/Job cancel / LED
16. Copy key / LED
17. Favorite key / Appricathion / LED
18. Send key / LED
19. Document box key / LED
20. FAX key / LED
21. Job separator LED
22. Auto color key / LED
23. Full color key / LED
24. Black & white key / LED
25. Processing LED
26. Memory LED
27. Attention LED

TONER
www.tonerplus.com.ua

1-1-3 Machine cross section

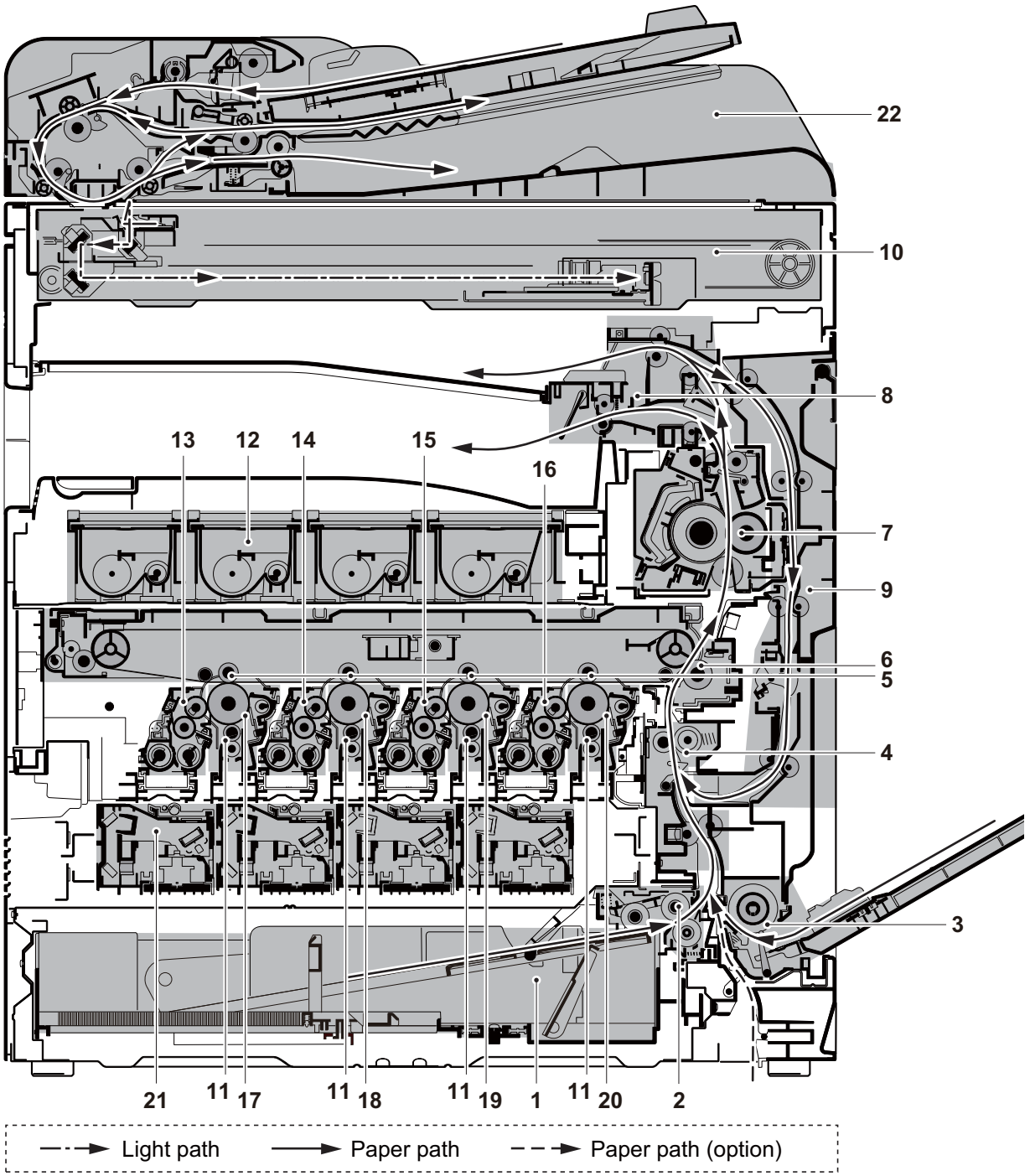

Figure 1-1-5

1. Cassette
2. Cassette paper feed section
3. MP tray paper feed section
4. Conveying section
5. Primary transfer section
6. Secondary transfer section / Separation sections
7. Fuser unit
8. Eject section
9. Duplex/conveyning section
10. Image scanner unit (ISU)
11. Charger roller unit
12. Toner container /YCMK
13. Developer unit /Y
14. Developer unit /C
15. Developer unit /M
16. Developer unit /K
17. Drum unit /Y
18. Drum unit /C
19. Drum unit /M
20. Drum unit /K
21. Laser scanner unit (LSU) /YCMK
22. Document processor (DP)

TONER

1-2-1 Installation environment

1. Temperature: 10 to 32.5°C/50 to 90.5°F
2. Humidity: 15 to 80% RH
3. Power supply: 120 V AC, 12.0 A
   220 - 240 V AC, 6.5 A
4. Power supply frequency: 50 Hz ±2%/60 Hz ±2%
5. Installation location
   Avoid direct sunlight or bright lighting. Ensure that the photoconductor will not be exposed to direct sunlight or other strong light when removing paper jams.
   Avoid locations subject to high temperature and high humidity or low temperature and low humidity; an abrupt change in the environmental temperature; and cool or hot, direct air.
   Avoid places subject to dust and vibrations.
   Choose a surface capable of supporting the weight of the machine.
   Place the machine on a level surface (maximum allowance inclination: 1°).
   Avoid air-borne substances that may adversely affect the machine or degrade the photoconductor, such as mercury, acidic of alkaline vapors, inorganic gasses, NOx, SOx gases and chlorine-based organic solvents.
   Select a well-ventilated location.
6. Allow sufficient access for proper operation and maintenance of the machine.

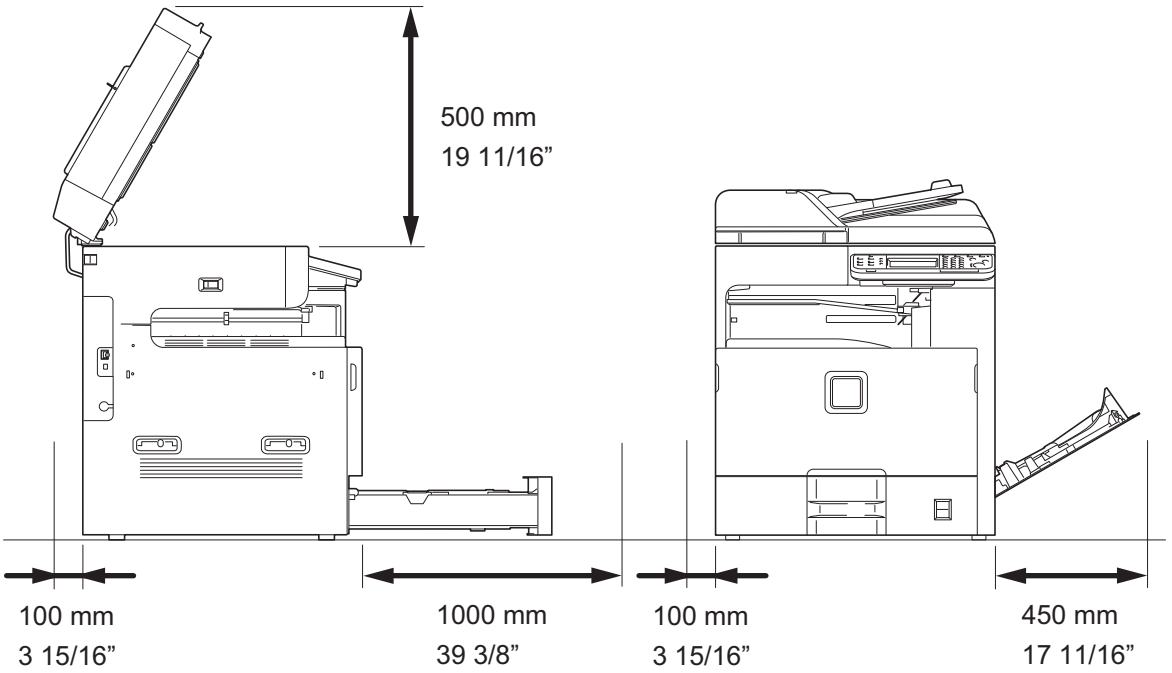

Figure 1-2-1

TONER+
www.tonerplus.com.ua

1-2-2 Unpacking and installation

(1) Installation procedure

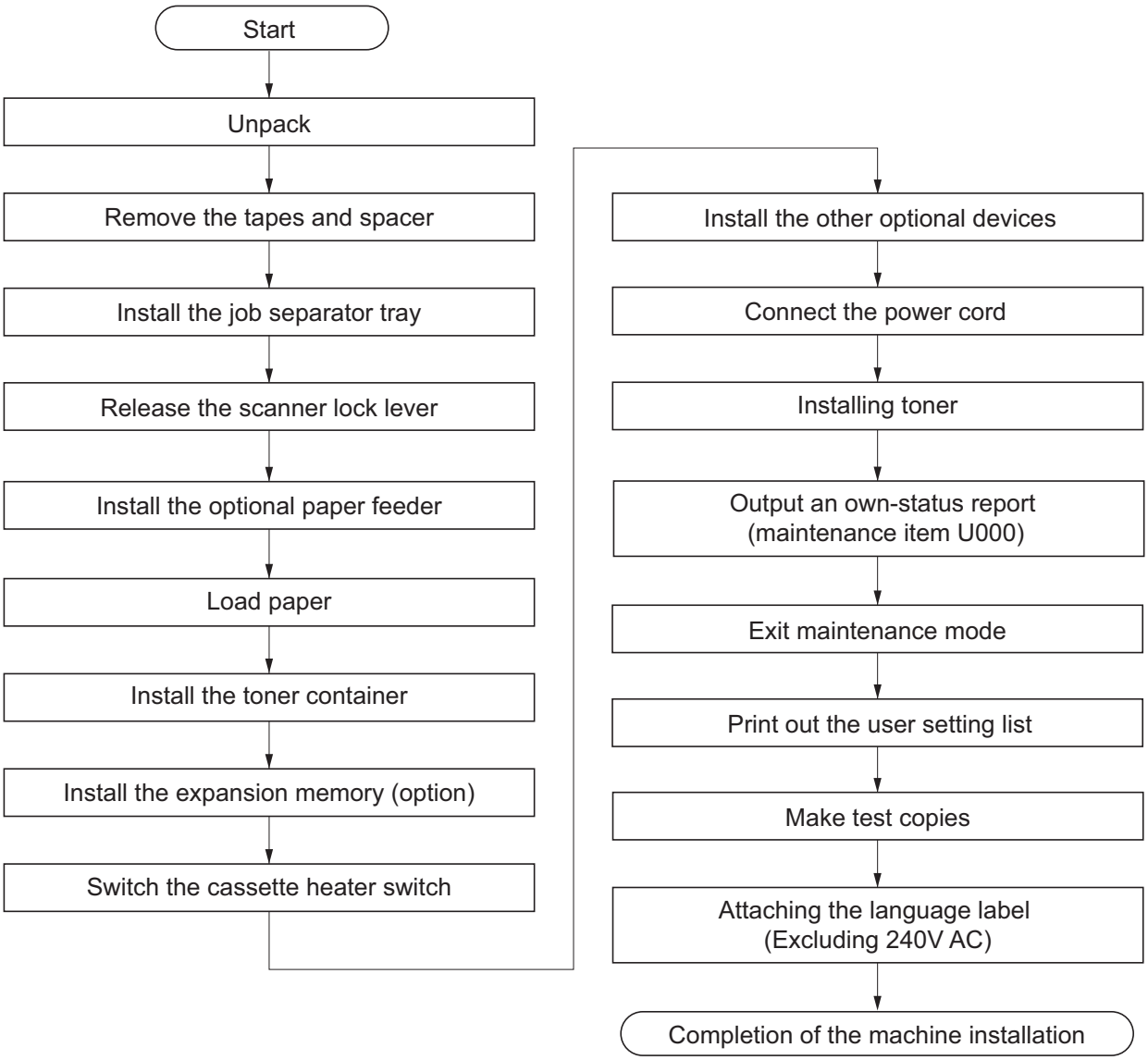

TONER
www.tonerplus.com.ua

Unpacking

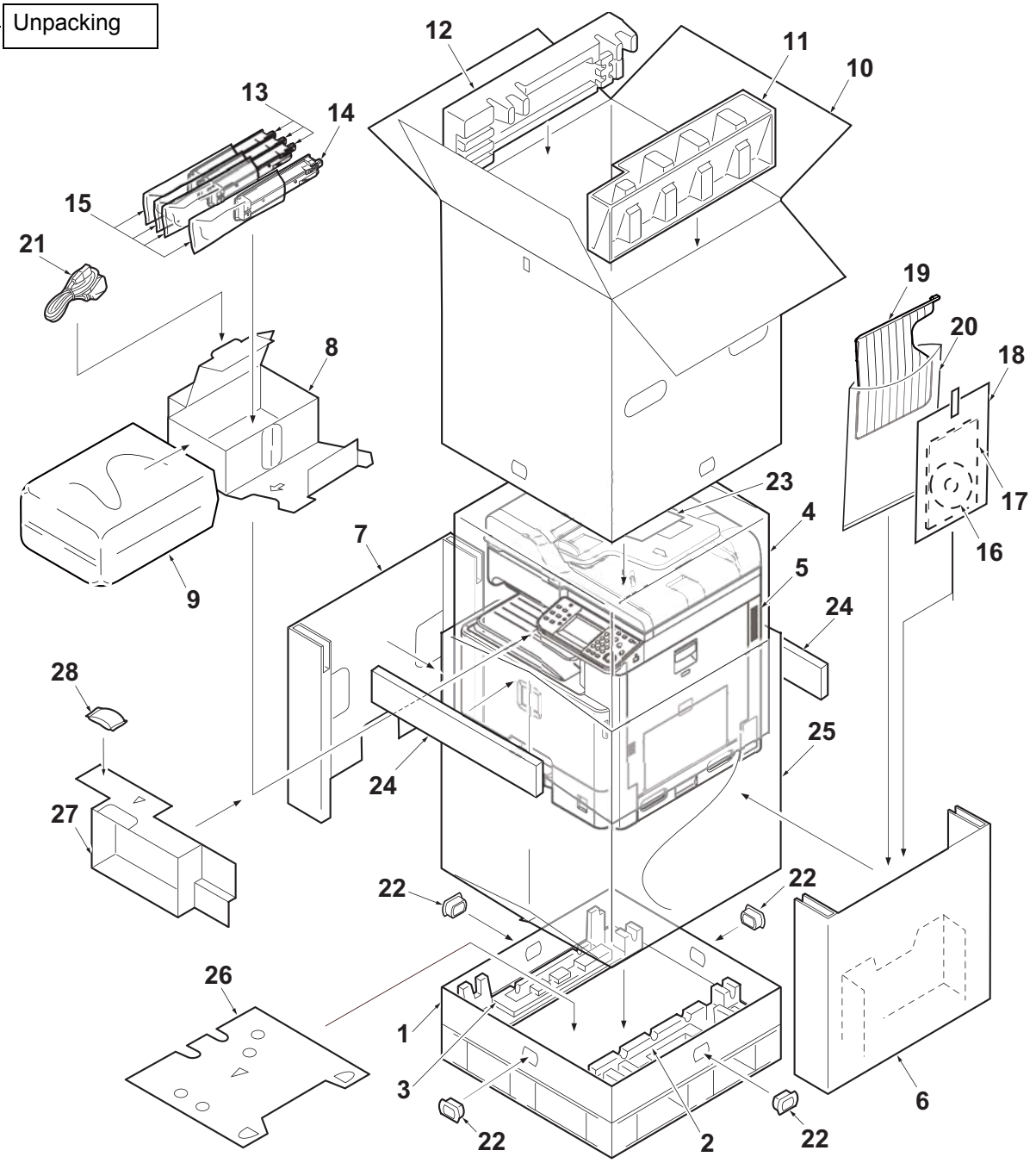

Figure 1-2-2

1. Bottom case
2. Bottom pad R
3. Bottom pad L
4. Machine cover
5. Machine
6. Inner case R
7. Inner case L
8. Spacer A
9. Plastic bag (540 × 950)
10. Outer case
11. Upper pad R
12. Upper pad L
13. Toner container /YCM
14. Toner container /K
15. Plastic bag (250 × 650)
16. CD-ROM *1
17. Installation guide, etc.
18. Plastic bag
19. Job separator tray
20. Plastic bag (400 × 600)
21. Power cord
22. Hinge joints
23. Quick installation guide
24. Reinforcement parts
25. Plastic bag
26. Lower pad
27. Front pad
28. Desiccant

*1 Excluding 230V AC model

Place the machine on a level surface.

TONER
www.to

Remove the tapes and spacer

1. Remove four tapes.

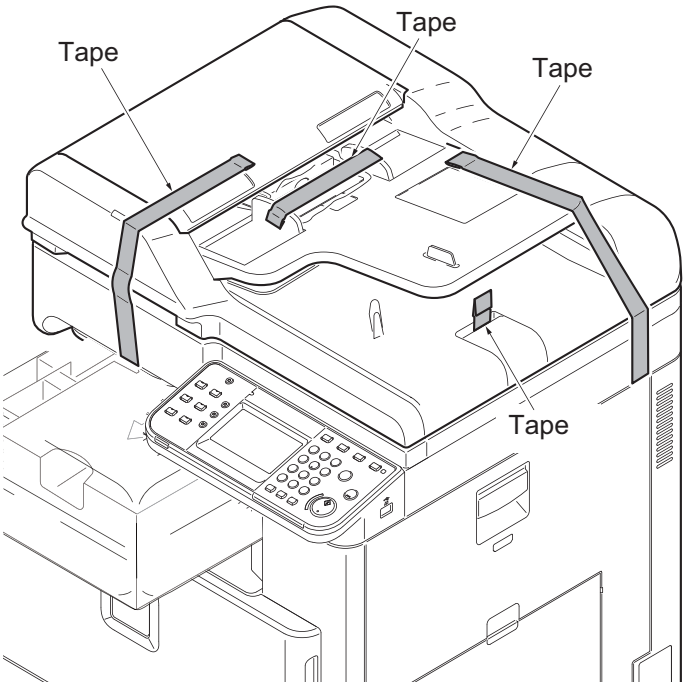

Figure 1-2-3

2. Open the DP top cover.
3. Slide two DP original width guides and then remove the pad.
4. Close the DP top cover.

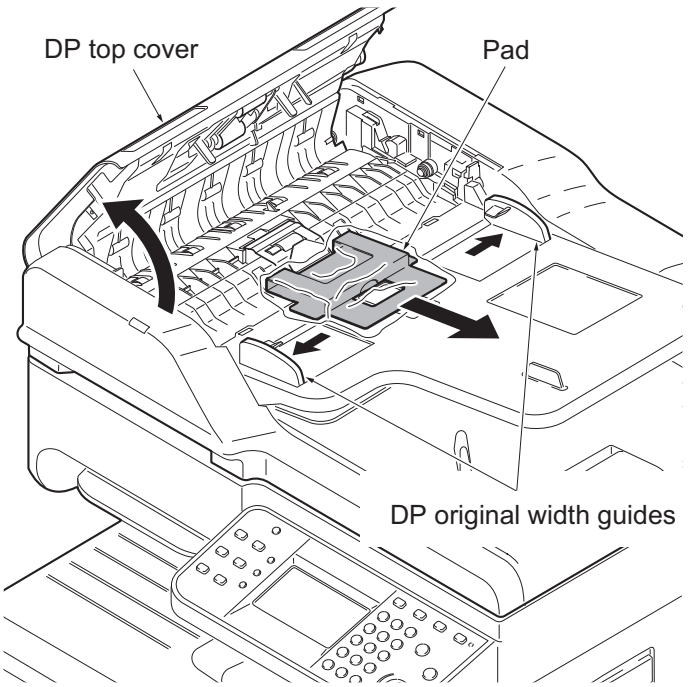

Figure 1-2-4

TONER
www.tonerplus.com.ua

5. Open the DP.
6. Remove the protective sheet and paper.

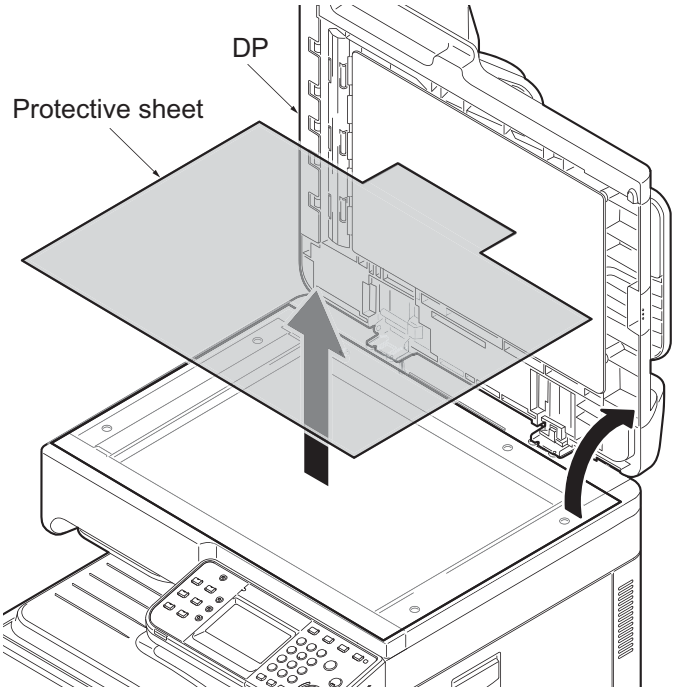

Figure 1-2-5

7. Remove the paper.
8. Close the DP.

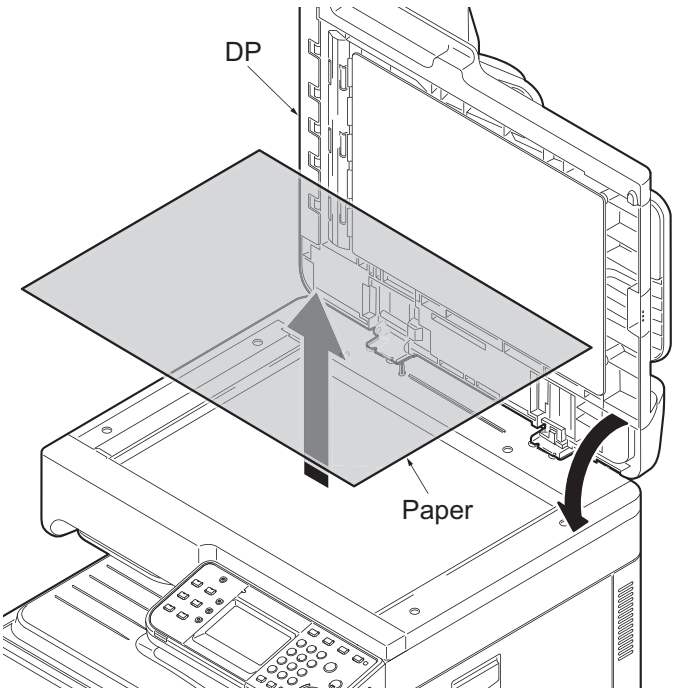

Figure 1-2-6

TONER
www.tonerplus.com.ua

9. Remove the tape.

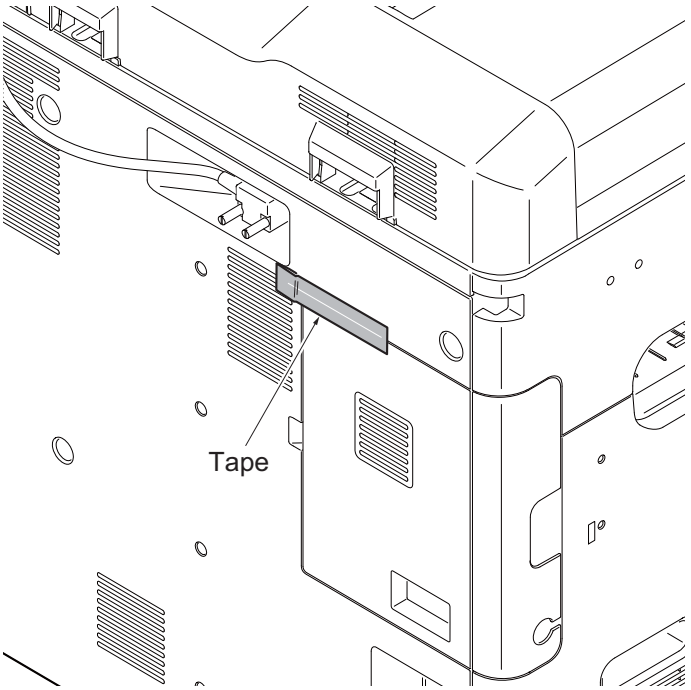

Figure 1-2-7

10. Peel off two protective sheets.
11. Remove the spacer.

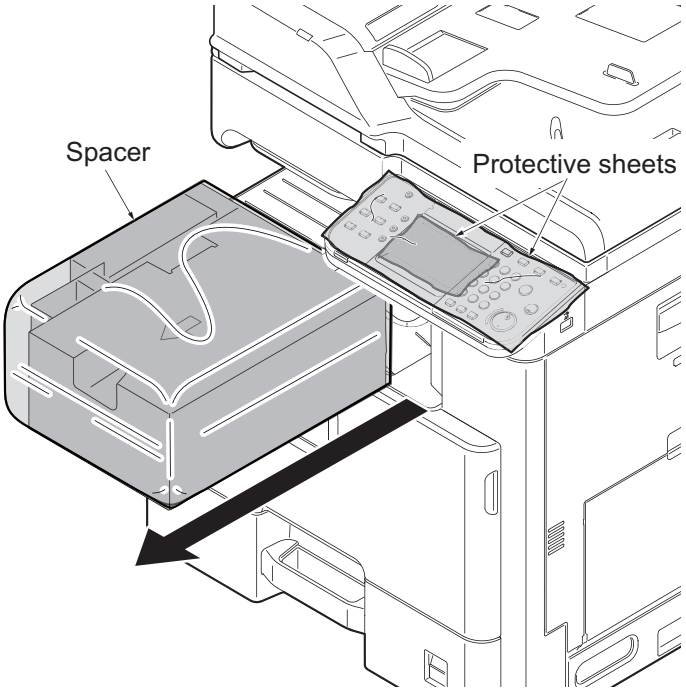

Figure 1-2-8

TONER+
www.tonerplus.com.ua

Install the job separator tray

1. Gently push the job separator tray into the machine along the guides.

   ATTENTION: When installing the Job separator tray, are cautious of the position of a paper guide.

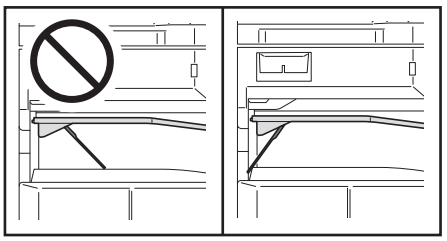

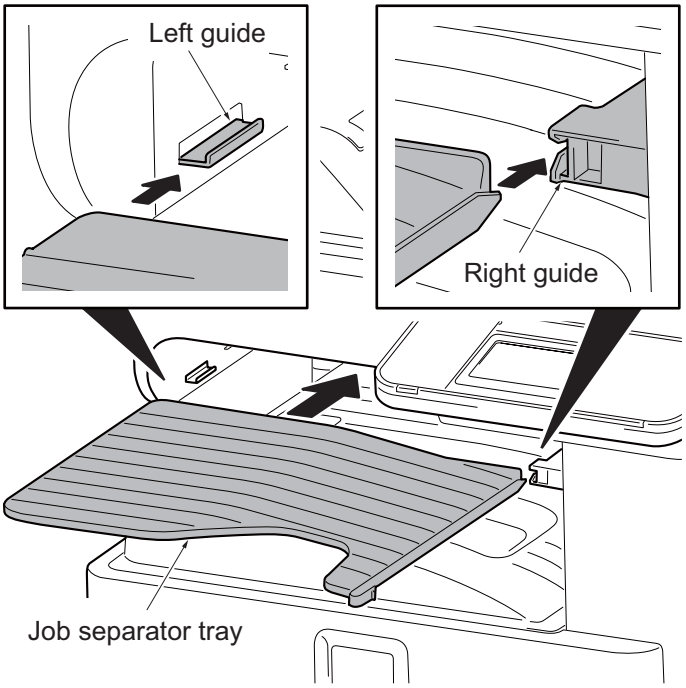

Figure 1-2-9

Release the scanner lock lever

1. Pull the scanner lock lever in the direction of the arrow. This will unlock the scanner mechanism.

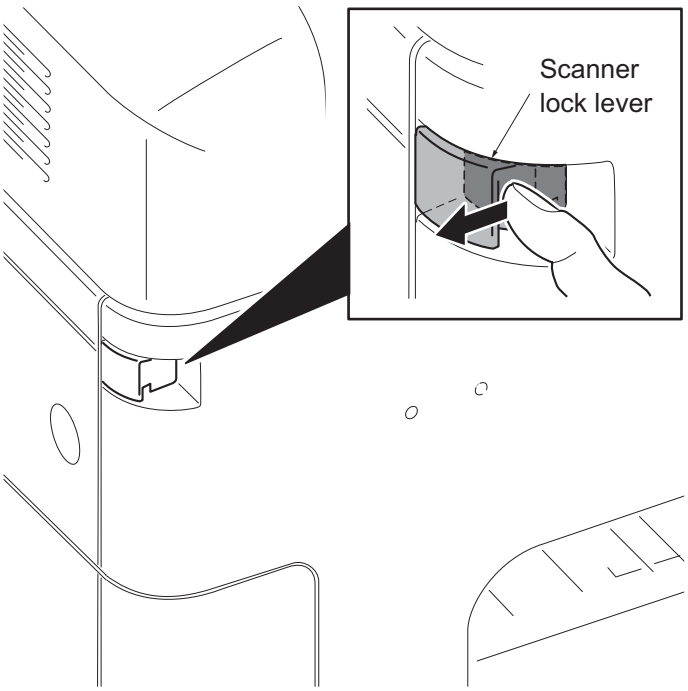

Figure 1-2-10

TONER+
www.tonerplus.com.ua

Install the optional paper feeder

1. Install the optional paper feeder as required.

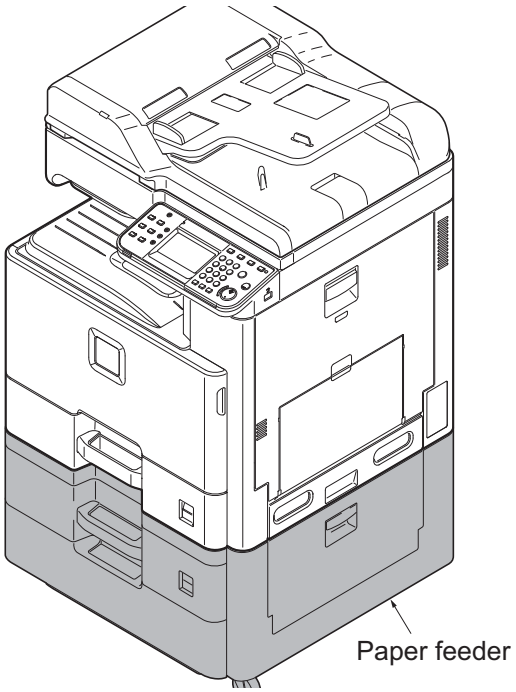

Figure 1-2-11

Load paper

1. Pressing the paper width adjusting tab as shown, move the paper width guides to fit the paper size.

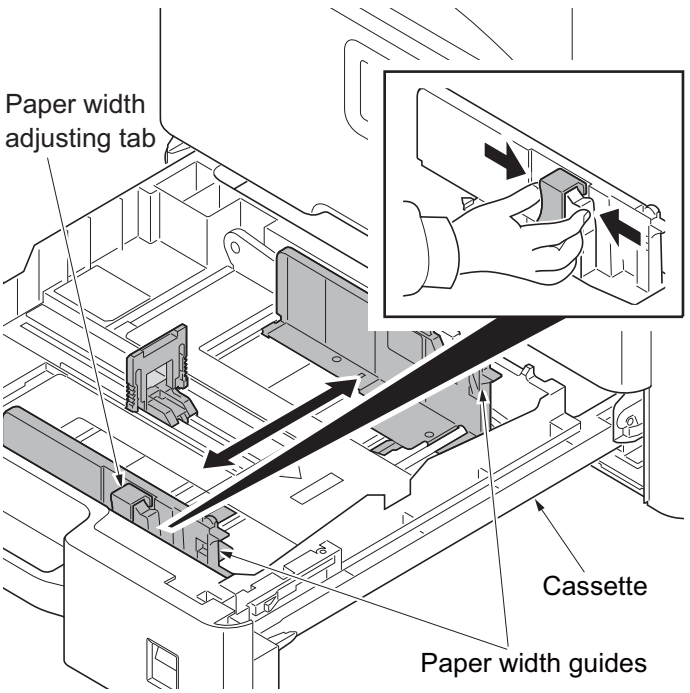

Figure 1-2-12

TONER+
www.tonerplus.com.ua

2. Adjust the paper length guide to fit the paper size.

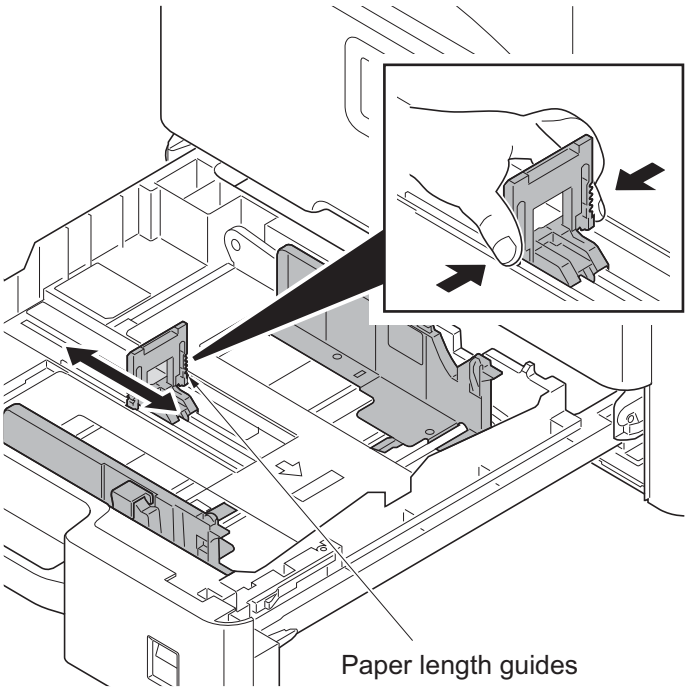

Figure 1-2-13

3. Align the paper so that it is abut with the right end of the cassette.
4. Insert the cassette size plate.
5. Gently push the cassette back in.

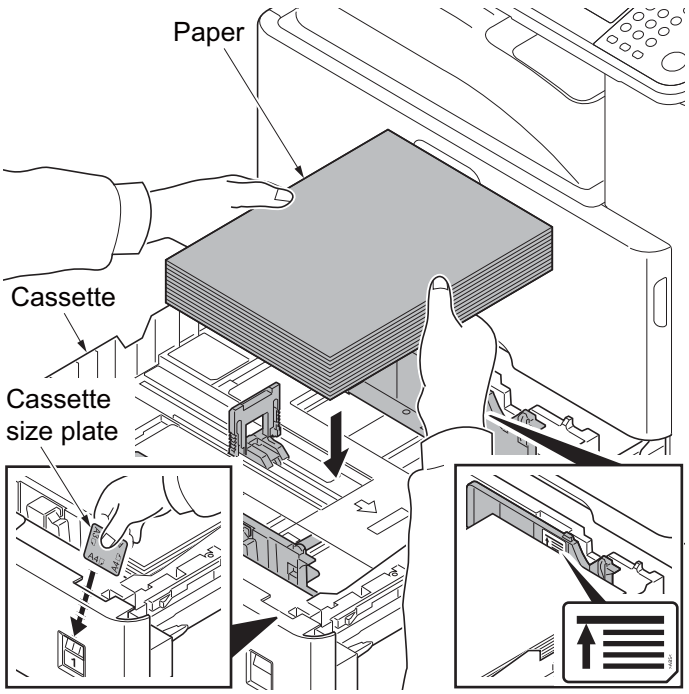

Figure 1-2-14

TONER
www.tonerplus.com.ua

Install the toner container

1. Open the front cover.
2. Hold the toner container vertically and tap the upper part five times or more.
   Turn the toner container upside down and tap the upper part five times or more.

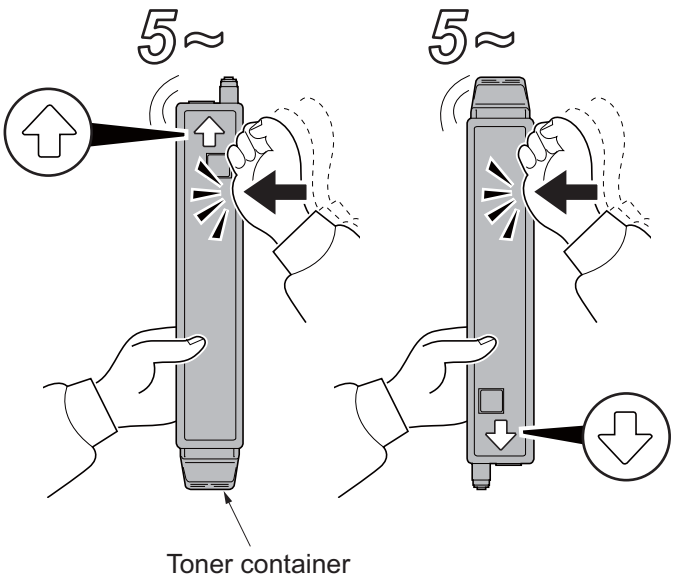

Figure 1-2-15

3. Shake the toner container up and down five times or more.
   Turn the toner container upside down and shake it five times or more.

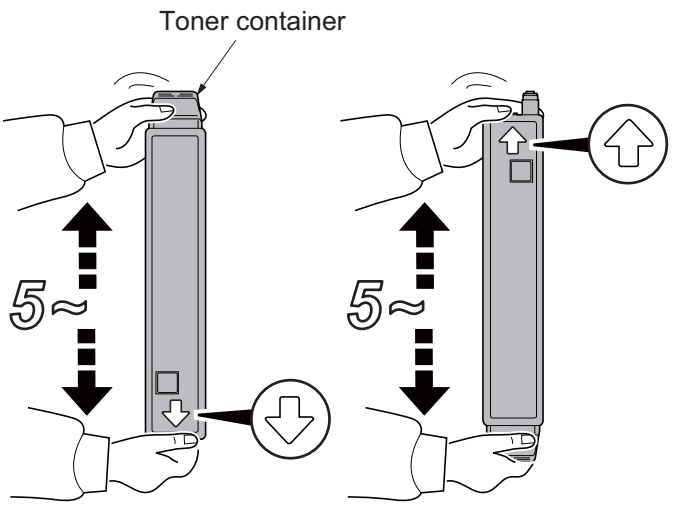

Figure 1-2-16

TONER
www.tonerplus.com.ua

4. Shake the toner container approximately five or six times in the horizontal direction to stir toner.

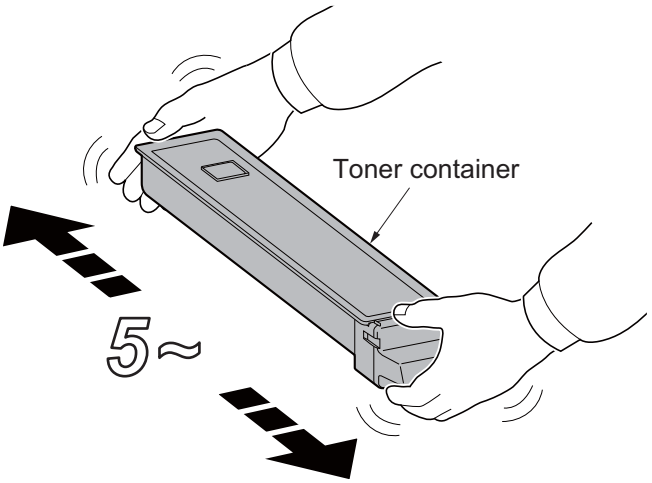

Figure 1-2-17

5. Gently push the toner container into the machine.
   Push the container all the way into the machine until it locks in place.

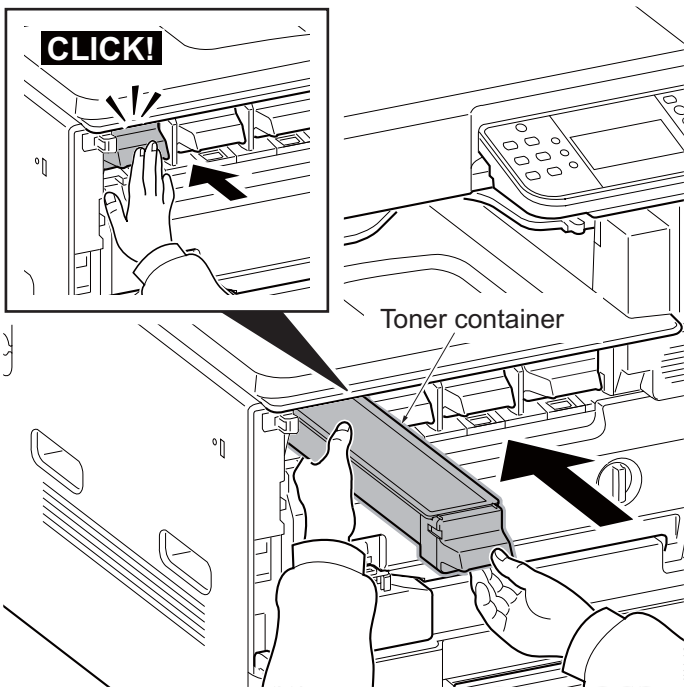

Figure 1-2-18

TONER
www.tonerplus.com.ua

Switch the cassette heater switch

1. Release the hook and then remove the switch cover.
2. Turn the cassette heater switch on.
   Note: When the cassette heater is used, it turns it on.
3. Refit the switch cover.

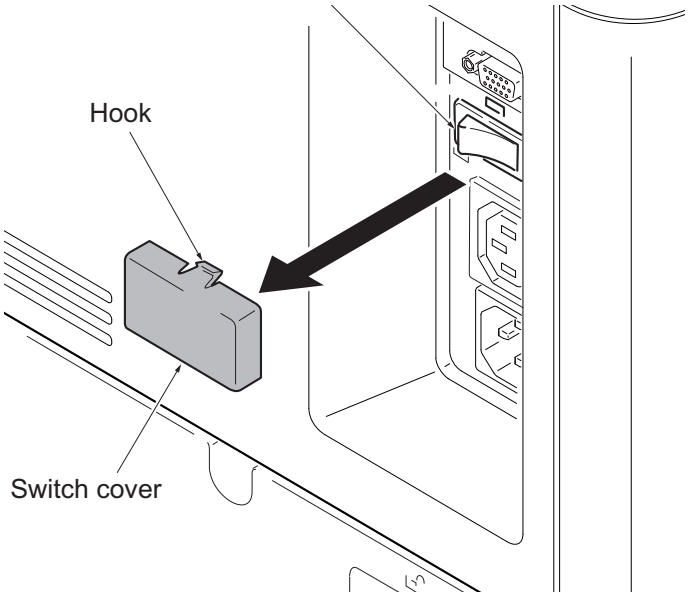

Figure 1-2-19

Install the other optional devices

1. Install the optional devices (Document finisher, Fax kit, etc.) as required.

Connect the power cord

1. Connect the power cord to the connector on the machine.
2. Insert the power plug into the wall outlet.

Installing toner

1. Turn the main power switch on.
   The machine automatically starts to feed toner in the developer unit.
   Note: When the main power switch is turned on for the first time, it takes about one minute until entering the state that can be copied.
2. The drive chain is disengaged when toner installation is completed.

TONER
www.tonerplus.com.ua

Output an own-status report (maintenance item U000)

1. Enter 000 using the numeric keys and press the start key.
2. Select Maintenance and press the start key to output a list of the current settings of the maintenance items.
3. Press the stop key.

Exit maintenance mode

1. Enter “001” using the numeric keys and press the start key.

Print out a user setting list

1. Select [Report Print] to print a user setting list.

Make test copies

1. Place an original and make test copies.

Attaching the language label (Excluding 240V AC)

1. Attach the corresponding language label as required.

Installation is completed.

(2) Setting initial copy modes

Factory settings are as follows:

Maintenance item No.	Contents	Factory setting
U253	Switching between double and single counts	Double count (A3/Ledger)
U260	Selecting the timing for copy counting	Eject
U285	Setting service status page	On
U326	Setting the black line cleaning indication	On/8
U343	Switching between duplex/simplex copy mode	Off

TONER
www.tonerplus.com.ua

1-2-3 Install the expansion memory (option)

Procedure

1. Turn off the main power switch.
   Caution: Do not insert or remove expansion memory while machine power is on.
   Doing so may cause damage to the machine and the expansion memory.
2. Release four hooks and then remove the controller box cover.
3. Remove two screws.

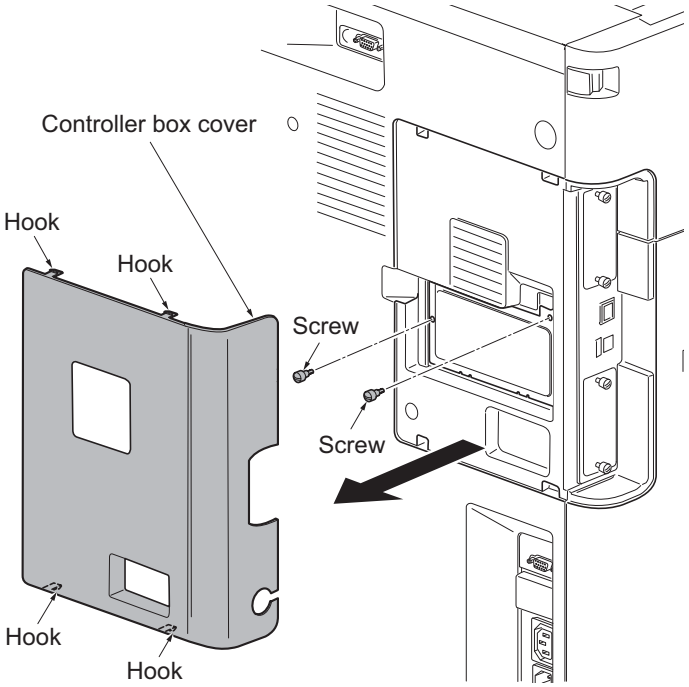

Figure 1-2-20

4. Remove the memory slot cover.
5. Insert the expansion memory into the memory socket so that the notches on the memory align with the corresponding protrusions in the slot.
6. Refit the memory slot cover.
7. Refit two screws.
8. Refit the controller box cover.
9. Print a status page to check the memory expansion.(See 1-3-135)
   If memory expansion has been properly performed, information on the installed memory is printed with the total memory capacity has been increased. Standard memory capacity is 1024 MB.

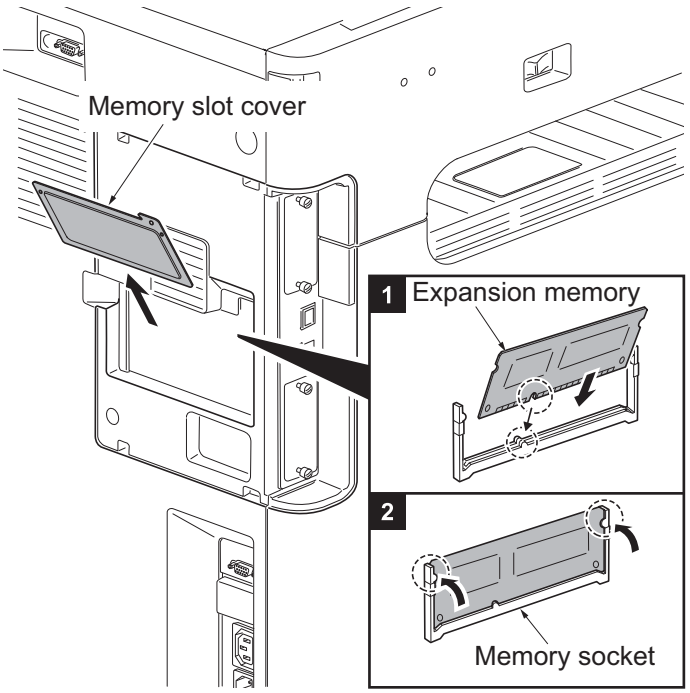

Figure 1-2-21

TONER
www.tonerplus.com.ua

1-2-4 Option composition

DF-470 (500 sheets)
(Document finisher)

AK-470
(Bridge unit)

PF-790 (500 sheets x 1)
(Paper feeder + Cabinet)

PF-471 (500 sheets x 2)
(Paper feeder)

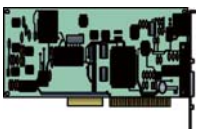

IB-50
(Gigabit ethernet board)

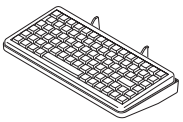

USB key board

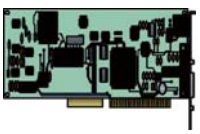

FAX System(U)

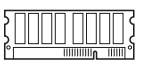

RAM Memory (1GB)

UG-33
ThinPrint Activation Kit

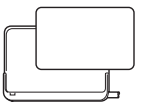

IC Card Reader

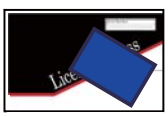

Card Authentication Kit (B)

Card Reader Holder

TONER
www.tonerplus.com.ua

This page is intentionally left blank.

TONER+
www.tonerplus.com.ua

1-3-1 Maintenance mode

The machine is equipped with a maintenance function which can be used to maintain and service the machine.

(1) Executing a maintenance item

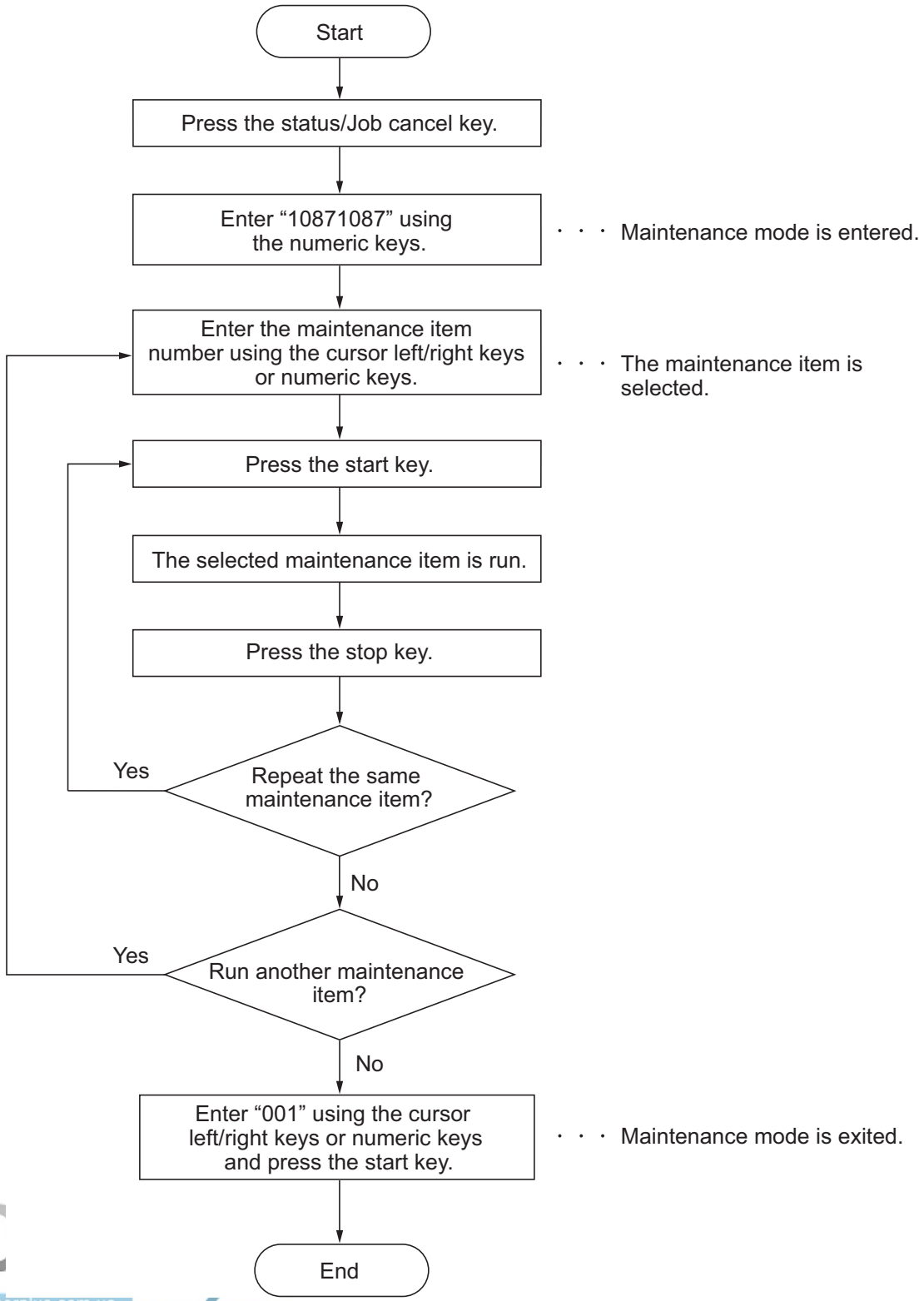

TC
www.tonerplus.com.ua

(2) Maintenance modes item list

Section	Item No.	Content of maintenance item	Initial setting	
			20ppm	25ppm
General	U000	Outputting an own-status report	-	
	U001	Exiting the maintenance mode	-	
	U002	Setting the factory default data	-	
	U004	Setting the machine number	-	
	U019	Displaying the ROM version	-	
Initialization	U021	Memory initializing	-	
Drive, paper feed and paper conveying system	U030	Checking the operation of the motors	-	
	U031	Checking switches and sensors for paper conveying	-	
	U032	Checking the operation of the clutches	-	
	U033	Checking the operation of the solenoids	-	
	U034	Adjusting the print start timing Leading edge registration Center line	41/41/41 0/0/0/0/0	
	U035	Setting the printing area for folio paper	330/210	
	U037	Checking the operation of the fan motors	-	
	U051	Adjusting the deflection in the paper	0/0/0/0	
	U053	Setting the adjustment of the motor speed	-1/-3/-4/ -4/-3/-3/13 -3/-2/-3/ -3/-1/-1/3 -1/-3/-3/ -3/-2/-2/10	-1/-3/-5/ -5/-3/-3/13 -3/-2/-3/ -3/-1/-1/3 -1/-3/-4/ -4/-2/-2/10
Optical	U063	Adjusting the shading position	0	
	U065	Adjusting the scanner magnification	0/0	
	U066	Adjusting the scanner leading edge registration	0/0	
	U067	Adjusting the scanner center line	0/0	
	U068	Adjusting the scanning position for originals from the DP	0/0	
	U070	Adjusting the DP magnification	0/0	
	U071	Adjusting the DP scanning timing	0/0/0/0	
	U072	Adjusting the DP center line	0/0	
	U074	Adjusting the DP input light luminosity	0	
	U089	Outputting a MIP-PG pattern	-	
	U099	Adjusting original size detection	40/30/20/19 50/50/50/49 (When DP is installed.)	

TONER
www.tonerplus.com.ua

Section	Item No.	Content of maintenance item	Initial setting	
			20ppm	25ppm
High voltage	U100	Setting the main high voltage	Auto 0/0/0/0 -/-/-/- 145/145/145/145 Mode0 Off	
	U101	Setting the voltage for the primary transfer	40/25 0/4/4/4 -2/2/2/2 24	45/25 0/5/5/5 -3/2/2/2 30
	U106	Setting the voltage for the secondary transfer	66/46/34 70/48/32 68/48/35 72/50/34 51/36/26 54/37/25 43/30/22 45/31/22 40/33/25 59/42/31 62/42/32 66/44/32 48/33/25 51/34/24 43/30/22 45/31/22	83/58/42 88/60/40 85/60/44 90/62/42 64/45/33 68/47/32 43/30/22 45/31/21 40/33/25 59/42/31 78/53/40 83/55/38 60/41/31 64/43/30 43/30/22 45/31/21
	U107	Setting the voltage for the intermediate transfer cleaning	10/9/9 10/9/9 72/45/54 60/42/35 72/45/72 60/42/35	13/9/10 13/9/10 90/45/68 90/68/45 90/45/90 90/68/45
	U108	Setting separation shift bias	16/16 8/10 8/8 8/8 2/0/0/100	20/20 10/12 10/10 8/8 3/0/0/100
	U111	Checking the drum drive time	0/0/0/0	
	U118	Displaying the drum history	-	
	U123	Displaying the transfer belt unit history	-	
	U127	Checking/clearing the transfer count	-	

TONER
www.tonerplus.com.ua

Section	Item No.	Content of maintenance item	Initial setting	
			20ppm	25ppm
Developer	U135	Checking toner motor operation	-	
	U136	Setting toner near end detection	0/0	
	U139	Displaying the temperature and humidity outside the machine	-	
	U140	Setting developer bias	480/480/450/450 50/50/50/50 380/380/350/350 180/180/150/150 150/150/150/150 180/180/150/150 36/36/36/36 36/36/36/36 36/36/36/36 37/37/37/37 33/33/33/33 33/33/33/33 1500/1500/1500/1500 1150/1150/1150/1150 1150/1150/1150/1150 0/0/0/0 0/0/0/0	
	U147	Setting for toner applying operation	0/60	
	U150	Checking sensors for toner	-	
	U157	Checking the developing drive time	0/0/0/0	
Fuser	U161	Setting the fuser control temperature	210/240/ 190/95/85/ 110/135/ 140/140/ 115/135/ 240/85/40/ 200/85	210/240/ 190/100/90/ 115/140/ 145/145/ 120/140/ 240/90/45/ 200/90
	U167	Displaying fuser heater temperature	0	
	U168	Confirmation/setting the fuser drive time	0/0	
	U169	Confirmation/setting the fuser drive time	-	
	U199	Displaying fuser heater temperature	-	
Operation panel and support equipment	U201	Initializing the touch panel	-	
	U203	Checking DP operation	-	
	U207	Checking the operation panel keys	-	
	U222	Setting the IC card type	Other	
	U243	Checking the operation of the DP motors	-	
	U244	Checking the DP switches	-	

TONER
www.tonerplus.com.ua

Section	Item No.	Content of maintenance item	Initial setting	
			20ppm	25ppm
Mode setting	U250	Checking/clearing the maintenance cycle	200000/200000/0	
	U251	Checking/clearing the maintenance counter	0/0/0	
	U252	Setting the destination	-	
	U253	Switching between double and single counts	Double count (A3/Ledger)	
	U260	Selecting the timing for copy counting	Eject	
	U265	Setting OEM purchaser code	-	
	U285	Setting service status page	ON	
	U325	Setting the paper interval	1	
	U326	Setting the black line cleaning indication	ON/8	
	U332	Setting the size conversion factor	1.0	
	U341	Specific paper feed location setting for printing function	Off/Off/Off	
	U343	Switching between duplex/simplex copy mode	Off	
	U345	Setting the value for maintenance due indication	0	
Image processing	U402	Adjusting margins of image printing	3.0/2.5/2.5/5.0	
	U403	Adjusting margins for scanning an original on the contact glass	2.0/2.0/2.0/2.0	
	U404	Adjusting margins for scanning an original from the DP	3.0/2.5/3.0/4.0	
	U407	Adjusting the leading edge registration for memory image printing	0	
	U411	Adjusting the scanner automatically	-	
	U425	Setting the target White Black Gray1 Gray2 Gray3 C M Y R G B Adjust original	 93.6/0.9/-0.4 10.6/-0.2/-0.7 76.2/-0.2/1.2 25.2/-0.2/-0.2 51.3/-0.3/0.3 72.6/-32.8/-11.5 48.1/69.9/-6.1 86.2/-18.6/81.7 46.7/54.2/38.6 67.8/-51.3/48.9 38.8/25.3/-22.8 5.0/10.0/190.0	

TONER
www.tonerplus.com.ua

Section	Item No.	Content of maintenance item	Initial setting	
			20ppm	25ppm
Image processing	U429	Setting the offset for the color balance Text+Photo Photo Text Graphics/Map Copy/Printout	 0/0/0/0/0 0/0/0/0/0 0/0/0/0/0 0/0/0/0/0 0/0/0/0/0	
	U432	Setting the center offset for the exposure	0/0/0	
	U464	Setting the ID correction operation	On/On 10/20/10 935/400 895/200 885/200 846/130	
	U467	Setting the color registration adjustment	-	
	U468	Checking the color registration data	-	
	U470	Setting the JPEG compression ratio Copy Send HC-PDF Photo Text System	 85/85/85/85 15/25/60/15/25/60 30/40/51/70/90/ 30/40/51/70/90 30/40/51/70/90/ 30/40/51/70/90 90/90	
	U473	Adjusting laser power output	92/92/92/50	
	U486	Setting color/black and white operation mode	Mode2	
Fax	U600	Initializing all data	-	
	U601	Initializing permanent data	-	
	U603	Setting user data 1	DTMF	
	U604	Setting user data 2	2 (120 V) 1 (220-240 V)	
	U605	Clearing data	-	
	U610	Setting system 1 Setting the number of lines to be ignored when receiving a fax at 100% magnification Setting the number of lines to be ignored when receiving a fax in the auto reduction mode Setting the number of lines to be ignored when receiving a fax (A4R/LetterR) in the auto reduction mode	 0 3 0	

TONER
www.tonerplus.com.ua

Section	Item No.	Content of maintenance item	Initial setting	
			20ppm	25ppm
Fax	U611	Setting system 2 Setting the number of adjustment lines for automatic reduction Setting the number of adjustment lines for automatic reduction when A4 paper is set Setting the number of adjustment lines for automatic reduction when letter size paper is set	7 22 26	
	U612	Setting system 3 Selecting if auto reduction in the auxiliary direction is to be performed Setting the automatic printing of the protocol list	On Off	
	U615	Setting system 6	Ledger	
	U620	Setting the remote switching mode	One	
	U625	Setting the transmission system 1 Setting the auto redialing interval Setting the number of times of auto redialing	3 (120 V) 2 (220-240 V) 2 (120 V) 3 (220-240 V)	
	U630	Setting communication control 1 Setting the communication starting speed Setting the reception speed Setting the waiting period to prevent echo problems at the sender Setting the waiting period to prevent echo problems at the receiver	14400bps/V17 14400bps 300 75	
	U631	Setting communication control 2 Setting ECM transmission Setting ECM reception Setting the frequency of the CED signal	On On 2100	
	U632	Setting communication control 3 Setting the DIS signal to 4 bytes Setting the CNG detection times in the fax/telephone auto select mode	Off 2Time	
	U633	Setting communication control 4 Enabling/disabling V.34 communication Setting the number of times of DIS signal reception Setting the number of times of DIS signal reception Setting the reference for RTN signal output	On On Once 15%	
	U634	Setting communication control 5	0	

TONER
www.tonerplus.com.ua

Section	Item No.	Content of maintenance item	Initial setting	
			20ppm	25ppm
Fax	U640	Setting communication time 1 Setting the one-shot detection time for remote switching Setting the continuous detection time for remote switching	7 80	
	U641	Setting communication time 2 Setting the T0 time-out time Setting the T1 time-out time Setting the T2 time-out time Setting the Ta time-out time Setting the Tb1 time-out time Setting the Tb2 time-out time Setting the Tc time-out time Setting the Td time-out time	56 36 69 30 20 80 60 9 (120 V) 6 (220-240 V)	
	U650	Setting modem 1 Setting the G3 transmission cable equalizer Setting the G3 reception cable equalizer Setting the modem detection level	0dB 0dB -43dBm	
	U651	Setting modem 2 Modem output level DTMF output level (main value) DTMF output level (level difference)	-11 (120 V) -11 (220-240 V) -6 (120 V) -8 (220-240 V) 2	
	U660	Setting the NCU Setting the connection to PBX/PSTN Setting PSTN dial tone detection Setting busy tone detection Setting for a PBX Setting the loop current detection before dialing	PSTN On On Loop On	
	U670	Outputting lists	-	
	U695	FAX function customize	On/Off	
	U699	Setting the software switches	-	

TONER
www.tonerplus.com.ua

Section	Item No.	Content of maintenance item	Initial setting	
			20ppm	25ppm
Others	U901	Checking copy counts by paper feed locations	0/0/0/0/0	
	U903	Checking/clearing the paper jam counts	-	
	U904	Checking/clearing the call for service counts	-	
	U905	Checking counts by optional devices	0/0/0/0	
	U910	Clearing the print coverage data	-	
	U917	Setting backup data reading/writing	-	
	U927	Clearing the all copy counts and machine life counts (one time only)	-	
	U942	Setting of deflection for feeding from DP	0/0	
	U977	Data capture mode	-	
	U984	Checking the developing unit number	-	
	U985	Displaying the developer history	-	

TONER
www.tonerplus.com.ua

(3) Contents of the maintenance mode items

<table>
<tr><th>Item No.</th><th>Description</th></tr>
<tr><td>U000</td><td>
Outputting an own-status report

Description
Outputs lists of the current settings of the maintenance items and paper jam and service call occurrences. Outputs the event log. Also sends output data to the USB memory.
Purpose
To check the current setting of the maintenance items, or paper jam or service call occurrences. Before initializing or replacing the backup RAM, output a list of the current settings of the maintenance items to reenter the settings after initialization or replacement.

Method
1. Press the start key.
2. Select the item to be output using the cursor up/down keys.
3. Select On or Off using the cursor left/right keys or numeric keys.
<table>
<tr><th>Display</th><th>Output list</th></tr>
<tr><td>Maintenance</td><td>List of the current settings of the maintenance modes</td></tr>
<tr><td>Event</td><td>Outputs the event log</td></tr>
<tr><td>All</td><td>Outputs the all reports</td></tr>
</table>
4. Press the start key. A list is output.

Method: Send to the USB memory
1. Press the power key on the operation panel, and after verifying the main power indicator has gone off, switch off the main power switch.
2. Insert USB memory in USB memory slot.
3. Turn the main power switch on.
4. Enter the maintenance item.
5. Press the start key.
6. Select the item to be send.
7. Select [Text] or [HTML].
<table>
<tr><th>Display</th><th>Output list</th></tr>
<tr><td>Print</td><td>Outputs the report</td></tr>
<tr><td>USB (Text)</td><td>Sends output data to the USB memory (text type)</td></tr>
<tr><td>USB (HTML)</td><td>Sends output data to the USB memory (HTML type)</td></tr>
</table>
8. Press the start key.
Output will be sent to the USB memory.

Completion
Press the stop key. The screen for selecting a maintenance item No. is displayed.
</td></tr>
</table>

TONER
www.tonerplus.com.ua

Item No.	Description
U000	**Event log**

Event Log

MFP

(2) 04/Sep/2010 08:40

(1) Firmware version 2KZ_2000.000.000 2010.09.04

(3) [XXXXXXXX] (4) [XXXXXXXX] (5) [XXXXXXXX]

(7) Paper Jam Log

#	Count.	Event Descriprions
16	1876543	0501.01.08.01.01
15	166554	4002.01.08.01.01
14	4988	0501.01.08.01.01
13	4988	4002.01.08.01.01
12	4988	0501.01.08.01.01
11	4988	4002.01.08.01.01
10	1103	0501.01.08.01.01
9	1103	4002.01.08.01.01
8	1103	0501.01.08.01.01
7	1103	4002.01.08.01.01
6	1027	0501.01.08.01.01
5	1027	4002.01.08.01.01
4	1027	0501.01.08.01.01
3	1027	4002.01.08.01.01
2	406	0501.01.08.01.01
1	36	4002.01.08.01.01

0501.01.08.01.01
(a) (b) (c) (d) (e)

(8) Service Call Log

#	Count.	Service Code
8	1881214	01.6000
7	178944	01.2100
6	5296	01.4000
5	5295	01.6000
4	2099	01.2100
3	1054	01.4000
2	809	01.6000
1	30	01.2100

(9) Maintenance Log

#	Count.	Item
8	1045571	01.00
7	104511	01.00
6	7045	01.00
5	3454	01.00
4	3454	01.01
3	3454	01.01
2	417	01.01
1	34	01.01

(10) Unknown toner Log

#	Count.	Item
5	3454	01.00
4	3454	01.00
3	3454	01.00
2	406	01.00
1	32	01.00

(11) Counter Log

(f)

J0100: 0	J0511: 0	J4201: 0
J0101: 0	J0512: 0	J4202: 0
J0104: 0	J0513: 0	J4203: 0
J0106: 0	J0518: 0	J4208: 0
J0107: 0	J0519: 0	J4209: 0

(g)

C0030: 1	C2000: 1
C0070: 1	C2010: 1
C0100: 1	C2600: 1
C0120: 1	C3100: 1
C0130: 1	C3200: 1

(h) T00: 1
T01: 1

(6) [XXXXXXXXXXXXXXXX]

Figure 1-3-1

TONER
www.tonerplus.com.ua

<table>
<tr><th>Item No.</th><th>Description</th></tr>
<tr><td>U000</td><td>Detail of event log
<table>
<tr><th>No.</th><th>Items</th><th colspan="3">Description</th></tr>
<tr><td>(1)</td><td colspan="4">System version</td></tr>
<tr><td>(2)</td><td colspan="4">System date</td></tr>
<tr><td>(3)</td><td colspan="4">Engine soft version</td></tr>
<tr><td>(4)</td><td colspan="4">Engine boot version</td></tr>
<tr><td>(5)</td><td colspan="4">Operation panel mask version</td></tr>
<tr><td>(6)</td><td colspan="4">Machine serial number</td></tr>
<tr><td rowspan="3">(7)</td><td rowspan="3">Paper Jam Log</td><td>#</td><td>Count.</td><td>Event</td></tr>
<tr><td>Remembers 1 to 16 of occurrence. If the occurrence of the previous paper jam is less than 16, all of the paper jams are logged. When the occurrence excesseds 16, the oldest occurrence is removed.</td><td>The total page count at the time of the paper jam.</td><td>Log code (hexadecimal, 5 categories)

(a) Cause of a paper jam
(b) Paper source
(c) Paper size
(d) Paper type
(e) Paper eject</td></tr>
<tr><td colspan="3">(a) Cause of paper jam (Hexadecimal)</td></tr>
<tr><td colspan="4">Refer to P.1-4-1 for paper jam location
0000: Initial jam
0100: Secondary paper feed request time out
0101: Waiting for process package to be ready
0104: Waiting for conveying package to be ready
0106: Paper feeding request for duplex printing time out
0107: Waiting for fuser package to be ready
0110: Right cover open
0111: Front cover open
0120: Receiving a duplex paper feeding request while paper is empty
0121: Exceeding number of duplex pages circulated
0210: Right lower cover open
0501: No paper feed from cassette 1
0502: No paper feed from cassette 2
0503: No paper feed from cassette 3
0508: No paper feed from duplex section
0509: No paper feed from MP tray
0511: Multiple sheets in cassette 1
0512: Multiple sheets in cassette 2
0513: Multiple sheets in cassette 3
0518: Multiple sheets in duplex section
0519: Multiple sheets in MP tray
1403: PF feed sensor 1 non arrival jam
1413: PF feed sensor 1 stay jam
4002: Registration sensor non arrival jam (cassette 2)
4003: Registration sensor non arrival jam (cassette 3)</td></tr>
</table></td></tr>
</table>

TONER
www.tonerplus.com.ua

Item No.	Description
U000	

No.	Items	Description
(7) cont.	Paper Jam Log	4012: Registration sensor stay jam (cassette 2) 4013: Registration sensor stay jam (cassette 3) 4201: Eject sensor non arrival jam (cassette 1) 4202: Eject sensor non arrival jam (cassette 2) 4203: Eject sensor non arrival jam (cassette 3) 4208: Eject sensor non arrival jam (duplex) 4209: Eject sensor non arrival jam (Mp tray) 4211: Eject sensor stay jam (cassette 1) 4212: Eject sensor stay jam (cassette 2) 4213: Eject sensor stay jam (cassette 3) 4218: Eject sensor stay jam (duplex) 4219: Eject sensor stay jam (MP tray) 4301: Duplex sensor non arrival jam (cassette 1) 4302: Duplex sensor non arrival jam (cassette 2) 4303: Duplex sensor non arrival jam (cassette 3) 4309: Duplex sensor non arrival jam (MP tray) 4311: Duplex sensor stay jam (cassette 1) 4312: Duplex sensor stay jam (cassette 2) 4313: Duplex sensor stay jam (cassette 3) 4319: Duplex sensor stay jam (MP tray) 4901: Bridge conveying sensor 1 non arrival jam (cassette 1) 4902: Bridge conveying sensor 1 non arrival jam (cassette 2) 4903: Bridge conveying sensor 1 non arrival jam (cassette 3) 4908: Bridge conveying sensor 1 non arrival jam (duplex) 4909: Bridge conveying sensor 1 non arrival jam (MP tray) 4911: Bridge conveying sensor 1 stay jam (cassette 1) 4912: Bridge conveying sensor 1 stay jam (cassette 2) 4913: Bridge conveying sensor 1 stay jam (cassette 3) 4918: Bridge conveying sensor 1 stay jam (duplex) 4919: Bridge conveying sensor 1 stay jam (MP tray) 5001: Bridge conveying sensor 3 non arrival jam (cassette 1) 5002: Bridge conveying sensor 3 non arrival jam (cassette 2) 5003: Bridge conveying sensor 3 non arrival jam (cassette 3) 5008: Bridge conveying sensor 3 non arrival jam (duplex) 5009: Bridge conveying sensor 3 non arrival jam (MP tray) 5011: Bridge conveying sensor 3 stay jam (cassette 1) 5012: Bridge conveying sensor 3 stay jam (cassette 2) 5013: Bridge conveying sensor 3 stay jam (cassette 3) 5018: Bridge conveying sensor 3 stay jam (duplex) 5019: Bridge conveying sensor 3 stay jam (MP tray) 6023: Staple cover open 6043: DF top cover open6103: DF paper conveying sensor non arrival jam 6113: DF paper conveying sensor stay jam 6123: DF paper conveying sensor remaining jam 6413: DF eject paper sensor stay jam 6423: DF eject paper sensor remaining jam 6803: Front adjustment plate operation ON error

TONER
www.tonerplus.com.ua

<table>
<tr><th>Item No.</th><th>Description</th></tr>
<tr><td>U000</td><td>
<table>
<tr><th>No.</th><th>Items</th><th>Description</th></tr>
<tr><td>(7)
cont.</td><td>Paper Jam Log</td><td>6813: Front adjustment plate operation OFF error
6903: Rear adjustment plate operation ON error
6913: Rear adjustment plate operation OFF error
7013: Staple operation error
7023: Staple initial operation error
7913: Sequence error 1 (operation prohibited)
7923: Sequence error 2 (initialoperation error)
7933: Sequence error 3 (Error in the reception of backup data)
7943: Sequence error 4 (standby)
7953: Sequence error 5 (Error in between copies)
9000: No original feed
9001: DP original conveying jam
9004: DP original swichback jam
9010: DP open
9011: DP top cover open
9110: DP paper feed sensor stay jam
9200: DP registration sensor non arrival jam
9400: DP timing sensor non arrival jam
9410: DP timing sensor stay jam</td></tr>
<tr><td></td><td></td><td>(b) Detail of paper source (Hexadecimal)</td></tr>
<tr><td></td><td></td><td>00: MP tray
01: Cassette 1
02: Cassette 2 (paper feeder 1)
03: Cassette 3 (paper feeder 2)
04 to 09: Reserved</td></tr>
<tr><td></td><td></td><td>(c) Detail of paper size (Hexadecimal)</td></tr>
<tr><td></td><td></td><td>
<table>
<tr>
<td>00: (Not specified)
01: Monarch
02: Business
03: International DL
04: International C5
05: Executive
06: Letter-R
86: Letter-E
07: Legal
08: A4R
88: A4E
09: B5R
89: B5E
0A: A3</td>
<td>0B: B4
0C: Ledger
0D: A5R
0E: A6
0F: B6
10: Commercial #9
11: Commercial #6
12: ISO B5
13: Custom size
1E: C4
1F: Postcard
20: Reply-paid post-card
21: Oficio II</td>
<td>22: Special 1
23: Special 2
24: A3 wide
25: Ledger wide
26: Full bleed paper (12 x 8)
27: 8K
28: 16K-R
A8: 16K-E
32: Statement-R
B2: Statement-E
33: Folio
34: Western type 2
35: Western type 4</td>
</tr>
</table>
</td></tr>
</table>
</td></tr>
</table>

TONER
www.tonerplus.com.ua

<table>
<tr><th>Item No.</th><th>Description</th></tr>
<tr><td>U000</td><td>
<table>
<tr><th>No.</th><th>Items</th><th colspan="3">Description</th></tr>
<tr><td rowspan="4">(7) cont.</td><td rowspan="4">Paper Jam Log</td><td colspan="3">(d) Detail of paper type (Hexadecimal)</td></tr>
<tr><td>01: Plain
02: Transparency
03: Preprinted
04: Labels
05: Bond
06: Recycled
07: Vellum
08: Rough
09: Letterhead</td><td>0A: Color
0B: Prepunched
0C: Envelope
0D: Cardstock
0E: Coated
0F: 2nd side
10: Thick
11: High quality</td><td>15: Custom 1
16: Custom 2
17: Custom 3
18: Custom 4
19: Custom 5
1A: Custom 6
1B: Custom 7
1C: Custom 8</td></tr>
<tr><td colspan="3">(e) Detail of paper eject location (Hexadecimal)</td></tr>
<tr><td colspan="3">01: Face down (FD)
02: Face up (FU)/Document finisher face up (FU)/
03: Document finisher face down (FD)</td></tr>
<tr><td rowspan="2">(8)</td><td rowspan="2">Service Call Log</td><td>#</td><td>Count.</td><td>Service Code</td></tr>
<tr><td>Remembers 1 to 8 of occurrence of self diagnostics error. If the occurrence of the previous diagnostics error is less than 8, all of the diagnostics errors are logged.</td><td>The total page count at the time of the self diagnostics error.</td><td>Self diagnostic error code (See page 1-4-9)

Example:
01.6000

01: Self diagnostic error
6000: Self diagnostic error code number</td></tr>
<tr><td rowspan="2">(9)</td><td rowspan="2">Maintenance Log</td><td>#</td><td>Count.</td><td>Item</td></tr>
<tr><td>Remembers 1 to 8 of occurrence of replacement. If the occurrence of the previous replacement of toner container is less than 8, all of the occurrences of replacement are logged.</td><td>The total page count at the time of the replacement of the toner container.</td><td>Code of maintenance replacing item
(1 byte, 2 categories)

First byte (Replacing item)
01: Toner container
Second byte
(Type of replacing item)
00: Black

First byte (Replacing item)
02: Maintenance kit
Second byte
(Type of replacing item)
01: MK-896A
02: MK-896B</td></tr>
</table>
</td></tr>
</table>

TONER
www.tonerplus.com.ua

<table>
<tr><th>Item No.</th><th>Description</th></tr>
<tr><td>U000</td><td>
<table>
<tr><th>No.</th><th>Items</th><th colspan="3">Description</th></tr>
<tr><td rowspan="2">(10)</td><td rowspan="2">Unknown Toner Log</td><td>#</td><td>Count.</td><td>Item</td></tr>
<tr><td>Remembers 1 to 5 of occurrence of unknown toner detection. If the occurrence of the previous unknown toner detection is less than 5, all of the unknown toner detection are logged.</td><td>The total page count at the time of the toner empty error with using an unknown toner container.</td><td>Unknown toner log code
(1 byte, 2 categories)

First byte
01: Toner container (Fixed)
Second byte
00: Black</td></tr>
<tr><td rowspan="2">(11)</td><td rowspan="2">Counter Log

Comprised of three log counters including paper jams, self diagnostics errors, and replacement of the toner container.</td><td>(f) Paper jam</td><td>(g) Self diagnostic error</td><td>(h) Maintenance item replacing</td></tr>
<tr><td>Indicates the log counter of paper jams depending on location.

Refer to Paper Jam Log.

All instances including those are not occurred are displayed.</td><td>Indicates the log counter of self diagnostics errors depending on cause.
(See page 1-3-12)

Example:
C6000: 4

Self diagnostics error 6000 has happened four times.</td><td>Indicates the log counter depending on the maintenance item for maintenance.

T: Toner container
00: Black
M: Maintenance kit
01: MK-477/475/479

Example:
T00: 1
The toner container has been replaced once.</td></tr>
</table>
</td></tr>
</table>

TONER
www.tonerplus.com.ua

<table>
<tr><th>Item No.</th><th>Description</th></tr>
<tr><td>U001</td><td>Exiting the maintenance mode

Description
Exits the maintenance mode and returns to the normal copy mode.
Purpose
To exit the maintenance mode.

Method
Press the start key. The normal copy mode is entered.</td></tr>
<tr><td>U002</td><td>Setting the factory default data

Description
Restores the machine conditions to the factory default settings.
Purpose
To move the mirror frame of the scanner to the position for transport

Method
1. Press the start key.
2. Select [Mode1(All)].
3. Press the start key.
The mirror frame of the scanner returns to the position for transport.
4. Turn the main power switch off and on.
* : An error code is displayed in case of an initialization error.
When errors occurred, turn main power switch off then on, and execute initialization using maintenance item U002.

Error codes
<table><tr><th>Codes</th><th>Description</th></tr><tr><td>0001</td><td>Entity error</td></tr><tr><td>0002</td><td>Controller error</td></tr><tr><td>0020</td><td>Engine error</td></tr><tr><td>0040</td><td>Scanner error</td></tr></table></td></tr>
</table>

TONER
www.tonerplus.com.ua

<table>
<tr><th>Item No.</th><th>Description</th></tr>
<tr><td>U004</td><td>

Setting the machine number

Description
Sets or displays the machine number.
Purpose
To check or set the machine number.

Method
1. Press the start key.
   If the machine serial number of engine PWB matches with that of main PWB

Display	Description
Machine No.	Displays the machine serial number

   If the machine serial number of engine PWB does not match with that of main PWB

Display	Description
Machine No.(Main)	Displays the machine serial number of main
Machine No.(Eng)	Displays the machine serial number of engine

Setting
Carry out if the machine serial number does not match.
1. Select [Execute].
2. Press the start key. Writing of serial No. starts.
3. Turn the main power switch off and on.

Completion
Press the stop key. The screen for selecting a maintenance item No. is displayed.

</td></tr>
</table>

TONER
www.tonerplus.com.ua

Item No.	Description
U019	**Displaying the ROM version** **Description** Displays the part number of the ROM fitted to each PWB. **Purpose** To check the part number or to decide, if the newest version of ROM is installed. **Method** 1. Press the start key. The ROM version are displayed. 2. Change the screen using the cursor up/down keys.

Display	Description
Main	Main ROM
MMI	Operation ROM
Engine	Engine ROM
Engine Boot	Engine booting
RFID	RFID ROM
IH CPU	IH CPU ROM
IH CPU Boot	IH CPU booting
IO CPU	IO CPU ROM
IO CPU Boot	IO CPU booting
LSU CPU	LSU CPU ROM
LSU CPU Boot	LSU CPU booting
Browser	Browser ROM
Option Language	Optional language ROM
Dictionary	Kanji dictionary ROM
Color Table1	Color Table1 ROM
Color Table2	Color Table2 ROM
DP	Document processor ROM
DP Boot	Document processor booting
PF	Paper feeder ROM
PF Boot	Paper feeder booting
DF	Document finisher ROM
DF Boot	Document finisher booting
AK	Bridge ROM
AK Boot	Bridge booting
Fax APL	Fax control PWB APL
Fax Boot	Fax control PWB booting
Fax IPL	Fax control PWB IPL

Completion
Press the stop key. The screen for selecting a maintenance item No. is displayed.

TONER www.tonerplus

Item No.	Description
U021	**Memory initializing** **Description** Initializes all settings, except those pertinent to the type of machine, namely each counter, service call history and mode setting. Also initializes backup RAM according to region specification selected in maintenance item U252 Setting the destination. **Purpose** To return the machine settings to their factory default. **Method** 1. Press the start key. 2. Select [Execute]. 3. Press the start key. All data other than that for adjustments due to variations between machines is initialized based on the destination setting. 4. Turn the main power switch off and on. * : An error code is displayed in case of an initialization error. When errors occurred, turn main power switch off then on, and execute initialization using maintenance item U021. **Error codes** Codes: 0001 — Entity error; 0002 — Controller error; 0020 — Engine error; 0040 — Scanner error

TONER
www.tonerplus.com.ua

Item No.	Description
U030	**Checking the operation of the motors** **Description** Drives each motor. **Purpose** To check the operation of each motor. **Method** 1. Press the start key. 2. Select the motor to be operated. 3. Press the start key. The operation starts.

Display	Description
Feed	Conveying motor (CM) is turned on
Exit(CW)	Eject motor (EM) is turned on clockwise
Exit(CCW)	Eject motor (EM) is turned on counterclockwise
Drum K	Drum motor K (DRM-K) is turned on
Drum COL	Drum motor YCM (DRM-YCM) is turned on
DLP K(CW)	Developer motor K (DRM-K) is turned on clockwise
DLP K(CCW)	Developer motor K (DRM-K) is turned on counterclockwise
DLP COL(CW)	Developer motor YCM (DRM-YCM) is turned on clockwise
DLP COL(CCW)	Developer motor YCM (DRM-YCM) is turned on counterclock-wise

4. To stop operation, press the stop key.

Completion
Press the stop key. The screen for selecting a maintenance item No. is displayed.

TONER
www.tonerplus.com.ua

Item No.	Description
U031	**Checking switches and sensors for paper conveying** **Description** Displays the on-off status of each paper detection switch or sensor on the paper path. **Purpose** To check if the switches and sensors for paper conveying operate correctly. **Method** 1. Press the start key. 2. Turn each switch or sensor on and off manually to check the status. When a switch or sensor is detected to be in the ON position, the display for that switch or sensor will be “1”.

Display	Switches and sensors
Switch 00000000	
1st digit	Euser pre sensor (FUPS)
2nd digit	Bridge detection switch (BRDSW)
3rd digit	Job paper full sensor (JPFS)
4th digit	Paper full sensor (PFS)
5th digit	Feed sensor (FS)
6th digit	Duplex sensor (DUS)
7th digit	Eject sensor (ES)
8th digit	Registration sensor (RS)

Completion
Press the stop key. The screen for selecting a maintenance item No. is displayed.

TONER
www.tonerplus.com.ua

<table>
<tr><th>Item No.</th><th>Description</th></tr>
<tr><td>U032</td><td>
Checking the operation of the clutches

Description
Turns each clutch on.
Purpose
To check the operation of each clutch.

Method
1. Press the start key.
2. Select the clutch to be operated.
3. Press the start key. The operation starts.
<table>
<tr><th>Display</th><th>Description</th></tr>
<tr><td>Main</td><td>Main motor (MM) is turned on</td></tr>
<tr><td>Feed</td><td>Paper feed clutch (PFCL) is turned on</td></tr>
<tr><td>Regist</td><td>Registration clutch (RCL) is turned on</td></tr>
<tr><td>Duplex</td><td>Duplex clutch (DUCL) is turned on</td></tr>
<tr><td>Middle</td><td>Middle clutch (MCL) is turned on</td></tr>
<tr><td>DLP</td><td>Developer stop clutch (DEVSCL) is turned on</td></tr>
</table>
4. Press the stop key.

Completion
Press the stop key. The screen for selecting a maintenance item No. is displayed.
</td></tr>
<tr><td>U033</td><td>
Checking the operation of the solenoids

Description
Turns each solenoid on.
Purpose
To check the operation of each solenoid.

Method
1. Press the start key.
2. Select the solenoid to be operated.
3. Press the start key. The operation starts.
<table>
<tr><th>Display</th><th>Description</th></tr>
<tr><td>MPT</td><td>MP solenoid (MPSOL) is turned on</td></tr>
<tr><td>Eject</td><td>Feedshift solenoid (FSSOL) is turned on</td></tr>
</table>
4. Press the stop key.

Completion
Press the stop key. The screen for selecting a maintenance item No. is displayed.
</td></tr>
</table>

TONER
www.tonerplus.com.ua

Item No.	Description
U034	**Adjusting the print start timing** **Description** Adjusts the leading edge registration or center line. **Purpose** Make the adjustment if there is a regular error between the leading edges of the copy image and original. Make the adjustment if there is a regular error between the center lines of the copy image and original. **Method** 1. Press the start key. 2. Select the item to be adjusted.

Display	Description
LSU Out Top	Leading edge registration adjustment
LSU Out Left	Center line adjustment

Adjustment: Leading edge registration adjustment

1. Press the system menu key.
2. Press the start key to output a test pattern.
3. Press the system menu key.
4. Select the item to be adjusted.

Display	Description	Setting range	Initial setting	Change in value per step
MPT(L)	Paper feed from MP tray (when large size paper is used)	-128 to 127	41	0.1 mm
Cassette(L)	Paper feed from cassette (when large size paper is used)	-128 to 127	41	0.1 mm
Duplex(L)	Duplex mode (second) (when large size paper is used)	-128 to 127	41	0.1 mm

Large size: 218 mm or more in width of paper.

TONER
www.tonerplus.com.ua

Item No.	Description
U034	5. Change the setting value using the cursor left/right keys or numeric keys. For output example 1, increase the value. For output example 2, decrease the value.

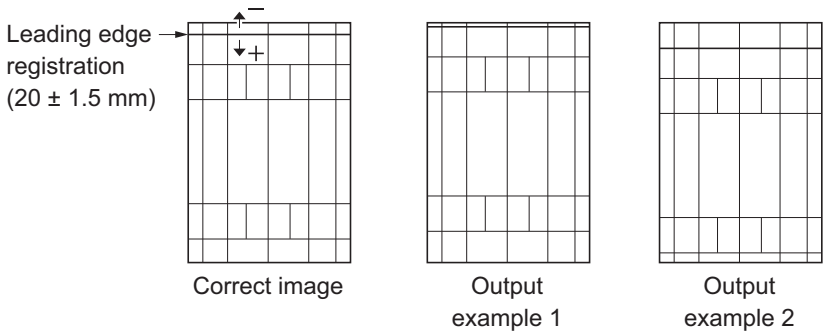

Figure 1-3-2

6. Press the start key. The value is set.

Remark
Changing the larger sizes settings affects those for the smaller sizes.

Caution
Check the copy image after the adjustment. If the image is still incorrect, perform the following adjustments in maintenance mode.

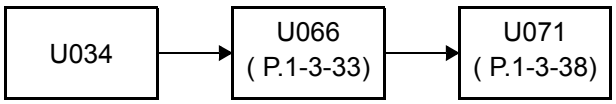

Adjustment: Center line adjustment
1. Press the system menu key.
2. Press the start key to output a test pattern.
3. Press the system menu key.
4. Select the item to be adjusted.

Display	Description	Setting range	Initial setting	Change in value per step
MPT	Paper feed from MP tray	-128 to 127	0	0.1 mm
Cassette1	Paper feed from cassette 1	-128 to 127	0	0.1 mm
Cassette2	Paper feed from optional cassette 2	-128 to 127	0	0.1 mm
Cassette3	Paper feed from optional cassette 3	-128 to 127	0	0.1 mm
Duplex	Duplex mode (second)	-128 to 127	0	0.1 mm

TONER
www.tonerplus.com.ua

Item No.	Description
U034	5. Change the setting value using the cursor left/right keys or numeric keys. For output example 1, increase the value. For output example 2, decrease the value. 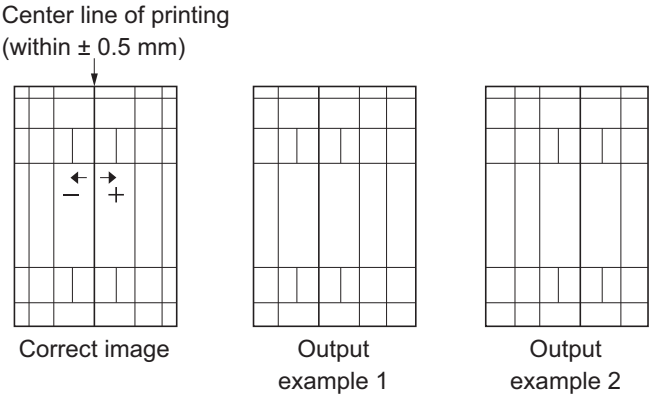 **Figure 1-3-3** 6. Press the start key. The value is set. **Caution** Check the copy image after the adjustment. If the image is still incorrect, perform the following adjustments in maintenance mode. U034 → U067 (P.1-3-34) → U072 (P.1-3-40) **Completion** Press the stop key. The screen for selecting a maintenance item No. is displayed.

TONER
www.tonerplus.com.ua

<table>
<tr><th>Item No.</th><th>Description</th></tr>
<tr><td>U035</td><td>
Setting the printing area for folio paper

Description
Changes the printing area for copying on folio paper.
Purpose
To prevent cropped images on the trailing edge or left/right side of copy paper by setting the actual printing area for folio paper.

Setting
1. Press the start key.
2. Select the item to be set.
3. Change the setting value using the cursor left/right keys.
<table>
<tr><th>Display</th><th>Description</th><th>Setting range</th><th>Initial setting</th></tr>
<tr><td>Length</td><td>Length</td><td>330 to 356 mm</td><td>330</td></tr>
<tr><td>Width</td><td>Width</td><td>200 to 220 mm</td><td>210</td></tr>
</table>
4. Press the start key. The value is set.

Completion
Press the stop key. The screen for selecting a maintenance item No. is displayed.
</td></tr>
<tr><td>U037</td><td>
Checking the operation of the fan motors

Description
Drives each fan motor.
Purpose
To check the operation of each fan motor.

Method
1. Press the start key.
2. Select the fan motor to be operated.
3. Press the start key. The operation starts.
<table>
<tr><th>Display</th><th>Description</th></tr>
<tr><td>All</td><td>All fan motors are turned on</td></tr>
<tr><td>Low Power</td><td>Power source fan motor (PSFM) is turned on</td></tr>
<tr><td>Container</td><td>Container fan motor (CFM) is turned on</td></tr>
<tr><td>IH Coil</td><td>IH Coil fan motor (IHCFM) is turned on</td></tr>
<tr><td>LSU Cooling</td><td>LSU Cooling fan motor (LSUFM) is turned on</td></tr>
<tr><td>IH Edge</td><td>IH fan motor (IHFM) is turned on</td></tr>
</table>
To stop operation, press the stop key.

Completion
Press the stop key. The screen for selecting a maintenance item No. is displayed.
</td></tr>
</table>

TONER
www.tonerplus.com.ua

Item No.	Description
U051	**Adjusting the deflection in the paper** **Description** Adjusts the deflection in the paper at the registration roller. **Purpose** Make the adjustment if the leading edge of the copy image is missing or varies randomly, or if the copy paper is Z-folded. **Adjustment** 1. Press the start key. 2. Press the system menu key. 3. Place an original and press the start key to make a test copy. 4. Press the system menu key. 5. Select the item to be adjusted.

Display	Description	Setting range	Initial setting
MPT	Paper feed from MP tray	-30 to 20	0
Cassette	Paper feed from cassette 1	-30 to 20	0
PF	Paper feed from paper feeder	-30 to 20	0
Duplex	Duplex mode (second)	-30 to 20	0

6. Change the setting value using the cursor left/right keys or numeric keys.
   For output example 1, increase the value. For output example 2, decrease the value.
   The greater the value, the larger the deflection; the smaller the value, the smaller the deflection.

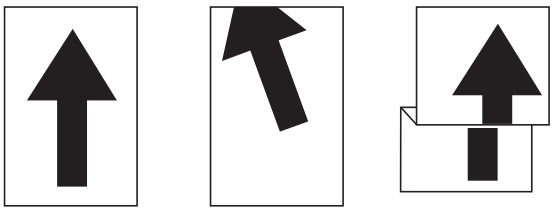

Figure 1-3-4

7. Press the start key. The value is set.

Completion
Press the stop key. The indication for selecting a maintenance item No. appears.

TONER
www.tonerplus.com.ua

<table>
<tr><th>Item No.</th><th>Description</th></tr>
<tr><td>U053</td><td>

Setting the adjustment of the motor speed

Description
Performs fine adjustment of the speeds of the motors.
Purpose
Basically, the setting need not be changed. Modify settings by interlock setting only if faulty images occur.

Method
1. Press the start key.
2. Select the item. The screen for executing each item is displayed.

<table>
<tr><th>Display</th><th>Description</th></tr>
<tr><td>Full</td><td>Speed correction value setting at full velocity</td></tr>
<tr><td>Half</td><td>Speed correction value setting at half velocity</td></tr>
<tr><td>3/4</td><td>Speed correction value setting at 3/4 velocity</td></tr>
</table>

3. Press the system menu key.
4. Place an original and press the start key to make a test copy.
5. Press the system menu key.
6. Select the item to be adjusted.

<table>
<tr><th>Display</th><th>Description</th><th>Setting range</th></tr>
<tr><td>Feed</td><td>Conveying motor (CM) speed adjustment</td><td>-50 to 50</td></tr>
<tr><td>Exit</td><td>Eject motor (EM) speed adjustment</td><td>-40 to 40</td></tr>
<tr><td>Drum(CMY)</td><td>Drum motor (DRM-YCM) speed adjustment</td><td>-50 to 50</td></tr>
<tr><td>Drum(K)</td><td>Drum motor (DRM-K) speed adjustment</td><td>-50 to 50</td></tr>
<tr><td>DLP(CMY)</td><td>DLP motor (DEVM-YCM) speed adjustment</td><td>-50 to 50</td></tr>
<tr><td>DLP(K)</td><td>DLP motor (DEVM-K) speed adjustment</td><td>-50 to 50</td></tr>
<tr><td>Fixing</td><td>Fixing motor(FUM) speed adjustment</td><td>-50 to 50</td></tr>
</table>

7. Change the setting value using the cursor left/right keys or numeric keys.
8. Press the start key. The value is set.

Completion
Press the stop key. The indication for selecting a maintenance item No. appears.

</td></tr>
</table>

TONER
www.tonerplus.com.ua

<table>
<tr><th>Item No.</th><th>Description</th></tr>
<tr><td>U063</td><td>

Adjusting the shading position

Description
Changes the shading position of the scanner.
Purpose
Used when the white line continue to appear longitudinally on the image after the shading plate is cleaned.
This is due to flaws or stains inside the shading plate. To prevent this problem, the shading position should be changed so that shading is possible without being affected by the flaws or stains.

Setting
1. Press the start key.
2. Select [Position].
3. Change the setting value using the cursor left/right keys or numeric keys.

<table>
<tr><th>Display</th><th>Description</th><th>Setting range</th><th>Initial setting</th><th>Change in value per step</th></tr>
<tr><td>Position</td><td>Shading position</td><td>-6 to 18</td><td>0</td><td>0.091 mm</td></tr>
</table>

Increasing the value moves the shading position toward the machine left, and decreasing it moves the position toward the machine right.
4. Press the start key. The value is set.

Supplement
While this maintenance item is being executed, copying from an original is available in interrupt copying mode (which is activated by pressing the system menu key).

Completion
Press the stop key. The screen for selecting a maintenance item No. is displayed.

</td></tr>
</table>

TONER
www.tonerplus.com.ua

Item No.	Description
U065	**Adjusting the scanner magnification**

Description
Adjusts the magnification of the original scanning.
Purpose
Make the adjustment if the magnification in the main scanning direction is incorrect.
Make the adjustment if the magnification in the auxiliary scanning direction is incorrect.

Caution
Adjust the magnification of the scanner in the following order.

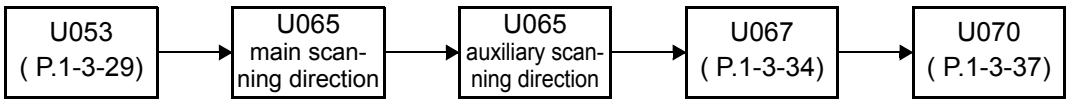

Method
1. Press the start key.
2. Press the system menu key.
3. Place an original and press the start key to make a test copy.
4. Press the system menu key.
5. Select the item to be adjusted.

Display	Description	Setting range	Initial setting	Change in value per step
Y Scan Zoom	Scanner magnification in the main scanning direction	-75 to 75	0	0.02 %
X Scan Zoom	Scanner magnification in the auxiliary scanning direction	-125 to 125	0	0.02 %

Adjustment: [Y Scan Zoom]
1. Change the setting value using the cursor left/right keys or numeric keys.
   For copy example 1, increase the value. For copy example 2, decrease the value.

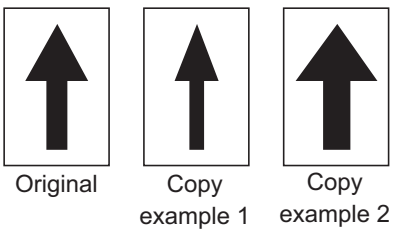

Figure 1-3-5

2. Press the start key. The value is set.

TONER
www.tonerplus.com.ua

Item No.	Description
U065	**Adjustment: [X Scan Zoom]** 1. Change the setting value using the cursor left/right keys or numeric keys. For copy example 1, increase the value. For copy example 2, decrease the value. 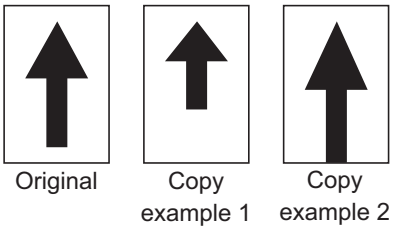 **Figure 1-3-6** 2. Press the start key. The value is set. **Completion** Press the stop key. The screen for selecting a maintenance item No. is displayed.

TONER
www.tonerplus.com.ua

Item No.	Description
U066	**Adjusting the scanner leading edge registration**

Description
Adjusts the scanner leading edge registration of the original scanning.
Purpose
Make the adjustment if there is a regular error between the leading edges of the copy image and original.

Adjustment
1. Press the start key.
2. Press the system menu key.
3. Place an original and press the start key to make a test copy.
4. Press the system menu key.
5. Select the item to be adjusted.

Display	Description	Setting range	Initial setting	Change in value per step
Front	Scanner leading edge registration	-45 to 45	0	0.091 mm
Rotate	Scanner leading edge registration (rotate copying)	-45 to 45	0	0.100mm

6. Change the setting value using the cursor left/right keys or numeric keys.
   For copy example 1, increase the value. For copy example 2, decrease the value.

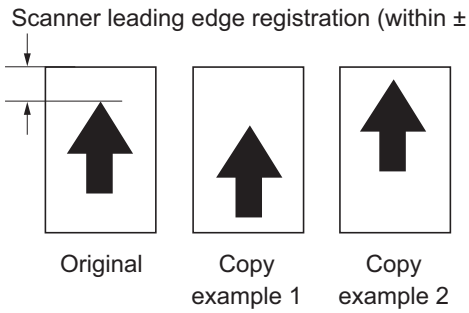

Figure 1-3-7

7. Press the start key. The value is set.

Caution
Check the copy image after the adjustment. If the image is still incorrect, perform the following adjustments in maintenance mode.

U066 → U403 (P.1-3-78) → U071 (P.1-3-38) → U404 (P.1-3-79)

Completion
Press the stop key. The screen for selecting a maintenance item No. is displayed.

TONER
www.tonerplus.com.ua

Item No.	Description
U067	**Adjusting the scanner center line**

Description
Adjusts the scanner center line of the original scanning.
Purpose
Perform this adjustment if there is a unmatching error between the center lines of the copy image and original.

Adjustment
1. Press the start key.
2. Press the system menu key.
3. Place an original and press the start key to make a test copy.
4. Press the system menu key.
5. Select the item to be adjusted.l

Display	Description	Setting range	Initial setting	Change in value per step
Front	Scanner center line	-40 to 40	0	0.085 mm
Rotate	Scanner center line (rotate copying)	-40 to 40	0	0.100 mm

6. Change the setting value using the cursor left/right keys or numeric keys.
   For copy example 1, increase the value. For copy example 2, decrease the value.

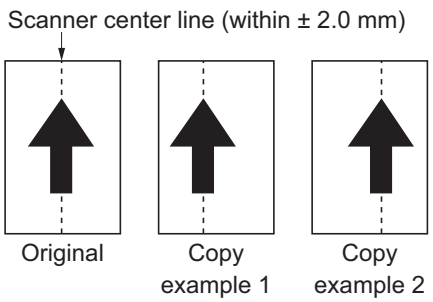

Figure 1-3-8

7. Press the start key. The value is set.

Caution
Check the copy image after the adjustment. If the image is still incorrect, perform the following adjustments in maintenance mode.

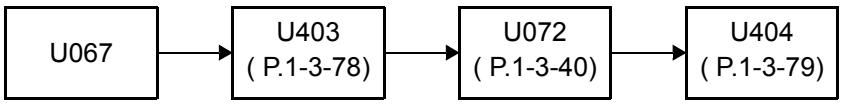

Completion
Press the stop key. The screen for selecting a maintenance item No. is displayed.

TONER
www.tonerplus.com.ua

<table>
<tr><th>Item No.</th><th>Description</th></tr>
<tr><td>U068</td><td>

Adjusting the scanning position for originals from the DP

Description

Adjusts the position for scanning originals from the DP. Performs the test copy at the four scanning positions after adjusting.

Purpose

Used when the image fogging occurs because the scanning position is not proper when the DP is used. Run U071 to adjust the timing of DP leading edge when the scanning position is changed.

Setting

1. Press the start key.l

<table>
<tr><th>Display</th><th>Description</th><th>Setting range</th><th>Initial setting</th><th>Change in value per step</th></tr>
<tr><td>DP Read</td><td>Starting position adjustment for scanning originals</td><td>-55 to 55</td><td>0</td><td>0.091 mm</td></tr>
<tr><td>Black Line</td><td>Scanning position for the test copy originals</td><td>0 to 3</td><td>0</td><td>-</td></tr>
</table>

2. Select [DP Read].
3. Change the setting using the cursor left/right keys or numeric keys.
   When the setting value is increased, the scanning position moves to the right and it moves to the left when the setting value is decreased.
4. Press the start key. The value is set.
5. Select [Black Line].
6. Change the setting using the cursor left/right keys or numeric keys.
7. Press the start key. The value is set.
8. Set the original (the one which density is known) in the DP and press the system menu key.
9. Press the start key. Test copy is executed.
10. Perform the test copy at each scanning position with the setting value from 0 to 3 and check that no black line appears and the image is normally scanned.

Completion

Press the stop key. The screen for selecting a maintenance item No. is displayed.

</td></tr>
</table>

TONER
www.tonerplus.com.ua

Item No.	Description
U070	**Adjusting the DP magnification** **Description** Adjusts the DP original scanning speed. **Purpose** Perform this adjustment if the magnification is incorrect in the auxiliary scanning direction when the DP is used. **Adjustment** 1. Press the start key. 2. Press the system menu key. 3. Place an original on the DP and press the start key to make a test copy. 4. Press the system menu key. 5. Select the item to be adjusted.l

Display	Description	Setting range	Initial setting	Change in value per step
Y Scan Zoom	Magnification in the main scanning direction	-125 to 125	0	0.02 %
X Scan Zoom	Magnification in the auxiliary scanning direction	-125 to 125	0	0.02 %

Adjustment: [Y Scan Zoom]

1. Change the setting value using the cursor left/right keys or numeric keys.
   For copy example 1, increase the value. For copy example 2, decrease the value.

Figure 1-3-9

TONER
www.tonerplus.com.ua

Item No.	Description
U070	2. Press the start key. The value is set. **Adjustment: [X Scan Zoom]** 1. Change the setting value using the cursor left/right keys or numeric keys. For copy example 1, increase the value. For copy example 2, decrease the value. 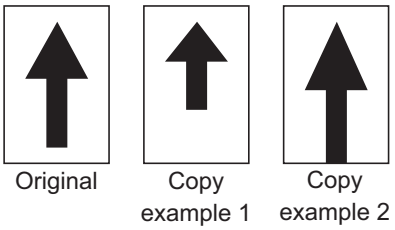 **Figure 1-3-10** 2. Press the start key. The value is set. **Caution** Check the copy image after the adjustment. If the image is still incorrect, perform the following adjustments in maintenance mode. 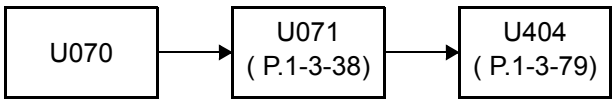 **Completion** Press the stop key. The screen for selecting a maintenance item No. is displayed.

TONER
www.tonerplus.com.ua

Item No.	Description
U071	**Adjusting the DP scanning timing**

Description
Adjusts the DP original scanning timing.
Purpose
Make the adjustment if there is a regular error between the leading or trailing edges of the original and the copy image when the DP is used.

Method
1. Press the start key.
2. Press the system menu key.
3. Place an original on the DP and press the start key to make a test copy.
4. Press the system menu key.
5. Select the item to be adjusted.l

Display	Description	Setting range	Initial setting	Change in value per step
Front Head	Leading edge registration (first side)	-80 to 80	0	0.119 mm
Front Tail	Trailing edge registration (first side)	-80 to 80	0	0.119 mm
Back Head	Leading edge registration (second side)	-80 to 80	0	0.119 mm
Back Tail	Trailing edge registration (second side)	-80 to 80	0	0.119 mm

Adjustment: Leading edge registration
1. Change the setting value using the cursor left/right keys or numeric keys.
   For copy example 1, increase the value. For copy example 2, decrease the value.

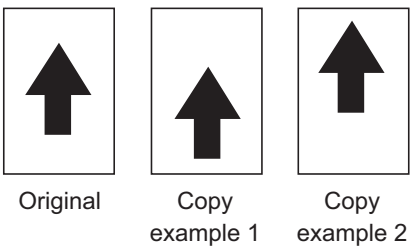

Figure 1-3-11

2. Press the start key. The value is set.

Caution
If the first side is adjusted, check the second side and if adjustment is required, carry out the adjustment.
Check the copy image after the adjustment. If the image is still incorrect, perform the following adjustments in maintenance mode.

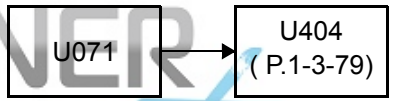

TONER
www.tonerplus.com.ua

Item No.	Description
U071	**Adjustment: Trailing edge registration** 1. Change the setting value using the cursor left/right keys or numeric keys. For copy example 1, increase the value. For copy example 2, decrease the value. 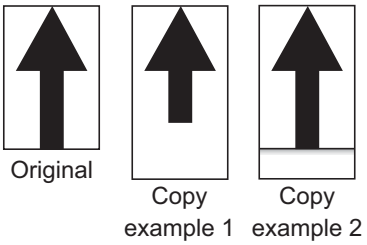 **Figure 1-3-12** 2. Press the start key. The value is set. **Caution** If the first side is adjusted, check the second side and if adjustment is required, carry out the adjustment. Check the copy image after the adjustment. If the image is still incorrect, perform the following adjustments in maintenance mode. 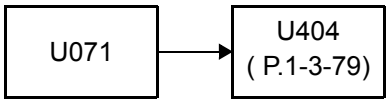 **Completion** Press the stop key. The screen for selecting a maintenance item No. is displayed.

TONER
www.tonerplus.com.ua

Item No.	Description
U072	**Adjusting the DP center line** **Description** Adjusts the scanning start position for the DP original. **Purpose** Perform the adjustment if there is a regular error between the centers of the original and the copy image when the DP is used. **Adjustment** 1. Press the start key. 2. Press the system menu key. 3. Place an original on the DP and press the start key to make a test copy. 4. Press the system menu key. 5. Select the item to be adjusted.l

Display	Description	Setting range	Initial setting	Change in value per step
Front	DP center line (first side)	-80 to 80	0	0.119 mm
Back	DP center line (second side)	-80 to 80	0	0.119 mm

6. Change the setting value using the cursor left/right keys or numeric keys.
   For copy example 1, increase the value. For copy example 2, decrease the value.

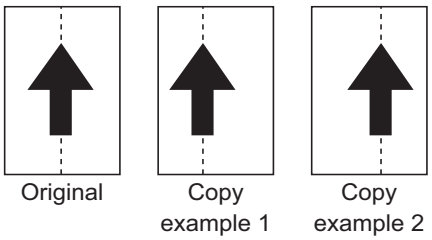

Figure 1-3-13

7. Press the start key. The value is set.

Caution
If the first side is adjusted, check the second side and if adjustment is required, carry out the adjustment.
Check the copy image after the adjustment. If the image is still incorrect, perform the following adjustments in maintenance mode.

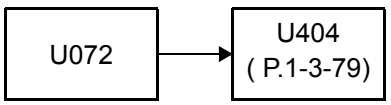

Completion
Press the stop key. The screen for selecting a maintenance item No. is displayed.

TONER
www.tonerplus.com.ua

Item No.	Description
U074	**Adjusting the DP input light luminosity** **Description** Sets the luminosity correction for scanning originals from the DP. Purpose Modify the setting only if a spotted background appears when a bluish original is scanned from the DP. **Setting** 1. Press the start key. 2. Change the setting value using the cursor left/right keys or numeric keys.

Display	Description	Setting range	Initial setting
Coefficient	DP input light luminosity correction	0 to 3	0

Settings 0: No correction / 1: Slight correction / 2: Medium correction / 3: Strong correction

3. Press the start key. The value is set.

Supplement
While this maintenance item is being executed, copying from an original is available in interrupt copying mode (which is activated by pressing the system menu key).

Completion
Press the stop key. The screen for selecting a maintenance item No. is displayed.

TONER
www.tonerplus.com.ua

<table>
<tr><th>Item No.</th><th>Description</th></tr>
<tr><td>U089</td><td>

Outputting a MIP-PG pattern

Description
Selects and outputs the MIP-PG pattern created in the machine.
Purpose
To check copier status other than scanner when adjusting image printing, using MIP-PG pattern output (with-out scanning).

Method
1. Press the start key.
2. Select the MIP-PG pattern to be output and press the start key.

<table>
<tr><th>Display</th><th>PG pattern to be output</th><th>Purpose</th></tr>
<tr><td>256GRADATION</td><td>256-gradation PG</td><td>To check the gradation reproducibility</td></tr>
<tr><td>COLOR BELT</td><td>Four color belts PG</td><td>To check the developing state and the engine section ID</td></tr>
<tr><td>GRAY(C)</td><td>Cyan PG</td><td>To check the drum quality</td></tr>
<tr><td>GRAY(M)</td><td>Magenta PG</td><td>To check the drum quality</td></tr>
<tr><td>GRAY(Y)</td><td>Yellow PG</td><td>To check the drum quality</td></tr>
<tr><td>GRAY(K)</td><td>Black PG</td><td>To check the drum quality</td></tr>
<tr><td>WHITE</td><td>Blank paper PG</td><td>To check the drum quality</td></tr>
<tr><td>GRADATION GRAY</td><td>5-graduation gray PG</td><td>To check for vertical lines on the laser scanner unit</td></tr>
</table>

3. Press the system menu key.
4. Press the start key. A MIP-PG pattern is output.

Completion
Press the stop key. The screen for selecting a maintenance item No. is displayed.

</td></tr>
</table>

TONER
www.tonerplus.com.ua

Item No.	Description
U099	**Adjusting original size detection** **Description** Checks the operation of the original size sensor and sets the sensing threshold value. **Purpose** To adjust the sensitivity of the sensor and size judgement time if the original size sensor malfunctions frequently due to incident light or the like. **Method** 1. Press the start key. 2. Select the item. The screen for executing each item is displayed.

Display	Description
Data1	Displaying original size sensor transmission data
B/W Level1	B/W LEVEL setting original size sensor threshold value Setting original size judgment time
Data2	Displaying original size sensor transmission data (when DP is installed)

Method: [Data1/Data2]

1. Place the original and close the original cover or DP. The detection sensor transmission data is displayed.

Display	Description
Original Area (dot)	Detected original width size (dot)
Original Area (mm)	Detected original width size (mm)
Size SW L	Displays the original size sensor (OSS) ON/OFF

Setting: [B/W Level1]

1. Select an item to be set.
2. Change the setting value using the cursor left/right keys or numeric keys.l

Display	Description	Setting range	Initial setting	
Original 1	Original threshold value	0 to 255	40	50*
Original 2	Original threshold value	0 to 255	30	50*
Original 2	Original threshold value	0 to 255	20	50*
Light Source	Light source threshold value	0 to 255	19	49*

When DP is installed.

Note: A smaller value increases the sensor sensitivity, and a larger value decreases it.

3. Press the start key. The value is set.

Completion

Press the stop key. The screen for maintenance item No. is displayed.

TONER
www.tonerplus.com.ua

<table>
<tr><th>Item No.</th><th>Description</th></tr>
<tr><td>U100</td><td>

Setting the main high voltage

Description
Controls the charger roller voltage to optimize the surface potential.
Purpose
To change the setting value to adjust the image if an image failure (background blur, etc.) occurs.

Method
1. Press the start key.
2. Select the item. The screen for executing each item is displayed.

<table>
<tr><th>Display</th><th>Description</th></tr>
<tr><td>Base</td><td>MC DC bias</td></tr>
<tr><td>Protect Table</td><td>Drum protection control table</td></tr>
<tr><td>Drum Aging</td><td>Aging for an electrification roller</td></tr>
</table>

Method:[Base]
1. Select the item. The screen for executing each item is displayed.

<table>
<tr><th>Display</th><th>Description</th></tr>
<tr><td>Mode</td><td>MC compensation mode</td></tr>
<tr><td>Bias</td><td>MC DC bias</td></tr>
</table>

Setting:[Mode]
1. Select the item. The screen for executing each item is displayed.

<table>
<tr><th>Display</th><th>Description</th></tr>
<tr><td>Auto</td><td>Each color radical semi- value display and a degree setup of a standard value</td></tr>
<tr><td>Manual</td><td>A value setup of each color</td></tr>
</table>

Initial setting: Auto

</td></tr>
</table>

TONER
www.tonerplus.com.ua

Item No.	Description
U100	**Setting:[Bias]** 1. Select an item to be set. 2. Change the setting value using the +/- keys or numeric keys.

Display	Description	Setting range	Initial setting
1st	Manual adjustment value (1st)	0 to 250	145
2nd	Manual adjustment value (2nd)	0 to 250	145
3rd	Manual adjustment value (3rd)	0 to 250	145
4th	Manual adjustment value (4th)	0 to 250	145
Default(1st)	Manual adjustment base value (1st)	0 to 250	-
Default(2nd)	Manual adjustment base value (2nd)	0 to 250	-
Default(3rd)	Manual adjustment base value (3rd)	0 to 250	-
Default(4th)	Manual adjustment base value (4th)	0 to 250	-

3. Press the start key. The value is set.

Setting:[Bias]

1. Select an item to be set.
2. Change the setting value using the +/- keys or numeric keys.

Display	Description	Setting range	Initial setting
1st	MC DC bias (1st)	0 to 250	145
2nd	MC DC bias (2nd)	0 to 250	145
3rd	MC DC bias (3rd)	0 to 250	145
4th	MC DC bias (4th)	0 to 250	145

3. Press the start key. The value is set.

Supplement

While this maintenance item is being executed, copying from an original is available in interrupt copying mode (which is activated by pressing the system menu key).

TONER
www.tonerplus.com.ua

<table>
<tr><th>Item No.</th><th>Description</th></tr>
<tr><td>U100</td><td>
Setting:[Protect table]
1. Select an item to be set.
<table>
<tr><th>Display</th><th>Description</th></tr>
<tr><td>Mode0</td><td>It changes by drum drive time.</td></tr>
<tr><td>Mode1</td><td>Initial fixation</td></tr>
</table>
Initial setting: Mode0
2. Press the start key. The value is set.

Setting:[Drum Aging]
1. Select an item to be set.
<table>
<tr><th>Display</th><th>Description</th></tr>
<tr><td>On</td><td>with aging (it operates by lapsed time)</td></tr>
<tr><td>Off</td><td>with not aging</td></tr>
</table>
Initial setting: Off
2. Press the start key. The value is set.

Completion
Press the stop key when main charger output stops. The screen for selecting a maintenance item No. is displayed.
</td></tr>
</table>

TONER
www.tonerplus.com.ua

Item No.	Description
U101	**Setting the voltage for the primary transfer**

Description
Sets the control voltage for the primary transfer.
Purpose
To change the setting when any density problems, such as too dark or light, occur.

Method
1. Press the start key.
2. Select the item. The screen for executing each item is displayed.

Display	Description
Base	Standard value
1st side	Correction value of single-side printing
2nd side	Correction value of duplex printing
B/W	Correction value of monochrome printing

Setting: [Base]
1. Select the item to be set.
2. Change the setting value using the cursor left/right keys or numeric keys.

Display	Description	Setting range	Initial setting	
			20ppm	25ppm
Full	Full speed printing	0 to 100	40	45
Half	Half speed printing	0 to 100	25	25

3. Press the start key. The value is set.

Setting: [1st side/02nd side]
1. Select the item to be set.
2. Change the setting value using the cursor left/right keys or numeric keys.

Display	Description	Setting range	Initial setting	
			20ppm	25ppm
1st	Correction value (Yellow)	-50 to 50	0/-2	0/-3
2nd	Correction value (Cyan)	-50 to 50	4/2	5/2
3rd	Correction value (Magenta)	-50 to 50	4/2	0/2
4th	Correction value (Black)	-50 to 50	4/2	5/2

3. Press the start key. The value is set.

TONER
www.tonerplus.com.ua

<table>
<tr><th>Item No.</th><th>Description</th></tr>
<tr><td>U101</td><td>
Setting: [B/W]
1. Select the item to be set.
2. Change the setting value using the cursor left/right keys or numeric keys.
<table>
<tr><th rowspan="2">Display</th><th rowspan="2">Description</th><th rowspan="2">Setting range</th><th colspan="2">Initial setting</th></tr>
<tr><th>20ppm</th><th>25ppm</th></tr>
<tr><td>Value</td><td>Correction value</td><td>-50 to 50</td><td>24</td><td>30</td></tr>
</table>
3. Press the start key. The value is set.

Completion
Press the stop key. The screen for selecting a maintenance item No. is displayed.
</td></tr>
</table>

TONER+
www.tonerplus.com.ua

<table>
<tr><th>Item No.</th><th>Description</th></tr>
<tr><td>U106</td><td>

Setting the voltage for the secondary transfer

Description
Sets the control voltage for the secondary transfer.
Purpose
To change the setting when any density problems, such as too dark or light, occur.

Method
1. Press the start key.
2. Select the item. The screen for executing each item is displayed.

Display	Description
Color	Correction value of color printing
B/W	Correction value of monochrome printing

Method:[Color]
1. Select the item. The screen for executing each item is displayed.

Display	Description
Light/Normal1	Weight of paper (light to usual 1)
Normal2/3	Weight of paper (usual 2 to 3)
Heavy1	Weight of paper (heavy 1)
Heavy2-3	Weight of paper (heavy 2 to 3)
OHP	Kind of paper (OHP)
Coated	Kind of paper (Coated paper)

Method: [Light/Normal1 / Normal2/3 / Heavy1 / Heavy2-3]
1. Select the item. The screen for executing each item is displayed.

Display	Description
1st side	Correction value of single-side printing
2nd side	Correction value of duplex printing

Setting:[1st side/2nd side]
1. Select the item to be set.
2. Change the setting value using the cursor left/right keys or numeric keys.

Display	Description	Setting range	Initial setting	
			20ppm	25ppm
Width<160	width of paper<160	0 to 200	66/68/51/43 70/72/54/45	83/85/64/43 88/90/68/45
160<=Width<220	160<= width of paper <220	0 to 200	46/48/36/30 48/50/37/31	58/60/45/30 60/62/47/31
220<=Width	220<= width of paper	0 to 200	34/35/26/22 32/34/25/22	42/44/33/22 40/42/32/21

3. Press the start key. The value is set.

</td></tr>
</table>

TONER
www.tonerplus.com.ua

<table>
<tr><th>Item No.</th><th>Description</th></tr>
<tr><td>U106</td><td>

Setting:[OHP/Coated]

1. Select the item to be set.
2. Change the setting value using the cursor left/right keys or numeric keys.

<table>
<tr><th rowspan="2">Display</th><th rowspan="2">Description</th><th rowspan="2">Setting range</th><th colspan="2">Initial setting</th></tr>
<tr><th>20ppm</th><th>25ppm</th></tr>
<tr><td>Width<160</td><td>width of paper<160</td><td>0 to 200</td><td>40/59</td><td>40/59</td></tr>
<tr><td>160<=Width<220</td><td>160<= width of paper <220</td><td>0 to 200</td><td>33/42</td><td>33/42</td></tr>
<tr><td>220<=Width</td><td>220<= width of paper</td><td>0 to 200</td><td>25/31</td><td>25/31</td></tr>
</table>

3. Press the start key. The value is set.

Method:[B/W]

1. Select the item. The screen for executing each item is displayed.

<table>
<tr><th>Display</th><th>Description</th></tr>
<tr><td>Light/Normal1</td><td>Weight of paper (light to usual 1)</td></tr>
<tr><td>Heavy1</td><td>Weight of paper (heavy 1)</td></tr>
<tr><td>Heavy2-3</td><td>Weight of paper (heavy 2 to 3)</td></tr>
</table>

Method: [Light/Normal1 / Heavy1 / Heavy2-3]

1. Select the item. The screen for executing each item is displayed.

<table>
<tr><th>Display</th><th>Description</th></tr>
<tr><td>1st side</td><td>Correction value of single-side printing</td></tr>
<tr><td>2nd side</td><td>Correction value of duplex printing</td></tr>
</table>

Setting:[1st side/2nd side]

1. Select the item to be set.
2. Change the setting value using the cursor left/right keys or numeric keys.

<table>
<tr><th rowspan="2">Display</th><th rowspan="2">Description</th><th rowspan="2">Setting range</th><th colspan="2">Initial setting</th></tr>
<tr><th>20ppm</th><th>25ppm</th></tr>
<tr><td>Width<160</td><td>width of paper<160</td><td>0 to 200</td><td>62/48/43
66/51/45</td><td>78/60/43
83/64/45</td></tr>
<tr><td>160<=Width<220</td><td>160<= width of paper <220</td><td>0 to 200</td><td>42/33/30
44/34/31</td><td>53/41/30
55/43/31</td></tr>
<tr><td>220<=Width</td><td>220<= width of paper</td><td>0 to 200</td><td>32/25/22
32/24/22</td><td>40/31/22
38/30/21</td></tr>
</table>

3. Press the start key. The value is set.

Completion

Press the stop key. The screen for selecting a maintenance item No. is displayed.

</td></tr>
</table>

TONER
www.tonerplus.com.ua

Item No.	Description
U107	**Setting the voltage for the intermediate transfer cleaning**

Description
Sets the control voltage for the **intermediate transfer cleaning**.
Purpose
To change the setting when the offset by a defective cleaning of the transfer belt is generate.

Method
1. Press the start key.
2. Select the item. The screen for executing each item is displayed.

Display	Description
Belt(A)	Correction value of belt A
Belt(B)	Correction value of belt B
Belt(C)	Correction value of belt C

Setting
1. Select the item to be set.
2. Change the setting value using the cursor left/right keys or numeric keys.

Display	Description	Setting range	Initial setting	
			20ppm	25ppm
Full	Full speed printing of color	0 to 200	10/72/72	13/90/90
Half	Half speed printing of color	0 to 200	9/45/45	9/45/45
3/4	75% of full speed printing of color	0 to 200	9/54/72	10/68/90
B/W Full	Full speed printing of monochrome	0 to 200	10/60/60	13/90/90
B/W Half	Half speed printing of monochrome	0 to 200	9/42/42	9/68/68
B/W 3/4	75% of full speed printing of monochrome	0 to 200	9/35/35	10/45/45

3. Press the start key. The value is set.

Completion
Press the stop key. The screen for selecting a maintenance item No. is displayed.

TONER
www.tonerplus.com.ua

<table>
<tr><th>Item No.</th><th>Description</th></tr>
<tr><td>U108</td><td>

Setting separation shift bias

Description
Adjusts output of separation shift bias and ON/OFF timing.
Purpose
To set when the separated malfunction of the paper occurs.

Method
1. Press the start key.
2. Select the item. The screen for executing each item is displayed.

Display	Description
Light/Normal1	Weight of paper (light to usual 1)
Normal2/3	Weight of paper (usual 2 to 3)
Heavy1	Weight of paper (heavy 1)
Coated	Kind of paper (Coated paper)
Timing	Setting of the separation timing

Method
1. Select the item. The screen for executing each item is displayed.

Display	Description	Setting range	Initial setting
1st side	Correction value of single-side printing	0 to 40	22/10/10/10
2nd side	Correction value of duplex printing	0 to 40	22/12/10/10

Setting
1. Select the item to be set.
2. Change the setting value using the cursor left/right keys or numeric keys.

Display	Description	Setting range	Initial setting
Add Normal Lead	for the leading edge on paper	0 to 20	3
On Timing 1	Adjustment of the ON Timing 1	-100 to 100	0
On Timing 2	Adjustment of the ON Timing 2	-100 to 100	0
Off Timing	Adjustment of the OFF Timing	-100 to 100	100

3. Press the start key. The value is set.

Completion
Press the stop key. The screen for selecting a maintenance item No. is displayed.

</td></tr>
</table>

TONER
www.tonerplus.com.ua

<table>
<tr><th>Item No.</th><th>Description</th></tr>
<tr><td>U111</td><td>

Checking the drum drive time

Description
Displays the drum drive time for checking a figure, which is used as a reference when correcting the high voltage based on time.
Purpose
To check the drum status.

Method
1. Press the start key.
2. Select the item. The drum drive time is displayed.

<table>
<tr><th>Display</th><th>Description</th></tr>
<tr><td>C</td><td>Cyan drum drive time</td></tr>
<tr><td>M</td><td>Magenta drum drive time</td></tr>
<tr><td>Y</td><td>Yellow drum drive time</td></tr>
<tr><td>K</td><td>Black drum drive time</td></tr>
</table>

Setting
1. Change the drum drive time using the cursor left/right keys or numeric keys.
2. Press the start key. The drum drive time is set.

Completion
Press the stop key. The screen for selecting a maintenance item No. is displayed.

</td></tr>
</table>

TONER
www.tonerplus.com.ua

<table>
<tr><th>Item No.</th><th>Description</th></tr>
<tr><td>U118</td><td>

Displaying the drum history

Description
Displays the past record of machine number and the drum counter.
Purpose
To check the count value of machine number and the drum counter.

Method
1. Press the start key. The each history displayed by five cases.

Display	Description
C	Cyan drum past record
M	Magenta drum past record
Y	Yellow drum past record
K	Black drum past record

2. The history of a machine number and a drum counter for each color is displayed by three cases.T

Display	Description
Machine History 1 - 3	Historical records of the machine number
Cnt History 1 - 3	Historical records of drum counter

Completion
Press the stop key. The screen for selecting a maintenance item No. is displayed.

</td></tr>
<tr><td>U123</td><td>

Displaying the transfer belt unit history

Description
Displays the past record of machine number and the transfer belt unit counter.
Purpose
To check the count value of machine number and the transfer counter.

Method
1. Press the start key.
   The history of a machine number and a transfer belt unit counter for each color is displayed by three cases.

Display	Description
Machine History 1 - 3	Historical records of the machine number
Count History 1 - 3	Historical records of transfer belt unit counter

Completion
Press the stop key. The screen for selecting a maintenance item No. is displayed.

</td></tr>
</table>

TONER
www.tonerplus.com.ua

<table>
<tr><th>Item No.</th><th>Description</th></tr>
<tr><td>U127</td><td>
Checking/clearing the transfer count

Description
Displays and clears the counts of the transfer counter.
Purpose
To check the count after replacement of the transfer belt unit or transfer roller. Also to clear the counts after replacing transfer roller.

Method
1. Press the start key. The current counts of the transfer counter is displayed.
<table>
<tr><th>Display</th><th>Description</th></tr>
<tr><td>Mid Trans</td><td>Transfer belt unit counter value</td></tr>
<tr><td>2nd Trans</td><td>Transfer roller counter value</td></tr>
</table>
Clearing
1. Select [Clear].
2. Press the start key. The counter value is cleared.

Setting
1. Change the counter value using the cursor left/right keys or numeric keys.
2. Press the start key. The counter value is set.

Completion
Press the stop key. The screen for selecting a maintenance item No. is displayed.
</td></tr>
<tr><td>U135</td><td>
Checking toner motor operation

Description
Drives toner motors.
Purpose
To check the operation of toner motors.

Remarks
When driving the toner motors long time or several times, developing section becomes the toner full and is locked.

Method
1. Press the start key.
2. Select [Toner].
3. Press the start key. The operation starts.

Completion
Press the stop key after operation stops. The screen for selecting a maintenance item No. is displayed.
</td></tr>
</table>

TONER
www.tonerplus.com.ua

<table>
<tr><th>Item No.</th><th>Description</th></tr>
<tr><td>U136</td><td>

Setting toner near end detection

Description
Sets the level that indicates the number of sheets that can be printed from occurrence of toner near end to toner empty.
Purpose
To change the setting to advance detection of near end if the interval from toner near end to toner empty seems too short.

Setting
1. Press the start key.
2. Select the item to be set.
3. Change the setting value using the cursor left/right keys or numeric keys.

<table>
<tr><th>Display</th><th>Description</th><th>Setting range</th><th>Initial setting</th></tr>
<tr><td>K</td><td>Setting the level of black toner</td><td>0 to 10*</td><td>0</td></tr>
<tr><td>CMY</td><td>Setting the level of cyan/magenta/yellow toner</td><td>0 to 10*</td><td>0</td></tr>
</table>

Increasing the setting makes the interval from toner near end to toner empty longer.
Decreasing the setting makes the interval from toner near end to toner empty shorter.
If 0 is set, toner near end will not be detected.
* : The change is not in the level of set value 5 to 10.

4. Press the start key. The value is set.

Completion
Press the stop key. The screen for selecting a maintenance item No. is displayed.

</td></tr>
<tr><td>U139</td><td>

Displaying the temperature and humidity outside the machine

Description
Displays the detected temperature and humidity outside the machine.
Purpose
To check the temperature and humidity outside the machine.

Method
1. Press the start key. The detected temperature and humidity are displayed.

<table>
<tr><th>Display</th><th>Description</th></tr>
<tr><td>External Temperature</td><td>External temperature (°C)</td></tr>
<tr><td>External Humidity</td><td>External humidity (g/m^3)</td></tr>
<tr><td>LSU Temp (K)</td><td>Internal temperature around the laser scanner unit (°C)</td></tr>
<tr><td>LSU Temp(COL)</td><td>Internal temperature around the transfer section (°C)</td></tr>
<tr><td>Dev Temp</td><td>Internal temperature around the developing section (°C)</td></tr>
</table>

Completion
Press the stop key. The screen for selecting a maintenance item No. is displayed.

</td></tr>
</table>

TONER
www.tonerplus.com.ua

Item No.	Description
U140	**Setting developer bias** **Description** Setting the value of various developer bias. **Purpose** To check and setting the value of developer bias. **Method** 1. Press the start key. 2. Select the item to be set or displayed.

Display	Description
Mag DC	Setting the value of magnet DC bias.
Sleeve DC	Setting the value of sleeve DC bias.
Clock Freq	Setting the value of clock frequency.
Clock Duty	Setting the value of clock duty.
AC Ctrl	Setting the value of AC control voltage.
On Timing	Setting the value of developer On timing.
Off Timing	Setting the value of developer Off timing.

Setting: [Mag DC/Sleeve DC/Clock Freq/Clock Duty/AC Ctrl]

1. Select the item to be set.
2. Change the setting value using the cursor left/right keys or numeric keys.

Display	Description	Initial setting
1st	Setting the value of yellow.	480/180/36/37/1500
2nd	Setting the value of cyan.	480/180/36/37/1500
3rd	Setting the value of magenta.	450/150/36/37/1500
4th	Setting the value of black.	450/150/36/37/1500
Remove 1st	Setting the value of remove yellow.	50/150/36/33/1150
Remove 2nd	Setting the value of remove cyan.	50/150/36/33/1150
Remove 3rd	Setting the value of remove magenta.	50/150/36/33/1150
Remove 4th	Setting the value of remove black.	50/150/36/33/1150
Remove 1st Half	Setting the value of remove yellow Half.	380/180/36/33/1150
Remove 2nd Half	Setting the value of remove cyan Half.	380/180/36/33/1150
Remove 3rd Half	Setting the value of remove magenta Half.	350/150/36/33/1150
Remove 4th Half	Setting the value of remove black Half.	350/150/36/33/1150

3. Press the start key. The value is set.

TONER
www.tonerplus.com.ua

<table>
<tr><th>Item No.</th><th>Description</th></tr>
<tr><td>U140</td><td>
Setting: [On Timing/On Timing]
1. Select the item to be set.
2. Change the setting value using the cursor left/right keys or numeric keys.
<table>
<tr><th>Display</th><th>Description</th><th>Setting range</th><th>Initial setting</th></tr>
<tr><td>1st</td><td>Setting the value of yellowt.</td><td>-500 to 500</td><td>0/0</td></tr>
<tr><td>2nd</td><td>Setting the value of cyan.</td><td>-500 to 500</td><td>0/0</td></tr>
<tr><td>3rd</td><td>Setting the value of magenta.</td><td>-500 to 500</td><td>0/0</td></tr>
<tr><td>4th</td><td>Setting the value of black.</td><td>-500 to 500</td><td>0/0</td></tr>
</table>
3. Press the start key. The value is set.

Completion
Press the stop key. The screen for selecting a maintenance item No. is displayed.
</td></tr>
<tr><td>U147</td><td>
Setting for toner applying operation

Description
Sets the mode for removing charged toner in the developer unit (T7 control: Toner applying operation).
Purpose
Changing settings are not required. However, when the documents with lower print density (e.g. less than 2%) should customarily printed in a great volume, mode must be changed.
If the charged toner stays inside the developer unit, density decreases.

Setting
1. Press the start key
2. Select the item to be set.
3. Change the setting value using the cursor left/right keys or numeric keys.
<table>
<tr><th>Display</th><th>Description</th><th>Setting range</th><th>Initial setting</th></tr>
<tr><td>T7</td><td>T7 Operational mode</td><td>0 to 1</td><td>0</td></tr>
<tr><td>Drum T7</td><td>Drum T7 operational mode</td><td>0 to 255</td><td>60</td></tr>
</table>
4. Press the start key. The setting is set.

Completion
Press the stop key. The screen for selecting a maintenance item No. is displayed.
</td></tr>
</table>

TONER
www.tonerplus.com.ua

<table>
<tr><th>Item No.</th><th>Description</th></tr>
<tr><td>U150</td><td>

Checking sensors for toner

Description
Displays the on-off status of each sensor or switch related to toner.
Purpose
To check if the sensors and switches operate correctly.

Method
1. Press the start key.
2. Select the item. The screen for executing each item is displayed.

<table>
<tr><th>Display</th><th>Description</th></tr>
<tr><td>T/C</td><td>Displays the state of the toner sensor.</td></tr>
<tr><td>Waste Box</td><td>Displays the state of the waste toner box.</td></tr>
</table>

Method: [T/C]
1. Turn each switch or sensor on and off manually to check the status.
   When a switch or sensor is detected to be in the ON position, the display for that switch or sensor will be “1”

<table>
<tr><th>Display</th><th>Switches and sensors</th></tr>
<tr><td>T/C Sensor 1st</td><td>Displays the state of the toner sensor (Yellow).</td></tr>
<tr><td>T/C Sensor 2nd</td><td>Displays the state of the toner sensor (Cyan).</td></tr>
<tr><td>T/C Sensor 3rd</td><td>Displays the state of the toner sensor (Magenta).</td></tr>
<tr><td>T/C Sensor 4th</td><td>Displays the state of the toner sensor (Black).</td></tr>
<tr><td>Motor</td><td>Drives developer motor, developer clutch.</td></tr>
</table>

2. To stop motor driving, press the stop key.

Method: [Waste Box]
1. Turn each switch or sensor on and off manually to check the status.
   When a switch or sensor is detected to be in the ON position, the display for that switch or sensor will be “1”

<table>
<tr><th>Display</th><th>Switches and sensors</th></tr>
<tr><td>Waste Box Sensor</td><td>Displays the state of the waste toner box.</td></tr>
<tr><td>Motor</td><td>Drives developer motor, developer clutch.</td></tr>
</table>

2. To stop motor driving, press the stop key.

Completion
Press the stop key. The screen for selecting a maintenance item No. is displayed.

</td></tr>
</table>

TONER
www.tonerplus.com.ua

Item No.	Description
U157	**Checking the developing drive time** **Description** Displays the developing drive time for checking a figure, which is used as a reference when correcting the toner control. **Purpose** To check the developing drive time after replacing the developing unit. **Method** 1. Press the start key. The developing drive time of each color is displayed.

Display	Description
C	Cyan developing drive time (min)
M	Magenta developing drive time (min)
Y	Yellow developing drive time (min)
K	Black developing drive time (min)

Setting

1. Select the item to be set.
2. Change the setting value using the cursor left/right keys or numeric keys.

Display	Description	Setting range	Initial setting
C	Cyan developing drive time (min)	0 to 59999	0
M	Magenta developing drive time (min)	0 to 59999	0
Y	Yellow developing drive time (min)	0 to 59999	0
K	Black developing drive time (min)	0 to 59999	0

3. Press the start key. The setting is set.

Completion

Press the stop key. The screen for selecting a maintenance item No. is displayed.

TONER
www.tonerplus.com.ua

<table>
<tr><th>Item No.</th><th>Description</th></tr>
<tr><td>U161</td><td>

Setting the fuser control temperature

Description
Changes the fuser control temperature and control temperature correction value and other set values.
Purpose
Normally no change is necessary. However, this mode can be used to prevent curling or creasing of paper, or solve a fuser problem on thick paper.

Setting
1. Press the start key.
2. Select the item to be set.
3. Change the setting value using the cursor left/right keys.

<table>
<tr><th rowspan="2">Display</th><th rowspan="2">Description</th><th rowspan="2">Setting range</th><th colspan="2">Initial setting</th></tr>
<tr><th>20ppm</th><th>25ppm</th></tr>
<tr><td>Copy Curb(Edge)</td><td>Prevention temperature of overtemperature rise under copy</td><td>100 to 250</td><td>210</td><td>210</td></tr>
<tr><td>Curb(Edge)</td><td>Prevention temperature of overtemperature rise</td><td>100 to 250</td><td>240</td><td>240</td></tr>
<tr><td>Return(Edge)</td><td>Return temperature of overtemperature rise</td><td>100 to 250</td><td>190</td><td>190</td></tr>
<tr><td>Ready(Edge)</td><td>Ready display temperature</td><td>0 to 200</td><td>95</td><td>100</td></tr>
<tr><td>Pressure(Press)</td><td>Pressurizing beginning temperature</td><td>0 to 200</td><td>85</td><td>90</td></tr>
<tr><td>High speed(Center)</td><td>Full speed shift temperature</td><td>0 to 200</td><td>110</td><td>115</td></tr>
<tr><td>Ready(Center)</td><td>Ready display temperature</td><td>100 to 200</td><td>135</td><td>140</td></tr>
<tr><td>Drive(Center)</td><td>The second stability temperature</td><td>100 to 200</td><td>140</td><td>145</td></tr>
<tr><td>Full speed(Center)</td><td>Print control temperature</td><td>100 to 200</td><td>140</td><td>145</td></tr>
<tr><td>Wait(Center)</td><td>Control temperature when being standing by</td><td>100 to 200</td><td>115</td><td>120</td></tr>
<tr><td>WarmUp Curb(Center)</td><td>Electric power control temperature at start-up</td><td>0 to 200</td><td>135</td><td>140</td></tr>
<tr><td>Curb(Center)</td><td>Prevention temperature of overtemperature rise</td><td>170 to 250</td><td>240</td><td>240</td></tr>
<tr><td>Low power(Center)</td><td>Low electric power control temperature</td><td>0 to 200</td><td>85</td><td>90</td></tr>
<tr><td>Ready(Press)</td><td>Ready display temperature</td><td>0 to 200</td><td>40</td><td>45</td></tr>
<tr><td>Curb(Press)</td><td>Prevention temperature of overtemperature rise</td><td>170 to 250</td><td>200</td><td>200</td></tr>
<tr><td>Wait Offset(Press)</td><td>Correction temperature when being standing by</td><td>0 to 200</td><td>85</td><td>90</td></tr>
</table>

4. Press the start key. The value is set.

</td></tr>
</table>

TONER www.tonerplus.com

<table>
<tr><th>Item No.</th><th>Description</th></tr>
<tr><td>U161</td><td>Completion
Press the stop key. The screen for selecting a maintenance item No. is displayed.</td></tr>
<tr><td>U167</td><td>Checking/setting the fuser count

Description
Displays and sets the fuser count for checking.
Purpose
To check or set the fuser count after replacement of the fuser unit.
Method
1. Press the start key. The fuser count is displayed.
<table>
<tr><th>Display</th><th>Description</th></tr>
<tr><td>Cnt</td><td>Fuser count value</td></tr>
</table>
Setting:[Cnt]
1. Press [Cnt].
2. Change the setting using the cursor left/right keys or numeric keys.
3. Press the start key. The setting is set.

Completion
Press the stop key. The screen for selecting a maintenance item No. is displayed.</td></tr>
<tr><td>U168</td><td>Confirmation/setting the fuser drive time

Description
Displays and settings the specification of fuser drive time for checking.
Purpose
To check or set the drive time of fuser unit after replacement of the fuser unit.

Method
1. Press the start key. The drive time of fuser unit is displayed.
<table>
<tr><th>Display</th><th>Description</th></tr>
<tr><td>Press</td><td>Counts of the fuser drive time (Pressing force)</td></tr>
<tr><td>Release</td><td>Counts of the fuser drive time (Decompression)</td></tr>
</table>
Setting
1. Select the item to be set.
2. Change the setting using the cursor left/right keys or numeric keys.
3. Press the start key. The value is set.

Completion
Press the stop key. The screen for selecting a maintenance item No. is displayed.</td></tr>
</table>

TONER
www.tonerplus.com.ua

<table>
<tr><th>Item No.</th><th>Description</th></tr>
<tr><td>U169</td><td>
Confirmation/setting the fuser power supply

Description
Displays and settings the specification of fuser power supply for checking.
Purpose
To check or set the specification of fuser power supply after replacement of the fuser power supply.

Method
1. Press the start key. The specification of fuser power supply is displayed.
<table>
<tr><th>Display</th><th>Description</th></tr>
<tr><td>Mode</td><td>Specification of fuser power supply
(1: 100V , 2: 200V , 3: 120V)</td></tr>
</table>
Setting
1. Change the setting using the cursor left/right keys or numeric keys.
2. Press the start key. The value is set.

Completion
Press the stop key. The screen for selecting a maintenance item No. is displayed.
</td></tr>
<tr><td>U199</td><td>
Displaying fuser heater temperature

Description
Displays the detected fuser temperature.
Purpose
To check the fuser temperature.

Method
1. Press the start key. The current setting is displayed.
<table>
<tr><th>Display</th><th>Description</th></tr>
<tr><td>Fix Press</td><td>Press roller center temperature (°C)</td></tr>
<tr><td>Fix Edge</td><td>Heat roller edge temperature (°C)</td></tr>
<tr><td>Fix Center</td><td>Heat roller center temperature (°C)</td></tr>
</table>
Completion
Press the stop key. The screen for selecting a maintenance mode No. is displayed.
</td></tr>
</table>

TONER
www.tonerplus.com.ua

<table>
<tr><th>Item No.</th><th>Description</th></tr>
<tr><td>U201</td><td>

Initializing the touch panel

Description
Automatically correct the positions of the X- and Y-axes of the touch panel.
Purpose
To automatically correct the display positions on the touch panel after it is replaced.

Method
1. Press the start key.
2. Select the [Initialize] or [Check].

<table>
<tr><th>Display</th><th>Description</th></tr>
<tr><td>Initialize</td><td>Adjusts the display on the panel automatically</td></tr>
<tr><td>Check</td><td>Checks the display on the touch panel</td></tr>
</table>

Method: [Initialize]
1. Press the start key.
2. Press the center of the + keys. Be sure to press three + keys displayed in order.
   The touch panel is adjusted automatically.
3. Press the indicated three + keys, and then check the display.
4. Press the stop key. The screen for selecting a maintenance item No. is displayed.

Method: [Check]
1. Press the start key.
2. Press the indicated three + keys, and then check the display.
   When adjusting the display, press [Initialize] to execute the adjustment automatically.
3. Press the stop key. The screen for selecting a maintenance item No. is displayed.

Completion
Press the stop key. The screen for selecting a maintenance item No. is displayed.

</td></tr>
</table>

TONER
www.tonerplus.com.ua

<table>
<tr><th>Item No.</th><th>Description</th></tr>
<tr><td>U203</td><td>

Checking DP operation

Description
Simulates the original conveying operation separately in the DP.
Purpose
To check the DP operation.

Method
1. Press the start key.
2. Place an original in the DP if running this simulation with paper.
3. Select the speed to be operated.

<table>
<tr><th>Display</th><th>Description</th></tr>
<tr><td>Normal Speed</td><td>Normal reading (600 dpi)</td></tr>
<tr><td>High Speed</td><td>High-speed reading</td></tr>
</table>

4. Select the item to be operated.

<table>
<tr><th>Display</th><th>Description</th></tr>
<tr><td>CCD ADP (Non-P)</td><td>Without paper, single-sided original of CCD (continuous operation)</td></tr>
<tr><td>CCD ADP</td><td>With paper, single-sided original of CCD</td></tr>
<tr><td>CCD RADP (Non-P)</td><td>Without paper, double-sided original of CCD (continuous operation)</td></tr>
<tr><td>CCD RADP</td><td>With paper, double-sided original of CCD</td></tr>
</table>

5. Press the start key. The operation starts.
6. To stop continuous operation, press the stop key.

Completion
Press the stop key. The screen for selecting a maintenance item No. is displayed.

</td></tr>
</table>

TONER
www.tonerplus.com.ua

<table>
<tr><th>Item No.</th><th>Description</th></tr>
<tr><td>U207</td><td>
Checking the operation panel keys

Description
Checks operation of the operation panel keys.
Purpose
To check operation of all the keys and LEDs on the operation panel.

Method
1. Press the start key. The screen for executing is displayed.
2. [Count0] is displayed and the leftmost LED on the operation panel lights.
3. As the keys lined up in the same line as the lit indicator are pressed in the order from the top to the bottom, the figure shown on the touch panel increases in increments of 1. When all the keys in that line are pressed and if there are any LEDs corresponding to the keys in the line on the immediate right, the top LED in that line will light.
4. When all the keys on the operation panel have been pressed, all the LEDs light for up to 10 seconds.

Completion
Press the stop key. The screen for selecting a maintenance item No. is displayed.
</td></tr>
<tr><td>U222</td><td>
Setting the IC card type

Description
Sets the type of IC card.
Purpose
To change the type of IC card.

Setting
1. Press the start key.
2. Select the item.
<table>
<tr><th>Display</th><th>Description</th></tr>
<tr><td>Other</td><td>The type of IC card is SSFC.</td></tr>
<tr><td>SSFC</td><td>The type of IC card is not SSFC.</td></tr>
</table>
* : Initial setting: Other
3. Press the start key. The setting is set.

Completion
Press the stop key. The screen for selecting a maintenance item No. is displayed.
</td></tr>
</table>

TONER
www.tonerplus.com.ua

<table>
<tr><th>Item No.</th><th>Description</th></tr>
<tr><td>U243</td><td>

Checking the operation of the DP motors

Description
Turns the motors or clutches in the DP on.
Purpose
To check the operation of the DP motors and clutches.

Method
1. Press the start key.
2. Select the item to be operated.
3. Press the start key. The operation starts.

<table>
<tr><th>Display</th><th>Description</th></tr>
<tr><td>Conv Motor</td><td>DP paper feed motor (DPPFM) is turned on</td></tr>
<tr><td>Rev Motor</td><td>DP switchback motor (DPSBM) is turned on</td></tr>
<tr><td>Feed Clutch</td><td>DP paper feed clutch (DPPFCL) is turned on</td></tr>
<tr><td>Regist Clutch</td><td>DP registration clutch (DPRCL) is turned on</td></tr>
</table>

4. To turn each motor off, press the stop key.

Completion
Press the stop key when operation stops. The screen for selecting a maintenance item No. is displayed.

</td></tr>
</table>

TONER
www.tonerplus.com.ua

<table>
<tr><th>Item No.</th><th>Description</th></tr>
<tr><td>U244</td><td>

Checking the DP switches

Description
Displays the status of the respective switches in the DP.
Purpose
To check if the respective switches in the DP operate correctly.

Method
1. Press the start key.
2. Turn each switch or sensor on and off manually to check the status.
   When a switch or sensor is detected to be in the ON position, the display for that switch or sensor will be “1”.

<table>
<tr><th>Display</th><th>Switches and sensors</th></tr>
<tr><td>Switch 00000000</td><td></td></tr>
<tr><td>1st digit</td><td>DP interlock switch (DPILSW)</td></tr>
<tr><td>2nd digit</td><td>DP open/close sensor (DPOCS)</td></tr>
<tr><td>3rd digit</td><td>DP paper feed sensor (DPPFS)</td></tr>
<tr><td>4th digit</td><td>DP registration sensor (DPRS)</td></tr>
<tr><td>5th digit</td><td>DP timing sensor (DPTS)</td></tr>
<tr><td>6th digit</td><td>DP original sensor (DPOS)</td></tr>
<tr><td>7th digit</td><td>DP original size length sensor (DPOLS)</td></tr>
<tr><td>8th digit</td><td>-</td></tr>
</table>

Completion
Press the stop key. The screen for selecting a maintenance item No. is displayed.

</td></tr>
</table>

TONER
www.tonerplus.com.ua

<table>
<tr><th>Item No.</th><th>Description</th></tr>
<tr><td>U250</td><td>

Checking/clearing the maintenance cycle

Description
Changes preset values for maintenance cycle and automatic grayscale adjustment.
Purpose
Provides changing the time when the message to acknowledge to conduct maintenance and automatic grayscale adjustment is periodically displayed.

Setting
1. Press the start key.
2. Select the item to be changed.
3. Change the setting using the cursor left/right keys or numeric keys.

<table>
<tr><th>Display</th><th>Description</th><th>Setting range</th><th>Initial setting</th></tr>
<tr><td>M.Cnt A</td><td>Preset values for maintenance cycle (A)</td><td>0 to 9999999</td><td>200000</td></tr>
<tr><td>M.Cnt B</td><td>Preset values for maintenance cycle (B)</td><td>0 to 9999999</td><td>200000</td></tr>
<tr><td>M.Cnt HT</td><td>Preset values for automatic grayscale adjustment</td><td>0 to 9999999</td><td>0</td></tr>
</table>

4. Press the start key. The setting value is set.

Clearing
1. Select [Clear].
2. Press the start key. The setting value is cleared.

Completion
Press the stop key. The screen for selecting a maintenance item No. is displayed.

</td></tr>
</table>

TONER
www.tonerplus.com.ua

<table>
<tr><th>Item No.</th><th>Description</th></tr>
<tr><td>U251</td><td>

Checking/clearing the maintenance counter

Description
Displays and clears or changes the maintenance count and automatic grayscale adjustment count.
Purpose
To verify the maintenance counter count and automatic grayscale count. Also to clear the count during maintenance service.

Setting
1. Press the start key.
2. Select the item to be changed.
3. Change the setting using the cursor left/right keys or numeric keys.

<table>
<tr><th>Display</th><th>Description</th><th>Setting range</th><th>Initial setting</th></tr>
<tr><td>M.Cnt A</td><td>Count value for maintenance cycle (A)</td><td>0 to 9999999</td><td>0</td></tr>
<tr><td>M.Cnt B</td><td>Count value for maintenance cycle (B)</td><td>0 to 9999999</td><td>0</td></tr>
<tr><td>M.Cnt HT</td><td>Automatic grayscale adjustment count</td><td>0 to 9999999</td><td>0</td></tr>
</table>

4. Press the start key. The setting value is set.

Clearing
1. Select [Clear].
2. Press the start key. The setting value is cleared.

Completion
Press the stop key. The screen for selecting a maintenance item No. is displayed.

</td></tr>
</table>

TONER
www.tonerplus.com.ua

<table>
<tr><th>Item No.</th><th>Description</th></tr>
<tr><td>U252</td><td>

Setting the destination

Description
Switches the operations and screens of the machine according to the destination.
Purpose
To be executed after initializing the backup RAM, in order to return the setting to the value before replacement or initialization.

Method
1. Press the start key.
2. Select the destination.

<table>
<tr><th>Display</th><th>Description</th></tr>
<tr><td>Japan Metric</td><td>Metric (Japan) specifications</td></tr>
<tr><td>Inch</td><td>Inch (North America) specifications</td></tr>
<tr><td>Europe Metric</td><td>Metric (Europe) specifications</td></tr>
<tr><td>Asia Pacific</td><td>Metric (Asia Pacific) specifications</td></tr>
<tr><td>Australia</td><td>Australia specifications</td></tr>
<tr><td>China</td><td>China specifications</td></tr>
<tr><td>Korea</td><td>Korea specifications</td></tr>
</table>

3. Press the start key.
4. Turn the main power switch off and on.
   * : An error code is displayed in case of an initialization error.
   When errors occurred, turn main power switch off then on, and execute initialization using maintenance item U252.

Error codes

<table>
<tr><th>Codes</th><th>Description</th></tr>
<tr><td>0001</td><td>Entity error</td></tr>
<tr><td>0002</td><td>Controller error</td></tr>
<tr><td>0003</td><td>OS error</td></tr>
<tr><td>0020</td><td>Engine error</td></tr>
<tr><td>0040</td><td>Scanner error</td></tr>
</table>

</td></tr>
</table>

TONER
www.tonerplus.com.ua

<table>
<tr><th>Item No.</th><th>Description</th></tr>
<tr><td>U253</td><td>
Switching between double and single counts

Description
Switches the count system for the total counter and other counters.
Purpose
Used to select, according to the preference of the user (copy service provider), if folio size paper is to be counted as one sheet (single count) or two sheets (double count).

Setting
1. Press the start key.
2. Select the item to set.
<table>
<tr><th>Display</th><th>Description</th></tr>
<tr><td>Color</td><td>Count system of color mode</td></tr>
<tr><td>B/W</td><td>Count system of black/white mode</td></tr>
</table>
3. Select the count system.
<table>
<tr><th>Display</th><th>Description</th></tr>
<tr><td>SGL (All)</td><td>Single count for all size paper</td></tr>
<tr><td>DBL (A3/Ledger)</td><td>Double count for A3/Ledger size or larger</td></tr>
<tr><td>DBL (B4)</td><td>Double count for B4 size or larger</td></tr>
<tr><td>DBLFolio)</td><td>Double count for Folio size or larger</td></tr>
</table>
* : Initial setting: DBL (A3/Ledger)
4. Press the start key. The setting is set.

Completion
Press the stop key. The screen for selecting a maintenance item No. is displayed.
</td></tr>
<tr><td>U260</td><td>
Selecting the timing for copy counting

Description
Changes the copy count timing for the total counter and other counters.
Purpose
To be set according to user request.

Setting
1. Press the start key.
2. Select the copy count timing.
<table>
<tr><th>Display</th><th>Description</th></tr>
<tr><td>Feed</td><td>When secondary paper feed starts</td></tr>
<tr><td>Eject</td><td>When the paper is ejected</td></tr>
</table>
* : Initial setting: Eject
3. Press the start key. The setting is set.

Completion
Press the stop key. The screen for selecting a maintenance item No. is displayed.
</td></tr>
</table>

TONER
www.tonerplus.com.ua

<table>
<tr><th>Item No.</th><th>Description</th></tr>
<tr><td>U265</td><td>
Setting OEM purchaser code
Description
Sets the OEM purchaser code.
Purpose
Sets the code when replacing the main PWB and the like.

Setting
1. Press the start key.
2. Change the preset value using the numeric keys.
3. Press the start key. The setting is set.
4. Turn the main power switch off and on.
</td></tr>
<tr><td>U285</td><td>
Setting service status page

Description
Determines displaying the print coverage report on reporting.
Purpose
According to user request, changes the setting.

Setting
1. Press the start key.
2. Select [On] or [Off].
<table>
<tr><th>Display</th><th>Description</th></tr>
<tr><td>On</td><td>Displays the print coverage</td></tr>
<tr><td>Off</td><td>Not to display the print coverage</td></tr>
</table>
* : Initial setting: On
3. Press the start key. The setting is set.

Completion
Press the stop key. The screen for selecting a maintenance item No. is displayed.
</td></tr>
<tr><td>U325</td><td>
Setting the paper interval

Description
Determines the interval between pages and the toner replenishment amount when printing pages with high print coverage.
Purpose
Modify the settings only if a spotted background or uneven density appears when printing pages with high print coverage.

Method
1. Press the start key.
2. Change the setting using the cursor left/right keys or numeric keys.
<table>
<tr><th>Display</th><th>Description</th><th>Setting range</th><th>Initial setting</th></tr>
<tr><td>Rank</td><td>Setting the rank</td><td>0 to 4</td><td>1</td></tr>
</table>
3. Press the start key. The setting value is set.

Completion
Press the stop key. The screen for selecting a maintenance item No. is displayed.
</td></tr>
</table>

TONER www.tonerplus.com.ua

Item No.	Description
U326	**Setting the black line cleaning indication** **Description** Sets whether to display the cleaning guidance when detecting the black line. **Purpose** Displays the cleaning guidance in order to make the call for service with the black line decrease by the rubbish on the contact glass when scanning from the DP. **Method** 1. Press the start key. 2. Select the item to set. The screen for setting each item is displayed. **Setting: [Black Line Mode]** 1. Select [On] or [Off]. * : Initial setting: On 2. Press the start key. The setting is set. **Setting: [Black Line Cnt]** 1. Select [Cnt]. 2. Change the setting value using the cursor left/right keys or numeric keys. * : When setting is 0, the black line cleaning indication is displayed only if the black line is detected. 3. Press the start key. The value is set. **Completion** Press the stop key. The screen for selecting a maintenance item No. is displayed.

Display	Description
Black Line Mode	Black line cleaning guidance ON/OFF setting
Black Line Cnt	Setting counts of the cleaning guidance indication

Display	Description
On	Displays the cleaning guidance
Off	Not to display the cleaning guidance

Display	Description	Setting range	Initial setting
Cnt	Setting counts of the cleaning guidance indication (x 1000 sheets)	0 to 255	8

TONER
www.tonerplus.com.ua

<table>
<tr><th>Item No.</th><th>Description</th></tr>
<tr><td>U332</td><td>
Setting the size conversion factor

Description
Sets the coefficient of nonstandard sizes in relation to the A4/Letter size. The coefficient set here is used to convert the black ratio in relation to the A4/Letter size and to display the result in user simulation.
Purpose
To set the coefficient for converting the black ratio for nonstandard sizes in relation to the A4/Letter size.

Setting
1. Press the start key.
2. Select [Rate].
3. Change the setting using the cursor left/right keys or numeric keys.
<table>
<tr><th>Display</th><th>Description</th><th>Setting range</th><th>Initial setting</th></tr>
<tr><td>Rate</td><td>Size parameter</td><td>0.1 to 3.0</td><td>1.0</td></tr>
</table>
4. Press the start key. The value is set.

Completion
Press the stop key. The screen for selecting a maintenance item No. is displayed.
</td></tr>
<tr><td>U341</td><td>
Specific paper feed location setting for printing function

Description
Sets a paper feed location specified for printer output.
Purpose
To use a paper feed location only for printer output.
A paper feed location specified for printer output cannot be used for copy output.

Method
1. Press the start key.
2. Select the paper feed location for the printer.
3. Select [On] or [Off] using the cursor left/right keys.
<table>
<tr><th>Display</th><th>Description</th></tr>
<tr><td>Cassette1</td><td>Cassette 1</td></tr>
<tr><td>Cassette2</td><td>Cassette 2 (optional paper feeder)</td></tr>
<tr><td>Cassette3</td><td>Cassette 3 (optional paper feeder)</td></tr>
</table>
* : When an optional paper feed device is not installed, the corresponding count is not displayed.
4. Press the start key. The setting is set.

Completion
Press the stop key. The screen for selecting a maintenance item No. is displayed.
</td></tr>
</table>

TONER
www.tonerplus.com.ua

<table>
<tr><th>Item No.</th><th>Description</th></tr>
<tr><td>U343</td><td>
Switching between duplex/simplex copy mode

Description
Switches the initial setting between duplex and simplex copy.
Purpose
To be set according to frequency of use: set to the more frequently used mode.

Setting
1. Press the start key.
2. Select [On] or [Off].
<table>
<tr><th>Display</th><th>Description</th></tr>
<tr><td>On</td><td>Duplex copy</td></tr>
<tr><td>Off</td><td>Simplex copy</td></tr>
</table>
* : Initial setting: Off
3. Press the start key. The setting is set.

Completion
Press the stop key. The screen for selecting a maintenance item No. is displayed.
</td></tr>
<tr><td>U345</td><td>
Setting the value for maintenance due indication

Description
Sets when to display a message notifying that the time for maintenance is about to be reached, by setting the number of copies that can be made before the current maintenance cycle ends. When the difference between the number of copies of the maintenance cycle and that of the maintenance count reaches the set value, the message is displayed.
Purpose
To change the time for maintenance due indication.

Setting
1. Press the start key.
2. Select [Cnt].
3. Change the setting using the cursor left/right keys or numeric keys.
<table>
<tr><th>Display</th><th>Description</th><th>Setting range</th><th>Initial setting</th></tr>
<tr><td>Cnt</td><td>Time for maintenance due indication
(Remaining number of copies that can be made before the current maintenance cycle ends)</td><td>0 to 9999</td><td>0</td></tr>
</table>
4. Press the start key. The value is set.

Clearing
1. Select [Clear].
2. Press the start key. The value is cleared.

Completion
Press the stop key. The screen for selecting a maintenance item No. is displayed.
</td></tr>
</table>

TONER
www.tonerplus.com.ua

Item No.	Description
U402	**Adjusting margins of image printing**

Description
Adjusts margins for image printing.
Purpose
Make the adjustment if margins are incorrect.

Adjustment
1. Press the start key.
2. Press the system menu key.
3. Press the start key to output a test pattern.
4. Press the system menu key.
5. Select the item to be adjusted.

Display	Description	Setting range	Initial setting	Change in value per step
Lead	Printer leading edge margin	0 to 10.0	3.0	0.1 mm
A Margin	Printer left margin	0 to 10.0	2.5	0.1 mm
C Margin	Printer right margin	0 to 10.0	2.5	0.1 mm
Trail	Printer trailing edge margin	0 to 10.0	5.0	0.1 mm

6. Change the setting value using the cursor left/right keys or numeric keys.
   Increasing the value makes the margin wider, and decreasing it makes the margin narrower.

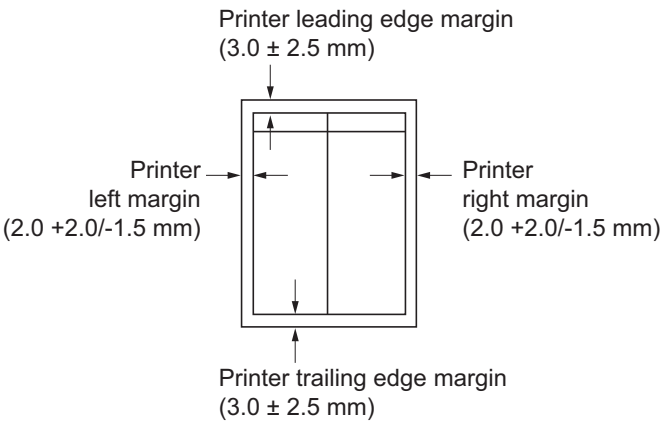

Figure 1-3-14

7. Press the start key. The value is set.

Caution
Check the copy image after the adjustment. If the image is still incorrect, perform the following adjustments in maintenance mode.

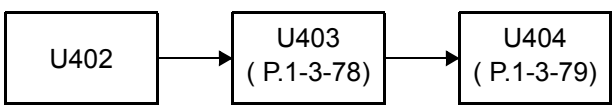

Completion
Press the stop key. The screen for selecting a maintenance item No. is displayed.

TONER
www.tonerplus.com.ua

Item No.	Description
U403	**Adjusting margins for scanning an original on the contact glass**

Description
Adjusts margins for scanning the original on the contact glass.
Purpose
Perform the adjustment if margins are incorrect.

Adjustment
1. Press the start key.
2. Press the system menu key.
3. Place an original and press the start key to make a test copy.
4. Press the system menu key.
5. Select the item to be adjusted.

Display	Description	Setting range	Initial setting	Change in value per step
A Margin	Scanner left margin	0 to 10.0	2.0	0.5 mm
B Margin	Scanner leading edge margin	0 to 10.0	2.0	0.5 mm
C Margin	Scanner right margin	0 to 10.0	2.0	0.5 mm
D Margin	Scanner trailing edge margin	0 to 10.0	2.0	0.5 mm

6. Change the setting value using the cursor left/right keys or numeric keys.
   Increasing the value makes the margin wider, and decreasing it makes the margin narrower.

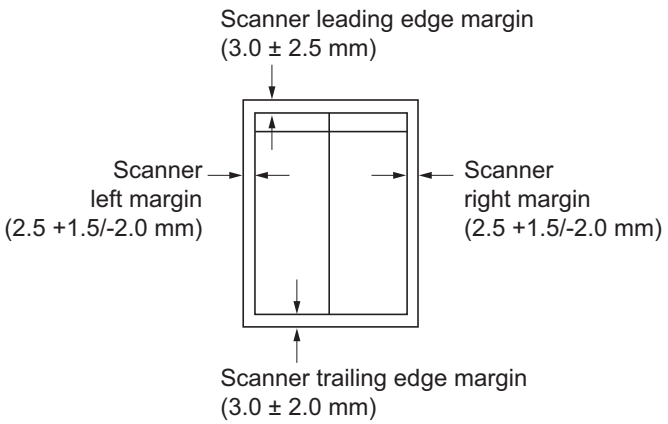

Figure 1-3-15

7. Press the start key. The value is set.

Caution
Check the copy image after the adjustment. If the image is still incorrect, perform the following adjustments in maintenance mode.

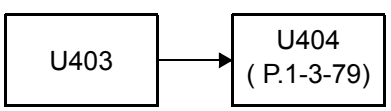

Completion
Press the stop key. The indication for selecting a maintenance item No. appears.

TONER
www.tonerplus.com.ua

Item No.	Description
U404	**Adjusting margins for scanning an original from the DP**

Description
Adjusts margins for scanning the original from the DP.
Purpose
Perform the adjustment if margins are incorrect.

Caution
Before making this adjustment, ensure that the following adjustments have been made in maintenance mode

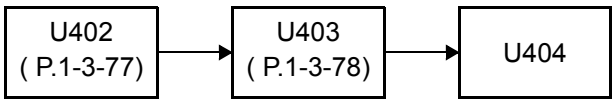

Adjustment
1. Press the start key.
2. Press the system menu key.
3. Place an original on the DP and press the start key to make a test copy.
4. Press the system menu key.
5. Select the item to be adjusted.

Display	Description	Setting range	Initial setting	Change in value per step
A Margin	DP left margin	0 to 10.0	3.0	0.5 mm
B Margin	DP leading edge margin	0 to 10.0	2.5	0.5 mm
C Margin	DP right margin	0 to 10.0	3.0	0.5 mm
D Margin	DP trailing edge margin	0 to 10.0	4.0	0.5 mm

6. Change the setting value using the cursor left/right keys or numeric keys.
   Increasing the value makes the margin wider, and decreasing it makes the margin narrower.

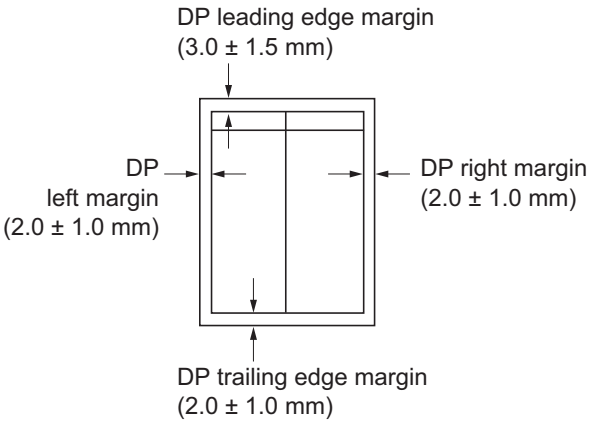

Figure 1-3-16

7. Press the start key. The value is set.

Completion
Press the stop key. The screen for selecting a maintenance item No. is displayed.

TONER
www.tonerplus.com.ua

Item No.	Description
U407	**Adjusting the leading edge registration for memory image printing**

Description
Adjusts the leading edge registration during memory copying.
Purpose
Perform the following adjustment if there is a regular error between the leading edge of the copy image on the front face and that on the reverse face during duplex switchback copying.

Caution
Before Performing this adjustment, ensure that the following adjustments have been made in maintenance mode.

U034 (P.1-3-24) → U402 (P.1-3-77) → U066 (P.1-3-33) → U403 (P.1-3-78) → U071 (P.1-3-38) →
U404 (P.1-3-79) → U407

Adjustment
1. Press the start key.
2. Press the system menu key.
3. Place an original and press the start key to make a test copy.
4. Press the system menu key.
5. Select [Adj Data].

Display	Description	Setting range	Initial setting	Change in value per step
Adj Data	Leading edge registration for memory image printing	-47 to 47	0	0.1 mm

6. Change the setting value using the cursor left/right keys or numeric keys.
   For copy example 1, decrease the value. For copy example 2, increase the value.

Figure 1-3-17

7. Press the start key. The value is set.

Completion
Press the stop key. The screen for selecting a maintenance item No. is displayed.

TONER
www.tonerplus.com.ua

<table>
<tr><th>Item No.</th><th>Description</th></tr>
<tr><td>U411</td><td>

Adjusting the scanner automatically

Description
Uses a specified original and automatically adjusts the following items in the scanner and the DP scanning sections.
Scanner section: Original size magnification, leading edge timing, center line, input gamma, input gamma in monochrome mode and matrix
DP scanning section: Original size magnification, leading edge timing, center line
Purpose
To perform automatic adjustment of various items in the scanner and the DP scanning sections.

Method
1. Press the start key.
2. Select the item.

<table>
<tr><th>Display</th><th>Description</th><th>Original to be used for adjustment (P/N)</th></tr>
<tr><td>Table</td><td>Automatic adjustment in the scanner section</td><td>7505000005</td></tr>
<tr><td>DP</td><td>Automatic adjustment in the DP scanning section:</td><td>302AC68243</td></tr>
<tr><td>All</td><td>Performs automatic adjustment in the DP scanning section following automatic adjustment in the scanner section</td><td>7505000005/ 302AC68243</td></tr>
<tr><td>Target</td><td>Set-up for obtaining the target value</td><td>-</td></tr>
</table>

Method: Table
To manually enter the target value
1. Enter the target values which are shown on the specified original (P/N: 7505000005) executing maintenance item U425.
2. Set a specified original (P/N: 7505000005) on the platen.
3. Enter maintenance item U411.
4. Select [Target].
5. Select [U425] using the cursor left/right keys.
6. Select [Table].
7. Press the start key. Auto adjustment starts.

To manually enter the target value
The accuracy of adjustment is worse than the manual entry.
1. Set a specified original (P/N: 7505000005) on the platen.
2. Enter maintenance item U411.
3. Select [Target].
4. Select [Auto] using the cursor left/right keys.
5. Select [Table].
6. Press the start key. Auto adjustment starts.

* : When automatic adjustment has normally completed, [OK] is displayed. If a problem occurs during auto adjustment, [NG XX] (XX is replaced by an error code) is displayed and operation stops. Should this happen, determine the details of the problem and repeat the procedure from the beginning.

</td></tr>
</table>

TONER www.tonerplus.com.ua

<table>
<tr><th>Item No.</th><th>Description</th></tr>
<tr><td>U411</td><td>
Method: DP
1. Select [DP].
2. Set a specified original (P/N: 302AC68243) in the DP.
* : When running this test chart, you first must clean the feed rollers with alcohol and ensure the DP width guides are correctly positioned against the original.
3. Press the start key. Auto adjustment starts.
* : When automatic adjustment has normally completed, [OK] is displayed. If a problem occurs during auto adjustment, [NG XX] (XX is replaced by an error code) is displayed and operation stops. Should this happen, determine the details of the problem and repeat the procedure from the beginning.

Error Codes
<table>
<tr><th>Codes</th><th>Description</th></tr>
<tr><td>00</td><td>Automatic adjustment success</td></tr>
<tr><td>01</td><td>Black band detection error (scanner leading edge registration)</td></tr>
<tr><td>03</td><td>Black band detection error (scanner main scanning direction magnification)</td></tr>
<tr><td>04</td><td>Black band is not detected (scanner leading edge registration)</td></tr>
<tr><td>05</td><td>Black band is not detected (scanner center line)</td></tr>
<tr><td>06</td><td>Black band is not detected (scanner main scanning direction magnification)</td></tr>
<tr><td>07</td><td>Black band is not detected (scanner auxiliary scanning direction magnification)</td></tr>
<tr><td>08</td><td>Black band is not detected (DP main scanning direction magnification far end)</td></tr>
<tr><td>09</td><td>Black band is not detected (DP main scanning direction magnification near end)</td></tr>
<tr><td>0a</td><td>Black band is not detected (DP auxiliary scanning direction magnification leading edge)</td></tr>
<tr><td>0b</td><td>Black band is not detected (DP auxiliary scanning direction magnification leading edge original check)</td></tr>
<tr><td>0c</td><td>Black band is not detected (DP auxiliary scanning direction trailing edge)</td></tr>
<tr><td>0d</td><td>White band is not detected (DP auxiliary scanning direction trailing edge 2)</td></tr>
<tr><td>0e</td><td>DMA time out</td></tr>
<tr><td>0f</td><td>Auxiliary scanning direction magnification error</td></tr>
<tr><td>10</td><td>Auxiliary scanning direction leading edge detection error</td></tr>
<tr><td>11</td><td>Auxiliary scanning direction trailing edge detection error</td></tr>
<tr><td>12</td><td>Auxiliary scanning direction skew 1.5 error</td></tr>
<tr><td>13</td><td>Maintenance request error</td></tr>
<tr><td>14</td><td>Main scanning direction center line error</td></tr>
<tr><td>15</td><td>Main scanning direction skew 1.5 error</td></tr>
<tr><td>16</td><td>Main scanning direction magnification error</td></tr>
<tr><td>17</td><td>Service call error</td></tr>
<tr><td>18</td><td>DP paper misfeed error</td></tr>
</table>
</td></tr>
</table>

TONER
www.tonerplus.com.ua

Item No.	Description
U411	

Codes	Description
1a	Original error (Dirt of the original for adjustment and damage)
1b	Original error (scanner input gamma adjustment)
1c	Original error (scanner matrix adjustment)
63	TestRAW acquisition completion

Completion

Press the stop key. The screen for selecting a maintenance item is displayed.

TONER
www.tonerplus.com.ua

<table>
<tr><th>Item No.</th><th>Description</th></tr>
<tr><td>U425</td><td>

Setting the target

Description
Enters the lab values that is indicated on the back of the chart (P/N: 7505000005) used for adjustment.
Purpose
Performs data input in order to correct for differences in originals during automatic adjustment.

Method
1. Press the start key.
2. Select the item to be set.

<table>
<tr><th>Display</th><th>Description</th></tr>
<tr><td>White</td><td>Setting the white patch for the original for adjustment</td></tr>
<tr><td>Black</td><td>Setting the black patch for the original for adjustment</td></tr>
<tr><td>Gray1</td><td>Setting the Gray1 patch for the original for adjustment</td></tr>
<tr><td>Gray2</td><td>Setting the Gray2 patch for the original for adjustment</td></tr>
<tr><td>Gray3</td><td>Setting the Gray3 patch for the original for adjustment</td></tr>
<tr><td>C</td><td>Setting the cyan patch for the original for adjustment</td></tr>
<tr><td>M</td><td>Setting the magenta patch for the original for adjustment</td></tr>
<tr><td>Y</td><td>Setting the yellow patch for the original for adjustment</td></tr>
<tr><td>R</td><td>Setting the red patch for the original for adjustment</td></tr>
<tr><td>G</td><td>Setting the green patch for the original for adjustment</td></tr>
<tr><td>B</td><td>Setting the blue patch for the original for adjustment</td></tr>
<tr><td>Adjust Original</td><td>Setting the main and auxiliary scanning directions</td></tr>
</table>

3. Select the item to be set.

<table>
<tr><th>Display</th><th>Description</th><th>Setting range</th></tr>
<tr><td>L</td><td>Setting the L value</td><td>0.0 to 100.0</td></tr>
<tr><td>a</td><td>Setting the a value</td><td>-200.0 to 200.0</td></tr>
<tr><td>b</td><td>Setting the b value</td><td>-200.0 to 200.0</td></tr>
</table>

4. Enters the value that is indicated on the back of the chart using the cursor left/right keys or numeric keys.
5. Press the start key. The value is set.

</td></tr>
</table>

TONER
www.tonerplus.com.ua

Item No.	Description
U425	**Setting: [Adjust Original]** 1. Measure the distance from the leading edge to the top of black belt 1 of the original at A, B and C. Measurement procedure 1) Measure the distance from the leading edge to the top of black belt 1 of the original at A (30 mm from the left edge), B (148.5 mm from the left edge) and C (267 mm from the left edge), respectively. 2) Apply the following formula for the values obtained: ((A + B + C) / 3) 2. Enter the values solved using the cursor left/right keys or numeric keys in [Dist1]. 3. Press the start key. The value is set. 4. Measure the distance from the left edge to the right edge black belt 2 of the original at F. Measurement procedure 1) Measure the distance from the left edge to the right edge black belt 2 of the original at F (15 mm from the top edge of black belt 1). 5. Enter the values using the cursor left/right keys or numeric keys in [Dist2]. 6. Press the start key. The value is set. 7. Measure the distance from the top edge of black belt 1 to the bottom of black belt 3 of the original at D and E. 1) Measure the distance from the top edge of black belt 1 to the bottom of black belt 3 of the original at D (30 mm from the left edge) and E (267 mm from the left edge), respectively. 2) Apply the following formula for the values obtained: (D/2 + E/2) 8. Enter the measured value using the cursor left/right keys or numeric keys in [Dist3]. 9. Press the start key. The value is set. 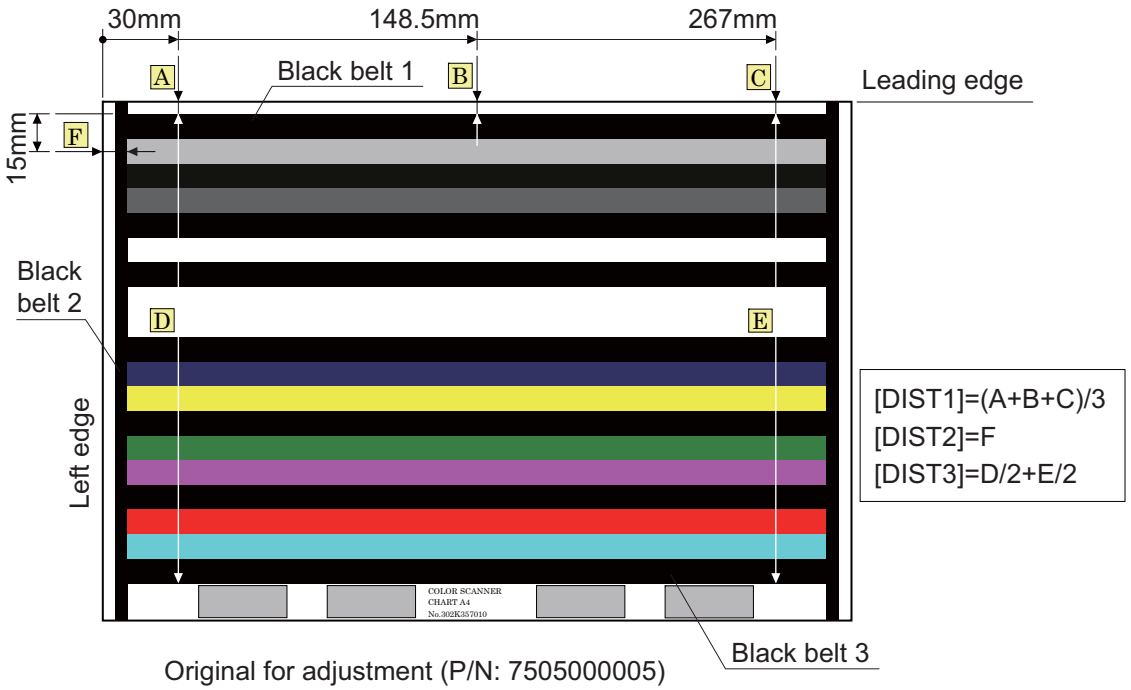 **Figure 1-3-18** **Completion** Press the stop key. The screen for selecting a maintenance item No. is displayed.

TONER
www.tonerplus.com.ua

Item No.	Description
U429	**Setting the offset for the color balance** **Description** Displays and changes the density for each color during copying in the various image quality modes. **Purpose** To change the balance for each color. **Method** 1. Press the start key. 2. Select the image quality mode. The setting screen for the selected item is displayed.

Display	Description
Text + Photo	Density of each color in the text & photo mode
Photo	Density of each color in the photo mode
Text	Density of each color in the text mode
Graphics/Map	Density of each color in the graphics/map mode
Copy/Print out	Density of each color in the printed document mode

Setting
1. Select the item to be set.
2. Change the setting value using the cursor left/right keys or numeric keys.

Display	Description	Setting range	Initial setting
C	Value of the cyan setting	-5 to 5	0
M	Value of the magenta setting	-5 to 5	0
Y	Value of the yellow setting	-5 to 5	0
K	Value of the black setting	-5 to 5	0

   Increasing the value darkens the density and decreasing it lightens the density.
3. Press the start key. The value is set.

Supplement
While this maintenance item is being executed, copying from an original is available in interrupt copying mode (which is activated by pressing the system menu key).

Completion
Press the stop key. The screen for selecting a maintenance item No. is displayed.

TONER
www.tonerplus.com.ua

<table>
<tr><th>Item No.</th><th>Description</th></tr>
<tr><td>U432</td><td>

Setting the center offset for the exposure

Description
Sets the offset value for the setting data for exposure centering adjustment under user simulation. For example, if the value for the exposure centering adjustment is set to -1 and you change the offset value to +2, image processing is performed as though the exposure centering adjustment setting is +1.
Purpose
Set according to the preference of the user.

Setting
1. Press the start key.
2. Select the item to be set. The setting screen for the selected item is displayed.

<table>
<tr><th>Display</th><th>Description</th></tr>
<tr><td>Color</td><td>Exposure offset setting for the color mode</td></tr>
<tr><td>B/W</td><td>Exposure offset setting for the black and white mode</td></tr>
</table>

3. Select image quality mode to be set.
4. Change the setting value using the cursor left/right keys or numeric keys.

<table>
<tr><th>Display</th><th>Description</th><th>Setting range</th><th>Initial setting</th></tr>
<tr><td>Text + Photo</td><td>Offset value for the text & photo mode</td><td>-3 to 3</td><td>0</td></tr>
<tr><td>Photo</td><td>Offset value for the photo mode</td><td>-3 to 3</td><td>0</td></tr>
<tr><td>Text</td><td>Offset value for the text mode</td><td>-3 to 3</td><td>0</td></tr>
</table>

* : If the setting value is increased to increase the exposure centering adjustment value, images is darker.
If the setting value is decreased to decrease the exposure centering adjustment value, images is lighter.

5. Press the start key. The value is set.

Supplement
While this maintenance item is being executed, copying from an original is available in interrupt copying mode (which is activated by pressing the system menu key).

Completion
Press the stop key. The screen for selecting a maintenance item No. is displayed.

</td></tr>
</table>

TONER
www.tonerplus.com.ua

Item No.	Description
U464	**Setting the ID correction operation**

Description
Turns ID correction (calibration) on or off. Also, this determines the duration of calibration and the timing of calibration during printing. Also, this allows individual settings for calibration operation by enabling custom settings.

Purpose
To restrict calibration when poor image quality is generated. Also, this allows individual settings for calibration by enabling custom settings in setting the calibration cycle under the machine defaults depending on the user preferences.

Method

1. Press the start key.
2. Select the item to be set. The setting screen for the selected item is displayed.

Display	Description
Permission	Setting of operation permission
Time Interval	Setting of driving time
Bias Target	Setting of Bias target
Gamma Target	Setting of quantities of light target
Calib	Execution of calibration

Setting: [Permission]

1. Select the item to be set.
2. Change the setting value using the cursor left/right keys or numeric keys.

Display	Description	Setting range	Initial setting
Calib	Setting the permission of calibration.	On/Off	On
Paper Int Calib	Setting the permission of calibration between paper.	On/Off	On

3. Press the start key. The value is set.

Setting: [Time Interval]

1. Select the item to be set.
2. Change the setting value using the cursor left/right keys or numeric keys.

Display	Description	Setting	Initial set-
Paper Int Calib	Setting the driving time of the calibration between paper.	0 to 100	10
Sleep Out	Setting the execution time of sleeve return calibration.	0 to 100	20
T/C Calib	Setting the execution time of T/C calibration.	0 to 100	10

3. Press the start key. The value is set.

TONER
www.tonerplus.com.ua

<table>
<tr><th>Item No.</th><th>Description</th></tr>
<tr><td>U464</td><td>
Setting: [Bias Target/Gamma Target]
1. Select the item to be set.
2. Change the setting value using the cursor left/right keys or numeric keys.
<table>
<tr><th>Display</th><th>Description</th><th>Setting range</th><th>Initial set-ting</th></tr>
<tr><td>1st</td><td>Setting of target (Yellow)</td><td>10 to 1000</td><td>935/400</td></tr>
<tr><td>2nd</td><td>Setting of target (Cyan)</td><td>10 to 1000</td><td>895/200</td></tr>
<tr><td>3rd</td><td>Setting of target (Magenta)</td><td>10 to 1000</td><td>885/200</td></tr>
<tr><td>4th</td><td>Setting of target (Black)</td><td>10 to 1000</td><td>846/130</td></tr>
</table>
3. Press the start key. The value is set.

Method: [Calib]
1. Select the item to be set
2. Press the start key. The operation starts.
<table>
<tr><th>Display</th><th>Description</th></tr>
<tr><td>Regist</td><td>Executes the calibration to correct registration.</td></tr>
<tr><td>Gamma</td><td>Executes the calibration to quantities of light.</td></tr>
<tr><td>Paper Int</td><td>Executes the calibration between paper.</td></tr>
<tr><td>Color Regist</td><td>Executes the calibration to color registration.</td></tr>
</table>
To stop operation, press the stop key.

Completion
Press the stop key. The screen for selecting a maintenance item No. is displayed.
</td></tr>
</table>

TONER
www.tonerplus.com.ua

<table>
<tr><th>Item No.</th><th>Description</th></tr>
<tr><td>U467</td><td>
Setting the color registration adjustment

Description
Sets the color registration adjustment.
Purpose
If color variance is uneven due to a sensor failure, etc., turn this off and temporarily make a manual adjustment.

Method
1. Press the start key.
2. Select the item to be set.
<table>
<tr><th>Display</th><th>Description</th></tr>
<tr><td>Permission</td><td>Setting of operation permission</td></tr>
<tr><td>Timing</td><td>Setting of execution timing of resist correction</td></tr>
</table>
Setting
1. Change the setting value using the cursor left/right keys or numeric keys.
2. Press the start key. The value is set.

Completion
Press the stop key. The screen for selecting a maintenance item No. is displayed.
</td></tr>
<tr><td>U468</td><td>
Checking the color registration data

Description
Displays the color registration correction data and transfer belt speed correction data.
Purpose
To check the corresponding data.

Method
1. Press the start key.
2. Select the item to be reference. The screen for the selected item is displayed.
<table>
<tr><th>Display</th><th>Description</th></tr>
<tr><td>Auto (1st)</td><td>Display the auto color registration adjustment value for 1st color</td></tr>
<tr><td>Auto (2nd)</td><td>Display the auto color registration adjustment value for 2nd color</td></tr>
<tr><td>Auto (3rd)</td><td>Display the auto color registration adjustment value for 3rd color</td></tr>
<tr><td>Manual (1st)</td><td>Display the manual color registration adjustment value for 1st color</td></tr>
<tr><td>Manual (2nd)</td><td>Display the manual color registration adjustment value for 2nd color</td></tr>
<tr><td>Manual (3rd)</td><td>Display the manual color registration adjustment value for 3rd color</td></tr>
<tr><td>Initialize</td><td>Execution of initialization</td></tr>
</table>
</td></tr>
</table>

TONER
www.tonerpids.com.ua

Item No.	Description
U468	**Displaying: [Auto]** 1. Select [Auto(1st)], [Auto(2nd)] or [Auto(3rd)]. The current value is displayed.

Display	Description
LSU Out Top	Image up-to-date timing
LSU Out Left	Image optical axis adjustment
Magnification(Whole)	Correction data of original size magnification in whole

Displaying: [Manual]

1. Select [Manua(1st)], [Manual(2nd)] or [Manual(3rd)].
   The current value is displayed.

Display	Description
LSU Out Top	Image up-to-date timing
LSU Out Left	Image optical axis adjustment
Magnification(Whole)	Correction data of original size magnification in whole
Magnification(Part1)	Correction data of original size magnification in a part 1
Magnification(Part2)	Correction data of original size magnification in a part 2
Magnification(Part3)	Correction data of original size magnification in a part 3
Magnification(Part4)	Correction data of original size magnification in a part 4
Magnification(Part5)	Correction data of original size magnification in a part 5
Magnification(Part6)	Correction data of original size magnification in a part 6
Magnification(Part7)	Correction data of original size magnification in a part 7
Magnification(Part8)	Correction data of original size magnification in a part 8

Method: [Initialize]

1. Select [Initialize].
2. Select [Execute] and then press the start key.
   * : Initialization is executed.

Display	Description
Execute	Execution of initialization

Completion

Press the stop key. The screen for selecting a maintenance item No. is displayed.

TONER
www.tonerplus.com.ua

Item No.	Description
U470	**Setting the JPEG compression ratio** **Description** Sets the compression ratio for JPEG images in each image quality mode. **Purpose** To change the setting in accordance with the image that the user is copying. For example, in order to soften the coarseness of the image when making copies at over 200% magnification, change the level of compression by raising the value. Lowering the value will increase the compression and thereby lower the image quality; Raising the value will increase image quality but lower the image processing speed. **Method** 1. Press the start key. 2. Select the item to be set.

Display	Description
Copy	Compression ratio for copying
Send	Compression ratio for sending
System	Compression ratio for temporary storage in system

Setting: [Copy]

1. Select the item to be set.

Display	Description
Photo	Compression ratio in the photo mode
Text	Compression ratio in the text mode

2. Select the item to be set.
3. Change the setting value using the cursor left/right keys or numeric keys.

Display	Description	Setting range	Initial setting
Y	Compression ratio of brightness	1 to 100	85
CbCr	Compression ratio of color differential	1 to 100	85

4. Press the start key. The value is set.

TONER
www.tonerplus.com.ua

<table>
<tr><th>Item No.</th><th>Description</th></tr>
<tr><td>U470</td><td>

Setting: [Send]

1. Select the item to be set.

Display	Description
Photo	Compression ratio in the photo mode
Text	Compression ratio in the text mode
HC-PDF	Compression ratio of high compression PDF

2. Select the item to be set.
3. Change the setting value using the cursor left/right keys or numeric keys.
[Photo] or [Text]

Display	Description	Setting range	Initial setting
Y1 to Y5	Compression ratio of brightness	1 to 100	30/40/51/70/90
CbCr1 to CbCr5	Compression ratio of color differential	1 to 100	30/40/51/70/90

[HC-PDF]

Display	Description	Setting range	Initial setting
Y3 to Y3	Compression ratio of brightness	1 to 100	15/25/60
CbCr3 to CbCr3	Compression ratio of color differential	1 to 100	15/25/60

4. Press the start key. The value is set.

Setting: [System]

1. Select the item to be set.
2. Change the setting value using the cursor left/right keys or numeric keys.

Display	Description	Setting range	Initial setting
Y	Compression ratio of brightness	1 to 100	90
CbCr	Compression ratio of color differential	1 to 100	90

3. Press the start key. The value is set.

Supplement

While this maintenance item is being executed, copying from an original is available in interrupt copying mode (which is activated by pressing the system menu key).

Completion

Press the stop key. The screen for selecting a maintenance item No. is displayed.

</td></tr>
</table>

TONER
www.tonerplus.com.ua

<table>
<tr><th>Item No.</th><th>Description</th></tr>
<tr><td>U473</td><td>

Adjusting laser power output

Description
Adjusts the laser output power for each color.
Purpose
Enter the exposure density correction data after replacing the laser scanner unit.

Setting
1. Press the start key.
2. Select the item to be set.
3. Change the setting value using the cursor left/right keys or numeric keys.

<table>
<tr><th>Display</th><th>Description</th><th>Setting range</th><th>Initial setting</th></tr>
<tr><td>1st</td><td>Setting the LSU laser power (Yellow)</td><td>0 to 255</td><td>92</td></tr>
<tr><td>2nd</td><td>Setting the LSU laser power (Cyan)</td><td>0 to 255</td><td>92</td></tr>
<tr><td>3rd</td><td>Setting the LSU laser power (Magenta)</td><td>0 to 255</td><td>92</td></tr>
<tr><td>4th</td><td>Setting the LSU laser power (Black)</td><td>0 to 255</td><td>50</td></tr>
</table>

4. Press the start key. The value is set.

Completion
Press the stop key. The screen for selecting a maintenance item No. is displayed.

</td></tr>
</table>

TONER
www.tonerplus.com.ua

<table>
<tr><th>Item No.</th><th>Description</th></tr>
<tr><td>U486</td><td>

Setting color/black and white operation mode

Description
When color and B/W documents are mixed, sets operation mode after a color document is detected.
Purpose
To ensure productivity when copying color and B/W documents in ACS mode, select Mode3. However, selecting Mode3 will increase the maintenance count for cyan, magenta, and yellow color developer units even when there is a B/W original after a color original.

Setting
1. Press the start key.
2. Select the mode.

<table>
<tr><th>Display</th><th>Description</th></tr>
<tr><td>Mode1</td><td>A mode suited for the user with high black-and-white usage in which the occurrence of color printing during continuous printing is minimum.
Color / monochrome mode is switched for every original.</td></tr>
<tr><td>Mode2</td><td>A mode suited for the user with high black-and-white usage in which the occurrence of color printing during continuous printing is maximum.
Printing in color mode resumes up to 10 pages in a row even an interrupt is made to switch to black and white mode, until printing is diverted to black and white mode from color mode at the 11th page (color processing is terminated).</td></tr>
<tr><td>Mode3</td><td>A mode suited for the user with high black-and-white usage in which the occurrence of color printing during continuous printing is maximum.
Mode suited for high color printing volume
Once diverted to color mode, the black and white printings are executed in color processing mode.</td></tr>
<tr><td>Auto</td><td>Mode that allows to select from modes 1 through 3 depending on the usage. Mode is selected from three modes depending on the percentage of color and black and white printings in the total number of print pages during a predetermined period.</td></tr>
</table>

Initial setting: Mode2

3. Press the start key. The setting is set.

Completion
Press the stop key. The screen for selecting a maintenance item No. is displayed.

</td></tr>
</table>

TONER
www.tonerplus.com.ua

Item No.	Description
U486	**Details on the modes**

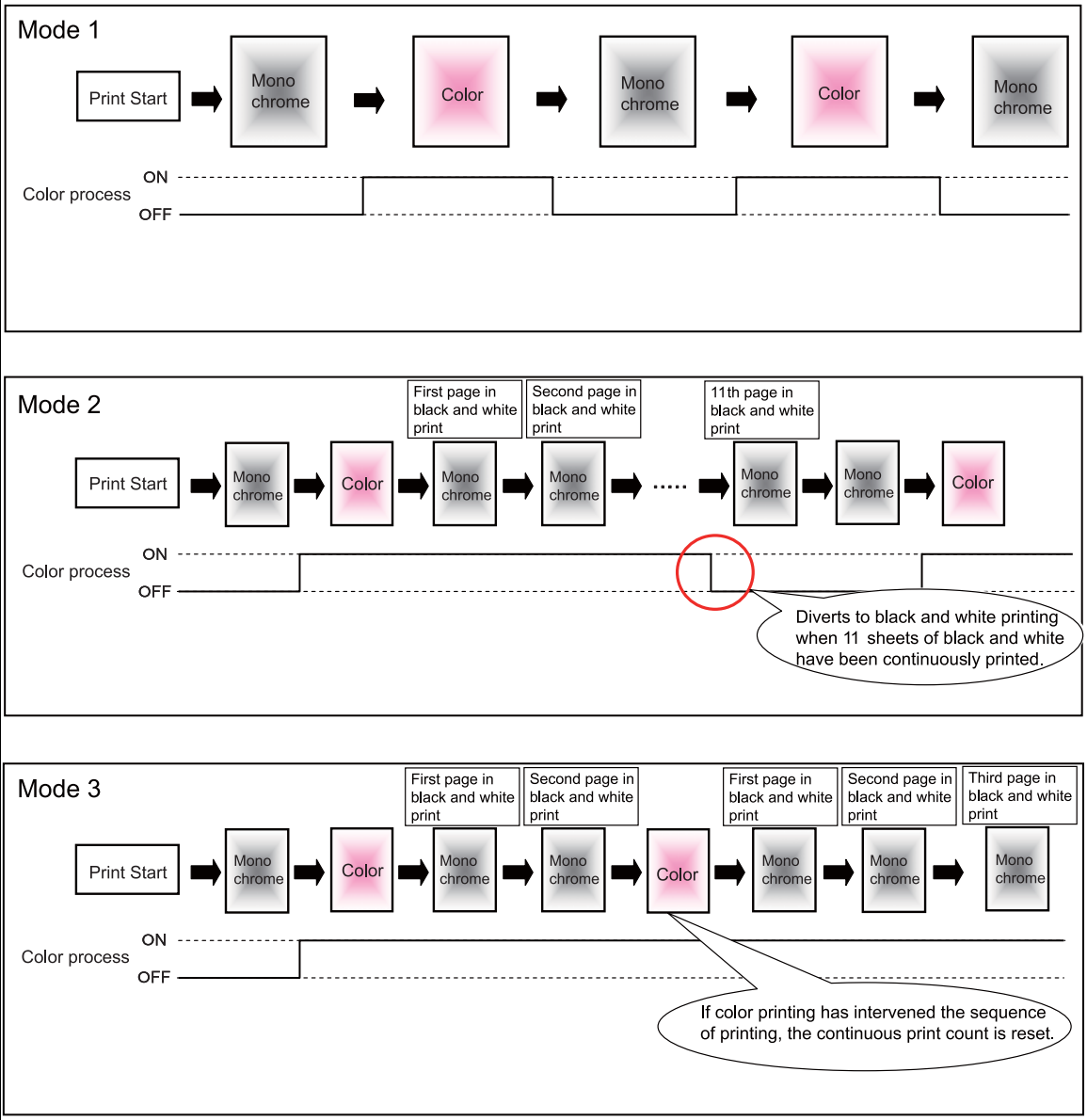

Figure 1-3-19

TONER
www.tonerplus.com.ua

Item No.	Description
U600	**Initializing all data** **Description** Initializes software switches and all data in the backup data on the FAX control PWB, according to the destination and OEM. Executes the check of the file system, when abnormality of the file system is detected, initializes the file system, communication past record and register setting contents. **Purpose** To initialize the FAX control PWB. **Method** 1. Press the start key. 2. Select [Country Code] and enter a destination code using the numeric keys. Refer to the destination code list on following for the destination code. OEM code is no operation necessary. 3. Select [Execute]. 4. Press the start key. Data initialization starts. To cancel data initialization, press the stop key. 5. After data initialization, ROM version are displayed. A ROM version displays three kinds, application, boot, and IPL. **Destination code list**

Code	Destination	Code	Destination
000	Japan	253	CTR21 (European nations)
009	Australia		Italy
038	China		Germany
080	Hong Kong		Spain
084	Indonesia		U.K.
088	Israel		Netherlands
097	Korea		Sweden
108	Malaysia		France
126	New Zealand		Austria
136	Peru		Switzerland
137	Philippines		Belgium
152	Middle East		Denmark
156	Singapore		Finland
159	South Africa		Portugal
169	Thailand		Ireland
181	U.S.A.		Norway
242	South America	254	Taiwan
243	Saudi Arabia		

TONER
www.tonerplus.com.ua

<table>
<tr><th>Item No.</th><th>Description</th></tr>
<tr><td>U601</td><td>
Initializing permanent data

Description
Initializes software switches on the FAX control PWB according to the destination and OEM.
Purpose
To initialize the FAX control PWB without changing user registration data.

Method
1. Press the start key.
2. Select [Country Code] and enter a destination code using the numeric keys.
Refer to the destination code list on page 1-3-97 for the destination code.
OEM code is no operation necessary.
3. Select [Execute].
4. Press the start key. Data initialization starts. To cancel data initialization, press the back key.
5. After data initialization, ROM version are displayed.
A ROM version displays three kinds, application, boot, and IPL.
</td></tr>
<tr><td>U603</td><td>
Setting user data 1

Description
Makes user settings to enable the use of the machine as a fax.
Purpose
To be executed as required.

Setting
1. Press the start key.
2. Select [Line Type].
3. Select the setting.
<table>
<tr><th>Display</th><th>Description</th></tr>
<tr><td>DTMF</td><td>DTMF</td></tr>
<tr><td>10PPS</td><td>10 PPS</td></tr>
<tr><td>20PPS</td><td>20 PPS</td></tr>
</table>
* : Initial setting: DTMF
4. Press the start key. The setting is set.

Completion
Press the stop key. The screen for selecting a maintenance item No. is displayed.
</td></tr>
</table>

TONER
www.tonerplus.com.ua

<table>
<tr><th>Item No.</th><th>Description</th></tr>
<tr><td>U604</td><td>
Setting user data 2

Description
Makes user settings to enable the use of the machine as a fax.
Purpose
Use this if the user wishes to adjust the number of rings that occur before the unit switches into fax receiving mode when fax/telephone auto-select is enabled.

Method
1. Press the start key.
2. Select [Rings(F/T) #].
3. Change the setting using the cursor left/right keys or numeric keys.
<table>
<tr><th>Display</th><th>Description</th><th>Setting range</th><th>Initial setting</th></tr>
<tr><td>Rings(F/T) #</td><td>Number of fax/telephone rings</td><td>0 to 15</td><td>2 (120 V)/
1 (220-240 V)</td></tr>
</table>
* : If you set this to 0, the unit will start fax reception without any ringing.
4. Press the start key. The value is set.

Completion
Press the stop key. The screen for selecting a maintenance item No. is displayed.
</td></tr>
<tr><td>U605</td><td>
Clearing data

Description
Initializes data related to the fax transmission such as transmission history.
Purpose
To clear the transmission history.

Method
1. Press the start key.
2. Select [Comm REC].
3. Press the start key. Initialization processing starts.
When processing is finished, [Completed] is displayed.

Completion
Press the stop key. The screen for selecting a maintenance item No. is displayed.
</td></tr>
</table>

TONER
www.tonerplus.com.ua

<table>
<tr><th>Item No.</th><th>Description</th></tr>
<tr><td>U610</td><td>

Setting system 1

Description

Makes settings for fax reception regarding the sizes of the fax paper and received images and automatic printing of the protocol list.

Method

1. Press the start key.
2. Select the item to be set.

<table>
<tr><th>Display</th><th>Description</th></tr>
<tr><td>Cut Line:A4</td><td>Sets the number of lines to be ignored when receiving a fax (A4R/LetterR) in the auto reduction mode.</td></tr>
<tr><td>Cut Line:100%</td><td>Sets the number of lines to be ignored when receiving a fax at 100% magnification.</td></tr>
<tr><td>Cut Line:Auto</td><td>Sets the number of lines to be ignored when receiving a fax in the auto reduction mode.</td></tr>
</table>

Setting the number of lines to be ignored when receiving a fax (A4R/LetterR) in the auto reduction mode

Sets the maximum number of lines to be ignored if the received data volume exceeds the recording capacity when the data is recorded in the auto reduction mode onto A4R or LetterR paper under the conditions below.
If the number of excess lines is below the setting, those lines are ignored. If over the setting, the entire data on a page is further reduced so that it can be recorded on the same page.

1. Change the setting using the cursor left/right keys or numeric keys.

<table>
<tr><th>Description</th><th>Setting range</th><th>Initial setting</th><th>Change in value per step</th></tr>
<tr><td>Number of lines to be ignored when receiving a fax (A4R, letter) in the auto reduction mode</td><td>0 to 22</td><td>0</td><td>16 lines</td></tr>
</table>

* : Increase the setting if a page received in the reduction mode is over-reduced and too much trailing edge margin is left. Decrease it if the received image does not include all transmitted data.

2. Press the start key. The value is set.

Setting the number of lines to be ignored when receiving a fax at 100% magnification

Sets the maximum number of lines to be ignored if the received data volume exceeds the recording capacity when recording the data at 100% magnification. If the number of excess lines is below the setting, those lines are ignored. If over the setting, they are recorded on the next page.

1. Change the setting using the cursor left/right keys or numeric keys.

<table>
<tr><th>Description</th><th>Setting range</th><th>Initial setting</th><th>Change in value per step</th></tr>
<tr><td>Number of lines to be ignored when receiving at 100%</td><td>0 to 22</td><td>3</td><td>16 lines</td></tr>
</table>

* : Increase the setting if a blank second page is output, and decrease it if the received image does not include the entire transmitted data.

2. Press the start key. The value is set.

</td></tr>
</table>

TONER www.tonerplus.com.ua

<table>
<tr><th>Item No.</th><th>Description</th></tr>
<tr><td>U610</td><td>
Setting the number of lines to be ignored when receiving a fax in the auto reduction mode
Sets the maximum number of lines to be ignored if the received data volume exceeds the recording capacity when the data is recorded in the auto reduction mode. If the number of excess lines is below the setting, those lines are ignored. If over the setting, the entire data on a page is further reduced so that it can be recorded on the same page.
1. Change the setting using the cursor left/right keys or numeric keys.
<table>
<tr><th>Description</th><th>Setting range</th><th>Initial setting</th><th>Change in value per step</th></tr>
<tr><td>Number of lines to be ignored when receiving in the auto reduction mode</td><td>0 to 22</td><td>0</td><td>16 lines</td></tr>
</table>
* : Increase the setting if a page received in the reduction mode is over-reduced and too much trailing edge margin is left. Decrease it if the received image does not include all transmitted data.
2. Press the start key. The value is set.

Completion
Press the stop key. The screen for selecting a maintenance item No. is displayed.
</td></tr>
</table>

TONER
www.tonerplus.com.ua

<table>
<tr><th>Item No.</th><th>Description</th></tr>
<tr><td>U611</td><td>

Setting system 2

Description
Sets the number of adjustment lines for automatic reduction.

Method
1. Press the start key.
2. Select the item to be set.

Display	Description
Adj Lines	Sets the number of adjustment lines for automatic reduction.
Adj Lines(A4)	Sets the number of adjustment lines for automatic reduction when A4 paper is set.
Adj Lines(LT)	Sets the number of adjustment lines for automatic reduction when letter size paper is set.

Setting the number of adjustment lines for automatic reduction
Sets the number of adjustment lines for automatic reduction.
1. Change the setting using the cursor left/right keys or numeric keys.

Description	Setting range	Initial setting	Change in value per step
Number of adjustment lines for automatic reduction	0 to 22	7	16 lines

2. Press the start key. The value is set.

Setting the number of adjustment lines for automatic reduction when A4 paper is set
Sets the number of adjustment lines for automatic reduction when A4 paper is set.
1. Change the setting using the cursor left/right keys or numeric keys.

Description	Setting range	Initial setting	Change in value per step
Number of adjustment lines for automatic reduction when A4 paper is set	0 to 22	22	16 lines

2. Press the start key. The value is set.

Setting the number of adjustment lines for automatic reduction when letter size paper is set
Sets the number of adjustment lines for automatic reduction when letter size paper is set.
1. Change the setting using the cursor left/right keys or numeric keys.

Description	Setting range	Initial setting	Change in value per step
Number of adjustment lines for automatic reduction when letter size paper is set	0 to 26	26	16 lines

2. Press the start key. The value is set.

Completion
Press the stop key. The screen for selecting a maintenance item No. is displayed.

</td></tr>
</table>

TONER www.tonerplus.com.ba

Item No.	Description
U612	**Setting system 3** **Description** Makes settings for fax transmission regarding operation and automatic printing of the protocol list. **Method** 1. Press the start key. 2. Select the item to be set using the cursor up/down keys.

Display	Description
Auto Reduct	Selects if auto reduction in the auxiliary direction is to be performed.
Protocol List	Sets the automatic printing of the protocol list.

Selecting if auto reduction in the auxiliary direction is to be performed

Sets whether to receive a long document by automatically reducing it in the auxiliary direction or at 100% magnification.

1. Select the setting using the cursor left/right keys.

Display	Description
On	Auto reduction is performed if the received document is longer than the fax paper.
Off	Auto reduction is not performed.

* : Initial setting: On

2. Press the start key. The setting is set.

Setting the automatic printing of the protocol list

Sets if the protocol list is automatically printed out.

1. Select the setting using the cursor left/right keys.

Display	Description
Err	The protocol list is automatically printed out after communication only if a communication error occurs.
On	The protocol list is automatically printed out after communication.
Off	The protocol list is not printed out automatically.

* : Initial setting: Off

2. Press the start key. The setting is set.

Completion

Press the stop key. The screen for selecting a maintenance item No. is displayed.

TONER
www.tonerplus.com.ua

<table>
<tr><th>Item No.</th><th>Description</th></tr>
<tr><td>U615</td><td>
Setting system 6

Description
Makes settings for fax reception regarding the sizes of the fax paper and received images.
Purpose
To set the maximum recording width and processing method when 11" width fax paper is loaded on an inch specification machine.

Setting
1. Press the start key.
2. Select [RX Width For 11"].
3. Select the setting.
<table>
<tr><th>Display</th><th>Description</th></tr>
<tr><td>Ledger</td><td>Communicates to the destination unit 11" width as A3 width and records at 100% magnifications.</td></tr>
<tr><td>B4</td><td>Communicates to the destination unit 11" width as B4 width.</td></tr>
</table>
* : Initial setting: Ledger
4. Press the start key. The setting is set.

Completion
Press the stop key. The screen for selecting a maintenance item No. is displayed.
</td></tr>
<tr><td>U620</td><td>
Setting the remote switching mode

Description
Sets the signal detection method for remote switching. Be sure to change the setting according to the type of telephone connected to the machine.

Setting
1. Press the start key.
2. Select [Remort Mode].
3. Select the mode.
<table>
<tr><th>Display</th><th>Description</th></tr>
<tr><td>One</td><td>One-shot detection</td></tr>
<tr><td>Cont</td><td>Continuous detection</td></tr>
</table>
* : Initial setting: One
4. Press the start key. The setting is set.

Completion
Press the stop key. The screen for selecting a maintenance item No. is displayed.
</td></tr>
</table>

TONER
www.tonerplus.com.ua

<table>
<tr><th>Item No.</th><th>Description</th></tr>
<tr><td>U625</td><td>

Setting the transmission system 1

Description
Makes settings for the auto redialing interval and the number of times of auto redialing.
Purpose
Change the setting to prevent the following problems: fax transmission is not possible due to too short redial interval, or fax transmission takes too much time to complete due to too long redial interval.

Method
1. Press the start key.
2. Select the item to be set.

<table>
<tr><th>Display</th><th>Description</th></tr>
<tr><td>Interval</td><td>Setting the auto redialing interval</td></tr>
<tr><td>Times</td><td>Setting the number of times of auto redialing</td></tr>
</table>

Setting the auto redialing interval
1. Change the setting using the cursor left/right keys.

<table>
<tr><th>Description</th><th>Setting range</th><th>Initial setting</th></tr>
<tr><td>Redialing interval</td><td>1 to 9 (min.)</td><td>3 (120 V)/2 (220-240 V)</td></tr>
</table>

2. Press the start key. The value is set.

Setting the number of times of auto redialing
1. Change the setting using the cursor left/right keys or numeric keys.

<table>
<tr><th>Description</th><th>Setting range</th><th>Initial setting</th></tr>
<tr><td>Number of redialing</td><td>0 to 15</td><td>2 (120 V)/3 (220-240 V)</td></tr>
</table>

2. Press the start key. The value is set.

Completion
Press the stop key. The screen for selecting a maintenance item No. is displayed.

</td></tr>
</table>

TONER
www.tonerplus.com.ua

Item No.	Description
U630	**Setting communication control 1** **Description** Makes settings for fax transmission regarding the communication. **Method** 1. Press the start key. 2. Select the item to be set.

Display	Description
TX Speed	Sets the communication starting speed.
RX Speed	Sets the reception speed.
TX Echo	Sets the waiting period to prevent echo problems at the sender.
RX Echo	Sets the waiting period to prevent echo problems at the receiver.

Setting the communication starting speed

Sets the initial communication speed when starting transmission. When the destination unit has V.34 capability, V.34 is selected for transmission, regardless of this setting.

1. Select the setting.

Display	Description
14400bps/V17	V.17, 14400 bps
9600bps/V29	V.17, 9600 bps
4800bps/V27ter	V.27ter, 4800 bps
2400bps/V27ter	V.27ter, 2400 bps

* : Initial setting: 14400bps/V17

2. Press the start key. The setting is set.

Setting the reception speed

Sets the reception speed that the sender is informed of using the DIS or NSF signal. When the destination unit has V.34 capability, V.34 is selected, regardless of the setting.

1. Select the setting.

Display	Description
14400bps	V.17, V.33, V.29, V.27ter
9600bps	V.29, V.27ter
4800bps	V.27ter
2400bps	V.27ter (fallback only)

* : Initial setting: 14400bps

2. Press the start key. The setting is set.

TONER
www.tonerpids.com.ua

<table>
<tr><th>Item No.</th><th>Description</th></tr>
<tr><td>U630</td><td>
Setting the waiting period to prevent echo problems at the sender
Sets the period before a DCS signal is sent after a DIS signal is received. Used when problems occur due to echoes at the sender.
1. Select the setting.
<table>
<tr><th>Display</th><th>Description</th></tr>
<tr><td>500</td><td>Sends a DCS 500 ms after receiving a DIS.</td></tr>
<tr><td>300</td><td>Sends a DCS 300 ms after receiving a DIS.</td></tr>
</table>
* : Initial setting: 300
2. Press the start key. The setting is set.

Setting the waiting period to prevent echo problems at the receiver
Sets the period before an NSF, CSI or DIS signal is sent after a CED signal is received. Used when problems occur due to echoes at the receiver.
1. Select the setting.
<table>
<tr><th>Display</th><th>Description</th></tr>
<tr><td>500</td><td>Sends an NSF, CSI or DIS 500 ms after receiving a CED.</td></tr>
<tr><td>75</td><td>Sends an NSF, CSI or DIS 75 ms after receiving a CED.</td></tr>
</table>
* : Initial setting: 75
2. Press the start key. The setting is set.

Completion
Press the stop key. The screen for selecting a maintenance item No. is displayed.
</td></tr>
</table>

TONER
www.tonerplus.com.ua

Item No.	Description
U631	**Setting communication control 2** **Description** Makes settings regarding fax transmission. **Method** 1. Press the start key. 2. Select the item to be set.

Display	Description
ECM TX	Sets ECM transmission.
ECM RX	Sets ECM reception.
CED Freq	Sets the frequency of the CED signal.

Setting ECM transmission
To be set to Off when reduction of transmission costs is of higher priority than image quality. This should not be set to Off when connecting to the IP (Internet Protocol) telephone line.
1. Select the setting.

Display	Description
On	ECM transmission is enabled.
Off	ECM transmission is disabled.

* : Initial setting: On
2. Press the start key. The setting is set.

Setting ECM reception
To be set to Off when reduction of transmission costs is of higher priority than image quality. This should not be set to Off when connecting to the IP (Internet Protocol) telephone line.
1. Select the setting.

Display	Description
On	ECM reception is enabled.
Off	ECM reception is disabled.

* : Initial setting: On
2. Press the start key. The setting is set.

Setting the frequency of the CED signal
Sets the frequency of the CED signal. Used as one of the measures to improve transmission performance for international communications.
1. Select the setting.

Display	Description
2100	2100 Hz
1100	1100 Hz

* : Initial setting: 2100
2. Press the start key. The setting is set.

Completion
Press the stop key. The screen for selecting a maintenance item No. is displayed.

TONER www.tonerplus.com.ba

<table>
<tr><th>Item No.</th><th>Description</th></tr>
<tr><td>U632</td><td>

Setting communication control 3

Description

Makes settings for fax transmission regarding the communication.

Method

1. Press the start key.
2. Select the item to be set.

Display	Description
DIS 4Byte	Sets the DIS signal to 4 bytes.
Num OF CNG(F/T)	Sets the CNG detection times in the fax/telephone auto select mode.

Setting the DIS signal to 4 bytes

Sets if bit 33 and later bits of the DIS/DTC signal are sent.

1. Select the setting.

Display	Description
On	Bit 33 and later bits of the DIS/DTC signal are not sent.
Off	Bit 33 and later bits of the DIS/DTC signal are sent.

* : Initial setting: Off

2. Press the start key. The setting is set.

Setting the CNG detection times in the fax/telephone auto select mode

Sets the CNG detection times in the fax/telephone auto select mode.

1. Select the setting.

Display	Description
1Time	Detects CNG once.
2Time	Detects CNG twice.

* : Initial setting: 2Time

2. Press the start key. The setting is set.

Completion

Press the stop key. The screen for selecting a maintenance item No. is displayed.

</td></tr>
</table>

TONER
www.tonerplus.com.ua

Item No.	Description
U633	**Setting communication control 4** **Description** Makes settings for fax transmission regarding the communication. **Purpose** To reduce transmission errors when a low quality line is used. **Method** 1. Press the start key. 2. Select the item to be set.

Display	Description
V.34	Enables or disables V.34 communication.
V.34-3429Hz	Sets the V.34 symbol speed (3429 Hz).
DIS 2Res	Sets the number of times of DIS signal reception.
RTN Check	Sets the reference for RTN signal output.

Enabling/disabling V.34 communication

Sets whether V.34 communication is enabled/disabled for transmission and reception.

1. Select the setting.

Display	Description
On	V.34 communication is enabled for both transmission and reception.
TX	V.34 communication is enabled for transmission only.
RX	V.34 communication is enabled for reception only.
Off	V.34 communication is disabled for both transmission and reception.

* : Initial setting: On

2. Press the start key. The setting is set.

Setting the V.34 symbol speed (3429 Hz)

Sets if the V.34 symbol speed 3429 Hz is used.

1. Select the setting.

Display	Description
On	V.34 symbol speed 3429 Hz is used.
Off	V.34 symbol speed 3429 Hz is not used.

* : Initial setting: On

2. Press the start key. The setting is set.

TONER
www.tonerplus.com.ua

<table>
<tr><th>Item No.</th><th>Description</th></tr>
<tr><td>U633</td><td>
Setting the number of times of DIS signal reception
Sets the number of times to receive the DIS signal to once or twice. Used as one of the correction measures for transmission errors and other problems.
1. Select the setting.
<table>
<tr><th>Display</th><th>Description</th></tr>
<tr><td>Once</td><td>Responds to the first signal.</td></tr>
<tr><td>Twice</td><td>Responds to the second signal.</td></tr>
</table>
* : Initial setting: Once
2. Press the start key. The setting is set.

Setting the reference for RTN signal output
Sets the error line rate as the reference for RTN signal output. If transmission errors occur frequently due to the quality of the line, they can be reduced by lowering this setting.
1. Select the setting.
<table>
<tr><th>Display</th><th>Description</th></tr>
<tr><td>5%</td><td>Error line rate of 5%</td></tr>
<tr><td>10%</td><td>Error line rate of 10%</td></tr>
<tr><td>15%</td><td>Error line rate of 15%</td></tr>
<tr><td>20%</td><td>Error line rate of 20%</td></tr>
</table>
* : Initial setting: 15%
2. Press the start key. The setting is set.

Completion
Press the stop key. The screen for selecting a maintenance item No. is displayed.
</td></tr>
<tr><td>U634</td><td>
Setting communication control 5

Description
Sets the maximum number of error bytes judged acceptable when receiving a TCF signal. Used as a measure to ease transmission conditions if transmission errors occur.

Setting
1. Press the start key.
2. Select [TCF Check].
3. Change the setting using the cursor left/right keys or numeric keys.
<table>
<tr><th>Description</th><th>Setting range</th><th>Initial setting</th></tr>
<tr><td>Number of allowed error bytes when detecting TCF</td><td>0 to 255</td><td>0</td></tr>
</table>
4. Press the start key. The value is set.

Completion
Press the stop key. The screen for selecting a maintenance item No. is displayed.
</td></tr>
</table>

TONER
www.tonerplus.com.ua

<table>
<tr><th>Item No.</th><th>Description</th></tr>
<tr><td>U640</td><td>

Setting communication time 1

Description

Sets the detection time when one-shot detection is selected for remote switching. (This setting item will be displayed, but the setting made is ineffective.)
Sets the detection time when continuous detection is selected for remote switching. (This setting item will be displayed, but the setting made is ineffective.)

Method

1. Press the start key.
2. Select the item to be set.

<table>
<tr><th>Display</th><th>Description</th></tr>
<tr><td>Time (One)</td><td>Sets the one-shot detection time for remote switching.</td></tr>
<tr><td>Time (Cont)</td><td>Sets the continuous detection time for remote switching.</td></tr>
</table>

Setting the one-shot detection time for remote switching

1. Change the setting using the cursor left/right keys.

<table>
<tr><th>Description</th><th>Setting range</th><th>Initial setting</th></tr>
<tr><td>One-shot detection time for remote switching</td><td>0 to 255</td><td>7</td></tr>
</table>

2. Press the start key. The value is set.

Setting the continuous detection time for remote switching

1. Change the setting using the cursor left/right keys.

<table>
<tr><th>Description</th><th>Setting range</th><th>Initial setting</th></tr>
<tr><td>Continuous detection time for remote switching</td><td>0 to 255</td><td>80</td></tr>
</table>

2. Press the start key. The value is set.

Completion

Press the stop key. The screen for selecting a maintenance item No. is displayed.

</td></tr>
</table>

TONER
www.tonerplus.com.ua

Item No.	Description
U641	**Setting communication time 2** **Description** Sets the time-out time for fax transmission. **Purpose** To improve transmission performance for international communications mainly. **Method** 1. Press the start key. 2. Select the item to be set.

Display	Description
T0 Time Out	Sets the T0 time-out time.
T1 Time Out	Sets the T1 time-out time.
T2 Time Out	Sets the T2 time-out time.
Ta Time Out	Sets the Ta time-out time.
Tb1 Time Out	Sets the Tb1 time-out time.
Tb2 Time Out	Sets the Tb2 time-out time.
Tc Time Out	Sets the Tc time-out time.
Td Time Out	Sets the Td time-out time.

Setting the T0 time-out time
Sets the time before detecting a CED or DIS signal after a dialing signal is sent.
Depending on the quality of the exchange, or when the auto select function is selected at the destination unit, a line can be disconnected. Change the setting to prevent this problem.

1. Change the setting using the cursor left/right keys.

Description	Setting range	Initial setting
T0 time-out time	30 to 90 s	56

2. Press the start key. The value is set.

Setting the T1 time-out time
Sets the time before receiving the correct signal after call reception. No change is necessary for this maintenance item.

1. Change the setting using the cursor left/right keys.

Description	Setting range	Initial setting
T1 time-out time	30 to 90 s	36

2. Press the start key. The value is set.

TONER
www.tonerplus.com.ua

Item No.	Description
U641	**Setting the T2 time-out time** The T2 time-out time decides the following. From CFR signal output to image data reception From image data reception to the next signal reception In ECM, from RNR signal detection to the next signal reception 1. Change the setting using the cursor left/right keys. 2. Press the start key. The value is set. **Setting the Ta time-out time** In the fax/telephone auto select mode, sets the time to continue ringing an operator through the connected telephone after receiving a call as a fax machine (see figure 1-3-20). A fax signal is received within the Ta set time, or the fax mode is selected automatically when the time elapses. In fax/telephone auto select mode, change the setting when fax reception is unsuccessful or a telephone fails to receive a call. 1. Change the setting using the cursor left/right keys. 2. Press the start key. The value is set. **Setting the Tb1 time-out time** In the fax/telephone auto select mode, sets the time to start sending the ring back tone after receiving a call as a fax machine (see figure 1-3-20). In fax/telephone auto select mode, change the setting when fax reception is unsuccessful or a telephone fails to receive a call. 1. Change the setting using the cursor left/right keys. 2. Press the start key. The value is set.

Description	Setting range	Initial setting	Change in value per step
T2 time-out time	1 to 255	69	100 ms

Description	Setting range	Initial setting
Ta time-out time	1 to 255	30

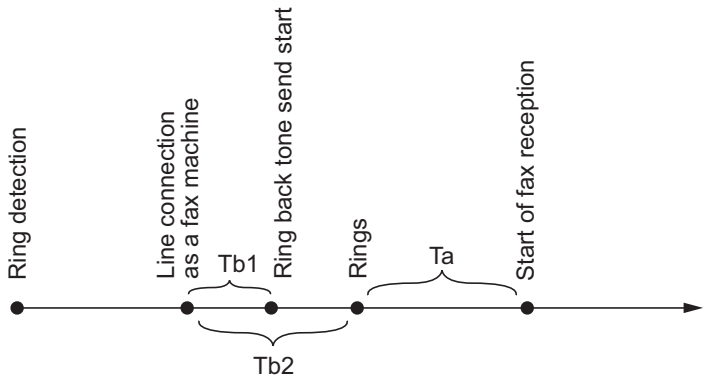

Figure 1-3-20 Ta/Tb1/Tb2 time-out time

Description	Setting range	Initial setting	Change in value per step
Tb1 time-out time	1 to 255	20	100 ms

TONER
www.tonerplus.com.ua

<table>
<tr><th>Item No.</th><th>Description</th></tr>
<tr><td>U641</td><td>

Setting the Tb2 time-out time

In the fax/telephone auto select mode, sets the time to start ringing an operator through the connected telephone after receiving a call as a fax machine (see figure 1-3-20). In the fax/telephone auto select mode, change the setting when fax reception is unsuccessful or a telephone fails to receive a call.

1. Change the setting using the cursor left/right keys.

Description	Setting range	Initial setting	Change in value per step
Tb2 time-out time	1 to 255	80	100 ms

2. Press the start key. The value is set.

Setting the Tc time-out time

In the TAD mode, set the time to check if there are any triggers for shifting to fax reception after a connected telephone receives a call. Only the telephone function is available if shifting is not made within the set Tc time.
In the TAD mode, change the setting when fax reception is unsuccessful or a telephone fails to receive a call.

1. Change the setting using the cursor left/right keys.

Description	Setting range	Initial setting
Tc time-out time	1 to 255	60

2. Press the start key. The value is set.

Setting the Td time-out time

Sets the length of the time required to determine silent status (fax), one of the triggers for Tc time check. In the TAD mode, change the setting when fax reception is unsuccessful or a telephone fails to receive a call. Be sure not to set it too short; otherwise, the mode may be shifted to fax while the unit is being used as a telephone.

1. Change the setting using the cursor left/right keys.

Description	Setting range	Initial setting
Td time-out time	1 to 255	9 (120 V)/6 (220-240 V)

2. Press the start key. The value is set.

Completion

Press the stop key. The screen for selecting a maintenance item No. is displayed.

</td></tr>
</table>

TONER
www.tonerplus.com.ua

<table>
<tr><th>Item No.</th><th>Description</th></tr>
<tr><td>U650</td><td>

Setting modem 1

Description
Sets the G3 cable equalizer. Sets the modem detection level.
Purpose
Perform the following adjustment to make the equalizer compatible with the line characteristics.
To improve the transmission performance when a low quality line is used.

Method
1. Press the start key.
2. Select the item to be set.

<table>
<tr><th>Display</th><th>Description</th></tr>
<tr><td>Reg G3 TX Eqr</td><td>Sets the G3 transmission cable equalizer.</td></tr>
<tr><td>Reg G3 RX Eqr</td><td>Sets the G3 reception cable equalizer.</td></tr>
<tr><td>RX Mdm Level</td><td>Sets the modem detection level.</td></tr>
</table>

Setting the G3 transmission cable equalizer
1. Select [0dB], [4dB], [8dB] or [12dB].
   * : Initial setting: 0dB
2. Press the start key. The setting is set.

Setting the G3 reception cable equalizer
1. Select [0dB], [4dB], [8dB] or [12dB].
   * : Initial setting: 0dB
2. Press the start key. The setting is set.

Setting the modem detection level
1. Select [-33dBm], [-38dBm], [-43dBm] or [-48dBm] using the cursor up/down keys.
   * : Initial setting: -43dBm
2. Press the start key. The setting is set.

Completion
Press the stop key. The screen for selecting a maintenance item No. is displayed.

</td></tr>
</table>

TONER
www.tonerplus.com.ua

Item No.	Description
U651	**Setting modem 2** **Description** Sets the modem output level. Sets the DTMF output level of a push-button dial telephone. **Purpose** Used if problems occur when sending a signal with a push-button dial telephone. **Setting** 1. Press the start key. 2. Select the item to be set. 3. Change the setting using the cursor left/right keys or numeric keys.

Display	Description	Setting range	Initial setting
Sgl LV Mdm	Modem output level	1 to 15	9 (120 V) 10 (220-240 V)
DTMF LV(C)	DTMF output level (main value)	0 to 15.0	5 (120 V) 10.5 (220-240 V)
DTMF LV(D)	DTMF output level (level difference)	0 to 5.5	2 (120 V) 2.5 (220-240 V)

4. Press the start key. The setting is set.

Completion
Press the stop key. The screen for selecting a maintenance item No. is displayed.

TONER
www.tonerplus.com.ua

Item No.	Description
U660	**Setting the NCU** **Description** Makes setting regarding the network control unit (NCU). **Purpose** To be executed as required. **Method** 1. Press the start key. 2. Select the item to be set.

Display	Description
Exchange	Sets the connection to PBX/PSTN.
Dial Tone	Sets PSTN dial tone detection.
Busy Tone	Sets busy tone detection.
PBX Setting	Setting for a PBX.
DC Loop	Sets the loop current detection before dialing.

Setting the connection to PBX/PSTN

Selects if a fax is to be connected to either a PBX or public switched telephone network.

1. Select the setting.

Display	Description
PSTN	Connected to the public switched telephone network.
PBX	Connected to a PBX.

* : Initial setting: PSTN

2. Press the start key. The setting is set.

Setting PSTN dial tone detection

Selects if the dial tone is detected to check the telephone is off the hook when a fax is connected to a public switched telephone network.

1. Select the setting.

Display	Description
On	Detects the dial tone.
Off	Does not detect the dial tone.

* : Initial setting: On

2. Press the start key. The setting is set.

TONER
www.tonerplus.com.ua

<table>
<tr><th>Item No.</th><th>Description</th></tr>
<tr><td>U660</td><td>
Setting busy tone detection
When a fax signal is sent, sets whether the line is disconnected immediately after a busy tone is detected, or the busy tone is not detected and the line remains connected until T0 time-out time. Fax transmission may fail due to incorrect busy tone detection. When set to 2, this problem may be prevented. However, the line is not disconnected within the T0 time-out time even if the destination line is busy.
1. Select the setting.
<table>
<tr><th>Display</th><th>Description</th></tr>
<tr><td>On</td><td>Detects busy tone.</td></tr>
<tr><td>Off</td><td>Does not detect busy tone.</td></tr>
</table>
* : Initial setting: On
2. Press the start key. The setting is set.

Setting for a PBX
Selects the mode to connect an outside call when connected to a PBX.
According to the type of the PBX connected, select the mode to connect an outside call.
1. Select the setting.
<table>
<tr><th>Display</th><th>Description</th></tr>
<tr><td>Flash</td><td>Flashing mode</td></tr>
<tr><td>Loop</td><td>Code number mode</td></tr>
</table>
* : Initial setting: Loop
2. Press the start key. The setting is set.

Setting the loop current detection before dialing
Sets if the loop current detection is performed before dialing.
1. Select the setting.
<table>
<tr><th>Display</th><th>Description</th></tr>
<tr><td>On</td><td>Performs loop current detection before dialing.</td></tr>
<tr><td>Off</td><td>Does not perform loop current detection before dialing.</td></tr>
</table>
* : Initial setting: On
2. Press the start key. The setting is set.

Completion
Press the stop key. The screen for selecting a maintenance item No. is displayed.
</td></tr>
</table>

TONER
www.tonerplus.com.ua

<table>
<tr><th>Item No.</th><th>Description</th></tr>
<tr><td>U670</td><td>

Outputting lists

Description
Outputs a list of data regarding fax transmissions.
Printing a list is disabled either when a job is remaining in the buffer or when [Pause All Print Jobs] is pressed to halt printing.
Purpose
To check conditions of use, settings and transmission procedures of the fax.

Method
1. Press the start key.
2. Select the item to be output.
3. Press the start key. The selected list is output.

<table>
<tr><th>Display</th><th>Description</th></tr>
<tr><td>Sys Conf Report</td><td>Outputs a list of software switches, self telephone number, confidential boxes, ROM versions and other information.</td></tr>
<tr><td>Action List</td><td>Outputs a list of error history, transmission line details and other information.</td></tr>
<tr><td>Self Sts Report</td><td>Outputs a list of settings in maintenance mode (own-status report) regarding fax transmission only.</td></tr>
<tr><td>Protocol List</td><td>Outputs a list of transmission procedures.</td></tr>
<tr><td>Error List</td><td>Outputs a list of error.</td></tr>
<tr><td>Addr List(No.)</td><td>Outputs address book in order IDs were added</td></tr>
<tr><td>Addr List(Idx)</td><td>Outputs address book in order of names</td></tr>
<tr><td>One-touch List</td><td>Outputs a list of one-touch.</td></tr>
<tr><td>Group List</td><td>Outputs a list of group.</td></tr>
</table>

Completion
Press the stop key. The screen for selecting a maintenance item No. is displayed.

</td></tr>
</table>

TONER
www.tonerplus.com.ua

Item No.	Description
U695	**FAX function customize** **Description** Sets fax batch transmission ON/OFF. Also changes the print size priority at the time of small size reception. **Purpose** To be executed as required. **Setting** 1. Select the setting. **Setting: [FAX Bulk TX]** 1. Select [On] or [Off] using the cursor left/right keys. * : Initial setting: On 2. Press the start key. The setting is set. **Setting: [A5 Pt Pri Chg]** 1. Select [On] or [Off] using the cursor left/right keys. * : Initial setting: Off 2. Press the start key. The setting is set. **Completion** Press the stop key. The screen for selecting a maintenance item No. is displayed.

Display	Description
FAX Bulk TX	fax batch transmission On/Off
A5 Pt Pri Chg	Change of print size priority at the time of small size reception

Display	Description
On	Fax batch transmission is enabled.
Off	Fax batch transmission is disabled.

Display	Description
On	At the time of A5 size reception: A5→B5→A4→B4→A3
Off	At the time of A5 size reception: A5→A4→B5→A3→B4

TONER
www.tonerplus.com.ua

Item No.	Description
U699	**Setting the software switches** **Description** Sets the software switches on the FAX control PWB individually. **Purpose** To change the setting when a problem such as split output of received originals occurs. Since the communication performance is largely affected, normally this setting need not be changed. **Method** 1. Press the start key. 2. Press [SW No.]. 3. Enter the desired software switch number (3 digits) using the numeric keys and press the enter key. 4. Use numeric keys 7 to 0 to switch each bit between 0 and 1. 5. Press the start key to set the value. **Completion** Press the stop key. The screen for selecting a maintenance item No. is displayed. **List of Software Switches of Which the Setting Can Be Changed** **<Communication control procedure>**

No.	Bit	Item
36	7654	Coding format in transmission
	3210	Coding format in reception
37	5	33600 bps/V34
	4	31200 bps/V34
	3	28800 bps/V34
	2	26400 bps/V34
	1	24000 bps/V34
	0	21600 bps/V34
38	7	19200 bps/V34
	6	16800 bps/V34
	5	14400 bps/V34
	4	12000 bps/V34
	3	9600 bps/V34
	2	7200 bps/V34
	1	4800 bps/V34
	0	2400 bps/V34
41	3	FSK detection in V.8
42	4	4800 bps when low-speed setting is active
	2	FIF length in transmission of more than 4 times of DIS/DTC signal

TONER
www.tonerplus.com.ua

Item No.	Description
U699	<Communication time setting>

No.	Bit	Item
53	76543210	T3 timeout setting
54	76543210	T4 timeout setting (automatic equipment)
55	76543210	T5 timeout setting
60	76543210	Time before transmission of CNG (1100 Hz) signal
63	76543210	T0 timeout setting (manual equipment)
64	7	Phase C timeout in ECM reception
66	76543210	Timeout 1 in countermeasures against echo
68	76543210	Timeout for FSK detection start in V.8

<Modem setting>

No.	Bit	Item
89	76543	RX gain adjust

<NCU setting>

No.	Bit	Item
121	7654	Dial tone/busy tone detection pattern
122	7654	Busy tone detection pattern
	1	Busy tone detection in automatic FAX/TEL switching
125	76543210	Access code registration for connection to PSTN
126	7654	FAX/TEL automatic switching ring back tone ON/OFF cycle

<Calling time setting>

No.	Bit	Item
133	76543210	DTMF signal transmission time
134	76543210	DTMF signal pause time
141	76543210	Ringer detection cycle (minimum)
142	76543210	Ringer detection cycle (maximum)
143	76543210	Ringer ON time detection
144	76543210	Ringer OFF time detection
145	76543210	Ringer OFF non-detection time
147	76543210	Dial tone detection time (continuous tone)
148	76543210	Allowable dial tone interruption time
149	76543210	Time for transmitting selection signal after closing the DC circuit
151	76543210	Ringer frequency detection invalid time

TONER
www.tonerplus.com.ua

Item No.	Description
U901	**Checking copy counts by paper feed locations** **Description** Displays or clears copy counts by paper feed locations. **Purpose** To check the time to replace consumable parts. Also to clear the counts after replacing the consumable parts. **Method** 1. Press the start key. The counts by paper feed locations are displayed. **Display** / **Description** MPT — MP tray Cassette1 — Cassette 1 Cassette2 — Cassette 2 (optional paper feeder) Cassette3 — Cassette 3 (optional paper feeder) Duplex — Duplex unit * : When an optional paper feed device is not installed, the corresponding count is not displayed. **Clearing** 1. Select the counts to be cleared. [Cassette2] and [Cassette3] cannot be cleared. 2. Select the counts for all and press [Clear]. 3. Press the start key. The counter value is cleared. **Completion** Press the stop key. The screen for selecting a maintenance item No. is displayed.

TONER
www.tonerplus.com.ua

<table>
<tr><th>Item No.</th><th>Description</th></tr>
<tr><td>U903</td><td>

Checking/clearing the paper jam counts

Description
Displays or clears the jam counts by jam locations.
Purpose
To check the paper jam status. Also to clear the jam counts after replacing consumable parts.

Method
1. Press the start key.
2. Select the item.

<table>
<tr><th>Display</th><th>Description</th></tr>
<tr><td>Cnt</td><td>Displays/clears the jam counts</td></tr>
<tr><td>Total Cnt</td><td>Displays the total jam counts</td></tr>
</table>

Method: [Cnt]
1. Select [Cnt]. The count of jam code by type is displayed.
   Codes for which the count value is 0 are not displayed.
2. Change the screen using the cursor up/down keys.
3. Select the count value for jam code and press [Clear].
   The individual counter cannot be cleared.
4. Press the start key. The counter value is cleared.

Method: [Total Cnt]
1. Select [Total Cnt]. The total number of jam code by type is displayed.
2. Change the screen using the cursor up/down keys.
   The total number of jam count cannot be cleared.

Completion
Press the stop key. The screen for selecting a maintenance item No. is displayed.

</td></tr>
</table>

TONER
www.tonerplus.com.ua

<table>
<tr><th>Item No.</th><th>Description</th></tr>
<tr><td>U904</td><td>

Checking/clearing the call for service counts

Description
Displays or clears the service call code counts by types.
Purpose
To check the service call code status by types.
Also to clear the service call code counts after replacing consumable parts.

Method
1. Press the start key.
2. Select the item.

<table>
<tr><th>Display</th><th>Description</th></tr>
<tr><td>Cnt</td><td>Displays/clears the call for service counts</td></tr>
<tr><td>Total Cnt</td><td>Displays the total call for service counts</td></tr>
</table>

Method: [Cnt]
1. Select [Cnt]. The count for service call detection by type is displayed.
   Codes for which the count value is 0 are not displayed.
2. Change the screen using the cursor up/down keys.
3. Select the count value for service call code and press [Clear].
   The individual counter cannot be cleared.
4. Press the start key. The counter value is cleared.

Method: [Total Cnt]
1. Select [Total Cnt]. The total number of service call counts by type is displayed.
2. Change the screen using the cursor up/down keys.
   The total number of service call count cannot be cleared.

Completion
Press the stop key. The screen for selecting a maintenance item No. is displayed.

</td></tr>
</table>

TONER
www.tonerplus.com.ua

<table>
<tr><th>Item No.</th><th>Description</th></tr>
<tr><td>U905</td><td>
Checking counts by optional devices

Description
Displays the counts of document processor or document finisher.
Purpose
To check the use of document processor or document finisher.

Method
1. Press the start key.
2. Select the device to be checked. The count of the selected device is displayed.
<table>
<tr><th>Display</th><th>Description</th></tr>
<tr><td>DP</td><td>Counts of document processor</td></tr>
<tr><td>DF</td><td>Counts of document finisher</td></tr>
</table>
DP
<table>
<tr><th>Display</th><th>Description</th></tr>
<tr><td>ADP</td><td>Counts of single-sided originals that has passed through the DP</td></tr>
<tr><td>RADP</td><td>Counts of double-sided originals that has passed through the DP</td></tr>
</table>
DF
<table>
<tr><th>Display</th><th>Description</th></tr>
<tr><td>Sorter</td><td>Counts of copies that has passed through the sorter</td></tr>
<tr><td>Staple</td><td>Frequency the stapler has been activated</td></tr>
</table>
Completion
Press the stop key. The screen for selecting a maintenance item No. is displayed.
</td></tr>
<tr><td>U910</td><td>
Clearing the print coverage data

Description
Clears the accumulated data for the print coverage per A4 size paper and its period of time (as shown on the service status report).
Purpose
To clear data as required at times such as during maintenance service.

Method
1. Press the start key.
2. Select [Execute].
3. Press the start key. The print coverage data is cleared.

Completion
Press the stop key. The screen for selecting a maintenance item No. is displayed.
</td></tr>
</table>

TONER
www.tonerplus.com.ua

<table>
<tr><th>Item No.</th><th>Description</th></tr>
<tr><td>U917</td><td>

Setting backup data reading/writing

Description
Retrieves the backup data to a USB memory from the machine; or writes the data from the USB memory to the machine.
Purpose
Machine information is backed up and restored.
Method
1. Press the power key on the operation panel, and after verifying the power indicator has gone off, switch off the main power switch.
2. Insert USB memory in USB memory slot.
3. Turn the main power switch on.
   Wait for 10 seconds to allow the machine to recognize the USB memory.
4. Enter the maintenance item.
5. Press the start key.
6. Select [Export] or [Import] and press the start key.

Display	Description
Import	Writing data from the USB memory to the machine
Export	Retrieving from the machine to a USB memory

7. Select the item.

Display	Description	Depending data
Address Book	Address book	-
Job Account	Job accounting	-
One Touch	Information on one-touch key	Address book
User	User managements	Job accounting
Program	Program information	Job accountings and user managements
Shortcut	Shortcut information	Job accountings, user managements and document box information
Document Box	Document box information	Job accountings and user managements
Fax Forward	FAX transfer information	Job accountings, user managements and document box information
IC Card	IC Card information	-

   * : Since data are dependent with each other, data other than those assigned are also retrieved or written in.
8. Select [On] using the cursor left/right keys.
9. Press the start key. Starts reading or writing.
   The progress of selected item is displayed in %.
   When an error occurs, the operation is canceled and an error code is displayed.
10. When normally completed, [Fin] is displayed.
11. Turn the main power switch off and on after completing writing when selecting [Import].

</td></tr>
</table>

TONER
www.tonerplus.com.ua

Item No.	Description
U917	**Error Codes**

Codes	Description	Codes	Description
e002	Parameter error	e31e	User managements error
e003	File write error	e31f	User managements open error
e004	File initialization error	e320	User managements error
e005	File error	e321	User managements open error
e006	Processing error	e322	User managements list error
e010	Address book clear error (contact)	e323	User managements list error
e011	Address book open error (contact)	e324	Shortcut open error
e012	Address book list error (contact)	e325	Shortcut list error
e013	Address book list error (contact)	e326	Shortcut list error
e014	Address book clear error (group)	e410	Box file open error
e015	Address book open error (group)	e411	Box error in writing
e016	Address book list error (group)	e412	Box error in reading
e017	Address book list error (group)	e413	Box list error
e110	Job accounting clear error	e414	Box list error
e111	Job accounting open error	e415	Box error
e112	Job accounting open error	e416	Box error
e113	Job accounting error in writing	e417	Box open error
e114	Job accounting list error	e418	Box close error
e115	Job accounting list error	e419	Box creation error
e210	One-touch open error	e41a	Box creation error
e211	One-touch list error	e41b	Box deletion error
e212	One-touch list error	e41c	Box movement error
e310	User managements backup error	e510	Program error in writing
e311	User managements clear error	e511	Program error in reading
e312	User managements open error	e710	Fax memory open error
e313	User managements open error	e711	Fax memory initialization error
e314	User managements open error	e712	Fax memory list error
e315	User managements error in writing	e713	Fax memory error
e316	User managements list error	e714	Fax memory error
e317	User managements list error	e715	Fax memory mode error
e318	User managements list error	e716	Fax memory error
e319	User managements list error	e717	Fax memory error
e31a	User managements open error	e718	Fax memory mode error
e31b	User managements error	e910	File reading error
e31c	User managements error	e911	File writing error
e31d	User managements open error	e912	Data mismatch

TONER
www.tonerplus.com.ua

<table>
<tr><th>Item No.</th><th>Description</th></tr>
<tr><td>U917</td><td>
Error Codes
<table>
<tr><th>Codes</th><th>Description</th><th>Codes</th><th>Description</th></tr>
<tr><td>e913</td><td>Log file open error</td><td>d008</td><td>File rename error</td></tr>
<tr><td>e914</td><td>Log file error in writing</td><td>d009</td><td>File open error</td></tr>
<tr><td>e915</td><td>Directory open error</td><td>d00a</td><td>File close error</td></tr>
<tr><td>e916</td><td>Directory error in reading</td><td>d00b</td><td>File reading error</td></tr>
<tr><td>e917</td><td>Synchronization error</td><td>d00c</td><td>File writing error</td></tr>
<tr><td>e918</td><td>Synchronization error</td><td>d00d</td><td>File copy error</td></tr>
<tr><td>d000</td><td>Unspecified error</td><td>d00e</td><td>File compressed error</td></tr>
<tr><td>d001</td><td>HDD unavailable</td><td>d00f</td><td>File decompressed error</td></tr>
<tr><td>d002</td><td>USB memory is not inserted</td><td>d010</td><td>Directory open error</td></tr>
<tr><td>d003</td><td>File for writing is not found in the USB</td><td>d011</td><td>Directory creation error</td></tr>
<tr><td>d004</td><td>File for reading is not found in the HDD</td><td>d012</td><td>File writing error</td></tr>
<tr><td>d005</td><td>USB error in writing</td><td>d013</td><td>File reading error</td></tr>
<tr><td>d006</td><td>USB error in reading</td><td>d014</td><td>File deletion error</td></tr>
<tr><td>d007</td><td>USB unmount error</td><td>d015</td><td>File copy error to the USB</td></tr>
</table>
Completion
Press the stop key. The screen for selecting a maintenance item No. is displayed.
</td></tr>
<tr><td>U927</td><td>
Clearing the all copy counts and machine life counts (one time only)

Description
Resets all of the counts back to zero.

Supplement
The total account counter and the machine life counter can be cleared only once if all count values are 1000 or less.

Method
1. Press the start key.
2. Select [Execute].
3. Press the start key. All copy counts and machine life counts are cleared.

Completion
Press the stop key. The screen for selecting a maintenance item No. is displayed.
</td></tr>
</table>

TONER
www.tonerplus.com.ua

Item No.	Description
U942	**Setting of deflection for feeding from DP** **Description** Adjusts the deflection generated when the document processor is used. **Purpose** Use this mode if an original non-feed jam, oblique feed or wrinkling of original occurs when the document processor is used. **Setting** 1. Press the start key. 2. Press the system menu key. 3. Place an original on the DP and press the start key to make a test copy. 4. Press the system menu key. 5. Select the item to be adjusted. 6. Change the setting value using the cursor left/right keys or numeric keys.l

Display	Description	Setting range	Initial setting	Change in value per step
Front	Deflection of DP paper feed motor (DPPFM)	-50 to 50	0	0.119 mm
Back	Deflection of DP switchback motor (DPSBM)	-50 to 50	0	0.119 mm

* : The greater the value, the larger the deflection; the smaller the value, the smaller the deflection.
If an original non-feed jam or oblique feed occurs, increase the setting value. If wrinkling of original occurs, decrease the value.

7. Press the start key. The value is set.

Completion
Press the stop key. The screen for selecting a maintenance item No. is displayed.

TONER
www.tonerplus.com.ua

<table>
<tr><th>Item No.</th><th>Description</th></tr>
<tr><td>U977</td><td>
Data capture mode

Description
Store the print data sent to the machine into USB memory.
Purpose
In case to occur the error at printing, check the print data sent to the machine.

Method
1. Press the power key on the operation panel, and after verifying the main power indicator has gone off, switch off the main power switch.
2. Insert USB memory in USB memory slot.
3. Turn the main power switch on.
4. Enter maintenance item U977.
5. Select [Execute].
6. Press the start key.
7. Send the print data to the machine.
Once the print data is stored into USB memory, [Finish] will be displayed.

Completion
Press the stop key. The screen for selecting a maintenance item No. is displayed.
</td></tr>
<tr><td>U984</td><td>
Checking the developing unit number

Description
Displays the developing unit number.
Purpose
To check the developing unit number.

Method
1. Press the start key. The developing unit number for each color is displayed.
<table>
<tr><th>Display</th><th>Description</th></tr>
<tr><td>C</td><td>Cyan developing unit number</td></tr>
<tr><td>M</td><td>Magenta developing unit number</td></tr>
<tr><td>Y</td><td>Yellow developing unit number</td></tr>
<tr><td>K</td><td>Black developing unit number</td></tr>
</table>
Completion
Press the stop key. The screen for selecting a maintenance item No. is displayed.
</td></tr>
</table>

TONER
www.tonerplus.com.ua

<table>
<tr><th>Item No.</th><th>Description</th></tr>
<tr><td>U985</td><td>

Displaying the developer history

Description
Displays the past record of machine number and the developer counter.
Purpose
To check the count value of machine number and the developer counter.

Method
1. Press the start key.
2. Select the color to check.

<table>
<tr><th>Display</th><th>Description</th></tr>
<tr><td>C</td><td>Cyan developing unit past record</td></tr>
<tr><td>M</td><td>Magenta developing unit past record</td></tr>
<tr><td>Y</td><td>Yellow developing unit past record</td></tr>
<tr><td>K</td><td>Black developing unit past record</td></tr>
</table>

3. The history of a machine number and a developing counter for each color is displayed by three cases.

<table>
<tr><th>Display</th><th>Description</th></tr>
<tr><td>Machine History 1 - 3</td><td>Historical records of the machine number</td></tr>
<tr><td>Cnt History 1 - 3</td><td>Historical records of developer counter</td></tr>
</table>

Completion
Press the stop key. The screen for selecting a maintenance item No. is displayed.

</td></tr>
</table>

TONER
www.tonerplus.com.ua

1-3-2 Service mode

The machine is equipped with a maintenance function which can be used to maintain and service the machine.

(1) Printing the service status page

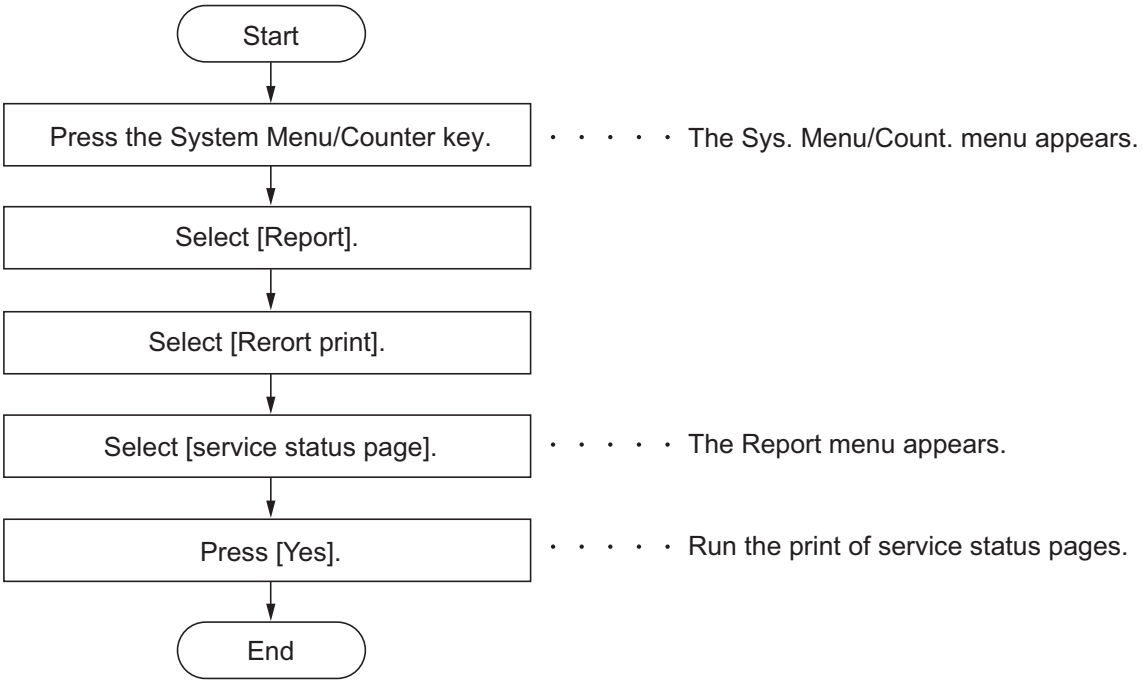

Service items	Description
Service Status	**Printing a status page for service purpose** **Description** Prints a status page for service purpose. The status page includes various settings and service cumulative. **Purpose** To acquire the current printing environmental parameters and cumulative information. **Method** 1. Select [Service status]. 2. Select [YES]. Two pages will be printed. **Completion** Press the System Menu/Counter key.

TONER
www.tonerplus.com.ua

Service items	Description

Service status page (1)

Service Status Page

MFP

(2) 2011/09/28 15:15

(1) Firmware version 2MY_2F00.001.001 2011.09.28 **(3)** [XXXXXXXX] **(4)** [XXXXXXXX] **(5)** [XXXXXXXX]

Controller Information

Memory status

(7) Standard Size 128.0 KB
(8) Option Slot 128.0 KB
(9) Total Size 256.0 KB

Time

(10) Local Time Zone +01:00 Tokio
(11) Date and Time 10/10/2010 12:00
(12) Time Server 10.183.53.13

Installed Options

(13) Paper feeder Cassette
(14) Finisher 500-Finisher
(15) Card Authentication Kit (B) Installed
(16) USB Keyboard Connected
(17) USB Keyboard Type US -English
(18) UG-33 Installed

Print Coverage

(19) Average(%) / Usage Page(A4/Letter Conversion)
(20) Total
K: 1.10 / 1111111.11
C: 2.20 / 2222222.22
M: 3.30 / 3333333.33
Y: 4.40 / 4444444.44
(21) Copy
K: 1.10 / 1111111.11
C: 2.20 / 2222222.22
M: 3.30 / 3333333.33
Y: 4.40 / 4444444.44
(22) Printer
K: 1.10 / 1111111.11
C: 2.20 / 2222222.22
M: 3.30 / 3333333.33
Y: 4.40 / 4444444.44
(23) FAX
K: 1.10 / 1111111.11
(24) Period (27/10/2009 - 03/11/2009 08:40)
(25) Last Page K/C/M/Y(%) 1.00 / 2.22 / 3.33 / 4.44

FAX Information

(26) Rings (Normal) 3
(27) Rings (FAX/TEL) 3
(28) Rings (TAD) 3

(29) FRPO Status

User Top Margin	A1+A2/100	0.00
User Left Margin	A3+A4/100	0.00
PDF mode	Y5	00

1

(6) [XXXXXXXXXXXXXXXX]

Figure 1-3-21

TONER
www.tonerplus.com.ua

Service items	Description

Service status page (2)

Service Status Page

MFP 2011/09/028 15:15

Firmware version 2MY_2F00.001.001 2011.09.28 [XXXXXXXX] [XXXXXXXX] [XXXXXXXX]

Engine Information

(30) NVRAM Version _1F31225_1F31225
(31) FAX
FAX BOOT Version 2K3_5000.001.001
FAX APL Version 2K3_5100.001.001
FAX IPL Version 2K3_5200.001.001
(32) MAC Address 00:C0:EE:D0:01:0D
(33) DP Counters
Total 1234

Send Information

(34) Date and Time 09/03/05 15:30
(35) Address

1/2 **(36) (37)**
(38) 100/100
(39) 0/0/0/0/0
(40) 0/0/0/0/0
(41) 0/0/0/0/0/0/0/0/
(42) 0000000/0000000/0000000/0000000/0000000/0000000/
0000000/0000000/0000000/0000000/0000000/0000000/0000000/0000000/0000000/0000000/
F00/U00/0/0/0/0/30/30/70/70/0/0/abcde/1/0 **(43) (44) (45) (46) (47) (48) (49) (50) (51)**
(52) (53) (54) (55) (56) (57)
(58) 0000/0000/0000/0000/0000/0000/0000/0000/0000/0000/0000/0000/0000/0000/0000/
0000/0000/0000/0000/0000/0000/0000/0000/0000/0000/
(59) 0000/0000/0000/0000/0000/0000/0000/0000/0000/0000/0000/0000/0000/0000/0000/
0000/0000/0000/0000/0000/0000/0000/0000/0000/0000/0000/0000/0000/0000/0000/
(60) 000000000000000/000000000000000/000000000000000/000000000000000/000000000000 000000/
(61) 000000000000000/000000000000000/000000000000000/000000000000000/0000000000/
(62) 000000000000000/000000000000000/000000000000000/
(63) 000000000000000/000000000000000/000000000000000/000000000000000/000000000000 00000/
(64) 000000000000000/000000000000000/000000000000000/000000000000000/00000000000 00000000/
(65) 000000000000000/000000000000000/000000000000000/000000000000000/0000000000 000000000/
(66) 000000000000000/000000000000000/000000000000000/000000000000000/00000000000 00000000/
(67) 000000000000000/000000000000000/000000000000000/
(68) 000000000000000/000000000000000/000000000000000/000000000000000/000000000000 000000/
(69) 000000000000000/000000000000000/000000000000000/000000000000000/000000000 0000000/
(70) 000000000000000/000000000000000/000000000000000/000000000000000/000000 0000000000/
(71) 000000000000000/000000000000000/000000000000000/000000000000000/00 00000000000000/
(72) 12345678/11223344/00001234abcd567800001234abcd5678/01234567890123456789012345678901/0008/00/07
12345678/11223344/00001234abcd567800001234abcd5678/01234567890123456789012345678901/0008/00/07
12345678/11223344/00001234abcd567800001234abcd5678/01234567890123456789012345678901/0008/00/07
12345678/11223344/00001234abcd567800001234abcd5678/01234567890123456789012345678901/0008/00/07
2KV_D100.001.005/0/ **(73) (74)**
[3NN_9000.001.016] **(75)**
[2KX_81BR.001.010] [ABCDEFGHIJ] [ABCDEFGHIJ] **(76) (77) (78)**
0000000000/F80C001A37/302A183C00/000100013D/8791BEC305/0000000000/0000000000/000000000/ **(79)**
0000000000/0000000000/0000000000/00
0/3/ **(80) (81)**
1/ **(82)**
ABCDEFGHIJKL/ABCDEFGHIJKL/ABCDEFGHIJKL/ABCDEFGHIJKL/ **(83)**

2 [XXXXXXXXXXXXXXXX]

Figure 1-3-22

TONER
www.tonerplus.com.ua

Service items	Description

Detail of service status page

No.	Description	Supplement
(1)	Firmware version	-
(2)	System date	-
(3)	Engine soft version	-
(4)	Engine boot version	-
(5)	Operation panel mask version	-
(6)	Machine serial number	-
(7)	Standard memory size	-
(8)	Optional memory size	-
(9)	Total memory size	-
(10)	Local time zone	-
(11)	Report output date	Day/Month/Year hour:minute
(12)	NTP server name	-
(13)	Presence or absence of the optional paper feeder	Paper feeder 1/Paper feeder 2/Not Installed
(14)	Presence or absence of the optional paper finisher	500-Finisher/Not Installed
(15)	Presence or absence of the optional IC card authentication kit	Installed/Not Installed/Trial
(16)	The connection state of an optional USB keyboard	Connected/Not Connected
(17)	Displays setting of optional USB Keyboard	US-English/US English with Euro/German/ French
(18)	Presence or absence of optional UG-33	Installed/Not Installed/Traial
(19)	Page of relation to the A4/Letter	-
(20)	Average coverage for total	Black/Cyan/Magenta/Yellow
(21)	Average coverage for copy	Black/Cyan/Magenta/Yellow
(22)	Average coverage for printer	Black/Cyan/Magenta/Yellow
(23)	Average coverage for fax	Black/Cyan/Magenta/Yellow
(24)	Cleared date and output date	-
(25)	Coverage on the final output page	-
(26)	Number of rings	0 to 15
(27)	Number of rings before automatic switching	0 to 15
(28)	Number of rings before connecting to answering machine	0 to 15

www.tonerplus.com.ua

Service items	Description

No.	Description	Supplement
(29)	FRPO setting	-
(30)	NV RAM version	_ 1F3 1225 _ 1F3 1225 (a) (b) (c) (d) (e) (f) (a) Consistency of the present software version and the database _ (underscore): OK * (Asterisk): NG (b) Database version (c) The oldest time stamp of database version (d) Consistency of the present software version and the ME firmware version _ (underscore): OK * (Asterisk): NG (e) ME firmware version (f) The oldest time stamp of the ME database version Normal if (a) and (d) are underscored, and (b) and (e) are identical with (c) and (f).
(31)	Fax firmware version	-
(32)	Mac address	-
(33)	Number of original feed from DP	-
(34)	The last sent date and time	-
(35)	Transmission address	-
(36)	Destination information	-
(37)	Area information	-
(38)	Margin settings	Top margin/Left margin
(39)	Top offset for each paper source	MP tray/Paper feeder 1/Paper feeder 2/Duplex/ Page rotation
(40)	Left offset for each paper source	MP tray/Paper feeder 1/Paper feeder 2/Duplex/ Page rotation
(41)	Margin/Page length/Page width settings	Top margin integer part/Top margin decimal part/ Left margin integer part/Left margin decimal part/ Page length integer part/Page length decimal part/ Page width integer part/Page width decimal part
(42)	Life counter (The first line)	Machine life/MP tray/Cassette/Paper feeder 1/ Paper feeder 2 /Duplex
	Life counter (The second line)	Drum unit K/Drum unit C/Drum unit M/Drum unit Y/ Intermediate transfer unit/Developer unit K/ Developer unit C/Developer unit M/Developer unit Y/Maintenance kit
(43)	Panel lock information	0: OFF/1: Partial lock/2: Full lock

www.tonerplus.com.ua

Service items	Description

No.	Description	Supplement
(44)	USB information	U00: Not installed/U01: Full speed/U02: Hi speed
(45)	Paper handling information	0: Paper source unit select/1: Paper source unit
(46)	Color printing double count mode	0: All single counts 3: Folio, Single count, Less than 330 mm (length)
(47)	Black and white printing double count mode	0: All single counts 3: Folio, Single count, Less than 330 mm (length)
(48)	Billing counting timing	-
(49)	Temperature (machine inside)	-
(50)	Temperature (machine outside)	-
(51)	Relative temperature (machine outside)	-
(52)	Absolute temperature (machine outside)	-
(53)	Thermistor temperature (LSU)	-
(54)	Thermistor temperature (LSU2)	-
(55)	Fixed assets number	-
(56)	Job end judgment time-out time	-
(57)	Job end detection mode	-
(58)	Media type attributes 1 to 28 (Not used: 18, 19, 20)	Weight settings 0: Light 1: Normal 1 2: Normal 2 3: Normal 3 4: Heavy 1 5: Heavy 2 6: Heavy 3 7: Extra Heavy Fuser settings 0: High 1: Middle 2: Low 3: Vellum Duplex settings 0: Disable 1: Enable
(59)	Calibration information	-
(60)	Calibration information	76 Bytes
(61)	The initial characteristic of a sensor	37 Bytes
(62)	Calibration information	24 Bytes
(63)	Calibration information	64 Bytes
(64)	Calibration information	48 Bytes

TONER
www.tonerplus.com.ua

Service items	Description

No.	Description	Supplement
(65)	Calibration information	64 Bytes
(66)	Calibration information	64 Bytes
(67)	The amount of gaps of resist compensation	24 Bytes
(68)	The interval of resist compensation	56 Bytes
(69)	Patch length of resist compensation	64 Bytes
(70)	Calibration information	64 Bytes
(71)	Calibration information	64 Bytes
(72)	RFID information	-
(73)	RFID reader/writer version information	-
(74)	Toner install mode information	0: Off t: On
(75)	Soft version of the optional paper feeder	Paper feeder 1/Paper feeder 2
(76)	Version of the optional message	-
(77)	Version of the color table	-
(78)	Version of second color table	-
(79)	Maintenance information	-
(80)	Altitude	0: Standard 1: High altitude 1 2: High altitude 2
(81)	Charger roller correction	1 to 5
(82)	Shift restrictions of an one-sheet original	0:Off 1:On
(83)	Drum serial number	Black/Cyan/Magenta/Yellow

Code conversion

A	B	C	D	E	F	G	H	I	J
0	1	2	3	4	5	6	7	8	9

TONER
www.tonerplus.com.ua

(2) Executing a service mode

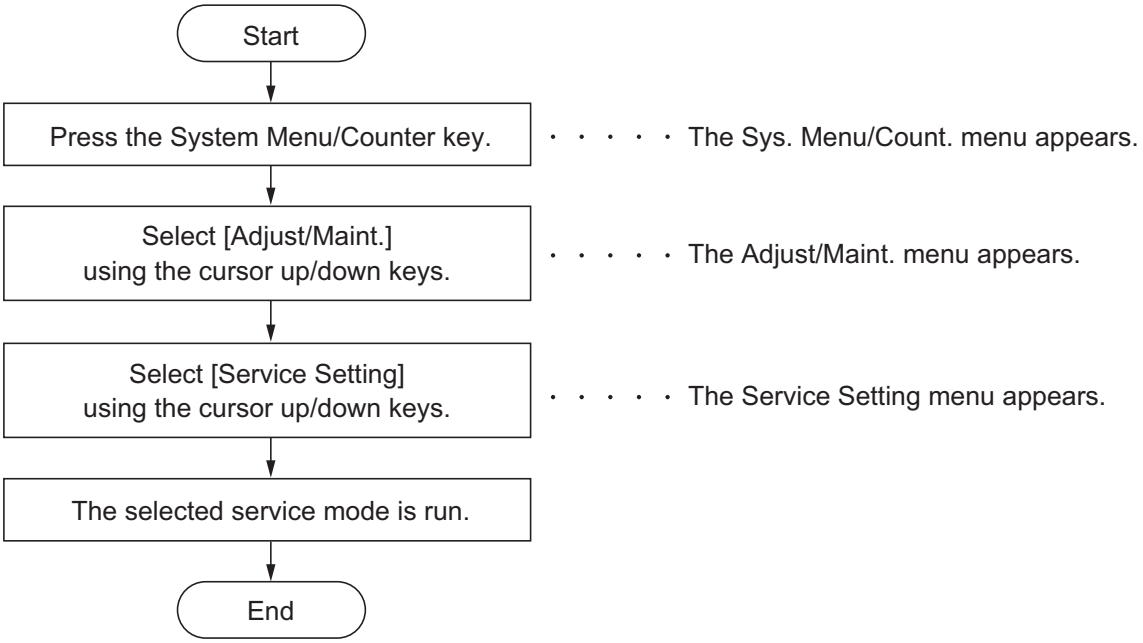

(3) Description of service mode

Service items	Description
Enable Repaired Unit	**Release the disconnection of the cassette and the document feeder.** **Description** Restore the system control when the defective unit is replaced to enable the unit. The menu is displayed only when the unit is detached for failure. **Purpose** Perform when the defective unit is replaced. **Method** 1. Enter the service menu. 2. Select [Enable Repaired Unit]. 3. Press [Start]. **Completion** The unit is automatically powered after execution.

TONER
www.tonerplus.com.ua

Service items	Description
Maintenance (A)	**Reset the counter of the maintenance kit(A).** **Description** Reset the kit counter when replacing the maintenance kit. The menu is displayed only when replacing the maintenance kit. **Purpose** Perform when the maintenance kit is replaced. **Method** 1. Enter the service menu. 2. Select [Maintenance (A)]. 3. Press [Start]. **Completion** Automatically completes when the confirmation display is shown.
Maintenance (B)	**Reset the counter of the maintenance kit(B).** **Description** Reset the kit counter when replacing the maintenance kit. The menu is displayed only when replacing the maintenance kit. **Purpose** Perform when the maintenance kit is replaced. **Method** 1. Enter the service menu. 2. Select [Maintenance (B)]. 3. Press [Start]. **Completion** Automatically completes when the confirmation display is shown.

TONER
www.tonerplus.com.ua

Service items	Description
Center line alighment	**Alignment of the cassette and MP tray and duplex** **Description** Perform settings for the center line adjustment. **Purpose** Perform if the alignment has not been obtained after the center line adjustment. **Method** 1. Enter the service menu. 2. Select [Center Line Adjustment]. 3. Press [Save]. **Completion** Press the Save key in the setting display.

TONER
www.tonerplus.com.ua

<table>
<tr><th>Service items</th><th>Description</th></tr>
<tr><td>FAX country code</td><td>
FAX Country Code

Description
Initializes software switches and all data in the backup data on the FAX control PWB, according to the destination.
Purpose
To initialize the FAX control PWB.

Method
1. Enter the Service Setting menu.
2. Select [FAX Country Code] using the cursor up/down keys.
3. Press the start key.
4. Enter a destination code using the numeric keys.
5. Press the start key. The setting is set.
6. Press the start key. Data initialization starts.

Destination code list
<table>
<tr><th>Code</th><th>Destination</th><th>Code</th><th>Destination</th></tr>
<tr><td>000</td><td>Japan</td><td>253</td><td>CTR21 (European nations)</td></tr>
<tr><td>009</td><td>Australia</td><td></td><td>Italy</td></tr>
<tr><td>038</td><td>China</td><td></td><td>Germany</td></tr>
<tr><td>080</td><td>Hong Kong</td><td></td><td>Spain</td></tr>
<tr><td>084</td><td>Indonesia</td><td></td><td>U.K.</td></tr>
<tr><td>088</td><td>Israel</td><td></td><td>Netherlands</td></tr>
<tr><td>097</td><td>Korea</td><td></td><td>Sweden</td></tr>
<tr><td>108</td><td>Malaysia</td><td></td><td>France</td></tr>
<tr><td>126</td><td>New Zealand</td><td></td><td>Austria</td></tr>
<tr><td>136</td><td>Peru</td><td></td><td>Switzerland</td></tr>
<tr><td>137</td><td>Philippines</td><td></td><td>Belgium</td></tr>
<tr><td>152</td><td>Middle East</td><td></td><td>Denmark</td></tr>
<tr><td>156</td><td>Singapore</td><td></td><td>Finland</td></tr>
<tr><td>159</td><td>South Africa</td><td></td><td>Portugal</td></tr>
<tr><td>169</td><td>Thailand</td><td></td><td>Ireland</td></tr>
<tr><td>181</td><td>U.S.A.</td><td></td><td>Norway</td></tr>
<tr><td>242</td><td>South America</td><td>254</td><td>Taiwan</td></tr>
<tr><td>243</td><td>Saudi Arabia</td><td></td><td></td></tr>
</table>
Completion
Press the stop key.
</td></tr>
</table>

TONER
www.tonerplus.com.ua

<table>
<tr><th>Service items</th><th>Description</th></tr>
<tr><td>FAX call Setting</td><td>
FAX call setting

Description
Selects if a fax is to be connected to either a PBX or public switched telephone network.
Selects the mode to connect an outside call when connected to a PBX.
Access code registration for connection to PSTN.
Purpose
To be executed as required.

Method
1. Enter the Service Setting menu.
2. Select [FAX Call Set.] using the cursor up/down keys.
3. Press the start key.
<table>
<tr><th>Display</th><th>Description</th></tr>
<tr><td>Exchange Select.</td><td>Setting the connection to PBX/PSTN</td></tr>
<tr><td>PBX Setting</td><td>Setting for a PBX</td></tr>
<tr><td>Dial No. to PSTN</td><td>Setting access code to PSTN</td></tr>
</table>
Setting the connection to PBX/PSTN
1. Select [Exchange Select.] using the cursor up/down keys.
2. Press the start key.
3. Select [PBX] or [PSTN] using the cursor up/down keys.
4. Press the start key. The setting is set.

Setting for PBX
1. Select [PBX Setting] using the cursor up/down keys.
2. Press the start key.
3. Select [Loop], [Flash] or [Earth] using the cursor up/down keys.
4. Press the start key. The setting is set.

Setting access code to PSTN
1. Select [Dial No. to PSTN] using the cursor up/down keys.
2. Press the start key.
3. Enter access code using the numeric keys. (0 to 9, 00 to 99)
4. Press the start key. The setting is set.

Completion
Press the stop key.
</td></tr>
</table>

TONER
www.tonerplus.com.ua

Service items	Description
Altitude adjustment	**Setting altitude adjustment** **Description** Sets the altitude adjustment mode. **Purpose** Used when print quality deteriorates in an installation at the altitude of 1,500 meters or higher. **Method** 1. Enter the Service Setting menu. 2. Select [Altitude Adj.]. 3. Press the start key. 4. Select [Normal], [High 1], [High 2] or [High 3)]. 5. Press the start key. The setting is set. **Completion** Press the stop key.
Main charger adjustment	**Setting main charger output** **Description** Sets the main charger output. This is executable only when the altitude adjustment mode is set to [Normal]. **Purpose** Execute when the image density declines or an offset has occurred. **Method** 1. Enter the Service Setting menu. 2. Select [MC]. 3. Press the start key. 4. Select [1], [2] , [3] , [4] or [5]. 5. Press the start key. The setting is set. **Completion** Press the stop key.

TONER
www.tonerplus.com.ua

Service items	Description
Developer cleaning	**Setting developer cleaning** **Description** Execute toner discharging and replenishing repeatedly to cast the deteriorated toner out of the developer unit. **Purpose** The deterioration of image due to the low development density and blurring will be reduced. **Method** 1. Enter the Service Setting menu. 2. Select [DEV-CLN]. 3. Press [Start]. **Completion** Press the [OK] key in the confirmation display.
Main chager roller cleaning	**Setting main chager roller cleaning** **Description** White streaks are resulted by the conductive substance, soaked in the charging roller, being adhered at a nip formed between the charging roller and the drum when they have been left inactive for a prolonged period. White streaks are prevented by rotating the drum before the image is formed, because the conductive substance is scraped off with the cleaning blade. OFF: Aging to cancel bleeding is not performed. OFF: Aging to cancel bleeding is performed. **Purpose** Conduct when white streaks are resulted in the lengthwise direction of the drum. **Method** 1. Enter the Service Setting menu. 2. Select [MC-CLN]. 3. Select [OFF] or [ON].

TONER
www.tonerplus.com.ua

Service items	Description
Memory Diagnostics	**Perform a memory diagnostic** **Description** Diagnose memory at power up (whether reading and writing are executable). **Purpose** Execute memory check in purpose of rectifying a defective memory device which may possibly cause an unresolvable F call, locking, or abnormal images. **Method** 1. Enter the Service Setting menu. 2. Select [Memory Diagnostics]. 3. Press [Start]. 4. Turn the main power switch off and on. Allow more than 5 seconds between Off and On.

TONER
www.tonerplus.com.ua

1-4-1 Paper misfeed detection

(1) Paper misfeed indication

When a paper misfeed occurs, the machine immediately stops copying and displays the jam location on the operation panel.
Paper misfeed counts sorted by component can be checked by maintenance item U903.
To remove the paper jammed in the machine, open the right cover and pull the cassette out.
To remove the original jammed in DP or the document finisher, open the top cover.
Paper misfeed can be reset by opening and closing the respective covers.

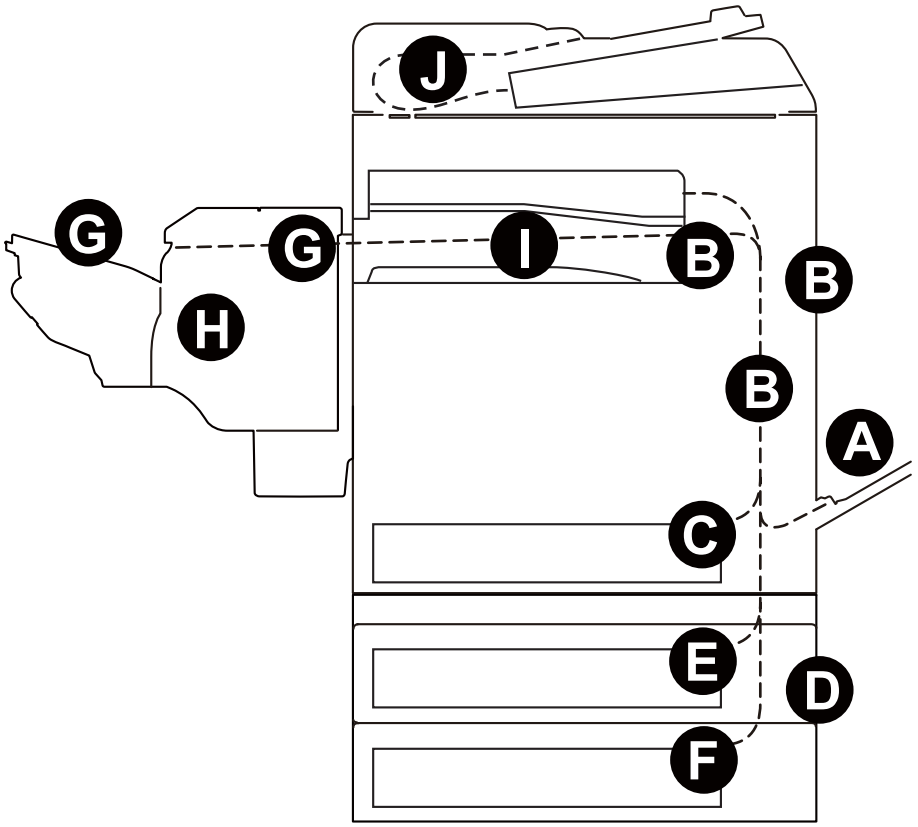

Figure 1-4-1

(A) Misfeed in the MP tray
(B) Misfeed in right cover 1
(C) Misfeed in cassette 1
(D) Misfeed in right cover 3
(E) Misfeed in cassette 2
(F) Misfeed in cassette 3
(G) Misfeed in the document finisher
(H) Stapler problem
(I) Misfeed in the bridge
(J) Misfeed in the document processor

TONER+
www.tonerplus.com.ua

(2) Paper misfeed detection component

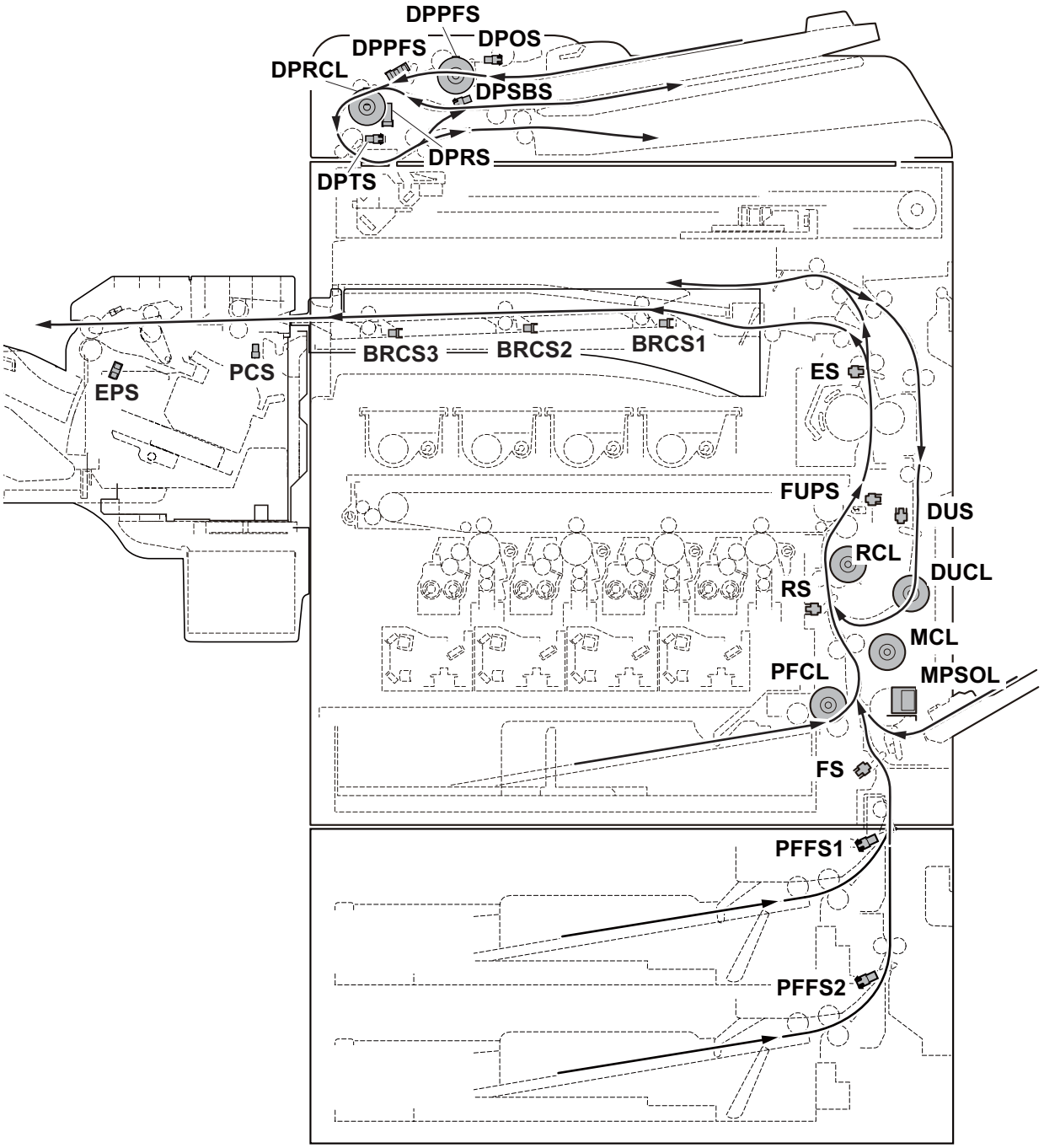

Figure 1-4-2

TONER+
www.tonerplus.com.ua

Code	Contents	Conditions	Jam location*
0000	Initial jam	The power is turned on when a sensor in the conveying system is on.	-
0100	Secondary paper feed request time out	Secondary paper feed request given by the controller is unreachable.	B
0101	Waiting for process package to be ready	Process package won't be ready.	B
0104	Waiting for conveying package to be ready	Conveying package won't be ready.	B
0106	Paper feeding request for duplex printing time out	Paper feeding request for duplex printing given by the controller is unreachable.	B
0107	Waiting for fuser package to be ready	Fuser package won't be ready.	-
0110	Right cover open	The right cover is opened during printing.	-
0111	Front cover open	The front cover is opened during printing.	-
0120	Receiving a duplex paper feeding request while paper is empty	Paper feed request was received from the duplex section despite the absence of paper in the duplex section.	B
0121	Exceeding number of duplex pages circulated	The controller issued the duplex section a request for more pages than the duplex print cycle contains.	B
0210	Right lower cover open	The right lower cover is opened during printing.	-
0501	No paper feed from cassette 1	The registration sensor (RS) does not turn on during paper feed from cassette 1.	C
0502	No paper feed from cassette 2	PF feed sensor 1 (PFFS1) does not turn on during paper feed from cassette 2 (Retry 1 times).	E
0503	No paper feed from cassette 3	PF feed sensor 2 (PFFS2) does not turn on during paper feed from cassette 3 (Retry 1 times).	F
0508	No paper feed from duplex section	The registration sensor (RS) does not turn on during paper feed from the duplex section.	B
0509	No paper feed from MP tray	The registration sensor (RS) does not turn on during paper feed from the MP tray.	A
0511	Multiple sheets in cassette 1	The registration sensor (RS) does not turn off during paper feed from cassette 1.	C
0512	Multiple sheets in cassette 2	PF feed sensor 1 (PFFS1) does not turn off during paper feed from cassette 2.	E
0513	Multiple sheets in cassette 3	PF feed sensor 2 (PFFS2) does not turn off during paper feed from cassette 3.	F
0518	Multiple sheets in duplex section	The registration sensor (RS) does not turn off during paper feed from the duplex section.	B
0519	Multiple sheets in MP tray	The registration sensor (RS) does not turn off during paper feed from theMP tray.	A

*: Refer to figure 1-4-1 for paper jam location (see page 1-4-1).

TONER
www.tonerplus.com.ua

Code	Contents	Conditions	Jam location*
1403	PF feed sensor 1 non arrival jam	PF feed sensor 1 (PFFS1) does not turn on during paper feed from cassette 3.	D
1413	PF feed sensor 1 stay jam	PF feed sensor 1 (PFFS1) does not turn off during paper feed from cassette 3.	D
4002	Registration sensor non arrival jam	The registration sensor (RS) does not turn on during paper feed from cassette 2.	D
4003		The registration sensor (RS) does not turn on during paper feed from cassette 3.	D
4012	Registration sensor stay jam	The registration sensor (RS) does not turn off during paper feed from cassette 2.	D
4013		The registration sensor (RS) does not turn off during paper feed from cassette 3.	D
4101	Fuser pre sensor non arrival jam	The fuser pre sensor (FUPS) does not turn on during paper feed from cassette 1.	B
4102		The fuser pre sensor (FUPS) does not turn on during paper feed from cassette 2.	B
4103		The fuser pre sensor (FUPS) does not turn on during paper feed from cassette 3.	B
4108		The fuser pre sensor (FUPS) does not turn on during paper feed from duplex section.	B
4109		The fuser pre sensor (FUPS) does not turn on during paper feed from MP tray.	B
4111	Fuser pre sensor stay jam	The fuser pre sensor (FUPS) does not turn off during paper feed from cassette 1.	B
4112		The fuser pre sensor (FUPS) does not turn off during paper feed from cassette 2.	B
4113		The fuser pre sensor (FUPS) does not turn off during paper feed from cassette 3.	B
4118		The fuser pre sensor (FUPS) does not turn off during paper feed from the duplex section.	B
4119		The fuser pre sensor (FUPS) does not turn off during paper feed from the MP tray.	B

*: Refer to figure 1-4-1 for paper jam location (see page 1-4-1).

TONER
www.tonerplus.com.ua

Code	Contents	Conditions	Jam location*
4201	Eject sensor non arrival jam	The eject sensor (ES) does not turn on during paper feed from cassette 1.	B
4202		The eject sensor (ES) does not turn on during paper feed from cassette 2.	B
4203		The eject sensor (ES) does not turn on during paper feed from cassette 3.	B
4208		The eject sensor (ES) does not turn on during paper feed from duplex section.	B
4209		The eject sensor (ES) does not turn on during paper feed from MP tray.	B
4211	Eject sensor stay jam	The eject sensor (ES) does not turn off during paper feed from cassette 1.	B
4212		The eject sensor (ES) does not turn off during paper feed from cassette 2.	B
4213		The eject sensor (ES) does not turn off during paper feed from cassette 3.	B
4218		The eject sensor (ES) does not turn off during paper feed from the duplex section.	B
4219		The eject sensor (ES) does not turn off during paper feed from the MP tray.	B
4301	Duplex sensor non arrival jam	The duplex sensor (DUS) does not turn on during paper feed from cassette 1.	B
4302		The duplex sensor (DUS) does not turn on during paper feed from cassette 2.	B
4303		The duplex sensor (DUS) does not turn on during paper feed from cassette 3.	B
4309		The duplex sensor (DUS) does not turn on during paper feed from the MP tray.	B
4311	Duplex sensor stay jam	The duplex sensor (DUS) does not turn off during paper feed from cassette 1.	B
4312		The duplex sensor (DUS) does not turn off during paper feed from cassette 2.	B
4313		The duplex sensor (DUS) does not turn off during paper feed from cassette 3.	B
4319		The duplex sensor (DUS) does not turn off during paper feed from the MP tray.	B

*: Refer to figure 1-4-1 for paper jam location (see page 1-4-1).

TONER www.tonerplus.com.ua

Code	Contents	Conditions	Jam location*
4901	Bridge conveying sensor 1 non arrival jam	The bridge conveying sensor 1 (BRCS1) does not turn on during paper feed from cassette 1.	B
4902		The bridge conveying sensor 1 (BRCS1) does not turn on during paper feed from cassette 2.	B
4903		The bridge conveying sensor 1 (BRCS1) does not turn on during paper feed from cassette 3.	B
4908		The bridge conveying sensor 1 (BRCS1) does not turn on during paper feed from duplex section.	B
4909		The bridge conveying sensor 1 (BRCS1) does not turn on during paper feed from the MP tray.	B
4911	Bridge conveying sensor 1 stay jam	The bridge conveying sensor 1 (BRCS1) does not turn off during paper feed from cassette 1.	I
4912		The bridge conveying sensor 1 (BRCS1) does not turn off during paper feed from cassette 2.	I
4913		The bridge conveying sensor 1 (BRCS1) does not turn off during paper feed from cassette 3.	I
4918		The bridge conveying sensor 1 (BRCS1) does not turn off during paper feed from duplex section.	I
4919		The bridge conveying sensor 1 (BRCS1) does not turn off during paper feed from the MP tray.	I
5001	Bridge conveying sensor 3 non arrival jam	The bridge conveying sensor 3 (BRCS3) does not turn on during paper feed from cassette 1.	I
5002		The bridge conveying sensor 3 (BRCS3) does not turn on during paper feed from cassette 2.	I
5003		The bridge conveying sensor 3 (BRCS3) does not turn on during paper feed from cassette 3.	I
5008		The bridge conveying sensor 3 (BRCS3) does not turn on during paper feed from the duplex section.	I
5009		The bridge conveying sensor 3 (BRCS3) does not turn on during paper feed from theMP tray.	I
5011	Bridge conveying sensor 3 stay jam	The bridge conveying sensor 3 (BRCS3) does not turn off during paper feed from cassette 1.	I
5012		The bridge conveying sensor 3 (BRCS3) does not turn off during paper feed from cassette 2.	I
5013		The bridge conveying sensor 3 (BRCS3) does not turn off during paper feed from cassette 3.	I
5018		The bridge conveying sensor 3 (BRCS3) does not turn off during paper feed from duplex section.	I
5019		The bridge conveying sensor 3 (BRCS3) does not turn off during paper feed from the MP tray.	I

*: Refer to figure 1-4-1 for paper jam location (see page 1-4-1).

TONER
www.tonerplus.com.ua

Code	Contents	Conditions	Jam location*
6023	Staple cover open	The staple cover is opened during operation.	G
6043	DF top cover open	The DF top cover is opened during operation.	G
6103	DF paper conveying sensor non arrival jam	The paper conveying sensor (PCS) does not turned on even if a specified time has elapsed after the machine eject signal was received.	I
6113	DF paper conveying sensor stay jam	The paper conveying sensor (PCS) does not turn off within the specified time of its turning on.	G
6123	DF paper conveying sensor remaining jam	The paper conveying sensor (PCS) does not turned on when the power is turned on or the cover is closed.	G
6413	DF eject paper sensor stay jam	The eject paper sensor (EPS) does not turn off within the specified time.	G
6423	DF eject paper sensor remaining jam	The eject paper sensor (EPS) does not turned on when the power is turned on or the cover is closed.	G
6803	Front adjustment plate operation ON error	The adjustment sensor 1 (ADS1) does turned on when the job is executed.	H
6813	Front adjustment plate operation OFF error	The adjustment sensor 1 (ADS1) does not turned off when the job is executed.	H
6903	Rear adjustment plate operation ON error	The adjustment sensor 2 (ADS2) does not turned on when the job is executed.	H
6913	Rear adjustment plate operation OFF error	The adjustment sensor 2 (ADS2) does not turned off when the job is executed.	H
7013	Staple operation error	The next staple hasn't head-poked for the next copy to bind after a predetermined interval while clinching has commenced.	H
7023	Staple initial operation error	Head-poking has not been accomplished after 10 attempts in the initialization at power up or closing the cover.	H
7913	Sequence error 1 (operation prohibited)	Operation commenced in the state the finisher is prohibited to operate.	G
7923	Sequence error 2 (initialoperation error)	A request for maintenance mode has occurred in the state the finisher is prohibited to operate or has commenced operation.	G
7933	Sequence error 3 (Error in the reception of backup data)	A backup data command has been received in the state the operation has initiated.	G
7943	Sequence error 4 (standby)	Operation has started in the state standby is prohibited.	G
7953	Sequence error 5 (Error in between copies)	An illegal inter-page or inter-copy interval has occurred.	G

*: Refer to figure 1-4-1 for paper jam location (see page 1-4-1).

TONER
www.tonerplus.com.ua

Code	Contents	Conditions	Jam location*
7963	Sequence error 6	The finisher does not deliver the eject-complete command in 15 seconds after the bridge eject sensor is turned off.	G
9001	DP original conveying jam	DP timing sensor (DPTS) turns off within the specified time since the sensor turns on.	J
9004	DP original switchback jam	During duplex switchback scanning, the DP registration sensor (DPRS) does not turn on within specified time of the DP timing sensor (DPTS) turning off.	J
9010	DP open	The DP is opened during original feeding. Sensor in the conveying system is on when the power is turned on or the cover is closed.	-
9011	DP top cover open	The DP top cover is opened during original feeding.	-
9110	DP paper feed sensor stay jam	The DP paper feed sensor (DPPFS) or DP registration sensor (DPRS) does not turn off within the specified time of the DP timing sensor (DPTS) turning on.	J
9200	DP registration sensor non arrival jam	The DP registration sensor (DPRS) does not turn on within the specified time of the DP paper feed sensor (DPPFS) turning on.	J
9400	DP timing sensor non arrival jam	The DP timing sensor (DPTS) does not turn on within the specified time of the DP registration sensor (DPRS) turning on (Retry 5 times).	J
9410	DP timing sensor stay jam	The DP timing sensor (DPTS) does not turned off within the specified time its turning on.	J

*: Refer to figure 1-4-1 for paper jam location (see page 1-4-1).

TONER
www.tonerplus.com.ua

1-4-2 Self-diagnostic function

(1) Self-diagnostic function

This machine is equipped with self-diagnostic function. When a problem is detected, the machine stops printing and display an error message on the operation panel. An error message consists of a message prompting a contact with service personnel and a four-digit error code indicating the type of the error.

(2) Self-diagnostic codes

If the part causing the problems not designated as a service part, replace the assembly comprising the part.

Code	Contents	Causes	Check procedures/ corrective measures
0030	**FAX control PWB system error** Processing with the fax software was disabled due to a hardware problem.	Defective FAX control PWB.	Replace the fax control PWB and check for correct operation.
0070	**FAX control PWB incompatible detection error** In the initial communication with the FAX control PWB, the normal communication command is not transmitted.	Defective FAX software.	Install the fax software.
		Defective FAX control PWB.	Replace the fax control PWB and check for correct operation.
0100	**Backup memory device error**	Defective flash memory.	Replace the main PWB and check for correct operation (see page 1-5-31).
		Defective main PWB.	
0120	**MAC address data error** The data includes an invalid MAC address.	Defective flash memory.	Replace the main PWB and check for correct operation (see page 1-5-31).
		Defective engine PWB.	Replace the engine PWB and check for correct operation (see page 1-5-32).
0130	**Backup memory read/write error (main PWB)**	Defective flash memory.	Replace the main PWB and check for correct operation (see page 1-5-31).
		Defective main PWB.	
0140	**Backup memory data error (main PWB)**	Defective flash memory.	Replace the main PWB and check for correct operation (see page 1-5-31).
		Defective main PWB.	

TONER
www.tonerplus.com.ua

Code	Contents	Causes	Check procedures/ corrective measures
0150	**Backup memory read/write error (engine PWB)** Detecting engine PWB EEPROM communication error.	The engine PWB EEPROM was improperly installed.	Check the EEPROM is properly installed and remedy if necessary.
		Defective engine PWB.	Replace the engine PWB and check for correct operation (see page 1-5-32).
		Defective EEPROM.	Contact the Service Administrative Division.
0160	**Backup memory data error (engine PWB)**	Defective flash memory.	Replace the engine PWB and check for correct operation (see page 1-5-32).
		Defective engine PWB.	
0170	**Billing counting error** A checksum error is detected in the main and engine backup memories for the billing counters.	Data in the EEPROM .	Contact the Service Administrative Division.
		Defective PWB.	Replace the main PWB or the engine PWB and check for correct operation (see page 1-5-31, 1-5-32).
0180	**Machine number mismatch** Machine number of main and engine does not match.	Data in the EEPROM .	Contact the Service Administrative Division.
0320	**I/O CPU communication error** A communication error is detected 10 times in succession.	Defective PWB.	Replace the main PWB or the engine PWB and check for correct operation. (see page 1-5-31,1-5-32)
0630	**DMA error** DMA transmission of image data does not complete within the specified period of time.	Poor contact in the connector terminals.	Check the connection the signal cable for CIS and the main PWB, and the continuity across the connector terminals. Repair or replace if necessary.
		Defective main PWB.	Replace the main PWB and check for correct operation (see page 1-5-31).
0800	**Image processing error** The JAM100 fee counter is continuously generated.	Defective main PWB.	Replace the main PWB and check for correct operation (see page 1-5-31).
0830	**FAX control PWB flash program area checksum error** A checksum error occurred with the program of the FAX control PWB.	Defective FAX software.	Install the fax software.
		Defective FAX control PWB.	Replace the FAX control PWB.

TONER
www.tonerplus.com.ua

Code	Contents	Causes	Check procedures/ corrective measures
0840	**Faults of RTC** The time is judged to go back based on the comparison of the RTC time and the current time or five years or more have passed.	The battery is disconnected from the main PWB.	Check visually and remedy if necessary
		Defective main PWB.	Replace the main PWB and check for correct operation (see page 1-5-31).
0870	**FAX control PWB to main PWB high capacity data transfer error** High-capacity data transfer between the FAX control PWB and the main PWB of the machine was not normally performed even if the data transfer was retried the specified times.	Improper installation FAX control PWB.	Reinstall the FAX control PWB.
		Defective FAX control PWB or main PWB.	Replace the FAX control PWB or main PWB and check for correct operation (see page 1-5-31).
0920	**Fax file system error** The backup data is not retained for file system abnormality of flash memory of the FAX control PWB.	Defective FAX control PWB.	Replace the FAX control PWB and check for correct operation.
1010	**Lift motor error** After cassette 1 is inserted, the lift sensor does not turn on within 12 s. This error is detected four times successively.	Defective bottom plate elevation mechanism in the cassette.	Check to see if the bottom plate can move smoothly and repair any problem that is found.
		Defective connector cable or poor contact in the connector.	Reinsert the connector. Also check for continuity of the connector cable. If necessary, replace the cable. Lift motor and engine PWB (YC1)
		Defective drive transmission system of the lift motor.	Check if the gears rotate smoothly. If not, grease the bushes and gears. Check for broken gears and replace if necessary.
		Defective lift motor.	Replace the lift motor.
		Defective engine PWB.	Replace the engine PWB and check for correct operation (see page 1-5-32).

TONER
www.tonerplus.com.ua

Code	Contents	Causes	Check procedures/ corrective measures
1020	**PF lift motor 1 error (paper feeder)** After cassette 2 is inserted, PF lift sensor 1 does not turn on within 12 s. This error is detected four times successively.	Defective bottom plate elevation mechanism in the cassette.	Check to see if the bottom plate can move smoothly and repair any problem that is found.
		Defective connector cable or poor contact in the connector.	Reinsert the connector. Also check for continuity of the connector cable. If necessary, replace the cable. PF lift motor 1 and PF main PWB (YC4)
		Defective drive transmission system of the PF lift motor 1.	Check if the gears rotate smoothly. If not, grease the bushes and gears. Check for broken gears and replace if necessary.
		Defective PF lift motor 1.	Replace the PF lift motor 1.
		Defective PF main PWB.	Replace the PF main PWB (Refer to the service manual of the paper feeder).
1030	**PF lift motor 2 error (paper feeder)** After cassette 3 is inserted, PF lift sensor 2 does not turn on within 12 s. This error is detected four times successively.	Defective bottom plate elevation mechanism in the cassette.	Check to see if the bottom plate can move smoothly and repair it if any problem is found.
		Defective connector cable or poor contact in the connector.	Reinsert the connector. Also check for continuity of the connector cable. If necessary, replace the cable. PF lift motor 2 and PF main PWB (YC7)
		Defective drive transmission system of the PF lift motor 2.	Check if the gears rotate smoothly. If not, grease the bushes and gears. Check for broken gears and replace if any.
		Defective PF lift motor 2.	Replace the PF lift motor 2.
		Defective PF main PWB.	Replace the PF main PWB (Refer to the service manual of the paper feeder).

TONER
www.tonerplus.com.ua

Code	Contents	Causes	Check procedures/ corrective measures
1800	**Paper feeder communication error** A communication error is detected 10 times in succession.	Improper installation of the paper feeder.	Follow the installation instruction carefully again.
		Defective connector cable or poor contact of the connector.	Reinsert the connector. Also check for continuity of the connector cable. If necessary, replace the cable. PF main PWB (YC3) and engine PWB (YC20)
		Defective engine PWB.	Replace the engine PWB and check for correct operation (see page 1-5-32).
		Defective PF main PWB.	Replace the PF main PWB (Refer to the service manual of the paper feeder).
1900	**Paper feeder EEPROM error** When writing the data, the write data and the read data is not continuously in agreement 4 times.	Defective PF main PWB.	Replace the PF main PWB (Refer to the service manual of the paper feeder).
		Device damage of EEPROM.	Contact the Service Administrative Division.
1950	**Transfer belt unit EEPROM error** No response is issued from the device in reading/writing for 5 ms or more and this problem is repeated five times successively. Mismatch of reading data from two locations occurs eight times successively. Mismatch between writing data and reading data occurs eight times successively.	Defective transfer PWB.	Replace the transfer PWB and check for correct operation.
		Device damage of EEPROM.	Contact the Service Administrative Division.
2101	**Developer motor K steady-state error** The rated speed signal detected the stability OFF continuously for 1 s after the developer motor K stabilizes.	Defective connector cable or poor contact in the connector.	Reinsert the connector. Also check for continuity of the connector cable. If necessary, replace the cable. Developer motor K and engine PWB (YC4)
		Defective drive transmission system.	Check if the rollers and gears rotate smoothly. If not, grease the bushings and gears. Check for broken gears and replace if necessary.
		Defective motor.	Replace the Developer motor K.
		Defective PWB.	Replace the engine PWB and check for correct operation (see page 1-5-32).

TONER
www.tonerplus.com.ua

Code	Contents	Causes	Check procedures/ corrective measures
2102	**Developer motor YCM steady-state error** The rated speed signal detected the stability OFF continuously for 1 s after the developer motor YCM stabilizes.	Defective connector cable or poor contact in the connector.	Reinsert the connector. Also check for continuity within the connector cable. If none, replace the cable. Developer motor YCM and engine PWB (YC3)
		Defective drive transmission system.	Check if the rollers and gears rotate smoothly. If not, grease the bushings and gears. Check for broken gears and replace if any.
		Defective motor.	Replace the Developer motor YCM.
		Defective PWB.	Replace the engine PWB and check for correct operation (see page 1-5-32).
2111	**Developer motor K startup error** Developer motor K is not stabilized within 2 s since the motor is activated.	Defective connector cable or poor contact in the connector.	Reinsert the connector. Also check for continuity of the connector cable. If necessary, replace the cable. Developer motor K and engine PWB (YC4)
		Defective drive transmission system.	Check if the rollers and gears rotate smoothly. If not, grease the bushings and gears. Check for broken gears and replace if necessary.
		Defective motor.	Replace the Developer motor K.
		Defective PWB.	Replace the engine PWB and check for correct operation (see page 1-5-32).
2112	**Developer motor YCM startup error** Developer motor YCM is not stabilized within 2 s since the motor is activated.	Defective connector cable or poor contact in the connector.	Reinsert the connector. Also check for continuity within the connector cable. If necessary, replace the cable. Developer motor YCM and engine PWB (YC4)
		Defective drive transmission system.	Check if the rollers and gears rotate smoothly. If not, grease the bushings and gears. Check for broken gears and replace if necessary.
		Defective motor.	Replace the Developer motor YCM.
		Defective PWB.	Replace the engine PWB and check for correct operation (see page 1-5-32).

TONER
www.tonerplus.com.ua

Code	Contents	Causes	Check procedures/ corrective measures
2201	**Drum motor K steady-state error** The rated speed signal detected the stability OFF continuously for 1 s after the drum motor K stabilizes.	Defective connector cable or poor contact in the connector.	Reinsert the connector. Also check for continuity within the connector cable. If none, replace the cable. Drum motor K and engine PWB (YC3)
		Defective drive transmission system.	Check if the rollers and gears rotate smoothly. If not, grease the bushings and gears. Check for broken gears and replace if any.
		Defective motor.	Replace the Drum motor K.
		Defective PWB.	Replace the engine PWB and check for correct operation (see page 1-5-32).
2202	**Drum motor YCM steady-state error** The rated speed signal detected the stability OFFcontinuously for 1 s after the drum motor YCM stabilizes.	Defective connector cable or poor contact in the connector.	Reinsert the connector. Also check for continuity within the connector cable. If none, replace the cable. Drum motor YCM and engine PWB (YC3)
		Defective drive transmission system.	Check if the rollers and gears rotate smoothly. If not, grease the bushings and gears. Check for broken gears and replace if any.
		Defective motor.	Replace the Drum motor YCM.
		Defective PWB.	Replace the engine PWB and check for correct operation (see page 1-5-32).
2211	**Drum motor K startup error** Drum motor K is not stabilized within 2 s since the motor is activated.	Defective connector cable or poor contact in the connector.	Reinsert the connector. Also check for continuity within the connector cable. If none, replace the cable. Drum motor K and engine PWB (YC3)
		Defective drive transmission system.	Check if the rollers and gears rotate smoothly. If not, grease the bushings and gears. Check for broken gears and replace if any.
		Defective motor.	Replace the Drum motor K.
		Defective PWB.	Replace the engine PWB and check for correct operation (see page 1-5-32).
2212	**Drum motor YCM startup error** Drum motor YCM is not stabilized within 2 s since the motor is activated.	Defective connector cable or poor contact in the connector.	Reinsert the connector. Also check for continuity within the connector cable. If none, replace the cable. Drum motor YCM and engine PWB (YC3)
		Defective drive transmission system.	Check if the rollers and gears rotate smoothly. If not, grease the bushings and gears. Check for broken gears and replace if any.
		Defective motor.	Replace the Drum motor YCM.
		Defective PWB.	Replace the engine PWB and check for correct operation (see page 1-5-32).

TONER
www.tonerplus.com.ua

Code	Contents	Causes	Check procedures/ corrective measures
2300	**Fuser motor steady-state error** The rated speed signal detected the stability OFF continuously for 1 s after the fuser motor stabilizes.	Defective connector cable or poor contact in the connector.	Reinsert the connector. Also check for continuity within the connector cable. If none, replace the cable. Fuser motor and engine PWB (YC4)
		Defective drive transmission system.	Check if the rollers and gears rotate smoothly. If not, grease the bushings and gears. Check for broken gears and replace if any.
		Defective motor.	Replace the Fuser motor.
		Defective PWB.	Replace the engine PWB and check for correct operation (see page 1-5-32).
2310	**Fuser motor startup error** Fuser motor is not stabilized within 2 s since the motor is activated.	Defective connector cable or poor contact in the connector.	Reinsert the connector. Also check for continuity within the connector cable. If none, replace the cable. Fuser motor and engine PWB (YC3)
		Defective drive transmission system.	Check if the rollers and gears rotate smoothly. If not, grease the bushings and gears. Check for broken gears and replace if any.
		Defective motor.	Replace the fuser motor.
		Defective PWB.	Replace the engine PWB and check for correct operation (see page 1-5-32).
2550	**Conveying motor steady-state error** The rated speed signal detected the stability OFF continuously for 1 s after the conveying motor stabilizes.	Defective connector cable or poor contact in the connector.	Reinsert the connector. Also check for continuity within the connector cable. If none, replace the cable. Conveying motor and engine PWB (YC2)
		Defective drive transmission system.	Check if the rollers and gears rotate smoothly. If not, grease the bushings and gears. Check for broken gears and replace if any.
		Defective motor.	Replace the Conveying motor.
		Defective PWB.	Replace the engine PWB and check for correct operation (see page 1-5-32).
2560	**Conveying motor startup error** Conveying motor is not stabilized within 2 s since the motor is activated.	Defective connector cable or poor contact in the connector.	Reinsert the connector. Also check for continuity within the connector cable. If none, replace the cable. Conveying motor and engine PWB (YC2)
		Defective drive transmission system.	Check if the rollers and gears rotate smoothly. If not, grease the bushings and gears. Check for broken gears and replace if any.
		Defective motor.	Replace the conveying motor.
		Defective PWB.	Replace the engine PWB and check for correct operation (see page 1-5-32).

TONER
www.tonerplus.com.ua

Code	Contents	Causes	Check procedures/ corrective measures
2600	**PF drive motor error** (paper feeder) When the PF drive motor is driven, error signal is detected continuously for 1 s.	Defective connector cable or poor contact in the connector.	Reinsert the connector. Also check for continuity within the connector cable. If none, replace the cable. PF drive motor and PF main PWB (YC2)
		Defective drive transmission system.	Check if the rollers and gears rotate smoothly. If not, grease the bushes and gears. Check for broken gears and replace if any.
		Defective motor.	Replace the PF drive motor.
		Defective PWB.	Replace the PF main PWB (Refer to the service manual for the paper feeder).
2700	**TC belt motor error** When the TC belt motor is driven, error signal is detected continuously for 1 s.	Defective connector cable or poor contact in the connector.	Reinsert the connector. Also check for continuity within the connector cable. If none, replace the cable. TC belt motor and TC PWB(YC2) TC PWB and TC connect PWB(YC1) TC connect PWB and engine PWB(YC5)
		Defective drive transmission system.	Check if the rollers and gears rotate smoothly. If not, grease the bushings and gears. Check for broken gears and replace if any.
		Defective motor.	Replace the TC belt motor.
		Defective PWB.	Replace the engine PWB or TC PWB or TC connect PWB check for correct operation (see page 1-5-32).
3100	**ISU home position error** ON/OFF of the HP sensor doesn't change by retrying, after a prescribed pulse passes from power supply ON.	Defective connector cable or poor contact in the connector.	Reinsert the connector. Also check for continuity within the connector cable. If none, replace the cable. Home position sensor and engine PWB (YC13)
		Defective home position sensor.	Replace the home position sensor.
		Defective ISU motor.	Replace the ISU motor.
		Defective CCD PWB.	Replace the image scanner unit (see page 1-5-21).
		Defective engine PWB.	Replace the engine PWB and check for correct operation (see page 1-5-32).

TONER www.tonerplus.com.ua

Code	Contents	Causes	Check procedures/ corrective measures
3200	**Exposure lamp error** The peak count during CCD turned on does not count up for 300 seconds . When the white standard data at the time of an initial is lower than a rated value.	Defective connector cable or poor contact of the connector.	Reinsert the connector. Also check for continuity within the connector cable. If necessary, replace the cable. LED PWB and main PWB (YC112) CCD PWB and main PWB (YC113)
		Defective exposure lamp.	Replace the image scanner unit (see page 1-5-21).
		Defective CCD PWB.	
		Defective main PWB.	Replace the main PWB and check for correct operation (see page 1-5-31).
3500	**Communication error** A wrong read-back value.	Defective connector cable or poor contact in the connector.	Reinsert the connector. Also check for continuity within the connector cable. If none, replace the cable. CCD PWB and main PWB (YC113)
		Defective CCD PWB.	Replace the image scanner unit (see page 1-5-21).
		Defective main PWB.	Replace the main PWB and check for correct operation (see page 1-5-31).
3600	**Scanner sequence error**	Defective main PWB or engine PWB.	Replace the main PWB or the engine PWB and check for correct operation (see page 1-5-31 or 1-5-32).
4001	**Polygon motor (K) steady-state error** The rated speed signal detected the stability OFF continuously for 1 s after the polygon motor (K) stabilizes.	Defective connector cable or poor contact in the connector.	Reinsert the connector. Also check for continuity within the connector cable. If none, replace the cable. Laser scanner unit (K) and LSU connect PWB(YC5) LSU connect PWB and engine PWB (YC12)
		Defective motor.	Replace the Laser scanner unit (K).
		Defective PWB.	Replace the engine PWB or LSU connect PWB and check for correct operation (see page 1-5-32).
4002	**Polygon motor (C) steady-state error** The rated speed signal detected the stability OFF continuously for 1 s after the polygon motor (C) stabilizes.	Defective connector cable or poor contact in the connector.	Reinsert the connector. Also check for continuity within the connector cable. If none, replace the cable. Laser scanner unit (C) and LSU connect PWB(YC6) LSU connect PWB and engine PWB (YC12)
		Defective motor.	Replace the Laser scanner unit (C).
		Defective PWB.	Replace the engine PWB or LSU connect PWB and check for correct operation (see page 1-5-32).

TONER
www.tonerplus.com.ua

Code	Contents	Causes	Check procedures/ corrective measures
4003	**Polygon motor (M) steady-state error** The rated speed signal detected the stability OFF continuously for 1 s after the polygon motor (M) stabilizes.	Defective connector cable or poor contact in the connector.	Reinsert the connector. Also check for continuity within the connector cable. If none, replace the cable. Laser scanner unit (M) and LSU connect PWB(YC7) LSU connect PWB and engine PWB (YC12)
		Defective motor.	Replace the Laser scanner unit (M).
		Defective PWB.	Replace the engine PWB or LSU connect PWB and check for correct operation (see page 1-5-32).
4004	**Polygon motor (Y) steady-state error** The rated speed signal detected the stability OFF continuously for 1 s after the polygon motor (Y) stabilizes.	Defective connector cable or poor contact in the connector.	Reinsert the connector. Also check for continuity within the connector cable. If none, replace the cable. Laser scanner unit (Y) and LSU connect PWB(YC8) LSU connect PWB and engine PWB (YC12)
		Defective motor.	Replace the Laser scanner unit (Y).
		Defective PWB.	Replace the engine PWB or LSU connect PWB and check for correct operation (see page 1-5-32).
4011	**Polygon motor (K) startup error** Polygon motor (K) is not stabilized within 10 s since the motor is activated.	Defective connector cable or poor contact in the connector.	Reinsert the connector. Also check for continuity within the connector cable. If none, replace the cable. Laser scanner unit (K) and LSU connect PWB(YC5) LSU connect PWB and engine PWB (YC12)
		Defective motor.	Replace the Laser scanner unit (K).
		Defective PWB.	Replace the engine PWB or LSU connect PWB and check for correct operation (see page 1-5-32).
4012	**Polygon motor (C) startup error** Polygon motor (C) is not stabilized within 10 s since the motor is activated.	Defective connector cable or poor contact in the connector.	Reinsert the connector. Also check for continuity within the connector cable. If none, replace the cable. Laser scanner unit (C) and LSU connect PWB(YC6) LSU connect PWB and engine PWB (YC12)
		Defective motor.	Replace the Laser scanner unit (C).
		Defective PWB.	Replace the engine PWB or LSU connect PWB and check for correct operation (see page 1-5-32).

TONER
www.tonerplus.com.ua

Code	Contents	Causes	Check procedures/ corrective measures
4013	**Polygon motor (M) startup error** Polygon motor (M) is not stabilized within 10 s since the motor is activated.	Defective connector cable or poor contact in the connector.	Reinsert the connector. Also check for continuity within the connector cable. If none, replace the cable. Laser scanner unit (M) and LSU connect PWB(YC7) LSU connect PWB and engine PWB (YC12)
		Defective motor.	Replace the Laser scanner unit (M).
		Defective PWB.	Replace the engine PWB or LSU connect PWB and check for correct operation (see page 1-5-32).
4014	**Polygon motor (Y) startup error** Polygon motor (Y) is not stabilized within 10 s since the motor is activated.	Defective connector cable or poor contact in the connector.	Reinsert the connector. Also check for continuity within the connector cable. If none, replace the cable. Laser scanner unit (Y) and LSU connect PWB(YC8) LSU connect PWB and engine PWB (YC12)
		Defective motor.	Replace the Laser scanner unit (Y).
		Defective PWB.	Replace the engine PWB or LSU connect PWB and check for correct operation (see page 1-5-32).
4101	**BD initialization problem (K)** BD is not detected within one second after the polygon motor stabilizes.	Defective connector cable or poor contact in the connector.	Reinsert the connector. Also check for continuity within the connector cable. If none, replace the cable. BDPWB and APCPWB APCPWB and LSU connect PWB (YC1) LSU connect PWB and engine PWB (YC12)
		Defective APCPWB.	Replace the Laser scanner unit (K). (see page 1-5-20)
		Defective BDPWB.	
		Defective Main PWB.	Replace the main PWB and check for correct operation (see page 1-5-31).
4102	**BD initialization problem (C)** BD is not detected within one second after the polygon motor stabilizes.	Defective connector cable or poor contact in the connector.	Reinsert the connector. Also check for continuity within the connector cable. If none, replace the cable. BDPWB and APCPWB APCPWB and LSU connect PWB (YC2) LSU connect PWB and engine PWB (YC12)
		Defective APCPWB.	Replace the Laser scanner unit (C). (see page 1-5-20)
		Defective BDPWB.	
		Defective Main PWB.	Replace the main PWB and check for correct operation (see page 1-5-31).

TONER
www.tonerplus.com.ua

Code	Contents	Causes	Check procedures/ corrective measures
4103	**BD initialization problem (M)** BD is not detected within one second after the polygon motor stabilizes.	Defective connector cable or poor contact in the connector.	Reinsert the connector. Also check for continuity within the connector cable. If none, replace the cable. BDPWB and APCPWB APCPWB and LSU connect PWB (YC3) LSU connect PWB and engine PWB (YC12)
		Defective APCPWB.	Replace the Laser scanner unit (M). (see page 1-5-20)
		Defective BDPWB.	
		Defective Main PWB.	Replace the main PWB and check for correct operation (see page 1-5-31).
4104	**BD initialization problem (Y)** BD is not detected within one second after the polygon motor stabilizes.	Defective connector cable or poor contact in the connector.	Reinsert the connector. Also check for continuity within the connector cable. If none, replace the cable. BDPWB and APCPWB APCPWB and LSU connect PWB (YC4) LSU connect PWB and engine PWB (YC12)
		Defective APCPWB.	Replace the Laser scanner unit (M). (see page 1-5-20)
		Defective BDPWB.	
		Defective Main PWB.	Replace the main PWB and check for correct operation (see page 1-5-31).
4600	**LSU cleaning motor error** When the LSU cleaning motor is driven, an error signal is detected continuously for 1 s.	Defective connector cable or poor contact in the connector.	Reinsert the connector. Also check for continuity of the connector cable. If none, replace the cable. LSU cleaning motor and LSU connect PWB(YC11) LSU connect PWB and engine PWB(YC12)
		Defective drive transmission system.	Check if the rollers and gears rotate smoothly. If not, grease the bushings and gears. Check for broken gears and replace if any.
		Defective motor.	Replace the LSU cleaning motor.
		Defective PWB.	Replace the engine PWB or LSU connect PWB check for correct operation (see page 1-5-32).

TONER
www.tonerplus.com.ua

Code	Contents	Causes	Check procedures/ corrective measures
4700	**VIDEO ASIC device error** Mismatch of reading data from two locations occurs eight times successively. Mismatch between writing data and reading data occurs eight times successively.	Defective connector cable or poor contact in the connector.	Reinsert the connector. Also check for continuity within the connector cable. If none, replace the cable. Main PWB (YC105) and engine PWB (YC17)
		Defective main PWB or engine PWB.	Replace the main PWB or the engine PWB and check for correct operation (see page 1-5-31, 1-5-32).
4950	**LSU CPU communication error** A communication error is detected 10 times in succession.	Defective connector cable or poor contact in the connector.	Reinsert the connector. Also check for continuity within the connector cable. If none, replace the cable. Main PWB and engine PWB (YC26)
		Defective PWB.	Replace the main PWB or engine PWB and check for correct operation (see page 1-5-31, 1-5-32).
6000	**Broken fuser heater wire** Fuser thermistor 2 does not reach 80° C/176 °F even after20 s during warming up. The detected temperature of fuser thermistor2 does not reach the specified temperature (ready indication temperature) for 200 s in warming up after reached to 80° C/176 °F.	Defective connector cable or poor contact in the connector.	Reinsert the connector. Also check for continuity within the connector cable. If none, replace the cable. IH coil unit and IHPWB IHPWB and engine PWB (YC7)
		Deformed connector pin.	If the I/F connector pins of the fuser unit and the main unit are deformed owing to foreign matters, such as paper dusts, replace the connectors or the units including the connectors.
		Defective IH PWB.	Replace the IH PWB and check for correct operation (see page 1-5-36).
		Fuser thermostat triggered.	Reinsert the fuser unit (see page 1-5-18).
		Broken fuser heater wire.	
		Defective engine PWB.	Replace the engine PWB and check for correct operation (see page 1-5-32).
6020	**Abnormally high fuser thermistor 2 (center) temperature** The fuser thermistor 2 detects a temperature higher than 240°C/464°F continuously for 1 s.	Deformed connector pin.	If the I/F connector pins of the fuser unit and the main unit are deformed owing to foreign matters, such as paper dusts, replace the connectors or the units including the connectors.
		Shorted fuser thermistor.	Replace the fuser unit (see page 1-5-18).
		Defective engine PWB.	Replace the engine PWB and check for correct operation (see page 1-5-32).

TONER
www.tonerplus.com.ua

Code	Contents	Causes	Check procedures/ corrective measures
6030	**Fuser thermistor 2 (center) break error** A/D value of the fuser thermistor 2 exceeds 1010 bit continuously for 1 s during warming up.	Defective connector cable or poor contact in the connector.	Reinsert the connector. Also check for continuity within the connector cable. If none, replace the cable. Fuser thermister2 and fuser PWB (YC2) Fuser unit and engine PWB (YC22)
		Deformed connector pin.	If the I/F connector pins of the fuser unit and the main unit are deformed owing to foreign matters, such as paper dusts, replace the connectors or the units including the connectors.
		Defective fuser thermistor.	Replace the fuser unit (see page 1-5-18).
		Defective engine PWB.	Replace the engine PWB and check for correct operation (see page 1-5-32).
6040	**NC sensor error** When a sensor detected the temperature higher than 150 °C/302 °F continuously for 5 seconds.	Deformed connector pin.	If the I/F connector pins of the fuser unit and the main unit are deformed owing to foreign matters, such as paper dusts, replace the connectors or the units including the connectors.
		Shorted fuser thermistor.	Replace the fuser unit (see page 1-5-18).
		Defective engine PWB.	Replace the engine PWB and check for correct operation (see page 1-5-32).
6050	**Abnormally low fuser thermistor 2 (center) temperature** The fuser temperature lower than 100 °C/212 °F is detected continuously for 1 s during printing.	Deformed connector pin.	If the I/F connector pins of the fuser unit and the main unit are deformed owing to foreign matters, such as paper dusts, replace the connectors or the units including the connectors.
		Defective fuser thermistor.	Replace the fuser unit (see page 1-5-18).
		Defective fuser heater.	
		Defective engine PWB.	Replace the engine PWB and check for correct operation (see page 1-5-32).

TONER
www.tonerplus.com.ua

Code	Contents	Causes	Check procedures/ corrective measures
6120	**Abnormally high fuser thermistor 3 (press roller) temperature** The fuser temperature exceeds 200 °C/392 °F for 1 s.	Deformed connector pin.	If the I/F connector pins of the fuser unit and the main unit are deformed owing to foreign matters, such as paper dusts, replace the connectors or the units including the connectors.
		Defective IH PWB.	Replace the IH PWB and check for correct operation (see page 1-5-36).
		Defective fuser thermistor.	Replace the fuser unit (see page 1-5-18).
		Defective engine PWB.	Replace the engine PWB and check for correct operation (see page 1-5-32).
6130	**Fuser thermistor 3 (press roller) break error** Fuser thermistor 3 does not reach 30° C/86 °F even after60 s during warming up. The detected temperature of fuser thermistor3 does not reach the specified temperature (ready indication temperature) for 200 s in warming up after reached to 30° C/86 °F.	Defective connector cable or poor contact in the connector.	Reinsert the connector. Also check for continuity within the connector cable. If none, replace the cable. Fuser thermistor 3 and fuser PWB (YC4) Fuser unit and engine PWB (YC22)
		Deformed connector pin.	If the I/F connector pins of the fuser unit and the main unit are deformed owing to foreign matters, such as paper dusts, replace the connectors or the units including the connectors.
		Defective IH PWB.	Replace the IH PWB and check for correct operation (see page 1-5-36).
		Defective fuser thermistor.	Replace the fuser unit (see page 1-5-18).
		Defective engine PWB.	Replace the engine PWB and check for correct operation (see page 1-5-32).
6150	**Abnormally low fuser thermistor 3 (press roller) temperature** The fuser temperature lower than 30 °C/86 °F is detected continuously for 1 s.	Deformed connector pin.	If the I/F connector pins of the fuser unit and the main unit are deformed owing to foreign matters, such as paper dusts, replace the connectors or the units including the connectors.
		Defective fuser thermistor.	Replace the fuser unit (see page 1-5-18).
		Defective fuser heater.	
		Defective engine PWB.	Replace the engine PWB and check for correct operation (see page 1-5-32).

TONER
www.tonerplus.com.ua

Code	Contents	Causes	Check procedures/ corrective measures
6200	**Broken fuser edge heater wire** Fuser thermistor 1 does not reach 50° C/122 °F even after20 s during warming up. The detected temperature of fuser thermistor1 does not reach the specified temperature (ready indication temperature) for 60 s in warming up after reaching 50° C/122 °F.	Defective connector cable or poor contact in the connector.	Reinsert the connector. Also check for continuity within the connector cable. If none, replace the cable. IH coil unit and IHPWB IHPWB and engine PWB (YC7)
		Deformed connector pin.	If the I/F connector pins of the fuser unit and the main unit are deformed owing to foreign matters, such as paper dusts, replace the connectors or the units including the connectors.
		Fuser thermostat triggered.	Reinsert the fuser unit (see page 1-5-18).
		Broken fuser heater wire.	
		Defective engine PWB.	Replace the engine PWB and check for correct operation (see page 1-5-32).
6220	**Abnormally high fuser thermistor 1 (edge) temperature** The fuser temperature exceeds 240 °C/464 °F for 1 s.	Deformed connector pin.	If the I/F connector pins of the fuser unit and the main unit are deformed owing to foreign matters, such as paper dusts, replace the connectors or the units including the connectors.
		Defective cooling fan motor.	Replace the fuser fan motor.
		Defective fuser thermistor.	Replace the fuser unit (see page 1-5-18).
		Defective engine PWB.	Replace the engine PWB and check for correct operation (see page 1-5-32).
6230	**Fuser thermistor 1 (edge) break error** During warming up a hearter, fuser thermistor 2 detects a temperature of 100 °C/212 °F or higher and, fuser thermistor 1 detects a temperature of 37 °C/99 °F or lower.	Defective connector cable or poor contact in the connector.	Reinsert the connector. Also check for continuity within the connector cable. If none, replace the cable. Fuser thermistor 1 and fuser PWB (YC3) Fuser unit and engine PWB (YC22)
		Deformed connector pin.	If the I/F connector pins of the fuser unit and the main unit are deformed owing to foreign matters, such as paper dusts, replace the connectors or the units including the connectors.
		Defective fuser thermistor.	Replace the fuser unit (see page 1-5-18).
		Defective engine PWB.	Replace the engine PWB and check for correct operation (see page 1-5-32).

TONER
www.tonerplus.com.ua

Code	Contents	Causes	Check procedures/ corrective measures
6250	**Abnormally low fuser thermistor 1 (edge) temperature** The fuser temperature lower than 80 °C/176 °F is detected continuously for 1 s during printing.	Deformed connector pin.	If the I/F connector pins of the fuser unit and the main unit are deformed owing to foreign matters, such as paper dusts, replace the connectors or the units including the connectors.
		Defective IH PWB.	Replace the IH PWB and check for correct operation (see page 1-5-36).
		Defective fuser thermistor.	Replace the fuser unit (see page 1-5-18).
		Defective fuser heater.	
		Defective engine PWB.	Replace the engine PWB and check for correct operation (see page 1-5-32).
6410	**Fuser unit type mismatch problem** Absence of the fuser unit is detected.	Fuser unit connector inserted incorrectly.	Reinsert the fuser unit connector if necessary.
		Different type of the fuser unit is installed.	Install the correct fuser unit.
6600	**Belt rotation error** The belt was detected to stop for 2 s continuously during motor remote is on.	Defective fuser motor.	Replace the fuser motor.
		Defective IH belt.	Replace the fuser unit (see page 1-5-18).
		Defective IH PWB.	Replace the IH PWB and check for correct operation (see page 1-5-36).
		Defective engine PWB.	Replace the engine PWB and check for correct operation (see page 1-5-32).
6710	**CPU thermal runaway (IHPWB)**	Defective IH PWB.	Replace the IH PWB and check for correct operation (see page 1-5-36).
6720	**Belt rotation error (IHPWB)**	Defective IH PWB.	Replace the IH PWB and check for correct operation (see page 1-5-36).
		Defective fuser motor.	Replace the fuser motor.
		Defective fuser unit.	Replace the fuser unit.
6730	**Abnormally high IGBT1 temperature (IHPWB)**	Defective IH PWB.	Replace the IH PWB and check for correct operation (see page 1-5-36).
		Defective cooling fan motor.	Replace the IH fan motor.

TONER
www.tonerplus.com.ua

Code	Contents	Causes	Check procedures/ corrective measures
6740	**Abnormally high IGBT2 temperature (IHPWB)**	Defective IH PWB.	Replace the IH PWB and check for correct operation (see page 1-5-36).
		Defective cooling fan motor.	Replace the IH fan motor.
6750	**Abnormally output overcurrent (IHPWB)**	Defective IH PWB.	Replace the IH PWB and check for correct operation (see page 1-5-36).
		Defective fuser unit.	Replace the fuser unit.
6760	**Abnormally AC input overcurrent (IHPWB)**	Defective IH PWB.	Replace the IH PWB and check for correct operation (see page 1-5-36).
6770	**Abnormally low electric power (IHPWB)**	Defective connector cable or poor contact in the connector.	Reinsert the connector. Also check for continuity within the connector cable. If none, replace the cable.
		Defective IH PWB.	Replace the IH PWB and check for correct operation (see page 1-5-36).
6930	**IH coil fan motor error** The alarm signal was detected for 5 seconds continuously during operation.	Defective connector cable or poor contact in the connector.	Reinsert the connector. Also check for continuity within the connector cable. If none, replace the cable. IH coil fan motor and engine PWB(YC21)
		Defective cooling fan motor.	Replace the IH coil fan motor.
		Defective IH PWB.	Replace the IH PWB and check for correct operation (see page 1-5-36).
6950	**IH CPU communication error A communication error is detected 3 times in succession.**	Defective connector cable or poor contact in the connector.	Reinsert the connector. Also check for continuity within the connector cable. If none, replace the cable.
		Defective IH PWB.	Replace the IH PWB and check for correct operation (see page 1-5-36).
		Defective engine PWB.	Replace the engine PWB and check for correct operation (see page 1-5-32).
6990	**Fuser unit type mismatch problem** Absence of the fuser unit is detected.	Defective IH PWB.	Replace the IH PWB and check for correct operation (see page 1-5-36).

TONER
www.tonerplus.com.ua

Code	Contents	Causes	Check procedures/ corrective measures
7101	**Toner sensor K error**	Defective Developer unit.	Replace the developer unit K (see page 1-5-14).
		Defective PWB.	Replace the engine PWB check for correct operation (see page 1-5-32).
7102	**Toner sensor C error**	Defective Developer unit.	Replace the developer unit C (see page 1-5-14).
		Defective PWB.	Replace the engine PWB check for correct operation (see page 1-5-32).
7103	**Toner sensor M error**	Defective Developer unit.	Replace the developer unit M (see page 1-5-14).
		Defective PWB.	Replace the engine PWB check for correct operation (see page 1-5-32).
7104	**Toner sensor Y error**	Defective Developer unit.	Replace the developer unit Y (see page 1-5-14).
		Defective PWB.	Replace the engine PWB check for correct operation (see page 1-5-32).
7601	**ID sensor 1 (front) error**	Defective ID sensor.	Replace the ID sensor 1.
		Defective PWB.	Replace the engine PWB check for correct operation (see page 1-5-32).
7602	**ID sensor 2 (rear) error**	Defective ID sensor.	Replace the ID sensor 2.
		Defective PWB.	Replace the engine PWB check for correct operation (see page 1-5-32).
7611	**ID sensor (K) density error** When ID sensor 2 detected CTD is 500 or less.	Defective ID sensor.	Replace the ID sensor.
		Defective PWB.	Replace the engine PWB check for correct operation (see page 1-5-32).
7612	**ID sensor (C) density error** When ID sensor 2 detected CTD is 500 or less.	Defective ID sensor.	Replace the ID sensor.
		Defective PWB.	Replace the engine PWB check for correct operation (see page 1-5-32).
7613	**ID sensor (M) density error** When ID sensor 2 detected CTD is 500 or less.	Defective ID sensor.	Replace the ID sensor.
		Defective PWB.	Replace the engine PWB check for correct operation (see page 1-5-32).

TONER
www.tonerplus.com.ua

Code	Contents	Causes	Check procedures/ corrective measures
7614	**ID sensor (Y) density error** When ID sensor 2 detected CTD is 500 or less.	Defective ID sensor.	Replace the ID sensor.
		Defective PWB.	Replace the engine PWB check for correct operation (see page 1-5-32).
7620	**ID sensor timing error** Color registration correction was failed.	Defective ID sensor.	Replace the ID sensor.
		Defective PWB.	Replace the engine PWB check for correct operation (see page 1-5-32).
7800	**Broken external thermistor wire** The external thermistor delivers 0.3V or more.	Defective connector cable or poor contact in the connector.	Reinsert the connector. Also check for continuity within the connector cable. If none, replace the cable. Temperature sensor and engine PWB (YC21)
		Defective temperature sensor.	Replace the temperature sensor.
7810	**Short-circuited external thermistor wire** external thermistor delivers 3V or more.	Defective connector cable or poor contact in the connector.	Reinsert the connector. Also check for continuity within the connector cable. If none, replace the cable. Temperature sensor and engine PWB (YC21)
		Defective temperature sensor.	Replace the temperature sensor.
7901	**Drum K EEPROM error** No response is issued from the device in reading/writing for 5 ms or more and this problem is repeated five times successively. Mismatch of reading data from two locations occurs eight times successively. Mismatch between writing data and reading data occurs eight times successively.	Poor contact in the connector terminals.	Reinsert the connector. Also check for continuity within the connector cable. If none, replace the cable. Drum unit (K) and drum connect PWB(YC5) drum connect PWB and engine connect PWB (YC4) Engine connect PWB and engine PWB (YC9)
		Defective drum PWB.	Replace the drum unit K (see 1-5-16).

TONER
www.tonerplus.com.ua

Code	Contents	Causes	Check procedures/ corrective measures
7902	**Drum C EEPROM error** No response is issued from the device in reading/writing for 5 ms or more and this problem is repeated five times successively. Mismatch of reading data from two locations occurs eight times successively. Mismatch between writing data and reading data occurs eight times successively.	Poor contact in the connector terminals.	Reinsert the connector. Also check for continuity within the connector cable. If none, replace the cable. Drum unit (C) and drum connect PWB(YC3) drum connect PWB and engine connect PWB (YC4) Engine connect PWB and engine PWB (YC9)
		Defective drum PWB.	Replace the drum unit C (see 1-5-16).
7903	**Drum M EEPROM error** No response is issued from the device in reading/writing for 5 ms or more and this problem is repeated five times successively. Mismatch of reading data from two locations occurs eight times successively. Mismatch between writing data and reading data occurs eight times successively.	Poor contact in the connector terminals.	Reinsert the connector. Also check for continuity within the connector cable. If none, replace the cable. Drum unit (M) and drum connect PWB(YC4) drum connect PWB and engine connect PWB (YC4) Engine connect PWB and engine PWB (YC9)
		Defective drum PWB.	Replace the drum unit M (see 1-5-16).
7904	**Drum Y EEPROM error** No response is issued from the device in reading/writing for 5 ms or more and this problem is repeated five times successively. Mismatch of reading data from two locations occurs eight times successively. Mismatch between writing data and reading data occurs eight times successively.	Poor contact in the connector terminals.	Reinsert the connector. Also check for continuity within the connector cable. If none, replace the cable. Drum unit (Y) and drum connect PWB(YC2) drum connect PWB and engine connect PWB (YC4) Engine connect PWB and engine PWB (YC9)
		Defective drum PWB.	Replace the drum unit Y (see 1-5-16).
7911	**Developing unit K EEPROM error** No response is issued from the device in reading/writing for 5 ms or more and this problem is repeated five times successively. Mismatch of reading data from two locations occurs eight times successively. Mismatch between writing data and reading data occurs eight times successively.	Poor contact in the connector terminals.	Reinsert the connector. Also check for continuity within the connector cable. If none, replace the cable. Developer unit (K) and drum connect PWB(YC9) drum connect PWB and engine connect PWB (YC4) Engine connect PWB and engine PWB (YC12)
		Defective developing PWB.	Replace the developer unit K (see 1-5-14).

TONER
www.tonerplus.com.ua

Code	Contents	Causes	Check procedures/ corrective measures
7912	**Developing unit C EEPROM error** No response is issued from the device in reading/writing for 5 ms or more and this problem is repeated five times successively. Mismatch of reading data from two locations occurs eight times successively. Mismatch between writing data and reading data occurs eight times successively.	Poor contact in the connector terminals.	Reinsert the connector. Also check for continuity within the connector cable. If none, replace the cable. Developer unit (C) and drum connect PWB(YC7) drum connect PWB and engine connect PWB (YC4) Engine connect PWB and engine PWB (YC12)
		Defective developing PWB.	Replace the developer unit C (see 1-5-14).
7913	**Developing unit M EEPROM error** No response is issued from the device in reading/writing for 5 ms or more and this problem is repeated five times successively. Mismatch of reading data from two locations occurs eight times successively. Mismatch between writing data and reading data occurs eight times successively.	Poor contact in the connector terminals.	Reinsert the connector. Also check for continuity within the connector cable. If none, replace the cable. Developer unit (M) and drum connect PWB(YC8) drum connect PWB and engine connect PWB (YC4) Engine connect PWB and engine PWB (YC12)
		Defective developing PWB.	Replace the developer unit M (see 1-5-14).
7914	**Developing unit Y EEPROM error** No response is issued from the device in reading/writing for 5 ms or more and this problem is repeated five times successively. Mismatch of reading data from two locations occurs eight times successively. Mismatch between writing data and reading data occurs eight times successively.	Poor contact in the connector terminals.	Reinsert the connector. Also check for continuity within the connector cable. If none, replace the cable. Developer unit (Y) and drum connect PWB(YC6) drum connect PWB and engine connect PWB (YC4) Engine connect PWB and engine PWB (YC12)
		Defective developing PWB.	Replace the developer unit Y (see 1-5-14).

TONER
www.tonerplus.com.ua

Code	Contents	Causes	Check procedures/ corrective measures
8030	**Tray upper limit detection problem (document finisher)** When the tray elevation motor raises a tray, the ON status of the tray upper limit sensor is detected.	Defective connector cable or poor contact in the connector.	Reinsert the connector. Also check for continuity within the connector cable. If none, replace the cable. Tray upper limit sensor and DF main PWB (CN5) Paper surface sensor 1/2 and DF main PWB (CN6)
		Defective tray upper limit sensor, paper surface sensor 1/2.	Replace the sensor.
		Defective DF main PWB.	Replace the DF main PWB and check for correct operation.
8040	**Belt problem (document finisher)** The belt sensor does not turn on/off within specified time of the belt solenoid turning on.	Defective connector cable or poor contact in the connector.	Reinsert the connector. Also check for continuity within the connector cable. If none, replace the cable. Belt sensor and DF main PWB (CN10) Belt solenoid and DF main PWB (CN21)
		Defective belt sensor.	Replace the belt sensor.
		Defective belt solenoid.	Replace the belt solenoid.
		Defective DF main PWB.	Replace the DF main PWB and check for correct operation.
8140	**Tray elevation motor problem (document finisher)** The tray low limit sensor or paper surface sensor 1/2 cannot be detected to be on within 10 s since the tray elevation motor is activated.	Defective connector cable or poor contact in the connector.	Reinsert the connector. Also check for continuity within the connector cable. If none, replace the cable. Tray elevation motor and DF main PWB (CN12)
		Defective connector cable or poor contact in the connector.	Reinsert the connector. Also check for continuity within the connector cable. If none, replace the cable. Tray lower limit sensor, and DF main PWB (CN5) Paper surface sensor 1/2 and DF main PWB (CN6)
		The tray elevation motor malfunctions.	Replace the tray elevation motor.
		Defective tray lower limit sensor, paper surface sensor 1/2.	Replace the sensor.
		Defective DF main PWB.	Replace the DF main PWB and check for correct operation.

TONER
www.tonerplus.com.ua

Code	Contents	Causes	Check procedures/ corrective measures
8210	**Stapler problem (document finisher)** Jam 7012 or 7023 is indicated.	Defective connector cable of staple or poor contact in the connector.	Reinsert the connector. Also check for continuity within the connector cable. If none, replace the cable.
		The stapler is blocked with a staple.	Remove the stapler cartridge, and check the cartridge and the stapling section of the stapler.
		The stapler is broken.	Replace the stapler and check for correct operation.
		Defective DF main PWB.	Replace the DF main PWB and check for correct operation.
8320	**Adjustment motor 2 problem (document finisher)** The adjustment sensor 2 does not turn on/off within specified time of the adjustment motor 2 turning on.	Defective connector cable or poor contact in the connector.	Reinsert the connector. Also check for continuity within the connector cable. If none, replace the cable. Adjustment motor 2 and DF main PWB (CN18) Adjustment sensor 2 and DF main PWB (CN7)
		Defective adjustment sensor 2.	Replace the adjustment sensor 2.
		Defective adjustment motor 2.	Replace the adjustment motor 2.
		Defective DF main PWB.	Replace the DF main PWB and check for correct operation.
8330	**Adjustment motor 1 problem (document finisher)** The adjustment sensor 1 does not turn on/off within specified time of the adjustment motor 1 turning on.	Defective connector cable or poor contact in the connector.	Reinsert the connector. Also check for continuity within the connector cable. If none, replace the cable. Adjustment motor 1 and DF main PWB (CN18) Adjustment sensor 1 and DF main PWB (CN7)
		Defective adjustment sensor 1.	Replace the adjustment sensor 1.
		Defective adjustment motor 1.	Replace the adjustment motor 1.
		Defective DF main PWB.	Replace the DF main PWB and check for correct operation.

TONER
www.tonerplus.com.ua

Code	Contents	Causes	Check procedures/ corrective measures
8350	**Roller motor problem (document finisher)** The roller sensor does not turn on/off within specified time of the roller motor turning on.	Defective connector cable or poor contact in the connector.	Reinsert the connector. Also check for continuity within the connector cable. If none, replace the cable. Roller motor and DF main PWB (CN20) Roller sensor and DF main PWB (CN11)
		Defective roller sensor.	Replace the roller sensor.
		Defective roller motor.	Replace the roller motor.
		Defective DF main PWB.	Replace the DF main PWB and check for correct operation.
8360	**Slide motor problem (document finisher)** The slide sensor does not turn on/off within specified time of the slide motor turning on.	Defective connector cable or poor contact in the connector.	Reinsert the connector. Also check for continuity within the connector cable. If none, replace the cable. Slide motor and DF main PWB (CN14) Slide sensor and DF main PWB (CN22)
		Defective slide sensor.	Replace the slide sensor.
		Defective slide motor.	Replace the slide motor.
		Defective DF main PWB.	Replace the DF main PWB and check for correct operation.
8460	**EEPROM problem (document finisher)** Reading from or writing to EEPROM cannot be performed.	Defective EEPROM or DF main PWB.	Replace the DF main PWB and check for correct operation.
8800	**Document finisher communication error** A communication error is detected 10 times in succession.	Defective connector cable or poor contact in the connector.	Reinsert the connector. Also check for continuity within the connector cable. If none, replace the cable. Engine PWB (YC19) and DF relay PWB (YC2) DF relay PWB (YC3) and DF main PWB (CN1)
		Defective DF main PWB.	Replace the DF main PWB and check for correct operation.
		Defective engine PWB.	Replace the engine PWB and check for correct operation (see page 1-5-32).

TONER
www.tonerplus.com.ua

Code	Contents	Causes	Check procedures/ corrective measures
8830	**Bridge communication error (document finisher)** A communication error is detected 10 times in succession.	Defective connector cable or poor contact in the connector.	Reinsert the connector. Also check for continuity within the connector cable. If none, replace the cable. Engine PWB (YC19) and DF relay PWB (YC2) DF relay PWB (YC4) and bridge PWB (YC5)
		Defective bridge PWB.	Replace the bridge PWB and check for correct operation.
		Defective engine PWB.	Replace the engine PWB and check for correct operation (see page 1-5-32).
8900	**Backup memory data problem (document finisher)** Read and write data does not match 3 times in succession.	Defective connector cable or poor contact in the connector.	Check the connection of connector on the finisher main PWB and the connector of the machine, and the continuity across the connector terminals. Repair or replace if necessary.
		EEPROM installed incorrectly.	Install EEPROM correctly.
		Defective finisher main PWB.	Replace the finisher main PWB and check for correct operation.
9000	**Document processor communication error** A communication error is detected 10 times in succession.	Defective connector cable or poor contact in the connector.	Reinsert the connector. Also check for continuity within the connector cable. If none, replace the cable. DP main PWB and engine PWB (YC18)
		Defective DP main PWB.	Replace the DP main PWB and check for correct operation (see page 1-5-29).
9060	**DP EEPROM error** Mismatch between writing data and reading data occurs three times successively. Mismatch of reading data from two locations occurs three times successively.	Defective DP main PWB.	Replace the DP main PWB and check for correct operation (see page 1-5-29).
		Device damage of EEPROM.	Contact the Service Administrative Division.
9500			Contact the Service Administrative Division.
9510			
9520			

TONER
www.tonerplus.com.ua

Code	Contents	Causes	Check procedures/ corrective measures
F000	**Main PWB - operation panel PWB communication error**	Defective main PWB.	Turn the main power switch off/on to restart the machine. If the error is not resolved, replace main PWB (see page 1-5-31).
		Defective operation panel PWB.	Replace the operation panel PWB and check for correct operation.
F010	**Main PWB checksum error**	Defective main PWB.	Turn the main power switch off/on to restart the machine. If the error is not resolved, replace main PWB (see page 1-5-31).
F011			
F012			
F013			
F040	**Main PWB - print engine communication error**	Defective main PWB.	Turn the main power switch off/on to restart the machine. If the error is not resolved, replace main PWB (see page 1-5-31).
		Defective engine PWB.	Replace the engine PWB and check for correct operation (see page 1-5-32).
F050	**Print engine ROM checksum error**	Defective engine PWB.	Turn the main power switch off/on to restart the machine. If the error is not resolved, replace engine PWB (see page 1-5-32).

NOTE:
The other F codes are indicated to the appendix (see page 2-4-10).

TONER+ www.tonerplus.com.ua

1-4-3 Image quality problems

If the part causing the problem is not designated as a service part, replace with the assembly comprising the part.

(1) No image appears (entirely white).

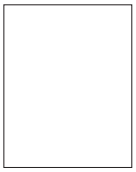

See page 1-4-38

(2) No image appears (entirely black).

See page 1-4-38

(3) Image is too light.

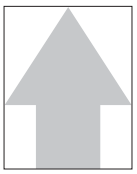

See page 1-4-39

(4) The background is colored.

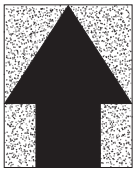

See page 1-4-39

(5) White streaks are printed vertically.

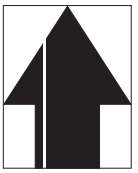

See page 1-4-39

(6) Black streaks are printed vertically.

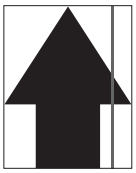

See page 1-4-40

(7) Streaks are printed horizontally.

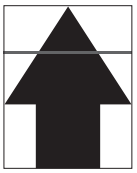

See page 1-4-40

(8) One side of the print image is darker than the other.

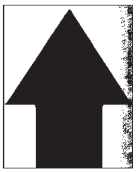

See page 1-4-40

(9) Spots are printed.

See page 1-4-41

(10) Image is blurred.

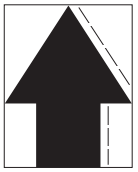

See page 1-4-41

(11) The leading edge of the image is consistently misaligned with the original.

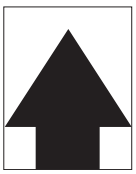

See page 1-4-41

(12) The leading edge of the image is sporadically misaligned with the original.

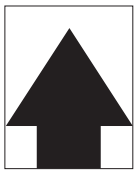

See page 1-4-41

(13) Paper is wrinkled.

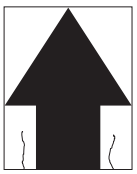

See page 1-4-42

(14) Offset occurs.

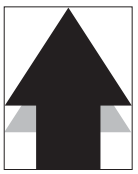

See page 1-4-42

(15) Part of image is missing.

See page 1-4-42

(16) Fusing is loose.

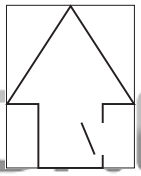

See page 1-4-42

(17) Image is out of focus.

See page 1-4-43

(18) Image center does not align with the original center.

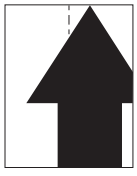

See page 1-4-43

TONER www.tonerplus.com.ua

(1) No image appears (entirely white).

Print example	Causes		Check procedures/corrective measures
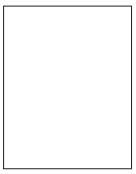	Defective transfer bias output.	Defective connector cable or poor contact in the connector.	Reinsert the connector. Also check for continuity of the connector cable. If necessary, replace the cable. High voltage PWB and engine PWB (YC15) High voltage PWB sub and engine PWB (YC13)
		Defective high voltage PWB.	Replace the high voltage PWB.
		Defective high voltage PWB sub.	Replace the high voltage PWB sub.
		Defective engine PWB.	Replace the engine PWB (see page 1-5-32).
	Defective developer bias output.	Defective connector cable or poor contact in the connector.	Reinsert the connector. Also check for continuity of the connector cable. If necessary, replace the cable. High voltage PWB and engine PWB (YC15)
		Defective high voltage PWB.	Replace the high voltage PWB.
		Defective engine PWB.	Replace the engine PWB (see page 1-5-32).
	No LSU laser is output.	Defective laser scanner unit.	Replace the laser scanner unit (see page 1-5-20).
		Defective main PWB.	Replace the main PWB (see page 1-5-31).

(2) No image appears (entirely black).

Print example	Causes		Check procedures/corrective measures
	No main charging.	Defective connector cable or poor contact in the connector.	Reinsert the connector. Also check for continuity within the connector cable. If none, replace the cable. High voltage PWB and engine PWB (YC15)
		Defective charger roller unit.	Replace the charger roller unit (see page 1-5-16).
		Defective high voltage PWB.	Replace the high voltage PWB.
		Defective engine PWB.	Replace the engine PWB (see page 1-5-32).
	Exposure lamp fails to light.	Defective connector cable or poor contact in the connector.	Reinsert the connector. Also check for continuity within the connector cable. If none, replace the cable. LED PWB and main PWB (YC112) CCD PWB and main PWB (YC113)
		Defective CCD PWB.	Replace the image scanner unit (see page 1-5-21).
		Defective main PWB.	Replace the main PWB (see page 1-5-31).

TONER
www.tonerplus.com.ua

(3) Image is too light.

Print example	Causes		Check procedures/corrective measures
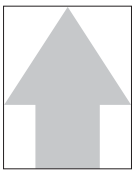	Defective transfer charger output.	Defective connector cable or poor contact in the connector.	Reinsert the connector. Also check for continuity within the connector cable. If none, replace the cable. High voltage PWB and engine PWB (YC15) High voltage PWB sub and engine PWB (YC13)
		Defective high voltage PWB.	Replace the high voltage PWB (see page 1-5-36).
		Defective high voltage PWB sub.	Replace the high voltage PWB sub (see page 1-5-36).
		Defective engine PWB.	Replace the engine PWB (see page 1-5-32).
	Insufficient toner.		If the display shows the message requesting toner replenishment, replace the container.
	Deteriorated toner.		Perform the drum refresh operation.

(4) The background is colored.

Print example	Causes		Check procedures/corrective measures
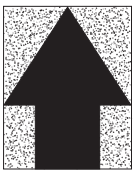	Defective main charger output.	Defective connector cable or poor contact in the connector.	Reinsert the connector. Also check for continuity within the connector cable. If none, replace the cable. High voltage PWB and engine PWB (YC15)
		Defective high voltage PWB.	Replace the high voltage PWB.
		Defective engine PWB.	Replace the engine PWB (see page 1-5-32).
	Deteriorated toner.		Perform the drum refresh operation.

(5) White streaks are printed vertically.

Print example	Causes	Check procedures/corrective measures
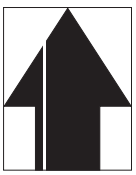	Foreign matter in the developer unit.	Check if the magnetic brush is formed uniformly. Replace the developer unit if any foreign matter (see page 1-5-14).
	Dirty shading plate.	Clean the shading plate.
	Adhesion of soiling to transfer belt.	Clean the transfer belt. Replace the intermadiate transfer unit if it is extremely dirty (see page 1-5-17).
	Adhesion of soiling to transfer roller.	Clean the transfer roller. Replace the transfer roller unit if it is extremely dirty (see page 1-5-17).
	Dirty LSU dust shield glass.	Perform the LSU dust shield glass cleaning.

TONER
www.tonerplus.com.ua

(6) Black streaks are printed vertically.

Print example	Causes	Check procedures/corrective measures
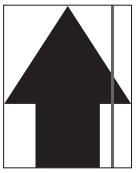	Dirty contact glass.	Clean the contact glass.
	Dirty slit glass.	Clean the slit glass.
	Dirty or flawed drum.	Perform the drum refresh operation. Flawed drum. Replace the drum unit (see page 1-5-16).
	Deformed or worn cleaning blade in the drum unit.	Replace the drum unit (see page 1-5-16).
	Defective transfer belt.	Replace the intermidiate transfer unit (see page 1-5-17).
	Defective transfer roller.	Replace the transfer roller unit(see page 1-5-17).
	Dirty scanner mirror.	Clean the scanner mirror.

(7) Streaks are printed horizontally.

Print example	Causes	Check procedures/corrective measures
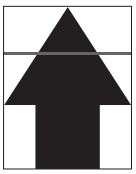	Dirty or flawed drum.	Perform the drum refresh operation. Flawed drum. Replace the drum unit (see page 1-5-16).
	Dirty developer section.	Clean any part contaminated with toner in the developer section.
	Poor contact of grounding terminal of drum unit.	Check the installation of the drum unit. If it operates incorrectly, replace it (see page 1-5-16).

(8) One side of the print image is darker than the other.

Print example	Causes	Check procedures/corrective measures
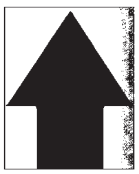	Defective exposure lamp.	Replace the LED PWB (see page 1-5-24).

TONER+
www.tonerplus.com.ua

(9) Spots are printed.

Print example	Causes	Check procedures/corrective measures
	Dirty contact glass.	Clean the contact glass.
	Dirty or flawed drum.	Perform the drum refresh operation. Flawed drum. Replace the drum unit (see page 1-5-16).
	Deformed or worn cleaning blade in the drum unit.	Replace the drum unit (see page 1-5-16).
	Flawed developer roller.	Replace the developer unit (see page 1-5-14).
	Dirty heat roller and press roller.	Clean the heat roller and press roller.

(10) Image is blurred.

Print example	Causes	Check procedures/corrective measures
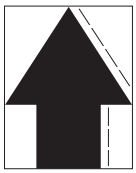	Scanner moves erratically.	Check if there is any foreign matter on the front and rear scanner rails. If any, remove it.
	Deformed press roller.	Replace the fuser unit (see page 1-5-18).
	Paper conveying section drive problem.	Check the gears and belts and, if necessary, grease them.

(11) The leading edge of the image is consistently misaligned with the original.

Print example	Causes	Check procedures/corrective measures
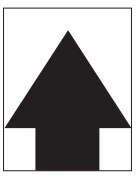	Misadjusted leading edge registration.	Run maintenance mode U034 to readjust the leading edge registration (see page 1-3-24).
	Misadjusted scanner leading edge registration.	Run maintenance mode U066 to readjust the scanner leading edge registration (see page 1-3-33).

(12) The leading edge of the image is sporadically misaligned with the original.

Print example	Causes	Check procedures/corrective measures
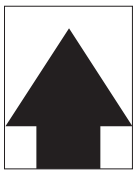	Paper feed clutch, registration clutch or duplex clutch operating incorrectly.	Check the installation of the clutch. If it operates incorrectly, replace it.

TONER
www.tonerplus.com.ua

(13) Paper is wrinkled.

Print example	Causes	Check procedures/corrective measures
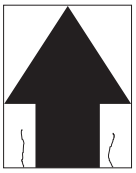	Paper curled.	Check the paper storage conditions.
	Paper damp.	Check the paper storage conditions.
	Defective pressure springs.	Replace the fuser unit (see page 1-5-18).

(14) Image is off-set.

Print example	Causes	Check procedures/corrective measures
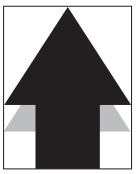	Deformed or worn cleaning blade in the drum unit.	Replace the drum unit (see page 1-5-16).
	Defective fuser unit.	Replace the fuser unit (see page 1-5-18).
	Wrong types of paper.	Check if the paper meets specifications. Replace paper.

(15) Part of image is missing.

Print example	Causes	Check procedures/corrective measures
	Paper damp.	Check the paper storage conditions.
	Paper creased.	Replace the paper.
	Drum condensation.	Perform the drum refresh operation.
	Dirty or flawed drum.	Perform the drum refresh operation. Flawed drum. Replace the drum unit (see page 1-5-16).
	Dirty transfer belt.	Clean the transfer belt. Replace the intermidate transfer unit if it is extremely dirty (see page 1-5-17).
	Dirty transfer roller.	Clean the transfer roller. Replace the transfer roller unit if it is extremely dirty (see page 1-5-17).

(16) Fusing is loose.

Print example	Causes	Check procedures/corrective measures
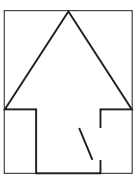	Wrong types of paper.	Check if the paper meets specifications, replace paper.
	Flawed heat roller or press roller.	Replace the fuser unit (see page 1-5-18).
	Defective pressure springs.	
	Defective fuser heater.	

TONER
www.tonerplus.com.ua

(17) Image is out of focus.

Print example	Causes	Check procedures/corrective measures
	Defective image scanning unit.	Replace the image scanning unit (see page 1-5-21).
	Drum condensation.	Perform the drum refresh operation.

(18) Image center does not align with the original center.

Print example	Causes	Check procedures/corrective measures
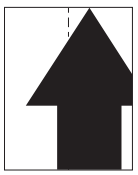	Misadjusted image center line.	Run maintenance item U034 to readjust the center line of image printing (see page 1-3-25).
	Misadjusted scanner center line.	Run maintenance item U067 to readjust the scanner leading edge registration (see page 1-3-34).
	Original is not placed correctly.	Place the original correctly.

TONER
www.tonerplus.com.ua

1-4-4 Electric problems

If the part causing the problem s not designated as a service part, replace with the assembly comprising the part.
Troubleshooting to each failure must be made in the order of the numbered Problems.

Problem	Causes	Check procedures/corrective measures
(1) The machine does not operate when the main power switch is turned on.	1. No electricity at the power outlet.	Measure the input voltage.
	2. The power cord is not plugged in properly.	Check the contact between the power plug and the outlet.
	3. Broken power cord.	Check for continuity. If none, replace the cord.
	4. Defective main power switch.	Check for continuity across the contacts. If none, replace the power switch.
	5. Defective interlock switch.	Check for continuity across the contacts of interlock switch. If none, replace the power source PWB (see page 1-5-33).
	6. Defective power source PWB.	Replace the power source PWB (see page 1-5-33).
(2) ISU motor does not operate.	1. Defective connector cable or poor contact in the connector.	Reinsert the connector. Also check for continuity within the connector cable. If none, replace the cable. ISU motor and engine PWB (YC17)
	2. Defective drive transmission system.	Check if the rollers and gears rotate smoothly. If not, grease the bushes and gears. Check for broken gears and replace if any.
	3. Defective motor.	Replace the ISU motor.
	4. Defective PWB.	Replace the engine PWB and check for correct operation (see page 1-5-32).
(3) Eject motor does not operate.	1. Defective connector cable or poor contact in the connector.	Reinsert the connector. Also check for continuity within the connector cable. If none, replace the cable. Eject motor and engine PWB (YC6)
	2. Defective drive transmission system.	Check if the rollers and gears rotate smoothly. If not, grease the bushes and gears. Check for broken gears and replace if any.
	3. Defective motor.	Replace the eject motor.
	4. Defective PWB.	Replace the engine PWB and check for correct operation (see page 1-5-32).

TONER
www.tonerplus.com.ua

Problem	Causes	Check procedures/corrective measures
(4) ID Shutter motor does not operate.	1. Defective connector cable or poor contact in the connector.	Reinsert the connector. Also check for continuity within the connector cable. If none, replace the cable. ID Shutter motor and engine connect PWB (YC17) engine connect PWB and engine PWB (YC9)
	2. Defective drive transmission system.	Check if the rollers and gears rotate smoothly. If not, grease the bushes and gears. Check for broken gears and replace if any.
	3. Defective motor.	Replace the ID Shuttermotor.
	4. Defective PWB.	Replace the engine PWB or engin connect PWB and check for correct operation (see page 1-5-32).
(5) Fuser pressure release motor does not operate.	1. Defective connector cable or poor contact in the connector.	Reinsert the connector. Also check for continuity within the connector cable. If none, replace the cable. Fuser pressure release motor and engine PWB (YC22)
	2. Defective drive transmission system.	Check if the rollers and gears rotate smoothly. If not, grease the bushes and gears. Check for broken gears and replace if any.
	3. Defective motor.	Replace the Fuser pressure release motor.
	4. Defective PWB.	Replace the engine PWB and check for correct operation (see page 1-5-32).
(6) Controller fan motor does not operate.	1. Defective connector cable or poor contact in the connector.	Reinsert the connector. Also check for continuity within the connector cable. If none, replace the cable. Controller fan motor and main PWB (YC41)
	2. Defective motor.	Replace the controller fan motor.
	3. Defective PWB.	Replace the main PWB and check for correct operation (see page 1-5-31).
(7) Power source fan motor does not operate.	1. Defective connector cable or poor contact in the connector.	Reinsert the connector. Also check for continuity within the connector cable. If none, replace the cable. Power source fan motor and engine connect PWB (YC11) engine connect PWB and engine PWB (YC9)
	2. Defective motor.	Replace the power source fan motor.
	3. Defective PWB.	Replace the engine PWB or engine connect PWB and check for correct operation (see page 1-5-32).
(8) Developer fan motor does not operate.	1. Defective connector cable or poor contact in the connector.	Reinsert the connector. Also check for continuity within the connector cable. If none, replace the cable. Developer fan motor and engine connect PWB (YC6) engine connect PWB and engine PWB (YC9)
	2. Defective motor.	Replace the developer fan motor.
	3. Defective PWB.	Replace the engine PWB or engine connect PWB and check for correct operation (see page 1-5-32).

TONER
www.tonerplus.com.ua

Problem	Causes	Check procedures/corrective measures
(9) LSU fan motor does not operate.	1. Defective connector cable or poor contact in the connector.	Reinsert the connector. Also check for continuity within the connector cable. If none, replace the cable. LSU fan motor and engine connect PWB (YC6) Engine connect PWB and engine PWB (YC9)
	2. Defective motor.	Replace the LSU fan motor.
	3. Defective PWB.	Replace the engine PWB engine connect PWB and check for correct operation (see page 1-5-32).
(10) IH fan motor does not operate.	1. Defective connector cable or poor contact in the connector.	Reinsert the connector. Also check for continuity within the connector cable. If none, replace the cable. IH fan motor and main PWB (YC4)
	2. Defective motor.	Replace the IH fan motor.
	3. Defective PWB.	Replace the engine PWB and check for correct operation (see page 1-5-32).
(11) Fuser fan motor does not operate.	1. Defective connector cable or poor contact in the connector.	Reinsert the connector. Also check for continuity within the connector cable. If none, replace the cable. Fuser fan motor and engine PWB (YC28)
	2. Defective motor.	Replace the Fuser fan motor.
	3. Defective PWB.	Replace the engine PWB and check for correct operation (see page 1-5-32).
(12) Container fan motor does not operate.	1. Defective connector cable or poor contact in the connector.	Reinsert the connector. Also check for continuity within the connector cable. If none, replace the cable. Container fan motor and engine PWB (YC21)
	2. Defective motor.	Replace the container fan motor.
	3. Defective PWB.	Replace the engine PWB and check for correct operation (see page 1-5-32).
(13) IH coil fan motor does not operate.	1. Defective connector cable or poor contact in the connector.	Reinsert the connector. Also check for continuity within the connector cable. If none, replace the cable. IH coil fan motor and engine PWB (YC21)
	2. Defective motor.	Replace the IH coil fan motor.
	3. Defective PWB.	Replace the engine PWB and check for correct operation (see page 1-5-32).
(14) Imaging fan motor does not operate.	1. Defective connector cable or poor contact in the connector.	Reinsert the connector. Also check for continuity within the connector cable. If none, replace the cable. Imaging fan motor and engine connect PWB (YC11) Engine connect PWB and engine PWB
	2. Defective motor.	Replace the Imaging fan motor.
	3. Defective PWB.	Replace the engine PWB or engine connect PWB and check for correct operation (see page 1-5-32).
(15) Paper feed clutch does not operate.	1. Defective connector cable or poor contact in the connector.	Reinsert the connector. Also check for continuity within the connector cable. If none, replace the cable. Paper feed clutch and engine PWB (YC2)
	2. Defective clutch.	Replace the paper feed clutch.
	3. Defective PWB.	Replace the engine PWB and check for correct operation (see page 1-5-32).

TONER
www.tonerplus.com.ua

Problem	Causes	Check procedures/corrective measures
(16) Mid clutch does not operate.	1. Defective connector cable or poor contact in the connector.	Reinsert the connector. Also check for continuity within the connector cable. If none, replace the cable. Mid clutch and engine PWB (YC2)
	2. Defective clutch.	Replace the mid clutch.
	3. Defective PWB.	Replace the engine PWB and check for correct operation (see page 1-5-32).
(17) Registration clutch does not operate.	1. Defective connector cable or poor contact in the connector.	Reinsert the connector. Also check for continuity within the connector cable. If none, replace the cable. Registration clutch and engine PWB (YC2)
	2. Defective clutch.	Replace the registration clutch.
	3. Defective PWB.	Replace the engine PWB and check for correct operation (see page 1-5-32).
(18) Duplex clutch does not operate.	1. Defective connector cable or poor contact in the connector.	Reinsert the connector. Also check for continuity within the connector cable. If none, replace the cable. Duplex clutch and engine PWB (YC2)
	2. Defective clutch.	Replace the duplex clutch.
	3. Defective PWB.	Replace the engine PWB and check for correct operation (see page 1-5-32).
(19) Developer stop clutch does not operate.	1. Defective connector cable or poor contact in the connector.	Reinsert the connector. Also check for continuity within the connector cable. If none, replace the cable. Developer stop clutch and engine PWB (YC3)
	2. Defective clutch.	Replace the developer stop clutch.
	3. Defective PWB.	Replace the engine PWB and check for correct operation (see page 1-5-32).
(20) MP solenoid does not operate.	1. Defective connector cable or poor contact in the connector.	Reinsert the connector. Also check for continuity within the connector cable. If none, replace the cable. MP solenoid and engine PWB (YC2)
	2. Defective solenoid.	Replace the MP solenoid.
	3. Defective PWB.	Replace the engine PWB and check for correct operation (see page 1-5-32).
(21) Feedshift solenoid does not operate.	1. Defective connector cable or poor contact in the connector.	Reinsert the connector. Also check for continuity within the connector cable. If none, replace the cable. Feedshift solenoid and engine PWB (YC20)
	2. Defective solenoid.	Replace the Feedshift solenoid.
	3. Defective PWB.	Replace the engine PWB and check for correct operation (see page 1-5-32).

TONER
www.tonerplus.com.ua

Problem	Causes	Check procedures/corrective measures
(22) The message requesting paper to be loaded is shown when paper is present on the cassette.	1. Defective connector cable or poor contact in the connector.	Reinsert the connector. Also check for continuity within the connector cable. If none, replace the cable. Paper sensor and engine connect PWB (YC15) Engine connect PWB to engine PWB (YC9)
	2. Deformed actuator of the paper sensor.	Check visually and replace if necessary.
	3. Defective paper sensor.	Replace the cassette PWB.
	4. Defective PWB.	Replace the engine PWB or engine connect PWB and check for correct operation (see page 1-5-32).
(23) The message requesting paper to be loaded is shown when paper is present on the MP tray.	1. Defective connector cable or poor contact in the connector.	Reinsert the connector. Also check for continuity within the connector cable. If none, replace the cable. MP paper sensor and engine PWB (YC28)
	2. Deformed actuator of the MP paper sensor.	Check visually and replace if necessary.
	3. Defective MP paper sensor.	Replace the MP paper sensor.
	4. Defective PWB.	Replace the engine PWB and check for correct operation (see page 1-5-32).
(24) The size of paper on the cassette is not displayed correctly.	1. Defective connector cable or poor contact in the connector.	Reinsert the connector. Also check for continuity within the connector cable. If none, replace the cable. Paper size width switch and engine PWB (YC14) Paper size length switch and engine PWB (YC14)
	2. Defective cassette size switch.	Replace the paper size width switch or paper size length switch.
	3. Defective PWB.	Replace the engine PWB and check for correct operation (see page 1-5-32).
(25) A paper jam in the paper feed, paper conveying or eject section is indicated when the main power switch is turned on.	1. A piece of paper torn from paper is caught around registration sensor, duplex sensor , feed sensor or eject sensor.	Check visually and remove it, if any.
	2. Defective sensor.	Replace the registration sensor, duplex sensor, feed sensor or eject sensor.
(26) A message indicating cover open is displayed when the front cover or right cover is closed.	1. Deformed actuator of the interlock switch.	Check visually and replace if necessary.
	2. Defective interlock switch.	Replace the interlock switch.

TONER
www.tonerplus.com.ua

Problem	Causes	Check procedures/corrective measures
(27) The LED lamp does not turn on when original is present on the DP.	1. Defective connector cable or poor contact in the connector.	Reinsert the connector. Also check for continuity within the connector cable. If none, replace the cable. DP original sensor and DP main PWB (YC3) DP main PWB (YC1) and engine PWB (YC18)
	2. Defective DP original sensor.	Replace the DP original sensor.
	3. Defective PWB.	Replace the DPLED PWB and check for correct operation.
		Replace the engine PWB and check for correct operation (see page 1-5-32).
(28) The size of original on the DP is not displayed correctly.	1. Defective connector cable or poor contact in the connector.	Reinsert the connector. Also check for continuity within the connector cable. If none, replace the cable. DP original size width sensor and DP main PWB (YC4) DP original size length sensor and DP main PWB (YC2) DP main PWB (YC1) and engine PWB (YC18)
	2. Defective original size sensor.	Replace the DP original size width sensor or DP original size length sensor.
	3. Defective PWB.	Replace the DP main PWB or engine PWB and check for correct operation (see page 1-5-29,1-5-32).
(29) DP paper feed motor does not operate.	1. Defective connector cable or poor contact in the connector.	Reinsert the connector. Also check for continuity within the connector cable. If none, replace the cable. DP paper feed motor and DP main PWB (YC9) DP main PWB (YC1) and engine PWB (YC18)
	2. Defective drive transmission system.	Check if the rollers and gears rotate smoothly. If not, grease the bushes and gears. Check for broken gears and replace if any.
	3. Defective motor.	Replace the DP paper feed motor.
	4. Defective PWB.	Replace the DP main PWB or engine PWB and check for correct operation (see page 1-5-29,1-5-32).
(30) DP switchback motor does not operate.	1. Defective connector cable or poor contact in the connector.	Reinsert the connector. Also check for continuity within the connector cable. If none, replace the cable. DP switchback motor and DP main PWB (YC9) DP main PWB (YC1) and engine PWB (YC18)
	2. Defective drive transmission system.	Check if the rollers and gears rotate smoothly. If not, grease the bushes and gears. Check for broken gears and replace if any.
	3. Defective motor.	Replace the DP switchback motor.
	4. Defective PWB.	Replace the DP main PWB or engine PWB and check for correct operation (see page 1-5-29,1-5-32).

TONER
www.tonerplus.com.ua

Problem	Causes	Check procedures/corrective measures
(31) DP paper feed clutch does not operate.	1. Defective connector cable or poor contact in the connector.	Reinsert the connector. Also check for continuity within the connector cable. If none, replace the cable. DP paper feed clutch and DP main PWB (YC8) DP main PWB (YC1) and engine PWB (YC18)
	2. Defective clutch.	Replace the DP paper feed clutch.
	3. Defective PWB.	Replace the DP main PWB or engine PWB and check for correct operation (see page 1-5-29,1-5-32).
(32) DP registration clutch does not operate.	1. Defective connector cable or poor contact in the connector.	Reinsert the connector. Also check for continuity within the connector cable. If none, replace the cable. DP registration clutch and DP main PWB (YC8) DP main PWB (YC1) and engine PWB (YC18)
	2. Defective clutch.	Replace the DP registration clutch.
	3. Defective PWB.	Replace the DP main PWB or engine PWB and check for correct operation (see page 1-5-29,1-5-32).
(33) An original jams when the main power switch is turned on.	1. A piece of paper torn from an original is caught around the DP paper feed sensor, DP registration sensor or DP timing sensor.	Check visually and remove it, if any.
	2. Defective sensor.	Replace the DP paper feed sensor, DP registration sensor or DP timing sensor.
(34) A message indicating cover open is displayed when the DP top cover is closed.	1. Defective connector cable or poor contact in the connector.	Reinsert the connector. Also check for continuity within the connector cable. If none, replace the cable. DP open/close sensor and DP main PWB (YC5) DP main PWB (YC1) and engine PWB (YC18)
	2. Defective DP open/close sensor.	Replace the DP open/close sensor.

TONER
www.tonerplus.com.ua

1-4-5 Mechanical problems

If the part causing the problem was not supplied, use the unit including the part for replacement.

Problem	Causes/check procedures	Corrective measures
(1) No primary paper feed.	Check if the surfaces of the following rollers are dirty with paper dusts. Pickup roller Paper feed roller MP paper feed roller	Clean with isopropyl alcohol.
	Check if any of the following rollers is deformed. Pickup roller Paper feed roller MP paper feed roller	Check visually and replace any deformed (see page 1-5-10, 1-5-11).
	Defective paper feed clutch installation.	Check visually and remedy if necessary.
(2) No secondary paper feed.	Check if the surfaces of the following rollers are dirty with paper powder. Right registration roller Left registration roller	Clean with isopropyl alcohol.
	Defective registration clutch installation.	Check visually and remedy if necessary.
(3) Skewed paper feed.	Paper width guide in the cassette are installed incorrectly.	Check the paper width guide visually and remedy or replace if necessary.
(4) Multiple sheets of paper are fed.	Check if the paper is excessively curled.	Change the paper.
	Paper is loaded incorrectly.	Load the paper correctly.
	Check if the retard roller is worn.	Replace the retard roller if it is worn (see page 1-5-10).
(5) Paper jams.	Check if the paper is excessively curled.	Change the paper.
	Check if the contact between the right and left registration rollers is correct.	Check visually and remedy if necessary.
	Check if the heat roller or press roller is extremely dirty or deformed.	Check visually and replace the fuser unit (see page 1-5-18).
(6) Toner drops on the paper conveying path.	Check if the drum unit or developer unit is extremely dirty.	Clean the drum unit or developer unit.

TONER
www.tonerplus.com.ua

Problem	Causes/check procedures	Corrective measures
(7) Abnormal noise is heard.	Check if the rollers, pulleys and gears operate smoothly.	Grease the bushes and gears.
	Check if the following clutches are installed correctly. Paper feed clutch Mid clutch Registration clutch Duplex clutch	Check visually and remedy if necessary.
(8) No primary original feed.	Check if the surfaces of the following pulleys are dirty with paper powder. DP forwarding pulley DP paper feed roller	Clean with isopropyl alcohol.
	Check if the following pulleys is deformed. DP forwarding pulley DP paper feed roller	Check visually and replace any deformed (see page 1-5-27).
(9) Multiple sheets of original are fed.	Original is not correctly set.	Set the original correctly.
	Check if the DP separation pulley is worn.	Replace the DP separation pulley if it is worn (see page 1-5-27).
(10) Originals jam.	Originals being used do not conform with the specifications.	Use only originals conforming to the specifications.
	Check if the surfaces of the following pulleys are dirty with paper powder. DP forwarding pulley DP paper feed roller	Clean with isopropyl alcohol.
	Check if the contact between the registration roller and registration pulley is correct.	Check visually and remedy if necessary.
	Check if the contact between the conveying roller and conveying pulley is correct.	Check visually and remedy if necessary.
	Check if the contact between the eject roller and eject pulley is correct.	Check visually and remedy if necessary.
	Check if the contact between the switchback roller and switchback pulley is correct.	Check visually and remedy if necessary.

TONER
www.tonerplus.com.ua

1-4-6 Send error code

This section describes the scanning errors and descriptions, preventive actions, as well as corrective actions.
Error codes not described here could fall within software errors.
If such an error is encountered, turn power off then on, and advise the service representative.

(1) Scan to SMB error codes

Code	Contents	Check procedures/corrective measures
1101	Host destined does not exist on the network.	1. Confirm the destined host. 2. Confirm thedevice's network parameters. 3. Confirm the parameters of the network to which the device is connected are correct.
1102	Login to the host has failed.	1. Confirm user name and password. 2. Confirm the parameters of the network to which the device is connected are correct. 3. Check the host if the folder is properly shared.
1103	Destined host, folder, and/or file names are invalid.	1. Check illegal characters are not contained within these names. 2. Check the name of the folder and files conform with the naming syntax. 3. Confirm destined host and folder.
1105	SMB protocol is not enabled.	1. Confirm device's SMB protocols.
2101	Login to the host has failed.	1. Confirm the destined host. 2. Confirm that the LAN cable is properly connected to the device. 3. Check the SMB port number. 4. Confirm the device's network parameters. 5. Confirm the parameters of the network to which the device is connected are correct.
2201	Writing scanned data has failed.	1. Check the file name to save the scanned data. 2. Confirm the device's network parameters. 3. Confirm the parameters of the network to which the device is connected are correct.

TONER
www.tonerplus.com.ua

(2) Scan to FTP error codes

Code	Contents	Check procedures/corrective measures
1101	FTP server does not exist on the network.	1. Check the FTP server name. 2. Confirm device's network parameters. 3. Confirm the parameters of the network to which the device is connected are correct.
1102	Login to the FTP server has failed.	1. Confirm user name and password. 2. Check the FTP server name.
1103	Destined folder is invalid.	1. Check that the illegal characters are not contained within these names. 2. Check the FTP server name.
1105	FTP protocol is not enabled.	1. Confirm device's FTP protocols.
1131	Initializing TLS has failed.	1. Confirm device's security parameters.
1132	TLS negotiation has failed.	1. Confirm device's security parameters. 2. Check the FTP server name.
2101	Access to the FTP server has failed.	1. Check the FTP server name. 2. Confirm that the LAN cable is properly connected to the device. 3. Check the FTP port number. 4. Confirm device's network parameters. 5. Confirm the network parameters the device is connected. 6. Check the FTP server name.
2102	Access to the FTP server has failed. (Connection timeout)	1. Check the FTP server name. 2. Check the FTP port number. 3. Confirm device's network parameters. 4. Confirm the network parameters the device is connected. 5. Check the FTP server name.
2201	Connection with the FTP server has failed.	1. Confirm device's network parameters. 2. Confirm the network parameters the device is connected. 3. Confirm destined folder. 4. Check the FTP server name.
2202	Connection with the FTP server has failed. (Timeout)	1. Confirm device's network parameters. 2. Confirm the network parameters the device is connected.
2231	Connection with the FTP server has failed. (FTPS communication)	1. Confirm device's network parameters. 2. Confirm the network parameters the device is connected.
3101	FTP server responded with an error.	1. Confirm device's network parameters. 2. Confirm the network parameters the device is connected. 3. Check the FTP server.

TONER
www.tonerplus.com.ua

(3) Scan to E-mail error codes

Code	Contents	Check procedures/corrective measures
1101	SMTP/POP3 server does not exist on the network.	1. Check the SMTP/POP3 server name. 2. Confirm device's network parameters. 3. Confirm the parameters of the network to which the device is connected are correct.
1102	Login to the SMTP/POP3 server has failed.	1. Confirm user name and password. 2. Check the SMTP/POP3 server.
1104	The domain the destined address belongs is prohibited by scanning restriction.	1. Confirm device's SMTP parameters.
1105	SMTP protocol is not enabled.	1. Confirm device's SMTP protocols.
1106	Sender’s address is not specified.	1. Confirm device's SMTP protocols.
2101	Connection to the SMTP/POP3 server has failed.	1. Check the SMTP/POP3 server name. 2. Confirm that the LAN cable is properly connected to the device. 3. Check the SMTP/POP3 port number. 4. Confirm device's network parameters. 5. Confirm the network parameters the device is connected. 6. Check the SMTP/POP3 server.
2102	Connection to the SMTP/POP3 server has failed. (Connection timeout)	1. Check the SMTP/POP3 server name. 2. Check the SMTP/POP3 port number. 3. Confirm device's network parameters. 4. Confirm the network parameters the device is connected. 5. Check the SMTP/POP3 server.
2201	Connection to the SMTP/POP3 server has failed.	1. Confirm device's network parameters. 2. Confirm the network parameters the device is connected.
2202	Connection to the SMTP/POP3 server has failed. (Timeout)	1. Confirm device's network parameters. 2. Confirm the network parameters the device is connected.
2204	The size of scanning exceeded its limit.	1. Confirm device's network parameters.
3101	SMTP/POP3 server responded with an error.	1. Confirm device's network parameters. 2. Confirm the network parameters the device is connected. 3. Check the SMTP/POP3 server.
3201	No SMTP authentication is found.	1. Check the SMTP server. 2. The device supports SMTP authentication services including CRAM-MD5, DIGEST-MD5, PLAIN and LOGIN.

TONER
www.tonerplus.com.ua

This page is intentionally left blank.

TONER
www.tonerplus.com.ua

1-5-1 Precautions for assembly and disassembly

(1) Precautions

Before starting disassembly, press the Power key on the operation panel to off. Make sure that the Power lamp is off before turning off the main power switch. Unplug the power cable from the wall outlet.
When the fax kit is installed, be sure to disconnect the modular code before starting disassembly.
When handling PWBs (printed wiring boards), do not touch parts with bare hands.
The PWBs are susceptible to static charge.
Do not touch any PWB containing ICs with bare hands or any object prone to static charge.
When removing the hook of the connector, be sure to release the hook.
Take care not to get the cables caught.
To reassemble the parts, use the original screws. If the types and the sizes of screws are not known, refer to the PARTS LIST.

(2) Drum unit

Note the following when handling or storing the drum unit.
When removing the drum unit, never expose the drum surface to strong direct light.
Keep the drum unit at an ambient temperature between -20°C/-4°F and 40°C/104°F and at a relative humidity not higher than 85% RH. Avoid abrupt changes in temperature and humidity.
Avoid exposure to any substance which is harmful to or may affect the quality of the drum unit.
Do not touch the drum surface with any object. Should it be touched by hands or stained with oil, clean it.

(3) Toner

Store the toner containers in a cool, dark place.
Avoid exposing the toner containers to direct light and high humidity.

TONER+
www.tonerplus.com.ua

(4) How to tell a genuine Kyocera Mita toner container

As a means of brand protection, the Kyocera Mita toner container utilizes an optical security technology to enable visual validation. A validation viewer is required to accomplish this.

Hold the validation viewer over the left side part of the brand protection seal on the toner container. Through each window of the validation viewer, the left side part of the seal should be seen as follows:

A black-colored band when seen through the left side window (●)

A shiny or gold-colored band when seen through the right side window (☼)

The above will reveal that the toner container is a genuine Kyocera Mita branded toner container, otherwise, it is a counterfeit.

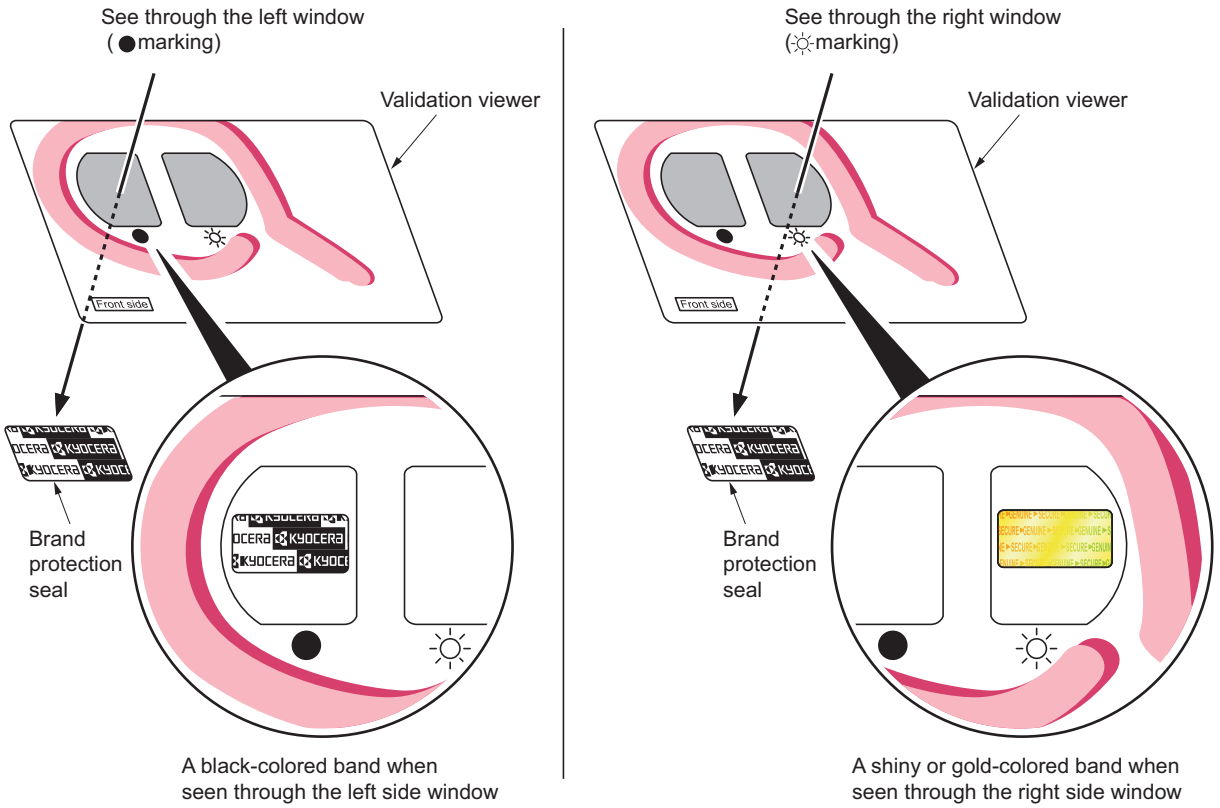

Figure 1-5-1

The brand protection seal has an incision as shown below to prohibit reuse.

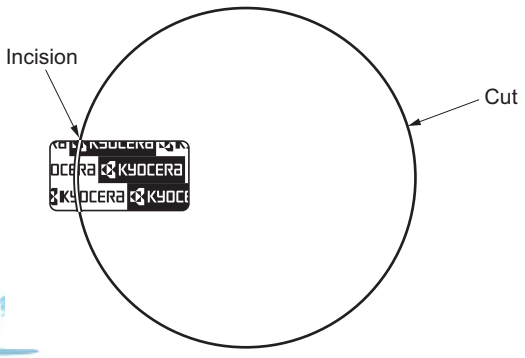

Figure 1-5-2

TONER+
www.tonerplus.com.ua

1-5-2 Outer covers

(1) Detaching and refitting the front cover

Procedure

1. Remove the cassette.
   (See page 1-5-10)
2. Open the front cover.

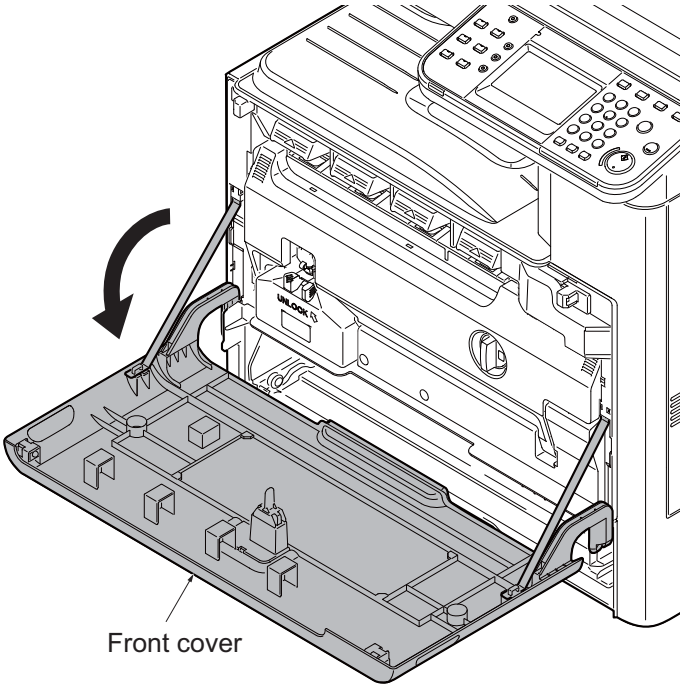

Figure 1-5-3

3. Unhitch the straps by squeezing the hooks inward as shown.

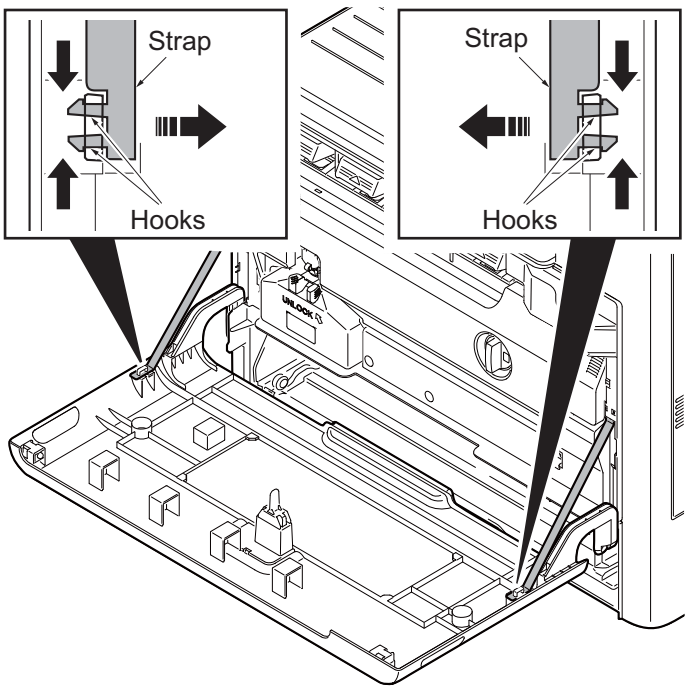

Figure 1-5-4

TONER+
www.tonerplus.com.ua

4. Remove two fulcrum axes of the front cover.
5. Remove the front cover.

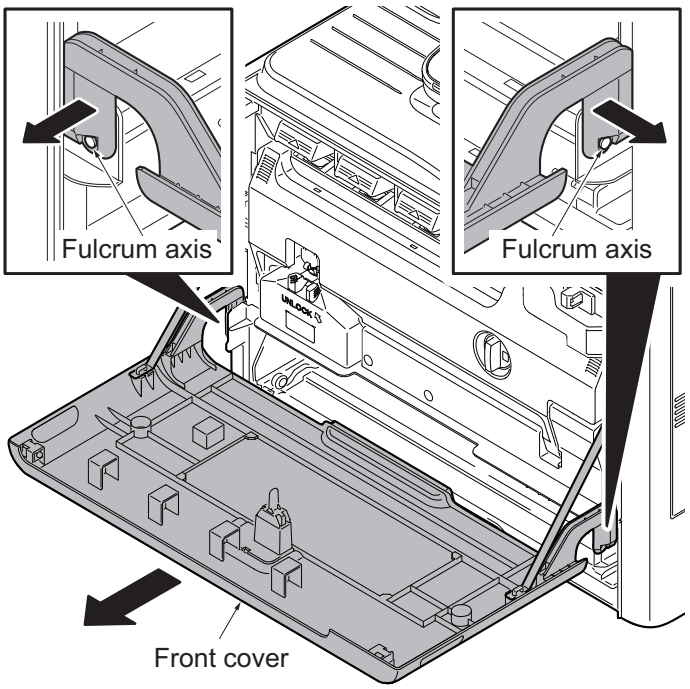

Figure 1-5-5

TONER
www.tonerplus.com.ua

(2) Detaching and refitting the rear cover

Procedure

1. Remove the power cord.
   If the document feeder is installed, remove its interface connector.
2. Release four hooks and then remove the controller box cover.

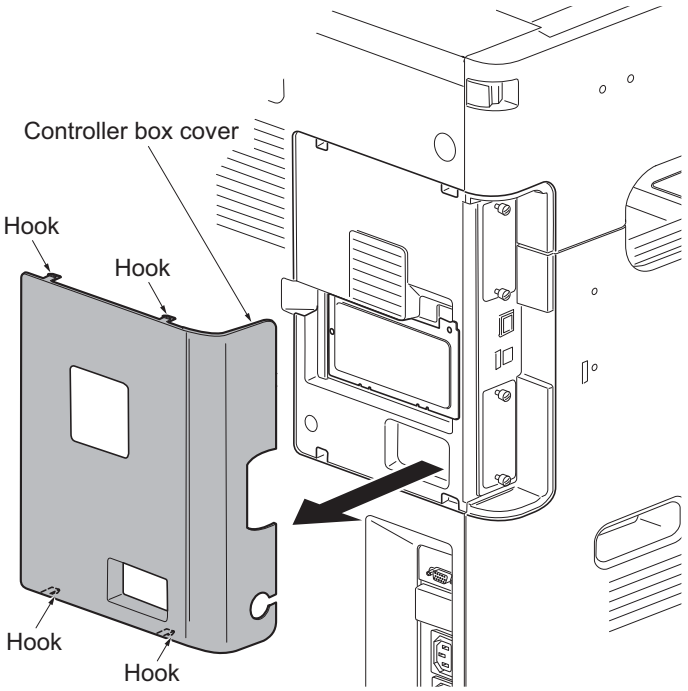

Figure 1-5-6

3. Remove two screws of the DP interface connector and then remove the DP interface connector.
   (See page 1-5-26)
4. Remove six screws.
5. Pull the rear cover upwards and then release three hooks.
6. Remove the rear cover.

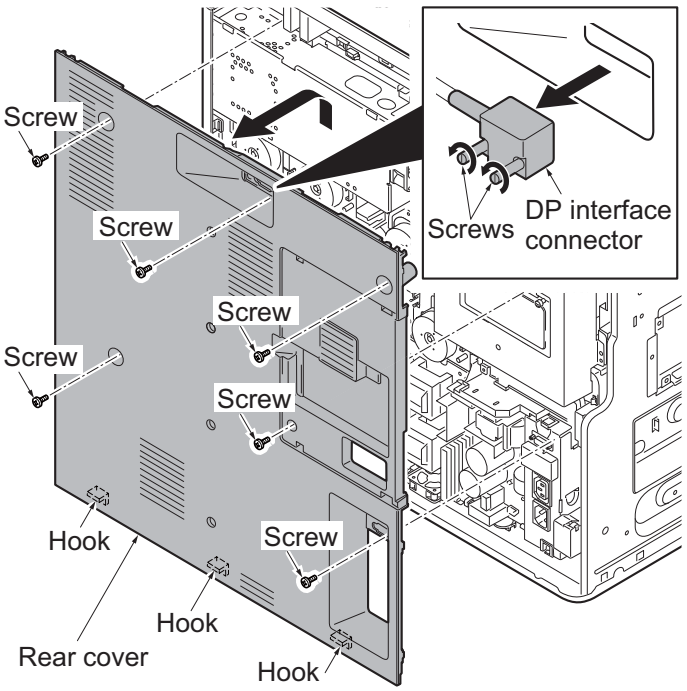

Figure 1-5-7

TONER+
www.tonerplus.com.ua

(3) Detaching and refitting the inner tray

Procedure

1. Release the lock lever and then remove the job separator tray.

   ATTENTION: When refitting the Job separator tray, are cautious of the position of a paper guide.

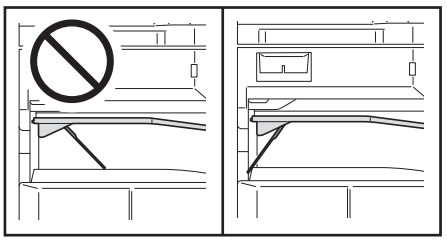

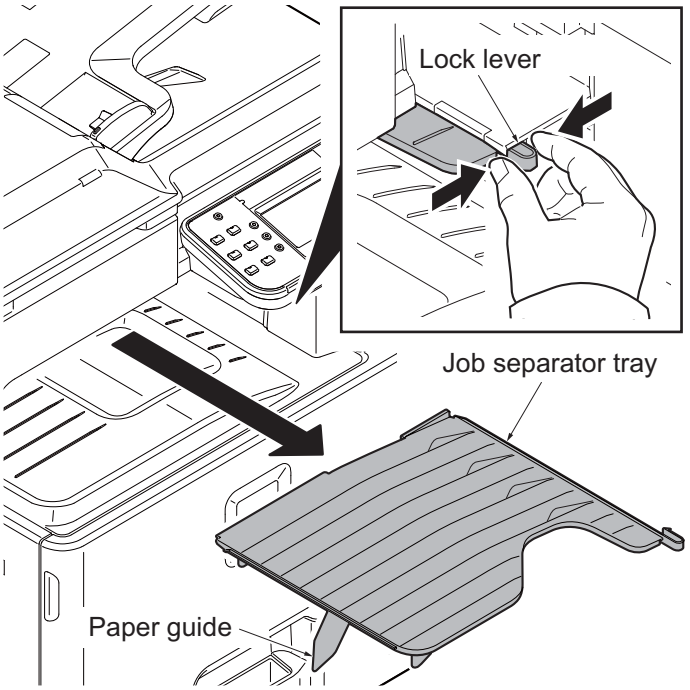

Figure 1-5-8

2. Remove the rear cover.
   (See page 1-5-5)
3. Remove the cassette.
   (See page 1-5-10)
4. Open the front cover.(See page 1-5-3)
5. Remove two screws.
6. Release three hooks A.
7. Pull the left lower cover upwards and then release ten hooks B.
8. Remove the left lower cover.

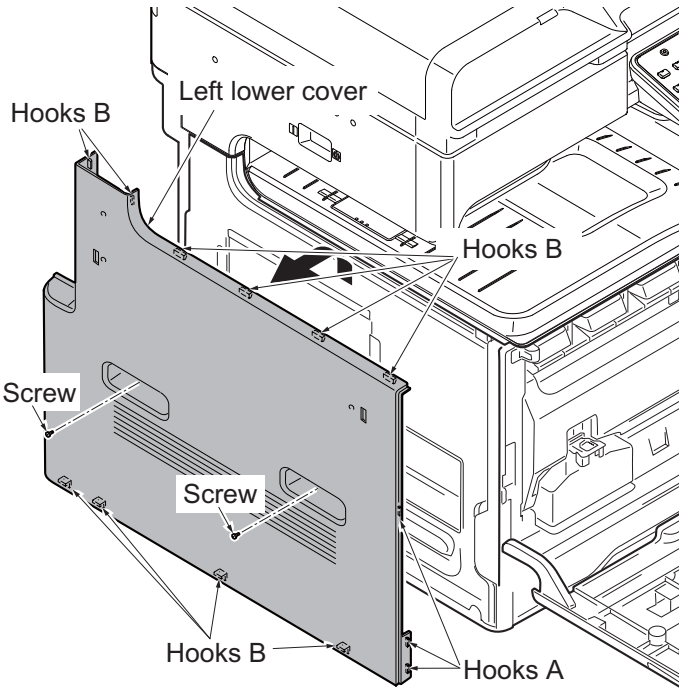

Figure 1-5-9

TONER+
www.tonerplus.com.ua

9. Release the hook of the front upper cover.
10. Tilt the front upper cover forward.

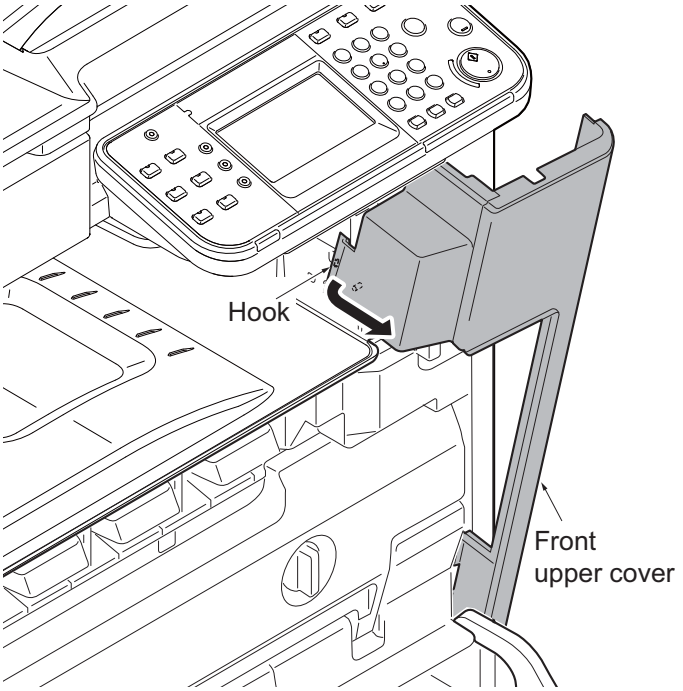

Figure 1-5-10

11. Remove the inner tray.

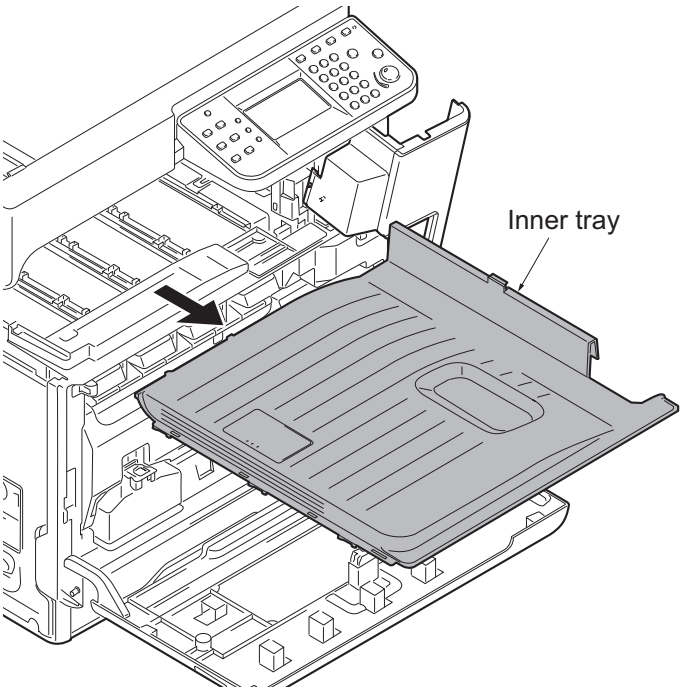

Figure 1-5-11

TONER+
www.tonerplus.com.ua

(4) Detaching and refitting the eject rear cover

Procedure

1. Release two hooks by using a flat screwdriver and then remove the tray left cover.

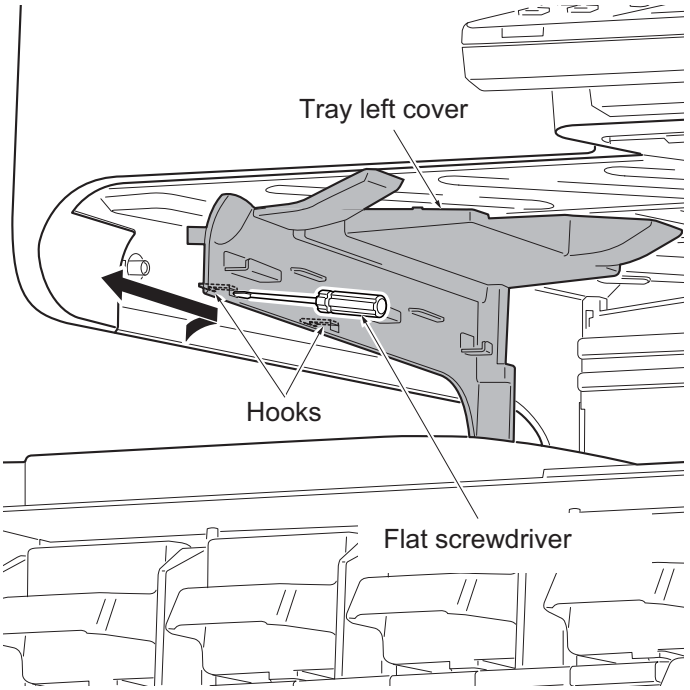

Figure 1-5-12

2. Pull the left upper cover downwards and then release two hooks A.
3. Pull the left upper cover upwards and then release three hooks B.
4. Remove the left upper cover.

ATTENTION: At the time of replace the left upper cover, confirm the position of the scaner lock lever .

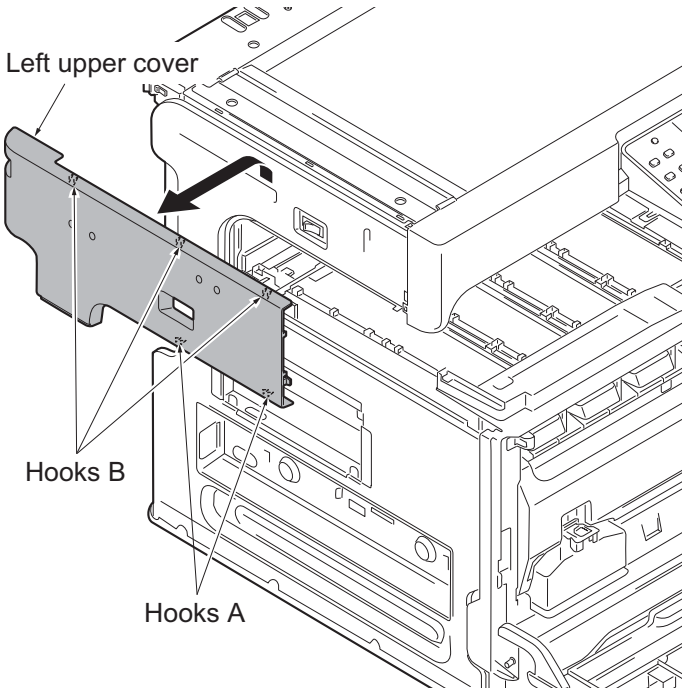

Figure 1-5-13

TONER+
www.tonerplus.com.ua

5. Remove the eject rear cover.

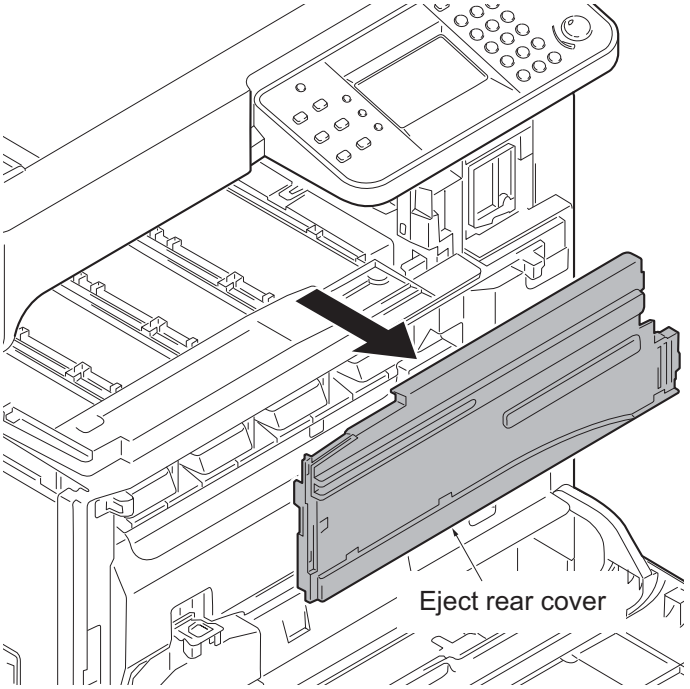

Figure 1-5-14

TONER+
www.tonerplus.com.ua

1-5-3 Paper feed section

(1) Detaching and refitting the primary paper feed unit

Procedure

1. Remove the cassette.

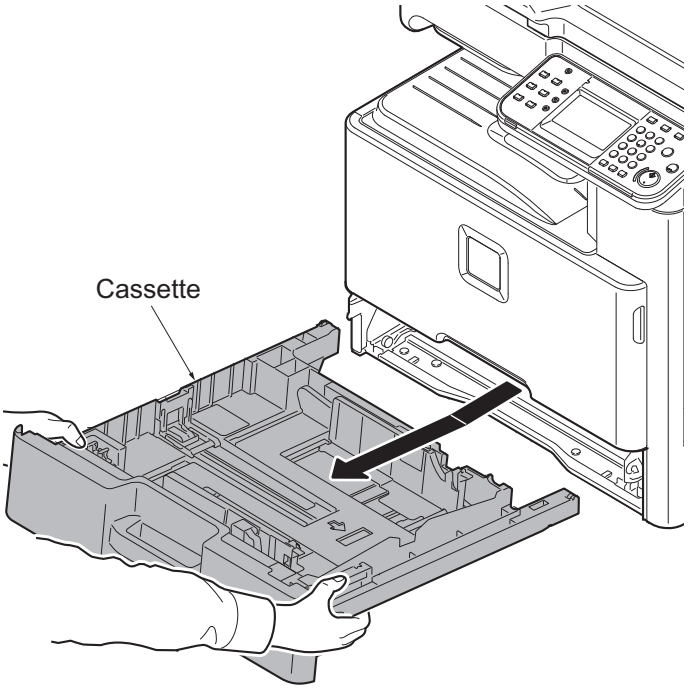

Figure 1-5-15

2. Release the feed lever (yellow) and then remove the primary paper feed unit.
3. Check or replace the primary paper feed unit and refit all the removed parts.

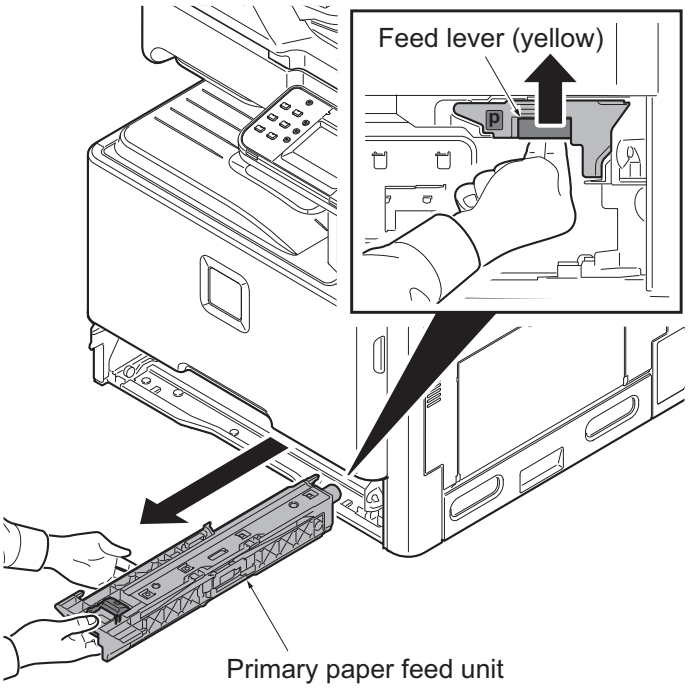

Figure 1-5-16

TONER
www.tonerplus.com.ua

(2) Detaching and refitting the MP paper feed roller and MP separation pad

Procedure

1. Open the right cover 1.

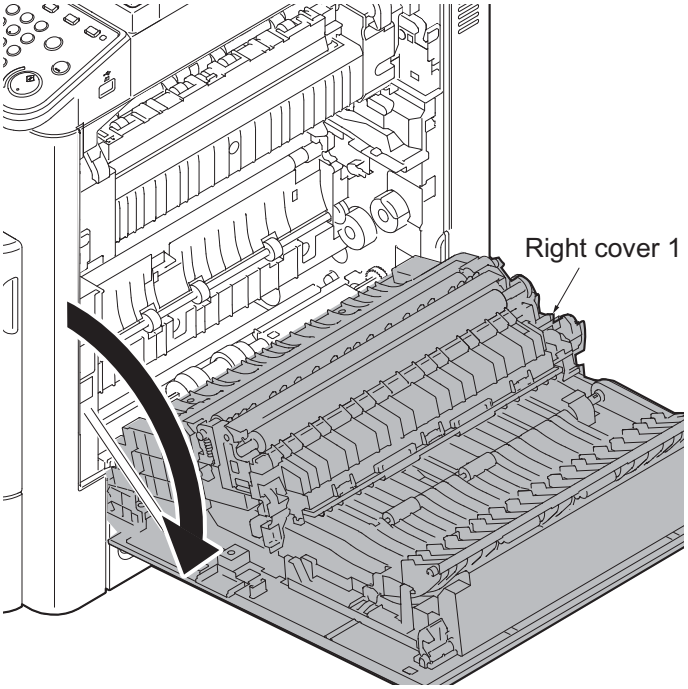

Figure 1-5-17

2. While squeezing the holder inward, remove the MP paper feed roller.

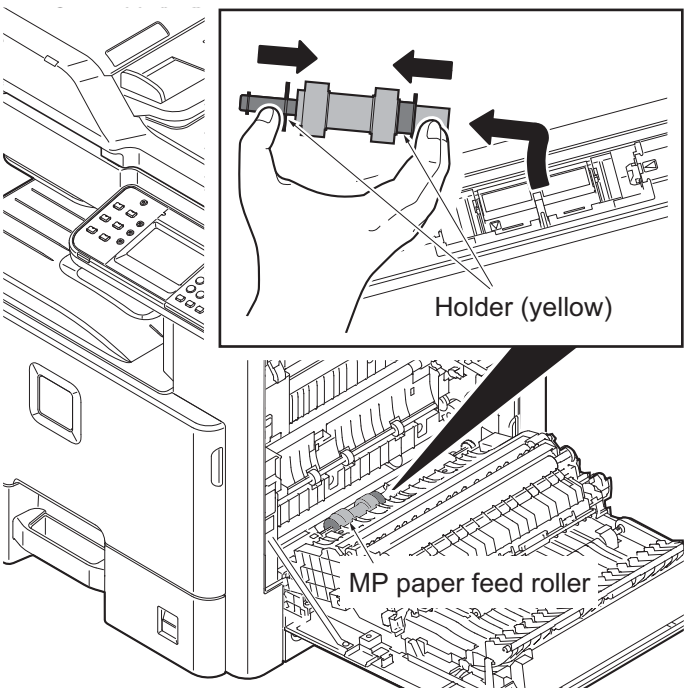

Figure 1-5-18

TONER+
www.tonerplus.com.ua

3. Tilt the MP separation pad forward and then remove it upwards.
4. Check or replace the MP paper feed roller and MP separation pad and refit all the removed parts.

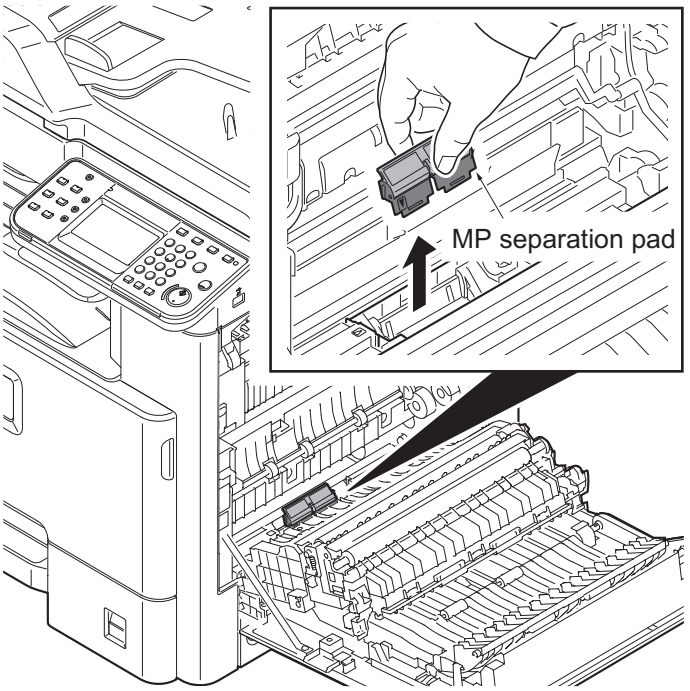

Figure 1-5-19

(3) Detaching and refitting the registration roller

Procedure

1. Open the right cover 1 (See page 1-5-11).
2. Remove the transfer roller unit. (See page 1-5-17)
3. Remove two springs at the front and back of the registration roller right.
4. Remove the cap and gear.
5. Slide and remove the registration roller right.
6. Check or replace the registration roller right and refit all the removed parts.

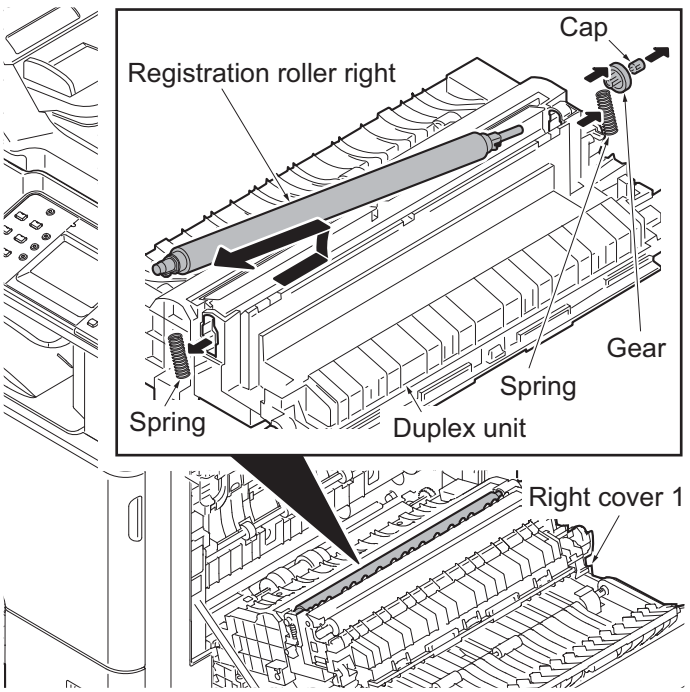

Figure 1-5-20

TONER+
www.tonerplus.com.ua

(4) Detaching and refitting the registration cleaner

Procedure

1. Open the front cover. (See page 1-5-3)
2. Open the duct cover. (See page 1-5-15)
3. Set the cleaner lever (yellow) up and draw the registration cleaner frontward.
4. Check or replace the registration cleaner and refit all the removed parts.

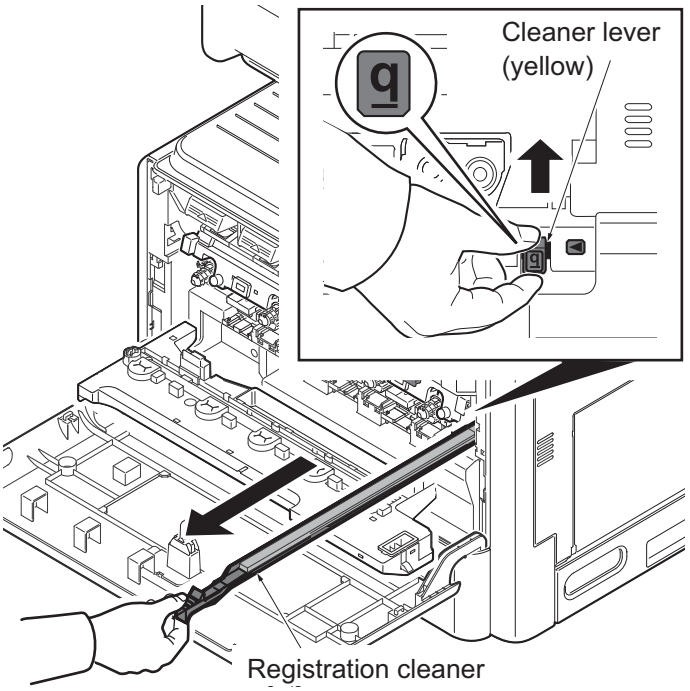

Figure 1-5-21

(5) Detaching and refitting the MP tray

Procedure

1. Open the MP tray.
2. Release two fulcrums of the MP tray by using a flat screwdriver.
3. Pull two straps upwards to remove.
4. Remove the MP tray.

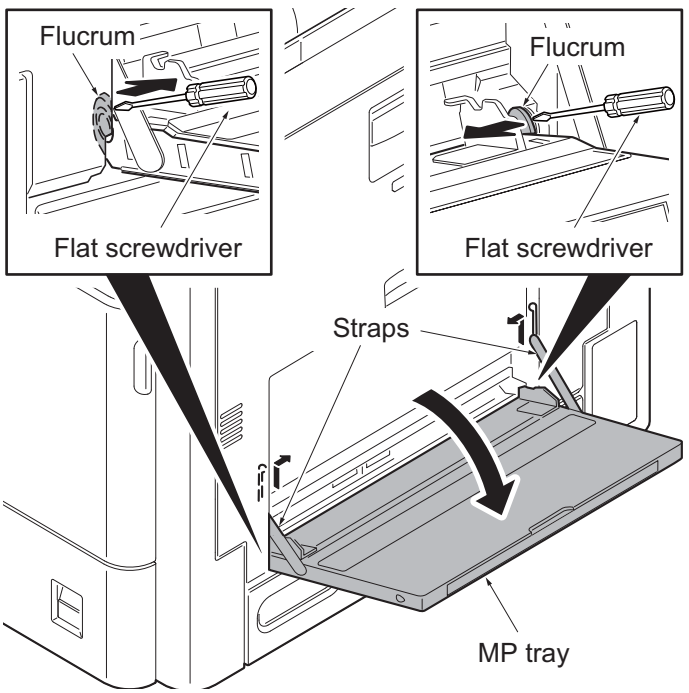

Figure 1-5-22

TONER+
www.tonerplus.com.ua

1-5-4 Developing section

(1) Detaching and refitting the developing unit

Procedure

1. Open the front cover. (See page 1-5-3)
2. Release the lock lever and then remove the waste toner box.

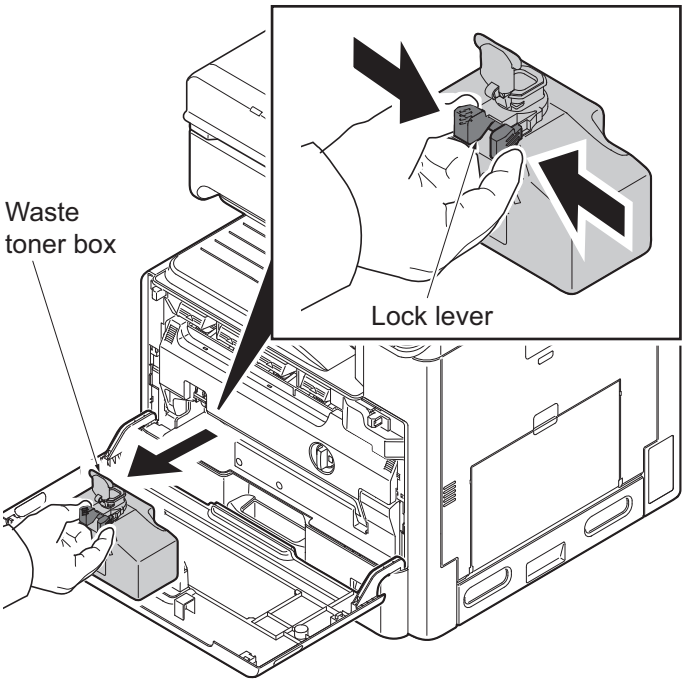

Figure 1-5-23

3. Turn the lock lever (yellow) to the right and then knock down the duct cover forwards.

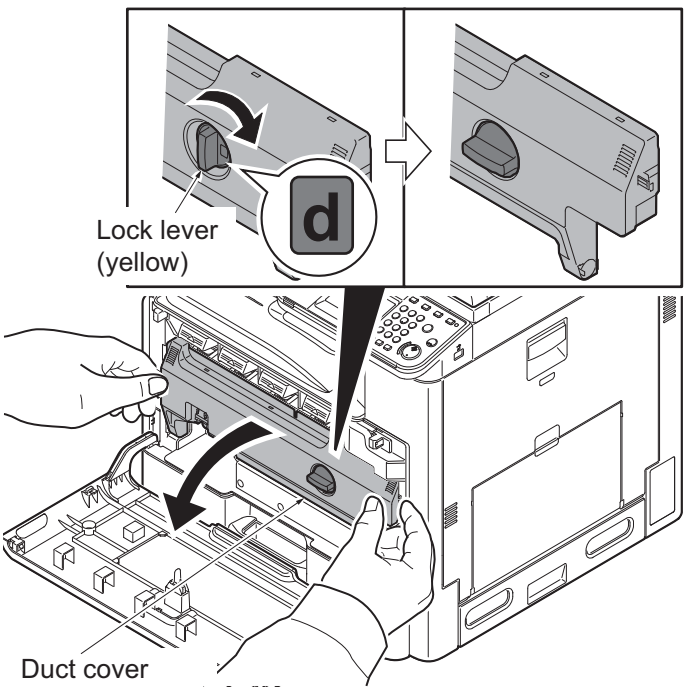

Figure 1-5-24

TONER+
www.tonerplus.com.ua

4. Lift the lever and turn the duct holder upwards.

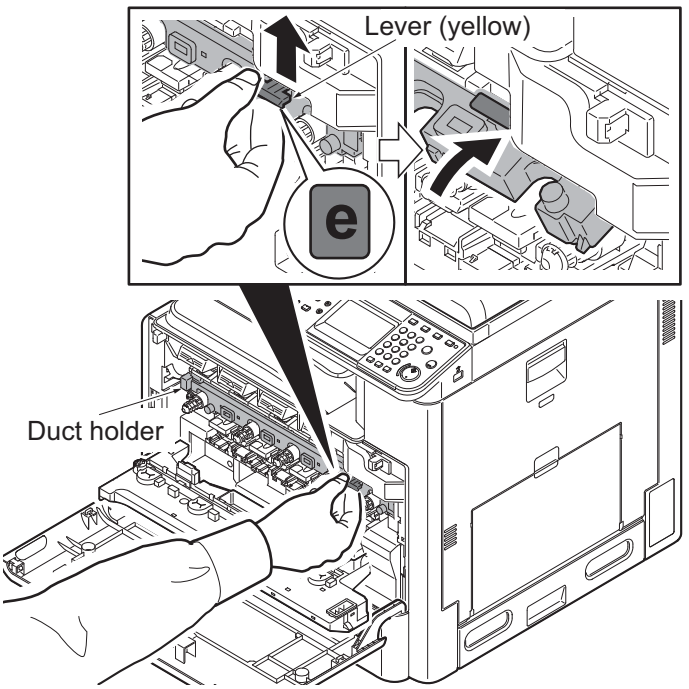

Figure 1-5-25

5. Push the lock lever (yellow) of the development unit upwards and then remove the developer unit.
6. Check or replace the developer unit and refit all the removed parts.

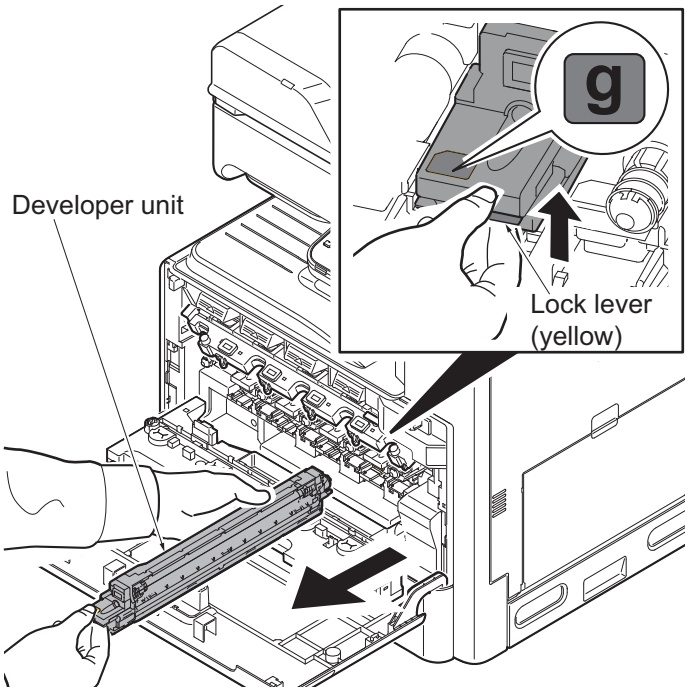

Figure 1-5-26

CAUTION: Please don't store or transport the developing units in the state that are put on slant or lengthways.
Please carry the developing units and the main machine horizontally without the shock or vibration when relocating.

TONER+
www.tonerplus.com.ua

1-5-5 Drum section

(1) Detaching and refitting the drum unit

Procedure

1. Open the front cover. (See page 1-5-3)
2. Release the waste toner box. (See page 1-5-14)
3. Turn the lock lever to the right and then knock down the duct cover forwards. (See page 1-5-15)
4. Lift the lever and turn the duct holder upwards.(See page1-5-11)
5. Push the lock lever (yellow) of the drum unit upwards and then remove the drum unit.
6. Check or replace the drum unit and refit all the removed parts.

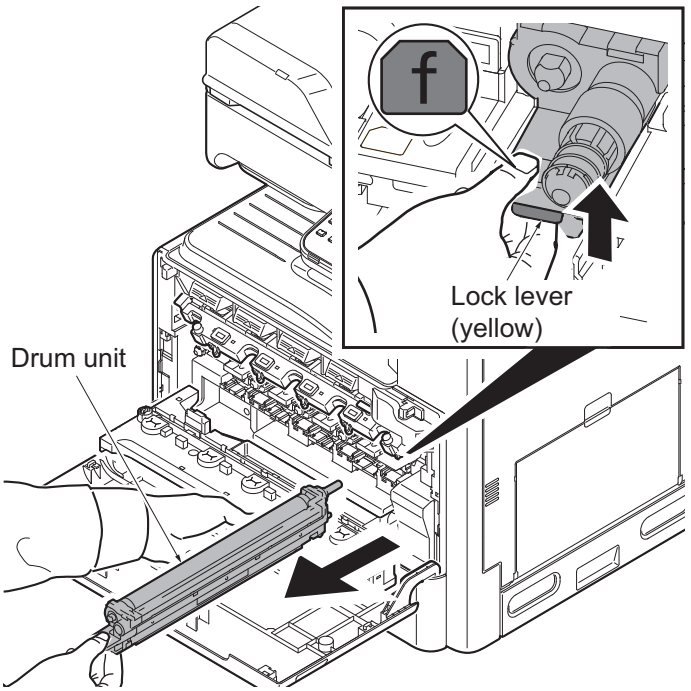

Figure 1-5-27

(2) Detaching and refitting the chager roller unit

Procedure

1. Remove the drum unit. (See page 1-5-16)
2. Release two lock levers and then remove the chager roller unit.
3. Check or replace the chager roller unit and refit all the removed parts.

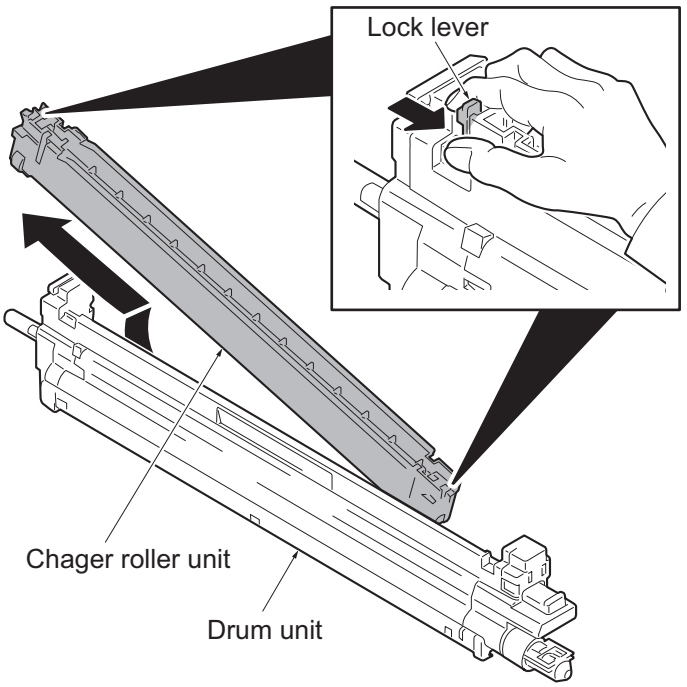

Figure 1-5-28

TONER+
www.tonerplus.com.ua

1-5-6 Transfer/separation section

(1) Detaching and refitting the intermediate transfer unit

Procedure

1. Open the right cover 1.
   (See page 1-5-11)
2. Pull the intermediate transfer unit forwards by holding two knobs A(yellow)
3. .Change to the knob B from the knob A and then remove the intermediate transfer unit.
4. Check or replace the intermediate transfer unit and refit all the removed parts.

   CAUTION: When refitting the transfer roller unit, insert it in place until it clicks in.

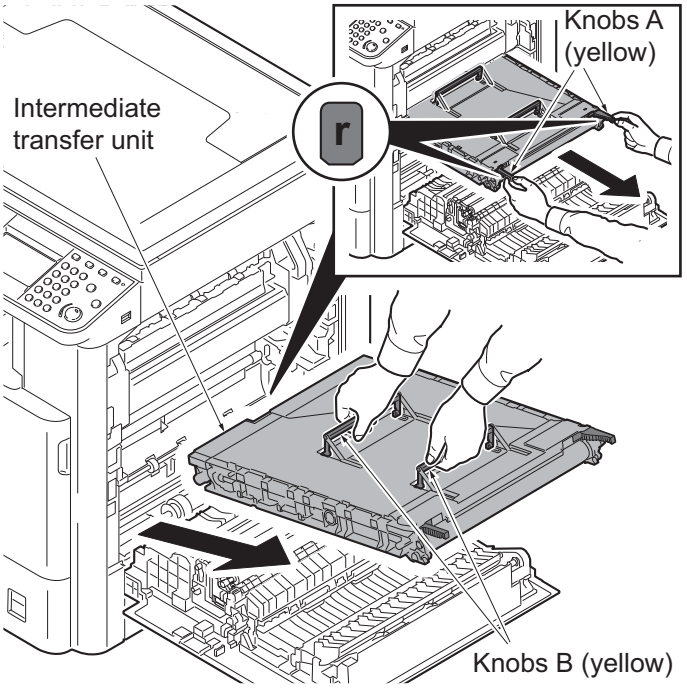

Figure 1-5-29

(2) Detaching and refitting the secondary transfer roller unit

Procedure

1. Open the right cover 1.
   (See page 1-5-11)
2. Release two lock levers (yellow) and then remove the secondary transfer roller unit.
3. Check or replace the secondary transfer roller unit and refit all the removed parts.

   ATTENTION: When refitting the secondary transfer roller unit, insert it in place until it clicks in.

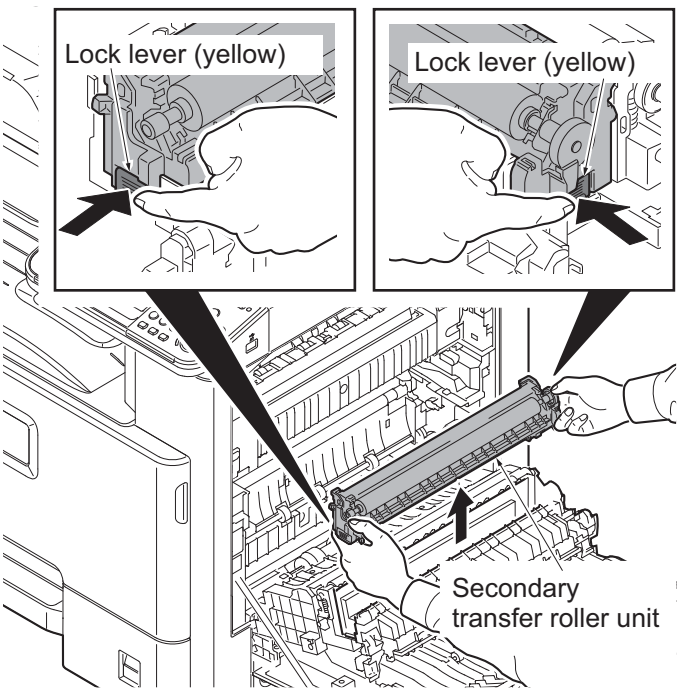

Figure 1-5-30

TONER+
www.tonerplus.com.ua

1-5-7 Fuser section

(1) Detaching and refitting the fuser unit

Procedure

1. Open the right cover 1.
   (See page 1-5-11)
2. Release two mount levers (yellow) and then pull the fuser unit forwards

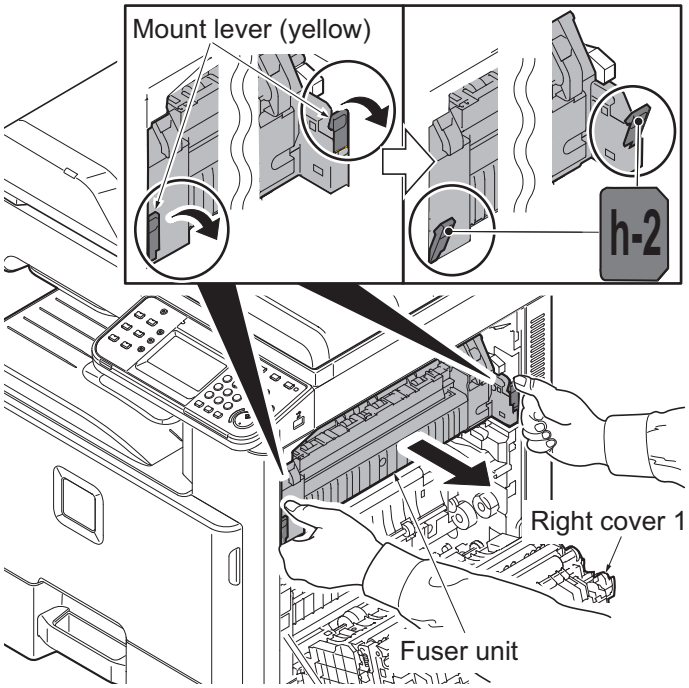

Figure 1-5-31

3. Grip two knobs (yellow) of the fuser unit.
4. Lift the fuser unit upwards and then remove the fuser unit.
5. Check or replace the fuser unit and refit all the removed parts.

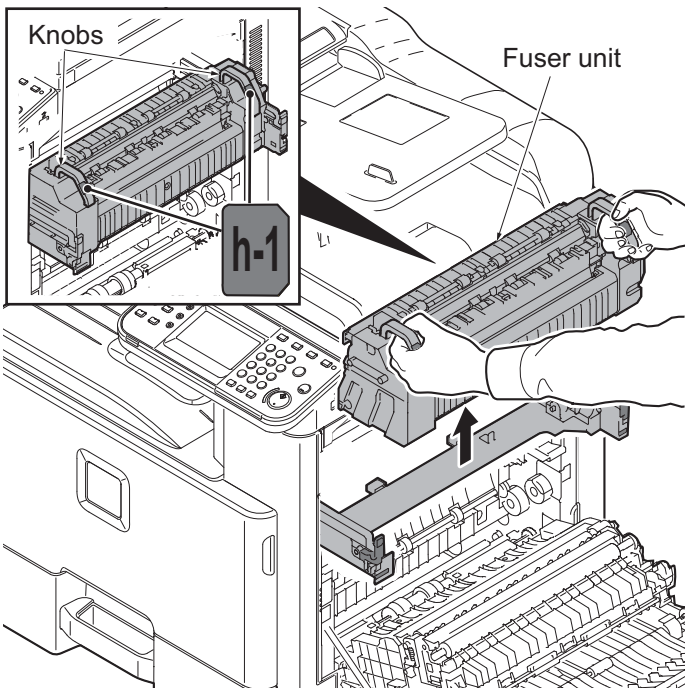

Figure 1-5-32

TONER
www.tonerplus.com.ua

1-5-8 Drive section

(1) Detaching and refitting the conveying motor

Procedure

1. Remove the rear cover.
   (See page 1-5-5)
2. Remove the connector from the conveying motor PWB.
3. Remove three screws and then remove the conveying motor.
4. Check or replace the conveying motor and refit all the removed parts.

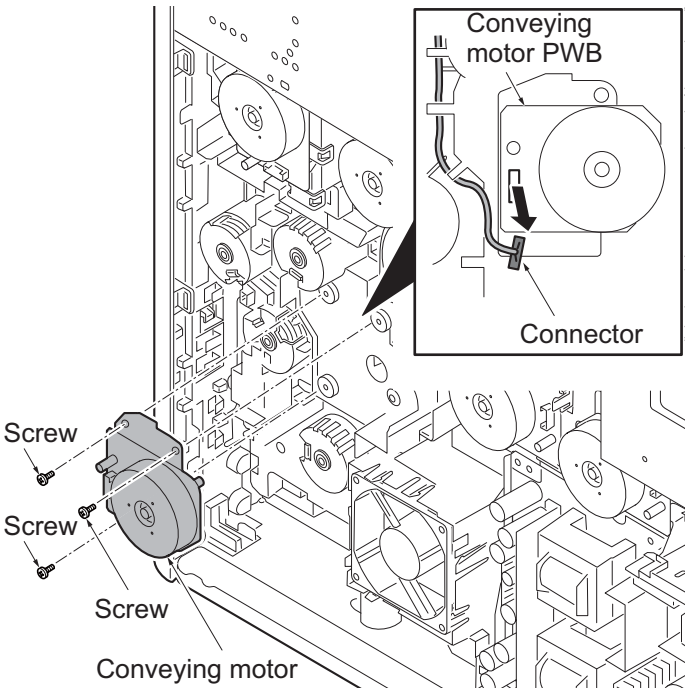

Figure 1-5-33

(2) Detaching and refitting the drive unit

Procedure

1. Remove the rear cover.
   (See page 1-5-5)
2. Remove three connectors and then release the waires from the hooks.
3. Remove four screws and then remove the drive unit.
4. Check or replace the drive unit and refit all the removed parts.

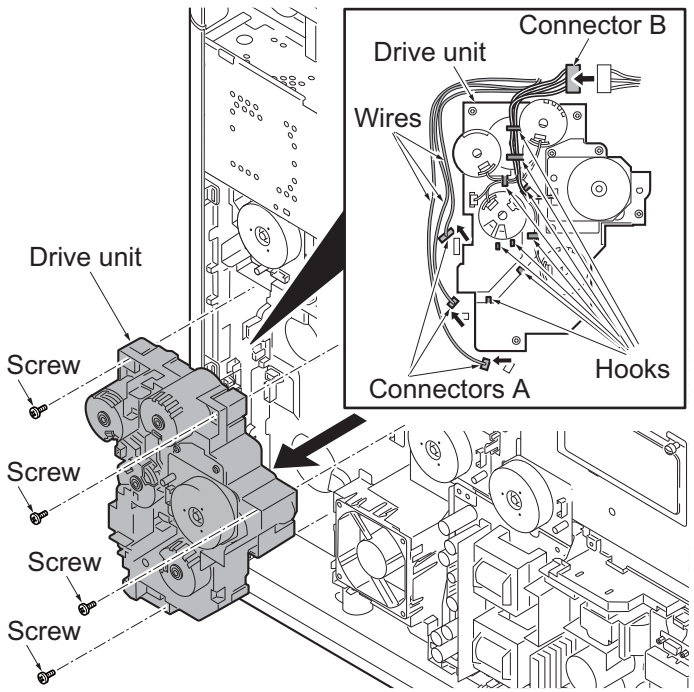

Figure 1-5-34

TONER+
www.tonerplus.com.ua

1-5-9 Optical section

(1) Detaching and refitting the laser scanner unit

Procedure

1. Remove the cassette.
   (See page 1-5-10)
2. Remove the rear cover and left lower cover.(See page 1-5-5,1-5-6)
3. Remove two connectors.
4. Remove four screws and then remove the laser scanner unit assy by pulling it forwards.

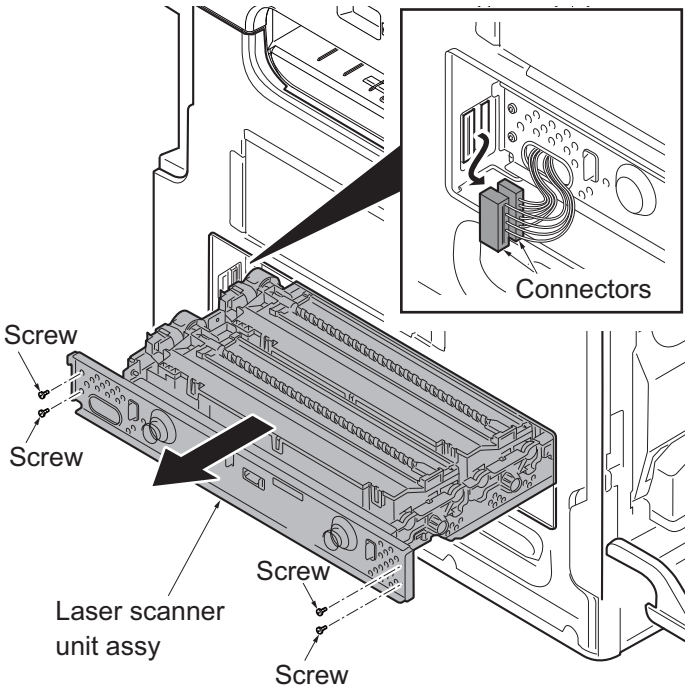

Figure 1-5-35

5. Release the clamp and then remove the FFC from the connector.
6. Remove two screws.
7. Remove the pin and spring and then remove the unit holder Y.
8. Lift the laser scanner unit Y upwards and then remove the laser scanner unit Y (LSU-Y).
9. Similarly, remove the laser scanner unit C/M/K(LSU-C/M/K).
10. Check or replace the laser scanner unit and refit all the removed parts.

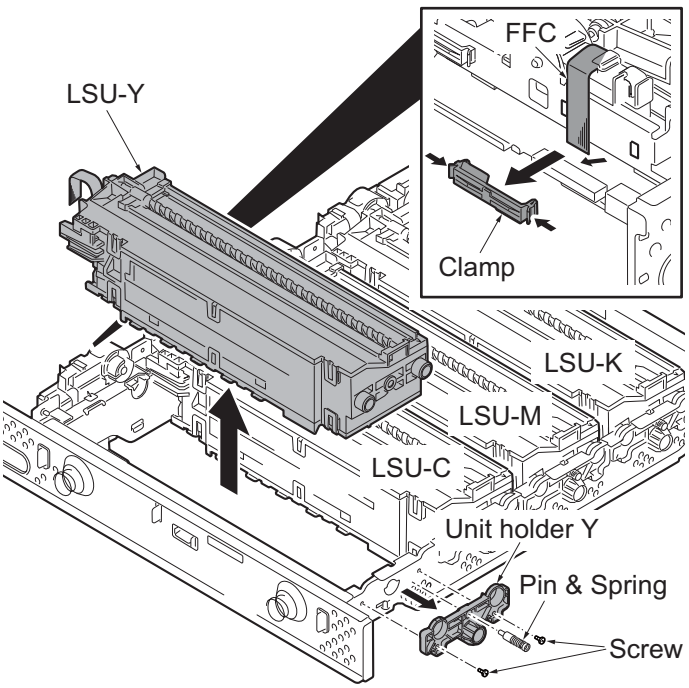

Figure 1-5-36

TONER+
www.tonerplus.com.ua

(2) Detaching and refitting the image scanner unit

Procedure

1. Remove the DP or original cover. (See page 1-5-26)
2. Remove two screws and then remove the scanner right cover.

   ATTENTION: To reinstall the scanner right cover, position it close to the platen.

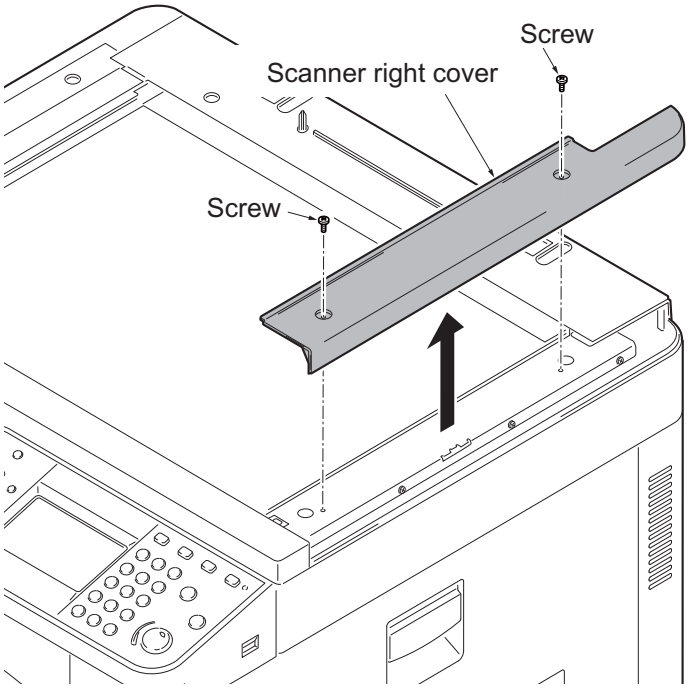

Figure 1-5-37

3. Remove the platen.

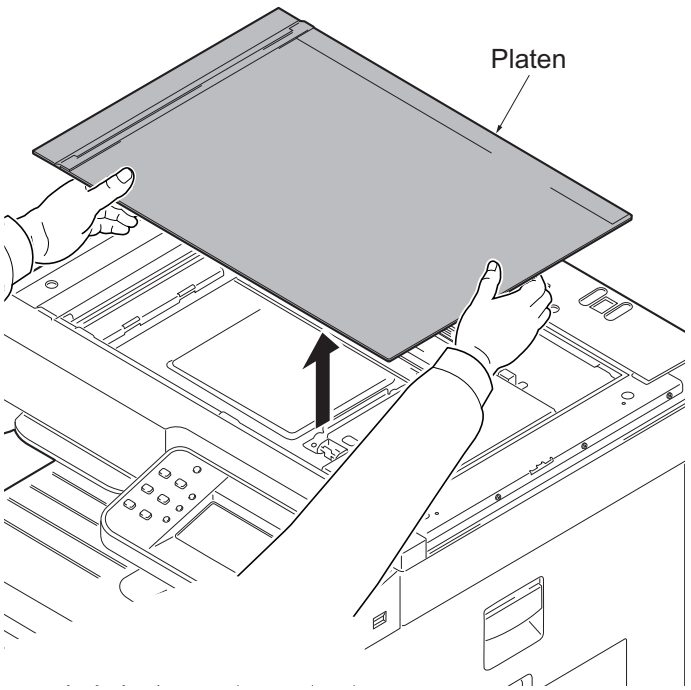

Figure 1-5-38

TONER+
www.tonerplus.com.ua

4. Remove four screws and then remove the scanner cover.

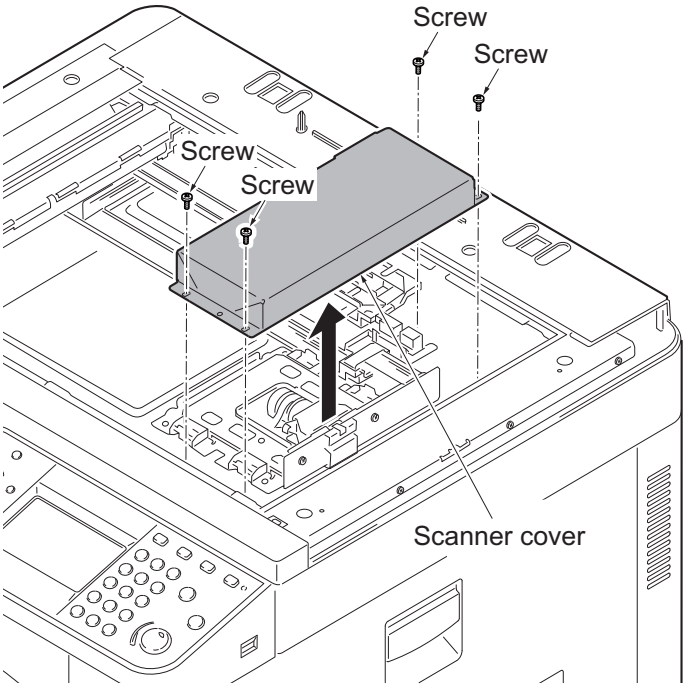

Figure 1-5-39

5. Remove the FFC from the connector.
6. Remove four screws and then remove the image scanner unit.

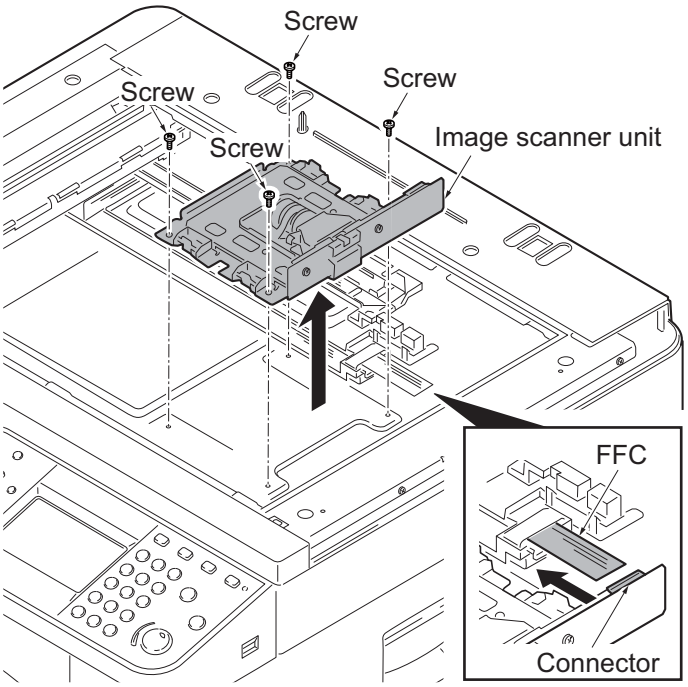

Figure 1-5-40

TONER+
www.tonerplus.com.ua

Refitting the ISU

7. When re-installation, fix the image scanner unit by matching to the scale of a former position.

   When exchange, decide the fix position of ISU by the following.

   The right and left of machine:
   Confirm the number marked (a) and then match the line (c) of ISU to the positioning line (b) of same number on frame side.
   (Line (c) is the one which is marked with the appropriate number.)

   The rear and front of machine:
   Match the edge (e) of ISU to the positioning line (d) on frame side.

8. Fix the ISU as before with four screws.
9. Check or replace the image scanner unit and refit all the removed parts.

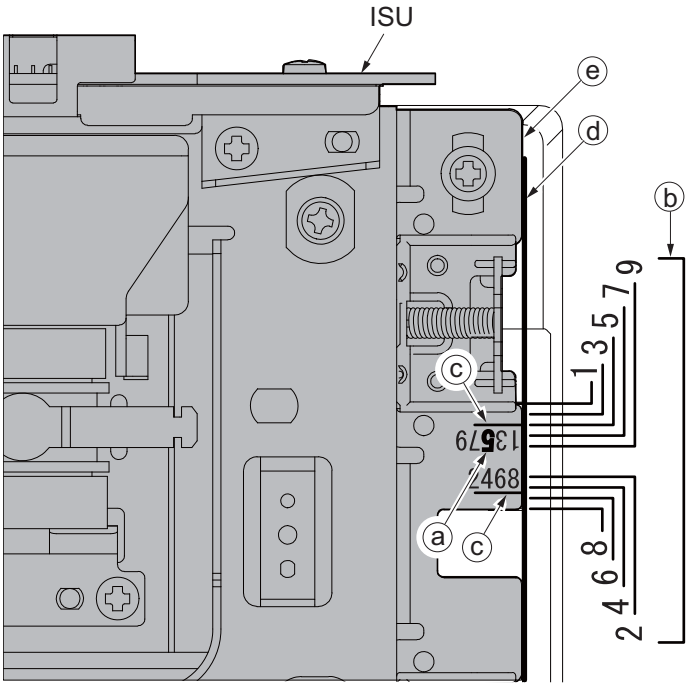

Figure 1-5-41

TONER
www.tonerplus.com.ua

(3) Detaching and refitting the LED unit

Procedure

1. Remove the DP or original cover. (See page 1-5-26)
2. Remove the sanner right cover and platen.(See page 1-5-21)
3. Remove the ISU front cover.

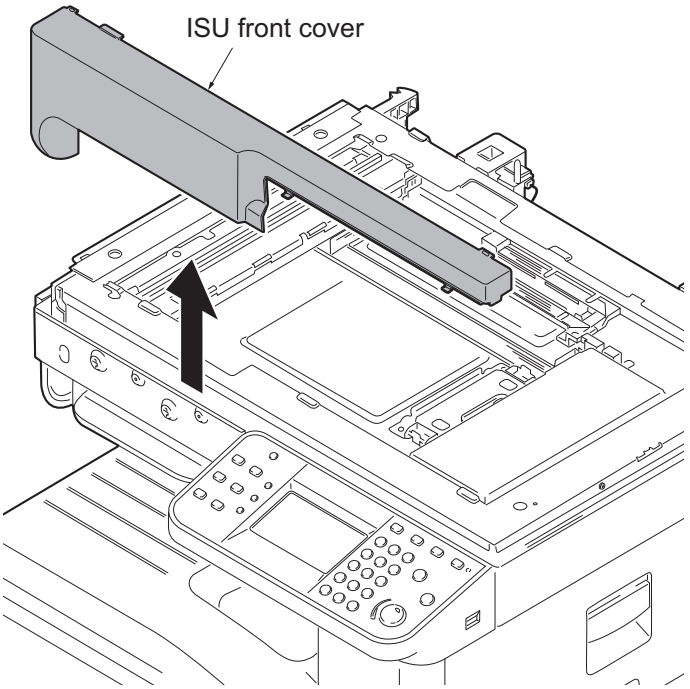

Figure 1-5-42

4. Remove two screws and then remove the ISU rear cover.

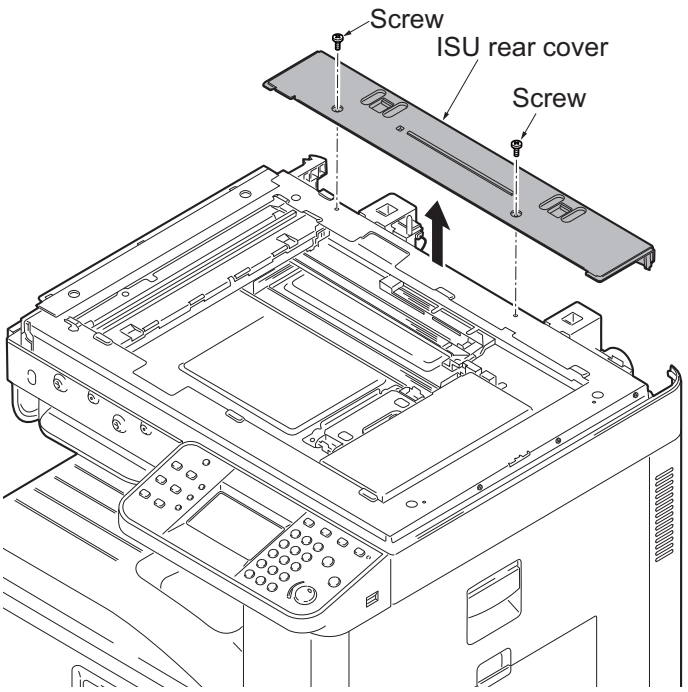

Figure 1-5-43

TONER+
www.tonerplus.com.ua

5. Move the exposure unit to the cutting lack part.
6. Peel off the sheet.
7. Release the hook and then remove the FFC cover.

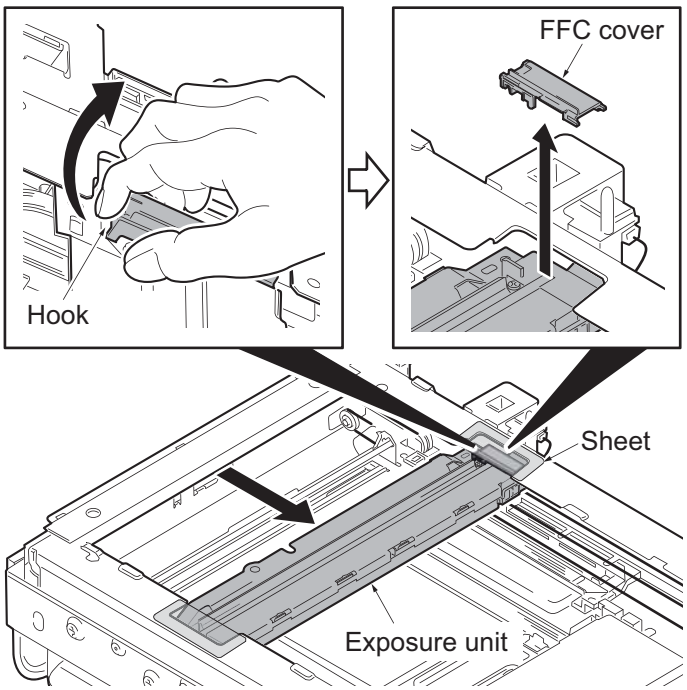

Figure 1-5-44

8. Remove the FFC from the connector.
9. Remove two screws and then remove the LED unit.
10. Check or replace the LED unit and refit all the removed parts.

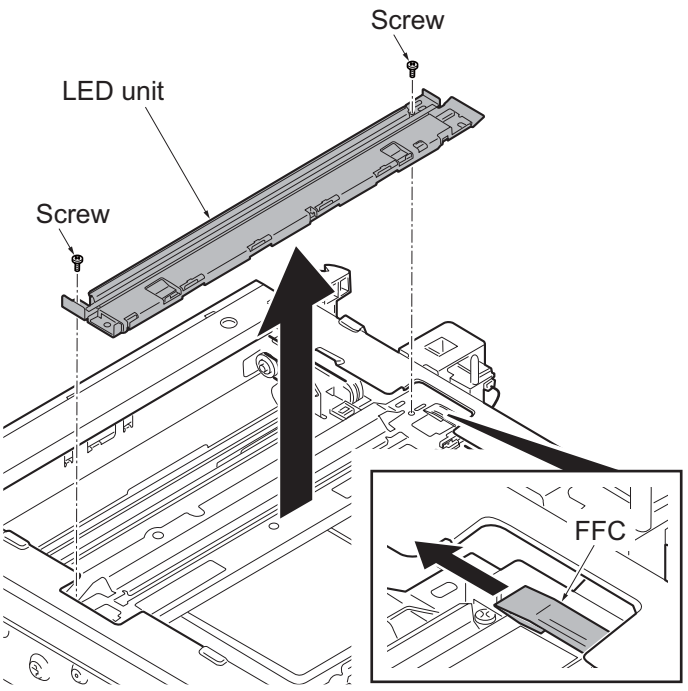

Figure 1-5-45

TONER
www.tonerplus.com.ua

1-5-10 Document processor

(1) Detaching and refitting the document processor

Procedure

1. Remove the restriction parts.
2. Open the document processor on vertically.

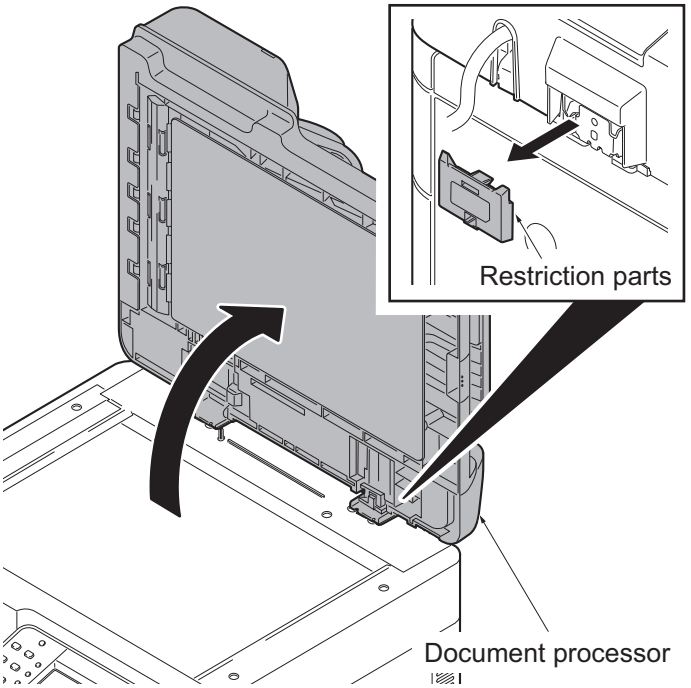

Figure 1-5-46

3. Remove two screws and then remove the DP interface connector.
4. Pull the document processor upwards out.

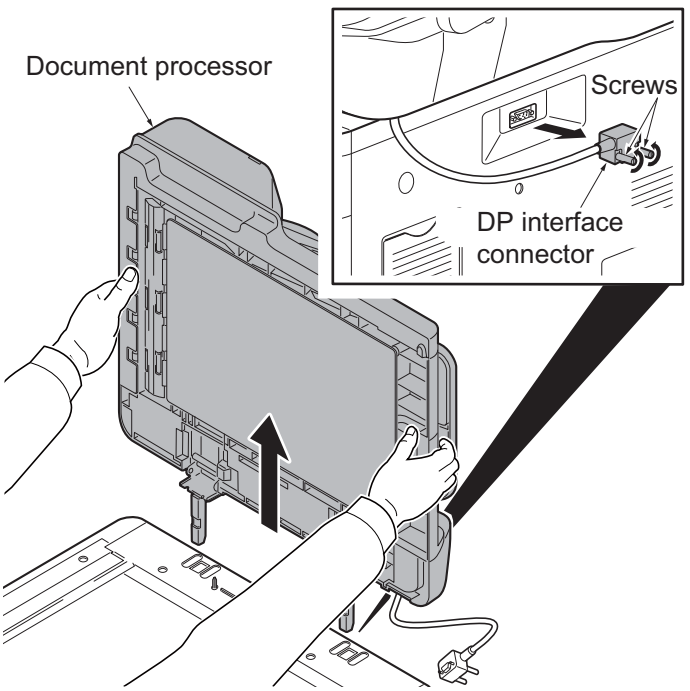

Figure 1-5-47

TONER+
www.tonerplus.com.ua

(2) Detaching and refitting the DP paper feed roller and DP separation pulley

Procedure

1. Open the DP top cover.

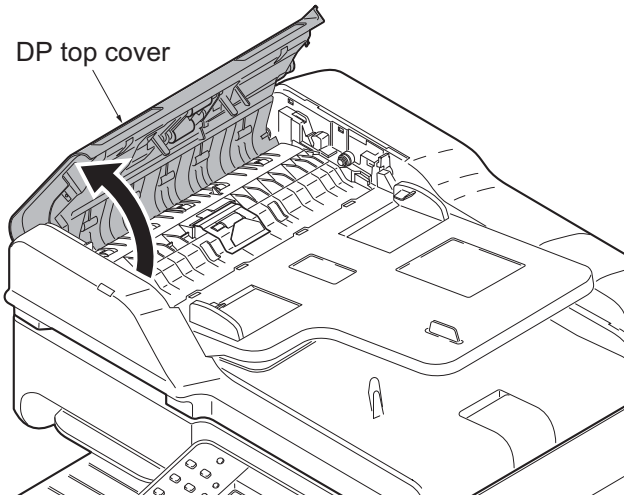

Figure 1-5-48

2. Pull the DP paper feed lever (yellow) down and then open it.
3. Knock the DP paper feed roller down forward.

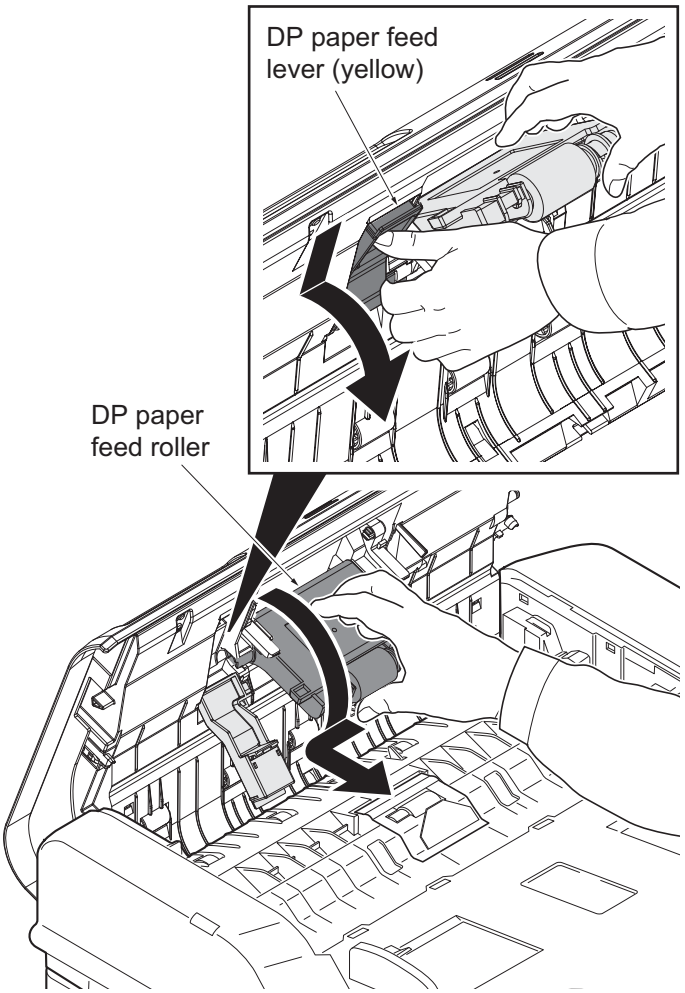

Figure 1-5-49

TONER+
www.tonerplus.com.ua

4. Release the hook and then remove DP separation pulley cover.

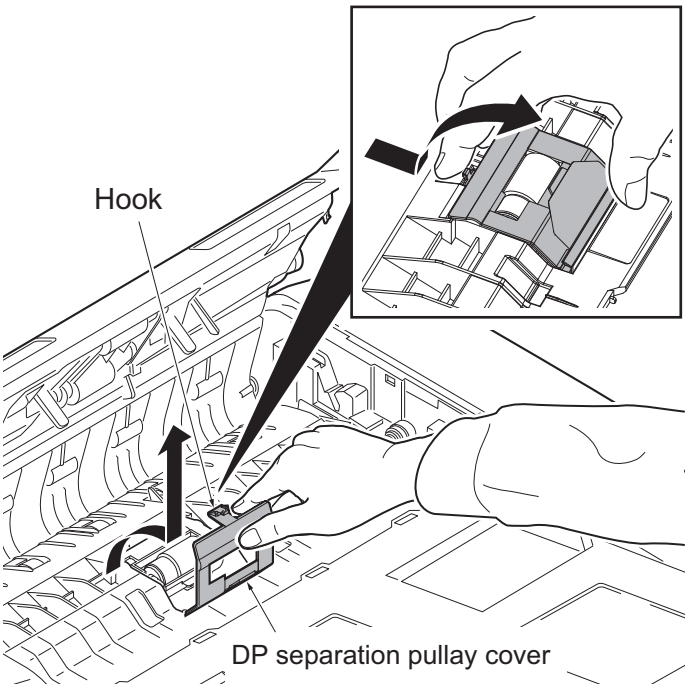

Figure 1-5-50

5. Raise the DP separation pulley and remove it by pulling upward.
6. Check or replace the DP paper feed roller and DP separation pulley and refit all the removed parts.

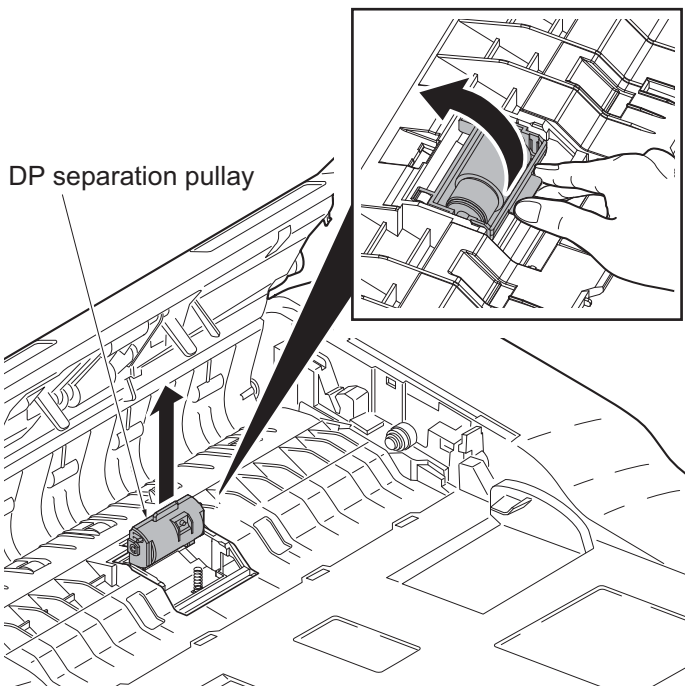

Figure 1-5-51

TONER+
www.tonerplus.com.ua

(3) Detaching and refitting the DP main PWB

Procedure

1. Open the document processor.
2. Release three hooks of the DP rear cover.

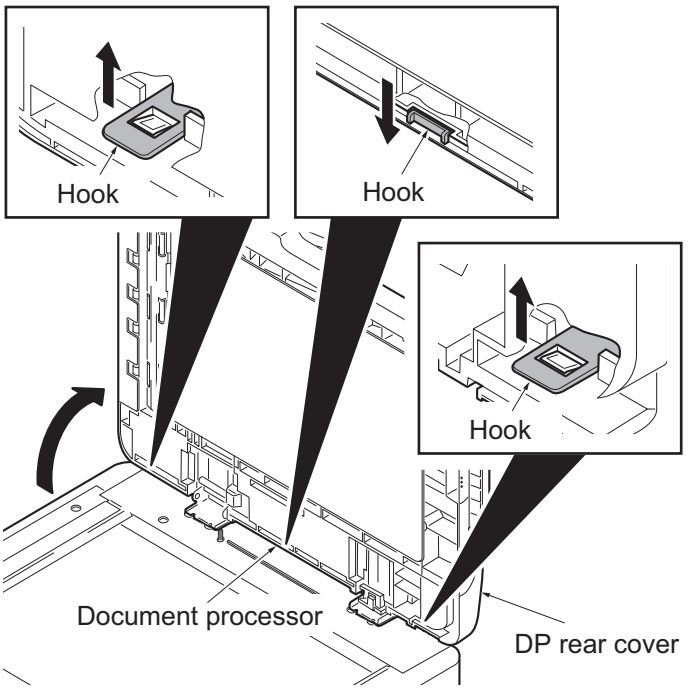

Figure 1-5-52

3. Release two hooks of the DP rear cover and then remove it.

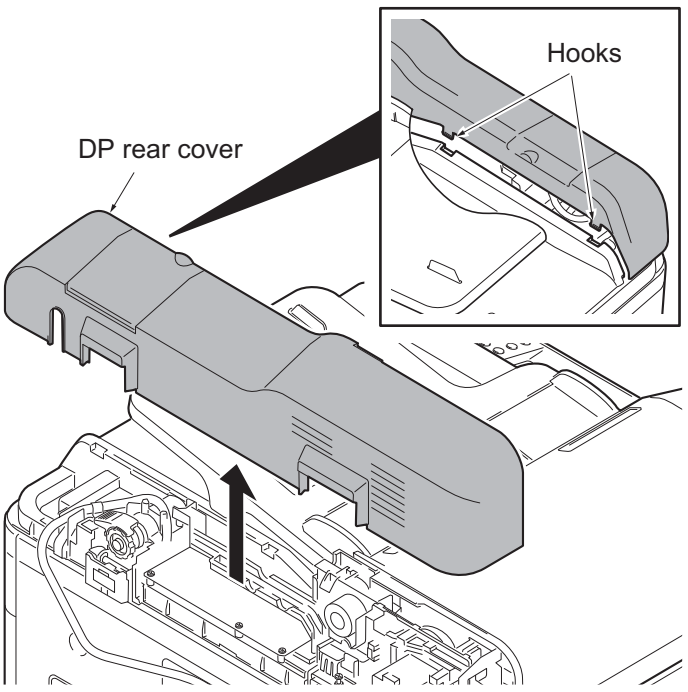

Figure 1-5-53

TONER+
www.tonerplus.com.ua

4. Remove all connectors from DP main PWB.
5. Remove five clamps and then remove the waires from holder.
6. Remove two screws and then remove the holder.

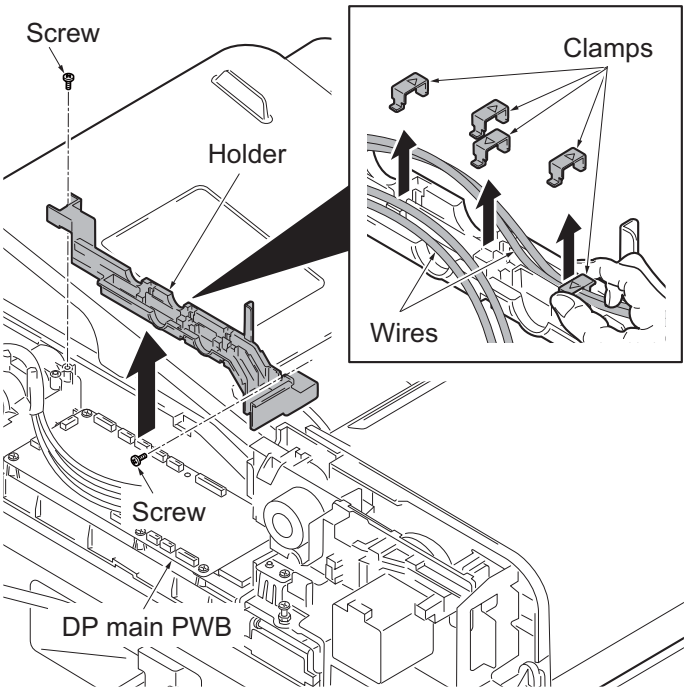

Figure 1-5-54

7. Remove six screws and then remove the DP main PWB.
8. Check or replace the DP main PWB and refit all the removed parts.

   CAUTION: When replacing the DP main PWB, remove the EEPROM from the DP main PWB that has been removed and then reattach it to the new DP main PWB.

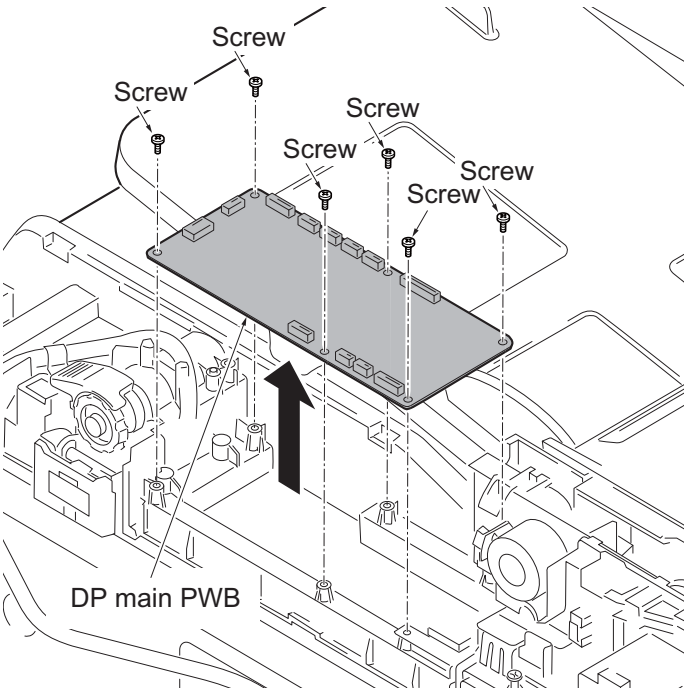

Figure 1-5-55

TONER+
www.tonerplus.com.ua

1-5-11 PWBs

(1) Detaching and refitting the main PWB

Procedure

1. Remove the rear cover.
   (See page 1-5-5)
2. Remove the left lower cover.
   (See page 1-5-6)
3. Remove the connector.
4. Remove the wire from the clamp.
5. Remove ten screws and then remove the controller box.

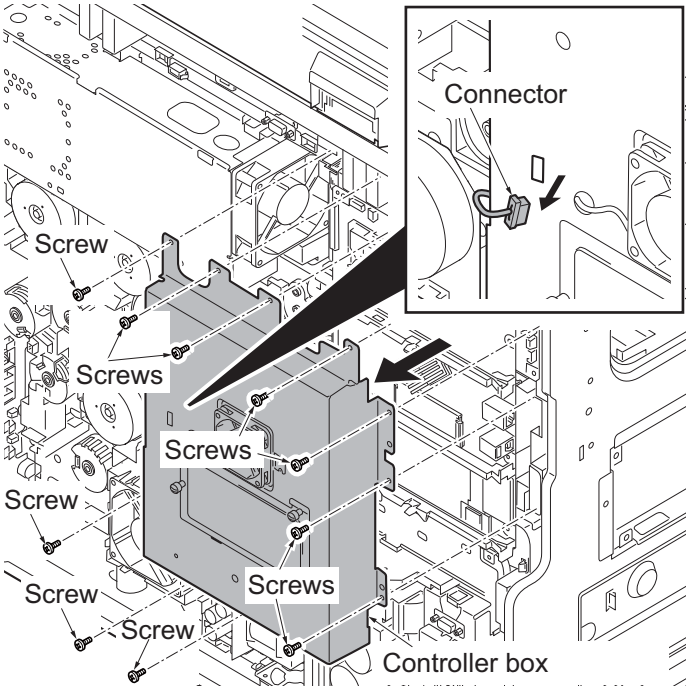

Figure 1-5-56

6. Remove all connectors and FFCs for the main PWB.
7. Remove eight screws and then remove the main PWB.
8. Check or replace the main PWB and refit all the removed parts.

   CAUTION: When replacing the main board, perform a re-setup in maintenance mode with reference to "1-6-2 Remarks on PWB replacement (See page 1-6-4)".

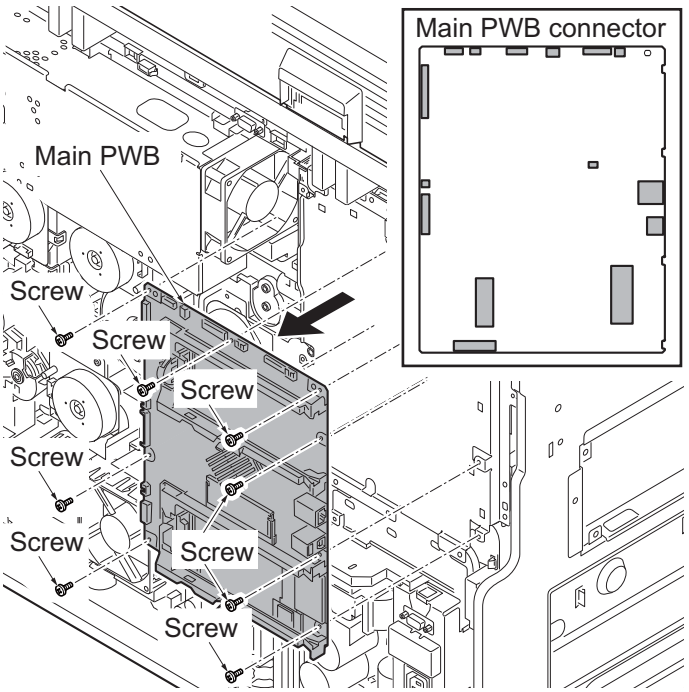

Figure 1-5-57

TONER+
www.tonerplus.com.ua

(2) Detaching and refitting the engine PWB

Procedure

1. Remove the rear cover.
   (See page 1-5-5)
2. Remove the main PWB.
   (See page 1-5-5)
3. Remove fourteen screws and then remove the mount board for main PWB.

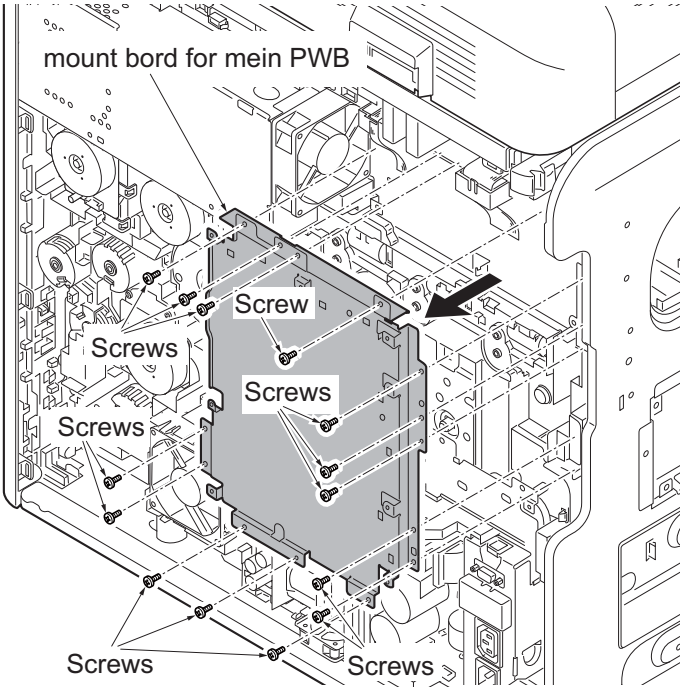

Figure 1-5-58

4. Remove all conectors from the engine PWB.
5. Remove four screws and then remove the engin PWB.
6. Check or replace the engine PWB and refit all the removed parts.

   CAUTION: When replacing the engine PWB, remove the EEPROM (U15) from the engine PWB that has been removed and then reattach it to the new engine PWB.

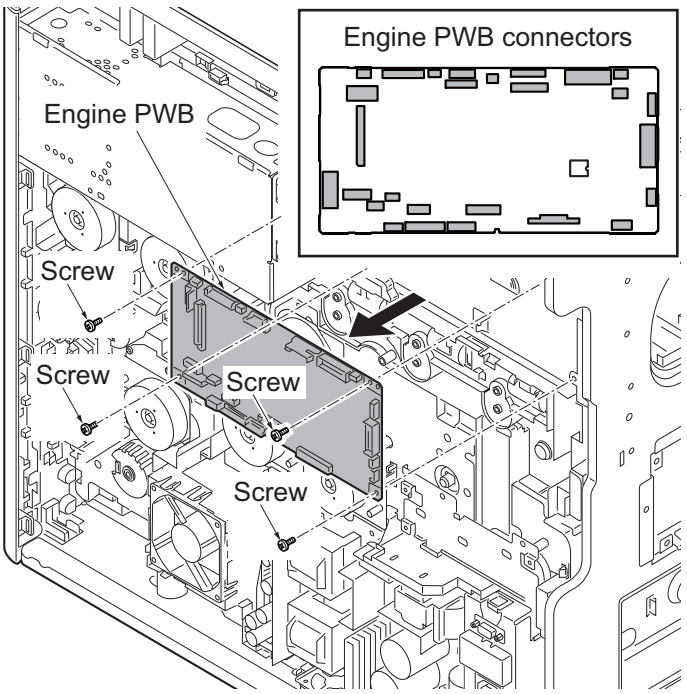

Figure 1-5-59

TONER+
www.tonerplus.com.ua

(3) Detaching and refitting the power source PWB

Procedure

1. Remove the rear cover and inner tray.(See page 1-5-5,1-5-6)
2. Remove the power source fan motor.(See page 1-5-20)
3. Remove all connecters from the power source PWB.
4. Remove four screws and then remove the power source PWB.
5. Check or replace the power source PWB and refit all the removed parts.

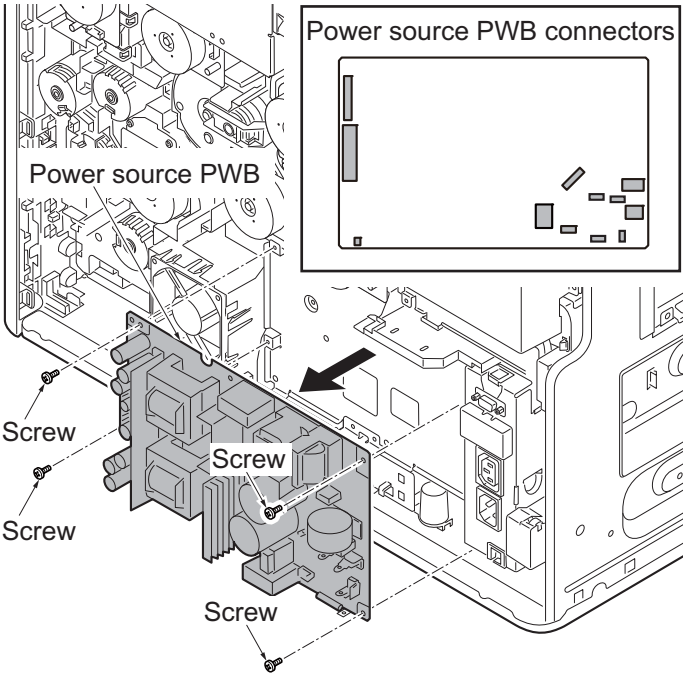

Figure 1-5-60

TONER
www.tonerplus.com.ua

(4) Detaching and refitting the operation panel PWB main

Procedure

1. Remove the language sheets. (See page 1-5-37)
2. Remove two screws.

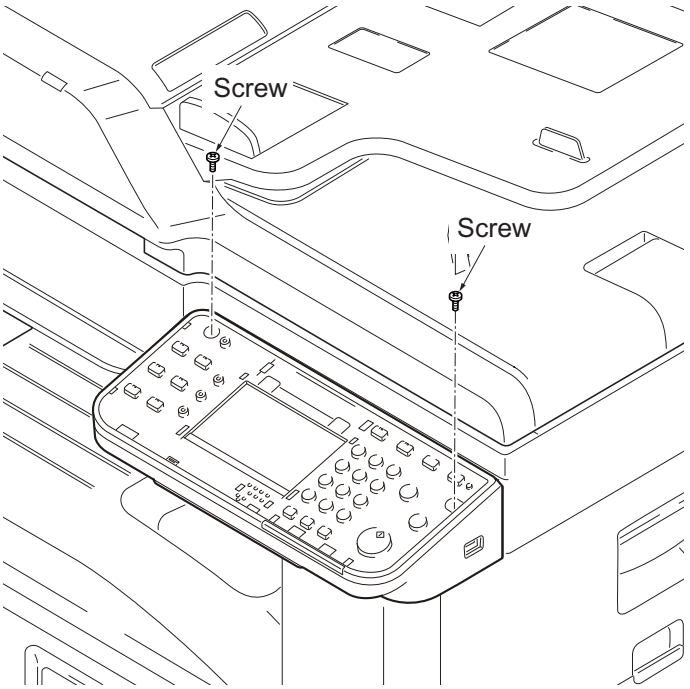

Figure 1-5-61

3. Remove three connectors from the operation panel PWB main.
4. Remove the operation panel upper unit.

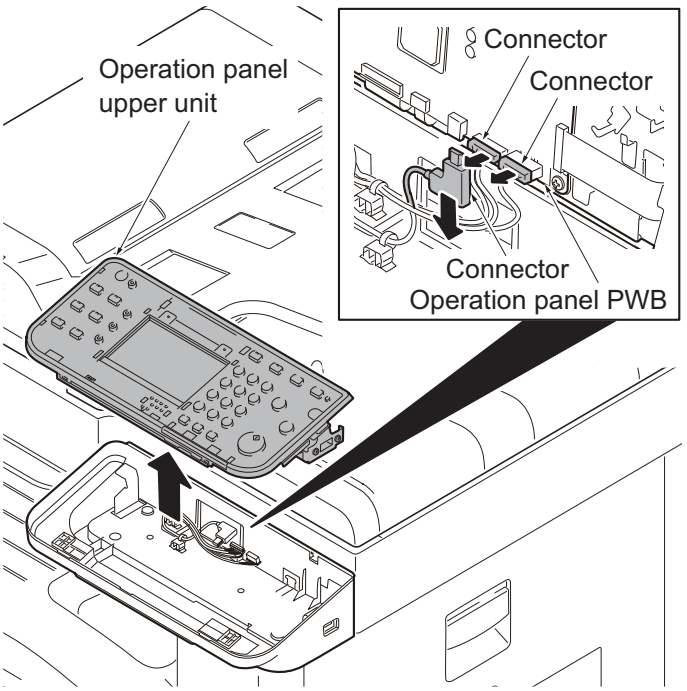

Figure 1-5-62

TONER+
www.tonerplus.com.ua

5. Remove four FFCs from the operatioon panel PWB main.
6. Remove four screws and then remove the operation panel PWB main.
7. Check or replace the operation panel PWB main and refit all the removed parts.

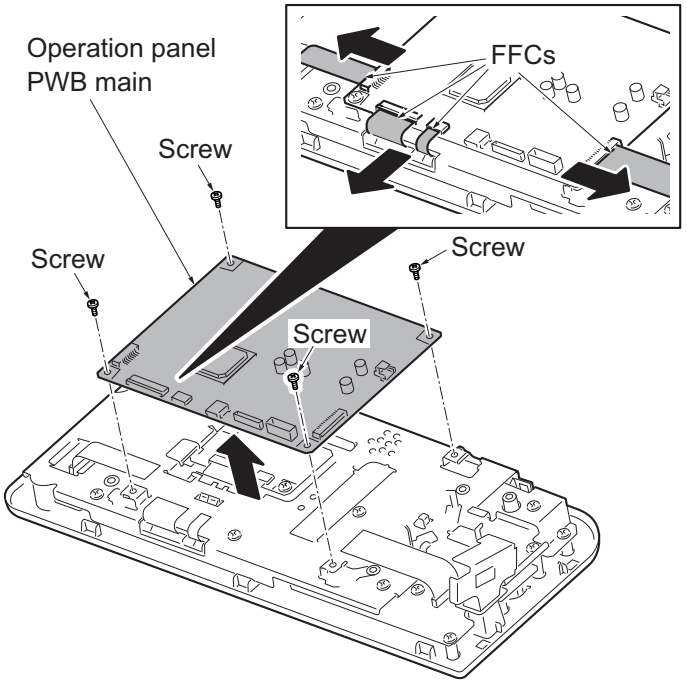

Figure 1-5-63

TONER
www.tonerplus.com.ua

(5) Detaching and refitting the IH PWB

Procedure

1. Remove the scanner right cover. (See page 1-5-5)
2. Remove the right upper cover.
3. Remove the right rear cover.

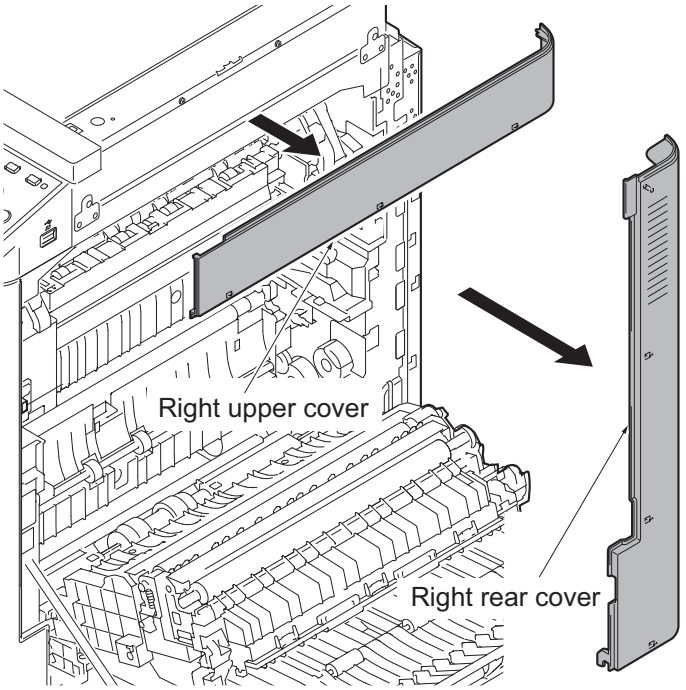

Figure 1-5-64

4. Remove two screws and then remove the IH box cover.
5. Remove all connectors from the IH PWB.
6. Remove six screws and then remove the IH PWB.
7. Check or replace the IH PWB and refit all the removed parts.

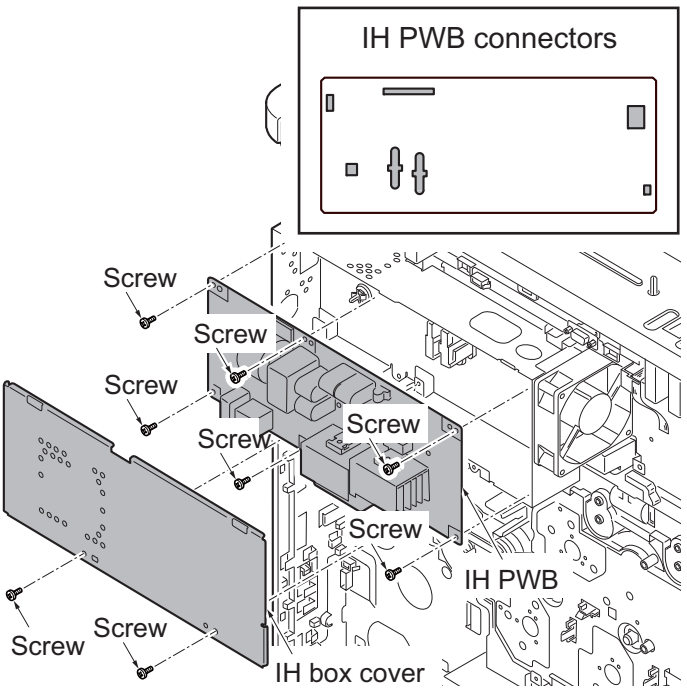

Figure 1-5-65

TONER+
www.tonerplus.com.ua

1-5-12 Others

(1) Detaching and refitting the language sheet

Procedure

1. Remove the upper cover by using a pen.
2. Remove the LCD cover.
3. Remove two operation panel covers
4. Remove two language sheets.
5. Check or replace the language sheet and refit all the removed parts.

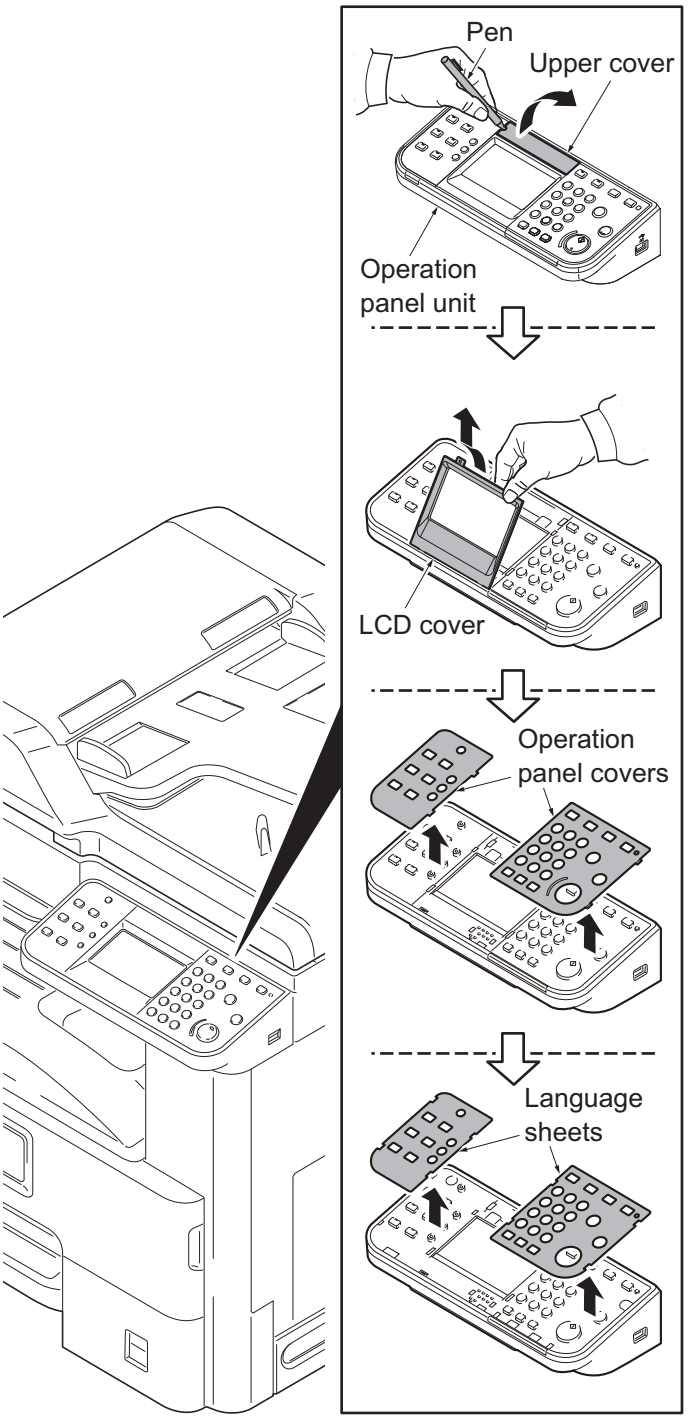

Figure 1-5-66

TONER+
www.tonerplus.com.ua

(2) Detaching and refitting the conveying unit

Procedure

1. Remove the MP tray.(See page 1-5-13)
2. Remove the right cover 1.
   (See page 1-5-11)

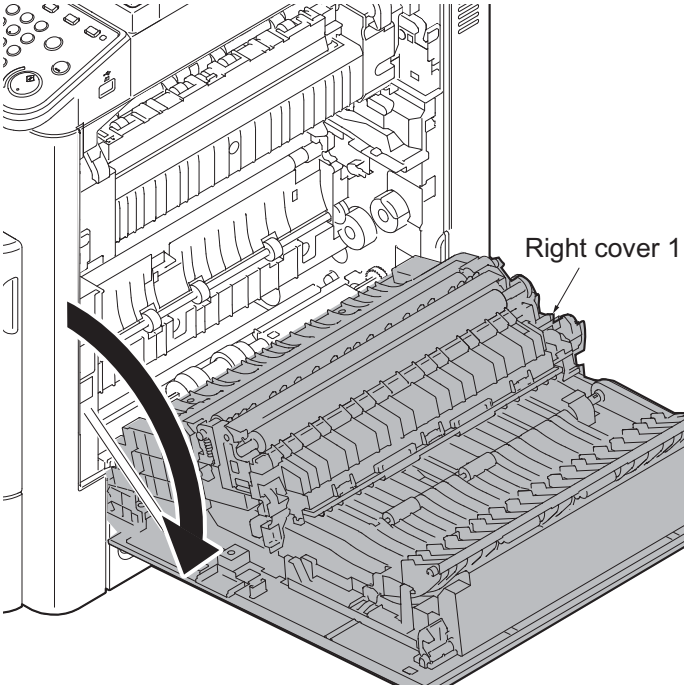

Figure 1-5-67

3. Remove two screws and then remove two straps.

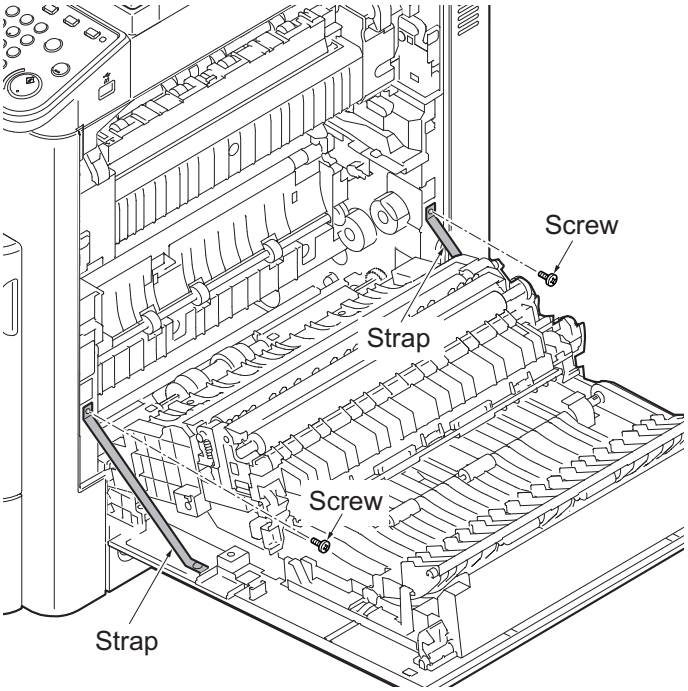

Figure 1-5-68

TONER+
www.tonerplus.com.ua

4. Rotate the wire cover.
5. Remove two connectors.
6. Rotate the fulcrum axis and slide it forward.
7. Pull the right cover 1 backward and then remove it.

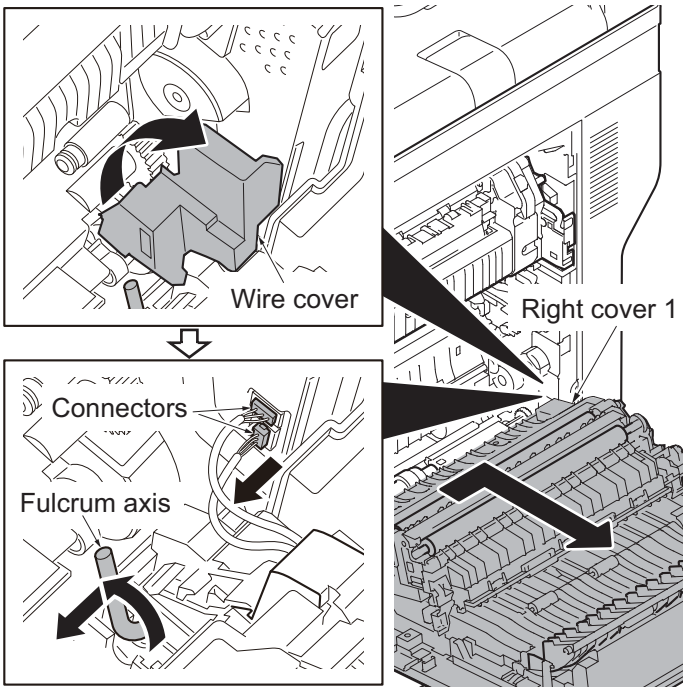

Figure 1-5-69

TONER
www.tonerplus.com.ua

(3) Detaching and refitting the imaging fan motor

Procedure

1. Remove the rear cover.
   (See page 1-5-5)
2. Remove four clamps and then remove the wires and the connector.
3. Unhook four hooks and then remove the imaging fan motor.

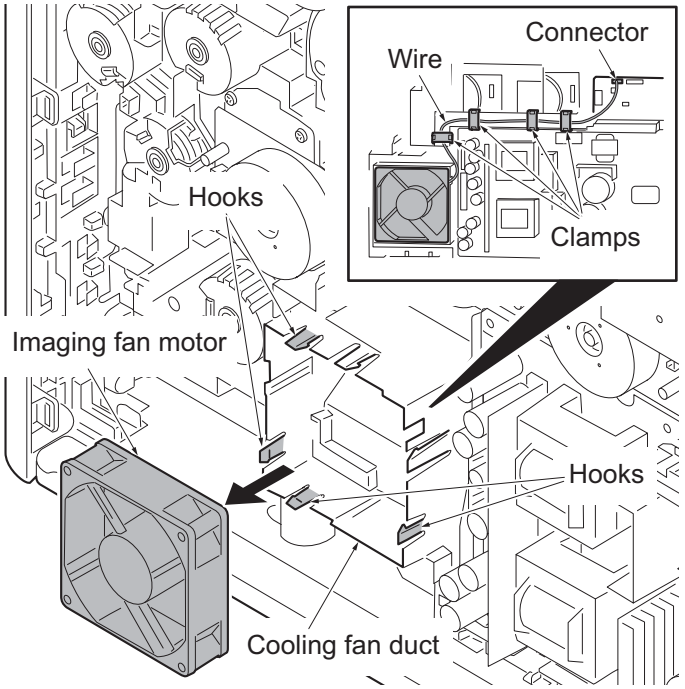

Figure 1-5-70

(4) Direction of installing the principal fan motors

When detaching or refitting the fan moter,be careful of the airflow direction (intake or exhaust).

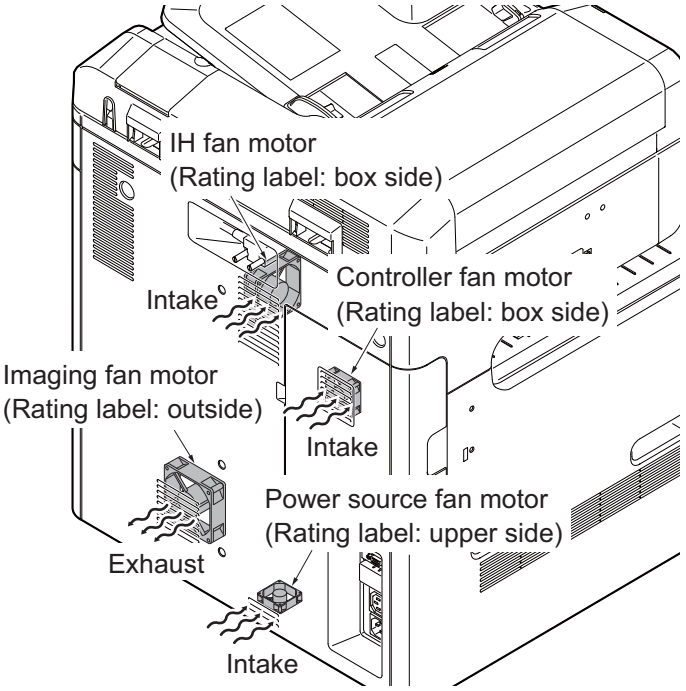

Figure 1-5-71

TONER+
www.tonerplus.com.ua

1-6-1 Upgrading the firmware

Follow the procedure to upgrade the firmware below.

* Main PWB (CTRL)
* DP main PWB (DP)
* PF main PWB (PF)
* DF main PWB (DF)
* Bridge PWB (AK)
* Engin fuser PWB (IH)
* Engine LSU PWB (LSU)
* Engine IO PWB (IO)
* Engine PWB (ENGN)
* FAX PWB (FAX)
* First color table (CLT1)
* Second color table (CLT2)
* Language data (OPT)
* Dictionary data (DIC)
* Operation panel PWB (PANL)

Preparation

Extract the file that has the download firmware and store them in a USB Memory.

NOTE: To improve Firmware Upgrade speed, a separate SKIP file can be added to the USB Memory Stick with the Firmware Upgrade package. The Skip file will allow ONLY the Firmware that has been Upgraded to a New Version to load, skipping duplicate Firmware Levels.

Procedure

1. Turn ON the main power switch and confirm if the screen shows “Ready to print” then, turn OFF the main power switch.
2. Insert USB memory that has the firmware in the USB memory slot.
3. Turn ON the main power switch.
4. About 50 seconds later, “Farmware Update” will be displayed (this shows that downloading is ready to start).
5. Select the firmware to upgrade by referring to the following codes:

   CTRL → DP → PF → DF → AK → IH → LSU → IO → ENGN → FAX → CLT1 → CLT2 → OPT → DIC → PANL

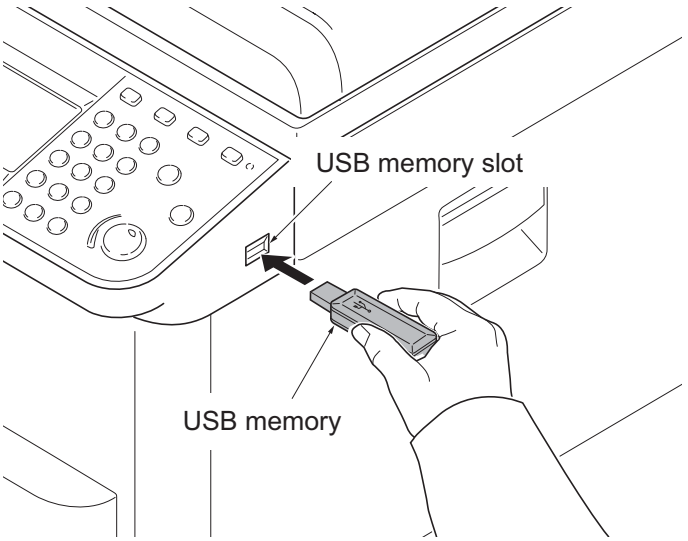

Figure 1-6-1

Example:

==========

Firmware Update	First line: Status of upgrading.
CTRL	Second line: Firm ware for upgrading.
xxx%	Third line: The progress of upgrading in %.

==========

Caution:

Never turn off the power switch or remove the USB flash device during upgrading.

6. Confirm that upgrading is completed.
7. Confirm that the version of the firmware is correctly displayed.
8. Turn OFF the main power switch and remove the USB memory.

TONER
www.tonerplus.com.ua

Emergency-UPDATE

If the device is accidentally switched off and upgrading was incomplete, upgrade becomes impossible from a USB flash device.
In that case, retry upgrading after recovering the software by following the procedure below.

Preparation

The CF memory card must be formatted in FAT or FAT32 in advance.
Extract the main firmware to download from the file.
Rename the file which was extracted from the archive. [DL_CTRL.2MY] to [KM_EMRG.2MY]
Copy the all extracted files to the root of the CF memory.

Procedure

1. Turn the main power switch off.
2. Install the CF memory card which contains the firmware onto the main PWB.
3. Turn the main power switch on.
4. Rewriting of the PWB software will start for restoration.
   The memory and attention LEDs will be blinking.
5. Only the Memory LED will be blinking when rewriting is successful.
   * : Only the Attention LED will be blinking when rewriting is failed.
6. Turn the main power switch off.
7. Wait for several seconds and then remove the CF memory from the main PWB.
8. Extract the firmware to download from the archive and copy to the root of the USB flash device.
   NOTE: Deletes the "ES_SKIP.on" file When it is contained directly under the USB memory.
9. Insert the USB flash device in which the firmware was copied into the slot on the machine.
10. Perform steps 3 to 8 on the previous page.
11. Turn the main power switch on.
12. Perform maintenance item U000 (Print a maintenance report) to check that the version of ROM U109 has been upgraded.

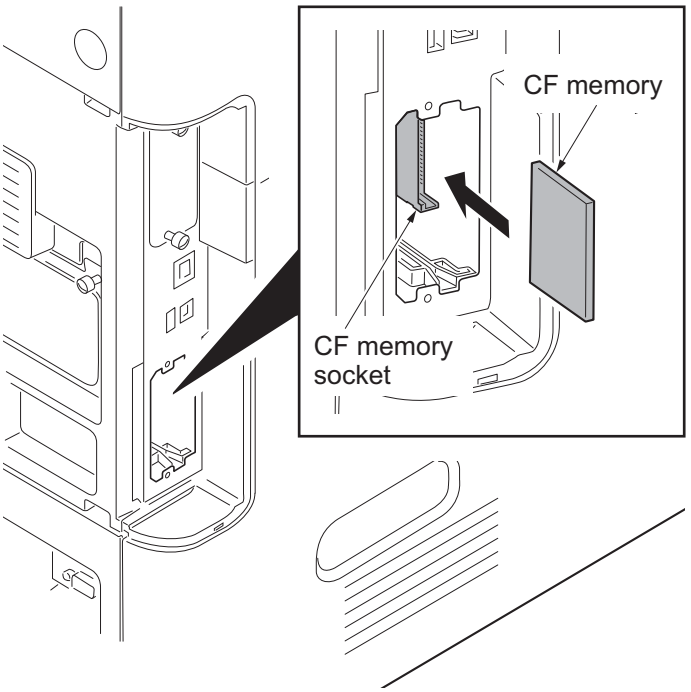

Figure 1-6-2

TONER+
www.tonerplus.com.ua

1-6-2 Remarks on PWB replacement

(1) Engine PWB

NOTE: When replacing the PWB, remove the EEPROM from the PWB and then reattach it to the new PWB.

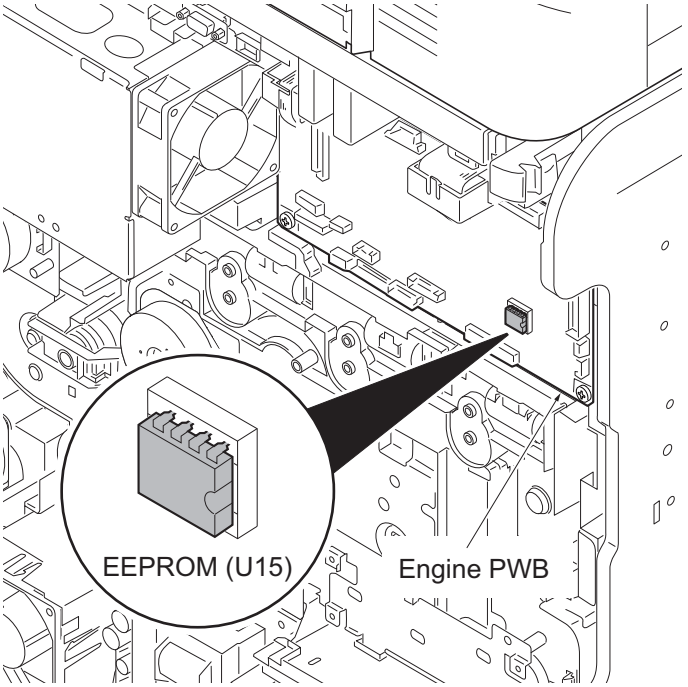

Figure 1-6-3

(2) DP main PWB

NOTE: When replacing the PWB, remove the EEPROM from the PWB and then reattach it to the new PWB.

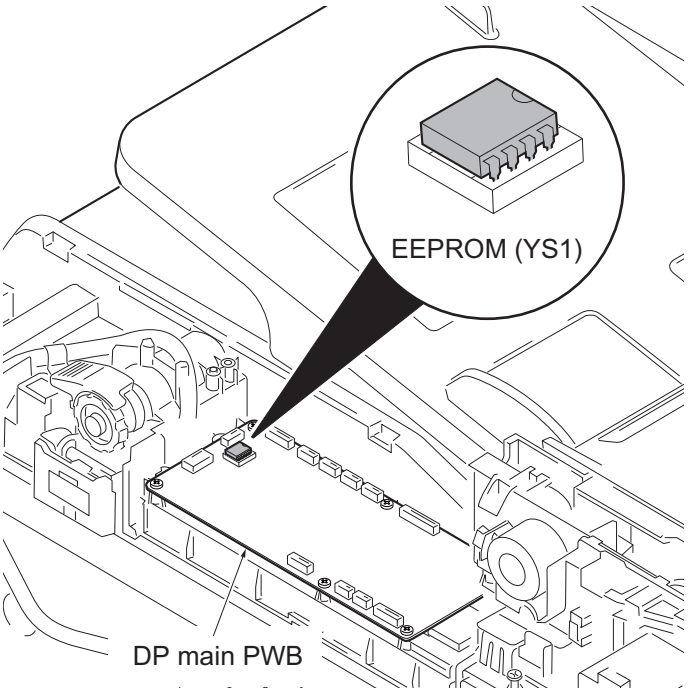

Figure 1-6-4

TONER+
www.tonerplus.com.ua

(3) Main PWB

NOTE: The following operations are required when replacing the main board.

1. Execute maintenance mode U004 to resolve machine number mismatch that appears after replacing the main board.
2. Adjust the scanner image.
   (1)Input the value in the auto scanner adjustment chart by using the maintenance mode U425.
   (2)Execute the maintenance mode U411 with the auto scanner adjustment chart.
   (3)Execute [Halftone adjustment] from the system menu
3. Reactivate the license for optional products if any were installed.
   (1)Reactivate ID CARD AUTHENTICATION KIT B).
   (2)Register an ID card again by using the maintenance mode U222.
4. Import data if any was exported from the machine before replacing the main board by using the maintenance mode U917. (The export and import is also available via KM-Net Viewer)
5. Register the initial user settings and FAX settings from the system menu or command center.
6. Execute the maintenance mode as below if necessary.

No.	Main machine related maintenance modes
U250	Checking/clearing the maintenance cycle
U251	Checking/clearing the maintenance counter
U253	Switching between double and single counts
U260	Selecting the timing for copy counting
U326	Setting the black line cleaning indication
U341	Specific paper feed location setting for printing function
U343	Switching between duplex/simplex copy mode
U345	Setting the value for maintenance due indication
U402	Adjusting margins of image printing
U403	Adjusting margins for scanning an original on the contact glass
U404	Adjusting margins for scanning an original from the DP
U407	Adjusting the leading edge registration for memory image printing
U425	Setting the target
U429	Setting the offset for the color balance
U432	Setting the center offset for the exposure
U470	Setting the JPEG compression ratio

No.	Fax related maintenance modes
U603	Setting user data 1
U604	Setting user data 2
U610	Setting system 1
U611	Setting system 2
U612	Setting system 3
U615	Setting system 6
U625	Setting the transmission system 1
U695	FAX function customize

TONER
www.tonerplus.com.ua

2-1-1 Paper feed/conveying section

The paper feed/conveying section consists of the paper feed unit that feeds paper from the cassette and the MP tray paper feed unit that feeds paper from the MP tray, and the paper conveying section that conveys the fed paper to the transfer/separation section.

(1) Cassette paper feed section

The cassette can contain 500 sheets. The sheet from the cassette is pulled out by rotation of the pickup roller and sent to the paper conveying section by rotation of the paper feed roller. Also the retard roller prevents multiple feeding of paper.

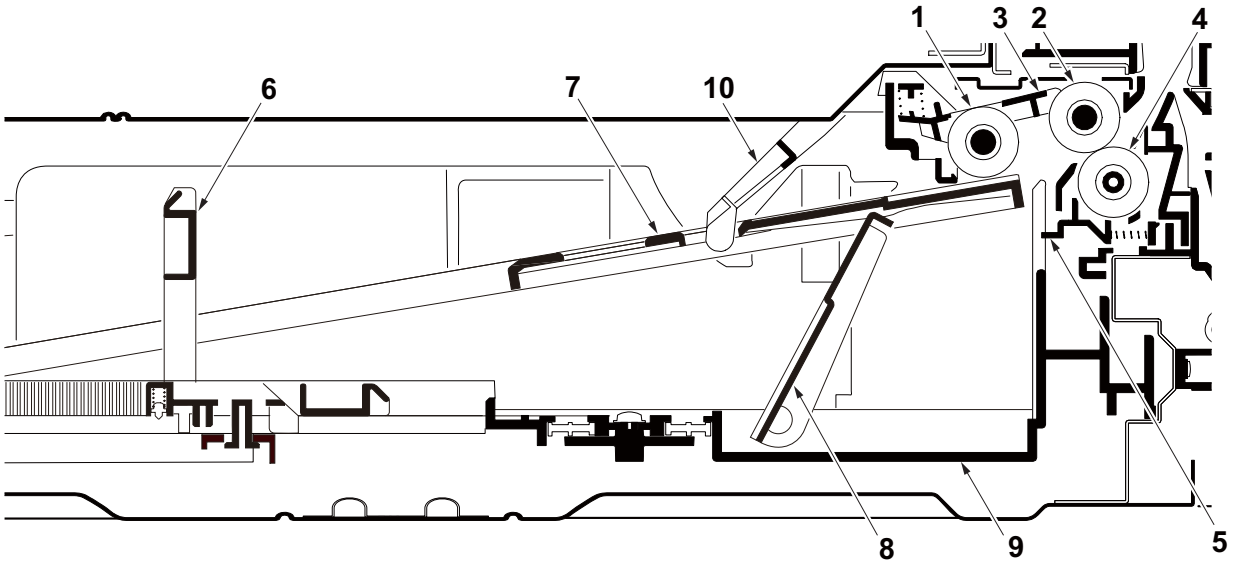

Figure 2-1-1 Cassette paper feed section

1. Pickup roller
2. Paper feed roller
3. Feed holder
4. Retard roller
5. Retard holder
6. Paper length guide
7. Bottom plate
8. Lift work plate
9. Cassette base
10. Actuator (paper sensor)

TONER+
www.tonerplus.com.ua

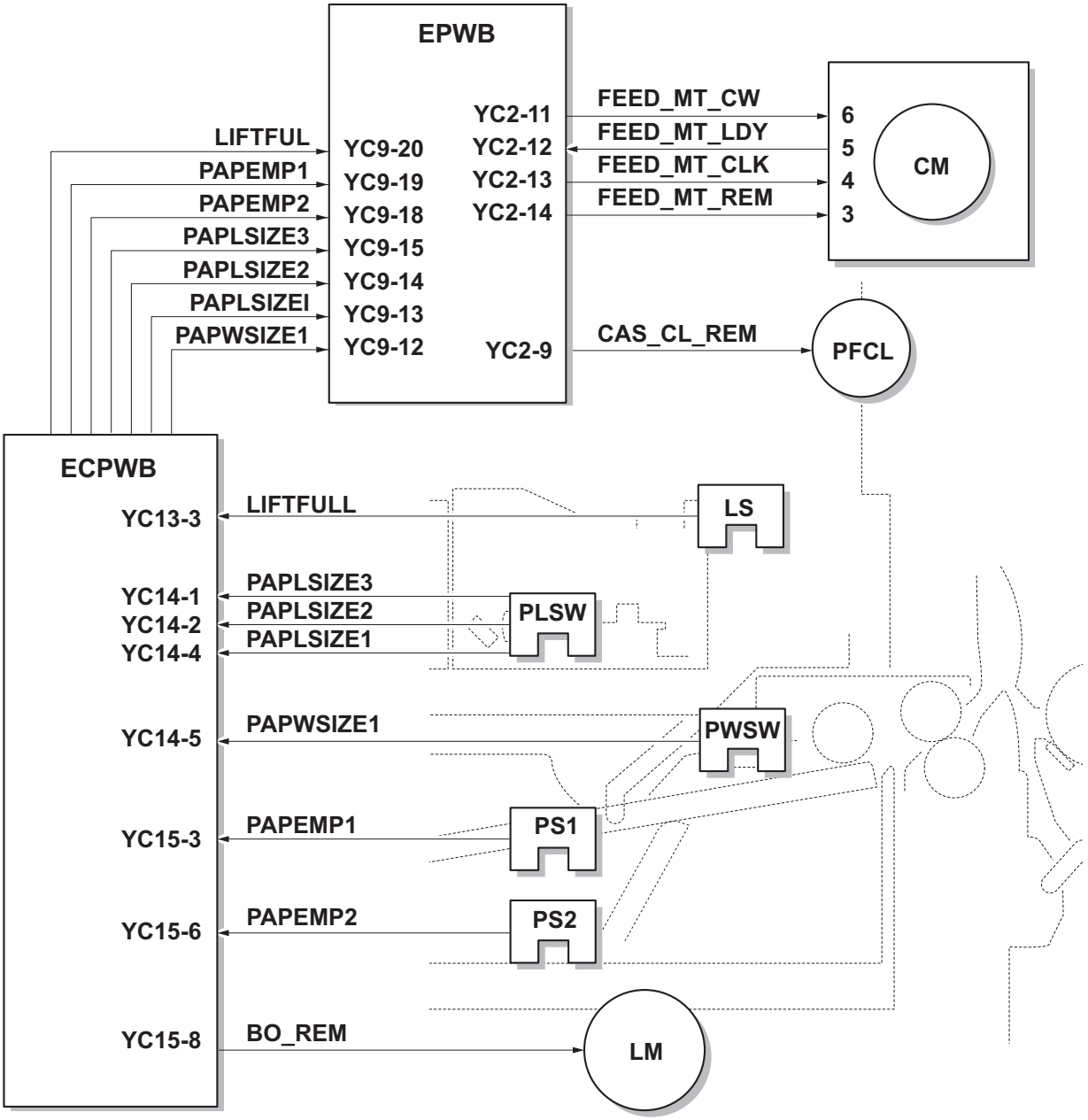

Figure 2-1-2 Cassette paper feed section block diagram

TONER
www.tonerplus.com.ua

(2) MP tray paper feed section

The MP tray can contain 100 sheets. Feeding from the MP tray is performed by the rotation of the MP paper feed roller. Also, function of the MP separation pad prevents paper from multiple feeding.

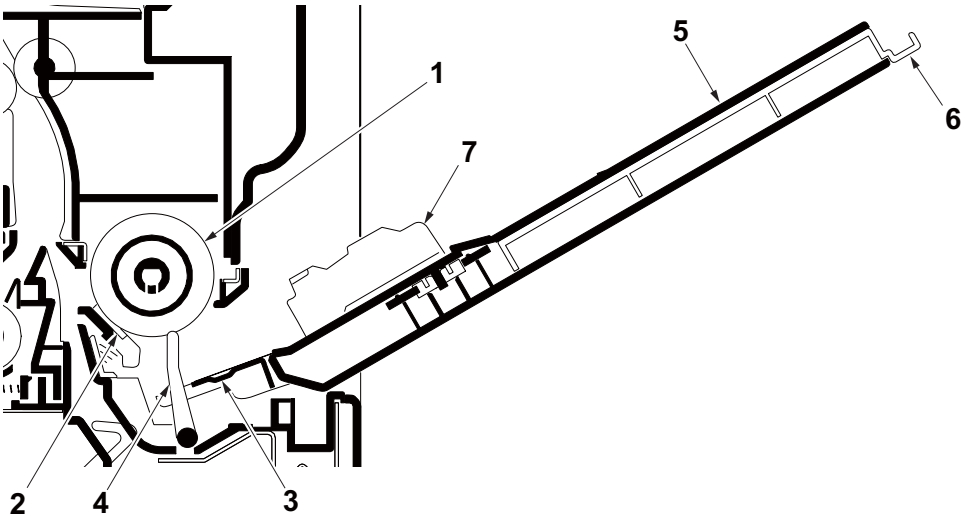

Figure 2-1-3 MP tray paper feed section

1. MP paper feed roller
2. MP separation pad
3. MP bottom plate
4. Actuator(MP paper feed sensor)
5. MP (multi purpose)tray
6. MP tray extension
7. MP paper width guide

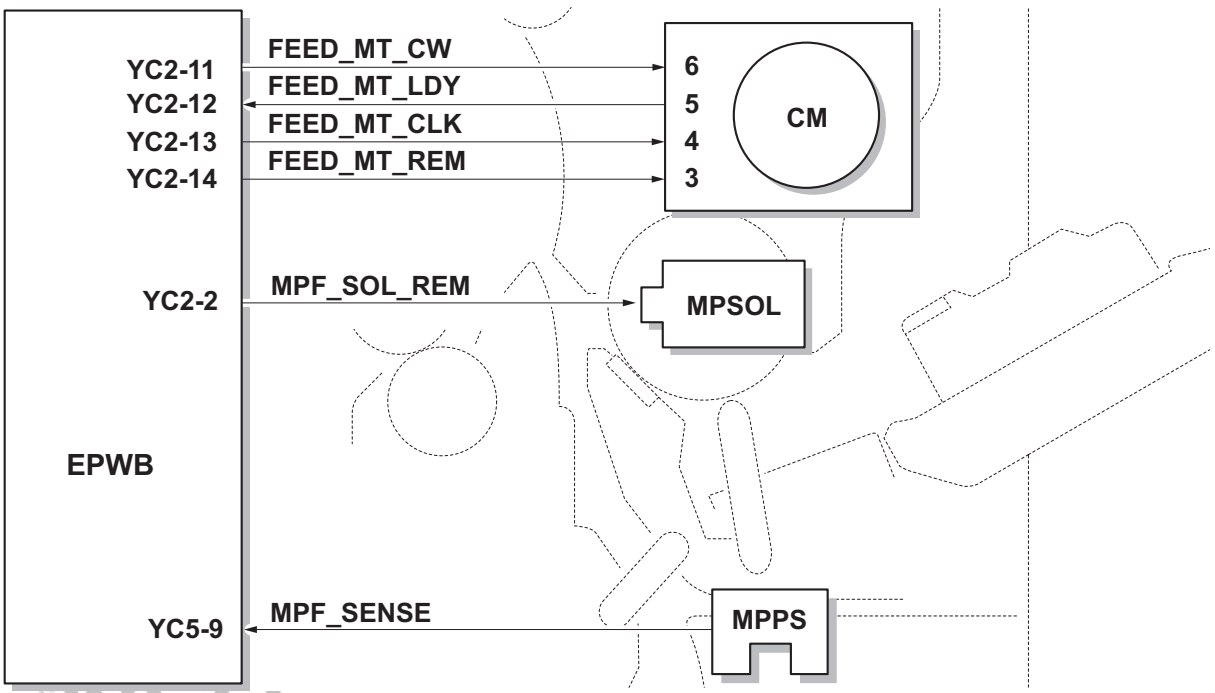

TONER
www.tonerplus.com.ua

Figure 2-1-4 MP tray paper feed section block diagram

(3) Conveying section

The conveying section conveys paper to the transfer/separation section as paper feeding from the cassette or MP tray, or as paper refeeding for duplex printing. Paper by feeding is conveyed by the paper feed roller to the position where the registration sensor (RS) is turned on, and then sent to the transfer/separation section by the right registration roller and left registration roller.

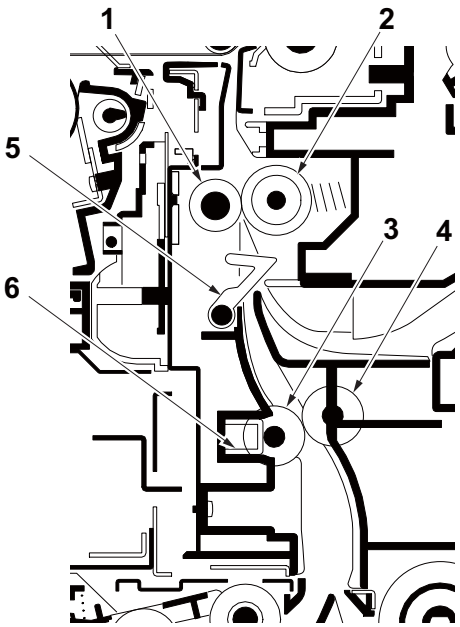

Figure 2-1-5 Conveying section

1. Left registration roller
2. Right registration roller
3. Left feed roller
4. Right feed roller
5. Actuator (registration sensor)
6. Registration cleaner

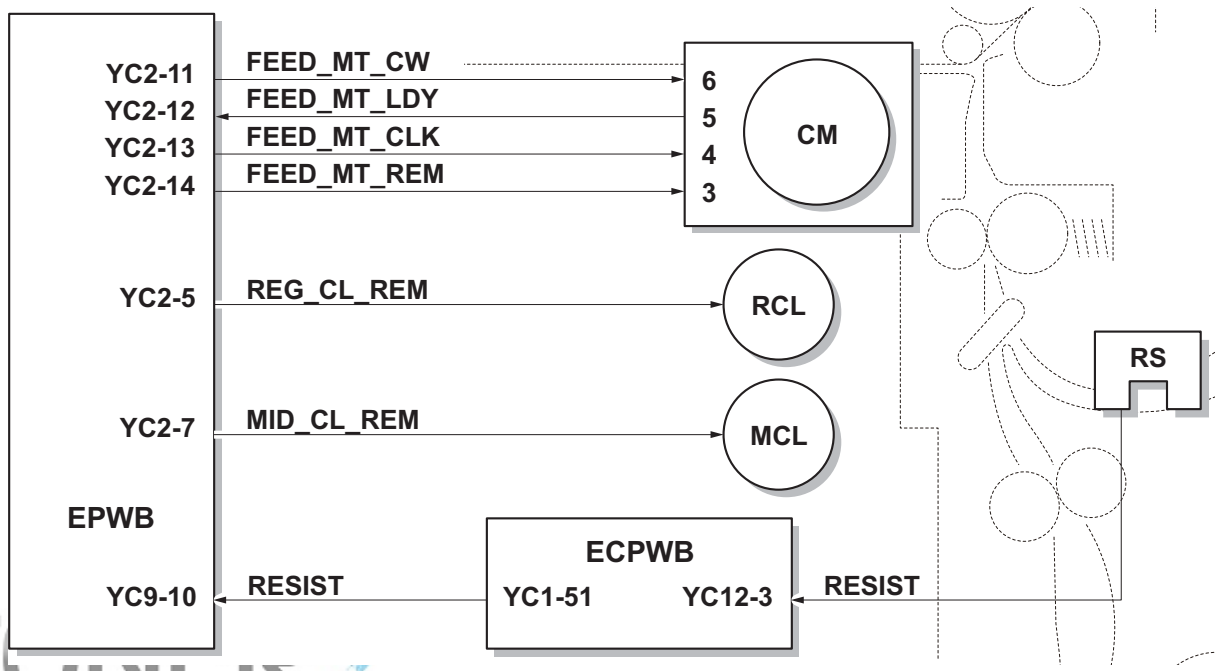

TONER
www.tonerplus.com.ua

Figure 2-1-6 Paper conveying section block diagram

2-1-2 Drum section

The drum section consists of the drum, the charger roller unit, and the cleaning unit, and the drum surface is uniformly charged in preparation for formation of residual image by laser beam.
After transfer is complete, toner remaining on the drum surface is chipped off with the cleaning blade and is collected to the waste toner box with the sweep roller. The cleaning lamp (CL) consists of LEDs and removes residual charge on the drum before main charging.

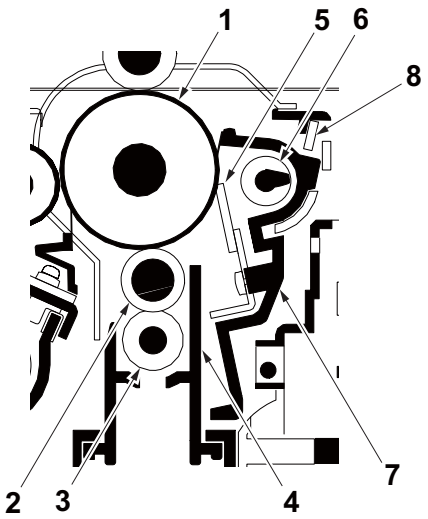

Figure 2-1-7 Drum section

1. Drum
2. Charger roller
3. Charger cleaning roller
4. Charger case
5. Cleaning blade
6. Sweep roller
7. Drum frame
8. Cleaning lamp (CL)

TONER+
www.tonerplus.com.ua

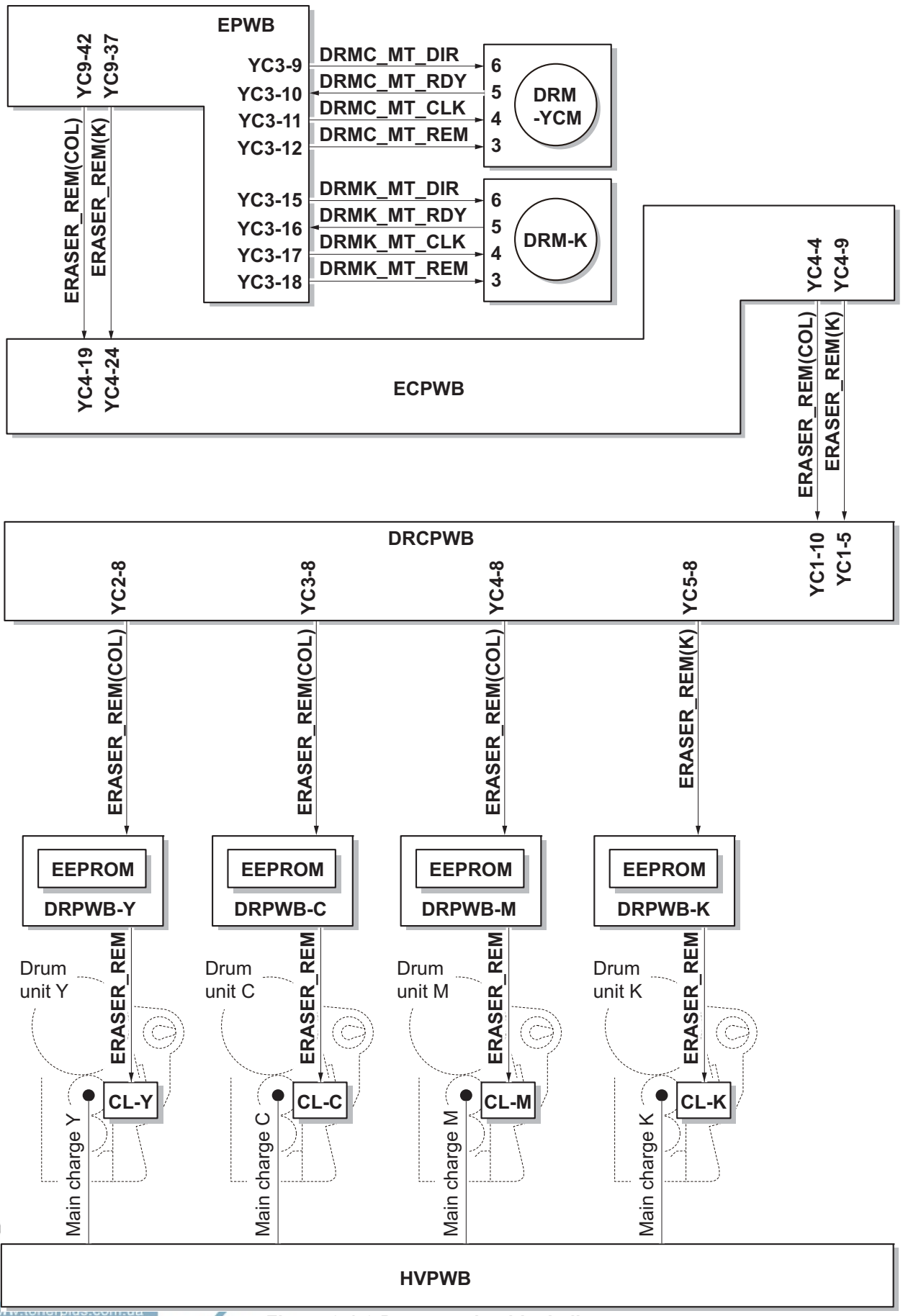

Figure 2-1-8 Drum section block diagram

2-1-3 Developing section

The developing unit consists of the sleeve roller that forms the magnetic brush, the magnet roller, the developing blade and the developing screws that agitate the toner.Also, the toner sensor (TS) checks whether or not toner remains in the developing unit.

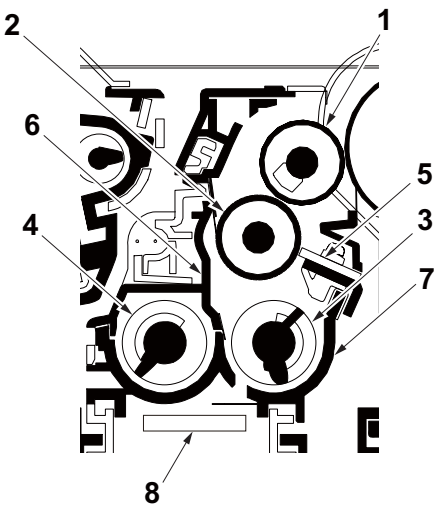

Figure 2-1-9 Developing section

1. Sleeve roller
2. Magnet roller
3. Developing screw A
4. Developing screw B
5. Developing blade
6. Developer case
7. Developer base
8. Toner sennsor (TS)

TONER+
www.tonerplus.com.ua

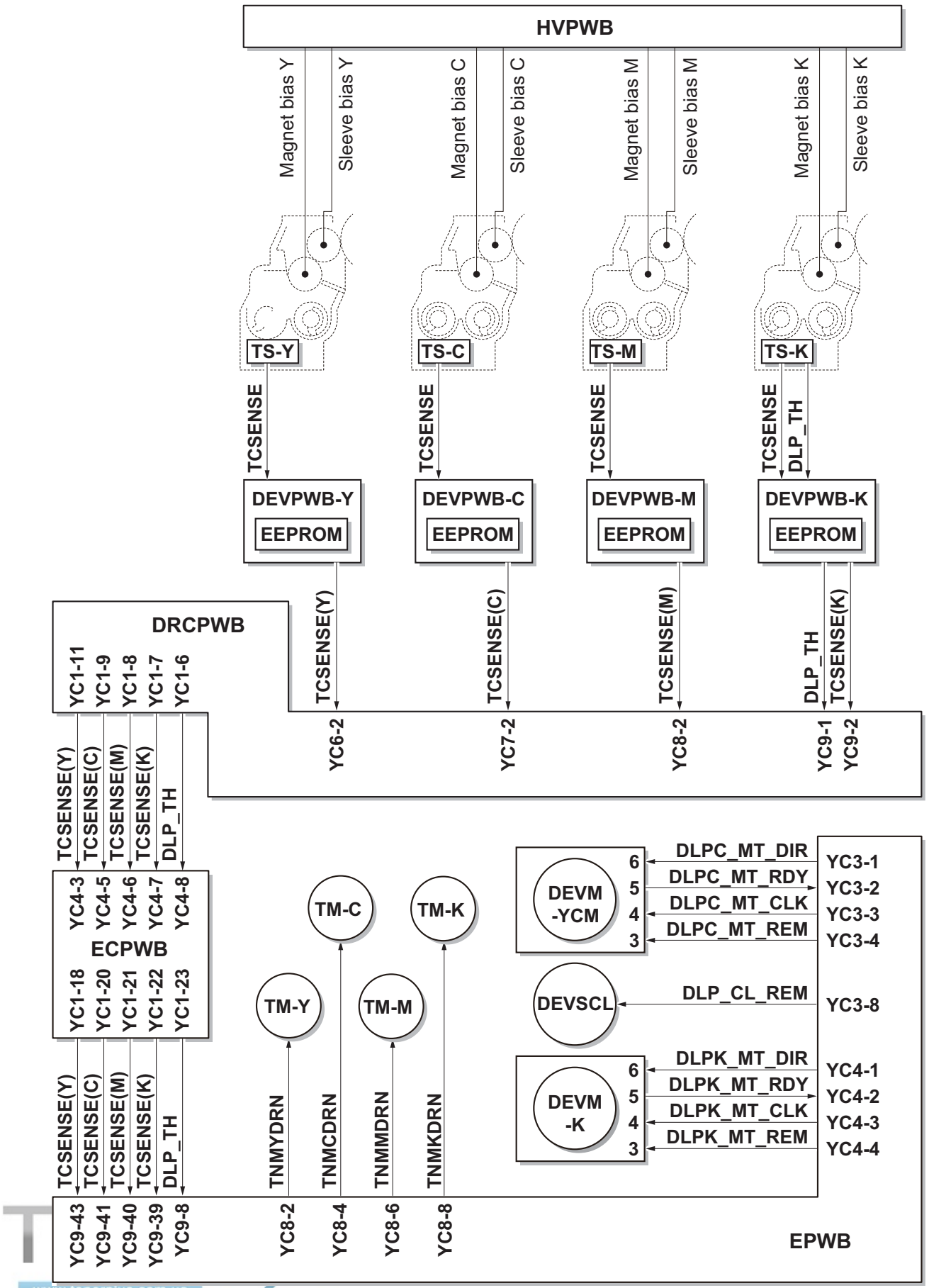

www.tonerplus.com.ua

Figure 2-1-10 Developing section block diagram

2-1-4 Optical section

The optical section consists of the image scanner section for scanning and the laser scanner section for printing.

(1) Image scanner section

The original image is illuminated by the exposure lamp (EL) and scanned by the CCD image sensor in the CCD PWB (CCDPWB) via the three mirrors and ISU lens, the reflected light being converted to an electrical signal.
If a document processor is used, the image scanner unit stops at the position of the DP contact glass and scans sequentially one row of the image on the original in synchronization with the moving timing of the original in the sub scan direction by driving the DP.

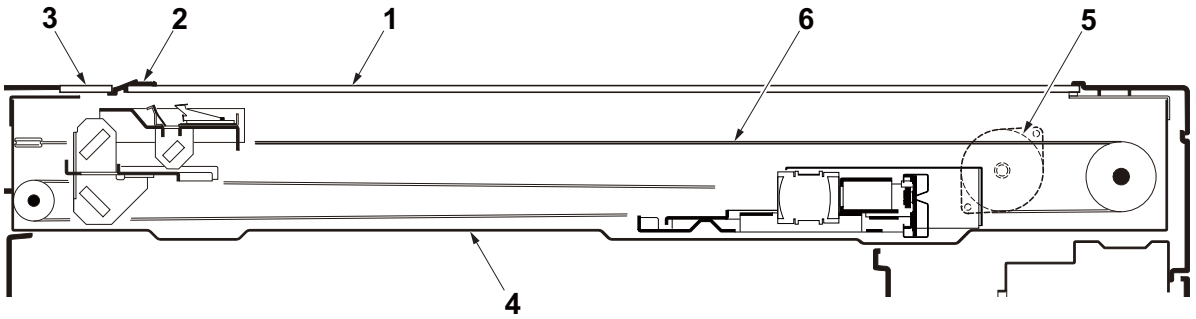

Figure 2-1-11 Scanner unit

1. Platen
2. Original size indicator plate
3. DP contact glass
4. ISU frame
5. ISU motor (ISUM)
6. ISU wire

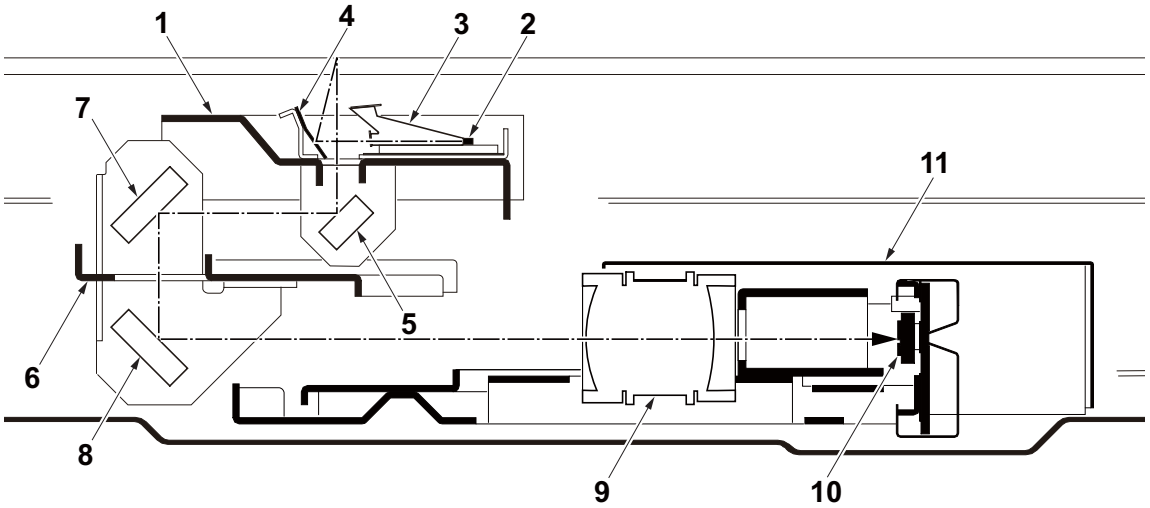

Figure 2-1-12 Image scanner unit (ISU)

1. The first mirror frame
2. Exposure lamp (EL)
3. Exposure lens
4. Reflector
5. Mirror A
6. The second mirror frame
7. Mirror B
8. Mirror C
9. ISU lens
10. CCD PWB (CCDPWB)
11. Scanner cover

TONER
www.tonerplus.com.ua

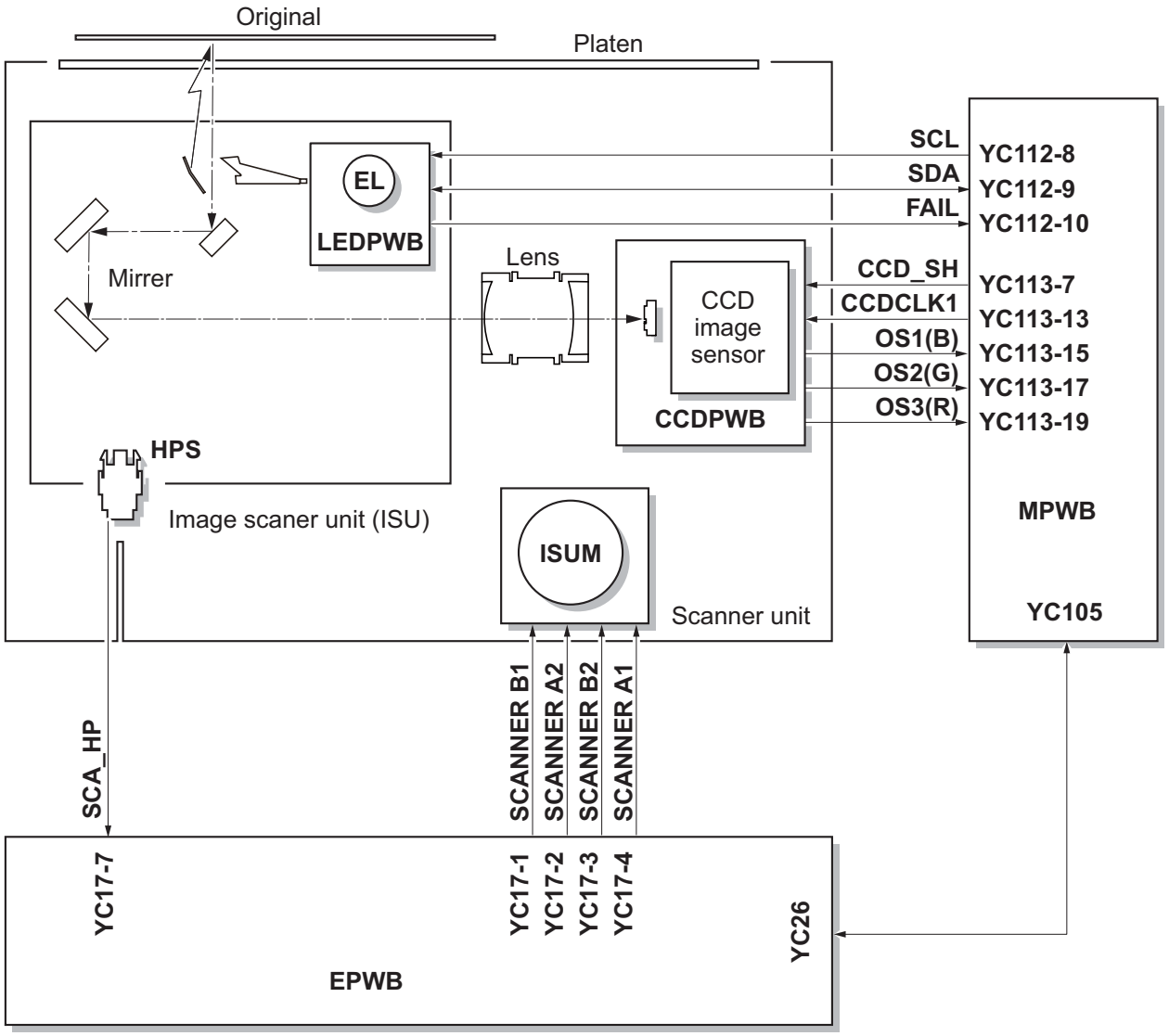

Figure 2-1-13 Scanner unit block diagram

TONER
www.tonerplus.com.ua

(2) Laser scanner section

The charged surface of the drum is then scanned by the laser beam from the laser scanner unit. The laser beam is dispersed as the polygon motor (PM) revolves to reflect the laser beam over the drum. Various lenses and mirror are housed in the laser scanner unit, adjust the diameter of the laser beam, and focalize it at the drum surface. Also the LSU cleaning motor (LSUCM) is activated to conduct automatically cleaning of the LSU dust shield glass.

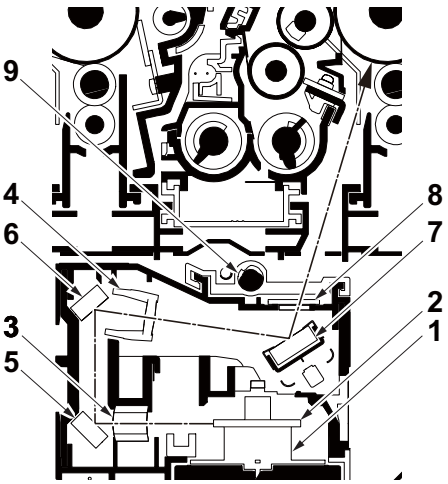

Figure 2-1-14 Laser scanner unit (LSU)

1. Polygon motor (PM)
2. Porygon mirrer
3. fθ lens A
4. fθ lens B
5. Mirrer A
6. Mirrer B
7. Mirrer C
8. LSU dust shield glass
9. LSU cleaning spiral

TONER+
www.tonerplus.com.ua

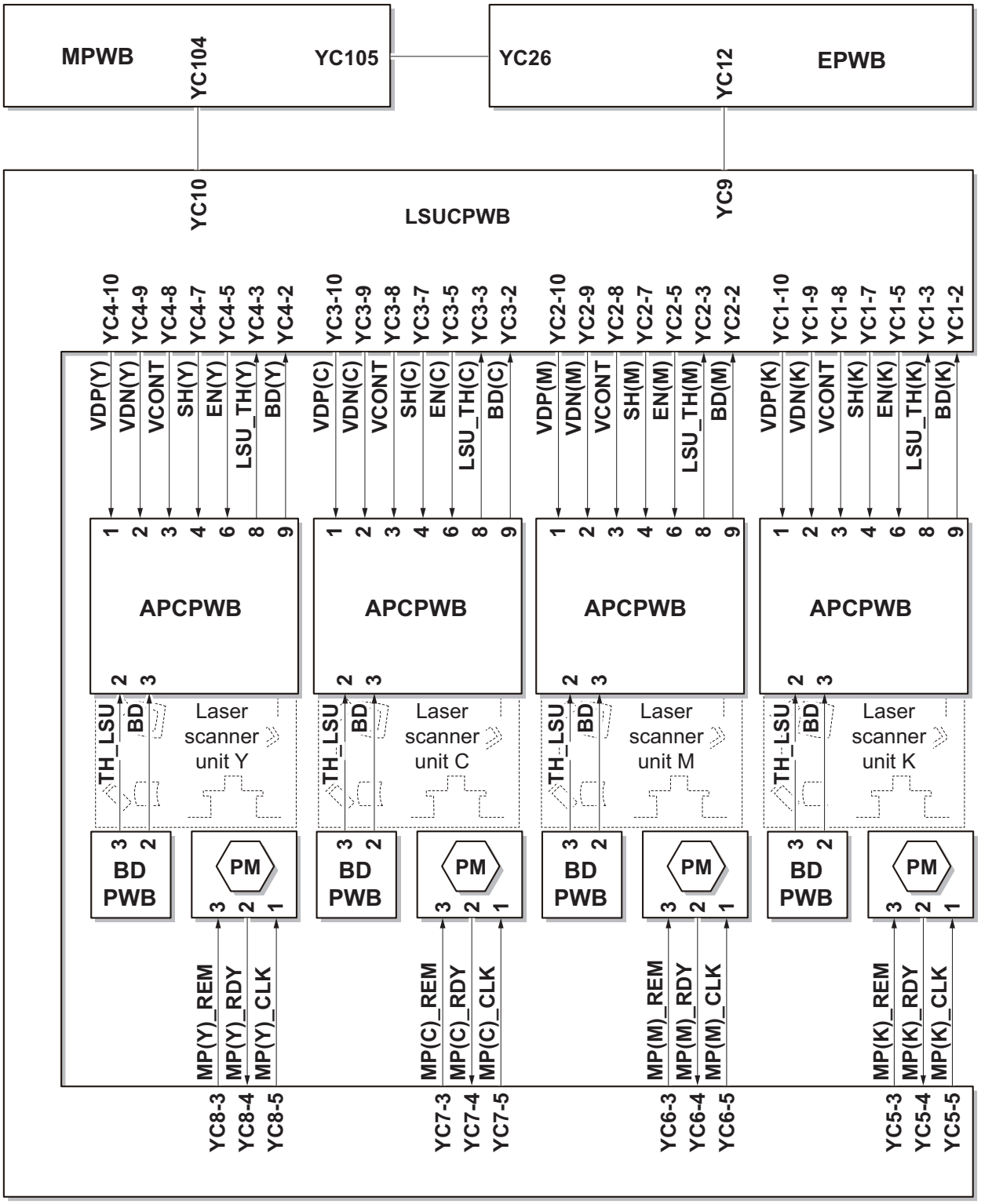

Figure 2-1-15 Laser scanner unit block diagram

TONER
www.tonerplus.com.ua

2-1-5 Transfer/Separation section

The transfer/separation section consists of the intermediate transfer unit section and the secondary transfer roller section.

(1) Intermediate transfer unit section

The intermediate transfer unit section consists of the transfer cleaning unit, the transfer belt, and the four primary transfer rollers for respective color drums, and forms a full-color toner image by superimposing and transferring single-color toner images formed on each drum onto the transfer belt. Also with the ID sensors (IDS) mounted on the machine frame, the toner density on the transfer belt is measured.
The transfer cleaning unit collects toner remaining on the transfer belt after secondary transfer and forwards it as waste toner to the waste toner box.

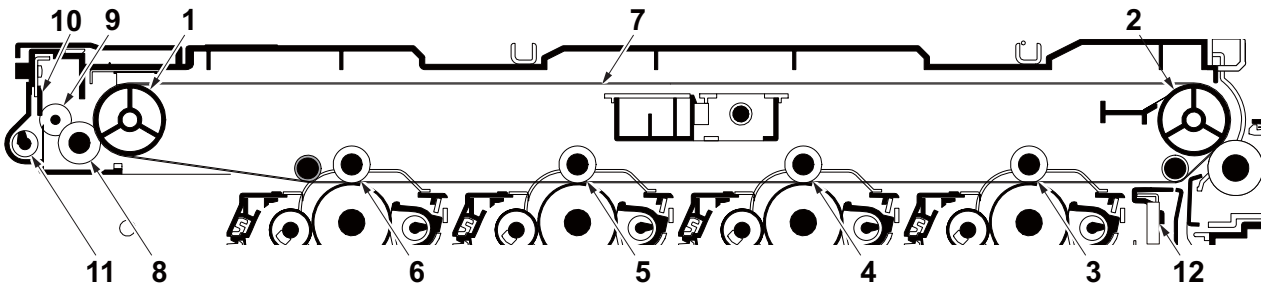

Figure 2-1-16 Inter mediate transfer unit section

1. Tension roller
2. Drive roller
3. Primary transfer roller K
4. Primary transfer roller M
5. Primary transfer roller C
6. Primary transfer roller Y
7. Transfer belt
8. Cleaning fur brush
9. Cleaning roller
10. Cleaning blade
11. Cleaning screw
12. ID sensors (IDS)

TONER+
www.tonerplus.com.ua

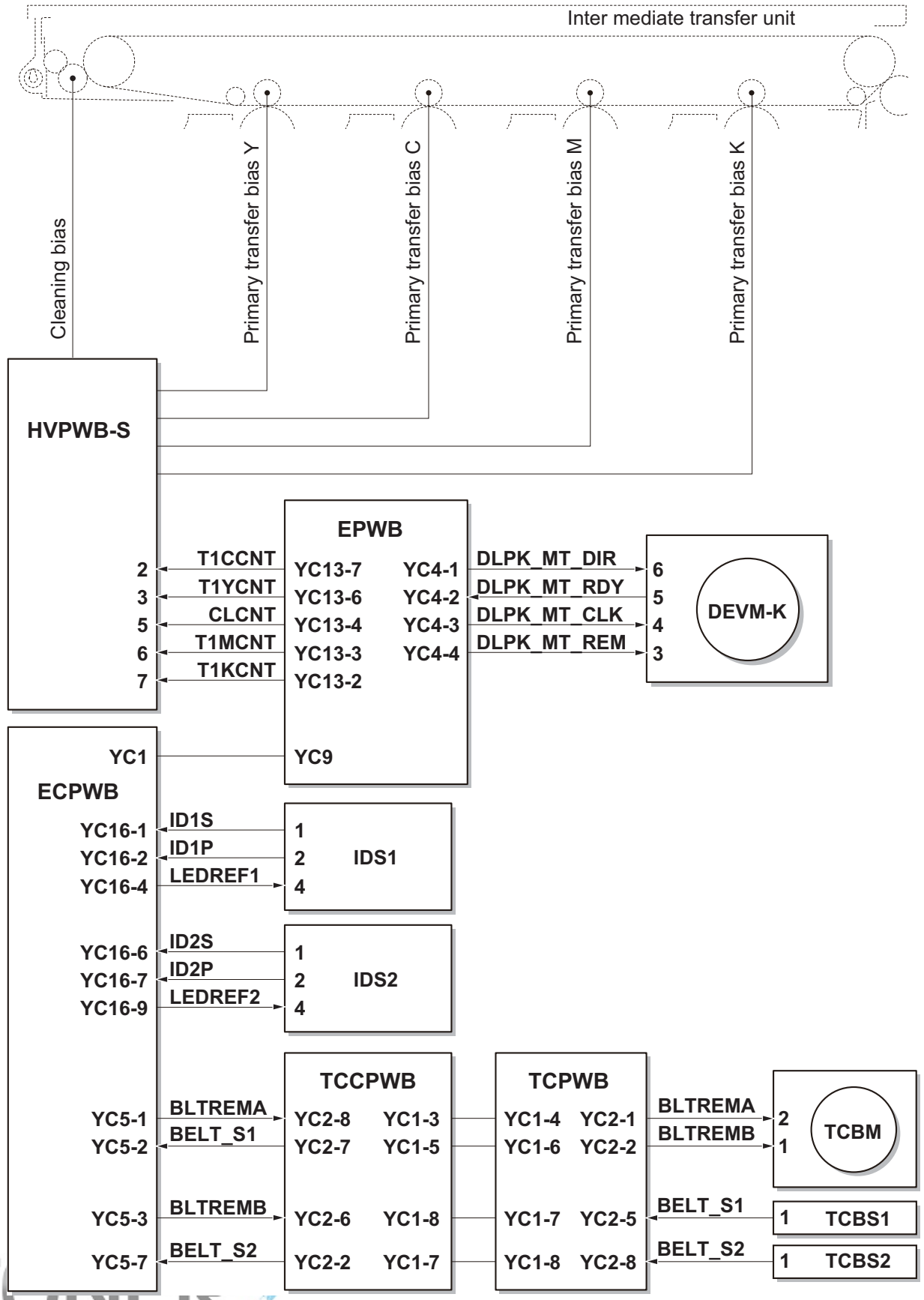

Figure 2-1-17 Intermediate transfer unit section block diagram

www.tonerplus.com.ua

(2) Secondary transfer roller section

The secondary transfer roller section consists of the secondary transfer roller mounted to the paper conveying unit and the separation needle. To the secondary transfer roller, DC bias is applied from the high voltage PWB (HVPWB). The toner image formed on the transfer belt is transferred to the paper by the potential difference. Paper after transfer is separated from the drum by applying separation charging that is output from the high voltage PWB (HVPWB) to the separation electrode.

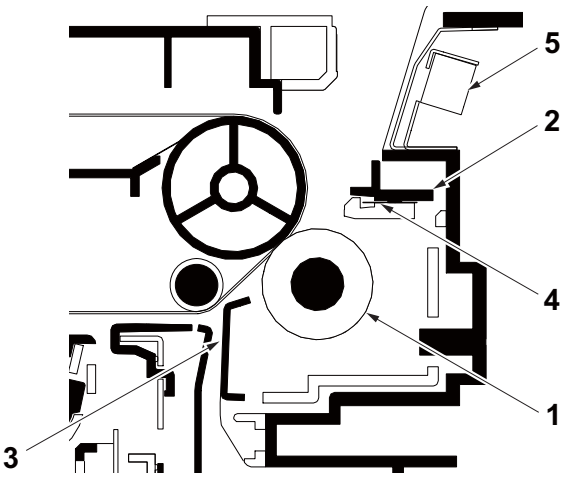

Figure 2-1-18 Secondary transfer roller section

1. Secondary transfer roller
2. Separation needle holder
3. Paper chute guide
4. Separation needle
5. Fuser pre sensor

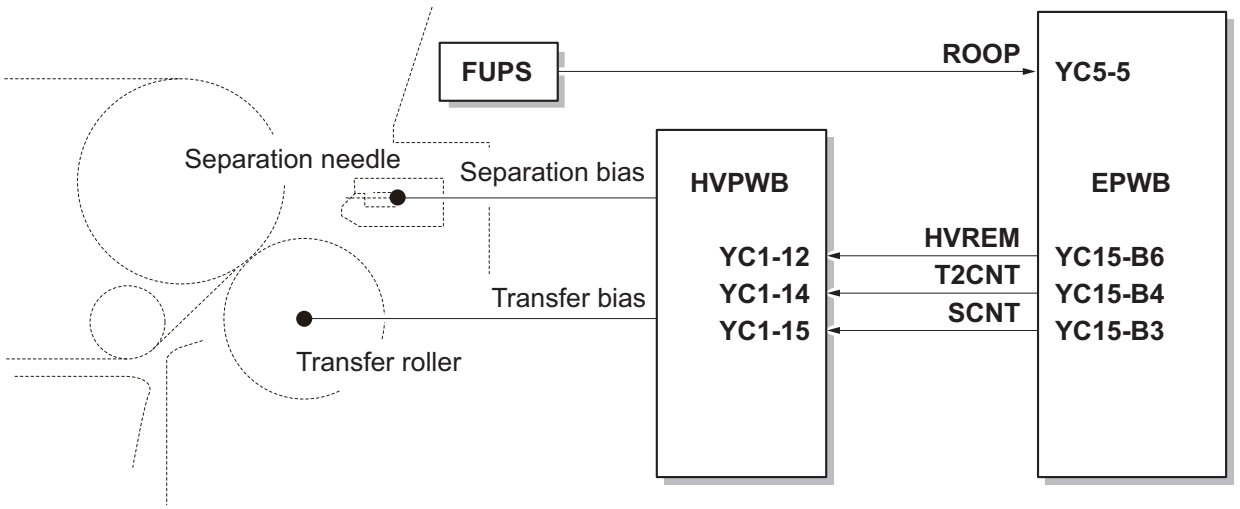

Figure 2-1-19 Secondary transfer roller section block diagram

TONER
www.tonerplus.com.ua

2-1-6 Fuser section

The paper sent from the transfer/separation section is interleaved between the heat roller and the press roller. The heat roller is heated by the IH coil (IHC), and the toner is fused by heat and pressure and fixed onto the paper because the press roller is pressed by the fuser press spring. The surface temperature of heat roller is detected by the fuser thermistor1 (FTH1), fuser thermistor2 (FTH2) and the surface temperature of press roller is detected by the fuser thermistor3 (FTH3) and controlled by the engine PWB (EPWB). If the fuser section shows extremely high temperature, the power line will be shut off and the IH coil (IHC) is forced to turn off.

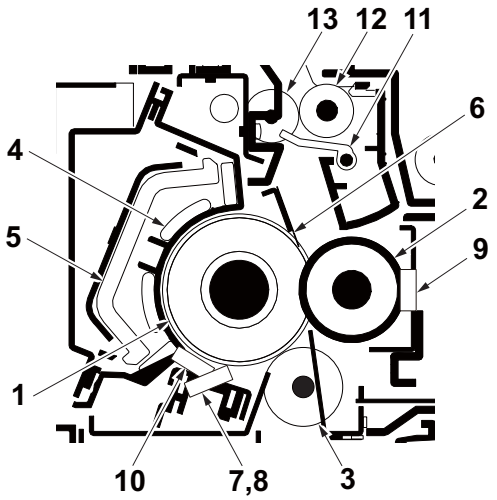

Figure 2-1-20 Fuser section

1. Heat roller
2. Press roller
3. Uniformity heat roller
4. IH coil (IHC)
5. Core
6. Separate plate
7. Fuser thermistor 1 (FTH1)
8. Fuser thermistor 2 (FTH2)
9. Fuser thermistor 3 (FTH3)
10. Fuser thermostat (FTS)
11. Actuator (eject sensor)
12. Eject roller
13. Eject pulley

TONER+
www.tonerplus.com.ua

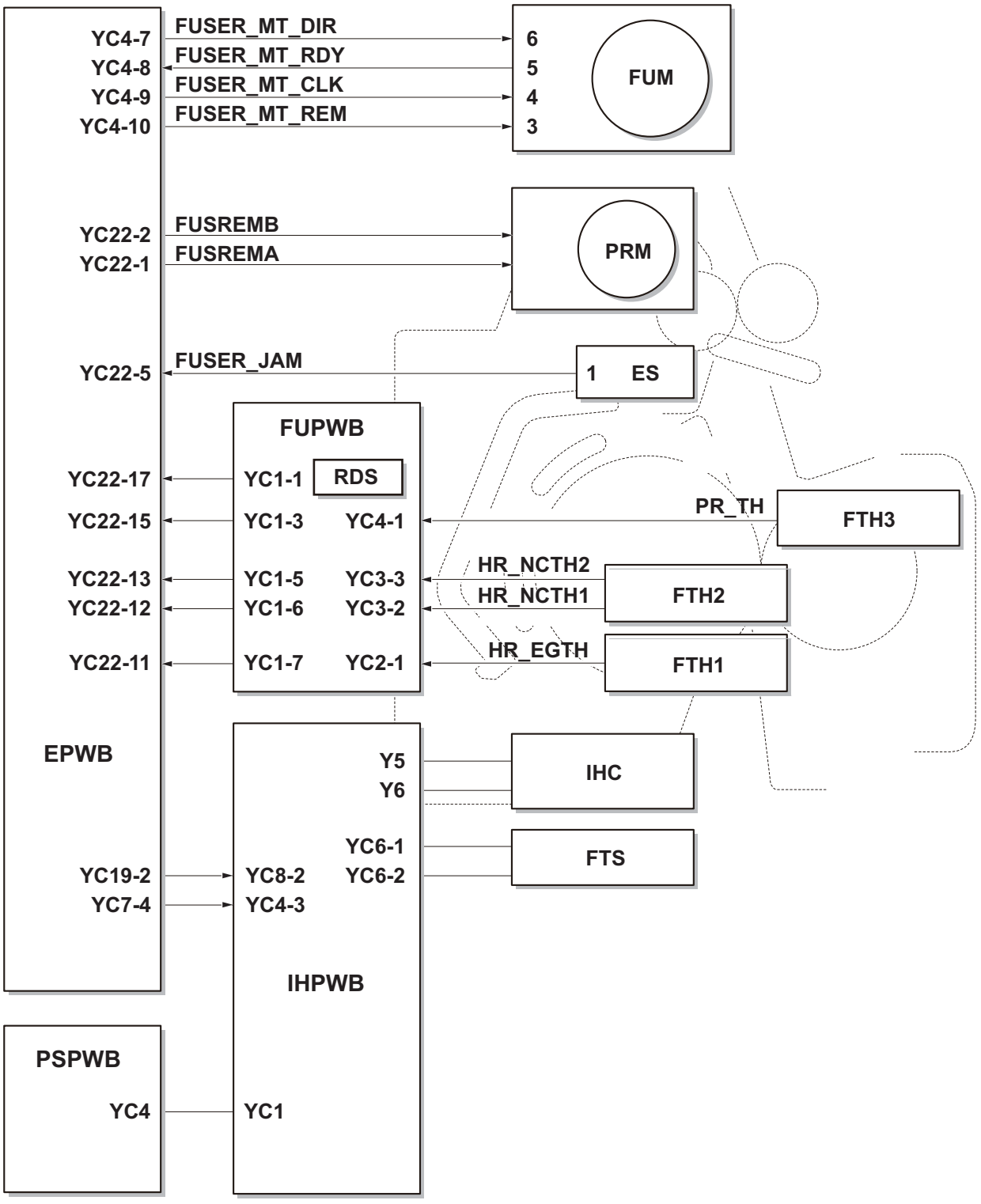

Figure 2-1-21 Fuser section block diagram

TONER
www.tonerplus.com.ua

2-1-7 Eject/Feedshift section

The paper eject/feedshift section consists of the conveying path which sends the paper that has passed the fuser section to the inner tray, the job separator tray or the duplex conveying section.

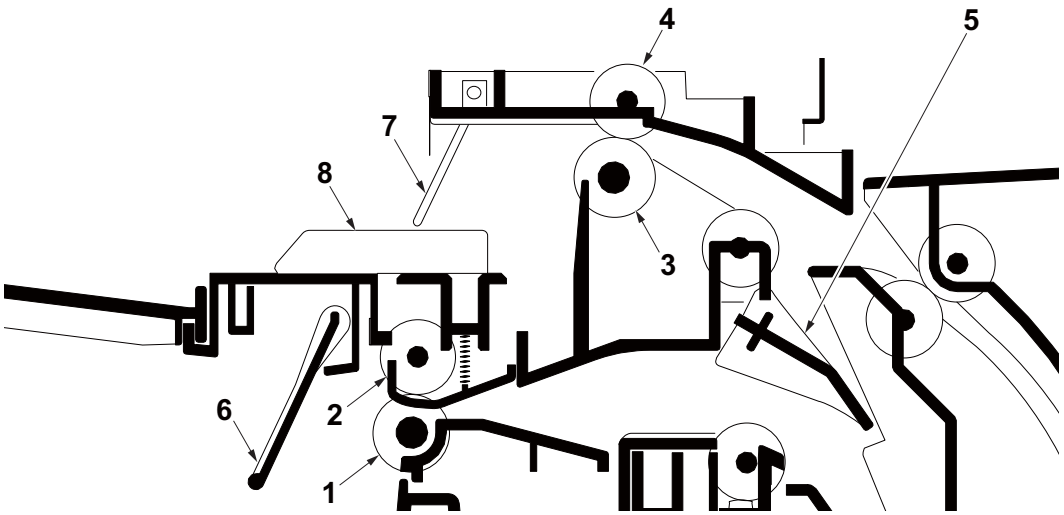

Figure 2-1-22 Eject/Feedshift section

1. Eject roller A
2. Eject pulley A
3. Eject roller B
4. Eject pulley B
5. Feedshift guide
6. Actuator (paper full sensor)
7. Actuator (job paper full sensor)
8. Actuator (job eject paper sensor)

TONER+
www.tonerplus.com.ua

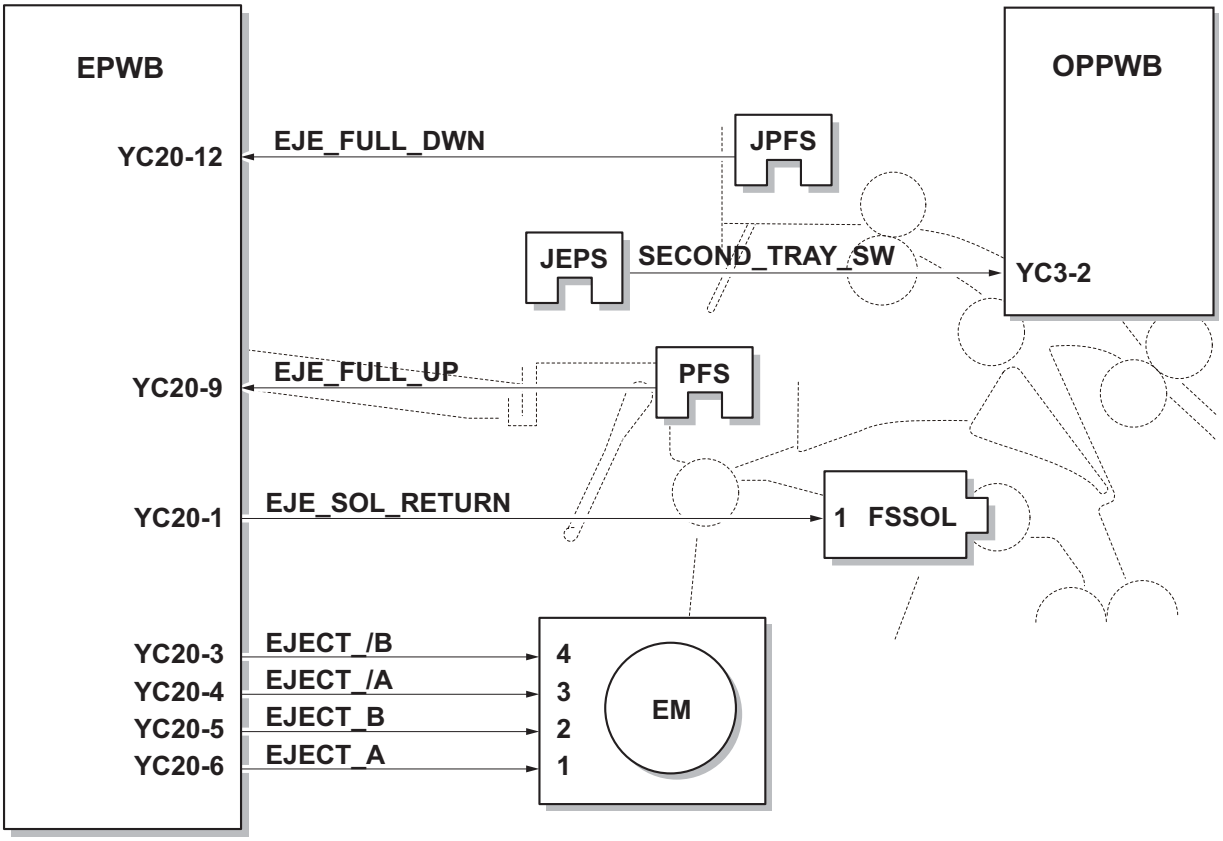

Figure 2-1-23 Eject/Feed shift section block diagram

TONER
www.tonerplus.com.ua

2-1-8 Duplex conveying section

The duplex conveying section consists of conveying path which sends the paper sent from the eject/feedshift section to the paper feed/conveying section when duplex printing.

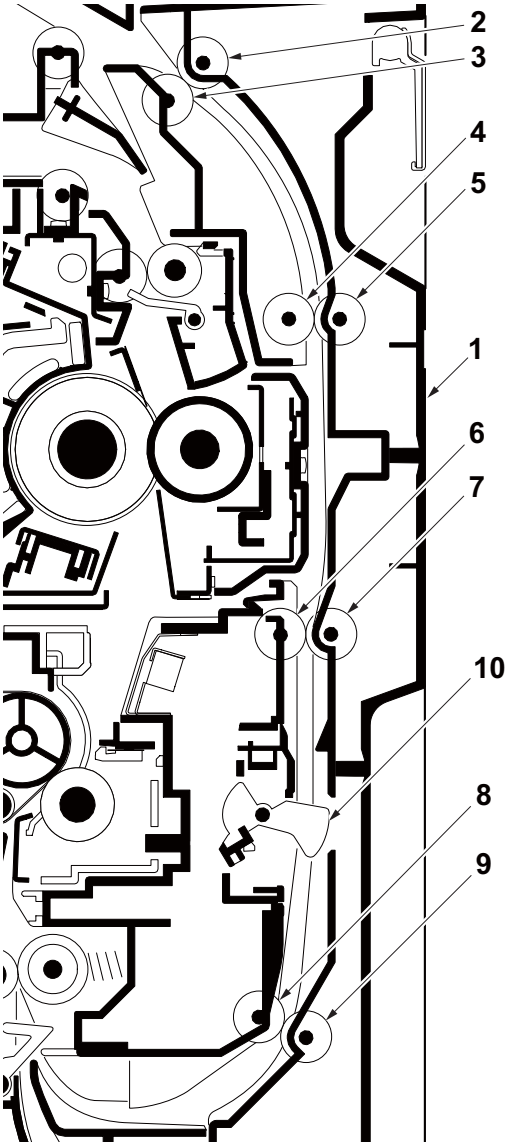

Figure 2-1-24 Duplex conveying section

1. Right cover 1
2. Duplex feed roller A
3. Duplex feed pulley A
4. Duplex feed roller B
5. Duplex feed pulley B
6. Duplex feed roller C
7. Duplex feed pulley C
8. Duplex feed roller D
9. Duplex feed pulley D
10. Actuater(duplex sensor)

TONER+
www.tonerplus.com.ua

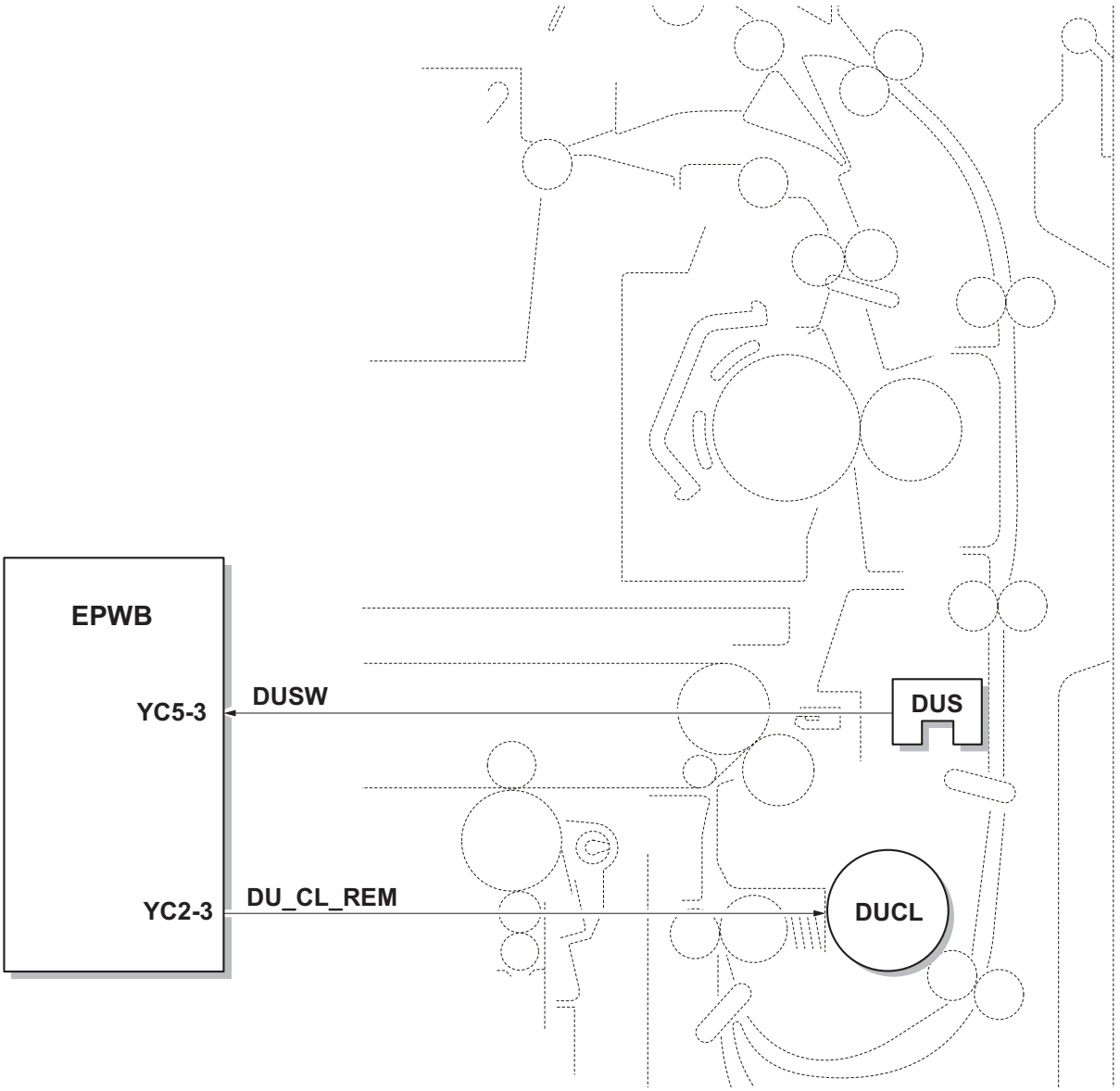

Figure 2-1-25 Duplex conveying section block diagram

TONER
www.tonerplus.com.ua

2-1-9 Document processor

(1) Original feed section

The original feed section consists of the parts shown in figure. An original placed on the original tray is conveyed to the original conveying section. Original is fed by the rotation of the DP forwarding pulley and DP paper feed roller.

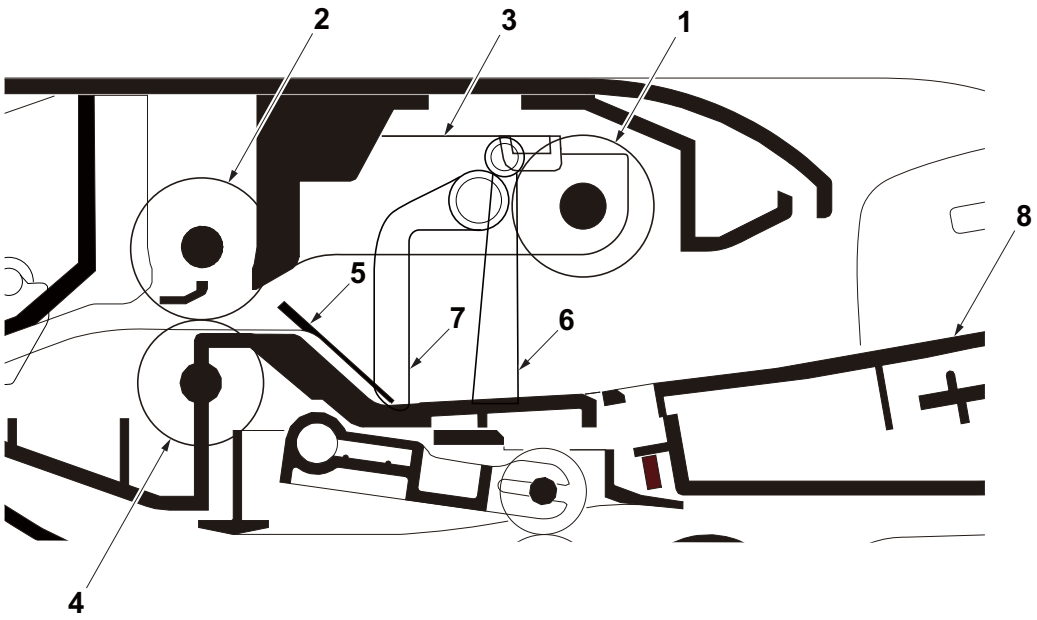

Figure 2-1-26 Original feed section

1. DP forwarding pulley
2. DP paper feed roller
3. DP feed holder
4. DP separation pulley
5. Front separation pad
6. Actuator (DP original sensor)
7. PF stopper
8. Original tray

TONER+
www.tonerplus.com.ua

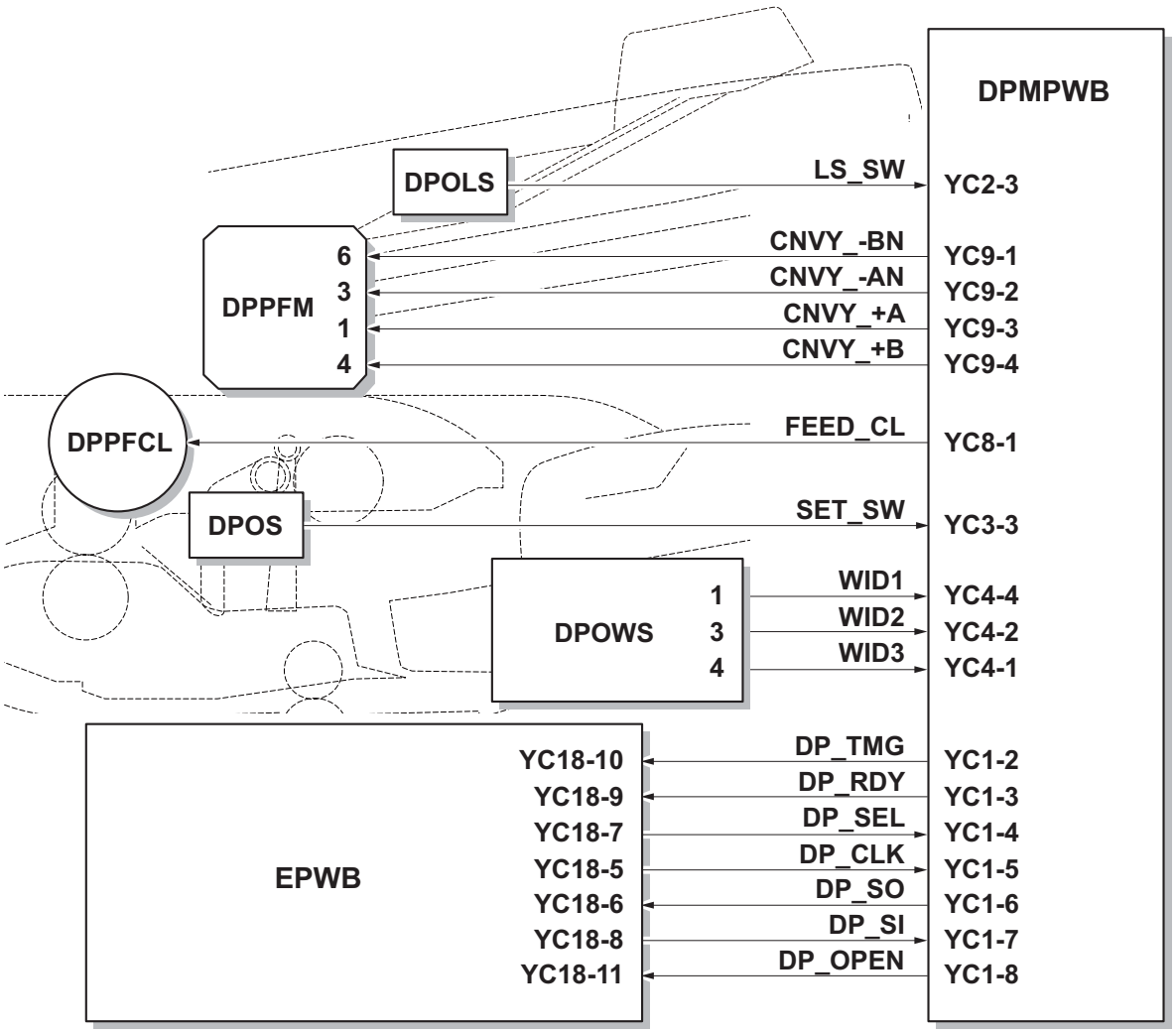

Figure 2-1-27 Original feed section block diagram

TONER
www.tonerplus.com.ua

(2) Original conveying section

The original conveying section consists of the parts shown in figure. A conveyed original is scanned by the optical section (CCD) on the main machine when it passes through the slit glass of main machine.

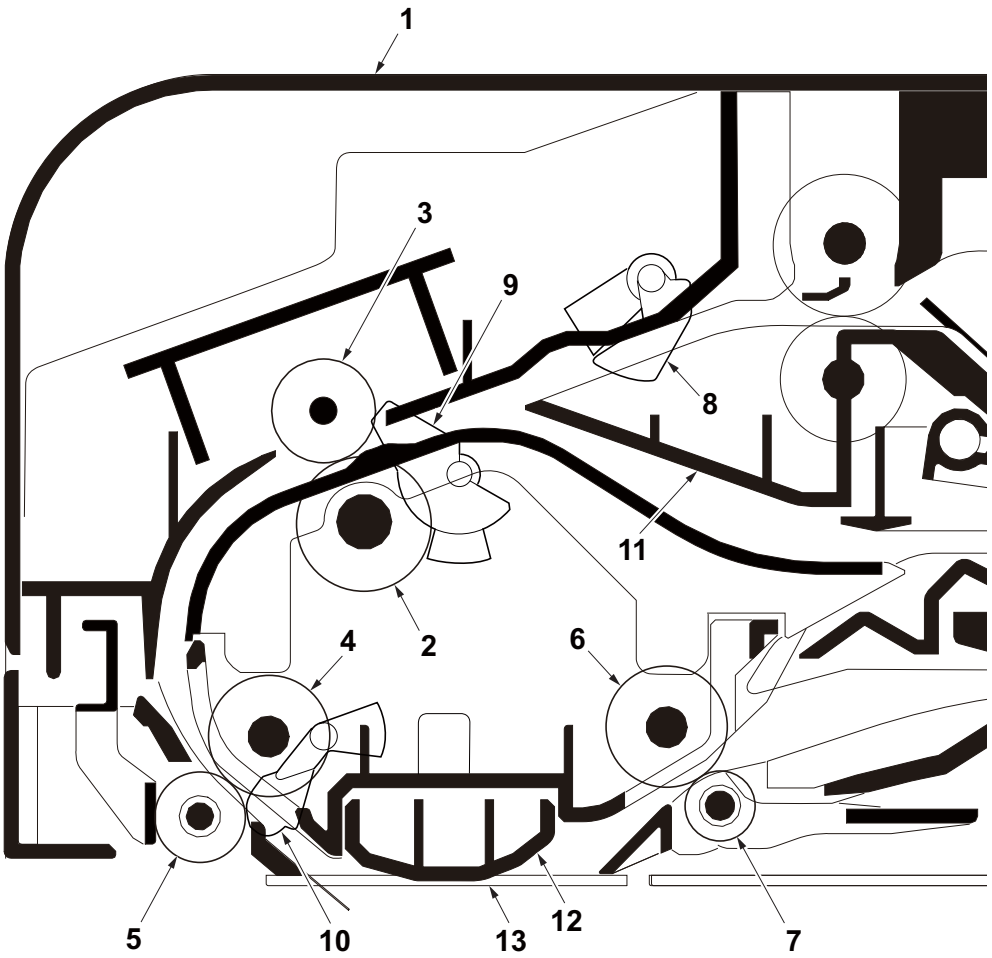

Figure 2-1-28 Original conveying section

1. DP top cover
2. DP registration roller
3. DP registration pulley
4. Conveying roller
5. Conveying pulley
6. Eject roller
7. Eject pulley
8. Actuator (DP paper feed sensor)
9. Actuator (DP registration sensor)
10. Actuator (DP timing sensor)
11. Switchback guide
12. Reading guide
13. Slit glass

TONER+
www.tonerplus.com.ua

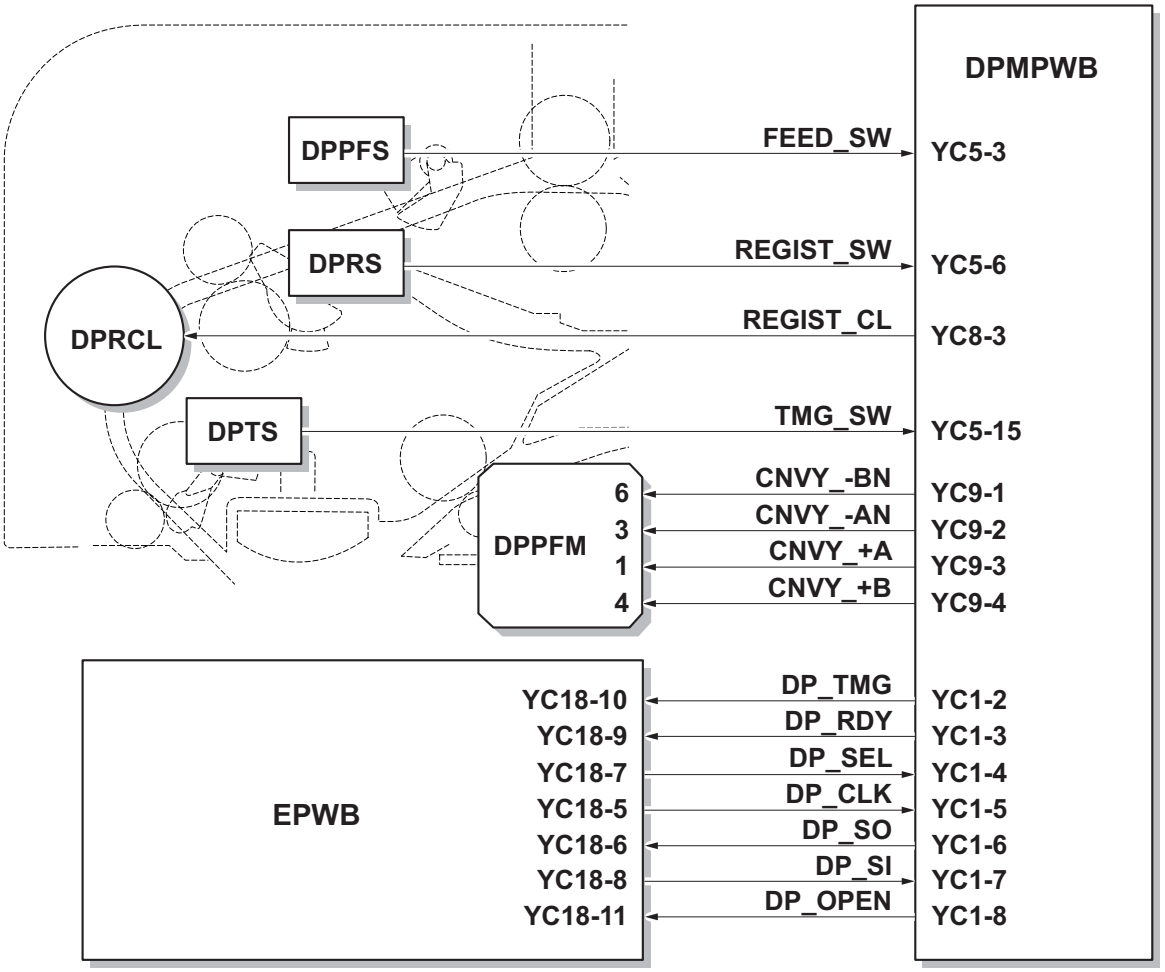

Figure 2-1-29 Original conveying section block diagram

TONER
www.tonerplus.com.ua

(3) Original switchback/eject sections

The original switchback/eject sections consists of the parts shown in figure. An original of which scanning is complete is ejected to the original eject table by the eject roller. In the case of duplex switchback scanning, an original is conveyed temporarily to the switchback tray and conveyed again to the original conveying section by the switchback roller.

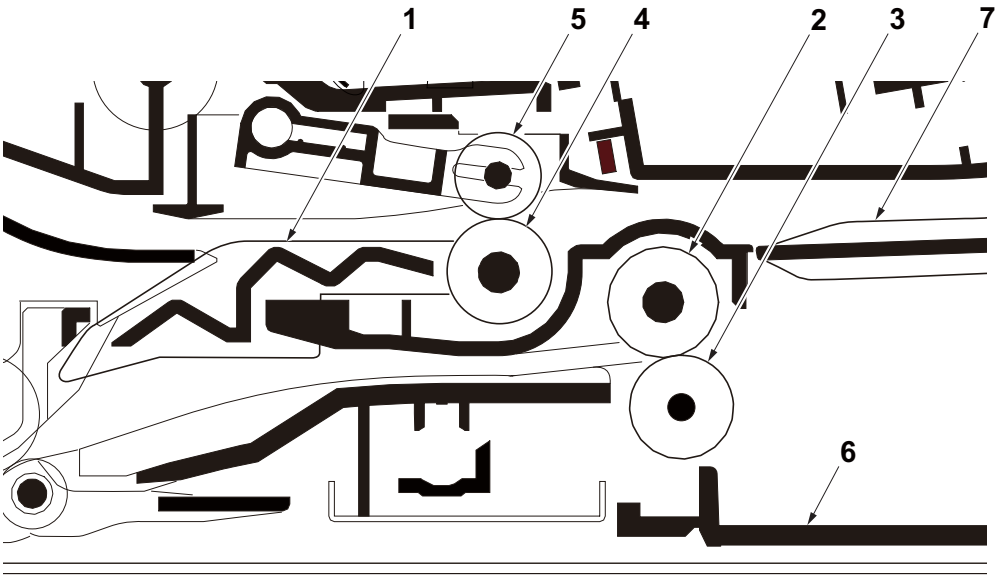

Figure 2-1-30 Original switchback/eject sections

1. Feedshift guide
2. Eject roller
3. Eject pulley
4. Switchback roller
5. Switchback pulley
6. Original eject table
7. Switchback tray

TONER+
www.tonerplus.com.ua

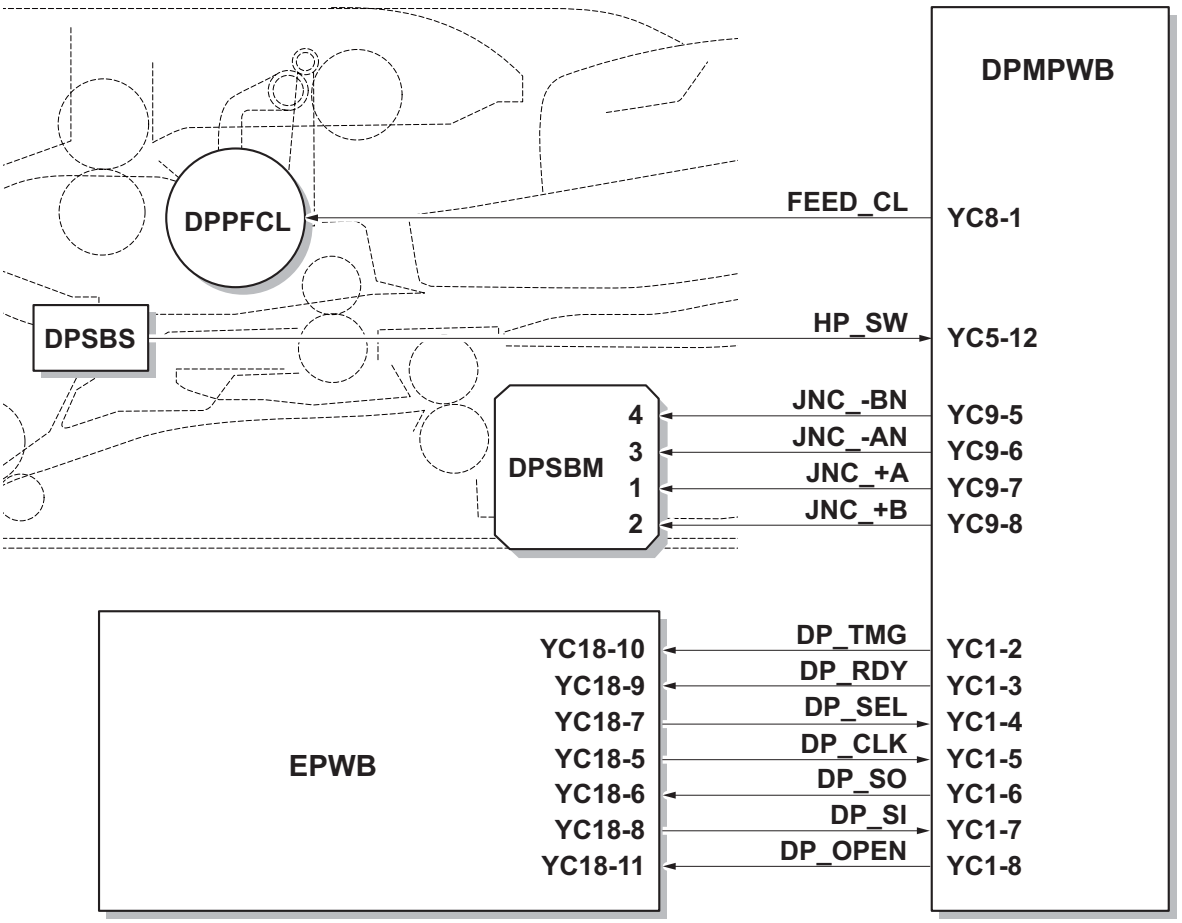

Figure 2-1-31 Original switchback/eject sections block diagram

TONER
www.tonerplus.com.ua

This page is intentionally left blank.

TONER
www.tonerplus.com.ua

2-2-1 Electrical parts layout

(1) PWBs

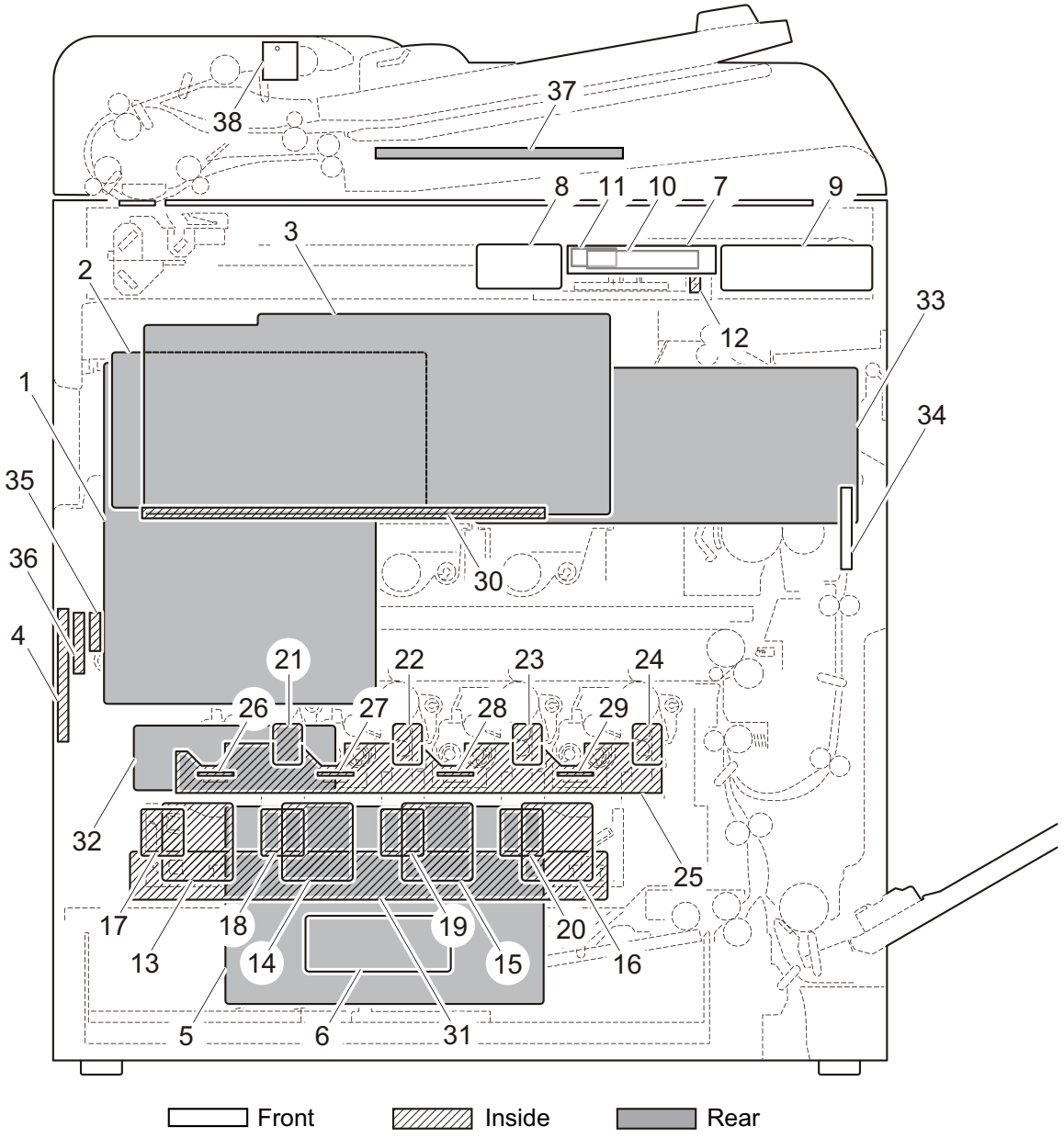

Figure 2-2-1 PWBs

1. Main PWB (MPWB) ..... Controls the software for print data processing and provides the interface with computers.
2. Engine PWB (EPWB)..... Controls printer hardware such as high voltage/bias output control, paper conveying system control, and fuser temperature control, etc.
3. High voltage PWB (HVPWB) ..... Generates main charging, developing bias, secondary transfer bias.
4. High voltage PWB sub (HVPWB-S)..... Generates primary transfer bias, cleaning bias.
5. Power source PWB (PSPWB) ..... After full-wave rectification of AC power source input, switching for converting to 24 V DC for output. Controls the fuser heater.
6. Power source PWB sub (PSPWB-S).... 5V output control when standing by.

TONER
www.tonerplus.com.ua

7. Operation panel PWB main (OPPWB-M) ..... Consists of the LCD, LED indicators and key switches.
8. Operation panel PWB left (OPPWB-L) ..... Consists of the LED indicators and key switches.
9. Operation panel PWB right (OPPWB-R) ..... Consists of the LED indicators and key switches.
10. LCD (LCD) ..... LCD display.
11. LCD relay PWB (LCDRPWB) ..... Consists of wiring relay circuits between the operation panel PWB main and the LCD PWB.
12. CCD PWB (CCDPWB)..... Scans the image of originals.
13. APC PWB Y (APCPWB-Y) ..... Generates and controls the laser beamfor yellow.
14. APC PWB C (APCPWB-C) ..... Generates and controls the laser beam for cyan.
15. APC PWB M (APCPWB-M) ..... Generates and controls the laser beam for magenta.
16. APC PWB K (APCPWB-K) ..... Generates and controls the laser beam for black.
17. BD PWB Y (BDPWB-Y) ..... Controls horizontal synchronizing timing of laser beam for yellow.
18. BD PWB C (BDPWB-C)..... Controls horizontal synchronizing timing of laser beam for cyan.
19. BD PWB M (BDPWB-M)..... Controls horizontal synchronizing timing of laser beam for magenta.
20. BD PWB K (BDPWB-K) ..... Controls horizontal synchronizing timing of laser beam for black.
21. Drum PWB Y (DRPWB-Y) ..... Relays wirings from electrical components on the drum unit for yellow.
    Stores the drum's identifications a EEPROM.
22. Drum PWB C (DRPWB-C)..... Relays wirings from electrical components on the drum unit for cyan.
    Stores the drum's identifications a EEPROM.
23. Drum PWB M (DRPWB-M)..... Relays wirings from electrical components on the drum unit for magenta.
    Stores the drum's identifications a EEPROM.
24. Drum PWB K (DRPWB-K) ..... Relays wirings from electrical components on the drum unit for black.
    Stores the drum's identifications a EEPROM.
25. Drum connect PWB (DRCPWB)..... Consists of wiring relay circuit between engine PWB and the drum unit.
26. Developing PWB Y (DEVPWB-Y)..... Relays wirings from electrical components on the developing unit for yellow.
    Stores the developer's identifications a EEPROM.
27. Developing PWB C (DEVPWB-C) ..... Relays wirings from electrical components on the developing unit for cyan.
    Stores the developer's identifications a EEPROM.
28. Developing PWB M (DEVPWB-M)..... Relays wirings from electrical components on the developing unit for magenta.
    Stores the developer's identifications a EEPROM.
29. Developing PWB K (DEVPWB-K)..... Relays wirings from electrical components on the developing unit for black.
    Stores the developer's identifications a EEPROM.
30. RFID PWB (RFPWB)..... Reads the container information.
31. LSU connect PWB (LSUCPWB)..... Consists of wiring relay circuit between main PWB, engine connect PWB and LSU unit.
32. Engine connect PWB (ECPWB) ..... Consists of wiring relay circuit between engine PWB and drum connect PWB, transfer connect PWB, option unit.
33. IH PWB (IHPWB)..... Control of IH coil that heats fuser roller.
34. Fuser PWB (FUPWB)..... Relays wirings from electrical components on the fuser unit.
    Fuser individual information in EEPROM storage.

TONER
www.tonerplus.com.ua

35. Transfer PWB (TCPWB) ..... Relays wirings from electrical components on the intermediate transfer unit.
Intermediate transfer individual information in EEPROM storage.
36. Transfer connect PWB (TCCPWB) ..... Consists of wiring relay circuit between engine connect PWB and Transfer PWB.
37. DP main PWB (DPMPWB) ..... Consists the motor and clutch driver circuit and wiring relay circuit.
38. DP LED PWB (DPLEDPWB) ..... Displays the presence of the original.

PWB names conversion

No.	Name used in service manual	Name used in parts list
1	Main PWB (MPWB)	PARTS PWB MAIN ASSY SP
2	Engine PWB (EPWB)	PARTS PWB ENGINE ASSY SP
3	Engine connect PWB (ECPWB)	PARTS PWB ENGINE CONNECT ASSY SP
4	High voltage PWB (HVPWB)	PARTS HVU1 SP
5	High voltage PWB sub (HVPWB-S)	PARTS HVU2 SP
6	Power source PWB (PSPWB)	PARTS LVU MAIN 100 SP PARTS LVU MAIN 200 SP
7	Power source PWB sub(PSPWB-S)	PARTS LVU SUB 100 SP PARTS LVU SUB 200 SP
8	IH PWB (IHPWB)	PARTS PWB IH 100 ASSY SP PARTS PWB IH 200 ASSY SP
9	Operation panel PWB main(OPPWB-M)	PARTS PWB PANEL MAIN ASSY SP
10	Drum connect PWB (DRCPWB)	PARTS PWB DRUM DLP CONNECT ASSY SP
11	Transfer connect PWB (TCCPWB)	PARTS PWB TRANSFER CONNECT ASSY SP
12	LSU connect PWB (LSUCPWB)	PARTS PWB LSU CONNECT ASSY SP
13	RFID PWB (RFIDPWB)	PARTS PWB RFID ASSY SP
14	DP main PWB (DPMPWB)	PARTS PWB DRIVE ASSY SP

TONER
www.tonerplus.com.ua

(2) Switches and sensors

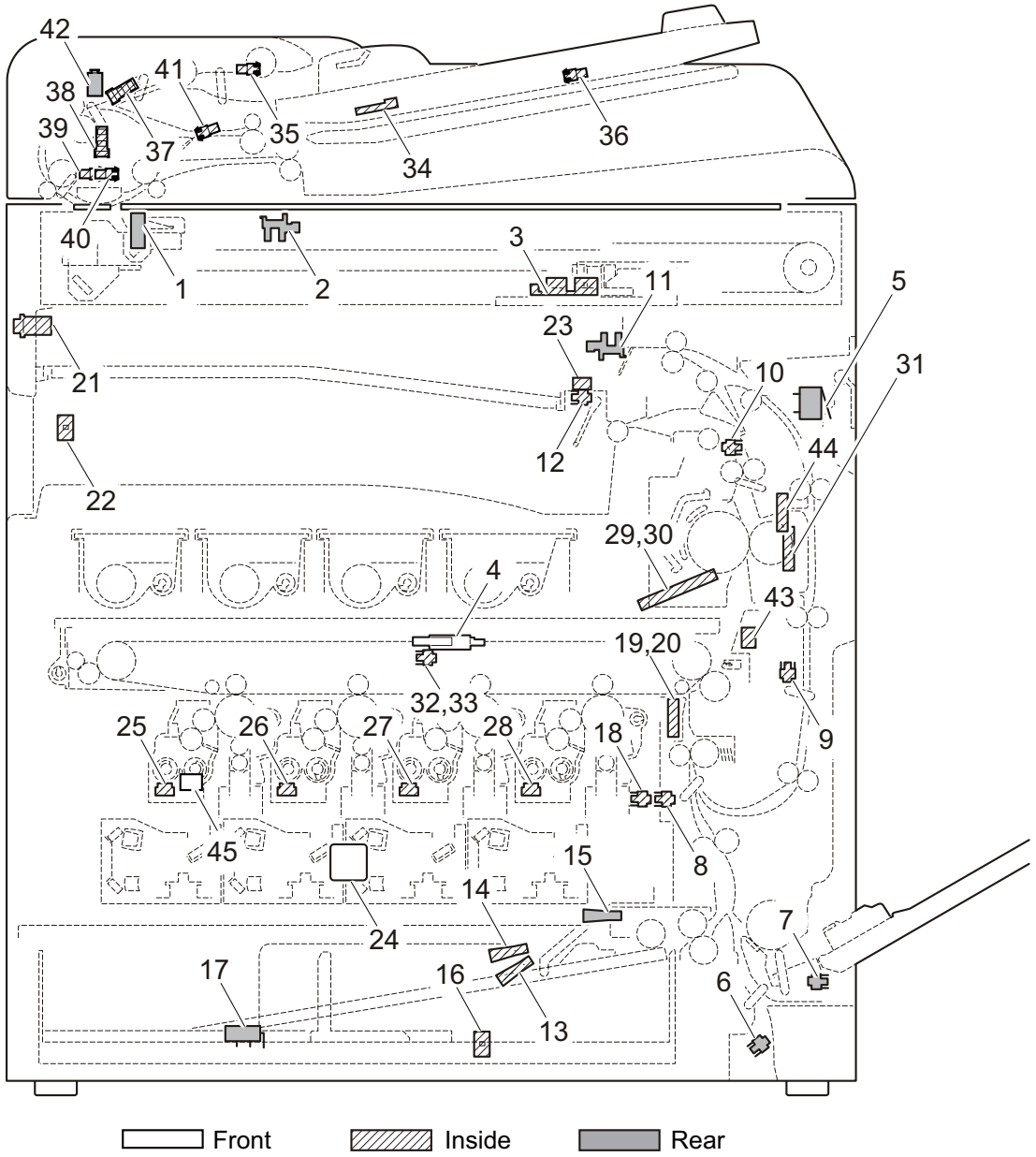

Figure 2-2-2 Switches and sensors

1. Home position sensor (HPS) ..... Detects the ISU in the home position.
2. Original detection switch (ODSW) ..... Operates the original size detection sensor.
3. Original size sensor (OSS) ..... Detects the size of the original.
4. Front cover switch (FCSW)..... Detects the opening and closing of the front cover.
5. Right cover switch (RCSW) ..... Detects the opening and closing of the right cover.
6. Feed sensor (FS)..... Detects a paper misfeed in the vertical conveying section.
7. MP paper sensor (MPPS)..... Detects the presence of paper on the MP tray.
8. Registration sensor (RS)..... Controls the secondary paper feed start timing.
9. Duplex sensor (DUS)..... Detects a paper jam in the duplex section.
10. Eject sensor (ES)..... Detects a paper misfeed in the fuser or eject section.
11. Job paper full sensor (JPFS)..... Detects the paper full in the job separator tray.
12. Paper full sensor (PFS)..... Detects the paper full in the inner tray.
13. Paper sensor 1 (PS1) ..... Detects the presence of paper in the cassette.

TONER

14. Paper sensor 2 (PS2) ..... Detects the presence of paper in the cassette.
15. Lift sensor (LS)..... Detects activation of upper limit of the bottom plate.
16. Paper size width switch (PWSW)..... Detects the width of paper in the cassette.
17. Paper size length switch (PLSW) ..... Detects the length of paper in the cassette.
18. ID shutter sensor (IDSS)..... Detects the position of the iD shutter.
19. ID sensor 1 (IDS1) ..... Measurement of density of toner at calibration.
20. ID sensor 2 (IDS2) ..... Measurement of density of toner at calibration.
21. Main power switch (MSW) ..... Turns ON/OFF the AC power source.
22. Bridge detection switch (BRDSW) ..... Detects the presence the bridge.
23. Job eject papersensor (JEPS) ..... Detects the presence of paper in the job separator.
24. Temperature sensor (TEMS)..... Detects temperature and absolute humidity in machine.
25. Toner sensor Y (TS-Y) ..... Detects the amount of toner remainder in the developing unit Y.
26. Toner sensor C (TS-C)..... Detects the amount of toner remainder in the developing unit C.
27. Toner sensor M (TS-M)..... Detects the amount of toner remainder in the developing unit M.
28. Toner sensor K (TS-K) ..... Detects the amount of toner remainder in the developing unit K.
29. Fuser thermistor 1 (FTH1) ..... Detects the heat roller temperature.(edge)
30. Fuser thermistor 2 (FTH2) ..... Detects the heat roller temperature.(center)
31. Fuser thermistor 3 (FTH3) ..... Detects the press roller temperature.
32. TC belt sensor 1 (TCBS1)..... Detects the position of the primary transfer belt.
33. TC belt sensor 2 (TCBS2)..... Detects the position of the primary transfer belt.
34. DP original size width sensor (DPOWS)..... Detects the width of the original.
35. DP original sensor (DPOS)..... Detects the presence of an original.
36. DP original size length sensor (DPOLS) ..... Detects the length of the original.
37. DP paper feed sensor (DPPFS)..... Detects a paper misfeed.
38. DP registration sensor (DPRS)..... Controls the secondary paper feed start timing.
39. DP timing sensor (DPTS)..... Detects the original scanning timing.
40. DP open/close sensor (DPOCS)..... Detects the opening/closing of the DP.
41. DP switchback sensor (DPSBS)..... Detects the switchback guide in the home position.
42. DP interlock switch (DPILSW) ..... Shuts off 24 V DC power line when the dp top coveris opened.
43. Fuser pre sensor (FUPS)..... Detects the JAM on this side of fuser.
44. Fuser roller rotation detection sensor (FURDS) ..... Detects the rotation of the fuser roller.
45. Waste toner sensor (WTS)..... Detects when the waste toner box is full.

TONER+
www.tonerplus.com.ua

(3) Motors

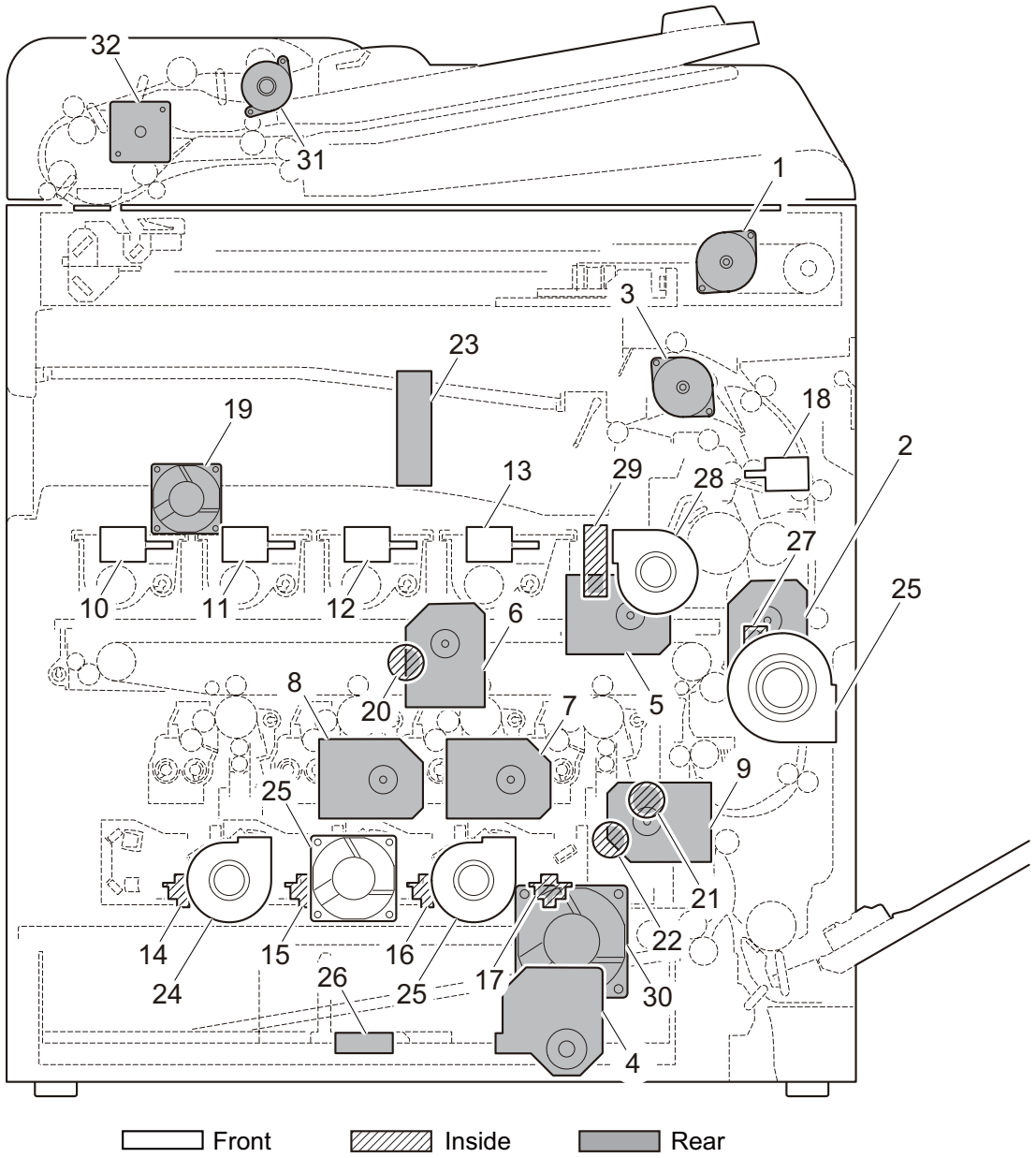

Figure 2-2-3 Motors

1. ISU motor (ISUM) ..... Drives the ISU.
2. Fuser motor (FUM) ..... Drives the fuser section.
3. Eject motor (EM) ..... Drives the eject section.
4. Lift motor (LM) ..... Operates the bottom plate.
5. Drum motor K (DRM-K) ..... Drives the drum unit K.
6. Drum motor YCM (DRM-YCM) ..... Drives the drum unit YCM.
7. Developer motor K (DEVM-K) ..... Drives the developer unit K.
8. Developer motor YCM (DEVM-YCM) ... Drives the developer unit YCM.
9. Conveying motor (CM) ..... Drives the paper feed section and conveying section.
10. Toner motor Y (TM-Y) ..... Replenishes toner to the developer unit Y.
11. Toner motor C (TM-C) ..... Replenishes toner to the developer unit C.
12. Toner motor M (TM-M) ..... Replenishes toner to the developer unit M.
13. Toner motor K (TM-K) ..... Replenishes toner to the developer unit K.

TONER

14. Polygon motor Y (PM-Y) ..... Drives the polygon mirror Y.
15. Polygon motor C (PM-C)..... Drives the polygon mirror C.
16. Polygon motor M (PM-M)..... Drives the polygon mirror M.
17. Polygon motor K (PM-K) ..... Drives the polygon mirror K.
18. Fuser press release motor (FPRM) ..... Drives the pressure release system of the fuser.
19. Controller fan motor (CONFM)..... Cools the controller section.
20. Transfer belt motor (TCBM) ..... Drives the transfer belt.
21. ID shutter motor (IDSM)..... Drives the ID sensor cleaning section.
22. LSU cleaning motor (LSUCM) ..... Drives the LSU cleaning section.
23. IH fan motor (IJHFM) ..... Cools the IH PWB.
24. Developer fan motor (DEVFM) ..... Cools the developer section.
25. LSU fan motor (LSUFM) ..... Cools the LSU section.
26. Power source fan motor (PSFM) ..... Cools the power source PWB.
27. Fuser fan motor (FUFM) ..... Cools the fuser and eject sections.
28. Container fan motor (CFM) ..... Cools the toner container section.
29. IH coil fan motor (IHCFM) ..... Cools the IH coil.
30. Imaging fan motor (IMGFM)..... Cools the imaging section.
31. DP paper feed motor (DPPFM)..... Drives the original feed section.
32. DP switchback motor (DPSBM) ..... Drives the original switchback section.

TONER+
www.tonerplus.com.ua

(4) Others

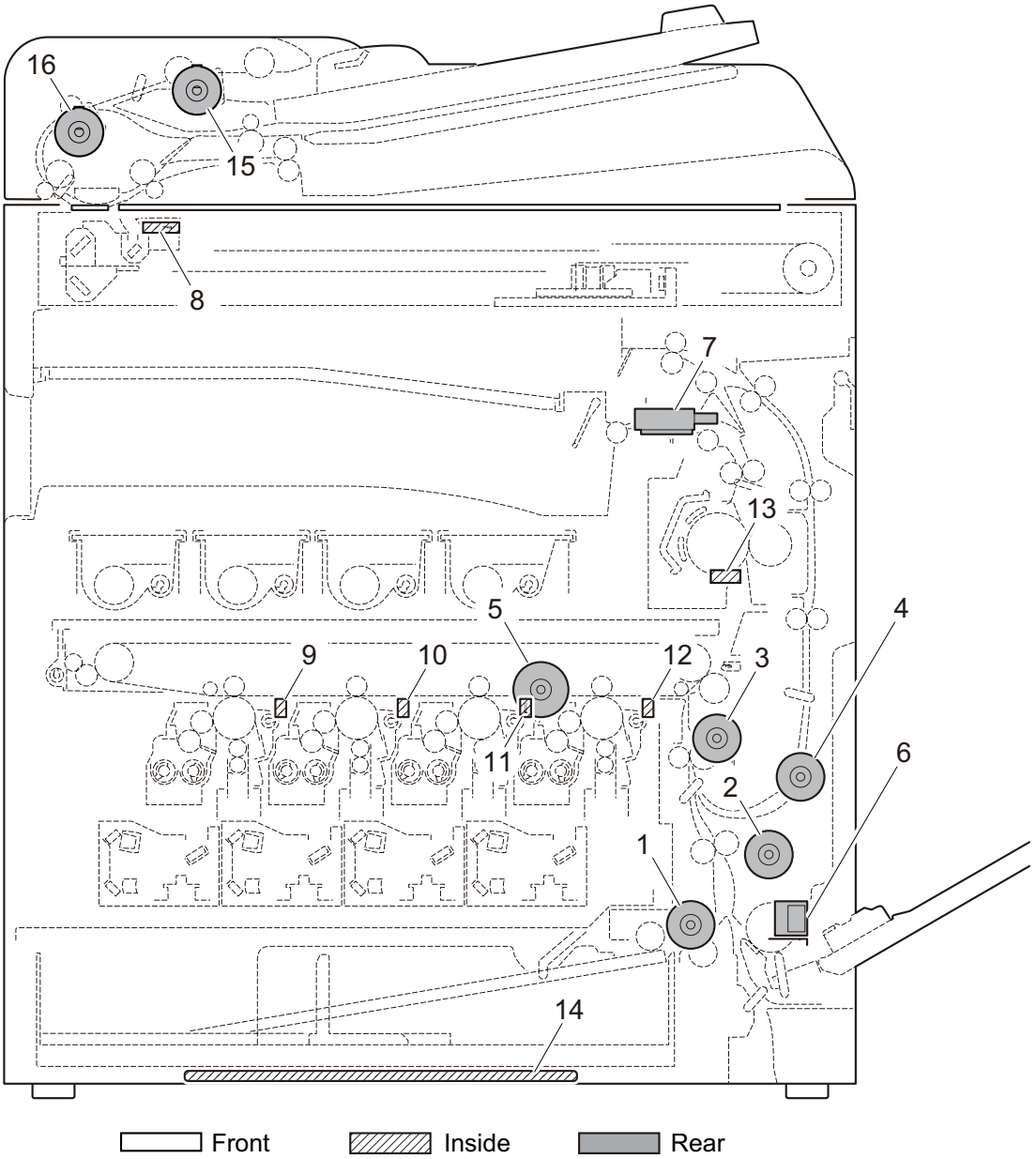

Figure 2-2-4 Others

1. Paper feed clutch (PFCL) ..... Controls the primary paper feed from cassette.
2. Mid clutch (MCL)..... Controls the paper conveying.
3. Registration clutch (RCL)..... Controls the secondary paper feed.
4. Duplex clutch (DUCL) ..... Controls the drive of the duplex feed roller.
5. Developer stop clutch (DEVSCL)..... Controls the drive of the developer.
6. MP solenoid (MPSOL) ..... Controls the MP bottom plate.
7. Feedshift solenoid (FSSOL)..... Operates the feedshift guide.
8. Exposure lamp (EL) ..... Exposes originals.
9. Cleaning lamp Y (CL-Y) ..... Eliminates the residual electrostatic charge on the drum.
10. Cleaning lamp C (CL-C)..... Eliminates the residual electrostatic charge on the drum.
11. Cleaning lamp M (CL-M)..... Eliminates the residual electrostatic charge on the drum.
12. Cleaning lamp K (CL-K)..... Eliminates the residual electrostatic charge on the drum.
13. Fuser thermostat (FTS)..... Prevents overheating of the heat roller.
14. Cassette heater (CH) ..... Dehumidifies the cassette section.

TONER

15. DP paper feed clutch (DPPFCL)..... Controls the drive of the DP forwarding pulley and DP paper feed roller.
16. DP registration clutch (DPRCL) ..... Controls the secondary paper feed.

TONER+
www.tonerplus.com.ua

This page is intentionally left blank.

TONER+
www.tonerplus.com.ua

2-3-1 Main PWB

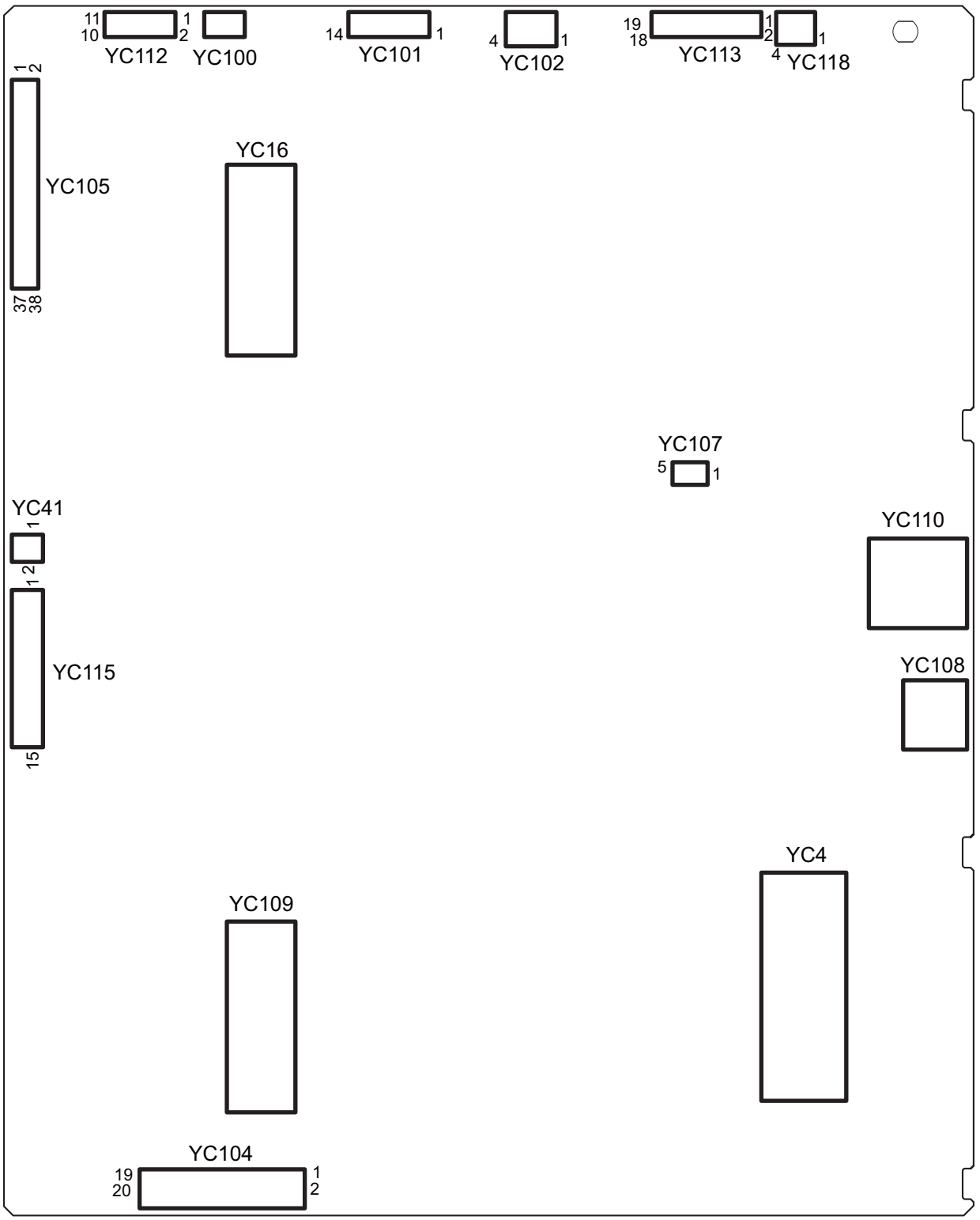

Figure 2-3-1 Main PWB silk-screen diagram

TONER
www.tonerplus.com.ua

Connector	Pin	Signal	I/O	Voltage	Description
YC100	1	VBUS	O	5 V DC	5 V DC power output
Connected to operathion panel PWB main(USB)	2	DATA-	I/O	LVDS	USB data signal
	3	DATA+	I/O	LVDS	USB data signal
	4	ID	-	-	Not used
	5	SHIELD_GND	-	-	Ground
YC101	1	NC	-	-	Not used
Connected to operation panel PWB main (contorol)	2	GND	-	-	Ground
	3	PANEL_STATUS	I	0/3.3 V DC	Operation panel status signal
	4	INT_POWERKEY	I	0/3.3 V DC	Power key: On/Off
	5	PANEL_RESET	O	0/3.3 V DC	OPPWB-M reset signal
	6	AUDIO	O	Analog	Voice output signal
	7	LIGHTOFF_POWER	O	0/3.3 V DC	Sleep return signal 1
	8	SHUTDOWN	O	0/3.3 V DC	24 V down signal
	9	LED_PROCESSING	O	0/3.3 V DC	Processing LED control signal
	10	LED_ATTENTION	O	0/3.3 V DC	Attention LED control signal
	11	LED_MEMORY	O	0/3.3 V DC	Memory LED control signal
	12	SUSPEND_Power	O	5 V DC	5 V DC power output to OPPWB-M
	13	ENERGY_SAVE	O	0/3.3 V DC	Energy save signal
	14	BEEP_POWERON	O	0/3.3 V DC	Sleep return signal 0
YC102	1	5V2	O	5 V DC	5 V DC power output to OPPWB-M
Connected to operation panel PWB main(power source)	2	5V2	O	5 V DC	5 V DC power output to OPPWB-M
	3	GND	-	-	Ground
	4	GND	-	-	Ground

TONER
www.tonerplus.com.ua

Connector	Pin	Signal	I/O	Voltage	Description
YC104	1	VDN(K)	O	LVDS	Video data signal (-)
Connected to LSU connect PWB	2	VDP(K)	O	LVDS	Video data signal (+)
	3	SH(K)	O	0/3.3 V DC	Sample/hold signal
	4	BD(K)	I	0/3.3 V DC(pulse)	Horizontal synchronizing signal
	5	SGND	-	-	Ground
	6	VDN(M)	O	LVDS	Video data signal (-)
	7	VDP(M)	O	LVDS	Video data signal (+)
	8	SH(M)	O	0/3.3 V DC	Sample/hold signal
	9	BD(M)	I	0/3.3 V DC(pulse)	Horizontal synchronizing signal
	10	SGND	-	-	Ground
	11	VDN(C)	O	LVDS	Video data signal (-)
	12	VDP(C)	O	LVDS	Video data signal (+)
	13	SH(C)	O	0/3.3 V DC	Sample/hold signal
	14	BD(C)	I	0/3.3 V DC(pulse)	Horizontal synchronizing signal
	15	SGND	-	-	Ground
YC105	1	SLEEPOFF	I	0/3.3 V DC	Sleep Off signal
Connected to engine PWB	2	ENG_HLD	O	0/3.3 V DC	Engine hold signal
	3	SCAN_HLD	O	0/3.3 V DC	Scan hold signal
	4	LIGHTSLEEPN	O	0/3.3 V DC	Light sleep shift signal
	5	24V4	I	24 V DC	24 V DC power input from EPWB
	6	24V4	I	24 V DC	24 V DC power input from EPWB
	7	5V4	I	5 V DC	5 V DC power input from EPWB
	8	3.3V0	I	3.3 V DC	3.3 V DC power input from EPWB
	9	3.3V4	I	3.3 V DC	3.3 V DC power input from EPWB
	10	3.3V4	I	3.3 V DC	3.3 V DC power input from EPWB
	11	24VDOWN	I	0/3.3 V DC	24 V down signal
	12	GND	-	-	Ground
	13	GND	-	-	Ground
	14	GND	-	-	Ground
	15	GND	-	-	Ground
	16	GND	-	-	Ground
	17	HYP_SCL	I	0/3.3 V DC(pulse)	Clock signal
	18	HYP_SDA	I	0/3.3 V DC(pulse)	Data signal
	19	HYP_INT	O	0/3.3 V DC	Interrupt sijgnal
	20	AQUA_CLK	I	0/3.3 V DC(pulse)	Clock signal
	21	AQUA_SO	O	0/3.3 V DC(pulse)	Serial communication data signal output
	22	AQUA_SI	I	0/3.3 V DC(pulse)	Serial communication data signal intput

TONER
www.tonerplus.com.ua

Connector	Pin	Signal	I/O	Voltage	Description
YC105	23	AQUA_SEL	I	0/3.3 V DC	Select signal
Connected to engine PWB	24	AQUA_RDY	O	0/3.3 V DC	Ready signal
	25	PVSYNC	I	0/3.3 V DC(pulse)	Vertical synchronizing signal
	26	OVSYNCMON	O	0/3.3 V DC	Sub-scanning monitor signal
	27	PAGEST	I	0/3.3 V DC	Sub-scanning standard signal
	28	EME_CLK	O	0/3.3 V DC(pulse)	Clock signal
	29	EME_SO	O	0/3.3 V DC(pulse)	Serial communication data signal output
	30	EME_SI	I	0/3.3 V DC(pulse)	Serial communication data signal intput
	31	EME_BSY	I	0/3.3 V DC	Busy signal
	32	EME_DIR	I	0/3.3 V DC	Communication direction change signal
	33	EME_IRN	I	0/3.3 V DC	Interrupt signal
	34	5V4IL	-	DC5 V	5 V DC power input from EPWB
	35	BDN(K)	O	0/3.3 V DC(pulse)	Horizontal synchronizing signal (K)
	36	BDN(M)	I	0/3.3 V DC(pulse)	Horizontal synchronizing signal (M)
	37	BDN(C)	I	0/3.3 V DC(pulse)	Horizontal synchronizing signal (C)
	38	BDN(Y)	-	0/3.3 V DC(pulse)	Horizontal synchronizing signal (Y)
YC107	1	VBUS	O	5 V DC	5 V DC power output
Connected to USB-HOST	2	DATA-	I/O	LVDS	USB data signal
	3	DATA+	I/O	LVDS	USB data signal
	4	ID	-	-	Not used
	5	SHIELD_GND	-	-	Ground
YC112	1	+24V4	O	24 V DC	24 V DC power output to LEDPWB
Connected to exposure lamp (LED PWB)	2	+24V4	O	24 V DC	24 V DC power output to LEDPWB
	3	POW	O	0/3.3 V DC	LED driver: On/Off
	4	PWM	O	0/3.3 V DC	PWM signal
	5	PGND	-	-	Ground
	6	SGND	-	-	Ground
	7	VSET	O	Analog	Analog voltage
	8	SCL	O	0/3.3 V DC(pulse)	Clock signal
	9	SDA	I/O	0/3.3 V DC(pulse)	Data signal
	10	FAIL	I	0/3.3 V DC	Error signal
	11	5V4	O	5 V DC	5 V DC power output to LEDPWB

TONER
www.tonerplus.com.ua

Connector	Pin	Signal	I/O	Voltage	Description
YC113	1	CCDPWR	O	12 V DC	12 V DC power output to CCDPWB
Connected to CCD PWB	2	CCDPWR	O	12 V DC	12 V DC power output to CCDPWB
	3	+5V4	O	5 V DC	5 V DC power output to CCDPWB
	4	+5V4	O	5 V DC	5 V DC power output to CCDPWB
	5	+5V4	O	5 V DC	5 V DC power output to CCDPWB
	6	+3.3V4	O	3.3 V DC	3.3 V DC power output to CCDPWB
	7	CCD_SH	O	0/3.3 V DC	Shift gate signal
	8	GND	-	-	Ground
	9	RS	O	0/3.3 V DC	Reset signal
	10	GND	-	-	Ground
	11	CP	O	0/3.3 V DC	Clamping signal
	12	GND	-	-	Ground
	13	CCDCLK1	O	0/3.3 V DC(pulse)	Clock signal
	14	GND	-	-	Ground
	15	OS1(B)	I	Analog	CCD Image output signal(B)
	16	GND	-	-	Ground
	17	OS2(G)	I	Analog	CCD Image output signal(G)
	18	GND	-	-	Ground
	19	OS3(R)	I	Analog	CCD Image output signal(R)
YC115	1	DEEPSLEEPN	O	0/3.3 V DC	Sleep signal: On/Off
Connected to power source PWB	2	GND	-	-	Ground
	3	GND	-	-	Ground
	4	GND	-	-	Ground
	5	GND	-	-	Ground
	6	GND	-	-	Ground
	7	GND	-	-	Ground
	8	GND	-	-	Ground
	9	5V2	I	5 V DC	5 V DC power input from PSPWB
	10	5V2	I	5 V DC	5 V DC power input from PSPWB
	11	5V2	I	5 V DC	5 V DC power input from PSPWB
	12	5V2	I	5 V DC	5 V DC power input from PSPWB
	13	5V2	I	5 V DC	5 V DC power input from PSPWB
	14	5V2	I	5 V DC	5 V DC power input from PSPWB
	15	5V2	I	5 V DC	5 V DC power input from PSPWB

TONER
www.tonerplus.com.ua

Connector	Pin	Signal	I/O	Voltage	Description
YC118	1	5V0	O	5 V DC	5 V DC power output to MSW
Connected to main switch,power source PWB sub	2	AUTODOWN	O	0/3.3 V DC	Auto down signal
	3	GND	-	-	Ground
	4	5V0	I	5 V DC	5 V DC power input from PSPWB-S
YC41	1	+24V1	O	24 V DC	24 V DC power output to CONFM
Connected to controller fan motor	2	CONTFANDRN	O	0/24 V DC	CONFM: On/Off
	3	N.C.	-	-	Not used

TONER
www.tonerplus.com.ua

2-3-2 Engine PWB

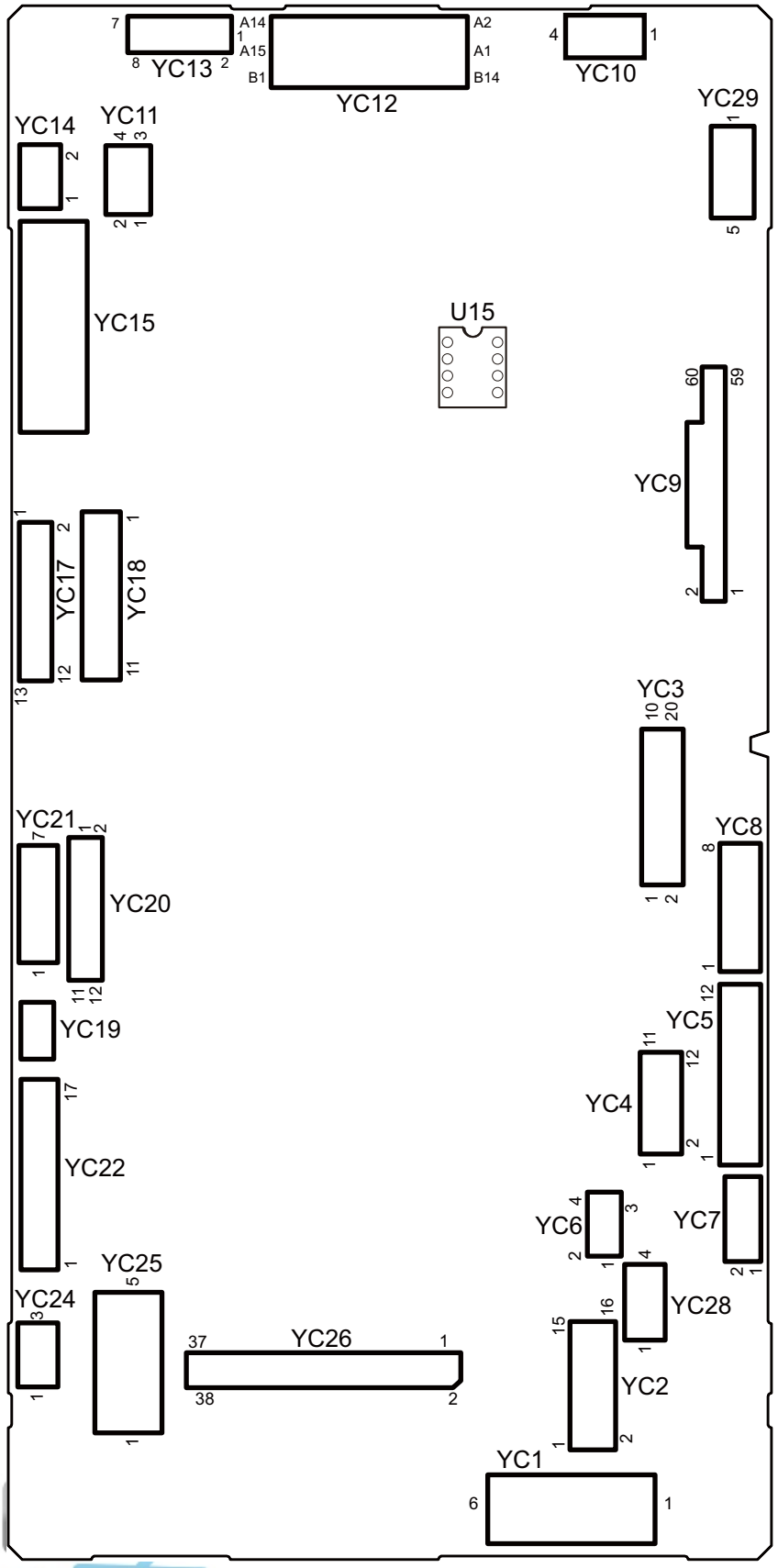

Figure 2-3-2 Engine PWB silk-screen diagram

www.tonerplus.com.ua

Connector	Pin	Signal	I/O	Voltage	Description
YC1	1	GND	-	-	GROUND
Connected to power source PWB	2	GND	-	-	GROUND
	3	GND	-	-	GROUND
	4	24V2	O	24 V DC	24 V DC power input from PSPWB
	5	24V2	O	24 V DC	24 V DC power input from PSPWB
	6	24V2	O	24 V DC	24 V DC power input from PSPWB
YC2	1	24V4	O	24 V DC	24 V DC power output to MPSOL
Connected to MP solenoid, duplex clutch, regis-tration clutch, mid clutch, feed clutch, conveying motor	2	MPF_SOL_REM	O	0/24 V DC	MPSOL: On/Off
	3	DU_CL_REM	O	0/24 V DC	DUCL: On/Off
	4	24V4	O	24 V DC	24 V DC power output to DUCL
	5	REG_CL_REM	O	0/24 V DC	RCL: On/Off
	6	24V4	O	24 V DC	24 V DC power output to RCL
	7	MID_CL_REM	O	0/24 V DC	MCL: On/Off
	8	24V4	O	24 V DC	24 V DC power output to MCL
	9	CAS_CL_REM	O	0/24 V DC	PFCL: On/Off
	10	24V4	O	24 V DC	24 V DC power output to PFCL
	11	FEED_MT_DIR	O	0/5 V DC	CM drive shift signal
	12	FEED_MT_RDY	I	0/3.3 V DC	CM ready signal
	13	FEED_MT_CLK	O	0/5 V DC (pulse)	CM clock signal
	14	FEED_MT_REM	O	0/5 V DC	CM: On/Off
	15	GND	-	-	GROUND
	16	24VIL	O	24 V DC	24 V DC power output to CM

TONER
www.tonerplus.com.ua

Connector	Pin	Signal	I/O	Voltage	Description
YC3	1	DLPC_MT_DIR	O	0/5V DC	DEVM-YCM drive shift signal
Connected to developer motor YCM, developer stop clutch, drum motor YCM, drum motor K	2	DLPC_MT_RDY	I	0/3.3 V DC	DEVM-YCM ready signal
	3	DLPC_MT_CLK	O	0/5 V DC (pulse)	DEVM-YCM clock signal
	4	DLPC_MT_REM	O	0/5 V DC	DEVM-YCM: On/Off
	5	GND	-	-	GROUND
	6	24V4	O	24 V DC	24 V DC power output to DEVM-YCM
	7	24V4	O	24 V DC	24 V DC power output to DEVSCL
	8	DLP_CL_REM	O	0/3.3 V DC	DEVSCL: On/Off
	9	DRMC_MT_DIR	O	0/5 V DC	DRM-YCM drive shift signal
	10	DRMC_MT_RDY	I	0/3.3 V DC	DRM-YCM ready signal
	11	DRMC_MT_CLK	O	0/5 V DC (pulse)	DRM-YCM clock signal
	12	DRMC_MT_REM	O	0/5 V DC	DRM-YCM: On/Off
	13	GND	-	-	GROUND
	14	24VIL	O	24 V DC	24 V DC power output to DRM-YCM
	15	DRMK_MT_DIR	O	0/5 V DC	DRM-K drive shift signal
	16	DRMK_MT_RDY	I	0/3.3 V DC	DRM-K ready signal
	17	DRMK_MT_CLK	O	0/5 V DC (pulse)	DRM-K clock signal
	18	DRMK_MT_REM	O	0/5 V DC	DRM-K: On/Off
	19	GND	-	-	GROUND
	20	24VIL	O	24 V DC	24 V DC power output to DRM-K

TONER
www.tonerplus.com.ua

Connector	Pin	Signal	I/O	Voltage	Description
YC4	1	DLPK_MT_DIR	O	0/5 V DC	DEVM-K drive shift signal
Connected to developer motor K, fuser motor	2	DLPK_MT_RDY	I	0/3.3 V DC	DEVM-K ready signal
	3	DLPK_MT_CLK	O	0/5 V DC (pulse)	DEVM-K clock signal
	4	DLPK_MT_REM	O	0/5 V DC	DEVM-K: On/Off
	5	GND	-	-	GROUND
	6	24VIL	O	24 V DC	24 V DC power output to DEVM-K
	7	FUSER_MT_DIR	O	0/5 V DC	FUM drive shift signal
	8	FUSER_MT_RDY	I	0/3.3 V DC	FUM ready signal
	9	FUSER_MT_CLK	O	0/5 V DC (pulse)	FUM clock signal
	10	FUSER_MT_REM	O	0/5 V DC	FUM: On/Off
	11	GND	-	-	GROUND
	12	24VIL	O	24 V DC	24 V DC power output to FUM
YC5	1	3.3V4	O	3.3 V DC	3.3 V DC power output to DUS
Connected to duplex sensor, MP paper sensor, feed sensor	2	GND	-	-	GROUND
	3	DUSW	I	0/3.3 V DC	DUS: On/Off
	4	GND	-	-	GROUND
	5	ROOP	-	-	FUPS: On/Off
	6	5V4	-	5 V DC	5 V DC power output to FUPS
	7	3.3V0	O	3.3 V DC	3.3 V DC power output to MPPS
	8	GND	-	-	GROUND
	9	MPF_SENSE	I	0/3.3 V DC	MPPS: On/Off
	10	3.3V4	O	3.3 V DC	3.3 V DC power output to FS
	11	GND	-	-	GROUND
	12	FEEDSW	I	0/3.3 V DC	FS: On/Off
YC6	1	SUB_SCL	O	3.3 V DC	Clock signal
Connected to sub PWB	2	SUB_SDA	I/O	3.3 V DC	Data signal
	3	GND	-	-	GROUND
	4	3.3V4	O	3.3 V DC	3.3 V DC power output to SPW

TONER
www.tonerplus.com.ua

Connector	Pin	Signal	I/O	Voltage	Description
YC7	1	RXD	I	3.3 V DC	Data input
Connected to IH PWB	2	TXD	O	3.3 V DC	Data output
	3	ROTATION	O	3.3 V DC	Rotation detection
	4	IH_REM	O	3.3 V DC	Heater remote
	5	3.3V4			
	6	GND			
YC8	1	24V4	O	24 V DC	24 V DC power output to TM-Y
Connected to toner motor Y/C/M/K	2	TNMYDRN	O	0/24 V DC	TM-Y: On/Off
	3	24V4	O	24 V DC	24 V DC power output to TM-C
	4	TNMCDRN	O	0/24 V DC	TM-C: On/Off
	5	24V4	O	24 V DC	24 V DC power output to TM-M
	6	TNMMDRN	O	0/24 V DC	TM-M: On/Off
	7	24V4	O	24 V DC	24 V DC power output to TM-K
	8	TNMKDRN	O	0/24 V DC	TM-K: On/Off
YC9	1	GND	-	-	GROUND
Connected to engine con-nect PWB	2	GND	-	-	GROUND
	3	GND	-	-	GROUND
	4	ID2S	I	Analog	IDS2 detection signal
	5	ID2P	I	Analog	IDS2 detection signal
	6	ID1S	I	Analog	IDS1 detection signal
	7	ID1P	I	Analog	IDS1 detection signal
	8	LEDREF2	O	Analog	IDS2 control signal
	9	LEDREF1	O	Analog	IDS1 control signal
	10	RESIST	I	0/3.3 V DC	RS: On/Off
	11	NC	-	-	Not used
	12	PAPWSIZE1	I	0/3.3 V DC	PWSW: On/Off
	13	PAPLSIZE1	I	0/3.3 V DC	PLSW: On/Off
	14	PAPLSIZE2	I	0/3.3 V DC	PLSW: On/Off
	15	PAPLSIZE3	I	0/3.3 V DC	PLSW: On/Off
	16	LMOTOCP	I	0/3.3 V DC	LM detection signal
	17	LMOTRE	O	0/3.3 V DC	LM: On/Off
	18	PAPEMP2	I	0/3.3 V DC	PS2: On/Off
	19	PAPEMP1	I	0/3.3 V DC	PS1: On/Off
	20	LIFTFULL	I	0/3.3 V DC	LS: On/Off
	21	FANBHALF	O	0/3.3 V DC	FM drive shift signal
	22	FANBFULL	O	0/3.3 V DC	FM: On/Off

TONER
www.tonerplus.com.ua

Connector	Pin	Signal	I/O	Voltage	Description
YC9	23	LIGHTSLEEPN	O	0/3.3 V DC	Sleep signal: On/Off
Connected to engine connect PWB	24	PFPAUSE	O	0/3.3 V DC	Paper feeder control signal
	25	PFSET	O	0/3.3 V DC	Paper feeder sleep return signal
	26	DFSET	O	0/3.3 V DC	Finisher set signal
	27	DFSEL	O	0/3.3 V DC	Finisher selection signal
	28	BRSEL	O	0/3.3 V DC	Bridge selection signal
	29	PFSEL	O	0/3.3 V DC	Paper feed selection signal
	30	EHRDY	I	0/3.3 V DC	Ready signal
	31	EHSO	O	0/3.3 V DC (pulse)	Serial communication data signal
	32	EHSI	I	0/3.3 V DC (pulse)	Serial communication data signal
	33	EHCLK	O	0/3.3 V DC (pulse)	Clock signal
	34	FANCHALF	O	0/3.3 V DC	FM drive shift signal
	35	FANCFULL	O	0/3.3 V DC	FM: On/Off
	36	NC	-	-	Not used
	37	ERASER_REM(K)	O	0/24 V DC	CL-K: On/Off
	38	DLP_TH	I	Analog	DEVTH detection voltege
	39	TCSENSE(K)	I	0/3.3 V DC	TS-K: On/Off
	40	TCSENSE(M)	I	0/3.3 V DC	TS-M: On/Off
	41	TCSENSE(C)	I	0/3.3 V DC	TS-C: On/Off
	42	ERASER_REM(COL)	O	0/3.3 V DC	CL-YCM: On/Off
	43	TCSENSE(Y)	I	0/3.3 V DC	TS-Y: On/Off
	44	GND	-	-	GROUND
	45	SDAC		0/3.3 V DC	Data
	46	GND	-	-	GROUND
	47	SCLC		0/3.3 V DC	Clock signal
	48	GND	-	-	GROUND
	49	SDAA		0/3.3 V DC	Data
	50	GND	-	-	GROUND
	51	SCLA		0/3.3 V DC	Clock signal
	52	GND	-	-	GROUND
	53	BLTHP2	I	0/3.3 V DC	BDS2: On/Off
	54	BLTHP1	I	0/3.3 V DC	BDS1: On/Off
	55	WTCFULLIN	I	Analog	WTDS detection voltage
	56	WTCFULLOUT	O	0/3.3 V DC	WTDS: On/Off

TONER
www.tonerplus.com.ua

Connector	Pin	Signal	I/O	Voltage	Description
YC9	57	IDCLHP	I	0/3.3 V DC	IDS: On/Off
Connected to engine con-nect PWB	58	3.3V0	O	3.3 V DC	3.3 V DC power output to ECPWB
	59	3.3V4	O	3.3 V DC	3.3 V DC power output to ECPWB
	60	3.3V4	O	3.3 V DC	3.3 V DC power output to ECPWB
YC10	1	IDMOTA	O	24 V DC	IDSM: On/Off
Connected to engine con-nect PWB	2	IDMOTB	O	24 V DC	IDSM: On/Off
	3	BLTREMA	O	24 V DC	TCBM: On/Off
	4	BLTREMB	O	24 V DC	TCBM: On/Off
YC11	1	3.3V4	O	3.3 V DC	3.3 V DC power output to RFPWB
Connected to RFID PWB	2	RFID_SCL	O	0/3.3 V DC (pulse)	RFPWB EEPROM clock signal
	3	RFID_SDA	I/O	0/3.3 V DC (pulse)	RFPWB EEPROM data signal
	4	GND	-	-	GROUND
YC12	B1	LSUMOTB	O	0/24 V DC	LSUCM: Forward/Stop (Forward)
Connected to LSU connect PWB	B2	LSUMOTA	O	0/24 V DC	LSUCM: Forward/Stop (Reverse)
	B3	MP(K)_REM	O	0/3.3 V DC	PM: On/Off
	B4	24V4	O	24 V DC	24 V DC power output to PM
	B5	MP(K)_RDY	I	0/3.3 V DC	PM ready signal
	B6	MP(M)_REM	O	0/3.3 V DC	PM: On/Off
	B7	MP(C)_REM	O	0/3.3 V DC	PM: On/Off
	B8	MP(C)_RDY	I	0/3.3 V DC	PM ready signal
	B9	VCONT(K)	O	Analog	APCPWB laser power standard voltage
	B10	MP(Y)_RDY	I	0/3.3 V DC	PM ready signal
	B11	VCONT(M)	O	Analog	APCPWB laser power standard voltage
	B12	LSU_TH(Y)	I	Analog	LSU thermistor signal
	B13	VCONT(Y)	O	Analog	APCPWB laser power standard voltage
	B14	GND	-	-	GROUND
	B15	VCONT(C)	O	Analog	APCPWB laser power standard voltage
	A1	3.3VIL	O	3.3 V DC	3.3 V DC power output to BDPWB
	A2	GND	-	-	GROUND
	A3	LSU_TH(K)	I	Analog	LSU thermistor signal
	A4	EN(K)	O	0/3.3 V DC	APCPWB laser enable signal
	A5	EN?COL)	O	0/3.3 V DC	APCPWB laser enable signal
	A6	MP(Y)_CLK	O	0/3.3 V DC (pulse)	PM clock signal
	A7	MP(Y)_REM	O	0/3.3 V DC	PM: On/Off

TONER
www.tonerplus.com.ua

Connector	Pin	Signal	I/O	Voltage	Description
YC12	A8	MP(C)_CLK	O	0/3.3 V DC (pulse)	PM clock signal
Connected to LSU connect PWB	A9	MP(M)_RDY	I	0/3.3 V DC	PM ready signal
	A10	MP(M)_CLK	O	0/3.3 V DC (pulse)	PM clock signal
	A11	MP(K)_CLK	O	0/3.3 V DC (pulse)	PM clock signal
	A12	GND	-	-	GROUND
	A13	24V4	O	24 V DC	24 V DC power output to PM
	A14	GND	-	-	GROUND
	A15	24V4	O	24 V DC	24 V DC power output to PM
YC13	1	GND	-	-	GROUND
Connected to high voltage PWB sub	2	T1KCNT	O	PWM	Primary transfer bias control voltage (Black)
	3	T1MCNT	O	PWM	Primary transfer bias control voltage (Magenta)
	4	CLCNT	O	PWM	Cleaning bias control signal
	5	HVREM	O	0/3.3 V DC (pulse)	Transfer bias remote signal
	6	T1YCNT	O	PWM	Primary transfer bias control voltage (Yellow)
	7	T1CCNT	O	PWM	Primary transfer bias control voltage (Cyan)
	8	24VIL	O	24 V DC	24 V DC power output to HVPWB-S
YC14	1	BRSET	I	0/3.3 V DC	BRDSW: On/Off
Connected to bridge detection switch	2	GND	-	-	GROUND
YC15	B1	GND	-	-	GROUND
Connected to high voltage PWB	B2	GND	-	-	GROUND
	B3	SCNT	O	PWM	Separation control signal
	B4	T2CNT	O	PWM	Secondary transfer bias control voltage
	B5	MISENS	I	Analog	Chager roller AC current signal
	B6	HVREM	O	0/3.3 V DC (pulse)	Developing bias remote signal
	B7	BKSCNT	O	PWM	Developing sleeve roller bias control voltage (Black)
	B8	BMMCNT	O	PWM	Developing magnet roller bias control voltage (Magenta)
	B9	BKMCNT	O	PWM	Developing magnet roller bias control voltage (Black)
	B10	BMSCNT	O	PWM	Developing sleeve roller bias control voltage (Magenta)

TONER
www.tonerplus.com.ua

Connector	Pin	Signal	I/O	Voltage	Description
YC15	B11	MKCNT	O	PWM	Chager roller control voltage (Black)
Connected to high voltage PWB	B12	MMCNT	O	PWM	Chager roller control voltage (Magenta)
	B13	BKBACCNT	O	PWM	Developing AC bias control voltage (Black)
	B14	HVCLKK	O	0/3.3 V DC (pulse)	Developing bias clock signal (Black)
	B15	HVCLKM	O	0/3.3 V DC (pulse)	Developing bias clock signal (Magenta)
	B16	24VIL	O	24 V DC	24 V DC power output to HVPWB
	B17	24VIL	O	24 V DC	24 V DC power output to HVPWB
	A1	CBACCNT	O	PWM	Developing AC bias control voltage (Cyan)
	A2	MBACCNT	O	PWM	Developing AC bias control voltage (Magenta)
	A3	MCCNT	O	PWM	Chager roller control voltage (Cyan)
	A4	HVCLKC	O	0/3.3 V DC (pulse)	Developing bias clock signal (Cyan)
	A5	BCSCNT	O	PWM	Developing sleeve roller bias control voltage (Cyan)
	A6	BYMCNT	O	PWM	Developing magnet roller bias control voltage (Yellow)
	A7	BCMCNT	O	PWM	Developing magnet roller bias control voltage (Cyan)
	A8	BYSCNT	O	PWM	Developing sleeve roller bias control voltage (Yellow)
	A9	MYCNT	O	PWM	Chager roller control voltage (Yellow)
	A10	YBACCNT	O	PWM	Developing AC bias control voltage (Yellow)
	A11	HVCLKY	O	0/3.3 V DC (pluse)	Developing bias clock signal (Yellow)
	A12	NC	-	-	Not used
	A13	NC	-	-	Not used
	A14	NC	-	-	Not used
	A15	NC	-	-	Not used
	A16	NC	-	-	Not used
	A17	NC	-	-	Not used

TONER
www.tonerplus.com.ua

Connector	Pin	Signal	I/O	Voltage	Description
YC17	1	SCANNER B1	O	0/24 V DC	ISUM drive controll signal
Connected to ISU motor, home position sensor, original detection switch, original size sensor	2	SCANNER A2	O	0/24 V DC	ISUM drive controll signal
	3	SCANNER B2	O	0/24 V DC	ISUM drive controll signal
	4	SCANNER A1	O	0/24 V DC	ISUM drive controll signal
	5	3.3V4	O	3.3 V DC	3.3 V DC power output to HPS
	6	GND	-	-	GROUND
	7	SCA_HP	I	0/3.3 V DC	HPS: On/Off
	8	3.3V4	O	3.3 V DC	3.3 V DC power output to ODSW
	9	GND	-	-	GROUND
	10	SCA_COVER	I	0/3.3 V DC	ODSW: On/Off
	11	GND	-	-	GROUND
	12	SCA_SIZE	I	0/3.3 V DC	OSS: On/Off
	13	5V4	O	5 V DC	5 V DC power output to OSS
YC18	1	GND	-	-	GROUND
Connected to document processor	2	GND	-	-	GROUND
	3	24V4	O	24 V DC	24 V DC power output to DP
	4	24V4	O	24 V DC	24 V DC power output to DP
	5	DP_CLK	O	0/3.3 V DC (pulse)	DP clock signal
	6	DP_SO	O	0/3.3 V DC (pulse)	Serial communication data signal
	7	DP_SEL	O	0/3.3 V DC	DP select signal
	8	DP_SI	I	0/3.3 V DC (pulse)	Serial communication data signal
	9	DP_RDY	I	0/3.3 V DC	DP ready signal
	10	DP_TMG	I	0/3.3 V DC	DPTS: On/Off
	11	DP_OPEN	I	0/3.3 V DC	DPOCS: On/Off
YC19	1	GND	-	-	GROUND
Connected to IH PWB	2	RELAY	O	3.3 V DC	Relay remote
	3	24V4	O	24 V DC	24 V DC power output to IHPWB
YC20	1	EJE_SOL_RETURN	O	0/24 V DC	FSSOL: On/Off
Connected to shift solenoid, eject motor, paper full sensor, job paper full sensor	2	24V4	O	24 V DC	24 V DC power output to FSSOL
	3	EJECT_/B	O	0/24 V DC (pluse)	EM drive control signal
	4	EJECT_/A	O	0/24 V DC (pluse)	EM drive control signal
	5	EJECT_B	O	0/24 V DC (pluse)	EM drive control signal
	6	EJECT_A	O	0/24 V DC (pluse)	EM drive control signal
	7	3.3V4	O	3.3 V DC	3.3 V DC power output to PFS
	8	GND	-	-	GROUND

TONER www.tonerplus.com.ua

Connector	Pin	Signal	I/O	Voltage	Description
YC20	9	EJE_FULL_UP	I	0/3.3 V DC	PFS: On/Off
Connected to shift solenoid, eject motor, paper full sensor, job paper full sensor	10	3.3V4	O	3.3 V DC	3.3 V DC power output to JEPS
	11	GND	-	-	GROUND
	12	EJE_FULL_DWN	I	0/3.3 V DC	JEPS: On/Off
YC21	1	IH_FAN2_REM	O	0/24 V DC	IHCFM: On/Off
Connected to IH coil fan motor, developer fan motor, container fan motor	2	GND	-	-	GROUND
	3	IH_FAN2_ALM	I	0/3.3 V DC	IHCFM alarm signal
	4	DLP_FAN_REM	O	0/24 V DC	DEVFM: On/Off
	5	GND	-	-	GROUND
	6	CON_FAN_REM	O	0/24 V DC	TCFM: On/Off
	7	GND	-	-	GROUND
YC22	1	FUSREMA	O	0/24 V DC	PRM: On/Off
Connected to thermistor1, thermistor2, eject sensor, fuser press release motor	2	FUSREMB	O	24 V DC	3.3 V DC power output to PRM
	3	3.3V4	O	3.3 V DC	3.3 V DC power output to ES
	4	GND	-	-	GROUND
	5	FUSER_JAM	I	0/3.3 V DC	ES: On/Off
	6	3.3V4	-	-	Not used
	7	GND	-	-	Not used
	8	FUSER_PRE	-	-	Not used
	9	SUBSDA	I/O	3.3 V DC	Data
	10	SUBSCL	O	3.3 V DC	Clock
	11	PR_TH	I	Analog	FTH detection voltage (Press roller)
	12	HR_NCTH1	I	Analog	FTH detection voltage (Center)
	13	HR_NCTH2	I	Analog	FTH detection voltage (Center)
	14	3.3V4	O	3.3 V DC	3.3 V DC power output to FTH
	15	EG_TH	I	Analog	FTH detection voltage (Edge)
	16	GND	-	-	GROUND
	17	ROTATION	I	3.3 V DC	Rotation detection

TONER
www.tonerplus.com.ua

Connector	Pin	Signal	I/O	Voltage	Description
YC24	1	IH_FAN1_REM	O	0/24 V DC	IHFM: On/Off
Connected to IH fan motor	2	GND	-	-	GROUND
	3	IH_FAN1_ALM	I	0/3.3 V DC	IHFM alarm signal
YC25	1	24VIL2	I	24 V DC	24 V DC power input from RCSW
Connected to right cover switch, front cover switch	2	24VIL1	O	24 V DC	24 V DC power output to RCSW
	3	24VIL1	O	24 V DC	24 V DC power output to FCSW
	4	24V4	I	24 V DC	24 V DC power input from FCSW
	5	3.3V0	O	3.3 V DC	3.3 V DC power output to FCSW
YC26	1	BDY	O	0/3.3 V DC (pulse)	Horizontal synchronizing signal (Yellow)
Connected to main PWB	2	BDC	O	0/3.3 V DC (pulse)	Horizontal synchronizing signal (Cyan)
	3	BDM	O	0/3.3 V DC (pulse)	Horizontal synchronizing signal (Magenta)
	4	BDBK	O	0/3.3 V DC (pulse)	Horizontal synchronizing signal (Black)
	5	NC	-	-	Not used
	6	EME_IRN	O	0/3.3 V DC	Interruption signal
	7	EME_DIR	O	0/3.3 V DC	Communication direction change signal
	8	EME_BSY	O	0/3.3 V DC	Busy signal
	9	EME_SO	I	0/3.3 V DC (pulse)	Serial communication data signal input
	10	EME_SI	O	0/3.3 V DC (pulse)	Serial communication data signal output
	11	EME_CLK	I	0/3.3 V DC (pulse)	Clock signal
	12	PAGEST	O	0/3.3 V DC	Sub-scanning standard signal
	13	OVSYNCMON	I	0/3.3 V DC	Sub-scanning monitor signal
	14	PVSYNC	O	0/3.3 V DC (pulse)	Vertical synchronizing signal
	15	AQUA_RDY	I	0/3.3 V DC	Ready signal
	16	AQUA_SEL	O	0/3.3 V DC	Select signal
	17	AQUA_SO	I	0/3.3 V DC (pulse)	Serial communication data signal input
	18	AQUA_SI	O	0/3.3 V DC (pulse)	Serial communication data signal output
	19	AQUA_CLK	O	0/3.3 V DC (pulse)	Clock signal
	20	HYP_INT	I	0/3.3 V DC	Interruption signal
	21	HYP_SDA	O	0/3.3 V DC (pulse)	Data signal
	22	HYP_SCL	O	0/3.3 V DC (pulse)	Clock signal
	23	GND	-	-	GROUND
	24	GND	-	-	GROUND
	25	GND	-	-	GROUND
	26	GND	-	-	GROUND

TONER
www.tonerplus.com.ua

Connector	Pin	Signal	I/O	Voltage	Description
YC26	27	GND	-	-	GROUND
Connected to main PWB	28	24VDOWN	I	24 V DC	24 V DC down signal
	29	3.3V4	O	0/3.3 V DC	3.3 V DC power output to MPWB
	30	3.3V4	O	0/3.3 V DC	3.3 V DC power output to MPWB
	31	3.3V0	O	0/3.3 V DC	3.3 V DC power output to MPWB
	32	5V4	O	5 V DC	5 V DC power output to MPWB
	33	24V4	O	24 V DC	24 V DC power output to MPWB
	34	24V4	O	24 V DC	24 V DC power output to MPWB
	35	LIGHT_SLEEPN	I	0/3.3 V DC	Light sleep shift signal
	36	SCAN_HLD	I	0/3.3 V DC	Scan hold signal
	37	ENG_HLD	I	0/3.3 V DC	Engine hold signal
	38	SLEEPOFF	O	0/3.3 V DC	Sleep return signal
YC28	1	FUSER_FAN_REM	O	0/24 V DC	FUFM1: On/Off
Connected to fuser fan motor	2	GND	-	-	GROUND
	3	FUSER_FAN_REM	O	0/24 V DC	FUFM2: On/Off
	4	GND	-	-	GROUND
YC29	1	GND	-	-	GROUND
Connected to temperature sensor	2	TMPDATA	I	Analog	TEMS detection voltage (Temperature)
	3	WETCLK0	O	0/3.3 V DC (pulse)	TEMS clock signal
	4	WETCLK1	O	0/3.3 V DC (pulse)	TEMS clock signal
	5	HUMDATA	I	Analog	TEMS detection voltage (Humidity)

TONER
www.tonerplus.com.ua

2-3-3 Power source PWB

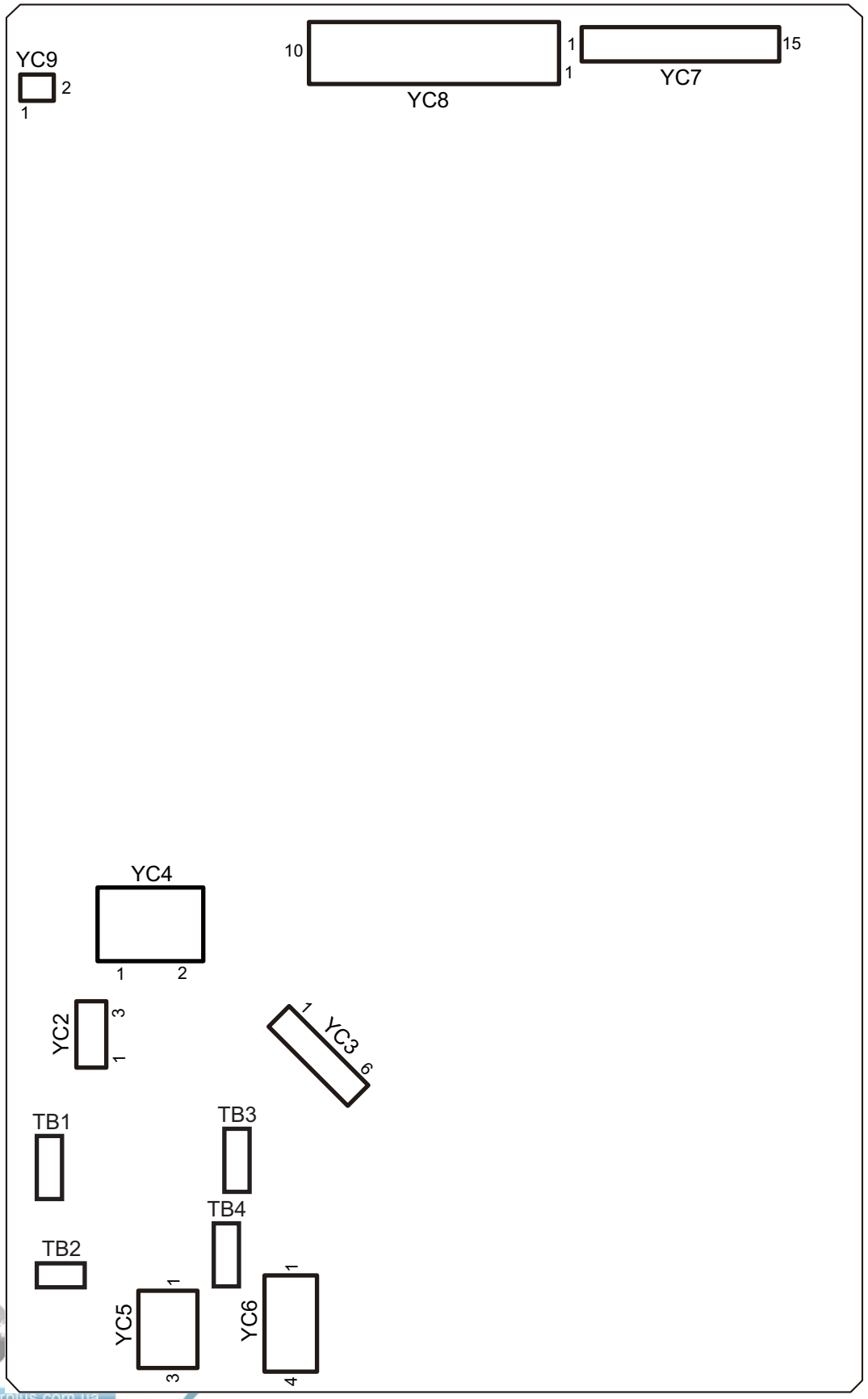

www.tonerplus.com.ua

Figure 2-3-3 Main PWB silk-screen diagram

Connector	Pin	Signal	I/O	Voltage	Description
TB	TB1	LIVE	I	100 V AC	AC power input
Connected to AC inlet, main switch	TB2	NEUTRAL	I	100 V AC	AC power input
	TB3	LIVE(SW)	O	100 V AC	AC power output to MSW
	TB4	LIVE(SW)	I	100 V AC	AC power input from MSW
YC2	1	CH_SW IN	O	100 V AC	AC power output to CHSW
Connected to cassette heater switch	2	NC	-	-	Not used
	3	CH_SW OUT	I	100 V AC	AC power input from CHSW
YC3	1	LIVE	O	100 V AC	AC power output to PFCH
Connected to paper feeder, cassette heater	2	LIVE	O	100 V AC	AC power output to CH
	3	NC	-	-	Not used
	4	NC	-	-	Not used
	5	NEUTRAL	O	100 V AC	AC power output to PFCH
	6	NEUTRAL	O	100 V AC	AC power output to CH
YC4	1	LIVE	O	100 V AC	AC power output to IHPWB
Connected to IH PWB	2	NEUTRAL	O	100 V AC	AC power output to IHPWB
YC5	1	LIVE	O	100 V AC	AC power output to PSPWB-S
Connected to power source PWB sub	2	NC	-	-	Not used
	3	NEUTRAL	O	100 V AC	AC power output to PSPWB-S
YC6	1	LIVE	O	100 V AC	Option AC power output
Connected to AC outlet	2	NC	-	-	Not used
	3	NC	-	-	Not used
	4	NEUTRAL	O	100 V AC	Option AC power output

TONER
www.tonerplus.com.ua

Connector	Pin	Signal	I/O	Voltage	Description
YC7	1	+5V2	O	5 V DC	5 V DC power output to MPWB
Connected to main PWB	2	+5V2	O	5 V DC	5 V DC power output to MPWB
	3	+5V2	O	5 V DC	5 V DC power output to MPWB
	4	+5V2	O	5 V DC	5 V DC power output to MPWB
	5	+5V2	O	5 V DC	5 V DC power output to MPWB
	6	+5V2	O	5 V DC	5 V DC power output to MPWB
	7	+5V2	O	5 V DC	5 V DC power output to MPWB
	8	GND	-	-	GROUND
	9	GND	-	-	GROUND
	10	GND	-	-	GROUND
	11	GND	-	-	GROUND
	12	GND	-	-	GROUND
	13	GND	-	-	GROUND
	14	GND	-	-	GROUND
	15	SLEEP1	I	0/3.3 V DC	Sleep 1 control signal: On/Off
YC8	1	+24V2	O	24 V DC	24 V DC power output to ECPWB
Connected to engine PWB, engine connect PWB	2	+24V2	O	24 V DC	24 V DC power output to ECPWB
	3	GND	-	-	GROUND
	4	GND	-	-	GROUND
	5	GND	-	-	GROUND
	6	GND	-	-	GROUND
	7	GND	-	-	GROUND
	8	+24V2	O	24 V DC	24 V DC power output to EPWB
	9	+24V2	O	24 V DC	24 V DC power output to EPWB
	10	+24V2	O	24 V DC	24 V DC power output to EPWB
YC9	1	NC	-	-	Not used
Connected to engine connect PWB	2	SLEEP2	I	0/3.3 V DC	Sleep 2 control signal: On/Off

TONER
www.tonerplus.com.ua

2-3-4 IH PWB

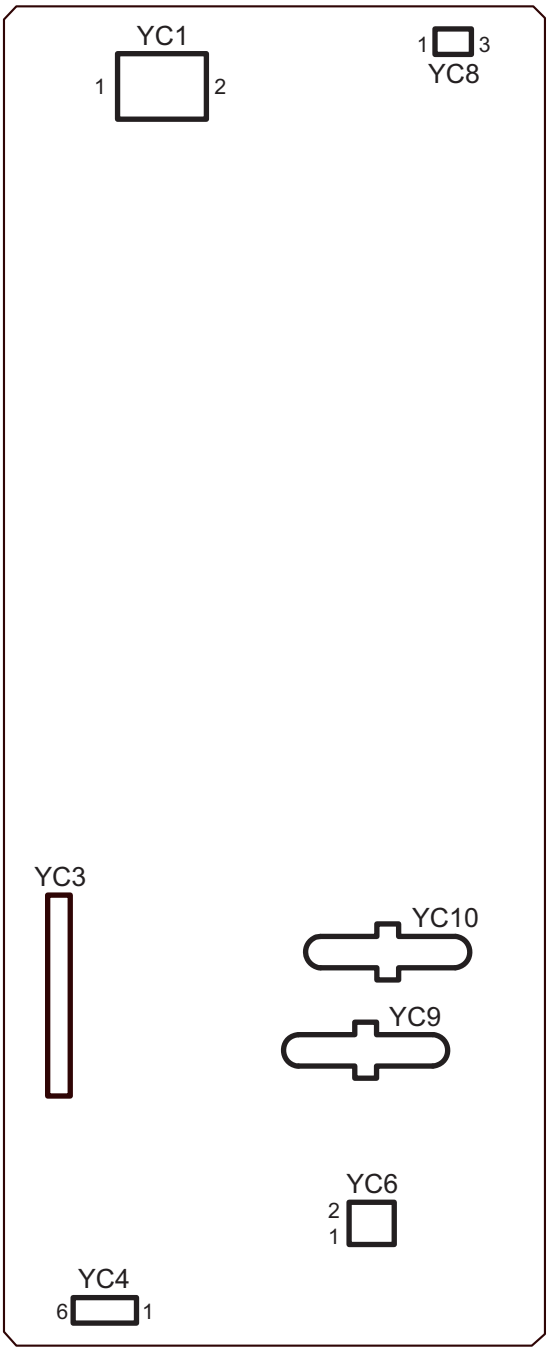

Figure 2-3-4 IH PWB silk-screen diagram

TONER
www.tonerplus.com.ua

Connector	Pin	Signal	I/O	Voltage	Description
YC1	1	IH_NEUTRAL	I	220 V AC	AC power input
Connected to power source PWB	2	IH_LIVE	I	220 V AC	AC power input
YC3	1	TH2	-	Analog	Low side IGBT case temperature
Connected to IH control PWB	2	TH1	-	Analog	High side IGBT case temperature
	3	AC_CURRENT	-	Analog	AC input current
	4	AC_VOLTAGE	-	Analog	AC input voltage
	5	OUT_CURRENT	-	Analog	Output current
	6	IH_REM	-	0/5 V DC	IH: On/off
	7	ROTATION	-	0/5 V DC	TCBM control signal
	8	RXD	-	0/5 V DC (pulse)	Serial communication data signal input
	9	TXD	-	0/5 V DC (pulse)	Serial communication data signal output
	10	S1	-	0/5 V DC	For soft distinction
	11	IGBT1	-	0/5 V DC	gate output
	12	IGBT2	-	0/5 V DC	gate output
	13	S2	-	0/5 V DC	For soft distinction
	14	ERROR	-	0/5 V DC	Error signal
	15	5V	-	5 V DC	5 V DC power output to IHCPWB
	16	GND	-	-	Ground
YC4	1	SGND	-	-	Ground
Connected to engine PWB	2	3.3V4	I	3.3 V DC	3.3 V DC power input from EPWB
	3	IH_REM	I	0/3.3 V DC	IH: On/off
	4	ROTATION	I	0/3.3 V DC	TCBM control signal
	5	RXD	I	0/3.3 V DC (pulse)	Serial communication data signal input
	6	TXD	O	0/3.3 V DC (pulse)	Serial communication data signal output
YC6	1	+15V-1	O	15 V DC	Control power supply
Connected to thermostat	2	+15V-2	I	15 V DC	Gate drive power supply
YC8	1	24VIL	I	24 V DC	24 V DC power input from EPWB
Connected to engine PWB	2	RELAY	I	0/3.3 V DC	RSW: On/Off
	3	PGND	-	-	Ground

TONER
www.tonerplus.com.ua

Connector	Pin	Signal	I/O	Voltage	Description
YC9 Connected to IH coil	1	IH_OUT1	O	390 V DC	Resonance circuit output
YC10 Connected to IH coil	1	IH_OUT2	O	1000 V DC	Resonance circuit output

CAUTION: Connectors YC1, YC3, YC6, YC9 and YC10 are not grounded, therefore, use caution not to damage the connectors during measurement of voltages.

TONER
www.tonerplus.com.ua

2-3-5 Operation panel PWB main

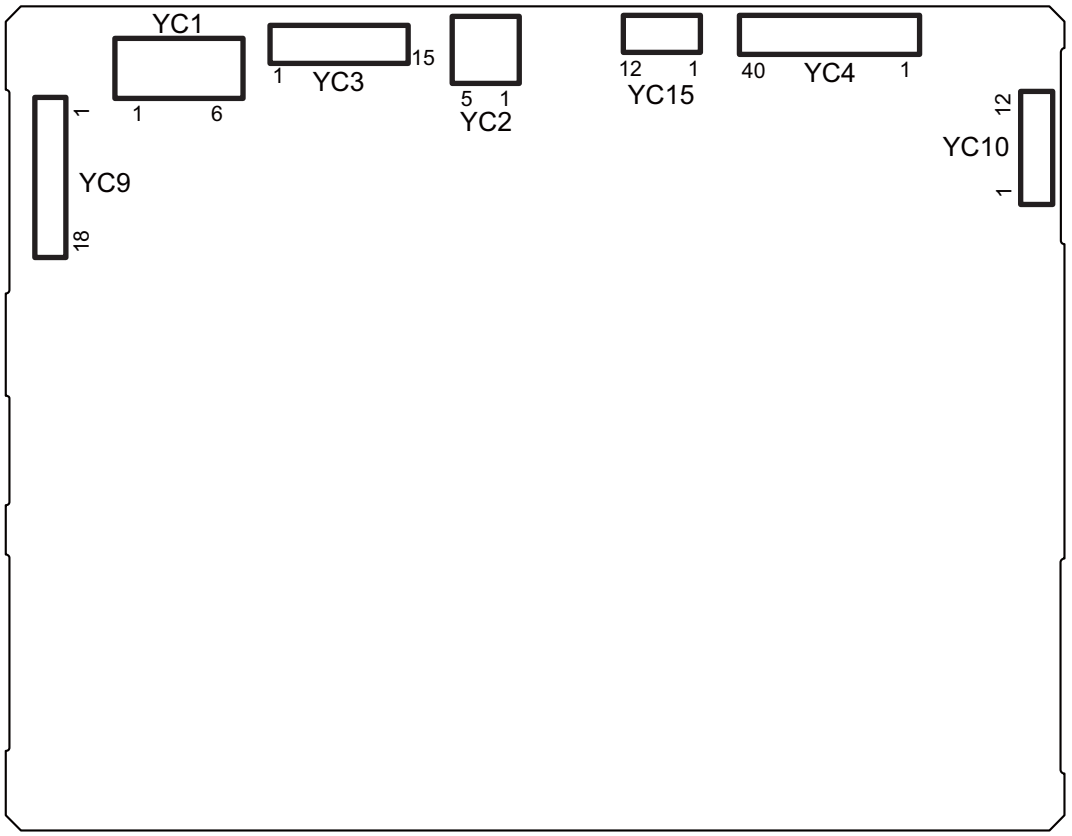

Figure 2-3-5 Operation panel PWB main silk-screen diagram

TONER
www.tonerplus.com.ua

Connector	Pin	Signal	I/O	Voltage	Description
YC1	1	5V2	I	5 V DC	5 V DC power intput from MPWB
Connected to main PWB	2	5V2	I	5 V DC	5 V DC power input from MPWB
	3	GND	-	-	Ground
	4	GND	-	-	Ground
YC2	1	VBUS	I	5 V DC	5 V DC power input
Connected to main PWB	2	DN	I/O	LVDS	USB data signal
	3	DP	I/O	LVDS	USB data signal
	4	ID	-	-	Not used
	5	GND	-	-	Ground
YC3	1	GND	-	-	Ground
Connected to main PWB	2	SECOND_TRAY_S	I	0/3.3 V DC	JEPS: On/Off
	3	BEEP_POWERON	I	0/3.3 V DC	Sleep return signal 0
	4	ENERGY_SAVE	I	0/3.3 V DC	Energy save signal
	5	SUSPEND_Power	I	3.3V DC	3.3 V DC power input from MPWB
	6	LED_MEMORY	I	0/3.3 V DC	Memory LED control signal
	7	LED_ATTENTION	I	0/3.3 V DC	Attention LED control signal
	8	LED_PROCESSING	I	0/3.3 V DC	Processing LED control signal
	9	SHUTDOWN	I	0/3.3 V DC	24 V down signal
	10	LIGHTOFF_POWER	I	0/3.3 V DC	Sleep return signal 1
	11	AUDIO	I	Analog	Voice output signal
	12	PANEL_RESET	I	0/3.3 V DC	Reset signal
	13	INT_POWERKEY	O	0/3.3 V DC	Power key: On/Off
	14	PANEL_STATUS	O	0/3.3 V DC	Operation panel status signal
	15	GND	-	-	Ground

TONER
www.tonerplus.com.ua

Connector	Pin	Signal	I/O	Voltage	Description
YC4	1	GND	-	-	Ground
Connected to LCD relay PWB	2	GND	-	-	Ground
	3	CK	O	0/3.3 V DC(pulse)	Clock signal
	4	GND	-	-	Ground
	5	GND	-	-	Ground
	6	SC	O	0/3.3 V DC	LCD Control signal
	7	R0	O	0/3.3 V DC	LCD Control signal
	8	R1	O	0/3.3 V DC	LCD Control signal
	9	R2	O	0/3.3 V DC	LCD Control signal
	10	GND	-	-	Ground
	11	R3	O	0/3.3 V DC	LCD Control signal
	12	R4	O	0/3.3 V DC	LCD Control signal
	13	R5	O	0/3.3 V DC	LCD Control signal
	14	GND	-	-	Ground
	15	G1	O	0/3.3 V DC	LCD Control signal
	16	G1	O	0/3.3 V DC	LCD Control signal
	17	G2	O	0/3.3 V DC	LCD Control signal
	18	GND	-	-	Ground
	19	G3	O	0/3.3 V DC	LCD Control signal
	20	G4	O	0/3.3 V DC	LCD Control signal
	21	G5	O	0/3.3 V DC	LCD Control signal
	22	GND	-	-	Ground
	23	B0	O	0/3.3 V DC	LCD Control signal
	24	B1	O	0/3.3 V DC	LCD Control signal
	25	B2	O	0/3.3 V DC	LCD Control signal
	26	GND	-	-	Ground
	27	B3	O	0/3.3 V DC	LCD Control signal
	28	B4	O	0/3.3 V DC	LCD Control signal
	29	B5	O	0/3.3 V DC	LCD Control signal
	30	GND	-	-	Ground
	31	H_SYNC	O	0/3.3 V DC(pulse)	Horizontal synchronizing signal
	32	GND	-	-	Ground
	33	V_SYNC	O	0/3.3 V DC(pulse)	Vertical synchronizing signal
	34	GND	-	-	Ground
	35	ENB	O	0/3.3 V DC	LCD enable signal
	36	CM	O	0/3.3 V DC	LCD mode switch signal
	37	3.3V	O	3.3V DC	3.3 V DC power output to LCDRPWB

TONER
www.tonerplus.com.ua

Connector	Pin	Signal	I/O	Voltage	Description
YC4	38	3.3V	O	3.3 V DC	3.3 V DC power output to LCDRPWB
Connected to LCD relay PWB	39	3.3V	O	3.3 V DC	3.3 V DC power output to LCDRPWB
	40	3.3V	O	3.3 V DC	3.3 V DC power output to LCDRPWB
YC9	1	A_LED	O	0/3.3 V DC	Memory LED control signal
Connected to operation panel PWB left	2	M_LED	O	0/3.3 V DC	Attention LED control signal
	3	P_LED	O	0/3.3 V DC	Processing LED control signal
	4	KEY4	I	0/3.3 V DC(pulse)	Operation panel key scan return signal 4
	5	INT_POWER KEY_N	O	0/5 V DC	Power key: On/Off
	6	KEY3	I	0/3.3 V DC(pulse)	Operation panel key scan return signal 3
	7	KEY2	I	0/3.3 V DC(pulse)	Operation panel key scan return signal 2
	8	KEY1	I	0/3.3 V DC(pulse)	Operation panel key scan return signal 1
	9	LED1	O	0/3.3 V DC(pulse)	Operation panel LED display drive signal 1
	10	3.3V0	O	3.3V DC	3.3 V DC power output to OPPWB-L
	11	LED0	O	0/3.3 V DC(pulse)	Operation panel LED display drive signal 0
	12	KEY0	I	0/3.3 V DC(pulse)	Operation panel key scan return signal 0
	13	SCAN4	O	0/3.3 V DC(pulse)	Scan signal 4
	14	SCAN3	O	0/3.3 V DC(pulse)	Scan signal 3
	15	SCAN2	O	0/3.3 V DC(pulse)	Scan signal 2
	16	SCAN1	O	0/3.3 V DC(pulse)	Scan signal 1
	17	SCAN0	O	0/3.3 V DC(pulse)	Scan signal 0
	18	GND	-	-	Ground

TONER
www.tonerplus.com.ua

Connector	Pin	Signal	I/O	Voltage	Description
YC10	1	S_LED	O	0/3.3 V DC	Memory LED control signal
Connected to operation panel PWB right	2	LED4	O	0/3.3 V DC(pulse)	Operation panel LED display drive signal 4
	3	LED2	O	0/3.3 V DC(pulse)	Operation panel LED display drive signal 2
	4	KEY5	I	0/3.3 V DC(pulse)	Operation panel key scan return signal 5
	5	SCAN3	O	0/3.3 V DC(pulse)	Scan signal 3
	6	SCAN2	O	0/3.3 V DC(pulse)	Scan signal 2
	7	SCAN1	O	0/3.3 V DC(pulse)	Scan signal 1
	8	KEY7	I	0/3.3 V DC(pulse)	Operation panel key scan return signal 7
	9	LED3	O	0/3.3 V DC(pulse)	Operation panel LED display drive signal 3
	10	KEY6	I	0/3.3 V DC(pulse)	Operation panel key scan return signal 6
	11	SCAN0	O	0/3.3 V DC(pulse)	Scan signal 0
	12	GND	-	-	Ground
YC15	1	GND	-	-	Ground
Connected to LCD relay PWB	2	SCK	O	0/3.3 V DC(pulse)	Clock signal
	3	SDI	O	0/3.3 V DC(pulse)	Serial communication data signal
	4	SPC_CS1N	O	0/3.3 V DC	LCD control signal
	5	SHUT	O	0/3.3 V DC	LCD control signal
	6	LCD_RESB	O	0/3.3 V DC	LCD control signal
	7	Y1(T)	I	Analog	Touch panel Y+Positional signal
	8	X2(L)	I	Analog	Touch panel X+Positional signal
	9	Y2(B)	I	Analog	Touch panel Y-Positional signal
	10	X1(R)	I	Analog	Touch panel X-Positional signal
	11	LED_A(+)	O	0/3.3 V DC	LED control signal
	12	LED_C(-)	I	0/3.3 V DC	LED control signal

TONER
www.tonerplus.com.ua

2-3-6 DP main PWB

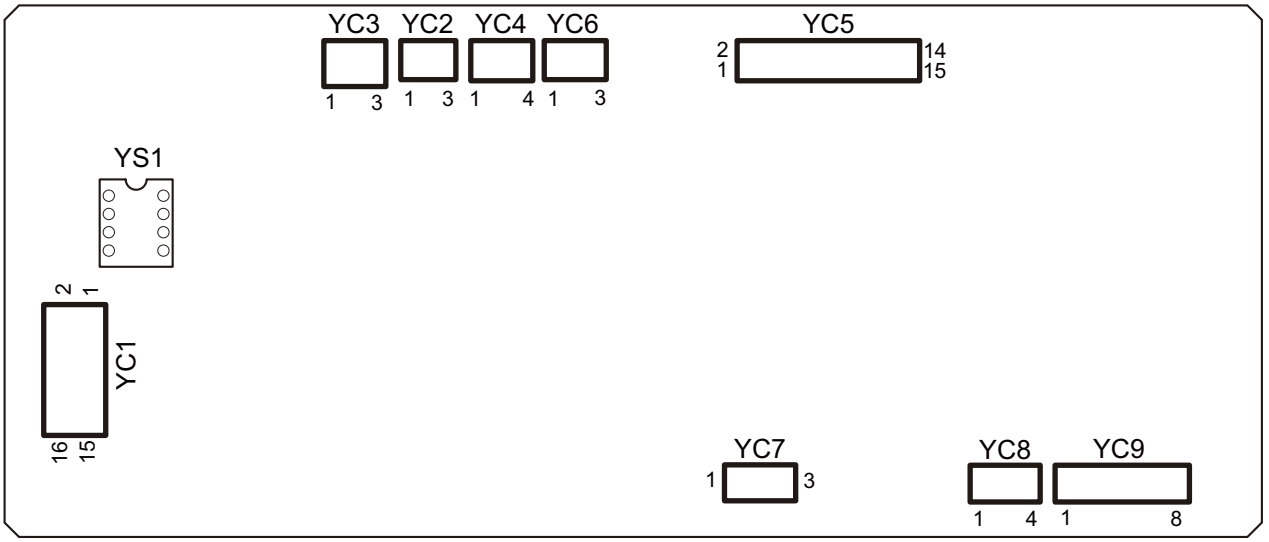

Figure 2-3-6 DP main PWB silk-screen diagram

TONER
www.tonerplus.com.ua

Connector	Pin	Signal	I/O	Voltage	Description
YC1	1	FG	-	-	Ground
Connected to engine PWB	2	ENG_TMG	O	0/3.3 V DC	DPTS: On/Off
	3	ENG_RDY	O	0/3.3 V DC	Ready signal
	4	ENG_SEL	I	0/3.3 V DC	Select signal
	5	ENG_CLK	I	0/3.3 V DC(pulse)	Clock signal
	6	ENG_SI	I	0/3.3 V DC(pulse)	Serial communication data signal
	7	ENG_SO	O	0/3.3 V DC(pulse)	Serial communication data signal
	8	ENG_OPEN	O	0/3.3 V DC	DPOCS: On/Off
	9	NC	-	-	Not used
	10	GND	-	-	Ground
	11	GND	-	-	Ground
	12	GND	-	-	Ground
	13	NC	-	-	Not used
	14	+24V	O	24 V DC	24 V DC power input from EPWB
	15	+24V	O	24 V DC	24 V DC power input from EPWB
	16	+24V	O	24 V DC	24 V DC power input from EPWB
YC2	1	ANODE	O	3.3 V DC	3.3 V DC power output to DPOLS
Connected to DP original size length sensor	2	GND	-	-	Ground
	3	LS_SW	I	0/3.3 V DC	DPOLS: On/Off
YC3	1	ANODE	O	3.3 V DC	3.3 V DC power output to DPOS
Connected to DP original sensor	2	GND	-	-	Ground
	3	SET_SW	I	0/3.3 V DC	DPOS: On/Off
YC4	1	WID1	I	0/3.3 V DC	DPOWS: On/Off
Connected to DP original size width sensor	2	GND	-	-	Ground
	3	WID2	I	0/3.3 V DC	DPOWS: On/Off
	4	WID3	I	0/3.3 V DC	DPOWS: On/Off

TONER
www.tonerplus.com.ua

Connector	Pin	Signal	I/O	Voltage	Description
YC5	1	ANODE	O	3.3 V DC	3.3 V DC power output to DPPFS
Connected to DP paper feed sensor,DP registration sensor,DP open/close sensor,DP switchback sensor and DP timing sensor	2	GND	-	-	Ground
	3	FEED SW	I	0/3.3 V DC	DPPFS: On/Off
	4	ANODE	O	3.3 V DC	3.3 V DC power output to DPRS
	5	GND	-	-	Ground
	6	REGIST_SW	I	0/3.3 V DC	DPRS: On/Off
	7	ANODE	O	3.3 V DC	3.3 V DC power output to DPOCS
	8	GND	-	-	Ground
	9	DP_OPENSW	I	0/3.3 V DC	DPOCS: On/Off
	10	ANODE	O	3.3 V DC	3.3 V DC power output to DPSBS
	11	GND	-	-	Ground
	12	HP_SW	I	0/3.3 V DC	DPSBS: On/Off
	13	ANODE	O	3.3 V DC	3.3 V DC power output to DPTS
	14	GND	-	-	Ground
	15	TMG_SW	I	0/3.3 V DC	DPTS: On/Off
YC6	1	NC	-	-	Not used
Connected to DP LED PWB	2	GND	-	-	Ground
	3	LED_REM	O	0/3.3 V DC	LED control signal
YC7	1	+24V	O	24 V DC	24 V DC power output to DPILSW
Connected to DP interlock switch	2	GND	-	-	Ground
	3	+R24V	I	24 V DC	24 V DC power input from DPILSW
YC8	1	FEED_CL	O	0/24 V DC	DPPFCL: On/Off
Connected to DP paper feed clutch and DP registration clutch	2	+R24V	O	24 V DC	24 V DC power output to DPPFCL
	3	REGIST_CL	O	0/24 V DC	DPRCL: On/Off
	4	+R24V	O	24 V DC	24 V DC power output to DPRCL
YC9	1	CNVY_-BN	O	0/24 V DC(pulse)	DPPFM drive control signal
Connected to DP paper feed motor and DP switchback motor	2	CNVY_-AN	O	0/24 V DC(pulse)	DPPFM drive control signal
	3	CNVY_+A	O	0/24 V DC(pulse)	DPPFM drive control signal
	4	CNVY_+B	O	0/24 V DC(pulse)	DPPFM drive control signal
	5	JNC_-BN	O	0/24 V DC(pulse)	DPSBM drive control signal
	6	JNC_-AN	O	0/24 V DC(pulse)	DPSBM drive control signal
	7	JNC_+A	O	0/24 V DC(pulse)	DPSBM drive control signal
	8	JNC_+B	O	0/24 V DC(pulse)	DPSBM drive control signal

TONER
www.tonerplus.com.ua

This page is intentionally left blank.

TONER+
www.tonerplus.com.ua

2-4-1 Appendixes

(1) Maintenance kits

Maintenance part name		Parts No.	Alternative part No.
Name used in service	**Name used in parts list**		
MK-896A/MAINTENANCE KIT (200,000 sheets)	MK-896A/MAINTENANCE KIT	1702MY0UN0	072MY0U0
Transfer roller unit	HOLDER TRANSFER ASSY	-	-
Drum unit	DRUM UNIT MK	-	-
Developer unit K	DLP UNIT BK MK	-	-
Intermediate transfer unit	IMAGE UNIT MK	-	-
Fuser unit	FUSER UNIT MK	-	-
Primary feed unit	PRIMARY FEED ASS'Y	-	-
MP separation pad	PAD SEPARATION ASSY SP	-	-
MP paper feed roller	ROLLER MPF ASSY SP	-	-
MK-896B/MAINTENANCE KIT (200,000 sheets)	MK-896B/MAINTENANCE KIT	1702K00UN2	072K00U2
Drum unit	DRUM UNIT	-	-
Developer unit C	DLP UNIT C	-	-
Developer unit M	DLP UNIT M	-	-
Developer unit Y	DLP UNIT Y	-	-
MK-470/MAINTENANCE KIT (150,000 sheets)	MK-470/MAINTENANCE KIT	1703M80UN0	073M80UN
DP paper feed roller	PAPER FEED ASSY SP	-	-
DP separation pullay cover	GUIDE RETARD ASSY SP	-	-
DP separation pullay	HOLDER RETARD ASSY SP	-	-

TONER+ www.tonerplus.com.ua

(2) Repetitive defects gauge

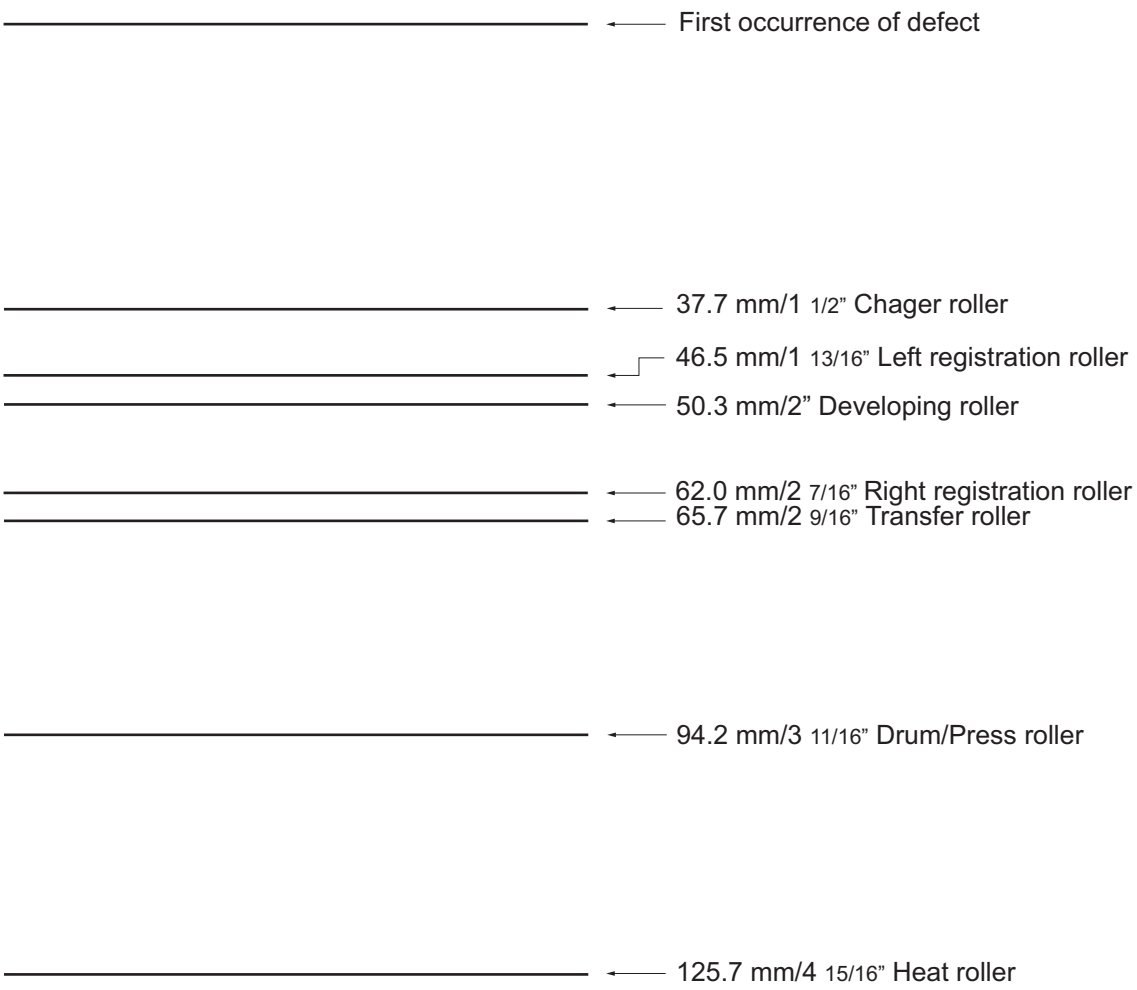

TONER+
www.tonerplus.com.ua

(3) Firmware environment commands

The printer maintains a number of printing parameters in its memory. These parameters may be changed permanently with the FRPO (Firmware RePrOgram) commands.
This section provides information on how to use the FRPO command and its parameters using examples.

Using FRPO commands for reprogramming the firmware

The current settings of the FRPO parameters are listed as the optional values on the service status page.

Note: Before changing any FRPO parameters, print out a service status page, so you will know the parameter values before the changes are made. To return FRPO parameters to their factory default values, send the FRPO INIT (FRPO-INITialize) command.(!R! FRPO INIT; EXIT;)

The FRPO command is sent to the printer in the following sequence:
!R! FRPO parameter, value; EXIT;
Example: Changing emulation mode to PC-PR201/65A
!R! FRPO P1, 11; EXIT;

FRPO parameters

Item	FRPO	Setting values	Factory setting
Default pattern resolution	B8	0: 300 dpi 1: 600 dpi	0
Copy count	C0	Number of copies to print:1-999	1
Page orientation	C1	0: Portrait 1: Landscape	0
Default font No. *	C2 C3 C5	Middle two digits of power-up font Last two digits of power-up font First two digits of power-up font	0 0 0
PCL font switch	C8	0:HP compatibility mode (Characters higher than 127 are not printed.) 32:Conventional mode (Characters higher than 127 are printed. Supported symbol sets: ISO-60 Norway [00D], ISO-15 Italian [00I], ISO-11 Sweden [00S], ISO-6 ASCII [00U], ISO-4 U.K. [01E], ISO-69 France [01F], ISO-21 Germany [01G], ISO-17 Spain [02S], Symbol [19M][a])	0
Total host buffer size	H8	0 to 99 in units of the size defined by FRPO S5	5
Form feed time-out value	H9	Value in units of 5 seconds (0 to 99).	6
Duplex binding	N4	0: Off 1: Long edge 2: Short edge	0
Sleep timer time-out time	N5	1 to 240 minutes [0: Off]	20 (20ppm) 30 (25ppm)
Ecoprint level	N6	0: Off 2: On	0

TONER
www.tonerplus.com.ua

Item	FRPO	Setting values	Factory setting
Default emulation mode	P1	6: PCL 6 9: KPDL	9(U.S.A) or 6(Euro and other)
Carriage-return action *	P2	0: Ignores 0x0d 1: Carriage-return 2: Carriage-return+linefeed	1
Linefeed action *	P3	0: Ignores 0x0d 1: Linefeed 2: Linefeed+carriage-return	1
Automatic emulation sensing (For KPDL3)	P4	0: AES disabled 1: AES enabled	1(U.S.A) or 0(Euro and other)
Automatic emulation switching trigger (For KPDL3)	P7	0: Page eject commands 1: None 2: Page eject and prescribe EXIT 3: Prescribe EXIT 4: Formfeed (^L) 6: Page eject, prescribe EXIT and formfeed 10: Page eject commands; if AES fails, resolves to KPDL	11(U.S.A) or 10(Euro and other)
Command recognition character	P9	ASCII code of 33 to 126	82 (R)
Default stacker	R0	1 (inner tray) 3 5	1

TONER
www.tonerplus.com.ua

Item	FRPO	Setting values	Factory setting
Default paper size	R2	0: Size of the default paper cassette (See R4.) 1: Monarch (3-7/8 × 7-1/2 inches) 2: Business (4-1/8 × 9-1/2 inches) 3: International DL (11 × 22 cm) 4: International C5 (16.2 × 22.9 cm) 5: Executive (7-1/4 × 10-1/2 inches) 6: US Letter (8-1/2 × 11 inches) 7: US Legal (8-1/2 × 14 inches) 8: A4 (21.0 × 29.7 cm) 9: JIS B5 (18.2 × 25.7 cm) 10: A3 (29.7 ´ 42 cm) 11: B4 (25.7 ´ 36.4 cm) 12: US Ledger (11 ´ 17 inches) 13: ISO A5 14: A6 (10.5 × 14.8 cm) 15: JIS B6 (12.8 × 18.2 cm) 16: Commercial #9 (3-7/8 × 8-7/8 inches) 17: Commercial #6 (3-5/8 × 6-1/2 inches) 18: ISO B5 (17.6 × 25 cm) 19: Custom (11.7 × 17.7 inches) 30: C4 (22.9 ´ 32.4 cm) 31: Hagaki (10 × 14.8 cm) 32: Ofuku-hagaki (14.8 × 20 cm) 33: Officio II 39: 8K 40: 16K 42: 8.5 × 13.5 inches 50: Statement 51: Folio 52: Youkei 2 53: Youkei 4	0
Default cassette	R4	0: MP tray 1: Cassette 1 2: Cassette 2 3: Cassette 3	1
MP tray paper size	R7	Same as the R2 values except: 0	6(U.S.A) or 8(Euro and other)
A4/letter equation	S4	0: Off 1: On	1
Host buffer size	S5	0: 10kB (x H8) 1: 100kB (x H8) 2: 1024kB (x H8)	1
RAM disk size	S6	1 to 1024 MB	400
RAM disk mode	S7	0: Off 1: On	0

TONER
www.tonerplus.com.ua

Item	FRPO	Setting values	Factory setting
Wide A4	T6	0: Off 1: On	0
Line spacing *	U0	Lines per inch (integer value)	6
Line spacing *	U1	Lines per inch (fraction value)	0
Character spacing *	U2	Characters per inch (integer value)	10
Character spacing *	U3	Characters per inch (fraction value)	0
Country code	U6	0: US-ASCII 1: France 2: Germany 3: UK 4: Denmark 5: Sweden 6: Italy 7: Spain 8: Japan 9: US Legal 10: IBM PC-850 (Multilingual) 11: IBM PC-860 (Portuguese) 12: IBM PC-863 (Canadian French) 13: IBM PC-865 (Norwegian) 14: Norway 15: Denmark 2 16: Spain 2 17: Latin America 21: US ASCII (U7 = 50 SET) 77: HP Roman-8 (U7 = 52 SET)	41
Code set at power up in daisy-wheel emulation	U7	0: Same as the default emulation mode (P1) 1: IBM 6: IBM PC-8 50: US ASCII (U6 = 21 SET) 52: HP Roman-8 (U6 = 77 SET)	53
Font pitch for fixed pitch scalable font	U8	Integer value in cpi: 0 to 99	10
	U9	Fraction value in 1/100 cpi: 0 to 99	0
Font height for the default scalable font *	V0	Integer value in 100 points: 0 to 9	0
	V1	Integer value in points: 0 to 99	12
	V2	Fraction value in 1/100 points: 0, 25, 50, 75	0
Default scalable font *	V3	Name of typeface of up to 32 characters, enclosed with single or double quotation marks	Courier

TONER
www.tonerplus.com.ua

Item	FRPO	Setting values	Factory setting
Default weight (courier and letter Gothic)	V9	0: Courier = darkness Letter Gothic = darkness 1: Courier = regular Letter Gothic = darkness 4: Courier = darkness Letter Gothic = regular 5: Courier = regular Letter Gothic = regular	5
Color mode	W1	0: Monochrome (grayscale) 1: Color (CMYK)	1
Gloss mode	W6	0: Low (normal) 1: High	0
Paper type for the MP tray	X0	1: Plain 1 2: Transparency 3: Preprinted 4: Label 5: Bond 6: Recycle 7: Vellum 9: Letterhead 10: Color 11: Prepunched 12: Envelope 13: Cardstock 16: Thick 17: High quality 21: Custom1 22: Custom2 23: Custom3 24: Custom4 25: Custom5 26: Custom6 27: Custom7 28: Custom8	1

TONER
www.tonerplus.com.ua

Item	FRPO	Setting values	Factory setting
Paper type for paper cassettes 1	X1	1: Plain 3: Preprinted 5: Bond 6: Recycled 9: Letterhead 10: Color 11: Prepunched 17: High quality 21: Custom1 22: Custom2 23: Custom3 24: Custom4 25: Custom5 26: Custom6 27: Custom7 28: Custom8	1
Paper type for paper cassettes 2 to 4	X2 X3	1: Plain 3: Preprinted 5: Bond 6: Recycled 9: Letterhead 10: Color 11: Prepunched 17: High quality 21: Custom1 22: Custom2 23: Custom3 24: Custom4 25: Custom5 26: Custom6 27: Custom7 28: Custom8	1
PCL paper source	X9	0: Performs paper selection depending on media type. 1: Performs paper selection depending on paper sources.	0
Automatic continue for 'Press GO'	Y0	0: Off 1: On	0
Automatic continue timer	Y1	Number from 0 to 99 in increments of 5 seconds	6 (30 secons)
Error message for device error	Y3	0: Not detect 1: Detect	0

TONER
www.tonerplus.com.ua

Item	FRPO	Setting values	Factory setting
Duplex operation for specified paper type (Prepunched, Preprintedand Letterhead)	Y4	0: Off 1: On	0
Default operation for PDF direct printing	Y5	0: Enlarges or reduces the image to fit in the current paper size. Loads paper from the current paper cassette. 1: Through the image. Loads paper which is the same size as the image. 2: Enlarges or reduces the image to fit in the current paper size. Loads Letter, A4 size paper depending on the image size. 3: Through the image. Loads Letter, A4 size paper depending on the image size. 8: Through the image. Loads paper from the current paper cassette. 9: Through the image. Loads Letter, A4 size paper depending on the image size. 10: Enlarges or reduces the image to fit in the current paper size. Loads Letter, A4 size paper depending on the imagesize.	0
e-MPS error	Y6	0:Does not print the error report and display the error message. 1:Prints the error report. 2:Displays the error message. 3:Prints the error report and displays the error message.	3

a. Characters higher than 127 are printed regardless of the C8 value. However, setting C8 to 0 does not print character code 160.

TONER
www.tonerpids.com.ua

(4) System Error (Fxxxx) Outline

The document is subscribed to describe the outline of the factors of the Fxxx errors that are not described in the
service manual. Please utilize it to refer to checking the factors.
Please utilize it as the measures when the system is not recovered after power off/on
or it frequently occurs.

* : It may be from the hardware factor while the error (Fxxx) is indicated.
Please initially check the following.

Check the DDR2 memory and neighboring parts:
Check the contact of YS1 or YS2 with the memory. Replace the memory if the error repeats.
Check the HDD if the error repeats after replacing the main board.
Take care, however, of handling the data when formatting or replacing the HDD.
Check the HDD : Replace the HDD if the error repeats after formatting the HDD.

TONER
www.tonerplus.com.ua

No.	Content	Check procedure & check point	Remark 1	TASKalfa 256ci/FS-C8525MFP, TASKalfa 206ci/FS-C8520MFP, TASKalfa 306i/FS-6530MFP, TASKalfa 256i/FS-6525MFP
-	Lock-up at Welcome display (TASKalfa/Ecosys) (The display unchages after a certain time (Note 1: *** seconds))	1) Check connection of the harness (Panel to Main board), (Main board to HDD) and connectors and check function. 2) Check contact of the DDR memory by detaching and reattaching. and check function. replace it if available and check function. 3) Format the HDD and check function. (U024 FULL formatting) (*1) 4) Execute the U021Memory initializing to initialize the controller backup memory and check function. 5) Replace the panelmain board and check function. 6) Replace the main board and check function. 7) Retrieve the USBLOG and contact the Service Administrative Division. (*1) For the HDD standard model only.	*User data and installed software is deleted if executing the U024. Reinstallation is required.	[Main - Panel Interface] Main board: YC100, YC101, YC102 Panel board: YC1, YC2, YC3 (Note 1) 70 seconds [Check the contact with the DDR2 memory] Main board: YS1 A certain part of the memory may be faulty. The frequency of faiure occurrence is dependent on the frequency of access to the faulty bit. The memories except the DIMM are mounted on the main PWB. The mounted memories or the ASIC may be faulty if the DIMM is not sensitive.
F000	CF000 appears in a certain time (Note 2: *** seconds) after the Welcome display continues Panel－Main board communication error	1) Check connection of the harness (Panel to Main board), (Main board to HDD) and connectors and check function. 2) Check contact of the DDR memory by detaching and reattaching. and check function. replace it if available and check function. 3) Format the HDD and check function. (U024 FULL formatting) (*1) 4) Execute the U021 Memory initializing to initialize the controller backup memory and check function. 5) Replace the main board and check function. 6) Replace the panelmain board and check function. 7) Retrieve the USBLOG and contact the Service Administrative Division. (*1) For the HDD standard model only.		[Main-Panel Interface] Main board: YC100, YC101, YC102 Panel board: YC1, YC2, YC3 If the LEDs are in the state below when the F000 appears, the DDR2 memory failure may be the cause. Check contact of the YS1 with the memory. (DDR2 memory is the option item for the monochrome models, and is the standard item for the color models.) Memory LED turned on Attention LED turned on (Note 1) 70 seconds [Check the contact with the DDR2 memory] Main board: YS1 A certain part of the memory may be faulty. The frequency of faiure occurrence is dependent on the frequency of access to the faulty bit. The memories except the DIMM are mounted on the main PWB. The mounted memories or the ASIC may be faulty if the DIMM is not sensitive.
F10X F11X	An error is detected at OS or some of device drivers.	1) Format the HDD and check function. (U024 FULL formatting) (*1) 2) Execute the U021 Memory initializing to initialize the controller backup memory and check function. 3) Replace the main board and check function. 4) Replace the HDD and check function. (*1) 5) Retrieve the USBLOG and contact the Service Administrative Division. (*1) For the HDD standard model only.		

No.	Content	Check procedure & check point	Remark 1	TASKalfa 256ci/FS-C8525MFP, TASKalfa 206ci/FS-C8520MFP, TASKalfa 306i/FS-6530MFP, TASKalfa 256i/FS-6525MFP
F12X	An error is detected at the Scan control section	1) Check connection of the harness (Scan/DP - Main board) and connectors and check function. 2) Format the HDD and check function. (U024 FULL formatting) (*1) 3) Execute the U021 Memory initializing to initialize the controller backup memory and check function. 4) Replace the Scan/DP board and check function. 5) Replace the main board and check function. 6) Retrieve the USBLOG and contact the Service Administrative Division. (*1) For the HDD standard model only.		[Main-Scan Interface] Main board:YC112 ,YC113 CCD board: YC1 LED board: YC1
F13X	An error is detected at the Panel control section	1) Check connection of the harness (Panel - Main board) and connectors and check function. 2) Format the HDD and check function. (U024 FULL formatting) (*1) 3) Execute the U021 Memory initializing to initialize the controller backup memory and check function. 4) Replace the panel board and check function. (*2) 5) Replace the main board and check function. 6) Retrieve the USBLOG and contact the Service Administrative Division. (*1) For the HDD standard model only. (*2) For the model separating the main/panel PWBs.		[Main-Panel Interface] Main board: YC100, YC101, YC102 Panel board: YC1, YC2, YC3
F14X	An error is detected at the FAX control section	1) Check connection of the harness (FAX - Main board) and connectors and check function. 2) Format the HDD and check function. (U024 FULL formatting) (*1) 3) Execute the U021 Memory initializing to initialize the controller backup memory and check function. 4) Execute the U671 Clear FAX back up data (FAX DIMM clear) and check function. (*3) (Take cae of the received data since it is cleared) 5) Replace the FAX_DIMM and check function. 6) Replace the FAX board and check function. 7) Replace the main board and check function. 8) Retrieve the USBLOG and contact the Service Administrative Division. (*1) For the HDD standard model only. (*3) For the models using the main PWB with the flash for the FAX data.		F14A,F14F: KUIO error Main board (USB hub) [Main-KUIO Interface] Main board: YC109 (Reference) YC16 is at the side where the IB-50 is inserted. <Note> 4) is not supported. 5) is unnecessary.
F15X	An error is detected at the authentication device control section	1) Check connection of the harness (Authentication device - Main board) and connectors and check function. 2) Format the HDD and check function. (U024 FULL formatting) (*1) 3) Execute the U021 Memory initializing to initialize the controller backup memory and check function. 4) Replace the main board and check function. 5) Replace the HDD and check function. (*1) 6) Retrieve the USBLOG and contact the Service Administrative Division. (*1) For the HDD standard model only.	Authentication device: Card Reader, etc.	[Main-USB Host Interface] Main board: YC107(USB Host where is at the side of the oparation unit) YC108(USB Host where is at the back side of the main frame)

No.	Content	Check procedure & check point	Remark 1	TASKalfa 256ci/FS-C8525MFP, TASKalfa 206ci/FS-C8520MFP, TASKalfa 306i/FS-6530MFP, TASKalfa 256i/FS-6525MFP
F16X	An error is detected at the KMAS control section	1) Check connection of the harness (KMAS - Main board) and connectors and check function. 2) Format the HDD and check function. (U024 FULL formatting) (*1) 3) Execute the U021 Memory initializing to initialize the controller backup memory and check function. 3) Replace the main board and check function. 4) Replace the HDD and check function. (*1) 5) Retrieve the USBLOG and contact the Service Administrative Division. (*1) For the HDD standard model only.		-
F17X	An error is detected at the print data control section	1) Format the HDD and check function. (U024 FULL formatting) (*1) 2) Execute the U021 Memory initializing to initialize the controller backup memory and check function. 3) Replace the main board and check function. 4) Replace the HDD and check function. (*1) 5) Retrieve the USBLOG and contact the Service Administrative Division. (*1) For the HDD standard model only.		
F18X	An error is detected at the Video control secion	1) Check connection of the harness (Engine - Main board) and connectors and check function. 2) Format the HDD and check function. (U024 FULL formatting) (*1) 3) Execute the U021 Memory initializing to initialize the controller backup memory and check function. 4) Replace the engine board and check function. 5) Replace the main board and check function. 6) Retrieve the USBLOG and contact the Service Administrative Division. (*1) For the HDD standard model only.		<Monochrome models> [Main-LSU Interface] Main board: YC103 LSU(APC PWB): YC2 [Main-Engine Interface] Main board: YC105 Engine board: YC17 <Color models> [Main-LSU Interface] Main board: YC104 LSU relay board: YC10 [Main-Engine Interface] Main board: YC105 Engine board: YC26 [Relay connector] Between the main board and the LSU relay board.
F19X F1AX	An error is detected at the OS or some of device drivers	1) Format the HDD and check function. (U024 FULL formatting) (*1) 2) Execute the U021 Memory initializing to initialize the controller backup memory and check function. 3) Replace the main board and check function. 4) Replace the HDD and check function. (*1) 5) Retrieve the USBLOG and contact the Service Administrative Division. (*1) For the HDD standard model only.		
F1BX	An error is detected at the Security management section	1) Format the HDD and check function. (U024 FULL formatting) (*1) 2) Execute the U021 Memory initializing to initialize the controller backup memory and check function. 3) Replace the main board and check function. 4) Replace the HDD and check function. (*1) 5) Retrieve the USBLOG and contact the Service Administrative Division. (*1) For the HDD standard model only.		

No.	Content	Check procedure & check point	Remark 1	TASKalfa 256ci/FS-C8525MFP, TASKalfa 206ci/FS-C8520MFP, TASKalfa 306i/FS-6530MFP, TASKalfa 256i/FS-6525MFP
F1CX	An error is detected at the File System management section	1) Format the HDD and check function. (U024 FULL formatting) (*1) 2) Execute the U021 Memory initializing to initialize the controller backup memory and check function. 3) Replace the main board and check function. 4) Replace the HDD and check function. (*1) 5) Retrieve the USBLOG and contact the Service Administrative Division. (*1) For the HDD standard model only.	*The F1C4 error appears with the HDD security kit at work.	
F1DX	An error is detected at the Image memory management section	1) Format the HDD and check function. (U024 FULL formatting) (*1) 2) Execute the U021 Memory initializing to initialize the controller backup memory and check function. 3) Replace the main board and check function. 4) Replace the HDD and check function. (*1) 5) Retrieve the USBLOG and contact the Service Administrative Division. (*1) For the HDD standard model only.	*The F1D4 error is RAM allocation error. 1. Check it with the U340 2. Initialize the setting valued with the U021	
F1EX F1FX F20X	An error is detected at the OS or some of device drivers	1) Format the HDD and check function. (U024 FULL formatting) (*1) 2) Execute the U021 Memory initializing to initialize the controller backup memory and check function. 3) Replace the main board and check function. 4) Replace the HDD and check function. (*1) 5) Retrieve the USBLOG and contact the Service Administrative Division. (*1) For the HDD standard model only.		
F21X F22X F23X	An error is detected at the Image processing section	1) Check contact of the DDR memory and check function. 2) Format the HDD and check function. (U024 FULL formatting) (*1) 3) Execute the U021 Memory initializing to initialize the controller backup memory and check function. 4) Replace the main board and check function. 5) Replace the HDD and check function. (*1) 6) Retrieve the USBLOG and contact the Service Administrative Division. (*1) For the HDD standard model only.		[DIMM] <Monochrome models: Option> <Color models: Standard> [DDR2 memory contact check] Main board: YS1 A certain part of the memory may be faulty. The frequency of faiure occurrence is dependent on the frequency of access to the faulty bit. The memories except the DIMM are mounted on the main PWB. The mounted memories or the ASIC may be faulty if the DIMM is not sensitive.
F24X	An error is detected at the System management section	1) Check contact of the DDR memory and check function. 2) Format the HDD and check function. (U024 FULL formatting) (*1) 3) Execute the U021 Memory initializing to initialize the controller backup memory and check function. 4) Replace the main board and check function. 5) Replace the HDD and check function. (*1) 6) Retrieve the USBLOG and contact the Service Administrative Division. (*1) For the HDD standard model only.	*The F248 eror is printer process error. if it repeats with a certain print data, retrieve the capture data and USBLOG.	[DIMM] <Monochrome models: Option> <Color models: Standard> [DDR2 memory contact check] Main board: YS1 A certain part of the memory may be faulty. The frequency of faiure occurrence is dependent on the frequency of access to the faulty bit. The memories except the DIMM are mounted on the main PWB. The mounted memories or the ASIC may be faulty if the DIMM is not sensitive.

No.	Content	Check procedure & check point	Remark 1	TASKalfa 256ci/FS-C8525MFP, TASKalfa 206ci/FS-C8520MFP, TASKalfa 306i/FS-6530MFP, TASKalfa 256i/FS-6525MFP
F25X	An error is detected at the Network management section	1) Format the HDD and check function. (U024 FULL formatting) (*1) 2) Execute the U021 Memory initializing to initialize the controller backup memory and check function. 3) Replace the main board and check function. 4) Retrieve the USBLOG and contact the Service Administratuve Division. (or retrieve the packet capture data depending on the reult of analysis) (*1) For the HDD standard model only.	*This may be owing to the users network environment.	
F26X F27X F28X F29X F2AX	An error is detected at the System management section	1) Format the HDD and check function. (U024 FULL formatting) (*1) 2) Execute the U021 Memory initializing to initialize the controller backup memory and check function. 3) Replace the main board and check function. 4) Replace the HDD and check function. (*1) 5) Retrieve the USBLOG and contact the Service Administrative Division. (*1) For the HDD standard model only.		
F2BX F2CX F2DX F2EX F2FX F30X F31X F32X	An error is detected at the Network control section	1) Format the HDD and check function. (U024 FULL formatting) (*1) 2) Execute the U021 Memory initializing to initialize the controller backup memory and check function. 3) Replace the main board and check function. 4) Retrieve the USBLOG and contact the Service Administratuve Division. (or retrieve the packet capture data depending on the reult of analysis) (*1) For the HDD standard model only.		
F33X	An error is detected at the Scan management section	1) Check connection of the harness (Scan/DP board - main board) and connectors and check function. 2) Format the HDD and check function. (U024 FULL formatting) (*1) 3) Execute the U021 Memory initializing to initialize the controller backup memory and check function. 4) Replace the Scan/DP board and check function. 5) Replace the main board and check function. 6) Retrieve the USBLOG and contact the Service Administrative Division. (*1) For the HDD standard model only.		[Main-Scan Interface] Main board: YC112, YC113 CCD PWB: YC1 LED PWB: YC1
F34X	An error is detected at the Panel management section	1) Check connection of the harness (Panel board - main board) and connectors and check function. 2) Format the HDD and check function. (U024 FULL formatting) (*1) 3) Execute the U021 Memory initializing to initialize the controller backup memory and check function. 4) Replace the panel board and check function. (*2) 5) Replace the main board and check function. 6) Retrieve the USBLOG and contact the Service Administrative Division. (*1) For the HDD standard model only. (*2) For the models separating the panel/main PWBs.		[Main-Panel Interface] Main board: YC100, YC101, YC102 Panel board: YC1, YC2, YC3
F35X	An error is detected at the Print control section	1) Format the HDD and check function. (U024 FULL formatting) (*1) 2) Execute the U021 Memory initializing to initialize the controller backup memory and check function. 3) Replace the main board and check function. 4) Replace the HDD and check function. (*1) 5) Retrieve the USBLOG and contact the Service Administrative Division. (*1) For the HDD standard model only.		

No.	Content	Check procedure & check point	Remark 1	TASKalfa 256ci/FS-C8525MFP, TASKalfa 206ci/FS-C8520MFP, TASKalfa 306i/FS-6530MFP, TASKalfa 256i/FS-6525MFP
F36X	An error is detected at the Print management section	1) Format the HDD and check function. (U024 FULL formatting) (*1) 2) Execute the U021 Memory initializing to initialize the controller backup memory and check function. 3) Replace the main board and check function. 4) Replace the HDD and check function. (*1) 5) Retrieve the USBLOG and contact the Service Administrative Division. (*1) For the HDD standard model only.		
F37X	An error is detected at the FAX management section	1) Format the HDD and check function. (U024 FULL formatting) (*1) 2) Execute the U021 Memory initializing to initialize the controller backup memory and check function. 3) Execute the U671 Clear FAX back up data (FAX DIMM clear) and check function. (*3) (Take cae of the received data since it is cleared) 4) Replace the FAX_DIMM and check function. 5) Replace the main board and check function. 6) Replace the HDD and check function. (*1) 7) Retrieve the USBLOG and contact the Service Administrative Division. (*1) For the HDD standard model only. (*3) For the models using the main PWB with the flash for the FAX data.		F14A,F14F: KUIO error Main board (USB hub) [Main-KUIO Interface] Main board: YC109 (Reference) YC16 is at the side where IB-50 is inserted. <Note> 3) is not supported. 4) is unnecessary.
F38X	An error is detected at the Authentication/permit management section	1) Format the HDD and check function. (U024 FULL formatting) (*1) 2) Execute the U021 Memory initializing to initialize the controller backup memory and check function. 3) Replace the main board and check function. 4) Replace the HDD and check function. (*1) 5) Retrieve the USBLOG and contact the Service Administrative Division. (*1) For the HDD standard model only.		
F39X	An error is detected at the KMAS control section	1) Check connection of the harness (KMAS - Main board) and connectors and check function. 2) Format the HDD and check function. (U024 FULL formatting) (*1) 3) Execute the U021 Memory initializing to initialize the controller backup memory and check function. 3) Replace the main board and check function. 4) Replace the HDD and check function. (*1) 5) Retrieve the USBLOG and contact the Service Administrative Division. (*1) For the HDD standard model only.		-
F3AX F3BX F3CX F3DX F3EX F3FX F40X F41X F42X F43X F44X F45X	An error is detected at the Entity management section	1) Format the HDD and check function. (U024 FULL formatting) (*1) 2) Execute the U021 Memory initializing to initialize the controller backup memory and check function. 3) Replace the main board and check function. 4) Replace the HDD and check function. (*1) 5) Retrieve the USBLOG and contact the Service Administrative Division. (*1) For the HDD standard model only.		

No.	Content	Check procedure & check point	Remark 1	TASKalfa 256ci/FS-C8525MFP, TASKalfa 206ci/FS-C8520MFP, TASKalfa 306i/FS-6530MFP, TASKalfa 256i/FS-6525MFP
F46X	An error is detected at the Print image process section	1) Replace the main board and check function. 2) Retrieve the USBLOG (or retrieve the print capture data by case)	*The F46F is printer process error. If it repeats with a certain print data, retrieve the capture data and USBLOG.	
F47X F48X F49X	An error is detected at the Image edit process control section	1) Format the HDD and check function. (U024 FULL formatting) (*1) 2) Execute the U021 Memory initializing to initialize the controller backup memory and check function. 3) Replace the main board and check function. 4) Replace the HDD and check function. (*1) 5) Retrieve the USBLOG and contact the Service Administrative Division. (*1) For the HDD standard model only.		
F4AX F4CX	An error is detected at the Print image process section	1) Format the HDD and check function. (U024 FULL formatting) (*1) 2) Execute the U021 Memory initializing to initialize the controller backup memory and check function. 3) Replace the main board and check function. 4) Replace the HDD and check function. (*1) 5) Retrieve the USBLOG and contact the Service Administrative Division. (*1) For the HDD standard model only.		
F4DX F4EX	An error is detected at the Entity control section	1) Format the HDD and check function. (U024 FULL formatting) (*1) 2) Execute the U021 Memory initializing to initialize the controller backup memory and check function. 3) Replace the main board and check function. 4) Replace the HDD and check function. (*1) 5) Retrieve the USBLOG and contact the Service Administrative Division. (*1) For the HDD standard model only.		
F4FX	An error is detected at the Job control section	1) Format the HDD and check function. (U024 FULL formatting) (*1) 2) Execute the U021 Memory initializing to initialize the controller backup memory and check function. 3) Replace the main board and check function. 4) Replace the HDD and check function. (*1) 5) Retrieve the USBLOG and contact the Service Administrative Division. (*1) For the HDD standard model only.		
F50X	An error is detected at the FAX control section	1) Format the HDD and check function. (U024 FULL formatting) (*1) 2) Execute the U021 Memory initializing to initialize the controller backup memory and check function. 3) Replace the main board and check function. 4) Replace the HDD and check function. (*1) 5) Retrieve the USBLOG and contact the Service Administrative Division. (*1) For the HDD standard model only.		
F51X F52X F53X F55X F56X F57X	An error is detected at the Job execution section	1) Format the HDD and check function. (U024 FULL formatting) (*1) 2) Execute the U021 Memory initializing to initialize the controller backup memory and check function. 3) Replace the main board and check function. 4) Replace the HDD and check function. (*1) 5) Retrieve the USBLOG and contact the Service Administrative Division. (*1) For the HDD standard model only.		

No.	Content	Check procedure & check point	Remark 1	TASKalfa 256ci/FS-C8525MFP, TASKalfa 206ci/FS-C8520MFP, TASKalfa 306i/FS-6530MFP, TASKalfa 256i/FS-6525MFP
F58X F59X F5AX F5BX F5CX F5DX F5EX	An error is detected at the Service management section	1) Format the HDD and check function. (U024 FULL formatting) (*1) 2) Execute the U021 Memory initializing to initialize the controller backup memory and check function. 3) Replace the main board and check function. 4) Replace the HDD and check function. (*1) 5) Retrieve the USBLOG and contact the Service Administrative Division. (*1) For the HDD standard model only.		
F5FX	An error is detected at the Service execution section	1) Format the HDD and check function. (U024 FULL formatting) (*1) 2) Execute the U021 Memory initializing to initialize the controller backup memory and check function. 3) Replace the main board and check function. 4) Replace the HDD and check function. (*1) 5) Retrieve the USBLOG and contact the Service Administrative Division. (*1) For the HDD standard model only.		
F60X	An error is detected at the Maintenance mode management section	1) Format the HDD and check function. (U024 FULL formatting) (*1) 2) Execute the U021 Memory initializing to initialize the controller backup memory and check function. 3) Replace the main board and check function. 4) Replace the HDD and check function. (*1) 5) Retrieve the USBLOG and contact the Service Administrative Division. (*1) For the HDD standard model only.		
F61X	An error is detected at the Report compiling section	1) Format the HDD and check function. (U024 FULL formatting) (*1) 2) Execute the U021 Memory initializing to initialize the controller backup memory and check function. 3) Replace the main board and check function. 4) Replace the HDD and check function. (*1) 5) Retrieve the USBLOG and contact the Service Administrative Division. (*1) For the HDD standard model only.		
F62X	An error is detected at the Service execution section	1) Format the HDD and check function. (U024 FULL formatting) (*1) 2) Execute the U021 Memory initializing to initialize the controller backup memory and check function. 3) Replace the main board and check function. 4) Replace the HDD and check function. (*1) 5) Retrieve the USBLOG and contact the Service Administrative Division. (*1) For the HDD standard model only.		
F63X	An error is detected at the Device control section	1) Format the HDD and check function. (U024 FULL formatting) (*1) 2) Execute the U021 Memory initializing to initialize the controller backup memory and check function. 3) Replace the main board and check function. 4) Replace the HDD and check function. (*1) 5) Retrieve the USBLOG and contact the Service Administrative Division. (*1) For the HDD standard model only.		
F64X F65X F66X F67X	An error is detected at the Print image process section	1) Format the HDD and check function. (U024 FULL formatting) (*1) 2) Execute the U021 Memory initializing to initialize the controller backup memory and check function. 3) Replace the main board and check function. 4) Replace the HDD and check function. (*1) 5) Retrieve the USBLOG and contact the Service Administrative Division. (*1) For the HDD standard model only.		

No.	Content	Check procedure & check point	Remark 1	TASKalfa 256ci/FS-C8525MFP, TASKalfa 206ci/FS-C8520MFP, TASKalfa 306i/FS-6530MFP, TASKalfa 256i/FS-6525MFP
F68X	An error is detected at the Storage device control section	1) Format the HDD and check function. (U024 FULL formatting) (*1) 2) Execute the U021 Memory initializing to initialize the controller backup memory and check function. 3) Replace the main board and check function. 4) Replace the HDD and check function. (*1) 5) Retrieve the USBLOG and contact the Service Administrative Division. (*1) For the HDD standard model only.	*F684 is overwrite error with the HDD security kit	
F69X F6AX F6BX F6CX	An error is detected at the HyPAS control section	1) Format the HDD and check function. (U024 FULL formatting) (*1) 2) Execute the U021 Memory initializing to initialize the controller backup memory and check function. 3) Replace the main board and check function. 4) Replace the HDD and check function. (*1) 5) Retrieve the USBLOG and contact the Service Administrative Division. (*1) For the HDD standard model only.		[Check the using CF] Main board: YC4 (Where the CF is inserted.) A certain part of the CF may be faulty. The frequency of faiure occurrence is dependent on the frequency of access to the faulty bit. The main PWB may be faulty if the CF is not sensitive.
F6DX F6EX F6FX F70X F71X F72X F73X F74X F75X	An error is detected at the External Server management section	1) Check the external server and check function. 2) Chekc the connection to the external server and check function. 3) Check the network settings and check function. 4) Replace the bridge board and check function. 5) Replace the main board and check function. 6) Retrieve the USBLOG and contact the Service Administrative Division.	*FieryOption related	-

This page is intentionally left blank.

TONER+
www.tonerplus.com.ua

(5) Chart of image adjustment procedures

Adjusting order	Item	Image	Description	Maintenance mode		Original	Page	Remarks
				Item No.	Mode			
1	Adjusting the magnification in the main scanning direction (printing adjustment)	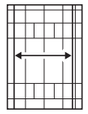	Polygon motor speed adjustment	U053	POLYGON	U053 test pattern	P.1-3-29	
2	Adjusting the magnification in the auxiliary scanning direction (printing adjustment)	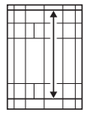	Drive motor speed adjustment	U053	MAIN	U053 test pattern	P.1-3-29	
3	Adjusting the center line of the MP tray (printing adjustment)	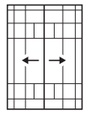	Adjusting the LSU print start timing	U034	LSUOUT LEFT (MPT)	U034 test pattern	P.1-3-24	To make an adjustment for duplex copying, select LSUOUT LEFT (DUPLEX).
4	Adjusting the center line of the cassettes (printing adjustment)	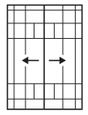	Adjusting the LSU print start timing	U034	LSUOUT LEFT (CASSETTE 1) LSUOUT LEFT (CASSETTE 2) LSUOUT LEFT (CASSETTE 3)	U034 test pattern	P.1-3-24	Cassette 1: select Center (CASSETTE 1) Cassette 2: select Center (CASSETTE 2) Cassette 3: select Center (CASSETTE 3)
5	Adjusting the leading edge registration of the MP tray (printing adjustment)	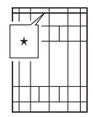	Registration motor turning on timing (secondary paper feed start timing)	U034	LSUOUT TOP MPT(L) LSUOUT TOP MPT(S)	U034 test pattern	P.1-3-24	To make an adjustment for duplex copying, select LSUOUT TOP DUPLEX. L: PAPER WIDTH 218mm or more S: PAPER WIDTH less than 218mm
6	Adjusting the leading edge registration of the cassette (printing adjustment)	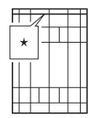	Registration motor turning on timing (secondary paper feed start timing)	U034	LSUOUT TOP CASSETTE(L) SUOUT TOP CASSETTE(S)	U034 test pattern	P.1-3-24	L: PAPER WIDTH 218mm or more S: PAPER WIDTH less than 218mm
7	Adjusting the leading edge margin (printing adjustment)	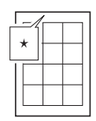	LSU illumination start timing	U402	LESD	U402 test pattern	P.1-3-77	
8	Adjusting the trailing edge margin (printing adjustment)	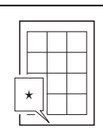	LSU illumination end timing	U402	TRAIL	U402 test pattern	P.1-3-77	
9	Adjusting the left and right margins (printing adjustment)	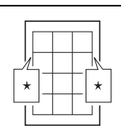	LSU illumination start/end timing	U402	A MARGIN C MARGIN	U402 test pattern	P.1-3-77	
10	Adjusting magnification of the scanner in the main scanning direction (scanning adjustment)	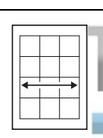	Data processing	U065 U070	Y SCAN ZOOM Y SCAN ZOOM	Test chart	P.1-3-31 P.1-3-37	U065: For copying an original placed on the platen. U070: For copying originals from the DP.

TONER
www.tonerplus.com.ua

Adjusting order	Item	Image	Description	Maintenance mode		Original	Page	Remarks
				Item No.	Mode			
11	Adjusting magnification of the scanner in the auxiliary scanning direction (scanning adjustment)	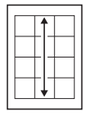	Original scanning speed	U065 U070	X SCAN ZOOM X SCAN ZOOM	Test chart	P.1-3-31 P.1-3-37	U065: For copying an original placed on the platen. U070: For copying originals from the DP.
12	Adjusting the center line (scanning adjustment)	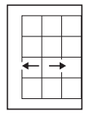	Adjusting the original scan data (image adjustment)	U067 U072	FRONT ROTATE FRONT BACK	Test chart	P.1-3-34 P.1-3-40	U067: For copying an original placed on the platen. To make an adjustment for rotate copying, select ROTATE. U072: For copying originals from the DP. To make an adjustment for duplex copying, select BACK.
13	Adjusting the leading edge registration (scanning adjustment)	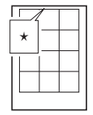	Original scan start timing	U066 U071	FRONT ROTATE FRONT HEAD BACK HEAD	Test chart	P.1-3-33 P.1-3-38	U066: For copying an original placed on the platen. To make an adjustment for trailing edge registration, select ROTATE. U071: For copying originals from the DP. To make an adjustment for duplex copying, select BACK HEAD.
14	Adjusting the leading edge margin (scanning adjustment)	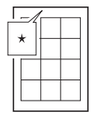	Adjusting the original scan data (image adjustment)	U403 U404	B MARGIN B MARGIN	Test chart	P.1-3-78 P.1-3-79	U403: For copying an original placed on the contact glass U404: For copying originals from the DP.
15	Adjusting the trailing edge margin (scanning adjustment)	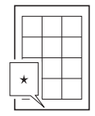	Adjusting the original scan data (image adjustment)	U403 U404	D MARGIN D MARGIN	Test chart	P.1-3-78 P.1-3-79	U403: For copying an original placed on the contact glass U404: For copying originals from the DP.
16	Adjusting the left and right margins (scanning adjustment)	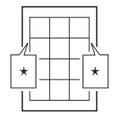	Adjusting the original scan data (image adjustment)	U403 U404	A MARGIN C MARGIN A MARGIN C MARGIN	Test chart	P.1-3-78 P.1-3-79	U403: For copying an original placed on the contact glass U404: For copying originals from the DP.

When maintenance item U411 (Automatic adjustment in the scanner) is run using the specified original (P/N 7505000005), the following adjustments are automatically made:
Adjusting the scanner magnification (U065)
Adjusting the scanner leading edge registration (U066)
Adjusting the scanner center line (U067)

When maintenance item U411 (Automatic adjustment in the DP) is run using the specified original (P/N 302AC68243), the following adjustments are automatically made:
* : When running this test chart, you first must clean the feed rollers with alcohol and ensure the DP width guides are correctly positioned against the original.
Adjusting the DP magnification (U070)
Adjusting the DP leading edge registration (U071)
Adjusting the DP center line (U072)

Image quality

Item	Specifications
100% magnification	Machine: ±0.8% Using DP: ±1.5%
Enlargement/reduction	Machine: ±1.0% Using DP: ±1.5%
Lateral squareness	Machine: ±1.5 mm/375 mm Using DP: ±3.0 mm/375 mm
Leading edge registration	Cassette: ±2.5 mm MP tray: ±2.5 mm Duplex: ±2.5 mm
Skewed paper feed (left-right difference)	Cassette: 1.5 mm or less MP tray: 1.5 mm or less Duplex: 2.0 mm or less
Lateral image shifting	Cassette: ±2.0 mm MP tray: ±2.0 mm Duplex: ±3.0 mm

TONER
www.tonerplus.com.ua

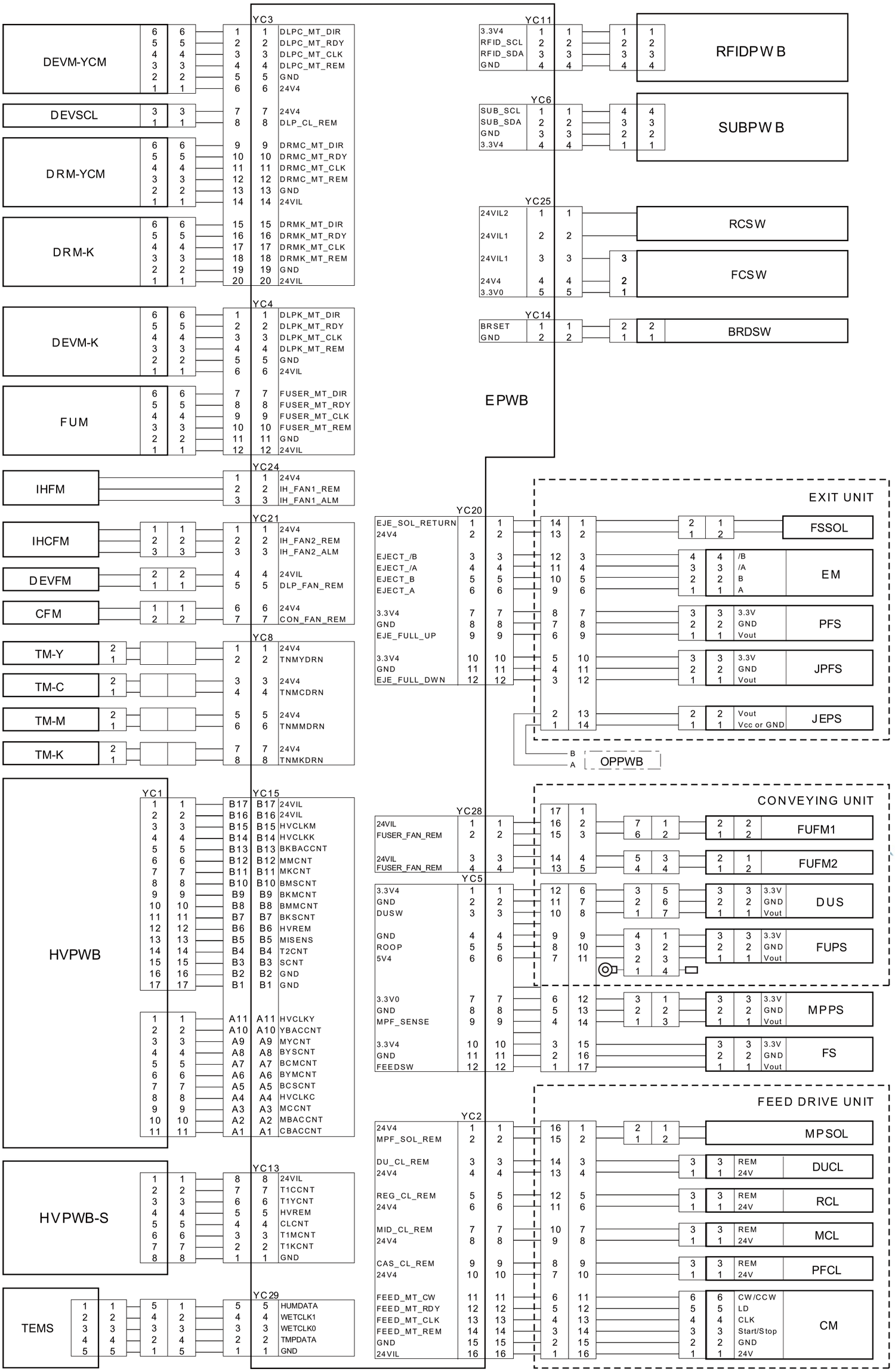
DEVM-YCM
DEVSCL
DRM-YCM
DRM-K
DEVM-K
FUM
IHFM
IHCFM
DEVFM
CFM
TM-Y
TM-C
TM-M
TM-K
HVPWB
HVPWB-S
TEMS
YC3
YC4
YC24
YC21
YC8
YC1
YC15
YC13
YC29
DLPC_MT_DIR
DLPC_MT_RDY
DLPC_MT_CLK
DLPC_MT_REM
GND
24V4
24VIL
DLP_CL_REM
DRMC_MT_DIR
DRMC_MT_RDY
DRMC_MT_CLK
DRMC_MT_REM
DRMK_MT_DIR
DRMK_MT_RDY
DRMK_MT_CLK
DRMK_MT_REM
DLPK_MT_DIR
DLPK_MT_RDY
DLPK_MT_CLK
DLPK_MT_REM
FUSER_MT_DIR
FUSER_MT_RDY
FUSER_MT_CLK
FUSER_MT_REM
IH_FAN1_REM
IH_FAN1_ALM
IH_FAN2_REM
IH_FAN2_ALM
DLP_FAN_REM
CON_FAN_REM
TNMYDRN
TNMCDRN
TNMMDRN
TNMKDRN
HVCLKM
HVCLKK
BKBACCNT
MMCNT
MKCNT
BMSCNT
BKMCNT
BMMCNT
BKSCNT
HVREM
MISENS
T2CNT
SCNT
HVCLKY
YBACCNT
MYCNT
BYSCNT
BCMCNT
BYMCNT
BCSCNT
HVCLKC
MCCNT
MBACCNT
CBACCNT
T1CCNT
T1YCNT
HVREM
CLCNT
T1MCNT
T1KCNT
HUMDATA
WETCLK1
WETCLK0
TMPDATA
EPWB
YC11
YC6
YC25
YC14
RFIDPWB
SUBPWB
RCSW
FCSW
BRDSW
3.3V4
RFID_SCL
RFID_SDA
SUB_SCL
SUB_SDA
24VIL2
24VIL1
3.3V0
BRSET
YC20
YC28
YC5
YC2
EJE_SOL_RETURN
EJECT_/B
EJECT_/A
EJECT_B
EJECT_A
EJE_FULL_UP
EJE_FULL_DWN
24VIL
FUSER_FAN_REM
DUSW
ROOP
5V4
3.3V0
MPF_SENSE
FEEDSW
MPF_SOL_REM
DU_CL_REM
REG_CL_REM
MID_CL_REM
CAS_CL_REM
FEED_MT_CW
FEED_MT_RDY
FEED_MT_CLK
FEED_MT_REM
EXIT UNIT
FSSOL
EM
/B
/A
B
A
PFS
JPFS
JEPS
3.3V
Vout
Vcc or GND
OPPWB
CONVEYING UNIT
FUFM1
FUFM2
DUS
FUPS
MPPS
FS
FEED DRIVE UNIT
MPSOL
DUCL
RCL
MCL
PFCL
CM
REM
24V
CW/CCW
LD
CLK
Start/Stop
GND

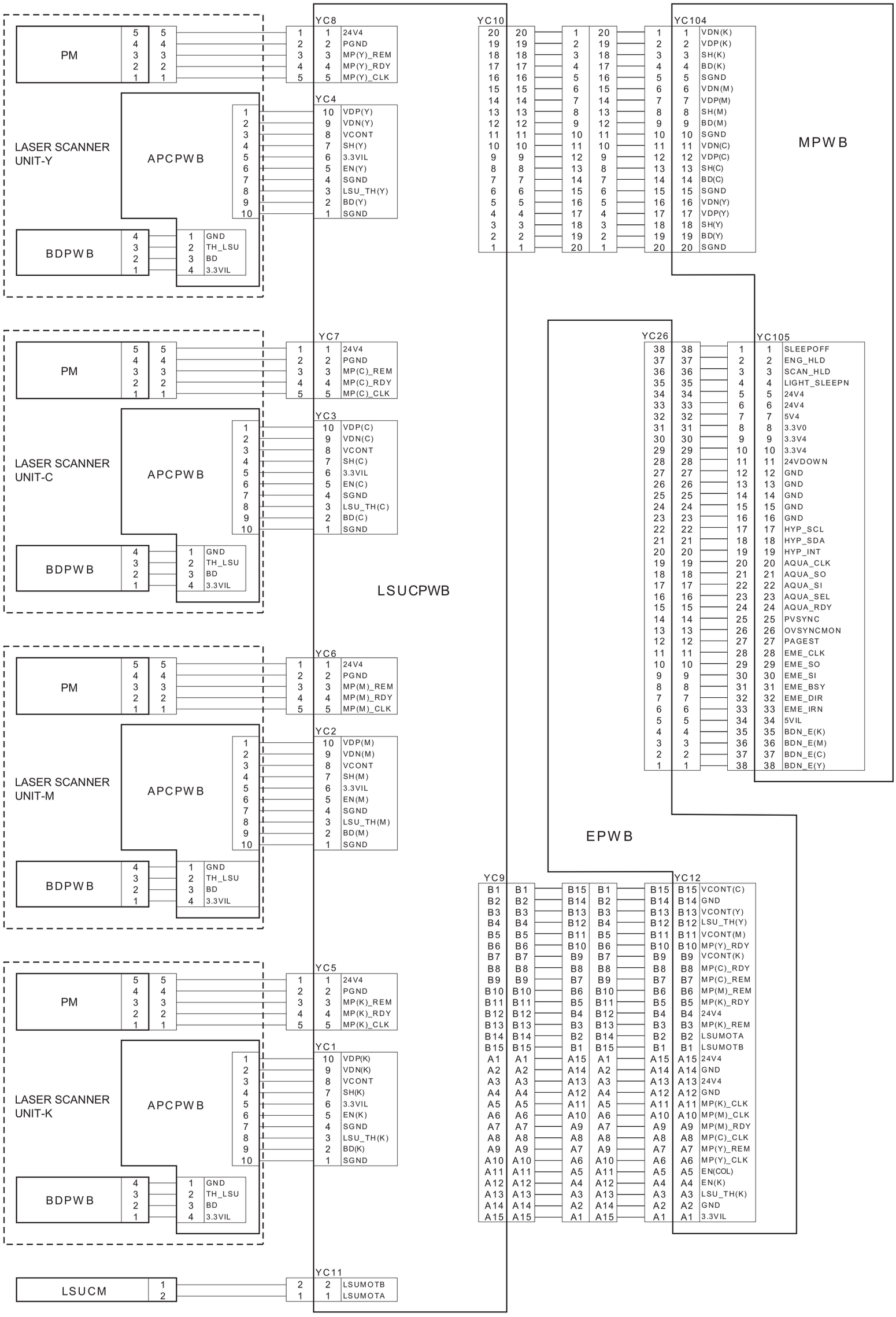
LASER SCANNER UNIT-Y
PM
APCPWB
BDPWB
LASER SCANNER UNIT-C
LASER SCANNER UNIT-M
LASER SCANNER UNIT-K
LSUCM
LSUCPWB
MPWB
EPWB
YC8
YC4
YC7
YC3
YC6
YC2
YC5
YC1
YC11
YC10
YC104
YC26
YC105
YC9
YC12
24V4
PGND
MP(Y)_REM
MP(Y)_RDY
MP(Y)_CLK
VDP(Y)
VDN(Y)
VCONT
SH(Y)
3.3VIL
EN(Y)
SGND
LSU_TH(Y)
BD(Y)
SGND
GND
TH_LSU
BD
3.3VIL
MP(C)_REM
MP(C)_RDY
MP(C)_CLK
VDP(C)
VDN(C)
VCONT
SH(C)
3.3VIL
EN(C)
SGND
LSU_TH(C)
BD(C)
SGND
MP(M)_REM
MP(M)_RDY
MP(M)_CLK
VDP(M)
VDN(M)
VCONT
SH(M)
3.3VIL
EN(M)
SGND
LSU_TH(M)
BD(M)
SGND
MP(K)_REM
MP(K)_RDY
MP(K)_CLK
VDP(K)
VDN(K)
VCONT
SH(K)
3.3VIL
EN(K)
SGND
LSU_TH(K)
BD(K)
SGND
LSUMOTB
LSUMOTA
VDN(K)
VDP(K)
SH(K)
BD(K)
SGND
VDN(M)
VDP(M)
SH(M)
BD(M)
SGND
VDN(C)
VDP(C)
SH(C)
BD(C)
SGND
VDN(Y)
VDP(Y)
SH(Y)
BD(Y)
SGND
SLEEPOFF
ENG_HLD
SCAN_HLD
LIGHT_SLEEPN
24V4
5V4
3.3V0
3.3V4
24VDOWN
GND
HYP_SCL
HYP_SDA
HYP_INT
AQUA_CLK
AQUA_SO
AQUA_SI
AQUA_SEL
AQUA_RDY
PVSYNC
OVSYNCMON
PAGEST
EME_CLK
EME_SO
EME_SI
EME_BSY
EME_DIR
EME_IRN
5VIL
BDN_E(K)
BDN_E(M)
BDN_E(C)
BDN_E(Y)
VCONT(C)
GND
VCONT(Y)
LSU_TH(Y)
VCONT(M)
MP(Y)_RDY
VCONT(K)
MP(C)_RDY
MP(C)_REM
MP(M)_REM
MP(K)_RDY
24V4
LSUMOTA
LSUMOTB
24V4
GND
24V4
MP(K)_CLK
MP(M)_CLK
MP(M)_RDY
MP(C)_CLK
MP(Y)_REM
MP(Y)_CLK
EN(COL)
EN(K)
LSU_TH(K)
GND
3.3VIL

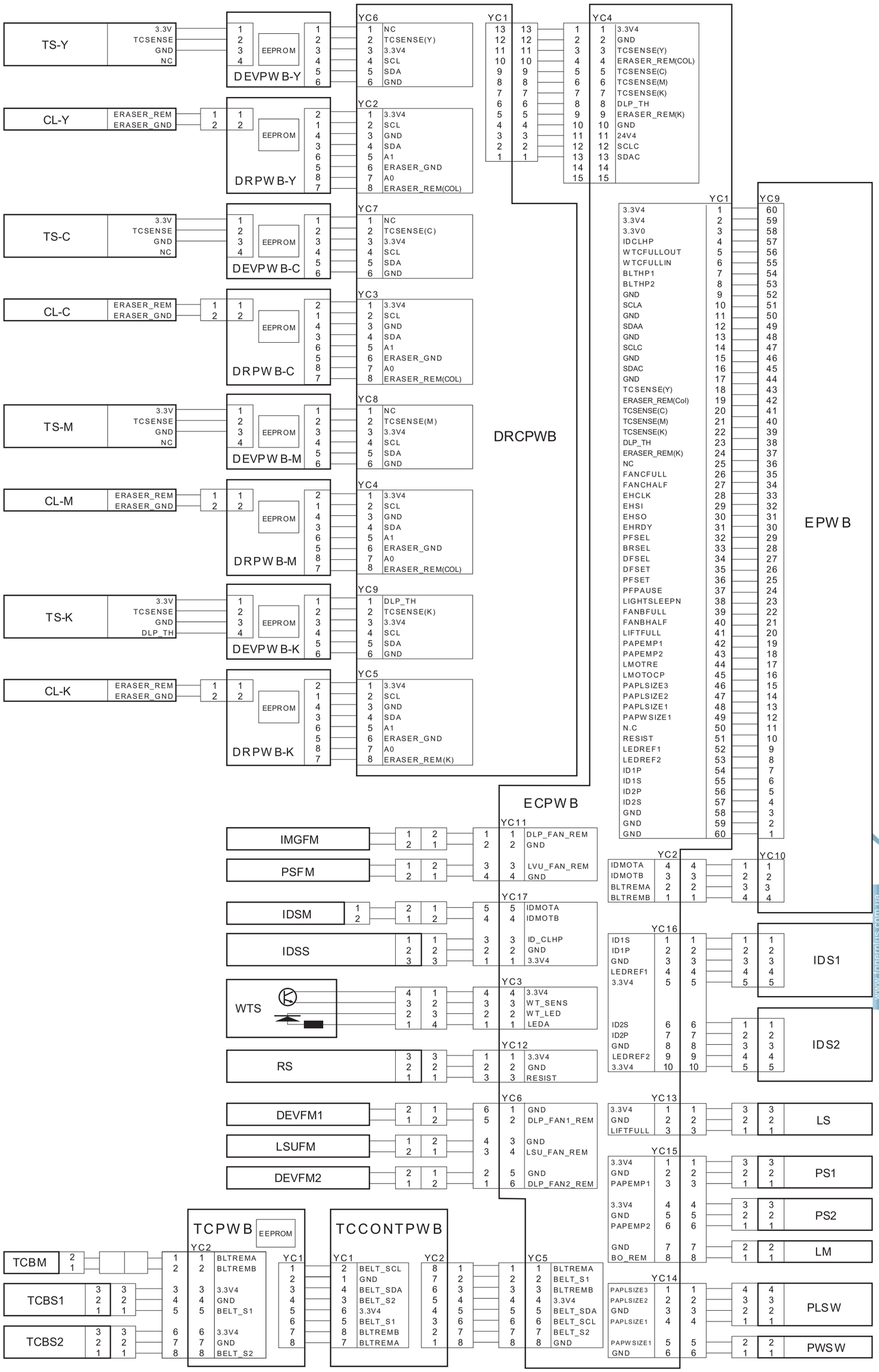

www.tonerplus.com.ua

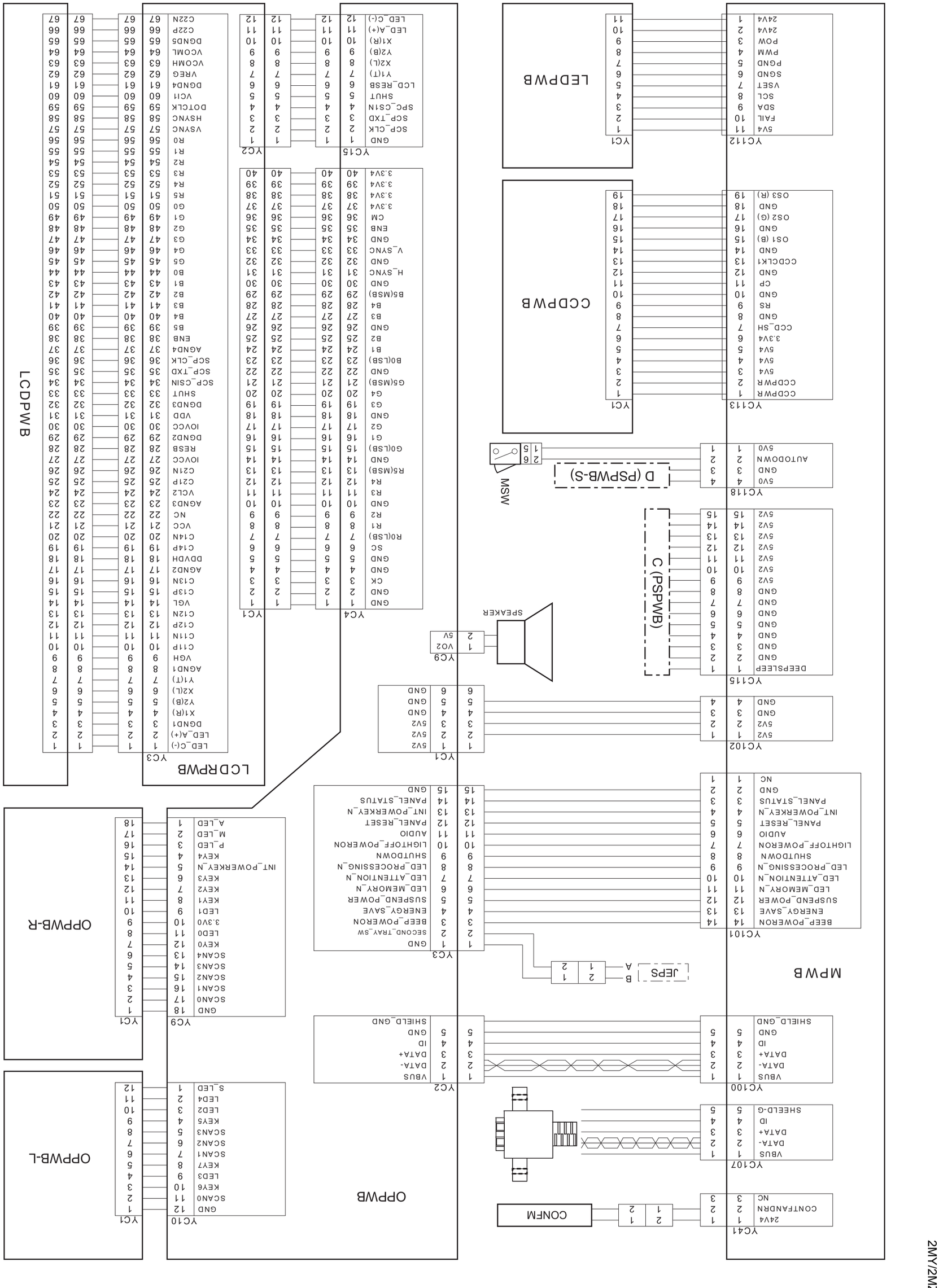
LCDPWB
OPPWB-L
OPPWB-R
OPPWB
MPWB
LCDRPWB
LEDPWB
CCDPWB
C (PSPWB)
D (PSPWB-S)
JEPS
CONFM
MSW
SPEAKER
YC1 GND SCP_CLK SCP_TXD SPC_CS1N SHUT LCD_RESB Y1(T) X2(L) Y2(B) X1(R) LED_A(+) LED_C(-)
YC2 GND SCP_CLK SCP_TXD SPC_CS1N SHUT LCD_RESB Y1(T) X2(L) Y2(B) X1(R) LED_A(+) LED_C(-)
YC3 LED_C(-) LED_A(+) DGND1 X1(R) Y2(B) X2(L) Y1(T) AGND1
YC4 GND GND CK GND GND SC R0(LSB) R1 R2 R3 R4 R5(MSB) G0(LSB) G1 G2 G3 G4 G5(MSB) B0(LSB) B1 B2 B3 B4 B5(MSB) GND H_SYNC GND V_SYNC GND ENB CM 3.3V4 3.3V4 3.3V4 3.3V4 A_LED M_LED P_LED KEY4 INT_POWERKEY_N KEY3 KEY2 KEY1 KEY0 LED0 3.3V0 LED1 KEY7 KEY6 LED3 KEY5 LED2 LED4 S_LED
YC9 GND SCAN0 SCAN1 SCAN2 SCAN3 SCAN4 KEY0 KEY1 KEY2 KEY3 KEY4 INT_POWERKEY_N KEY5 KEY6 KEY7 LED_PROCESSING_N LED_ATTENTION_N LED_MEMORY_N BEEP_POWERON ENERGY_SAVE SUSPEND_POWER LIGHTOFF_POWERON AUDIO PANEL_RESET INT_POWERKEY_N PANEL_STATUS GND
YC10 GND SCAN0 SCAN1 SCAN2 SCAN3 KEY5 LED2 LED4 S_LED
YC41 24V4 CONTFANDRN NC
YC101 BEEP_POWERON ENERGY_SAVE SUSPEND_POWER LED_ATTENTION_N LED_MEMORY_N LED_PROCESSING_N SHUTDOWN AUDIO LIGHTOFF_POWERON PANEL_RESET INT_POWERKEY_N PANEL_STATUS GND NC
YC102 5V2 GND 5V2 SCL SDA FAIL VSET SGND PGND PWM POW 24V4 24V4
YC107 VBUS DATA- DATA+ ID SHEELD-G
YC100 VBUS DATA- DATA+ ID GND SHIELD_GND
YC112 5V4
YC113 CCDPWR CCDPWR 5V4 5V4 5V4 3.3V4 CCD_SH GND RS GND CP GND CCDCLK1 GND OS1 (B) GND OS2 (G) GND OS3 (R)
YC115 DEEPSLEEP GND GND GND GND GND GND GND GND 5V2 5V2 5V2 5V2 5V2 5V2 5V2 5V2
YC118 5V0 GND AUTODOWN 5V0
YC1 5V2 GND GND GND 5V2
YC41 1 2 3
YC9 5V 5V2 1 2
YC1 GND GND GND GND GND GND 5V2 5V2 5V2 5V2 5V2 5V2
YC1 GND 5V2 5V2 5V2 5V2 5V2
YC1 GND SCAN0 SCAN1 SCAN2 SCAN3 KEY6 LED3 KEY7 LED_PROCESSING_N LED_ATTENTION_N LED_MEMORY_N BEEP_POWERON ENERGY_SAVE SUSPEND_POWER LIGHTOFF_POWERON AUDIO PANEL_RESET INT_POWERKEY_N PANEL_STATUS GND
YC1 5V4
YC1 24V4 SDA SCL VSET SGND PGND PWM POW 24V4 24V4
YC1 5V4 FAIL
YC1 GND SCP_CLK SCP_TXD SPC_CS1N SHUT LCD_RESB Y1(T) X2(L) Y2(B) X1(R) LED_A(+) LED_C(-)
YC2 GND SCP_CLK SCP_TXD SPC_CS1N SHUT LCD_RESB Y1(T) X2(L) Y2(B) X1(R) LED_A(+) LED_C(-)
YC3 LED_C(-) LED_A(+) DGND1 X1(R) Y2(B) X2(L) Y1(T) AGND1
YC4 GND GND CK GND GND SC R0(LSB) R1 R2 R3 R4 R5(MSB) G0(LSB) G1 G2 G3 G4 G5(MSB) B0(LSB) B1 B2 B3 B4 B5(MSB) GND H_SYNC GND V_SYNC GND ENB CM 3.3V4 3.3V4 3.3V4 3.3V4 A_LED M_LED P_LED KEY4 INT_POWERKEY_N KEY3 KEY2 KEY1 KEY0 LED0 3.3V0 LED1 KEY7 KEY6 LED3 KEY5 LED2 LED4 S_LED
YC9 GND SCAN0 SCAN1 SCAN2 SCAN3 SCAN4 KEY0 KEY1 KEY2 KEY3 KEY4 INT_POWERKEY_N KEY5 KEY6 KEY7 LED_PROCESSING_N LED_ATTENTION_N LED_MEMORY_N BEEP_POWERON ENERGY_SAVE SUSPEND_POWER LIGHTOFF_POWERON AUDIO PANEL_RESET INT_POWERKEY_N PANEL_STATUS GND
YC10 GND SCAN0 SCAN1 SCAN2 SCAN3 KEY5 LED2 LED4 S_LED
YC1 GND SCAN0 SCAN1 SCAN2 SCAN3 SCAN4 KEY0 KEY1 KEY2 KEY3 KEY4 INT_POWERKEY_N KEY5 KEY6 KEY7 LED_PROCESSING_N LED_ATTENTION_N LED_MEMORY_N BEEP_POWERON ENERGY_SAVE SUSPEND_POWER LIGHTOFF_POWERON AUDIO PANEL_RESET INT_POWERKEY_N PANEL_STATUS GND
YC2 VBUS DATA- DATA+ ID GND SHIELD_GND
YC100 VBUS DATA- DATA+ ID GND SHIELD_GND
YC2 VBUS DATA- DATA+ ID GND SHIELD_GND
YC107 VBUS DATA- DATA+ ID SHEELD-G
YC3 GND SECOND_TRAY_SW
YC101 BEEP_POWERON ENERGY_SAVE SUSPEND_POWER LED_ATTENTION_N LED_MEMORY_N LED_PROCESSING_N SHUTDOWN AUDIO LIGHTOFF_POWERON PANEL_RESET INT_POWERKEY_N PANEL_STATUS GND NC
YC102 5V2 GND GND GND
YC41 24V4 CONTFANDRN NC
YC112 5V4
YC113 CCDPWR CCDPWR 5V4 5V4 5V4 3.3V4 CCD_SH GND RS GND CP GND CCDCLK1 GND OS1 (B) GND OS2 (G) GND OS3 (R)
YC115 DEEPSLEEP GND GND GND GND GND GND GND GND 5V2 5V2 5V2 5V2 5V2 5V2 5V2 5V2
YC118 5V0 GND AUTODOWN 5V0
JEPS A B
CONFM
MSW
SPEAKER
YC9 5V 5V2

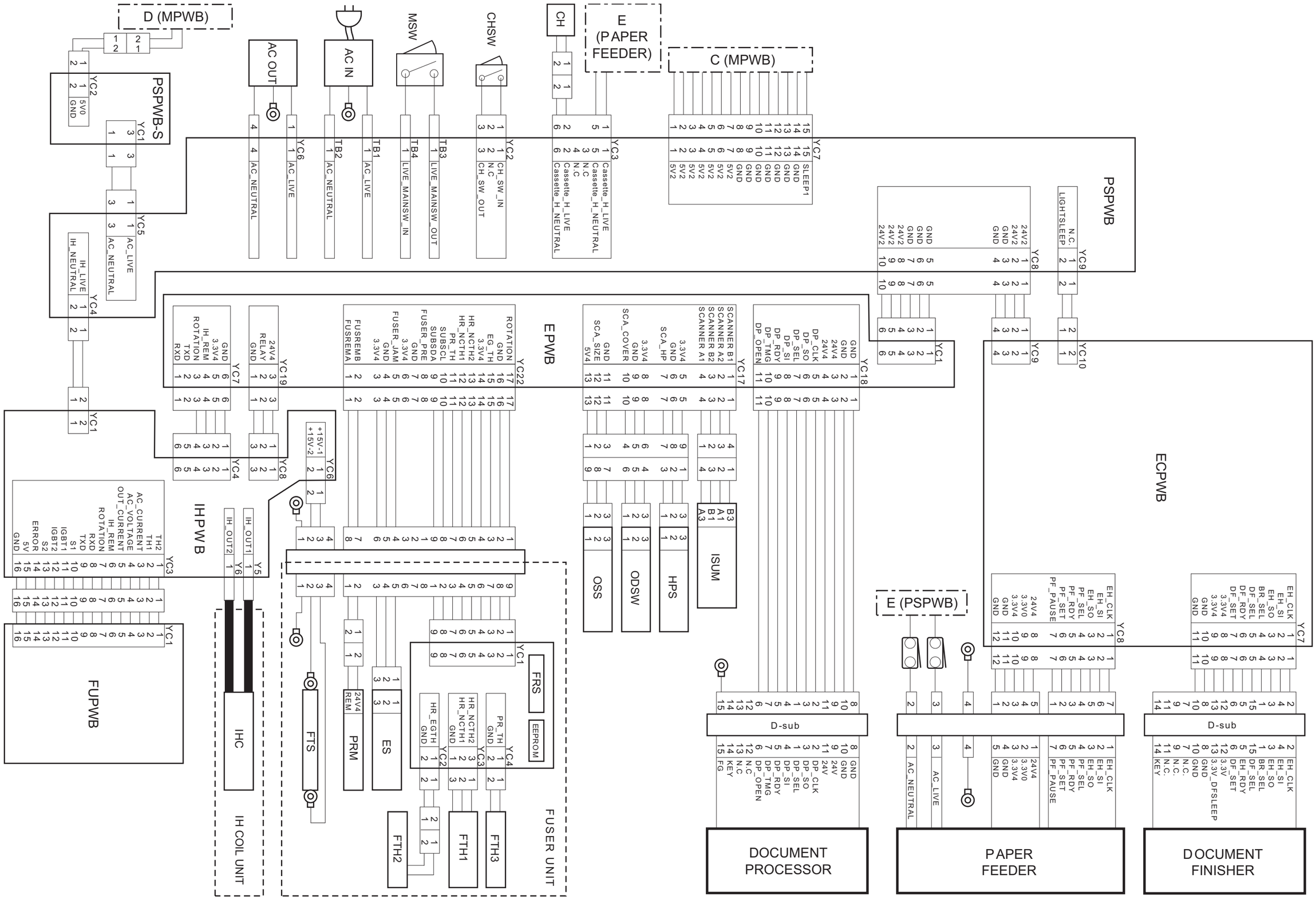
D (MPWB)
PSPWB-S
AC OUT
AC IN
MSW
CHSW
CH
E (PAPER FEEDER)
C (MPWB)
PSPWB
EPWB
ECPWB
IHPWB
FUPWB
IH COIL UNIT
FUSER UNIT
IHC
FTS
PRM
ES
FRS
EEPROM
FTH1
FTH2
FTH3
OSS
ODSW
HPS
ISUM
E (PSPWB)
D-sub
DOCUMENT PROCESSOR
PAPER FEEDER
DOCUMENT FINISHER

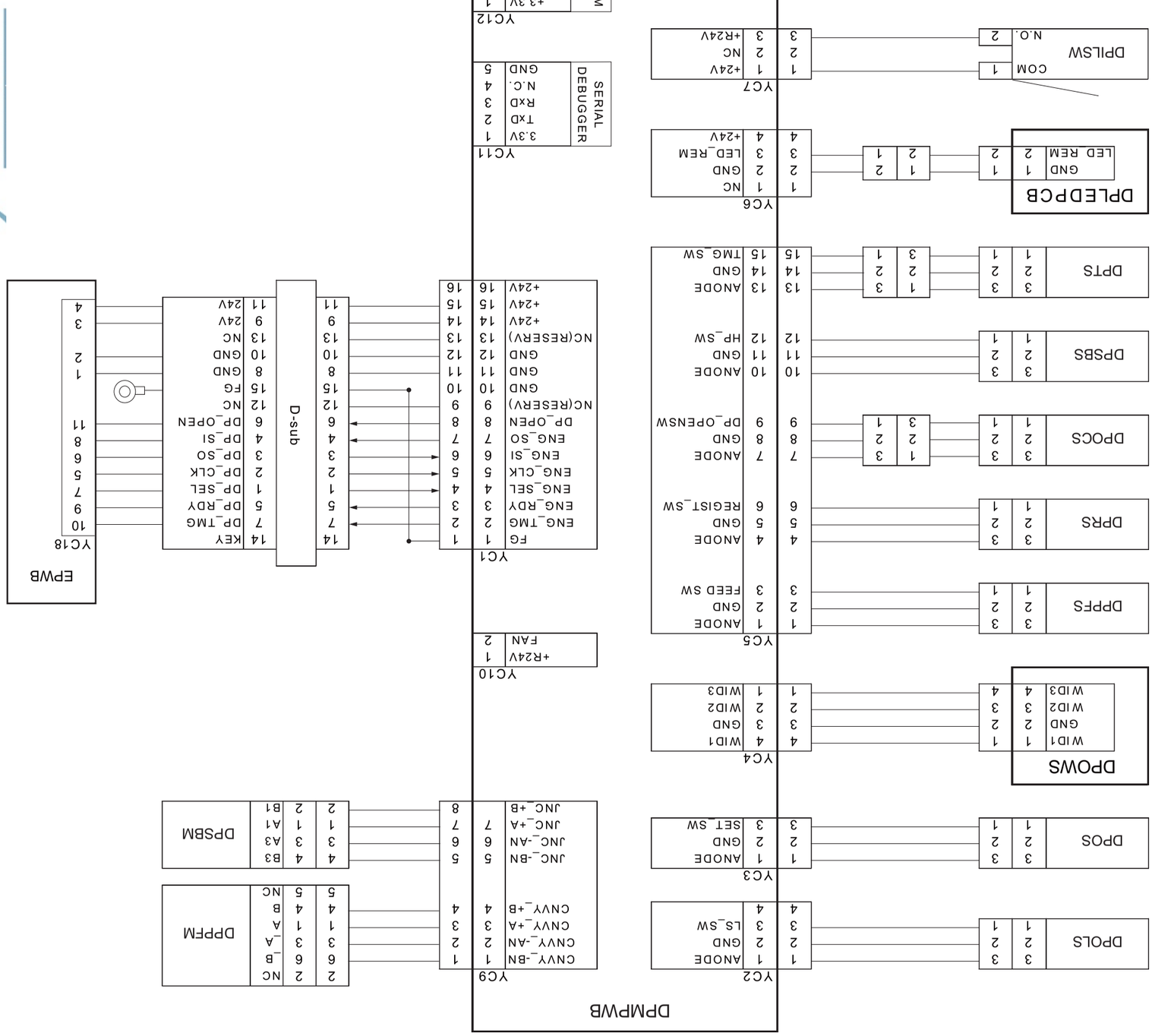
DPMPWB
YC1
FG 1
ENG_TMG 2
ENG_RDY 3
ENG_SEL 4
ENG_CLK 5
ENG_SI 6
ENG_SO 7
DP_OPEN 8
NC(RESERV) 9
GND 10
GND 11
GND 12
NC(RESERV) 13
+24V 14
+24V 15
+24V 16
YC2
ANODE 1
GND 2
LS_SW 3
ANODE 4
YC3
ANODE 1
GND 2
SET_SW 3
ANODE 4
YC4
WID1 4
GND 3
WID2 2
WID3 1
ANODE 4
YC5
ANODE 1
GND 2
FEED SW 3
ANODE 4
YC6
NC 1
GND 2
LED_REM 3
+24V 4
YC7
+24V 1
NC 2
+R24V 3
YC8
FEED_CL 1
+R24V 2
REGIST_CL 3
+R24V 4
YC9
CNVY_-BN 1
CNVY_-AN 2
CNVY_+A 3
CNVY_+B 4
JUC_-BN 5
JUC_-AN 6
JUC_+A 7
JUC_+B 8
YC10
+R24V 1
FAN 2
YC11
3.3V 1
TxD 2
RxD 3
N.C. 4
GND 5
SERIAL DEBUGGER
YC12
+3.3V 1
SWCLK 2
SWDIO 3
RESETN 4
GND 5
FLASH ROM I/F
DPOCS
DPSBS
DPTS
DPLEDPCB
GND 1
LED REM 2
DPLSW
COM 1
N.O. 2
DPPFCL
DPRCL
DPOLS
DPOS
DPRS
DPPFS
DPOWS
WID1 1
GND 2
WID2 3
WID3 4
DPSBM
DPPFM
D-sub
EPWB
YC18
KEY 14
DP_TMG 7
DP_RDY 5
DP_SEL 1
DP_CLK 2
DP_SO 3
DP_SI 4
DP_OPEN 6
NC 12
FG 15
GND 8
GND 10
NC 13
24V 9
24V 11

PF-470/471
(Paper feeder)
Installation Guide

TONER+
www.tonerplus.com.ua

PF-470/471 PAPER FEEDER

PF-470

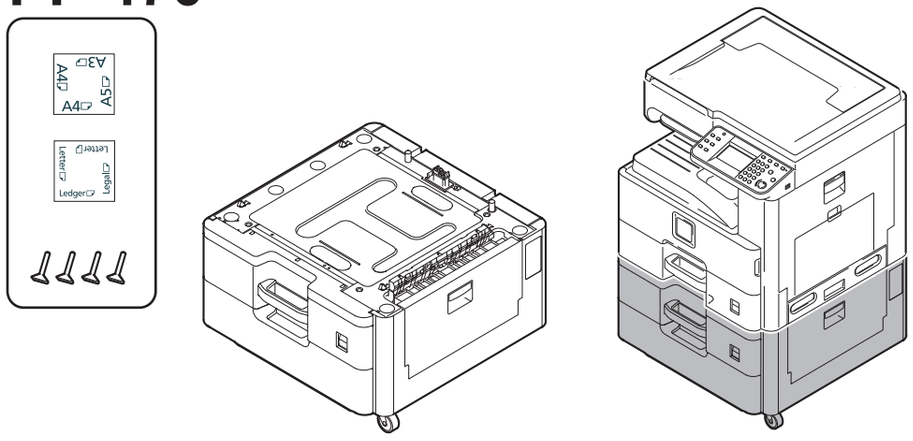

PF-471

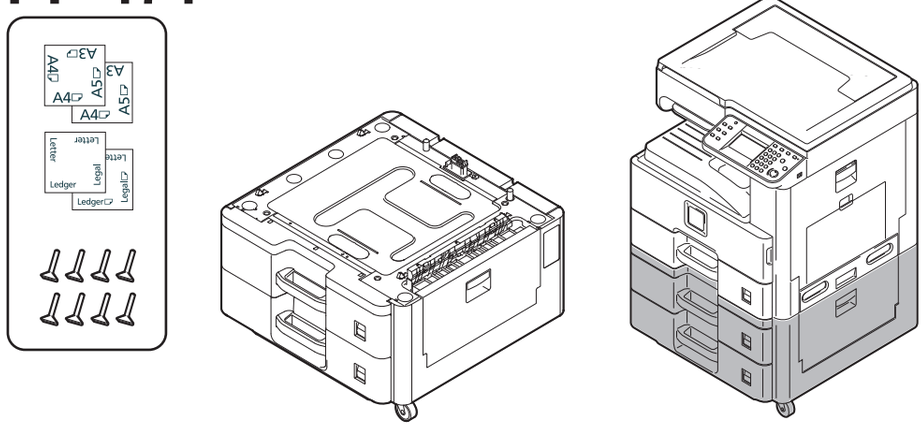

1

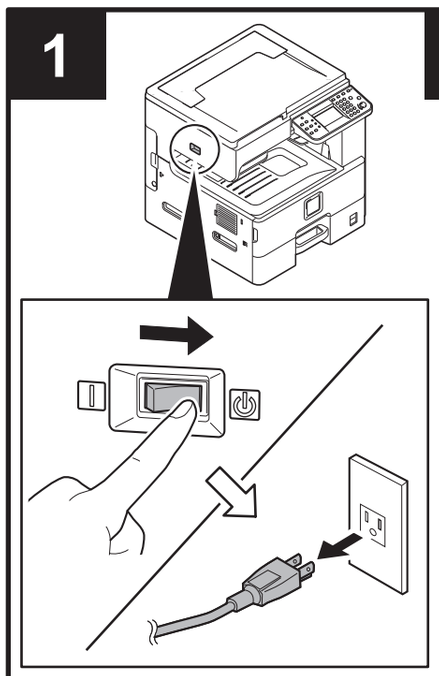

2

PF-470

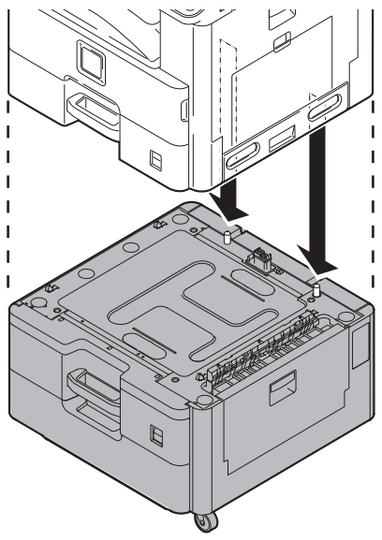

PF-471

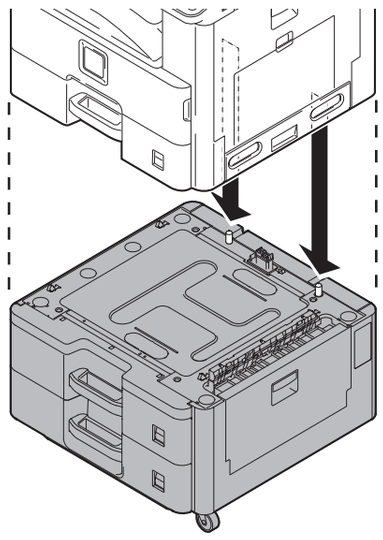

3

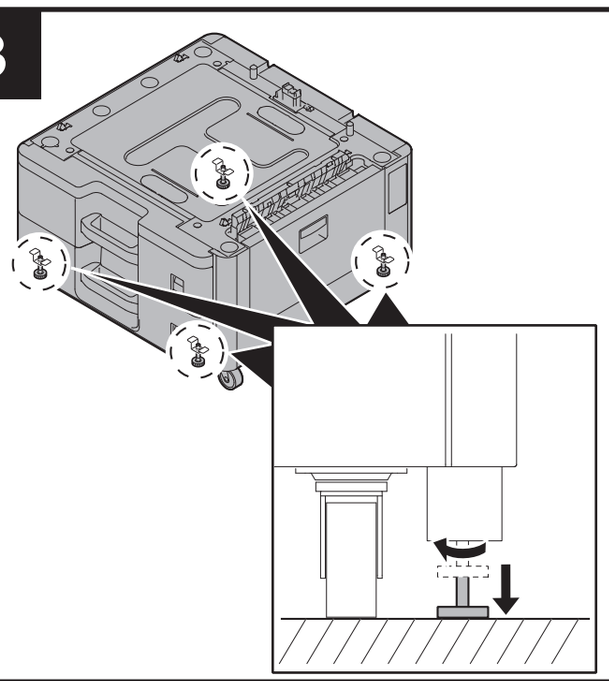

4

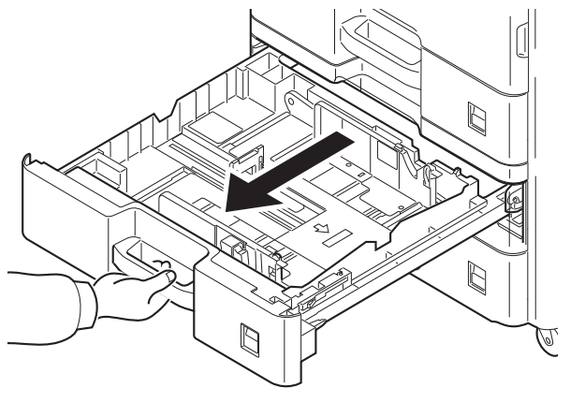

5-1

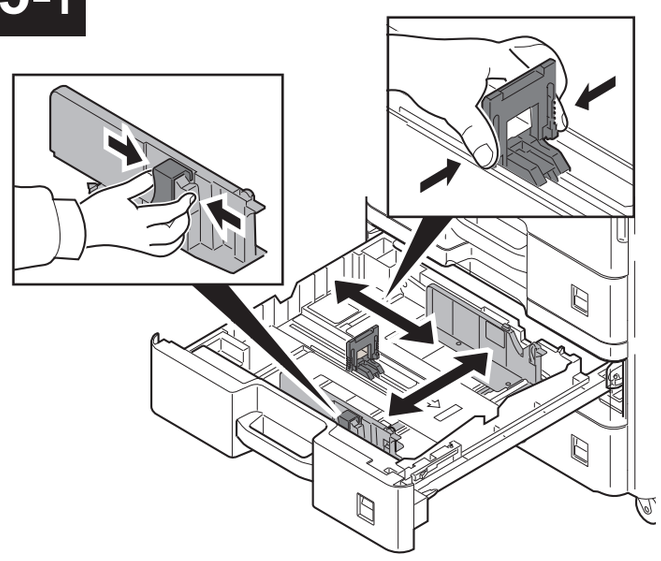

5-2

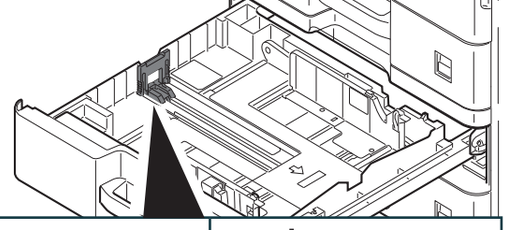

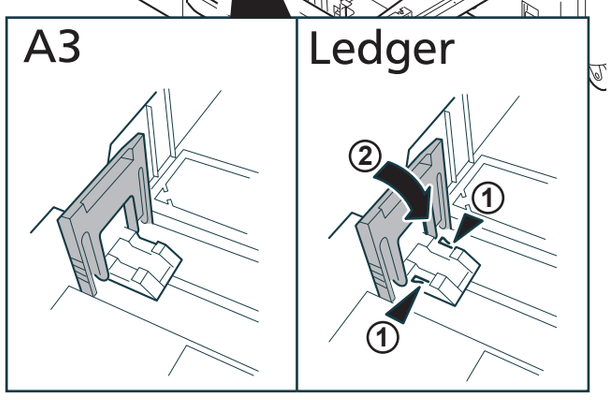

6

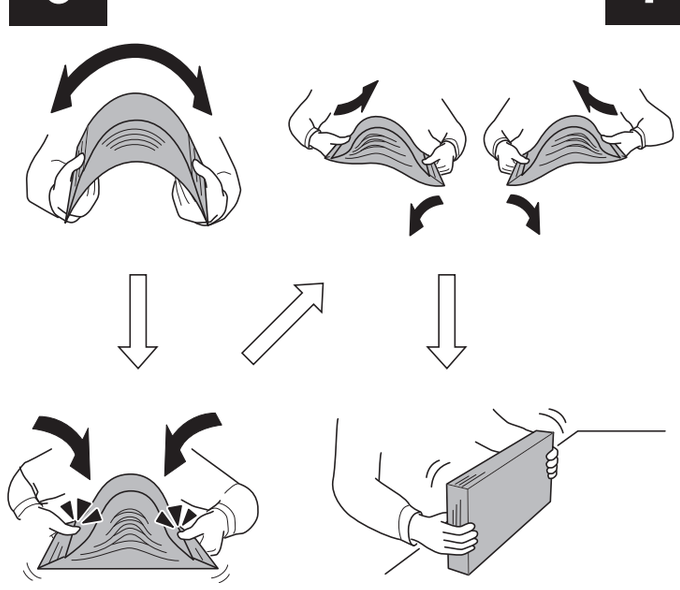

7

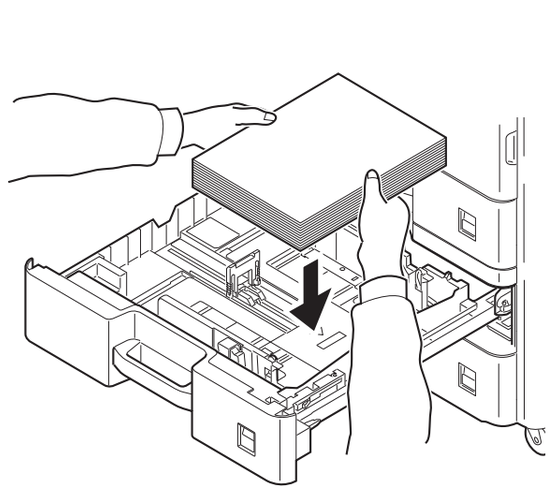

2010.9
303NN56710

8

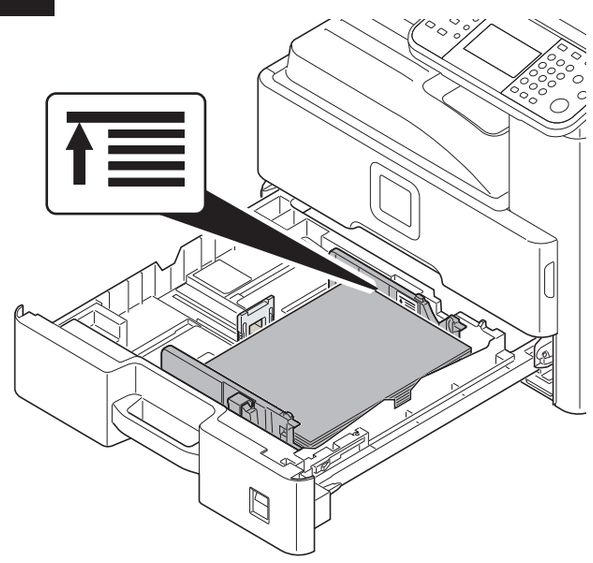

9

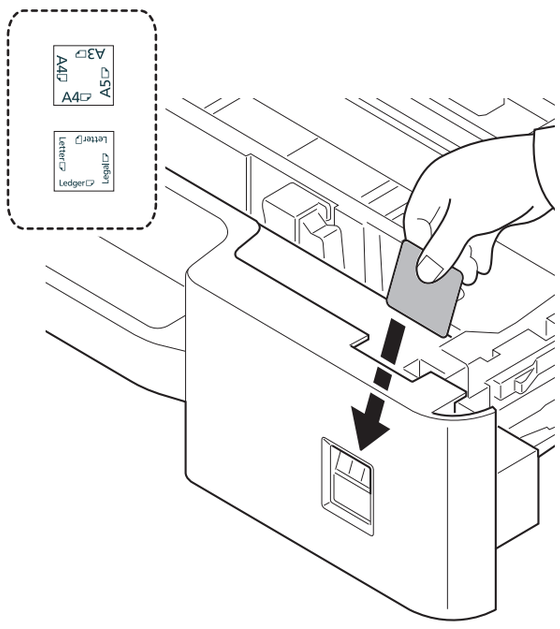

10

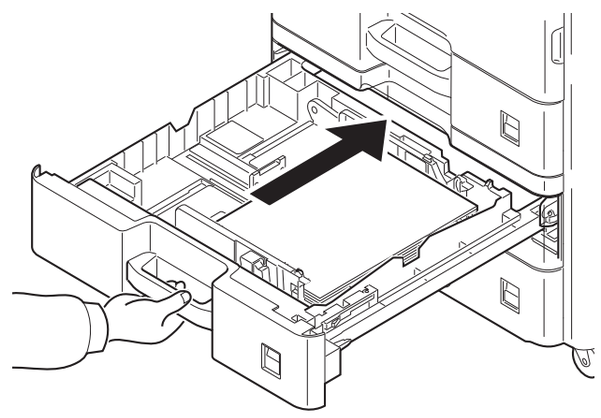

(ENG)

Fix Paper Width Guide
You can fix the paper width guide using the supplied retaining pins.
Follow the steps below as necessary.

(FR)

Fixation du guide de largeur du papier
Vous pouvez fixer le guide de largeur du papier en utilisant les goupilles de fixation fournies.
Suivez les étapes ci-dessous en fonction des besoins.

(ES)

Fijar la guía de anchura del papel
Puede fijar la guía de anchura del papel con los pernos de retén proporcionados.
Siga los pasos siguientes según sea necesario.

(DE)

Papierbreitenführung befestigen
Sie können die Papierbreitenführung mit den gelieferten Haltebolzen befestigen.
Folgen Sie den Schritten unten falls notwendig.

(IT)

Fissare la guida di larghezza carta
Per fissare la guida di larghezza carta, utilizzare i perni di fissaggio forniti.
Eseguire i seguenti punti come necessario.

(CN)

固定纸张宽度导板
您可以使用附带的定位销固定纸张宽度导板。
必要时执行如下步骤。

(TW)

固定紙張寬度導板
您可以使用隨附的定位卡榫固定紙張寬度導板。
如有必要，請執行以下步驟。

(KO)

용지폭 가이드 고정
기기와 함께 제공된 핀으로 용지폭 가이드를 고정시킬 수 있습니다.
필요하면 아래의 작업을 하십시오.

(JP)

用紙幅ガイドの固定
用紙幅ガイドは同梱のピンで固定することが可能です。
必要に応じて、以下の作業を行って下さい。

11

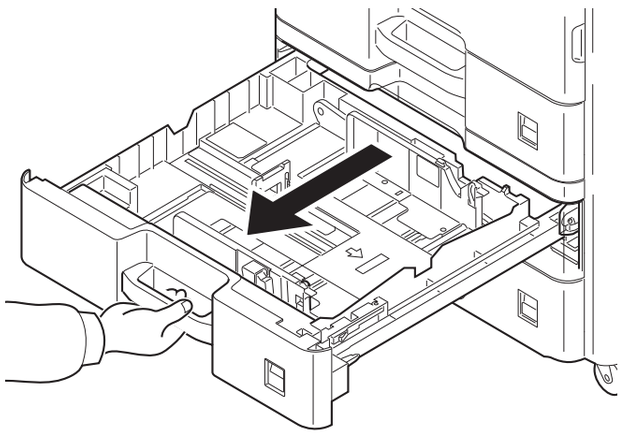

12

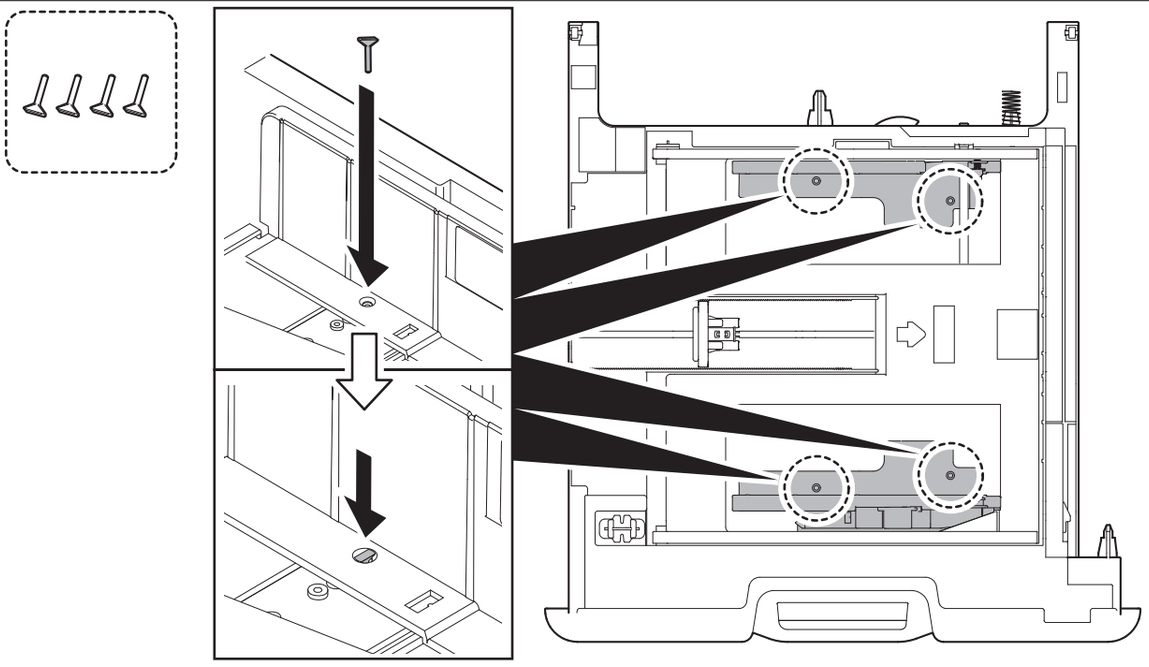

13

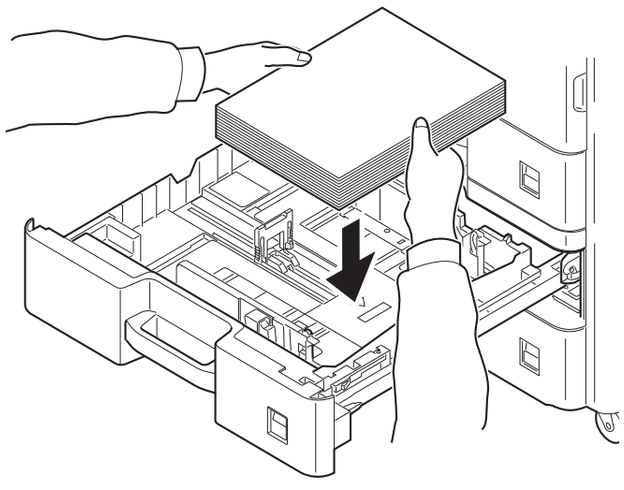

14

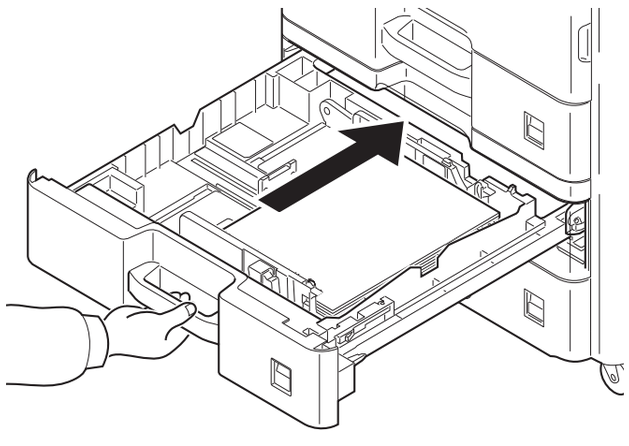

2010.9
303NN56710

DF-470/AK-470
(Document finisher)
Installation Guide

TONER
www.tonerplus.com.ua

DF-470 DOCUMENT FINISHER , AK-470 ATTACHMENT KIT

for

Black & White MFP 25/30

Color MFP 20/25

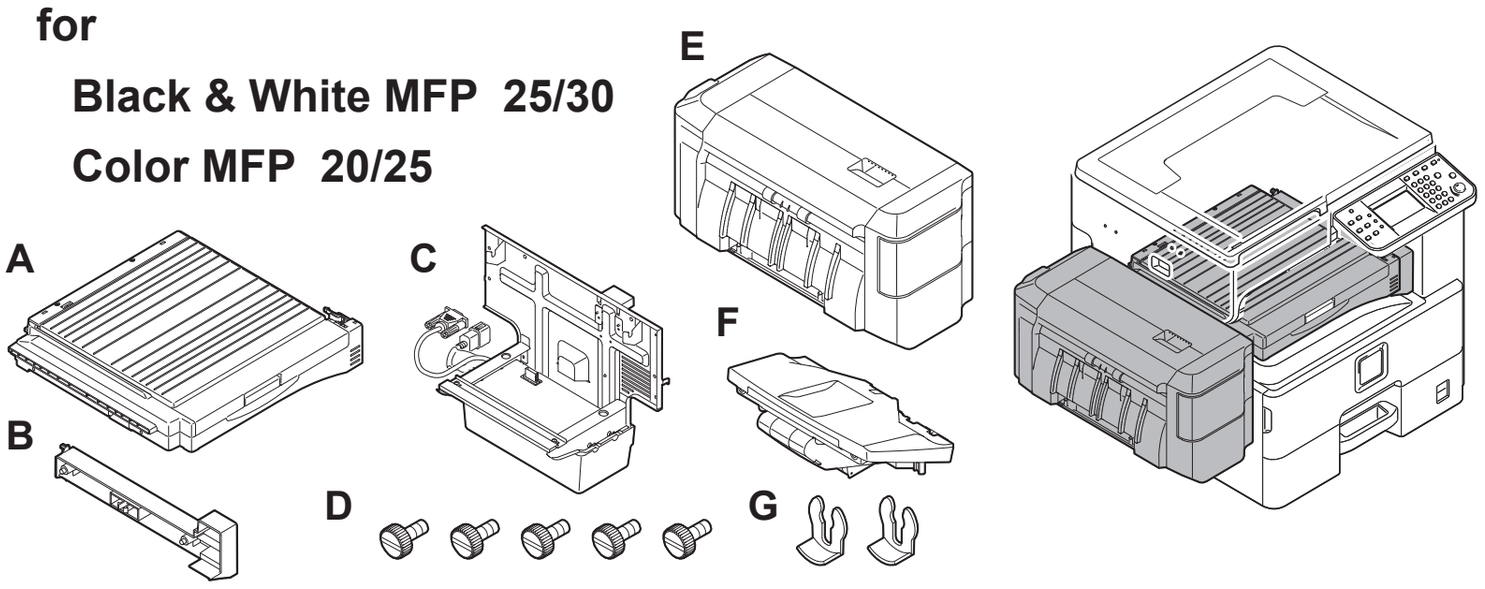

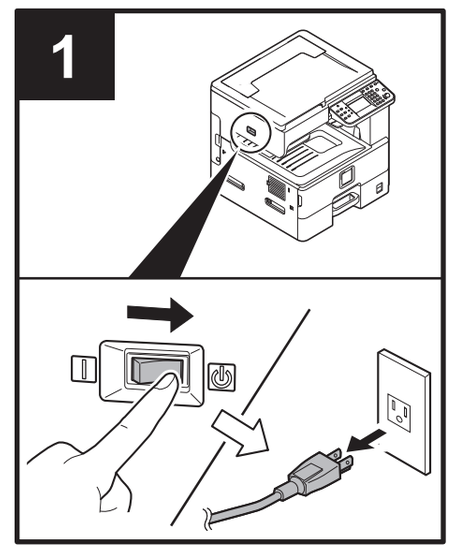

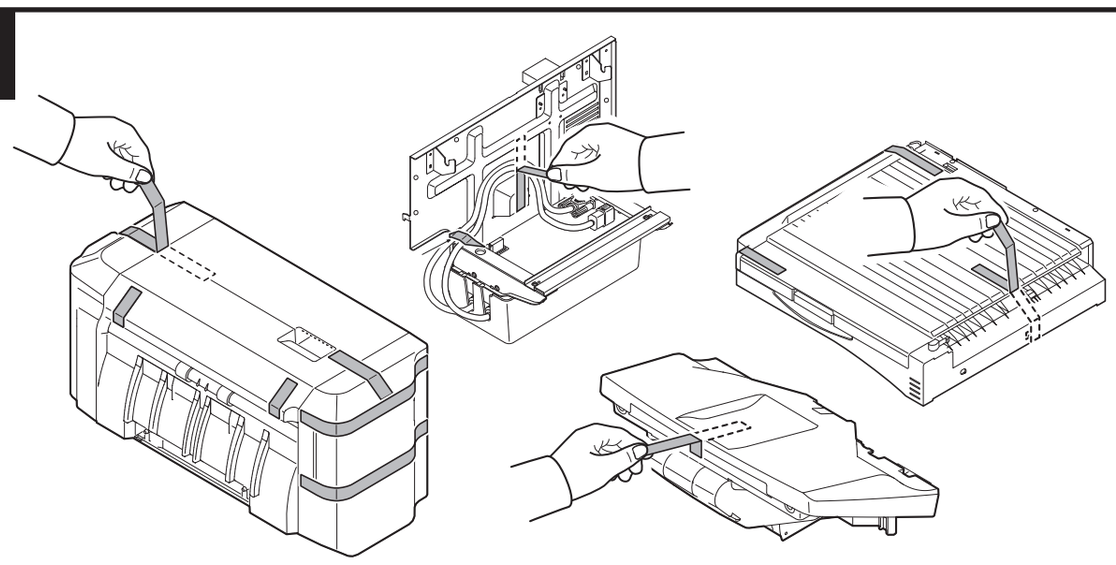

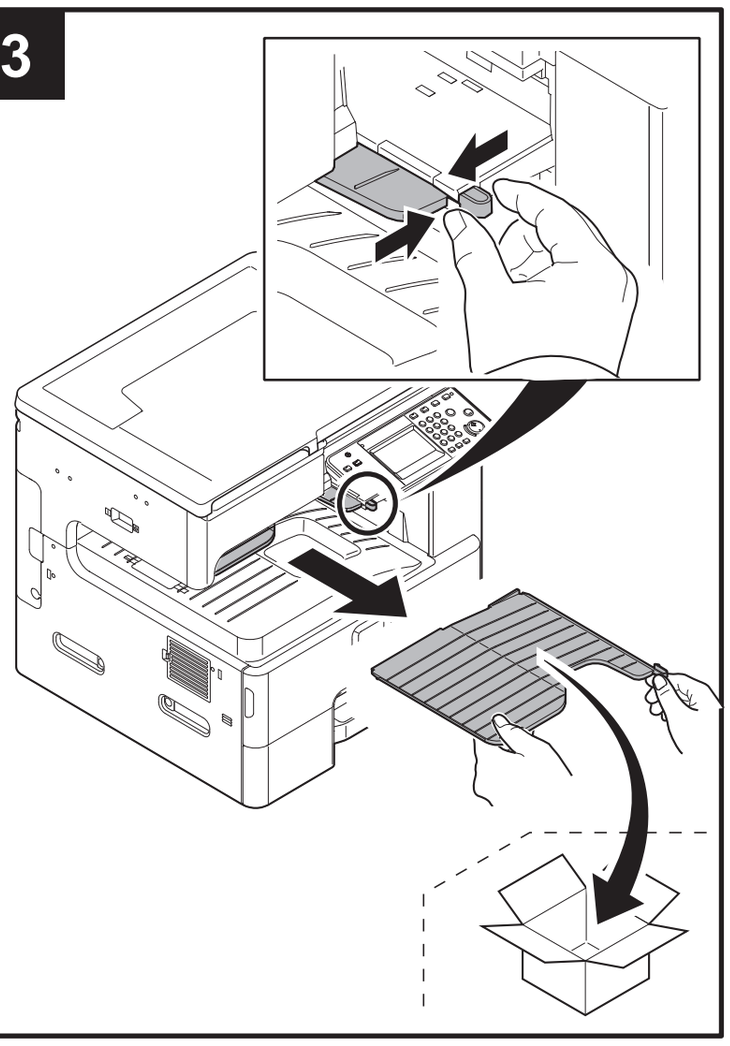

4 Black & White MFP 25/30

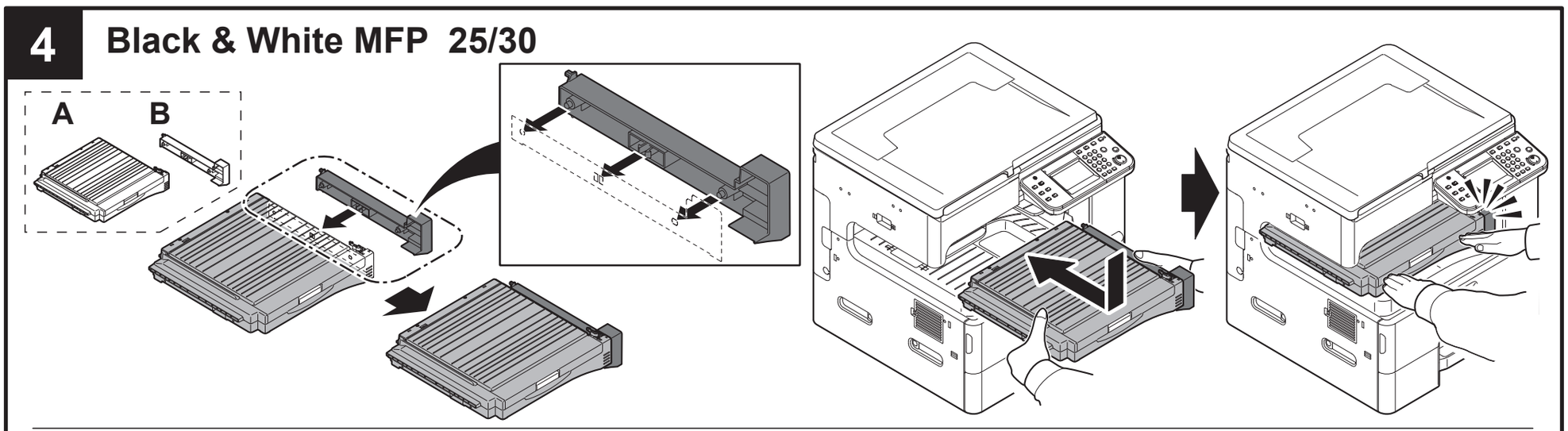

Color MFP 20/25

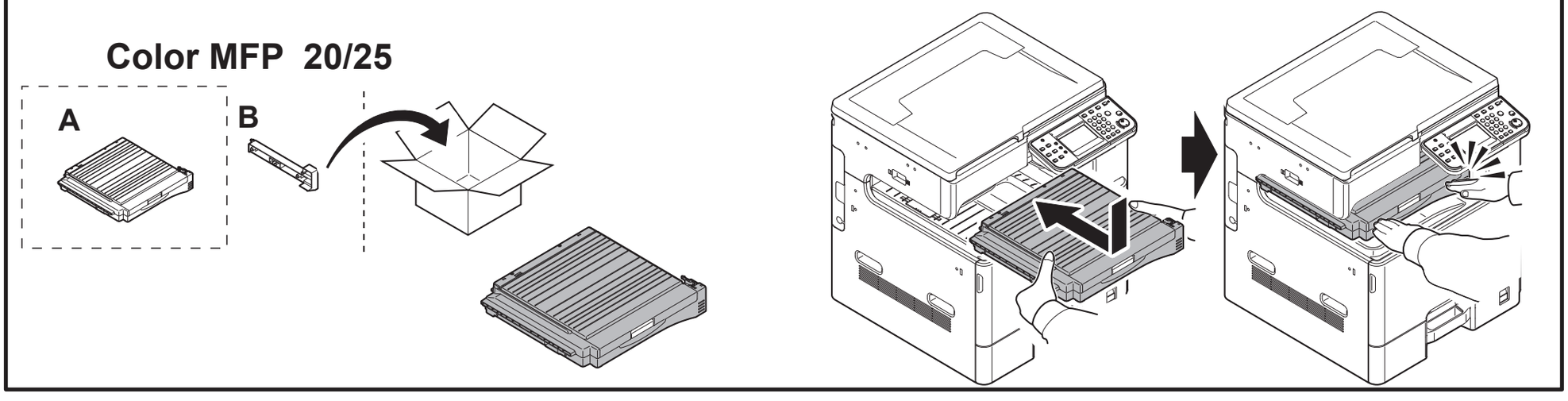

2010.9
305JS56710

5

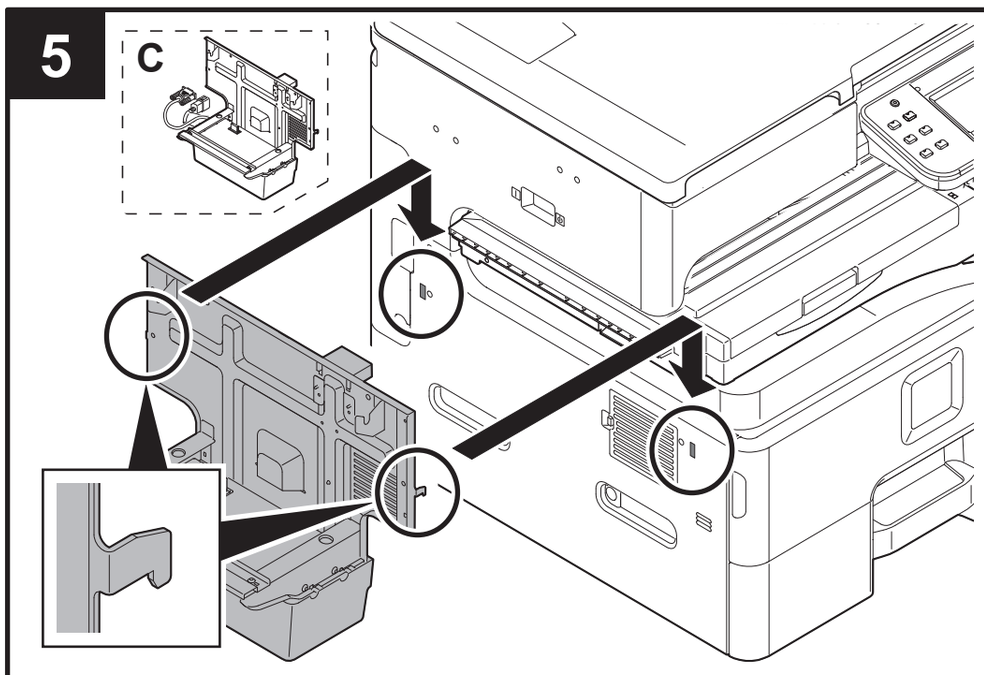

6

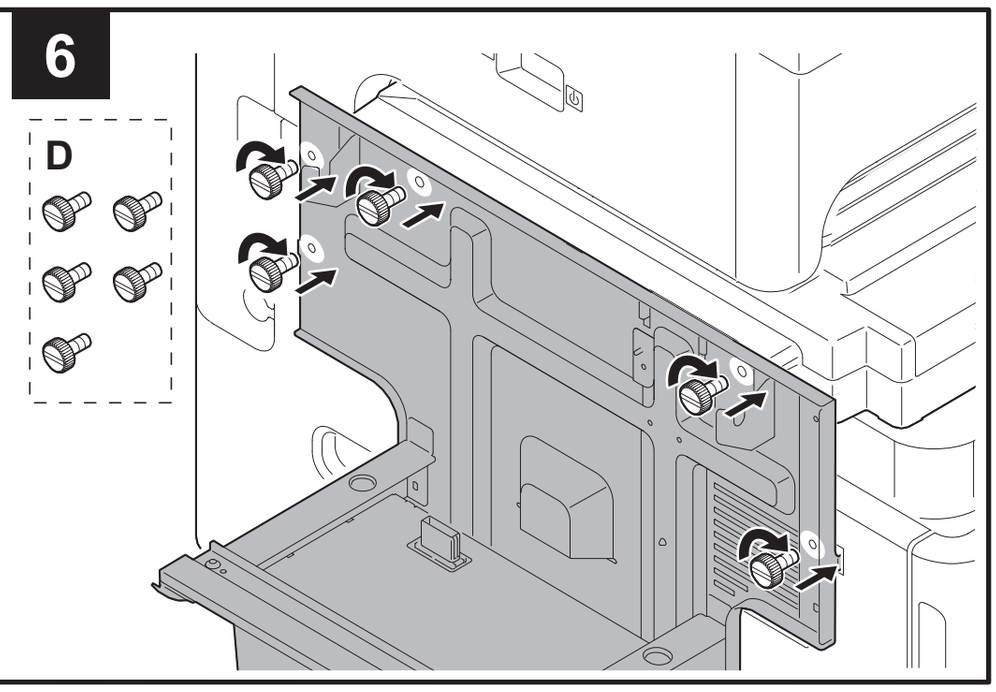

7

Black & White MFP 25/30

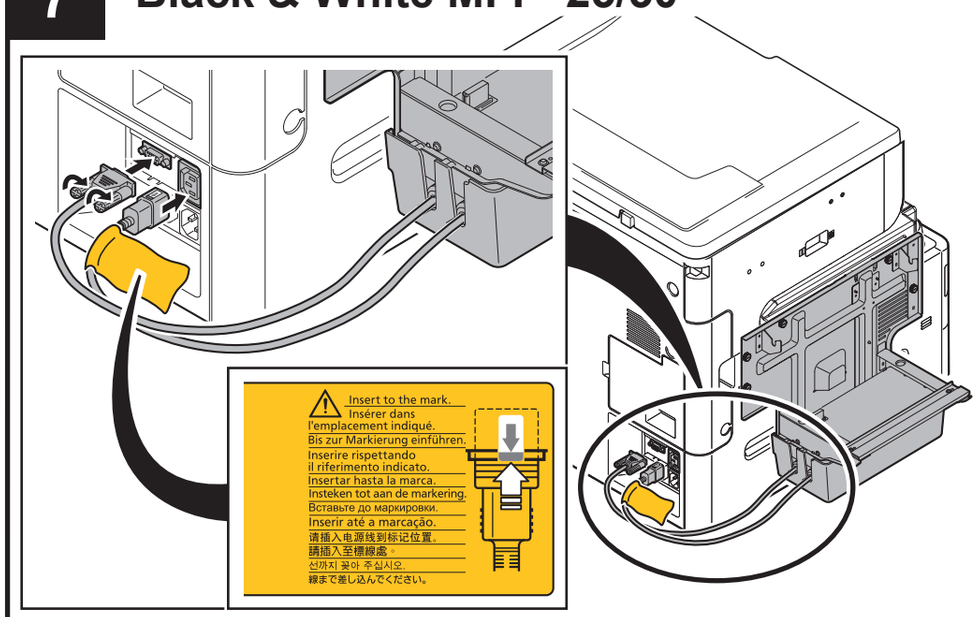

Color MFP 20/25

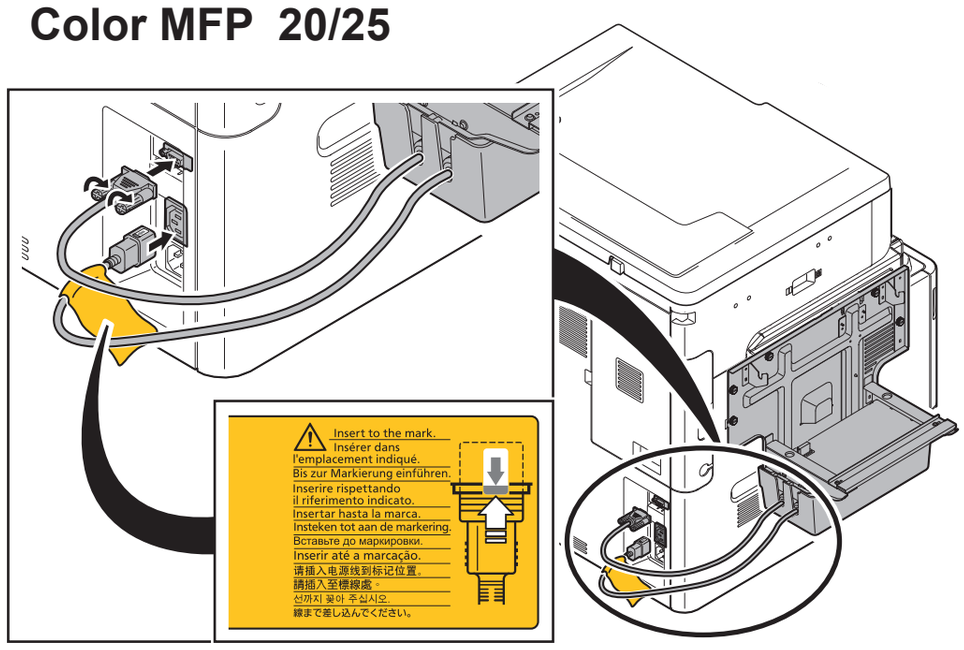

8

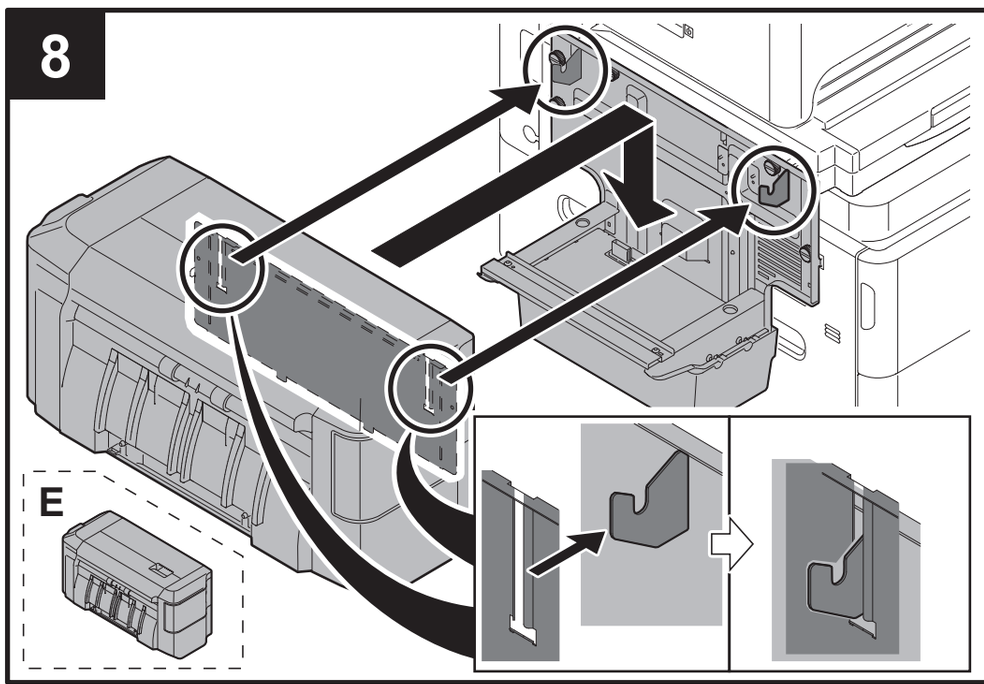

9

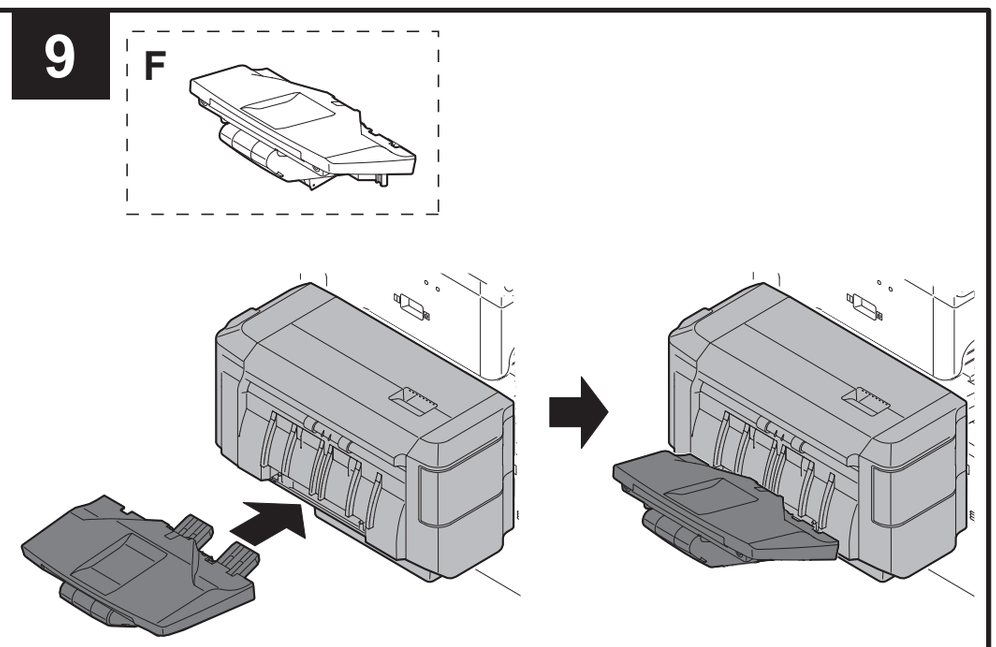

10

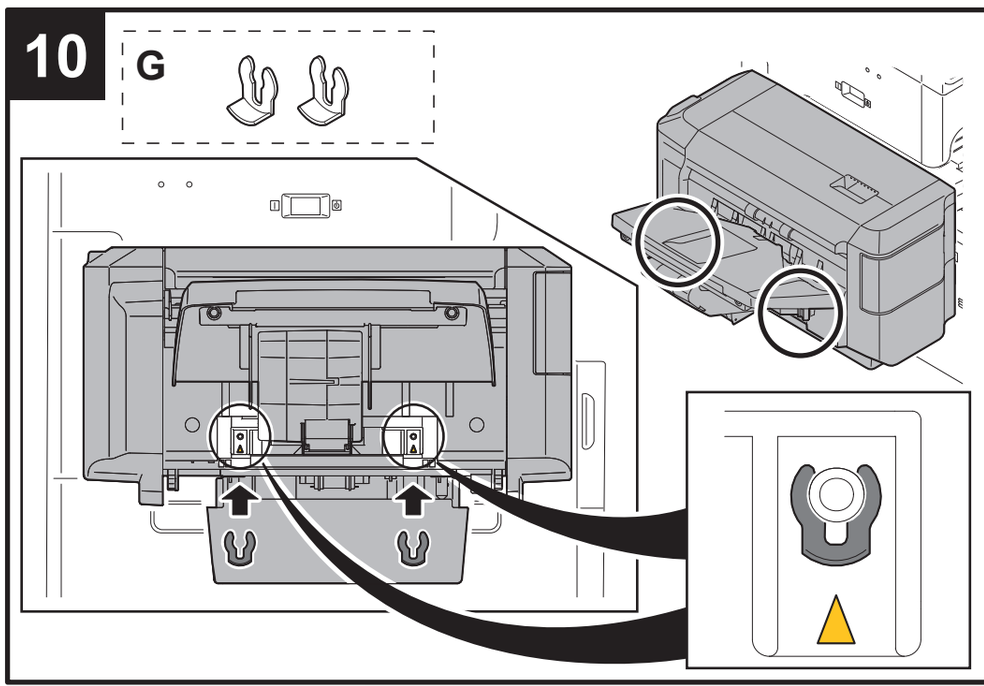

2010.9
305JS56710

FAX System(U)
Installation Guide

TONER+
www.tonerplus.com.ua

FAX System(U)

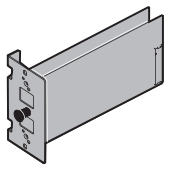

· · · · · · · · · · · · · · · · · 1

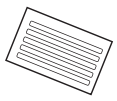

· · · · · · · · · · · · · · · · · 1

(100V · · · · · · · · · · · · · 0)

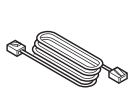

AU

· · · · · · · · · · · · · · · · · 1

JP

US

PJJWC0016Z (UL Listed. HUAN HSIN Type TL)

· · · · · · · · · · · · · · · · · 1

Black & White MFP 25/30

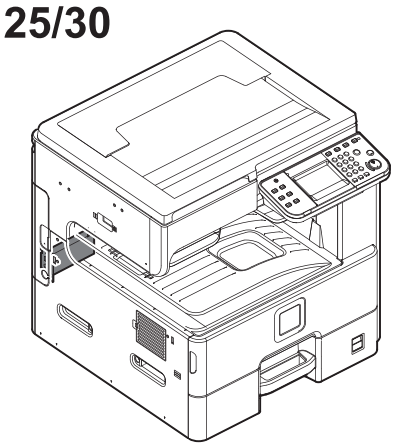

1

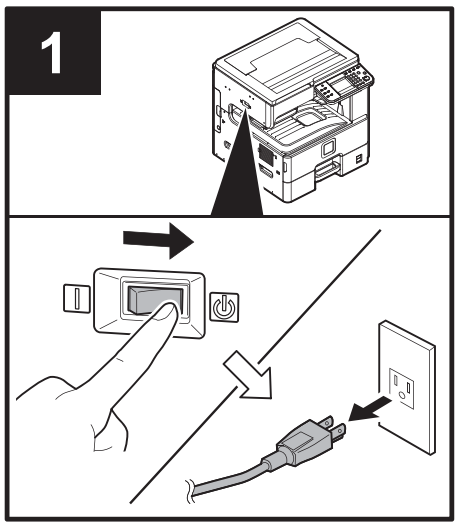

2

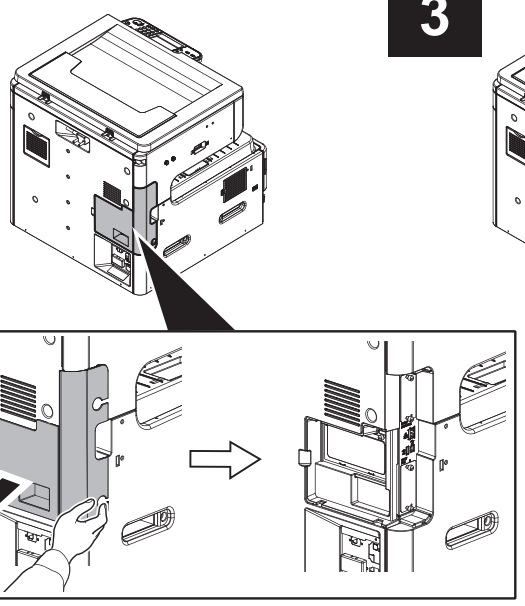

3

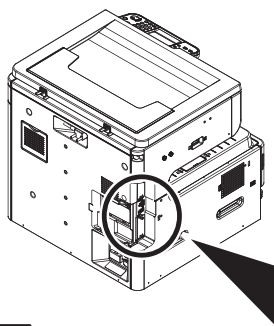

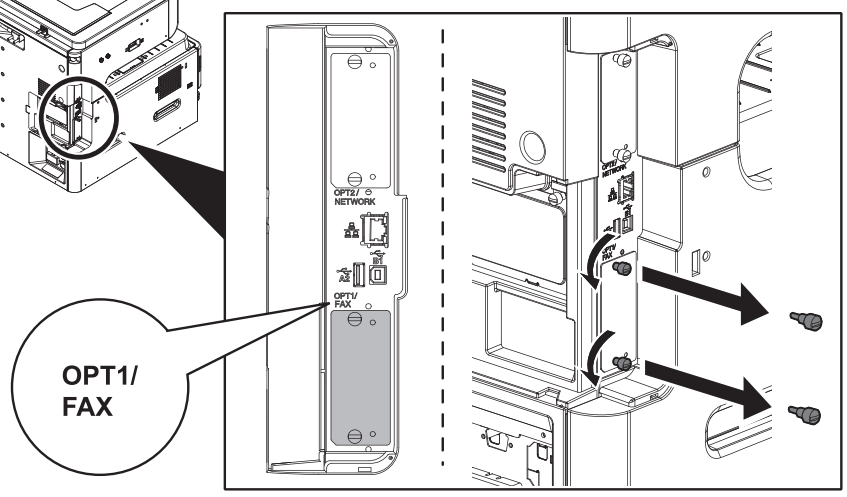

4

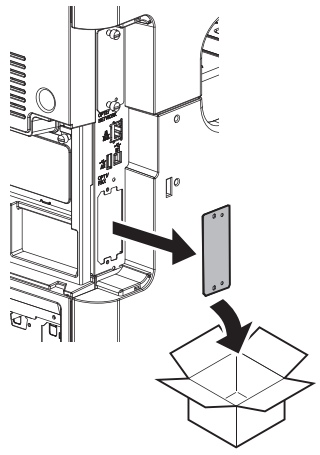

5

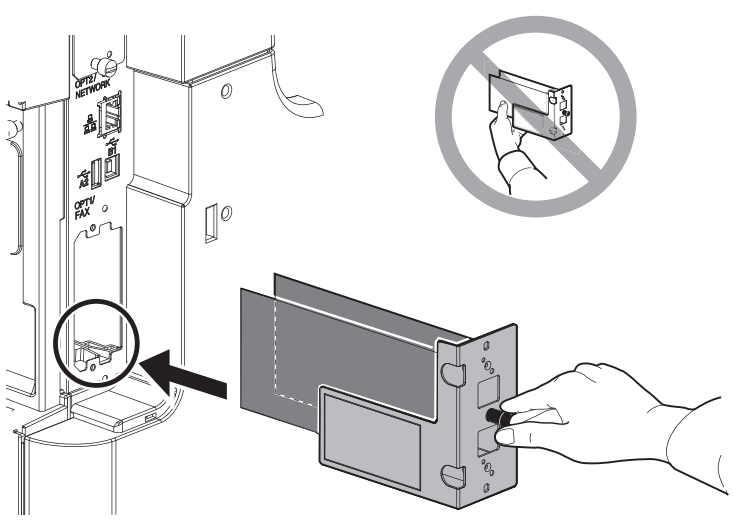

6

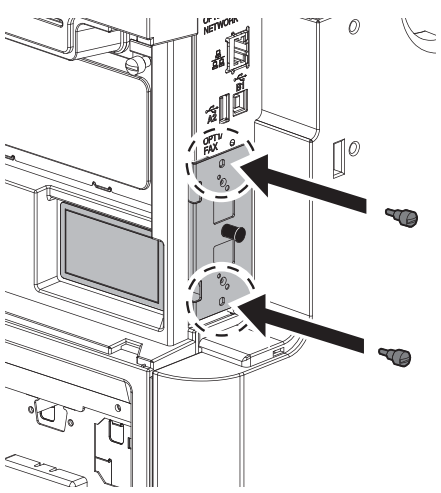

7

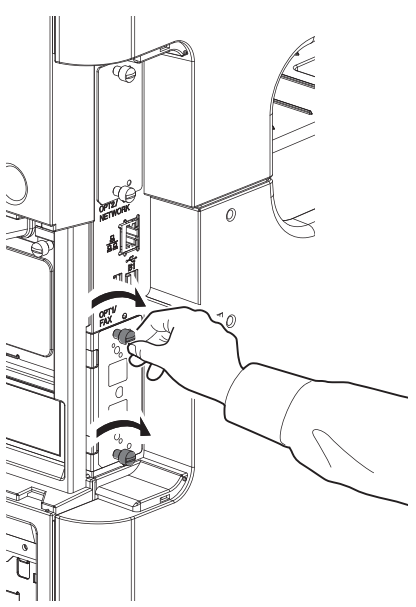

8

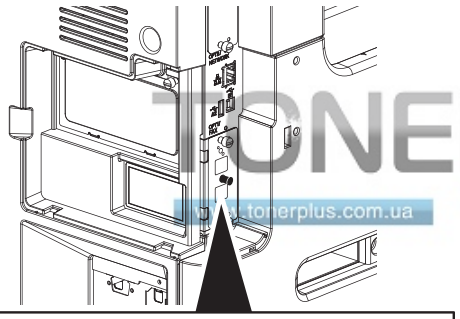

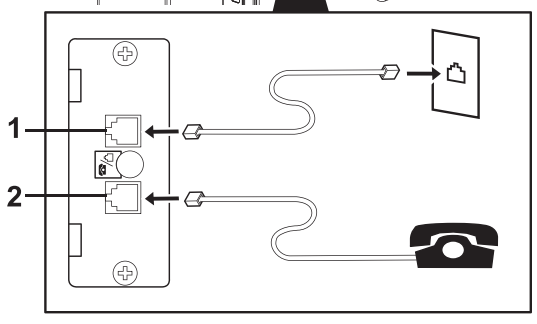

1	LINE connector	Connect the modular cord for the telephone line to this connector.
2	TEL connector	When using a commercially available telephone set, connect the modular cord to this connector.

1	Connecteur LINE	Brancher le cordon pour la ligne téléphonique sur cette prise.
2	Connecteur TEL	Lors de l'utilisation d'un téléphone standard, brancher le cordon téléphonique à cette prise.

1	Conector de LÍNEA	Conecte el cable modular de la línea telefónica a este conector.
2	Conector TEL	Si utiliza un aparato telefónico de los disponibles en el mercado, conecte el cable modular a este conector.

1	Leitungs-anschluss-buchse	Verbinden Sie diesen Anschluss mit der Telefondose.
2	Telefonan-schlussbuchse	Hier kann ein Telefon angeschlossen werden.

1	Connettore LINEA	Collegare a questo connettore il cavo modulare della linea telefonica.
2	Connettore TEL	Se si desidera collegare al sistema un normale telefono, collegarlo a questo connettore.

1	LINHA conector	Conecte o cabo modular para a linha telefônica a este conector.
2	TEL conector	Ao usar um aparelho telefônico disponível comercialmente, conecte o cabo modular a este conector.

1	LINE接続コネクター	電話回線のモジュラーコードを接続してください。
2	TEL接続コネクター	市販の電話機を併用する場合は、ここに接続してください。

TONER
www.tonerplus.com.ua

9

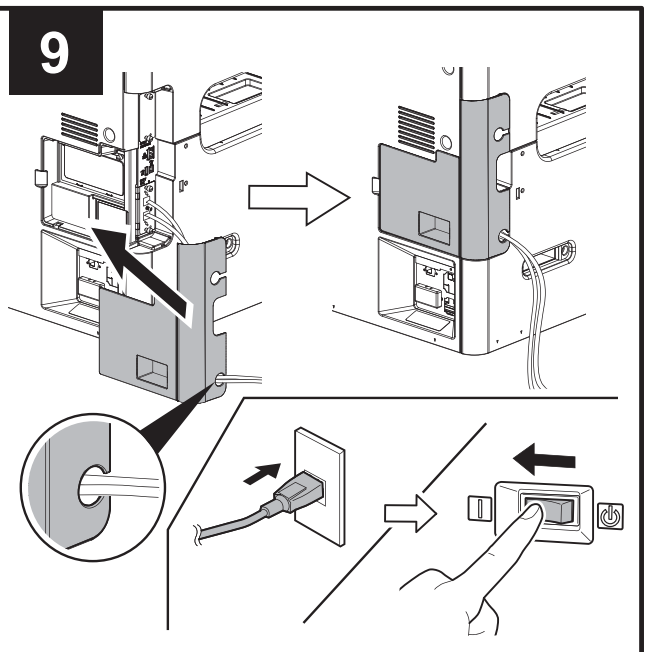

2010.9
305JR56710

10

FAX Setup Wizard

ENG

The machine provides Quick Setup Wizard in System Menu to set the FAX. Follow the instructions on the operation panel.

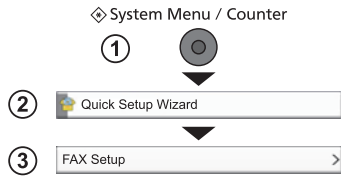

BR

A máquina fornece o Assistente de Configuração Rápida no Menu de Sistema para configurar o FAX. Siga as instruções no painel de operação.

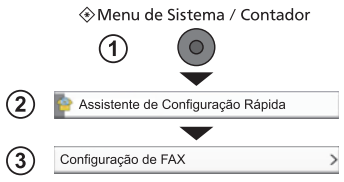

CZ

V systémové nabídce zařízení najdete Průvodce rychlým nastavením, pomocí něhož můžete nastavit FAX. Postupujte podle pokynů na provozním panelu.

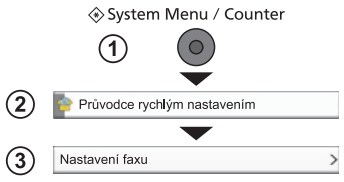

DE

Die Maschine bietet den Schnelleinstieg Wizard im Systemmenü an, um das Fax einzustellen: Folgen Sie den Anweisungen auf dem Bedienfeld.

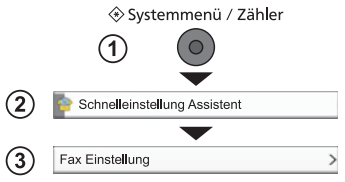

DK

Maskinen indeholder en Guide til hurtig opsætning i System menuen til indstilling af faxen. Følg anvisningerne på betjeningspanelet.

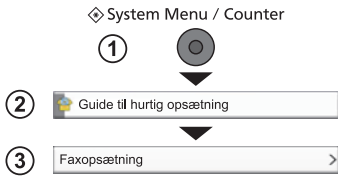

ES

La máquina dispone del Asistente de configuración rápida en el Menú Sistema para configurar el fax. Siga las instrucciones del panel de controles.

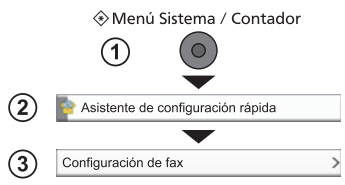

FI

Laitteen Järjestelmä-valikossa on ohjattu pika-asennustoiminto faksin asetusta varten. Noudata käyttöpaneelin ohjeita.

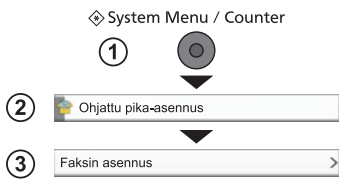

FR

L'appareil prévoit un Assistant de configuration rapide dans le menu système pour régler les paramètres du fax. Suivez les instructions sur le panneau de commande.

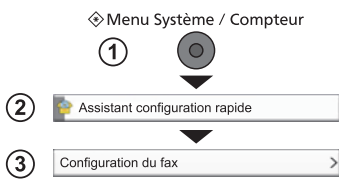

GR

Το μηχάνημα διαθέτει έναν Οδηγό Γρήγορης Εγκατάστασης στο Μενού Συστήματος για τη ρύθμιση του ΦΑΞ. Ακολουθήστε τις οδηγίες που εμφανίζονται στον πίνακα λειτουργίας.

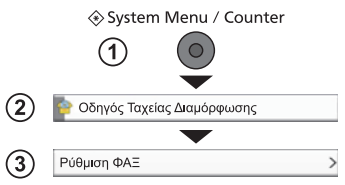

HEB

המכשיר מספק אשף הגדרה מהירה בתפריט המערכת, להגדרת הפקס.
פעל לפי ההוראות המופיעות בלוח המפעיל.

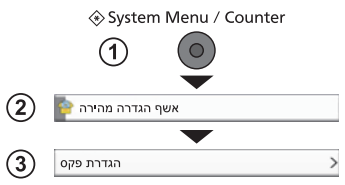

HU

A rendszermenüben a gyorstelepítő varázsló lehetővé teszi a FAX beállítását. Kövesse a kezelőpulton megjelenő utasításokat.

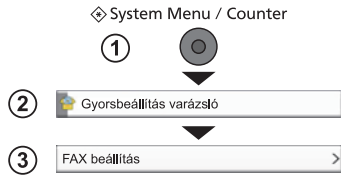

IT

È possibile utilizzare la procedura guidata di installazione rapida reperibile nel Menu Sistema per la configurazione del modulo FAX. Attenersi alle istruzioni visualizzate sul pannello comandi.

NL

In het Systeemmenu van het apparaat bevindt zich de wizard Snel installeren om de fax in te stellen. Volg de instructies op het bedieningspaneel van de fax.

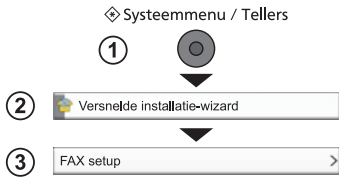

NO

Maskinen har en Hurtigoppsettveiviser i Systemmenyen til innstilling av faksen. Følg veiledningen på betjeningspanelet.

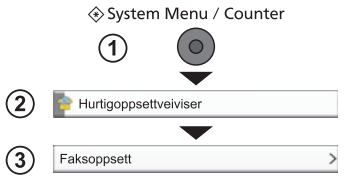

PL

W menu systemowym urządzenia dostępny jest Przewodnik szybkiej instalacj, który pozwoli ustawić funkcję FAKSU. Wykonuj instrukcje z panelu operacyjnego.

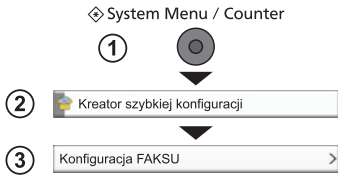

PT

A máquina proporciona o Assistente de Configuração Rápida no Menu do Sistema para definir o FAX. Siga as instruções no painel de funcionamento.

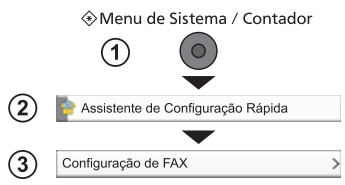

RO

Echipamentul are un expert de configurare rapidă în meniul Sistem pentru configurarea faxului.Urmați instrucțiunile din panoul de utilizare.

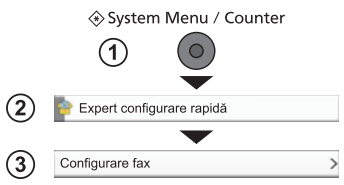

RU

Аппарат позволяет запустить мастер быстрой установки из системного меню для настройки факса. Выполните инструкции на панели управления.

SV

Maskinen har en snabbstartguide i systemmenyn för att ställa in faxen: Följ instruktionerna som anges på kontrollpanelen.

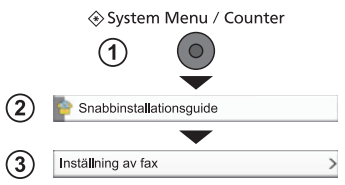

TR

Cihaz FAKS ayarlamak için Sistem Menüsünde Hızlı Kurulum Sihirbazı sunar. İşletim panosundaki talimatları izleyin.

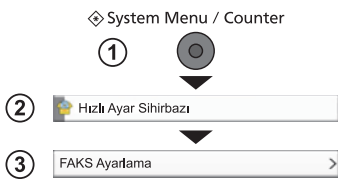

ARA

يوفر الجهاز معالج الإعداد السريع في قائمة النظام لإعداد الفاكس.
اتبع التعليمات الموجودة على لوحة التشغيل.

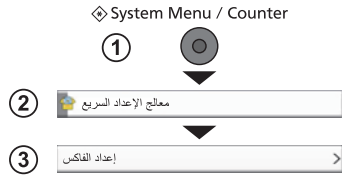

CN

可通过机器系统菜单中的快速设置向导设置传真。请遵循操作面板上的指导说明。

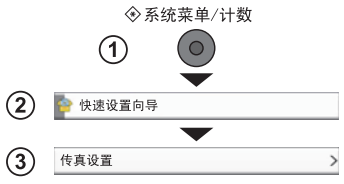

TW

可透過系統選單中的快速設定精靈進行傳真設定。請依照操作面板上的指示說明。

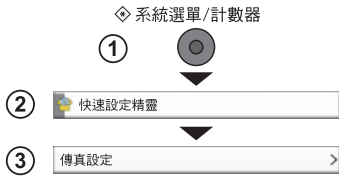

KO

기기의 시스템 메뉴에서 팩스를 설정할 수 있도록 빠른 설정 마법사를 제공합니다.조작 패널에 표시된 지침을 따르십시오.

JP

本機は、システムメニューに簡単セットアップウィザードを搭載しております。画面にしたがってファクスを設定してください。

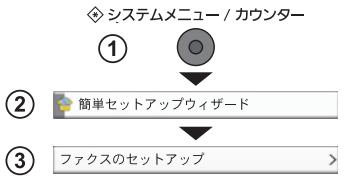

TONER
www.tonerplus.com.ua

2010.9
305JR56710

KYOCERA Document Solutions America, Inc.

Headquarters
225 Sand Road,
Fairfield, New Jersey 07004-0008, USA
Phone: +1-973-808-8444
Fax: +1-973-882-6000

Latin America
8240 NW 52nd Terrace Dawson Building, Suite 100
Miami, Florida 33166, USA
Phone: +1-305-421-6640
Fax: +1-305-421-6666

KYOCERA Document Solutions Canada, Ltd.
6120 Kestrel Rd., Mississauga, ON L5T 1S8,
Canada
Phone: +1-905-670-4425
Fax: +1-905-670-8116

KYOCERA Document Solutions Mexico, S.A. de C.V.
Calle Arquimedes No. 130, 4 Piso, Colonia Polanco
Chapultepec, Delegacion Miguel Hidalgo,
Distrito Federal, C.P. 11560, México
Phone: +52-555-383-2741
Fax: +52-555-383-7804

KYOCERA Document Solutions Brazil, Ltda.
Av.Tambore,1180 Mod.B-09 CEP 06460-000
Tambore-Barueri-SP, Brazil
Phone: +55-11-4195-8496
Fax: +55-11-4195-6167

KYOCERA Document Solutions Australia Pty. Ltd.
Level 3, 6-10 Talavera Road North Ryde N.S.W, 2113,
Australia
Phone: +61-2-9888-9999
Fax: +61-2-9888-9588

KYOCERA Document Solutions New Zealand Ltd.
1-3 Parkhead Place, Albany, Auckland 1330,
New Zealand
Phone: +64-9-415-4517
Fax: +64-9-415-4597

KYOCERA Document Solutions Asia Limited
16/F.,Mita Centre, 552-566, Castle Peak Road
Tsuenwan, NT, Hong Kong
Phone: +852-2610-2181
Fax: +852-2610-2063

KYOCERA Document Solutions (Thailand) Corp., Ltd.
335 Ratchadapisek Road, Bangsue, Bangkok 10800,
Thailand
Phone: +66-2-586-0333
Fax: +66-2-586-0278

KYOCERA Document Solutions Singapore Pte. Ltd.
12 Tai Seng Street #04-01A,
Luxasia Building, Singapore 534118
Phone: +65-6741-8733
Fax: +65-6748-3788

KYOCERA Document Solutions Hong Kong Limited
16/F.,Mita Centre, 552-566, Castle Peak Road
Tsuenwan, NT, Hong Kong
Phone: +852-2429-7422
Fax: +852-2423-2159

KYOCERA Document Solutions Taiwan Corporation
6F., No.37, Sec. 3, Minquan E. Rd.,
Zhongshan Dist., Taipei 104, Taiwan R.O.C.
Phone: +886-2-2507-6709
Fax: +886-2-2507-8432

KYOCERA Document Solutions Korea Co., Ltd.
18F, Kangnam bldg, 1321-1,
Seocho-Dong, Seocho-Gu, Seoul, Korea
Phone: +822-6933-4050
Fax: +822-747-0084

KYOCERA Document Solutions India Private Limited
First Floor, ORCHID CENTRE
Sector-53, Golf Course Road, Gurgaon 122 002,
India
Phone: +91-0124-4671000
Fax: +91-0124-4671001

TONER+
www.tonerplus.com.ua

KYOCERA Document Solutions Europe B.V.
Bloemlaan 4, 2132 NP Hoofddorp,
The Netherlands
Phone: +31-20-654-0000
Fax: +31-20-653-1256

KYOCERA Document Solutions Nederland B.V.
Beechavenue 25, 1119 RA Schiphol-Rijk,
The Netherlands
Phone: +31-20-5877200
Fax: +31-20-5877260

KYOCERA Document Solutions (U.K.) Limited
8 Beacontree Plaza,
Gillette Way Reading, Berkshire RG2 0BS,
United Kingdom
Phone: +44-118-931-1500
Fax: +44-118-931-1108

KYOCERA Document Solutions Italia S.p.A.
Via Verdi, 89/91 20063 Cernusco s/N.(MI),
Italy
Phone: +39-02-921791
Fax: +39-02-92179-600

KYOCERA Document Solutions Belgium N.V.
Sint-Martinusweg 199-201 1930 Zaventem,
Belgium
Phone: +32-2-7209270
Fax: +32-2-7208748

KYOCERA Document Solutions France S.A.S.
Espace Technologique de St Aubin
Route de l'Orme 91195 Gif-sur-Yvette CEDEX,
France
Phone: +33-1-69852600
Fax: +33-1-69853409

KYOCERA Document Solutions Espana, S.A.
Edificio Kyocera, Avda. de Manacor No.2,
28290 Las Matas (Madrid), Spain
Phone: +34-91-6318392
Fax: +34-91-6318219

KYOCERA Document Solutions Finland Oy
Atomitie 5C, 00370 Helsinki,
Finland
Phone: +358-9-47805200
Fax: +358-9-47805390

KYOCERA Document Solutions Europe B.V., Amsterdam (NL) Zürich Branch
Hohlstrasse 614, 8048 Zürich,
Switzerland
Phone: +41-44-9084949
Fax: +41-44-9084950

KYOCERA Document Solutions Deutschland GmbH
Otto-Hahn-Strasse 12, 40670 Meerbusch,
Germany
Phone: +49-2159-9180
Fax: +49-2159-918100

KYOCERA Document Solutions Austria GmbH
Eduard-Kittenberger-Gasse 95, 1230 Vienna,
Austria
Phone: +43-1-863380
Fax: +43-1-86338-400

KYOCERA Document Solutions Nordic AB
Esbogatan 16B 164 75 Kista, Sweden
Phone: +46-8-546-550-00
Fax: +46-8-546-550-10

KYOCERA Document Solutions Norge NUF
Postboks 150 Oppsal, 0619 Oslo,
Norway
Phone: +47-22-62-73-00
Fax: +47-22-62-72-00

KYOCERA Document Solutions Danmark A/S
Ejby Industrivej 60, DK-2600 Glostrup,
Denmark
Phone: +45-70223880
Fax: +45-45765850

KYOCERA Document Solutions Portugal Lda.
Rua do Centro Cultural, 41 (Alvalade) 1700-106 Lisboa,
Portugal
Phone: +351-21-843-6780
Fax: +351-21-849-3312

KYOCERA Document Solutions South Africa (Pty) Ltd.
49 Kyalami Boulevard,
Kyalami Business Park 1685 Midrand, South Africa
Phone: +27-11-540-2600
Fax: +27-11-466-3050

KYOCERA Document Solutions Russia LLC
Botanichesky pereulok 5, Moscow, 129090,
Russia
Phone: +7(495)741-0004
Fax: +7(495)741-0018

KYOCERA Document Solutions Middle East
Dubai Internet City, Bldg. 17,
Office 157 P.O. Box 500817, Dubai,
United Arab Emirates
Phone: +971-04-433-0412

KYOCERA Document Solutions Inc.
2-28, 1-chome, Tamatsukuri, Chuo-ku
Osaka 540-8585, Japan
Phone: +81-6-6764-3555
http://www.kyoceradocumentsolutions.com

© 2012 KYOCERA Document Solutions Inc.
KYOCERA is a trademark of KYOCERA Corporation