ECOSYS FS-C8600DN
ECOSYS FS-C8650DN

SERVICE MANUAL

Published in April 2014
2MNSM063
Rev. 3

CAUTION

RISK OF EXPLOSION IF BATTERY IS REPLACED BY AN INCORRECT TYPE. DISPOSE OF USED BATTERIES ACCORDING TO THE INSTRUCTIONS.

It may be illegal to dispose of this battery into the municipal waste stream. Check with your local solid waste officials for details in your area for proper disposal.

ATTENTION

IL Y A UN RISQUE D'EXPLOSION SI LA BATTERIE EST REMPLACEE PAR UN MODELE DE TYPE INCORRECT. METTRE AU REBUT LES BATTERIES UTILISEES SELON LES INSTRUCTIONS DONNEES.

Il peut être illégal de jeter les batteries dans des eaux d'égout municipales. Vérifiez avec les fonctionnaires municipaux de votre région pour les détails concernant des déchets solides et une mise au rebut appropriée.

Notation of products in the manual

For the purpose of this service manual, products are identified by print speed at A4 and black and white modes.

ECOSYS FS-C8600DN: 45 ppm model
ECOSYS FS-C8650DN: 55 ppm model

Revision history

Revision	Date	Replaced pages	Remarks
1	June 18, 2012	Contents, 1-1-1 to 1-1-3,1-1-6,1-2-2,1-2-8,1-2-9, 1-2-19,1-2-20,1-2-22,1-2-26,1-2-28,1-3-32,1-2-33, 1-2-38,1-2-43,1-3-6 to 1-3-8,1-3-10,1-3-16,1-3-17, 1-3-21 to 1-3-23,1-3-26 to 1-3-29,1-3-31 to 1-3-34, 1-3-37,1-3-38,1-3-48,1-3-49,1-3-53,1-3-54,1-3-59, 1-3-60,1-3-62,1-3-65,1-3-72,1-3-76,1-3-77,1-3-79, 1-3-84,1-3-85,1-3-87 to 1-3-91,1-3-93 to 1-3-96, 1-3-99,1-3-106,1-3-108,1-3-112 to 1-3-116,1-3-126, 1-3-130 to 1-3-133,1-3-135,1-3-137,1-3-139, 1-3-141,1-3-147 to1-3-150,1-4-2,1-4-26 to 1-4-28, 1-4-35 to 1-4-39,1-4-42,1-4-55,1-4-58 to 1-4-60, 1-4-71,1-4-88,1-4-90,1-4-91,1-5-1,1-5-4,1-5-8, 1-5-11,1-5-17,1-5-18,1-5-24,1-5-26,1-5-32,1-5-44 to 1-5-46,1-5-48,1-5-49,1-5-54,1-5-79 to 1-5-81,1-6-1, 1-6-2,2-2-1,2-2-3,2-3-1,2-3-8,2-3-28,2-3-32,2-3-36, 2-3-46,2-3-56,2-3-62,2-3-68,2-3-72,2-4-3,2-4-7, 2-4-8,2-4-13,2-4-22,2-4-23	-
2	April 4, 2013	Cover,Contents, 1-1-2,1-2-4,1-2-5,2-4-3,2-4-4, 2-4-15 to 2-4-20	-
3	April 15, 2014	Contents, 1-1-3,1-2-16,1-2-21 to 1-2-24,1-3-18, 1-3-20,1-3-29,1-3-39,1-3-51,1-3-75 to 1-3-77, 1-3-102 to 1-3-105,1-3-147,1-3-148,1-4-85,1-4-86, 1-4-92,1-4-93,1-4-98,1-5-6 to 1-5-9,1-5-29,1-5-32, 1-5-65,1-5-68,1-5-76,1-5-87,1-5-88,1-6-2,2-1-2, 2-1-5,2-1-6,2-2-4,2-2-5,2-2-10,2-3-60,2-4-1,2-4-2, 2-4-7,2-4-10,2-4-13,2-4-28	-

This page is intentionally left blank.

Safety precautions

This booklet provides safety warnings and precautions for our service personnel to ensure the safety of their customers, their machines as well as themselves during maintenance activities. Service personnel are advised to read this booklet carefully to familiarize themselves with the warnings and precautions described here before engaging in maintenance activities.

Safety warnings and precautions

Various symbols are used to protect our service personnel and customers from physical danger and to prevent damage to their property. These symbols are described below:

⚠**DANGER:** High risk of serious bodily injury or death may result from insufficient attention to or incorrect compliance with warning messages using this symbol.

⚠**WARNING:** Serious bodily injury or death may result from insufficient attention to or incorrect compliance with warning messages using this symbol.

⚠**CAUTION:** Bodily injury or damage to property may result from insufficient attention to or incorrect compliance with warning messages using this symbol.

Symbols

The triangle (△) symbol indicates a warning including danger and caution. The specific point of attention is shown inside the symbol.

 General warning.  Warning of risk of electric shock.

 Warning of high temperature.

⃠ indicates a prohibited action. The specific prohibition is shown inside the symbol.

 General prohibited action.  Disassembly prohibited.

● indicates that action is required. The specific action required is shown inside the symbol.

 General action required.  Remove the power plug from the wall outlet.

 Always ground the machine.

1. Installation Precautions

WARNING

- Do not use a power supply with a voltage other than that specified. Avoid multiple connections to one outlet: they may cause fire or electric shock. When using an extension cable, always check that it is adequate for the rated current. .....
- Connect the ground wire to a suitable grounding point. Not grounding the machine may cause fire or electric shock. Connecting the earth wire to an object not approved for the purpose may cause explosion or electric shock. Never connect the ground cable to any of the following: gas pipes, lightning rods, ground cables for telephone lines and water pipes or faucets not approved by the proper authorities. .....

CAUTION:

- Do not place the machine on an infirm or angled surface: the machine may tip over, causing injury. .
- Do not install the machine in a humid or dusty place. This may cause fire or electric shock. .....
- Do not install the machine near a radiator, heater, other heat source or near flammable material. This may cause fire.....
- Allow sufficient space around the machine to allow the ventilation grills to keep the machine as cool as possible. Insufficient ventilation may cause heat buildup and poor printing performance. .....
- Always handle the machine by the correct locations when moving it. .....
- Always use anti-toppling and locking devices on machines so equipped. Failure to do this may cause the machine to move unexpectedly or topple, leading to injury. .....
- Avoid inhaling toner or developer excessively. Protect the eyes. If toner or developer is accidentally ingested, drink a lot of water to dilute it in the stomach and obtain medical attention immediately. If it gets into the eyes, rinse immediately with copious amounts of water and obtain medical attention. .....
- Advice customers that they must always follow the safety warnings and precautions in the machine's instruction handbook. .....

2. Precautions for Maintenance

WARNING

- Always remove the power plug from the wall outlet before starting machine disassembly. .....
- Always follow the procedures for maintenance described in the service manual and other related brochures. .....
- Under no circumstances attempt to bypass or disable safety features including safety mechanisms and protective circuits. .....
- Always use parts having the correct specifications. .....
- Always use the thermostat or thermal fuse specified in the service manual or other related brochure when replacing them. Using a piece of wire, for example, could lead to fire or other serious accident. .....
- When the service manual or other serious brochure specifies a distance or gap for installation of a part, always use the correct scale and measure carefully. .....
- Always check that the machine is correctly connected to an outlet with a ground connection. .....
- Check that the power cable covering is free of damage. Check that the power plug is dust-free. If it is dirty, clean it to remove the risk of fire or electric shock. .....
- Never attempt to disassemble the optical unit in machines using lasers. Leaking laser light may damage eyesight. .....
- Handle the charger sections with care. They are charged to high potentials and may cause electric shock if handled improperly. .....

CAUTION

- Wear safe clothing. If wearing loose clothing or accessories such as ties, make sure they are safely secured so they will not be caught in rotating sections. .....
- Use utmost caution when working on a powered machine. Keep away from chains and belts. .....
- Handle the fixing section with care to avoid burns as it can be extremely hot. .....
- Check that the fixing unit thermistor, heat and press rollers are clean. Dirt on them can cause abnormally high temperatures. .....

- Do not remove the ozone filter, if any, from the machine except for routine replacement. .....
- Do not pull on the AC power cord or connector wires on high-voltage components when removing them; always hold the plug itself. .....
- Do not route the power cable where it may be stood on or trapped. If necessary, protect it with a cable cover or other appropriate item. .....
- Treat the ends of the wire carefully when installing a new charger wire to avoid electric leaks. .....
- Remove toner completely from electronic components. .....
- Run wire harnesses carefully so that wires will not be trapped or damaged. .....
- After maintenance, always check that all the parts, screws, connectors and wires that were removed, have been refitted correctly. Special attention should be paid to any forgotten connector, trapped wire and missing screws. .....
- Check that all the caution labels that should be present on the machine according to the instruction handbook are clean and not peeling. Replace with new ones if necessary. .....
- Handle greases and solvents with care by following the instructions below: .....
  · Use only a small amount of solvent at a time, being careful not to spill. Wipe spills off completely.
  · Ventilate the room well while using grease or solvents.
  · Allow applied solvents to evaporate completely before refitting the covers or turning the power switch on.
  · Always wash hands afterwards.
- Never dispose of toner or toner bottles in fire. Toner may cause sparks when exposed directly to fire in a furnace, etc. .....
- Should smoke be seen coming from the machine, remove the power plug from the wall outlet immediately. .....

3. Miscellaneous

WARNING

- Never attempt to heat the drum or expose it to any organic solvents such as alcohol, other than the specified refiner; it may generate toxic gas. .....
- Keep the machine away from flammable liquids, gases, and aerosols. A fire or an electric shock might occur. .....

This page is intentionally left blank.

CONTENTS

1-5 Assembly and disassembly

1-6 Requirements on PWB Replacement

2-1 Mechanical Construction

2-2 Electrical Parts Layout

2-3 Operation of the PWBs

2-4 Appendixes

INSTALLATION GUIDE

1-1-1 Specifications

Machine

Item		Specifications	
		45 ppm	55 ppm
Type		Desktop	
Printing method		Electrophotography by semiconductor laser, tandem drum system	
Paper weight	Cassette	60 to 256 g/m²	
	MP tray	60 to 300 g/m²	
Paper type	Cassette	Plain, Rough, Vellum, Recycled, Preprinted, Bond, Color (Colour), Prepunched, Letterhead, Thick, High Quality, Custom 1 to 8 (Duplex: Same as simplex)	
	MP tray	Plain, Transparency (OHP film), Rough, Vellum, Labels, Recycled, Preprinted, Bond, Cardstock, Color (Colour), Prepunched, Letterhead, Thick, Coated, Envelope, High Quality, Custom 1 to 8	
Paper size	Cassette	A3, B4, A4, A4R, B5, B5R, A5R, Ledger, Legal, Letter, LetterR, StatementR, Oficio II, 12 × 18", Folio, 8K, 16K, 16KR	
	MP tray	A3, B4, A4, A4R, B5, ISO B5, B5R, A5R, B6R, A6R, Return postcard, Postcards, Envelope DL, Envelope C5, Envelope C4, Envelope #10 (Commercial #10), Envelope #9 (Commercial #9), Envelope #6 (Commercial #6 3/4), Envelope Monarch, Youkei 2, Youkei 4, Ledger, Legal, Letter, LetterR, Executive, StatementR, Oficio II, 12 × 18", Folio, 8K, 16K, 16KR, Custom (98× 148mm × 304.9 × 1219.2mm)	
Printing speed	B/W	A4 : 45 ppm Letter : 45 ppm A4R : 24 ppm LetterR : 24 ppm A3 : 22 ppm Ledger : 22 ppm B4 : 27 ppm Legal : 21 ppm B5 : 45 ppm	A4 : 55 ppm Letter : 55 ppm A4R : 24 ppm LetterR : 24 ppm A3 : 27 ppm Ledger : 27 ppm B4 : 33 ppm Legal : 21 ppm B5 : 55 ppm
	Color	A4 : 45 ppm Letter : 45 ppm A4R : 24 ppm LetterR : 24 ppm A3 : 22 ppm Ledger : 22 ppm B4 : 27 ppm Legal : 21 ppm B5 : 45 ppm	A4 : 50 ppm Letter : 50 ppm A4R : 24 ppm LetterR : 24 ppm A3 : 25 ppm Ledger : 25 ppm B4 : 30 ppm Legal : 21 ppm B5 : 50 ppm
First print time (A4, feed from cassette)	B/W	5.4 s or less	4.9 s or less
	Color	6.6 s or less	6.2 s or less

Item		Specifications	
		45 ppm	55 ppm
Warm-up time (22 °C/71.6 °F, 60% RH)	Power on	30 s or less	30 s or less
	Low Power	20 s or less	20 s or less
	Sleep	30 s or less	30 s or less
Paper capacity	Cassette	550 sheets (64 g/m²) 500 sheets (80 g/m²)	
	MP tray	A4/Letter or less 165 sheets (64 g/m²) 150 sheets (80 g/m²) More than A4/Letter 55 sheets (64 g/m²) 50 sheets (80 g/m²)	
Output tray capacity	Main tray	500 sheets (80 g/m²)	
	Job separa-tor tray	250 sheets (80 g/m²) (When the Documents Finisher is installed, 100 sheets.)	
Photoconductor		a-Si (drum diameter 30 mm)	
Image write system		Semiconductor laser	
Charging system		Charger roller	
Developing system		Touch down developing system Developer: 2-component Toner replenishing: Automatic from the toner container	
Transfer system		Primary: Roller transfer system (Intermediate transfer belt) Secondary:Roller transfer system	
Separation system		Small diameter separation, Separation electrode	
Cleaning system		Drum: Counter blade, Cleaning roller Transfer belt: Fur brush	
Charge erasing system		Exposure by cleaning lamp (LED)	
Fusing system		Belt fusing Heat source: IH Abnormally high temperature protection devices: thermostat	
CPU		PowerPC 750GL/750 MHz	
Main memory	Standard	1024 MB (1024 MB DIMMx 1)	
	Maximum	2048 MB(1024 MB DIMMx 2)	
Hard Disk		160 GB (160 GB x 1) (standard)	
Interface	Standard	USB Interface Connector: 1 (Hi-Speed USB) USB Port: 2 (Hi-Speed USB) Network interface: 1 (10 BASE-T/100 BASE-TX/1000 BASE-T)	
	Option	Network interface: 1 (10 BASE-T/100 BASE-TX/1000 BASE-T)	
Resolution		600 × 600 dpi	
Operating system		Windows XP, Windows Server 2003, Windows Vista, Windows 7, Windows Server 2008, Apple Macintosh OS 10.x	
Page description language		PRESCRIBE	

Item		Specifications	
		45 ppm	55 ppm
Operating environment	Temperature	10 to 32.5 °C/50 to 90.5 °F	
	Humidity	15 to 80% RH	
	Altitude	2,500 m/8,202 ft or less	
	Brightness	1,500 lux or less	
Dimensions (W × D × H)	machine only	672 × 787 × 744 mm 26 29/64 × 30 63/64 × 29 13/32”	
	machine with Paper feeder	672 × 787 ×1053 mm 26 29/64 × 30 63/64 × 41 19/64”	
Space required (W × D)	Using MP tray	1001 × 787 mm 39 13/32 × 30 63/64	
	FUll system	1937 × 787 mm (machine + 4000-sheet finisher + Side deck) 76 17/64 × 30 63/64”	
Weight		111 kg / 244.7 lb	
Rated input		120 V AC, 60 Hz, more than 12.0 A 220 - 240 V AC, 50/60 Hz, more than 7.2 A	
Options		Paper feeder, Large capacity feeder, Side deck, Side multi tray, Side paper feeder, Side large capacity feeder, 1000-sheet finisher, 4000-sheet finisher, Center-folding unit, Mailbox, Punch unit, Data security kit,Emulation option kit, Gigabit ethernet board, IC card reader holder and Duct unit	

NOTE: These specifications are subject to change without notice.

1-1-2 Parts names

(1) Machine

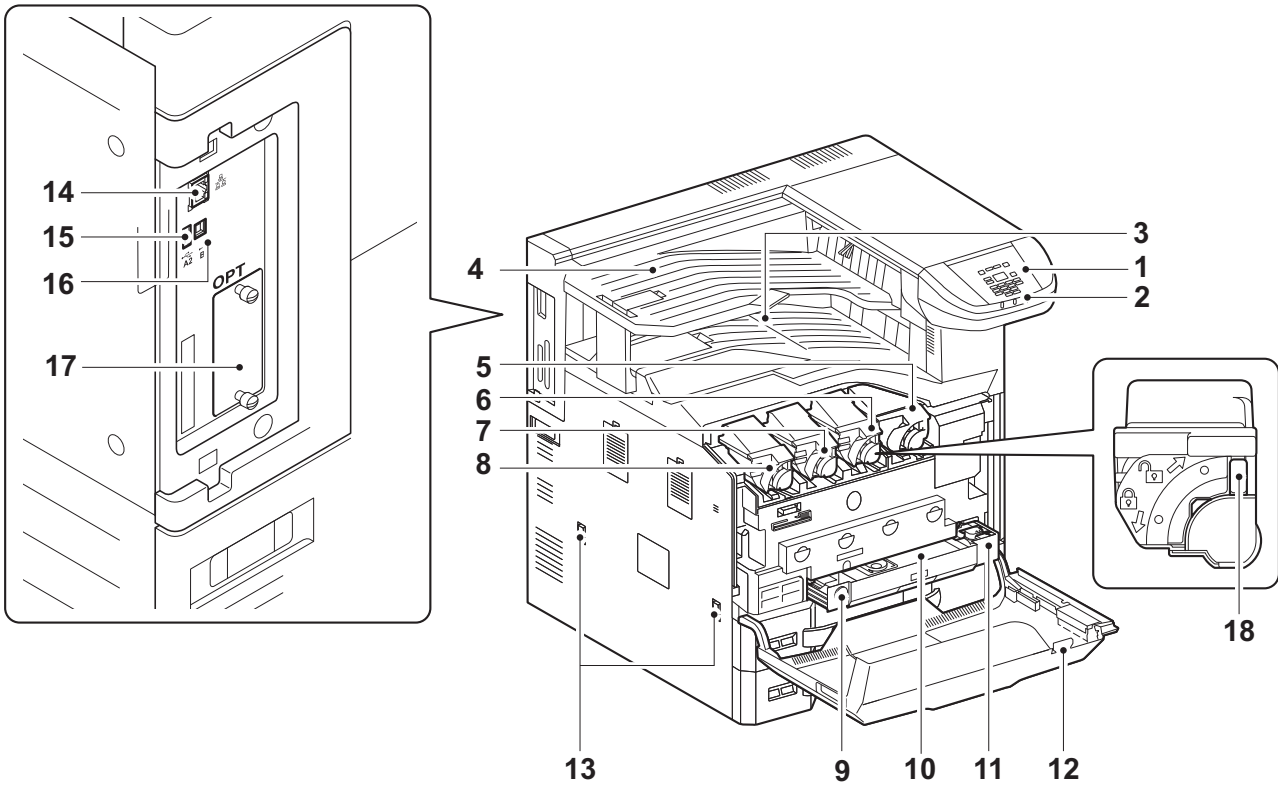

Figure 1-1-1

1. Operation panel
2. Indicators
3. Main tray
4. Job separator tray
5. Toner container K
6. Toner container M
7. Toner container C
8. Toner container Y
9. Release button
10. Waste toner box
11. Waste toner tray
12. Front cover
13. Handles
14. Network interface connector
15. USB port
16. USB interface connector
17. Option interface
18. Toner container release lever

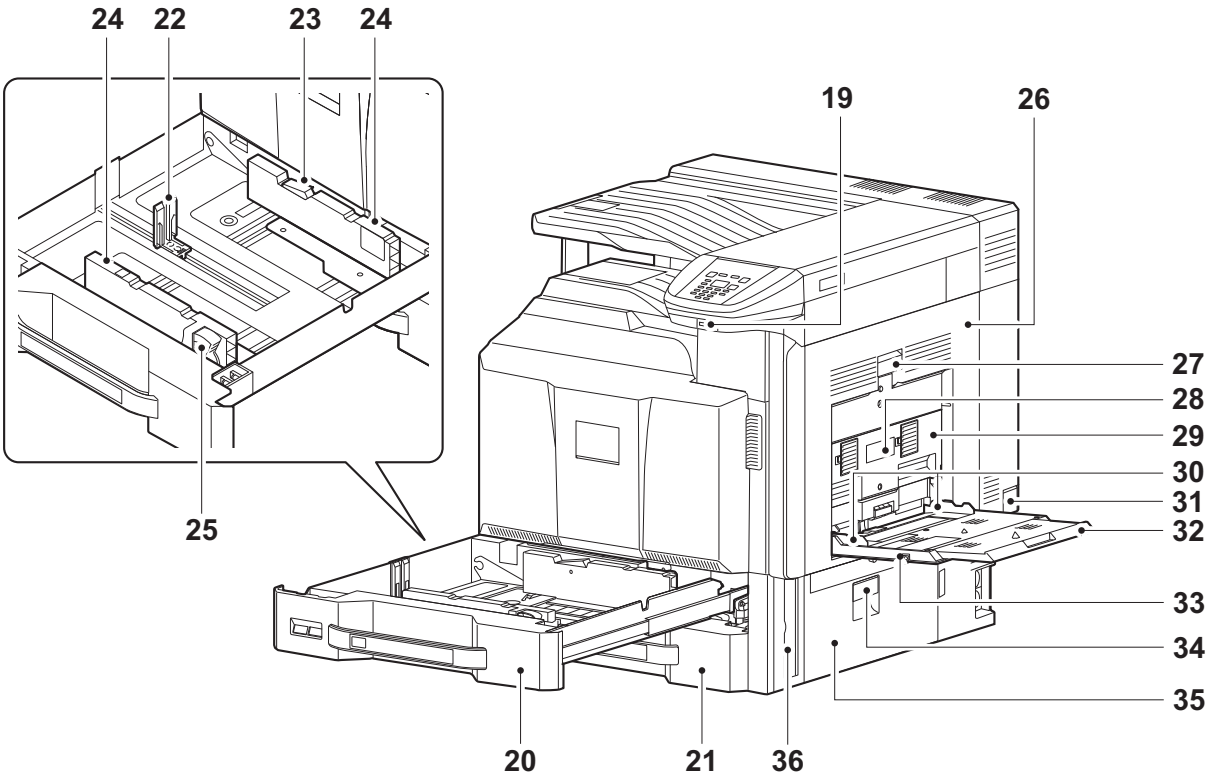

Figure 1-1-2

19. USB port
20. Cassettes 1
21. Cassettes 2
22. Paper length guide
23. Guide lock lever
24. Paper width guide
25. Paper width adjusting tab
26. Paper conveying unit
27. Paper conveying unit lever
28. Duplex cover lever
29. Duplex cover
30. MP paper width guide
31. Main power switch
32. MP support Tray
33. MP (Multi-Purpose) tray
34. Paper conveying cover lever
35. Paper conveying cover
36. Handle

(2) Option

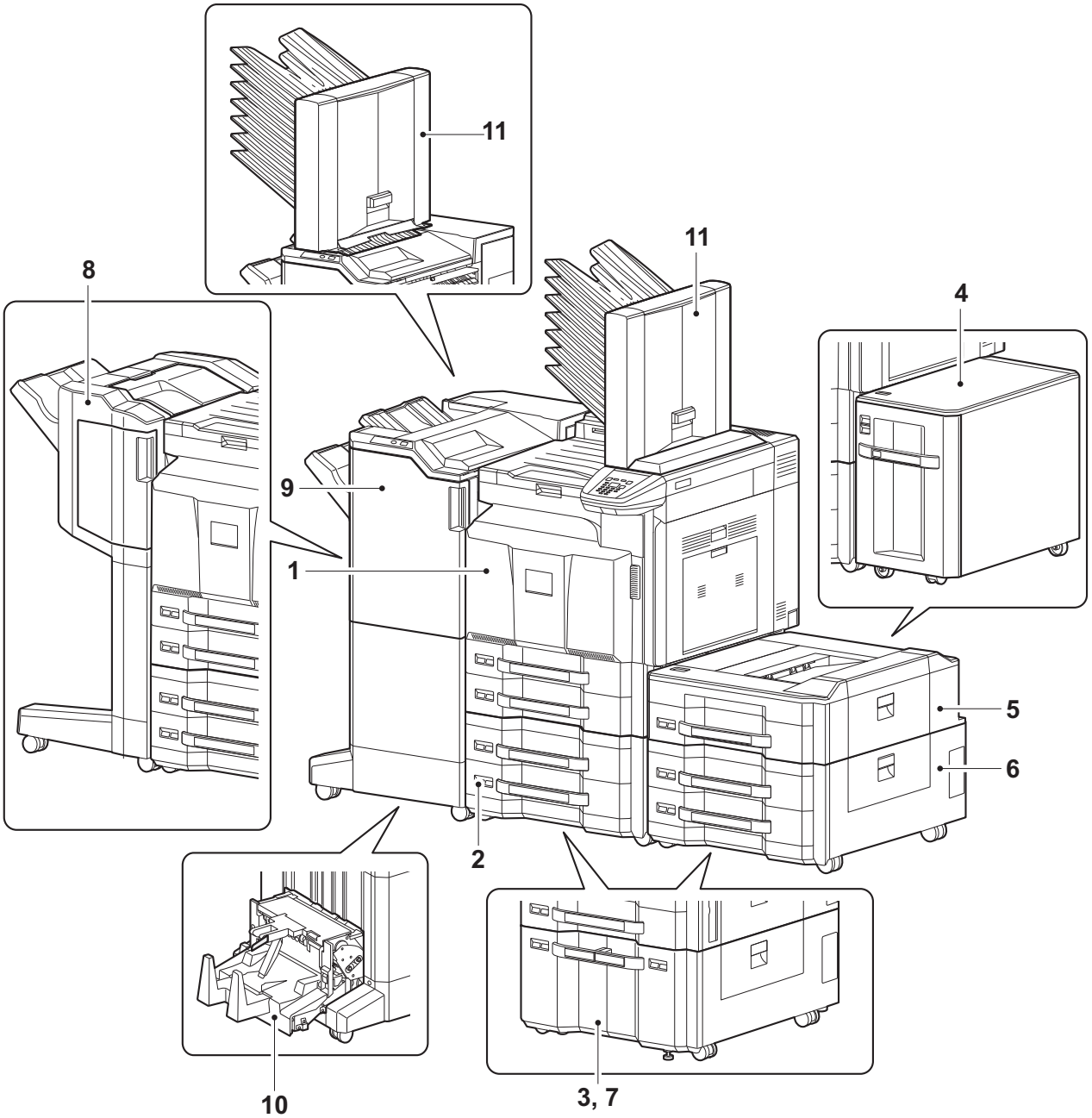

Figure 1-1-3

1. Machine
2. Paper feeder
3. Large capacity feeder
4. Side deck
5. Side multi tray
6. Side paper feeder
7. Side large capacity feeder
8. 1000-sheet finisher
9. 4000-sheet finisher
10. Center-folding unit
11. Mailbox

* : The mailbox can be installed either the main unit or the 4000-sheet finisher.(Not installable at the same time)

(3) Operation panel

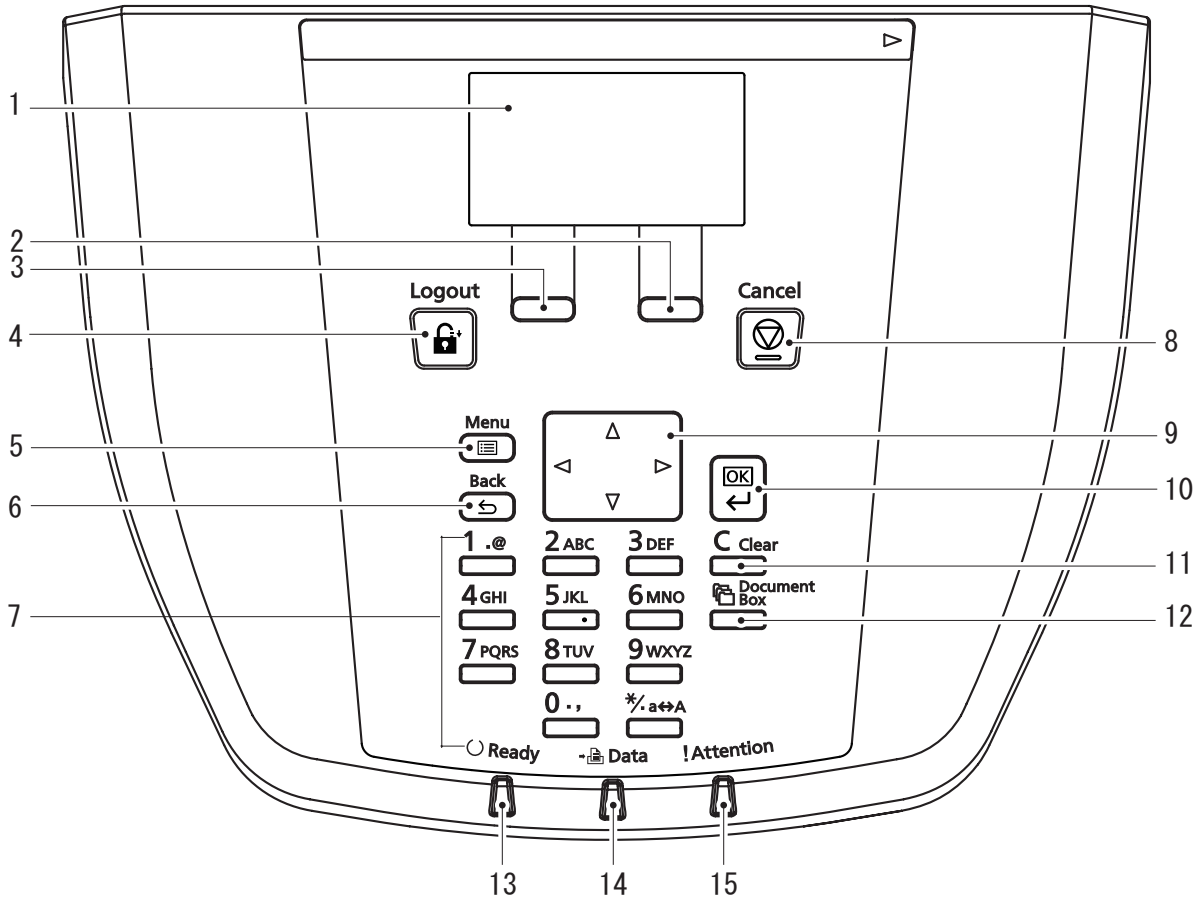

Figure 1-1-4

1. Message display
2. Right select key
3. Left select key
4. Logout key
5. Menu key
6. Back key
7. Numeric keys
8. Cancel key
9. Cursor key
10. OK key
11. Clear key
12. Print Box key
13. Ready indicator
14. Data indicator
15. Attention indicator

1-1-3 Machine cross section

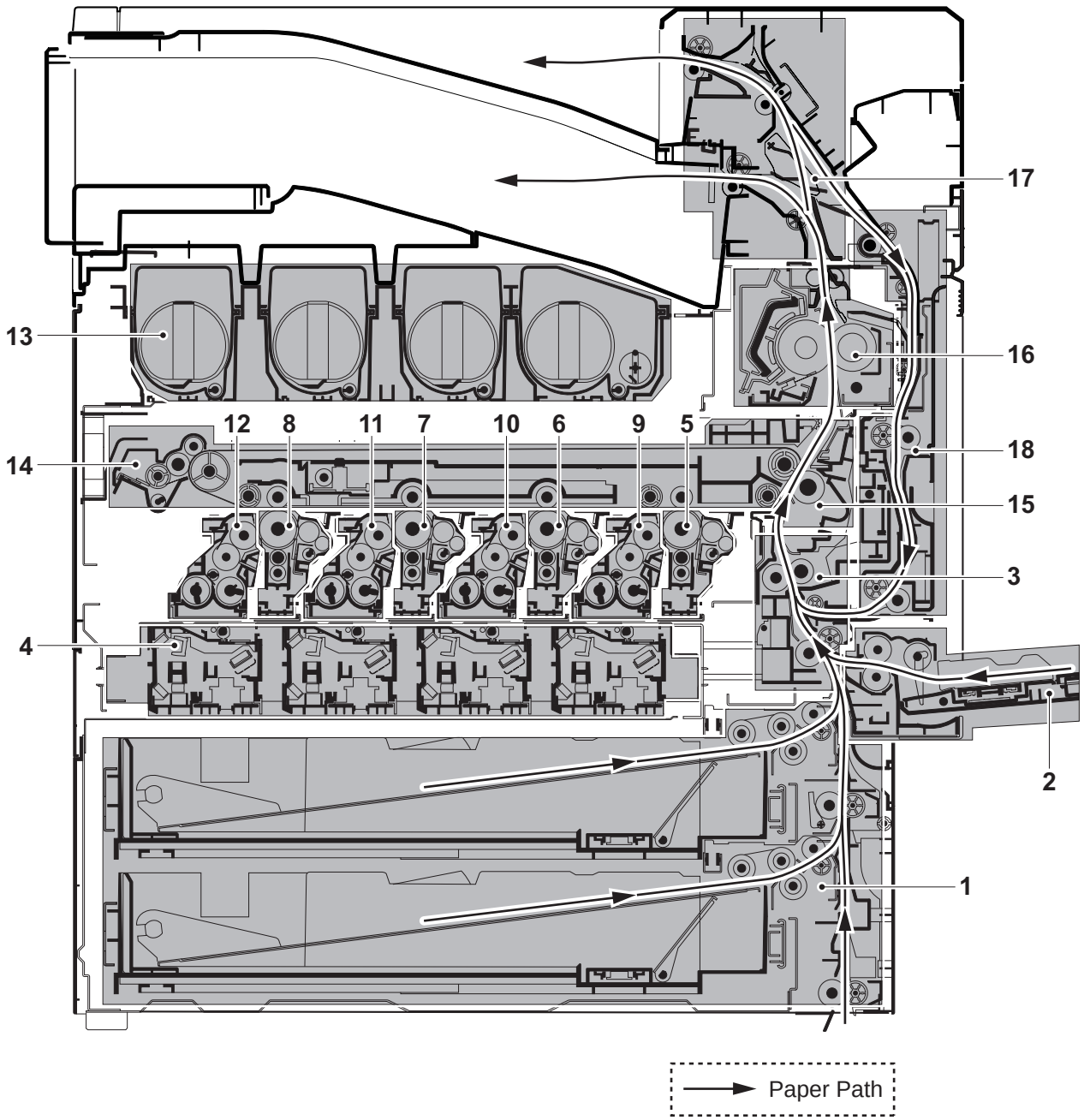

Figure 1-1-5

1. Cassette paper feed section
2. MP tray paper feed section
3. Paper conveying section
4. Laser scanner unit
5. Drum unit K
6. Drum unit M
7. Drum unit C
8. Drum unit Y
9. Developer unit K
10. Developer unit M
11. Developer unit C
12. Developer unit Y
13. Toner container section
14. Primary transfer section
15. Secondary transfer/Separation sections
16. Fuser section
17. Eject/Feed shift sections
18. Duplex section

1-2-1 Installation environment

1. Temperature: 10 to 32.5°C/50 to 90.5°F
2. Humidity: 15 to 80% RH
3. Power supply: 120 V AC, 12.0 A
   220 - 240 V AC, 7.2 A
4. Power source frequency: 50 Hz ± 2%/60 Hz ± 2%
5. Installation location
   Avoid direct sunlight or bright lighting. Ensure that the photoconductor will not be exposed to direct sunlight or other strong light when removing paper jams.
   Avoid locations subject to high temperature and high humidity or low temperature and low humidity; an abrupt change in the environmental temperature; and cool or hot, direct air.
   Avoid places subject to dust and vibrations.
   Choose a surface capable of supporting the weight of the machine.
   Place the machine on a level surface (maximum allowance inclination: 1°).
   Avoid air-borne substances that may adversely affect the machine or degrade the photoconductor, such as mercury, acidic of alkaline vapors, inorganic gasses, NOx, SOx gases and chlorine-based organic solvents.
   Select a well-ventilated location.
6. Allow sufficient access for proper operation and maintenance of the machine.
   Machine front : 100 cm/ 40"
   Machine rear : 10 cm/ 4"
   Machine right : 35 cm/ 14"
   Machine left : 30 cm/ 12"
   Machine top : 40 cm/ 15"

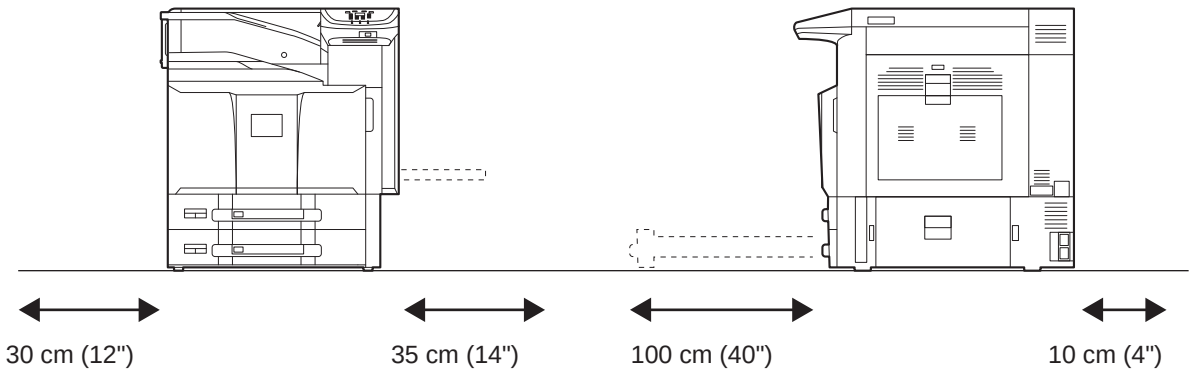

Figure 1-2-1

1-2-2 Unpacking and installation

(1) Installation procedure

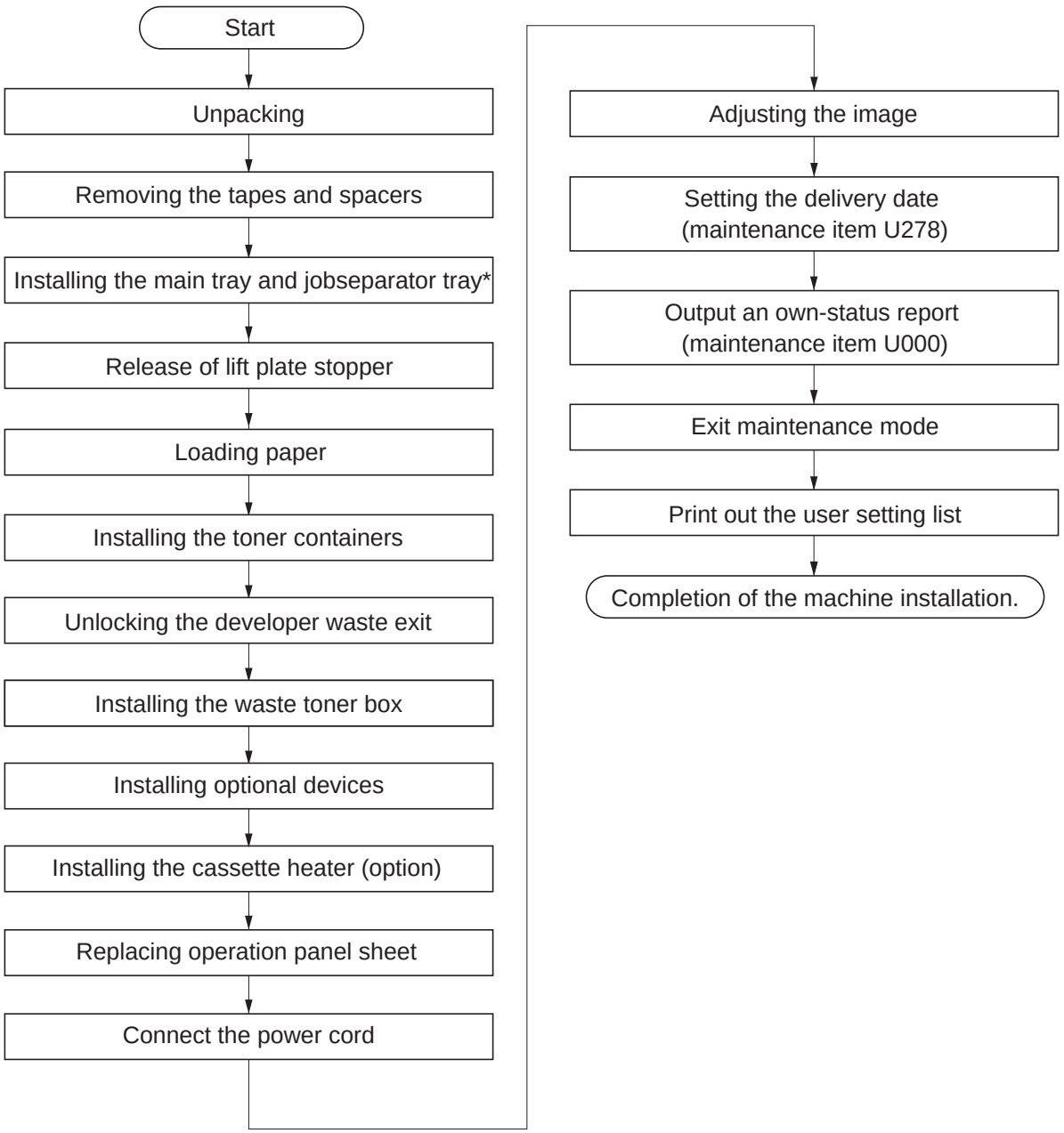

*: When the finisher has been installed, the job separator tray and the main tray are not needed.

Moving the machine

When moving the machine, pull out three carrying handles, and move with carrying handles and the hand-hold.

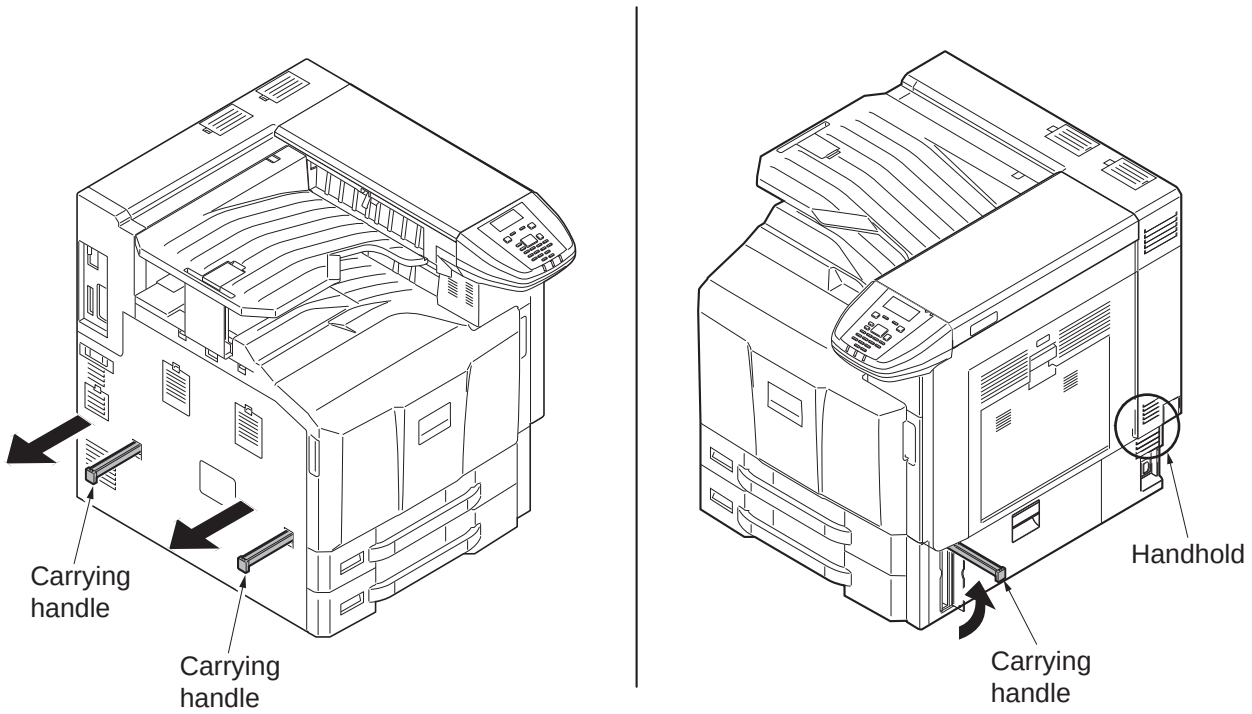

Figure 1-2-2

*: Moving this machine is a job for four people.

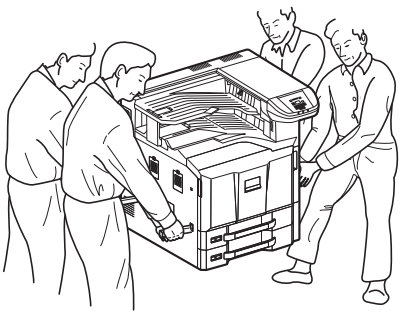

Figure 1-2-3

Unpacking

120V model

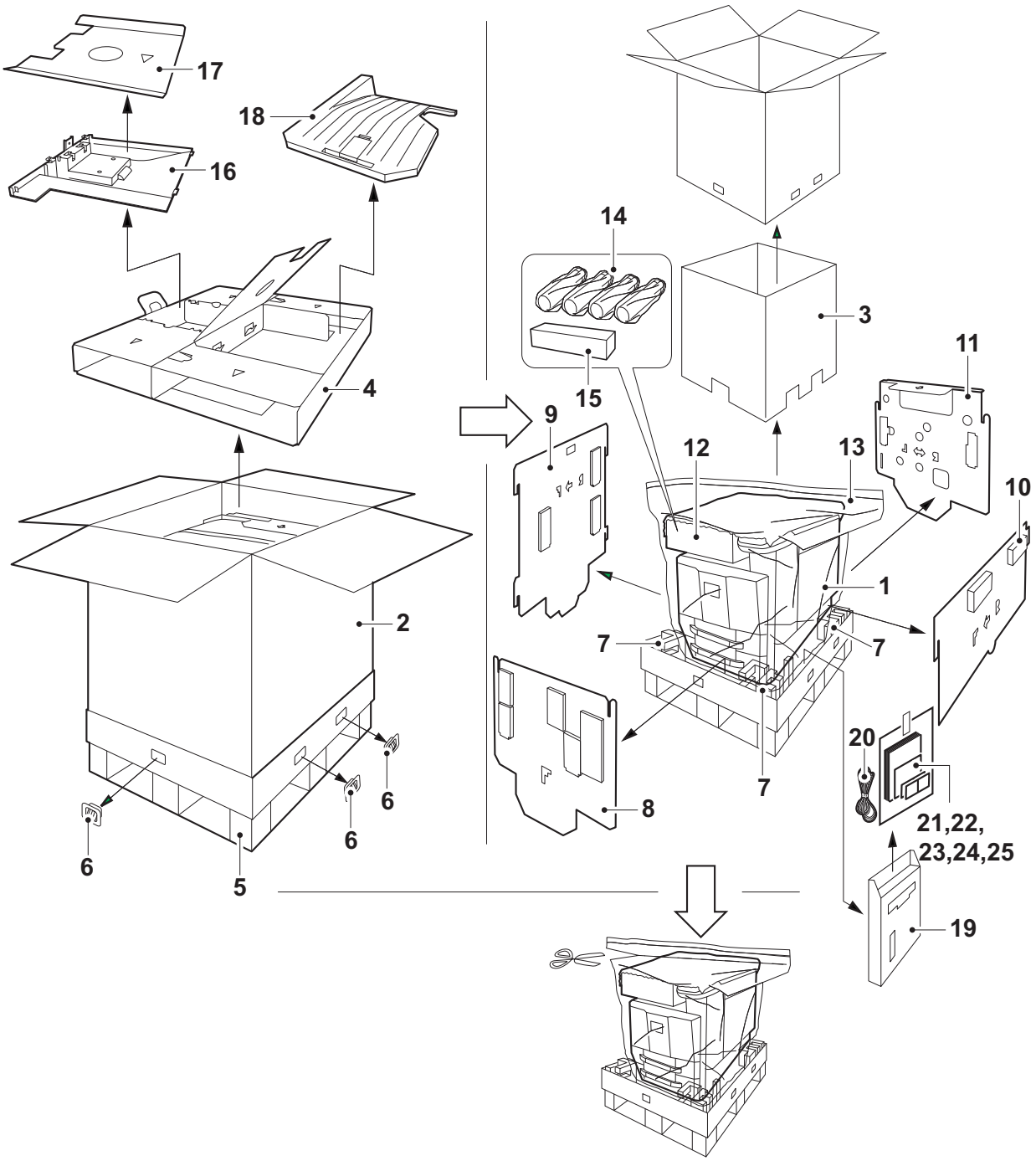

Figure 1-2-4

220-240V model

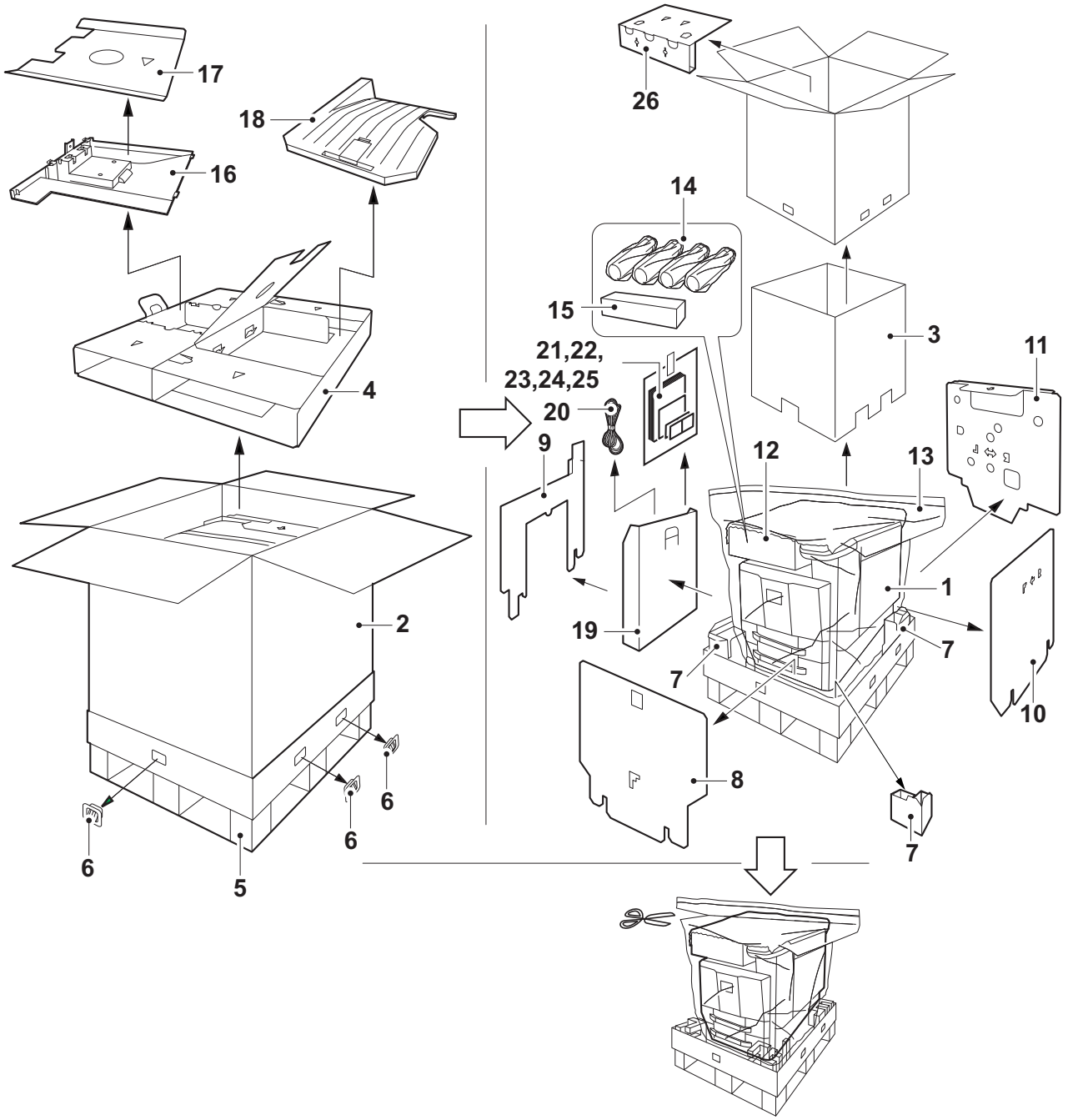

Figure 1-2-5

1. Machine
2. Outer case
3. Inner case
4. Spacer A
5. Skid
6. Hinge joints
7. Bottom pad
8. Front pad
9. Left pad
10. Right pad
11. Rear pad
12. Top spacer
13. Machine cover
14. Toner container (Y,M,C,K)
15. Waste toner box
16. Main tray
17. Spacer B
18. Job separetor tray
19. Document tray
20. Power cord
21. Plastic bag
22. Paper size plates
23. Paper media plates
24. Pin
25. Operation guide etc.
26. Top pad*

*:220-240V model only

Place the machine on a level surface.

Removing the tapes

1. Remove two tapes and the protect sheet.
2. Remove tape and the top spacer.

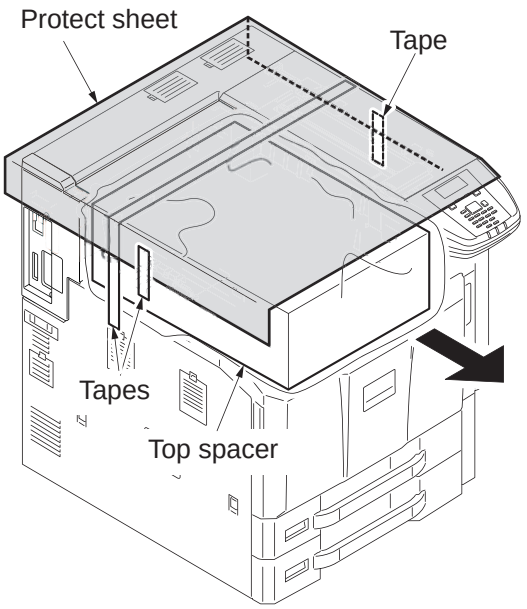

Figure 1-2-6

3. Remove tape and then two protect sheets.
4. Remove three tapes and then protect sheet.
5. Remove tape and then silica gel.

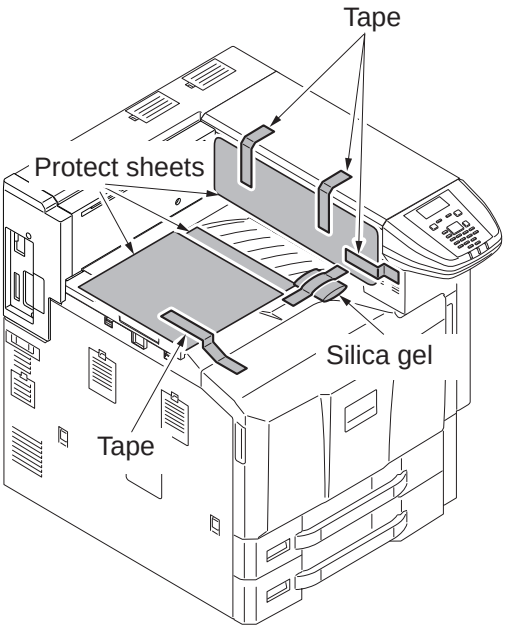

Figure 1-2-7

6. Open the front cover and then remove tape.

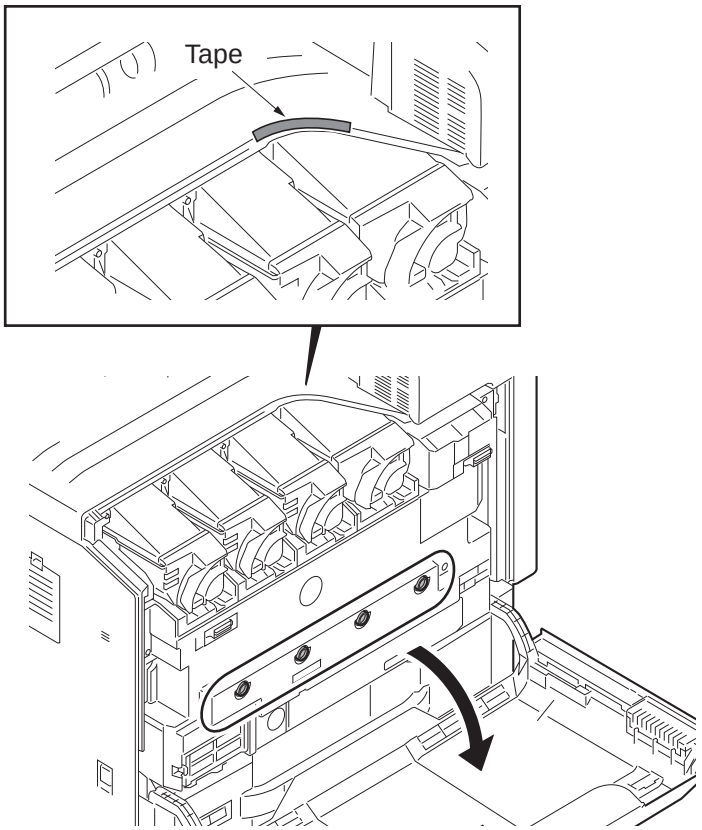

Figure 1-2-8

1. Remove three tapes and then remove three protect sheet.
2. Remove two tapes.

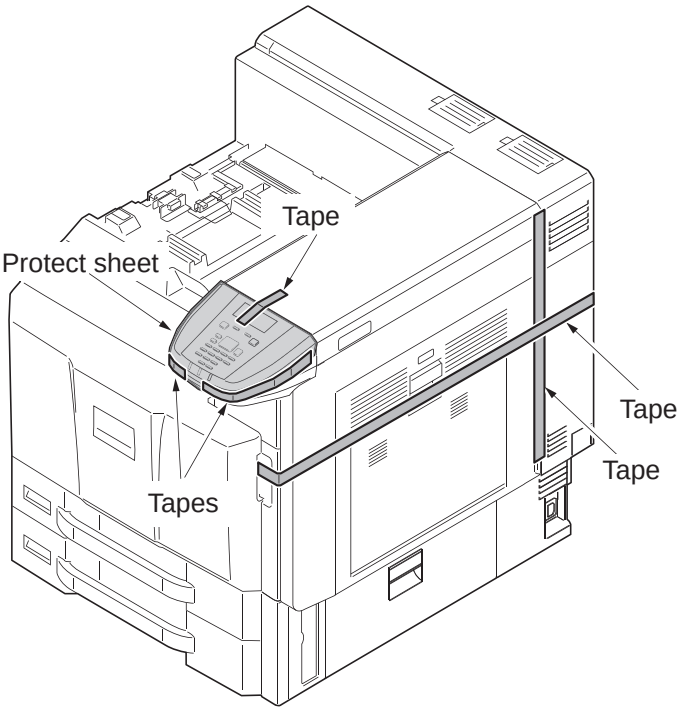

Figure 1-2-9

3. Remove tape.

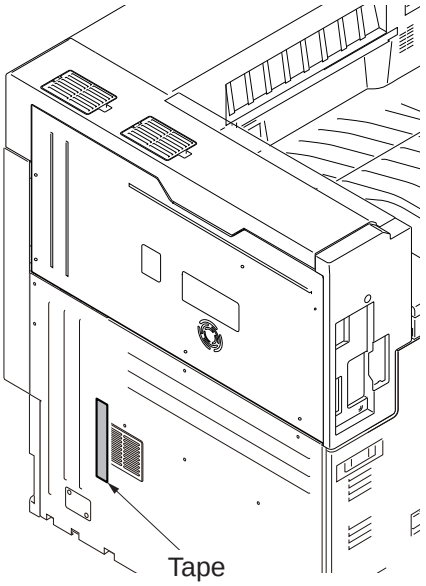

Figure 1-2-10

Installing the main tray and job separator tray

*: When the finisher has been installed, the job separator tray and the main tray are not needed.

1. Install the main tray included by latching in two hooks and securing by one screw.

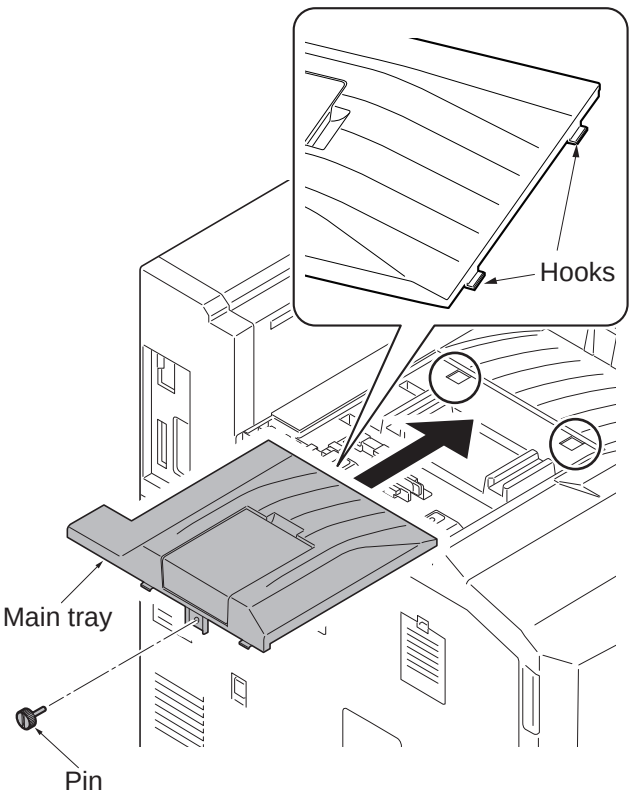

Figure 1-2-11

2. Raise the tray fixing plate.
3. Latch the three hooks to the job separator tray.
4. Load the tray on the tray fixing board and slide it to secure.

*: Make sure that the two clicks have been properly locked.

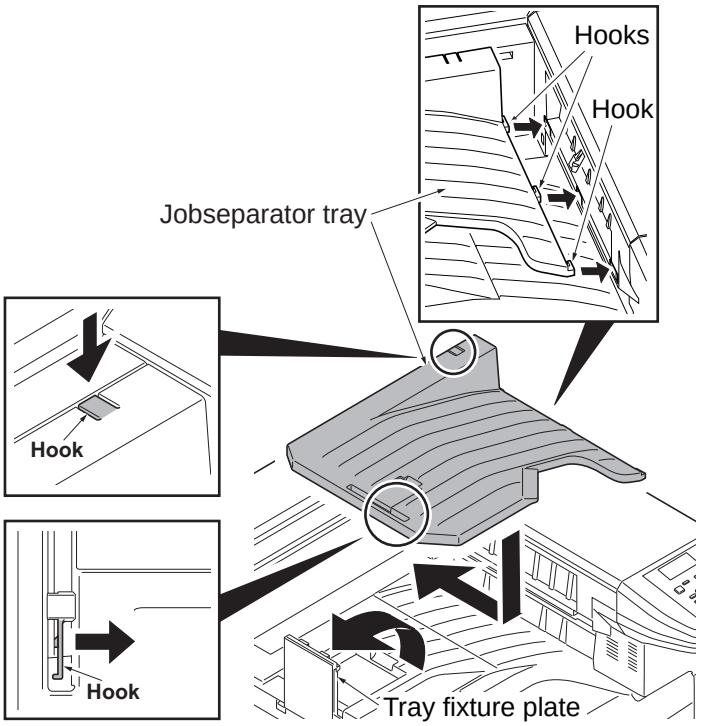

Figure 1-2-12

Release of lift plate stopper

1. Pull cassette 1 and 2 out.
2. Remove the lift plate stopper from each cassette and attach it to the storage location.
   When moving the machine, attach the lift plate in original position.

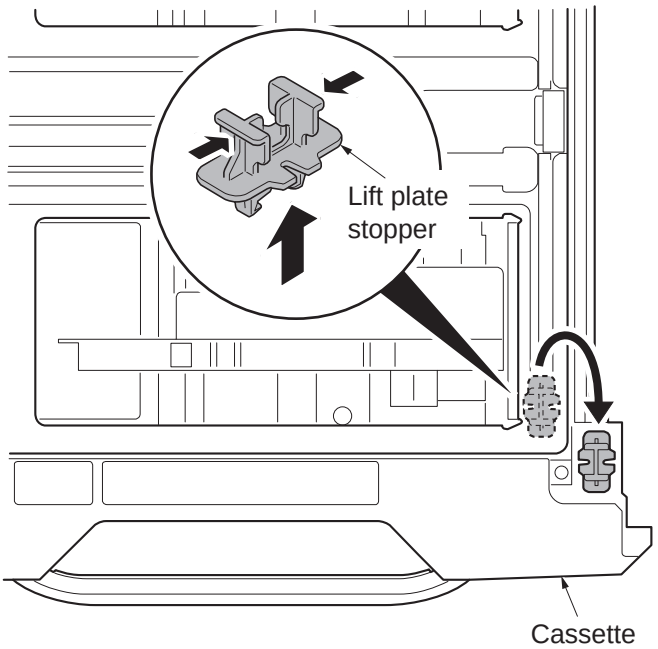

Figure 1-2-13

Loading paper

1. Squeeze the ends of the bottom of the paper length guide and move the guide to fit the length of the paper.

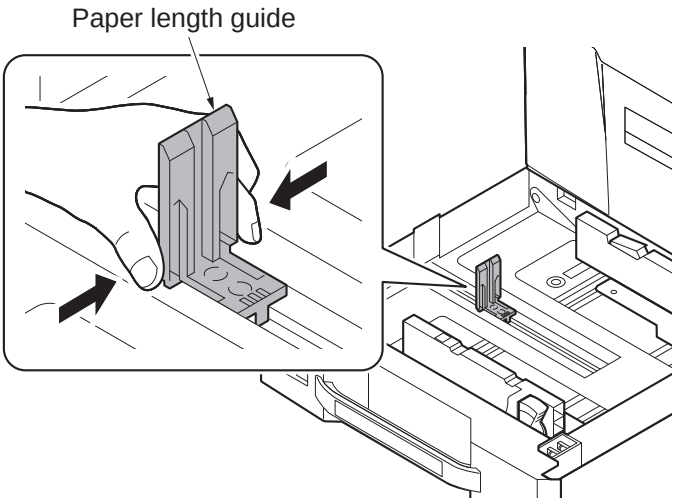

Figure 1-2-14

2. Press the guide lock lever to release the lock.
3. Grasp the paper width adjusting tab and move the paper width guides to fit the paper.

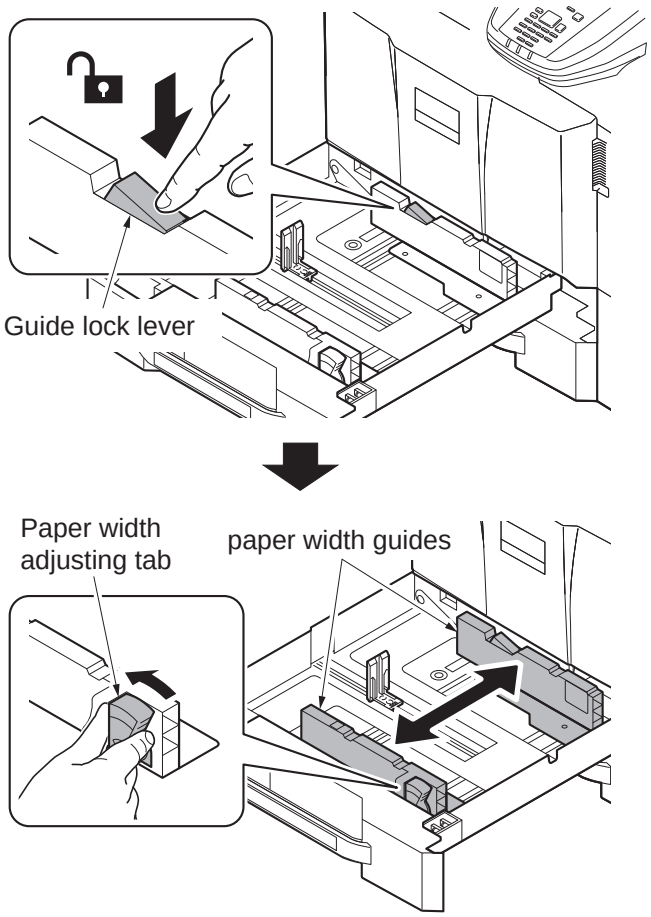

Figure 1-2-15

4. Align the paper flush against the right side of the cassette.

*: Before loading the paper, be sure that it is not curled or folded.

*: Ensure that the loaded paper does not exceed the level indicated.

*: Make sure that the paper length guide and the paper width guides are correctly abut with the paper. Be sure to remove spaces between the guides and the paper.

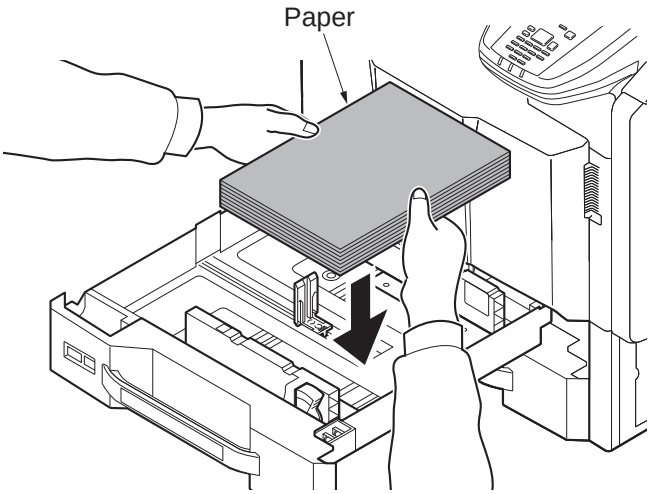

Figure 1-2-16

5. Press the guide lock lever to lock.

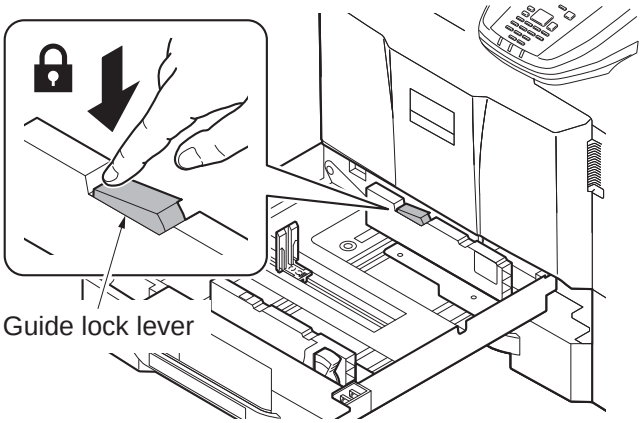

Figure 1-2-17

6. Insert the paper size plate and the paper media plate.
7. Gently push the cassette back in.

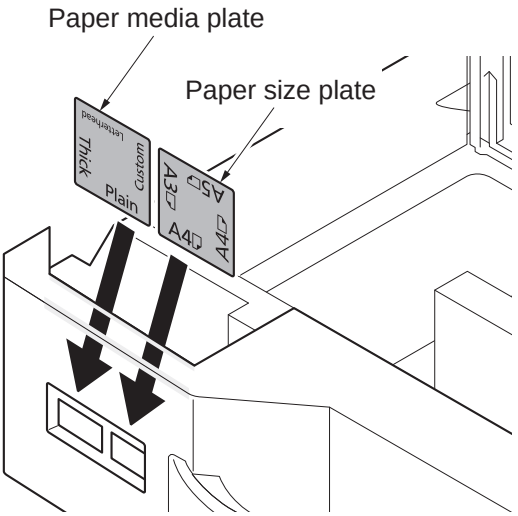

Figure 1-2-18

Installing the toner containers

1. Open the front cover.
2. Hold the toner container vertically and hit the upper part about 3 times. Invert the toner container so that the other end is up, and hit in the same way.
3. Hold the toner container horizontally and shake from side to side about 3 times.

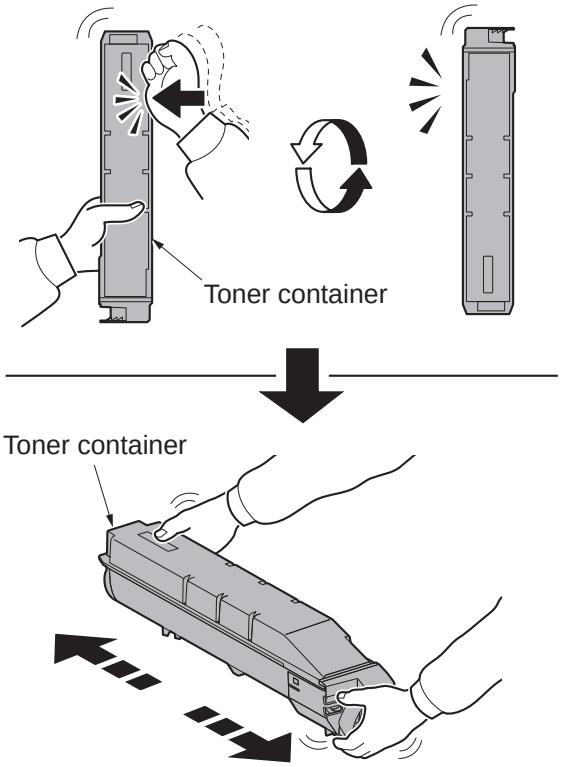

Figure 1-2-19

4. Install four color toner containers.
5. Turn down the toner container release levers to lock the four color toner containers.

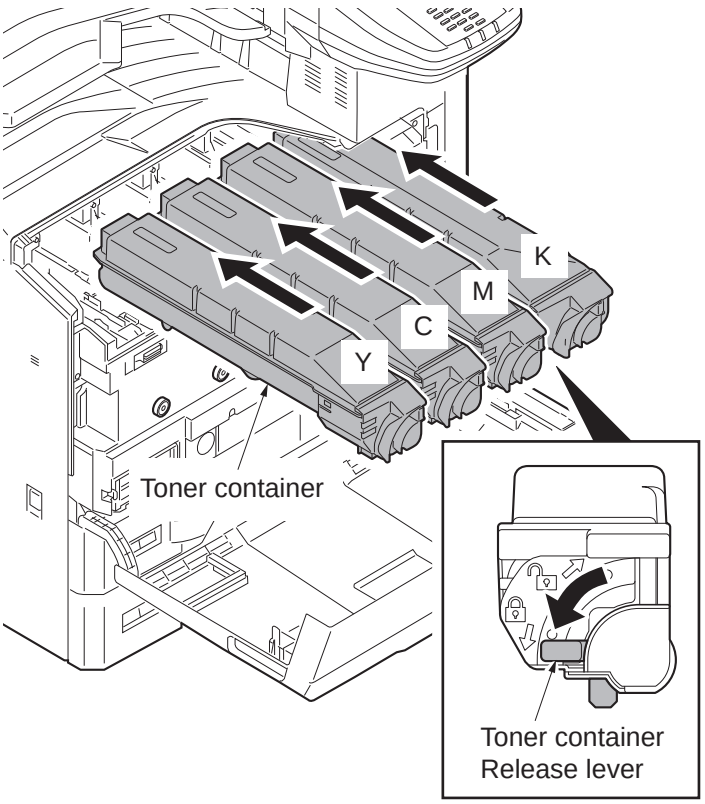

Figure 1-2-20

Unlocking the developer waste exit

Caution
To ease setup, the device was shipped with the developer unit already replenished with developer. Therefore, to prevent developer from spilling during shipping, a developer shutter is equipped with the developer unit.
To disengage the shutter, use the following procedure: Note that if the shutter is not completely disengaged and retained in place, the developer in the developer unit may clog at the outlet causing a damage to the developer unit.

1. Remove the tape and then remove the set up leaflet.
*: The setup leaflet must be affixed in position before dispatching the machine.
2. Press the fixing pin in four positions and rotate.
*: Fully insert the fixing pin keeping the line vertical and rotate by 90 degrees clockwise. Make sure that the central line is horizontal.

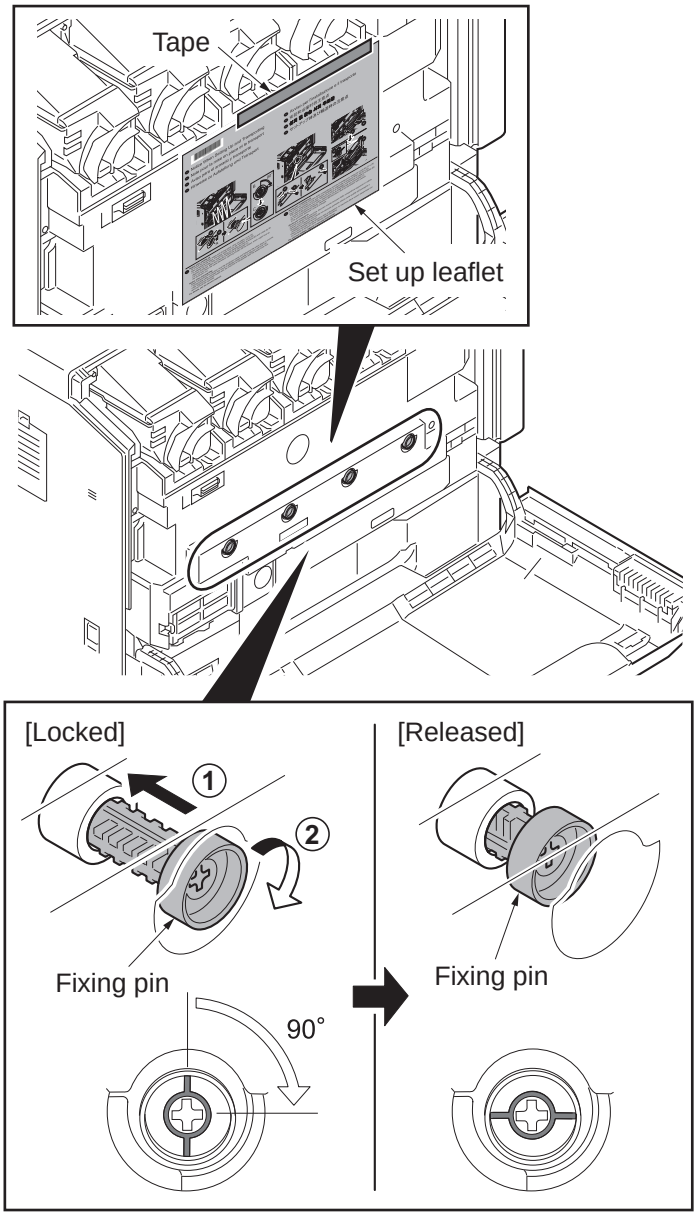

Figure 1-2-21

3. Remove a screw and slide the lever right wards.
4. Fix the lever using the screw previously removed at the right screw hole and unlock the developer waste exit.

*: When the device is shipped again or removed, use the reverse procedure to lock in the developer waste exit. Failure to observe this caution could result in deteriorated print quality and/or C calls.

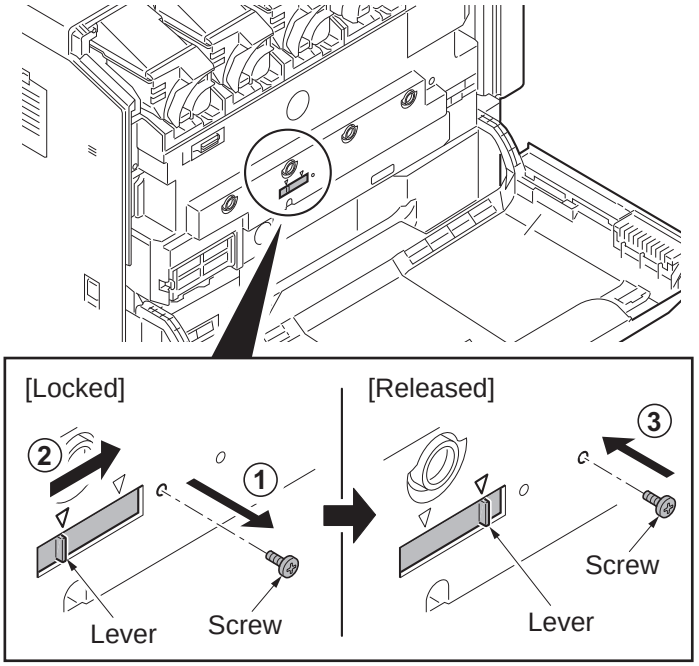

Figure 1-2-22

Installing the waste toner box

Caution

Before installing the waste toner box, unlock the developer waste exit (see page 1-2-14).

1. Push the release button and pull out the waste toner tray.
2. Open the lid and install the waste toner box.
3. Push the waste toner tray back in.
4. Close the front cover.

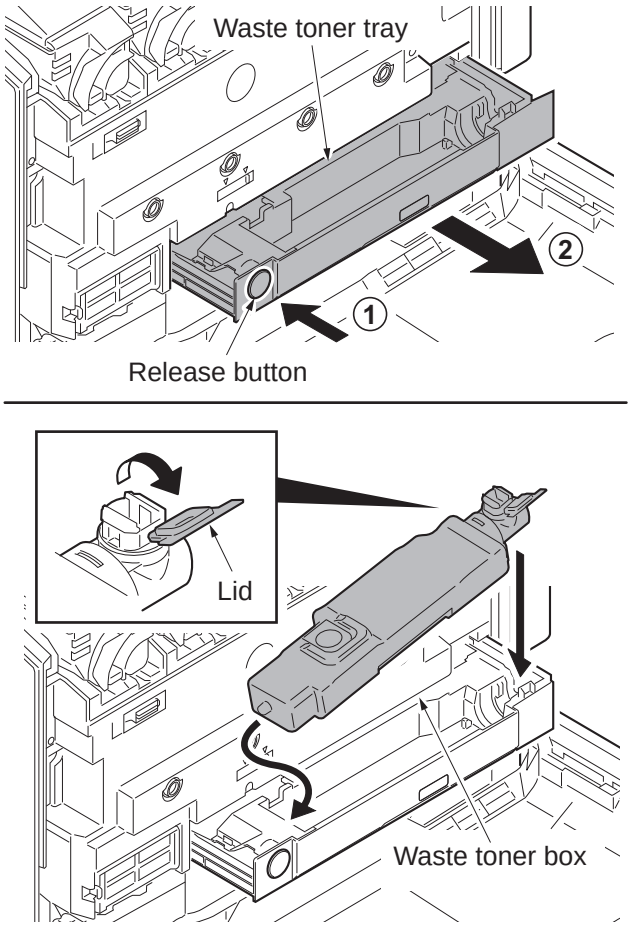

Figure 1-2-23

Installing optional devices

1. Install the optional devices (job separator, document finisher and/or fax kit etc.) as necessary.

Installing the cassette heater (option)

1. Install the optional cassette heater as necessary (see page 1-2-21).

Connect the power cord

1. Connect the power cord to the power cord connector on rear lower of the machine.
2. Connect the power plug to the wall outlet.

Adjusting the image

1. Turn the main power switch on.

2. **Check the messages on the operation panel**
   After completion of warming up, in case to display "Warning for high temperature. Adjust the room temperature." on the operation panel, follow the step 3. (Performing Drum Refresh)
   In case to display “Warning for low temperature. Adjust the room temperature.” on the operation panel, install the machine in the other location this message won’t be shown.
   Installing the machine in a low temperature environment could cause image quality problems.
   In case to have no display, follow the step 4 (Performing LSU cleaning).
*: Perform the high altitude settings when a leakage is developed on images in a high altitude installation, such as in Mexico City.
   U140 -> AC Calib -> Calibration -> Type 0 -> C,M,Y,K: On -> Execute -> Start
   Result 1: Developing leak image occur
   U140 -> AC Calib -> magnification
   Result 2: Grain image (solid image is dropped) occur
   U140 -> AC Calib -> Calibration -> Type 1 -> C,M,Y,K: On -> Execute -> Start
   In case the density of image is dropped even with Type 1.
   U140 -> AC Calib -> High Altitude -> Mode 2

3. **Performing drum refresh (see the operation guide)**
   Press the Menu key.
   In the Adjust/Maint. menu screen, press cursor key to select Service Setting.
   Press the OK key.
   In the Service Setting. menu screen, press cursor key to select [Durm].
   Press [OK]. A confirmation screen appears.
   Press [Yes] ([Left select key]).

4. **Performing LSU cleaning (see the operation guide)**
   In the Adjust/Maint. menu screen, press cursor key to select Service Setting.
   Press the OK key.
   In the Service Setting. menu screen, press cursor key to select [LSU].
   Press the OK key. A confirmation screen appears.
   Press [Yes] ([Left select key]).

5. **Performing calibration**
   (see the operation guide,U464 Setting the ID correction operation - performing calibration)
   In the Adjust/Maint. menu screen, press cursor key to select ColorCalibration.
   Press the OK key. A confirmation screen appears.
   Press [Yes] ([Left select key]).

6. **Performing color registration (see the operation guide,U469 Adjusting the color registration)**
   Print Chart (Printing the color registration correction chart)
   In the Adjust/Maint. menu screen, press cursor key to select Color Regist.
   Press the OK key.
   In the Color Regist menu screen, press cursor key to select Detail.
   Press the OK key.
   In the Detail menu screen, press cursor key to select [Print Chart].
   Press the OK key. A confirmation screen appears.
   Press [Yes] ([Left select key]).

   Adjust Magenta
   In the Adjust/Maint. menu screen, press cursor key to select Color Regist.
   Press the OK key.
   In the Color Regist menu screen, press cursor key to select Detail.
   Press the OK key.
   In the Detail menu screen, press cursor key to select [Adjust Magenta].
   Press the OK key.The Adjust Magenta screen appears.
   In the H and V charts for magenta printed in Print Chart above, note the values where the lines are closest to forming a single straight line.

*: Values corrected are H-1, H-2, H-3, H-4, H-5, H-6, H-7, V-3.
   Highlight the read value using the cursor up or down key and fill the other entries using the left and right cursor keys.
   When you have completed all the values, press the OK key.
   The setting is saved and you are returned to the Color Regist. Detail menu screen.

   Adjust Cyan and Adjust Yellow
   In the Detail menu screen, press cursor key to select [Adjust Cyan] or [Adjust Yellow].
   Press the OK key.The Adjust Cyan or Adjust Yellow screen appears.
   Using the same procedure as for magenta above, identify the cyan and yellow values in the color registration correction chart and set them in the printer.

7. **Make test prints.**
   If image quality is unsatisfactory after test printing, confirm process section and execute calibration again.
   If paper is fed skewed, perform the adjustment of skewed paper in the cassette (see page 1-5-87).

Setting the delivery date (maintenance item U278)

1. Press the menu key while pressing and holding the OK and down cursor keys simultaneously.
2. Enter the maintenance mode by entering 10871087 using the numeric keys. (see page P.1-3-1)
3. Enter 278 using the numeric keys and press the Ok key.
4. Select [Today].
5. Press the Ok key. The delivery date is set.
6. Press the Back key to exit.

Output an own-status report (maintenance item U000)

1. Enter 000 using the numeric keys and press the Ok key.
2. Select [Maintenance] and press the Ok key. A status report is output.
3. Press the back key to exit.

Exit maintenance mode

1. Enter 001 using the numeric keys and press the Ok key. The machine exits the maintenance mode.

Print out the user setting list

1. Select [Report Print] to output the user various setting reports.

Completion of the machine installation

(2) Shut-down

To turn main power off, be sure to perform the following before turning the main power switch off.

*: Before proceeding, make sure that the data lamp is turned off.
*: The hard disk may be operating when the Data indicator is lit or blinking. Turning off the main power switch while the hard disk is operating may cause damage.

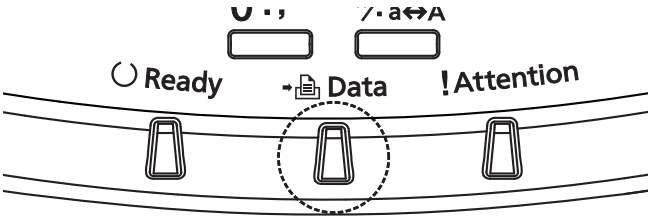

Figure 1-2-24

1. Press menu key.
2. Press the cursor key to select Shut down.
3. Press OK key. A confirmation screen appears.
4. Press [Yes] (Left Select key).
5. Follow the instructions on the display to turn the main power switch off.

```
Shut down.
Are you sure?

[  Yes    ] [   No    ]
```

```
Completed.
Turn the main power
switch off.
```

Figure 1-2-25

(3) Setting initial print modes

Factory settings are as follows:

Maintenance item No.	Contents	Factory setting
U253	Switching between double and single counts	DBL(A3/Ledger)
U260	Selecting the timing for print counting	Eject
U285	Setting service status page	On
U323	Setting abnormal temperature and humidity warning	On
U325	Setting the paper interval	Off/1
U327	Setting the cassette heater control	Off

1-2-3 Installing the cassette heater (option)

Cassette heater installation requires the following parts:

Parts	Quantity	Part.No.
Cassette heater set (120V)	1	302K994931
Cassette heater set (240V)	1	302K994941

Supplied parts of cassette heater set (302K994931):

Parts	Quantity	Part.No.
Cassette heater (120V)	1	302H794620
Wire saddle	3	7YZM610001++H0
Label	1	302KP34220
Connector cover	1	303NF04140
M3 x 8 tap-tight S screw	2	7BB700308H
M4 x 8 tap-tight S screw	1	7BB700408H

Supplied parts of cassette heater set (302K994941):

Parts	Quantity	Part.No.
Cassette heater (240V)	1	302H794610
Wire saddle	3	7YZM610001++H0
Label	1	302KP34220
Connector cover	1	303NF04140
M3 x 8 tap-tight S screw	2	7BB700308H
M4 x 8 tap-tight S screw	1	7BB700408H

Procedure

1. After confirming the data lamp is turned off, perform shut-down on the operation panel, turn power off, and unplug the power receptacle(see page P.1-2-19).
2. Pull the cassette 1 forward.

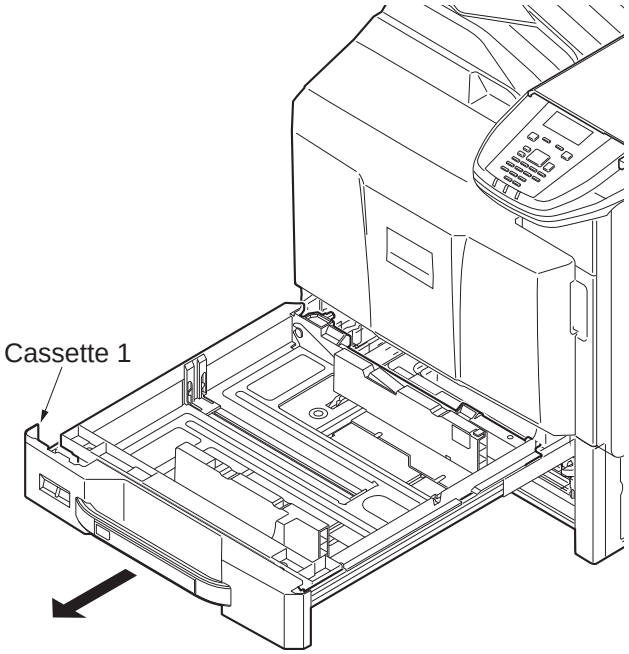

Figure 1-2-26

3. Pull up the cassette.
4. Pull the cassette 2 forward.
5. Draw out Cassette 2 by releasing the release lever.

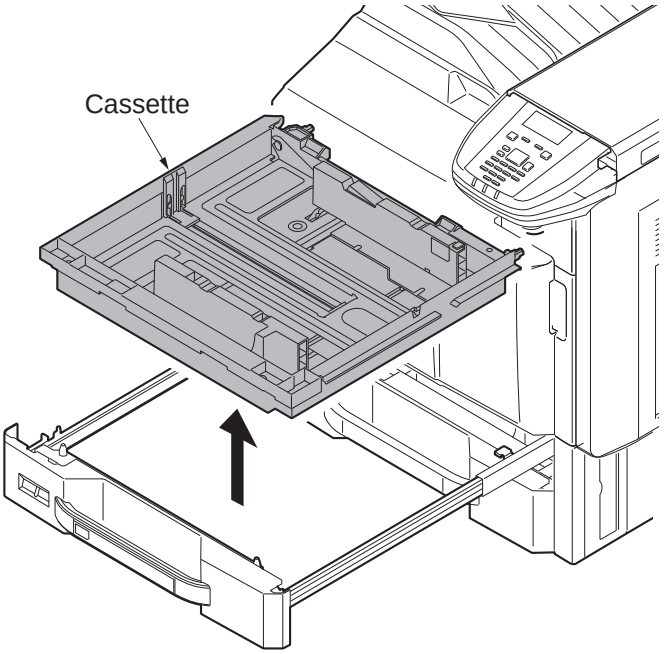

Figure 1-2-27

Remove the cassette 2 in the same manner as above.

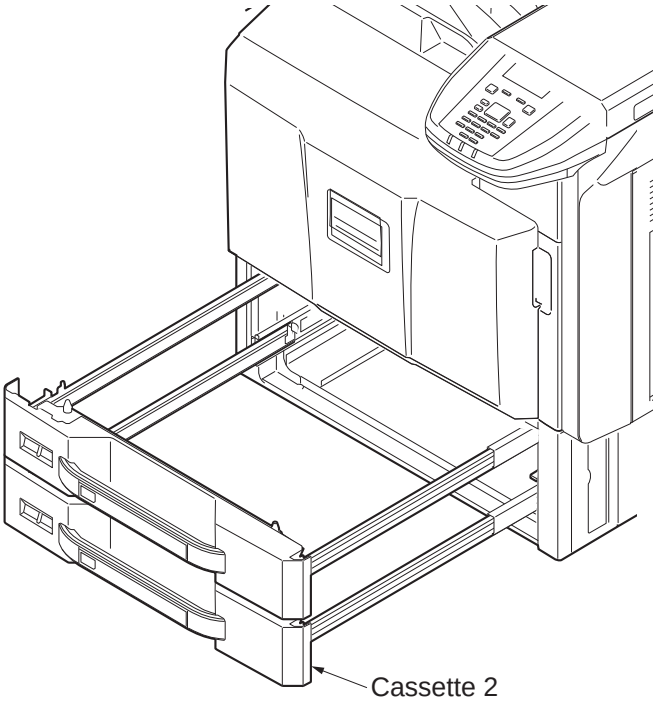

Figure 1-2-28

6. Fit three wire saddles on the bottom frame of the machine.
7. Fit the cassette heater using two M3 x 8 screws.

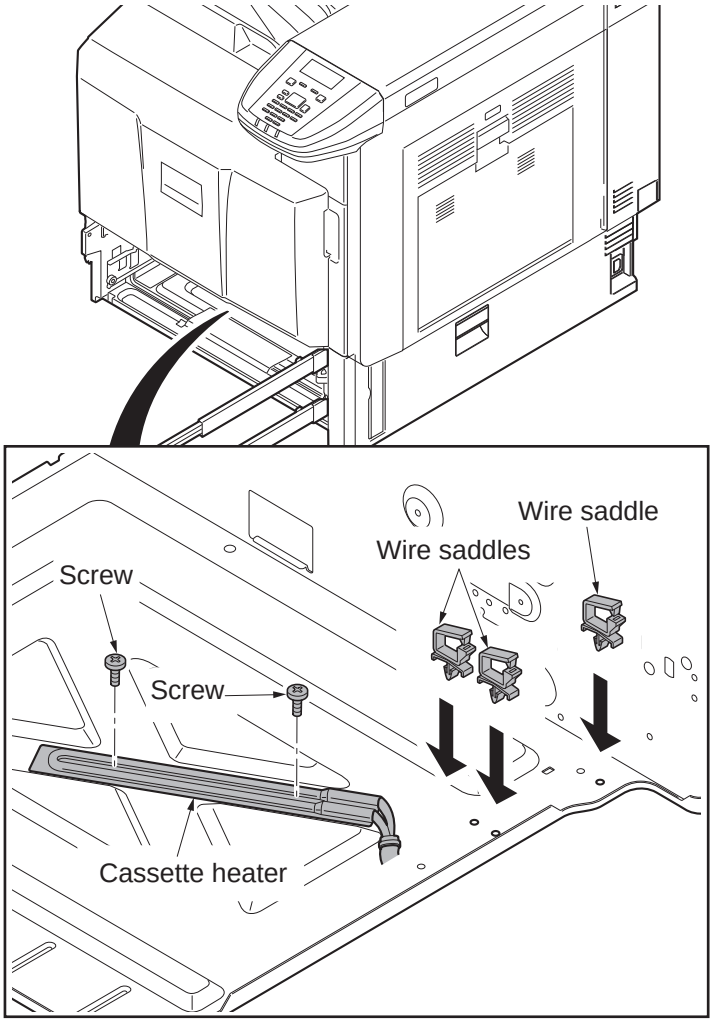

Figure 1-2-29

8. Connect the connector of the cassette heater to the connector in the rear frame of the machine.
9. Pass the wire of the cassette heater through three wire saddles and then fasten the wire.

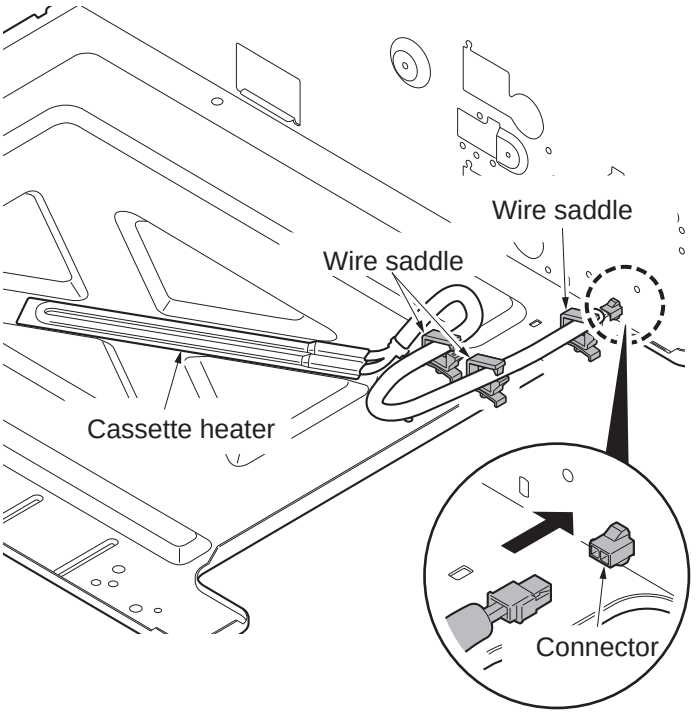

Figure 1-2-30

10. After installing the cassette heater, install the connector cover using the M4 × 8 screw.
11. Clean the label with alcohol and then affix the label.

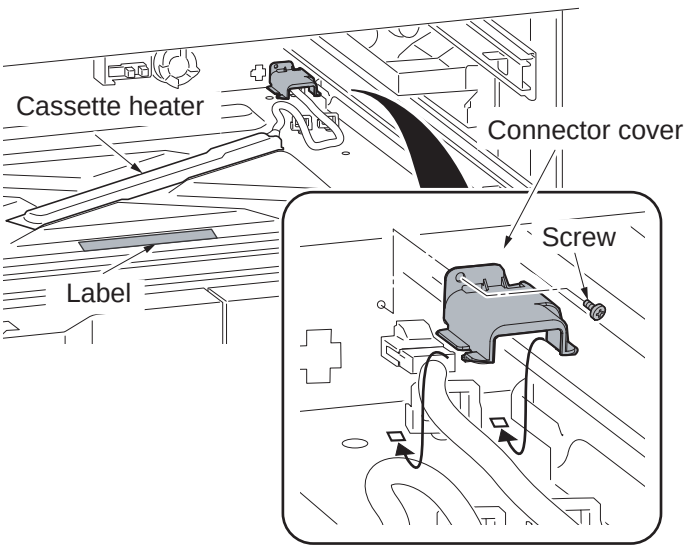

Figure 1-2-31

12. Replace the cassette 1 and 2.

*: Perform the maintenance mode U327 to configure the cassette heater control settings after a cassette heater was installed (see page P.1-3-109).

1-2-4 Installing the gigabit ethernet board (option)

Gigabit ethernet board installation requires the following parts:

Parts	Quantity	Part.No.
Gigabit ethernet board	1	1505JV0UN0 (option)

Procedure

1. After confirming the data lamp is turned off, perform shut-down on the operation panel, turn power off, and unplug the power receptacle (see page P.1-2-19).
2. Open the controller lid.
3. Remove two pins and then remove the slot cover.

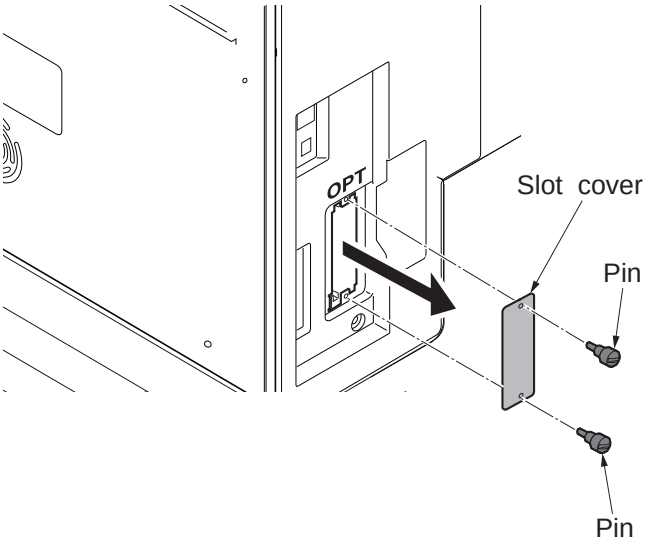

Figure 1-2-32

4. Insert the gigabit ethernet board along the groove in OPT2 and secure the board with two pins that have been removed in step 3.

*: Do not directly touch the gigabit ethernet board terminal.
Hold the top and bottom of the gigabit ethernet board, or the projection of the board to insert the gigabit ethernet board.

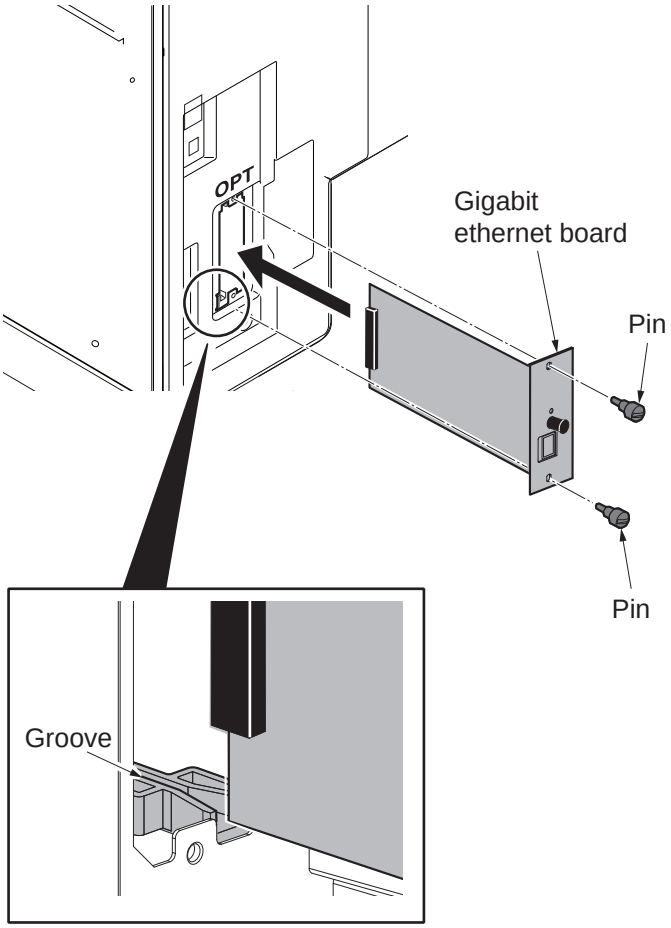

Figure 1-2-33

5. Plug the modular connector cable into the line terminal,
6. Close the controller lid.

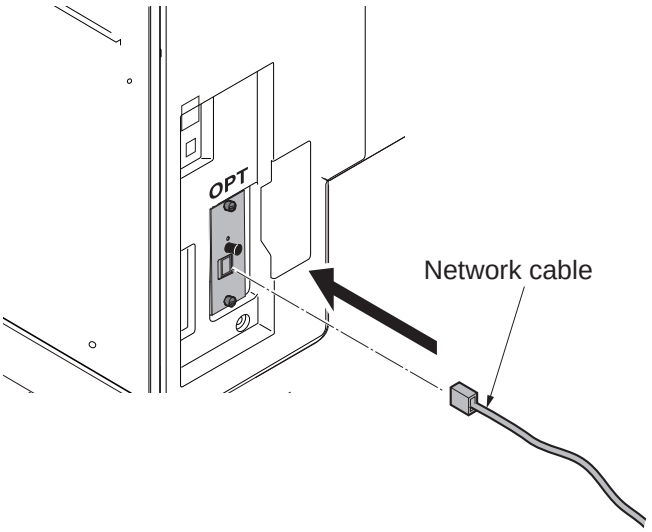

Figure 1-2-34

1-2-5 Installing the IC card reader holder (option)

IC card reader holder installation requires the following parts:

Parts	Quantity	Part.No.
IC card reader holder	1	1709AD0UN0 (option)
Relaying USB wire*	1	302MN46210

*1: For internal wirings only

Supplied parts of IC card reader holder (1709AD0UN0):

Parts	Quantity	Part.No.
Card reader case	1	-
Card reader base	1	-
Card reader mount	1	-
Card reader tray	1	-
USB Wire (For extension)	1	-
Pin	3	303NS24410
Clamp	6	7YZM690002++H01

The card reader base, card reader mount, and the pin are packaged as an assembled kit.

For internal wirings
Procedure

1. After confirming the data lamp is turned off, perform shut-down on the operation panel, turn power off, and unplug the power receptacle(see page P.1-2-19).
2. Pull the paper conveying unit out.
3. Remove two screws and then remove the upper right cover.

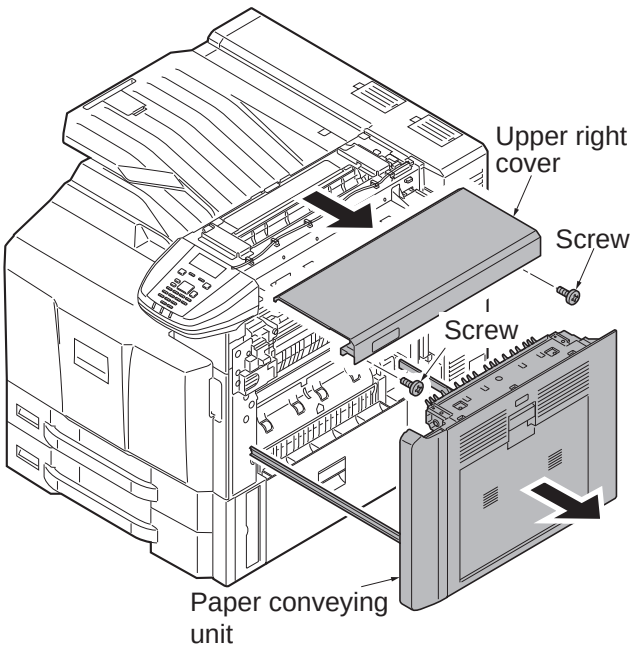

Figure 1-2-35

4. Remove two screws.
5. Unhook three hooks and then remove the Left upper cover.

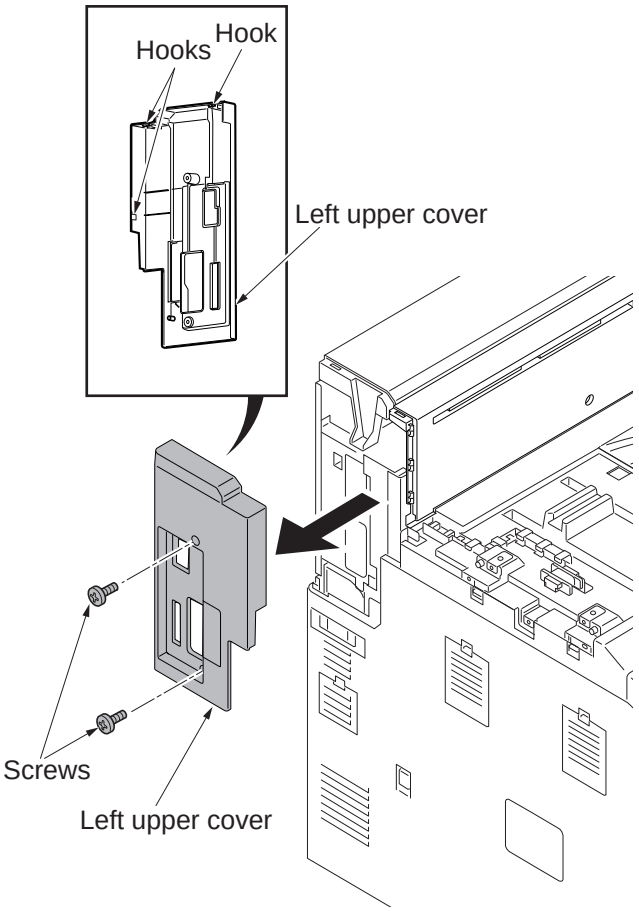

Figure 1-2-36

6. Remove screw and then remove the rear tray cover.

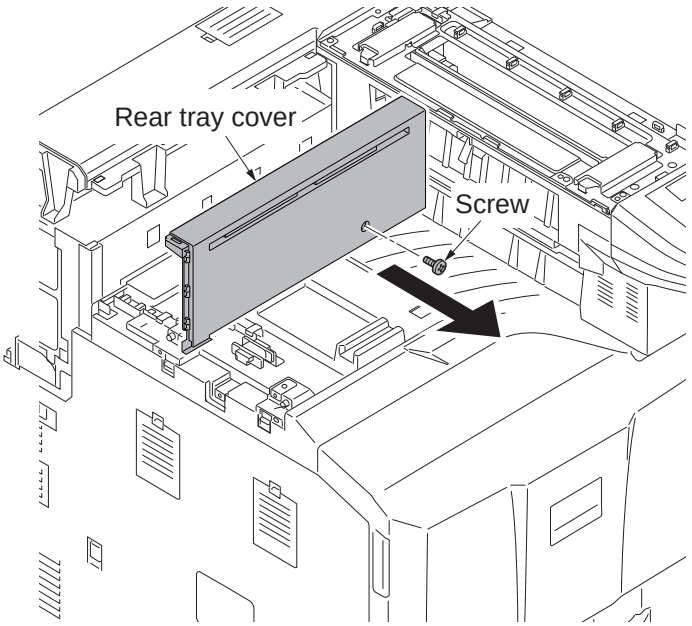

Figure 1-2-37

7. Remove eight screws and then remove the rear upper cover.

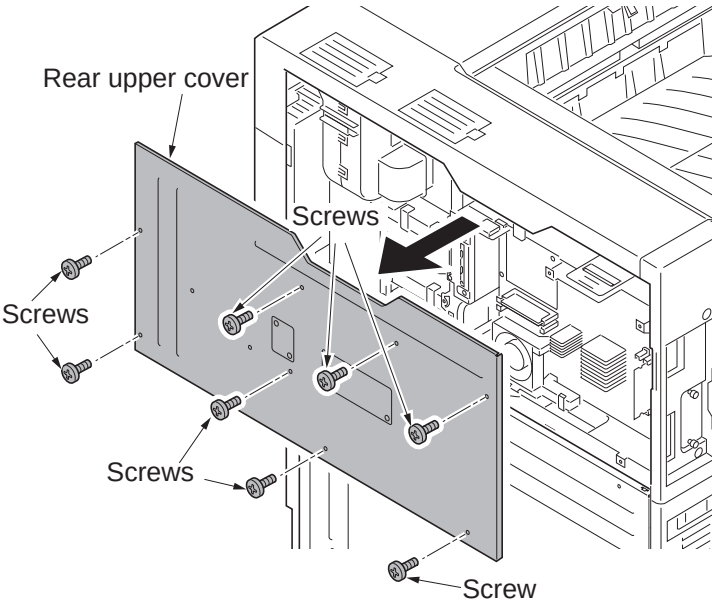

Figure 1-2-38

8. Remove five screws and then remove the Top cover.

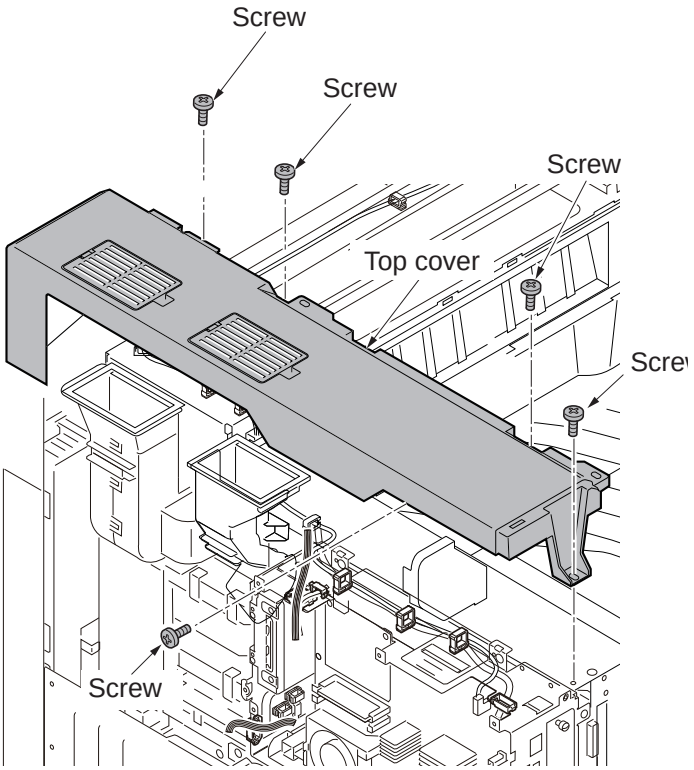

9. Cut out the aperture plate on the upper right cover using nippers.

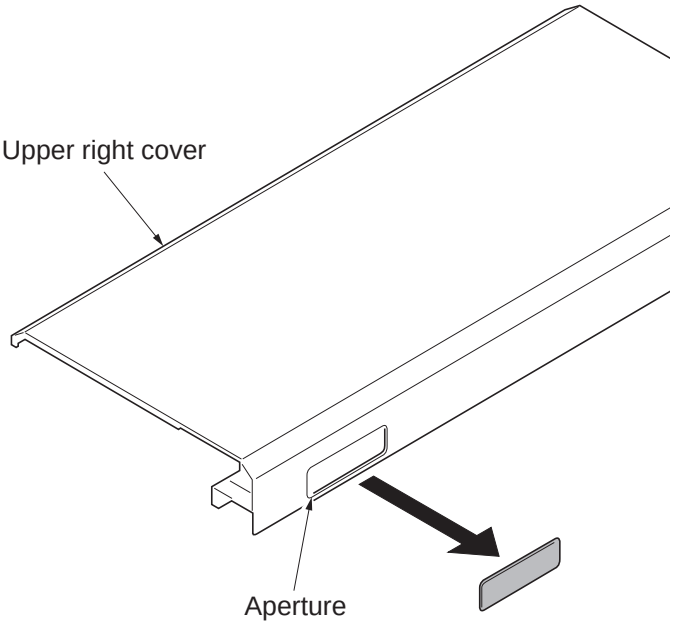

Figure 1-2-40

10. Fit two clamps.

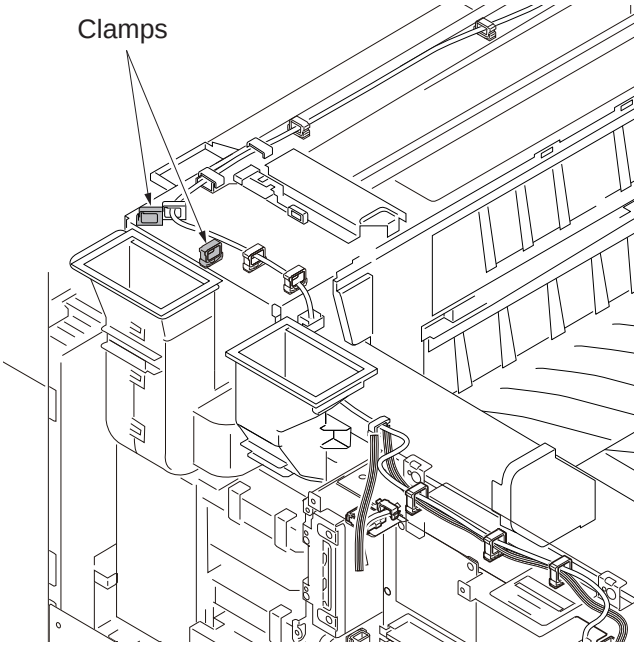

Figure 1-2-41

11. Fit four clamps.

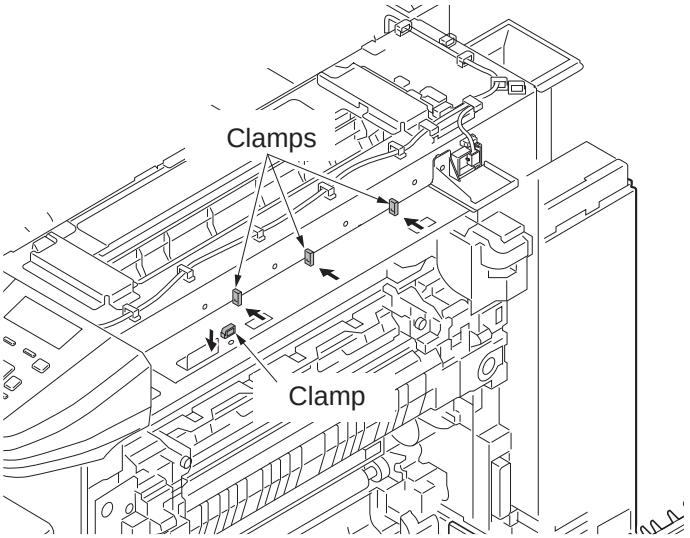

Figure 1-2-42

12. Release ten wire saddles.
13. Remove two wire holders.

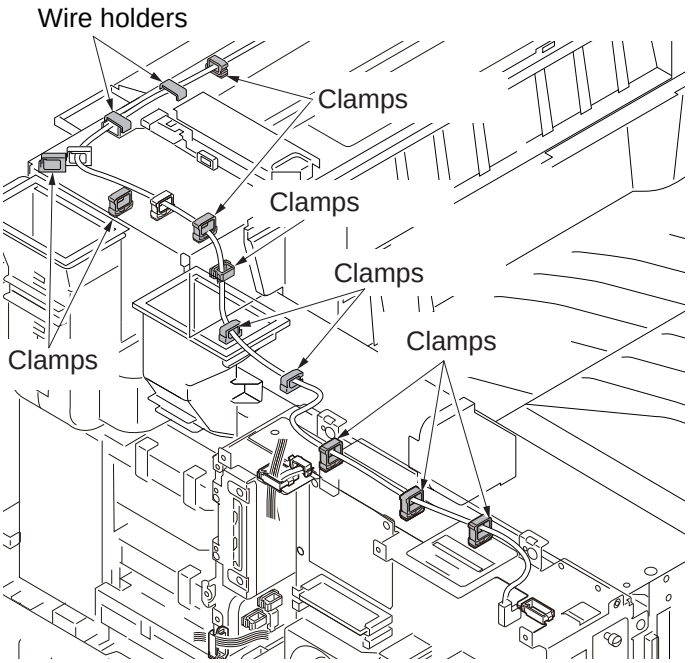

Figure 1-2-43

14. Connect the relaying USB wire to the USB wire of the IC card reader.
15. Insert the connector of the relaying USB wire to the main PWB.
16. Fix the USB wire of the IC card reader using ten wire saddles and two wire holders.

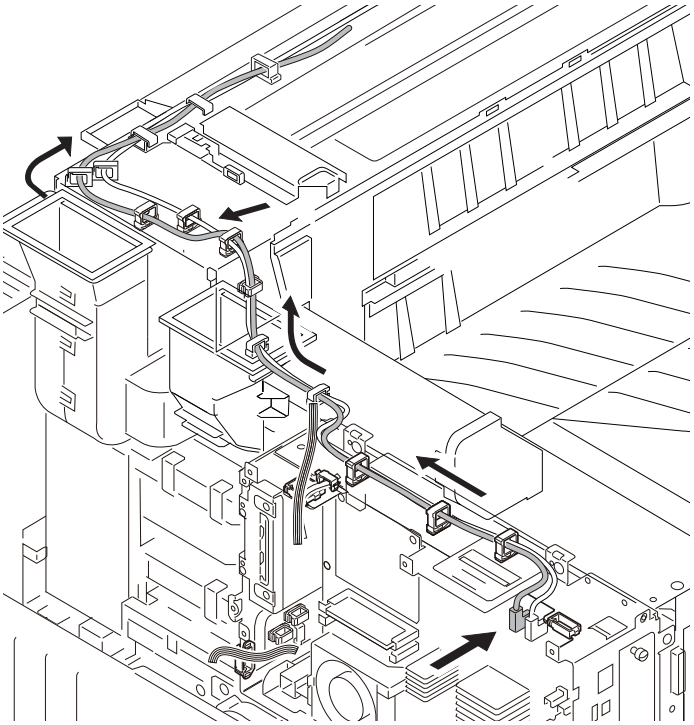

Figure 1-2-44

17. Pass the USB wire of the IC card reader through two clamps and then fasten the wire.

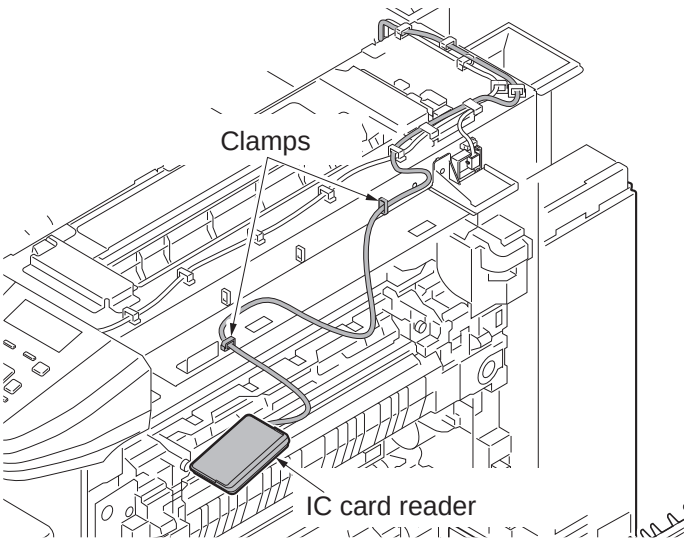

Figure 1-2-45

18. .Fix the wirings of extra portion using two clamps so that the distance of the USB power line from the clamp to the IC card reader is approximately 160mm.

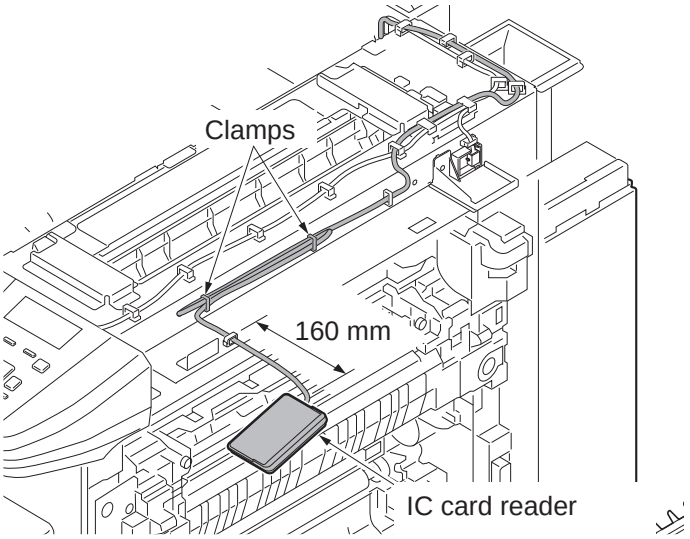

Figure 1-2-46

19. Route the IC card reader through the opening in the upper right cover and fix the upper right cover using the two screws.

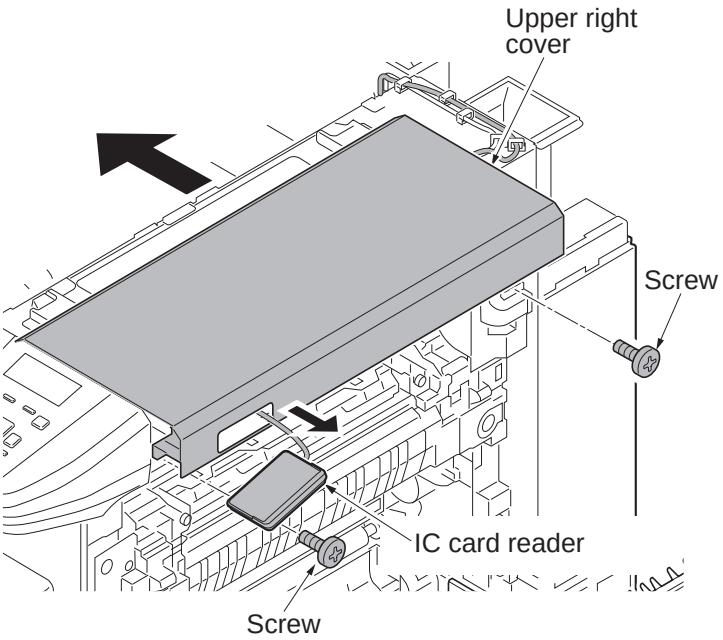

Figure 1-2-47

20. Remove the pin of the card reader base and then remove the card reader mount.

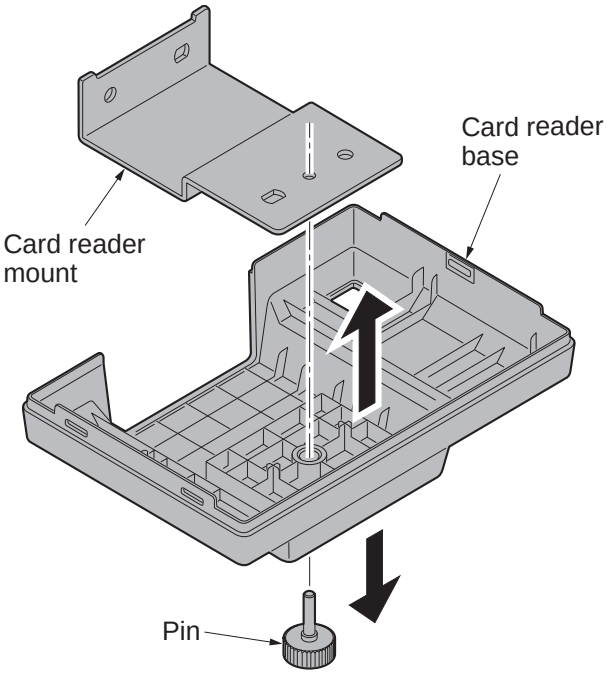

Figure 1-2-48

21. Fit the card reader mount to the machine using two pins.

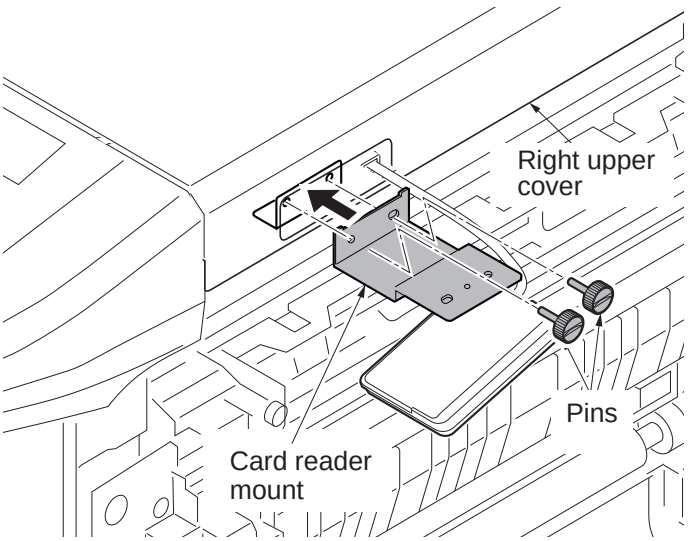

Figure 1-2-49

22. Refit the card reader base to card reader mount using the pin removed in step 20.

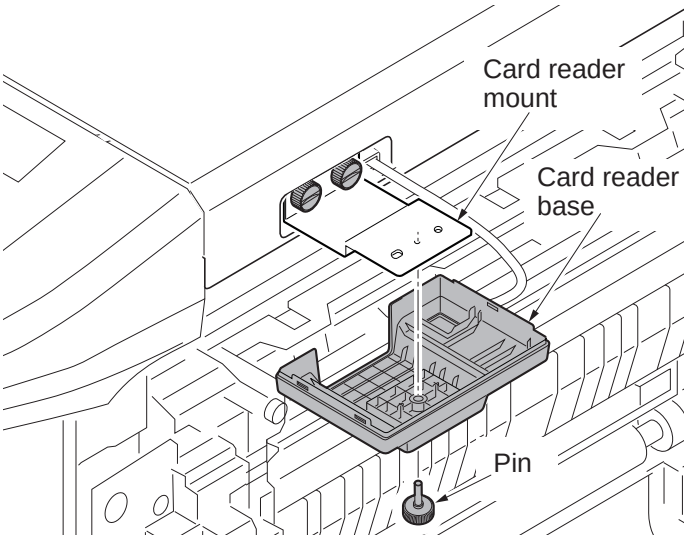

Figure 1-2-50

23. Fit the card reader tray to the card reader base.
    Choose the direction of mounting the IC card reader according to the depth of the reader.
    10mm to 22mm: Face the mark A upwards.
    Less than 10mm: Face the mark B upwards.

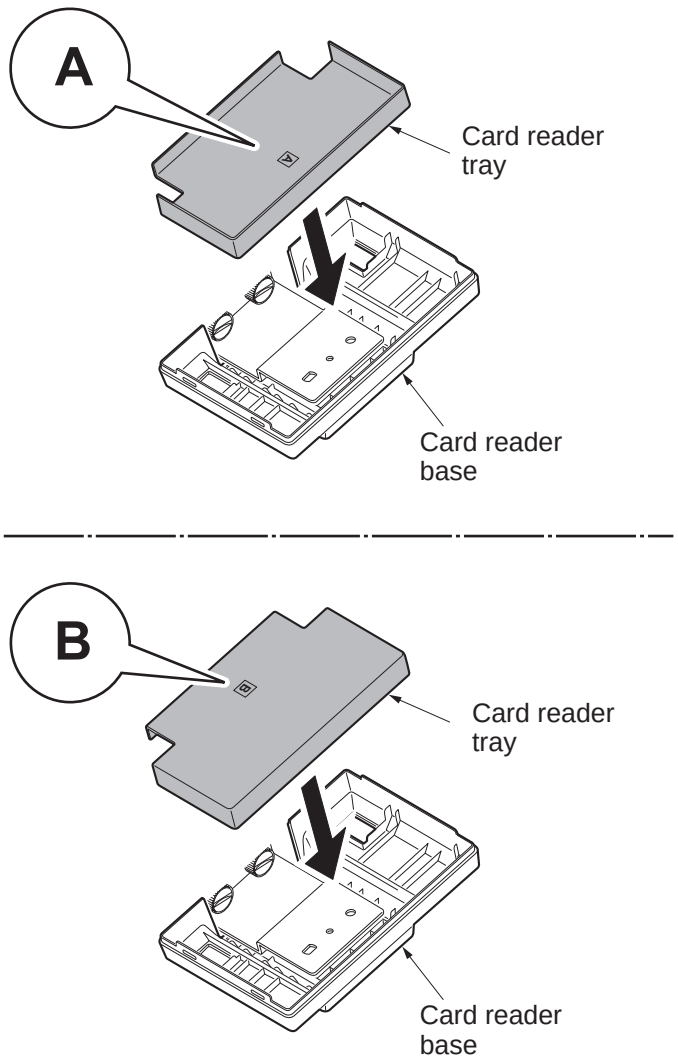

Figure 1-2-51

24. Mount the IC card reader on the card reader base.

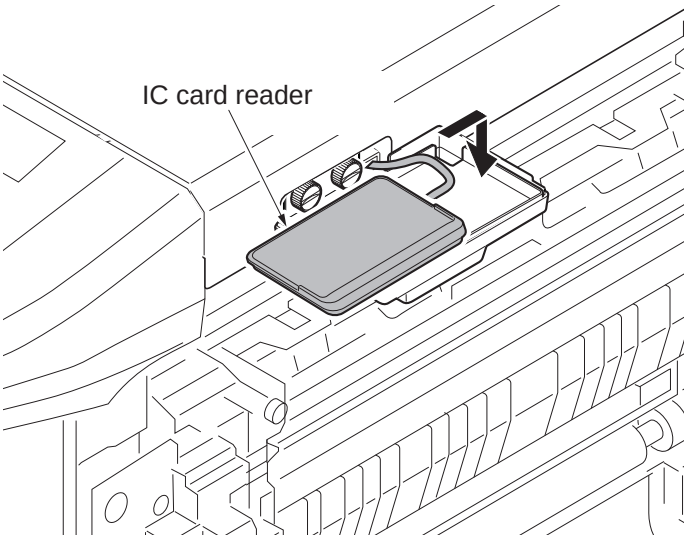

Figure 1-2-52

25. Hook the two hooks of the card reader case to fit the card reader case to the card reader base.
    Press its top until it clicks in.

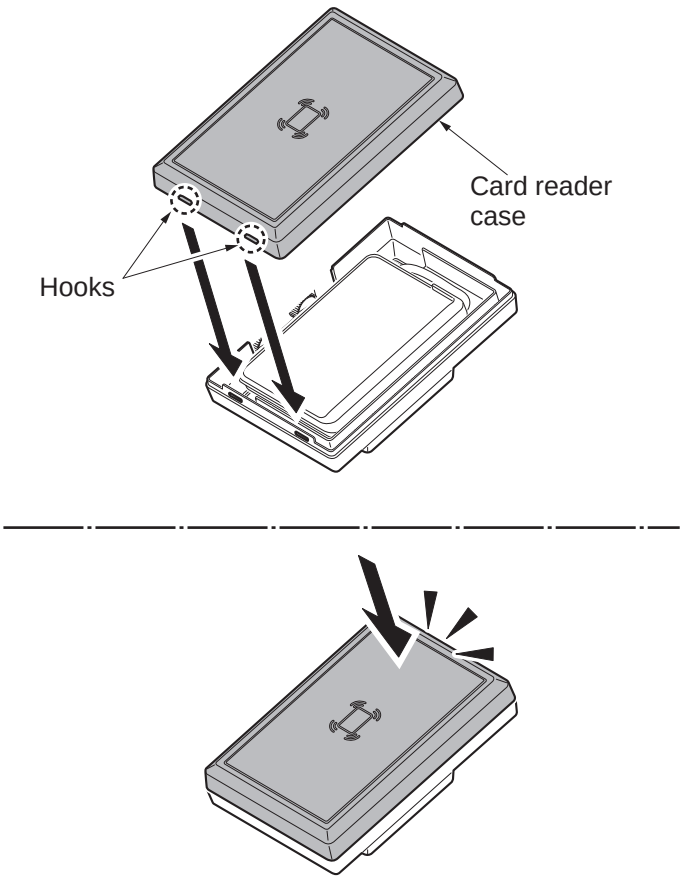

Figure 1-2-53

26. Replace the cover which was removed.

For external wirings
Procedure

1. After confirming the data lamp is turned off, perform shut-down on the operation panel, turn power off, and unplug the power receptacle(see page P.1-2-19).
2. Remove the pin of the card reader base and then remove the card reader mount.

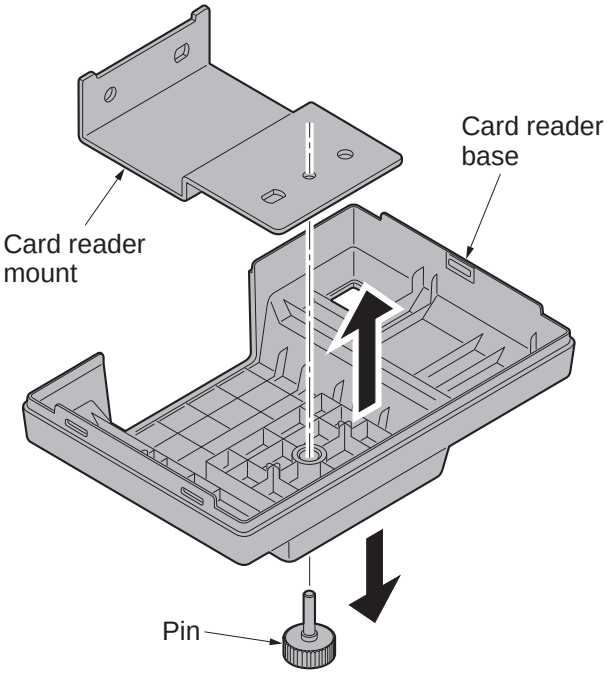

Figure 1-2-54

3. Remove the upper right cover (see page P.1-2-27).
4. Cut out the aperture plate on the upper right cover using nippers (see page P.1-2-30).
5. Replace the cover which was removed.

6. Fit the card reader mount to the machine using two pins.

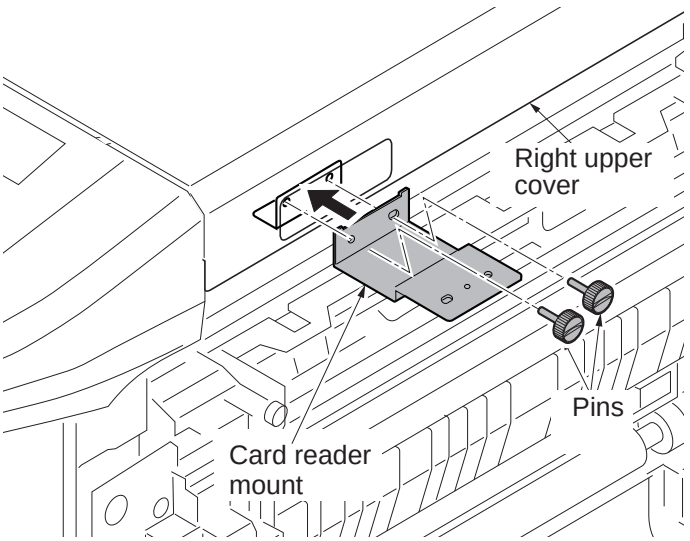

Figure 1-2-55

7. Refit the card reader base to card reader mount using the pin removed in step 2.

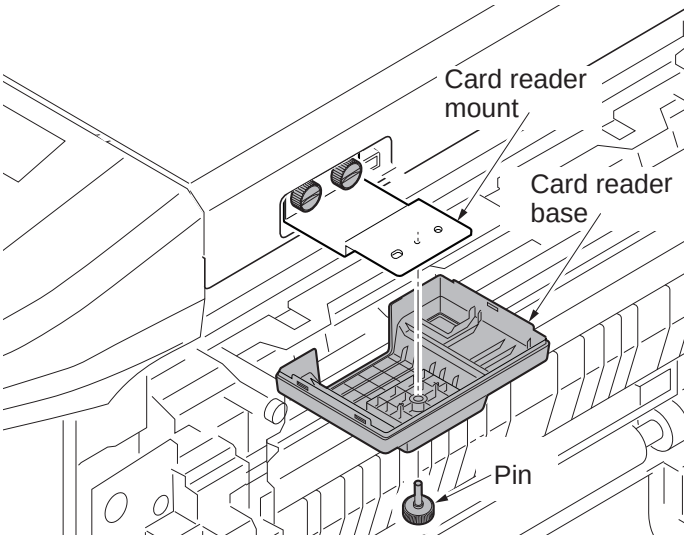

Figure 1-2-56

8. Fit the card reader tray to the card reader base.
   Choose the direction of mounting the IC card reader according to the depth of the reader.
   10mm to 22mm: Face the mark A upwards.
   Less than 10mm: Face the mark B upwards.

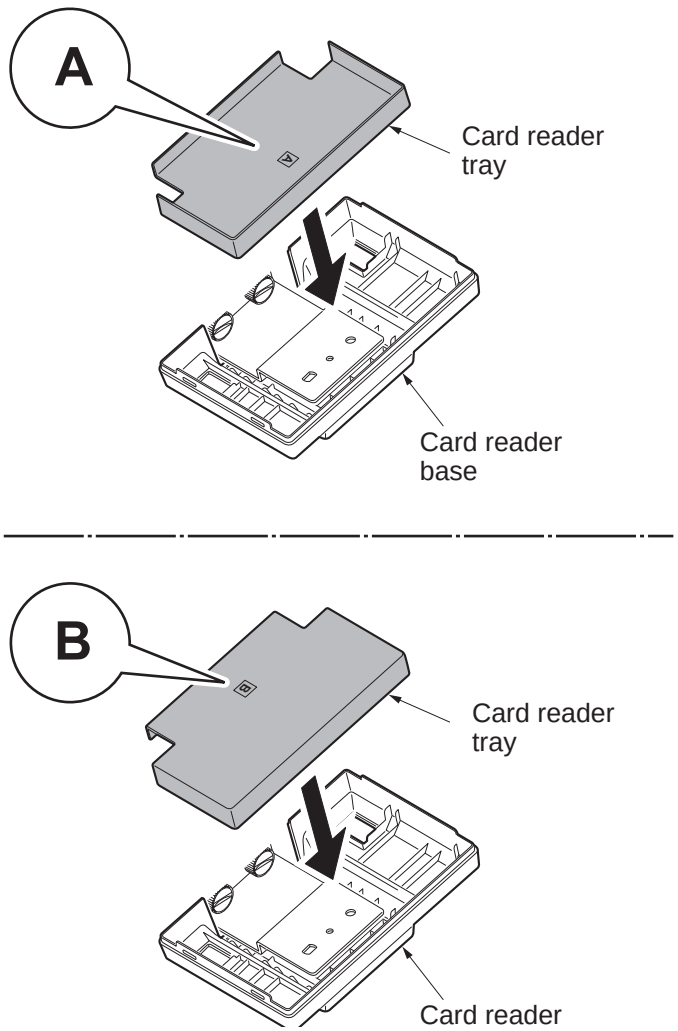

Figure 1-2-57

9. Route the USB wire of the IC card reader through the aperture of the card reader base and mount the IC card reader on the card reader base.

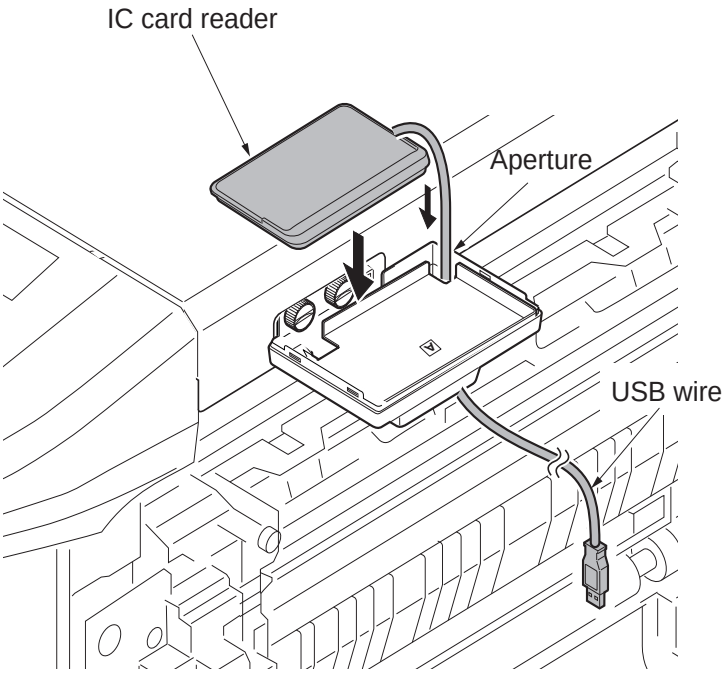

Figure 1-2-58

10. Hook the two hooks of the card reader case to fit the card reader case to the card reader base.
    Press its top until it clicks in.

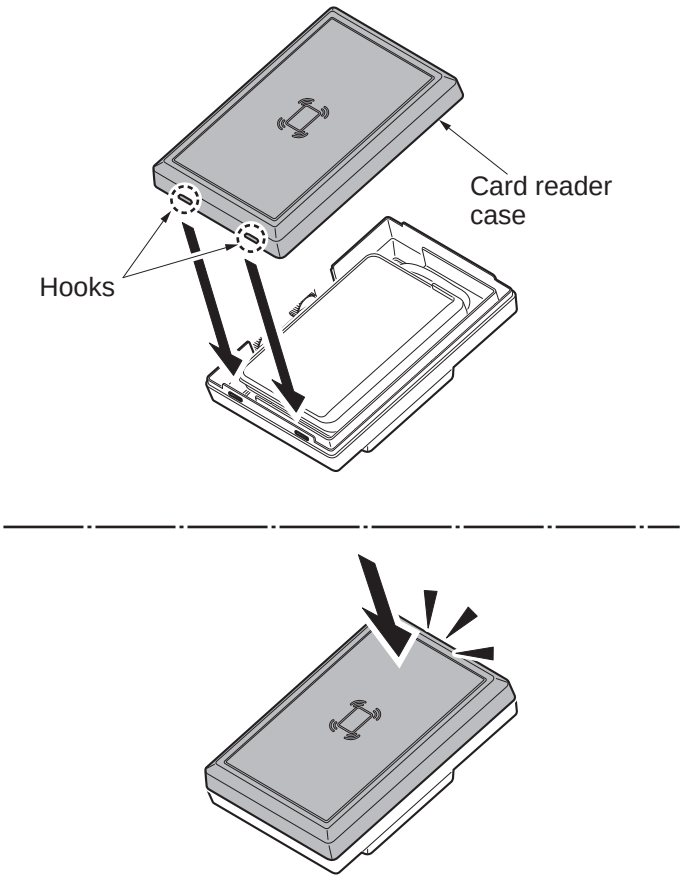

Figure 1-2-59

11. Fit six clamps.
    Right side: three
    Rear side: three

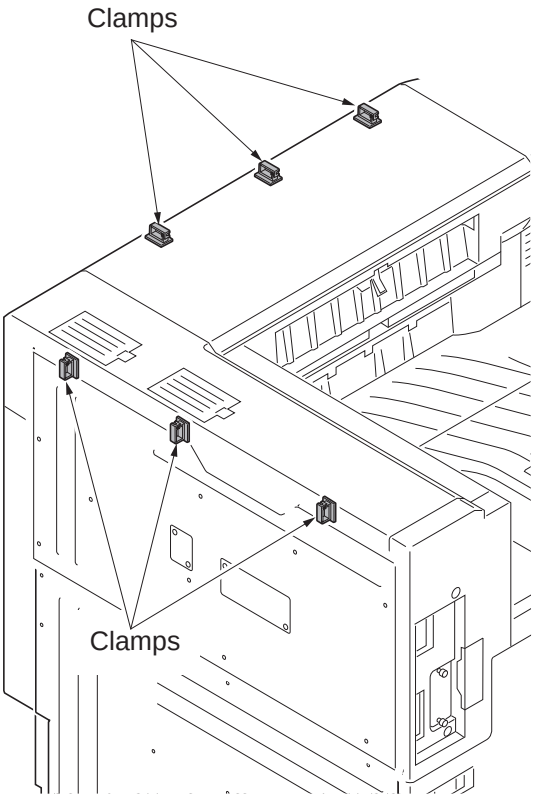

Figure 1-2-60

12. Pass the USB wire of the IC card reader through six clamps and then fasten the wire.
13. Connect the USB wire to the machine. If the length does not suffice, use the USB wire supplied.

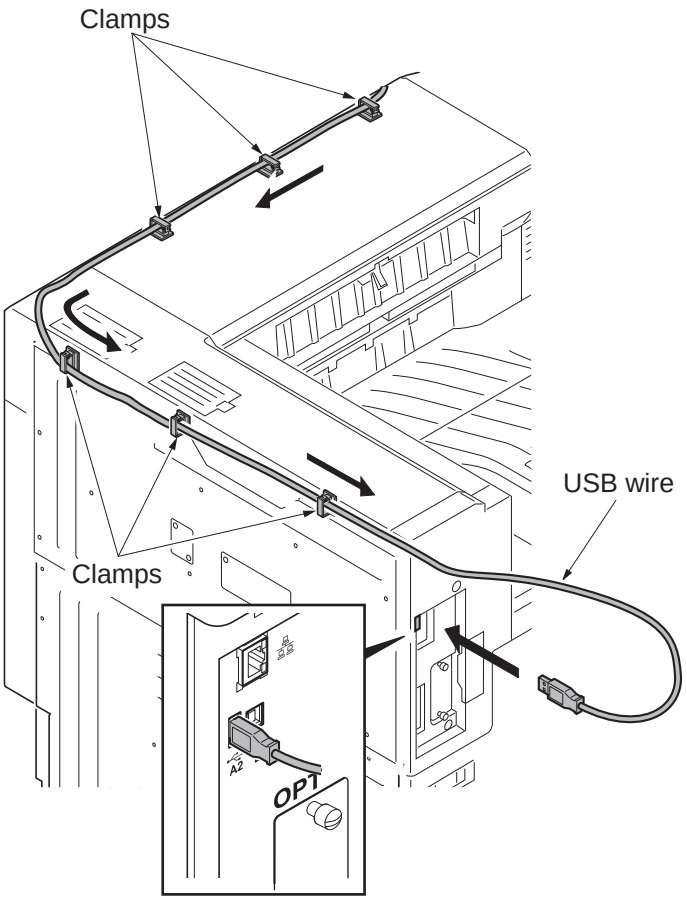

Figure 1-2-61

Enabling IC Card Authentication

Precautions

To install the optional function, you need the License Key. Please access the designated web site of your dealer or service representative, and register “Machine No.” indicated on your machine and “Product ID” indicated on the License Certificate supplied with the product to issue the License Key.

1. Turn the main power switch on.
2. Press [Menu].
3. Select Op Function. Press OK key.
4. The Login screen appears.
5. With the Login User Name entry field selected, press OK key.The Login User Name entry screen is displayed.
6. Enter the Login User Name using the numeric keys then press OK key.
7. Select the Login Password entry field. press OK key.
8. Enter the Login Password with the numeric keys then press OK key.
9. Pressing [Login] ([Right Select]).
10. The Op Functions menu appears.
11. Select the IC Card, then press OK key.
12. Select the License On. then press OK key.
13. Select the Official. then press OK key.
14. To use the application as a trial, select Trial and press OK key.
15. Enter the License key using the numeric keys.
16. When the confirmation screen appears, press [Yes] ([Left Select]).

To use a SSFC card, run maintenance mode U222 and set SSFC.

1-2-6 Installing the duct unit (option)

Duct unit installation requires the following parts:

Parts	Quantity	Part.No.
Duct unit	1	302LC94530

Supplied parts of duct unit (302LC94530):

Parts	Quantity	Part.No.
Duct A	1	-
Duct B	1	-
Filter	2	-
M3 x 8 tap-tight P screw	2	7BB200308H
M3 x 8 tap-tight P screw (black)	1	7BB282308H
M3 x 8 tap-tight S screw (black)	2	7BB782308H

*: This option unit cannot be installed together with the finisher.

Procedure

1. After confirming the data lamp is turned off, perform shut-down on the operation panel, turn power off, and unplug the power receptacle(see page P.1-2-19).
2. Fit duct B to duct A using two M3 x 8 tap-tight P screws.

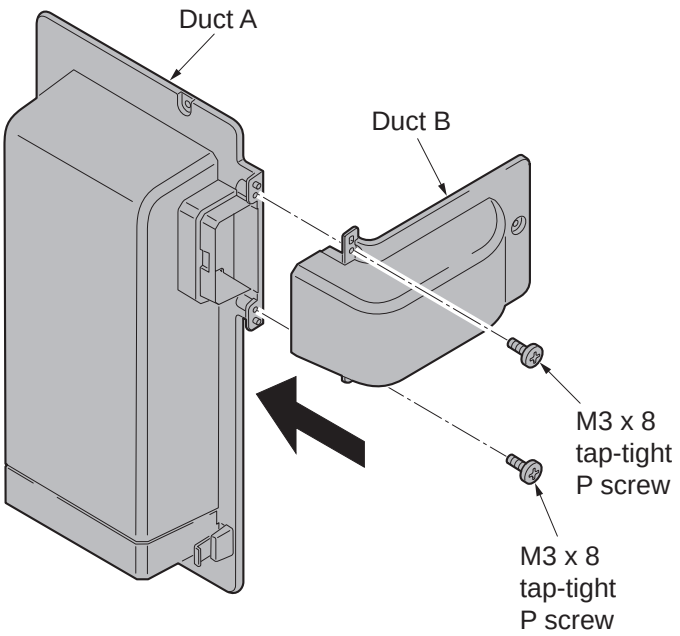

Figure 1-2-62

3. Fit two filters to duct A.

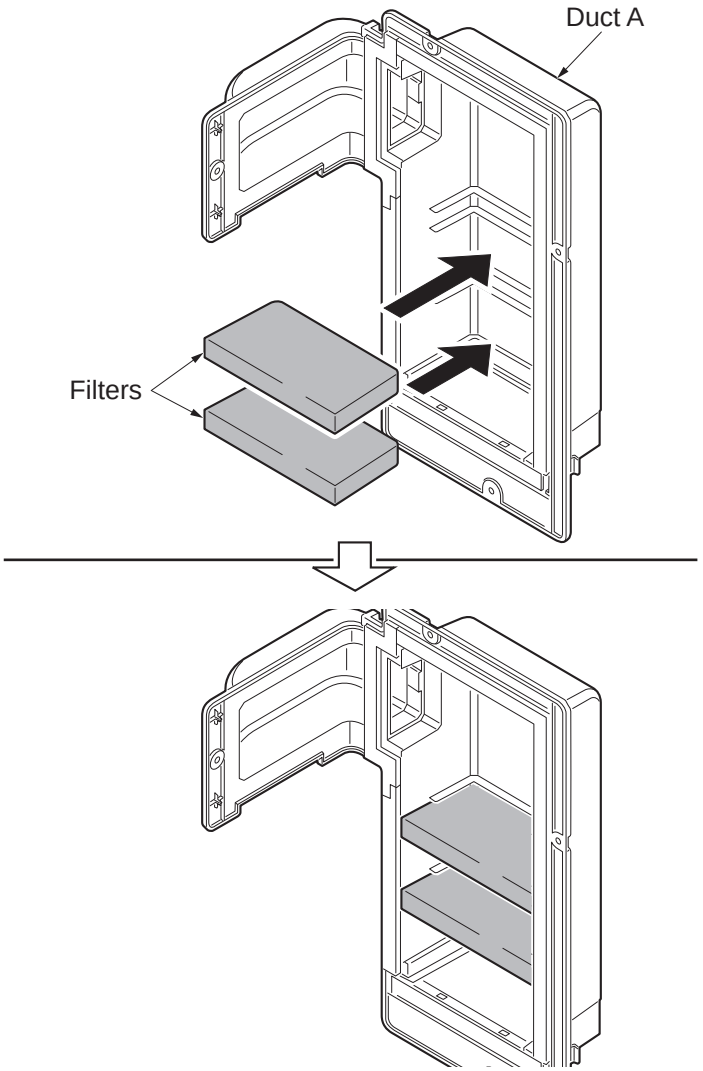

Figure 1-2-63

4. Remove the screw A from the rear lower cover.

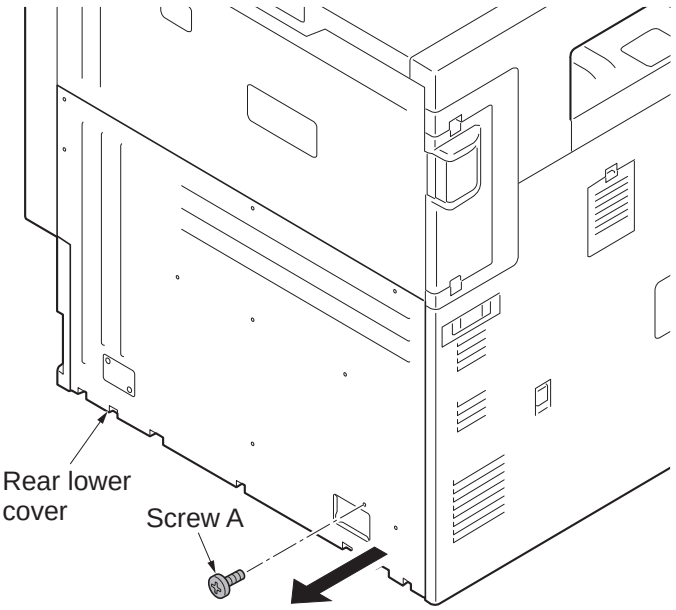

Figure 1-2-64

5. Fit the duct unit to the machine using the removed screw A, M3 x 8 tap-tight P screw (black) and two M3 x 8 tap-tight S screws (black).

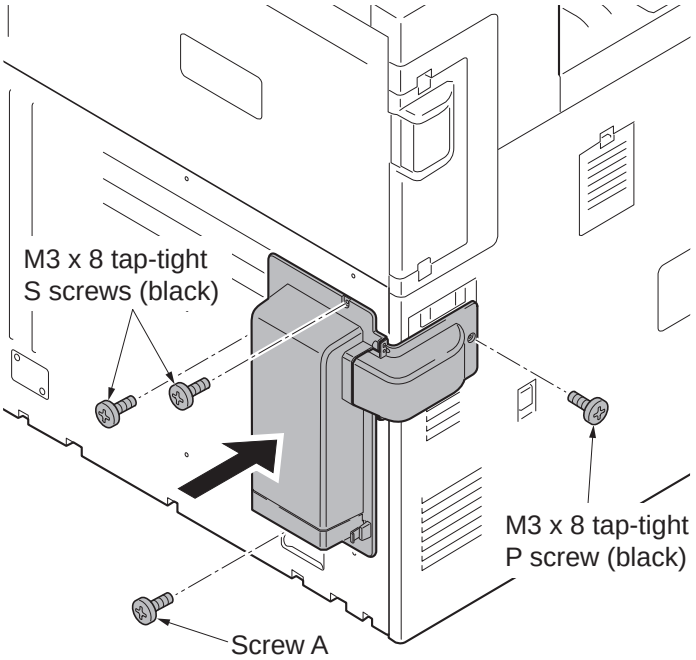

Figure 1-2-65

1-3-1 Maintenance mode

The machine is equipped with a maintenance function which can be used to maintain and service the machine.

(1) Executing a maintenance item

Perform this operation when the panel displays Ready to print or that the cover is open.

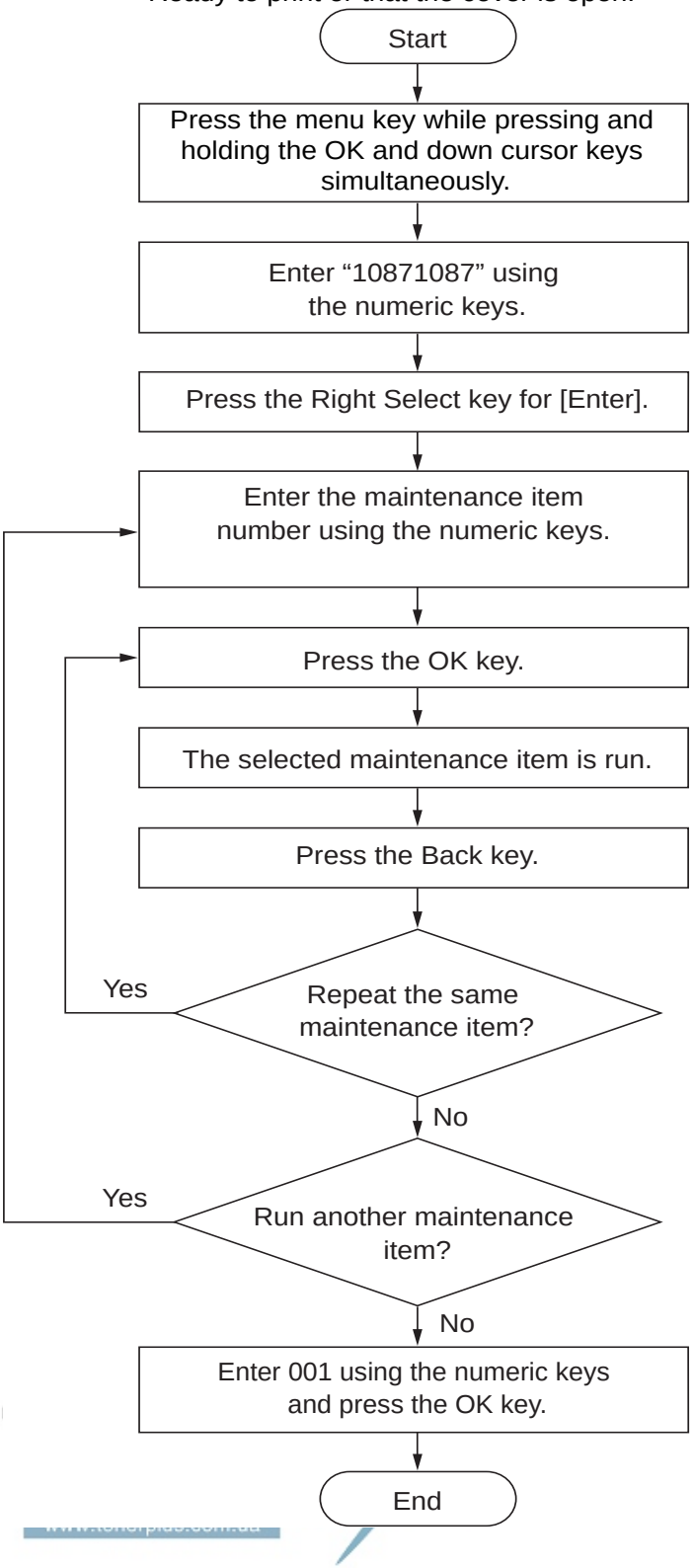

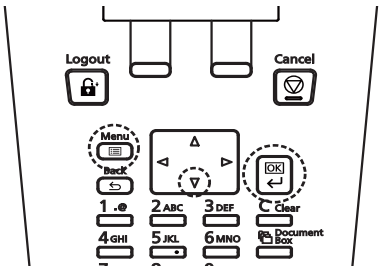

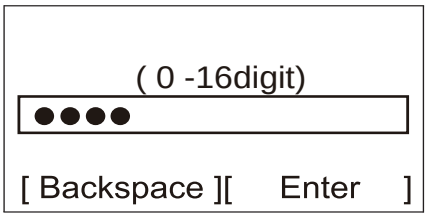

・・・・・ Maintenance mode is exited.

(2) Maintenance modes item list

Section	Item No.	Content of maintenance item	Initial setting	
			45ppm	55ppm
General	U000	Outputting an own-status report	-	
	U001	Exiting the maintenance mode	-	
	U002	Setting the factory default data	-	
	U004	Setting the machine number	-	
	U019	Displaying the ROM version	-	
Initializa-tion	U021	Memory initializing	-	
	U024	HDD formatting	-	
Drive, paper feed and paper convey-ing sys-tem	U030	Checking the operation of the motors	-	
	U031	Checking switches and sensors for paper conveying	-	
	U032	Checking the operation of the clutches	-	
	U033	Checking the operation of the solenoids	-	
	U034	Adjusting the print start timing	-	
		LSU Out Top	0/0/0/0/0/0/0/0/0/0/0/0	
		LSU Out Left	0/0/0/0/0/0/0/0/0	
		LSU Out Top B/W	-	0/0/0/0/0/0
		LSU Out Top 3/4	0/0/0/0/0/0	
	U037	Checking the operation of the fan motors	-	
	U051	Adjusting the deflection in the paper		
		Paper Loop Amount	-5/0/-5/0/ -5/0/-5/0 -6/-1/-5/0	-7/-1/-7/-1/ -7/-1/-7/-1/ -8/-2/-7/-1
		Paper Loop Amount B/W	-	-8/-8/-8/ -8/-9/-8
		Paper Loop Amount 3/4	-2/-2/-2/-2/-3/-2	
	U052	Setting the fuser motor control		
		Set Loop Sensor	-	
		Loop Sensor Control	On/On/On/On	
		Set Loop Sensor Valid	On	
	U053	Setting the adjustment of the motor speed		
		Motor1	12	11
		Motor2	0/0/0/17/0	0/0/0/15/0

Section	Item No.	Content of maintenance item	Initial setting	
			45ppm	55ppm
Drive, paper feed and paper convey-ing sys-tem	U053	Motor3	27/0/-30/ -30/82/0/18/-30/-30/ 0/0/0/0	-18/0/-27/ -27/73/0/ 16/-27/-27/ 0/0/0/0
		Motor4	-/28	25/22
		Motor5	-	0/0/14/0
		Motor6	-	-16/0/-25/ -25/66/0/ 15/-24/-24
		Motor1 Half	0	
		Motor2 Half	0/0/0/34/0	0/0/0/30/0
		Motor3 Half	54/0/-43/ -43/164/0/ 36/-60/-60	-36/0/-38/ -38/147/0/ 32/-54/-54
		Motor1 3/4	0	
		Motor2 3/4	0/0/0/22/0	
		Motor3 3/4	35/0/-39/-39/106/0/ 23/ -39/-39	-26/0/-39/-39/106/0/ 23/ -39/-39
	U059	Setting fan mode		
		Fan Mode	Mode1	
		Cooling Mode	0	
	U089	Outputting a MIP-PG pattern		
High voltage	U100	Adjusting main high voltage		
		Adj AC Bias	-	
		Set AC Auto Adj	On	
		Set DC Bias	-	
		Adj DC Bias	0/0/0/0/0/0/0/0	0/0/0/0/0/0/0/0/0
		Set Low Temp	1	
		Set Charger Freq	8807/ -/ 10690/ 8857	11022/10690/10690 8857
		Chk Current	-	
		Set AC Gain	Auto	
	U101	Setting the voltage for the primary trans-fer		
		Normal Full	126	131
		Normal Half	108	110
		Normal 3/4	118	118

Section	Item No.	Content of maintenance item	Initial setting	
			45ppm	55ppm
High voltage	U101	Normal B/W	-	135
		Add Color	2/2/5	
		Add Color 2nd	-3/-3/-2/-14	
		Surround Correct	Off	
	U106	Setting the voltage for the secondary transfer		
		Light/Normal 1st Normal2/3 1st	143/134/120	150/139/128
		Light/Normal 2nd Normal2/3 2nd	207/155/124	220/163/128
		Light/Normal 1st 3/4(Gloss) Normal2/3 1st 3/4(Gloss)	131/123/120	
		Light/Normal 2nd 3/4(Gloss) Normal2/3 2nd 3/4(Gloss)	180/140/120	
		Light/Normal 1st B/W Normal2/3 1st B/W	-	150/144/128/
		Light/Normal 2nd B/W Normal2/3 2nd B/W	-	183/171/128
		Heavy1 1st 3/4	133/129/124	
		Heavy1 2nd 3/4	155/150/124	
		Heavy4/5 1st Half	126/123/119	130/127/122
		Heavy4/5 2nd Half	144/140/119	151/146/122
		OHP	134/129/124	139/133/128
		Bias	1/1/1/-/138/126/133	1/1/1/1/143/130/133
	U107	Setting the transfer cleaning voltage	-	
		Belt(A)	202/180/192/-	207/182/192/212
		Belt(B)	150/110/130/-	160/110/130/160
	U108	Setting separation shift bias	-	
		Output	55/55/55/55/0/0	
		Output 3/4	55/55/55/55	
		Output B/W	20/20/20/20	
		Timing	-	
		Subtraction Value	-35	
	U110	Checking the drum count	-	
	U111	Checking the drum drive time	-	
	U117	Checking the drum number	-	
	U118	Displaying the drum history	-	
	U119	Setting the drum	-	

Section	Item No.	Content of maintenance item	Initial setting	
			45ppm	55ppm
High voltage	U122	Checking the transfer belt unit number	-	
	U123	Displaying the transfer belt unit history	-	
	U127	Checking/clearing the transfer count	-	
	U128	Setting transfer high-voltage timing	-5/0/13	-5/0/10
Developer	U130	Initial setting for the developer	-	
	U131	Adjusting the toner sensor control voltage	-	
		Manual	150/150/150/150	
		Mode	Auto	
	U132	Replenishing toner forcibly		
	U135	Checking toner motor operation	-	
	U136	Setting toner near end detection	3/3	
	U139	Displaying the temperature and humidity outside the machine	-	
	U140	Displaying developer bias		
		Sleeve DC	84/84/84/70/-	84/84/84/70/70
		Sleeve AC	155/155/155/155/-	155/155/155/155/155
		Mag DC	155/155/155/155/-	155/155/155/155/155
		Mag AC	160/200/200/200/-	160/200/200/200/160
		Sleeve Freq	5345/ -/ 5345/ 5345	5511/5345/5345/5345
		Sleeve Duty	68/-	68/68
		Mag Duty	43/-	43/43
		AC Calib	15/15/15/12 Mode1	
	U147	Setting for toner applying operation		
		Mode	Mode1	
		Upper Limit	2.0	
		Minimum	10	
		Interval Number	250/100/50	
	U148	Setting drum refresh mode	2/2	
	U155	Checking sensors for toner	-	
	U156	Setting the toner replenishment level		
		Supply	512/512/512/512/-	512/512/512/512/512
		Empty	100/100/100/100/-	100/100/100/100/100

Section	Item No.	Content of maintenance item	Initial setting	
			45ppm	55ppm
Developer	U157	Checking the developer drive time	-	
	U158	Checking the developer count	-	
Fuser	U161	Setting the fuser control temperature		
		Warm Up	165/140/80/170/165/150/50/155	170/145/80/175/175/150/50/160
		Print	170/5	175/5
		Low Power Mode	Mode1	
		Grain Mode	Mode0	
	U167	Checking/clearing the fuser count	-	
	U169	Checking/setting the fuser power source	-	
	U199	Displaying fuser heater temperature	-	
Operation panel and support equip-ment	U207	Checking the operation panel keys	-	
	U208	Setting the paper size for the side deck	Letter (Inch)/A4 (Metric)	
	U221	Setting the USB host lock function	Off	
	U223	Operation panel lock	Unlock	
	U234	Setting punch destination	Inch (Inch)/Europe Metric (Metric)	
	U237	Setting finisher stack quantity	0/0	
	U240	Checking the operation of the finisher	-	
	U241	Checking the operation of the switches of the finisher	-	
	U246	Setting the finisher		
		Finisher	0/0/0/0/0/0/0/0	
		Booklet	0/0/0/0/0/0/0/0/0	
	U247	Setting the paper feed device	-	
Mode setting	U250	Checking/clearing the maintenance cycle	600000/600000/300000	
	U251	Checking/clearing the maintenance counter	0/0/0	
	U252	Setting the destination	-	
	U253	Switching between double and single counts	DBL(A3/Ledger)	
	U260	Selecting the timing for print counting	Eject	
	U265	Setting OEM purchaser code	-	
	U271	Setting the page count	2/3	
	U278	Setting the delivery date	-	
	U285	Setting service status page	On	

Section	Item No.	Content of maintenance item	Initial setting	
			45ppm	55ppm
Mode setting	U323	Setting abnormal temperature and humidity warning	On	
	U325	Setting the paper interval	Off/1	
	U327	Setting the cassette heater control	Off	
	U332	Setting the size conversion factor		
		Rate	1.0	
		Mode	0	
		Level 1	1.0	
		Level 2	2.5	
	U340	Setting the applied mode	190/1	
	U345	Setting the value for maintenance due indication	0	
Image process-ing	U410	Setting a Gamma table.	Table1	
	U460	Adjusting the conveying sensor		
		Conveying Sensor	0/0	
		On/Off Config	Off	
	U464	Setting the ID correction operation		
		Permission	On	
		Time Interval	480	
		Mode	Normal	
		On/Sleep Out	On	
		AP/NE	On	
		Leaving Time	480	
		Driving Time	300	
		Timing	3600	
		Target Value	890/910/910/760/320/320/300/350	
		Print Rate(B/W)	50	
		Calib	-	
		Edge Reduction	Off	
	U465	Data reference for ID correction	-	
	U467	Setting the color registration adjustment	-	
		Color Regist	On	
		Timing	10	
	U468	Checking the color registration data	-	
	U469	Adjusting the color registration	-	
	U474	Checking LSU cleaning operation	1000	
	U485	Setting the color table	-	

Section	Item No.	Content of maintenance item	Initial setting	
			45ppm	55ppm
Image process-ing	U486	Setting color/black and white operation mode	Mode2	
Others	U901	Checking print counts by paper feed locations	-	
	U903	Checking/clearing the paper jam counts	-	
	U904	Checking/clearing the call for service counts	-	
	U905	Checking counts by optional devices	-	
	U906	Resetting partial operation control	-	
	U908	Checking the total counter value	-	
	U910	Clearing the print coverage data	-	
	U911	Checking print counts by paper sizes	-	
	U917	Setting backup data reading/writing	-	
	U920	Checking the print counts	-	
	U927	Clearing the all print counts and machine life counts (one time only)	-	
	U928	Checking machine life counts	-	
	U930	Checking/clearing the charger roller count	-	
	U952	Maintenance mode workflow	-	
	U964	Checking of log	-	
	U969	Checking of toner area code	-	
	U977	Data capture mode	-	
	U984	Checking the developer unit number	-	
	U985	Displaying the developer unit history	-	
	U989	HDD Scan disk	-	

Contents of the maintenance mode items

Item No.	Description
U000	**Outputting an own-status report** **Description** Outputs lists of the current settings of the maintenance items, and paper jam and service call occurrences. Outputs the event log or service status page. Also sends output data to the USB memory. **Purpose** To check the current setting of the maintenance items, or paper jam or service call occurrences. Before initializing or replacing the backup RAM, output a list of the current settings of the maintenance items to reenter the settings after initialization or replacement. **Method** 1. Press the OK key. 2. Select the item to be output using the cursor up/down keys.

Display	Output list
Maintenance	List of the current settings of the maintenance modes
User Status	Outputs the user status page
Service Status	Outputs the service status page
Event	Outputs the event log
Network Status	Outputs the network status page
All	Outputs the all reports

3. Press the OK key. A list is output.
4. Press the OK key. The interrupt print mode is entered and a list is output.
   When A4/Letter paper is available, a report of this size is output. If not, specify the paper feed location.
   The output status is displayed.

Display	Description
Ready	List of the current settings of the maintenance modes
Active	Outputs the user status page
Complete	Outputs the service status page
Error	Outputs the event log

Item No.	Description
U000	**Method: Send to the USB memory** 1. Perform shut-down on the operation panel, turn power off (see page p.1-2-19). 2. Insert USB memory in USB memory slot. 3. Turn the main power switch on. 4. Enter the maintenance item. 5. Press the OK key. 6. Select the item to be send. 7. Select [Text] or [HTML]. **Display** / **Output list** Print — Outputs the report USB (Text) — Sends output data to the USB memory (text type) USB (HTML) — Sends output data to the USB memory (HTML type) 8. Press the OK key. Output will be sent to the USB memory. **Completion** Press the Back key. The screen for selecting a maintenance item No. is displayed.

Item No.	Description
U000	**Event log**

Event Log

Printer

(2) 27/Oct/2010 08:40

(1) Firmware version 2MN_2000.000.000 2010.10.27

(3) [XXXXXXXX] (4) [XXXXXXXX] (5) [XXXXXXXX] (6) [XXXXXXXX]

(8) Paper Jam Log

#	Count.	Event Descriprions
16	9999999	0501.01.08.01.01
15	8888888	4002.01.08.01.01
14	7777777	0501.01.08.01.01
13	6666666	4002.01.08.01.01
12	5555555	0501.01.08.01.01
11	4444444	4002.01.08.01.01
10	3333333	0501.01.08.01.01
9	2222222	4002.01.08.01.01
8	1111111	0501.01.08.01.01
7	999999	4002.01.08.01.01
6	[illegible]	[illegible]
5	[illegible]	[illegible]
4	[illegible]	[illegible]
3	[illegible]	[illegible]
2	444444	[illegible]
1	1	4002.01.08.01.01

0501.01.08.01.01
(a) (b) (c) (d) (e)

(9) Service Call Log

#	Count.	Service Code
8	1111111	01.6000
7	999999	01.2100
6	888888	01.4000
5	777777	01.6000
4	666666	01.2100
3	555555	01.4000
2	444444	01.6000
1	1	01.2100

(10) Maintenance Log

#	Count.	Item.

Log Data Nothing...

(11) Unknown toner Log

#	Count.	Item.
5	1111111	01.00
4	999999	01.00
3	888888	01.00
2	777777	01.00
1	666666	01.00

(12) Counter Log

(f)

J0000:	0	J0041:	1
J0001:	1	J0042:	1
J0002:	11	J0043:	1
J0003:	222	J0044:	1
J0004:	1	J0045:	1
J0005:	1	J0046:	1
J0006:	1	J0047:	1
J0007:	1	J0048:	1
J0008:	1	J0049:	1
J0009:	1	J0050:	1
J0010:	1		
J0012:	999		
J0013:	1		
J0014:	1		
J0015:	1		
J0016:	1		
J0017:	1		
J0018:	1		
J0019:	1		
J0020:	1		
J0021:	1		
J0022:	1		
J0023:	1		
J0024:	1		
J0025:	1		
J0026:	1		
J0027:	1		
J0028:	1		
J0029:	1		
J0030:	1		
J0031:	1		
J0032:	1		
J0033:	1		
J0034:	1		
J0035:	1		
J0036:	1		
J0037:	1		
J0038:	1		
J0039:	1		
J0040:	1		

(g)

C0000:	0
C0001:	1
C0002:	2
C0003:	3
C0004:	4
C0005:	5
C0006:	6
C0007:	7
C0008:	8
C0009:	9
C0010:	10
C0011:	11
C0012:	12
C0013:	13
C0014:	14
C0015:	15
C0016:	16
C0017:	17
C0018:	18
C0019:	19
C0020:	20
C0021:	21
C0022:	22
C0023:	23

(h)

T00:	10
T01:	20
T02:	30
T03:	40
T04:	50
T05:	999

(7) [XXXXXXXXXXXXXXXX]

Figure 1-3-1

Detail of event log

No.	Items	Description
(1)	System version	
(2)	System date	
(3)	Engine soft version	
(4)	Engine boot version	

Item No.	Description
U000	**Detail of event log**

No.	Items	Description		
(5)	Controller BROM version			
(6)	Operation panel mask version			
(7)	Machine serial number			
(8)	Paper Jam Log	#	Count.	Event
		Remembers 1 to 16 of occurrence. If the occurrence of the previous paper jam is less than 16, all of the paper jams are logged. When the occurrence excesseds 16, the oldest occurrence is removed.	The total page count at the time of the paper jam.	Log code (hexadecimal, 5 categories) (a) Cause of a paper jam (b) Paper source (c) Paper size (d) Paper type (e) Paper eject
		(a) Cause of paper jam (Hexadecimal)		
		For details on the case of paper jam, refer to Paper Misfeed Detection. (P.1-4-2)		
		(b) Detail of paper source (Hexadecimal)		
		00: MP tray 01: Cassette 1 02: Cassette 2 03: Cassette 3 (paper feeder/large capacity feeder) 04: Cassette 4 (paper feeder/large capacity feeder) 05: Cassette 5 (side multi tray/side deck) 06: Cassette 6 (side paper feeder/side large capacity feeder) 07: Cassette 7 (side paper feeder/side large capacity feeder) 08 to 09: Reserved		
		(c) Detail of paper size (Hexadecimal)		
		00: (Not specified) 01: Monarch 02: Business 03: International DL 04: International C5 05: Executive 06: Letter-R 86: Letter-E 07: Legal 08: A4R 88: A4E 09: B5R 89: B5E 0A: A3	0B: B4 0C: Ledger 0D: A5R 0E: A6 0F: B6 10: Commercial #9 11: Commercial #6 12: ISO B5 13: Custom size 1E: C4 1F: Postcard 20: Reply-paid post-card 21: Oficio II	22: Special 1 23: Special 2 24: A3 wide 25: Ledger wide 26: Full bleed paper (12 x 8) 27: 8K 28: 16K-R A8: 16K-E 32: Statement-R B2: Statement-E 33: Folio 34: Western type 2 35: Western type 4

Item No.	Description
U000	

No.	Items	Description
(8) cont.	Paper Jam Log	(d) Detail of paper type (Hexadecimal)

01: Plain 02: Transparency 03: Preprinted 04: Labels 05: Bond 06: Recycled 07: Vellum 08: Rough 09: Letterhead	0A: Color 0B: Prepunched 0C: Envelope 0D: Cardstock 0E: Coated 0F: 2nd side 10: Media 16 11: High quality	15: Custom 1 16: Custom 2 17: Custom 3 18: Custom 4 19: Custom 5 1A: Custom 6 1B: Custom 7 1C: Custom 8

(e) Detail of paper eject location (Hexadecimal)

01: Face down (FD)
02: Face up (FU)/1000-sheet finisher face up (FU)/
4000-sheet finisher left sub tray (FU)
03: 1000-sheet finisher face down (FD)
4000-sheet finisher main tray (FD)
05: Job separator tray
06: 4000-sheet finisher right sub tray (FU)
07: 4000-sheet finisher left sub tray (FD)
09: 4000-sheet finisher right sub tray (FD)
0A: Center-folding unit tray
0B: Mailbox tray 1 (FD)
0C: Mailbox tray 1 (FU)
15: Mailbox tray 2 (FD)
16: Mailbox tray 2 (FU)
1F: Mailbox tray 3 (FD)
20: Mailbox tray 3 (FU)
29: Mailbox tray 4 (FD)
2A: Mailbox tray 4 (FU)
33: Mailbox tray 5 (FD)
34: Mailbox tray 5 (FU)
3D: Mailbox tray 6 (FD)
3E: Mailbox tray 6 (FU)
47: Mailbox tray 7 (FD)
48: Mailbox tray 7 (FU)
04/0D/0E: Reserved

Item No.	Description
U000	

No.	Items	Description		
(9)	Service Call Log	#	Count.	Service Code
		Remembers 1 to 8 of occurrence of self diagnostics error. If the occurrence of the previous diagnostics error is less than 8, all of the diagnostics errors are logged.	The total page count at the time of the self diagnostics error.	Self diagnostic error code (See page 1-4-27) Example: 01.6000 01: Self diagnostic error 6000: Self diagnostic error code number
(10)	Maintenance Log	#	Count.	Item
		Remembers 1 to 8 of occurrence of replacement. If the occurrence of the previous replacement of toner container is less than 8, all of the occurrences of replacement are logged.	The total page count at the time of the replacement of the toner container.	Code of maintenance replacing item (1 byte, 2 categories) First byte (Replacing item) 01: Toner container Second byte (Type of replacing item) 00: Black 01: Cyan 02: Magenta 03: Yellow First byte (Replacing item) 02: Maintenance kit Second byte (Type of replacing item) 01: MK-8505A 02: MK-8505B 03: MK-8505C
(11)	Unknown Toner Log	#	Count.	Item
		Remembers 1 to 5 of occurrence of unknown toner detection. If the occurrence of the previous unknown toner detection is less than 5, all of the unknown toner detection are logged.	The total page count at the time of the toner empty error with using an unknown toner container.	Unknown toner log code (1 byte, 2 categories) First byte 01: Toner container (Fixed) Second byte 00: Black 01: Cyan 02: Magenta 03: Yellow

Item No.	Description
U000	

No.	Items	Description		
(12)	Counter Log Comprised of three log counters including paper jams, self diagnostics errors, and replacement of the toner container.	(f) Paper jam	(g) Self diagnostic error	(h) Maintenance item replacing
		Indicates the log counter of paper jams depending on location. Refer to Paper Jam Log. All instances including those are not occurred are displayed.	Indicates the log counter of self diagnostics errors depending on cause. Example: C6000: 4 Self diagnostics error 6000 has happened four times.	Indicates the log counter depending on the maintenance item for maintenance. T: Toner container 00: Black 01: Cyan 02: Magenta 03: Yellow M: Maintenance kit 00: MK-8505A 01: MK-8505B 02: MK-8505C Example: T00: 1 The toner container has been replaced once.

Item No.	Description
U000	**Service status page (1)**

Service Status Page

Printer

(2) 27/10/2011 12:00

(1) Firmware version 2MN_2000.001.001 2011.10.27

(3)	**(4)**	**(5)**
[XXXXXXXX]	[XXXXXXXX]	[XXXXXXXX]

Controller Information

Memory status

(7)	Standard Size	1.0 GB
(8)	Option Slot	1.0 GB
(9)	Total Size	2.0 GB

Time

(10)	Local Time Zone	+01:00 Amsterdam
(11)	Date and Time	27/10/2010 12:00
(12)	Time Server	10.183.53.13

Installed Options

(13)	Paper feeder	Cassette (500 x 2)
(14)	Side Feeder	Cassette (3000)
(15)	Finisher	1000-Finisher
(16)	IC Card Authentication Kit (B)	Installed
(17)	Security Kit (E)	Installed
	Data Security Kit (E)	
(18)	UG-33	Installed
(19)	UG-34	Installed
(20)	USB Keyboard	Connected
(21)	USB Keyboard Type	US-English

Print Coverage

(22)	Average(%)	/ Usage Page(A4/Letter Conversion)
(23)	K: 1.10	/ 1111111.11
	C: 2.20	/ 2222222.22
	M: 3.30	/ 3333333.33
	Y: 4.40	/ 4444444.44

(24) Last Page K/C/M/Y(%) 1.00 / 2.22 / 3.33 / 4.44

(25) FRPO Status

Default Pattern Switch	B8	0
Default Font Number	C5*1000+C2*100+C3	00000

e-MPS error control	Y6	0

RP Code

(26) 1234 5678 9012
(27) 5678 9012 3456
(28) 9012 3456 7890
(29) 3456 7890 1234

1

(6) [XXXXXXXXXX]

Figure 1-3-2

Item No.	Description
U000	**Service status page (2)**

Service Status Page

Printer 27/10/2011 12:00

Firmware version 2MN_2000.001.001 2011.10.27 [XXXXXXXX] [XXXXXXXX] [XXXXXXXX]

Engine Information

(30) NVRAM Version _1F31225_1F31225
(31) MAC Address 00:C0:EE:D0:01:0D

Send Information

(32) Date and Time 11/10/27
(33) Address

1/2 **(34) (35)**
(36) 100/100
(37) 0/0/0/0/0/0/0/0
(38) 0000000/0000000/0000000/0000000/0000000/0000000/0000000/0000000/0000000/0000000/
0000000/0000000/0000000/0000000/0000000/0000000/0000000/0000000/0000000/0000000/0000000/0000000/
F00/U00/0/0/0/0/30/30/70/70/abcde/1/0/1/ **(39) (40) (41) (42) (43) (44) (45) (46) (47) (48) (49) (50) (51) (52)**
(53) 0000/0000/0000/0000/0000/0000/0000/0000/0000/0000/0000/0000/0000/0000/
0000/0000/0000/0000/0000/0000/0000/0000/0000/0000/
(54) 0000/0100/0500/1000/0000/0100/0500/1000/0000/0100/0500/1000/0000/0100/0500/1000/
0000/0100/0500/1000/0000/0100/0500/1000/0000/0100/0500/1000/0000/0100/0500/1000/
0000000000000000000000000000000/0000000000000000000000000000000000000000000/000000/ **(55) (56) (57)**
(58) 0000000000000000/0000000000000000/0000000000000000/0000000000000000/0000000000000000/0000000000000000/0000000000000/
0000000000000000/0000000000000000/0000000000000000/0000000000000000/0000000000000000/0000000000000000/0000000000000/
0000000000000000/0000000000000000/0000000000000000/0000000000000000/0000000000000000/0000000000000000/0000000000000/
0000000000000000/0000000000000000/0000000000000000/0000000000000000/0000000000000000/0000000000000000/0000000000000/
(59) 0000000000000000/0000000000000000/0000000000000000/0000000000000000/0000000000000000/0000000000000000/0000000000000/
0000000000000000/0000000000000000/0000000000000000/0000000000000000/0000000000000000/0000000000000000/0000000000000/
0000000000000000/0000000000000000/0000000000000000/0000000000000000/0000000000000000/0000000000000000/0000000000000/
0000000000000000/0000000000000000/0000000000000000/0000000000000000/0000000000000000/0000000000000000/0000000000000/
(60) 0000000000000000/0000000000000000/0000000000000000/0000000000000000/0000000000000000/0000000000000000/0000000000000/
0000000000000000/0000000000000000/0000000000000000/0000000000000000/0000000000000000/0000000000000000/0000000000000/
(61) 0000000000000000/0000000000000000/0000000000000000/0000000000000000/0000000000000000/0000000000000000/0000000000000/
0000000000000000/0000000000000000/0000000000000000/0000000000000000/0000000000000000/0000000000000000/0000000000000/
0000000000000000/0000000000000000/0000000000000000/0000000000000000/0000000000000000/0000000000000000/0000000000000/
0000000000000000/0000000000000000/0000000000000000/0000000000000000/0000000000000000/0000000000000000/0000000000000/
(62) 0000000000000000/0000000000000000/0000000000000000/0000000000000000/0000000000000000/0000000000000000/0000000000000/
0000000000000000/0000000000000000/0000000000000000/0000000000000000/0000000000000000/0000000000000000/0000000000000/
0000000000000000/0000000000000000/0000000000000000/0000000000000000/0000000000000000/0000000000000000/0000000000000/
0000000000000000/0000000000000000/0000000000000000/0000000000000000/0000000000000000/0000000000000000/0000000000000/
(63) 0000000000000000/0000000000000000/0000000000000000/0000000000000000/0000000000000000/0000000000000000/0000000000000/
(64) 12345678/11223344/00001234abcd567800001234abcd5678/0123456789012345678901234567890 1/0008/00/07
12345678/11223344/00001234abcd567800001234abcd5678/0123456789012345678901234567890 1/0008/00/07
12345678/11223344/00001234abcd567800001234abcd5678/0123456789012345678901234567890 1/0008/00/07
12345678/11223344/00001234abcd567800001234abcd5678/0123456789012345678901234567890 1/0008/00/07
(65) XXXXXXXX
[2MN_81BR.001.010][ABCDEFGHIJ][ABCDEFGHIJ] **(66) (67) (68)**

(69) 00070107FE/0700FE00FE/00FE000100/0000000000/0000000000/0000000000/00000A010A/0A0A0A3200/0000000000/0000000000/
0008000000/080000001D/0096009B00/9B009BFFFB/0082000000/000000001F/0000002C00/0000000000/0000000000/0000000000/
0000000000/0000000000/0000000000/0000000000/00
0/3/ **(70) (71)**
0/12.3/56.7/ **(72) (73) (74)**
0/0 2010/12/15 12:34:56 **(75)**
1/5/ **(76)(77)**
1/1/ **(78)(79)**
ABCDEFGHIJKL/ABCDEFGHIJKL/ABCDEFGHIJKL/ABCDEFGHIJKL/ **(80)**

2 [XXXXXXXXXX]

Figure 1-3-3

Item No.	Description
U000	**Detail of service status page**

No.	Description	Supplement
(1)	Firmware version	-
(2)	System date	-
(3)	Engine soft version	-
(4)	Engine boot version	-
(5)	Operation panel mask version	-
(6)	Machine serial number	-
(7)	Standard memory size	-
(8)	Option memory size	
(9)	Total memory size	
(10)	Local time zone	-
(11)	Report output date	Day/Month/Year hour:minute
(12)	NTP server name	-
(13)	Presence or absence of the paper feeder	Paper feeder/Large capacity feeder/Not Installed
(14)	Presence or absence of the side feeder	Side deck/Side multi tray/Side paper feeder/ Side large capacity feeder/Not Installed
(15)	Presence or absence of the finisher	1000-sheet finisher/4000-sheet finisher/ Not Installed
(16)	Presence or absence of the IC card authentication kit	Installed/Not Installed/Trial
(17)	Presence or absence of the data security kit	Installed/Not Installed
(18)	Presence or absence of the UG-33	Installed/Not Installed
(19)	Presence or absence of the UG-34	Installed/Not Installed
(20)	Presence or absence of the USB keyboard	Connected/Not connected
(21)	USB keyboard setting display	US-English/US-English with Euro/German/French
(22)	Page of relation to the A4/Letter	* :Print Coverage provides a close-matching reference of toner consumption and will not match with the actual toner consumption.
(23)	Average coverage for total	Black/Cyan/Magenta/Yellow
(24)	Coverage on the final output page	-
(25)	FRPO setting	-
(26)	RP code	Code the engine software version and the date of update.

Item No.	Description
U000	

No.	Description	Supplement
(27)	RP code	Code the main software version and the date of update.
(28)	RP code	Code the engine software version and the date of the previous update.
(29)	RP code	Code the main software version and the date of the previous update.
(30)	NV RAM version	_ 1F3 1225 _ 1F3 1225 (a) (b) (c) (d) (e) (f) (a) Consistency of the present software version and the database _ (underscore): OK * (Asterisk): NG (b) Database version (c) The oldest time stamp of database version (d) Consistency of the present software version and the ME firmware version _ (underscore): OK * (Asterisk): NG (e) ME firmware version (f) The oldest time stamp of the ME database version Normal if (a) and (d) are underscored, and (b) and (e) are identical with (c) and (f).
(31)	Mac address	-
(32)	The last sent date and time	-
(33)	Transmission address	-
(34)	Destination information	-
(35)	Area information	-
(36)	Margin settings	Top margin/Left margin
(37)	Margin/Page length/Page width settings	Top margin integer part/Top margin decimal part/ Left margin integer part/Left margin decimal part/ Page length integer part/Page length decimal part/ Page width integer part/Page width decimal part
(38)	Life counter (The first line)	Machine life/MP tray/Cassette 1/Cassette 2/ Cassette 3/Cassette 4/Cassette 5/Cassette 6/ Cassette 7/Duplex
	Life counter (The second line)	Drum unit K/Drum unit C/Drum unit M/Drum unit Y/ Transfer belt unit/Developer unit K/ Developer unit C/Developer unit M/ Developer unit Y/Maintenance kit A/ Maintenance kit B/Maintenance kit C

Item No.	Description
U000	

No.	Description	Supplement
(39)	Panel lock information	F00: Off/F01: Partial lock 1/F02:Partial lock 2 F03: Partial lock 3/F04: Full lock
(40)	USB information	U00: Not installed/U01: Full speed/U02: Hi speed
(41)	Paper handling information	0: Paper source unit select/1: Paper source unit
(42)	Color printing double count mode	0: All single counts 1: A3, Single count, Less than 420 mm (length) 2: Legal, Single count, 356 mm or less (length) 3: Folio, Single count, Less than 330 mm (length)
(43)	Black and white printing double count mode	0: All single counts 1: A3, Single count, Less than 420 mm (length) 2: Legal, Single count, 356 mm or less (length) 3: Folio, Single count, Less than 330 mm (length)
(44)	Billing counting timing	-
(45)	Temperature (machine inside)	-
(46)	Temperature (machine outside)	-
(47)	Relative humidity (machine outside)	-
(48)	Humidity (machine inside)	-
(49)	Fixed assets number	-
(50)	Job end judgment time-out time	-
(51)	Job end detection mode	-
(52)	Prescribe environment reset	0: Off 1: On
(53)	Media type attributes 1 to 28 (Not used: 18, 19, 20) * : For details on settings, refer to MDAT Command in “Prescribe Commands Reference Manual.	Weight settings 0: Light 1: Normal 1 2: Normal 2 3: Normal 3 4: Heavy 1 5: Heavy 2 6: Heavy 3 6: Heavy 4 6: Heavy 5 7: Extra Heavy Fuser settings 0: High 1: Middle 2: Low 3: Vellum Duplex settings 0: Disable 1: Enable
(54)	Calibration information	Black/Cyan/Magenta/Yellow
(55)	Calibration information	-
(56)	Calibration information	-
(57)	Calibration information	-
(58)	Calibration information	-
(59)	Calibration information	-

Item No.	Description
U000	

No.	Description	Supplement
(60)	Calibration information	Black/Cyan/Magenta/Yellow
(61)	Calibration information	-
(62)	Calibration information	-
(63)	Calibration information	-
(64)	RFID information	-
(65)	RFID reader/writer version information	-
(66)	Option messege version	-
(67)	Color table version for printer	-
(68)	Color table 2 version for printer	-
(69)	Maintenance information	-
(70)	Altitude	0: Standard 1: High altitude 1 2: High altitude 2
(71)	Charger roller correction	1 to 5
(72)	Configuring toner coverage counters	0: Full-color count display 1: Color coverage count display
(73)	Low coverage setting	0.1 to 100.0
(74)	Middle coverage setting	0.1 to 100.0
(75)	Data Sanitization information	-
(76)	Toner low setting	0: Enabled 1: Disabled
(77)	Toner low detection level	0 to 100 (%)
(78)	Limiting shifting for one-page document	0: Disabled 1: Enabled
(79)	Setting confirmation display for banner printing	
(80)	Drum serial number	Black/Cyan/Magenta/Yellow

Code conversion

A	B	C	D	E	F	G	H	I	J
0	1	2	3	4	5	6	7	8	9

Item No.	Description
U001	**Exiting the maintenance mode** **Description** Exits the maintenance mode and returns to the normal print mode. **Purpose** To exit the maintenance mode. **Method** 1. Press the OK key. The normal print mode is entered.
U002	**Setting the factory default data** **Description** Restores the machine conditions to the factory default settings. **Purpose** **Method** 1. Press the OK key. 2. Select [Mode1(All)]. 3. Press the OK key. 4. Exit the maintenance mode, perform shut-down, and turn the main power switch to off and on again. Allow more than 5 seconds between Off and On. * : An error code is displayed in case of an initialization error. When errors occurred, turn main power switch off then on, and execute initialization using maintenance item U002. **Error codes** Codes: 0001 — Entity error 0002 — Counter error 0003 — OS error 0020 — Engine error

Item No.	Description
U004	**Setting the machine number** **Description** Sets or displays the machine number. **Purpose** To check or set the machine number. **Method** 1. Press the OK key. If the machine serial number of engine PWB matches with that of main PWB Display: Machine No. Description: Displays the machine serial number If the machine serial number of engine PWB does not match with that of main PWB Display: Machine No.(Main) Description: Displays the machine serial number of main Display: Machine No.(Eng) Description: Displays the machine serial number of engine **Setting** Carry out if the machine serial number does not match. 1. Select [Execute]. 2. Press the OK key. Writing of serial No. starts. 3. Exit the maintenance mode, perform shut-down, and turn the main power switch to off and on again. Allow more than 5 seconds between Off and On. **Completion** Press the Back key. The screen for selecting a maintenance item No. is displayed.

Item No.	Description
U010	**Setting the maintenance mode ID** **Description** Sets the maintenance mode ID. **Purpose** Modify maintenance mode ID for more security. **Method** 1. Press the OK key. **Setting** 1. Select [New ID]. 2. Enter a new 8-digit ID on ten keys (0 – 9, *, #). * and # are mandatory to contain. 3. Select [New ID(Reconfirm)]. 4. Enter a new 8-digit ID on ten keys (0 – 9, *, #). 5. Press the OK key. The setting is set. **Method: [Initialize]** 1. Select [Initialize]. 2. Press the OK key. ID is initialized. **Completion** Press the Back key. The screen for selecting a maintenance item No. is displayed.

Display	Description
New ID	Enter a new 8-digit ID
New ID(Reconfirm)	Enter a new 8-digit ID (to confirm)
Initialize	Initialize the ID

Item No.	Description
U019	**Displaying the ROM version** **Description** Displays the part number of the ROM fitted to each PWB. **Purpose** To check the part number or to decide, if the newest version of ROM is installed. **Method** 1. Press the OK key. The ROM version are displayed. 2. Change the screen using the cursor up/down keys.

Display	Description
Main	Main ROM
MMI	Operation ROM
Engine	Engine ROM
Engine Boot	Engine booting
RFID	RFID ROM
IH CPU	IH CPU ROM
IH CPU Boot	IH CPU booting
Motor CPU	Motor CPU ROM
Motor CPU Boot	Motor CPU booting
PDF Resource	PDF resource ROM
Option Language	Optional language ROM
Color Table1(Prn)	Color table 1 (printer) ROM
Color Table2(Prn)	Color table 2 (printer) ROM
PF1	Paper feeder / Large capacity feeder ROM
PF1 Boot	Paper feeder / Large capacity feeder booting
Side PF	Side multi tray /Side deck ROM
Side PF Boot	Side multi tray /Side deck booting
SMT SSW	Side multi tray multi feed sensor
PF2	Side paper feeder / Side large capacity feeder ROM
PF2 Boot	Side paper feeder / Side large capacity feeder booting
DF	1000-sheet finisher / 4000-sheet finisher ROM
DF Boot	1000-sheet finisher / 4000-sheet finisher booting
PH	Punch ROM
PH Boot	Punch booting
MT	Mail box ROM
MT Boot	Mail box booting
BF	Center-folding unit ROM
BF Boot	Center-folding unit booting

Item No.	Description
U019	**Completion** Press the Back key. The screen for selecting a maintenance item No. is displayed.
U021	**Memory initializing** **Description** Initializes all settings, except those pertinent to the type of machine, namely each counter, service call history and mode setting. Also initializes backup RAM according to region specification selected in maintenance item U252 Setting the destination. **Purpose** Restores the machine parameters to factory default settings. **Method** 1. Press the OK key. 2. Select [Execute]. 3. Press the OK key. All data other than that for adjustments due to variations between machines is initialized based on the destination setting. 4. Exit the maintenance mode, perform shut-down, and turn the main power switch to off and on again. Allow more than 5 seconds between Off and On. * : An error code is displayed in case of an initialization error. When errors occurred, turn main power switch off then on, and execute initialization using maintenance item U021. **Error codes** 0001 Entity error 0002 Counter error 0020 Engine error

Item No.	Description
U024	**HDD formatting** **Description** Initializes the hard disk. **Purpose** To initialize the hard disk when replacing the hard disk after shipping. **Caution** In addition, the following settings are also initialized by initializing the hard disk. System menu (user login administration, job accounting and document box etc.) When fully formatted, the following pre-installed software are removed. Option language, PDF1.7 resource **Method** 1. Press the OK key. 2. Select the item. **Display** / **Description** Full — Full format Data — Data format (the application software are retained) 3. Press [Execute]. 4. Press the OK key to initialize the hard disk. 5. Exit the maintenance mode, perform shut-down, and turn the main power switch to off and on again. Allow more than 5 seconds between Off and On.

Item No.	Description
U030	**Checking the operation of the motors** **Description** Drives each motor. **Purpose** To check the operation of each motor. **Method** 1. Press the OK key. 2. Select the motor to be operated. 3. Press the OK key. The operation starts.

Display	Description
Feed	Paper feed motor (PFM) is turned on
DLP(K)	Developer motor K (DEVM-K) is turned on
DLP(CMY)	Developer motor MCY (DEVM-MCY) is turned on
Fuser	Fuser motor (FUM) is turned on
SB(CW)	Eject motor (EM) is turned on clockwise
SB(CCW)	Eject motor (EM) is turned on counterclockwise
CMY Release	Color release motor (CRM) is turned on
JobSepa	JS eject motor (JSEM) is turned on
Regist	Registration motor (RM) is turned on
Bridge1	BR conveying motor 1 (BRCM1) is turned on
Bridge2	BR conveying motor 2 (BRCM2) is turned on
Belt Meand	Transfer motor (TRM) is turned on
Press Release	Transfer release motor (TRRM) is turned on
Fuser Release	Fuser release motor (FURM) is turned on
DU1	Duplex motor 1 (DUM1) is turned on
DU2	Duplex motor 2 (DUM2) is turned on
Mid Roller	Middle motor (RM) is turned on
InnerJobSepa(CW)	JS conveying motor (JSCM) is turned on clockwise
InnerJobSepa(CCW)	JS conveying motor (JSCM) is turned on counterclockwise

4. To stop operation, press the Back key.

Completion
Press the Back key. The screen for selecting a maintenance item No. is displayed.

Item No.	Description
U031	**Checking switches and sensors for paper conveying**

Description
Displays the on-off status of each paper detection switch or sensor on the paper path.
Purpose
To check if the switches and sensors for paper conveying operate correctly.

Method
1. Press the OK key.
2. Turn each switch or sensor on and off manually to check the status.
   When a switch/sensor is detected to be in the ON position, the display for that switch/sensor will be “1”.

Display		Description
Switch 1	0 0 0 0 0 0 0	
	1	First digit: MP feed sensor (MPFS)
	1	Second digit: Feed sensor 1 (FS1)
	1	Third digit: Feed sensor 2 (FS2)
	1	Fourth digit: Paper conveying sensor (PCS)
	1	Fifth: Registration sensor (RS)
	1	Sixth: Loop sensor (LPS)
	1	Seventh: Switchback sensor (SBS)
Switch 2	0 0 0 0 0 0 0	
	1	First digit: Duplex sensor 1 (DUS1)
	1	Second digit: Duplex sensor 2 (DUS2)
	1	Third digit: BR conveying sensor 1 (BRCS1)
	1	Fourth digit: BR conveying sensor 2 (BRCS2)
	1	Fifth: BR eject sensor (BRES)
	1	Sixth: Eject full sensor (EFS)
	1	Seventh: Fuser eject sensor (FUES)
Switch 3	0 0 0 0 0 0 0	
	1	First digit: Middle sensor (MS)
	1	Second digit: JS eject sensor (JSES)
		-
	1	Fourth digit: Tray full sensor(JSTFS)
	1	Fifth digit: Eject sensor (ES)

Completion
Press the Back key. The screen for selecting a maintenance item No. is displayed.

Item No.	Description
U032	**Checking the operation of the clutches** **Description** Turns each clutch on. **Purpose** To check the operation of each clutch. **Method** 1. Press the OK key. 2. Select [Motor On] or [Motor Off].

Display	Description
Motor On	Motor is turned on
Motor Off	Motor is turned off

3. Press the OK key.
4. Select the clutch to be operated.
5. Press the OK key. The operation starts.

Display	Description
Feed1	Paper feed clutch 1 (PFCL1) is turned on
Feed2	Paper feed clutch 2 (PFCL2) is turned on
MPT Feed	MP paper feed clutch (MPPFCL) is turned on
Feed	Paper conveying clutch (PCCL) is turned on
Assist1	Assist clutch 1 (ASCL1) is turned on
Assist2	Assist clutch 2 (ASCL2) is turned on

6. To stop operation, press the Back key.

Completion
Press the Back key. The screen for selecting a maintenance item No. is displayed.

Item No.	Description
U033	**Checking the operation of the solenoids** **Description** Turns each solenoid on. **Purpose** To check the operation of each solenoid. **Method** 1. Press the OK key. 2. Select [Motor On] or [Motor Off].

Display	Description
Motor On	Motor is turned on
Motor Off	Motor is turned off

1. Press the OK key.
2. Select the solenoid to be operated.z
3. Press the OK key. The operation starts.

Display	Description
Branch Left	Feedshift solenoid (FSSOL) is turned on
Branch Exit	Feedshift solenoid is turned on
JobSepa	JS feedshift solenoid (JSFSSOL) is turned on
ID Clean	Cleaning solenoid (CLSOL) is turned on
Bridge Solenoid	Bridge solenoid is turned on
Mail box	Mail box solenoid is turned on

4. To stop operation, press the Back key.

Completion
Press the Back key. The screen for selecting a maintenance item No. is displayed.

Item No.	Description
U034	**Adjusting the print start timing** **Description** Adjusts the leading edge registration or aligns the center line. **Purpose** Make the adjustment if there is a regular error between the leading edges of the print image. Make the adjustment if there is a regular error between the center lines of the print image. **Method** 1. Press the OK key. 2. Select the item to be adjusted. **Display** / **Description** LSU Out Top — Leading edge registration adjustment LSU Out Left — Center line adjustment LSU Out Top B/W* — Leading edge registration adjustment in black/white mode LSU Out Top 3/4 — Leading edge registration adjustment at 3/4 times of line speed *: 55 ppm model only.

Item No.	Description
U034	**Adjustment: Leading edge registration adjustment**

1. Press the menu key.
2. Press the OK key to output a test pattern.
3. Select the item to be adjusted.

[LSU Out Top]

Display	Description	Setting range	Initial setting	Change in value per step
MPT(L)	Paper feed from MP tray	-3.0 to 3.0	0	0.1 mm
MPT Half(L)	Paper feed from MP tray	-3.0 to 3.0	0	0.1 mm
Cass(L)	Paper feed from cassette	-3.0 to 3.0	0	0.1 mm
Cass Half(L)	Paper feed from cassette	-3.0 to 3.0	0	0.1 mm
Dup(L)	Duplex mode (second)	-3.0 to 3.0	0	0.1 mm
Dup Half(L)	Duplex mode (second)	-3.0 to 3.0	0	0.1 mm
MPT(S)	Paper feed from MP tray	-3.0 to 3.0	0	0.1 mm
MPT Half(S)	Paper feed from MP tray	-3.0 to 3.0	0	0.1 mm
Cass(S)	Paper feed from cassette	-3.0 to 3.0	0	0.1 mm
Cass Half(S)	Paper feed from cassette	-3.0 to 3.0	0	0.1 mm
Dup(S)	Duplex mode (second)	-3.0 to 3.0	0	0.1 mm
Dup Half(S)	Duplex mode (second)	-3.0 to 3.0	0	0.1 mm

(L): When large size paper is used (218 mm or more in width of paper).
(S): When small size paper is used.

[LSU Out Top B/W] [LSU Out Top 3/4]

Display	Description	Setting range	Initial setting	Change in value per step
MPT(L)	Paper feed from MP tray	-3.0 to 3.0	0	0.1 mm
Cass(L)	Paper feed from cassette	-3.0 to 3.0	0	0.1 mm
Dup(L)	Duplex mode (second)	-3.0 to 3.0	0	0.1 mm
MPT(S)	Paper feed from MP tray	-3.0 to 3.0	0	0.1 mm
Cass(S)	Paper feed from cassette	-3.0 to 3.0	0	0.1 mm
Dup(S)	Duplex mode (second)	-3.0 to 3.0	0	0.1 mm

(L): When large size paper is used (218 mm or more in width of paper).
(S): When small size paper is used.

Item No.	Description
U034	4. Change the setting value using the numeric keys. * : Use the cursor keys to change the decimal digits. For output example 1, increase the value. For output example 2, decrease the value. 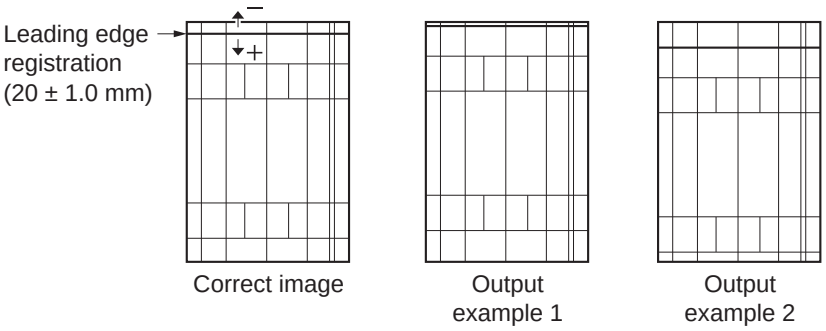 **Figure 1-3-4** 5. Press the OK key. The value is set. **Remark** When changing the setting value of [Large] each item is modified, equal to amount of the value which is changed adds also the value of [Small] each item and is pulled. **Adjustment: Center line adjustment** 1. Press the menu key. 2. Press the OK key to output a test pattern. 3. Press the menu key. 4. Select the item to be adjusted. [LSU Out Left]

Display	Description	Setting range	Initial setting	Change in value per step
MPT	Paper feed from MP tray	-3.0 to 3.0	0	0.1 mm
Cass1	Paper feed from cassette 1	-3.0 to 3.0	0	0.1 mm
Cass2	Paper feed from cassette 2	-3.0 to 3.0	0	0.1 mm
Cass3	Paper feed from optional cassette 3	-3.0 to 3.0	0	0.1 mm
Cass4	Paper feed from optional cassette 4	-3.0 to 3.0	0	0.1 mm
Cass5	Paper feed from optional cassette 5	-3.0 to 3.0	0	0.1 mm
Cass6	Paper feed from optional cassette 6	-3.0 to 3.0	0	0.1 mm
Cass7	Paper feed from optional cassette 7	-3.0 to 3.0	0	0.1 mm
Dup	Duplex mode (second)	-3.0 to 3.0	0	0.1 mm

Item No.	Description
U034	5. Change the setting value using the numeric keys. For output example 1, increase the value. For output example 2, decrease the value. 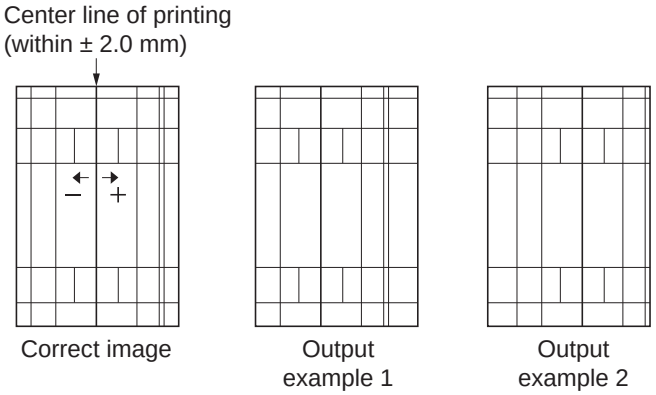 **Figure 1-3-5** 6. Press the OK key. The value is set. **Completion** Press the Back key. The screen for selecting a maintenance item No. is displayed.

Item No.	Description
U037	**Checking the operation of the fan motors**

Description
Drives each fan motor.
Purpose
To check the operation of each fan motor.

Method
1. Press the OK key.
2. Select the fan motor to be operated.
3. Press the OK key. The operation starts.

Display	Description	Group
Fuser Cooling	Fuser rear fan motor (FURFM) is turned on	B
DLP Rear	Exhaust motor 1and 2 (EXFM1, 2) is turned on	A
LSU Cooling	LSU fan motor (LSUFM) is turned on	B
Belt Cooling	Belt fan motor 1and 2 (BLFM1, 2) is turned on	A
Exit Cooling	Eject front fan motor (EFFM) is turned on	B
Toner	Toner fan motor 1and 2 (TFM1, 2) is turned on	A
Low Volt	Power source fan motor (PSFM) is turned on	A
Exit Rear Cooling	Eject rear fan motor (EFRM) is turned on	B
IH PWB	IH fan motor (IHFM) is turned on	A
IH Coil	Fuser front fan motor (FUFFM) is turned on	A
DLP Front	Developer fan motor 1and 2 (DEVFM1, 2) is turned on	A
Conv Edge	Fuser fan motor 1and 2 (FUFM1, 2) is turned on	A
Fuser Edge	Fuser edge fan motor 1and 2 (FUEFM1, 2) is turned on	-
GroupA	Fan motors of group A are turned on	
GroupB	Fan motors of group B are turned on	

4. To stop operation, press the Back key.

Completion
Press the Back key. The screen for selecting a maintenance item No. is displayed.

Item No.	Description
U051	**Adjusting the deflection in the paper**

Description
Adjusts the deflection in the paper at the registration roller.
Purpose
Make the adjustment if the leading edge of the print image is missing or varies randomly, or if the print paper is Z-folded.

Method
1. Press the OK key.
2. Select the item to be adjusted.

Display	Description
Loop Amount	Deflection adjustment
Loop Amount B/W*	Deflection adjustment in black and white mode
Loop Amount 3/4	Deflection adjustment at 3/4 times of line speed

*: 55 ppm model only.

Adjustment
1. Select the item to be adjusted.
[Paper Loop Amount]

Display	Description	Setting range	Initial setting	
			45ppm	55ppm
MPT(L)	Paper feed from MP tray	-30 to 20	-5	-7
MPT H(L)	Paper feed from MP tray	-30 to 20	0	-1
Cass(L)	Paper feed from cassette	-30 to 20	-5	-7
Cass H(L)	Paper feed from cassette	-30 to 20	0	-1
Dup(L)	Duplex mode (second)	-30 to 20	-5	-7
Dup H(L)	Duplex mode (second)	-30 to 20	0	-1
MPT(S)	Paper feed from MP tray	-30 to 20	-5	-7
MPT H(S)	Paper feed from MP tray	-30 to 20	0	-1
Cass(S)	Paper feed from cassette	-30 to 20	-6	-8
Cass H(S)	Paper feed from cassette	-30 to 20	-1	-2
Dup(S)	Duplex mode (second)	-30 to 20	-5	-7
Dup H(S)	Duplex mode (second)	-30 to 20	0	-1

Change in value per step: 1.0 mm
(L): When large size paper is used (218 mm or more in width of paper).
(S): When small size paper is used.

Item No.	Description
U051	

[LSU Out Top B/W]

Display	Description	Setting range	Initial setting	
			45ppm	55ppm
MPT(L)	Paper feed from MP tray	-30 to 20	-	-8
Cass(L)	Paper feed from cassette	-30 to 20	-	-8
Dup(L)	Duplex mode (second)	-30 to 20	-	-8
MPT(S)	Paper feed from MP tray	-30 to 20	-	-8
Cass(S)	Paper feed from cassette	-30 to 20	-	-8
Dup(S)	Duplex mode (second)	-30 to 20	-	-8

Change in value per step: 1.0 mm
(L): When large size paper is used (218 mm or more in width of paper).
(S): When small size paper is used.

[LSU Out Top 3/4]

Display	Description	Setting range	Initial setting	
			45ppm	55ppm
MPT(L)	Paper feed from MP tray	-30 to 20	-2	-2
Cass(L)	Paper feed from cassette	-30 to 20	-2	-2
Dup(L)	Duplex mode (second)	-30 to 20	-2	-2
MPT(S)	Paper feed from MP tray	-30 to 20	-2	-2
Cass(S)	Paper feed from cassette	-30 to 20	-3	-3
Dup(S)	Duplex mode (second)	-30 to 20	-2	-2

Change in value per step: 1.0 mm
(L): When large size paper is used (218 mm or more in width of paper).
(S): When small size paper is used.

2. Change the setting value using the numeric keys.
For output example 1, increase the value. For output example 2, decrease the value.
The greater the value, the larger the deflection; the smaller the value, the smaller the deflection.

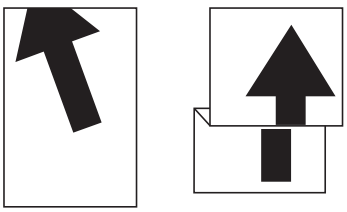

Print example 1 Print example 2

Figure 1-3-6

3. Press the OK key. The value is set.

Completion

Press the Back key. The indication for selecting a maintenance item No. appears.

Item No.	Description
U052	**Setting the fuser motor control**

Description
Enters the sensor data values described on the supplied sheet provided when the loop sensor is replaced and performs correction processing for the fuser motor.
Purpose
To perform when replacing the loop sensor or paper conveying unit.

Method
1. Press the OK key.
2. Select the item.

Display	Description
Set Loop S	Enter the data value for loop sensor
Adj Loop S	Perform the adjustment of the loop sensor sensitivity
Loop S Control	Set the loop sensor detection control
Set Loop S Valid	Sets the presence or absence of the loop sensor

Method: [Set Loop Sensor]
1. Select [Scanning Board1].
2. Enter the sensor data value of supplied sheet DATA1 using the numeric keys.
3. Select [Scanning Board2].
4. Enter the sensor data value of supplied sheet DATA2 using the numeric keys.
5. Press the OK key. The value is set.

How to read the sensor data value

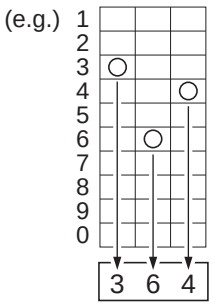

Setting: [Loop Sensor Control]
1. Select the item.
2. Change the setting value using the numeric keys.

Display	Description
ScanBoard1	Scanning Board1 adjustment
ScanBoard2	Scanning Board2 adjustment

3. Press the OK key. The setting is set.

Item No.	Description
	Setting: [Loop Sensor Control] 1. Select the item. 2. Select On or Off.

Display	Description	Initial setting
No.1	Sensor detection On/Off setting at 125 to 250 mm from the top of paper	On
No.2	Sensor detection On/Off setting at 250 to 290 mm from the top of paper	On
No.3	Sensor detection On/Off setting at 300 to 330 mm from the top of paper	On
No.4	Sensor detection On/Off setting at 350 to 370 mm from the top of paper	On

3. Press the OK key. The setting is set.

Setting: [Set Loop Sensor Valid]

1. Select On or Off.
   Initial setting: On
2. Press the OK key. The setting is set.

Completion

Press the Back key. The indication for selecting a maintenance item No. appears.

Item No.	Description
U053	**Setting the adjustment of the motor speed**

Description
Performs fine adjustment of the speeds of the motors.
Purpose
Basically, the setting need not be changed. Modify settings by interlock setting only if faulty images occur.

Method
1. Press the OK key.
2. Select the item to be adjusted
3. Press the OK key.

Display	Description
Motor1	Adjustment of drum motor K speeds
Motor2	Adjustment of developer motor K, developer motor MCY, transfer motor, registration motor and transfer cleaning motor speeds
Motor3	Adjustment of eject motor, fuser motor, BR conveying motor 1/2, paper feed motor, JS eject motor, middle motor and duplex motor 1/2 speeds
Motor4	Drum motor K speed adjustment in black/white mode
Motor5*	Adjustment of developer motor K, transfer motor, registration motor and transfer cleaning motor speeds in black/white mode
Motor6*	Adjustment of eject motor, fuser motor, BR conveying motor 1/2, paper feed motor, JS eject motor, middle motor and duplex motor 1/2 speeds in black/white mode
Motor1 Half	Adjustment of drum motor K speeds in half speed
Motor2 Half	Adjustment of developer motor K, developer motor MCY, transfer motor, registration motor and transfer cleaning motor speeds in half speed
Motor3 Half	Adjustment of eject motor, fuser motor, BR conveying motor 1/2, paper feed motor, JS eject motor, middle motor and duplex motor 1/2 speeds in half speed
Motor1 3/4	Adjustment of drum motor K speeds at 3/4 times of line speed
Motor2 3/4	Adjustment of developer motor K, developer motor MCY, transfer motor, registration motor and transfer cleaning motor speeds at 3/4 times of line speed
Motor3 3/4	Adjustment of eject motor, fuser motor, BR conveying motor 1/2, paper feed motor, JS eject motor, middle motor and duplex motor 1/2 speeds at 3/4 times of line speed

*: 55 ppm model only.

Setting: [Motor1]
1. Select the item to be adjusted.

Display	Description	Setting range	Initial setting	
			45ppm	55ppm
Drum(K)	Drum motor K (DRM-K)	-5000 to 5000	12	11

Item No.	Description
U053	**Setting: [Motor2]** 1. Select the item to be adjusted.

Display	Description	Setting range	Initial setting	
			45ppm	55ppm
Dev(K)	Developer motor K (DEVM-K)	-5000 to 5000	0	0
Dev(CMY)	Developer motor MCY (DEVM-MCY)	-5000 to 5000	0	0
Trans	Transfer motor (TRM)	-5000 to 5000	0	0
Regist	Registration motor (RM)	-5000 to 5000	17	15
Clean	Transfer cleaning motor (TRCM)	-5000 to 5000	0	0

Setting: [Motor3]

1. Select the item to be adjusted.

Display	Description	Setting range	Initial setting	
			45ppm	55ppm
SB	Eject motor (EM)	-5000 to 5000	27	-18
Fixing	Fuser motor (FUM)	-5000 to 5000	0	0
Brg1	BR conveying motor 1 (BRCM1)	-5000 to 5000	-30	-27
Brg2	BR conveying motor 2 (BRCM2)	-5000 to 5000	-30	-27
Feed	Paper feed motor (PFM)	-5000 to 5000	82	73
JobSepa	JS eject motor (JSEM)	-5000 to 5000	0	0
Mid	Middle motor (MM)	-5000 to 5000	18	16
DU1	Duplex motor 1 (DUM1)	-5000 to 5000	-30	-27
DU2	Duplex motor 2 (DUM2)	-5000 to 5000	-30	-27
Brg1 DF H	BR conveying motor 1 (BRCM1)	-5000 to 5000	0	0
Brg1 DF L	BR conveying motor 1 (BRCM1)	-5000 to 5000	0	0
Brg2 DF H	BR conveying motor 2 (BRCM2)	-5000 to 5000	0	0
Brg2 DF L	BR conveying motor 2 (BRCM2)	-5000 to 5000	0	0

Item No.	Description
U053	

Setting: [Motor4]

1. Select the item to be adjusted.

Display	Description	Setting range	Initial setting	
			45ppm	55ppm
Drum B/W K	Drum motor K (DRM-K) in black/white mode	-5000 to 5000	-	25
Drum-Mono K	Drum motor K (DRM-K) in monochrome mode	-5000 to 5000	28	22

*: 55 ppm model only.

Setting: [Motor5]:55 ppm model only

1. Select the item to be adjusted.

Display	Description	Setting range	Initial setting
Dev B/W(K)	Developer motor K (DEVM-K) in black/ white mode	-5000 to 5000	0
Trans B/W	Transfer motor (TRM) in black/white mode	-5000 to 5000	0
Regist B/W	Registration motor (RM) in black/white mode	-5000 to 5000	14
Clean B/W	Transfer cleaning motor (TRCM) in black/white mode	-5000 to 5000	0

Setting: [Motor6]:55 ppm model only

1. Select the item to be adjusted.

Display	Description	Setting range	Initial setting
SB B/W	Eject motor (EM) in black/white mode	-5000 to 5000	-16
Fixing B/W	Fuser motor (FUM) in black/white mode	-5000 to 5000	0
Brg1 B/W	BR conveying motor 1 (BRCM1) in black/white mode	-5000 to 5000	-25
Brg2 B/W	BR conveying motor 2 (BRCM2) in black/white mode	-5000 to 5000	-25
Feed B/W	Paper feed motor (PFM) in black/white mode	-5000 to 5000	66
JobSepaB/W	JS eject motor (JSEM) in black/white mode	-5000 to 5000	0
Mid B/W	Middle motor (MM) in black/white mode	-5000 to 5000	15
DU1 B/W	Duplex motor 1 (DUM1) in black/white mode	-5000 to 5000	-24
DU2 B/W	Duplex motor 2 (DUM2) in black/white mode	-5000 to 5000	-24

Item No.	Description
U053	

Setting: [Motor1 Half]

1. Select the item to be adjusted.

Display	Description	Setting range	Initial setting
Drum(K)	Drum motor K (DRM-K) in half speed	-5000 to 5000	0

Setting: [Motor2 Half]

1. Select the item to be adjusted.

Display	Description	Setting range	Initial setting	
			45ppm	55ppm
Dev(K)	Developer motor K (DEVM-K) in half speed	-5000 to 5000	0	0
Dev(CMY)	Developer motor MCY (DEVM-MCY) in half speed	-5000 to 5000	0	0
Trans	Transfer motor (TRM) in half speed	-5000 to 5000	0	0
Regist	Registration motor (RM) in half speed	-5000 to 5000	34	30
Clean	Transfer cleaning motor (TRCM) in half speed	-5000 to 5000	0	0

Setting: [Motor3 Half]

Select the item to be adjusted.

Display	Description	Setting range	Initial setting	
			45ppm	55ppm
SB	Eject motor (EM) in half speed	-5000 to 5000	54	-36
Fixing	Fuser motor (FUM) in half speed	-5000 to 5000	0	0
Brg1	BR conveying motor 1 (BRCM1) in half speed	-5000 to 5000	-43	-38
Brdg2	BR conveying motor 2 (BRCM2) in half speed	-5000 to 5000	-43	-38
Feed	Paper feed motor (PFM) in half speed	-5000 to 5000	164	147
JobSepa	JS eject motor (JSEM) in half speed	-5000 to 5000	0	0
Mid	Middle motor (MM) in half speed	-5000 to 5000	36	32

Item No.	Description
U053	

Display	Description	Setting range	Initial setting	
			45ppm	55ppm
DU1	Duplex motor 1 (DUM1) in half speed	-5000 to 5000	-60	-54
DU2	Duplex motor 2 (DUM2) in half speed	-5000 to 5000	-60	-54

Setting: [Motor1 3/4]

1. Select the item to be adjusted.

Display	Description	Setting range	Initial setting
Drum(K)	Drum motor K (DRM-K) at 3/4 times of line speed	-5000 to 5000	0

Setting: [Motor2 3/4]

Select the item to be adjusted.

Display	Description	Setting range	Initial setting
Dev(K)	Developer motor K (DEVM-K) at 3/4 times of line speed	-5000 to 5000	0
Dev(CMY)	Developer motor MCY (DEVM-MCY) at 3/4 times of line speed	-5000 to 5000	0
Trans	Transfer motor (TRM) at 3/4 times of line speed	-5000 to 5000	0
Regist	Registration motor (RM) at 3/4 times of line speed	-5000 to 5000	22
Clean	Transfer cleaning motor (TRCM) at 3/4 times of line speed	-5000 to 5000	0

Item No.	Description
U053	**Setting: [Motor3 3/4]** 1. Select the item to be adjusted.

Display	Description	Setting range	Initial setting	
			45ppm	55ppm
SB	Eject motor (EM) at 3/4 times of line speed	-5000 to 5000	35	-26
Fixing	Fuser motor (FUM) at 3/4 times of line speed	-5000 to 5000	0	0
Brg1	BR conveying motor 1 (BRCM1) at 3/4 times of line speed	-5000 to 5000	-39	-39
Brg2	BR conveying motor 2 (BRCM2) at 3/4 times of line speed	-5000 to 5000	-39	-39
Feed	Paper feed motor (PFM) at 3/4 times of line speed	-5000 to 5000	106	106
JobSepa	JS eject motor (JSEM) at 3/4 times of line speed	-5000 to 5000	0	0
Mid	Middle motor (MM) at 3/4 times of line speed	-5000 to 5000	23	23
DU1	Duplex motor 1 (DUM1) at 3/4 times of line speed	-5000 to 5000	-39	-39
DU2	Duplex motor 2 (DUM2) at 3/4 times of line speed	-5000 to 5000	-39	-39

Completion

Press the Back key. The indication for selecting a maintenance item No. appears.

Item No.	Description
U059	**Setting fan mode** **Description** Specifies mode for developer fan motors. **Purpose** Handling the lowering density [to suppress thermal stresses owing to the heated toner]

Method

1. Press the OK key.
2. Select the mode.

Display	Description
Fan	Sets threshold temperature at which developer fan motors operate.
Cooling	Sets temperature at which the developer fan motors are switched for controlling.

Setting: [Fan]

1. Select the mode.

Display	Description
Mode1	Setting temperature:Normal
Mode2	Setting temperature:Temperature threshold is raised from mode1 (WUP, temperature at READY : mode1 temperature -7(°C), Temperature at PRINT : mode1 temperature -3(°C).)
Mode3	Setting temperature:Temperature threshold is raised from mode2 (WUP, temperature at READY : mode1 temperature -22(°C), Temperature at PRINT : mode1 temperature -8(°C).)
Auto	Starting with Mode 2 at power up or recovery from sleep mode, and switches to Mode 3 when the termistor detects a developer temperature BK is equal to or higher than 38°C. The device never reverts from mode 2 from mode 3 while power is on.

Initial setting: Mode1

2. Press the OK key. The setting is set.

Setting: [Cooling]

1. Change the setting value using the numeric keys.

Display	Description	Setting range	Initial setting
Cooling Mode	Amount of shift from the initial standard temperature	-3 to 3 (°C)	0

A larger value advances the operating timing, and a smaller value slows it.

2. Press the OK key. The value is set.

Completion

Press the Back key. The indication for selecting a maintenance item No. appears.

Item No.	Description
U089	**Outputting a MIP-PG pattern**

Description
Selects and outputs the MIP-PG pattern created in the machine.
Purpose
To check machine status when adjusting image printing, using MIP-PG pattern output.

Method
1. Press the OK key.
2. Select the MIP-PG pattern to be output and press the OK key.

Display	Description	Purpose
256Gradation	256-gradation PG	To check the gradation reproducibility
Color Belt	Four color belts PG	To check the developer state and the engine section ID
Gray(C)	Cyan PG	To check the drum quality
Gray(M)	Magenta PG	To check the drum quality
Gray(Y)	Yellow PG	To check the drum quality
Gray(K)	Black PG	To check the drum quality
White	Blank paper PG	To check the drum quality
Gradation Gray	5-graduation gray PG	To check for vertical lines on the laser scanner unit
Sample Set	Four color belts PG, Cyan PG, Magenta PG, Yellow PG and Black PG	Pattern output for LLU assurance application

3. Press the menu key.
4. Press the OK key. A MIP-PG pattern is output.

Completion
Press the Back key. The screen for selecting a maintenance item No. is displayed.

Item No.	Description
U100	**Adjusting main high voltage**

Description
Controls the charger roller voltage to optimize the surface potential.
Purpose
To change the setting value to adjust the image if an image failure (background blur, etc.) occurs.
Method
1. Press the OK key.
2. Select an item and press the OK key.
3. Press the OK key.

Display	Description
Adj AC Bias	Main charger AC bias for each color
Set AC Auto Adj	Setting the AC bias auto adjustment
Set DC Bias	Main charger DC bias for each color
Adj DC Bias	Additional surface potential
Set Low Temp	Pre-charge time at power supply ON
Set Charger Freq	Setting the main charger frequency
Chk Current	Rush current display
Set AC Gain	Setting the AC Gain

Setting: [Adj AC Bias]
1. Change the value using the numeric keys.
   Increasing the setting makes the image lighter; decreasing it makes the image darker.
   The values set vary depending on environments.

Display	Description	Setting range
AC(C)	Main charger AC bias for cyan	0 to 255
AC(M)	Main charger AC bias for magenta	0 to 255
AC(Y)	Main charger AC bias for yellow	0 to 255
AC(K)	Main charger AC bias for black	0 to 255
AC B/W(K)*	Main charger AC bias for black in black/white mode	0 to 255

   *: 55 ppm model only.
2. Press the OK key. The value is set.

Setting: [Set AC Auto Adj]
1. Select On or Off.

Display	Description
On	Turns auto adjustment ON
Off	Turns auto adjustment OFF

   Initial setting: On
2. Press the OK key. The setting is set.

Item No.	Description
U100	

Displaying: [Set DC Bias]

1. The current setting is displayed.

Display	Description
DC1(C)	Main charger DC bias for cyan (full speed)
DC1 Half(C)	Main charger DC bias for cyan (half speed)
DC1(M)	Main charger DC bias for magenta (full speed)
DC1 Half(M)	Main charger DC bias for magenta (half speed)
DC1(Y)	Main charger DC bias for yellow (full speed)
DC1 Half(Y)	Main charger DC bias for yellow (half speed)
DC1(K)	Main charger DC bias for black (full speed)
DC1 Half(K)	Main charger DC bias for black (half speed)
DC1 B/W(K)*	Main charger DC bias for black in black/white mode

*: 55 ppm model only.

Setting: [Adj DC Bias]

1. Select the item to be set.
2. Change the value using the numeric keys.
   Increasing the setting makes the image lighter; decreasing it makes the image darker.l

Display	Description	Setting range	Initial setting
DC2(C)	Main charger DC bias for cyan (full speed)	128 to 127	0
DC2 Half(C)	Main charger DC bias for cyan (half speed)	128 to 127	0
DC2(M)	Main charger DC bias for magenta (full speed)	128 to 127	0
DC2 Half(M)	Main charger DC bias for magenta (half speed)	128 to 127	0
DC2(Y)	Main charger DC bias for yellow (full speed)	128 to 127	0
DC2 Half(Y)	Main charger DC bias for yellow (half speed)	128 to 127	0
DC2(K)	Main charger DC bias for black (full speed)	128 to 127	0
DC2 Half(K)	Main charger DC bias for black (half speed)	128 to 127	0
DC2 B/W(K)*	Main charger DC bias for black in black/white mode		

*: 55 ppm model only.

3. Press the OK key. The value is set.

Setting: [Set Low Temp]

1. Change the value using the numeric keys.l

Display	Description	Setting range	Initial setting
Set Low Temp	Pre-charge time at power supply ON	0 to 6	1

2. Press the OK key. The value is set.

Item No.	Description
U100	**Setting: [Set Charger Freq]** 1. Select the item to be set. 2. Change the value using the numeric keys.ll

Display	Description	Setting range	Initial setting	
			45ppm	55ppm
Generally	Main charger frequency	7500 to 11280	8807	11022
B/W*	Main charger frequency in black/white mode	7500 to 11280	-	10690
Half	Main charger frequency in half speed	7500 to 11280	10690	10690
3/4	Main charger frequency at 3/4 times of line speed	7500 to 11280	8857	8857

*: 55 ppm model only.

3. Press the OK key. The value is set.

Displaying: [Chk Current]

1. The current setting is displayed.

Display	Description
C	Cyan rush current
M	Magenta rush current
Y	Yellow rush current
K	Black rush current

Setting: [Set AC Gain]

1. Select the item to be set.

Display	Description
Auto	Automatically adjusted in accordance with the environment (Default)
Mode1	Use this setting when C220X occurs (Multiplier = 0.95)
Mode2	Use this setting when charging pitch streaks (horizontal) occur (Multiplier = 1.05)
Mode3	Use this setting if C220X occurred and the charging pitch streaks (horizontal) has been observed despite mode1 has

Initial setting: Auto

2. Press the OK key. The setting is set.

Completion

Press the Back key. The screen for maintenance item No. is displayed.

Item No.	Description
U101	**Setting the voltage for the primary transfer**

Description
Sets the control voltage for the primary transfer.
Purpose
To change the setting when any density problems, such as too dark or light, occur.

Setting
1. Press the OK key.
2. Select the item to be set.

Display	Description
Normal	Setting the primary transfer positive voltage
Add Color	Setting the addition value (The addition value at the surface is referenced as standard)
Add Color 2nd	Setting the addition value for the second side
Surround Correct	Environmental correction ON/OFF setting

Setting: [Normal]
1. Select the item to be set.
1. Change the value using the numeric keys.ll

Display	Description	Setting range	Initial setting	
			45ppm	55ppm
Full	Primary transfer positive voltage for yellow (full speed)	0 to 255	126	131
Half	Primary transfer positive voltage for yellow (half speed)	0 to 255	108	110
3/4	Primary transfer positive voltage for yellow at 3/4 times of line speed	0 to 255	118	118
B/W*	Primary transfer positive voltage for yellow in black/white mode	0 to 255	-	135

*: 55 ppm model only.
2. Press the OK key. The value is set.

Setting: [Add Color]
1. Select the item to be set.
2. Change the value using the numeric keys.l

Display	Description	Setting range	Initial setting
Normal	Regular	-127 to 127	2
Heavy4/5	Heavy 4/5	-127 to 127	2

3. Press the OK key. The value is set.

Item No.	Description
U101	**Setting: [Add Color 2nd]** 1. Select the item to be set. 2. Change the value using the numeric keys.l

Display	Description	Setting range	Initial setting
C	Addition value for the second side (cyan)	-127 to 127	-3
M	Addition value for the second side (magenta)	-127 to 127	-3
Y	Addition value for the second side (yellow)	-127 to 127	-2
K	Addition value for the second side (black)	-127 to 127	-14

3. Press the OK key. The value is set.

Setting: [Surround Correct]

1. Select On or Off.

Display	Description
On	Environmental correction is not performed
Off	Environmental correction is performed

Initial setting: Off

2. Press the OK key. The setting is set.

Completion

Press the Back key. The screen for selecting a maintenance item No. is displayed.

Item No.	Description
U106	**Setting the voltage for the secondary transfer**

Description
Sets the control voltage for the secondary transfer depending on each paper type.
Purpose
To change the setting when any density problems, such as too dark or light, occur.

Method
1. Press the OK key.
2. Select the item to be set.

Display	Description
Light/Normal1	Control voltage for the transfer bias on paper with thickness 52 g/m^2 to 64 g/m^2 and 65 g/m^2 to 75 g/m^2
Normal2/3	Control voltage for the transfer bias on paper with thickness 76 g/m^2 to 105 g/m^2
Heavy1	Control voltage for the transfer bias on paper with thickness 106 g/m^2 to 135 g/m^2
Heavy2	Control voltage for the transfer bias on paper with thickness 136 g/m^2 to 163 g/m^2
Heavy3	Control voltage for the transfer bias on paper with thickness 164 g/m^2 to 220 g/m^2
Heavy4	Control voltage for the transfer bias on paper with thickness 221 g/m^2 to 256 g/m^2
Heavy5	Control voltage for the transfer bias on paper with thickness 257 g/m^2 to 300 g/m^2
Bias	Transfer bias value
OHP	Control voltage for the transfer bias for transparencies

Setting: [Light/Normal1]
1. Select the item to be set.

Display	Description
1st	Control voltage for the transfer bias for the first side (full speed)
2nd	Control voltage for the transfer bias for the second side (full speed)
1st 3/4(Gloss)	Control voltage for the transfer bias for the first side at 3/4 times of line speed
2nd 3/4(Gloss)	Control voltage for the transfer bias for the second side at 3/4 times of line speed
1st B/W*	Control voltage for the transfer bias for the first side in black/white mode
2nd B/W*	Control voltage for the transfer bias for the second side in black/white mode

*: 55 ppm model only.
2. Select the paper width to be set.
3. Change the value using the numeric keys.

Item No.	Description
U106	

[1st]

Display	Description	Setting range	Initial setting	
			45ppm	55ppm
Width=105	105 mm wide	0 to 255	143	150
Width=210	210 mm wide	0 to 255	134	139
Width=297	297 mm wide	0 to 255	120	128

[2nd]

Display	Description	Setting range	Initial setting	
			45ppm	55ppm
Width=105	105 mm wide	0 to 255	207	220
Width=210	210 mm wide	0 to 255	155	163
Width=297	297 mm wide	0 to 255	124	128

[1st 3/4(Gloss)]

Display	Description	Setting range	Initial setting	
			45ppm	55ppm
Width=105	105 mm wide	0 to 255	131	131
Width=210	210 mm wide	0 to 255	123	123
Width=297	297 mm wide	0 to 255	120	120

[2nd 3/4(Gloss)]

Display	Description	Setting range	Initial setting	
			45ppm	55ppm
Width=105	105 mm wide	0 to 255	180	180
Width=210	210 mm wide	0 to 255	140	140
Width=297	297 mm wide	0 to 255	120	120

[1st B/W]

Display	Description	Setting range	Initial setting
			55ppm
Width=105	105 mm wide	0 to 255	150
Width=210	210 mm wide	0 to 255	144
Width=297	297 mm wide	0 to 255	128

[2nd B/W]

Display	Description	Setting range	Initial setting
			55ppm
Width=105	105 mm wide	0 to 255	183
Width=210	210 mm wide	0 to 255	171
Width=297	297 mm wide	0 to 255	128

4. Press the OK key. The value is set.

Item No.	Description
U106	**Setting: [Normal2/3]**

1. Select the item to be set.

Display	Description
1st	Control voltage for the transfer bias for the first side (full speed)
2nd	Control voltage for the transfer bias for the second side (full speed)
1st 3/4(Gloss)	Control voltage for the transfer bias for the first side at 3/4 times of line speed
2nd 3/4(Gloss)	Control voltage for the transfer bias for the second side at 3/4 times of line speed
1st B/W*	Control voltage for the transfer bias for the first side in black/white mode
2nd B/W*	Control voltage for the transfer bias for the second side in black/white mode

*: 55 ppm model only.

2. Select the paper width to be set.
3. Change the value using the numeric keys.

[1st]

Display	Description	Setting range	Initial setting	
			45ppm	55ppm
Width=105	105 mm wide	0 to 255	143	150
Width=210	210 mm wide	0 to 255	134	139
Width=297	297 mm wide	0 to 255	120	128

[2nd]

Display	Description	Setting range	Initial setting	
			45ppm	55ppm
Width=105	105 mm wide	0 to 255	207	220
Width=210	210 mm wide	0 to 255	155	163
Width=297	297 mm wide	0 to 255	124	128

[1st 3/4(Gloss)]

Display	Description	Setting range	Initial setting	
			45ppm	55ppm
Width=105	105 mm wide	0 to 255	131	131
Width=210	210 mm wide	0 to 255	123	123
Width=297	297 mm wide	0 to 255	120	120

Item No.	Description
U106	

[2nd 3/4(Gloss)]

Display	Description	Setting range	Initial setting	
			45ppm	55ppm
Width=105	105 mm wide	0 to 255	180	180
Width=210	210 mm wide	0 to 255	140	140
Width=297	297 mm wide	0 to 255	120	120

[1st B/W]

Display	Description	Setting range	Initial setting
			55ppm
Width=105	105 mm wide	0 to 255	150
Width=210	210 mm wide	0 to 255	144
Width=297	297 mm wide	0 to 255	128

[2nd B/W]

Display	Description	Setting range	Initial setting
			55ppm
Width=105	105 mm wide	0 to 255	183
Width=210	210 mm wide	0 to 255	171
Width=297	297 mm wide	0 to 255	128

4. Press the OK key. The value is set.

Setting: [Heavy1]

1. Select the item to be set.

Display	Description
1st 3/4	Control voltage for the transfer bias for the first side at 3/4 times of line speed
2nd 3/4	Control voltage for the transfer bias for the second side at 3/4 times of line speed

2. Select the paper width to be set.
3. Change the value using the numeric keys.l

[1st 3/4]

Display	Description	Setting range	Initial setting	
			45ppm	55ppm
Width=105	105 mm wide	0 to 255	133	133
Width=210	210 mm wide	0 to 255	129	129
Width=297	297 mm wide	0 to 255	124	124

Item No.	Description
U106	

[2nd 3/4]

Display	Description	Setting range	Initial setting	
			45ppm	55ppm
Width=105	105 mm wide	0 to 255	155	155
Width=210	210 mm wide	0 to 255	150	150
Width=297	297 mm wide	0 to 255	124	124

4. Press the OK key. The value is set.

Setting: [Heavy4/5]

1. Select the item to be set.

Display	Description
1st Half	Control voltage for the transfer bias for the first side (half speed)
2nd Half	Control voltage for the transfer bias for the second side (half speed)

2. Select the paper width to be set.
3. Change the value using the numeric keys.l

[1st Half]

Display	Description	Setting range	Initial setting	
			45ppm	55ppm
Width=105	105 mm wide	0 to 255	126	130
Width=210	210 mm wide	0 to 255	123	127
Width=297	297 mm wide	0 to 255	119	122

[2nd Half]

Display	Description	Setting range	Initial setting	
			45ppm	55ppm
Width=105	105 mm wide	0 to 255	144	151
Width=210	210 mm wide	0 to 255	140	146
Width=297	297 mm wide	0 to 255	119	122

4. Press the OK key. The value is set.

Setting: [OHP]

1. Select the item to be set.
2. Change the value using the numeric keys.

Display	Description	Setting range	Initial setting	
			45ppm	55ppm
Width=105	105 mm wide	0 to 255	134	139
Width=210	210 mm wide	0 to 255	129	133
Width=297	297 mm wide	0 to 255	124	128

3. Press the OK key. The value is set.

Item No.	Description
U106	**Setting: [Bias]** 1. Select the item to be set. 2. Change the value using the numeric keys.

Display	Description	Setting range	Initial setting	
			45ppm	55ppm
Reverse	Transfer reverse bias (full speed)	0 to 255	1	1
Reverse Half	Transfer reverse bias (half speed)	0 to 255	1	1
Reverse 3/4	Transfer reverse bias at 3/4 times of line speed	0 to 255	1	1
Reverse B/W*	Transfer reverse bias in black/white mode	0 to 255	-	1
Cleaning	Cleaning control value (full speed)	0 to 255	138	143
Cleaning Half	Cleaning control value (half speed)	0 to 255	126	130
Cleaning 3/4	Cleaning control value at 3/4 times of line speed	0 to 255	133	133

*: 55 ppm model only.

3. Press the OK key. The value is set.

Completion

Press the Back key. The screen for selecting a maintenance item No. is displayed.

Item No.	Description
U107	**Setting the transfer cleaning voltage**

Description
Sets the cleaning control voltage for transfer belt unit.
Purpose
Change settings if an offset has occurred due to the failure of cleaning the transfer belt.

Method
1. Press the OK key.
2. Select the item to be set.

Display	Description
Belt(A)	Transfer belt cleaning voltage (printing)
Belt(B)	Transfer belt cleaning voltage (paper interval)

3. Select the item to be set.
4. Change the value using the numeric keys.

[Belt(A)]

Display	Description	Setting range	Initial setting	
			45ppm	55ppm
Full	Full speed	0 to 255	202	207
Half	Half speed	0 to 255	180	182
3/4	3/4 times of line speed	0 to 255	192	192
B/W*	Black/white mode	0 to 255	-	212

[Belt(B)]

Display	Description	Setting range	Initial setting	
			45ppm	55ppm
Full	Full speed	0 to 255	150	160
Half	Half speed	0 to 255	110	110
3/4	3/4 times of line speed	0 to 255	130	130
B/W*	Black/white mode	0 to 255	-	160

*: 55 ppm model only.

5. Press the OK key. The value is set.

Completion
Press the Back key. The screen for selecting a maintenance item No. is displayed.

Item No.	Description
U108	**Setting separation shift bias**

Description
Adjusts output of separation shift bias and ON/OFF timing.
Purpose
To set when the separated malfunction of the paper occurs.

Method
1. Press the OK key.
2. Select the item to be set.

Display	Description
Output	Adjusting the separation shift bias output
Output 3/4	Adjusting the separation shift bias output
Output B/W*	Adjusting the separation shift bias output in black/white mode
Timing	Adjusting the ON/OFF timing with paper position
Subtraction Value	

***: 55 ppm model only.**

Setting: [Output]
1. Select the item to be set.
2. Change the setting value using the numeric keys or numeric key.

Display	Description	Setting range	Initial setting
Light 1st	Separation shift bias for the first side on paper with thickness 52 to 64 g/m^2	0 to 255	55
Light 2nd	Separation shift bias for the second side on paper with thickness 52 to 64 g/m^2	0 to 255	55
Normal 1st	Separation shift bias for the first side on paper with thickness 65 to 75 g/m^2	0 to 255	55
Normal 2nd	Separation shift bias for the second side on paper with thickness 65 to 75 g/m^2	0 to 255	55
Add Lead	Addition value for leading edge on paper with thickness 76 to 105 g/m^2	-127 to 127	0
Heavy/OHP	Separation shift bias for transparencies or paper with thickness 106 to 300 g/m^2	0 to 255	0

3. Press the OK key. The value is set.

Item No.	Description
U108	

Setting: [Output 3/4 / Output B/W]

1. Select the item to be set.
2. Change the setting value using the numeric keys or numeric key.

Display	Description	Setting range	Initial setting	
			Output 3/4	Output B/W*
Light 1st	Separation shift bias for the first side on paper with thickness 52 to 64 g/m²	0 to 255	55	20
Light 2nd	Separation shift bias for the second side on paper with thickness 52 to 64 g/m²	0 to 255	55	20
Normal 1st	Separation shift bias for the first side on paper with thickness 65 to 75 g/m²	0 to 255	55	20
Normal 2nd	Separation shift bias for the second side on paper with thickness 65 to 75 g/m²	0 to 255	55	20

* : 55 ppm model only.

3. Press the OK key. The value is set.

Setting: [Timing]

1. Select the item to be set.
2. Change the setting value using the numeric keys or numeric key.

Display	Description	Setting range	Initial setting
On Lead	Separation shift bias ON timing at leading edge of paper	-200 to 200	0
On Center	Separation shift bias ON timing at center of paper	-200 to 200	0
Off	Separation shift bias OFF timing	-200 to 200	0

3. Press the OK key. The value is set.

Setting: [Subtraction Value]

1. Change the setting value using the numeric keys or numeric key.

Display	Description	Setting range	Initial setting
Value		-127 to 127	-35

2. Press the OK key. The value is set.

Completion

Press the Back key. The screen for selecting a maintenance item No. is displayed.

Item No.	Description
U110	**Checking the drum count** **Description** Displays the drum counts for checking. **Purpose** To check the drum status. **Method** 1. Press the OK key. The current drum counts is displayed. **Completion** Press the Back key. The screen for selecting a maintenance item No. is displayed.
U111	**Checking the drum drive time** **Description** Displays the drum drive time for checking a figure, which is used as a reference when correcting the high voltage based on time. **Purpose** To check the drum status. **Method** 1. Press the OK key. The drum drive time is displayed. **Completion** Press the Back key. The screen for selecting a maintenance item No. is displayed.

Display	Description
C	Drum count value for cyan
M	Drum count value for magenta
Y	Drum count value for yellow
K	Drum count value for black

Display	Description
C	Drum drive time for cyan
M	Drum drive time for magenta
Y	Drum drive time for yellow
K	Drum drive time for black

Item No.	Description
U117	**Checking the drum number** **Description** Displays the drum number. **Purpose** To check the drum number. **Method** 1. Press the OK key. The drum number is displayed. **Completion** Press the Back key. The screen for selecting a maintenance item No. is displayed.

Display	Description
C	Cyan drum number
M	Magenta drum number
Y	Yellow drum number
K	Black drum number

<table>
<tr><th>Item No.</th><th>Description</th></tr>
<tr><td>U118</td><td>

Displaying the drum history

Description
Displays the past record of machine number and the drum counter.
Purpose
To check the count value of machine number and the drum counter.

Method
1. Press the OK key.
2. Select the color to check.

Display	Description
C	Cyan drum past record
M	Magenta drum past record
Y	Yellow drum past record
K	Black drum past record

3. Press the OK key.
   The history of a machine number and a drum counter for each color is displayed by three cases.

Display	Description
Machine History1 - 3	Historical records of the machine number
Cnt History1 - 3	Historical records of drum counter

Completion
Press the Back key. The screen for selecting a maintenance item No. is displayed.

</td></tr>
<tr><td>U119</td><td>

Setting the drum

Description
Sets drum sensitivity.
Purpose
To set the drum after replacing the drum unit or laser scanner unit.
When completed, perform maintenance mode U464, Calibration.

Method
1. Press the OK key.
2. Select [Execute].
3. Press the OK key. Drum setup is commenced.
4. Exit the maintenance mode, perform shut-down, and turn the main power switch to off and on again. Allow more than 5 seconds between Off and On.

</td></tr>
</table>

<table>
<tr><th>Item No.</th><th>Description</th></tr>
<tr><td>U122</td><td>

Checking the transfer belt unit number

Description
Displays the number of the transfer belt unit for checking.
Purpose
To check the number of the transfer belt.

Method
1. Press the OK key.
   The current number of the transfer belt is displayed.

Completion
Press the Back key. The screen for selecting a maintenance item No. is displayed.

</td></tr>
<tr><td>U123</td><td>

Displaying the transfer belt unit history

Description
Displays the past record of machine number and the transfer belt unit counter.
Purpose
To check the count value of machine number and the transfer counter.

Method
1. Press the OK key.
   The history of a machine number and a transfer belt unit counter for each color is displayed by three cases.

<table>
<tr><th>Display</th><th>Description</th></tr>
<tr><td>Machine History1 - 3</td><td>Historical records of the machine number</td></tr>
<tr><td>Cnt History1 - 3</td><td>Historical records of transfer belt unit counter</td></tr>
</table>

Completion
Press the Back key. The screen for selecting a maintenance item No. is displayed.

</td></tr>
</table>

Item No.	Description
U127	**Checking/clearing the transfer count** **Description** Displays and clears the counts of the transfer counter. **Purpose** To check the count or drive time after replacement of the transfer belt unit or transfer roller. Also to clear the counts after replacing transfer roller. **Method** 1. Press the OK key. The current counts of the transfer counter is displayed. **Clearing** 1. Select [Clear]. 2. Press the OK key. The counter value is cleared. Clears only the transfer roller. The transfer belt unit is not cleared. **Completion** Press the Back key. The screen for selecting a maintenance item No. is displayed.

Display	Description
Mid(Cnt)	Transfer belt unit count value
2nd(Cnt)	Transfer roller count value
Mid(Time)	Transfer belt unit drive time
2nd(Time)	Transfer roller drive time
Clear	The counter value is cleared

Item No.	Description
U128	**Setting transfer high-voltage timing** **Description** Adjusts the ON/OFF timing of transfer high-voltage output. **Purpose** Basically, the setting need not be changed. If any problem such as faulty images or dirt on the back surface occurs, change the setting. **Method** 1. Press the OK key. 2. Select the item to set. 3. Change the value using the numeric keys. **Display** / **Description** / **Setting range** / **Initial setting** (45ppm, 55ppm) On Timing 1st / Transfer ON timing adjustment value (first side) / -200 to 200 / -5 / -5 On Timing 2nd / Transfer ON timing adjustment value (second side) / -200 to 200 / 0 / 0 Off Timing / Transfer OFF timing adjustment value / -200 to 200 / 13 / 10 4. Press the OK key. The value is set. **Completion** Press the Back key. The screen for selecting a maintenance item No. is displayed.
U130	**Initial setting for the developer** **Description** The toner sensor control bias is adjusted so that the sensor output is set as the target value with the initial developer. **Purpose** Automatically executed when the developer unit loaded with the initial developer is replaced. **Method** 1. Press the OK key. 2. Select [Execute]. 3. Press the OK key. Toner installation is started and the control value of the toner sensor is displayed. **Display** / **Description** C / Toner sensor C control voltage M / Toner sensor M control voltage Y / Toner sensor Y control voltage K / Toner sensor K control voltage Excute / **Completion** Press the Back key. The screen for selecting a maintenance item No. is displayed.

Item No.	Description
U131	**Adjusting the toner sensor control voltage**

Description
Adjusts the toner sensor control voltage.
Purpose
If control values are not correctly retrievable due to the EEPROM of the developer unit failure, etc., use manual adjustment and obtain a temporary control value.

Method
1. Press the OK key.
2. Select the item to be set or displayed.

Display	Description
Manual	Toner sensor control voltage manual adjustment
Auto	Toner sensor control voltage auto adjustment
Mode	Switching the manual adjustment and auto adjustment

Setting: [Manual]
1. Select the item to be set.
2. Change the value using the numeric keys.

Display	Description	Setting range	Initial setting
Control(C)	Toner sensor C control voltage	0 to 255	150
Control(M)	Toner sensor M control voltage	0 to 255	150
Control(Y)	Toner sensor Y control voltage	0 to 255	150
Control(K)	Toner sensor K control voltage	0 to 255	150

3. Press the OK key. The value is set.

Displaying: [Auto]
1. The current setting is displayed.

Display	Description
Default(C)	Reference value for toner sensor C control voltage
Default(M)	Reference value for toner sensor M control voltage
Default(Y)	Reference value for toner sensor Y control voltage
Default(K)	Reference value for toner sensor K control voltage
Control(C)	Toner sensor C control voltage after correction
Control(M)	Toner sensor M control voltage after correction
Control(Y)	Toner sensor Y control voltage after correction
Control(K)	Toner sensor K control voltage after correction

<table>
<tr><th>Item No.</th><th>Description</th></tr>
<tr><td>U131</td><td>

Setting: [Mode]

1. Select the item to be set.

Display	Description
Manual	Toner sensor control voltage manual adjustment
Auto	Toner sensor control voltage auto adjustment

Initial setting: Auto

2. Press the OK key. The value is set.

Completion

Press the Back key. The screen for selecting a maintenance item No. is displayed.

</td></tr>
<tr><td>U132</td><td>

Replenishing toner forcibly

Description

Replenishes toner forcibly until the toner sensor output value reaches the toner feed start level.

Purpose

Used when the toner empty is detected frequently.

Method

1. Press the OK key.
2. Select [Execute].
3. Press the OK key.
   Toner is replenished until the toner sensor output value reaches the toner feed start level.

Display	Description
Supply(C)	Toner feed start level (cyan)
Supply(M)	Toner feed start level (magenta)
Supply(Y)	Toner feed start level (yellow)
Supply(K)	Toner feed start level (black)
Sensor(C)	Toner sensor output value (cyan)
Sensor(M)	Toner sensor output value (magenta)
Sensor(Y)	Toner sensor output value (yellow)
Sensor(K)	Toner sensor output value (black)
Excute	

4. To stop operation, press the Back key.

Completion

Press the Back key. The screen for selecting a maintenance item No. is displayed.

</td></tr>
</table>

Item No.	Description
U135	**Checking toner motor operation** **Description** Drives toner motors. **Purpose** To check the operation of toner motors. **Remarks** When driving the toner motors long time or several times, developer section becomes the toner full and is locked. **Method** 1. Press the OK key. 2. Select [Toner]. 3. Press the OK key. The operation starts. Display: Toner Description: Toner motor (TM) is turned on 4. To stop the operation, press the Back key. **Completion** Press the Back key after operation stops. The screen for selecting a maintenance item No. is displayed.
U136	**Setting toner near end detection** **Description** Sets the level that indicates the number of sheets that can be printed from occurrence of toner near end to toner empty. **Purpose** To change the setting to advance detection of near end if the interval from toner near end to toner empty seems too short. **Setting** 1. Press the OK key. 2. Select the item to be set. 3. Change the value using the numeric keys. Display: CMY Description: Setting the level of cyan/magenta/yellow toner Setting range: 0 to 9 Initial setting: 3 Display: K Description: Setting the level of black toner Setting range: 0 to 9 Initial setting: 3 Increasing the setting makes the interval from toner near end to toner empty longer. Decreasing the setting makes the interval from toner near end to toner empty shorter. If 0 is set, toner near end will not be detected. 4. Press the OK key. The value is set. **Completion** Press the Back key. The screen for selecting a maintenance item No. is displayed.

Item No.	Description
U139	**Displaying the temperature and humidity outside the machine** **Description** Displays the detected temperature and humidity outside the machine. **Purpose** To check the temperature and humidity outside the machine. **Method** 1. Press the OK key. 2. Select the item. **Method: [Ext/Int]** 1. The current temperature and humidity are displayed. **Method: [LSU]** 1. The current temperature is displayed. **Method: [Developing]** 1. The current temperature is displayed. **Completion** Press the Back key. The screen for selecting a maintenance item No. is displayed.

Display	Description
Ext/Int	Internal/External temperature (°C), External humidity (%)
LSU	Internal temperature around the laser scanner unit (°C)
Developing	Internal temperature around the developer section (°C)

Display	Description
Ext Temp	External temperature (°C)
Ext Humidity	External humidity (%)
Int Temp	Internal temperature (°C)

Display	Description
C	Internal temperature around the laser scanner unit C (°C)
M	Internal temperature around the laser scanner unit M (°C)
Y	Internal temperature around the laser scanner unit Y (°C)
K	Internal temperature around the laser scanner unit K (°C)

Display	Description
C	Internal temperature around the developer unit C (°C)
M	Internal temperature around the developer unit M (°C)
Y	Internal temperature around the developer unit Y (°C)
K	Internal temperature around the developer unit K (°C)

Item No.	Description
U140	**Displaying developer bias**

Description
Displays and changes various developer bias value.
Purpose
To check or changes the developer bias value.

Method
1. Press the OK key.
2. Select the item to be set.

Display	Description
Sleeve DC	Developer sleeve roller DC bias
Sleeve AC	Developer sleeve roller AC bias
Mag DC	Developer magnet roller DC bias
Mag AC	Developer magnet roller AC bias
Sleeve Freq	Developer sleeve roller frequency
Sleeve Duty	Developer sleeve roller duty
Mag Duty	Developer magnet roller duty
AC Calib	Executing or setting the AC calibration

Setting: [Sleeve DC]
1. Select the item to be set.
2. Change the setting value using the numeric keys.

Display	Description	Setting range	Initial setting	
			45ppm	55ppm
C	Developer sleeve roller DC bias for cyan	0 to 255	84	84
M	Developer sleeve roller DC bias for magenta	0 to 255	84	84
Y	Developer sleeve roller DC bias for yellow	0 to 255	84	84
K	Developer sleeve roller DC bias for black	0 to 255	70	70
B/W*	Developer sleeve roller DC bias in black/white mode	0 to 255	-	70

*: 55 ppm model only.

3. Press the OK key. The value is set.

Item No.	Description
U140	

Setting: [Sleeve AC]

1. Select the item to be set.
2. Change the setting value using the numeric keys.

Display	Description	Setting range	Initial setting	
			45ppm	55ppm
C	Developer sleeve roller AC bias for cyan	0 to 255	155	155
M	Developer sleeve roller AC bias for magenta	0 to 255	155	155
Y	Developer sleeve roller AC bias for yellow	0 to 255	155	155
K	Developer sleeve roller AC bias for black	0 to 255	155	155
B/W*	Developer sleeve roller AC bias in black/white mode	0 to 255	-	155

*: 55 ppm model only.

3. Press the OK key. The value is set.

Setting: [Mag DC]

1. Select the item to be set.
2. Change the setting value using the numeric keys.

Display	Description	Setting range	Initial setting	
			45ppm	55ppm
C	Developer magnet roller DC bias for cyan	0 to 255	155	155
M	Developer magnet roller DC bias for magenta	0 to 255	155	155
Y	Developer magnet roller DC bias for yellow	0 to 255	155	155
K	Developer magnet roller DC bias for black	0 to 255	155	155
B/W*	Developer magnet roller DC bias in black/white mode	0 to 255	-	155

*: 55 ppm model only.

3. Press the OK key. The value is set.

Item No.	Description
U140	

Setting: [Mag AC]

1. Select the item to be set.
2. Change the setting value using the numeric keys.

Display	Description	Setting range	Initial setting	
			45ppm	55ppm
C	Developer magnet roller AC bias for cyan	0 to 255	200	200
M	Developer magnet roller AC bias for magenta	0 to 255	200	200
Y	Developer magnet roller AC bias for yellow	0 to 255	200	200
K	Developer magnet roller AC bias for black	0 to 255	160	160
B/W*	Developer magnet roller AC bias in black/white mode	0 to 255	-	160

*: 55 ppm model only.

3. Press the OK key. The value is set.

Setting: [Sleeve Freq]

1. Select the item to be set.
2. Change the setting value using the numeric keys.

Display	Description	Setting range	Initial setting	
			45ppm	55ppm
Normal	Developer sleeve roller frequency	0 to 6200	5345	5511
B/W*	Developer sleeve roller frequency in black/white mode	0 to 6200	-	5345
Half	Developer sleeve roller frequency (half speed)	0 to 6200	5345	5345
3/4*	Developer sleeve roller frequency at 3/4 times of line speed	0 to 6200	5345	5345

*: 55 ppm model only.

3. Press the OK key. The value is set.

Setting: [Sleeve Duty]

1. Select the item to be set.
2. Change the setting value using the numeric keys.

Display	Description	Setting range	Initial setting	
			45ppm	55ppm
Normal	Developer sleeve roller duty	0 to 99	68	43
B/W*	Developer sleeve roller duty in black/white mode	0 to 99	-	43

*: 55 ppm model only.

3. Press the OK key. The value is set.

Item No.	Description
U140	**Setting: [Mag Duty]** 1. Select the item to be set. 2. Change the setting value using the numeric keys.

Display	Description	Setting range	Initial setting	
			45ppm	55ppm
Normal	Developer magnet roller duty	0 to 99	43	68
B/W*	Developer magnet roller duty in black/white mode	0 to 99	-	68

*: 55 ppm model only.

3. Press the OK key. The value is set.

Method: [AC Calib]

1. Select the item.

Display	Description
Calibration	Executing the AC calibration (Developer AC calibration setting) **Executing timing** 1. When the setup at high altitude place. 2. Execute when replacing the developer unit or drum unit 3. Execute at the time of developing leak outbreak 4. When the density of solid image is dropped after the AC calibration.
Magnification	AC calibration target bias value setting **Executing timing** 1. Developing bias setting when developing leak occurs after AC calibration practice
High Altitude	Mode setting for AC calibration bias control **Executing timing** 1. In case the density of solid image levels drop is not improved even if execute AC calibration (setting at high altitude)

Method: [Calibration]

1. Turns the items to implement to on.

Display	Description
Type	High altitude grain mode setting
C	Change On/Off of Cyan developer
M	Change On/Off of Magenta developer
Y	Change On/Off of Yellow developer
K	Change On/Off of Black developer
Execute	Executing the calibration

* : When the density of solid image is dropped, select "Type" and chose "+1". (High altitude grain mode)

2. Select [Execute].
3. Press the OK key. AC calibration is executed.
4. Exit the maintenance mode, perform shut-down, and turn the main power switch to off and on again. Allow more than 5 seconds between Off and On.

* : When an error occurs, an error code is displayed.

Item No.	Description
U140	

Setting: [Type]

1. Change the setting value using the +/- keys or numeric keys.

Display	Description
0	Continue the present setting and execute AC calibration
+1	High altitude grain mode On and then execute AC calibration (C, M, Y and K switches to On)
+2	High altitude grain mode Off and then execute AC calibration (C, M, Y and K switches to Off)

* : The following are automatically changed if "+1" is set up in the Type.

If current setting is [Normal2] or [Normal3] -> changed to [Normal1]
The U161 [Grain Mode] is set to [Mode2]

2. Select [Execute].
3. Press the start key.

Setting: [Magnification]

1. Select the item to be set.
2. Change the setting value using the numeric keys.

Display	Description	Setting range	Initial setting
C	Set it at the time of Cyan developing leak outbreak	-10 to 15	15
M	Set it at the time of Magenta developing leak out-break	-10 to 15	15
Y	Set it at the time of Yellow developing leak outbreak	-10 to 15	15
K	Set it at the time of Black developing leak outbreak	-10 to1 5	12

3. Press the OK key. The value is set.

Method: [High Altitude]

1. Select Mode1 or Mode2.

Display	Description
Mode1	Execute AC calibration by normal bias control
Mode2	If print density is low in an installation at high altitude, execute calibration by fixing the bias potential.

Initial setting: Mode1

2. Press the OK key. The value is set.
3. Exit the maintenance mode, perform shut-down, and turn the main power switch to off and on again. Allow more than 5 seconds between Off and On.

Completion

Press the Back key. The screen for selecting a maintenance item No. is displayed.

Item No.	Description
U147	**Setting for toner applying operation** **Description** Sets the mode for removing charged toner in the developing unit (T7 control: Toner applying operation). Defines the action that the toner accumulated on the developer blade is sent back in the developer unit (done by the vibration motor). **Purpose** The setting can be changed to reduce the toner applying quantity. Performed to change the occurrence of the control of the vibration motor. If the charged toner stays inside the developing unit, density decreases. **Method** 1. Press the OK key. 2. Select the item to be set.

Display	Description
Mode	Settings for toner applying operation
Upper Limit	Upper limit printing ratio of toner applying quantity with each mode
Minimum	Toner layer width when cleaning mode is selected
Interval Number	Setting the vibration motor On timing

Setting: [Mode]

1. Select the mode.

Display	Description
Mode0	Less consumption of toner than a regular toner applying operation
Mode1	Executes toner applying with the regular amount of toner
Mode2	Applying more consumption of toner than a regular toner applying operation

Initial setting; Mode1

2. Press the OK key. The setting is set.

Setting: [Upper Limit]

1. Change the setting value using the numeric keys.

Display	Description	Setting range	Initial setting
Value	Upper limit printing ratio of toner applying quantity with each mode (%)	0 to 2.0	2.0

2. Press the OK key. The value is set.

Setting: [Minimum]

1. Change the setting value using the numeric keys.

Display	Description	Setting range	Initial setting
Value	Toner layer width when cleaning mode is selected (mm)	0 to 30	10

2. Press the OK key. The value is set.

<table>
<tr><th>Item No.</th><th>Description</th></tr>
<tr><td>U147</td><td>

Setting: [Interval Number]

1. Select the item to be set.
2. Change the setting value using the numeric keys.

Display	Description	Setting range	Initial setting
Print(Normal)	During continuous printing (Normal environ-ment)	10 to 500	250
Print(H/H)	During continuous printing (High humidity environment)	10 to 200	100
Print End	Print completed	10 to 100	50

3. Press the OK key. The value is set.

Completion

Press the Back key. The screen for selecting a maintenance item No. is displayed.

</td></tr>
<tr><td>U148</td><td>

Setting drum refresh mode

Description

Selects the mode used in drum refreshing

Purpose

Change settings when drum refreshing is too frequently executed.

Setting

1. Press the OK key.
2. Select the mode.
3. Change the setting value using the numeric keys.

Display	Description	Setting range	Initial setting
Normal	Auto setting drum refresh mode	0 to 3	2
Dew Cond		0 to 3	2

* : Normal 0: Off / 1: Short / 2: Standard / 3: Long
Dew Cond 0: mode1 / 1: mode2 / 2: mode2 / 3: mode3
0: Inoperable. 1 - 3: the greater the value the more refreshings to take place.

4. Press the OK key. The setting is set.

Completion

Press the Back key. The screen for selecting a maintenance item No. is displayed.

</td></tr>
</table>

Item No.	Description
U155	**Checking sensors for toner** **Description** Displays the toner sensor output value. **Purpose** To check the output value for each color when any image problems occur. **Method** 1. Press the OK key. 2. Select the item to be display.

Display	Description
Waste Toner	Control voltage value of the waste toner sensor
Toner	Control voltage value and replenishment level of toner sensor each color

Method: [Waste Toner]

1. Check the status of sensor. The current value is displayed.

Display	Description
Full	Waste toner sensor 1 (WTS1)
Near Full	Waste toner sensor 2 (WTS2)

Method: [Toner]

1. Check the status of sensor. The current value is displayed.

Display	Description
Sensor(C)	Toner sensor C output value
Sensor(M)	Toner sensor M output value
Sensor(Y)	Toner sensor Y output value
Sensor(K)	Toner sensor K output value
Supply(C)	Toner replenishment level for cyan
Supply(M)	Toner replenishment level for magenta
Supply(Y)	Toner replenishment level for yellow
Supply(K)	Toner replenishment level for black

Completion

Press the Back key. The screen for selecting a maintenance item No. is displayed.

Item No.	Description
U156	**Setting the toner replenishment level**

Description
Sets the toner replenishment level for each color.
Purpose
To change settings according to the original image.

Method
1. Press the OK key.
2. Select the item to be set.

Display	Description
Supply	Setting the toner replenishment level
Empty	Setting the toner empty level

Method: [Supply]
1. Select the item to be set.
2. Change the setting value using the numeric keys.
   Increasing the setting makes the image lighter; decreasing it makes the image darker.

Display	Description	Setting range	Initial setting
C	Toner replenishment level for cyan	0 to 900	512
M	Toner replenishment level for magenta	0 to 900	512
Y	Toner replenishment level for yellow	0 to 900	512
K	Toner replenishment level for black	0 to 900	512
B/W*	Toner replenishment level in black/white mode	0 to 900	512

*: 55 ppm model only.
3. Press the OK key. The value is set.

Method: [Empty]
1. Select the item to be set.
2. Change the setting value using the numeric keys.
   Increasing the setting makes ‘toner empty’ appear later and decreasing it makes ‘toner empty’ appear earlier.

Display	Description	Setting range	Initial setting
C	Toner empty level for cyan	0 to 1023	100
M	Toner empty level for magenta	0 to 1023	100
Y	Toner empty level for yellow	0 to 1023	100
K	Toner empty level for black	0 to 1023	100
B/W*	Toner empty level in black/white mode	0 to 1023	100

*: 55 ppm model only.
3. Press the OK key. The value is set.

Completion
Press the Back key. The screen for selecting a maintenance item No. is displayed.

Item No.	Description
U157	**Checking the developer drive time** **Description** Displays the developer drive time for checking a figure, which is used as a reference when correcting the toner control. **Purpose** To check the developer drive time after replacing the developer unit. **Method** 1. Press the OK key. The developer drive time is displayed. **Completion** Press the Back key. The screen for selecting a maintenance item No. is displayed.
U158	**Checking the developer count** **Description** Displays the developer count for checking. **Purpose** To check the developer unit status. **Method** 1. Press the OK key. The current developer counts is displayed. **Completion** Press the Back key. The screen for selecting a maintenance item No. is displayed.

Display	Description
C	Developer drive time for cyan
M	Developer drive time for magenta
Y	Developer drive time for yellow
K	Developer drive time for black

Display	Description
C	Developer count value for cyan
M	Developer count value for magenta
Y	Developer count value for yellow
K	Developer count value for black

Item No.	Description
U161	**Setting the fuser control temperature**

Description
Changes the fuser control temperature.
Purpose
Normally no change is necessary. However, can be used to prevent curling or creasing of paper, or solve a fuser problem on thick paper.

Method
1. Press the OK key.
2. Select the item to be set.

Display	Description
WarmUp	Control temperature except at printing
Print	Control temperature during printing
LowPower Mode	Heating power reduction control
Grain Mode	Setting the grain mode

Setting: [WarmUp]
1. Select the item to be set.
2. Change the setting value using the numeric keys.

Display	Description	Setting range	Initial setting	
			45ppm	55ppm
Ready (C)	Control temperature at displaying Ready (Center)	130 to 200 (°C)	165	170
Ready (E)	Control temperature at displaying Ready (Edge)	100 to 200 (°C)	140	145
Ready (P)	Control temperature at displaying Ready (Press)	0 to 200 (°C)	80	80
Drive (C)	Stable temperature during driving (Center)	130 to 200 (°C)	170	175
Wait (C)	Stable temperature during halt (Center)	130 to 200 (°C)	165	175
Low Power (P)	Control temperature at low power consumption (Press)	0 to 200 (°C)	150	150
F.S. Shift(C	Full speed shift temperature (Center)	0 to 200 (°C)	50	50
Pressure(P)	Pressurizing beginning temperature (Press)	0 to 200 (°C)	155	160

3. Press the OK key. The value is set.

Item No.	Description
U161	**Setting: [Print]** 1. Select the item to be set. 2. Change the setting value using the numeric keys.

Display	Description	Setting range	Initial setting	
			45ppm	55ppm
F.S.Print(C)	Temperature at maximum print speed (Center)	130 to 200 (°C)	170	175
Dup Shift(C)	Temperature at duplex printing (Center)	-20 to 20 (°C)	5	5

3. Press the OK key. The value is set.

Setting: [LowPower Mode]

1. Select the item to be set.

Display	Description
Mode0	Not used normally (use when a fusing problem has occurred at continuous printing in mode 1, however, use caution that mode 0, when used continously, can deteriorate the durability of the fuser rollers).
Mode1	Fuser control temperature reduction mode (For normal users)
Mode2	Large volume output mode (For users who repeatedly print approximately 1500 sheets at a time)

Initial setting: Mode1

2. Press the OK key. The setting is set.

Setting: [Grain Mode]

1. Select the item to be set.

Display	Description
Mode0	Existing level (No special treatment)
Mode1	Setting the grain mode
Mode2	More improvements

Initial setting: Mode0

Press the OK key. The setting is set.

Completion

Press the Back key. The screen for selecting a maintenance item No. is displayed.

Item No.	Description
U167	**Checking/clearing the fuser count** **Description** Displays and clears the fuser count for checking. **Purpose** To check the fuser count or drive time after replacement of the fuser unit. Also to clear the counts after replacing unit. **Method** 1. Press the OK key. The fuser count is displayed. Display / Description: Cnt — Fuser unit count value Release — Fuser unit drive time (release) Press — Fuser unit drive time (press) Clear — Clear the fuser unit count valueis **Clearing** 1. Select the [Clear]. 2. Press the OK key. The count is cleared. **Completion** Press the Back key. The screen for selecting a maintenance item No. is displayed.
U169	**Checking/setting the fuser power source** **Description** Displays and settings the reference voltage of the fuser IH PWB. **Purpose** To check the reference voltage. When performing U021, use the same voltage as for the IH control PWB. **Method** 1. Press the OK key. 2. Select the mode. Display / Description / Setting range: Mode — Reference voltage — 1 to 4 1: 100 V specifications 2: 200 V specifications 3: 120 V specifications 4: 110 V specifications 3. Press the OK key. The setting is set. **Completion** Press the Back key. The screen for selecting a maintenance item No. is displayed.

<table>
<tr><th>Item No.</th><th>Description</th></tr>
<tr><td>U199</td><td>

Displaying fuser heater temperature

Description
Displays the detected fuser temperature.
Purpose
To check the fuser temperature.

Method
1. Press the OK key. The fuser temperature is displayed.

<table>
<tr><th>Display</th><th>Description</th></tr>
<tr><td>Heat Edge1</td><td>Heat roller edge temperature (°C)</td></tr>
<tr><td>Heat Edge2</td><td>Heat roller edge temperature (°C)</td></tr>
<tr><td>Heat Center</td><td>Heat roller center temperature (°C)</td></tr>
<tr><td>Press Center</td><td>Press roller center temperature (°C)</td></tr>
</table>

Completion
Press the Back key. The screen for selecting a maintenance mode No. is displayed.

</td></tr>
<tr><td>U207</td><td>

Checking the operation panel keys

Description
Checks operation of the operation panel keys.
Purpose
To check operation of all the keys and LEDs on the operation panel.

Method
1. Press the OK key.

Completion
Press the Back key. The screen for selecting a maintenance item No. is displayed.

</td></tr>
</table>

Item No.	Description
U208	**Setting the paper size for the side deck** **Description** Sets the size of paper used in side deck. **Purpose** To change the setting when installing the side deck or the size of paper used in the side deck is changed. **Setting** 1. Press the OK key. 2. Select the paper size (A4, B5 or Letter). Initial setting: Letter (Inch specifications) A4 (Metric specifications) 3. Press the OK key. The setting is set. 4. Exit the maintenance mode, perform shut-down, and turn the main power switch to off and on again. Allow more than 5 seconds between Off and On.
U211	**Setting the presence or absence of the job separator** **Description** Sets the presence or absence of the inner job separator. **Purpose** To run this maintenance item if the inner job separator is installed. **Method** 1. Press the OK key. 2. Select [Inner Job Separator]. 3. Select On or Off. Display: On — Description: The inner job separator is installed Display: Off — Description: The inner job separator is not installed Initial setting: Off 4. Press the OK key. The setting is set. 5. Exit the maintenance mode, perform shut-down, and turn the main power switch to off and on again. Allow more than 5 seconds between Off and On.

Item No.	Description
U221	**Setting the USB host lock function** **Description** Specifies ON/OFF the USB host lock function. Setting this to ON causes the machine to be unable to recognize the device connected to the USB host. **Purpose** Set according to the preference of the user. **Method** 1. Press the OK key. 2. Select [Host Lock]. 3. Select On or Off. Display / Description: On — USB host lock function ON Off — USB host lock function OFF Initial setting: Off 4. Press the OK key. The setting is set. 5. Exit the maintenance mode, perform shut-down, and turn the main power switch to off and on again. Allow more than 5 seconds between Off and On.
U223	**Operation panel lock** **Description** Sets the operation panel lock function. **Purpose** This is performed to inhibit operating and canceling the menu on the operation panel which may be done by others then an administrator. **Setting** 1. Press the OK key. 2. Select the item. Display / Description: Unlock — Release the lock of the operation from the menu Partial Lock — Lock the operation from the menu Lock — Lock the operation from the menu and job cancel Initial setting: Unlock 3. Press the OK key. The setting is set. Item / Partial Lock / Lock: Entering menu — Prohibited — Prohibited Pressing Back key — Permitted — Prohibited **Completion** Press the Back key. The screen for selecting a maintenance item No. is displayed.

Item No.	Description
U234	**Setting punch destination** **Description** Sets the destination of punch unit of 1000-sheet finisher or 4000-sheet finisher. **Purpose** To be set when installing a different punch unit from the destination of the machine. **Setting** 1. Press the OK key. 2. Select the destination. Initial setting: Inch (Inch specifications)/Europe Metric (Metric specifications) 3. Press the OK key. The setting is set. 4. Exit the maintenance mode, perform shut-down, and turn the main power switch to off and on again. Allow more than 5 seconds between Off and On.

Display	Description
Auto	Conforms to destination settings.
Japan Metric	Metric (Japan) specifications
Inch	Inch (North America) specifications
Europe Metric	Metric (Europe) specifications

Item No.	Description
U237	**Setting finisher stack quantity** **Description** Sets the number of sheets of each stack on the main tray and on the middle tray in 4000-sheet finisher. **Purpose** To change the setting when a stack malfunction has occurred. **Method** 1. Press the OK key. 2. Select the item to be set. **Display** / **Description** Main Tray — Number of sheets of stack on the main tray Middle Tray — Number of sheets of stack on the middle tray for staple mode **Setting: [Main Tray]** 1. Change the setting using the numeric keys. **Display** / **Description** 0 — Number of sheets of stack on the main tray: 4000 sheets 1 — Number of sheets of stack on the main tray: 2000 sheets Initial setting: 0 2. Press the OK key. The setting is set. 3. Exit the maintenance mode, perform shut-down, and turn the main power switch to off and on again. Allow more than 5 seconds between Off and On. **Setting: [Middle Tray]** 1. Change the setting using the numeric keys. **Display** / **Description** 0 — Number of sheets of stack on the middle tray for staple mode: 65 sheets 1 — Number of sheets of stack on the middle tray for staple mode: 30 sheets Initial setting: 0 Number of sheets of stack on the internal tray for non-staple printing: 10 sheets 2. Press the OK key. The setting is set. 3. Exit the maintenance mode, perform shut-down, and turn the main power switch to off and on again. Allow more than 5 seconds between Off and On.

Item No.	Description
U240	**Checking the operation of the finisher**

Description
Turns each motor and solenoid of 1000-sheet finisher or 4000-sheet finisher ON.
Purpose
To check the operation of each motor and solenoid of the 1000-sheet finisher or 4000-sheet finisher.

Method
1. Press the OK key.
2. Select the item to be checked.
3. Press the OK key.

Display	Description
Motor	Checking the motor of the document finisher
Solenoid	Checking the solenoid of the document finisher
Mail Box	Checking the motor of the mailbox
Top Mail Box	Checking the motor of the top mailbox
Booklet	Checking the motor of the center-folding unit

Method: [Motor]
1. Select the item to be operated.
2. Press the OK key. The operation starts.

Display	Description
Feed In(H)	DF paper entry motor (DFPEM) is turned on at high speed
Feed In(L)	DF paper entry motor (DFPEM) is turned on at low speed
Middle(H)	DF middle motor (DFMM) is turned on at high speed
Middle(L)	DF middle motor (DFMM) is turned on at low speed
Eject(H)	DF eject motor (DFEM) is turned on at high speed
Eject(L)	DF eject motor (DFEM) is turned on at low speed
Save(H)	DF drum motor (DFDRM) is turned on at high speed
Save(L)	DF drum motor (DFDRM) is turned on at low speed
Tray	DF tray motor (DFTM) is turned on
Staple Move	DF slide motor (DFSLM) is turned on
Staple	DF staple motor (DFSTM) is turned on
Width Test(A3)	DF side registration motor 1, 2 (DFSRM1, 2) is turned on
Width Test(LD)	DF side registration motor 1, 2 (DFSRM1, 2) is turned on
Beat	DF paddle motor (DFPDM) is turned on
Eject Unlock(HP)	DF eject release motor (DFERM) is turned on to home position
Sort Test	DF shift motor 1, 2 (DFSFM1, 2) is turned on
EjectUnlock(30)	DF eject release motor (DFERM) drive position 30-sheet stack
EjectUnlock(50)	DF eject release motor (DFERM) drive position 50-sheet stack

Item No.	Description
U240	

Display	Description
EjectUnlock(Fix)	DF eject release motor (DFERM) fixed drive position
EjectUnlock(Full)	DF eject release motor (DFERM) full-open drive position
Punch	Punch motor (PUM) is turned on
Punch Move	Punch slide motor (PUSLM) is turned on

Method: [Solenoid]

1. Select the item to be operated.
2. Press the OK key. The operation starts.

Display	Description
Sub Tray	DF feedshift solenoid (DFFSSOL) is turned on
Save Drum	DF drum solenoid (DFDRSOL) is turned on
Booklet	DF center fold solenoid (DFCFSOL) is turned on
Punch	Punch solenoid (PUSOL) is turned on
Three Fold	CF feedshift solenoid (CFFSSOL) is turned on

Method: [Mail Box/Top Mail Box]

1. Select the item to be operated.
2. Press the OK key. The operation starts.

Display	Description
Conv	MB drive motor (MBDM) is turned on at paper conveying
Branch	MB drive motor (MBDM) is turned on at feedshift operation

Method: [Booklet]

1. Select the item to be operated.
2. Press the OK key. The operation starts.

Display	Description
Folding	CF main motor (CFMM) is turned on
Blade	CF blade motor (CFBM) is turned on
Bundle Up	CF adjustment motor 2 (CFADM2) is turned on
Bundle Down	CF adjustment motor 1 (CFADM1) is turned on
Staple	CF staple motor (CFSTM) is turned on
Width Test(A3)	CF side registration motor 1, 2 (CFSRM1, 2) is turned on
Width Test(LD)	CF side registration motor 1, 2 (CFSRM1, 2) is turned on
Feed In	CF paper entry motor (CFPEM) is turned on

Completion

Press the Back key. The screen for selecting a maintenance item No. is displayed.

Item No.	Description
U241	**Checking the operation of the switches of the finisher**

Description
Displays the status of each switches and sensors of 1000-sheet finisher or 4000-sheet finisher.
Purpose
To check the operation of each switches and sensors of the 1000-sheet finisher or 4000-sheet finisher.

Method
1. Press the OK key.
2. Select the item to be checked.
3. Press the OK key

Display	Description
Finisher	Checking the switch and sensor of the document finisher
Mail Box	Checking the switch and sensor of the mailbox
Booklet	Checking the switch and sensor of the center-folding unit
Top Mail Box	Checking the motor of the top mailbox
Punch	Checking the switch and sensor of the punch unit

Method: [Finisher]
1. Turn each switch or sensor on and off manually to check the status.
   When a switch/sensor is detected to be in the ON position, the display for that switch/sensor will be “1”.

Display		Description
Switch 1	0 0 0 0 0 0 0	
	1	First digit: DF front cover switch (DFFCSW)
	1	Second digit: DF eject cover switch (DFECSW)*1
	1	Third digit: DF top cover switch (DFTCSW)*2
	1	Fourth digit: DF tray sensor 1 (DFTS1)
	1	Fifth: DF tray sensor 2 (DFTS2)*1
	1	Sixth: DF tray sensor 3 (DFTS3)
	1	Seventh: DF tray sensor 4 (DFTS4)
Switch 2	0 0 0 0 0 0 0	
	1	First digit: DF tray sensor 5 (DFTS5)*1
	1	Second digit: DF tray upper surface sensor (DFTUSS)
	1	Third digit: DF paper entry sensor (DFPES)
	1	Fourth digit: DF sub eject sensor (DFSES)*1
	1	Fifth: DF middle eject sensor (DFMES)
	1	Sixth: DF drum sensor (DFDRS)*1
	1	Seventh: DF slide sensor (DFSLS)

Item No.	Description
U241	

Display		Description
Switch 3	0 0 0 0 0 0 0	
	1	First digit: DF middle tray sensor (DFMTS)
	1	Second digit: DF side registration sensor 1 (DFSRS1)
	1	Third digit: DF side registration sensor 2 (DFSRS2)
	1	Fourth digit: DF bundle discharge sensor (DFBDS)*1
	1	Fifth: DF adjustment sensor (DFADS)
	1	Sixth: DF paddle sensor (DFPDS)*1
	1	Seventh: DF shift sensor 1 (DFSFS1)
Switch 4	0 0 0 0 0 0 0	
	1	First digit: DF shift sensor 2 (DFSFS2)
	1	Second digit: DF shift release sensor (DFSFRS)
	1	Third digit: DF sub tray full sensor (DFSTFS)
	1	Fourth digit: DF shift set sensor (DFSFSS)

* : *1: 4000-sheet finisher only. *2: 1000-sheet finisher only.

Method: [Mail Box]

1. Turn each switch or sensor on and off manually to check the status.
   When a switch/sensor is detected to be in the ON position, the display for that switch/sensor will be “1”.

Display		Description
Switch 1	0 0 0 0 0 0 0	
	1	First digit: MB eject sensor (MBES)
	1	Second digit: MB cover open/close switch (MBCOCSW)
	1	Third digit: MB overflow sensor 1 (MBOFS1)
	1	Fourth digit: MB overflow sensor 2 (MBOFS2)
	1	Fifth: MB overflow sensor 3 (MBOFS3)
	1	Sixth: MB overflow sensor 4 (MBOFS4)
	1	Seventh: MB overflow sensor 5 (MBOFS5)
Switch 2	0 0 0 0 0 0 0	
	1	First digit: MB overflow sensor 6 (MBOFS6)
	1	Second digit: MB overflow sensor 7 (MBOFS7)
	1	Third digit: MB paper entry sensor (MBPES)

Item No.	Description
U241	**Method: [Booklet]** 1. Turn each switch or sensor on and off manually to check the status. When a switch/sensor is detected to be in the ON position, the display for that switch/sensor will be “1”.

Display		Description
Switch 1	0 0 0 0 0 0 0	
	1	First digit: CF paper entry sensor (CFPES)
	1	Second digit: CF eject sensor (CFES)
	1	Third digit: CF paper sensor (CFPS)
	1	Fourth digit: CF tray full sensor (CFTFS)
	1	Fifth: CF adjustment sensor 1 (CFADS1)
	1	Sixth: CF adjustment sensor 2 (CFADS2)
	1	Seventh: CF side registration sensor 1 (CFSRS1)
Switch 2	0 0 0 0 0 0 0	
	1	First digit: CF side registration sensor 2 (CFSRS2)
	1	Second digit: CF blade sensor (CFBLS)
	1	Third digit: CF tray switch (CFTSW)
	1	Fourth digit: CF set switch (CFSSW)
	1	Fifth: CF left guide switch (CFLGSW)
	1	Sixth: CF paper conveying sensor (CFPCS)
	1	Seventh: CF side registration sensor 2 (CFSRS2)

Method: [Punch]

1. Turn each switch or sensor on and off manually to check the status.
When a switch/sensor is detected to be in the ON position, the display for that switch/sensor will be “1”.

Display		Description
Switch 1	0 0 0 0 0 0 0	
	1	First digit: Punch home position sensor (PUHPS)
	1	Second digit: Punch paper edge sensor (PUPES)
	1	Third digit: Punch paper edge sensor (PUPES)
	1	Fourth digit: Punch paper edge sensor (PUPES)
	1	Fifth: Punch paper edge sensor (PUPES)
	1	Sixth: Punch tank set switch (PUTSSW)
	1	Seventh: Punch tank full sensor (PUTFS)

Completion

Press the Back key. The screen for selecting a maintenance item No. is displayed.

Item No.	Description
U246	**Setting the finisher**

Description

Provides various settings for the 1000-sheet finisher or 4000-sheet finisher, if furnished.

Purpose

1. **Adjustment of registration stop timing in punch mode**
   Adjust if skewed paper conveying occurs or if the print paper is Z-folded in punch mode.
2. **Adjustment of paper stop timing in the punch mode**
   To adjust this item when the position of a punch hole is different from the specified one.
3. **Adjustment of center position timing in the punch mode**
   Adjusts the center position of a punch hole in punch mode if the position is not proper.
4. **Adjustment of front/rear side registration home position**
   Provides optimization when paper jam occurs due to an inferior fitting of the side registration guides to paper.
5. **Adjustment of front/rear shift home position**
   Performed when adjustment is lost with the ejected paper
6. **Adjusting of front/back stapling home position**
   Adjusts the stapling position in the staple mode if the position is not proper.
7. **Adjustment of upper/lower side registration home position**
   Provides optimization when paper jam occurs due to an inferior fitting of the side registration guides to paper.
8. **Adjustment of booklet stapling position**
   Adjusts the booklet stapling position in the stitching mode if the position is not proper.
9. **Adjustment of center folding position**
   Adjusts the center folding position in the stitching mode if the position is not proper.
10. **Adjustment of tri- folding position**
    Adjusts the tri-folding position in the stitching mode if the position is not proper.

Method

1. Press the OK key.
2. Select the item to set.
3. Press the OK key.

Display	Description
Finisher	Adjustment of 1000-sheet finisher and 4000-sheet finisher
Booklet	Adjustment of center-folding unit

Method: [Finisher]

1. Select the item to set.

Display	Description
Punch Regist	1.Adjustment of registration stop timing in punch mode
Punch Feed	2.Adjustment of the paper stop timing in punch mode
Punch Width	3.Adjustment of the center position timing in punch mode
WidthFront HP	4.Adjustment of front side registration home position
WidthTail HP	4.Adjustment of rear side registration home position
ShiftFront HP	5.Adjustment of front shift home position
ShiftTail HP	5.Adjustment of rear shift home position
Staple HP	6.Adjustment of front and back stapling home position

Item No.	Description
U246	

Setting: [Punch Regist]

1. Select [Punch Regist].
2. Change the setting value using the numeric keys.

Description	Setting range	Initial setting	Change in value per step
Adjustment of registration stop timing	-20 to 20	0	0.25 mm

If skewed paper conveying occurs (sample 1), increase the setting value. If the print paper is Z-folded (sample 2), decrease the setting value.

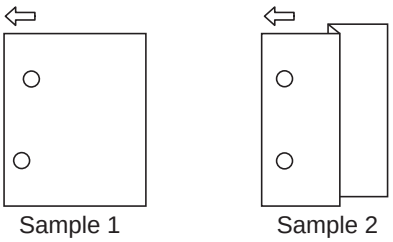

Figure 1-3-7

3. Press the OK key. The value is set.

Setting: [Punch Feed]

1. Select [Punch Feed].
2. Change the setting value using the numeric keys.

Description	Setting range	Initial setting	Change in value per step
Adjustment of the paper stop timing	-10 to 10	0	0.52 mm

If the distance of the position of a punch hole is smaller than the specified value A, increase the setting value. If the distance is larger than the value A, decrease the setting value.

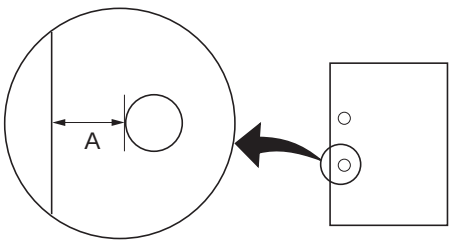

Preset value A: 13 mm (metric)
9.5 mm (inch)

Figure 1-3-8

3. Press the OK key. The value is set.

Item No.	Description
U246	

Setting: [Punch Width]

1. Select [Punch Width].
2. Change the setting value using the numeric keys.

Description	Setting range	Initial setting	Change in value per step
Adjustment of the punch center position timing	-4 to 4	0	0.52 mm

If the punch hole is too close to the front of the machine, increase the setting value. If the punch hole is too close to the rear of the machine, decrease the setting value.

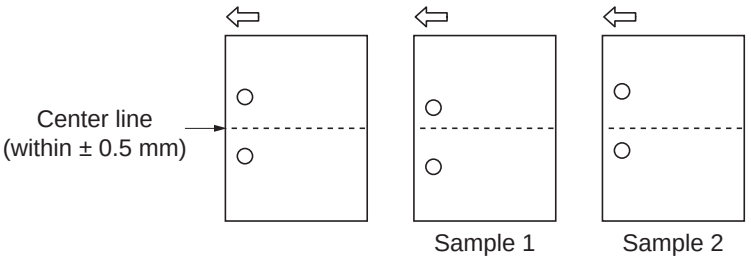

Figure 1-3-9

3. Press the OK key. The value is set.

Setting: [WidthFront HP/WidthTail HP]

1. Select [Width Front HP] or [Width Tail HP].
2. Change the setting value using the numeric keys.

Description	Setting range	Initial setting	Change in value per step
Adjustment of front side registration home position	-15 to 15	0	0.19 mm
Adjustment of rear side registration home position	-15 to 15	0	0.19 mm

3. Press the OK key. The value is set.
4. Press the Back key. The screen for selecting a maintenance item No. is displayed.
5. Enter maintenance mode U240 and select [Motor], then [Width Test(A3)].
   The width guides of the middle tray will move to A3-size position.
6. Pull the middle tray, insert paper between the guides and check that paper is abut the guides.
7. Repeat the above adjustment until paper is properly in position.

Setting: [ShiftFront HP/ShiftTail HP]

1. Select [Shift Front HP] or [Shift Tail HP].
2. Change the setting value using the numeric keys.

Description	Setting range	Initial setting	Change in value per step
Adjustment of front shift home position	-15 to 15	0	0.19 mm
Adjustment of rear shift home position	-15 to 15	0	0.19 mm

3. Press the OK key. The value is set.
4. Press the Back key. The screen for selecting a maintenance item No. is displayed.
5. Enter maintenance mode U240 and select [Motor], then [Sort Test].
6. Repeat the above adjustment until eject paper is properly in position.

Item No.	Description
U246	

Setting: [Staple HP]

1. Select [Staple HP].
2. Change the setting value using the numeric keys.

Description	Setting range	Initial setting	Change in value per step
Adjustment of front and back stapling home position	-15 to 15	0	0.19 mm

When staple positions are off toward the front side of the machine (sample 1), increase the setting value. When staple positions are off toward the rear side of the machine (sample 2), decrease the setting value.

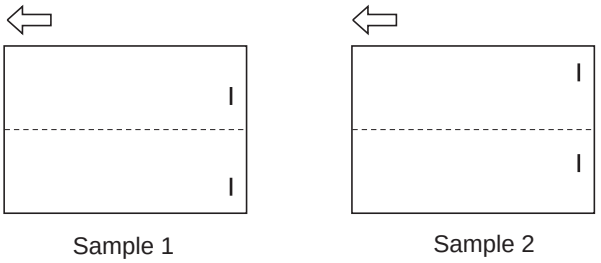

Figure 1-3-10

3. Press the OK key. The value is set.

Method: [Booklet]

1. Select the item to set.

Display	Description
WidthUp HP	7.Adjustment of upper side registration home position
WidthDown HP	7.Adjustment of lower side registration home position
Staple Pos1	8.Adjustment of booklet stapling position for A4/Letter size
Staple Pos2	8.Adjustment of booklet stapling position for B4/Legal size
Staple Pos3	8.Adjustment of booklet stapling position for A3/Ledger/8K size
Booklet Pos1	9.Adjustment of center folding position for A4/Letter size
Booklet Pos2	9.Adjustment of center folding position for B4/Legal size
Booklet Pos3	9.Adjustment of center folding position for A3/Ledger/8K size
Three Fold	10.Adjustment of tri-folding position

Item No.	Description
U246	

Setting: [WidthUp HP/WidthDown HP]

1. Select [Width Up HP] or [Width Down HP].
2. Change the setting value using the numeric keys.

Description	Setting range	Initial setting	Change in value per step
Adjustment of upper side registration home position	-15 to 15	0	0.34 mm
Adjustment of lower side registration home position	-15 to 15	0	0.34 mm

3. Press the OK key. The value is set.
4. Press the Back key. The screen for selecting a maintenance item No. is displayed.
5. Enter maintenance mode U240 and select [Booklet], then [Width Test(A3)].
   The width guides of the center-folding unit will move to A3-size position.
6. Pull the center-folding unit, insert paper between the guides and check that paper is abut the guides.
7. Repeat the above adjustment until paper is properly in position.

Setting: [Staple Pos]

1. Select [Staple Pos1], [Staple Pos2] or [Staple Pos3].
2. Change the setting value using the numeric keys.

Description	Setting range	Initial setting	Change in value per step
Adjustment of booklet stapling position for A4/Letter size	-15 to 15	0	0.32 mm
Adjustment of booklet stapling position for B4/Legal size	-15 to 15	0	0.32 mm
Adjustment of booklet stapling position for A3/Ledger/8K size	-15 to 15	0	0.32 mm

When staples are placed too far right (sample 1), decrease the preset value. When staples are placed too far left (sample 2), increase the preset value.
Reference value: within ± 2 mm

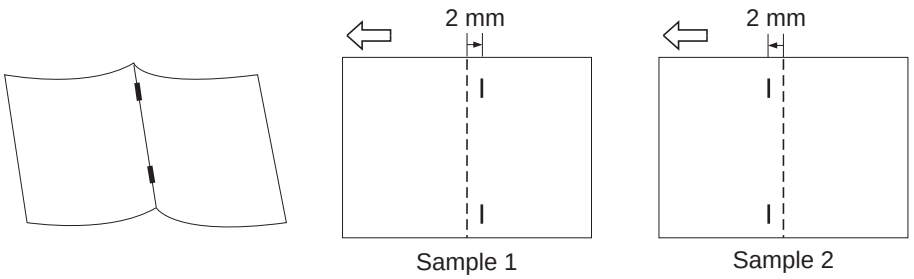

Figure 1-3-11

3. Press the OK key. The value is set.

Item No.	Description
U246	

Setting: [Booklet Pos]

1. Select [Booklet Pos1], [Booklet Pos2] or [Booklet Pos3].
2. Change the setting value using the numeric keys.

Description	Setting range	Initial setting	Change in value per step
Adjustment of center folding position for A4/Letter size	-15 to 15	0	0.32 mm
Adjustment of center folding position for B4/Legal size	-15 to 15	0	0.32 mm
Adjustment of center folding position for A3/Ledger/ 8K size	-15 to 15	0	0.32 mm

When the centerfold position too far right (sample 1), increase the preset value. When the centerfold position too far left (sample 2), decrease the setting value.
Reference value A: A4, Letter: Length of paper × 1/2 ± 2 mm
A3, Ledger, B4: Length of paper × 1/2 ± 3 mm

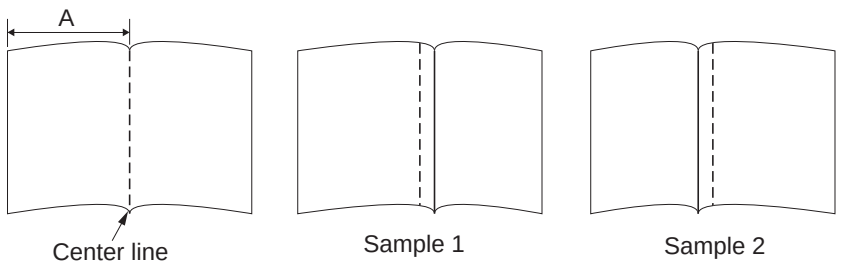

Figure 1-3-12

3. Press the OK key. The value is set.

Setting: [Three Fold]

1. Select [Three Fold].
2. Change the setting value using the numeric keys.

Description	Setting range	Initial setting	Change in value per step
Adjustment of tri-folding position	-15 to 15	0	0.32 mm

When the tri-fold position too far right (sample 1), increase the preset value. When the tri-fold position too far left (sample 2), decrease the setting value.
Reference value A: 7.0 ± 2 mm

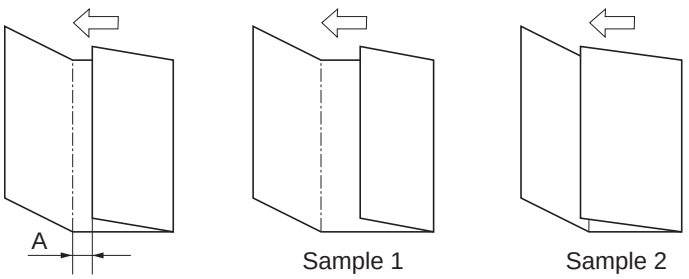

Figure 1-3-13

3. Press the OK key. The value is set.

Completion

Press the Back key. The screen for selecting a maintenance item No. is displayed.

Item No.	Description
U247	**Setting the paper feed device**

Description
Turns on motor and clutches of paper feeder device.
Purpose
To check the operation of motor and clutches of paper feed device.

Method
1. Press the OK key.
2. Select the paper feed device.

Display	Description
2PF	Paper feeder
LCF	Large capacity feeder
Side Deck	Side deck
SMT	Side multi tray
Side 2PF	Side paper feeder
Side LCF	Side large capacity feeder

Method: [2PF/Side 2PF]
1. Press the OK key.
2. Select [Motor] or [Device].
3. Select the item to be operated using the Left/Right Select keys.

Display		Description
Motor	Off	PF paper feed motor (PFPFM) is turned off
	On	PF paper feed motor (PFPFM) is turned on
Device	C1 Clutch	PF paper feed clutch 1 (PFPFCL1) is turned on
	C2 Clutch	PF paper feed clutch 2 (PFPFCL2) is turned on
	V Feed(H) Clutch	PF paper conveying clutch 1 (PFPCCL1) is turned on
	V Feed(L) Clutch	PF paper conveying clutch 2 (PFPCCL2) is turned on
Execute		Executing the action

4. Select [Execute].
5. Press the OK key. The operation starts.
6. To stop operation, press the Back key.

Item No.	Description
U247	**Method: [LCF/Side LCF]** 1. Press the OK key. 2. Select [Motor] or [Device]. 1. Select the item to be operated using the Left/Right Select keys

Display		Description
Motor	Off	PF paper feed motor (PFPFM) is turned off
	On	PF paper feed motor (PFPFM) is turned on
Device	C1	PF paper conveying clutch 1 (PFPCCL1) is turned on
	C2	PF paper conveying clutch 2 (PFPCCL2) is turned on
	VFeed	PF paper conveying clutch 3 (PFPCCL3) is turned on
	H Feed1	PF paper feed clutch 1 (PFPFCL1) is turned on
	H Feed2	PF paper feed clutch 2 (PFPFCL2) is turned on
Execute		Executing the action

2. Select [Execute].
3. Press the OK key. The operation starts.
4. To stop operation, press the Back key.

Method: [Side Deck]

1. Press [Motor] or [Device] and select the item.

Display		Description
Motor	Off	SF paper feed motor (SFPFM) is turned off
	On	SF paper feed motor (SFPFM) is turned on
Device	C1	SD paper feed clutch (SDPFCL) is turned on
	Cass1	SD paper feed solenoid (SDPFSOL) is turned on
Execute		Executing the action

2. Select [Execute].
3. Press the OK key. The operation starts.
4. To stop operation, press the Back key.

<table>
<tr><th>Item No.</th><th>Description</th></tr>
<tr><td>U247</td><td>

Method: [SMT]

1. Press the OK key.
2. Select [Motor] or [Device].
1. Select the item to be operated using the Left/Right Select keys

<table>
<tr><th colspan="2">Display</th><th>Description</th></tr>
<tr><td>Motor</td><td>Off</td><td>SM paper feed motor (SMPFM) is turned off</td></tr>
<tr><td></td><td>On</td><td>SM paper feed motor (SMPFM) is turned on</td></tr>
<tr><td>Device</td><td>C1</td><td>SM paper feed clutch (SMPFCL) is turned on</td></tr>
<tr><td></td><td>Feed1</td><td>SMT paper conveying clutch 1 (SMPCCL1) is turned on</td></tr>
<tr><td></td><td>Feed2</td><td>SMT paper conveying clutch 2 (SMPCCL2) is turned on</td></tr>
<tr><td></td><td>Feed3</td><td>SMT paper conveying clutch 3 (SMPCCL3) is turned on</td></tr>
<tr><td></td><td>Sepa</td><td>SM feedshift solenoid (SMFSSOL) is turned on</td></tr>
<tr><td colspan="2">Execute</td><td>Executing the action</td></tr>
</table>

2. Select [Execute].
3. Press the OK key. The operation starts.

To stop operation, press the Back key.

Completion

Press the Back key. The screen for selecting a maintenance item No. is displayed.

</td></tr>
<tr><td>U250</td><td>

Checking/clearing the maintenance cycle

Description

Changes preset values for maintenance cycle.

Purpose

Provides changing the time when the message to acknowledge to conduct maintenance is periodically displayed.

Setting

1. Press the OK key.
2. Select the item to be set.
3. Change the setting using the Left/Right Select keys or numeric keys.

<table>
<tr><th>Display</th><th>Description</th><th>Setting range</th><th>Initial setting</th></tr>
<tr><td>M.Cnt A</td><td>Preset values for maintenance cycle (kit A)</td><td>0 to 9999999</td><td>600000</td></tr>
<tr><td>M.Cnt B</td><td>Preset values for maintenance cycle (kit B)</td><td>0 to 9999999</td><td>600000</td></tr>
<tr><td>M.Cnt C</td><td>Preset values for maintenance cycle (kit C)</td><td>0 to 9999999</td><td>300000</td></tr>
<tr><td>Cass1</td><td>Maintenance counter cassette1</td><td>0 to 9999999</td><td>150000</td></tr>
<tr><td>Cass2</td><td>Maintenance counter cassette2</td><td>0 to 9999999</td><td>150000</td></tr>
<tr><td>Cass3</td><td>Maintenance counter cassette3</td><td>0 to 9999999</td><td>150000</td></tr>
<tr><td>Cass4</td><td>Maintenance counter cassette4</td><td>0 to 9999999</td><td>150000</td></tr>
<tr><td>Cass5</td><td>Maintenance counter cassette5</td><td>0 to 9999999</td><td>150000</td></tr>
<tr><td>Cass6</td><td>Maintenance counter cassette6</td><td>0 to 9999999</td><td>150000</td></tr>
<tr><td>Cass7</td><td>Maintenance counter cassette7</td><td>0 to 9999999</td><td>150000</td></tr>
</table>

</td></tr>
</table>

Item No.	Description
U250	4. Press the OK key. The value is set. **Completion** Press the Back key. The screen for selecting a maintenance item No. is displayed. * : When the firmware is upgraded in the field, the standard counter value newly added should be set to 150000.
U251	**Checking/clearing the maintenance counter** **Description** Displays and clears or changes the maintenance count. **Purpose** To verify the maintenance counter count. Also to clear the count during maintenance service. **Setting** 1. Press the OK key. 2. Select the item to be changed. 3. Change the setting using the numeric keys.

Display	Description	Setting range	Initial setting
M.Cnt A	Count value for maintenance cycle (kit A)	0 to 9999999	0
M.Cnt B	Count value for maintenance cycle (kit B)	0 to 9999999	0
M.Cnt C	Count value for maintenance cycle (kit C)	0 to 9999999	0
Cass1	Maintenance counter cassette1	0 to 9999999	0
Cass2	Maintenance counter cassette2	0 to 9999999	0
Cass3	Maintenance counter cassette3	0 to 9999999	0
Cass4	Maintenance counter cassette4	0 to 9999999	0
Cass5	Maintenance counter cassette5	0 to 9999999	0
Cass6	Maintenance counter cassette6	0 to 9999999	0
Cass7	Maintenance counter cassette7	0 to 9999999	0
Clear	Maintenance counter all clear	0 to 9999999	0

4. Press the OK key. The value is set.

Clearing
1. Select [Clear].
2. Press the OK key. The setting value is cleared.

Completion
Press the Back key. The screen for selecting a maintenance item No. is displayed.

* : When the firmware is upgraded in the field, input the counter value of U901 into the primary feed counter.
If the counter value is larger than 150000, replace the primary feed roller and input "0".

Item No.	Description
U252	**Setting the destination** **Description** Switches the operations and screens of the machine according to the destination. **Purpose** To be executed after initializing the backup RAM, in order to return the setting to the value before replacement or initialization. **Method** 1. Press the OK key. 2. Select the destination. Display / Description: Japan Metric — Metric (Japan) specifications Inch — Inch (North America) specifications Europe Metric — Metric (Europe) specifications Asia Pacific — Metric (Asia Pacific) specifications Australia — Australia specifications China — China specifications Korea — Korea specifications 3. Press the OK key. 4. Exit the maintenance mode, perform shut-down, and turn the main power switch to off and on again. Allow more than 5 seconds between Off and On. * : An error code is displayed in case of an initialization error. When errors occurred, turn main power switch off then on, and execute initialization using maintenance item U252.

Item No.	Description
U253	**Switching between double and single counts** **Description** Switches the count system for the total counter and other counters for every color mode. **Purpose** Used to select, according to the preference of the user, if A3/Ledger paper is to be counted as one sheet (single count) or two sheets (double count). **Setting** 1. Press the OK key. 2. Select the item to set. 3. Press the OK key. Display: Full Color — Description: Count system of full color mode Display: B/W — Description: Count system of black/white mode 4. Select the count system. Display: SGL(All) — Description: Single count for all size paper Display: DBL(A3/Ledger) — Description: Double count for A3/Ledger size or larger Display: DBL(B4) — Description: Double count for B4 size or larger Display: DBL(Folio) — Description: Double count for Folio size or larger Initial setting: DBL(A3/Ledger) 5. Press the OK key. The setting is set. **Completion** Press the Back key. The screen for selecting a maintenance item No. is displayed.

Item No.	Description
U260	**Selecting the timing for print counting** **Description** Changes the print count timing for the total counter and other counters. **Purpose** To be set according to user request. **Setting** 1. Press the OK key. 2. Select the print count timing. Display / Description Feed / When secondary paper feed starts Eject / When the paper is ejected Initial setting: Eject 3. Press the OK key. The setting is set. **Completion** Press the Back key. The screen for selecting a maintenance item No. is displayed.
U265	**Setting OEM purchaser code** **Description** Sets the OEM purchaser code. **Purpose** Sets the code when replacing the main PWB and the like. **Setting** 1. Press the OK key. 2. Change the setting value using the numeric keys. 3. Press the OK key. The setting is set. 4. Exit the maintenance mode, perform shut-down, and turn the main power switch to off and on again. Allow more than 5 seconds between Off and On.

<table>
<tr><th>Item No.</th><th>Description</th></tr>
<tr><td>U271</td><td>

Setting the page count

Description
Banner counting
Purpose
To change when modifying counting Banner

Setting
1. Press the OK key.
2. Select the item.
3. Change the setting value using the numeric keys.

<table>
<tr><th>Display</th><th>Description</th><th>Setting range</th><th>Initial setting</th></tr>
<tr><td>Banner A</td><td>Counting for Banner A (470.1mm to 915mm/18.51” to 36”)</td><td>2 to 30</td><td>2</td></tr>
<tr><td>Banner B</td><td>Counting for Banner B (915.1mm to 1,220mm/36.01” to 48”)</td><td>2 to 30</td><td>3</td></tr>
</table>

4. Press the OK key. The value is set.

Completion
Press the Back key. The screen for selecting a maintenance item No. is displayed.

</td></tr>
<tr><td>U278</td><td>

Setting the delivery date

Description
Enter delivery date in month, day, and year.
Purpose
To operate when installing the machine. Perform this to confirm the delivery date.

Method
1. Press the OK key.
2. Select [Today].
3. Press the OK key. The delivery date is set.

Setting
1. Press the OK key.
2. Select [Year], [Month] or [Day].
3. Change the setting using thenumeric keys.
4. Press the OK key. The setting is set.

Clearing
1. Select [Clear].
2. Press the OK key. The delivery date is cleared.

Completion
Press the Back key. The screen for selecting a maintenance item No. is displayed.

</td></tr>
</table>

<table>
<tr><th>Item No.</th><th>Description</th></tr>
<tr><td>U285</td><td>

Setting service status page

Description
Determines displaying the print coverage report on reporting.
Purpose
According to user request, changes the setting.

Setting
1. Press the OK key.
2. Select On or Off.

<table>
<tr><th>Display</th><th>Description</th></tr>
<tr><td>On</td><td>Displays the print coverage</td></tr>
<tr><td>Off</td><td>Not to display the print coverage</td></tr>
</table>

Initial setting: On
3. Press the OK key. The setting is set.

Completion
Press the Back key. The screen for selecting a maintenance item No. is displayed.

</td></tr>
<tr><td>U323</td><td>

Setting abnormal temperature and humidity warning

Description
Specify whether or not a notice is displayed on the operation panel when abnormal temperature and humidity is detected.
Purpose
According to user request, changes the setting.

Setting
1. Press the OK key.
2. Select On or Off.

<table>
<tr><th>Display</th><th>Description</th></tr>
<tr><td>On</td><td>Displays the abnormal temperature and humidity warning</td></tr>
<tr><td>Off</td><td>Not to display the abnormal temperature and humidity warning</td></tr>
</table>

Initial setting: On
3. Press the OK key. The setting is set.

Completion
Press the Back key. The screen for selecting a maintenance item No. is displayed.

</td></tr>
</table>

Item No.	Description
U325	**Setting the paper interval** **Description** Determines the interval between pages and the toner replenishment amount when printing pages with high print coverage. **Purpose** Modify the settings only if a spotted background or uneven density appears when printing pages with high print coverage. **Method** 1. Press the OK key. 2. Select the item to set. **Display** / **Description** Interval — Paper interval control ON/OFF setting Mode — Setting mode of the paper interval control **Setting: [Interval]** 1. Select On or Off. **Display** / **Description** On — Paper interval control is performed Off — Paper interval control is not performed Initial setting: Off 2. Press the OK key. The setting is set. **Setting: [Mode]** 1. Change the setting value using the numeric keys. **Display** / **Description** / **Setting range** / **Initial setting** Mode — Paper interval control mode — 1 to 10 — 1 **Completion** Press the Back key. The screen for selecting a maintenance item No. is displayed.

Item No.	Description
U327	**Setting the cassette heater control** **Description** Sets the cassette heater control. **Purpose** To change the setting according to the machine installation environment. **Setting** 1. Press the OK key. 2. Select On or Off. Initial setting: Off 3. Press the OK key. The setting is set. * : To finalize the setting values, exit the maintenance mode, perform shut-down from the normal display, and turn the main power switch off and on again. **Completion** Press the Back key. The screen for selecting a maintenance item No. is displayed.

Display	Description
Mode1	Set to On at 65% RH (during sleep mode or in ready state)
Mode2	Always on (during sleep mode or in ready state)
Off	Cassette heater OFF

Item No.	Description
U332	**Setting the size conversion factor** **Description** **Rate:** Sets the coefficient of nonstandard sizes in relation to the A4/Letter size. The coefficient set here is used to convert the black ratio in relation to the A4/Letter size and to print the service status page. **Mode:** Make settings on the color print coverage counter displays, as well as the coverage threshold. **Method** 1. Press the OK key. 2. Select the item to set.

Display	Description
Rate	Size coefficient
Mode	Toggling full-color count and color coverage count display
Level 1	Low coverage threshold value
Level 2	Middle coverage threshold value

Setting: [Rate]
Purpose: To set the coefficient for converting the black ratio for nonstandard sizes in relation to the A4/Letter size.
1. Change the setting using the numeric keys.

Display	Description	Setting range	Initial setting
Rate	Size coefficient	0.1 to 3.0	1.0

2. Press the OK key. The value is set.

Setting: [Mode]
Purpose: Make settings on the color print color/coverage counter displays.
1. Select the mode.

Display	Description
0	Full-color count display
1	Color coverage count display

Initial setting: 0
* : If ‘0’ has been changed to ‘1’, revert the U260 feed/eject counter switch to its initial state (Eject).
2. Press the OK key. The setting is set.

Setting: [Level 1/2]
Purpose: Make settings on the color print coverage threshold.
1. Select the item.
2. Change the setting using the numeric keys.

Display	Description	Setting range	Initial setting
Level 1	Low coverage threshold value	0.1 to 99.8	1.0
Level 2	Middle coverage threshold value	0.1 to 99.9	2.5

3. Press the OK key. The value is set.

Completion
Press the Back key. The screen for selecting a maintenance item No. is displayed.

Item No.	Description
U340	**Setting the applied mode**

Description
Allocates memory to ensure that there is sufficient memory available for the printer to use as a working area.
Purpose
Modify the memory allocation if insufficient memory for transparency support or XPS direct printing occurs.

Method
1. Press the OK key.
2. Select the item to set.

Display	Description
Adj Memory	Setting the memory allocation

Setting: [Adj Memory]
1. Change the setting using the numeric keys.

Display	Description	Setting range	Initial setting
Image	Area temporarily used to create output image.	0 to 400 (MB)	190
Image(Detail)	Area temporarily used to hold down-loaded font and other data.	0 to 400 (MB)	1

Set the values below in case print failure occurs with the memory shortage.
(recommended value)
Image : +190
Image(Detaile) : +1
2. Press the OK key. The value is set.
3. Exit the maintenance mode, perform shut-down, and turn the main power switch to off and on again. Allow more than 5 seconds between Off and On.

Completion
Press the Back key. The screen for selecting a maintenance item No. is displayed.

Item No.	Description
U345	**Setting the value for maintenance due indication** **Description** Sets when to display a message notifying that the time for maintenance is about to be reached, by setting the number of prints that can be made before the current maintenance cycle ends. When the difference between the number of prints of the maintenance cycle and that of the maintenance count reaches the set value, the message is displayed. **Purpose** To change the time for maintenance due indication. **Setting** 1. Press the OK key. 2. Change the setting using the numeric keys. Display: Cnt Description: Time for maintenance due indication (Remaining number of prints that can be made before the current maintenance cycle ends) Setting range: 0 to 9999 Initial setting: 0 3. Press the OK key. The value is set. **Completion** Press the Back key. The screen for selecting a maintenance item No. is displayed.
U410	**Setting a Gamma table** **Description** Setting a Gamma table. **Purpose** Setting a Gamma table. **Method** 1. Press the OK key. 2. Select the item to set. Display: Table1 — Description: Gamma table1 Display: Table2 — Description: Gamma table2 Display: Table3 — Description: Gamma table3 **Completion** Press the Back key. The screen for selecting a maintenance item No. is displayed.

Item No.	Description
U460	**Adjusting the conveying sensor**

Description
Compensates the threshold value of the side multi tray's multi feed sensor.
Purpose
If more than one sheet is fed at a time, modify the threshold depending on the environment.

Method
1. Press the OK key.
2. Select [SMT].

Display	Description
SMT	Settings of multiple feed sensor on the side multi tray

Method
1. Select the item.

Display	Description
Conveying Sensor	Multi feed sensor settings/Calibration
On/Off Config	Multi feed sensor On/Off settings

Setting: [Conveying Sensor]
1. Select the item.

Display	Description
Threshold(S)	Paper feeding threshold settings
Threshold(M)	Multi feed threshold settings
Sensor(Non-P)	Empty paper sensor display
Sensor	Displaying sensor value when paper is present
Execute	Executing the calibration

Setting: [Threshold(S)/(M)]
1. Select the item.
2. Change the setting value using the numeric keys.

Display	Description	Setting range	Initial setting
Threshold(S)	Paper feeding threshold settings	0 to 254	0
Threshold(M)	Multi feed threshold settings	0 to 254	0

3. Press the OK key. The value is set.

Method: [Execute]
1. Select [Execute].
2. Press the OK key. Calibration is executed.

Item No.	Description
U460	**Setting: [On/Off Config]** 1. Select On or Off. Initial setting: Off 2. Press the OK key. The setting is set. **Completion** Press the Back key. The screen for selecting a maintenance item No. is displayed.

Display	Description
On	Multi feed sensor is enabled
Off	Multi feed sensor is disabled

Item No.	Description
U464	**Setting the ID correction operation**

Description
Turns ID correction (calibration) on or off. Also, this allows individual settings for calibration operation.
Purpose
Implements various settings of calibration when poor image quality is caused or to allow various settings of calibration depending on the user preference.
To perform the calibration when replacing the maintenance kit.
Method
1. Press the OK key.
1. Select the item to be set.
2. Press the OK key.

Display	Description
Permission	Setting to turn calibration on/off
Time Interval	Setting the interval time of calibration after printing
Mode	Setting the color print execution mode
On/Sleep Out*	Setting execution parameters for calibration when powered up or reverted from auto-sleep
AP/NE*	Paper interval calibration ON/OFF setting at the time of calibration/near end after toner feed
Leaving Time*	Setting the standard time for judging whether or not to carry out calibration based on the sleep time when the machine recovers from the sleep mode
Driving Time*	Setting the standard time for judging whether or not to carry out paper interval calibration based on the driving time during printing
Timing*	Setting the standard time for judging whether or not to carry out calibration based on the continuous print driving time during printing
Target Value	Setting the sensor target values for toner thick layer calibration and light amount calibration
Print Rate(B/W)*	Setting the proportion of black/white printing at which black/white calibration is executed during color printing.
Calib	Executing the calibration
Edge Reduction	Smoothing edge settings (automatic calibration is implemented after settings are completed)

*: Enabled when Mode is set to Custom.

Setting: [Permission]
1. Select On or Off.

Display	Description
On	Turns calibration ON
Off	Turns calibration OFF

Initial setting: On
2. Press the OK key. The setting is set.

Item No.	Description
U464	**Setting: [Time Interval]** 1. Change the setting value using the numeric keys. 2. Press the OK key. The value is set. **Setting: [Mode]** 1. Select the item. Initial setting: Normal 2. Press the OK key. The setting is set. **Setting: [On/Sleep Out]** 1. Select On or Off. Initial setting: On 2. Press the OK key. The setting is set. **Setting: [AP/NE]** 1. Select On or Off. Initial setting: On 2. Press the OK key. The setting is set.

Display	Description	Setting range	Initial setting
Time(sec)	Setting the interval time of calibration	0 to 9999 (s)	480

Display	Description
Short	Setting the color print execution mode: short
Normal	Setting the color print execution mode: normal
Long	Setting the color print execution mode: long
Custom	Setting the color print execution mode: custom
Auto	Setting the color print execution mode: auto

Display	Description
On	Executes calibration if fuser temperature is less than 50°C/ 122°F at power-up or recovery from auto sleep mode
Off	Not to execute calibration regardless of fuser temperature at power-up or recovery from auto sleep mode

Display	Description
On	Paper interval calibration at the time of calibration/near end after toner feed is carried out
Off	Paper interval calibration at the time of calibration/near end after toner feed is not carried out

Item No.	Description
U464	

Setting: [Leaving Time]

1. Change the setting value using the numeric keys.

Display	Description	Setting range	Initial setting
Time(min)	Setting the standard time of sleep mode	0 to 480 (min)	480

2. Press the OK key. The value is set.

Setting: [Driving Time]

1. Change the setting value using the numeric keys.

Display	Description	Setting range	Initial setting
Time(sec)	Setting the drive standard time	300 to 3000 (s)	300

2. Press the OK key. The value is set.

Setting: [Timing]

1. Change the setting value using the numeric keys.

Display	Description	Setting range	Initial setting
Time(sec)	Setting the drive standard time of continuous print	0 to 3600 (s)	3600

2. Press the OK key. The value is set.

Setting: [Target Value]

1. Select the item.
2. Change the setting value using the numeric keys.

Display	Description	Setting range	Initial setting	
			45ppm	55ppm
Thickness(C)	Toner thick layer calibration (cyan)	0 to 1000	890	890
Thickness(M)	Toner thick layer calibration (magenta)	0 to 1000	910	910
Thickness(Y)	Toner thick layer calibration (yellow)	0 to 1000	910	910
Thickness(K)	Toner thick layer calibration (black)	0 to 1000	760	790
Gamma(C)	Light amount calibration (cyan)	0 to 500	320	320
Gamma(M)	Light amount calibration (magenta)	0 to 500	320	320
Gamma(Y)	Light amount calibration (yellow)	0 to 500	300	300
Gamma(K)	Light amount calibration (black)	0 to 500	350	350

3. Press the OK key. The value is set.

<table>
<tr><th>Item No.</th><th>Description</th></tr>
<tr><td>U464</td><td>

Setting: [Print Rate(B/W)]

1. Change the setting value using the numeric keys.

Display	Description	Setting range	Initial setting
Threshold	Proportion of black/white printing	0 to 100 (%)	50

2. Press the OK key. The value is set.

Method: [Calib]

1. Select [Execute].
2. Press the OK key. Calibration is executed.

* : Duplicates selecting [System Menu] - [Adjustment/Maintenance] - [Calibration].
The same operation as System menu.

Setting: [Edge Reduction]

1. Select On or Off.

Display	Description
On	Enable smoothing edges
Off	Disable smoothing edges

Initial setting: On

Press the OK key. The setting is set.

Completion

Press the Back key. The screen for selecting a maintenance item No. is displayed.

</td></tr>
<tr><td>U465</td><td>

Data reference for ID correction

Description

References the data related to ID correction.

Purpose

To check the corresponding data.

Method

1. Press the OK key.
2. Select the item to be reference.
3. Press the OK key

Display	Description
TCONT	Developer bias control value after ID correction
Laser Power	Scaling factor to the value determined in light amount calibration
Bias Calib	Sensor value for toner thick layer calibration
T7 CTD	T7 control value
Stress	Durability

</td></tr>
</table>

Item No.	Description
U465	**Displaying: [TCOUNT]** Select [TCOUNT]. The current value is displayed.

Display	Description
Before(C)	Developer bias control value for cyan before ID correction
Before(M)	Developer bias control value for magenta before ID correction
Before(Y)	Developer bias control value for yellow before ID correction
Before(K)	Developer bias control value for black before ID correction
After(C)	Developer bias control value for cyan after ID correction
After(M)	Developer bias control value for magenta after ID correction
After(Y)	Developer bias control value for yellow after ID correction
After(K)	Developer bias control value for black after ID correction

Displaying: [Laser Power]

1. Select [Laser Power]. The current value is displayed.

Display	Description
C	Scaling factor to the value determined in light amount calibration (cyan)
M	Scaling factor to the value determined in light amount calibration (magenta)
Y	Scaling factor to the value determined in light amount calibration (yellow)
K	Scaling factor to the value determined in light amount calibration (black)

Displaying: [Bias Calib]

1. Select [Bias Calib]. The current value is displayed.

Display	Description
C	Sensor value for toner thick layer calibration (cyan)
M	Sensor value for toner thick layer calibration (magenta)
Y	Sensor value for toner thick layer calibration (yellow)
K	Sensor value for toner thick layer calibration (black)

Displaying: [T7 CTD]

1. Select [T7 CTD]. The current value is displayed.

Display	Description
C	T7 control value (cyan)
M	T7 control value (magenta)
Y	T7 control value (yellow)
K	T7 control value (black)

Item No.	Description
U465	**Displaying: [Stress]** 1. Select [Stress]. The current value is displayed. **Completion** Press the Back key. The screen for selecting a maintenance item No. is displayed.

Display	Description
Front	Durability of the belt (front)
Rear	Durability of the belt (rear)

Item No.	Description
U467	**Setting the color registration adjustment** **Description** Sets the color registration adjustment and transfer belt speed correction. Also, determines the conditions by which color registration correction is executed depending on the LSU temperature. **Purpose** If color variance is uneven due to a sensor failure, etc., turn this off and temporarily make a manual adjustment. **Method** 1. Press the OK key. 2. Select the item to be set. **Display** / **Description** Color Regist / Setting the color registration correction operation Timing / After the previous correction is executed, color registration is compensated as the LSU temperature varies by the value determined. **Setting: [Color Regist]** 1. Select On or Off. **Display** / **Description** On / Enables the color registration correction operation. Off / Disables the color registration correction operation. Initial setting: On 2. Press the OK key. The setting is set. **Setting: [Timing]** 1. Change the setting value using the numeric keys. **Display** / **Description** / **Setting range** / **Initial setting** LSU Temp / Conditions for execution depending on the LSU temperature variation / 2 to 10 / 10 2. Press the OK key. The value is set. **Completion** Press the Back key. The screen for selecting a maintenance item No. is displayed.

Item No.	Description
U468	**Checking the color registration data**

Description
Displays the color registration correction data and transfer belt speed correction data.
Purpose
To check the corresponding data.

Method
1. Press the OK key.
2. Select the item to be reference.
3. Press the OK key.

Display	Description
V Correction	Display the transfer speed adjustment value
Auto(C)	Display the auto color registration adjustment value for cyan
Auto(M)	Display the auto color registration adjustment value for magenta
Auto(Y)	Display the auto color registration adjustment value for yellow
Manual(C)	Display the manual color registration adjustment value for cyan
Manual(M)	Display the manual color registration adjustment value for magenta
Manual(Y)	Display the manual color registration adjustment value for yellow

Displaying: [V Correction]
1. Select [V Correction]. The current value is displayed.

Display	Description
Status	transfer speed adjustment value

Displaying: [Auto(C)/Auto(M)/Auto(Y)]
1. Select [Auto(C)], [Auto(M)] or [Auto(Y)]. The current value is displayed.

Display	Description
Main Scan	Auto color registration adjustment value of the main scanning direction
Sub Scan	Auto color registration adjustment value of the auxiliary scanning direction
Mag	Auto color registration adjustment value of the magnification

Displaying: [Manual(C)/Manual(M)/Manual(Y)]
1. Select [Manual(C)], [Manual((M)] or [Manual((Y)]. The current value is displayed.

Display	Description
Main Scan	Manual color registration adjustment value of the main scanning direction
Sub Scan	Manual color registration adjustment value of the auxiliary scanning direction
Mag1-6	Manual color registration adjustment value of the magnification1-6

Item No.	Description
U468	**Completion** Press the Back key. The screen for selecting a maintenance item No. is displayed.
U469	**Adjusting the color registration** **Description** Performs the color registration correction and transfer belt speed correction. **Purpose** To perform when replacing the transfer belt unit or laser scanner unit. **Method** * : Before excuting this mode, the U464 Calib mode must be executed. 1. Press the OK key. 2. Select the item. 3. Press the OK key.

Display	Description
Manual	Executing the manual color registration correction
Belt Initialize	Executing the transfer belt speed correction
Belt Check	Confirmation of transfer belt position

Method: [Manual]

1. Select [Print].
2. Press the OK key. A chart for adjustment is outputted.

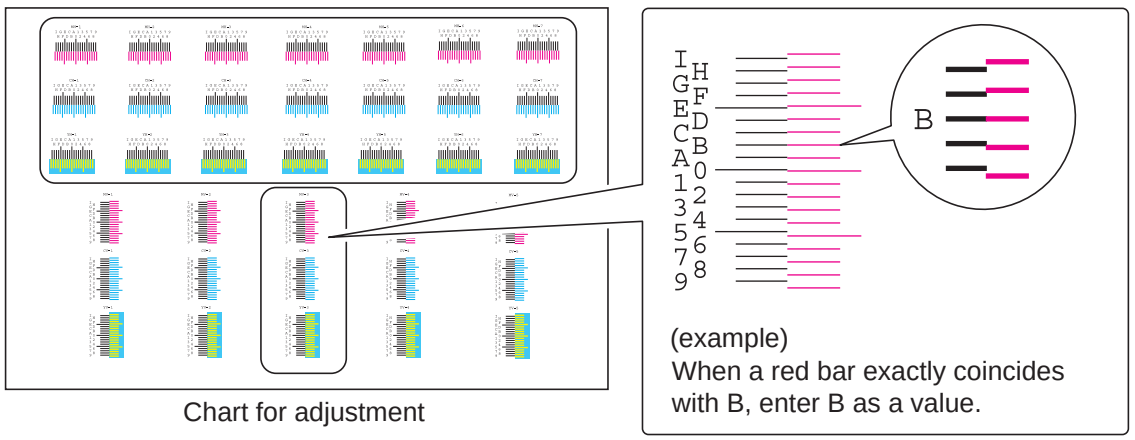

Chart for adjustment

Figure 1-3-14

3. Select [Regist].
4. Read figures at MH-1 to 7/CH-1 to 7/YH-1 to 7 and MV-3/CV-3/YV-3 of the reference chart and enter the figure marked at the scale which the BK fine line is in line with the M/C/Y fine lines, using the cursor and 10 keys.

Item No.	Description
U469	

Codes	Descrip-tion	Codes	Descrip-tion
CH-1	0	MH-5	0
CH-2	0	MH-6	0
CH-3	0	MH-7	0
CH-4	0	MV-3	0
CH-5	0	YH-1	0
CH-6	0	YH-2	0
CH-7	0	YH-3	0
CV-3	0	YH-4	0
MH-1	0	YH-5	0
MH-2	0	YH-6	0
MH-3	0	YH-7	0
MH-4	0	YV-3	0

5. Press the OK key to finalize the value.
6. Press the OK key after all values have been entered. Color registration correction starts.
7. Print a chart for adjustment.
8. Verify that each scale is within the range of 1to A.

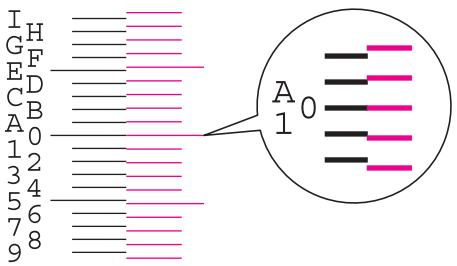

The scale must be corresponding
within the range of "A" from "1".

Figure 1-3-15

<table>
<tr><th>Item No.</th><th>Description</th></tr>
<tr><td>U469</td><td>

Method: [Belt Initialize]

1. Select [Execute].
2. Press the OK key. Transfer belt speed correction starts.

Method:[Belt Check]

1. Select [Mode].
2. Change the setting value using the numeric keys.

Display	Description
Angle	Display of cam position
Belt Position	Display of belt position
Mode	Operational mode
Excute	Execution of belt position confirmation

3. Select [Execute].
4. Press the OK key. Transfer belt position confirmation starts, and the value is displayed.

Completion

Press the Back key. The screen for selecting a maintenance item No. is displayed.

</td></tr>
<tr><td>U474</td><td>

Checking LSU cleaning operation

Description

Provides cleaning LSU by means of the LSU cleaning motor. Also, the cleaning cycle can be adjusted.

Method

1. Press the OK key.
2. Select the item.

Display	Description
Execute	Executing the cleaning operation
Cycle	Setting the cleaning cycle

Method: [Execute]

1. Press the OK key. Cleaning the LSU slit glass.

Setting: [Cycle]

1. Change the setting value using numeric keys.

Display	Description	Setting range	Initial setting
Cnt	Cleaning cycle	0 to 5000	1000

The setting can be changed by 1000 per step.

2. Press the OK key. The value is set.

Completion

Press the Back key. The screen for selecting a maintenance item No. is displayed.

</td></tr>
</table>

Item No.	Description
U485	**Setting the color table** **Description** Modify and install the color table. **Purpose** Perform the procedure to modify the color table. **Method.** 1. Press the OK key. 2. Select the item. Press the OK key. **Setting: [Color Table 1(Prn)],[Color Table 2(Prn)]** 1. Default/Custom printer color tables are shown. 2. Select the target color tables for switching 3. Press the OK key. **Setting: [Install]** * : Before proceeding, make sure that the USB flash device that contains the color table files is inserted. The color table files must be placed in the root of the USB flash device. 1. Press the Excute button. 2. Press the OK key. 3. Installation is completed when [OK] is displayed. **Setting: [Uninstall]** 1. The color table currently being installed is displayed. 2. Select the color table you want to uninstall, then press the OK key. **Completion** Press the Back key. The screen for selecting a maintenance item No. is displayed.

Display	Description
Color Table 1(Prn)	Setting the printer color table (Default)
Color Table 2(Prn)	Setting the printer color table (Custom)
Install	Install the printer color table
Uninstall	Uninstall the printer color table

Item No.	Description
U486	**Setting color/black and white operation mode** **Description** When color and B/W documents are mixed, sets operation mode after a color document is detected. **Purpose** **Mode:**To ensure productivity when printing color and B/W documents in ACS mode, select Mode3. However, selecting Mode3 will increase the maintenance count for cyan, magenta, and yellow color developer units even when there is a B/W printing after a color printing. **Permission:** During monochrome half-speed printing, which is color printing mode at hald speed, the color background problem may occur when printing on envelopes. **Method** 1. Press the OK key. 2. Select the item. **Display** / **Description** Mode — Setting color/black and white operation Permission — Allowing black and white half speed mode **Setting: [Mode]** 1. Press the OK key. 2. Select the mode. **Display** / **Description** Mode1 — A mode suited for the user with high black-and-white usage in which the occurrence of color printing during continuous printing is minimum. Once diverted to color printing mode, the subsequent black and white printing is executed in the same linear velocity as in color printing with other processings switched on the fly. Mode2 — A mode suited for the user with high black-and-white usage in which the occurrence of color printing during continuous printing is maximum. Printing in color mode resumes up to 9 pages in a row even an interrupt is made to switch to black and white mode, until printing is diverted to black and white mode from color mode at the 10th page (color processing is terminated). Mode3 — A mode suited for the user with high black-and-white usage in which the occurrence of color printing during continuous printing is maximum. Mode suited for high color printing volume Once diverted to color mode, the black and white printings are executed in color processing mode (including the linear velocity). Auto — Mode that allows to select from modes 1 through 3 depending on the usage. Mode is selected from three modes depending on the percentage of color and black and white printings in the total number of print pages during a predetermined period. Initial setting: Mode2 3. Press the OK key. The setting is set.

Item No.	Description
U486	**Setting: [**Permission**]** 1. Select On or Off. Initial setting: Off * : Enable this setting if color background printing has occurred when printing on envelopes.Note jitter could result. 2. Press the OK key. The setting is set. **Completion** Press the Back key. The screen for selecting a maintenance item No. is displayed. **Details on the modes**

Display	Description
On	Black and white printing (3 colors are released)*
Off	Color printing (4 colors are latched in)

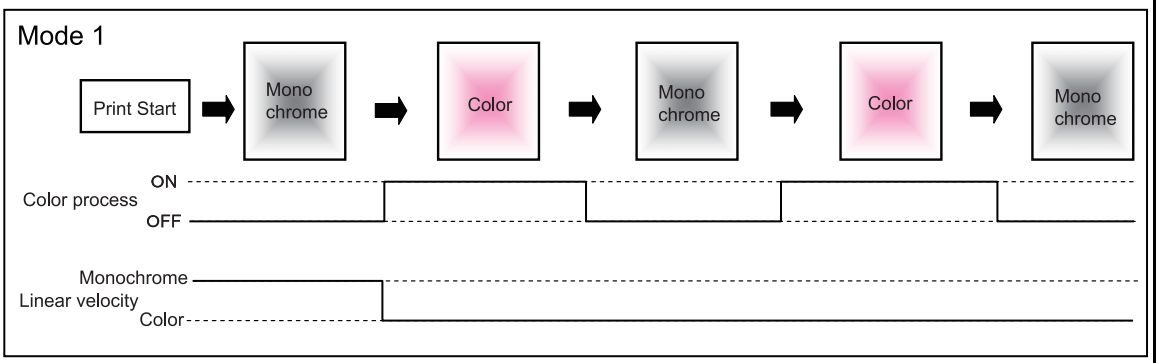

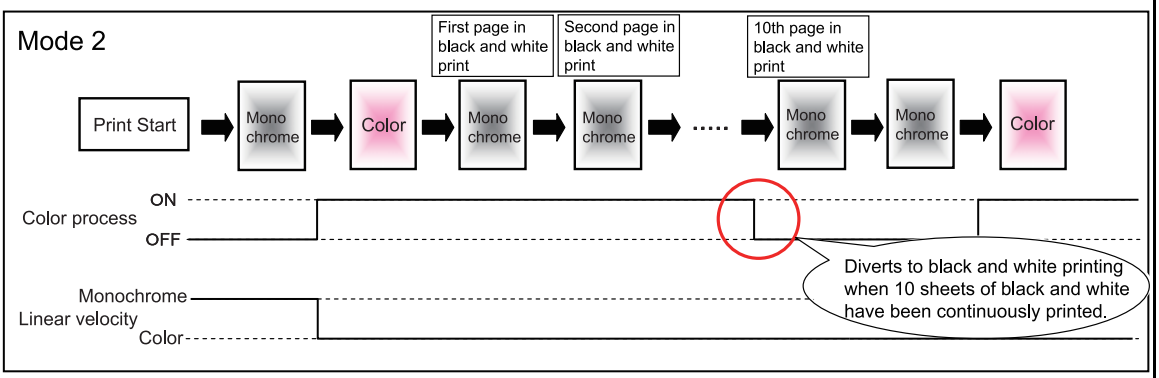

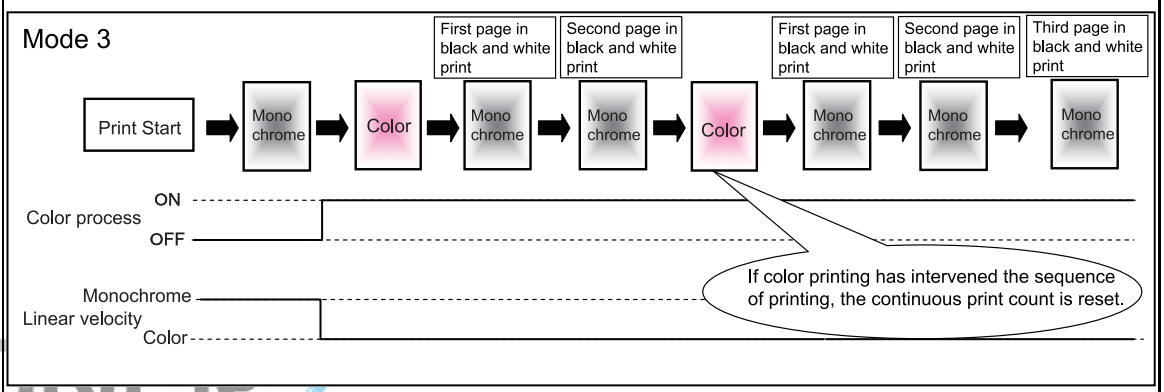

Figure 1-3-16

Item No.	Description
U901	**Checking print counts by paper feed locations**

Description
Displays or clears paper feed counts by paper feed locations.
Performs backup when the counters on the engine PWB and PF main PWB do not match.
Purpose
To check the time to replace consumable parts. Also to clear the counts after replacing the consumable parts.
Backup the counter values after completing changing the PF main PWB and the paper feed unit.

Method
1. Press the OK key. The counts by paper feed locations are displayed.

Display	Description
MPT	MP tray
Cassette1	Cassette 1
Cassette2	Cassette 2
Cassette3	Cassette 3 (paper feeder/large capacity feeder)
Cassette4	Cassette 4 (paper feeder/large capacity feeder)
Cassette5	Cassette 5 (side multi tray/side deck)
Cassette6	Cassette 6 (side paper feeder/side large capacity feeder)
Cassette7	Cassette 7 (side paper feeder/side large capacity feeder)
Duplex	Duplex unit

* : When an optional paper feed unit is not installed, the corresponding count is not displayed.

Clearing
1. Select the counts to be cleared.
   [Cassette3], [Cassette4], [Cassette5], [Cassette6] and [Cassette7] cannot be cleared.
2. Select the counts for all and press [Clear].
3. Press the OK key. The counts is cleared.

Back up
If the paper feeding counters of the engine and the paper feeder do not match, the following message will be displayed.
The back up destination will be shown on the list items and 'engine (fixed value)' <-> None <-> 'PF (fixed PF value) are displayed.
1. Press the OK key. The counts by paper feed locations are displayed.

Display	Description
Cassette3	Cassette 3 (paper feeder/large capacity feeder)
Cassette4	Cassette 4 (paper feeder/large capacity feeder)
Cassette5	Cassette 5 (side multi tray/side deck)
Cassette6	Cassette 6 (side paper feeder/side large capacity feeder)
Cassette7	Cassette 7 (side paper feeder/side large capacity feeder)
Duplex	Duplex unit

Item No.	Description
U901	1. Select the paper feed location. 2. Select engine counter values when changing the PF main PWB. Backup the engine counter values to PF. Select PF counter values when changing the paper feed unit. Backup the PF counter values to engine. 3. Select [Execute]. 4. Press the start key. Back up the counter values. 5. Exit the maintenance mode, perform shut-down, and turn the main power switch to off and on again. Allow more than 5 seconds between Off and On. * : The values of cassette 4 counter vary in accordance with the cassette 3 counter. The values of cassette 7 counter vary in accordance with the cassette 6 counter. Select [None] if the counter values are not backed up. **Completion** Press the Back key. The screen for selecting a maintenance item No. is displayed.

Item No.	Description
U903	**Checking/clearing the paper jam counts** **Description** Displays or clears the jam counts by jam locations. **Purpose** To check the paper jam status. Also to clear the jam counts after replacing consumable parts. **Method** 1. Press the OK key. 2. Select the item. **Method: [Cnt]** 1. Select [Cnt]. The count of jam code by type is displayed. Codes for which the count value is 0 are not displayed. 2. Change the screen using the cursor up/down keys. 3. Select the count value for jam code and press [Clear]. The individual counter cannot be cleared. 4. Press the OK key. The counter value is cleared. **Method: [Total Cnt]** 1. Select [Total Cnt]. The total number of jam code by type is displayed. 2. Change the screen using the cursor up/down keys. The total number of jam count cannot be cleared. **How to display the history of paper jams** **[Function]** To check the variation in the occurrences of paper jams as a consequence of firmware upgrade. **[Procedure]** 1. Retrives versions of system and engine software at the timing of clearing. 2. Displays comparison of the occurrences of paper jams before and after firmware upgrades. 3. Displays the date of clearing. **[Method]** **At firmware upgrade** 1. Perform clearance of the counter following the above before performing firmware upgrade. 2. Clearing the counter records the date of clearing. 3. Perform firmware upgrade. **At performing service** 1. Print a maintenance report using mode U000 and check the variance of occurrence of paper jams after firmware upgrade was done.

Display	Description
Cnt	Displays/clears the jam counts
Total Cnt	Displays the total jam counts

Item No.	Description
U903	**Detail of history of paper jams**

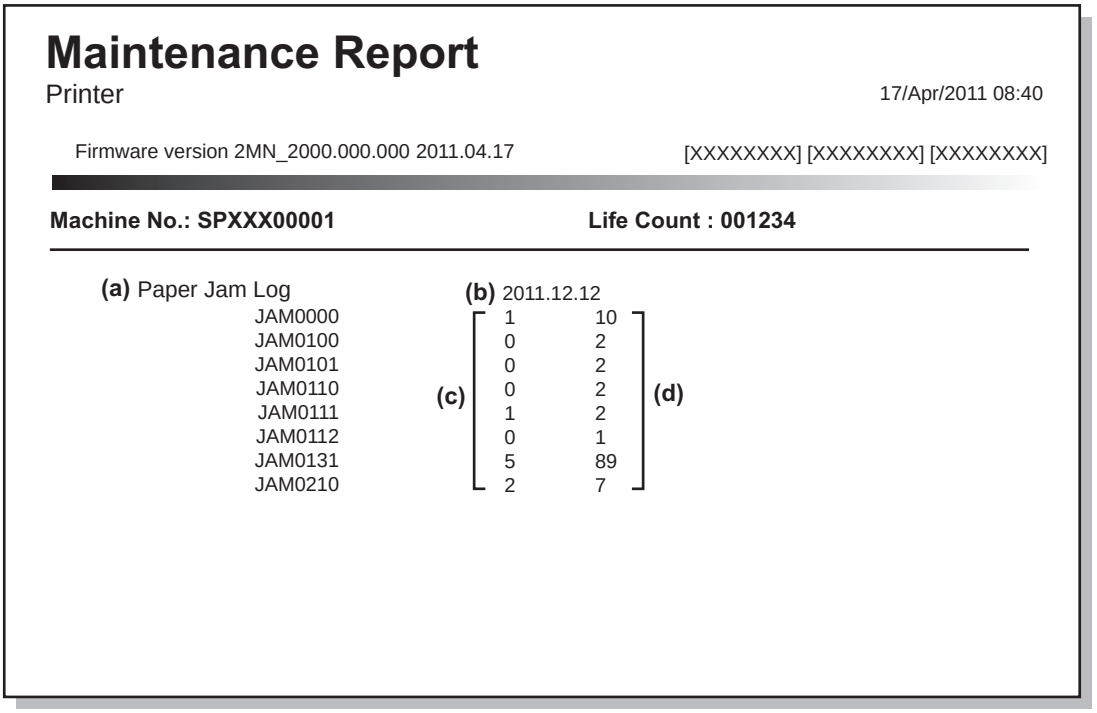

Figure 1-3-17

No.	Description
a	Paper jam numbers
b	Date of clearing counter records
c	Occurrences of paper jams after clearing the paper jam counts
d	Total number of paper jams

Method: [Total Cnt]

1. Select [Total Cnt]. The total number of jam code by type is displayed.
2. Change the screen using the cursor up/down keys.
   The total number of jam count cannot be cleared.

Completion

Press the Back key. The screen for selecting a maintenance item No. is displayed.

Item No.	Description
U904	**Checking/clearing the call for service counts** **Description** Displays or clears the service call code counts by types. **Purpose** To check the service call code status by types. Also to clear the service call code counts after replacing consumable parts. **Method** 1. Press the OK key. 2. Select the item. **Method: [Cnt]** 1. Select [Cnt]. The count for service call detection by type is displayed. Codes for which the count value is 0 are not displayed. 2. Change the screen using the cursor up/down keys. 3. Select the count value for service call code and press [Clear]. The individual counter cannot be cleared. 4. Press the OK key. The counter value is cleared. **Method: [Total Cnt]** 1. Select [Total Cnt]. The total number of service call counts by type is displayed. 2. Change the screen using the cursor up/down keys. The total number of service call count cannot be cleared. **How to display the history of service counts** **[Function]** To check the variation in the occurrences of service calls as a consequence of firmware upgrade. **[Procedure]** 1. Retrives versions of system and engine software at the timing of clearing. 2. Displays comparison of the occurrences of service calls before and after firmware upgrades. 3. Displays the date of clearing. **[Method]** **At firmware upgrade** 1. Perform clearance of the counter following the above before performing firmware upgrade. 2. Clearing the counter records the date of clearing. 3. Perform firmware upgrade. **At performing service** 1. Print a maintenance report using mode U000 and check the variance of occurrence of service calls after firmware upgrade was done.

Display	Description
Cnt	Displays/clears the call for service counts
Total Cnt	Displays the total call for service counts

Item No.	Description
U904	**Detail of history of service counts**

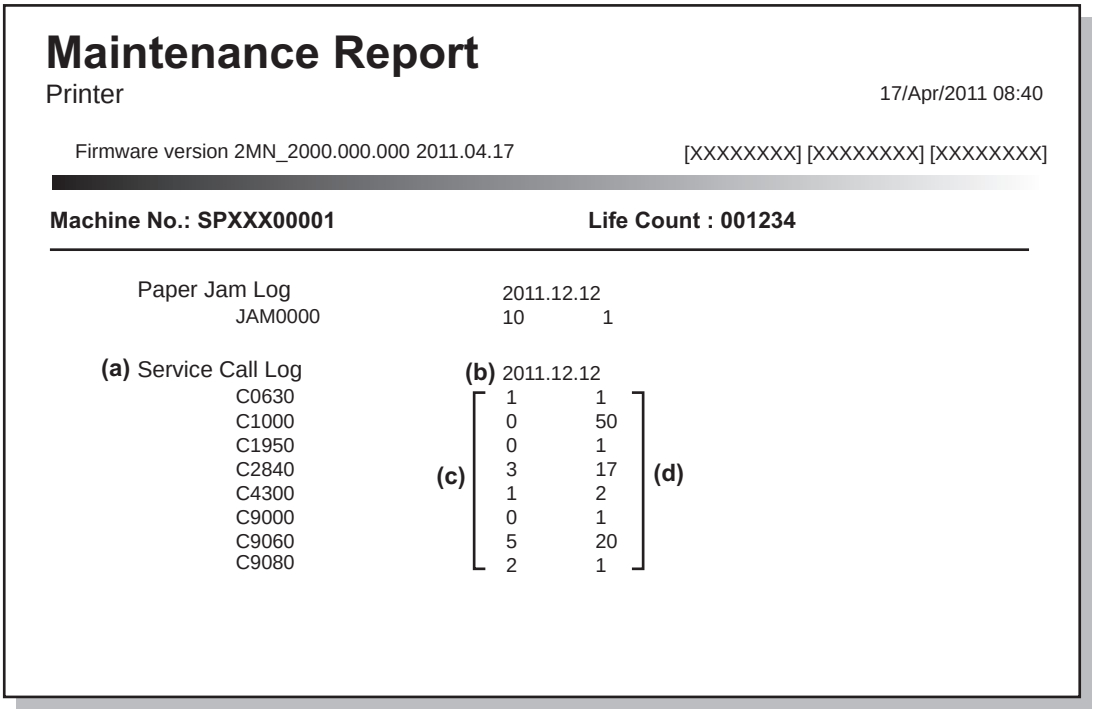

Figure 1-3-18

No	Description
a	Service call numbers
b	Date of clearing counter records
c	Occurrences of paper jams after clearing the service call counts
d	Total number of service calls

Method: [Total Cnt]

1. Select [Total Cnt]. The total number of service call counts by type is displayed.
2. Change the screen using the cursor up/down keys.
   The total number of service call count cannot be cleared.

Completion

Press the Back key. The screen for selecting a maintenance item No. is displayed.

Item No.	Description
U905	**Checking counts by optional devices** **Description** Displays the counts of 1000-sheet or 4000-sheet finisher. **Purpose** To check the use of 1000-sheet or 4000-sheet finisher. **Method** 1. Press the OK key. 2. Select the device, the count of which is to be checked. 3. Press the OK key. The count of the selected device is displayed. **Method: [DF]** **Completion** Press the Back key. The screen for selecting a maintenance item No. is displayed.

Display	Description
DF	Counts of 1000-sheet or 4000-sheet finisher

Display	Description
Sorter	No. of prints that has passed
Staple	Frequency the stapler has been activated
Punch	Frequency the punch has been activated
Stack*	Frequency the main tray eject has been activated
Saddle*	Frequency the saddle eject has been activated
Fold*	Frequency the center folding has been activated
Three Fold*	Frequency the tri-folding has been activated

* : 4000-sheet finisher only

Item No.	Description
U906	**Resetting partial operation control** **Description** Resets the service call code for partial operation control. **Purpose** To be reset after partial operation is performed due to problems in the cassettes or other sections, and the related parts are serviced. **Method** 1. Press the OK key. 2. Press [Execute]. 3. Press the OK key to reset partial operation control. 4. Exit the maintenance mode, perform shut-down, and turn the main power switch to off and on again. Allow more than 5 seconds between Off and On.
U908	**Checking the total counter value** **Description** Displays the total counter value. **Purpose** To check the total counter value. **Method** 1. Press the OK key. The total count value is displayed. **Completion** Press the Back key. The screen for selecting a maintenance item No. is displayed.
U910	**Clearing the print coverage data** **Description** Clears the accumulated data for the print coverage per A4 size paper and its period of time (as shown on the service status report). **Purpose** To clear data as required at times such as during maintenance service. **Method** 1. Press the OK key. 2. Select [Execute]. 3. Press the OK key. The print coverage data is cleared. **Completion** Press the Back key. The screen for selecting a maintenance item No. is displayed.

Item No.	Description
U911	**Checking print counts by paper sizes**

Description
Displays the paper feed counts by paper sizes.
Purpose
To check the counts after replacing consumable parts.

Method
1. Press the OK key. The screen for the paper feed counts by paper size is displayed.

Display (metric)	Description	Display (inch)	Description
A3	Paper feed counts for A3	Ledger	Paper feed counts for Ledger
B4	Paper feed counts for B4	Legal	Paper feed counts for Legal
A4	Paper feed counts for A4	Letter	Paper feed counts for Letter
B5	Paper feed counts for B5	Statement	Paper feed counts for Statement
A5	Paper feed counts for A5		
Folio	Paper feed counts for Folio	ETC	Paper feed counts for other size
ETC	Paper feed counts for other size		

Clearing
1. Select the paper size of counts to be cleared.
2. Press the OK key. The counts is cleared.

Completion
Press the Back key. The screen for selecting a maintenance item No. is displayed.

Item No.	Description
U917	**Setting backup data reading/writing** **Description** Retrieves the backup data to a USB memory from the machine; or writes the data from the USB memory to the machine. **Purpose** To store and write data when replacing the HDD. **Method** 1. Perform shut-down on the operation panel, turn power off (see page p.1-2-19). 2. Insert USB memory in USB memory slot. 3. Turn the main power switch on. Wait for 10 seconds to allow the machine to recognize the USB memory. 4. Enter maintenance item U917. 5. Select [Import] or [Export].

Display	Description
Import	Writing data from the USB memory to the machine
Export	Retrieving from the machine to a USB memory

6. Select the item.

Display	Description	Depending data
Job Account	Job accounting	-
User	User managements	Job accounting
Document Box	Document box information	Job accountings and user manage-ments

* : Since data are dependent with each other, data other than those assigned are also retrieved or written in.

7. Press the OK key. Starts reading or writing.
The progress of selected item is displayed in %.
When an error occurs, the operation is canceled and an error code is displayed.
8. When normally completed, [Finish] is displayed.
9. Turn the main power switch off and on after completing writing when selecting [Import].

Item No.	Description
U917	**Error Codes**

Codes	Description	Codes	Description
e002	Parameter error	e31e	User managements error
e003	File write error	e31f	User managements open error
e004	File initialization error	e320	User managements error
e005	File error	e321	User managements open error
e006	Processing error	e322	User managements list error
e010	Address book clear error (contact)	e324	Shortcut open error
e011	Address book open error (contact)	e325	Shortcut list error
e012	Address book list error (contact)	e410	Box file open error
e013	Address book list error (contact)	e411	Box error in writing
e014	Address book clear error (group)	e412	Box error in reading
e015	Address book open error (group)	e413	Box list error
e016	Address book list error (group)	e414	Box list error
e017	Address book list error (group)	e415	Box error
e110	Job accounting clear error	e416	Box error
e111	Job accounting open error	e417	Box open error
e112	Job accounting open error	e418	Box close error
e113	Job accounting error in writing	e419	Box creation error
e114	Job accounting list error	e41a	Box creation error
e115	Job accounting list error	e41b	Box deletion error
e210	One-touch open error	e41c	Box movement error
e211	One-touch list error	e510	Program error in writing
e212	One-touch list error	e511	Program error in reading
e310	User managements backup error	e610	Shortcut error in writing
e311	User managements clear error	e611	Shortcut error in reading
e312	User managements open error	e710	Fax memory open error
e313	User managements open error	e711	Fax memory initialization error
e314	User managements open error	e712	Fax memory list error
e315	User managements error in writing	e713	Fax memory error
e316	User managements list error	e714	Fax memory error
e317	User managements list error	e715	Fax memory mode error
e318	User managements list error	e716	Fax memory error
e319	User managements list error	e717	Fax memory error
e31a	User managements open error	e718	Fax memory mode error
e31b	User managements error	e910	File reading error
e31c	User managements error	e911	File writing error
e31d	User managements open error	e912	Data mismatch

Item No.	Description
U917	**Error Codes**

Codes	Description	Codes	Description
e913	Log file open error	d009	File open error
e914	Log file error in writing	d00a	File close error
e915	Directory open error	d00b	File reading error
e916	Directory error in reading	d00c	File writing error
e917	Synchronization error	d00d	File copy error
e918	Synchronization error	d00e	File compressed error
d000	Unspecified error	d00f	File decompressed error
d001	HDD unavailable	d010	Directory open error
d002	USB memory is not inserted	d011	Directory creation error
d003	File for writing is not found in the USB	d012	File writing error
d004	File for reading is not found in the HDD	d013	File reading error
d005	USB error in writing	d014	File deletion error
d006	USB error in reading	d015	File copy error to the USB
d007	USB unmount error	d016	File compatibility error
d008	File rename error		

Completion

Press the Back key. The screen for selecting a maintenance item No. is displayed.

<table>
<tr><th>Item No.</th><th>Description</th></tr>
<tr><td>U920</td><td>

Checking the print counts

Description
Checks the print counts.
Purpose
To check the print counts.

Method
1. Press the OK key. The current counts are displayed.

<table>
<tr><th>Display</th><th>Description</th></tr>
<tr><td>ColorPrn H</td><td>Count value of full color print (coverage: high)</td></tr>
<tr><td>ColorPrn M</td><td>Count value of full color print (coverage: middle)</td></tr>
<tr><td>ColorPrn L</td><td>Count value of full color print (coverage: low)</td></tr>
<tr><td>B/W Prn</td><td>Count value of black/white print</td></tr>
</table>

Completion
Press the Back key. The screen for selecting a maintenance item No. is displayed.

</td></tr>
<tr><td>U927</td><td>

Clearing the all print counts and machine life counts (one time only)

Description
Resets all of the counts back to zero.

Supplement
The total account counter and the machine life counter can be cleared only once if all count values are 1000 or less.

Method
1. Press the OK key.
2. Select [Execute].
3. Press the OK key. All print counts and machine life counts are cleared.

Completion
Press the Back key. The screen for selecting a maintenance item No. is displayed.

</td></tr>
</table>

Item No.	Description
U928	**Checking machine life counts** **Description** Displays the machine life counts. **Purpose** To check the machine life counts. **Method** 1. Press the OK key. The current machine life counts is displayed. **Completion** Press the Back key. The screen for selecting a maintenance item No. is displayed.
U930	**Checking/clearing the charger roller count** **Description** Displays the counts of the charger roller counter for checking or clearing. **Purpose** To check the count after replacement of the charger roller unit. To clear the counter value when replacing the charger roller unit. **Method** 1. Press the OK key. The current counts of the charger roller count for each color is displayed. **Clearing** 1. Select the counts to be cleared. 2. Select the counts for all and press [Clear]. 3. Press the OK key. The counts is cleared. **Completion** Press the Back key. The screen for selecting a maintenance item No. is displayed.

Display	Description
Cnt	Machine life counts

Display	Description
C	Count value of cyan charger roller
M	Count value of magenta charger roller
Y	Count value of yellow charger roller
K	Count value of black charger roller

Item No.	Description
U952	**Maintenance mode workflow**

Description
The maintenance modes configured in the machine or a USB flash device as a workflow must be executed in succession.
Purpose
This allows maintenance mode to be preset as a template.

Setting
1. Press the OK key.
2. Select the item.

Display	Description
Continue	Restarting an abandoned workflow
Exec(USB)	Executes a workflow housed in a USB flash device
Exec	Executes a workflow stored in the machine
Entry(USB)	Exports a workflow housed in a USB flash device to the machine
Entry	Assigns a workflow in the machine manually
Log	Displays a list of workflows recently executed

Method: [Exec]
1. Select [Execute].
2. Select the workflow.

Display	Description
Data1 - 6	The area to store workflows in the machine

3. Press the OK key.
   Executes maintenance modes defined in a workflow in succession.

Method: [Entry]
1. Select [Entry].
2. Select the area to store workflow.

Display	Description
Data1 - 6	The area to store workflows in the machine

3. Press the numeric keys to assign a maintenance Nbr. into a workflow.

Display	Description
Flow1 - 14	Assign a maintenance Nbr.

4. Press the OK key. The setting is set.
5. Press the OK key.
   Executes maintenance modes defined in a workflow in succession.

Item No.	Description
U952	**Method: [Exec(USB)]** 1. Perform shut-down on the operation panel, turn power off(see page P.1-2-19). 2. Insert USB memory in USB memory slot. 3. Turn the main power switch on. 4. Enter maintenance item U952. 5. Select [Execute(USB)]. 6. Select the workflow. 7. Press the OK key. Executes maintenance modes defined in a workflow in succession. **Method: [Entry(USB)]** 1. Perform shut-down on the operation panel, turn power off (see page p.1-2-19). 2. Insert USB memory in USB memory slot. 3. Turn the main power switch on. 4. Enter maintenance item U952. 5. Select [Entry(USB)]. 6. Select the workflow. 7. Select the work flow save area. 8. Select [Execute]. Exports a workflow housed in a USB flash device to the machine. **Example** Registration is feasible when a USB flash device that stores the commands and text/maintenance ID (editable) is inserted. File Format: xxx.mwf 1.SET UP, 464, 469, 000, 927, 278 2.WARRANTY, 089, 000 3.MK-A, 119, 930, 140, 469, 127, 464, 469, 464, 251 4.MK-B, 119, 930, 140, 464, 469, 464, 251 5.MK-C, 167, 464, 469, 251 **Completion** Press the Back key. The screen for selecting a maintenance item No. is displayed.

Display	Description
Data01 - 06	Workflow data in the USB flash device

Display	Description
Data01 - 06	Workflow data in the USB flash device

Display	Description
Data1 - 6	The area to store workflows in the machine

Item No.	Description
U964	**Checking of log** **Description** Sends a log file saved on the HDD to a USB memory. **Purpose** To transfer a log file saved on the HDD to a USB memory as a means of investigating malfunctions. **Method** 1. Perform shut-down on the operation panel, turn power off(see page P.1-2-19). 2. Insert USB memory in USB memory slot. 3. Turn the main power switch on. 4. Enter maintenance item U964. Display: Execute — Description: Transer the Log file which is stored into HDD into the USB memory Display: Jam Log — Description: Exchange the Log acquision function when JAM occures 5. Select [Execute]. 6. Press the OK key. Starts sending the log file saved on the HDD to the USB memory. Processing is displayed for approximately 3 to 5 minutes. 7. When normally completed, [Completed] is displayed. 8. Exit the maintenance mode, perform shut-down, and turn the main power switch to off and on again. Allow more than 5 seconds between Off and On. If a problem occurs during auto correction, error code is displayed. **Setting: [Jam Log]** 1. Press the start key. 2. Select On or Off. Display: On — Description: Acquire the Log when JAM occurs Display: Off — Description: Do not acquire the Log when JAM occurs Initial setting: Off 3. Press the start key. The setting is set. * : When U964 JAM setting turns ON, please explain the user make sure to turn OFF/ON the main power switch when the Log has been acuired completely after clearing jammed paper when JAM occures. * : When U964 JAM setting turns ON, the service call may appear wrongly due to malfunction if the main power switch is not turned OFF/ON after clearing jammed paper.

<table>
<tr><th>Item No.</th><th>Description</th></tr>
<tr><td></td><td>

Error codes

<table>
<tr><th>Error codes</th><th>Error name</th><th>Description</th></tr>
<tr><td>1</td><td>No Usb Storage</td><td>USB memory is not inserted</td></tr>
<tr><td>2</td><td>No File</td><td>File is not found</td></tr>
<tr><td>3</td><td>Mount Error</td><td>USB memory mount error</td></tr>
<tr><td>4</td><td>File Delete Error</td><td>File deletion error</td></tr>
<tr><td>5</td><td>Copy Error</td><td>File copy error</td></tr>
<tr><td>6</td><td>Unmount Error</td><td>USB memory unmount error</td></tr>
<tr><td>7</td><td>Other Error</td><td>Other error</td></tr>
</table>

</td></tr>
<tr><td>U969</td><td>

Checking of toner area code

Description
Displays the toner area code.
Purpose
To check the toner area code.

Method
1. Press the OK key. The toner area code is displayed.

Completion
Press the stop/clear key. The screen for selecting a maintenance item No. is displayed.

</td></tr>
</table>

Item No.	Description
U977	**Data capture mode** **Description** Store the print data sent to the machine into USB memory. **Purpose** In case to occur the error at printing, check the print data sent to the machine. **Method** 1. Perform shut-down on the operation panel, turn power off(see page P.1-2-19). 2. Insert USB memory in USB memory slot. 3. Turn the main power switch on. 4. Enter maintenance item U977. 5. Select [Execute]. 6. Press the OK key. 7. Send the print data to the machine. Once the print data is stored into USB memory, [OK] will be displayed. **Completion** Press the Back key. The screen for selecting a maintenance item No. is displayed. **Error codes** Error codes: 1 — The removable memory has been crushed or removed or write-protected Error codes: 2 — The removable memory is full Error codes: 3 — Other errors have occurred
U984	**Checking the developer unit number** **Description** Displays the developer unit number. **Purpose** To check the developer unit number. **Method** 1. Press the OK key. The developer unit number for each color is displayed. Display: C — Description: Cyan developer unit number Display: M — Description: Magenta developer unit number Display: Y — Description: Yellow developer unit number Display: K — Description: Black developer unit number **Completion** Press the Back key. The screen for selecting a maintenance item No. is displayed.

Item No.	Description
U985	**Displaying the developer unit history** **Description** Displays the past record of machine number and the developer counter. **Purpose** To check the count value of machine number and the developer counter. **Method** 1. Press the OK key. 2. Select the color to check. Display / Description: C — Cyan developer unit past record M — Magenta developer unit past record Y — Yellow developer unit past record K — Black developer unit past record The history of a machine number and a developer counter for each color is displayed by three cases. Display / Description: Machine History1 - 3 — Historical records of the machine number Cnt History1 - 3 — Historical records of developer counter **Completion** Press the Back key. The screen for selecting a maintenance item No. is displayed.
U989	**HDD Scan disk** **Description** Restores data in the hard disk by scanning the disk. **Purpose** If power is turned off while accessing to the hard disk is performed, the control information in the hard disk drive may be damaged. Use this mode to restore the data. **Method** 1. Press the OK key. 2. Select [Execute]. 3. Press the OK key. When scanning of the disk is complete, the execution result is displayed. 4. Exit the maintenance mode, perform shut-down, and turn the main power switch to off and on again. Allow more than 5 seconds between Off and On.

This page is intentionally left blank.

1-4-1 Paper misfeed detection

(1) Paper misfeed indication

When a paper misfeed occurs, the machine immediately stops printing and displays the paper misfeed message on the operation panel. To remove paper misfeed in the machine, pull out the cassette, open the paper conveying unit or paper conveying cover.

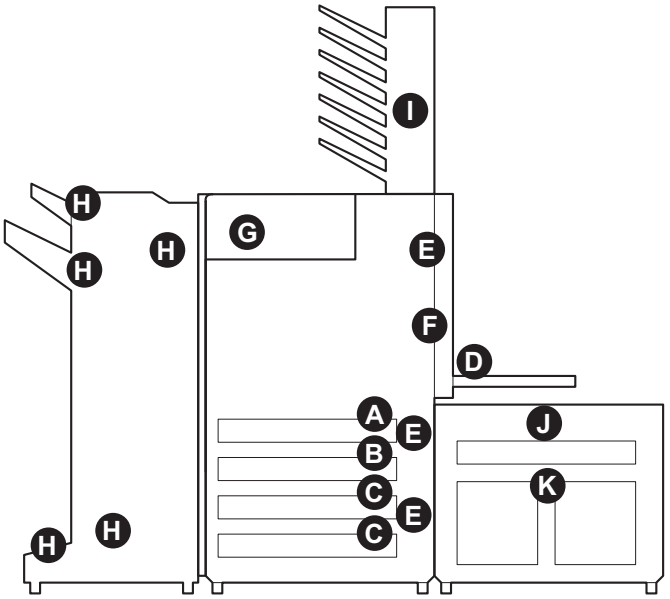

Figure 1-4-1 Paper misfeed indication

A. Misfeed in cassette 1
B. Misfeed in cassette 2
C. Misfeed in cassette 3 or 4 (option)
D. Misfeed in the MP tray
E. Misfeed in paper conveying unit, paper conveying cover or PF paper conveying cover
F. Misfeed in the duplex section
G. Misfeed in bridge unit (option)
H. Misfeed in document finisher (option)
I. Misfeed in cassette 5 (option)
J. Misfeed in cassette 6 or 7 (option)

(2) Paper misfeed detection condition

Machine

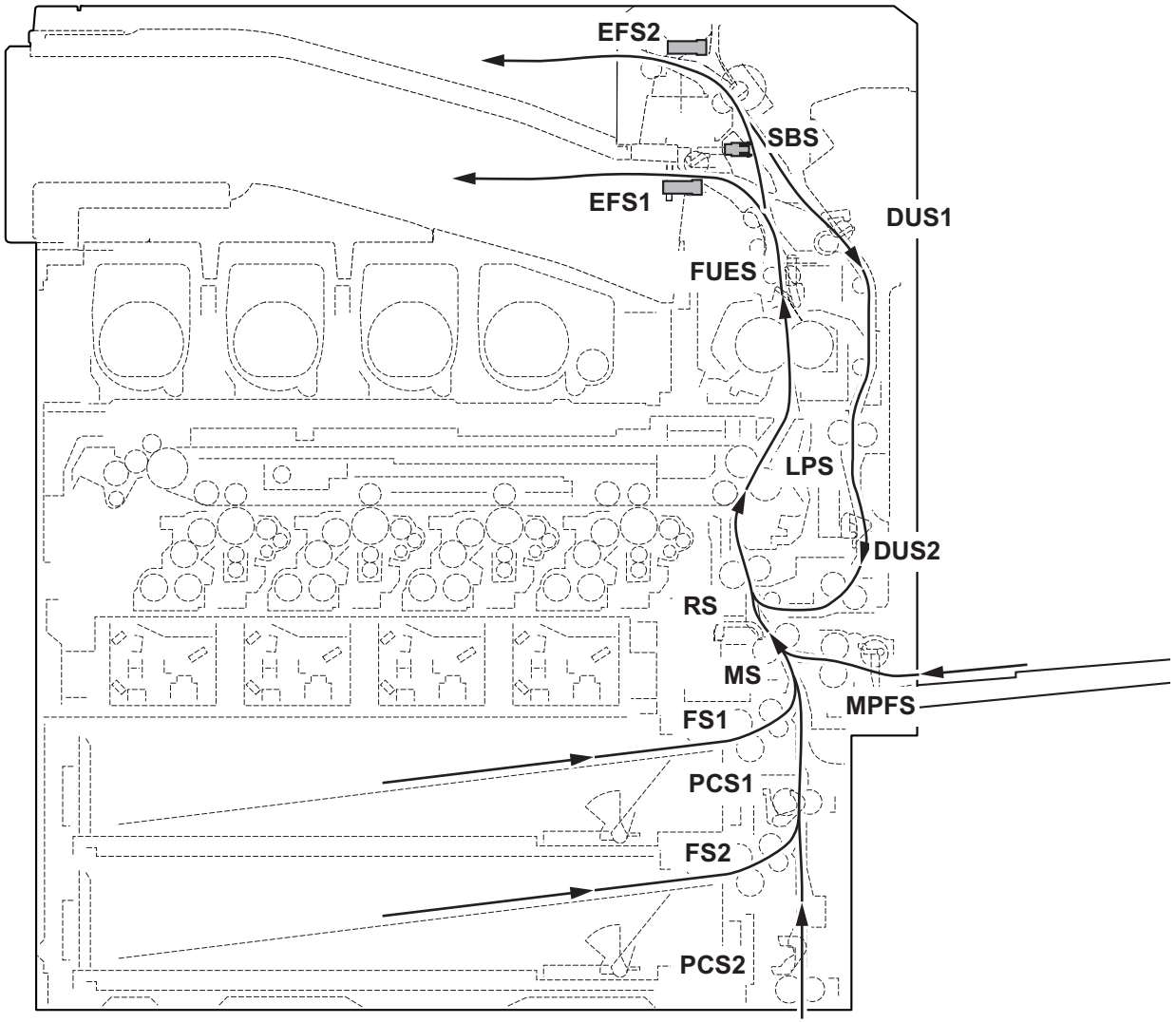

Figure 1-4-2 Paper jam location

* : This model does not support the following codes:
0132 /0505 /0515 /9030

Code	Contents	Conditions	Jam location*
0000	Initial jam	The power is turned on when a sensor in the conveying system is on.	-
0100	Secondary paper feed request time out	Secondary paper feed request given by the controller is unreachable.	-
0101	Waiting for process package to become ready	Process package won't become ready.	-
0102	Waiting for toner package to become ready	Toner package won't become ready.	-
0103	Waiting for the image-sustaining package to become ready	The image-sustaining package won't become ready.	-
0104	Waiting for conveying package to become ready	Conveying package won't become ready.	-
0106	Paper feeding request for duplex printing time out	Paper feeding request for duplex printing given by the controller is unreachable.	-
0107	Waiting for fuser package to become ready	Fuser package won't become ready.	-
0108	Waiting for option package to become ready	Option package won't become ready.	-
0110	Paper conveying unit open	The paper conveying unit is opened during printing.	E
0111	Front cover open	The front cover is opened during printing.	-
0112	Duplex cover open	The duplex cover is opened during printing.	F
0113	Paper conveying cover open	The paper conveying cover is opened during printing.	E
0114	BR conveying unit open	The BR conveying unit is opened during printing.	G
0115	BR eject cover open	The BR eject cover is opened during printing.	G
0131	MP lift sensor upper limit detection	MP lift sensor 1 (MPLS1) does not turn on within specified time of the MP lift plate rising.	D
0200	Machine sequence error	A sequence error has caused.	-
0210	PF paper conveying cover open	The PF paper conveying cover is opened during printing.	E

*: Refer to figure 1-4-1 for paper misfeed indication (see page 1-4-1).

Code	Contents	Conditions	Jam location*
0211	SM paper conveying cover open	The SM paper conveying cover is opened during printing.	J
0212	SM top cover open	The SM top cover is opened during printing.	J
0213	SD cover open	The SD cover is opened during printing.	J
0214	PF paper conveying cover (side) open	The PF paper conveying cover (side) is opened during printing.	K
0215	Side multi tray release	The side multi tray is released during printing.	J
0300	Ejection uncompleted	An ejection-completed error has occurred.	-
0501	No paper feed from cassette 1	Feed sensor 1 (FS1) does not turn on during paper feed from cassette 1.	A
0502	No paper feed from cassette 2	Feed sensor 2 (FS2) does not turn on during paper feed from cassette 2.	B
0503	No paper feed from cassette 3	PF feed sensor 1 (PFFS1) does not turn on during paper feed from cassette 3 (paper feeder).	C
0504	No paper feed from cassette 4	PF feed sensor 2 (PFFS2) does not turn on during paper feed from cassette 4 (paper feeder).	C
0505	No paper feed from cassette 5	SM feed sensor (SMFS) does not turn on during paper feed from cassette 5 (side multi tray).	J
0506	No paper feed from cassette 6	PF feed sensor 1 (PFFS1) does not turn on during paper feed from cassette 6 (side paper feeder).	K
0507	No paper feed from cassette 7	PF feed sensor 2 (PFFS2) does not turn on during paper feed from cassette 7 (side paper feeder).	K
0508	No paper feed from duplex section	Registration sensor (RS) does not turn on during paper feed from duplex section.	F
0509	No paper feed from MP tray	MP feed sensor (MPFS) does not turn on during paper feed from MP tray.	D
0511	Multiple sheets in cassette 1	Feed sensor 1 (FS1) does not turn off during paper feed from cassette 1.	A
0512	Multiple sheets in cassette 2	Feed sensor 2 (FS2) does not turn off during paper feed from cassette 2.	B
0513	Multiple sheets in cassette 3	PF feed sensor 1 (PFFS1) does not turn off during paper feed from cassette 3 (paper feeder).	C
0514	Multiple sheets in cassette 4	PF feed sensor 2 (PFFS2) does not turn off during paper feed from cassette 4 (paper feeder).	C

*: Refer to figure 1-4-1 for paper misfeed indication (see page 1-4-1).

Code	Contents	Conditions	Jam location*
0515	Multiple sheets in cassette 5	SM feed sensor (SMFS) does not turn off during paper feed from cassette 5 (side multi tray).	J
0516	Multiple sheets in cassette 6	PF feed sensor 1 (PFFS1) does not turn off during paper feed from cassette 6 (side paper feeder).	K
0517	Multiple sheets in cassette 7	PF feed sensor 2 (PFFS2) does not turn off during paper feed from cassette 7 (side paper feeder).	K
0518	Multiple sheets in duplex section	Registration sensor (RS) does not turn off during paper feed from duplex section.	F
0519	Multiple sheets in MP tray	MP feed sensor (MPFS) does not turn off during paper feed from MP tray.	D
0523	No paper feed from cassette 3	PF feed sensor 1 (PFFS1) does not turn on during paper feed from cassette 3 (large capacity feeder).	C
0524	No paper feed from cassette 4	PF feed sensor 2 (PFFS2) does not turn on during paper feed from cassette 4 (large capacity feeder).	C
0525	No paper feed from cassette 5	SM feed sensor (SMFS) does not turn on during paper feed from cassette 5 (side multi tray).	J
0526	No paper feed from cassette 6	PF feed sensor 1 (PFFS1) does not turn on during paper feed from cassette 6 (side large capacity feeder).	K
0527	No paper feed from cassette 7	PF feed sensor 2 (PFFS2) does not turn on during paper feed from cassette 7 (side large capacity feeder).	K
0533	Multiple sheets in cassette 3	PF feed sensor 1 (PFFS1) does not turn off during paper feed from cassette 3 (large capacity feeder).	C
0534	Multiple sheets in cassette 4	PF feed sensor 2 (PFFS2) does not turn off during paper feed from cassette 4 (large capacity feeder).	C
0535	Multiple sheets in cassette 5	SM feed sensor (SMFS) does not turn off during paper feed from cassette 5 (side multi tray).	J
0536	Multiple sheets in cassette 6	PF feed sensor 1 (PFFS1) does not turn off during paper feed from cassette 6 (side large capacity feeder).	K
0537	Multiple sheets in cassette 7	PF feed sensor 2 (PFFS2) does not turn off during paper feed from cassette 7 (side large capacity feeder).	K

*: Refer to figure 1-4-1 for paper misfeed indication (see page 1-4-1).

Code	Contents	Conditions	Jam location*
0545	No paper feed from side deck	SD feed sensor (SDFS) does not turn on during paper feed from side deck.	J
0555	Multiple sheets in side deck	SD feed sensor (SDFS) does not turn off during paper feed from side deck.	J
1301	Middle sensor non arrival jam	Middle sensor (MS) does not turn on during paper feed from cassette 1.	A
1302		Middle sensor (MS) does not turn on during paper feed from cassette 2.	B
1303		Middle sensor (MS) does not turn on during paper feed from cassette 3 (paper feeder/large capacity feeder).	C
1304		Middle sensor (MS) does not turn on during paper feed from cassette 4 (paper feeder/large capacity feeder).	C
1305		Middle sensor (MS) does not turn on during paper feed from cassette 5 (side multi tray/side deck).	J
1306		Middle sensor (MS) does not turn on during paper feed from cassette 6 (side paper feeder/side large capacity feeder).	K
1307		Middle sensor (MS) does not turn on during paper feed from cassette 7 (side paper feeder/side large capacity feeder).	K
1311	Middle sensor stay jam	Middle sensor (MS) does not turn off during paper feed from cassette 1.	E
1312		Middle sensor (MS) does not turn off during paper feed from cassette 2.	E
1313		Middle sensor (MS) does not turn off during paper feed from cassette 3 (paper feeder/large capacity feeder).	E
1314		Middle sensor (MS) does not turn off during paper feed from cassette 4 (paper feeder/large capacity feeder).	E
1315		Middle sensor (MS) does not turn off during paper feed from cassette 5 (side multi tray/side deck).	E
1316		Middle sensor (MS) does not turn off during paper feed from cassette 6 (side paper feeder/side large capacity feeder).	E
1317		Middle sensor (MS) does not turn off during paper feed from cassette 7 (side paper feeder/side large capacity feeder).	E

*: Refer to figure 1-4-1 for paper misfeed indication (see page 1-4-1).

Code	Contents	Conditions	Jam location*
1502	Paper conveying sensor non arrival jam	Paper conveying sensor (PCS) does not turn on during paper feed from cassette 2.	B
1503		Paper conveying sensor (PCS) does not turn on during paper feed from cassette 3 (paper feeder/large capacity feeder).	C
1504		Paper conveying sensor (PCS) does not turn on during paper feed from cassette 4 (paper feeder/large capacity feeder).	C
1512	Paper conveying sensor stay jam	Paper conveying sensor (PCS) does not turn off during paper feed from cassette 2.	E
1513		Paper conveying sensor (PCS) does not turn off during paper feed from cassette 3 (paper feeder/large capacity feeder).	E
1514		Paper conveying sensor (PCS) does not turn off during paper feed from cassette 4 (paper feeder/large capacity feeder).	E
1703	PF paper conveying sensor 1 non arrival jam	PF paper conveying sensor 1 (PFPCS1) does not turn on during paper feed from cassette 3 (paper feeder).	C
1704		PF paper conveying sensor 1 (PFPCS1) does not turn on during paper feed from cassette 4 (paper feeder).	C
1713	PF paper conveying sensor 1 stay jam	PF paper conveying sensor 1 (PFPCS1) does not turn off during paper feed from cassette 3 (paper feeder).	E
1714		PF paper conveying sensor 1 (PFPCS1) does not turn off during paper feed from cassette 4 (paper feeder).	E
1904	PF paper conveying sensor 2 non arrival jam	PF paper conveying sensor 2 (PFPCS2) does not turn on during paper feed from cassette 4 (paper feeder).	C
1914	PF paper conveying sensor 2 stay jam	PF paper conveying sensor 2 (PFPCS2) does not turn off during paper feed from cassette 4 (paper feeder).	E
2106	PF paper conveying sensor 1 non arrival jam	PF paper conveying sensor 1 (PFPCS1) does not turn on during paper feed from cassette 6 (side paper feeder).	K
2107		PF paper conveying sensor 1 (PFPCS1) does not turn on during paper feed from cassette 7 (side paper feeder).	K
2116	PF paper conveying sensor 1 stay jam	PF paper conveying sensor 1 (PFPCS1) does not turn off during paper feed from cassette 6 (side paper feeder).	J
2117		PF paper conveying sensor 1 (PFPCS1) does not turn off during paper feed from cassette 7 (side paper feeder).	J
2307	PF paper conveying sensor 2 non arrival jam	PF paper conveying sensor 2 (PFPCS2) does not turn on during paper feed from cassette 7 (side paper feeder).	K

*: Refer to figure 1-4-1 for paper misfeed indication (see page 1-4-1).

Code	Contents	Conditions	Jam location*
2317	PF paper conveying sensor 2 stay jam	PF paper conveying sensor 2 (PFPCS2) does not turn off during paper feed from cassette 7 (side paper feeder).	K
2603	PF paper conveying sensor 1 non arrival jam	PF paper conveying sensor 1 (PFPCS1) does not turn on during paper feed from cassette 3 (large capacity feeder).	C
2604		PF paper conveying sensor 1 (PFPCS1) does not turn on during paper feed from cassette 4 (large capacity feeder).	C
2606		PF paper conveying sensor 1 (PFPCS1) does not turn on during paper feed from cassette 6 (side large capacity feeder).	K
2607		PF paper conveying sensor 1 (PFPCS1) does not turn on during paper feed from cassette 7 (side large capacity feeder).	K
2613	PF paper conveying sensor 1 stay jam	PF paper conveying sensor 1 (PFPCS1) does not turn off during paper feed from cassette 3 (large capacity feeder).	E
2614		PF paper conveying sensor 1 (PFPCS1) does not turn off during paper feed from cassette 4 (large capacity feeder).	E
2616		PF paper conveying sensor 1 (PFPCS1) does not turn off during paper feed from cassette 6 (side large capacity feeder).	J
2617		PF paper conveying sensor 1 (PFPCS1) does not turn off during paper feed from cassette 7 (side large capacity feeder).	J
2704	PF paper conveying sensor 2 non arrival jam	PF paper conveying sensor 2 (PFPCS2) does not turn on during paper feed from cassette 4 (large capacity feeder).	C
2707		PF paper conveying sensor 2 (PFPCS2) does not turn on during paper feed from cassette 7 (side large capacity feeder).	K
2714	PF paper conveying sensor 2 stay jam	PF paper conveying sensor 2 (PFPCS2) does not turn off during paper feed from cassette 4 (large capacity feeder).	E
2717		PF paper conveying sensor 2 (PFPCS2) does not turn off during paper feed from cassette 7 (side large capacity feeder).	J

*: Refer to figure 1-4-1 for paper misfeed indication (see page 1-4-1).

Code	Contents	Conditions	Jam location*
3106	PF paper conveying sensor 1 non arrival jam	PF paper conveying sensor 1 (PFPCS1) does not turn on during paper feed from cassette 6 (side large capacity feeder).	K
3107		PF paper conveying sensor 1 (PFPCS1) does not turn on during paper feed from cassette 7 (side large capacity feeder).	K
3116	PF paper conveying sensor 1 stay jam	PF paper conveying sensor 1 (PFPCS1) does not turn off during paper feed from cassette 6 (side large capacity feeder).	J
3117		PF paper conveying sensor 1 (PFPCS1) does not turn off during paper feed from cassette 7 (side large capacity feeder).	J
3307	PF paper conveying sensor 2 non arrival jam	PF paper conveying sensor 2 (PFPCS2) does not turn on during paper feed from cassette 7 (side large capacity feeder).	K
3317	PF paper conveying sensor 2 stay jam	PF paper conveying sensor 2 (PFPCS2) does not turn off during paper feed from cassette 7 (side large capacity feeder).	J
3405	SM paper conveying sensor 1 non arrival jam	SM paper conveying sensor 1 (SMPCS1) does not turn on during paper feed from cassette 5 (side multi tray).	J
3406		SM paper conveying sensor 1 (SMPCS1) does not turn on during paper feed from cassette 6 (side multi tray).	K
3407		SM paper conveying sensor 1 (SMPCS1) does not turn on during paper feed from cassette 7 (side multi tray).	K
3415	SM paper conveying sensor 1 stay jam	SM paper conveying sensor 1 (SMPCS1) does not turn off during paper feed from cassette 5 (side multi tray).	J
3416		SM paper conveying sensor 1 (SMPCS1) does not turn off during paper feed from cassette 6 (side multi tray).	J
3417		SM paper conveying sensor 1 (SMPCS1) does not turn off during paper feed from cassette 7 (side multi tray).	J

*: Refer to figure 1-4-1 for paper misfeed indication (see page 1-4-1).

Code	Contents	Conditions	Jam location*
3505	SM paper conveying sensor 2 non arrival jam	SM paper conveying sensor 2 (SMPCS2) does not turn on during paper feed from cassette 5 (side multi tray).	J
3506		SM paper conveying sensor 2 (SMPCS2) does not turn on during paper feed from cassette 6 (side multi tray).	K
3507		SM paper conveying sensor 2 (SMPCS2) does not turn on during paper feed from cassette 7 (side multi tray).	K
3515	SM paper conveying sensor 2 stay jam	SM paper conveying sensor 2 (SMPCS2) does not turn off during paper feed from cassette 5 (side multi tray).	J
3516		SM paper conveying sensor 2 (SMPCS2) does not turn off during paper feed from cassette 6 (side multi tray).	J
3517		SM paper conveying sensor 2 (SMPCS2) does not turn off during paper feed from cassette 7 (side multi tray).	J
3605	SM paper conveying sensor 3 non arrival jam	SM paper conveying sensor 3 (SMPCS3) does not turn on during paper feed from cassette 5 (side multi tray).	J
3606		SM paper conveying sensor 3 (SMPCS3) does not turn on during paper feed from cassette 6 (side multi tray).	K
3607		SM paper conveying sensor 3 (SMPCS3) does not turn on during paper feed from cassette 7 (side multi tray).	K
3615	SM paper conveying sensor 3 stay jam	SM paper conveying sensor 3 (SMPCS3) does not turn off during paper feed from cassette 5 (side multi tray).	J
3616		SM paper conveying sensor 3 (SMPCS3) does not turn off during paper feed from cassette 6 (side multi tray).	J
3617		SM paper conveying sensor 3 (SMPCS3) does not turn off during paper feed from cassette 7 (side multi tray).	K

*: Refer to figure 1-4-1 for paper misfeed indication (see page 1-4-1).

Code	Contents	Conditions	Jam location*
3705	SM eject sensor non arrival jam	SM eject sensor (SMES) does not turn on during paper feed from cassette 5 (side multi tray).	J
3706		SM eject sensor (SMES) does not turn on during paper feed from cassette 6 (side multi tray).	K
3707		SM eject sensor (SMES) does not turn on during paper feed from cassette 7 (side multi tray).	K
3715	SM eject sensor stay jam	SM eject sensor (SMES) does not turn off during paper feed from cassette 5 (side multi tray).	J
3716		SM eject sensor (SMES) does not turn off during paper feed from cassette 6 (side multi tray).	J
3717		SM eject sensor (SMES) does not turn off during paper feed from cassette 7 (side multi tray).	J
4001	Registration sensor non arrival jam	Registration sensor (RS) does not turn on during paper feed from cassette 1.	E
4002		Registration sensor (RS) does not turn on during paper feed from cassette 2.	E
4003		Registration sensor (RS) does not turn on during paper feed from cassette 3 (paper feeder/large capacity feeder).	E
4004		Registration sensor (RS) does not turn on during paper feed from cassette 4 (paper feeder/large capacity feeder).	E
4005		Registration sensor (RS) does not turn on during paper feed from cassette 5 (side multi tray/side deck).	E
4006		Registration sensor (RS) does not turn on during paper feed from cassette 6 (side paper feeder/side large capacity feeder).	E
4007		Registration sensor (RS) does not turn on during paper feed from cassette 7 (side paper feeder/side large capacity feeder).	E
4009		Registration sensor (RS) does not turn on during paper feed from MP tray.	E

*: Refer to figure 1-4-1 for paper misfeed indication (see page 1-4-1).

Code	Contents	Conditions	Jam location*
4011	Registration sensor stay jam	Registration sensor (RS) does not turn off during paper feed from cassette 1.	E
4012		Registration sensor (RS) does not turn off during paper feed from cassette 2.	E
4013		Registration sensor (RS) does not turn off during paper feed from cassette 3 (paper feeder/large capacity feeder).	E
4014		Registration sensor (RS) does not turn off during paper feed from cassette 4 (paper feeder/large capacity feeder).	E
4015		Registration sensor (RS) does not turn off during paper feed from cassette 5 (side multi tray/side deck).	E
4016		Registration sensor (RS) does not turn off during paper feed from cassette 6 (side paper feeder/side large capacity feeder).	E
4017		Registration sensor (RS) does not turn off during paper feed from cassette 7 (side paper feeder/side large capacity feeder).	E
4019		Registration sensor (RS) does not turn off during paper feed from MP tray.	E
4101	Loop sensor non arrival jam	Loop sensor (LPS) does not turn on during paper feed from cassette 1.	E
4102		Loop sensor (LPS) does not turn on during paper feed from cassette 2.	E
4103		Loop sensor (LPS) does not turn on during paper feed from cassette 3 (paper feeder/large capacity feeder).	E
4104		Loop sensor (LPS) does not turn on during paper feed from cassette 4 (paper feeder/large capacity feeder).	E
4105		Loop sensor (LPS) does not turn on during paper feed from cassette 5 (side multi tray/side deck).	E
4106		Loop sensor (LPS) does not turn on during paper feed from cassette 6 (side paper feeder/side large capacity feeder).	E
4107		Loop sensor (LPS) does not turn on during paper feed from cassette 7 (side paper feeder/side large capacity feeder).	E
4108		Loop sensor (LPS) does not turn on during paper feed from duplex section.	E
4109		Loop sensor (LPS) does not turn on during paper feed from MP tray.	E

*: Refer to figure 1-4-1 for paper misfeed indication (see page 1-4-1).

Code	Contents	Conditions	Jam location*
4111	Loop sensor stay jam	Loop sensor (LPS) does not turn off during paper feed from cassette 1.	E
4112		Loop sensor (LPS) does not turn off during paper feed from cassette 2.	E
4113		Loop sensor (LPS) does not turn off during paper feed from cassette 3 (paper feeder/large capacity feeder).	E
4114		Loop sensor (LPS) does not turn off during paper feed from cassette 4 (paper feeder/large capacity feeder).	E
4115		Loop sensor (LPS) does not turn off during paper feed from cassette 5 (side multi tray/side deck).	E
4116		Loop sensor (LPS) does not turn off during paper feed from cassette 6 (side paper feeder/side large capacity feeder).	E
4117		Loop sensor (LPS) does not turn off during paper feed from cassette 7 (side paper feeder/side large capacity feeder).	E
4118		Loop sensor (LPS) does not turn off during paper feed from duplex section.	E
4119		Loop sensor (LPS) does not turn off during paper feed from MP tray.	E

*: Refer to figure 1-4-1 for paper misfeed indication (see page 1-4-1).

Code	Contents	Conditions	Jam location*
4201	Fuser eject sensor non arrival jam	Fuser eject sensor (FUES) does not turn on during paper feed from cassette 1.	E
4202		Fuser eject sensor (FUES) does not turn on during paper feed from cassette 2.	E
4203		Fuser eject sensor (FUES) does not turn on during paper feed from cassette 3 (paper feeder/large capacity feeder).	E
4204		Fuser eject sensor (FUES) does not turn on during paper feed from cassette 4 (paper feeder/large capacity feeder).	E
4205		Fuser eject sensor (FUES) does not turn on during paper feed from cassette 5 (side multi tray/side deck).	E
4206		Fuser eject sensor (FUES) does not turn on during paper feed from cassette 6 (side paper feeder/side large capacity feeder).	E
4207		Fuser eject sensor (FUES) does not turn on during paper feed from cassette 7 (side paper feeder/side large capacity feeder).	E
4208		Fuser eject sensor (FUES) does not turn on during paper feed from duplex section.	E
4209		Fuser eject sensor (FUES) does not turn on during paper feed from MP tray.	E
4211	Fuser eject sensor stay jam	Fuser eject sensor (FUES) does not turn off during paper feed from cassette 1.	G
4212		Fuser eject sensor (FUES) does not turn off during paper feed from cassette 2.	G
4213		Fuser eject sensor (FUES) does not turn off during paper feed from cassette 3 (paper feeder/large capacity feeder).	G
4214		Fuser eject sensor (FUES) does not turn off during paper feed from cassette 4 (paper feeder/large capacity feeder).	G
4215		Fuser eject sensor (FUES) does not turn off during paper feed from cassette 5 (side multi tray/side deck).	G
4216		Fuser eject sensor (FUES) does not turn off during paper feed from cassette 6 (side paper feeder/side large capacity feeder).	G
4217		Fuser eject sensor (FUES) does not turn off during paper feed from cassette 7 (side paper feeder/side large capacity feeder).	G
4218		Fuser eject sensor (FUES) does not turn off during paper feed from duplex section.	G
4219		Fuser eject sensor (FUES) does not turn off during paper feed from MP tray.	G

*: Refer to figure 1-4-1 for paper misfeed indication (see page 1-4-1).

Code	Contents	Conditions	Jam location*
4301	Duplex sensor 1 non arrival jam	Duplex sensor 1 (DUS1) does not turn on during paper feed from cassette 1.	G
4302		Duplex sensor 1 (DUS1) does not turn on during paper feed from cassette 2.	G
4303		Duplex sensor 1 (DUS1) does not turn on during paper feed from cassette 3 (paper feeder/large capacity feeder).	G
4304		Duplex sensor 1 (DUS1) does not turn on during paper feed from cassette 4 (paper feeder/large capacity feeder).	G
4305		Duplex sensor 1 (DUS1) does not turn on during paper feed from cassette 5 (side multi tray/side deck).	G
4306		Duplex sensor 1 (DUS1) does not turn on during paper feed from cassette 6 (side paper feeder/side large capacity feeder).	G
4307		Duplex sensor 1 (DUS1) does not turn on during paper feed from cassette 7 (side paper feeder/side large capacity feeder).	G
4309		Duplex sensor 1 (DUS1) does not turn on during paper feed from MP tray.	G
4311	Duplex sensor 1 stay jam	Duplex sensor 1 (DUS1) does not turn off during paper feed from cassette 1.	F
4312		Duplex sensor 1 (DUS1) does not turn off during paper feed from cassette 2.	F
4313		Duplex sensor 1 (DUS1) does not turn off during paper feed from cassette 3 (paper feeder/large capacity feeder).	F
4314		Duplex sensor 1 (DUS1) does not turn off during paper feed from cassette 4 (paper feeder/large capacity feeder).	F
4315		Duplex sensor 1 (DUS1) does not turn off during paper feed from cassette 5 (side multi tray/side deck).	F
4316		Duplex sensor 1 (DUS1) does not turn off during paper feed from cassette 6 (side paper feeder/side large capacity feeder).	F
4317		Duplex sensor 1 (DUS1) does not turn off during paper feed from cassette 7 (side paper feeder/side large capacity feeder).	F
4319		Duplex sensor 1 (DUS1) does not turn off during paper feed from MP tray.	F

*: Refer to figure 1-4-1 for paper misfeed indication (see page 1-4-1).

Code	Contents	Conditions	Jam location*
4401	Duplex sensor 2 non arrival jam	Duplex sensor 2 (DUS2) does not turn on during paper feed from cassette 1.	F
4402		Duplex sensor 2 (DUS2) does not turn on during paper feed from cassette 2.	F
4403		Duplex sensor 2 (DUS2) does not turn on during paper feed from cassette 3 (paper feeder/large capacity feeder).	F
4404		Duplex sensor 2 (DUS2) does not turn on during paper feed from cassette 4 (paper feeder/large capacity feeder).	F
4405		Duplex sensor 2 (DUS2) does not turn on during paper feed from cassette 5 (side multi tray/side deck).	F
4406		Duplex sensor 2 (DUS2) does not turn on during paper feed from cassette 6 (side paper feeder/side large capacity feeder).	F
4407		Duplex sensor 2 (DUS2) does not turn on during paper feed from cassette 7 (side paper feeder/side large capacity feeder).	F
4409		Duplex sensor 2 (DUS2) does not turn on during paper feed from MP tray.	F
4411	Duplex sensor 2 stay jam	Duplex sensor 2 (DUS2) does not turn off during paper feed from cassette 1.	F
4412		Duplex sensor 2 (DUS2) does not turn off during paper feed from cassette 2.	F
4413		Duplex sensor 2 (DUS2) does not turn off during paper feed from cassette 3 (paper feeder/large capacity feeder).	F
4414		Duplex sensor 2 (DUS2) does not turn off during paper feed from cassette 4 (paper feeder/large capacity feeder).	F
4415		Duplex sensor 2 (DUS2) does not turn off during paper feed from cassette 5 (side multi tray/side deck).	F
4416		Duplex sensor 2 (DUS2) does not turn off during paper feed from cassette 6 (side paper feeder/side large capacity feeder).	F
4417		Duplex sensor 2 (DUS2) does not turn off during paper feed from cassette 7 (side paper feeder/side large capacity feeder).	F
4418		Duplex sensor 2 (DUS2) does not turn off during paper feed from duplex section.	F
4419		Duplex sensor 2 (DUS2) does not turn off during paper feed from MP tray.	F

*: Refer to figure 1-4-1 for paper misfeed indication (see page 1-4-1).

Code	Contents	Conditions	Jam location*
4601	Eject full sensor non arrival jam	Eject full sensor (EFS) does not turn on during paper feed from cassette 1.	G
4602		Eject full sensor (EFS) does not turn on during paper feed from cassette 2.	G
4603		Eject full sensor (EFS) does not turn on during paper feed from cassette 3 (paper feeder/large capacity feeder).	G
4604		Eject full sensor (EFS) does not turn on during paper feed from cassette 4 (paper feeder/large capacity feeder).	G
4605		Eject full sensor (EFS) does not turn on during paper feed from cassette 5 (side multi tray/side deck).	G
4606		Eject full sensor (EFS) does not turn on during paper feed from cassette 6 (side paper feeder/side large capacity feeder).	G
4607		Eject full sensor (EFS) does not turn on during paper feed from cassette 7 (side paper feeder/side large capacity feeder).	G
4608		Eject full sensor (EFS) does not turn on during paper feed from duplex section.	G
4609		Eject full sensor (EFS) does not turn on during paper feed from MP tray.	G
4611	Eject full sensor stay jam	Eject full sensor (EFS) does not turn off during paper feed from cassette 1.	G
4612		Eject full sensor (EFS) does not turn off during paper feed from cassette 2.	G
4613		Eject full sensor (EFS) does not turn off during paper feed from cassette 3 (paper feeder/large capacity feeder).	G
4614		Eject full sensor (EFS) does not turn off during paper feed from cassette 4 (paper feeder/large capacity feeder).	G
4615		Eject full sensor (EFS) does not turn off during paper feed from cassette 5 (side multi tray/side deck).	G
4616		Eject full sensor (EFS) does not turn off during paper feed from cassette 6 (side paper feeder/side large capacity feeder).	G
4617		Eject full sensor (EFS) does not turn off during paper feed from cassette 7 (side paper feeder/side large capacity feeder).	G
4618		Eject full sensor (EFS) does not turn off during paper feed from duplex section.	G
4619		Eject full sensor (EFS) does not turn off during paper feed from MP tray.	G

*: Refer to figure 1-4-1 for paper misfeed indication (see page 1-4-1).

Code	Contents	Conditions	Jam location*
4701	Switchback sensor non arrival jam	Switchback sensor (SBS) does not turn on during paper feed from cassette 1.	G
4702		Switchback sensor (SBS) does not turn on during paper feed from cassette 2.	G
4703		Switchback sensor (SBS) does not turn on during paper feed from cassette 3 (paper feeder/large capacity feeder).	G
4704		Switchback sensor (SBS) does not turn on during paper feed from cassette 4 (paper feeder/large capacity feeder).	G
4705		Switchback sensor (SBS) does not turn on during paper feed from cassette 5 (side multi tray/side deck).	G
4706		Switchback sensor (SBS) does not turn on during paper feed from cassette 6 (side paper feeder/side large capacity feeder).	G
4707		Switchback sensor (SBS) does not turn on during paper feed from cassette 7 (side paper feeder/side large capacity feeder).	G
4708		Switchback sensor (SBS) does not turn on during paper feed from duplex section.	G
4709		Switchback sensor (SBS) does not turn on during paper feed from MP tray.	G
4711	Switchback sensor stay jam	Switchback sensor (SBS) does not turn off during paper feed from cassette 1.	G
4712		Switchback sensor (SBS) does not turn off during paper feed from cassette 2.	G
4713		Switchback sensor (SBS) does not turn off during paper feed from cassette 3 (paper feeder/large capacity feeder).	G
4714		Switchback sensor (SBS) does not turn off during paper feed from cassette 4 (paper feeder/large capacity feeder).	G
4715		Switchback sensor (SBS) does not turn off during paper feed from cassette 5 (side multi tray/side deck).	G
4716		Switchback sensor (SBS) does not turn off during paper feed from cassette 6 (side paper feeder/side large capacity feeder).	G
4717		Switchback sensor (SBS) does not turn off during paper feed from cassette 7 (side paper feeder/side large capacity feeder).	G
4718		Switchback sensor (SBS) does not turn off during paper feed from duplex section.	G
4719		Switchback sensor (SBS) does not turn off during paper feed from MP tray.	G

*: Refer to figure 1-4-1 for paper misfeed indication (see page 1-4-1).

Code	Contents	Conditions	Jam location*
4901	BR conveying sensor 1 non arrival jam	BR conveying sensor 1 (BRCS1) does not turn on during paper feed from cassette 1.	G
4902		BR conveying sensor 1 (BRCS1) does not turn on during paper feed from cassette 2.	G
4903		BR conveying sensor 1 (BRCS1) does not turn on during paper feed from cassette 3 (paper feeder/large capacity feeder).	G
4904		BR conveying sensor 1 (BRCS1) does not turn on during paper feed from cassette 4 (paper feeder/large capacity feeder).	G
4905		BR conveying sensor 1 (BRCS1) does not turn on during paper feed from cassette 5 (side multi tray/side deck).	G
4906		BR conveying sensor 1 (BRCS1) does not turn on during paper feed from cassette 6 (side paper feeder/side large capacity feeder).	G
4907		BR conveying sensor 1 (BRCS1) does not turn on during paper feed from cassette 7 (side paper feeder/side large capacity feeder).	G
4908		BR conveying sensor 1 (BRCS1) does not turn on during paper feed from duplex section.	G
4909		BR conveying sensor 1 (BRCS1) does not turn on during paper feed from MP tray.	G
4911	BR conveying sensor 1 stay jam	BR conveying sensor 1 (BRCS1) does not turn off during paper feed from cassette 1.	G
4912		BR conveying sensor 1 (BRCS1) does not turn off during paper feed from cassette 2.	G
4913		BR conveying sensor 1 (BRCS1) does not turn off during paper feed from cassette 3 (paper feeder/large capacity feeder).	G
4914		BR conveying sensor 1 (BRCS1) does not turn off during paper feed from cassette 4 (paper feeder/large capacity feeder).	G
4915		BR conveying sensor 1 (BRCS1) does not turn off during paper feed from cassette 5 (side multi tray/side deck).	G
4916		BR conveying sensor 1 (BRCS1) does not turn off during paper feed from cassette 6 (side paper feeder/side large capacity feeder).	G
4917		BR conveying sensor 1 (BRCS1) does not turn off during paper feed from cassette 7 (side paper feeder/side large capacity feeder).	G

*: Refer to figure 1-4-1 for paper misfeed indication (see page 1-4-1).

Code	Contents	Conditions	Jam location*
4918	BR conveying sensor 1 stay jam	BR conveying sensor 1 (BRCS1) does not turn off during paper feed from duplex section.	G
4919		BR conveying sensor 1 (BRCS1) does not turn off during paper feed from MP tray.	G
5001	BR conveying sensor 2 non arrival jam	BR conveying sensor 2 (BRCS2) does not turn on during paper feed from cassette 1.	G
5002		BR conveying sensor 2 (BRCS2) does not turn on during paper feed from cassette 2.	G
5003		BR conveying sensor 2 (BRCS2) does not turn on during paper feed from cassette 3 (paper feeder/large capacity feeder).	G
5004		BR conveying sensor 2 (BRCS2) does not turn on during paper feed from cassette 4 (paper feeder/large capacity feeder).	G
5005		BR conveying sensor 2 (BRCS2) does not turn on during paper feed from cassette 5 (side multi tray/side deck).	G
5006		BR conveying sensor 2 (BRCS2) does not turn on during paper feed from cassette 6 (side paper feeder/side large capacity feeder).	G
5007		BR conveying sensor 2 (BRCS2) does not turn on during paper feed from cassette 7 (side paper feeder/side large capacity feeder).	G
5008		BR conveying sensor 2 (BRCS2) does not turn on during paper feed from duplex section.	G
5009		BR conveying sensor 2 (BRCS2) does not turn on during paper feed from MP tray.	G
5011	BR conveying sensor 2 stay jam	BR conveying sensor 2 (BRCS2) does not turn off during paper feed from cassette 1.	G
5012		BR conveying sensor 2 (BRCS2) does not turn off during paper feed from cassette 2.	G
5013		BR conveying sensor 2 (BRCS2) does not turn off during paper feed from cassette 3 (paper feeder/large capacity feeder).	G
5014		BR conveying sensor 2 (BRCS2) does not turn off during paper feed from cassette 4 (paper feeder/large capacity feeder).	G
5015		BR conveying sensor 2 (BRCS2) does not turn off during paper feed from cassette 5 (side multi tray/side deck).	G

*: Refer to figure 1-4-1 for paper misfeed indication (see page 1-4-1).

Code	Contents	Conditions	Jam location*
5016	BR conveying sensor 2 stay jam	BR conveying sensor 2 (BRCS2) does not turn off during paper feed from cassette 6 (side paper feeder/side large capacity feeder).	G
5017		BR conveying sensor 2 (BRCS2) does not turn off during paper feed from cassette 7 (side paper feeder/side large capacity feeder).	G
5018		BR conveying sensor 2 (BRCS2) does not turn off during paper feed from duplex section.	G
5019		BR conveying sensor 2 (BRCS2) does not turn off during paper feed from MP tray.	G
5101	BR eject sensor non arrival jam	BR eject sensor (BRES) does not turn on during paper feed from cassette 1.	G
5102		BR eject sensor (BRES) does not turn on during paper feed from cassette 2.	G
5103		BR eject sensor (BRES) does not turn on during paper feed from cassette 3 (paper feeder/large capacity feeder).	G
5104		BR eject sensor (BRES) does not turn on during paper feed from cassette 4 (paper feeder/large capacity feeder).	G
5105		BR eject sensor (BRES) does not turn on during paper feed from cassette 5 (side multi tray/side deck).	G
5106		BR eject sensor (BRES) does not turn on during paper feed from cassette 6 (side paper feeder/side large capacity feeder).	G
5107		BR eject sensor (BRES) does not turn on during paper feed from cassette 7 (side paper feeder/side large capacity feeder).	G
5108		BR eject sensor (BRES) does not turn on during paper feed from duplex section.	G
5109		BR eject sensor (BRES) does not turn on during paper feed from MP tray.	G

*: Refer to figure 1-4-1 for paper misfeed indication (see page 1-4-1).

Code	Contents	Conditions	Jam location*
5111	BR eject sensor stay jam	BR eject sensor (BRES) does not turn off during paper feed from cassette 1.	G
5112		BR eject sensor (BRES) does not turn off during paper feed from cassette 2.	G
5113		BR eject sensor (BRES) does not turn off during paper feed from cassette 3 (paper feeder/large capacity feeder).	G
5114		BR eject sensor (BRES) does not turn off during paper feed from cassette 4 (paper feeder/large capacity feeder).	G
5115		BR eject sensor (BRES) does not turn off during paper feed from cassette 5 (side multi tray/side deck).	G
5116		BR eject sensor (BRES) does not turn off during paper feed from cassette 6 (side paper feeder/side large capacity feeder).	G
5117		BR eject sensor (BRES) does not turn off during paper feed from cassette 7 (side paper feeder/side large capacity feeder).	G
5118		BR eject sensor (BRES) does not turn off during paper feed from duplex section.	G
5119		BR eject sensor (BRES) does not turn off during paper feed from MP tray.	G
6000	DF paper entry error	DF paper entry sensor (DFPES) turns on before the eject signal is output from the machine (4000-sheet finisher).	H
6001		DF paper entry sensor (DFPES) turns on before the eject signal is output from the machine (1000-sheet finisher).	H
6020	DF front cover open	DF front upper cover is opened during operation (4000-sheet finisher).	H
6021		DF front cover is opened during operation (1000-sheet finisher).	H
6041	DF top cover open	DF top cover is opened during operation (1000-sheet finisher).	H
6050	CF eject cover open	CF eject cover is opened during operation (4000-sheet finisher).	H
6060	MB cover open	MB cover is opened during operation (4000-sheet finisher).	H
6070	Center folding unit open	Center folding unit is opened during operation (4000-sheet finisher).	H
6080	CF left guide open	CF left guide is opened during operation (4000-sheet finisher).	H

*: Refer to figure 1-4-1 for paper misfeed indication (see page 1-4-1).

Code	Contents	Conditions	Jam location*
6100	DF paper entry sensor non arrival jam	DF paper entry sensor (DFPES) is not turned on even if a specified time has elapsed after the machine eject signal was received (4000-sheet finisher).	H
6101		DF paper entry sensor (DFPES) is not turned on even if a specified time has elapsed after the machine eject signal was received (1000-sheet finisher).	H
6110	DF paper entry sensor stay jam	DF paper entry sensor (DFPES) is not turned off within specified time of its turning on (4000-sheet finisher).	H
6111		DF paper entry sensor (DFPES) is not turned off within specified time of its turning on (1000-sheet finisher).	H
6200	DF sub eject sensor non arrival jam	DF sub eject sensor (DFSES) does not turn on within specified time of DF paper entry sensor (DFPES) turning on.	H
6210	DF sub eject sensor stay jam	DF sub eject sensor (DFSES) is not turned off within specified time of its turning on.	H
6300	DF middle eject sensor non arrival jam	DF middle eject sensor (DFMES) does not turn on within specified time of DF paper entry sensor (DFPES) turning on (4000-sheet finisher).	H
6301		DF middle eject sensor (DFMES) does not turn on within specified time of DF paper entry sensor (DFPES) turning on (1000-sheet finisher).	H
6310	DF middle eject sensor stay jam	DF middle eject sensor (DFMES) is not turned off within specified time of its turning on (4000-sheet finisher).	H
6311		DF middle eject sensor (DFMES) is not turned off within specified time of its turning on (1000-sheet finisher)	H

*: Refer to figure 1-4-1 for paper misfeed indication (see page 1-4-1).

Code	Contents	Conditions	Jam location*
6400	DF tray upper surface sensor non arrival jam	DF tray upper surface sensor (DFTUSS) does not turn on within specified time of DF middle eject sensor (DFMES) turning on (4000-sheet finisher).	H
6401		DF tray upper surface sensor (DFTUSS) does not turn on within specified time of DF middle eject sensor (DFMES) turning on (1000-sheet finisher).	H
6410	DF tray upper surface sensor stay jam	DF tray upper surface sensor (DFTUSS) is not turned off within specified time of its turning on (4000-sheet finisher).	H
6411		DF tray upper surface sensor (DFTUSS) is not turned off within specified time of its turning on (1000-sheet finisher).	H
6500	DF bundle discharge sensor non arrival jam	DF bundle discharge sensor (DFBDS) does not turn on within specified time of DF middle eject sensor (DFMES) turning on.	H
6510	DF bundle discharge sensor stay jam	DF bundle discharge sensor (DFBDS) is not turned off since the bundle discharge starts (4000-sheet finisher).	H
6511		DF bundle discharge sensor (DFBDS) is not turned off since the bundle discharge starts (1000-sheet finisher).	H
6600	DF drum sensor non arrival jam	DF drum sensor (DFDRS) does not turn on within specified time of DF paper entry sensor (DFPES) turning on.	H
6610	DF drum sensor stay jam	DF drum sensor (DFDRS) is not turned off within specified time of its turning on.	H
6710	Center folding unit stay jam	During paper conveying to center folding unit, DF drum sensor (DFDRS) is not turned off within specified time of its turning on.	H
6810	DF side registration sensor 1 stay jam	DF side registration sensor 1 (DFSRS1) is not turned off within specified time after driving the DF side registration motor 1 (DFSRM1) (4000-sheet finisher).	H
6811		DF side registration sensor 1 (DFSRS1) is not turned off within specified time after driving the DF side registration motor 1 (DFSRM1) (1000-sheet finisher).	H
6910	DF side registration sensor 2 stay jam	DF side registration sensor 2 (DFSRS2) is not turned off within specified time after driving the DF side registration motor 2 (DFSRM2) (4000-sheet finisher).	H
6811		DF side registration sensor 2 (DFSRS2) is not turned off within specified time after driving the DF side registration motor 2 (DFSRM2) (1000-sheet finisher).	H

*: Refer to figure 1-4-1 for paper misfeed indication (see page 1-4-1).

Code	Contents	Conditions	Jam location*
7000	DF staple operation error	DF staple sensor (DFSTS) is not turned on within specified time after driving the DF staple motor (DFSTM) (4000-sheet finisher).	H
7001		DF staple sensor (DFSTS) is not turned on within specified time after driving the DF staple motor (DFSTM) (1000-sheet finisher).	H
7100	CF paper entry sensor non arrival jam	CF paper entry sensor (CFPES) is not turned on even if a specified time has elapsed after the machine eject signal was received.	H
7110	CF paper entry sensor stay jam	CF paper entry sensor (CFPES) is not turned off within specified time of its turning on.	H
7200	CF eject sensor non arrival jam	CF eject sensor (CFES) is not turned on within specified time since centerfold operation starts.	H
7210	CF eject sensor stay jam	During centerfold operation, CF eject sensor (CFES) is not turned off within specified time of its turning on.	H
7300	CF eject sensor non arrival jam	CF eject sensor (CFES) is not turned on within specified time since three fold operation starts.	H
7310	CF eject sensor stay jam	During three fold operation, CF eject sensor (CFES) is not turned off within specified time of its turning on.	H
7400	CF side registration sensor 2 non arrival jam	CF side registration sensor 2 (CFSRS2) is not turned on within specified time after driving the CF side registration motor 2 (CFSRM2).	H
7500	CF side registration sensor 1 non arrival jam	CF side registration sensor 1 (CFSRS1) is not turned on within specified time after driving the CF side registration motor 1 (CFSRM1).	H
7600	CF staple operation error	CF staple sensor (CFSTS) is not turned on within specified time after driving the CF staple motor (CFSTM).	H
7700	CF paper conveying sensor non arrival jam	CF paper conveying sensor (CFPCS) is not turned on even if a specified time has elapsed after the machine eject signal was received.	H
7710	CF paper conveying sensor stay jam	CF paper conveying sensor (CFPCS) is not turned off within specified time of its turning on.	H
7800	MB eject sensor non arrival jam	MB eject sensor (MBES) is not turned on even if a specified time has elapsed after the machine eject signal was received.	I
7810	MB eject sensor stay jam	MB eject sensor (MBES) is not turned off within specified time of its turning on.	I
7950	Paper interval error jam	An illegal inter-page or inter-print interval has occurred (4000-sheet finisher).	H
7951		An illegal inter-page or inter-print interval has occurred (1000-sheet finisher).	H

*: Refer to figure 1-4-1 for paper misfeed indication (see page 1-4-1).

1-4-2 Self-diagnostic function

(1) Self-diagnostic function

This machine is equipped with self-diagnostic function. When a problem is detected, the machine stops printing and display an error message on the operation panel. An error message consists of a message prompting a contact to service personnel and a four-digit error code indicating the type of the error.

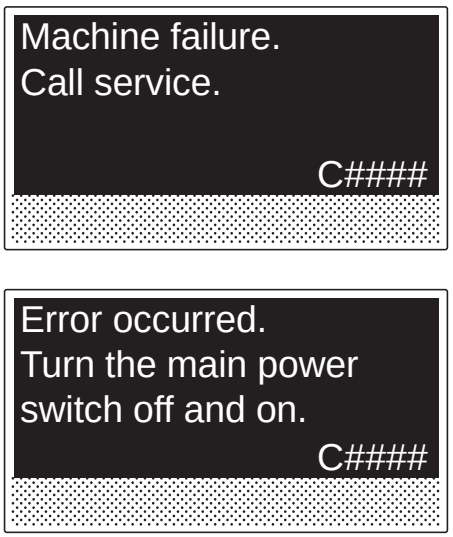

Figure 1-4-3

(2) Self diagnostic codes

If the part causing the problem was not supplied, use the unit including the part for replacement.

Code	Contents	Causes	Check procedures/ corrective measures
0100	**Backup memory device error**	Defective EEPROM.	Replace the main PWB and check for correct operation (see page 1-5-47).
		Defective main PWB.	Replace the main PWB and check for correct operation (see page 1-5-47).
0120	**MAC address data error** For data in which the MAC address is invalid.	Defective EEPROM.	Replace the main PWB and check for correct operation (see page 1-5-47).
		Defective engine PWB.	Replace the engine PWB and check for correct operation (see page 1-5-52).
0150	**Backup memory read/write error (engine PWB)** No response is issued from the device in reading/writing for 5 ms or more and this problem is repeated 5 times successively. Mismatch of reading data from 2 locations occurs 8 times successively. Mismatch between writing data and reading data occurs 8 times successively.	Improper installation EEPROM.	Check the installation of the EEPROM and remedy if necessary.
		Defective engine PWB.	Replace the engine PWB and check for correct operation (see page 1-5-52).
		Device damage of EEPROM.	Contact the Service Administrative Division.
0160	**Backup memory data error (engine PWB)** Reading data from EEPROM is abnormal.	Data damage of EEPROM.	Contact the Service Administrative Division.
0170	**Billing counting error** A checksum error is detected in the main and engine backup memories for the billing counters.	Data damage of EEPROM.	Contact the Service Administrative Division.
		Defective PWB.	Replace the DF main PWB or the engine PWB and check for correct operation. (see page 1-5-47,1-5-52)
0180	**Machine number mismatch** Machine number of main and engine does not match.	Data damage of EEPROM.	Contact the Service Administrative Division.
0640	**Hard disk error** The hard disk cannot be accessed.	Defective connector cable or poor contact in the connector.	Reinsert the connector. Also check for continuity within the connector cable. If none, replace the cable.
		Defective hard disk.	Run U024 (HDD formatting) without turning the power off to initialize the hard disk. Replace the hard disk drive and check for correct operation if the problem is still detected after initialization.
		Defective main PWB.	Replace the main PWB and check for correct operation (see page 1-5-47).

Code	Contents	Causes	Check procedures/ corrective measures
0800	**Image processing error** JAM010X is detected twice.	Defective main PWB.	Replace the main PWB and check for correct operation (see page 1-5-47).
0840	**Faults of RTC** The time is judged to go back based on the comparison of the RTC time and the current time or five years or more have passed.	The battery is disconnected from the main PWB.	Check visually and remedy if necessary
		Defective main PWB.	Replace the main PWB and check for correct operation (see page 1-5-47).
		* : Once detected, turning the main power switch off and on lets the machine in disconnection mode, displaying Maintenance T.Execute U906 to reset.	
0970	**12 V power down detect** Power is disconnected during sleepingDetection of the temporary blackout during sleeping (24V is off, 23V is on, only the controller software is running).	Defective power source PWB.	Replace the power source PWB and check for correct operation.
0980	**24 V power down detect** **24V disconnection signal is detected for 1 s and 12V disconnection signal is not detected.**	Defective power source PWB.	Replace the power source PWB and check for correct operation.
1000	**MP lift motor error** After the MP lift motor is driven, the ON status of MP lift sensors 1 and 2 cannot be detected for 3 s.	Defective MP plate elevation mechanism.	Check to see if the MP plate can move smoothly and repair it if any problem is found.
		Defective connector cable or poor contact in the connector.	Reinsert the connector. Also check for continuity within the connector cable. If none, replace the cable. MP lift motor and relay PWB (YC3) Relay PWB (YC12) and feed PWB 1 (YC17) Feed PWB 1 (YC1) and engine PWB (YC6)
		Defective drive transmission system of motor.	Check if the gears rotate smoothly. If not, grease the bushes and gears. Check for broken gears and replace if any.
		Defective MP lift motor.	Replace the MP lift motor.
		Defective engine PWB.	Replace the engine PWB and check for correct operation (see page 1-5-52).

Code	Contents	Causes	Check procedures/ corrective measures
1010	**Lift motor 1 error** After cassette 1 is inserted, lift sensor 1 does not turn on within 12 s. This error is detected 5 times successively. The lock signal of the motor is detected continuously for 1 s. This error is detected 5 times successively.	Defective bottom plate elevation mechanism in the cassette.	Check to see if the bottom plate can move smoothly and repair it if any problem is found.
		Defective connector cable or poor contact in the connector.	Reinsert the connector. Also check for continuity within the connector cable. If none, replace the cable. Lift motor 1 and feed PWB 2 (YC3) Feed PWB 2 (YC1) and engine PWB (YC4)
		Defective drive transmission system of motor.	Check if the gears rotate smoothly. If not, grease the bushes and gears. Check for broken gears and replace if any.
		Defective lift motor 1.	Replace the lift motor 1.
		Defective engine PWB.	Replace the engine PWB and check for correct operation (see page 1-5-52).
1020	**Lift motor 2 error** After cassette 2 is inserted, lift sensor 2 does not turn on within 12 s. This error is detected 5 times successively. The lock signal of the motor is detected continuously for 1 s. This error is detected 5 times successively.	Defective bottom plate elevation mechanism in the cassette.	Check to see if the bottom plate can move smoothly and repair it if any problem is found.
		Defective connector cable or poor contact in the connector.	Reinsert the connector. Also check for continuity within the connector cable. If none, replace the cable. Lift motor 2 and feed PWB 2 (YC3) Feed PWB 2 (YC1) and engine PWB (YC4)
		Defective drive transmission system of motor.	Check if the gears rotate smoothly. If not, grease the bushes and gears. Check for broken gears and replace if any.
		Defective lift motor 2.	Replace the lift motor 2.
		Defective engine PWB.	Replace the engine PWB and check for correct operation (see page 1-5-52).

Code	Contents	Causes	Check procedures/ corrective measures
1030	**PF lift motor 1 error (paper feeder)** After cassette 3 is inserted, PF lift sensor 1 does not turn on within 12 s. This error is detected 5 times successively. During driving the motor, the lift overcurrent protective monitor signal is detected for 1 s or more 5 times successively. However, the first 1 s after motor is turned on is excluded from detection.	Defective bottom plate elevation mechanism in the cassette.	Check to see if the bottom plate can move smoothly and repair it if any problem is found.
		Defective connector cable or poor contact in the connector.	Reinsert the connector. Also check for continuity within the connector cable. If none, replace the cable. PF lift motor 1 and PF main PWB (YC7)
		Defective drive transmission system of motor.	Check if the gears rotate smoothly. If not, grease the bushes and gears. Check for broken gears and replace if any.
		Defective PF lift motor 1.	Replace the PF lift motor 1.
		Defective PF main PWB.	Replace the PF main PWB (Refer to the service manual for the paper feeder).
1040	**PF lift motor 2 error (paper feeder)** After cassette 4 is inserted, PF lift sensor 2 does not turn on within 12 s. This error is detected 5 times successively. During driving the motor, the lift overcurrent protective monitor signal is detected for 1 s or more 5 times successively. However, the first 1 s after motor is turned on is excluded from detection.	Defective bottom plate elevation mechanism in the cassette.	Check to see if the bottom plate can move smoothly and repair it if any problem is found.
		Defective connector cable or poor contact in the connector.	Reinsert the connector. Also check for continuity within the connector cable. If none, replace the cable. PF lift motor 2 and PF main PWB (YC7)
		Defective drive transmission system of motor.	Check if the gears rotate smoothly. If not, grease the bushes and gears. Check for broken gears and replace if any.
		Defective PF lift motor 2.	Replace the PF lift motor 2.
		Defective PF main PWB.	Replace the PF main PWB (Refer to the service manual for the paper feeder).
1050	**SM lift motor error (side multi tray)** [45 ppm/55 ppm model] After cassette 5 is inserted, SM lift sensor does not turn on within 12 s. This error is detected 5 times successively. (Time to detect is 2 seconds at the second time and later.) During driving the motor, the lift overcurrent protective monitor signal is detected for 1 s or more 5 times successively. However, the first 1 s after motor is turned on is excluded from detection.	Defective bottom plate elevation mechanism in the cassette.	Check to see if the bottom plate can move smoothly and repair it if any problem is found.
		Defective connector cable or poor contact in the connector.	Reinsert the connector. Also check for continuity within the connector cable. If none, replace the cable. SM lift motor and SM main PWB (YC5)
		Defective drive transmission system of motor.	Check if the gears rotate smoothly. If not, grease the bushes and gears. Check for broken gears and replace if any.
		Defective SM lift motor.	Replace the SM lift motor.
		Defective SM main PWB.	Replace the SM main PWB (Refer to the service manual for the paper feeder).

Code	Contents	Causes	Check procedures/ corrective measures
1060	**PF lift motor 1 error (side paper feeder)** After cassette 6 is inserted, PF lift sensor 1 does not turn on within 12 s. This error is detected 5 times successively. (Time to detect is 2 seconds at the second time and later.) During driving the motor, the lift overcurrent protective monitor signal is detected for 1 s or more 5 times successively. However, the first 1 s after motor is turned on is excluded from detection. *:The software over-current protection monitor signal has been detected for 200ms or longer where LFC is installed.	Defective bottom plate elevation mechanism in the cassette.	Check to see if the bottom plate can move smoothly and repair it if any problem is found.
		Defective connector cable or poor contact in the connector.	Reinsert the connector. Also check for continuity within the connector cable. If none, replace the cable. PF lift motor 1 and PF main PWB (YC7)
		Defective drive transmission system of motor.	Check if the gears rotate smoothly. If not, grease the bushes and gears. Check for broken gears and replace if any.
		Defective PF lift motor 1.	Replace the PF lift motor 1.
		Defective PF main PWB.	Replace the PF main PWB (Refer to the service manual for the paper feeder).
1070	**PF lift motor 2 error (side paper feeder)** After cassette 7 is inserted, PF lift sensor 2 does not turn on within 12 s. This error is detected 5 times successively. (Time to detect is 2 seconds at the second time and later.) During driving the motor, the lift overcurrent protective monitor signal is detected for 1 s or more 5 times successively. However, the first 1 s after motor is turned on is excluded from detection. *:The software over-current protection monitor signal has been detected for 200ms or longer where LFC is installed.	Defective bottom plate elevation mechanism in the cassette.	Check to see if the bottom plate can move smoothly and repair it if any problem is found.
		Defective connector cable or poor contact in the connector.	Reinsert the connector. Also check for continuity within the connector cable. If none, replace the cable. PF lift motor 2 and PF main PWB (YC7)
		Defective drive transmission system of motor.	Check if the gears rotate smoothly. If not, grease the bushes and gears. Check for broken gears and replace if any.
		Defective PF lift motor 2.	Replace the PF lift motor 2.
		Defective PF main PWB.	Replace the PF main PWB (Refer to the service manual for the paper feeder).

Code	Contents	Causes	Check procedures/ corrective measures
1100	**PF lift motor 1 error (large capacity feeder)** After cassette 3 is inserted, PF lift sensor 1 does not turn on within 23 s. This error is detected 5 times successively. (Time to detect is 2 seconds at the second time and later.) During driving the motor, the lift overcurrent protective monitor signal is detected for 200 ms or more 5 times successively. However, the first 1 s after PF lift motor 1 is turned on is excluded from detection.	Defective connector cable or poor contact in the connector.	Reinsert the connector. Also check for continuity within the connector cable. If none, replace the cable. PF lift motor 1 and PF main PWB (YC7)
		Defective drive transmission system of motor.	Check if the gears rotate smoothly. If not, grease the bushes and gears. Check for broken gears and replace if any.
		Defective PF lift motor 1.	Replace the PF lift motor 1.
		Defective PF main PWB.	Replace the PF main PWB (Refer to the service manual for the paper feeder).
1110	**PF lift motor 2 error (large capacity feeder)** After cassette 4 is inserted, PF lift sensor 2 does not turn on within 23 s. This error is detected 5 times successively. (Time to detect is 2 seconds at the second time and later.) During driving the motor, the lift overcurrent protective monitor signal is detected for 200 ms or more 5 times successively. However, the first 1 s after PF lift motor 2 is turned on is excluded from detection.	Defective connector cable or poor contact in the connector.	Reinsert the connector. Also check for continuity within the connector cable. If none, replace the cable. PF lift motor 2 and PF main PWB (YC7)
		Defective drive transmission system of motor.	Check if the gears rotate smoothly. If not, grease the bushes and gears. Check for broken gears and replace if any.
		Defective PF lift motor 2.	Replace the PF lift motor 2.
		Defective PF main PWB.	Replace the PF main PWB (Refer to the service manual for the paper feeder).
1140	**SD lift motor error (side deck)** After cassette 5 is inserted, SD lift sensor does not turn on within 30 s. The lock signal of the motor is detected continuously for 200 ms.	Defective connector cable or poor contact in the connector.	Reinsert the connector. Also check for continuity within the connector cable. If none, replace the cable. SD lift motor and SD main PWB (YC8)
		Defective drive transmission system of motor.	Check if the gears rotate smoothly. If not, grease the bushes and gears. Check for broken gears and replace if any.
		Defective SD lift motor.	Replace the SD lift motor.
		Defective SD main PWB.	Replace the SD main PWB (Refer to the service manual for the paper feeder).

Code	Contents	Causes	Check procedures/ corrective measures
1250	**SM multi feed sensor communication error (side multi tray)** A communication error is detected 3 times in succession.	Improper installation side multi tray.	Follow installation instruction carefully again.
		Defective connector cable or poor contact in the connector.	Reinsert the connector. Also check for continuity within the connector cable. If none, replace the cable. SM main PWB (YC1) and engine PWB (YC19)
		Defective engine PWB.	Replace the engine PWB a1-5-52nd check for correct operation (see page 1-5-52).
		Defective SM main PWB.	Replace the SM main PWB (Refer to the service manual for the paper feeder).
1350	**SM multi feed sensor error (side multi tray)** The SM multi feed sensor has detected multi feeding 5 times successively.	Defective connector cable or poor contact in the connector.	Reinsert the connector. Also check for continuity within the connector cable. If none, replace the cable. SM multi feed sensor and SM main PWB (YC11)
		Defective SM multi feed sensor.	Replace the SM multi feed sensor.
		Defective SM main PWB.	Replace the SM main PWB (Refer to the service manual for the paper feeder).
1450	**SM multi feed sensor backup error (side multi tray)** When writing the data, read and write data does not match 3 times in succession. Deleting a block has failed three times in a row. Writing won't complete in 200 ms after writing has commenced.	Defective connector cable or poor contact in the connector.	Reinsert the connector. Also check for continuity within the connector cable. If none, replace the cable. SM multi feed sensor and SM main PWB (YC11)
		Defective SM multi feed sensor.	Replace the SM multi feed sensor.
		Defective SM main PWB.	Replace the SM main PWB (Refer to the service manual for the paper feeder).
1800	**Paper feeder communication error** A communication error from paper feeder is detected 10 times in succession.	Improper installation paper feeder.	Follow installation instruction carefully again.
		Defective connector cable or poor contact in the connector.	Reinsert the connector. Also check for continuity within the connector cable. If none, replace the cable. PF main PWB (YC13) and engine PWB (YC19)
		Defective engine PWB.	Replace the engine PWB and check for correct operation (see page 1-5-52).
		Defective PF main PWB.	Replace the PF main PWB (Refer to the service manual for the paper feeder).

Code	Contents	Causes	Check procedures/ corrective measures
1810	**Side multi tray communication error** A communication error from paper feeder is detected 10 times in succession.	Improper installation side multi tray.	Follow installation instruction carefully again.
		Defective connector cable or poor contact in the connector.	Reinsert the connector. Also check for continuity within the connector cable. If none, replace the cable. SM main PWB (YC1) and engine PWB (YC19)
		Defective engine PWB.	Replace the engine PWB and check for correct operation (see page 1-5-52).
		Defective SM main PWB.	Replace the SM main PWB (Refer to the service manual for the paper feeder).
1820	**Side paper feeder communication error** A communication error from paper feeder is detected 10 times in succession.	Improper installation side paper feeder.	Follow installation instruction carefully again.
		Defective connector cable or poor contact in the connector.	Reinsert the connector. Also check for continuity within the connector cable. If none, replace the cable. PF main PWB (YC13) and SM main PWB (YC4) SM main PWB (YC1) and engine PWB (YC19)
		Defective engine PWB.	Replace the engine PWB and check for correct operation (see page 1-5-52).
		Defective SM main PWB.	Replace the SM main PWB (Refer to the service manual for the paper feeder).
		Defective PF main PWB.	Replace the PF main PWB (Refer to the service manual for the paper feeder).
1900	**Paper feeder EEPROM error** When writing the data, read and write data does not match 3 times in succession.	Defective PF main PWB.	Replace the PF main PWB (Refer to the service manual for the paper feeder).
		Device damage of EEPROM.	Contact the Service Administrative Division.
1910	**Side multi tray EEPROM error** When writing the data, read and write data does not match 3 times in succession.	Defective SM main PWB.	Replace the SM main PWB (Refer to the service manual for the paper feeder).
		Device damage of EEPROM.	Contact the Service Administrative Division.
1920	**Side paper feeder EEPROM error** When writing the data, read and write data does not match 3 times in succession.	Defective PF main PWB.	Replace the PF main PWB (Refer to the service manual for the paper feeder).
		Device damage of EEPROM.	Contact the Service Administrative Division.

Code	Contents	Causes	Check procedures/ corrective measures
1950	**Transfer belt unit EEPROM error** No response is issued from the device in reading/writing for 5 ms or more and this problem is repeated 5 times successively. Mismatch of reading data from 2 locations occurs 8 times successively. Mismatch between writing data and reading data occurs 8 times successively.	Defective connector cable or poor contact in the connector.	Reinsert the connector. Also check for continuity within the connector cable. If none, replace the cable. Transfer belt unit and engine PWB (YC3)
		Defective transfer belt unit.	Replace the transfer belt unit and check for correct operation (see 1-5-37).
2101	**Developer motor K error** After developer motor K is driven, the ready signal does not turn to L within 5 s. After developer motor K is stabilized, the ready signal is at the H level for 5 s continuously.	Defective connector cable or poor contact in the connector.	Reinsert the connector. Also check for continuity within the connector cable. If none, replace the cable. Developer motor K and motor control PWB (YC7) Motor control PWB (YC3) and engine PWB (YC9)
		Defective drive transmission system of motor.	Check if the gears rotate smoothly. If not, grease the bushes and gears. Check for broken gears and replace if any.
		Defective developer motor K.	Replace the developer motor K.
		Defective Motor control PWB.	Replace the Motor control PWB and check for correct operation.
		Defective engine PWB.	Replace the engine PWB and check for correct operation (see page 1-5-52).
2103	**Developer motor MCY error** After developer motor MCY is driven, the ready signal does not turn to L within 5 s. After developer motor MCY is stabilized, the ready signal is at the H level for 5 s continuously.	Defective connector cable or poor contact in the connector.	Reinsert the connector. Also check for continuity within the connector cable. If none, replace the cable. Developer motor MCY and motor control PWB (YC7) Motor control PWB (YC3) and engine PWB (YC9)
		Defective drive transmission system of motor.	Check if the gears rotate smoothly. If not, grease the bushes and gears. Check for broken gears and replace if any.
		Defective developer motor MCY.	Replace the developer motor MCY.
		Defective Motor control PWB.	Replace the Motor control PWB and check for correct operation.
		Defective engine PWB.	Replace the engine PWB and check for correct operation (see page 1-5-52).

Code	Contents	Causes	Check procedures/ corrective measures
2201	**Drum motor K steady-state error** After drum motor K is stabilized, the ready signal is at the H level for 5 s continuously.	Defective connector cable or poor contact in the connector.	Reinsert the connector. Also check for continuity within the connector cable. If none, replace the cable. Drum motor K and motor control PWB (YC5) Motor control PWB (YC3) and engine PWB (YC9)
		Defective drive transmission system of motor.	Check if the gears rotate smoothly. If not, grease the bushes and gears. Check for broken gears and replace if any.
		Defective drum motor K.	Replace the drum motor K.
		Defective Motor control PWB.	Replace the Motor control PWB and check for correct operation.
		Defective engine PWB.	Replace the engine PWB and check for correct operation (see page 1-5-52).
2202	**Drum motor C steady-state error** After drum motor C is stabilized, the ready signal is at the H level for 5 s continuously.	Defective connector cable or poor contact in the connector.	Reinsert the connector. Also check for continuity within the connector cable. If none, replace the cable. Drum motor C and motor control PWB (YC4) Motor control PWB (YC3) and engine PWB (YC9)
		Defective drive transmission system of motor.	Check if the gears rotate smoothly. If not, grease the bushes and gears. Check for broken gears and replace if any.
		Defective drum motor C.	Replace the drum motor C.
		Defective Motor control PWB.	Replace the Motor control PWB and check for correct operation.
		Defective engine PWB.	Replace the engine PWB and check for correct operation (see page 1-5-52).

Code	Contents	Causes	Check procedures/ corrective measures
2203	**Drum motor M steady-state error** After drum motor M is stabilized, the ready signal is at the H level for 5 s continuously.	Defective connector cable or poor contact in the connector.	Reinsert the connector. Also check for continuity within the connector cable. If none, replace the cable. Drum motor M and motor control PWB (YC5) Motor control PWB (YC3) and engine PWB (YC9)
		Defective drive transmission system of motor.	Check if the gears rotate smoothly. If not, grease the bushes and gears. Check for broken gears and replace if any.
		Defective drum motor M.	Replace the drum motor M.
		Defective Motor control PWB.	Replace the Motor control PWB and check for correct operation.
		Defective engine PWB.	Replace the engine PWB and check for correct operation (see page 1-5-52).
2204	**Drum motor Y steady-state error** After drum motor Y is stabilized, the ready signal is at the H level for 5 s continuously.	Defective connector cable or poor contact in the connector.	Reinsert the connector. Also check for continuity within the connector cable. If none, replace the cable. Drum motor Y and motor control PWB (YC4) Motor control PWB (YC3) and engine PWB (YC9)
		Defective drive transmission system of motor.	Check if the gears rotate smoothly. If not, grease the bushes and gears. Check for broken gears and replace if any.
		Defective drum motor Y.	Replace the drum motor Y.
		Defective Motor control PWB.	Replace the Motor control PWB and check for correct operation.
		Defective engine PWB.	Replace the engine PWB and check for correct operation (see page 1-5-52).

Code	Contents	Causes	Check procedures/ corrective measures
2211	**Drum motor K startup error** Drum motor K is not stabilized within 5 s since the motor is activated.	Defective connector cable or poor contact in the connector.	Reinsert the connector. Also check for continuity within the connector cable. If none, replace the cable. Drum motor K and motor control PWB (YC5) Motor control PWB (YC3) and engine PWB (YC9)
		Defective drive transmission system of motor.	Check if the gears rotate smoothly. If not, grease the bushes and gears. Check for broken gears and replace if any.
		Defective drum motor K.	Replace the drum motor K.
		Defective Motor control PWB.	Replace the Motor control PWB and check for correct operation.
		Defective engine PWB.	Replace the engine PWB and check for correct operation (see page 1-5-52).
2212	**Drum motor C startup error** Drum motor C is not stabilized within 5 s since the motor is activated.	Defective connector cable or poor contact in the connector.	Reinsert the connector. Also check for continuity within the connector cable. If none, replace the cable. Drum motor C and motor control PWB (YC4) Motor control PWB (YC3) and engine PWB (YC9)
		Defective drive transmission system of motor.	Check if the gears rotate smoothly. If not, grease the bushes and gears. Check for broken gears and replace if any.
		Defective drum motor C.	Replace the drum motor C.
		Defective Motor control PWB.	Replace the Motor control PWB and check for correct operation.
		Defective engine PWB.	Replace the engine PWB and check for correct operation (see page 1-5-52).

Code	Contents	Causes	Check procedures/ corrective measures
2213	**Drum motor M startup error** Drum motor M is not stabilized within 5 s since the motor is activated.	Defective connector cable or poor contact in the connector.	Reinsert the connector. Also check for continuity within the connector cable. If none, replace the cable. Drum motor M and motor control PWB (YC5) Motor control PWB (YC3) and engine PWB (YC9)
		Defective drive transmission system of motor.	Check if the gears rotate smoothly. If not, grease the bushes and gears. Check for broken gears and replace if any.
		Defective drum motor M.	Replace the drum motor M.
		Defective Motor control PWB.	Replace the Motor control PWB and check for correct operation.
		Defective engine PWB.	Replace the engine PWB and check for correct operation (see page 1-5-52).
2214	**Drum motor Y startup error** Drum motor Y is not stabilized within 5 s since the motor is activated.	Defective connector cable or poor contact in the connector.	Reinsert the connector. Also check for continuity within the connector cable. If none, replace the cable. Drum motor Y and motor control PWB (YC4) Motor control PWB (YC3) and engine PWB (YC9)
		Defective drive transmission system of motor.	Check if the gears rotate smoothly. If not, grease the bushes and gears. Check for broken gears and replace if any.
		Defective drum motor Y.	Replace the drum motor Y.
		Defective Motor control PWB.	Replace the Motor control PWB and check for correct operation.
		Defective engine PWB.	Replace the engine PWB and check for correct operation (see page 1-5-52).
2300	**Fuser motor error** After fuser motor is driven, the ready signal does not turn to L within 2 s. After fuser motor is stabilized, the ready signal is at the H level for 1 s continuously.	Defective connector cable or poor contact in the connector.	Reinsert the connector. Also check for continuity within the connector cable. If none, replace the cable. Fuser motor and feed PWB 1 (YC18) Feed PWB 1 (YC1) and engine PWB (YC6)
		Defective drive transmission system of motor.	Check if the gears rotate smoothly. If not, grease the bushes and gears. Check for broken gears and replace if any.
		Defective fuser motor.	Replace the fuser motor.
		Defective engine PWB.	Replace the engine PWB and check for correct operation (see page 1-5-52).

Code	Contents	Causes	Check procedures/ corrective measures
2500	**Paper feed motor error** After paper feed motor is driven, the ready signal does not turn to L within 2 s. After paper feed motor is stabilized, the ready signal is at the H level for 1 s continuously.	Defective connector cable or poor contact in the connector.	Reinsert the connector. Also check for continuity within the connector cable. If none, replace the cable. Paper feed motor and feed PWB 2 (YC2) Feed PWB 2 (YC1) and engine PWB (YC4)
		Defective drive transmission system of motor.	Check if the gears rotate smoothly. If not, grease the bushes and gears. Check for broken gears and replace if any.
		Defective paper feed motor.	Replace the paper feed motor.
		Defective engine PWB.	Replace the engine PWB and check for correct operation (see page 1-5-52).
2600	**PF paper feed motor error (large capacity feeder)** After PF paper feed motor is driven, the ready signal does not turn to L within 2 s.	Defective connector cable or poor contact in the connector.	Reinsert the connector. Also check for continuity within the connector cable. If none, replace the cable. PF paper feed motor and PF main PWB (YC16)
		Defective drive transmission system of motor.	Check if the gears rotate smoothly. If not, grease the bushes and gears. Check for broken gears and replace if any.
		Defective PF paper feed motor.	Replace the PF paper feed motor.
		Defective PF main PWB.	Replace the PF main PWB (Refer to the service manual for the paper feeder).
2610	**PF paper feed motor error (paper feeder)** After PF paper feed motor is driven, the ready signal does not turn to L within 2 s.	Defective connector cable or poor contact in the connector.	Reinsert the connector. Also check for continuity within the connector cable. If none, replace the cable. PF paper feed motor and PF main PWB (YC16)
		Defective drive transmission system of motor.	Check if the gears rotate smoothly. If not, grease the bushes and gears. Check for broken gears and replace if any.
		Defective PF paper feed motor.	Replace the PF paper feed motor.
		Defective PF main PWB.	Replace the PF main PWB (Refer to the service manual for the paper feeder).

Code	Contents	Causes	Check procedures/ corrective measures
2640	**SD paper feed motor error (side deck)** After SD paper feed motor is driven, the ready signal does not turn to L within 2 s.	Defective connector cable or poor contact in the connector.	Reinsert the connector. Also check for continuity within the connector cable. If none, replace the cable. SD paper feed motor and SD main PWB (YC16)
		Defective drive transmission system of motor.	Check if the gears rotate smoothly. If not, grease the bushes and gears. Check for broken gears and replace if any.
		Defective SD paper feed motor.	Replace the SD paper feed motor.
		Defective SD main PWB.	Replace the SD main PWB (Refer to the service manual for the paper feeder).
2650	**SM paper feed motor error (side multi tray)** After SM paper feed motor is driven, the ready signal does not turn to L within 2 s.	Defective connector cable or poor contact in the connector.	Reinsert the connector. Also check for continuity within the connector cable. If none, replace the cable. SM paper feed motor and SM main PWB (YC5)
		Defective drive transmission system of motor.	Check if the gears rotate smoothly. If not, grease the bushes and gears. Check for broken gears and replace if any.
		Defective SM paper feed motor.	Replace the SM paper feed motor.
		Defective SM main PWB.	Replace the SM main PWB (Refer to the service manual for the paper feeder).
2660	**PF paper feed motor error (side large capacity feeder)** After PF paper feed motor is driven, the ready signal does not turn to L within 2 s.	Defective connector cable or poor contact in the connector.	Reinsert the connector. Also check for continuity within the connector cable. If none, replace the cable. PF paper feed motor and PF main PWB (YC16)
		Defective drive transmission system of motor.	Check if the gears rotate smoothly. If not, grease the bushes and gears. Check for broken gears and replace if any.
		Defective PF paper feed motor.	Replace the PF paper feed motor.
		Defective PF main PWB.	Replace the PF main PWB (Refer to the service manual for the paper feeder).

Code	Contents	Causes	Check procedures/ corrective measures
2670	**PF paper feed motor error (side paper feeder)** After PF paper feed motor is driven, the ready signal does not turn to L within 2 s.	Defective connector cable or poor contact in the connector.	Reinsert the connector. Also check for continuity within the connector cable. If none, replace the cable. PF paper feed motor and PF main PWB (YC16)
		Defective drive transmission system of motor.	Check if the gears rotate smoothly. If not, grease the bushes and gears. Check for broken gears and replace if any.
		Defective PF paper feed motor.	Replace the PF paper feed motor.
		Defective PF main PWB.	Replace the PF main PWB (Refer to the service manual for the paper feeder).
2700	**Color release motor error** When the color release motor is driven, the color release sensor does not turn on/off for 5 s.	Defective connector cable or poor contact in the connector.	Reinsert the transfer belt unit connector if necessary.Check for continuity within the harness and, if none, replace the harness. Color release motor and engine PWB (YC3)
		Defective drive transmission system of motor.	Replace the transfer belt unit.
		Defective color release motor.	Replace the transfer belt unit.
		Defective engine PWB.	Replace the engine PWB and check for correct operation (see page 1-5-52).
2730	**Transfer release motor error** When the transfer release motor is driven, the transfer release sensor does not turn on/off for 5 s.	Defective connector cable or poor contact in the connector.	Reinsert the connector. Also check for continuity within the connector cable. If none, replace the cable. Transfer release motor and relay PWB (YC14) Relay PWB (YC14) and feed PWB 1 (YC14) Feed PWB 1 (YC1) and engine PWB (YC6)
		Defective drive transmission system of motor.	Check if the gears rotate smoothly. If not, grease the bushes and gears. Check for broken gears and replace if any.
		Defective transfer release motor.	Replace the transfer release motor.
		Defective engine PWB.	Replace the engine PWB and check for correct operation (see page 1-5-52).

Code	Contents	Causes	Check procedures/ corrective measures
2760	**Transfer motor startup error** Transfer motor is not stabilized within 5 s since the motor is activated.	Defective connector cable or poor contact in the connector.	Reinsert the connector. Also check for continuity within the connector cable. If none, replace the cable. Transfer motor and feed PWB 1 (YC13) Feed PWB 1 (YC2) and engine PWB (YC5)
		Defective drive transmission system of motor.	Check if the gears rotate smoothly. If not, grease the bushes and gears. Check for broken gears and replace if any.
		Defective transfer motor.	Replace the transfer motor.
		Defective engine PWB.	Replace the engine PWB and check for correct operation (see page 1-5-52).
2770	**Transfer skew error** An abnormal value is detected to transfer skew sensor.	Improper installation transfer belt unit.	Reinstall the transfer belt unit.
		Defective connector cable or poor contact in the connector.	Reinsert the connector. Also check for continuity within the connector cable. If none, replace the cable. Transfer belt unit and engine PWB (YC3)
		Defective transfer skew sensor.	Replace the transfer belt unit.
		Defective engine PWB.	Replace the engine PWB and check for correct operation (see page 1-5-52).
2780	**Transfer skew sensor error** An abnormal value is detected to transfer skew sensor.	Defective connector cable or poor contact in the connector.	Reinsert the connector. Also check for continuity within the connector cable. If none, replace the cable. Transfer belt unit and engine PWB (YC3)
		Defective transfer skew sensor.	Replace the transfer belt unit.
		Defective engine PWB.	Replace the engine PWB and check for correct operation (see page 1-5-52).
2790	**Transfer skew motor error** When the transfer skew motor is driven, timeouts (300 ms) were detected twice in a row.	Defective connector cable or poor contact in the connector.	Reinsert the connector. Also check for continuity within the connector cable. If none, replace the cable. Transfer skew motor and engine PWB (YC3)
		Defective drive transmission system of motor.	Check if the gears rotate smoothly. If not, grease the bushes and gears. Check for broken gears and replace if any.
		Defective transfer skew motor.	Replace the transfer skew motor.
		Defective engine PWB.	Replace the engine PWB and check for correct operation (see page 1-5-52).

Code	Contents	Causes	Check procedures/ corrective measures
2810	**Waste toner motor error** Initialized when an error is constantly observed for 2 s after the waste toner motor is activated. An error is constantly observed for 2.5 s after rebooting. The lock detect signal won't be H level three times in a row within 200 ms at 1.25 ms cycles after the waste toner motor has been driven.	Defective connector cable or poor contact in the connector.	Reinsert the connector. Also check for continuity within the connector cable. If none, replace the cable. Waste toner motor and front PWB (YC16) Front PWB (YC3) and engine PWB (YC7)
		Defective drive transmission system of motor.	Check if the gears rotate smoothly. If not, grease the bushes and gears. Check for broken gears and replace if any.
		Defective waste toner motor.	Replace the waste toner motor.
		Defective engine PWB.	Replace the engine PWB and check for correct operation (see page 1-5-52).
2820	**Transfer motor steady-state error** After transfer motor is stabilized, the ready signal is at the H level for 5 s continuously. The counter value obtained by timer capture is lower than 2200 for 10 times in a row.	Defective connector cable or poor contact in the connector.	Reinsert the connector. Also check for continuity within the connector cable. If none, replace the cable. Transfer motor and feed PWB 1 (YC13) Feed PWB 1 (YC2) and engine PWB (YC5)
		Defective drive transmission system of motor.	Check if the gears rotate smoothly. If not, grease the bushes and gears. Check for broken gears and replace if any.
		Defective transfer motor.	Replace the transfer motor.
		Defective engine PWB.	Replace the engine PWB and check for correct operation (see page 1-5-52).
2840	**Transfer cleaning motor error** After transfer cleaning motor is driven, the ready signal does not turn to L within 2 s. After transfer cleaning motor is stabilized, the ready signal is at the H level for 1 s continuously.	Defective connector cable or poor contact in the connector.	Reinsert the connector. Also check for continuity within the connector cable. If none, replace the cable. Transfer cleaning motor and engine PWB (YC3)
		Defective drive transmission system of motor.	Check if the gears rotate smoothly. If not, grease the bushes and gears. Check for broken gears and replace if any.
		Defective transfer cleaning motor.	Replace the transfer cleaning motor.
		Defective engine PWB.	Replace the engine PWB and check for correct operation (see page 1-5-52).

Code	Contents	Causes	Check procedures/ corrective measures
2850	**Transfer belt motor sensor error** The signal is not received for 100 ms in succession.	Defective connector cable or poor contact in the connector.	Reinsert the connector. Also check for continuity within the connector cable. If none, replace the cable. Transfer motor and feed PWB (YC13) Feed PWB (YC1) to engine PWB(YC6)
		Defective transfer motor.	Replace the transfer motor.
		Defective engine PWB.	Replace the engine PWB and check for correct operation (see page 1-5-52).
2860	**Transfer belt sensor error** The signal is not received for 100 ms in succession.	Defective connector cable or poor contact in the connector.	Reinsert the connector. Also check for continuity within the connector cable. If none, replace the cable. Transfer belt sensor and engine PWB (YC3)
		Defective transfer belt sensor.	Replace the transfer belt sensor.
		Defective engine PWB.	Replace the engine PWB and check for correct operation (see page 1-5-52).
2950	**Motor control PWB communication error** A communication error from the motor control PWB is detected 10 times in succession.	Defective connector cable or poor contact in the connector.	Reinsert the connector. Also check for continuity within the connector cable. If none, replace the cable. Motor control PWB (YC3) and engine PWB (YC9)
		Defective motor control PWB.	Replace the motor control PWB and check for correct operation.
		Defective engine PWB.	Replace the engine PWB and check for correct operation (see page 1-5-52).
4001	**Polygon motor K synchronization error** After polygon motor K is driven, the ready signal does not turn to L within 30 s. The polygon motor speed won't stabilize within 10 s.	Defective connector cable or poor contact in the connector.	Reinsert the connector. Also check for continuity within the connector cable. If none, replace the cable. Polygon motor K and LSU relay PWB (YC4) LSU relay PWB (YC4) and engine PWB (YC12)
		Defective polygon motor K.	Replace the laser scanner unit (see page 1-5-19).
		Defective engine PWB.	Replace the engine PWB and check for correct operation (see page 1-5-52).

Code	Contents	Causes	Check procedures/ corrective measures
4002	**Polygon motor C synchronization error** After polygon motor C is driven, the ready signal does not turn to L within 30 s. The polygon motor speed won't stabilize within 10 s.	Defective connector cable or poor contact in the connector.	Reinsert the connector. Also check for continuity within the connector cable. If none, replace the cable. Polygon motor C and LSU relay PWB (YC9) LSU relay PWB (YC3) and engine PWB (YC12)
		Defective polygon motor C.	Replace the laser scanner unit (see page 1-5-19).
		Defective engine PWB.	Replace the engine PWB and check for correct operation (see page 1-5-52).
4003	**Polygon motor M synchronization error** After polygon motor M is driven, the ready signal does not turn to L within 30 s. The polygon motor speed won't stabilize within 10 s.	Defective connector cable or poor contact in the connector.	Reinsert the connector. Also check for continuity within the connector cable. If none, replace the cable. Polygon motor M and LSU relay PWB (YC7) LSU relay PWB (YC3) and engine PWB (YC12)
		Defective polygon motor M.	Replace the laser scanner unit (see page 1-5-19).
		Defective engine PWB.	Replace the engine PWB and check for correct operation (see page 1-5-52).
4004	**Polygon motor Y synchronization error** After polygon motor Y is driven, the ready signal does not turn to L within 30 s. The polygon motor speed won't stabilize within 10 s.	Defective connector cable or poor contact in the connector.	Reinsert the connector. Also check for continuity within the connector cable. If none, replace the cable. Polygon motor Y and LSU relay PWB (YC11) LSU relay PWB (YC3) and engine PWB (YC12)
		Defective polygon motor Y.	Replace the laser scanner unit (see page 1-5-19).
		Defective engine PWB.	Replace the engine PWB and check for correct operation (see page 1-5-52).
4011	**Polygon motor K steady-state error** After polygon motor K is stabilized, the ready signal is at the H level for 15 s continuously.	Defective connector cable or poor contact in the connector.	Reinsert the connector. Also check for continuity within the connector cable. If none, replace the cable. Polygon motor K and LSU relay PWB (YC4) LSU relay PWB (YC4) and engine PWB (YC12)
		Defective polygon motor K.	Replace the laser scanner unit (see page 1-5-19).
		Defective engine PWB.	Replace the engine PWB and check for correct operation (see page 1-5-52).

Code	Contents	Causes	Check procedures/ corrective measures
4012	**Polygon motor C steady-state error** After polygon motor C is stabilized, the ready signal is at the H level for 15 s continuously.	Defective connector cable or poor contact in the connector.	Reinsert the connector. Also check for continuity within the connector cable. If none, replace the cable. Polygon motor C and LSU relay PWB (YC9) LSU relay PWB (YC3) and engine PWB (YC12)
		Defective polygon motor C.	Replace the laser scanner unit (see page 1-5-19).
		Defective engine PWB.	Replace the engine PWB and check for correct operation (see page 1-5-52).
4013	**Polygon motor M steady-state error** After polygon motor M is stabilized, the ready signal is at the H level for 15 s continuously.	Defective connector cable or poor contact in the connector.	Reinsert the connector. Also check for continuity within the connector cable. If none, replace the cable. Polygon motor M and LSU relay PWB (YC7) LSU relay PWB (YC3) and engine PWB (YC12)
		Defective polygon motor M.	Replace the laser scanner unit (see page 1-5-19).
		Defective engine PWB.	Replace the engine PWB and check for correct operation (see page 1-5-52).
4014	**Polygon motor Y steady-state error** After polygon motor Y is stabilized, the ready signal is at the H level for 15 s continuously.	Defective connector cable or poor contact in the connector.	Reinsert the connector. Also check for continuity within the connector cable. If none, replace the cable. Polygon motor Y and LSU relay PWB (YC11) LSU relay PWB (YC3) and engine PWB (YC12)
		Defective polygon motor Y.	Replace the laser scanner unit (see page 1-5-19).
		Defective engine PWB.	Replace the engine PWB and check for correct operation (see page 1-5-52).
4101	**BD initialization error K** After polygon motor K is driven, the BD signal is not detected for 1 s.	Defective connector cable or poor contact in the connector.	Reinsert the connector. Also check for continuity within the connector cable. If none, replace the cable. Laser scanner unit and LSU relay PWB (YC5) LSU relay PWB (YC3) and engine PWB (YC12)
		Defective PD PWB K.	Replace the laser scanner unit (see page 1-5-19).
		Defective engine PWB.	Replace the engine PWB and check for correct operation (see page 1-5-52).

Code	Contents	Causes	Check procedures/ corrective measures
4102	**BD initialization error C** After polygon motor C is driven, the BD signal is not detected for 1 s.	Defective connector cable or poor contact in the connector.	Reinsert the connector. Also check for continuity within the connector cable. If none, replace the cable. Laser scanner unit and LSU relay PWB (YC10) LSU relay PWB (YC3) and engine PWB (YC12)
		Defective PD PWB C.	Replace the laser scanner unit (see page 1-5-19).
		Defective engine PWB.	Replace the engine PWB and check for correct operation (see page 1-5-52).
4103	**BD initialization error M** After polygon motor M is driven, the BD signal is not detected for 1 s.	Defective connector cable or poor contact in the connector.	Reinsert the connector. Also check for continuity within the connector cable. If none, replace the cable. Laser scanner unit and LSU relay PWB (YC8) LSU relay PWB (YC3) and engine PWB (YC12)
		Defective PD PWB M.	Replace the laser scanner unit (see page 1-5-19).
		Defective engine PWB.	Replace the engine PWB and check for correct operation (see page 1-5-52).
4104	**BD initialization error Y** After polygon motor Y is driven, the BD signal is not detected for 1 s.	Defective connector cable or poor contact in the connector.	Reinsert the connector. Also check for continuity within the connector cable. If none, replace the cable. Laser scanner unit and LSU relay PWB (YC12) LSU relay PWB (YC3) and engine PWB (YC12)
		Defective PD PWB Y.	Replace the laser scanner unit (see page 1-5-19).
		Defective engine PWB.	Replace the engine PWB and check for correct operation (see page 1-5-52).
4201	**BD steady-state error K** The BD signal is not detected.	Defective connector cable or poor contact in the connector.	Reinsert the connector. Also check for continuity within the connector cable. If none, replace the cable. Laser scanner unit and LSU relay PWB (YC5) LSU relay PWB (YC3) and engine PWB (YC12)
		Defective PD PWB K.	Replace the laser scanner unit (see page 1-5-19).
		Defective engine PWB.	Replace the engine PWB and check for correct operation (see page 1-5-52).

Code	Contents	Causes	Check procedures/ corrective measures
4202	**BD steady-state error C** The BD signal is not detected.	Defective connector cable or poor contact in the connector.	Reinsert the connector. Also check for continuity within the connector cable. If none, replace the cable. Laser scanner unit and LSU relay PWB (YC10) LSU relay PWB (YC3) and engine PWB (YC12)
		Defective PD PWB C.	Replace the laser scanner unit (see page 1-5-19).
		Defective engine PWB.	Replace the engine PWB and check for correct operation (see page 1-5-52).
4203	**BD steady-state error M** The BD signal is not detected.	Defective connector cable or poor contact in the connector.	Reinsert the connector. Also check for continuity within the connector cable. If none, replace the cable. Laser scanner unit and LSU relay PWB (YC8) LSU relay PWB (YC3) and engine PWB (YC12)
		Defective PD PWB M.	Replace the laser scanner unit (see page 1-5-19).
		Defective engine PWB.	Replace the engine PWB and check for correct operation (see page 1-5-52).
4204	**BD steady-state error Y** The BD signal is not detected.	Defective connector cable or poor contact in the connector.	Reinsert the connector. Also check for continuity within the connector cable. If none, replace the cable. Laser scanner unit and LSU relay PWB (YC12) LSU relay PWB (YC3) and engine PWB (YC12)
		Defective PD PWB Y.	Replace the laser scanner unit (see page 1-5-19).
		Defective engine PWB.	Replace the engine PWB and check for correct operation (see page 1-5-52).
4300	**Polygon motor phase error** ASIC won't settle in completion of phase adjustment for 2 s after a BD signal is detected.	Defective laser scanner unit.	Replace the laser scanner unit (see page 1-5-19).
		Defective engine PWB.	Replace the engine PWB and check for correct operation (see page 1-5-52).

Code	Contents	Causes	Check procedures/ corrective measures
4600	**LSU cleaning motor error** After LSU cleaning motor is driven, the ready signal does not turn to L within 2 s. After LSU cleaning motor is stabilized, the ready signal is at the H level for 1 s continuously.	Defective connector cable or poor contact in the connector.	Reinsert the connector. Also check for continuity within the connector cable. If none, replace the cable. LSU cleaning motor and engine PWB (YC21)
		Defective drive transmission system of motor.	Check if the gears rotate smoothly. If not, grease the bushes and gears. Check for broken gears and replace if any.
		Defective LSU cleaning motor.	Replace the LSU cleaning motor.
		Defective engine PWB.	Replace the engine PWB and check for correct operation (see page 1-5-52).
5101	**Main high-voltage error K** Measure the inflowing current when Vpp is varied in 3 steps and verify if the difference of the currents of 0 and step 2 is less than 42 (51 if lower high-voltage board).	Improper installation charger roller unit K.	Reinstall the charger roller unit K.
		Defective connector cable or poor contact in the connector.	Reinsert the connector. Also check for continuity within the connector cable. If none, replace the cable. High voltage PWB 1 (YC4) and engine PWB (YC17)
		Defective high voltage PWB 1.	Replace the high voltage PWB 1 and check for correct operation (see page 1-5-57).
		Defective engine PWB.	Replace the engine PWB and check for correct operation (see page 1-5-52).
5102	**Main high-voltage error C** Measure the inflowing current when Vpp is varied in 3 steps and verify if the difference of the currents of 0 and step 2 is less than 42 (51 if lower high-voltage board).	Improper installation charger roller unit C.	Reinstall the charger roller unit C.
		Defective connector cable or poor contact in the connector.	Reinsert the connector. Also check for continuity within the connector cable. If none, replace the cable. High voltage PWB 1 (YC2) and engine PWB (YC16)
		Defective high voltage PWB 1.	Replace the high voltage PWB 1 and check for correct operation (see page 1-5-57).
		Defective engine PWB.	Replace the engine PWB and check for correct operation (see page 1-5-52).

Code	Contents	Causes	Check procedures/ corrective measures
5103	**Main high-voltage error M** Measure the inflowing current when Vpp is varied in 3 steps and verify if the difference of the currents of 0 and step 2 is less than 42 (51 if lower high-voltage board).	Improper installation charger roller unit M.	Reinstall the charger roller unit M.
		Defective connector cable or poor contact in the connector.	Reinsert the connector. Also check for continuity within the connector cable. If none, replace the cable. High voltage PWB 1 (YC3) and engine PWB (YC17)
		Defective high voltage PWB 1.	Replace the high voltage PWB 1 and check for correct operation (see page 1-5-57).
		Defective engine PWB.	Replace the engine PWB and check for correct operation (see page 1-5-52).
5104	**Main high-voltage error Y** Measure the inflowing current when Vpp is varied in 3 steps and verify if the difference of the currents of 0 and step 2 is less than 42 (51 if lower high-voltage board).	Improper installation charger roller unit Y.	Reinstall the charger roller unit Y.
		Defective connector cable or poor contact in the connector.	Reinsert the connector. Also check for continuity within the connector cable. If none, replace the cable. High voltage PWB 1 (YC1) and engine PWB (YC16)
		Defective high voltage PWB 1.	Replace the high voltage PWB 1 and check for correct operation (see page 1-5-57).
		Defective engine PWB.	Replace the engine PWB and check for correct operation (see page 1-5-52).
6000	**Broken fuser heater wire** Fuser thermistor 1 does not reach 100° C/212 °F even after 60 s during warming up. The detected temperature of fuser thermistor 1 does not reach the specified temperature (ready indication temperature) for 420 s in warming up after reached to 100° C/212 °F.	Defective connector cable or poor contact in the connector.	Reinsert the connector. Also check for continuity within the connector cable. If none, replace the cable. Power source PWB (YC3) and fuser IH PWB (YC1) Fuser IH PWB (YC4) and engine PWB (YC26)
		Fuser thermostat triggered.	Replace the fuser unit (see page 1-5-43).
		Defective fuser IH.	Replace the fuser unit (see page 1-5-43).
		Defective engine PWB.	Replace the engine PWB and check for correct operation (see page 1-5-52).
6020	**Abnormally high fuser thermistor 1 temperature** Fuser thermistor 1 detects a temperature higher than 240°C/464°F for 1 s.	Defective connector cable or poor contact in the connector.	Reinsert the connector. Also check for continuity within the connector cable. If none, replace the cable. Fuser unit and engine PWB (YC26)
		Shorted fuser thermistor 1.	Replace the fuser unit (see page 1-5-43).
		Defective engine PWB.	Replace the engine PWB and check for correct operation (see page 1-5-52).

Code	Contents	Causes	Check procedures/ corrective measures
6030	**Broken fuser thermistor 1 wire** Input from fuser thermistor 1 is 984 or more (A/D value) continuously for 1 s. Verify if A/D read in the differential output won't change by 4 or more when it was turned on for 10 seconds in a low-temperature environment.	Defective connector cable or poor contact in the connector.	Reinsert the connector. Also check for continuity within the connector cable. If none, replace the cable. Fuser unit and engine PWB (YC26)
		Broken fuser thermistor 1 wire.	Replace the fuser unit (see page 1-5-43).
		Fuser thermostat triggered.	Replace the fuser unit (see page 1-5-43).
		Defective fuser IH.	Replace the fuser unit (see page 1-5-43).
		Defective engine PWB.	Replace the engine PWB and check for correct operation (see page 1-5-52).
6040	**Fuser heater error** Input from fuser thermistor 1 is abnormal value continuously for 1 s.	Defective connector cable or poor contact in the connector.	Reinsert the connector. Also check for continuity within the connector cable. If none, replace the cable. Fuser unit and engine PWB (YC26)
		Broken fuser thermistor 1 wire.	Replace the fuser unit (see page 1-5-43).
		Defective fuser IH.	Replace the fuser unit (see page 1-5-43).
		Defective engine PWB.	Replace the engine PWB and check for correct operation (see page 1-5-52).
6050	**Abnormally low fuser thermistor 1 temperature** Fuser thermistor 1 detects a temperature lower than 100°C/212°F for 1 s after warming up, during ready or during print. Fuser thermistor 1 detects a temperature lower than 70°C/158°F for 1 s during low power mode.	Defective connector cable or poor contact in the connector.	Reinsert the connector. Also check for continuity within the connector cable. If none, replace the cable. Fuser unit and engine PWB (YC26)
		Defective fuser thermistor 1.	Replace the fuser unit (see page 1-5-43).
		Defective fuser IH.	Replace the fuser unit (see page 1-5-43).
		Defective engine PWB.	Replace the engine PWB and check for correct operation (see page 1-5-52).
6120	**Abnormally high fuser thermistor 4 temperature** Fuser thermistor 4 detects a temperature higher than 190°C/374°F for 1 s.	Defective connector cable or poor contact in the connector.	Reinsert the connector. Also check for continuity within the connector cable. If none, replace the cable. Fuser unit and engine PWB (YC26)
		Shorted fuser thermistor 4.	Replace the fuser unit (see page 1-5-43).
		Defective engine PWB.	Replace the engine PWB and check for correct operation (see page 1-5-52).

Code	Contents	Causes	Check procedures/ corrective measures
6130	**Broken fuser thermistor 4 wire** Input from fuser thermistor 4 is 992 or more (A/D value) continuously for 60 s.	Defective connector cable or poor contact in the connector.	Reinsert the connector. Also check for continuity within the connector cable. If none, replace the cable. Fuser unit and engine PWB (YC26)
		Broken fuser thermistor 4 wire.	Replace the fuser unit (see page 1-5-43).
		Defective fuser IH.	Replace the fuser unit (see page 1-5-43).
		Defective engine PWB.	Replace the engine PWB and check for correct operation (see page 1-5-52).
6150	**Abnormally low fuser thermistor 4 temperature** Fuser thermistor 4 detects a temperature lower than 30°C/ 86°F for 1 s after warming up.	Defective connector cable or poor contact in the connector.	Reinsert the connector. Also check for continuity within the connector cable. If none, replace the cable. Fuser unit and engine PWB (YC26)
		Defective fuser thermistor 4.	Replace the fuser unit (see page 1-5-43).
		Defective fuser IH.	Replace the fuser unit (see page 1-5-43).
		Defective engine PWB.	Replace the engine PWB and check for correct operation (see page 1-5-52).
6200	**Broken fuser edge heater wire** Fuser thermistor 2 does not reach 100° C/212 °F even after 60 s during warming up. The detected temperature of fuser thermistor 2 does not reach the specified temperature (ready indication temperature) for 420 s in warming up after reached to 100° C/212 °F.	Defective connector cable or poor contact in the connector.	Reinsert the connector. Also check for continuity within the connector cable. If none, replace the cable. Power source PWB (YC3) and fuser IH PWB (YC1) Fuser IH PWB (YC4) and engine PWB (YC26)
		Fuser thermostat triggered.	Replace the fuser unit (see page 1-5-43).
		Defective fuser IH.	Replace the fuser unit (see page 1-5-43).
		Defective engine PWB.	Replace the engine PWB and check for correct operation (see page 1-5-52).
6220	**Abnormally high fuser thermistor 2 temperature** Fuser thermistor 2 detects a temperature higher than 245°C/473°F for 1 s.	Defective connector cable or poor contact in the connector.	Reinsert the connector. Also check for continuity within the connector cable. If none, replace the cable. Fuser unit and engine PWB (YC26)
		Shorted fuser thermistor 2.	Replace the fuser unit (see page 1-5-43).
		Defective engine PWB.	Replace the engine PWB and check for correct operation (see page 1-5-52).

Code	Contents	Causes	Check procedures/ corrective measures
6230	**Broken fuser thermistor 2 wire** The Input signal from the fuser thermistor 2 is 992 or more (A/D value) continuously for 1 s when the temperature at the fuser thermistor 1 is greater than 100°C/212°F during warming up.	Defective connector cable or poor contact in the connector.	Reinsert the connector. Also check for continuity within the connector cable. If none, replace the cable. Fuser unit and engine PWB (YC26)
		Broken fuser thermistor 2 wire.	Replace the fuser unit (see page 1-5-43).
		Fuser thermostat triggered.	Replace the fuser unit (see page 1-5-43).
		Defective fuser IH.	Replace the fuser unit (see page 1-5-43).
		Defective engine PWB.	Replace the engine PWB and check for correct operation (see page 1-5-52).
6250	**Abnormally low fuser thermistor 2 temperature** Fuser thermistor 2 detects a temperature lower than 100°C/212°F for 1 s during ready or print. Fuser thermistor 2 detects a temperature lower than 50°C/122°F for 1 s during warming up.	Defective connector cable or poor contact in the connector.	Reinsert the connector. Also check for continuity within the connector cable. If none, replace the cable. Fuser unit and engine PWB (YC26)
		Defective fuser thermistor 2.	Replace the fuser unit (see page 1-5-43).
		Defective fuser IH.	Replace the fuser unit (see page 1-5-43).
		Defective engine PWB.	Replace the engine PWB and check for correct operation (see page 1-5-52).
6320	**Abnormally high fuser thermistor 3 temperature** Fuser thermistor 3 detects a temperature higher than 205°C/401°F for 1 s.	Defective connector cable or poor contact in the connector.	Reinsert the connector. Also check for continuity within the connector cable. If none, replace the cable. Fuser unit and engine PWB (YC26)
		Shorted fuser thermistor 3.	Replace the fuser unit (see page 1-5-43).
		Defective engine PWB.	Replace the engine PWB and check for correct operation (see page 1-5-52).
6330	**Broken fuser thermistor 3 wire** Fuser thermistor 3 detects a temperature lower than 20°C/68°F continuously for 1 s	Defective connector cable or poor contact in the connector.	Reinsert the connector. Also check for continuity within the connector cable. If none, replace the cable. Fuser unit and engine PWB (YC26)
		Broken fuser thermistor 3 wire.	Replace the fuser unit (see page 1-5-43).
		Fuser thermostat triggered.	Replace the fuser unit (see page 1-5-43).
		Defective fuser IH.	Replace the fuser unit (see page 1-5-43).
		Defective engine PWB.	Replace the engine PWB and check for correct operation (see page 1-5-52).

Code	Contents	Causes	Check procedures/ corrective measures
6600	**Fuser belt rotation error** A belt rotating pulse is not received for 1 s. (Engine CPU)	Defective connector cable or poor contact in the connector.	Reinsert the connector. Also check for continuity within the connector cable. If none, replace the cable. Fuser unit and engine PWB (YC26)
		Defective fuser belt sensor.	Replace the fuser unit (see page 1-5-43).
		Defective engine PWB.	Replace the engine PWB and check for correct operation (see page 1-5-52).
6610	**Fuser release motor error** When the fuser release motor is driven, the fuser release sensor does not turn on/off for 5 s.	Defective connector cable or poor contact in the connector.	Reinsert the connector. Also check for continuity within the connector cable. If none, replace the cable. Fuser unit and engine PWB (YC26)
		Defective drive transmission system of motor.	Check if the gears rotate smoothly. If not, grease the bushes and gears. Check for broken gears and replace if any.
		Defective fuser release motor.	Replace the fuser unit (see page 1-5-43).
		Defective engine PWB.	Replace the engine PWB and check for correct operation (see page 1-5-52).
6710	**Fuser IH PWB CPU reset error** Watch doc timer has been overflowed.	Defective connector cable or poor contact in the connector.	Reinsert the connector. Also check for continuity within the connector cable. If none, replace the cable. Fuser IH PWB (YC4) and engine PWB (YC26)
		Defective fuser IH PWB.	Replace the fuser IH PWB and check for correct operation.
		Defective engine PWB.	Replace the engine PWB and check for correct operation (see page 1-5-52).
6720	**Fuser IH belt rotation error** A belt rotating pulse is not received for 2 s.	Defective connector cable or poor contact in the connector.	Reinsert the connector. Also check for continuity within the connector cable. If none, replace the cable. Fuser unit and engine PWB (YC26)
		Defective fuser belt sensor.	Replace the fuser unit (see page 1-5-43).
		Defective fuser IH PWB.	Replace the fuser IH PWB and check for correct operation.
		Defective engine PWB.	Replace the engine PWB and check for correct operation (see page 1-5-52).

Code	Contents	Causes	Check procedures/ corrective measures
6730	**Abnormally high fuser IH PWB temperature 1** The input detect temperature is greater than 105°C/221 °F.	Defective connector cable or poor contact in the connector.	Reinsert the connector. Also check for continuity within the connector cable. If none, replace the cable. Fuser IH PWB (YC4) and engine PWB (YC26)
		Defective fuser IH PWB.	Replace the fuser IH PWB and check for correct operation.
		Defective engine PWB.	Replace the engine PWB and check for correct operation (see page 1-5-52).
6740	**Abnormally high fuser IH PWB temperature 2** The input detect temperature is greater than 105°C/221 °F.	Defective connector cable or poor contact in the connector.	Reinsert the connector. Also check for continuity within the connector cable. If none, replace the cable. Fuser IH PWB (YC4) and engine PWB (YC26)
		Defective fuser IH PWB.	Replace the fuser IH PWB and check for correct operation.
		Defective engine PWB.	Replace the engine PWB and check for correct operation (see page 1-5-52).
6750	**Fuser IH output over-current error** The output current is greater than 90A for 10 ms in succession.	Defective connector cable or poor contact in the connector.	Reinsert the connector. Also check for continuity within the connector cable. If none, replace the cable. Fuser IH PWB (YC4) and engine PWB (YC26)
		Defective fuser IH PWB.	Replace the fuser IH PWB and check for correct operation.
		Defective engine PWB.	Replace the engine PWB and check for correct operation (see page 1-5-52).
6760	**Fuser IH input over-current error** The input current is greater than 20A(100V/120V), 10A(200V) for 100 ms in succession.	Defective connector cable or poor contact in the connector.	Reinsert the connector. Also check for continuity within the connector cable. If none, replace the cable. Fuser IH PWB (YC4) and engine PWB (YC26)
		Defective fuser IH PWB.	Replace the fuser IH PWB and check for correct operation.
		Defective engine PWB.	Replace the engine PWB and check for correct operation (see page 1-5-52).
6770	**Fuser IH low electric power error** The preset power is less than 0.6 times of it for 120 ms in succession.	Defective connector cable or poor contact in the connector.	Reinsert the connector. Also check for continuity within the connector cable. If none, replace the cable. Fuser IH PWB (YC4) and engine PWB (YC26)
		Defective fuser IH PWB.	Replace the fuser IH PWB and check for correct operation.
		Defective engine PWB.	Replace the engine PWB and check for correct operation (see page 1-5-52).

Code	Contents	Causes	Check procedures/ corrective measures
6900	**Fuser belt cooling fan error** When the fuser edge fan motor 1 , 2 is driven, alarm signal is detected for 5 s continuously.	Defective connector cable or poor contact in the connector.	Reinsert the connector. Also check for continuity within the connector cable. If none, replace the cable. Fuser edge fan motor 1 and front PWB (YC26) Fuser edge fan motor 2 and fuser PWB (YC2) Fuser PWB (YC1) and engine PWB (YC26)
		Defective fuser edge fan motor 1 or 2.	Replace the fuser edge fan motor 1 or 2.
		Defective engine PWB.	Replace the engine PWB and check for correct operation (see page 1-5-52).
6910	**Engine software ready error** The device won't engage in ready state in 60 minutes after warming-up has began.	Defective engine software.	Install the engine software.
		Defective engine PWB.	Replace the engine PWB and check for correct operation(see page 1-5-52).
6920	**Fuser front fan motor error** When the fuser front fan motor is driven, alarm signal is detected for 5 s continuously.	Defective connector cable or poor contact in the connector.	Reinsert the connector. Also check for continuity within the connector cable. If none, replace the cable. Fuser front fan motor and engine PWB (YC26)
		Defective fuser front fan motor.	Replace fuser front fan motor.
		Defective engine PWB.	Replace the engine PWB and check for correct operation (see page 1-5-52).
6930	**Fuser rear fan motor error** When the fuser rear fan motor is driven, alarm signal is detected for 5 s continuously.	Defective connector cable or poor contact in the connector.	Reinsert the connector. Also check for continuity within the connector cable. If none, Fuser rear fan motor and fuser PWB (YC2) Fuser PWB (YC1) and engine PWB (YC26)
		Defective fuser rear fan motor.	Replace fuser rear fan motor.
		Defective engine PWB.	Replace the engine PWB and check for correct operation (see page 1-5-52).
6940	**IH fan motor error** When the IH fan motor is driven, the alarm signal is detected for 5 s continuously.	Defective connector cable or poor contact in the connector.	Reinsert the connector. Also check for continuity within the connector cable. If none, replace the cable. IH fan motor and feed PWB 1 (YC11) Feed PWB 1 (YC2) and engine PWB (YC5)
		Defective IH fan motor.	Replace the IH fan motor.
		Defective engine PWB.	Replace the engine PWB and check for correct operation (see page 1-5-52).

Code	Contents	Causes	Check procedures/ corrective measures
6950	**Fuser IH PWB communication error** No response is received in 30 ms since a command is sent to IHCPU. A checksum error is detected 10 times in succession.	Defective connector cable or poor contact in the connector.	Reinsert the connector. Also check for continuity within the connector cable. If none, replace the cable. Fuser IH PWB (YC4) and engine PWB (YC26)
		Defective fuser IH PWB.	Replace the fuser IH PWB and check for correct operation.
		Defective engine PWB.	Replace the engine PWB and check for correct operation (see page 1-5-52).
6960	**Current PWB error** Less than 1A is continuously observed for 5 s.	Defective current PWB.	Replace the current PWB and check for correct operation.
6990	**Fuser power supply incompatibility** Information won't match between the engine backup and the fuser IH PWB.	Differences in settings after initialization	When this has happened after initialization using U201, make settings identical with the voltages on the IH PWB using U169.
		Defective fuser IH PWB.	Replace the fuser IH PWB and check for correct operation.
		Defective engine PWB.	Replace the engine PWB and check for correct operation (see page 1-5-52).
		Data damage of EEPROM.	Contact the Service Administrative Division.
7001	**Toner motor K error** When the toner motor K is driven, the pulse sensor is not detected for 15 times in 200 ms intervals has occurred in 15 times. During the toner motor is driven, an event in which TMOT_LOCK turns to H (locked) 5 times has occurred in 15 sets.	Defective connector cable or poor contact in the connector.	Reinsert the connector. Also check for continuity within the connector cable. If none, replace the cable. Toner motor K and engine PWB (YC27)
		Defective screw sensor K.	Replace the screw sensor K.
		Defective toner motor K.	Replace the toner motor K.
		Defective engine PWB.	Replace the engine PWB and check for correct operation (see page 1-5-52).
7002	**Toner motor C error** When the toner motor K is driven, the pulse sensor is not detected for 15 times in 200 ms intervals has occurred in 15 times. During the toner motor is driven, an event in which TMOT_LOCK turns to H (locked) 5 times has occurred in 15 sets.	Defective connector cable or poor contact in the connector.	Reinsert the connector. Also check for continuity within the connector cable. If none, replace the cable. Toner motor C and engine PWB (YC27)
		Defective screw sensor C.	Replace the screw sensor C.
		Defective toner motor C.	Replace the toner motor C.
		Defective engine PWB.	Replace the engine PWB and check for correct operation (see page 1-5-52).

Code	Contents	Causes	Check procedures/ corrective measures
7003	**Toner motor M error** When the toner motor K is driven, the pulse sensor is not detected for 15 times in 200 ms intervals has occurred in 15 times. During the toner motor is driven, an event in which TMOT_LOCK turns to H (locked) 5 times has occurred in 15 sets.	Defective connector cable or poor contact in the connector.	Reinsert the connector. Also check for continuity within the connector cable. If none, replace the cable. Toner motor M and engine PWB (YC27)
		Defective screw sensor M.	Replace the screw sensor M.
		Defective toner motor M.	Replace the toner motor M.
		Defective engine PWB.	Replace the engine PWB and check for correct operation (see page 1-5-52).
7004	**Toner motor Y error** When the toner motor K is driven, the pulse sensor is not detected for 15 times in 200 ms intervals has occurred in 15 times. During the toner motor is driven, an event in which TMOT_LOCK turns to H (locked) 5 times has occurred in 15 sets.	Defective connector cable or poor contact in the connector.	Reinsert the connector. Also check for continuity within the connector cable. If none, replace the cable. Toner motor Y and engine PWB (YC27)
		Defective screw sensor Y.	Replace the screw sensor Y.
		Defective toner motor Y.	Replace the toner motor Y.
		Defective engine PWB.	Replace the engine PWB and check for correct operation (see page 1-5-52).
7101	**Toner sensor K error** Sensor output value of 60 or less or 944 or more continued for 3 s.	Defective connector cable or poor contact in the connector.	Reinsert the connector. Also check for continuity within the connector cable. If none, replace the cable. Toner sensor K and front PWB (YC9) Front PWB (YC2) and engine PWB (YC10)
		Defective toner sensor K.	Replace developer unit K (see page 1-5-31).
		Failure of locking the developer waste slot at setup.	Check whether the developer waste slot has been unlocked and unlock if necessary (see page 1-2-14).
		Defective engine PWB.	Replace the engine PWB and check for correct operation (see page 1-5-52).

Code	Contents	Causes	Check procedures/ corrective measures
7102	**Toner sensor C error** Sensor output value of 60 or less or 944 or more continued for 3 s.	Defective connector cable or poor contact in the connector.	Reinsert the connector. Also check for continuity within the connector cable. If none, replace the cable. Toner sensor C and front PWB (YC13) Front PWB (YC2) and engine PWB (YC10)
		Defective toner sensor C.	Replace developer unit C (see page 1-5-31).
		Failure of locking the developer waste slot at setup.	Check whether the developer waste slot has been unlocked and unlock if necessary (see page 1-2-14).
		Defective engine PWB.	Replace the engine PWB and check for correct operation (see page 1-5-52).
7103	**Toner sensor M error** Sensor output value of 60 or less or 944 or more continued for 3 s.	Defective connector cable or poor contact in the connector.	Reinsert the connector. Also check for continuity within the connector cable. If none, replace the cable. Toner sensor M and front PWB (YC11) Front PWB (YC2) and engine PWB (YC10)
		Defective toner sensor M.	Replace developer unit M (see page 1-5-31).
		Failure of locking the developer waste slot at setup.	Check whether the developer waste slot has been unlocked and unlock if necessary (see page 1-2-14).
		Defective engine PWB.	Replace the engine PWB and check for correct operation (see page 1-5-52).
7104	**Toner sensor Y error** Sensor output value of 60 or less or 944 or more continued for 3 s.	Defective connector cable or poor contact in the connector.	Reinsert the connector. Also check for continuity within the connector cable. If none, replace the cable. Toner sensor Y and front PWB (YC15) Front PWB (YC2) and engine PWB (YC10)
		Defective toner sensor Y.	Replace developer unit Y (see page 1-5-31).
		Failure of locking the developer waste slot at setup.	Check whether the developer waste slot has been unlocked and unlock if necessary (see page 1-2-14).
		Defective engine PWB.	Replace the engine PWB and check for correct operation (see page 1-5-52).

Code	Contents	Causes	Check procedures/ corrective measures
7200	**Broken outer temperature sensor 2 wire** The sensor input sampling is greater than 230.	Defective connector cable or poor contact in the connector.	Reinsert the connector. Also check for continuity within the connector cable. If none, replace the cable. Outer temperature sensor 2 and front PWB (YC19) Front PWB (YC2) and engine PWB (YC10)
		Defective outer temperature sensor 2.	Replace outer temperature sensor 2.
		Defective engine PWB.	Replace the engine PWB and check for correct operation (see page 1-5-52).
7210	**Short-circuited outer temperature sensor 2** The sensor input sampling is less than 69.	Defective connector cable or poor contact in the connector.	Reinsert the connector. Also check for continuity within the connector cable. If none, replace the cable. Outer temperature sensor 2 and front PWB (YC19) Front PWB (YC2) and engine PWB (YC10)
		Defective outer temperature sensor 2.	Replace outer temperature sensor 2.
		Defective engine PWB.	Replace the engine PWB and check for correct operation (see page 1-5-52).
7221	**Broken LSU thermistor K wire** The sensor input sampling is greater than 230.	Defective connector cable or poor contact in the connector.	Reinsert the connector. Also check for continuity within the connector cable. If none, replace the cable. Laser scanner unit and LSU relay PWB (YC5) LSU relay PWB (YC3) and engine PWB (YC12)
		Defective LSU thermistor K.	Replace the laser scanner unit (see page 1-5-19).
		Defective engine PWB.	Replace the engine PWB and check for correct operation (see page 1-5-52).

Code	Contents	Causes	Check procedures/ corrective measures
7222	**Broken LSU thermistor C wire** The sensor input sampling is greater than 230.	Defective connector cable or poor contact in the connector.	Reinsert the connector. Also check for continuity within the connector cable. If none, replace the cable. Laser scanner unit and LSU relay PWB (YC10) LSU relay PWB (YC3) and engine PWB (YC12)
		Defective LSU thermistor C.	Replace the laser scanner unit (see page 1-5-19).
		Defective engine PWB.	Replace the engine PWB and check for correct operation (see page 1-5-52).
7223	**Broken LSU thermistor M wire** The sensor input sampling is greater than 230.	Defective connector cable or poor contact in the connector.	Reinsert the connector. Also check for continuity within the connector cable. If none, replace the cable. Laser scanner unit and LSU relay PWB (YC8) LSU relay PWB (YC3) and engine PWB (YC12)
		Defective LSU thermistor M.	Replace the laser scanner unit (see page 1-5-19).
		Defective engine PWB.	Replace the engine PWB and check for correct operation (see page 1-5-52).
7224	**Broken LSU thermistor Y wire** The sensor input sampling is greater than 230.	Defective connector cable or poor contact in the connector.	Reinsert the connector. Also check for continuity within the connector cable. If none, replace the cable. Laser scanner unit and LSU relay PWB (YC12) LSU relay PWB (YC3) and engine PWB (YC12)
		Defective LSU thermistor Y.	Replace the laser scanner unit (see page 1-5-19).
		Defective engine PWB.	Replace the engine PWB and check for correct operation (see page 1-5-52).
7231	**Short-circuited LSU thermistor K** The sensor input sampling is less than 69.	Defective connector cable or poor contact in the connector.	Reinsert the connector. Also check for continuity within the connector cable. If none, replace the cable. Laser scanner unit and LSU relay PWB (YC5) LSU relay PWB (YC3) and engine PWB (YC12)
		Defective LSU thermistor K.	Replace the laser scanner unit (see page 1-5-19).
		Defective engine PWB.	Replace the engine PWB and check for correct operation (see page 1-5-52).

Code	Contents	Causes	Check procedures/ corrective measures
7232	**Short-circuited LSU thermistor C** The sensor input sampling is less than 69.	Defective connector cable or poor contact in the connector.	Reinsert the connector. Also check for continuity within the connector cable. If none, replace the cable. Laser scanner unit and LSU relay PWB (YC10) LSU relay PWB (YC3) and engine PWB (YC12)
		Defective LSU thermistor C.	Replace the laser scanner unit (see page 1-5-19).
		Defective engine PWB.	Replace the engine PWB and check for correct operation (see page 1-5-52).
7233	**Short-circuited LSU thermistor M** The sensor input sampling is less than 69.	Defective connector cable or poor contact in the connector.	Reinsert the connector. Also check for continuity within the connector cable. If none, replace the cable. Laser scanner unit and LSU relay PWB (YC8) LSU relay PWB (YC3) and engine PWB (YC12)
		Defective LSU thermistor M.	Replace the laser scanner unit (see page 1-5-19).
		Defective engine PWB.	Replace the engine PWB and check for correct operation (see page 1-5-52).
7234	**Short-circuited LSU thermistor Y** The sensor input sampling is less than 69.	Defective connector cable or poor contact in the connector.	Reinsert the connector. Also check for continuity within the connector cable. If none, replace the cable. Laser scanner unit and LSU relay PWB (YC12) LSU relay PWB (YC3) and engine PWB (YC12)
		Defective LSU thermistor Y.	Replace the laser scanner unit (see page 1-5-19).
		Defective engine PWB.	Replace the engine PWB and check for correct operation (see page 1-5-52).
7241	**Broken developer thermistor K wire** The sensor input sampling is greater than 230.	Defective connector cable or poor contact in the connector.	Reinsert the connector. Also check for continuity within the connector cable. If none, replace the cable. Developer unit K and front PWB (YC9) Front PWB (YC2) and engine PWB (YC10)
		Defective developer thermistor K.	Replace developer unit K (see page 1-5-31).
		Defective engine PWB.	Replace the engine PWB and check for correct operation (see page 1-5-52).

Code	Contents	Causes	Check procedures/ corrective measures
7242	**Broken developer thermistor C wire** The sensor input sampling is greater than 230.	Defective connector cable or poor contact in the connector.	Reinsert the connector. Also check for continuity within the connector cable. If none, replace the cable. Developer unit C and front PWB (YC13) Front PWB (YC2) and engine PWB (YC10)
		Defective developer thermistor C.	Replace developer unit C (see page 1-5-31).
		Defective engine PWB.	Replace the engine PWB and check for correct operation (see page 1-5-52).
7243	**Broken developer thermistor M wire** The sensor input sampling is greater than 230.	Defective connector cable or poor contact in the connector.	Reinsert the connector. Also check for continuity within the connector cable. If none, replace the cable. Developer unit M and front PWB (YC11) Front PWB (YC2) and engine PWB (YC10)
		Defective developer thermistor M.	Replace developer unit M (see page 1-5-31).
		Defective engine PWB.	Replace the engine PWB and check for correct operation (see page 1-5-52).
7244	**Broken developer thermistor Y wire** The sensor input sampling is greater than 230.	Defective connector cable or poor contact in the connector.	Reinsert the connector. Also check for continuity within the connector cable. If none, replace the cable. Developer unit Y and front PWB (YC15) Front PWB (YC2) and engine PWB (YC10)
		Defective developer thermistor Y.	Replace developer unit Y (see page 1-5-31).
		Defective engine PWB.	Replace the engine PWB and check for correct operation (see page 1-5-52).
7251	**Short-circuited developer thermistor K** The sensor input sampling is less than 69.	Defective connector cable or poor contact in the connector.	Reinsert the connector. Also check for continuity within the connector cable. If none, replace the cable. Developer unit K and front PWB (YC9) Front PWB (YC2) and engine PWB (YC10)
		Defective developer thermistor K.	Replace developer unit K (see page 1-5-31).
		Defective engine PWB.	Replace the engine PWB and check for correct operation (see page 1-5-52).

Code	Contents	Causes	Check procedures/ corrective measures
7252	**Short-circuited developer thermistor C** The sensor input sampling is less than 69.	Defective connector cable or poor contact in the connector.	Reinsert the connector. Also check for continuity within the connector cable. If none, replace the cable. Developer unit C and front PWB (YC13) Front PWB (YC2) and engine PWB (YC10)
		Defective developer thermistor C.	Replace developer unit C (see page 1-5-31).
		Defective engine PWB.	Replace the engine PWB and check for correct operation (see page 1-5-52).
7253	**Short-circuited developer thermistor M** The sensor input sampling is less than 69.	Defective connector cable or poor contact in the connector.	Reinsert the connector. Also check for continuity within the connector cable. If none, replace the cable. Developer unit M and front PWB (YC11) Front PWB (YC2) and engine PWB (YC10)
		Defective developer thermistor M.	Replace developer unit M (see page 1-5-31).
		Defective engine PWB.	Replace the engine PWB and check for correct operation (see page 1-5-52).
7254	**Short-circuited developer thermistor Y wire** The sensor input sampling is less than 69.	Defective connector cable or poor contact in the connector.	Reinsert the connector. Also check for continuity within the connector cable. If none, replace the cable. Developer unit Y and front PWB (YC15) Front PWB (YC2) and engine PWB (YC10)
		Defective developer thermistor Y.	Replace developer unit Y (see page 1-5-31).
		Defective engine PWB.	Replace the engine PWB and check for correct operation (see page 1-5-52).
7401	**Developer unit K type mismatch error** Absence of the developer unit K is detected.	Defective connector cable or poor contact in the connector.	Reinsert the connector. Also check for continuity within the connector cable. If none, replace the cable. Developer unit K and front PWB (YC9) Front PWB (YC2) and engine PWB (YC10)
		Different type of the developer unit is installed.	Install the correct developer unit.
7402	**Developer unit C type mismatch error** Absence of the developer unit C is detected.	Defective connector cable or poor contact in the connector.	Reinsert the connector. Also check for continuity within the connector cable. If none, replace the cable. Developer unit C and front PWB (YC13) Front PWB (YC2) and engine PWB (YC10)
		Different type of the developer unit is installed.	Install the correct developer unit.

Code	Contents	Causes	Check procedures/ corrective measures
7403	**Developer unit M type mismatch error** Absence of the developer unit M is detected.	Defective connector cable or poor contact in the connector.	Reinsert the connector. Also check for continuity within the connector cable. If none, replace the cable. Developer unit M and front PWB (YC11) Front PWB (YC2) and engine PWB (YC10)
		Different type of the developer unit is installed.	Install the correct developer unit.
7404	**Developer unit Y type mismatch error** Absence of the developer unit Y is detected.	Defective connector cable or poor contact in the connector.	Reinsert the connector. Also check for continuity within the connector cable. If none, replace the cable. Developer unit Y and front PWB (YC15) Front PWB (YC2) and engine PWB (YC10)
		Different type of the developer unit is installed.	Install the correct developer unit.
7601	**ID sensor 1 error** An abnormal value is detected in the input data to ID sensor 1. Dark potential error FrontDarkP and FrontDarkS are greater than 0.80V. Light potential error FrontBrightS is smaller than FrontDarkS. FrontBrightP is smaller than FrontDarkP + 0.5V.	Defective connector cable or poor contact in the connector.	Reinsert the connector. Also check for continuity within the connector cable. If none, replace the cable. ID sensor 1 and feed PWB 1 (YC10) Feed PWB 1 (YC1) and engine PWB (YC6)
		Defective engine PWB.	Replace the engine PWB and check for correct operation (see page 1-5-52).
7602	**ID sensor 2 error** Dark potential error RearDarkP and RearDarkS are greater than 0.80V. Light potential error RearBrightS is smaller than RearDarkS. RearBrightP is smaller than RearDarkP + 0.5V.	Defective connector cable or poor contact in the connector.	Reinsert the connector. Also check for continuity within the connector cable. If none, replace the cable. ID sensor 2 and feed PWB 1 (YC10) Feed PWB 1 (YC1) and engine PWB (YC6)
		Defective engine PWB.	Replace the engine PWB and check for correct operation (see page 1-5-52).

Code	Contents	Causes	Check procedures/ corrective measures
7800	**Broken outer temperature sensor 1 wire** The device did not respond for more than 5 ms during reading, in 5 times.	Defective connector cable or poor contact in the connector.	Reinsert the connector. Also check for continuity within the connector cable. If none, replace the cable. Outer temperature sensor 1 and front PWB (YC16) Front PWB (YC2) and engine PWB (YC10)
		Defective outer temperature sensor 1.	Replace outer temperature sensor 1.
		Defective engine PWB.	Replace the engine PWB and check for correct operation (see page 1-5-52).
7901	**Drum K EEPROM error** No response is issued from the device in reading/writing for 5 ms or more and this problem is repeated five times successively. Mismatch of reading data from two locations occurs 8 times successively. Mismatch between writing data and reading data occurs 8 times successively.	Defective connector cable or poor contact in the connector.	Reinsert the connector. Also check for continuity within the connector cable. If none, replace the cable. Drum PWB K and front PWB (YC7) Front PWB (YC2) and engine PWB (YC10)
		Defective drum PWB K.	Replace the drum unit K (see page 1-5-31).
7902	**Drum C EEPROM error** No response is issued from the device in reading/writing for 5 ms or more and this problem is repeated five times successively. Mismatch of reading data from two locations occurs 8 times successively. Mismatch between writing data and reading data occurs 8 times successively.	Defective connector cable or poor contact in the connector.	Reinsert the connector. Also check for continuity within the connector cable. If none, replace the cable. Drum PWB C and front PWB (YC12) Front PWB (YC2) and engine PWB (YC10)
		Defective drum PWB C.	Replace the drum unit C (see page 1-5-31).
7903	**Drum M EEPROM error** No response is issued from the device in reading/writing for 5 ms or more and this problem is repeated five times successively. Mismatch of reading data from two locations occurs 8 times successively. Mismatch between writing data and reading data occurs 8 times successively.	Defective connector cable or poor contact in the connector.	Reinsert the connector. Also check for continuity within the connector cable. If none, replace the cable. Drum PWB M and front PWB (YC10) Front PWB (YC2) and engine PWB (YC10)
		Defective drum PWB M.	Replace the drum unit M (see page 1-5-31).

Code	Contents	Causes	Check procedures/ corrective measures
7904	**Drum Y EEPROM error** No response is issued from the device in reading/writing for 5 ms or more and this problem is repeated five times successively. Mismatch of reading data from two locations occurs 8 times successively. Mismatch between writing data and reading data occurs 8 times successively.	Defective connector cable or poor contact in the connector.	Reinsert the connector. Also check for continuity within the connector cable. If none, replace the cable. Drum PWB Y and front PWB (YC14) Front PWB (YC2) and engine PWB (YC10)
		Defective drum PWB Y.	Replace the drum unit Y (see page 1-5-31).
7911	**Developer unit K EEPROM error** No response is issued from the device in reading/writing for 5 ms or more and this problem is repeated five times successively. Mismatch of reading data from two locations occurs 8 times successively. Mismatch between writing data and reading data occurs 8 times successively.	Defective connector cable or poor contact in the connector.	Reinsert the connector. Also check for continuity within the connector cable. If none, replace the cable. Developer unit K and front PWB (YC9) Front PWB (YC2) and engine PWB (YC10)
		Defective developer unit K.	Replace the developer unit K (see page 1-5-31).
7912	**Developer unit C EEPROM error** No response is issued from the device in reading/writing for 5 ms or more and this problem is repeated five times successively. Mismatch of reading data from two locations occurs 8 times successively. Mismatch between writing data and reading data occurs 8 times successively.	Defective connector cable or poor contact in the connector.	Reinsert the connector. Also check for continuity within the connector cable. If none, replace the cable. Developer unit C and front PWB (YC13) Front PWB (YC2) and engine PWB (YC10)
		Defective developer unit C.	Replace the developer unit C (see page 1-5-31).

Code	Contents	Causes	Check procedures/ corrective measures
7913	**Developer unit M EEPROM error** No response is issued from the device in reading/writing for 5 ms or more and this problem is repeated five times successively. Mismatch of reading data from two locations occurs 8 times successively. Mismatch between writing data and reading data occurs 8 times successively.	Defective connector cable or poor contact in the connector.	Reinsert the connector. Also check for continuity within the connector cable. If none, replace the cable. Developer unit M and front PWB (YC11) Front PWB (YC2) and engine PWB (YC10)
		Defective developer unit M.	Replace the developer unit M (see page 1-5-31).
7914	**Developer unit Y EEPROM error** No response is issued from the device in reading/writing for 5 ms or more and this problem is repeated five times successively. Mismatch of reading data from two locations occurs 8 times successively. Mismatch between writing data and reading data occurs 8 times successively.	Defective connector cable or poor contact in the connector.	Reinsert the connector. Also check for continuity within the connector cable. If none, replace the cable. Developer unit Y and front PWB (YC15) Front PWB (YC2) and engine PWB (YC10)
		Defective developer unit Y.	Replace the developer unit Y (see page 1-5-31).
7941	**Laser scanner unit K EEPROM error** Mismatch of reading data from two locations occurs 8 times successively. Mismatch between writing data and reading data occurs 8 times successively.	Defective connector cable or poor contact in the connector.	Reinsert the connector. Also check for continuity within the connector cable. If none, replace the cable. APC PWB K and LSU relay PWB (YC5) LSU relay PWB (YC2) and engine PWB (YC11)
		Defective APC PWB K.	Replace the laser scanner unit (see page 1-5-19).
7942	**Laser scanner unit C EEPROM error** Mismatch of reading data from two locations occurs 8 times successively. Mismatch between writing data and reading data occurs 8 times successively.	Defective connector cable or poor contact in the connector.	Reinsert the connector. Also check for continuity within the connector cable. If none, replace the cable. APC PWB C and LSU relay PWB (YC10) LSU relay PWB (YC2) and engine PWB (YC11)
		Defective APC PWB C.	Replace the laser scanner unit (see page 1-5-19).

Code	Contents	Causes	Check procedures/ corrective measures
7943	**Laser scanner unit M EEPROM error** Mismatch of reading data from two locations occurs 8 times successively. Mismatch between writing data and reading data occurs 8 times successively.	Defective connector cable or poor contact in the connector.	Reinsert the connector. Also check for continuity within the connector cable. If none, replace the cable. APC PWB M and LSU relay PWB (YC8) LSU relay PWB (YC2) and engine PWB (YC11)
		Defective APC PWB M.	Replace the laser scanner unit (see page 1-5-19).
7944	**Laser scanner unit Y EEPROM error** Mismatch of reading data from two locations occurs 8 times successively. Mismatch between writing data and reading data occurs 8 times successively.	Defective connector cable or poor contact in the connector.	Reinsert the connector. Also check for continuity within the connector cable. If none, replace the cable. APC PWB Y and LSU relay PWB (YC12) LSU relay PWB (YC2) and engine PWB (YC11)
		Defective APC PWB Y.	Replace the laser scanner unit (see page 1-5-19).
8010	**Punch motor error 1** When the punch motor is driven, punch home position sensor does not turn on within 200 ms.	Defective connector cable or poor contact in the connector (4000-sheet finisher).	Reinsert the connector. Also check for continuity within the connector cable. If none, replace the cable. Punch motor and punch PWB (YC4) Punch home position sensor and punch PWB (YC8) Punch PWB (YC1) and DF main PWB (YC7)
		Defective connector cable or poor contact in the connector (1000-sheet finisher).	Reinsert the connector. Also check for continuity within the connector cable. If none, replace the cable. Punch motor and punch PWB (YC4) Punch home position sensor and punch PWB (YC8) Punch PWB (YC1) and DF main PWB (YC8)
		Defective punch home position sensor.	Replace the punch home position sensor.
		Defective punch motor.	Replace the punch motor.
		Defective PWB.	Replace the punch PWB or DF main PWB and check for correct operation.

Code	Contents	Causes	Check procedures/ corrective measures
8020	**Punch motor error 2** Home position is not obtained in 3 s after home position is initialized or in standby.	Defective connector cable or poor contact in the connector (4000-sheet finisher).	Reinsert the connector. Also check for continuity within the connector cable. If none, replace the cable. Punch motor and punch PWB (YC4) Punch PWB (YC1) and DF main PWB (YC7)
		Defective connector cable or poor contact in the connector (1000-sheet finisher).	Reinsert the connector. Also check for continuity within the connector cable. If none, replace the cable. Punch motor and punch PWB (YC4) Punch PWB (YC1) and DF main PWB (YC8)
		Defective punch motor.	Replace the punch motor.
		Defective PWB.	Replace the punch PWB or DF main PWB and check for correct operation.
8030	**Punch motor error 3** Home position does not turn from On to Off in 50 ms after home position has been initialized.	Defective connector cable or poor contact in the connector (4000-sheet finisher).	Reinsert the connector. Also check for continuity within the connector cable. If none, replace the cable. Punch motor and punch PWB (YC4) Punch PWB (YC1) and DF main PWB (YC7)
		Defective connector cable or poor contact in the connector (1000-sheet finisher).	Reinsert the connector. Also check for continuity within the connector cable. If none, replace the cable. Punch motor and punch PWB (YC4) Punch PWB (YC1) and DF main PWB (YC8)
		Defective punch motor.	Replace the punch motor.
		Defective PWB.	Replace the punch PWB or DF main PWB and check for correct operation.
8040	**Abnormal simultaneous connection of mailbox** When the mailbox is installed in both the main unit and the finisher.	When the mailbox is installed in both the main unit and the finisher.	Uninstall either of the mailboxes.

Code	Contents	Causes	Check procedures/ corrective measures
8090	**DF paddle motor error** When the DF paddle motor is driven, DF paddle sensor does not turn on within 1 s.	Defective connector cable or poor contact in the connector (4000-sheet finisher).	Reinsert the connector. Also check for continuity within the connector cable. If none, replace the cable. DF paddle motor and DF main PWB (YC15) DF paddle sensor and DF main PWB (YC22)
		Defective connector cable or poor contact in the connector (1000-sheet finisher).	Reinsert the connector. Also check for continuity within the connector cable. If none, replace the cable. DF paddle motor and DF main PWB (YC11) DF paddle sensor and DF main PWB (YC20)
		Defective DF paddle sensor.	Replace the DF paddle sensor.
		Defective DF paddle motor.	Replace the DF paddle motor.
		Defective DF main PWB.	Replace the DF main PWB and check for correct operation.
8100	**DF eject release motor error** When the DF eject release motor is driven, DF bundle discharge sensor does not turn on within 1 s.	Defective connector cable or poor contact in the connector (4000-sheet finisher).	Reinsert the connector. Also check for continuity within the connector cable. If none, replace the cable. DF eject release motor and DF main PWB (YC12) DF bundle discharge sensor and DF main PWB (YC22)
		Defective connector cable or poor contact in the connector (1000-sheet finisher).	Reinsert the connector. Also check for continuity within the connector cable. If none, replace the cable. DF eject release motor and DF main PWB (YC10) DF bundle discharge sensor and DF main PWB (YC20)
		Defective DF bundle discharge sensor.	Replace the DF bundle discharge sensor.
		Defective DF eject release motor.	Replace the DF eject release motor.
		Defective DF main PWB.	Replace the DF main PWB and check for correct operation.

Code	Contents	Causes	Check procedures/ corrective measures
8110	**DF shift motor 1 error** (4000-sheet finisher) When the DF shift motor 1 is driven, DF shift sensor 1 does not turn on within 160 ms.	Defective connector cable or poor contact in the connector.	Reinsert the connector. Also check for continuity within the connector cable. If none, replace the cable. DF shift motor 1 and DF main PWB (YC14) DF shift sensor 1 and DF main PWB (YC23)
		Defective DF shift sensor 1.	Replace the DF shift sensor 1.
		Defective DF shift motor 1.	Replace the DF shift motor 1.
		Defective DF main PWB.	Replace the DF main PWB and check for correct operation.
8120	**DF shift motor 2 error** (4000-sheet finisher) When the DF shift motor 2 is driven, DF shift sensor 2 does not turn on within 160 ms.	Defective connector cable or poor contact in the connector.	Reinsert the connector. Also check for continuity within the connector cable. If none, replace the cable. DF shift motor 2 and DF main PWB (YC14) DF shift sensor 2 and DF main PWB (YC23)
		Defective DF shift sensor 2.	Replace the DF shift sensor 2.
		Defective DF shift motor 2.	Replace the DF shift motor 2.
		Defective DF main PWB.	Replace the DF main PWB and check for correct operation.
8130	**DF shift release motor error** (4000-sheet finisher) When the DF shift release motor is driven, DF shift release sensor does not turn on within 1 s.	Defective connector cable or poor contact in the connector.	Reinsert the connector. Also check for continuity within the connector cable. If none, replace the cable. DF shift release motor and DF main PWB (YC14) DF shift release sensor and DF main PWB (YC23)
		Defective DF shift release sensor.	Replace the DF shift release sensor.
		Defective DF shift release motor.	Replace the DF shift release motor.
		Defective DF main PWB.	Replace the DF main PWB and check for correct operation.

Code	Contents	Causes	Check procedures/ corrective measures
8140	**DF tray motor error 1** When the main tray has started ascending, DF tray sensor 1 or DF tray upper surface sensor does not turn on within 20 s.	Defective connector cable or poor contact in the connector (4000-sheet finisher).	Reinsert the connector. Also check for continuity within the connector cable. If none, replace the cable. DF tray motor and DF main PWB (YC16) DF tray sensor 1 and DF main PWB (YC22) DF tray upper surface sensor and DF main PWB (YC21, YC13)
		Defective connector cable or poor contact in the connector (1000-sheet finisher).	Reinsert the connector. Also check for continuity within the connector cable. If none, replace the cable. DF tray motor and DF main PWB (YC14) DF tray sensor 1 and DF main PWB (YC20) DF tray upper surface sensor and DF main PWB (YC18)
		Defective sensor.	Replace DF tray sensor 1 or DF tray upper surface sensor.
		Defective DF tray motor.	Replace the DF tray motor.
		Defective DF main PWB.	Replace the DF main PWB and check for correct operation.
8150	**DF tray motor error 2** When the main tray has descended, DF tray sensor 1 or DF tray upper surface sensor does not turn off within 5 s.	Defective connector cable or poor contact in the connector (4000-sheet finisher).	Reinsert the connector. Also check for continuity within the connector cable. If none, replace the cable. DF tray motor and DF main PWB (YC16) DF tray sensor 1 and DF main PWB (YC22) DF tray upper surface sensor and DF main PWB (YC21, YC13)
		Defective connector cable or poor contact in the connector (1000-sheet finisher).	Reinsert the connector. Also check for continuity within the connector cable. If none, replace the cable. DF tray motor and DF main PWB (YC14) DF tray sensor 1 and DF main PWB (YC20) DF tray upper surface sensor and DF main PWB (YC18)
		Defective sensor.	Replace DF tray sensor 1 or DF tray upper surface sensor.
		Defective DF tray motor.	Replace the DF tray motor.
		Defective DF main PWB.	Replace the DF main PWB and check for correct operation.

Code	Contents	Causes	Check procedures/ corrective measures
8160	**DF tray motor error 3** When the main tray has descended, DF tray sensor 3 does not turn on within 20 s.	Defective connector cable or poor contact in the connector (4000-sheet finisher).	Reinsert the connector. Also check for continuity within the connector cable. If none, replace the cable. DF tray motor and DF main PWB (YC16) DF tray sensor 3 and DF main PWB (YC23)
		Defective connector cable or poor contact in the connector (1000-sheet finisher).	Reinsert the connector. Also check for continuity within the connector cable. If none, replace the cable. DF tray motor and DF main PWB (YC14) DF tray sensor 3 and DF main PWB (YC20)
		Defective DF tray sensor 3.	Replace DF tray sensor 3.
		Defective DF tray motor.	Replace the DF tray motor.
		Defective DF main PWB.	Replace the DF main PWB and check for correct operation.
8170	**DF side registration motor 1 error 1** When initial operation, DF side registration sensor 1 does not turn on within 3 s.	Defective connector cable or poor contact in the connector (4000-sheet finisher).	Reinsert the connector. Also check for continuity within the connector cable. If none, replace the cable. DF side registration motor 1 and DF main PWB (YC15) DF side registration sensor 1 and DF main PWB (YC22)
		Defective connector cable or poor contact in the connector (1000-sheet finisher).	Reinsert the connector. Also check for continuity within the connector cable. If none, replace the cable. DF side registration motor 1 and DF main PWB (YC11) DF side registration sensor 1 and DF main PWB (YC20)
		Defective DF side registration sensor 1.	Replace DF side registration sensor 1.
		Defective DF side registration motor 1.	Replace DF side registration motor 1.
		Defective DF main PWB.	Replace the DF main PWB and check for correct operation.

Code	Contents	Causes	Check procedures/ corrective measures
8180	**DF side registration motor 1 error 2** JAM6810 is detected twice.	Defective connector cable or poor contact in the connector (4000-sheet finisher).	Reinsert the connector. Also check for continuity within the connector cable. If none, replace the cable. DF side registration motor 1 and DF main PWB (YC15) DF side registration sensor 1 and DF main PWB (YC22)
		Defective connector cable or poor contact in the connector (1000-sheet finisher).	Reinsert the connector. Also check for continuity within the connector cable. If none, replace the cable. DF side registration motor 1 and DF main PWB (YC11) DF side registration sensor 1 and DF main PWB (YC20)
		Defective DF side registration sensor 1.	Replace DF side registration sensor 1.
		Defective DF side registration motor 1.	Replace DF side registration motor 1.
		Defective DF main PWB.	Replace the DF main PWB and check for correct operation.
8190	**DF side registration motor 2 error 1** When initial operation, DF side registration sensor 2 does not turn on within 3 s.	Defective connector cable or poor contact in the connector (4000-sheet finisher).	Reinsert the connector. Also check for continuity within the connector cable. If none, replace the cable. DF side registration motor 2 and DF main PWB (YC15) DF side registration sensor 2 and DF main PWB (YC22)
		Defective connector cable or poor contact in the connector (1000-sheet finisher).	Reinsert the connector. Also check for continuity within the connector cable. If none, replace the cable. DF side registration motor 2 and DF main PWB (YC11) DF side registration sensor 2 and DF main PWB (YC20)
		Defective DF side registration sensor 2.	Replace DF side registration sensor 2.
		Defective DF side registration motor 2.	Replace DF side registration motor 2.
		Defective DF main PWB.	Replace the DF main PWB and check for correct operation.

Code	Contents	Causes	Check procedures/ corrective measures
8200	**DF side registration motor 2 error 2** JAM6910 is detected twice.	Defective connector cable or poor contact in the connector (4000-sheet finisher).	Reinsert the connector. Also check for continuity within the connector cable. If none, replace the cable. DF side registration motor 2 and DF main PWB (YC15) DF side registration sensor 2 and DF main PWB (YC22)
		Defective connector cable or poor contact in the connector (1000-sheet finisher).	Reinsert the connector. Also check for continuity within the connector cable. If none, replace the cable. DF side registration motor 2 and DF main PWB (YC11) DF side registration sensor 2 and DF main PWB (YC20)
		Defective DF side registration sensor 2.	Replace DF side registration sensor 2.
		Defective DF side registration motor 2.	Replace DF side registration motor 2.
		Defective DF main PWB.	Replace the DF main PWB and check for correct operation.
8210	**DF slide motor error** When initial operation, DF staple sensor does not turn on within 3 s.	Defective connector cable or poor contact in the connector (4000-sheet finisher).	Reinsert the connector. Also check for continuity within the connector cable. If none, replace the cable. DF slide motor and DF main PWB (YC12) DF staple sensor and DF main PWB (YC22)
		Defective connector cable or poor contact in the connector (1000-sheet finisher).	Reinsert the connector. Also check for continuity within the connector cable. If none, replace the cable. DF slide motor and DF main PWB (YC10) DF staple sensor and DF main PWB (YC20)
		Defective DF staple sensor.	Replace the DF staple sensor.
		Defective DF slide motor.	Replace the DF slide motor.
		Defective DF main PWB.	Replace the DF main PWB and check for correct operation.

Code	Contents	Causes	Check procedures/ corrective measures
8230	**DF staple motor error 1** Staple JAM (DF) has been detected twice in a row. (The home position could not be detected in 600 ms since the motor was driven after jam was detected twice.)	Defective connector cable or poor contact in the connector (4000-sheet finisher).	Reinsert the connector. Also check for continuity within the connector cable. If none, replace the cable. Staple unit and DF main PWB (YC17)
		Defective connector cable or poor contact in the connector (1000-sheet finisher).	Reinsert the connector. Also check for continuity within the connector cable. If none, replace the cable. Staple unit and DF main PWB (YC11)
		Defective DF staple sensor.	Replace the staple unit.
		Defective DF staple motor.	
		Defective DF main PWB.	Replace the DF main PWB and check for correct operation.
8240	**DF staple motor error 2** Staple JAM (DF) has been detected twice in a row. (The second JAM detection condition fullfilled with a lock detection signal maintained 1 V for 500 ms continuously, while the stapler motor was driven.)	Defective connector cable or poor contact in the connector (4000-sheet finisher).	Reinsert the connector. Also check for continuity within the connector cable. If none, replace the cable. Staple unit and DF main PWB (YC17)
		Defective connector cable or poor contact in the connector (1000-sheet finisher).	Reinsert the connector. Also check for continuity within the connector cable. If none, replace the cable. Staple unit and DF main PWB (YC11)
		Defective DF staple motor.	Replace the staple unit.
		Defective DF main PWB.	Replace the DF main PWB and check for correct operation.
8250	**DF tray motor error 4** The lock signal of the motor is detected continuously for 10 s.	Defective connector cable or poor contact in the connector (4000-sheet finisher).	Reinsert the connector. Also check for continuity within the connector cable. If none, replace the cable. DF tray motor and DF main PWB (YC16) DF tray sensor 3 and DF main PWB (YC23)
		Defective connector cable or poor contact in the connector (1000-sheet finisher).	Reinsert the connector. Also check for continuity within the connector cable. If none, replace the cable. DF tray motor and DF main PWB (YC14) DF tray sensor 3 and DF main PWB (YC20)
		Defective DF tray motor.	Replace the DF tray motor.
		Defective DF main PWB.	Replace the DF main PWB and check for correct operation.

Code	Contents	Causes	Check procedures/ corrective measures
8300	**Center-folding unit communication error** (4000-sheet finisher) Communication with the center-folding unit is not possible.	Defective connector cable or poor contact in the connector.	Reinsert the connector. Also check for continuity within the connector cable. If none, replace the cable. CF main PWB (YC7) and DF main PWB (YC9)
		Defective CF set sensor.	Replace the CF set sensor.
		Defective PWB.	Replace the CF main PWB or the DF main PWB and check for correct operation.
8310	**CF side registration motor 2 error** (4000-sheet finisher) When initial operation, CF side registration sensor 2 does not turn on within 1 s.	Defective connector cable or poor contact in the connector.	Reinsert the connector. Also check for continuity within the connector cable. If none, replace the cable. CF side registration motor 2 and CF main PWB (YC10) CF side registration sensor 2 and CF main PWB (YC20)
		Defective CF side registration sensor 2.	Replace CF side registration sensor 2.
		Defective CF side registration motor 2.	Replace CF side registration motor 2.
		Defective CF main PWB.	Replace the CF main PWB and check for correct operation.
8320	**CF adjustment motor error** (4000-sheet finisher) When initial operation, CF adjustment sensor does not turn on within 2.5 s.	Defective connector cable or poor contact in the connector.	Reinsert the connector. Also check for continuity within the connector cable. If none, replace the cable. CF adjustment motor 1, 2 and CF main PWB (YC10) CF adjustment sensor 1, 2 and CF main PWB (YC20)
		Defective CF adjustment sensor 1, 2.	Replace CF adjustment sensor 1, 2.
		Defective CF adjustment motor 1, 2.	Replace CF adjustment motor 1, 2.
		Defective CF main PWB.	Replace the CF main PWB and check for correct operation.

Code	Contents	Causes	Check procedures/ corrective measures
8330	**CF blade motor error** (4000-sheet finisher) When initial operation, CF blade sensor does not turn on within 3 s.	Defective connector cable or poor contact in the connector.	Reinsert the connector. Also check for continuity within the connector cable. If none, replace the cable. CF blade motor and CF main PWB (YC15) CF blade sensor and CF main PWB (YC20)
		Defective CF blade sensor.	Replace the CF blade sensor.
		Defective CF blade motor.	Replace the CF blade motor.
		Defective CF main PWB.	Replace the CF main PWB and check for correct operation.
8340	**CF staple motor error 1** (4000-sheet finisher) Staple JAM (center-folding unit) has been detected twice in a row. (The home position could not be detected in 600 ms since the motor was driven after jam was detected twice.)	Defective connector cable or poor contact in the connector.	Reinsert the connector. Also check for continuity within the connector cable. If none, replace the cable. CF staple unit and CF main PWB (YC13)
		Defective CF staple sensor.	Replace the CF staple unit.
		Defective CF staple motor.	
		Defective CF main PWB.	Replace the CF main PWB and check for correct operation.
8350	**CF side registration motor 1 error** (4000-sheet finisher) When initial operation, CF side registration sensor 1 does not turn on within 1 s.	Defective connector cable or poor contact in the connector.	Reinsert the connector. Also check for continuity within the connector cable. If none, replace the cable. CF side registration motor 1 and CF main PWB (YC10) CF side registration sensor 1 and CF main PWB (YC20)
		Defective CF side registration sensor 1.	Replace CF side registration sensor 1.
		Defective CF side registration motor 1.	Replace CF side registration motor 1.
		Defective CF main PWB.	Replace the CF main PWB and check for correct operation.
8360	**CF main motor error** (4000-sheet finisher) During driving the motor, lock signal is detected for 1 s continuously.	Defective connector cable or poor contact in the connector.	Reinsert the connector. Also check for continuity within the connector cable. If none, replace the cable. CF main motor and CF main PWB (YC16)
		Defective CF main motor.	Replace the CF main motor.
		Defective CF main PWB.	Replace the CF main PWB and check for correct operation.

Code	Contents	Causes	Check procedures/ corrective measures
8370	**CF staple motor error 2** (4000-sheet finisher) Staple JAM (DF) has been detected twice in a row. (The second JAM detection condition fullfilled with a lock detection signal maintained 1 V for 1000 ms continuously, while the stapler motor was driven.)	Defective connector cable or poor contact in the connector.	Reinsert the connector. Also check for continuity within the connector cable. If none, replace the cable. CF staple unit and CF main PWB (YC13)
		Defective CF staple motor.	Replace the CF staple unit.
		Defective CF main PWB.	Replace the CF main PWB and check for correct operation.
8410	**Punch slide motor error 1** The punch slide sensor won't turn On when home position has been moved by 30 mm.	Defective connector cable or poor contact in the connector (4000-sheet finisher).	Reinsert the connector. Also check for continuity within the connector cable. If none, replace the cable. Punch slide motor and punch PWB (YC3) Punch slide sensor and punch PWB (YC6) Punch PWB (YC1) and DF main PWB (YC7)
		Defective connector cable or poor contact in the connector (1000-sheet finisher).	Reinsert the connector. Also check for continuity within the connector cable. If none, replace the cable. Punch slide motor and punch PWB (YC3) Punch slide sensor and punch PWB (YC6) Punch PWB (YC1) and DF main PWB (YC8)
		Defective slide sensor.	Replace the punch slide sensor.
		Defective punch slide motor.	Replace the punch slide motor.
		Defective PWB.	Replace the punch PWB or DF main PWB and check for correct operation.
8420	**Punch slide motor error 2** In detection of paper edges, the paper edge cannot be detected in 30 mm move.	Defective connector cable or poor contact in the connector (4000-sheet finisher).	Reinsert the connector. Also check for continuity within the connector cable. If none, replace the cable. Punch slide motor and punch PWB (YC3) Punch PWB (YC1) and DF main PWB (YC7)
		Defective connector cable or poor contact in the connector (1000-sheet finisher).	Reinsert the connector. Also check for continuity within the connector cable. If none, replace the cable. Punch slide motor and punch PWB (YC3) Punch PWB (YC1) and DF main PWB (YC8)
		Defective punch slide motor.	Replace the punch slide motor.
		Defective PWB.	Replace the punch PWB or DF main PWB and check for correct operation.

Code	Contents	Causes	Check procedures/ corrective measures
8430	**Punch unit communication error** Communication failed to be established after the punch unit was hooked up.	Defective connector cable or poor contact in the connector (4000-sheet finisher).	Reinsert the connector. Also check for continuity within the connector cable. If none, replace the cable. Punch PWB (YC1) and DF main PWB (YC7)
		Defective connector cable or poor contact in the connector (1000-sheet finisher).	Reinsert the connector. Also check for continuity within the connector cable. If none, replace the cable. Punch PWB (YC1) and DF main PWB (YC8)
		Defective PWB.	Replace the punch PWB or the DF main PWB and check for correct operation.
8500	**Mailbox communication error** (4000-sheet finisher) Communication failed to be established after the mailbox was hooked up.	Defective connector cable or poor contact in the connector.	Reinsert the connector. Also check for continuity within the connector cable. If none, replace the cable. MB main PWB (YC3) and DF main PWB (YC6)
		Defective PWB.	Replace the MB main PWB or the DF main PWB and check for correct operation.
8510	**MB conveying motor error 1** (4000-sheet finisher) When initial operation, MB home position sensor does not turn on within 5 s.	Defective connector cable or poor contact in the connector.	Reinsert the connector. Also check for continuity within the connector cable. If none, replace the cable. MB conveying motor and MB main PWB (YC5) MB home position sensor and MB main PWB (YC2)
		Defective MB home position sensor.	Replace the MB home position sensor.
		Defective MB conveying motor.	Replace the MB conveying motor.
		Defective MB main PWB.	Replace the MB main PWB and check for correct operation.

Code	Contents	Causes	Check procedures/ corrective measures
8520	**MB conveying motor error 2** (4000-sheet finisher) When standby operation, MB home position sensor does not turn off within 1 s.	Defective connector cable or poor contact in the connector.	Reinsert the connector. Also check for continuity within the connector cable. If none, replace the cable. MB conveying motor and MB main PWB (YC5) MB home position sensor and MB main PWB (YC2)
		Defective MB home position sensor.	Replace the MB home position sensor.
		Defective MB conveying motor.	Replace the MB conveying motor.
		Defective MB main PWB.	Replace the MB main PWB and check for correct operation.
8800	**Document finisher main program error** Document finisher main program error at power up.	Defective connector cable or poor contact in the connector (4000-sheet finisher).	Reinsert the connector. Also check for continuity within the connector cable. If none, replace the cable. DF main PWB (YC4) and engine PWB (YC18)
		Defective connector cable or poor contact in the connector (1000-sheet finisher).	Reinsert the connector. Also check for continuity within the connector cable. If none, replace the cable. DF main PWB (YC7) and engine PWB (YC18)
		Defective PWB.	Replace the DF main PWB or the engine PWB and check for correct operation.
8900	**Document finisher backup error** Read and write data does not match 3 times in succession.	Defective connector cable or poor contact in the connector (4000-sheet finisher).	Reinsert the connector. Also check for continuity within the connector cable. If none, replace the cable. DF main PWB (YC4) and engine PWB (YC18)
		Defective connector cable or poor contact in the connector (1000-sheet finisher).	Reinsert the connector. Also check for continuity within the connector cable. If none, replace the cable. DF main PWB (YC7) and engine PWB (YC18)
		Improper installation EEPROM.	Check the installation of the EEPROM and remedy if necessary.
		Defective DF main PWB.	Replace the DF main PWB and check for correct operation.

Code	Contents	Causes	Check procedures/ corrective measures
8930	**Center-folding unit backup error** (4000-sheet finisher) Read and write data does not match 3 times in succession.	Defective connector cable or poor contact in the connector.	Reinsert the connector. Also check for continuity within the connector cable. If none, replace the cable. CF main PWB (YC7) and DF main PWB (YC9)
		Improper installation EEPROM.	Check the installation of the EEPROM and remedy if necessary.
		Defective CF main PWB.	Replace the CF main PWB and check for correct operation.
F000	**Communication error between main PWB and operation PWB**	Defective main PWB.	Turn the main power switch off/on to restart the machine. If the error is not resolved, replace main PWB (see page 1-5-47).
		Defective operation PWB.	Replace the operation PWB and check for correct operation.
F010	**Main PWB checksum error**	Defective main PWB.	Turn the main power switch off/on to restart the machine. If the error is not resolved, replace main PWB (see page 1-5-47).
F040	**Communication error between main PWB and print engine**	Defective main PWB.	Turn the main power switch off/on to restart the machine. If the error is not resolved, replace main PWB (see page 1-5-47).
		Defective engine PWB.	Replace the engine PWB and check for correct operation (see page 1-5-52).
F050	**Print engine ROM checksum error**	Defective engine software.	Install the engine software.
		Defective engine PWB.	Turn the main power switch off/on to restart the machine. If the error is not resolved, replace engine PWB (see page 1-5-52).
F278	**Power supply in drive system error**	The main power switch was turned off before the machine was shutdown, or a power failure has occurred.	Turn on power. (To switch off power, after confirming the data lamp is turned off, perform shut-down on the operation panel, turn power off.)

1-4-3 Image formation problems

If the part causing the problem was not supplied, use the unit including the part for replacement.

(1) No image appears (entirely white).

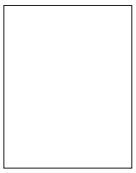

See page 1-4-87

(2) No image appears (entirely black).

See page 1-4-87

(3) Image is too light.

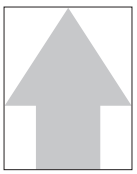

See page 1-4-88

(4) The background is colored.

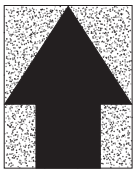

See page 1-4-88

(5) White streaks are printed vertically.

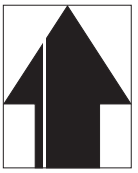

See page 1-4-89

(6) Black streaks are printed vertically.

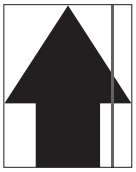

See page 1-4-89

(7) Streaks are printed horizontally.

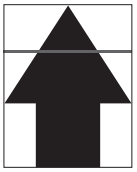

See page 1-4-89

(8) Spots are printed.

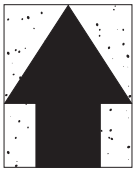

See page 1-4-90

(9) mage is blurred. I

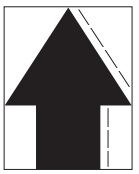

See page 1-4-90

(10) The leading edge of the image is consistently misaligned with the original.

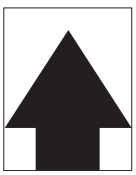

See page 1-4-90

(11) The leading edge of the image is sporadically misaligned with the original.

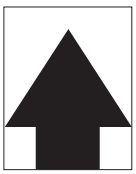

See page 1-4-90

(12) Paper is wrinkled.

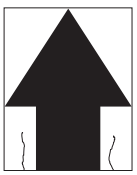

See page

(13) Offset occurs.

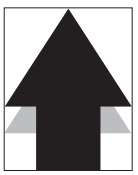

See page 1-4-91

(14) Part of image is missing.

See page 1-4-91

(15) Fusing is loose.

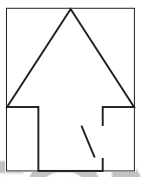

See page 1-4-92

(16) Image is out of focus.

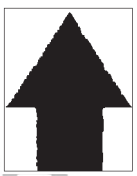

See page 1-4-92

(17) Image center does not align with the original center.

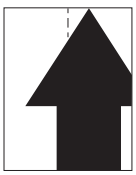

See page 1-4-92

(18) Unevenly repeating horizontal streaks in the printed objects. Colored spots in the printed objects.

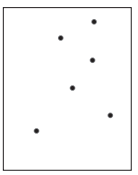

See page 1-4-92

(19)Grainy image.

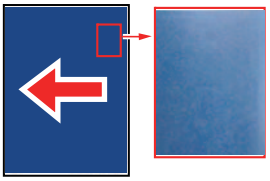

See page 1-4-87

(1) Unevenly repeating horizontal streaks in the printed objects. Colored spots in the printed objects.

Print example	Causes		Check procedures/corrective measures
	Defective transfer bias output.	Defective connector cable or poor contact in the connector.	Reinsert the connector. Also check for continuity within the connector cable. If none, replace the cable. High voltage PWB 2 (YC1) and engine PWB (YC8)
		Defective high voltage PWB 2.	Replace the high voltage PWB 2 (see page 1-5-58).
		Defective engine PWB.	Replace the engine PWB (see page 1-5-52).
	Defective developer bias output.	Defective connector cable or poor contact in the connector.	Reinsert the connector. Also check for continuity within the connector cable. If none, replace the cable. High voltage PWB 1 (YC1, 2) and engine PWB (YC16) High voltage PWB 1 (YC3, 4) and engine PWB (YC17)
		Defective high voltage PWB 1.	Replace the high voltage PWB 1 (see page 1-5-57).
		Defective engine PWB.	Replace the engine PWB (see page 1-5-52).
	No LSU laser is output.	Defective laser scanner unit.	Replace the laser scanner unit (see page 1-5-19).
		Defective engine PWB.	Replace the engine PWB (see page 1-5-52).

(2) No image appears (entirely black).

Print example	Causes		Check procedures/corrective measures
	No main charging.	Defective connector cable or poor contact in the connector.	Reinsert the connector. Also check for continuity within the connector cable. If none, replace the cable. High voltage PWB 1 (YC1, 2) and engine PWB (YC16) High voltage PWB 1 (YC3, 4) and engine PWB (YC17)
		Defective charger roller unit.	Replace the charger roller unit (see page 1-5-34).
		Defective high voltage PWB 1.	Replace the high voltage PWB 1 (see page 1-5-57).
		Defective engine PWB.	Replace the engine PWB (see page 1-5-52).
	The laser is activated simultaneously for all colors.	Defective laser scanner unit.	Replace the laser scanner unit (see page 1-5-19).

(3) Image is too light.

Print example	Causes		Check procedures/corrective measures
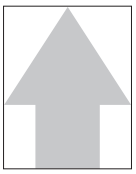	Defective developer bias output.	Defective developer unit.	Run maintenance mode U089 to output four-color bar PG, check the output status of the four colors, and replace the developer unit for any faulty color (see page 1-5-31).
		Defective high voltage PWB 1.	Replace the high voltage PWB 1 (see page 1-5-57).
		Defective engine PWB.	Replace the engine PWB (see page 1-5-52).
	Dirty drum unit.		Perform the drum refresh.
	Defective transfer bias output.	Defective high voltage PWB 2.	Replace the high voltage PWB 2 (see page 1-5-58).
		Defective transfer belt unit.	Replace the transfer belt unit (see page 1-5-37).
		Defective engine PWB.	Replace the engine PWB (see page 1-5-52).
	Defective color calibration.		Perform the tone curve adjustment (Refer to operation guide).
	Insufficient toner.		If the display shows the message requesting toner replenishment, replace the container.
	Insufficient agitation of toner container.		Shake the toner container vertically approximately 10 times.
	Paper damp.		Check the paper storage conditions, replace the paper.

(4) The background is colored.

Print example	Causes		Check procedures/corrective measures
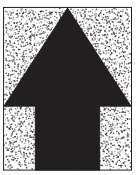	Defective developer bias output.	Defective developer unit.	Run maintenance mode U089 to output four-color bar PG, check the output status of the four colors, and replace the developer unit for any faulty color (see page 1-5-31).
		Defective high voltage PWB 1.	Replace the high voltage PWB 1 (see page 1-5-57).
		Defective engine PWB.	Replace the engine PWB (see page 1-5-52).
	Defective color calibration.		Perform the calibration (Refer to operation guide).
			Perform the tone curve adjustment (Refer to operation guide).

(5) White streaks are printed vertically.

Print example	Causes	Check procedures/corrective measures
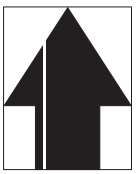	Foreign object in one of the developer units.	Run maintenance mode U089 to output four-color bar PG, check the output status of the four colors, and replace the developer unit for any faulty color (see page 1-5-31).
	Dirty transfer belt.	Clean the transfer belt. Replace the transfer belt unit if it is extremely dirty (see page 1-5-37).
	Dirty transfer roller.	Clean the transfer roller. Replace the transfer roller if it is extremely dirty (see page 1-5-41).
	Dirty LSU slit glasses.	Perform the laser scanner cleaning.

(6) Black streaks are printed vertically.

Print example	Causes	Check procedures/corrective measures
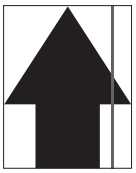	Dirty or flawed drum.	Perform the drum refresh (Refer to operation guide). Flawed drum. Replace the drum unit (see page 1-5-31).
	Deformed or worn cleaning blade in the drum unit.	Replace the drum unit (see page 1-5-31).
	Defective transfer belt cleaning.	Clean the cleaning pre brush. Replace the cleaning pre brush if it is extremely dirty (see page 1-5-39).
	Worn transfer belt.	Replace the transfer belt unit (see page 1-5-37).
	Defective transfer roller.	Replace the transfer roller (see page 1-5-41).

(7) Streaks are printed horizontally.

Print example	Causes	Check procedures/corrective measures
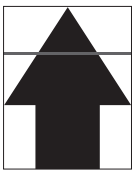	Dirty or flawed drum.	Perform the drum refresh (Refer to operation guide). Flawed drum. Replace the drum unit (see page 1-5-31).
	Dirty developer section.	Clean any part contaminated with toner in the developer section.
	Poor contact of grounding terminal of drum unit.	Check the installation of the drum unit. If it operates incorrectly, replace it (see page 1-5-31).

(8) Spots are printed.

Print example	Causes	Check procedures/corrective measures
	Dirty or flawed drum.	Perform the drum refresh (Refer to operation guide). Flawed drum. Replace the drum unit (see page 1-5-31).
	Deformed or worn cleaning blade in the drum unit.	Replace the drum unit (see page 1-5-31).
	Flawed developer roller.	Replace the developer unit (see page 1-5-31).
	Defective transfer belt cleaning.	Replace the cleaning pre brush (see page 1-5-39).
	Dirty heat roller and press roller.	Clean the heat roller and press roller.

(9) mage is blurred.

Print example	Causes	Check procedures/corrective measures
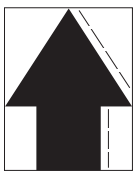	Deformed press roller.	Replace the fuser unit (see page 1-5-43).
	Paper conveying section drive problem.	Check the gears and belts and, if necessary, grease them.

(10) The leading edge of the image is consistently misaligned with the original.

Print example	Causes	Check procedures/corrective measures
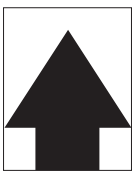	Misadjusted leading edge registration.	Run maintenance mode U034 to readjust the leading edge registration (see page 1-3-32).
	Misadjusted the deflection in the paper.	Run maintenance mode U051 to readjust the deflection in the paper (see page 1-3-37).

(11) The leading edge of the image is sporadically misaligned with the original.

Print example	Causes	Check procedures/corrective measures
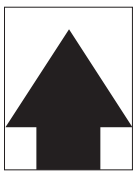	Paper feed clutch, middle motor, registration motor or duplex motor operating incorrectly.	Check the installation of the clutch or motor. If it operates incorrectly, replace it.

(12) Paper is wrinkled.

Print example	Causes	Check procedures/corrective measures
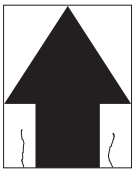	Paper curled.	Check the paper storage conditions.
	Paper damp.	Check the paper storage conditions.
	Faulty width adjusting cursor settings at loading paper.	Check how the cursor is set according to the width.(The gap between the paper and the cursor should be 1mm or less.)
	Unbalanced spring pressures at the left and right registration transporting.	Measure the spring pressures.
	Defective pressure springs.	Replace the fuser unit (see page 1-5-43).

(13) Offset occurs.

Print example	Causes	Check procedures/corrective measures
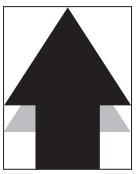	Deformed or worn cleaning blade in the drum unit.	Replace the drum unit (see page 1-5-31).
	Faulty cleaning bias output voltage	Verify the cleaning bias output.If no voltage is indicated, replace the high-voltage PWB 2.
	Defective transfer belt clean-ing.	Replace the transfer belt unit (see page 1-5-37).
	Defective fuser unit.	Replace the fuser unit (see page 1-5-43).
	Wrong types of paper.	Check if the paper meets specifications. Replace paper.

(14) Part of image is missing.

Print example	Causes	Check procedures/corrective measures
	Paper damp.	Check the paper storage conditions.
	Paper creased.	Replace the paper.
	Drum condensation.	Perform the drum refresh (Refer to operation guide).
	Dirty or flawed drum.	Flawed drum. Replace the drum unit (see page 1-5-31).
	Dirty transfer belt.	Clean the transfer belt. Replace the transfer belt unit if it is extremely dirty (see page 1-5-37).
	Dirty transfer roller.	Clean the transfer roller. Replace the transfer roller if it is extremely dirty (see page 1-5-41).

(15) Fusing is loose.

Print example	Causes	Check procedures/corrective measures
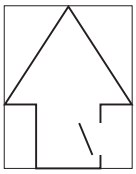	Wrong types of paper.	Check if the paper meets specifications, replace paper.
	Faulty media type settings.	Verify the media type accords with the weight of the paper used.
	Flawed heat roller or press roller.	Replace the fuser unit (see page 1-5-43).
	Defective pressure springs.	
	Defective fuser IH.	

(16) Image is out of focus.

Print example	Causes	Check procedures/corrective measures
	Drum condensation.	Perform the drum refresh (Refer to operation guide).

(17) Image center does not align with the original center.

Print example	Causes	Check procedures/corrective measures
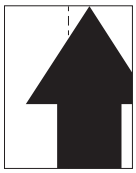	Misadjusted image center line.	Run maintenance item U034 to readjust the center line of image printing (see page 1-3-32).
	Paper is not placed correctly.	Place the paper correctly.

(18) Unevenly repeating horizontal streaks in the printed objects. Colored spots in the printed objects.

Print example	Causes	Check procedures/corrective measures
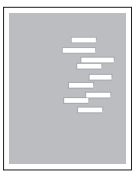 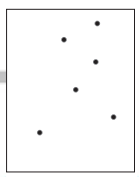	The device is installed in an altitude greater than 1500 m sea level.	If the device is installed in an altitude higher than 1500 m sea level, perform the following. 1. Press maintenance mode U140 and execute “AC Calib” and “Calibration” with the applicable colors (see page 1-3-73). 2. Execute maintenance mode U140 and select “AC Calib”, later “Maginification” in order to lower the setting value. (Initial setting CMY:15, K:12)

(19) Grainy image.

Print example	Causes	Check procedures/corrective measures
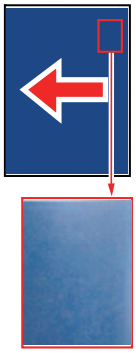	The device is installed in an altitude greater than 1500 m sea level.	If the device is installed in an altitude higher than 1500 m sea level, perform the following. 1. After switching from "0" to "+1" in "Type" ("AC Calib"→"Calibration"), select "Execute" and press the start key (see page 1-3-73). 2. When lighter image density does not improve even if following the above procedure, change setting of "High Altitude " in Mode2.

1-4-4 Electric problems

If the part causing the problem was not supplied, use the unit including the part for replacement.
Troubleshooting to each failure must be in the order of the numbered symptoms.

Problem	Causes	Check procedures/corrective measures
(1) The machine does not operate when the main power switch is turned on.	1. No electricity at the power outlet.	Measure the input voltage.
	2. The power cord is not plugged in properly.	Check the contact between the power plug and the outlet.
	3. Broken power cord.	Check for continuity. If none, replace the cord.
	4. Defective main power switch.	Check for continuity across the contacts. If none, replace the main power switch.
	5. Defective power source PWB.	Replace the power source PWB (see page 1-5-54).
(2) MP lift motor does not operate.	1. Defective connector cable or poor contact in the connector.	Reinsert the connector. Also check for continuity within the connector cable. If none, replace the cable. MP lift motor and relay PWB (YC3) Relay PWB (YC12) and feed PWB 1 (YC17) Feed PWB 1 (YC1) and engine PWB (YC6)
	2. Defective drive transmission system.	Check if the rollers and gears rotate smoothly. If not, grease the bushes and gears. Check for broken gears and replace if any.
	3. Defective motor.	Replace the MP lift motor.
	4. Defective PWB.	Replace the relay PWB, feed PWB 1 or engine PWB and check for correct operation (see page 1-5-52).
(3) Registration motor does not operate.	1. Defective connector cable or poor contact in the connector.	Reinsert the connector. Also check for continuity within the connector cable. If none, replace the cable. Registration motor and feed PWB 1 (YC25) Feed PWB 1 (YC2) and engine PWB (YC5)
	2. Defective drive transmission system.	Check if the rollers and gears rotate smoothly. If not, grease the bushes and gears. Check for broken gears and replace if any.
	3. Defective motor.	Replace the registration motor.
	4. Defective PWB.	Replace the feed PWB 1 or engine PWB and check for correct operation (see page 1-5-52).
(4) Middle motor does not operate .	1. Defective connector cable or poor contact in the connector.	Reinsert the connector. Also check for continuity within the connector cable. If none, replace the cable. Middle motor and feed PWB 2 (YC7) Feed PWB 2 (YC1) and engine PWB (YC4)
	2. Defective drive transmission system.	Check if the rollers and gears rotate smoothly. If not, grease the bushes and gears. Check for broken gears and replace if any.
	3. Defective motor.	Replace the middle motor.
	4. Defective PWB.	Replace the feed PWB 2 or engine PWB and check for correct operation (see page 1-5-52).

Problem	Causes	Check procedures/corrective measures
(5) Eject motor does not operate.	1. Defective connector cable or poor contact in the connector.	Reinsert the connector. Also check for continuity within the connector cable. If none, replace the cable. Eject motor and front PWB (YC5) Front PWB (YC3) and engine PWB (YC7)
	2. Defective drive transmission system.	Check if the rollers and gears rotate smoothly. If not, grease the bushes and gears. Check for broken gears and replace if any.
	3. Defective motor.	Replace the eject motor.
	4. Defective PWB.	Replace the front PWB or engine PWB and check for correct operation (see page 1-5-52).
(6) Duplex motor 1 does not operate.	1. Defective connector cable or poor contact in the connector.	Reinsert the connector. Also check for continuity within the connector cable. If none, replace the cable. Duplex motor 1 and relay PWB (YC16) Relay PWB (YC13) and feed PWB 1 (YC23) Feed PWB 1 (YC2) and engine PWB (YC5)
	2. Defective drive transmission system.	Check if the rollers and gears rotate smoothly. If not, grease the bushes and gears. Check for broken gears and replace if any.
	3. Defective motor.	Replace the duplex motor 1.
	4. Defective PWB.	Replace the relay PWB, feed PWB 1 or engine PWB and check for correct operation (see page 1-5-52).
(7) Duplex motor 2 does not operate.	1. Defective connector cable or poor contact in the connector.	Reinsert the connector. Also check for continuity within the connector cable. If none, replace the cable. Duplex motor 2 and relay PWB (YC7) Relay PWB (YC1) and feed PWB 1 (YC14) Feed PWB 1 (YC1) and engine PWB (YC6)
	2. Defective drive transmission system.	Check if the rollers and gears rotate smoothly. If not, grease the bushes and gears. Check for broken gears and replace if any.
	3. Defective motor.	Replace the duplex motor 2.
	4. Defective PWB.	Replace the relay PWB, feed PWB 1 or engine PWB and check for correct operation (see page 1-5-52).
(8) Toner fan motor 1, 2 does not operate.	1. Defective connector cable or poor contact in the connector.	Reinsert the connector. Also check for continuity within the connector cable. If none, replace the cable. Toner fan motor 1, 2 and engine PWB (YC19)
	2. Defective motor.	Replace the toner fan motor 1 or 2.
	3. Defective PWB.	Replace the engine PWB and check for correct operation (see page 1-5-52).

Problem	Causes	Check procedures/corrective measures
(9) Developer fan motor 1, 2 does not operate.	1. Defective connector cable or poor contact in the connector.	Reinsert the connector. Also check for continuity within the connector cable. If none, replace the cable. Developer fan motor 1, 2 and front PWB (YC6) Front PWB (YC3) and engine PWB (YC7)
	2. Defective motor.	Replace the developer fan motor 1 or 2.
	3. Defective PWB.	Replace the front PWB or engine PWB and check for correct operation (see page 1-5-52).
(10) Exhaust fan motor 1, 2 does not operate.	1. Defective connector cable or poor contact in the connector.	Reinsert the connector. Also check for continuity within the connector cable. If none, replace the cable. Exhaust fan motor 1, 2 and engine PWB (YC19)
	2. Defective motor.	Replace the exhaust fan motor 1 or 2.
	3. Defective PWB.	Replace the engine PWB and check for correct operation (see page 1-5-52).
(11) LSU fan motor does not operate.	1. Defective connector cable or poor contact in the connector.	Reinsert the connector. Also check for continuity within the connector cable. If none, replace the cable. LSU fan motor and front PWB (YC16) Front PWB (YC2) and engine PWB (YC10)
	2. Defective motor.	Replace the LSU fan motor.
	3. Defective PWB.	Replace the front PWB or engine PWB and check for correct operation (see page 1-5-52).
(12) Belt fan motor 1, 2 does not operate.	1. Defective connector cable or poor contact in the connector.	Reinsert the connector. Also check for continuity within the connector cable. If none, replace the cable. Belt fan motor 1, 2 and engine PWB (YC19)
	2. Defective motor.	Replace the belt fan motor 1 or 2.
	3. Defective PWB.	Replace the engine PWB and check for correct operation (see page 1-5-52).
(13) Fuser fan motor 1, 2 does not operate.	1. Defective connector cable or poor contact in the connector.	Reinsert the connector. Also check for continuity within the connector cable. If none, replace the cable. Fuser fan motor 1, 2 and relay PWB (YC16) Relay PWB (YC13) and feed PWB 1 (YC23) Feed PWB 1 (YC2) and engine PWB (YC5)
	2. Defective motor.	Replace the fuser fan motor 1 or 2.
	3. Defective PWB.	Replace the relay PWB, feed PWB 1 or engine PWB and check for correct operation (see page 1-5-52).
(14) Eject fan motor 1, 2 does not operate.	1. Defective connector cable or poor contact in the connector.	Reinsert the connector. Also check for continuity within the connector cable. If none, replace the cable. Eject fan motor 1, 2 and relay PWB (YC11) Relay PWB (YC13) and feed PWB 1 (YC23) Feed PWB 1 (YC2) and engine PWB (YC5)
	2. Defective motor.	Replace the eject fan motor 1 or 2.
	3. Defective PWB.	Replace the relay PWB, feed PWB 1 or engine PWB and check for correct operation (see page 1-5-52).

Problem	Causes	Check procedures/corrective measures
(15) Eject front fan motor does not operate.	1. Defective connector cable or poor contact in the connector.	Reinsert the connector. Also check for continuity within the connector cable. If none, replace the cable. Eject front fan motor and front PWB (YC4) Front PWB (YC3) and engine PWB (YC7)
	2. Defective motor.	Replace the eject front fan motor.
	3. Defective PWB.	Replace the front PWB or engine PWB and check for correct operation (see page 1-5-52).
(16) Eject rear fan motor does not operate.	1. Defective connector cable or poor contact in the connector.	Reinsert the connector. Also check for continuity within the connector cable. If none, replace the cable. Eject rear fan motor and feed PWB 1 (YC19) Feed PWB 1 (YC1) and engine PWB (YC6)
	2. Defective motor.	Replace the eject rear fan motor.
	3. Defective PWB.	Replace the feed PWB 1 or engine PWB and check for correct operation (see page 1-5-52).
(17) Power source fan motor does not operate.	1. Defective connector cable or poor contact in the connector.	Reinsert the connector. Also check for continuity within the connector cable. If none, replace the cable. Power source fan motor and engine PWB (YC22)
	2. Defective motor.	Replace the power source fan motor.
	3. Defective PWB.	Replace the engine PWB and check for correct operation (see page 1-5-52).
(18) Controller fan motor does not operate.	1. Defective connector cable or poor contact in the connector.	Reinsert the connector. Also check for continuity within the connector cable. If none, replace the cable. Controller fan motor and main PWB (YC23)
	2. Defective motor.	Replace the controller fan motor.
	3. Defective PWB.	Replace the main PWB and check for correct operation (see page 1-5-47).
(19) Paper feed clutch 1, 2 does not operate.	1. Defective connector cable or poor contact in the connector.	Reinsert the connector. Also check for continuity within the connector cable. If none, replace the cable. Paper feed clutch 1, 2 and feed PWB 2 (YC4) Feed PWB 2 (YC1) and engine PWB (YC4)
	2. Defective clutch.	Replace the paper feed clutch 1 or 2.
	3. Defective PWB.	Replace the feed PWB 2 or engine PWB and check for correct operation (see page 1-5-52).
(20) Assist clutch 1, 2 does not operate.	1. Defective connector cable or poor contact in the connector.	Reinsert the connector. Also check for continuity within the connector cable. If none, replace the cable. Assist clutch 1 and feed PWB 2 (YC10) Assist clutch 2 and feed PWB 2 (YC12) Feed PWB 2 (YC1) and engine PWB (YC4)
	2. Defective clutch.	Replace the assist clutch 1 or 2.
	3. Defective PWB.	Replace the feed PWB 2 or engine PWB and check for correct operation (see page 1-5-52).

Problem	Causes	Check procedures/corrective measures
(21) Paper conveying clutch does not operate.	1. Defective connector cable or poor contact in the connector.	Reinsert the connector. Also check for continuity within the connector cable. If none, replace the cable. Paper conveying clutch and feed PWB 2 (YC5) Feed PWB 2 (YC1) and engine PWB (YC4)
	2. Defective clutch.	Replace the paper conveying clutch.
	3. Defective PWB.	Replace the feed PWB 2 or engine PWB and check for correct operation (see page 1-5-52).
(22) MP paper feed clutch does not operate.	1. Defective connector cable or poor contact in the connector.	Reinsert the connector. Also check for continuity within the connector cable. If none, replace the cable. MP paper feed clutch and relay PWB (YC3) Relay PWB (YC12) and feed PWB 1 (YC17) Feed PWB 1 (YC1) and engine PWB (YC6)
	2. Defective clutch.	Replace the MP paper feed clutch.
	3. Defective PWB.	Replace the relay PWB, feed PWB 1 or engine PWB and check for correct operation (see page 1-5-52).
(23) Feedshift solenoid does not operate.	1. Defective connector cable or poor contact in the connector.	Reinsert the connector. Also check for continuity within the connector cable. If none, replace the cable. Feedshift and front PWB (YC5) Front PWB (YC3) and engine PWB (YC7)
	2. Defective solenoid.	Replace the feedshift solenoid 1 or 2.
	3. Defective PWB.	Replace the front PWB or engine PWB and check for correct operation (see page 1-5-52).
(24) Cleaning solenoid does not operate.	1. Defective connector cable or poor contact in the connector.	Reinsert the connector. Also check for continuity within the connector cable. If none, replace the cable. Cleaning solenoid and feed PWB 1 (YC10) Feed PWB 1 (YC1) and engine PWB (YC4)
	2. Defective solenoid.	Replace the cleaning solenoid.
	3. Defective PWB.	Replace the feed PWB 1 or engine PWB and check for correct operation (see page 1-5-52).
(25) The message requesting paper to be loaded is shown when paper is present on the cassette.	1. Defective connector cable or poor contact in the connector.	Reinsert the connector. Also check for continuity within the connector cable. If none, replace the cable. Paper sensor 1, 2 and feed PWB 2 (YC8) Feed PWB 2 (YC1) and engine PWB (YC4)
	2. Deformed actuator.	Check visually and replace if necessary.
	3. Defective sensor.	Replace the paper sensor 1 or 2.
	4. Defective PWB.	Replace the feed PWB 2 or engine PWB and check for correct operation (see page 1-5-52).

Problem	Causes	Check procedures/corrective measures
(26) The message requesting paper to be loaded is shown when paper is present on the MP tray.	1. Defective connector cable or poor contact in the connector.	Reinsert the connector. Also check for continuity within the connector cable. If none, replace the cable. MP paper sensor and relay PWB (YC3) Relay PWB (YC12) and feed PWB 1 (YC17) Feed PWB 1 (YC1)and engine PWB (YC6)
	2. Deformed actuator.	Check visually and replace if necessary.
	3. Defective sensor.	Replace the MP paper sensor.
	4. Defective PWB.	Replace the feed PWB 1 or engine PWB and check for correct operation (see page 1-5-52).
(27) The size of paper on the cassette is not displayed correctly.	1. Defective connector cable or poor contact in the connector.	Reinsert the connector. Also check for continuity within the connector cable. If none, replace the cable. Paper length switch 1, 2 and feed PWB 2 (YC3) Paper width switch 1, 2 and feed PWB 2 (YC3) Feed PWB 2 (YC1) and engine PWB (YC4)
	2. Defective switch.	Replace the paper length switch 1, 2 or paper width switch 1, 2.
	3. Defective PWB.	Replace the feed PWB 2 or engine PWB and check for correct operation (see page 1-5-52).
(28) The size of paper on the MP tray is not displayed correctly.	1. Defective connector cable or poor contact in the connector.	Reinsert the connector. Also check for continuity within the connector cable. If none, replace the cable. MP paper length switch and relay PWB (YC2) MP paper width switch and relay PWB (YC2) Relay PWB (YC12) and feed PWB 1 (YC17) Feed PWB 1 (YC1)and engine PWB (YC6)
	2. Defective switch.	Replace the MP paper length switch or MP paper width switch.
	3. Defective PWB.	Replace the relay PWB, feed PWB 1 or engine PWB and check for correct operation (see page 1-5-52).
(29) A paper jam in the paper feed, paper conveying or eject section is indicated when the main power switch is turned on.	1. A piece of paper torn from paper is caught around feed sensor 1, 2, MP feed sensor, middle sensor, paper conveying sensor, registration sensor, loop sensor, fuser eject sensor, duplex sensor 1, 2, eject full sensor or switchback sensor.	Check visually and remove it, if any.
	2. Defective sensor.	Replace the feed sensor 1, 2, MP feed sensor, middle sensor, paper conveying sensor, registration sensor, loop sensor, fuser eject sensor, duplex sensor 1, 2, eject full sensor or switchback sensor.

Problem	Causes	Check procedures/corrective measures
(30) A message indicating cover open is displayed when the front cover is closed.	1. Defective connector cable or poor contact in the connector.	Reinsert the connector. Also check for continuity within the connector cable. If none, replace the cable. Front cover switch and front PWB (YC16) Front PWB (YC2) and engine PWB (YC10)
	2. Defective switch.	Replace the front cover switch.
(31) A message indicating unit open is displayed when the paper conveying unit is closed.	1. Defective connector cable or poor contact in the connector.	Reinsert the connector. Also check for continuity within the connector cable. If none, replace the cable. Paper conveying unit switch and feed PWB 1 (YC15) Feed PWB 1 (YC4) and power source PWB (YC12)
	2. Defective switch.	Replace the paper conveying unit switch.
(32) A message indicating cover open is displayed when the duplex cover is closed.	1. Defective connector cable or poor contact in the connector.	Reinsert the connector. Also check for continuity within the connector cable. If none, replace the cable. Duplex cover switch and relay PWB (YC7) Relay PWB (YC1) and feed PWB 1 (YC14) Feed PWB 1 (YC1)and engine PWB (YC6)
	2. Defective switch.	Replace the duplex cover switch.
(33) A message indicating cover open is displayed when the paper conveying cover is closed.	1. Defective connector cable or poor contact in the connector.	Reinsert the connector. Also check for continuity within the connector cable. If none, replace the cable. Paper conveying cover switch and feed PWB 2 (YC6) Feed PWB 2 (YC1) and power source PWB (YC4)
	2. Defective switch.	Replace the paper conveying cover switch.

1-4-5 Mechanical problems

If the part causing the problem was not supplied, use the unit including the part for replacement.

Problem	Causes/check procedures	Corrective measures
(1) No primary paper feed.	Check if the surfaces of the following rollers are dirty with paper powder. Forwarding pulley Paper feed pulley MP paper feed pulley	Clean with isopropyl alcohol.
	Check if the following rollers is deformed. Forwarding pulley Paper feed pulley MP paper feed pulley	Check visually and replace any deformed (see page 1-5-7, 1-5-14.
	Defective paper feed clutch 1, 2 or MP paper feed clutch installation.	Check visually and remedy if necessary.
(2) No secondary paper feed.	Check if the surfaces of the following rollers are dirty with paper powder. Right registration roller Left registration roller	Clean with isopropyl alcohol.
	Defective registration motor installation. (45 ppm/55 ppm model) Defective registration clutch installation. (30 ppm/35 ppm model)	Check visually and remedy if necessary.
(3) Skewed paper feed.	Paper width guide in a cassette installed incorrectly.	Check the paper width guide visually and remedy or replace if necessary.
(4) Multiple sheets of paper are fed.	Check if the paper is excessively curled.	Change the paper.
	Paper is loaded incorrectly.	Load the paper correctly.
	Check if the separation pulley is worn.	Replace the separation pulley if it is worn (see page 1-5-7, 1-5-14).
(5) Paper jams.	Check if the paper is excessively curled.	Change the paper.
	Check if the contact between the right and left registration rollers is correct.	Check visually and remedy if necessary.
	Check if the heat roller or press roller is extremely dirty or deformed.	Check visually and replace the fuser unit (see page 1-5-43).
(6) Toner drops on the paper conveying path.	Check if the drum unit or developer unit is extremely dirty.	Clean the drum unit or developer unit.
(7) Abnormal noise is heard.	Check if the rollers, pulleys and gears operate smoothly.	Grease the bushes and gears.
	Check if the following clutches are installed correctly. Paper feed clutch 1, 2 Assist clutch 1, 2 Paper conveying clutch MP paper feed clutch	

This page is intentionally left blank.

1-5-1 Precautions for assembly and disassembly

(1) Precautions

Before starting disassembly, after confirming the data lamp is turned off, perform shut-down on the operation panel, turn power off, and unplug the power receptacle(see page 1-2-19).
When the fax kit is installed, be sure to disconnect the modular cable before starting disassembly.
When handling PWBs (printed wiring boards), do not touch parts with bare hands.
The PWBs are susceptible to static charge.
Do not touch any PWB containing ICs with bare hands or any object prone to static charge.
When removing the hook of the connector, be sure to release the hook.
Take care not to get the cables caught.
To reassemble the parts, use the original screws. If the types and the sizes of screws are not known, refer to the PARTS LIST.

(2) Drum

Note the following when handling or storing the drum.
When removing the drum unit, never expose the drum surface to strong direct light.
Keep the drum at an ambient temperature between -20°C/-4°F and 40°C/104°F and at a relative humidity not higher than 85% RH. Avoid abrupt changes in temperature and humidity.
Avoid exposure to any substance which is harmful to or may affect the quality of the drum.
Do not touch the drum surface with any object. Should it be touched by hands or stained with oil, clean it.

(3) Toner

Store the toner container in a cool, dark place.
Avoid direct light and high humidity.

(4) How to tell a genuine Kyocera toner container

As a means of brand protection, the Kyocera toner container utilizes an optical security technology to enable visual validation. A validation viewer is required to accomplish this.

Hold the validation viewer over the left side part of the brand protection seal on the toner container. Through each window of the validation viewer, the left side part of the seal should be seen as follows:

A black-colored band when seen through the left side window (●)

A shiny or gold-colored band when seen through the right side window (☼)

The above will reveal that the toner container is a genuine Kyocera branded toner container, otherwise, it is a counterfeit.

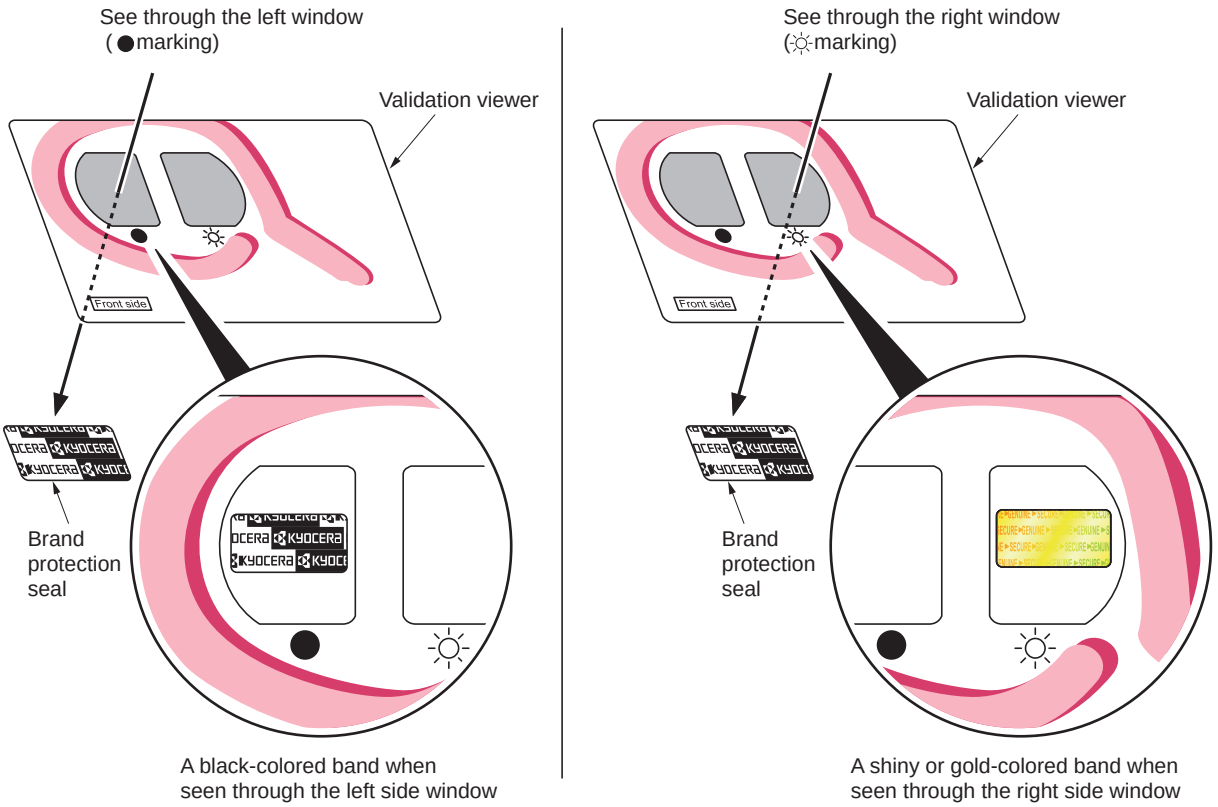

Figure 1-5-1

The brand protection seal has an incision as shown below to prohibit reuse.

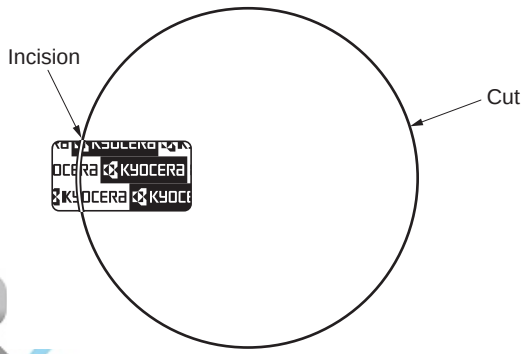

Figure 1-5-2

1-5-2 Paper feed section

(1) Detaching and refitting the primary paper feed unit

Procedure

Detaching remove the primary paper feed unit

1. Pull the cassette 1 and cassette 2 out completely.
2. Pull the paper conveying unit out.
3. Open the right lower cover.
4. Remove the strap and then remove the right lower cover.

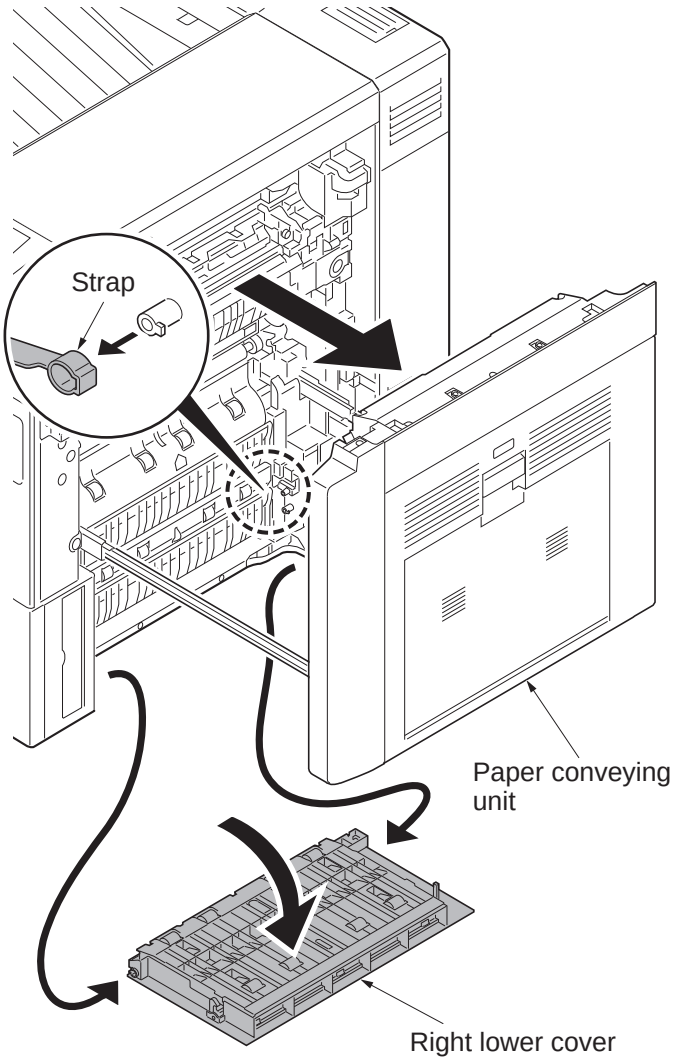

Figure 1-5-3

5. Remove the rear upper cover and the rear lower cover (see page 1-5-59).
6. Remove three screws B and then remove the right lower rear cover.

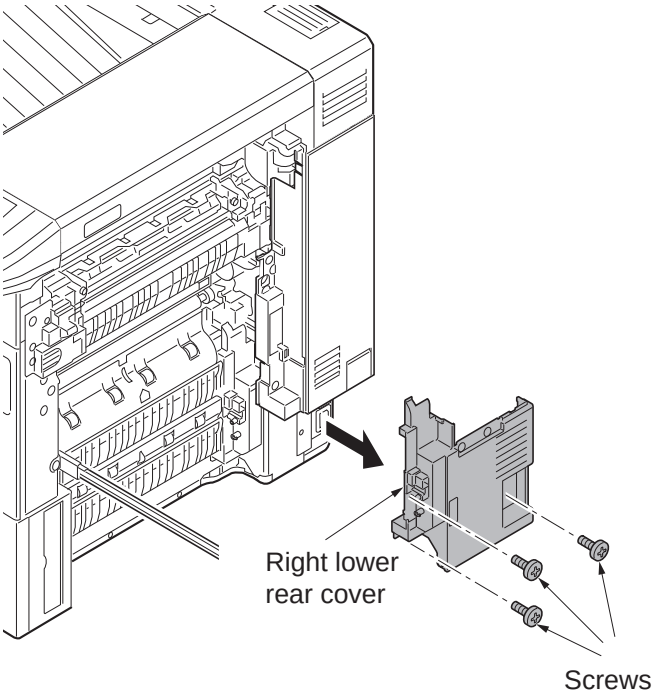

Figure 1-5-4

7. Open the handle cover.
8. Remove three screws.
9. Unhook the hook and then remove the right lower front cover.

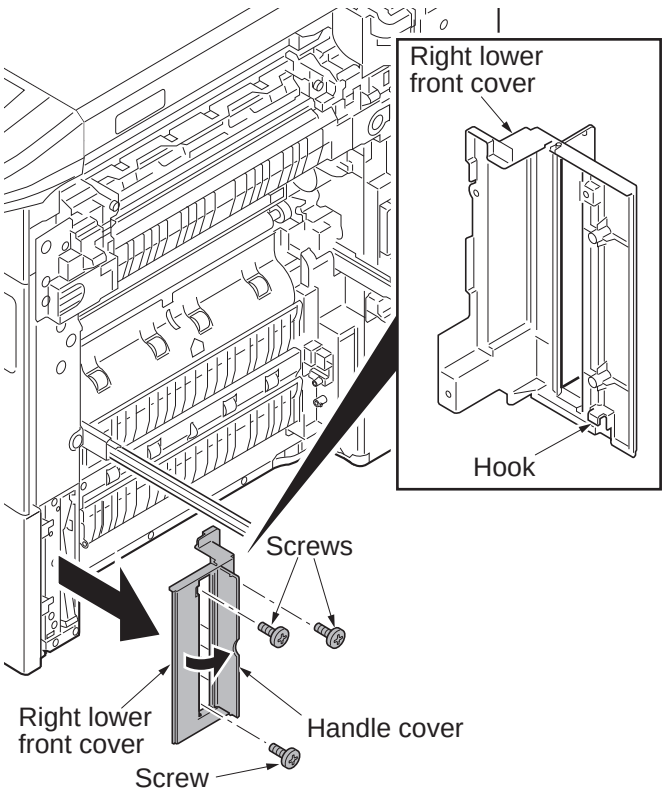

Figure 1-5-5

10. Remove two connectors.

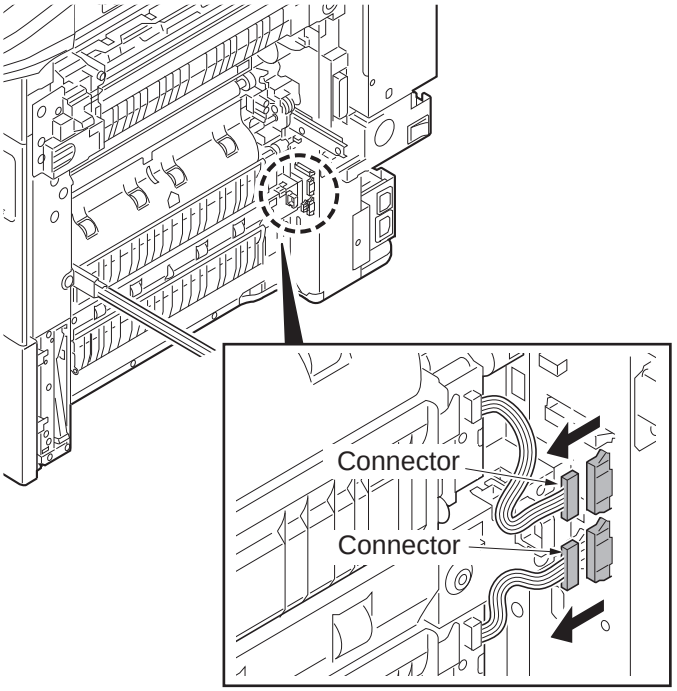

Figure 1-5-6

11. Remove two screws each from primary paper feed unit.
12. Remove the primary paper feed unit.

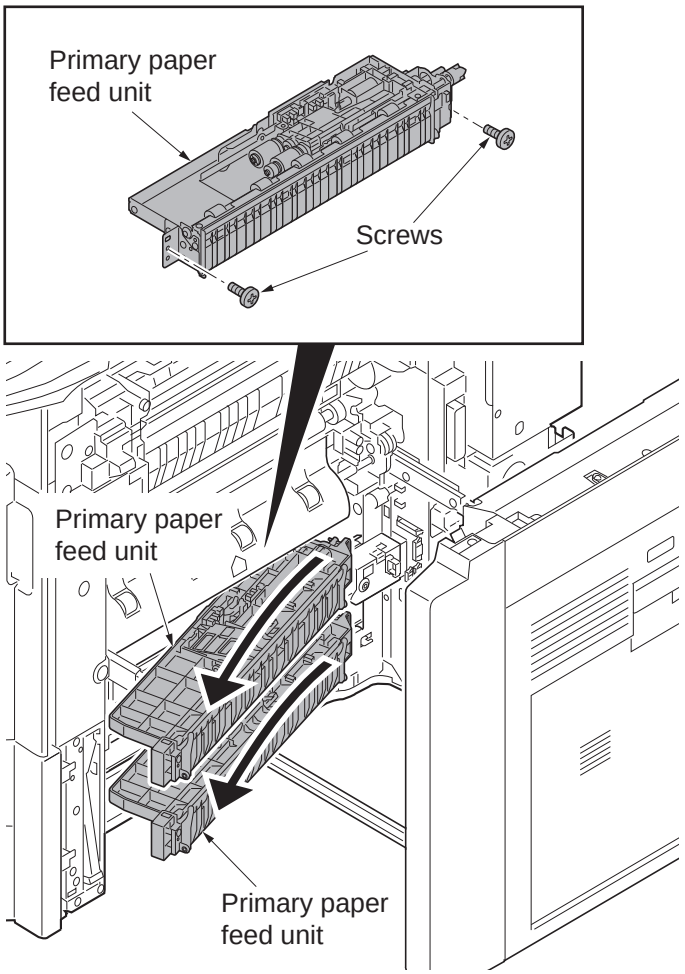

Figure 1-5-7

13. Check or replace the primary paper feed unit and refit all the removed parts.
    *: When refit the primary paper feed unit, you must confirm the inserted pin to the driving coupler.
14. When the primary paper feed unit is replaced, perform maintenance mode U903 (clearing the jam counter) (see page 1-3-134).
    Execute Maintenance Counter - Cassette - Counter Clear of U251 (Maintenance counter limits/clear).(see page 1-3-105)

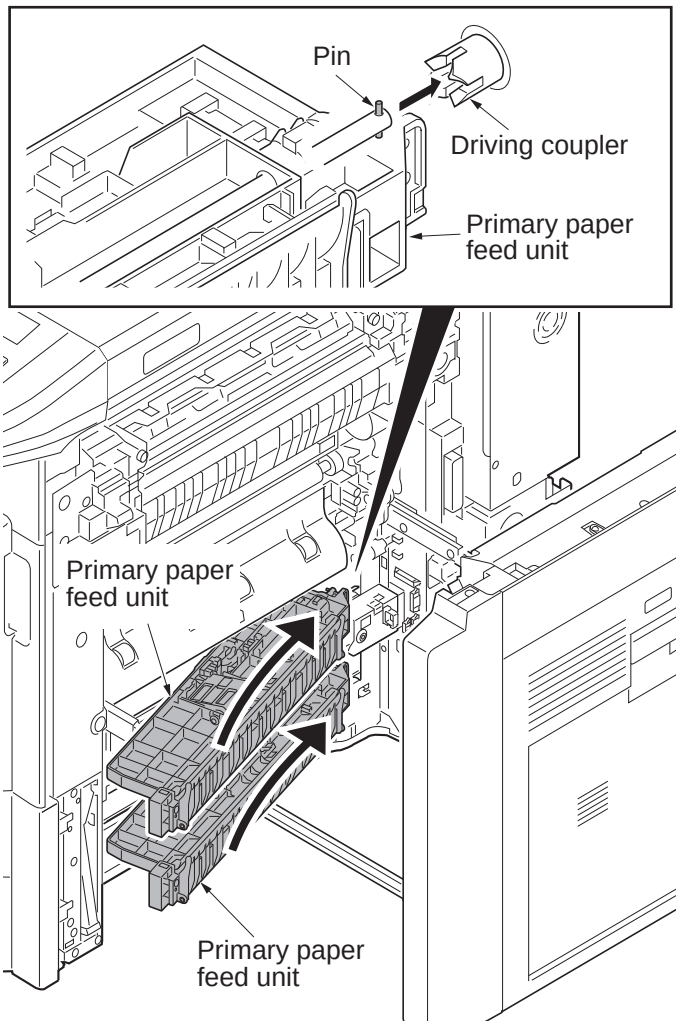

Figure 1-5-8

(2) Detaching and refitting the forwarding pulley, paper feed pulley and separation pulley.

Procedure

1. Pull the cassette 1 completely.
2. Pull up the cassette.

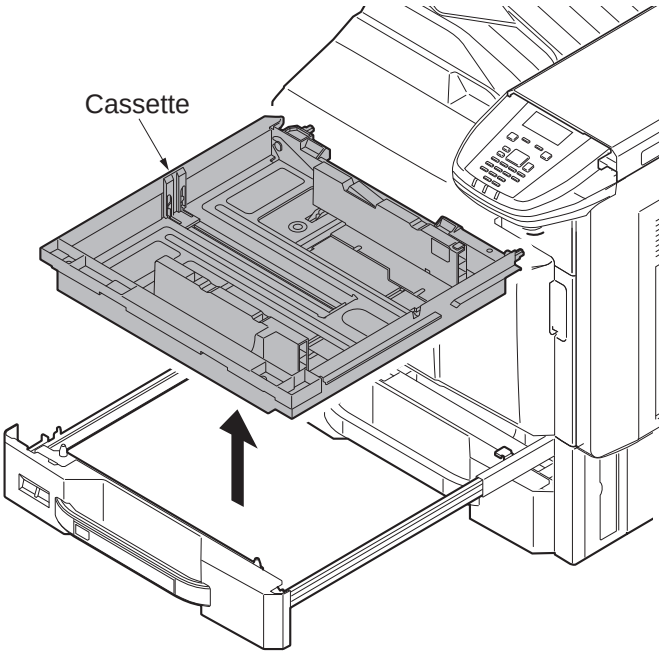

Figure 1-5-9

3. Remove the cassette 2 in the same manner as above.

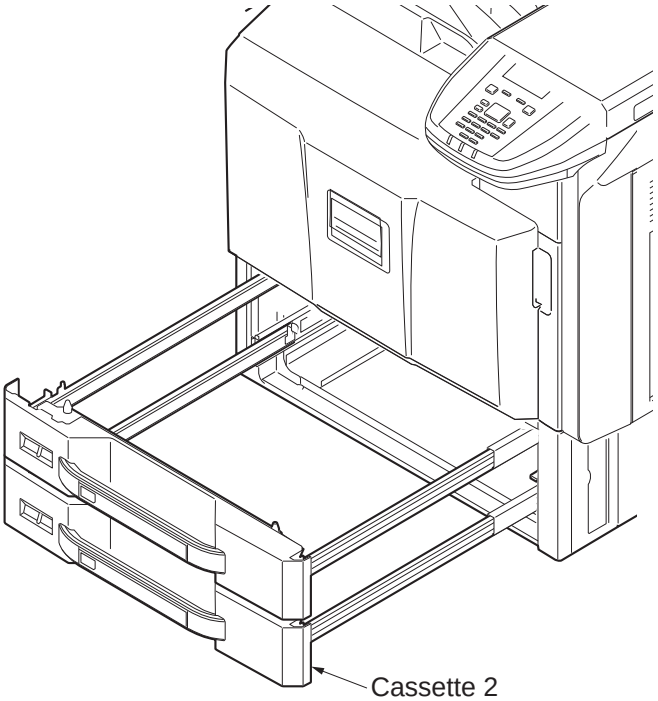

Figure 1-5-10

4. Remove the hook and remove the forward roller from the axle.
5. Remove the hook and remove the feed roller from the axle.

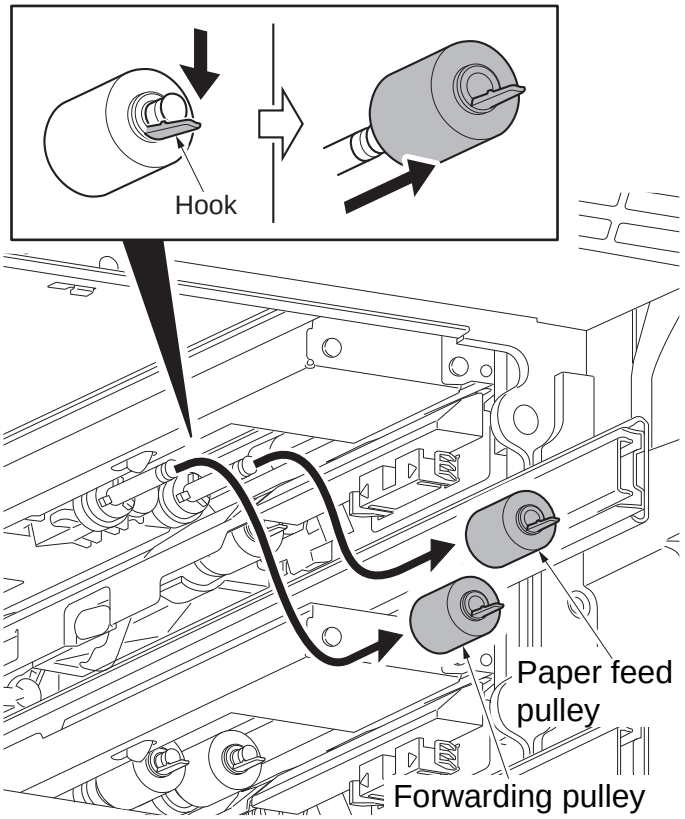

Figure 1-5-11

6. Unhook the two hooks and then remove the cover.

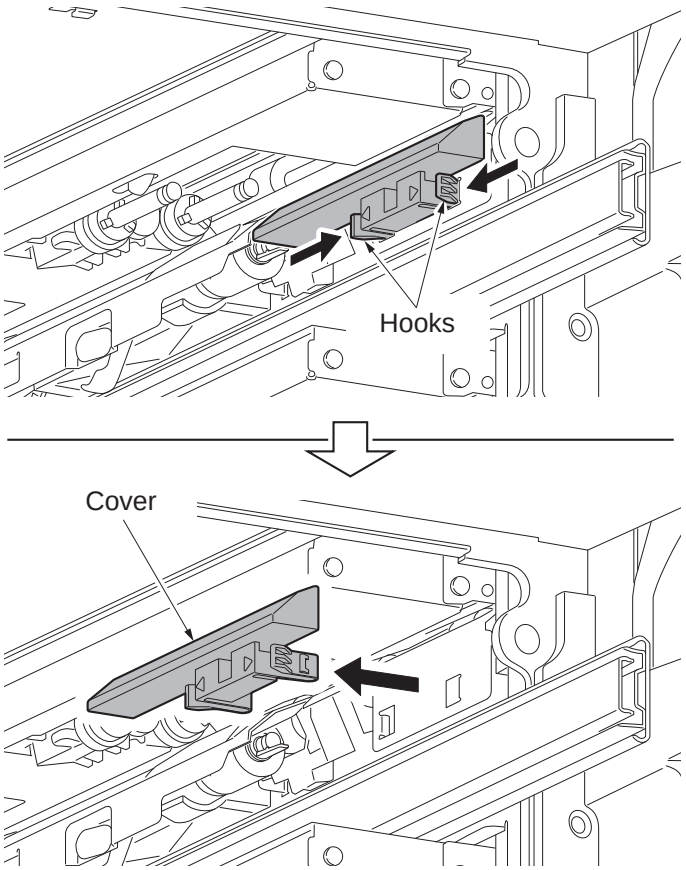

Figure 1-5-12

7. Remove the hook and remove the separation roller from the axle.
*: Confirm that the nipping between the feed roller and separation roller is released.
8. Clean or replace the forwarding pulley, paper feed pulley and separation pulley.
9. Refit the forwarding pulley, paper feed pulley and separation pulley to the primary paper feed unit.
*: Make sure that the collars are properly installed by checking its color.
Forwarding pulley (Collar is white.)
Paper feed pulley (Collar is white.)
Sparation pulley (Collar is black.)
10. When the forwarding pulley, paper feed pulley or separation pulley is replaced, perform maintenance mode U903 (clearing the jam counter) (see page 1-3-134).
Execute Maintenance Counter - Cassette - Counter Clear of U251 (Maintenance counter limits/clear) (see page 1-3-105).

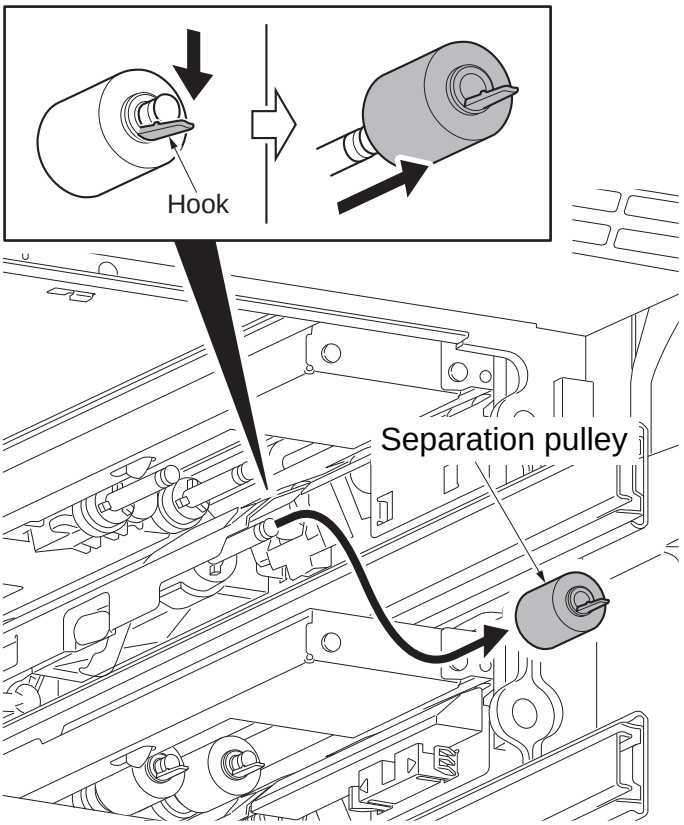

Figure 1-5-13

(3) Detaching and refitting the MP tray paper feed unit

Procedure

1. Pull the paper conveying unit out.
2. Remove screw.
3. Unhook two hooks and then remove the right cover.
4. Remove the right front cover. (see page 1-5-35)
5. Remove two screws and then remove the right middle cover.

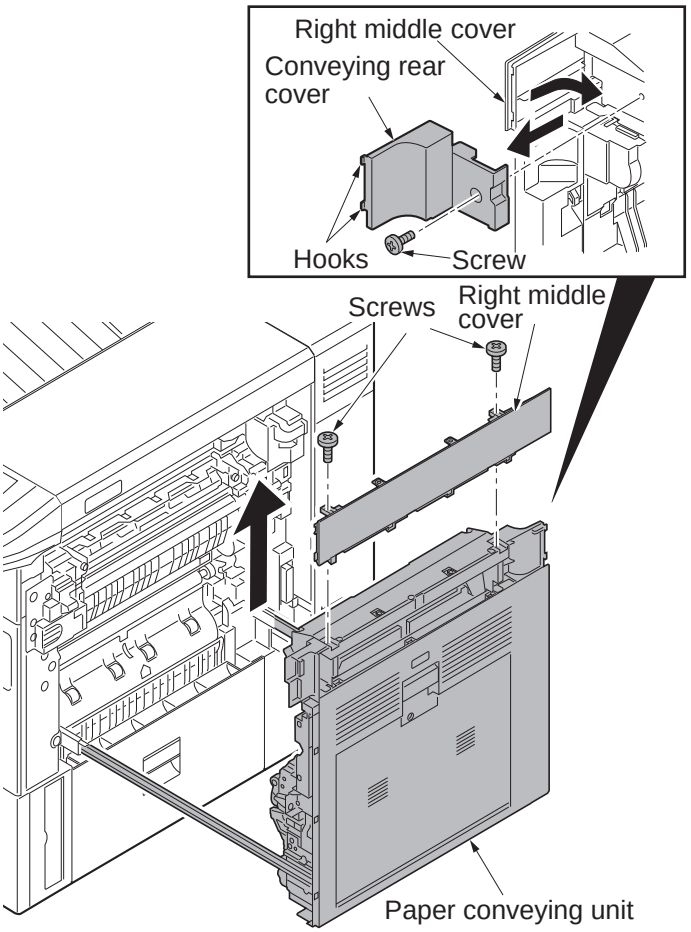

Figure 1-5-14

6. Open the MP tray.
7. Remove four screws.

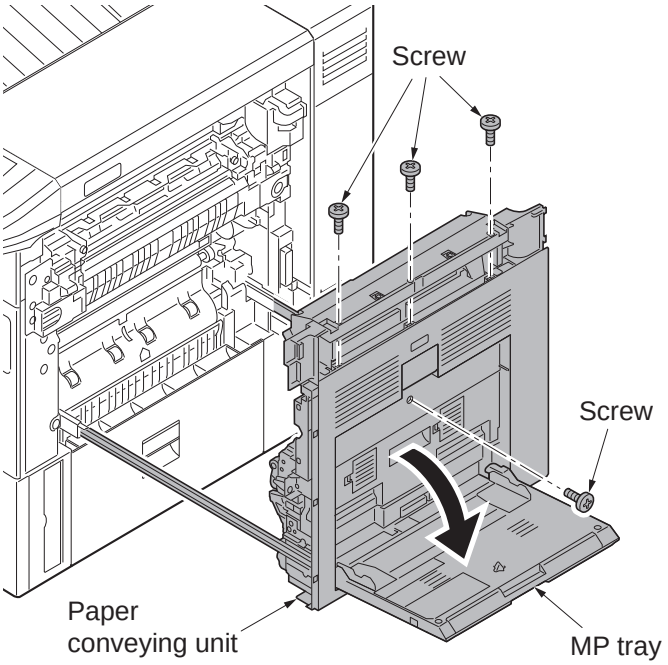

Figure 1-5-15

8. Unhook eight hooks and then remove the right cover and DU cover assembly.

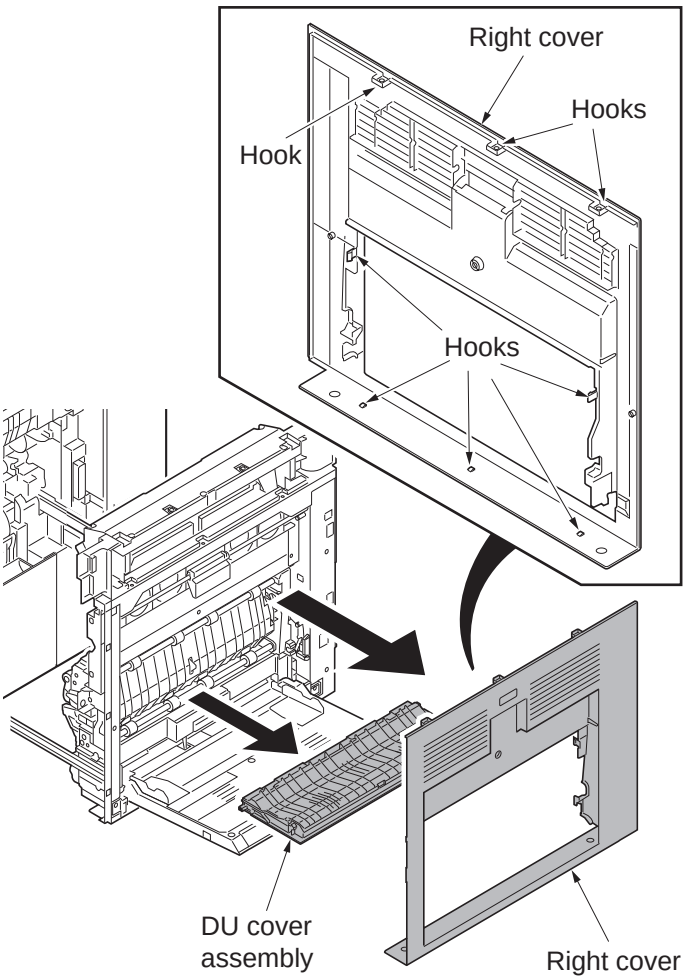

Figure 1-5-16

9. Remove two connectors.
10. Release the wire saddle.
11. Remove the wire saddle.
    *: To refit the wire saddle, be sure to fit in the positioning hole that was previously used.

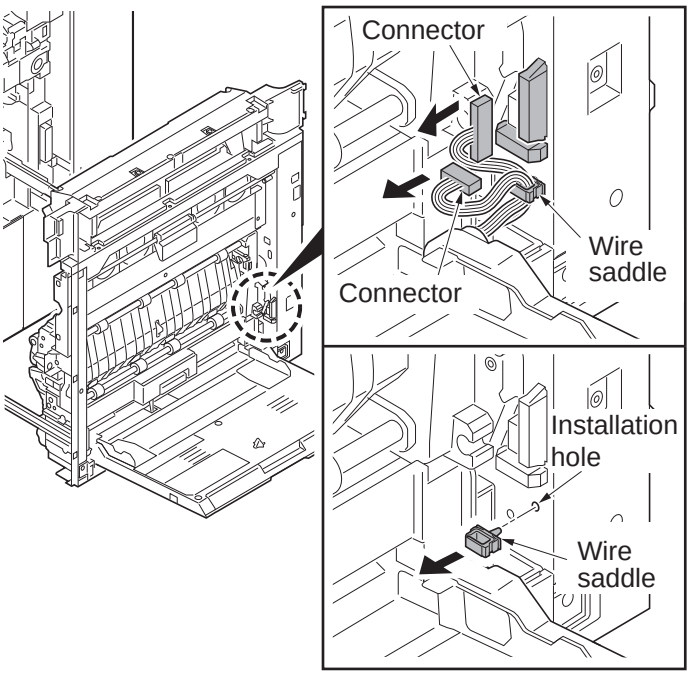

Figure 1-5-17

12. Remove the MP tray.
    *: When refitting the MP tray, insert it in the MP tray paper feed unit side by turning the lift arm.

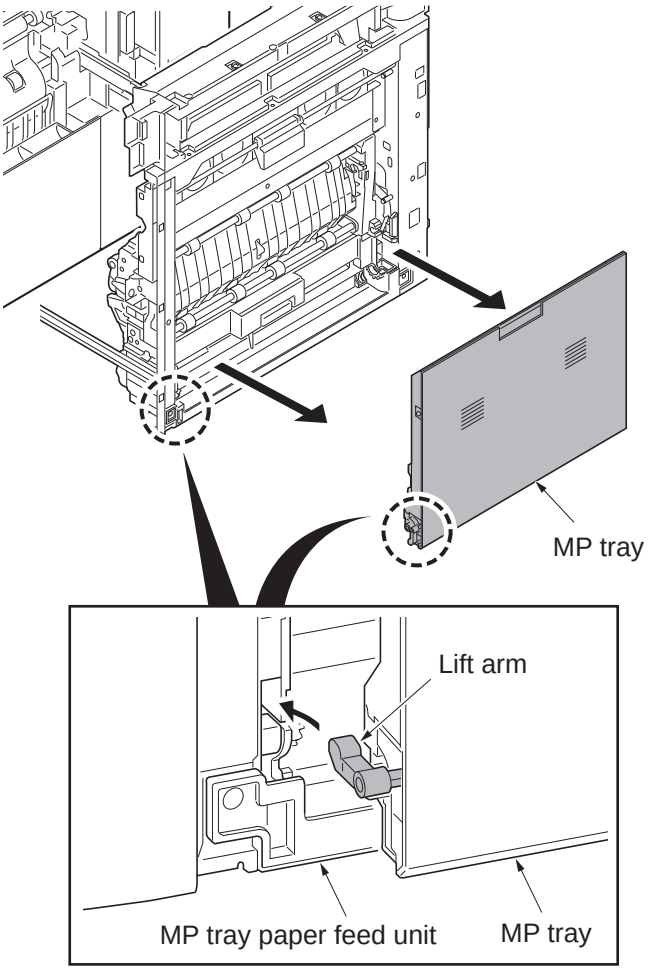

Figure 1-5-18

13. Remove two screws.
14. Remove the MP tray paper feed unit.

*: To reinstall the MP tray feed unit, align it with the opening in the front left bottom frame of the feed unit, install the MP tray feed unit, and raise it so that it is correctly seated.

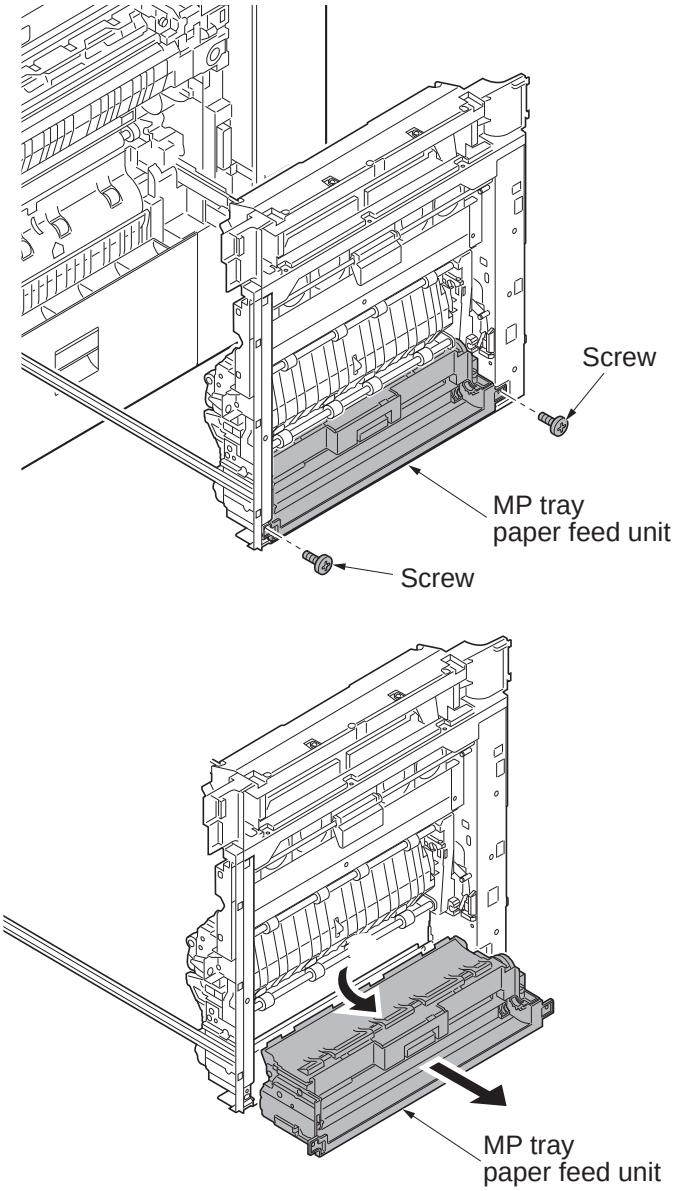

Figure 1-5-19

(4) Detaching and refitting the MP forwarding pulley, MP paper feed pulley and MP separation pulley

Procedure

1. Remove the MP tray paper feed unit (see page 1-5-10).

Detaching forwarding pulley and paper feed pulley

2. Unhook three hooks and then remove the Du lower guide.

*: Remove the DU lower guide easy by bending the top base that the hook is hooking because the hook of the DU lower guide lacks flexibility.

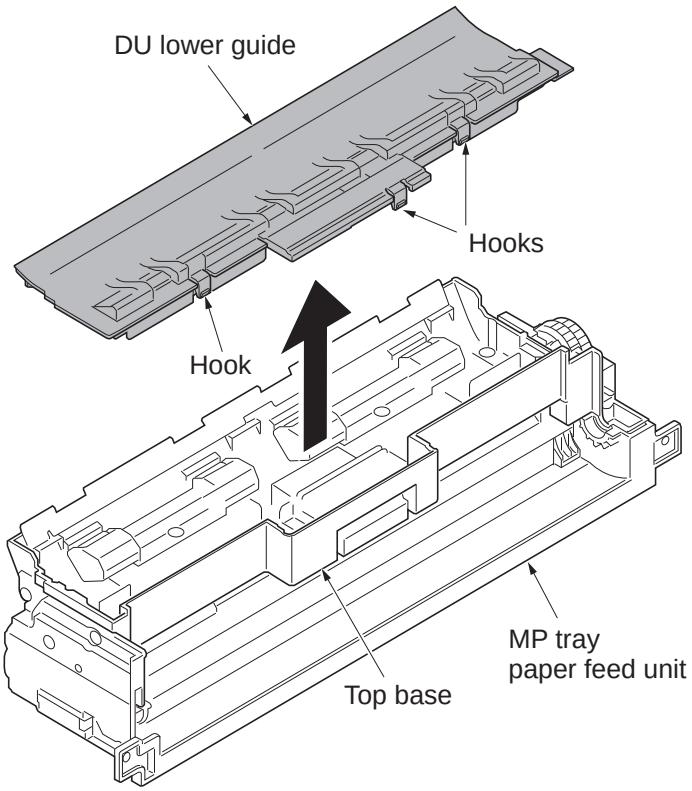

Figure 1-5-20

3. Remove the stop ring A and then slide the driving joint.
4. Slide the bush A.
5. Remove the stop ring B and then remove the bush B.

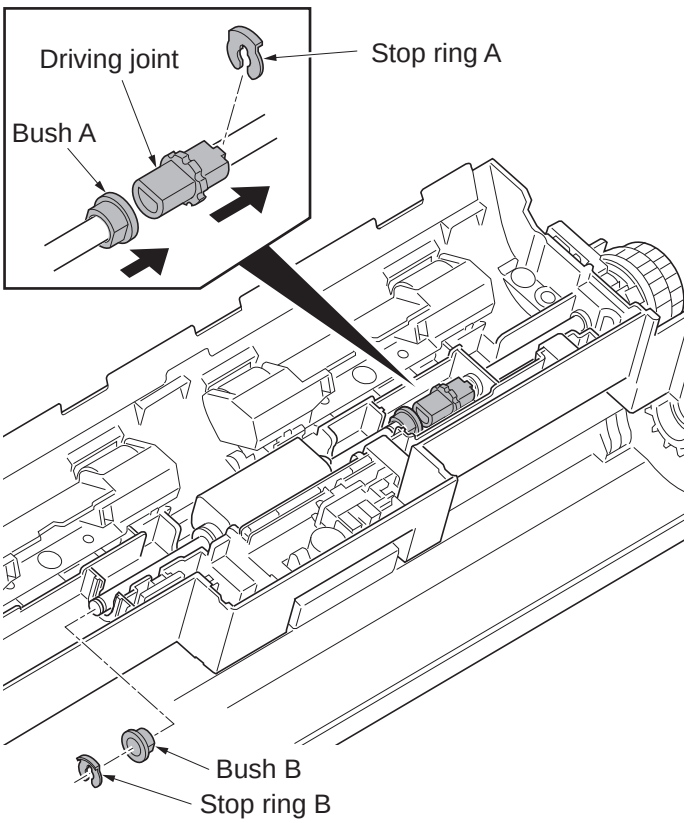

Figure 1-5-21

6. Unhook the hook of the feed holder assembly.
7. Remove the spring and the feed holder assembly from the top base.

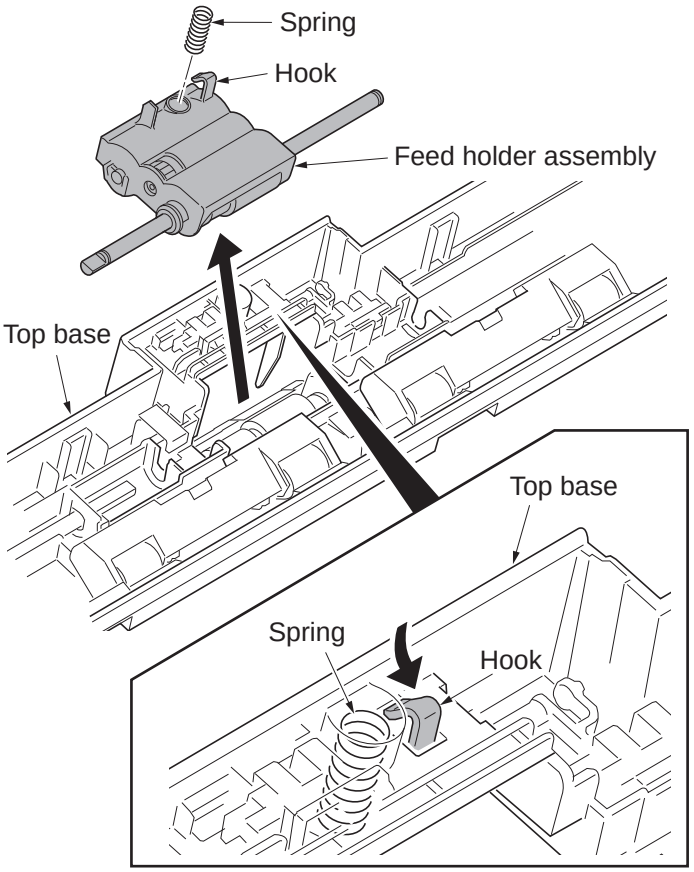

Figure 1-5-22

8. Remove two stop rings.
9. Pull the feed MPF shaft out.
10. Remove two bushes, one way gear Z30R and MP paper feed pulley.

*: To refit the one-way gear Z30R, mount the gear in the correct direction as shown.

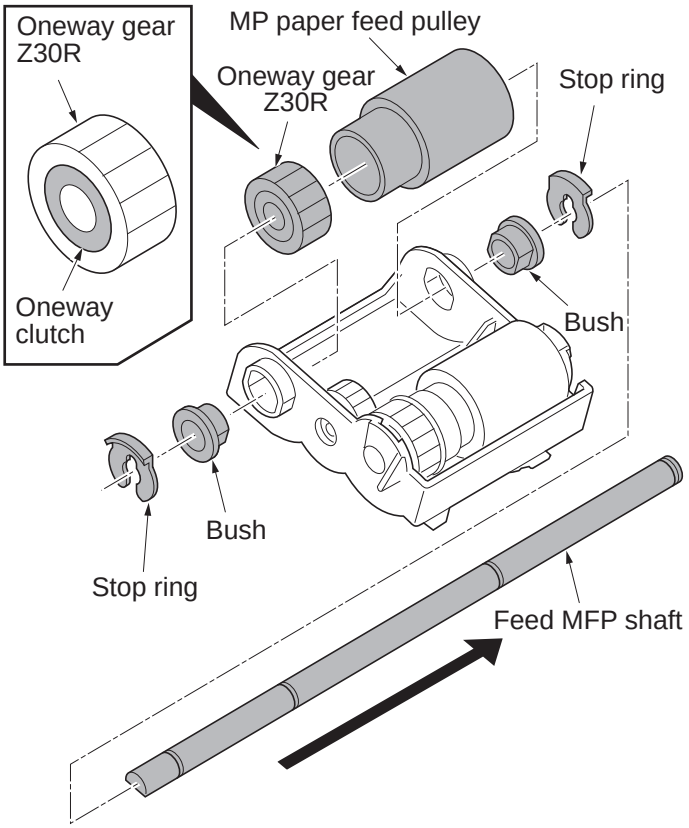

Figure 1-5-23

11. Remove the pickup MPF shaft from the axis holes of feed MPF holder.
12. Pull the pickup gear Z30R and MP forwarding pulley out from the pickup MFP shaft.

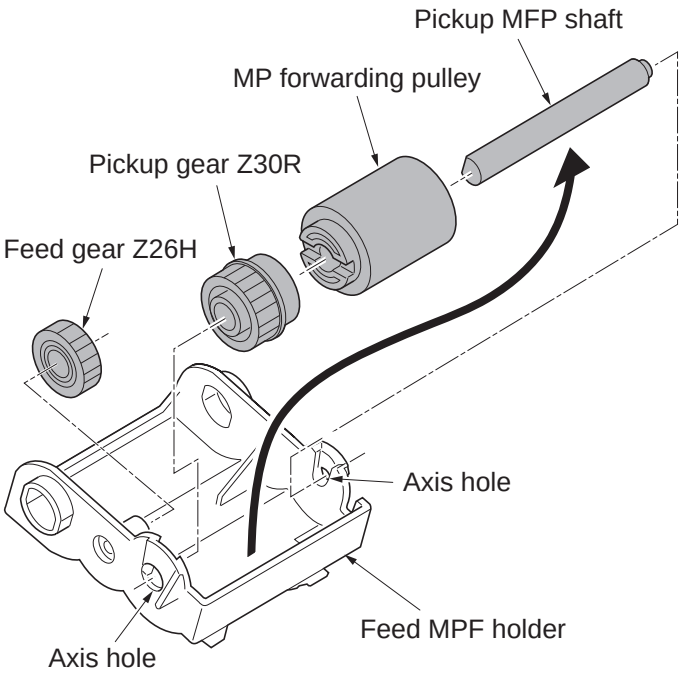

Figure 1-5-24

Detaching the MP separation pulley

13. Unhook two hooks and then remove the middle guide.

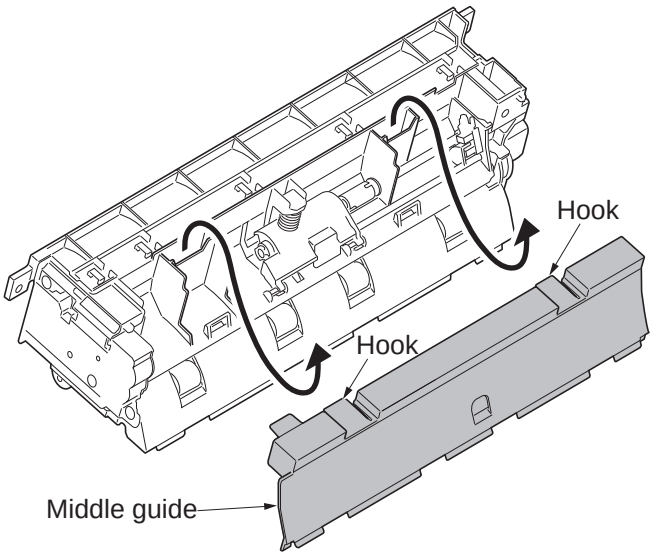

Figure 1-5-25

14. Remove the spring.
15. Release the uniting of joint by sliding the retard holder assembly.

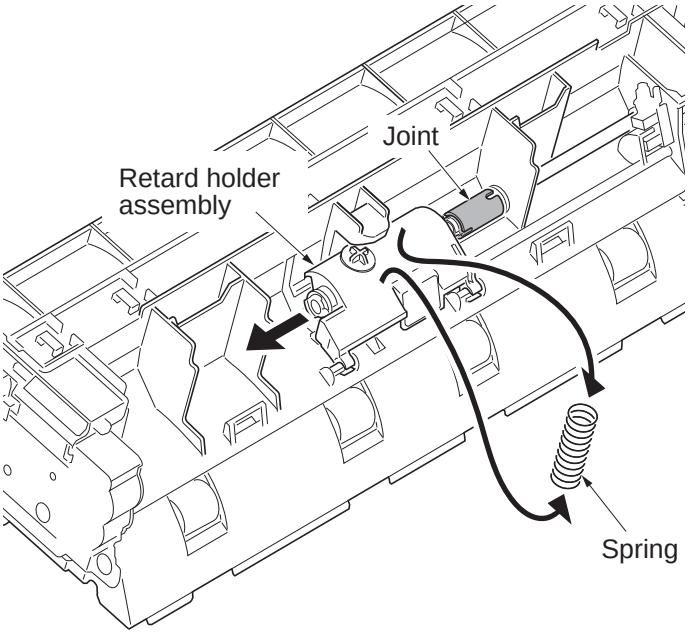

Figure 1-5-26

16. Remove the retard holder assembly by turning it as shown.

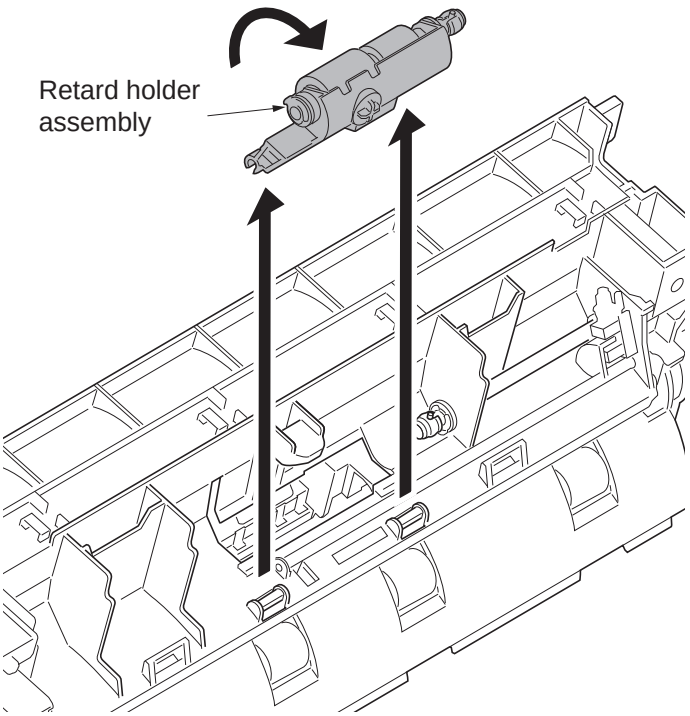

Figure 1-5-27

17. Remove two stop rings.
18. Remove two bushes.
19. Pull the retard MPF shaft out and then remove the torque limiter and the MP separation pulley.
20. Clean or replace the MP forwarding pulley, MP paper feed pulley and MP separation pulley.
21. Refit the MP forwarding pulley, MP paper feed pulley and MP separation pulley to the MP tray paper feed unit.
22. When the MP forwarding pulley, MP paper feed pulley or MP separation pulley is replaced, perform maintenance mode U903 (clearing the jam counter) (see page 1-3-134).

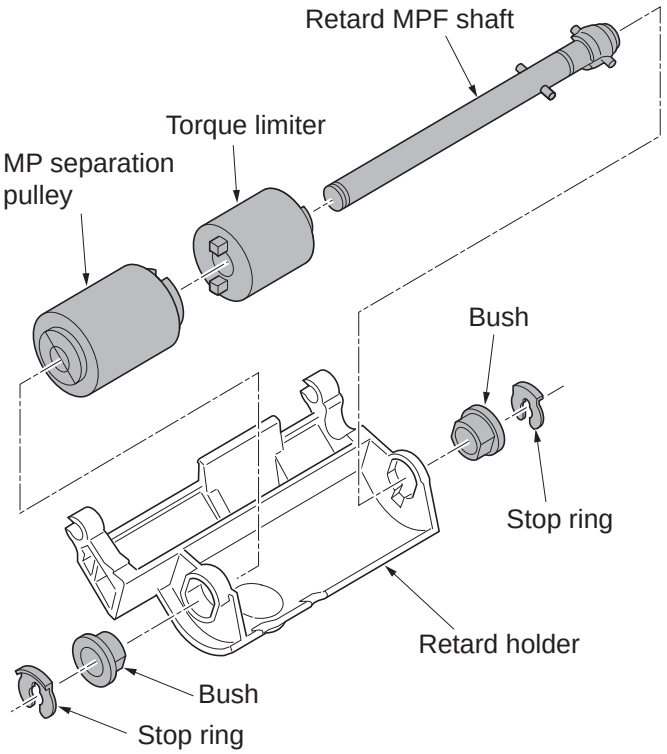

Figure 1-5-28

1-5-3 Optical section

(1) Detaching and refitting the LSU

Procedure

1. Remove the paper conveying unit (see page 1-5-35).
2. Remove the left upper cover (see page 1-5-47).
3. Remove the toner filter.
4. Remove the left filter cover and the left filter.
5. Remove two transfer belt filters.
6. Remove the left cover lid.
7. Open the front cover and remove screw A.
8. Remove four screws B and then remove the left cover.

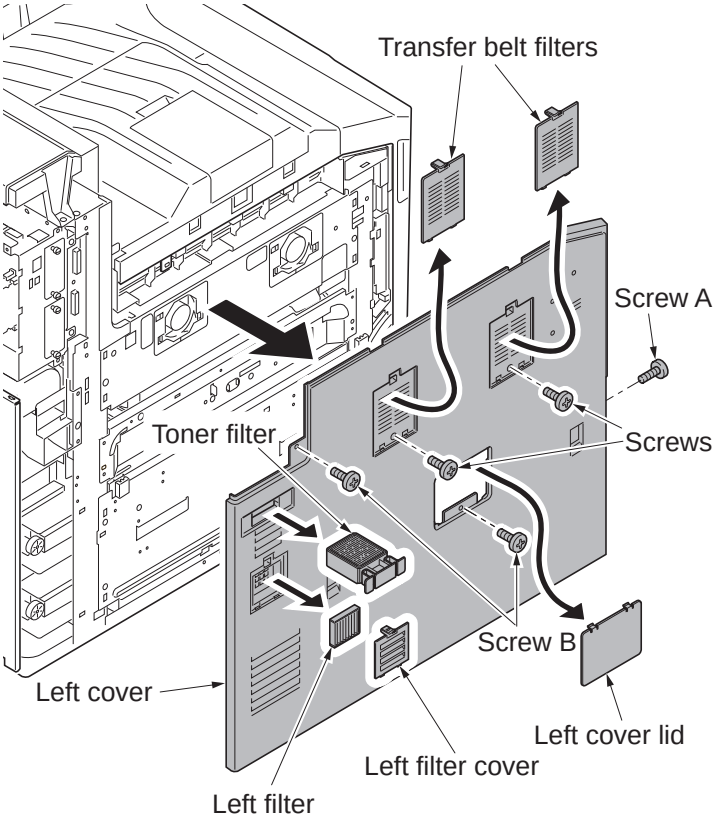

Figure 1-5-29

9. Remove four screws and then remove the LSU retainer.

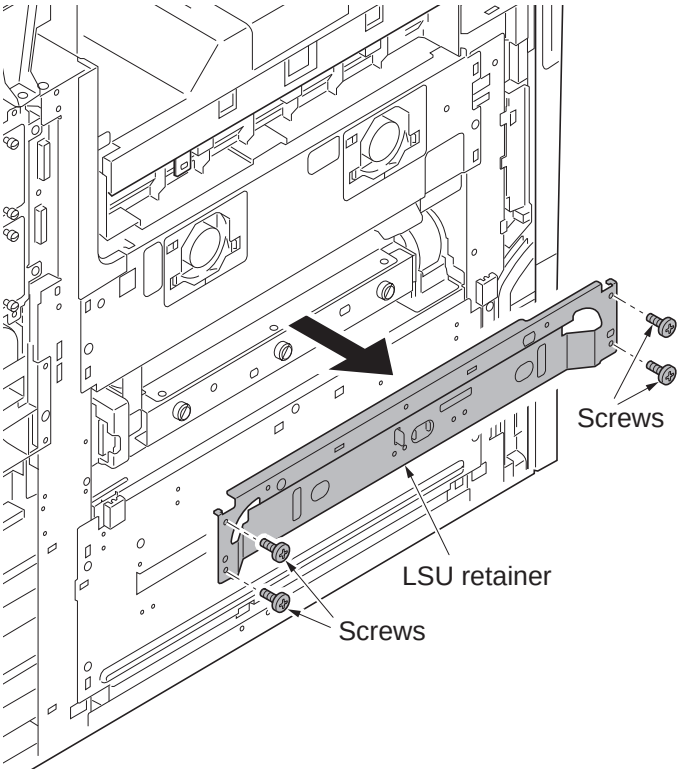

Figure 1-5-30

10. Remove two screws and then remove the middle feed plate and middle feed plate B.
11. Remove two LSU retainer pins and two springs.

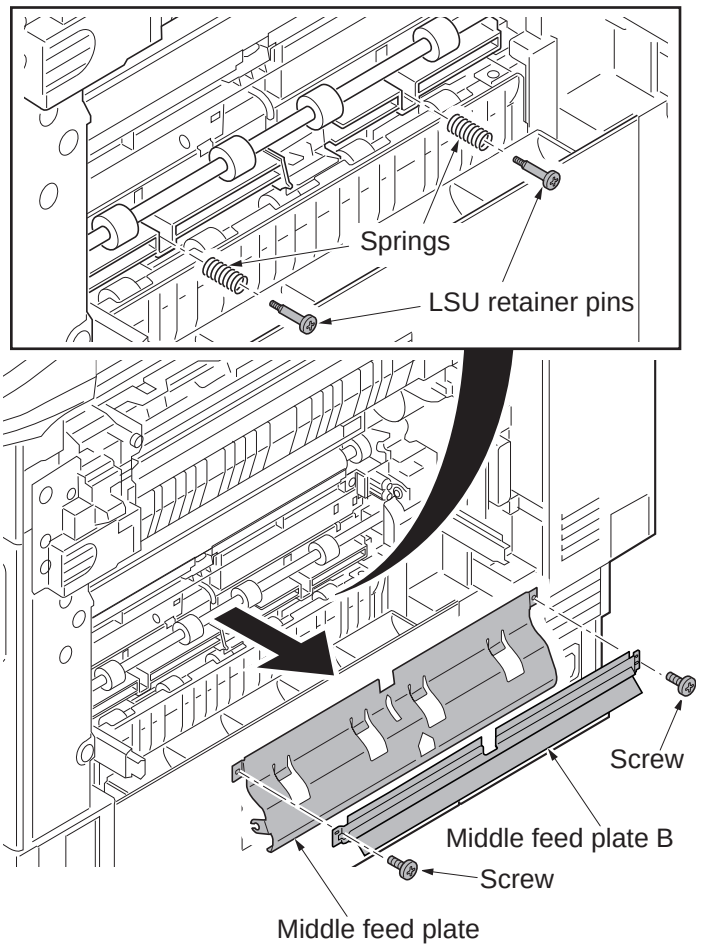

Figure 1-5-31

12. Pull the LSU out a little.
13. Remove the following connector from the LSU.
    30 ppm model/35 ppm model:
    FFC connector with a lock: 1pcs
    Connector: 2pcs

    45 ppm model/55 ppm model:
    FFC connector with a lock: 2pcs
    Connector: 2pcs

    *: When remove the FFC from the FFC connector with a lock, removing it after release the lock by lifting the lock lever up.

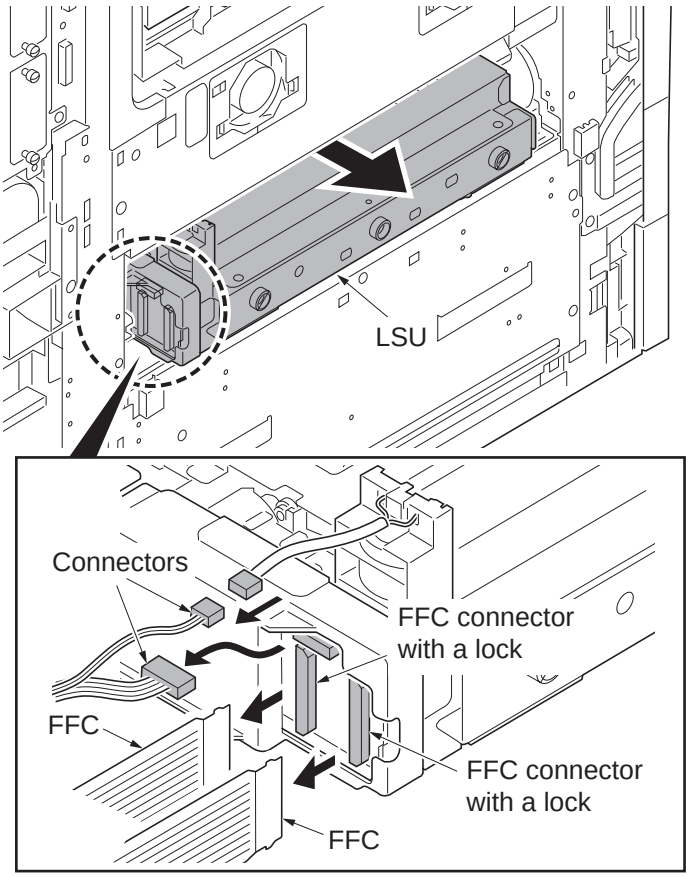

Figure 1-5-32

14. Pull the LSU out from the body of the machine.

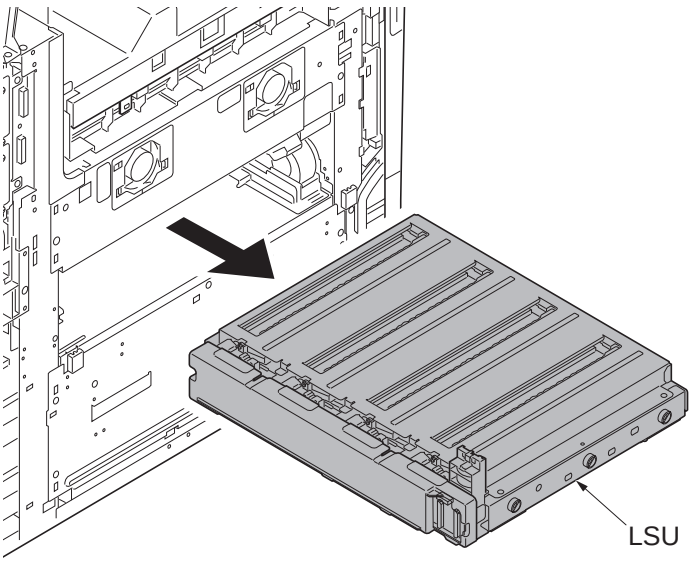

Figure 1-5-33

15. Remove seven screws and then remove the LSU mount lid.

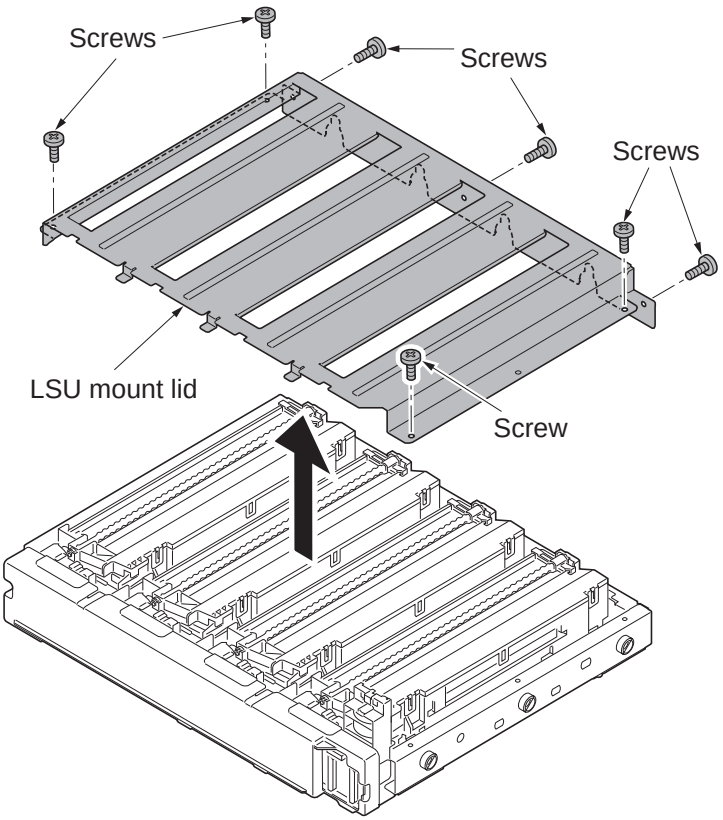

Figure 1-5-34

16. Remove the screw.
17. Unhook four hooks and then remove the LSU relay PWB cover.

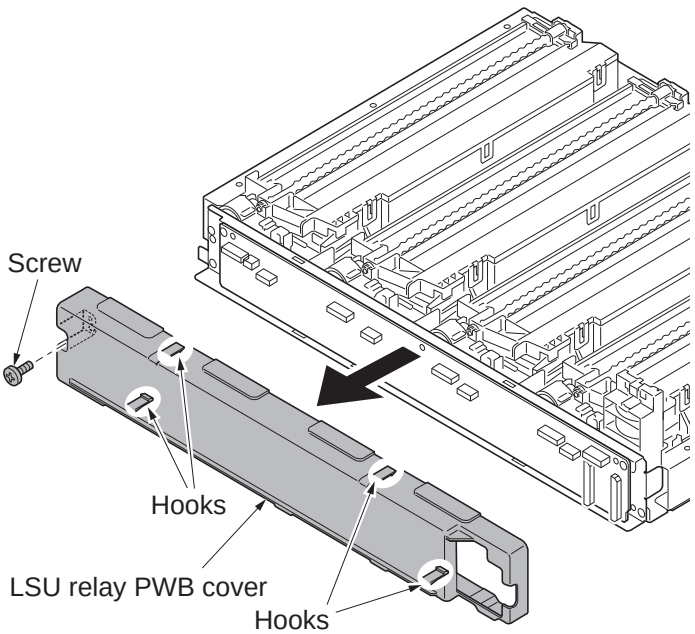

Figure 1-5-35

18. Remove all the connectors and the FFC connectors with a lock.
    *: When remove the FFC from the FFC connector with a lock, removing it after release the lock by lifting the lock lever up.
19. Remove the electric wire from the electric wire support portion.
20. Remove the FFC from the FFC support potion.

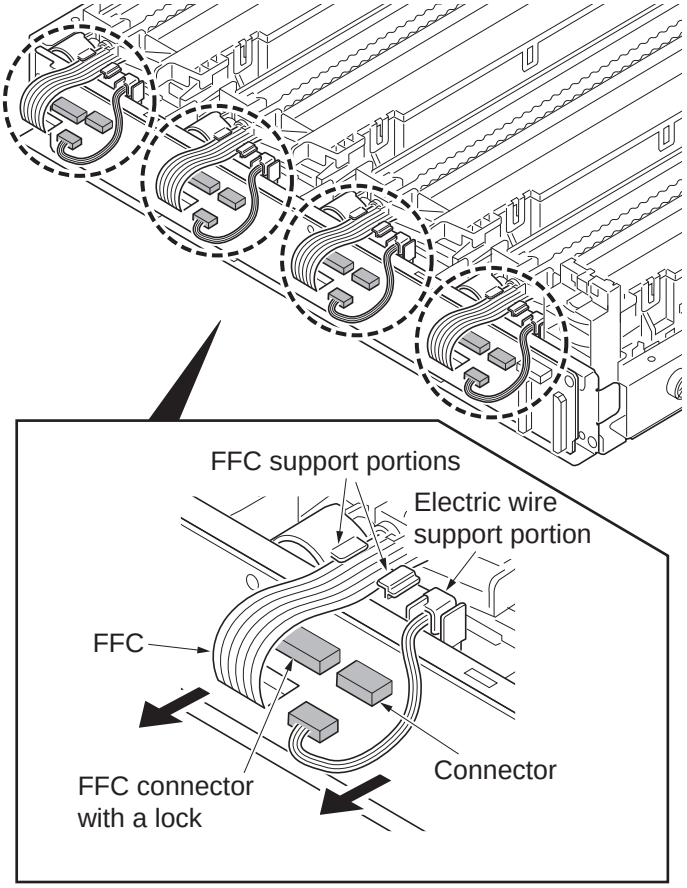

Figure 1-5-36

21. Remove the LSU retainer pins and the springs.
22. Remove two screws each and then remove the LSU front holder.

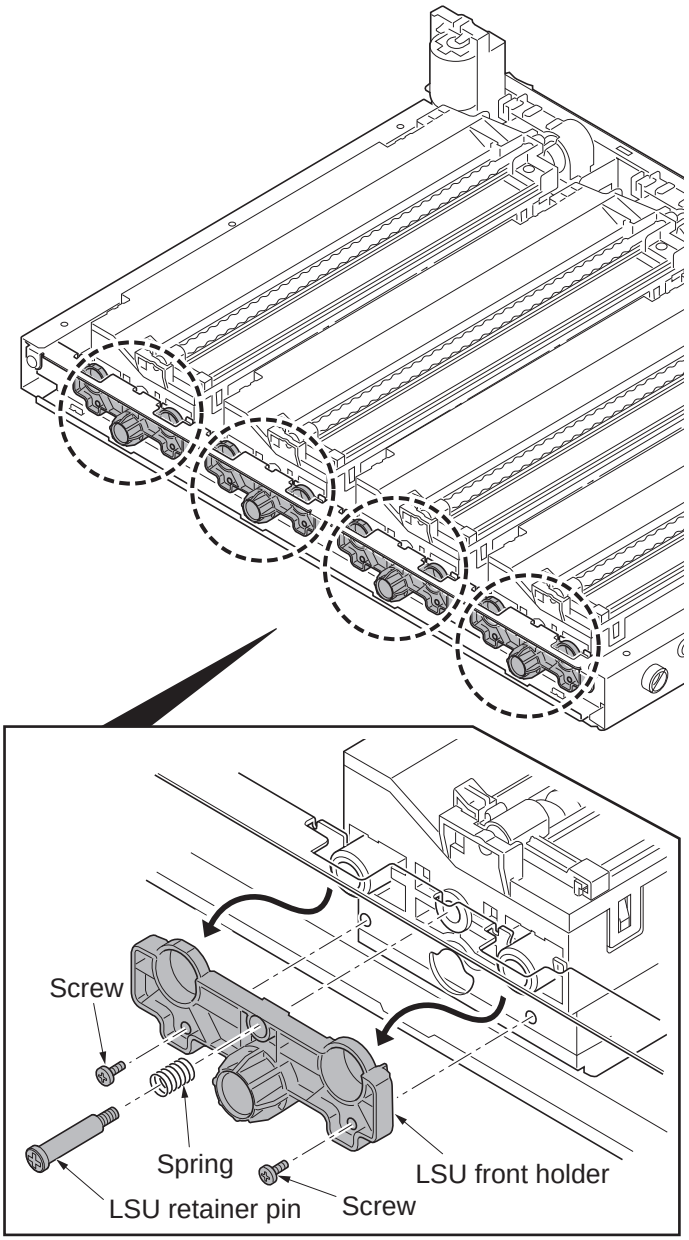

Figure 1-5-37

23. Wrap an antistatic discharging belt around your wrist to prevent damage to the LSU.
    *: Do not touch terminals and FFC contacts in the APC PWB of the LSU.
24. Remove four LSUs, following the precautions and instructions below.
    (1) Lift the far end of the LSU.
    (2) Unhook the protrusions at the front of the LSU.
    *: Be sure to handle the front and rear handholds when handling the LSU.
    *: Do not get the LSU in direct contact with the holding frame subsequently applying shocks to the polygon motor inside.

25. Check or replace the LSU and refit all the removed parts.
    *: When reconnecting FFCs, be sure to insert the FFC all the way in with the FFC connector.This is to avoid a lengthy servicing due to a possible error which could cause re-disassembly and -assembly.

26. When replacing the new LSU, proceed as follows:
    1)Performs maintenance mode U469 (Color registration correction) (see page 1-3-126).
    2)Performs maintenance mode U119 (Setting the drum) (see page 1-3-65).
    3)Performs maintenance mode U464 (Calibration) (see page 1-3-118).

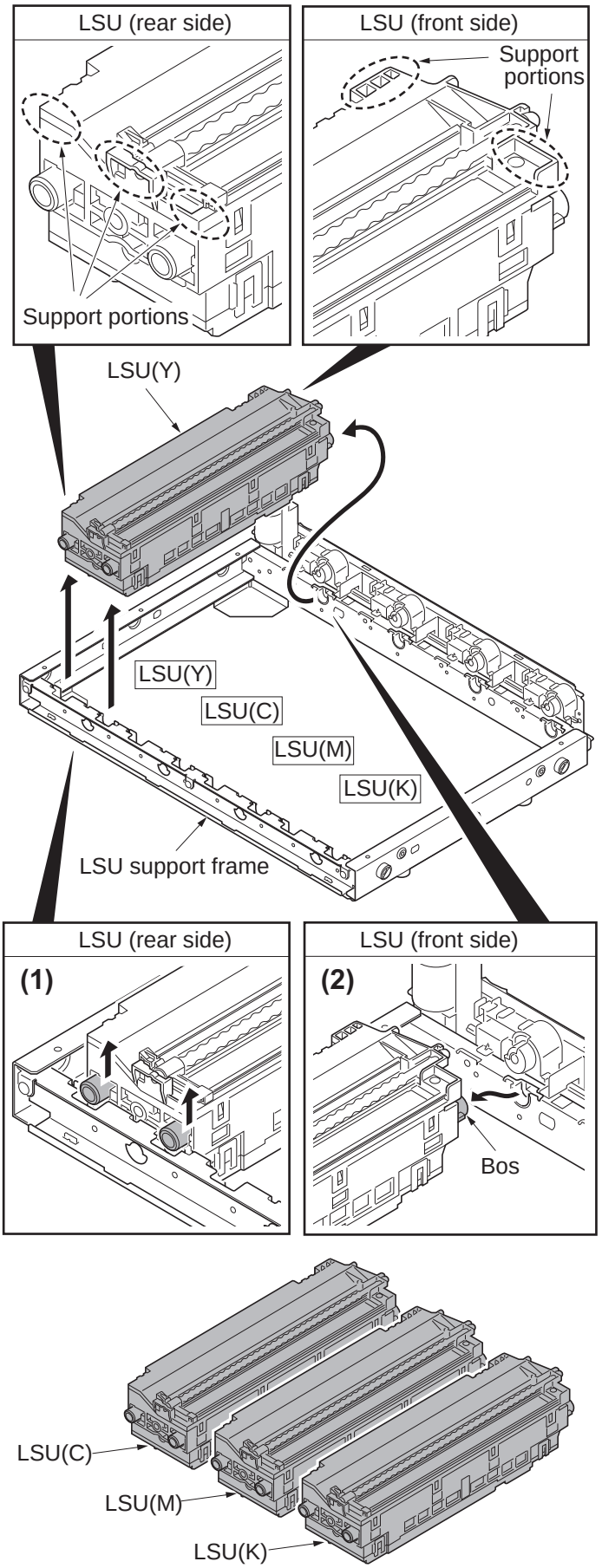

Figure 1-5-38

(2) Color registration adjustment

Follow the procedure below to replace the laser scanner unit.

Procedure

1. Press the menu key.
2. Performs maintenance mode U464 (Calibration) (see page 1-3-118).
3. Select [Adjustment/Maintenance], [Color Registration], [Detail], [Chart printing] and then press the OK key. In the confirmation screen, press [Yes] ([Left select key]). A chart is printed.
4. Select [Adjustment/Maintenance], [Color Registration], [Detail], [Magenta registration] and then press the OK key.
5. Read figures at H-1 to 7 and V-3 of the reference chart and enter the figure marked at the scale which the BK fine line is in line with the magenta fine lines, using the up/down keys.
6. Press OK key. A preset value is saved.
7. Select [Cyan registration] or [Yellow registration] and then repeat steps 3 through 5.

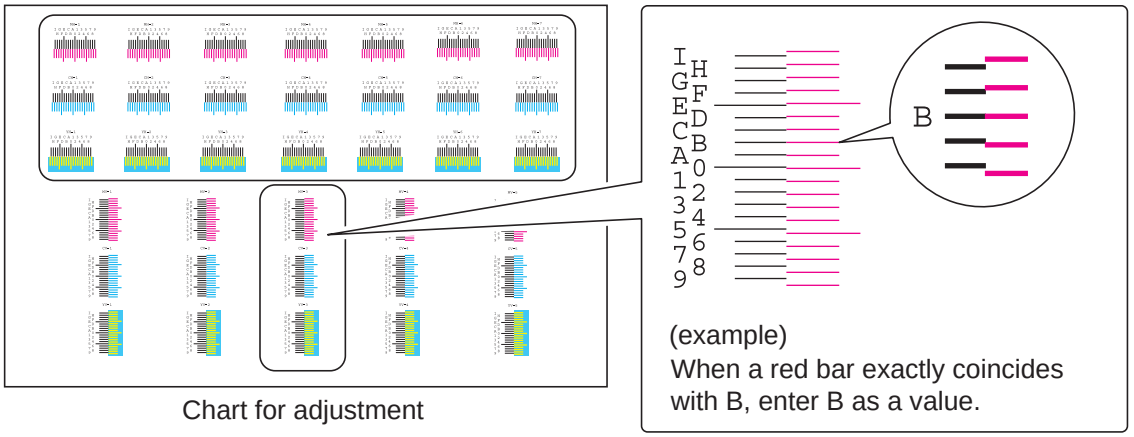

Figure 1-5-39

8. Output the chart by Procedure 2 again.
9. Verify that each scale is within the range of 1to A. If they are within the range, proceed to step 9.
   If scales are out of range, repeat steps 3 through 6.

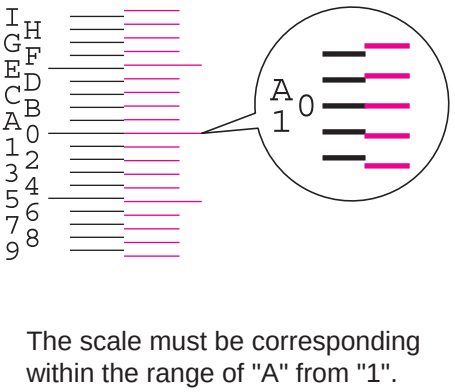

Figure 1-5-40

10. Verify that scales of MV-1,2,4,5/CV-1,2,4,5/YV-1,2,4,5 coincide within the range of 1 to A.
    If they are within the range, adjustment is complete.
    If they are out of range, proceed to step 10.

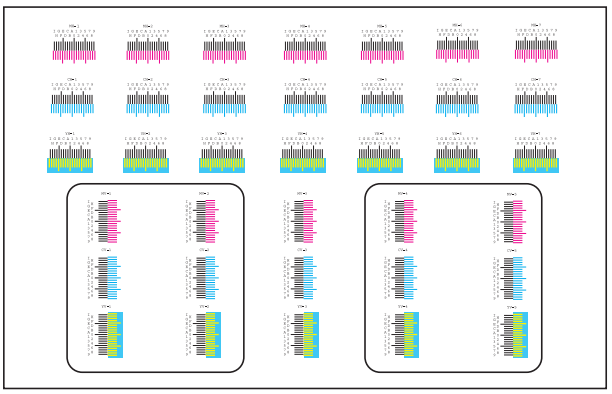

Chart for adjustment

Figure 1-5-41

If manual color registration has failed:

11. If the balance between V-1 and V-5 is more than 2 scales (sample 1) or less than -2 scales (sample 2), perform the following steps:

Sample 1

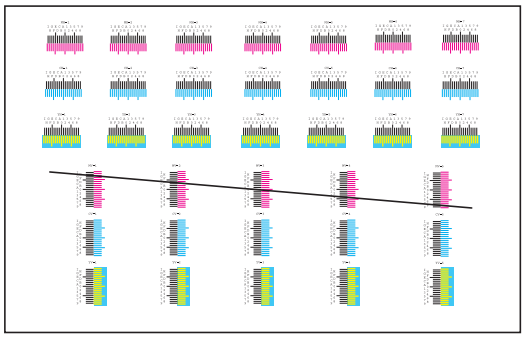

V-1 V-2 V-3 V-4 V-5

Sample 2

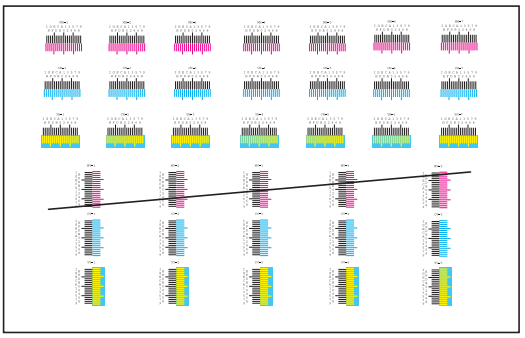

V-1 V-2 V-3 V-4 V-5

Figure 1-5-42

12. Open the front cover and then pull out the waste toner box tray (see page 1-5-29).
13. Rotate the adjustment knob using a 5 mm hex wrench.
    Direction of rotation
    (V-1 - V-5) >= 2 scales (sample 1): rotate counterclockwise.
    (V-1 - V-5) <= -2 scales (sample 2): rotate clockwise.
    Number of rotation
    (V-1- V-5) x 4 clicks
14. Refit the waste toner box tray as before and then close the front cover.
15. Perform shut-down on the operation panel, turn power off (see page p.1-2-19).
    Correction automatically starts.
16. Print a reference chart and verify the result.

Caution

After the adjustment for the abgle of the mirror has been made, run the maintenance mode U464 (Calibration). (see page 1-3-118)

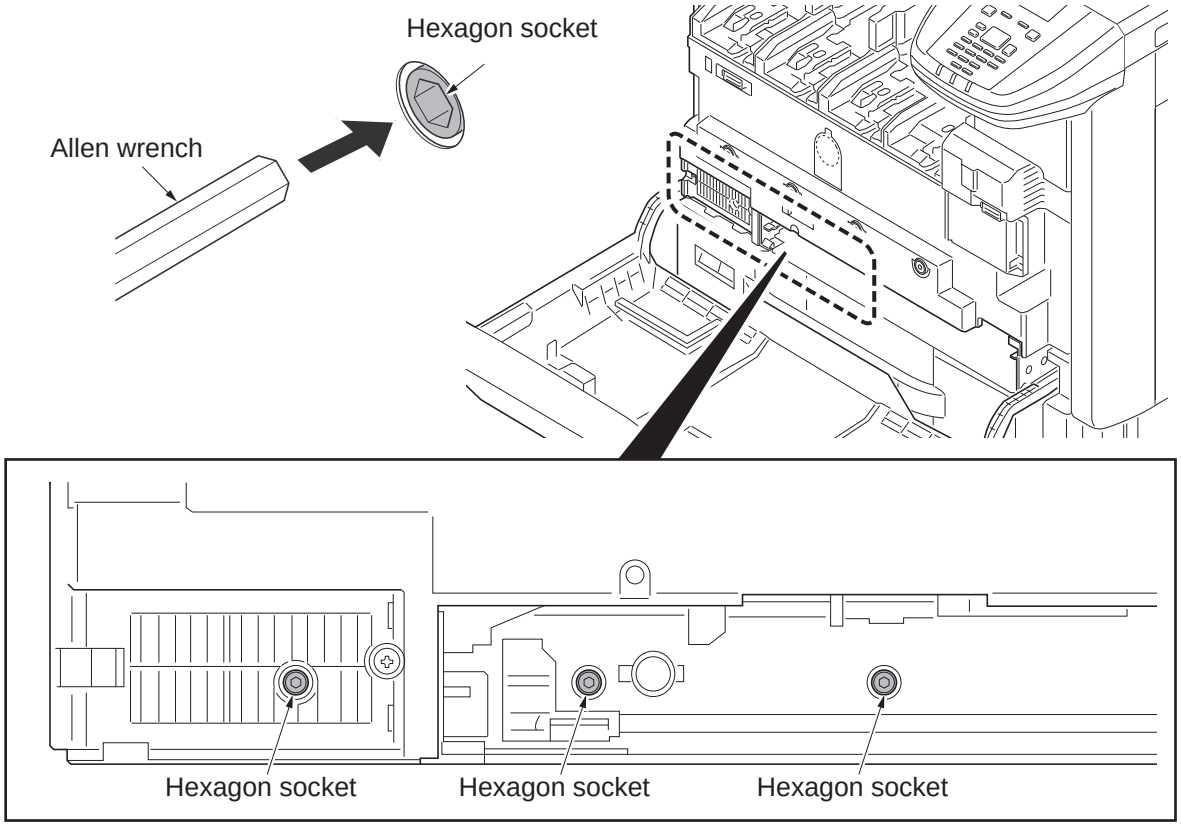

Figure 1-5-43

1-5-4 Image formation section

(1) Detaching and refitting the inner unit

Procedure

1. Open the front cover.
2. Remove all toner container each.
3. Remove the waste toner box tray by lifting upwards and from the right side.

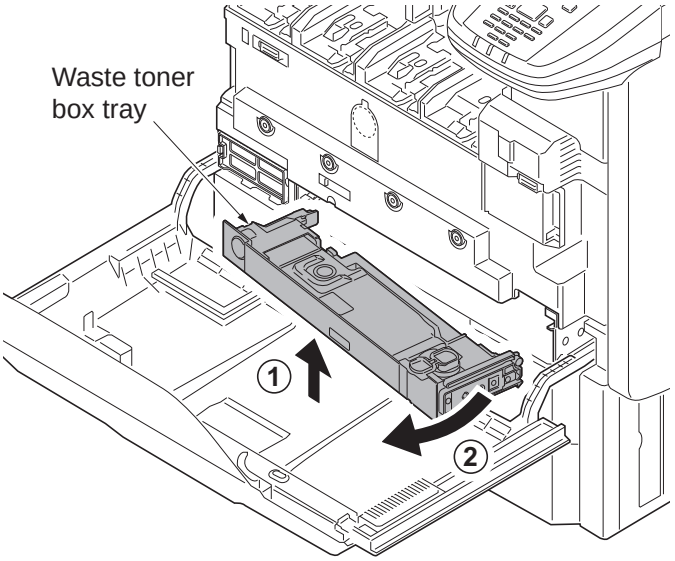

Figure 1-5-44

4. Remove the screw and then open the connector cover.
5. Remove the connector.
*: Remove the seal behind that connector is recessed.
6. Remove four fixed screws of inner unit.
*: Remove the seal behind that the screw-B is recessed.
7. Replace the seal in position.

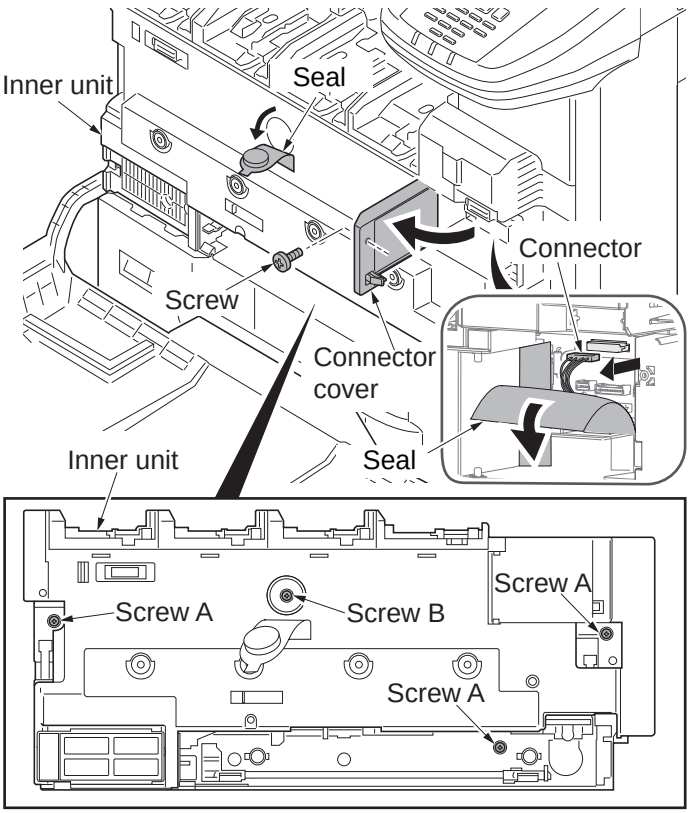

8. Release the lock by pushing the fixed levers at the right and left of inner unit.
9. Remove the inner unit.

Figure 1-5-45

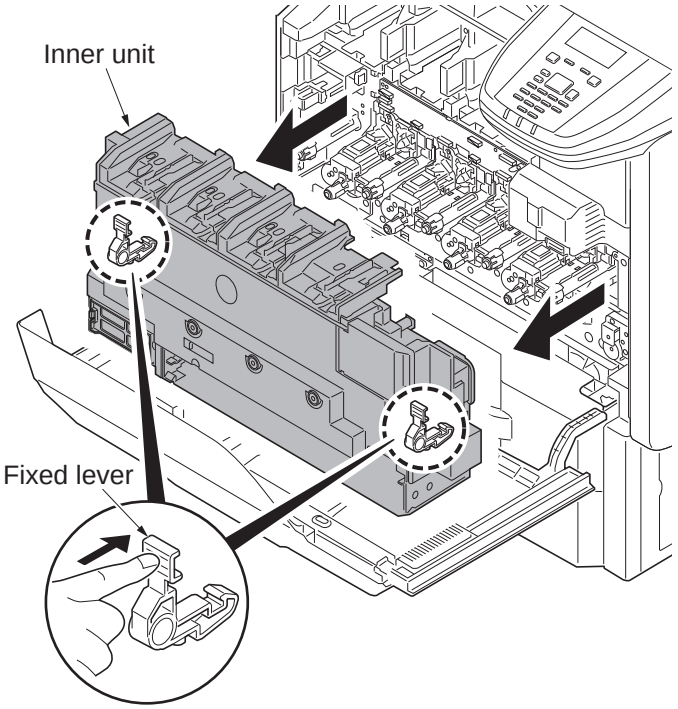

Figure 1-5-46

(2) Detaching and refitting the developer unit and drum unit

Detaching example: Developer unit Y and Drum unit Y

Procedure

1. Remove the fuser unit (see page 1-5-43).
2. Pull the transfer belt unit out a little (see page 1-5-37).
3. Remove the inner unit (see page 1-5-29).
4. Close the toner supply shutter.
5. Remove two connectors.

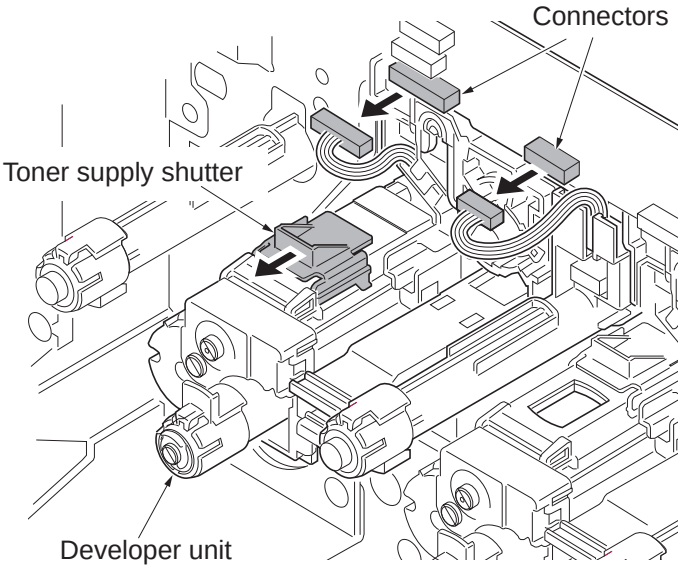

Figure 1-5-47

6. Pull out as one body the developer unit and the drum unit.
   (The developer unit becomes basic and the drum units are combined.)
7. Detach the developer unit while supporting bottom.

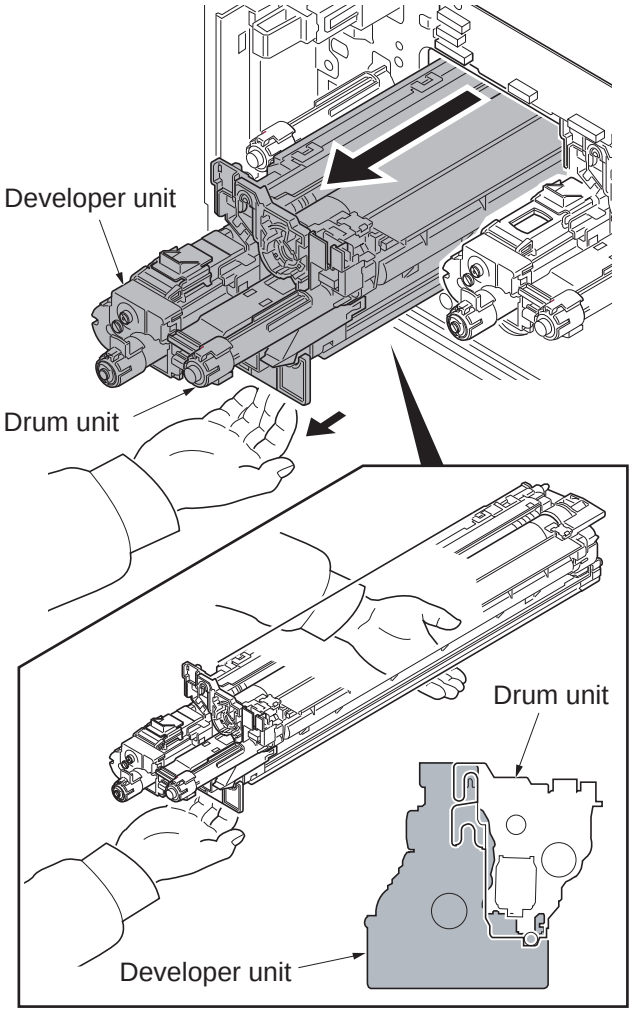

Figure 1-5-48

8. Remove the drum unit from the developer unit.

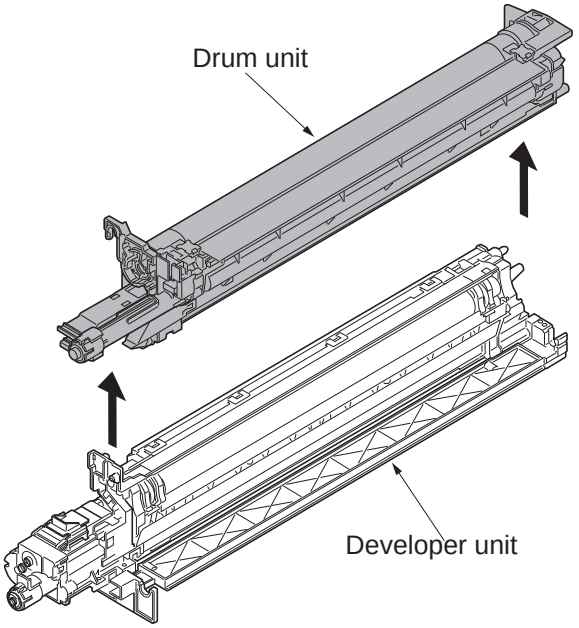

Figure 1-5-49

*: When a new development unit is installed, the developing roller protective sheet must be removed.

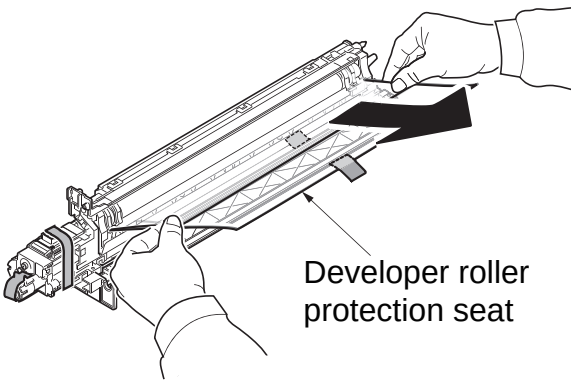

Figure 1-5-50

9. Check or replace the drum unit and the developer unit and refit all the removed parts.

*: To install the drum unit onto the developer unit, insert the front end first, then the rear end of the unit.

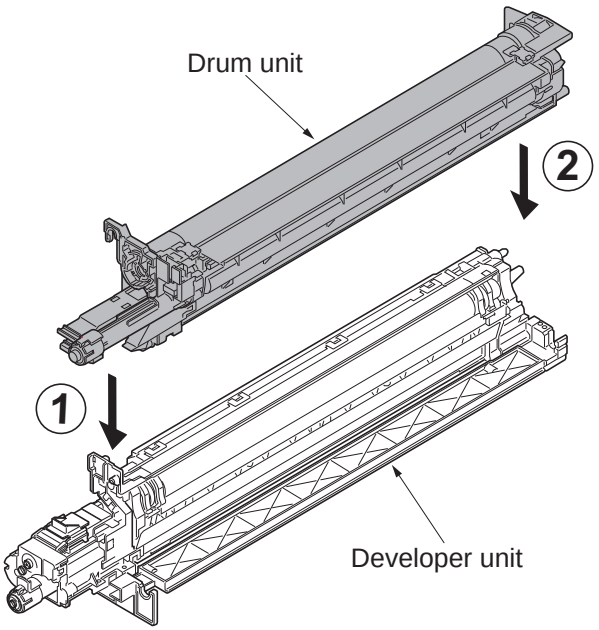

Figure 1-5-51

10. When replacing the new developer unit, proceed as follows:
    1) Performs maintenance mode U140 (AC calibration) (see page 1-3-73).
    2)Performs maintenance mode U464 (Calibration) (see page 1-3-118).
    3)Performs maintenance mode U469 (Auto color registration correction) (see page 1-3-126).

11. When replacing the new drum unit, proceed as follows:
    1) Performs maintenance mode U119 (drum setup) (see page 1-3-65).
    2) Performs maintenance mode U930 (checking/clearing the charger roller count) and checking the counter value (see page 1-3-145).
    3) Performs maintenance mode U140 (AC calibration) (see page 1-3-73).
    4)Performs maintenance mode U464 (Calibration) (see page 1-3-118).
    5)Performs maintenance mode U469 (Auto color registration correction) (see page 1-3-126).
    6)Performs maintenance mode U464 (Calibration) (see page 1-3-118).

(3) Detaching and refitting the charger roller unit

Detaching example: Charger roller unit Y

Procedure

1. Remove the inner unit (see page 1-5-29).
2. Pull out the charger roller unit by picking and releasing the MC lock lever.
3. Check or replace the charger roller unit and refit all the removed parts.

*: When refitting the charger roller unit, that must hook the hook certain by operating the MC lock lever after inserting the charger roller unit until bumping.

4. When replacing the new charger roller unit, proceed as follows:
   Performs maintenance mode U930 (clearing the charger roller count) (see page 1-3-145).

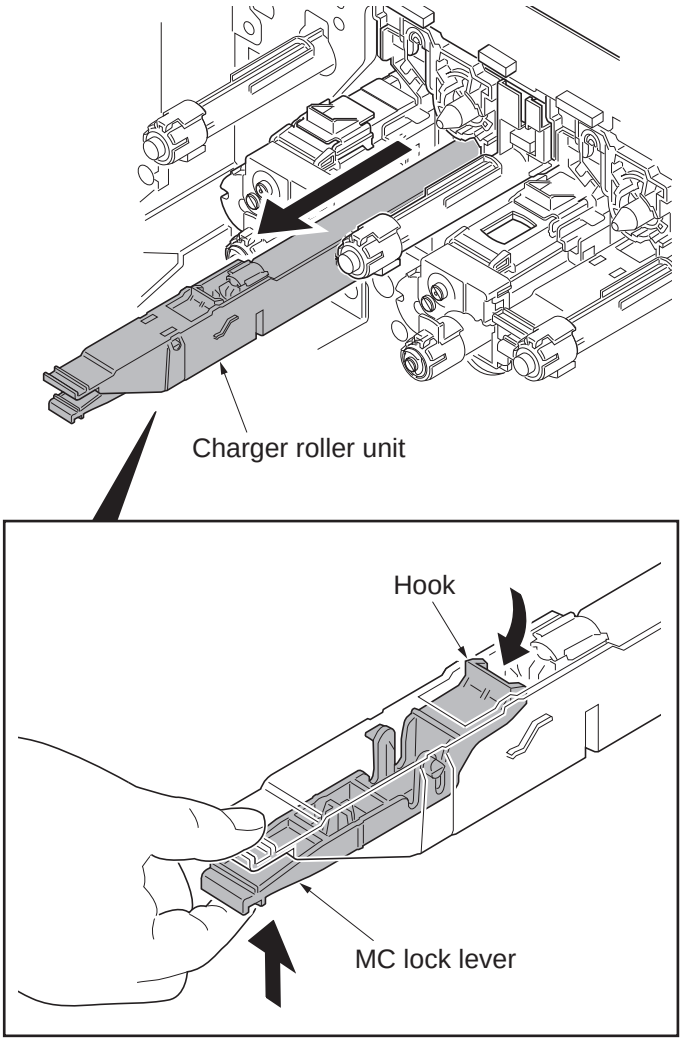

Figure 1-5-52

1-5-5 Transfer section

(1) Detaching and refitting the paper conveying unit

Procedure

1. Pull the paper conveying unit out.
2. Remove four screws.
3. Unhook three hooks and then remove the right front cover.

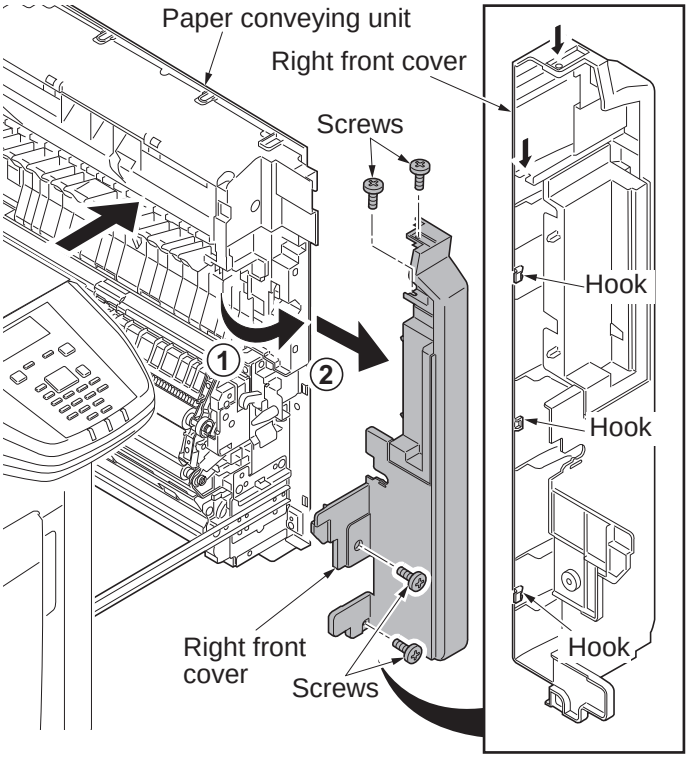

Figure 1-5-53

4. Unhook two hooks and then remove the conveying inner cover from the paper conveying unit.

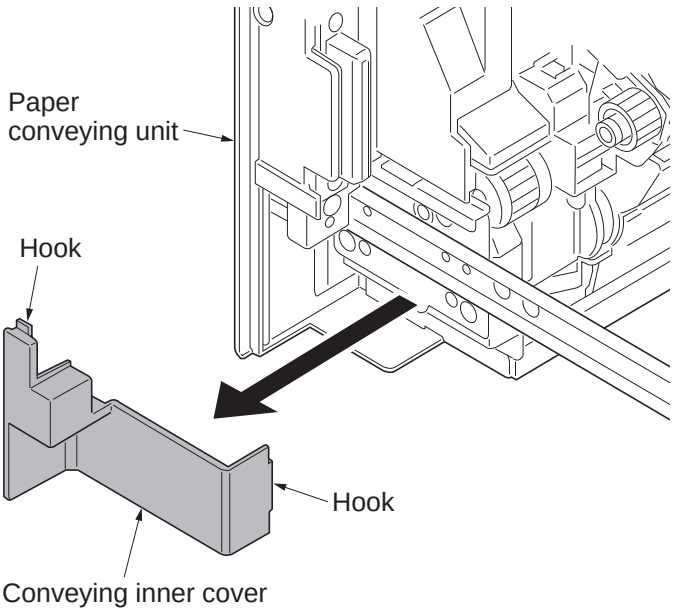

Figure 1-5-54

5. Remove four screws.
6. Remove the paper conveying unit by lifting upward.

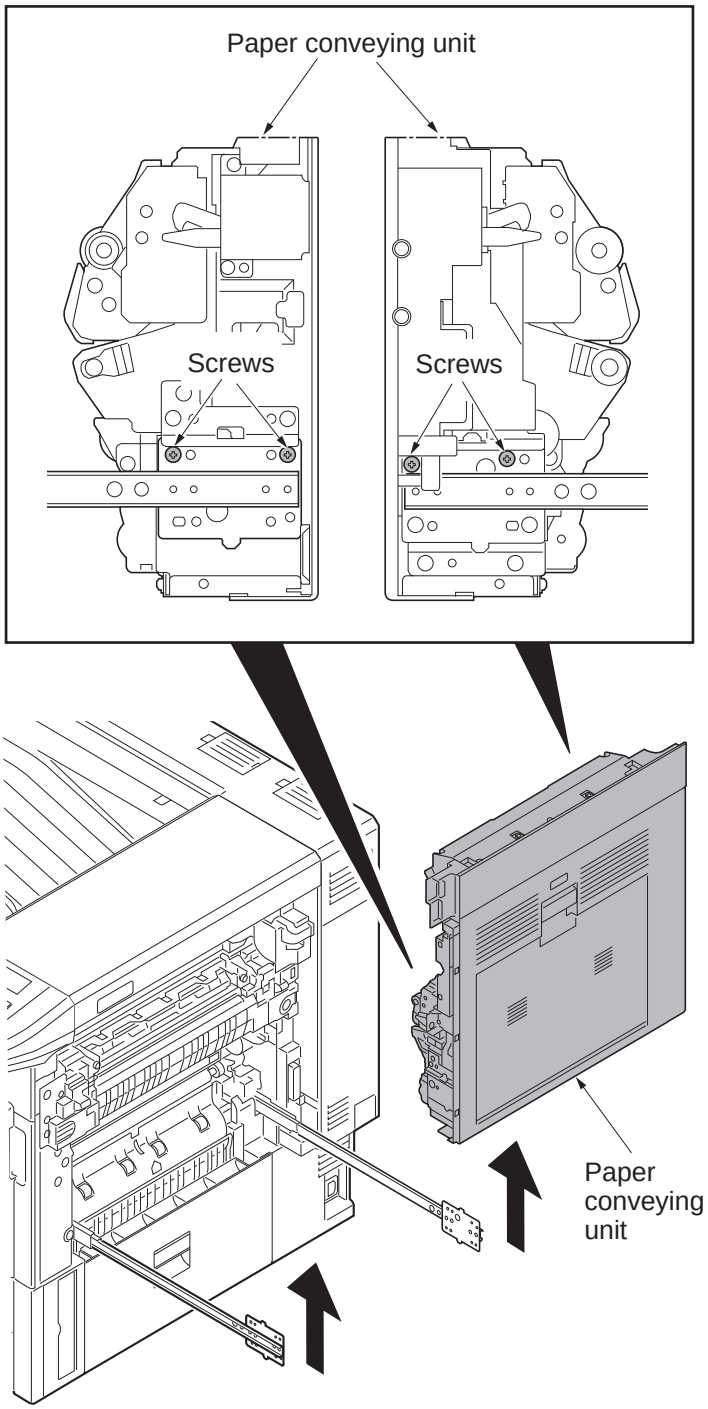

Figure 1-5-55

(2) Detaching and refitting the transfer belt unit

Procedure

1. Remove the paper conveying unit (see page 1-5-35).
2. Remove the fuser unit (see page 1-5-43).
3. Remove the connector.

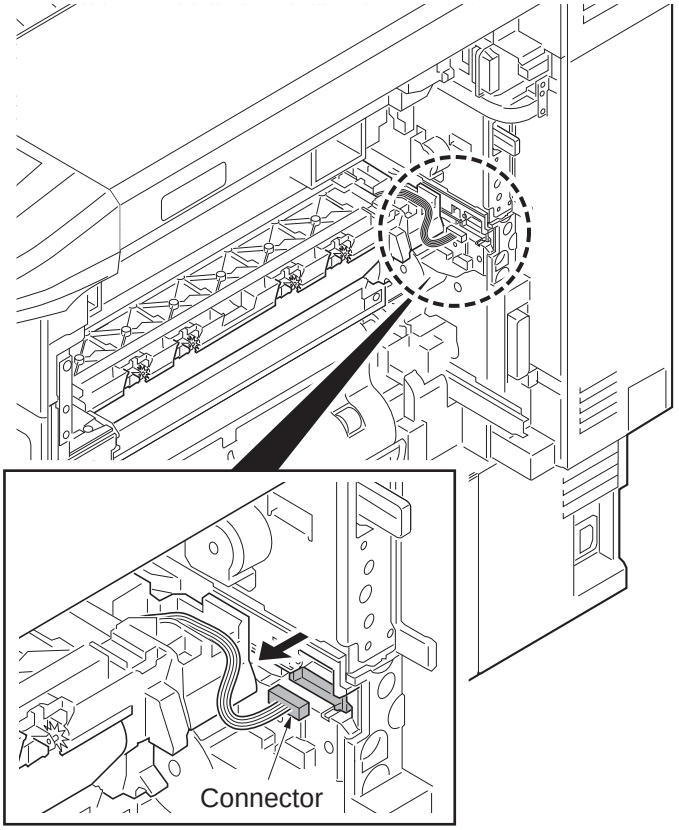

Figure 1-5-56

4. Pull out the transfer belt unit by lifting up both ends.

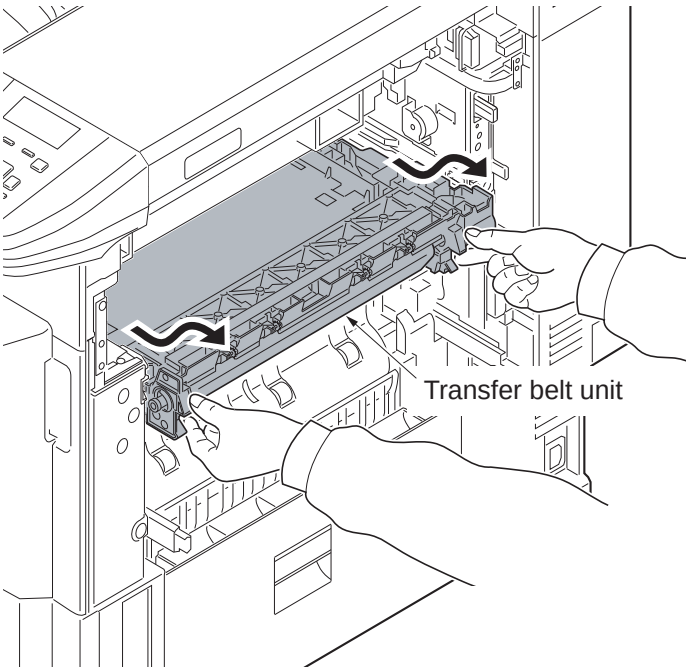

Figure 1-5-57

5. Remove the transfer belt unit.
6. Check or replace the transfer belt unit and refit all the removed parts.

*: When refitting the new transfer belt unit, set the projected part aligned with the rail entrance.

7. When replacing the new transfer belt unit, proceed as follows:
   1) Performs maintenance mode U469 (Transfer belt speed correction) (see page 1-3-126).
   2)Performs maintenance mode U464 (Calibration) (see page 1-3-118).
   3)Performs maintenance mode U469 (Auto color registration correction) (see page 1-3-126).

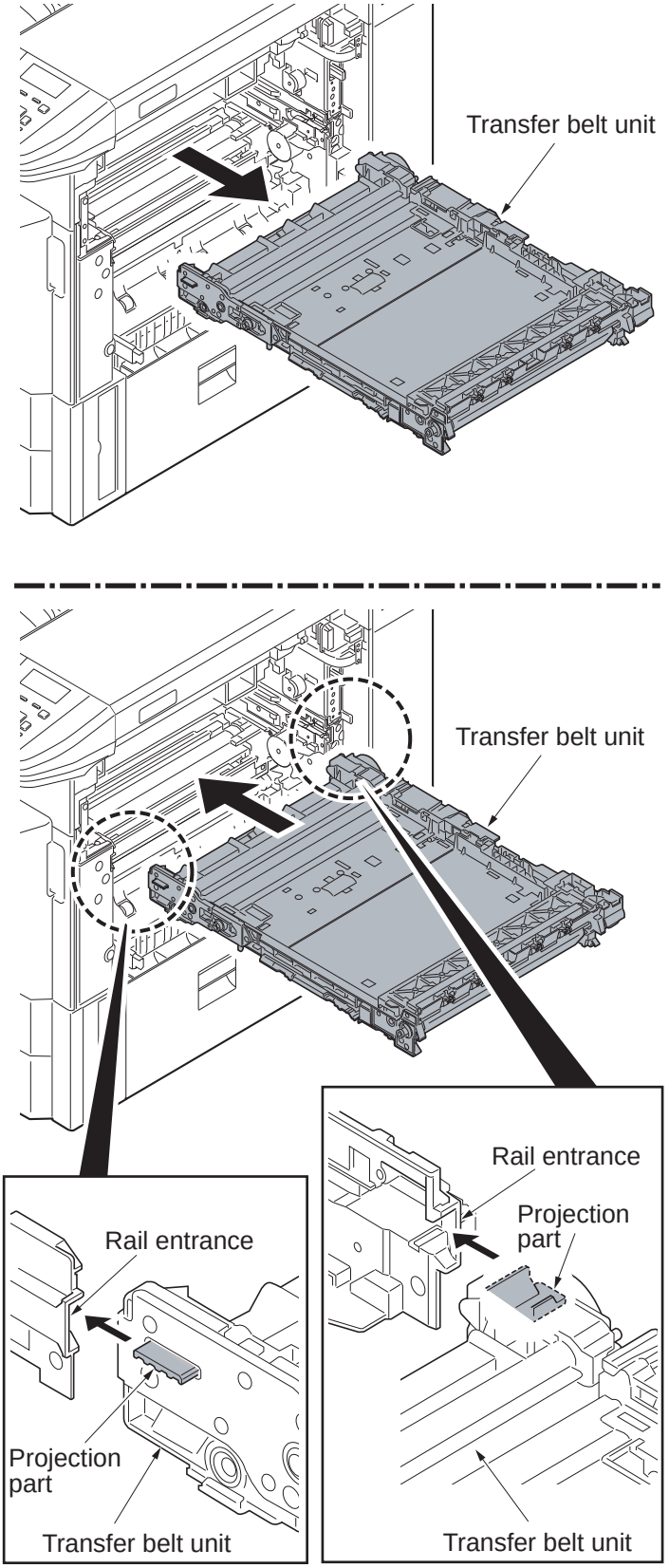

Figure 1-5-58

(3) Detaching and refitting the cleaning pre brush

Procedure

1. Remove the transfer belt unit (see page 1-5-37).
2. Unhook the front and back springs from the hooks.

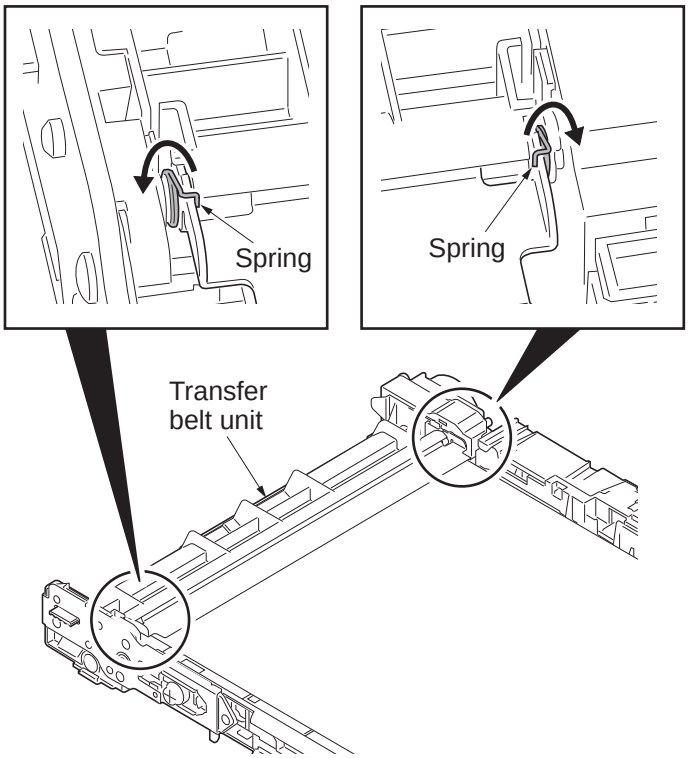

Figure 1-5-59

3. Unhook two hooks and then remove the cleaning cover.

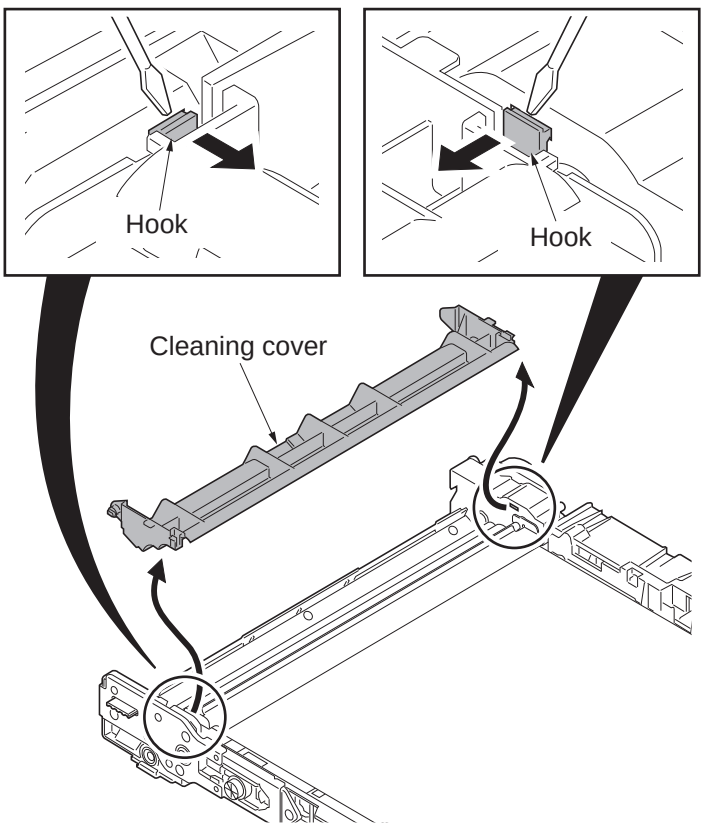

Figure 1-5-60

4. Remove the cleaning pre brush by turning it as shown.
5. Check or replace the cleaning pre brush and refit all the removed parts.

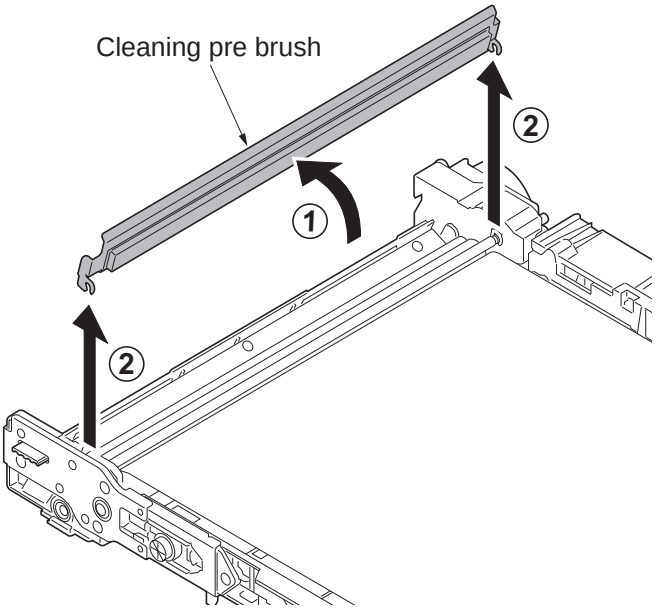

Figure 1-5-61

*: Hook the springs back in place onto the cleaning pre brush when installing.

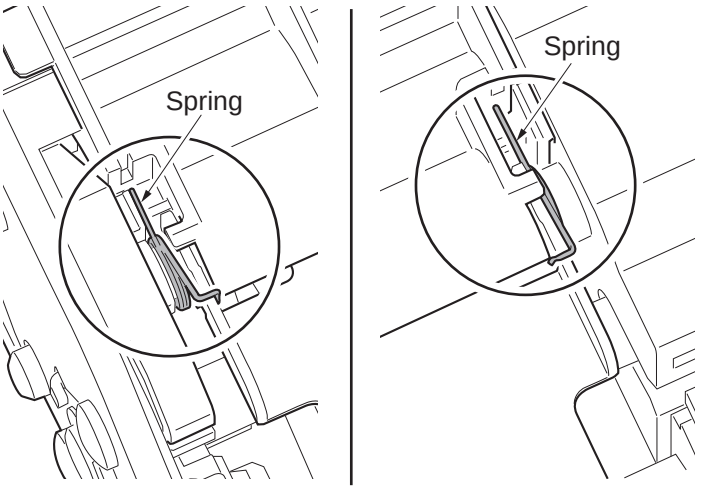

Figure 1-5-62

(4) Detaching and refitting the transfer roller

Procedure

1. Pull out the paper conveying unit.

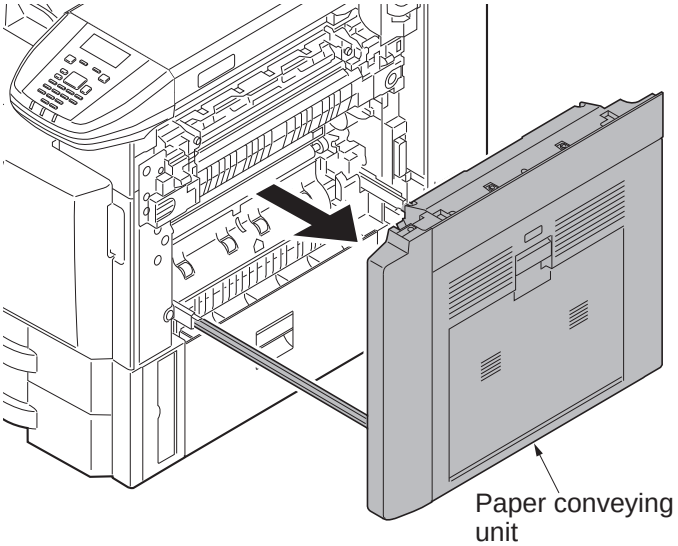

Figure 1-5-63

2. Loosen two fixed screws on the TC guide.
3. Remove the stop ring.
4. Unhook the hook and remove the TC gear Z29R.
5. Remove two bearings.
6. Remove the transfer roller.

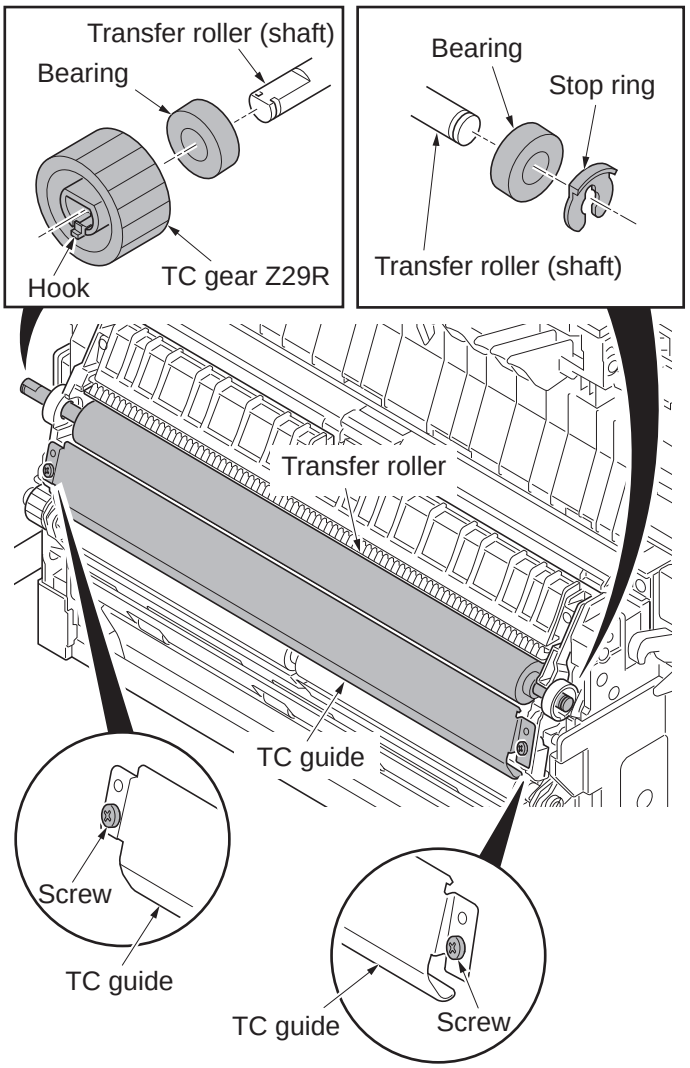

Figure 1-5-64

7. Check or replace the transfer roller and refit all the removed parts.
*: When refitting the transfer roller, confirm that the terminal of the ground plate is in contact with the ground plate in the frame.

8. When replacing the new transfer roller, proceed as follows:
   1) Performs maintenance mode U127 (clearing the transfer counter) (see page 1-3-67).
   2)Performs maintenance mode U464 (Calibration) (see page 1-3-118).
   3)Performs maintenance mode U469 (Auto color registration correction) (see page 1-3-126).

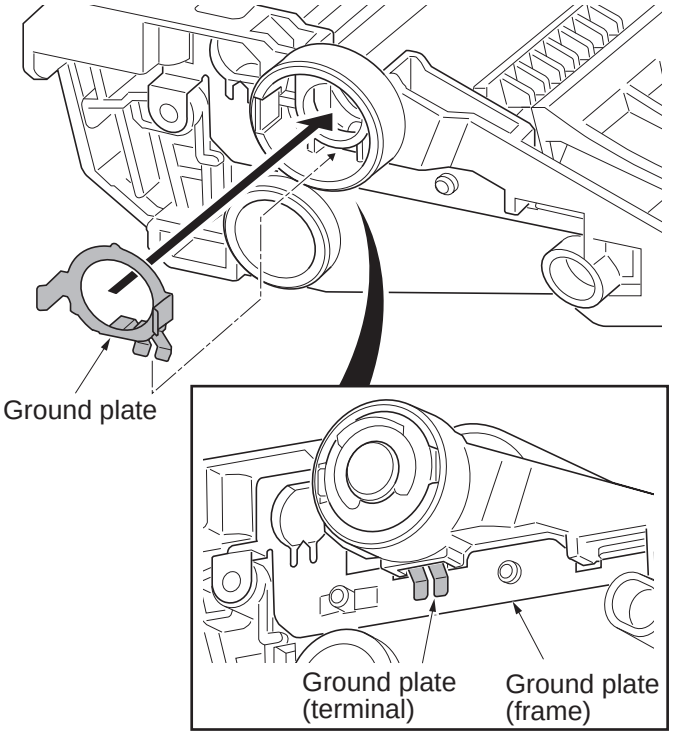

Figure 1-5-65

1-5-6 Fuser section

(1) Detaching and refitting the fuser unit

Procedure

1. Pull out the paper conveying unit.
2. Remove the screw and then the fuser wire cover.
3. Remove two connectors

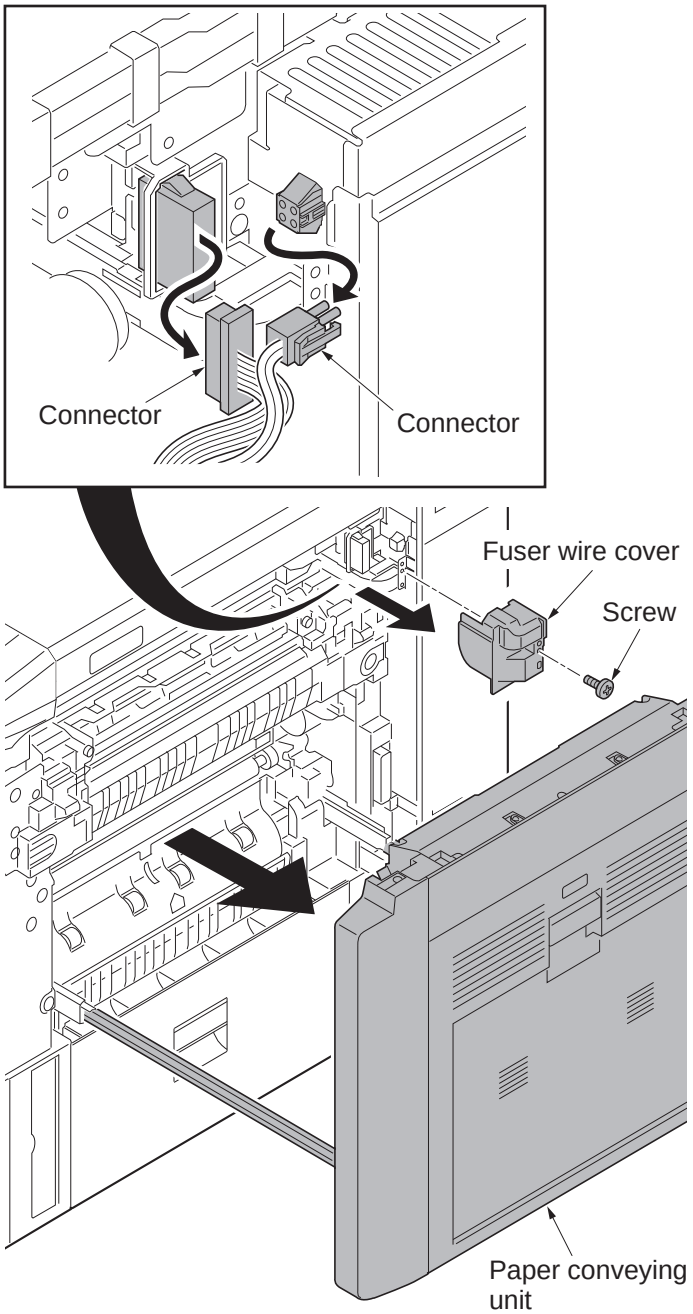

Figure 1-5-66

4. Remove four screws (M4 × 10) and then remove the fuser unit.
5. Check or replace the fuser unit and refit all the removed parts.

6. When replacing the new fuser unit, proceed as follows:
   1) Performs maintenance mode U167 (clearing the fuser count) (see page 1-3-85).
   2)Performs maintenance mode U464 (Calibration) (see page 1-3-118).
   3)Performs maintenance mode U469 (Auto color registration correction) (see page 1-3-126).

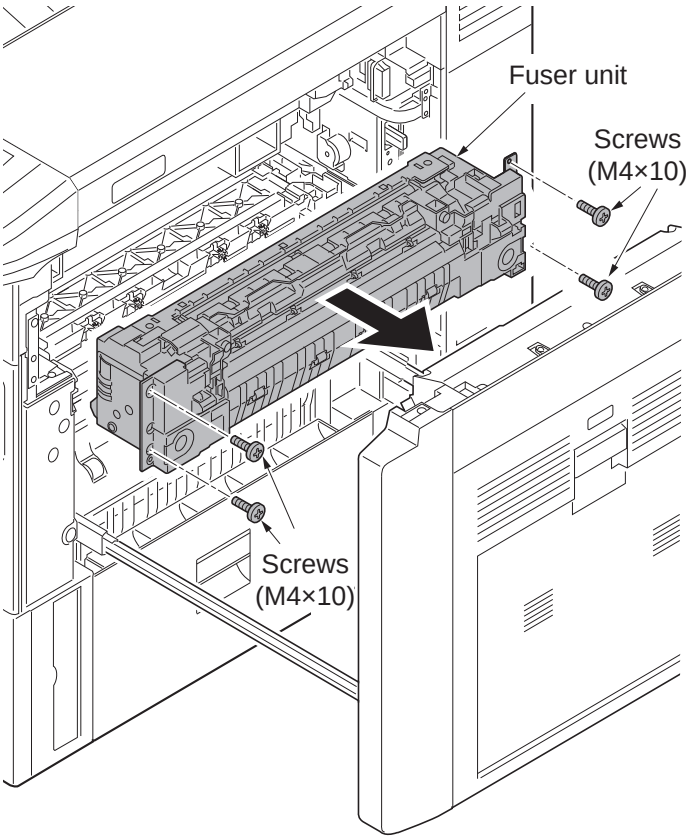

Figure 1-5-67

(2) Detaching and refitting fuser IH unit

Procedure

1. Remove the left upper cover.
2. Remove the rear upper cover and the rear lower cover (see page 1-5-59).
3. Remove the fuser unit (see page 1-5-43).
4. Remove the right upper cover (see page 1-5-59).
5. Remove the tray rear cover.
6. Remove the right middle rear cover (see page 1-5-59).
7. Remove four screws and then remove the fuser IH PWB cover (see page 1-5-59).
8. Remove the IH electric wire cover (see page 1-5-59).
9. Remove the top cover.
10. Remove the wire holder.
11. Release the wire saddle.
12. Remove two connectors from the fuser IH PWB according to the following notes.

*: Confirm the power plug is removed from the outlet without fail when you remove the connector because a high current is supplied to fuser IH unit by this connector.

*: Confirm the connected connector was surely locked when you connect this connector again.

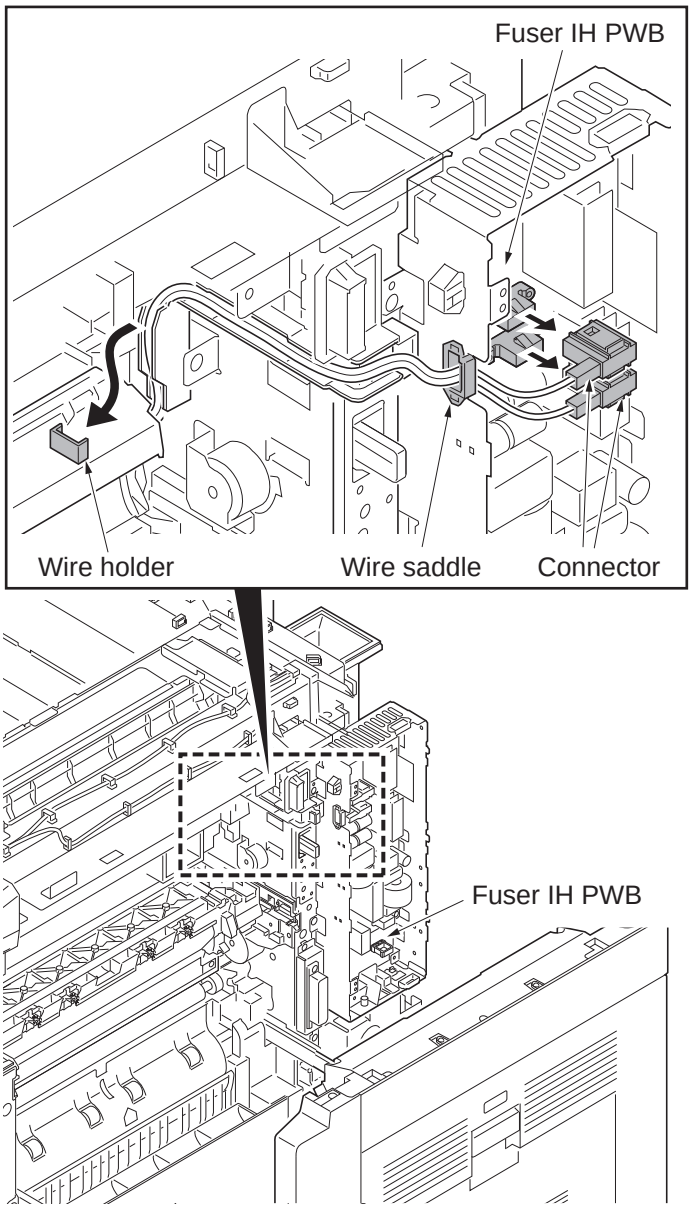

Figure 1-5-68

13. Remove two screws.
14. Unhook the hook by lifting up the fuser IH unit a little and then remove it.

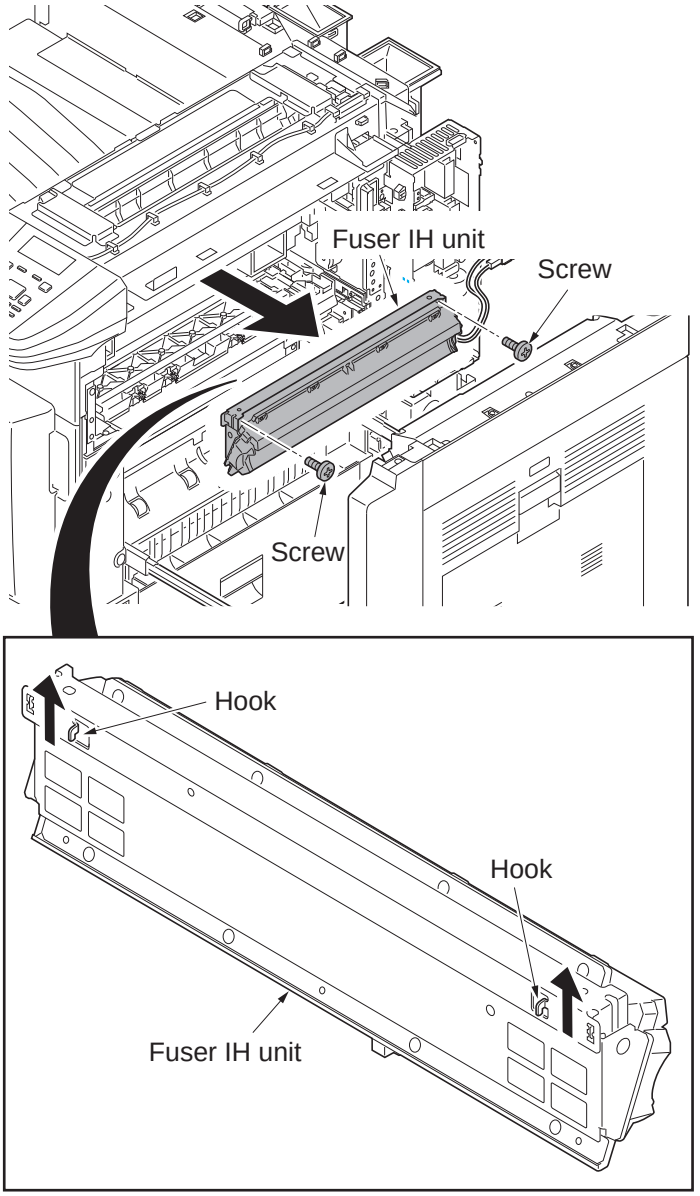

Figure 1-5-69

1-5-7 PWBs

(1) Detaching and refitting the main PWB

Procedure

1. Remove two screws.
2. Unhook three hooks and then remove the left upper cover.
3. Remove the rear upper cover (see page 1-5-59).

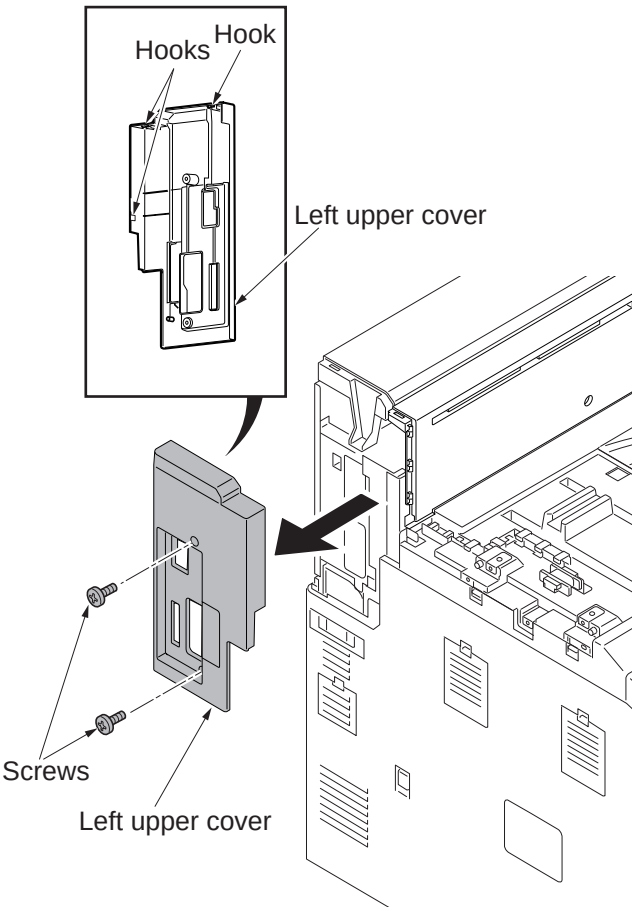

Figure 1-5-70

4. Release five wire saddles on the controller box.

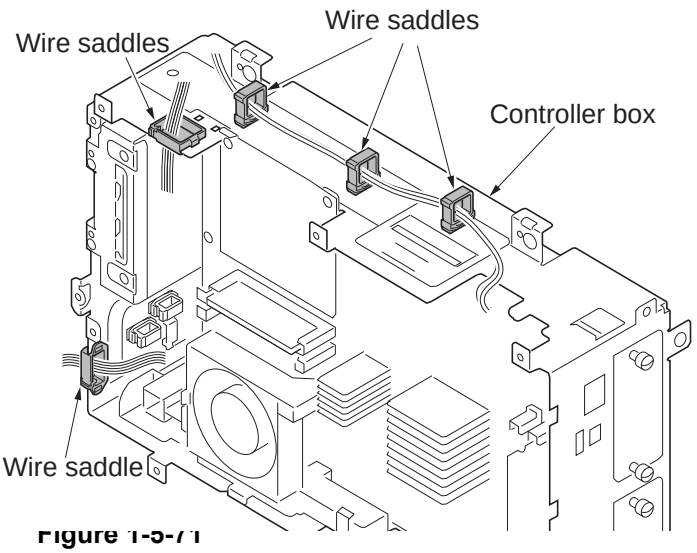

Figure 1-5-71

5. Remove the following connectors that connected to the main PWB from the outside of the control box.

   YC24
   YC3 (FFC connector with a lock)
   YC21 (WH)
   YC12

*: When removing the FFC from the FFC connector with a lock, remove the FFC after released by lifting down the lock lever
(see figure a and b).

*: When connecting an FFC furnished with the protrusions at both ends, address the side with a blue-colored tape towards the locking lever, insert the FFC into the connector until the protrusions are recessed, and raise the lock lever to lock the FFC
(see figure c).

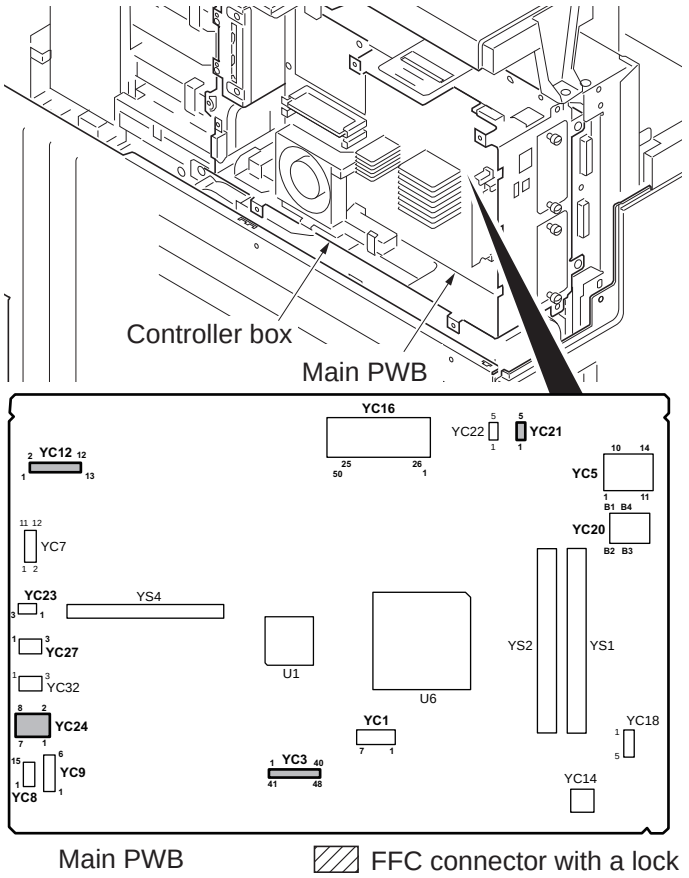

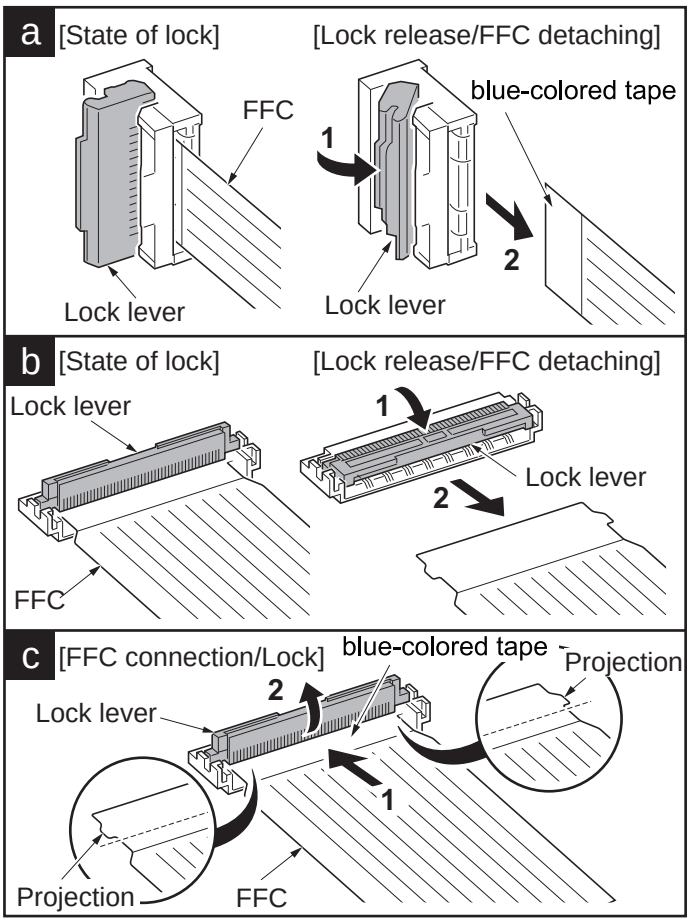

Figure 1-5-72

6. Remove five screws.
7. Unhook two hooks and then remove the controller box.

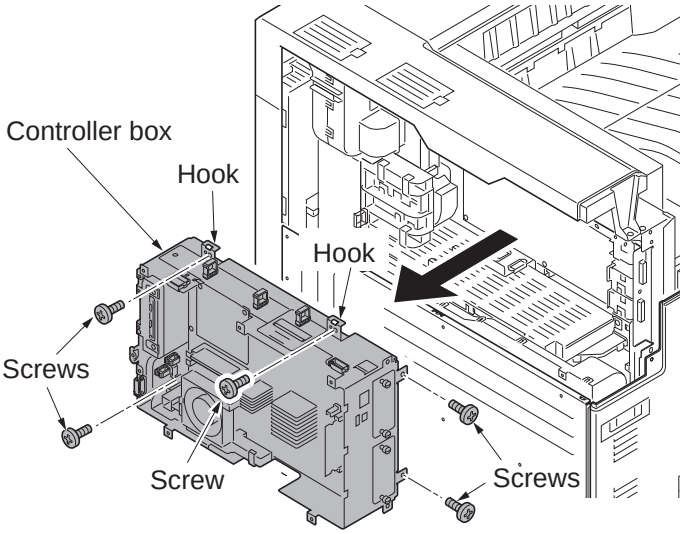

Figure 1-5-73

8. Remove the following connectors that connected to the main PWB.
   YC23
   YC27
   YC8 (FFC connector with a lock)
   YC9
   YC1 [BLACK] (with a lock)

*: When removing the FFC from the FFC connector with a lock, remove the FFC after released by lifting down the lock lever (see page 1-5-48)

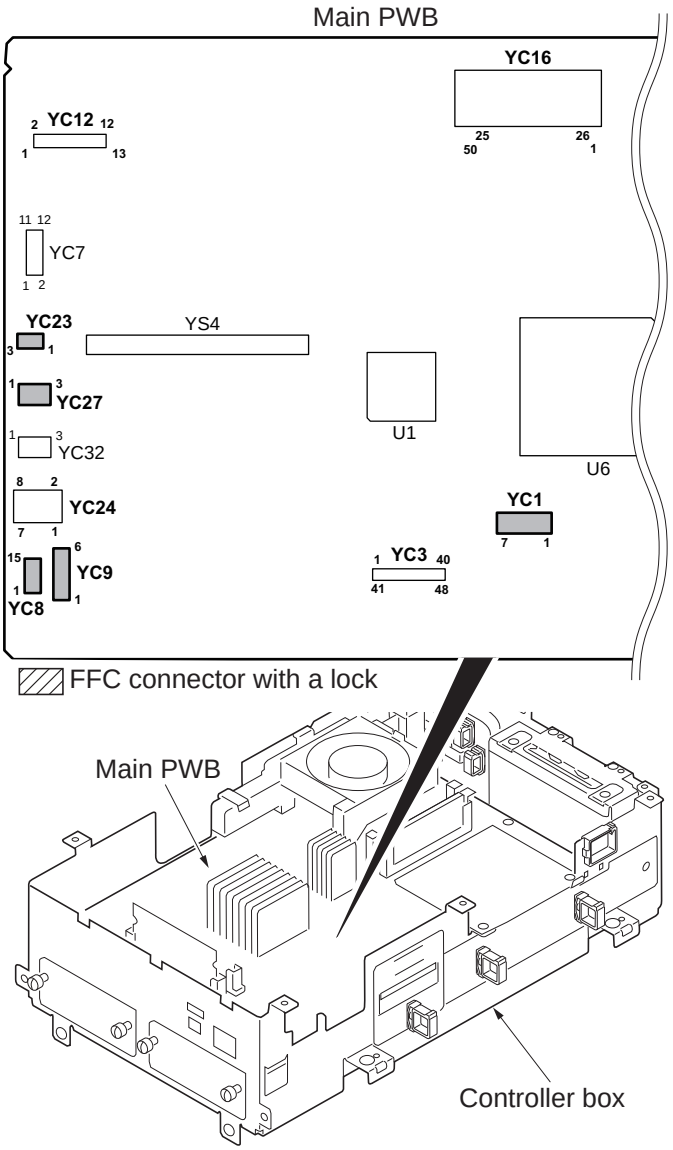

Figure 1-5-74

9. Release the wire saddle.
10. Remove two wire holders.
11. Remove two screws.
12. Remove the fan motor holder.

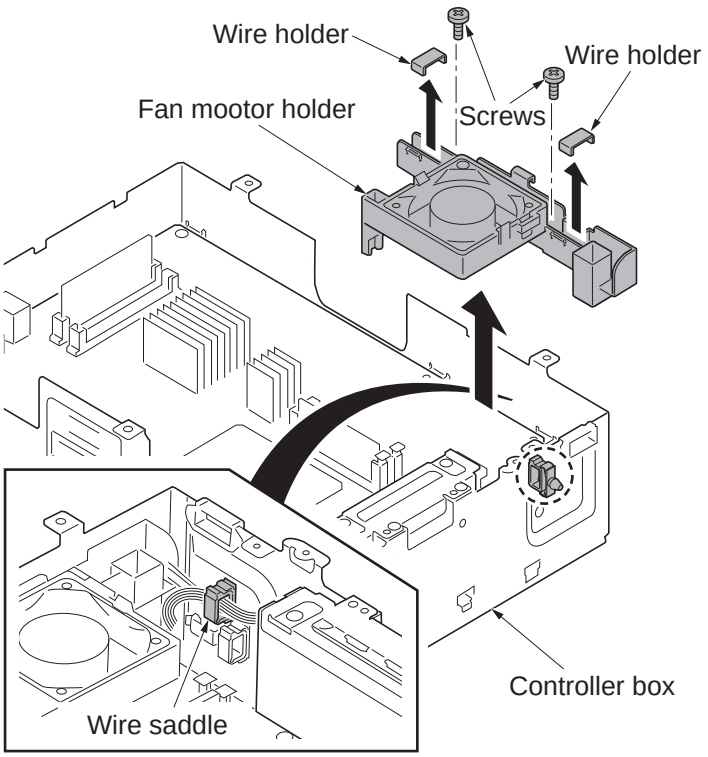

Figure 1-5-75

13. Remove five screws from the main PWB.

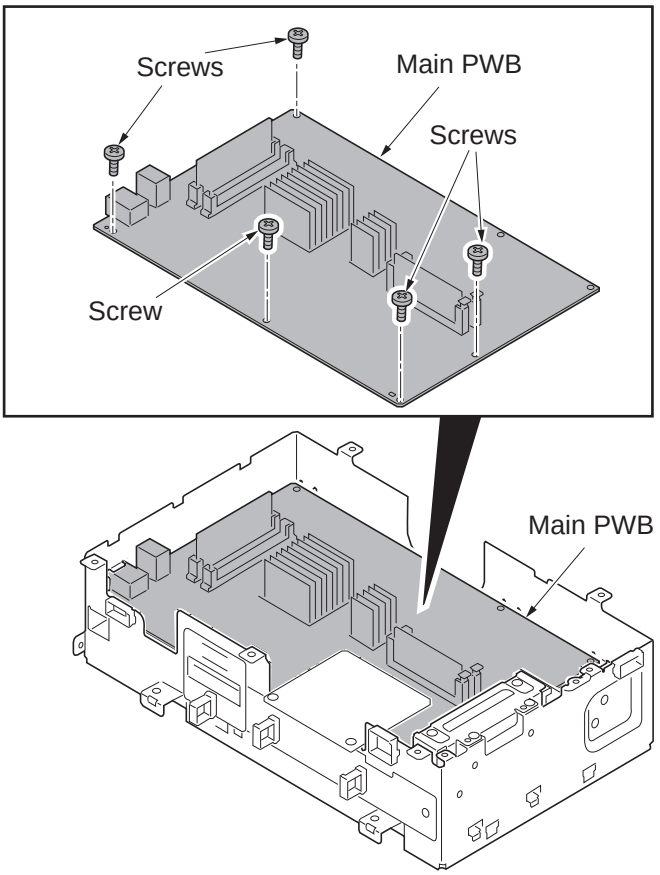

Figure 1-5-76

14. Remove the main PWB by releasing the projection of ground plate in the network connector.
15. Check or replace the main PWB and refit all the removed parts.

*: When replacing the main PWB, remove the following devices from the main PWB and then reattach it to the new main PWB. (see page 1-6-3)

EEPROM (YC14)
Code DIMM (YS4)
Memory DDR (YS1)

*: Exchange EEPROM (YC14) and code DIMM (YC4) by the set.

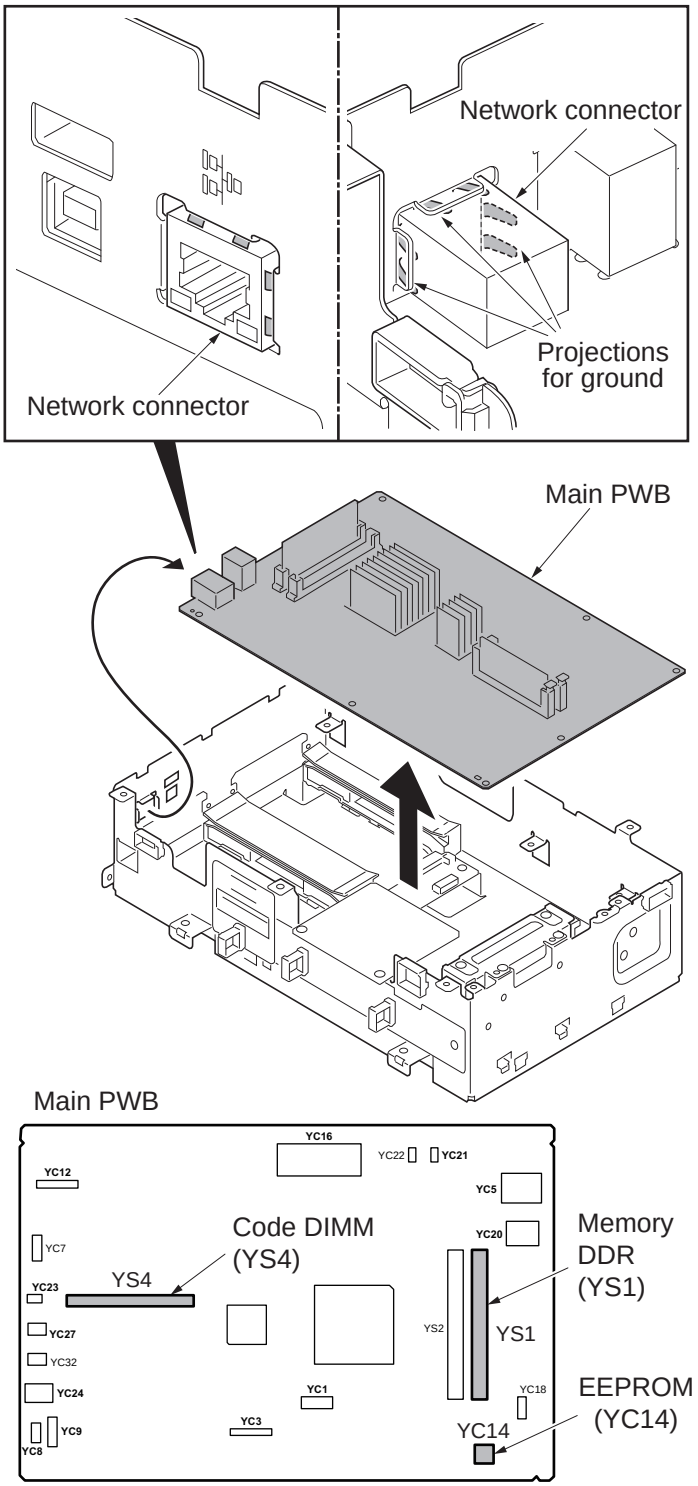

Figure 1-5-77

(2) Detaching and refitting the engine PWB

Procedure

1. Remove the controller box (see page 1-5-47).
2. Remove twenty two connectors of following from the engine PWB.
   YC1
   YC2
   YC3
   YC4
   YC5 (FFC connector with a lock)
   YC6 (FFC connector with a lock)
   YC7 (FFC connector with a lock)
   YC10 (FFC connector with a lock)
   YC26
   YC9
   YC8
   YC46 (FFC connector with a lock)
   YC11 (FFC connector with a lock)
   YC12 (FFC connector with a lock)
   YC15
   YC16
   YC18
   YC17
   YC19
   YC20
   YC21
   YC22

*: When removing the FFC from the FFC connector with a lock, remove the FFC after released by lifting down the lock lever (see page 1-5-48)
*: When removing the FFC from the YC-46, remove the FFC after released by lifting up the lock lever.
*: When connecting an FFC furnished with the protrusions at both ends, address the side with a blue-colored tape towards the locking lever, insert the FFC into the connector until the protrusions are recessed, and raise the lock lever to lock the FFC (see page 1-5-48)

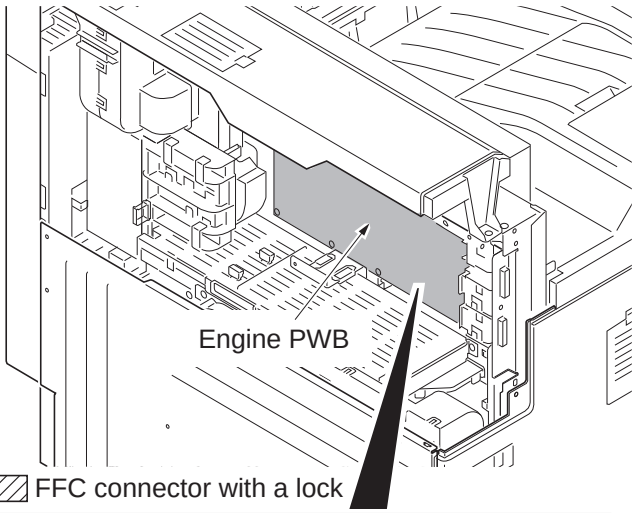

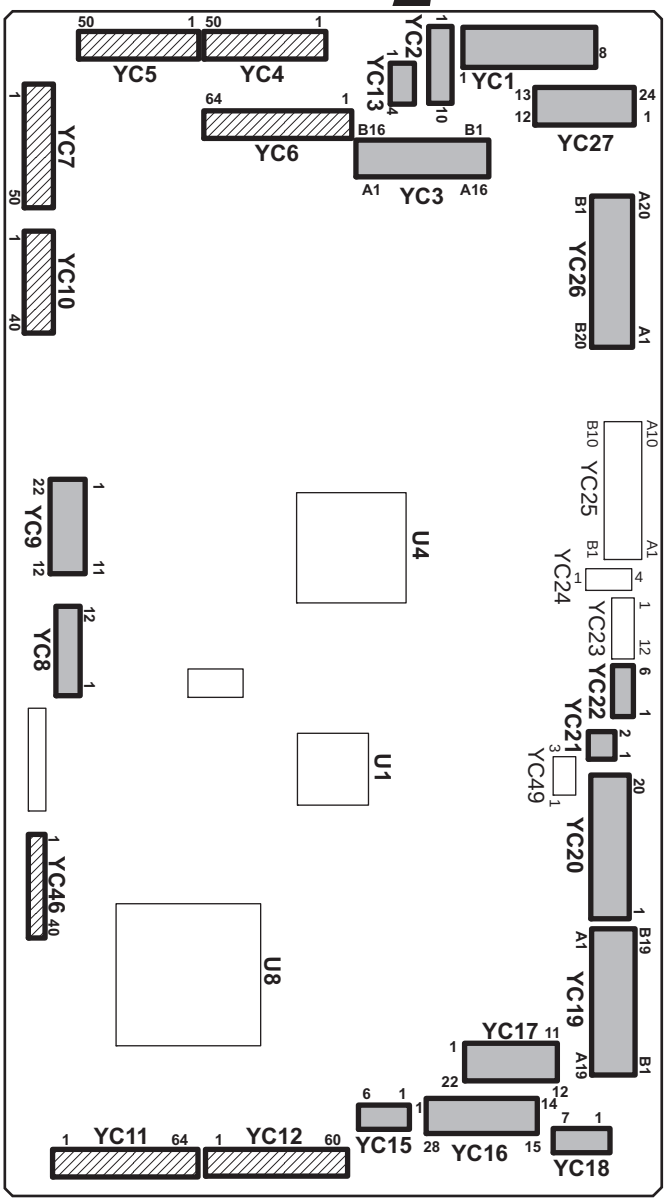

Engine PWB

3. Remove six screws.
4. Unhook two hooks and then remove the engine PWB.
5. Check or replace the engine PWB and refit all the removed parts.

*: When replacing the engine PWB, remove the EEPROM (U100) from the engine PWB and then reattach it to the new engine PWB.

Figure 1-5-78

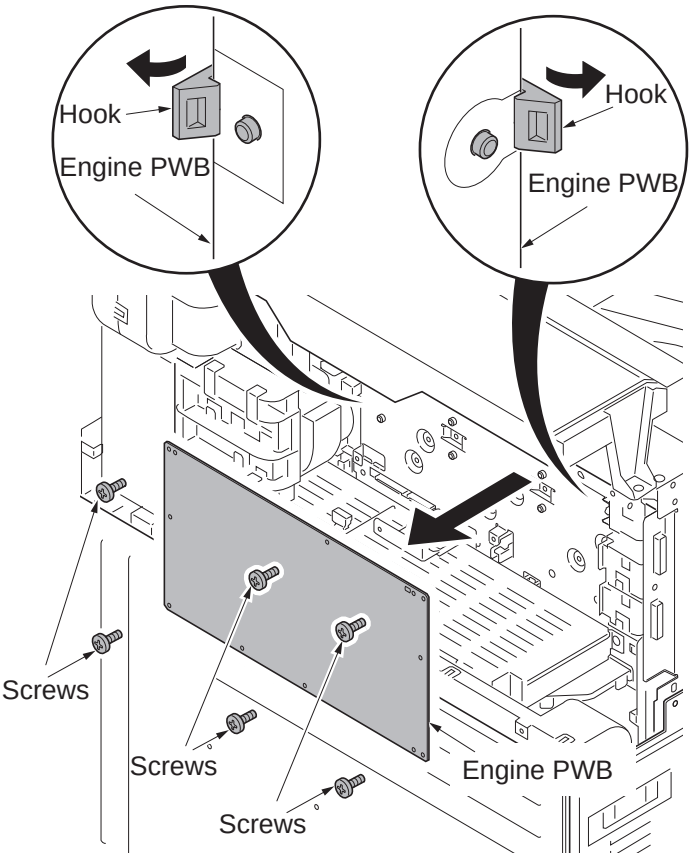

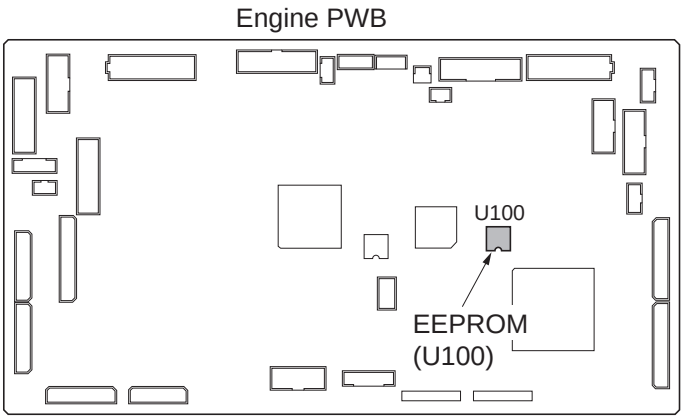

Figure 1-5-79

(3) Detaching and refitting the power source PWB

Procedure

1. Remove the rear lower cover (see page 1-5-59).
2. Release three wire saddles.
3. Remove four connectors.

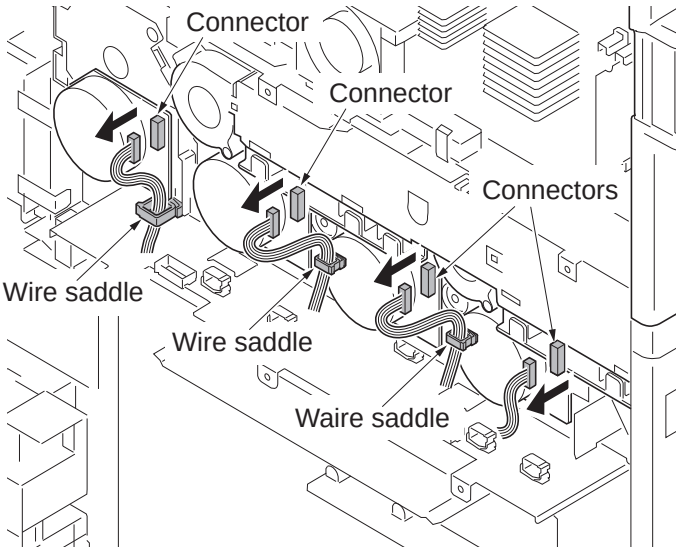

Figure 1-5-80

4. Release six wire saddles.
5. Remove the following eleven connectors and three tabs from the power source PWB.
   YC3
   YC1
   TB1
   TB2
   TB5
   YC7
   YC8
   YC17
   YC14
   YC12
   YC16
   YC13
   YC10
   YC11
6. Remove 2-pin relay connector.

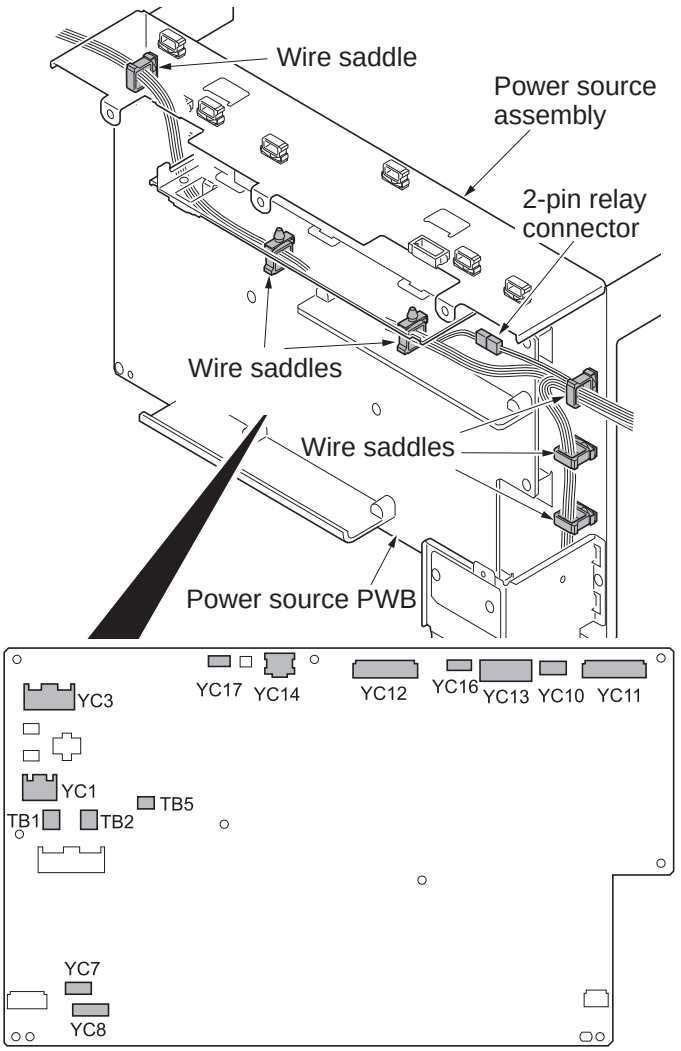

Power source PWB

Figure 1-5-81

7. Release the wire saddle.
8. Remove the connector from the coin vender plate.

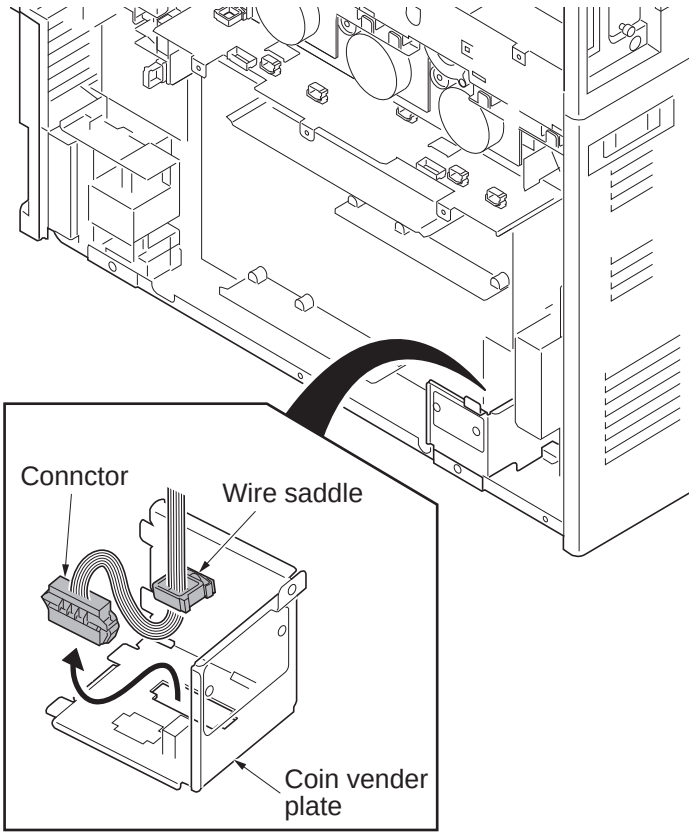

Figure 1-5-82

9. Remove screw.
10. Remove cooling duct1.
11. Remove two screws.
12. Remove the power source assembly.

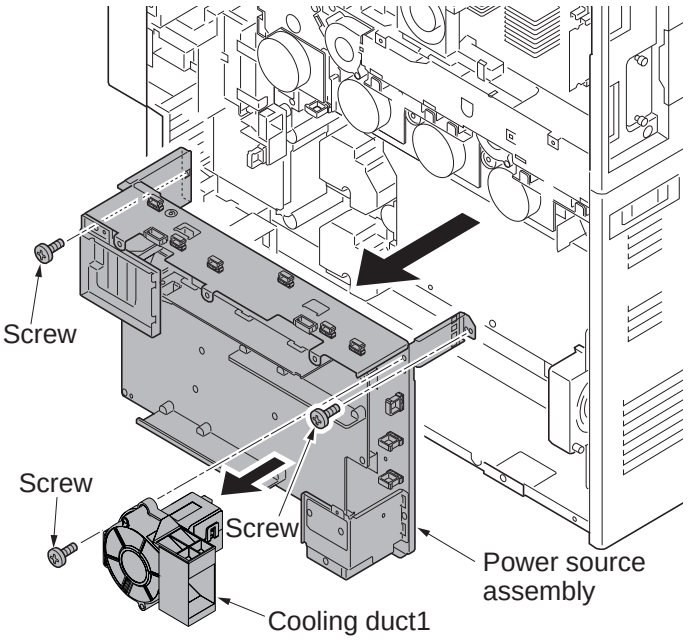

Figure 1-5-83

13. Release wire saddle.
14. Remove 2-pin relay connector.
15. Remove screw.
16. Remove cooling duct2.
17. Remove eight screws.
18. Remove the power source PWB.
19. Check or replace the power source PWB and refit all the removed parts.

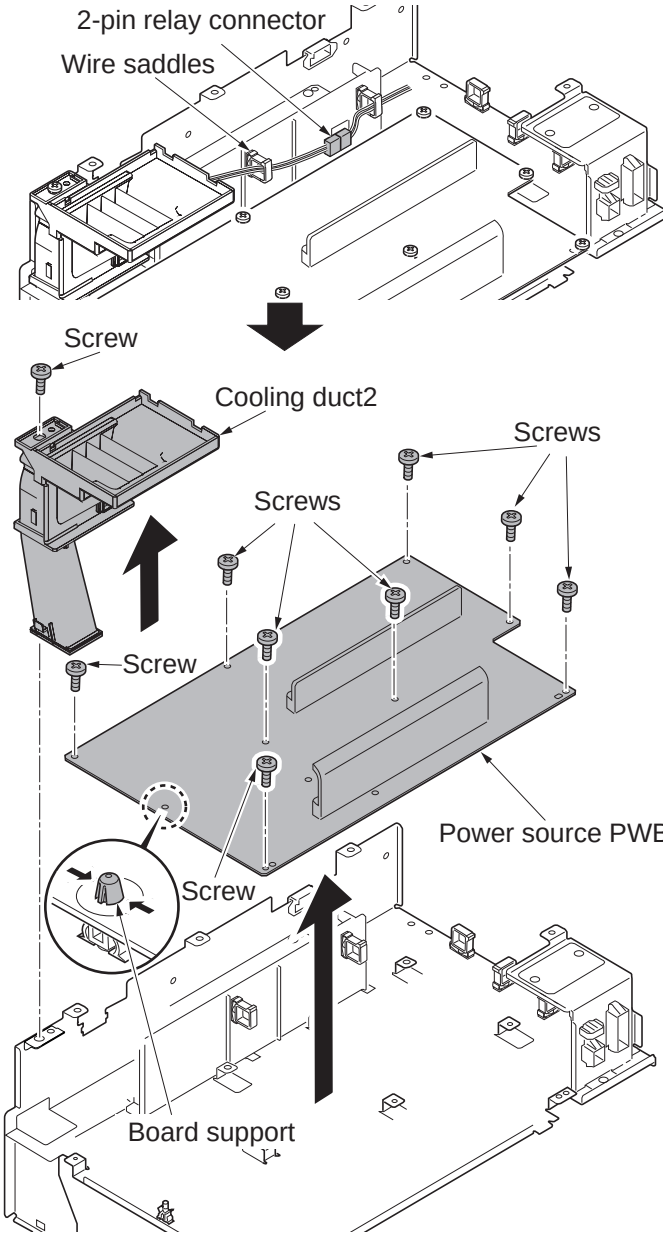

Figure 1-5-84

(4) Detaching and refitting the high voltage PWB 1

Procedure

1. Remove the power source PWB (see page 1-5-54).
2. Remove the main drive unit (see page 1-5-69).
3. Remove six connectors from high voltage PWB.

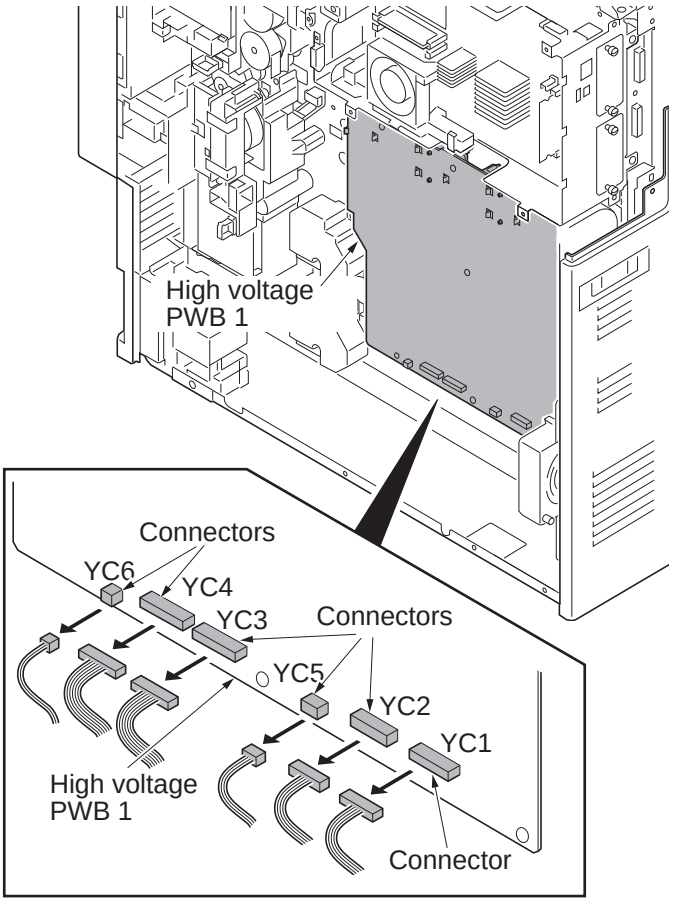

Figure 1-5-85

4. Remove eight screws.
5. Unhook two hooks of PWB spacer and then remove the high voltage PWB 1.
6. Check or replace the high voltage PWB 1 and refit all the removed parts.

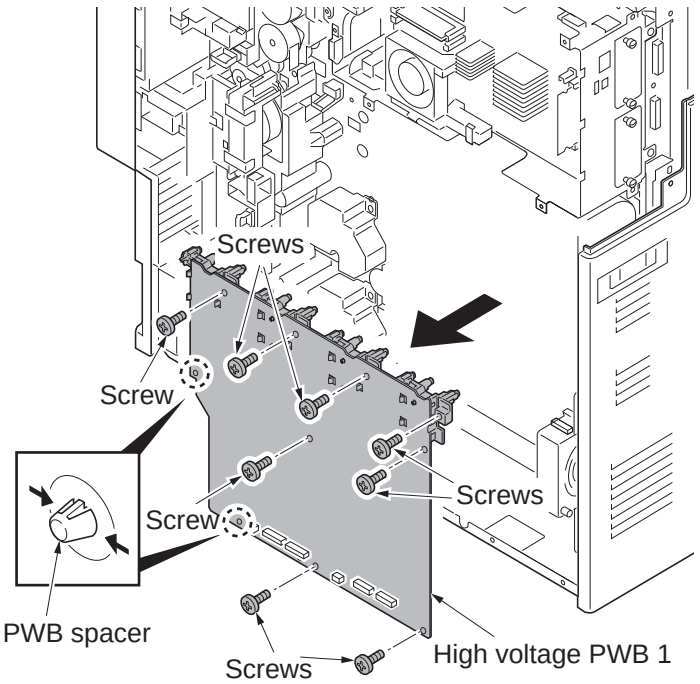

Figure 1-5-86

(5) Detaching and refitting the high voltage PWB 2

Procedure

1. Remove the main drive unit (see page 1-5-69).
2. Pull the transfer belt unit out a little (see page 1-5-37).
3. Remove two connectors from the high voltage PWB 2 assembly.

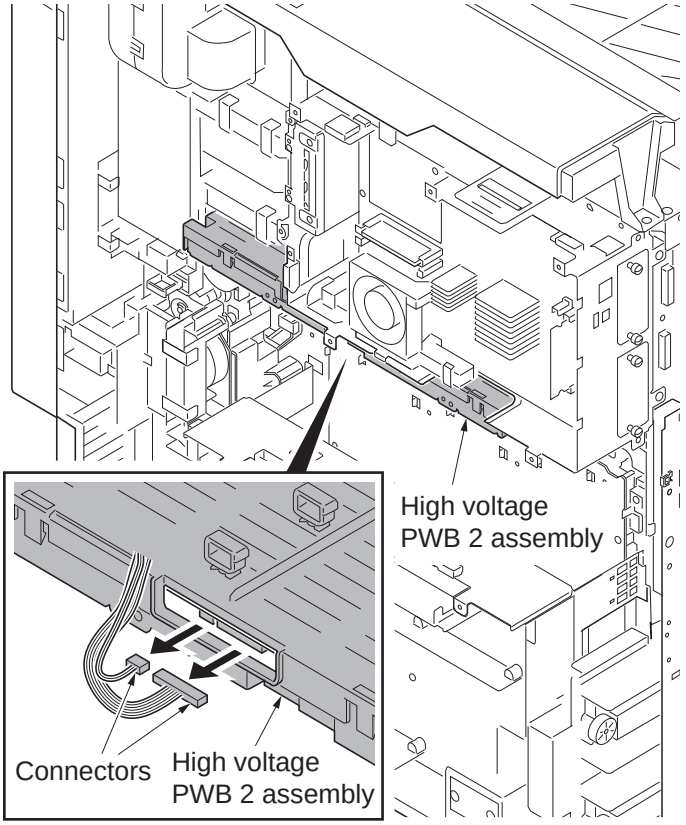

Figure 1-5-87

4. Remove two screws.
5. Unhook two hooks and then remove the high voltage PWB 2.
6. Check or replace the high voltage PWB 2 and refit all the removed parts.

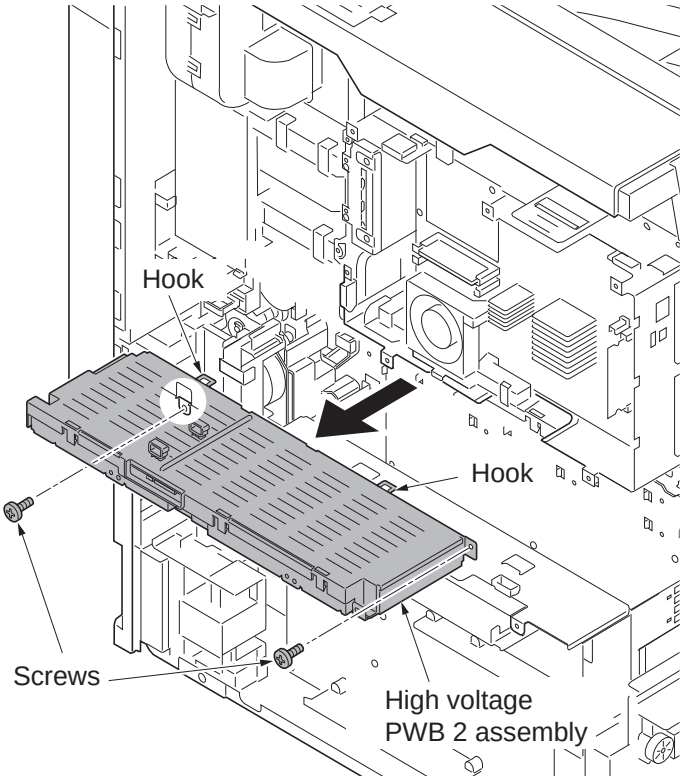

Figure 1-5-88

(6) Detaching and refitting the fuser IH PWB

Procedure

1. Remove eight screws and then remove the rear upper cover.

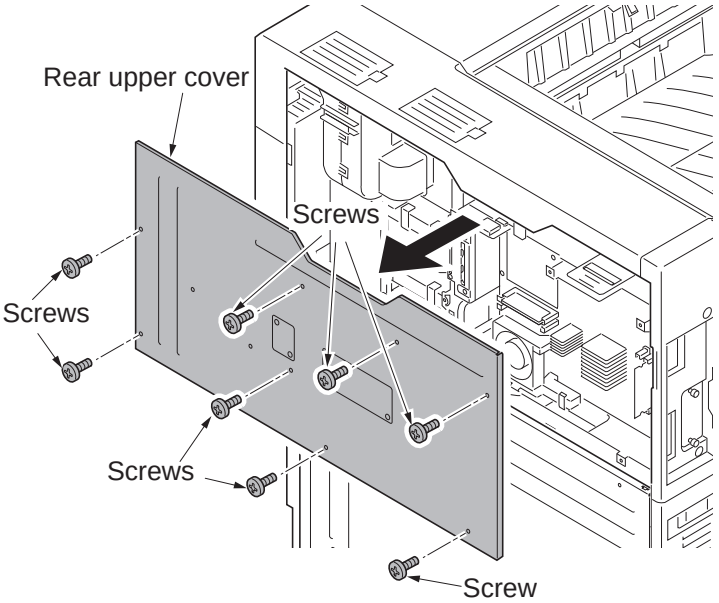

Figure 1-5-89

2. Remove eight screws.
3. Release two hanging parts and then remove the rear lower cover.
4. Remove the fuser unit (see page 1-5-43).

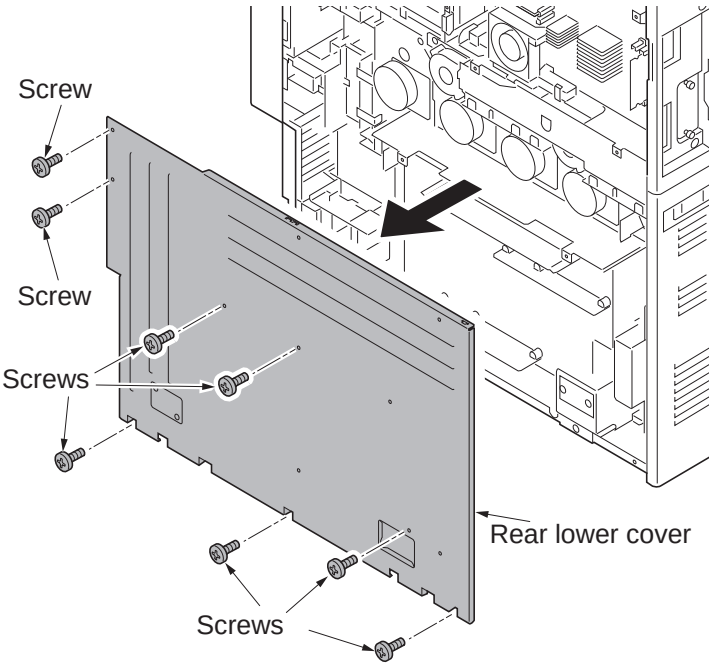

Figure 1-5-90

5. Remove two screws and then remove the ISU right cover.
6. Remove the screw and five hooks and then remove the right upper cover.

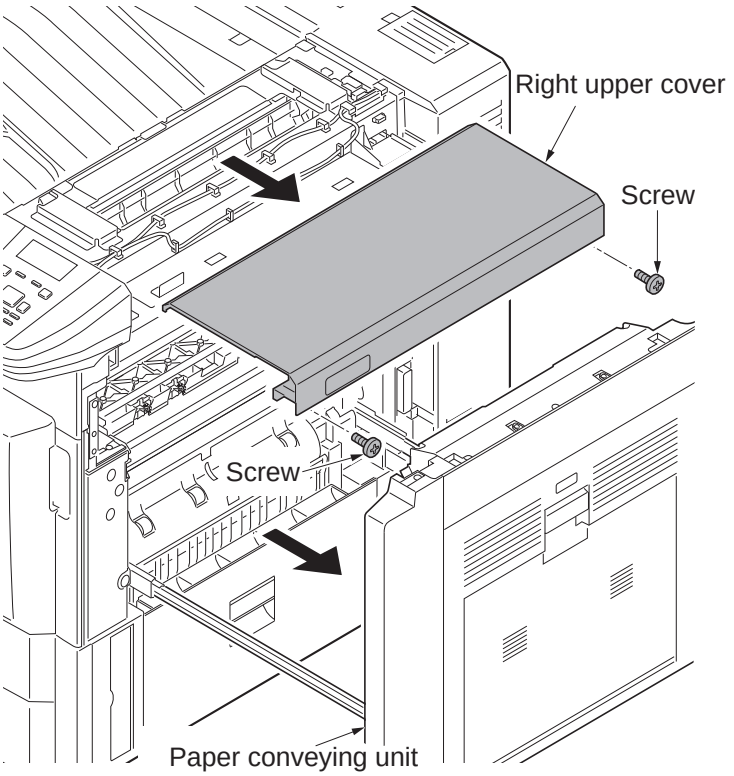

Figure 1-5-91

7. Remove the screw.
8. Unhook two hooks and then remove the right middle rear cover.

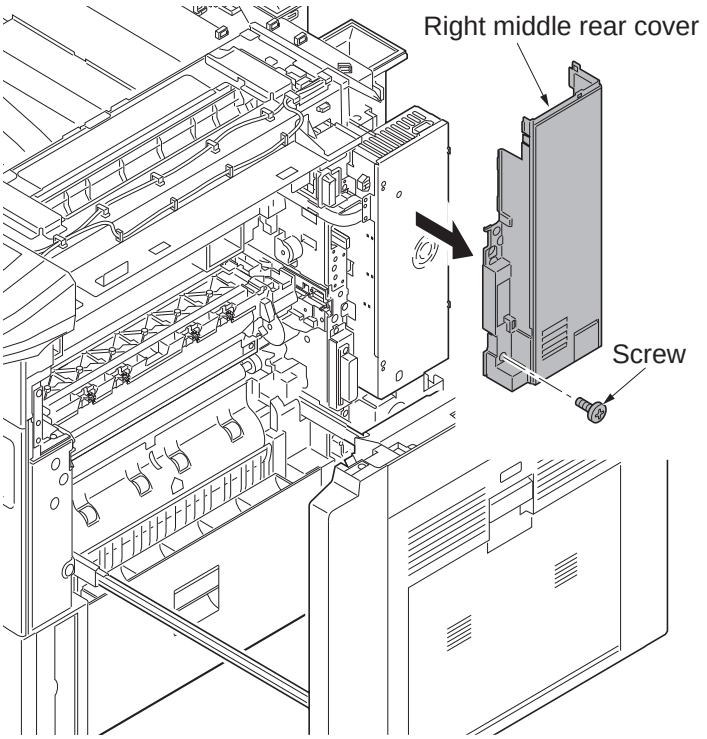

Figure 1-5-92

9. Remove four screws and the remove the fuser IH PWB cover.
10. Remove the IH electric wire cover.

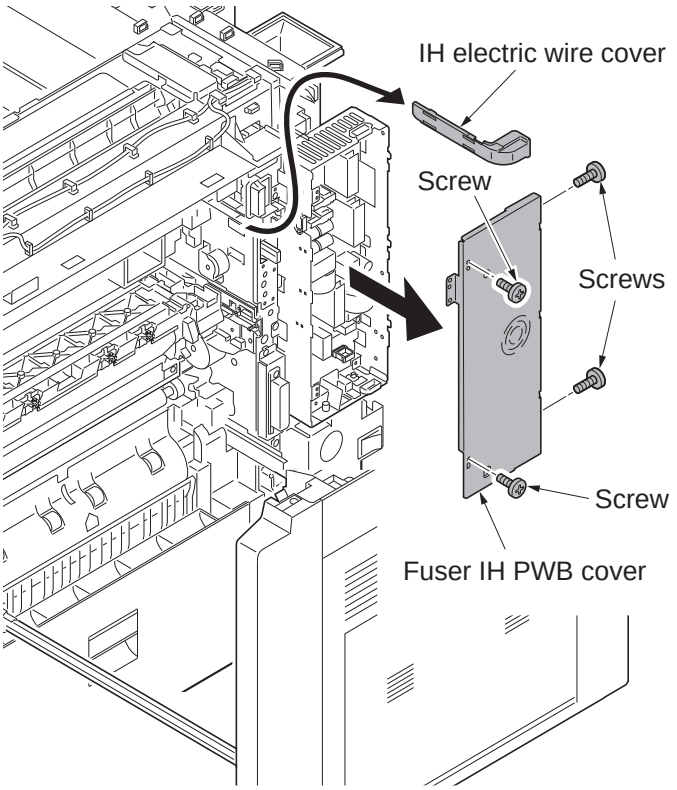

Figure 1-5-93

11. Release two wire saddles.
12. Remove four connectors from the fuser IH PWB.

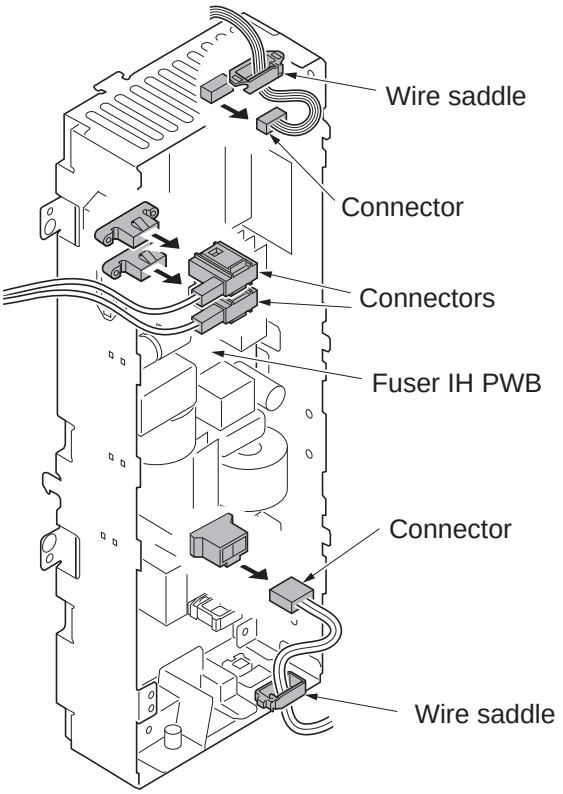

Figure 1-5-94

13. Remove two wire holders.
14. Remove the connector (YC27) from feed PWB 1.

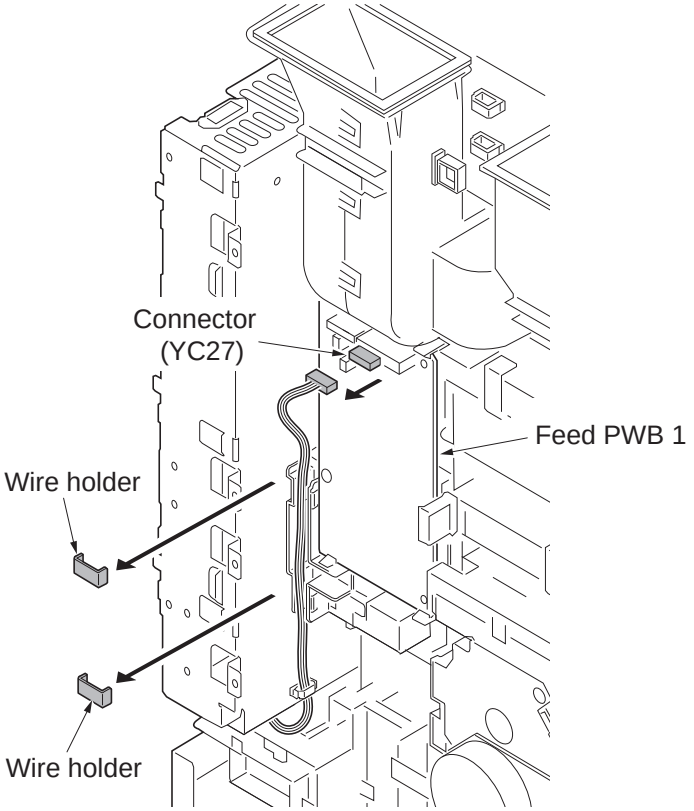

Figure 1-5-95

15. Remove three screws.
16. Unhook two hooks and then remove IH box assembly.

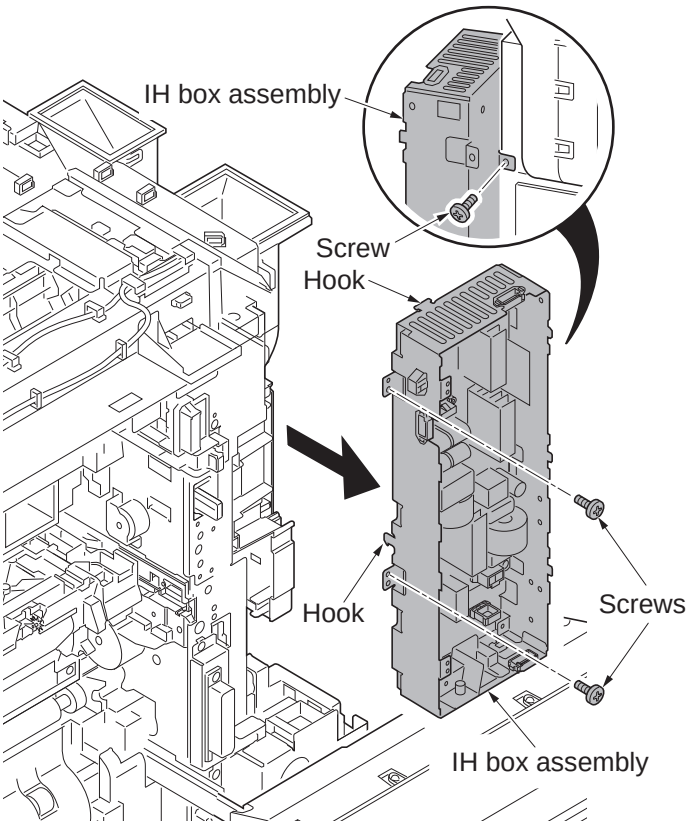

Figure 1-5-96

17. Remove two connectors.
18. Remove six screws.
19. Unhook the hook of the PWB spacer and then remove the fuser IH PWB.
20. Check or replace the fuser IH PWB and refit all the removed parts.

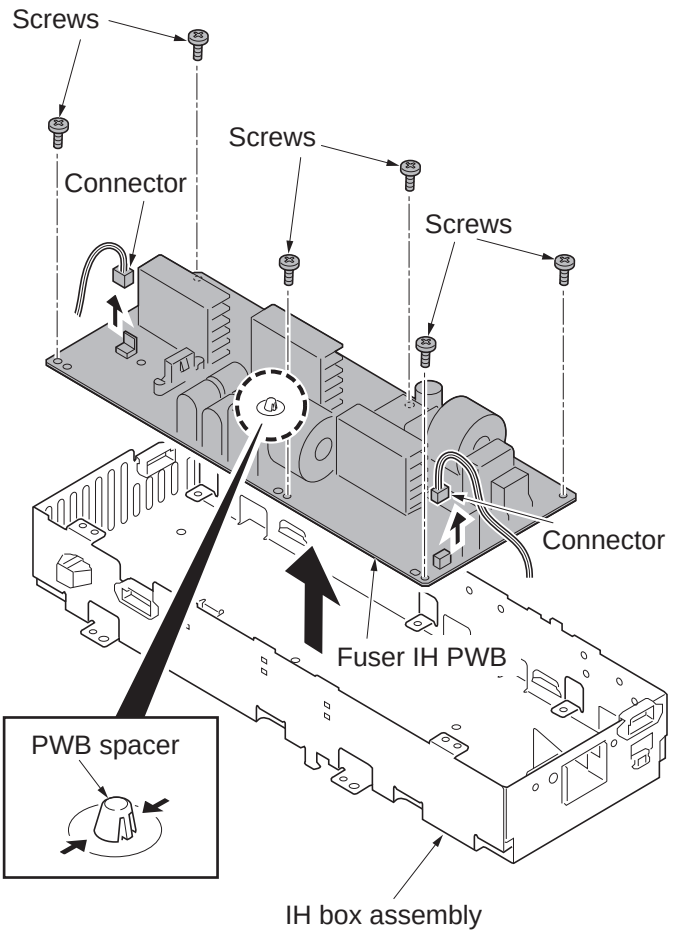

Figure 1-5-97

1-5-8 Drive section

(1) Detaching and refitting the drum drive unit K and the drum drive unit MCY

Procedure

Detaching the drum drive unit K

1. Remove the rear upper cover and the rear lower cover (see page 1-5-59).
2. Remove the connector.
3. Release the wire saddle.

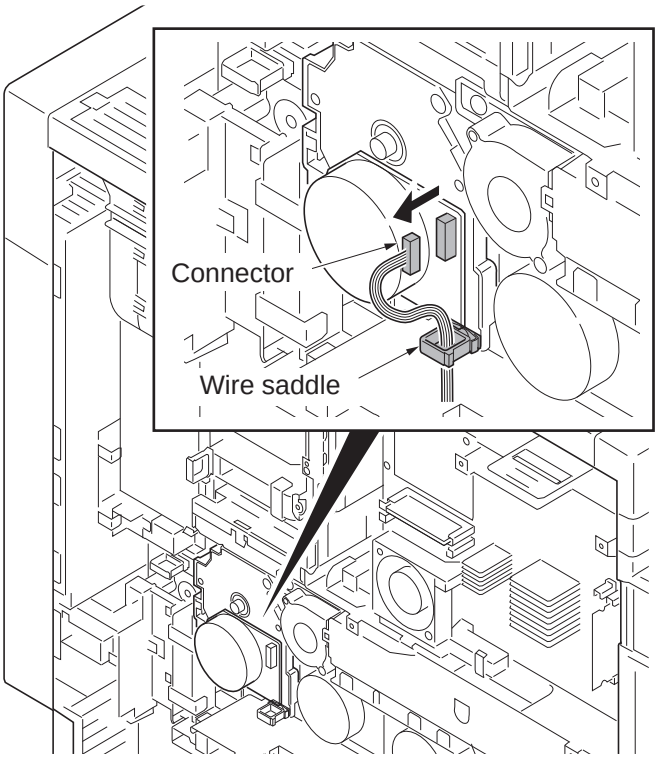

Figure 1-5-98

4. Remove three screws.
5. Remove the drum drive unit K.

*: Do not have a shaft part alone when you carry drum drive unit K. (Have the housing.)

*: Put support on the tip of the shaft so that the shaft may become the horizontal when you put drum drive unit K on the table etc.

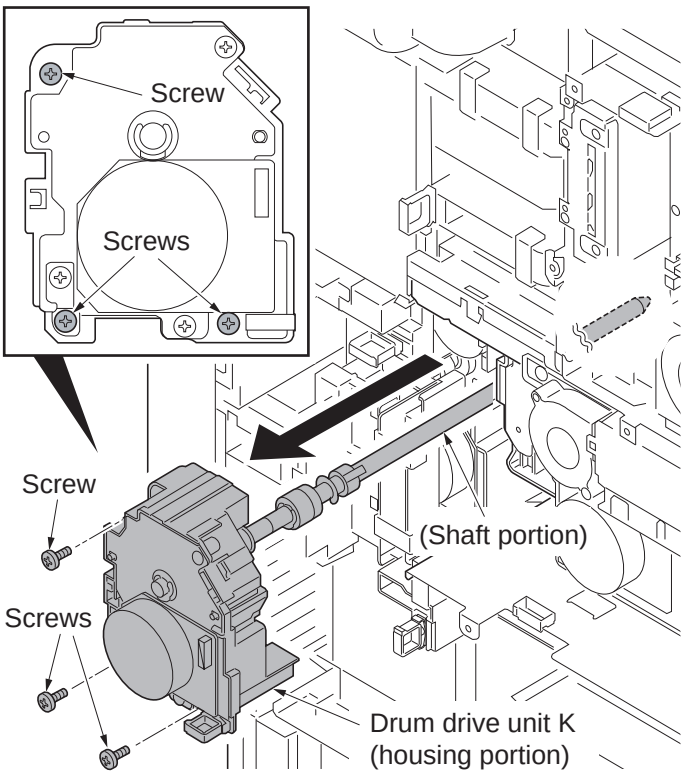

Figure 1-5-99

Detaching the drum motor K

1. Remove the rear upper cover and the rear lower cover (see page 1-5-59).
2. Remove the connector.
3. Release the wire saddle.

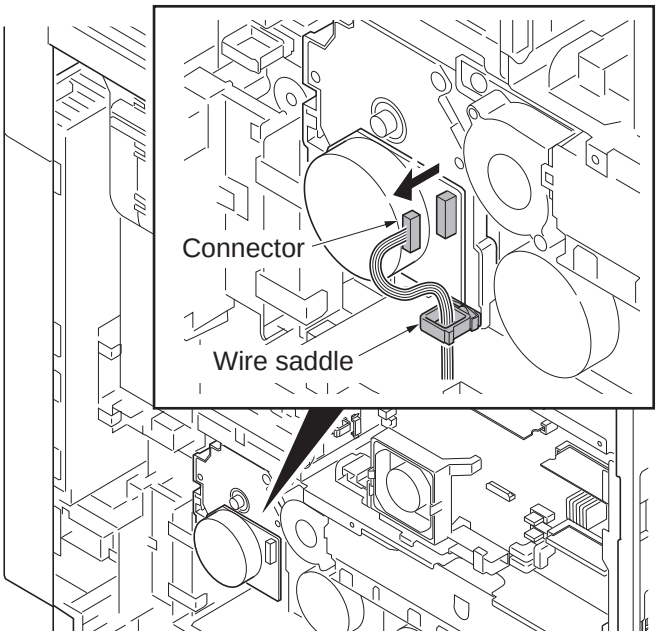

Figure 1-5-100

4. Remove three screws.
5. Remove the drum motor unit K.

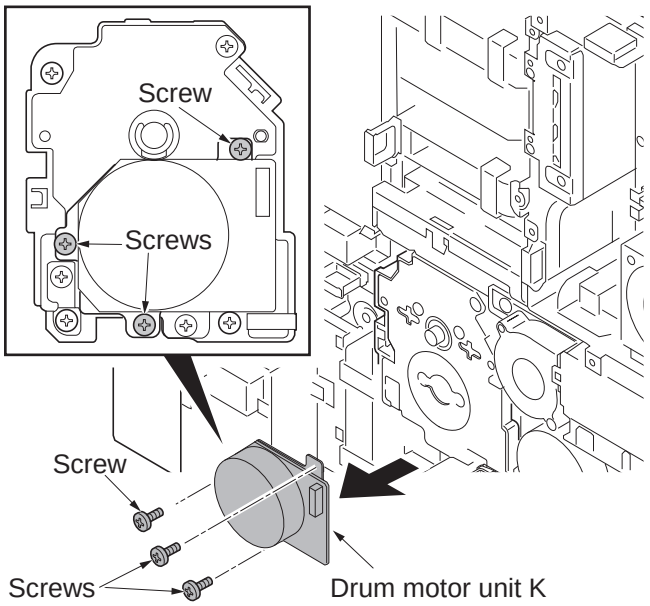

Figure 1-5-101

6. Remove two screws.
7. Remove the drive mounting bracket K.

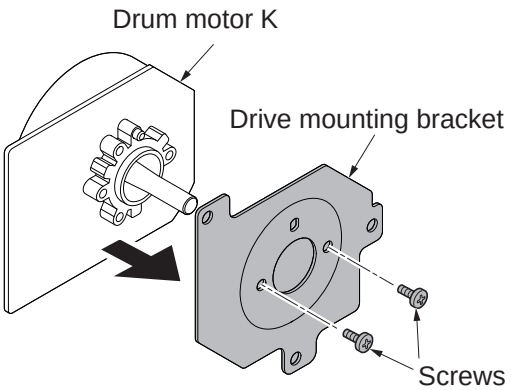

Figure 1-5-102

Detaching the drum drive unit MCY

1. Remove the left upper cover (see page 1-5-47).
2. Remove the left cover (see page 1-5-19).
3. Remove the connector.
4. Remove the screw.

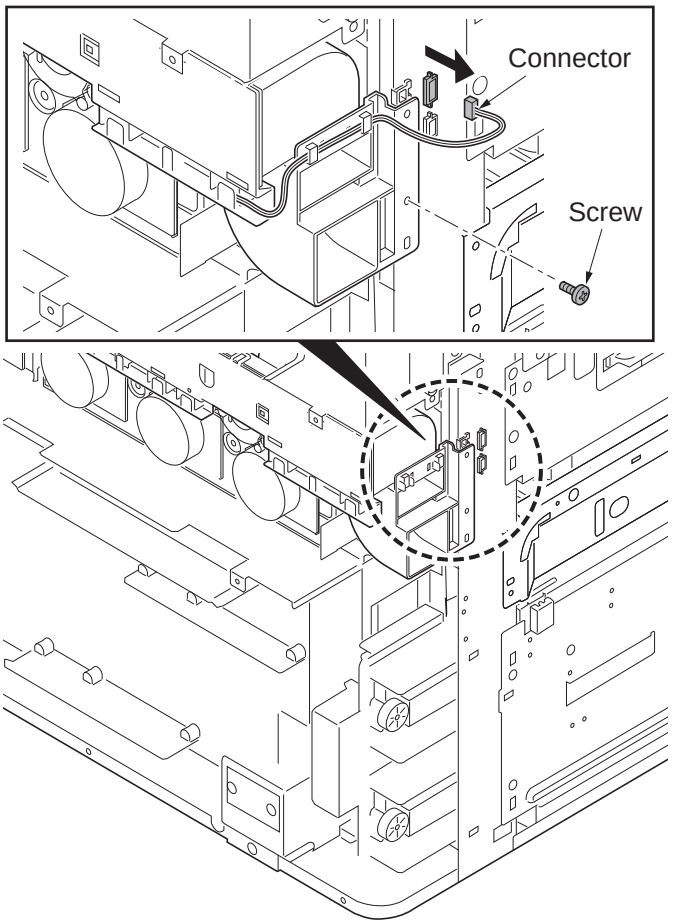

Figure 1-5-103

5. Remove as one body the toner unit duct, the toner fan motor 1 and the toner fan motor 2.

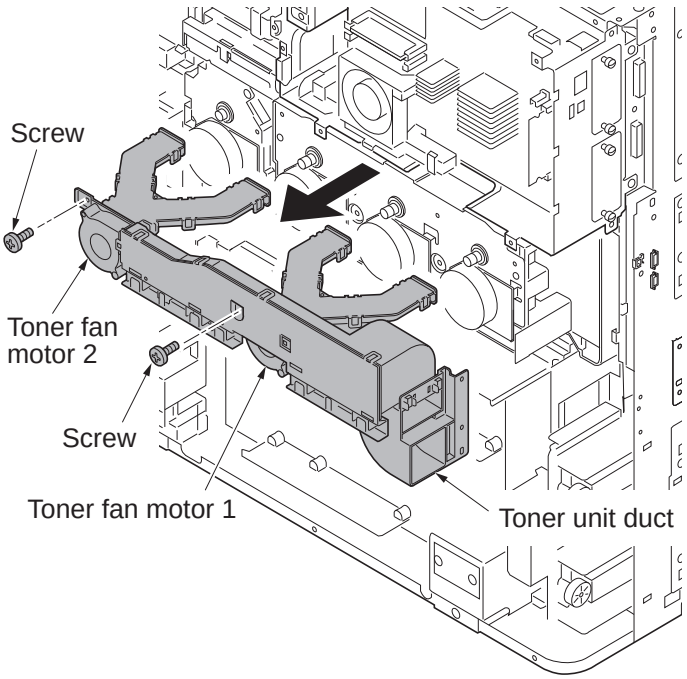

Figure 1-5-104

6. Release wire saddles.
   30ppm model/35ppm model: 1
   45ppm model/55ppm model: 2
7. Remove connectors.
   30ppm model/35ppm model: 1
   45ppm model/55ppm model: 3

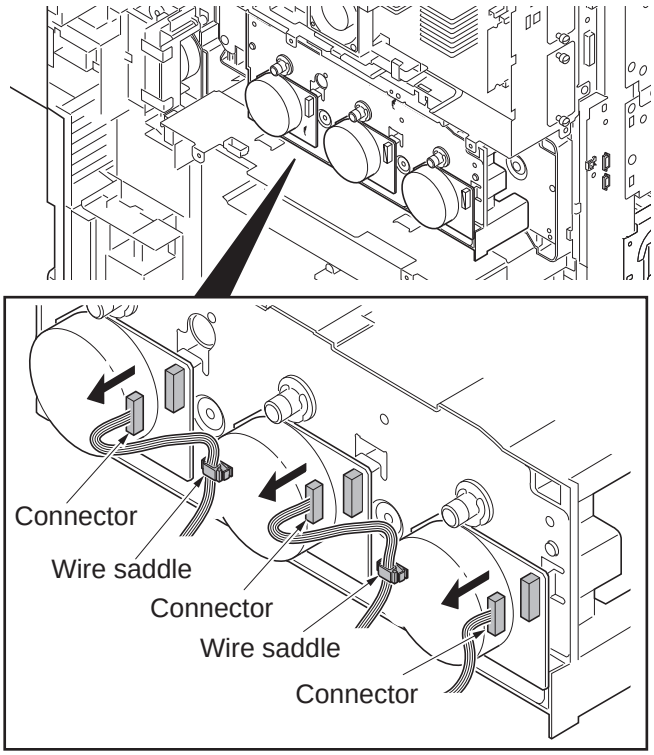

Figure 1-5-105

8. Remove five screws and then remove the drum drive unit MCY.
*: Do not have a shaft part alone when you carry drum drive unit MCY. (Have the housing.)
*: Put support on the tip of the shaft so that the shaft may become the horizontal when you put drum drive unit MCY on the table etc.
9. Check or replace the drum drive unit K and the drum drive unit MCY and refit all the removed parts.

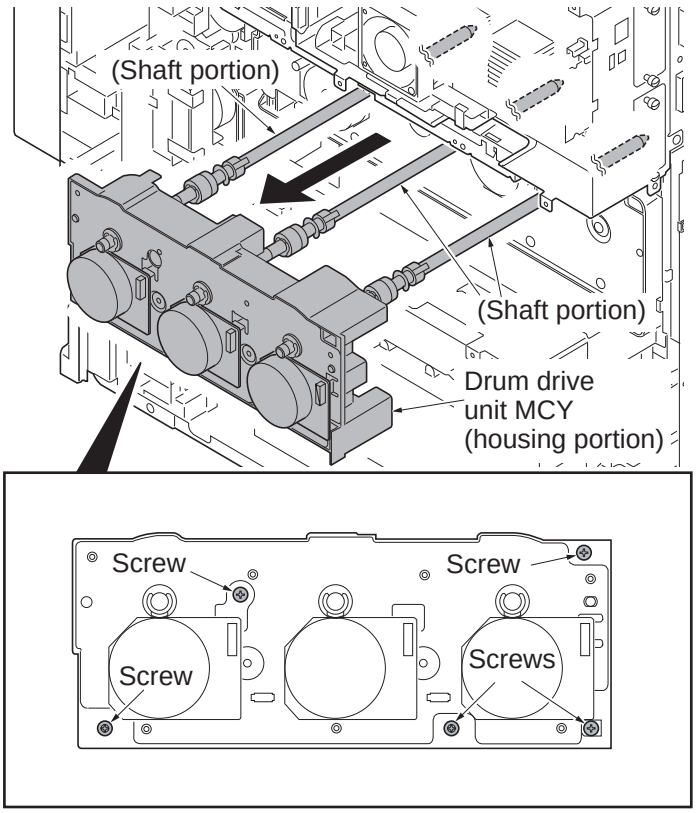

Figure 1-5-106

Detaching the drum motor MCY

Perform steps 1 through 5 of removing the drum drive unit MCY.

1. Release the wire saddle of the motor to remove. (See page 1-5-66.)

*: For the drum moros M, C, and MCY only.

2. Remove the connector from the motor to remove.

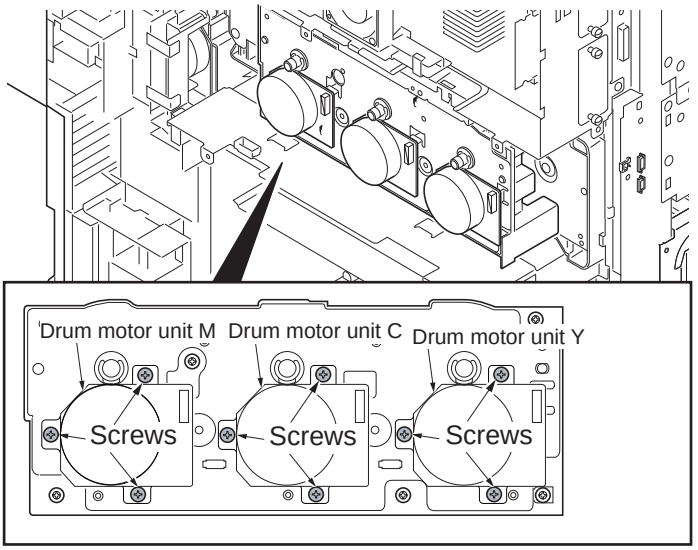

Figure 1-5-107

3. Remove three screws
4. Remove the drum motor unit.

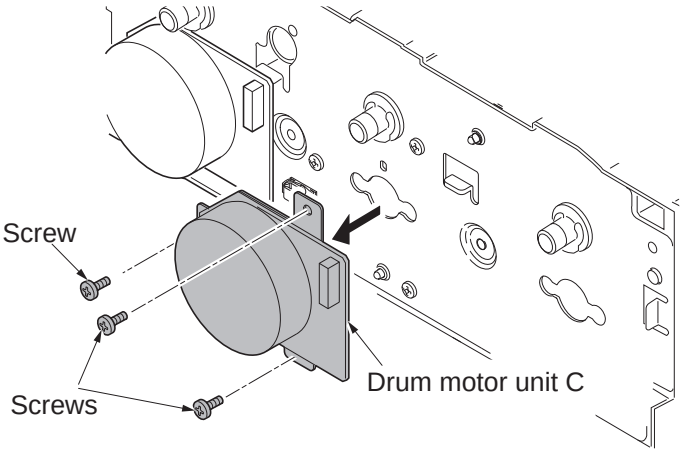

Figure 1-5-108

5. Remove two screws
6. Remove the drive mounfing bracket.

*: Remove the drum motor M in the same way.

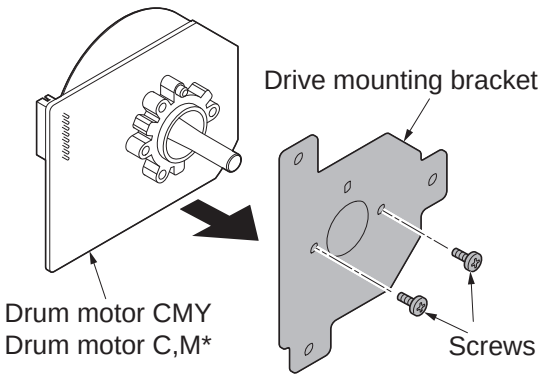

Figure 1-5-109

(2) Detaching and refitting the main drive unit

Procedure

1. Remove the drum drive unit K and the drum drive unit MCY (see page 1-5-64).
2. Release three wire saddles on the main drive unit.
3. Remove two connectors.

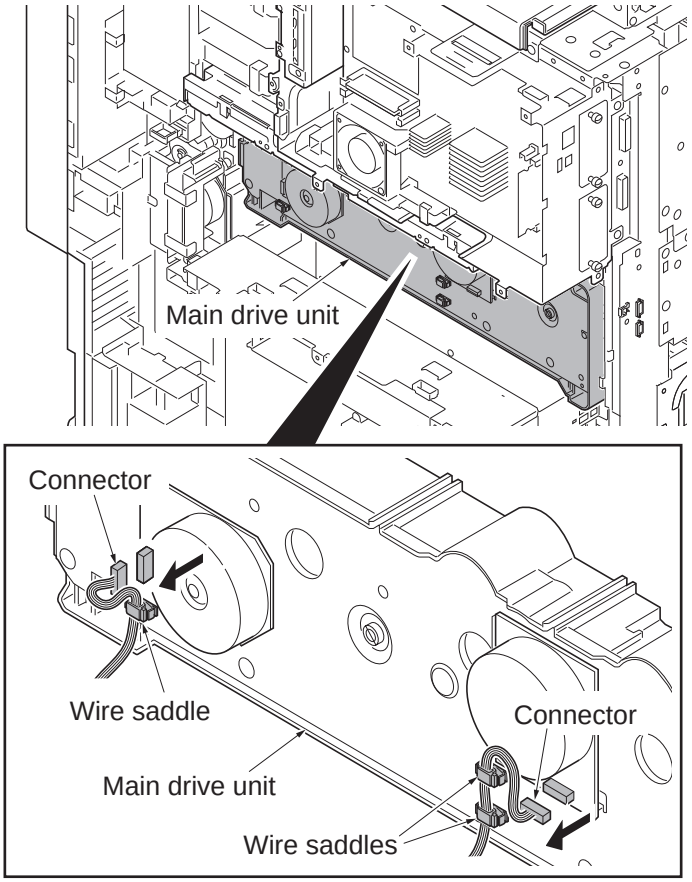

Figure 1-5-110

4. Remove five screws.
5. Remove the main drive unit.
6. Check or replace the main drive unit and refit all the removed parts.

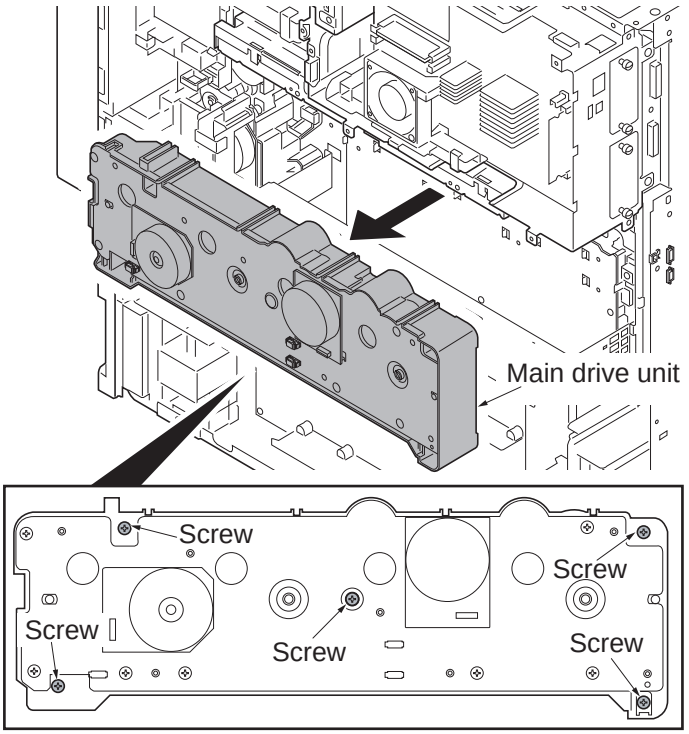

Figure 1-5-111

(3) Detaching and refitting the fuser drive unit, transfer drive unit and feed drive unit

Procedure

Detaching the fuser drive unit

1. Remove the rear upper cover and the rear lower cover (see page 1-5-59).
2. Remove five wire holders of feed PWB 1 assembly.
3. Release the wire saddle.

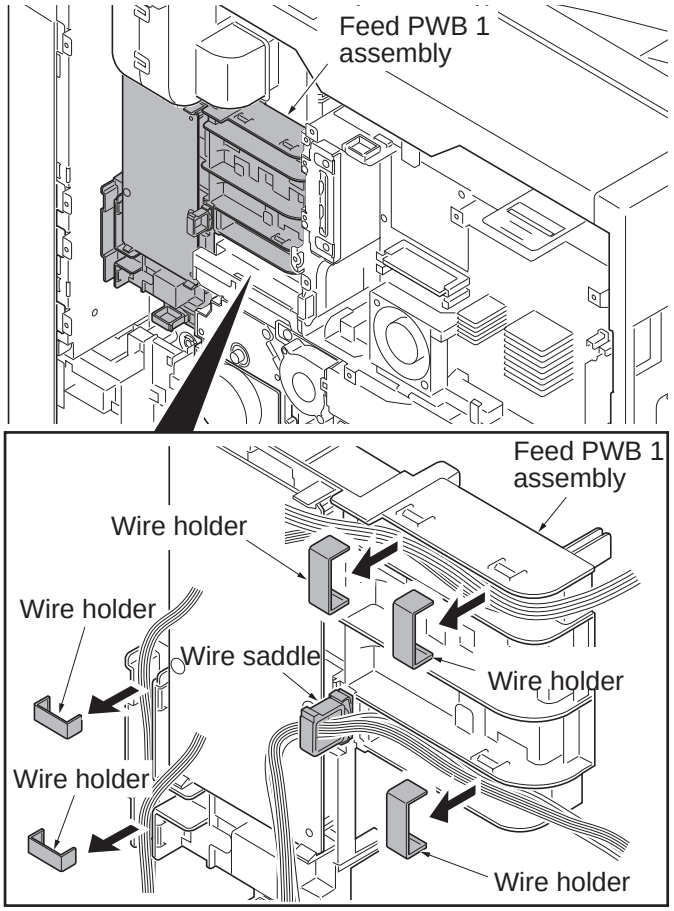

Figure 1-5-112

4. Remove the following twenty connectors from the feed PWB 1.
   YC18, YC19
   YC20, YC27
   YC26, YC3
   YC17, YC14
   YC10, YC16
   YC13, YC12
   YC23, YC25
   YC15, YC11
   YC5, YC4
   YC1 (FFC connector with a lock)
   YC2 (FFC connector with a lock)

*: When removing the FFC from the FFC connector with a lock, remove the FFC after released by lifting down the lock lever (see page 1-5-48).

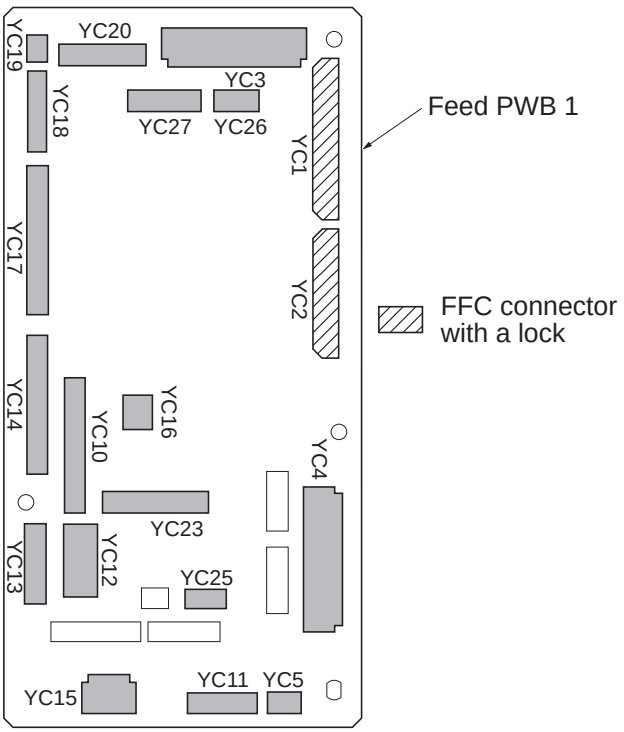

Figure 1-5-113

5. Remove the FFC from the FFC connector with a lock (YC4) on the engine PWB.
   Remove the FFC from the FFC connector with a lock (YC1) on the feed PWB 2.

*: When removing the FFC from the FFC connector with a lock, remove the FFC after released by lifting down the lock lever (see page 1-5-48).

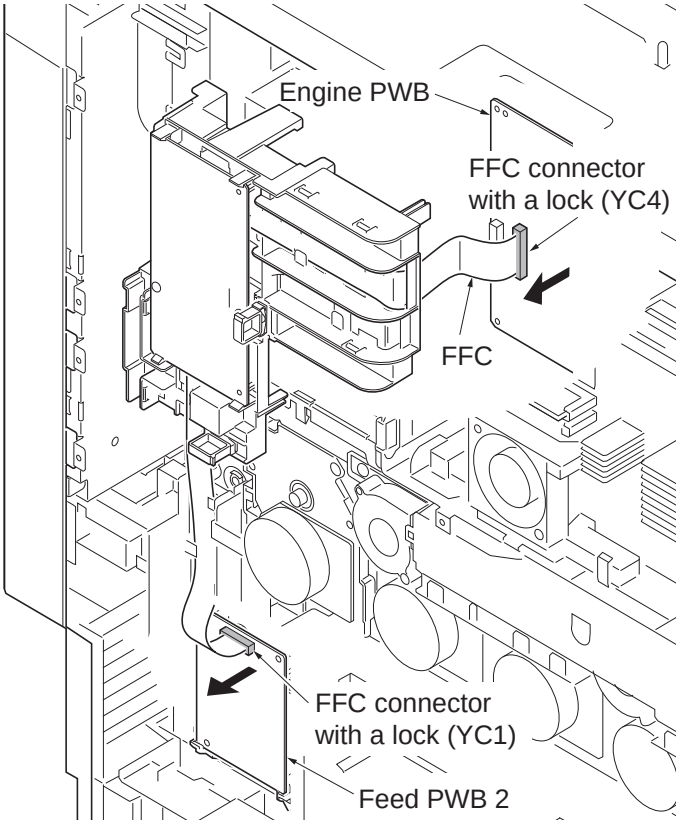

Figure 1-5-114

6. Remove three screws.
7. Remove the feed PWB 1 assembly.

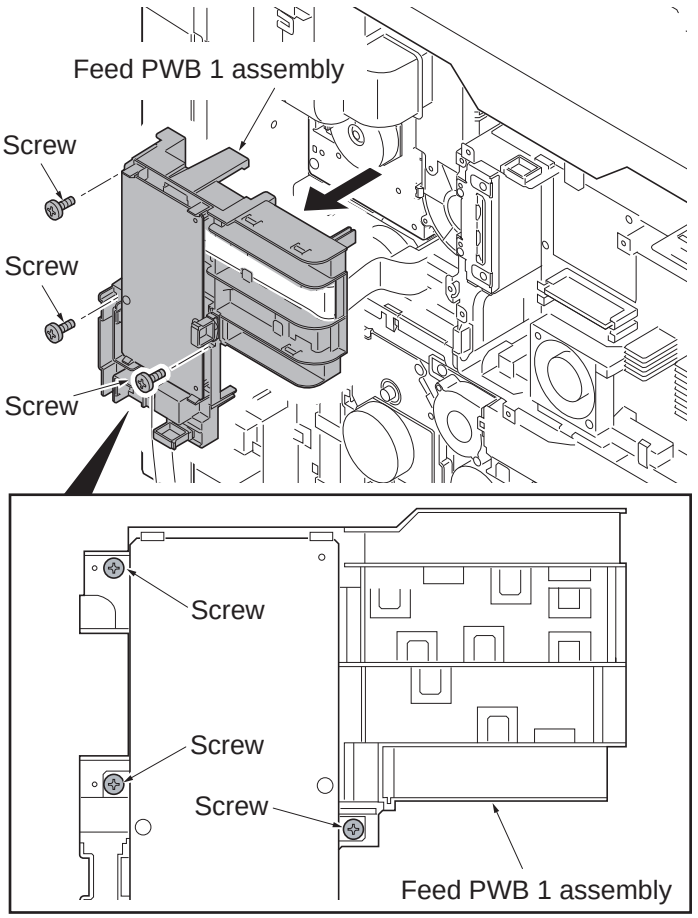

Figure 1-5-115

8. Remove the connector.
9. Remove three screws.
10. Remove the fuser drive unit.

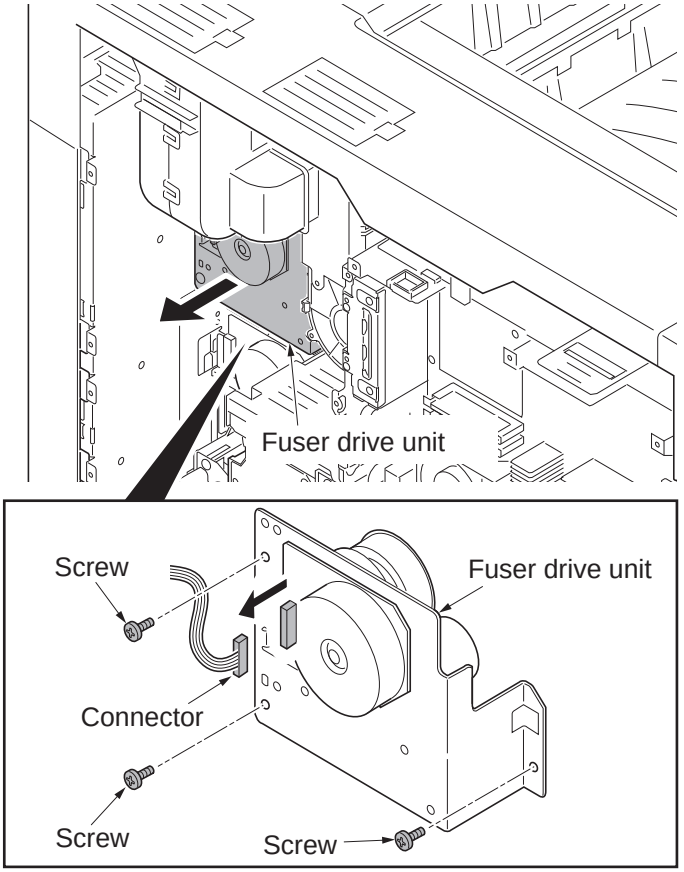

Figure 1-5-116

Detaching the transfer drive unit

11. Pull out the transfer belt unit a little (see page 1-5-37).
12. Release the clamp.
13. Remove the connector.
14. Remove three screws.
15. Remove the transfer drive unit.

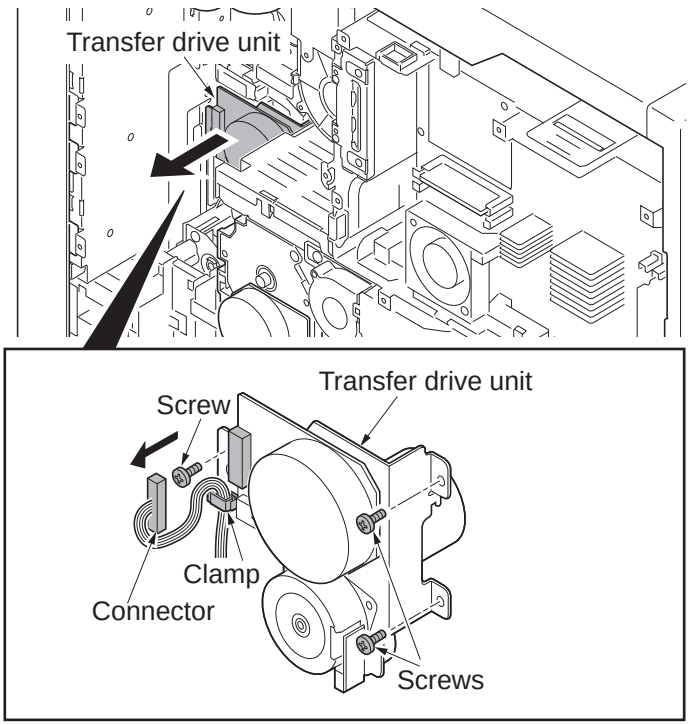

Figure 1-5-117

Detaching the feed drive unit

16. Remove three wire holders from the feed 2 FFC guide.

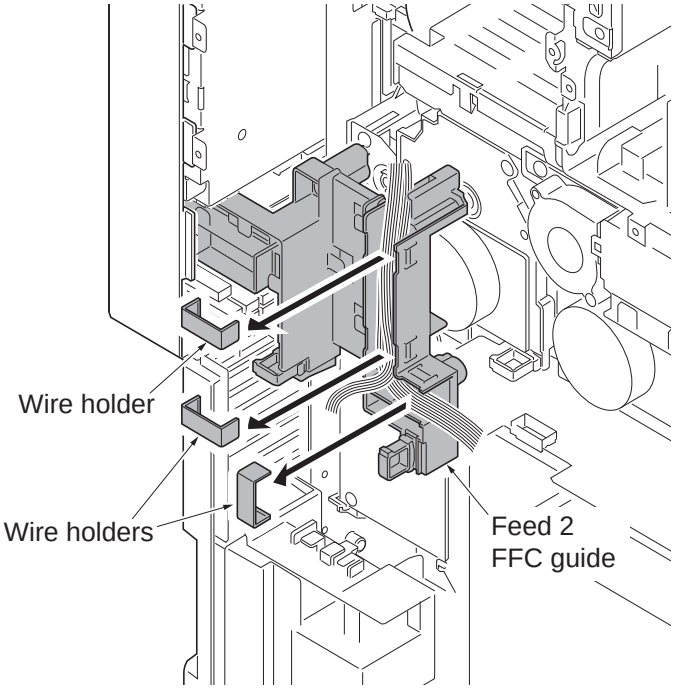

Figure 1-5-118

17. Remove two screws and then remove the feed 2 FFC guide.

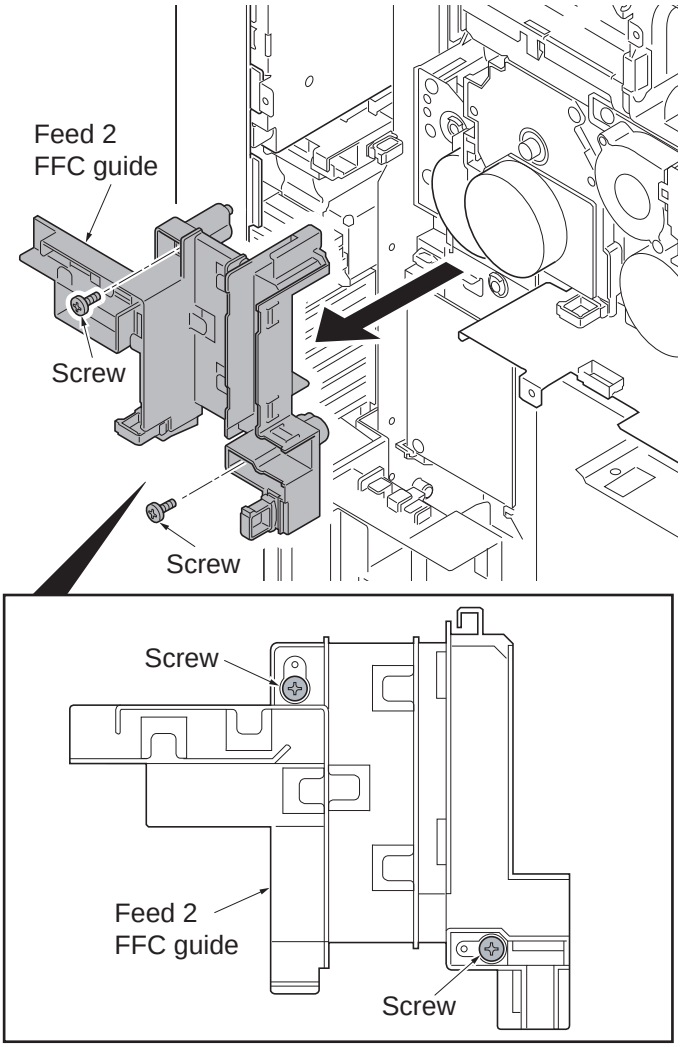

Figure 1-5-119

18. Remove the following nine connectors from the feed PWB 2.
    YC10
    YC11
    YC7
    YC8
    YC3
    YC5
    YC6
    YC13
    YC12

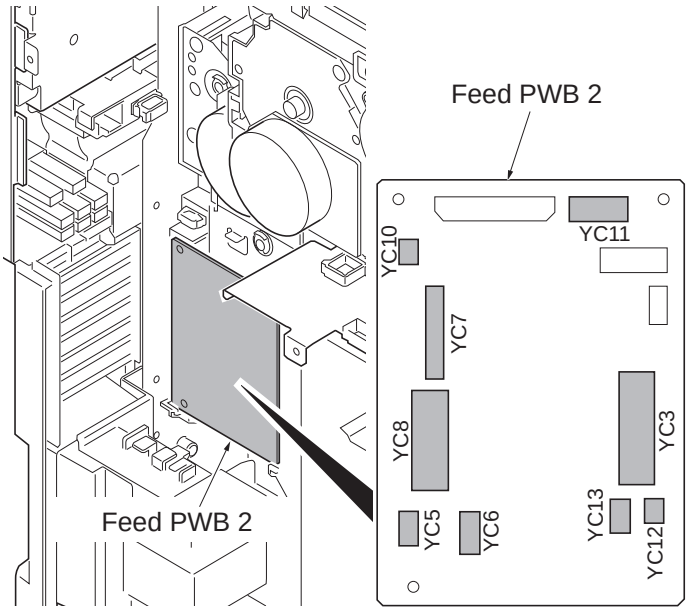

Figure 1-5-120

19. Remove three screws.
20. Remove the feed drive unit.

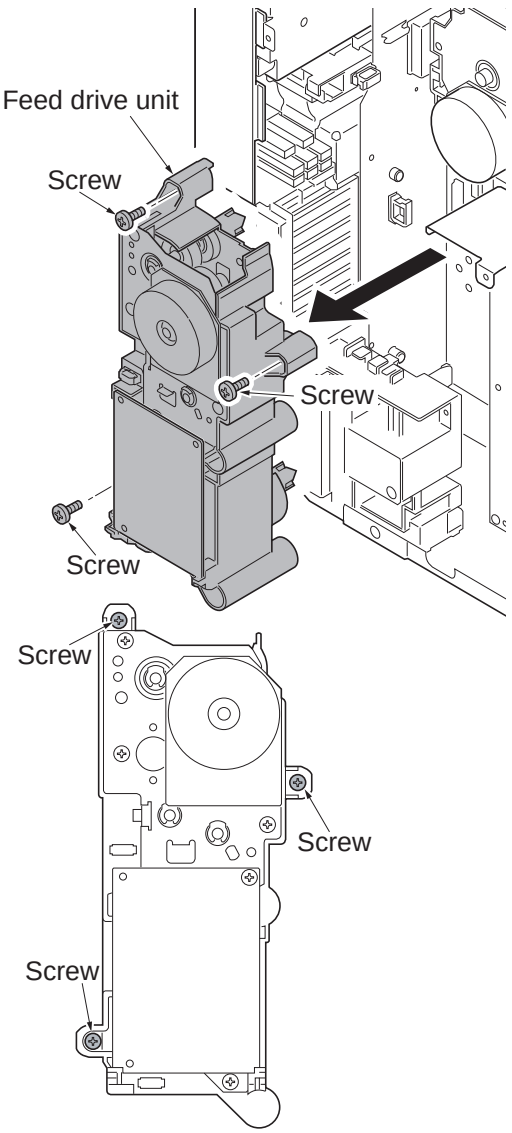

Figure 1-5-121

21. Check or replace the feed drive unit and refit all the removed parts.
    *: Connect the connector (yellow) to the connector of paper feed clutch 1 on stamp [YELLOW] side as before, when removing the connector of the paper feed clutch as the check of the feed drive unit etc.

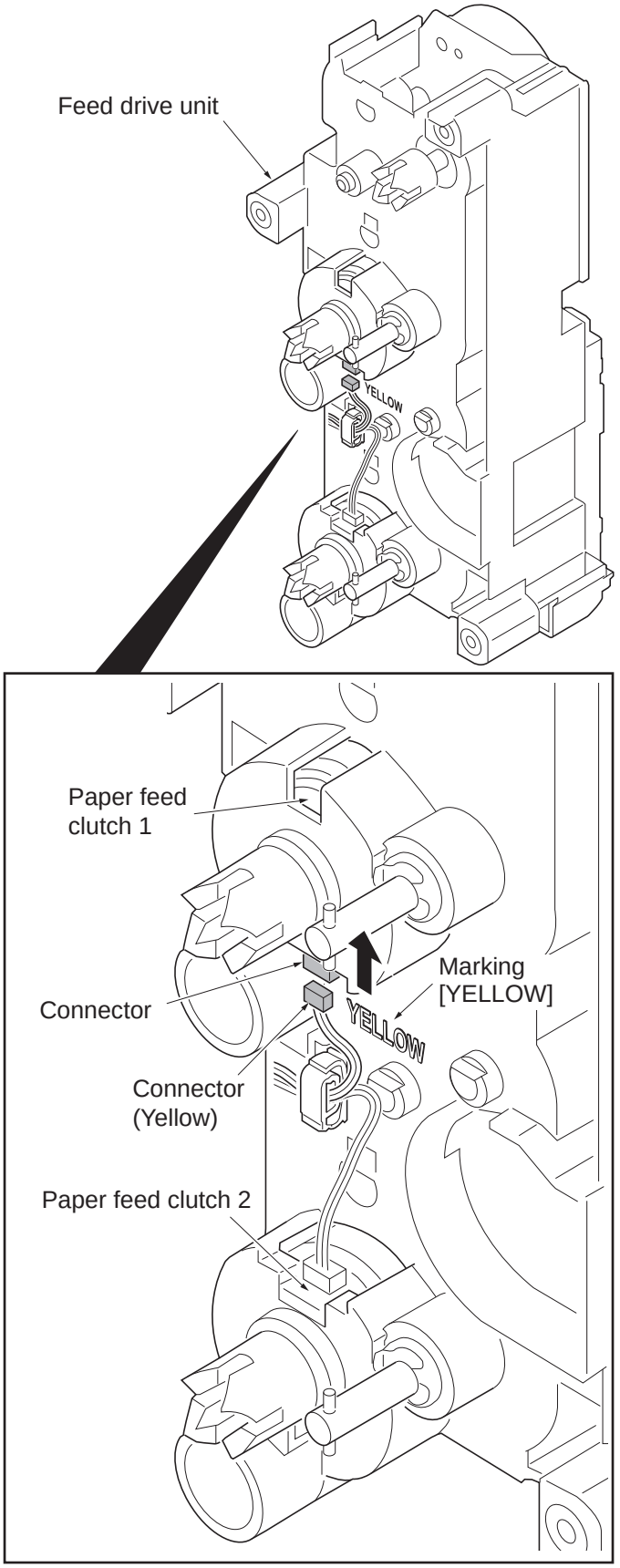

Figure 1-5-122

(4) Detaching and refitting the lift motor 1 and 2

Procedure

1. Remove the rear lower cover (see page 1-5-59).
2. Remove the power source assembly (see page 1-5-54).
3. Remove the connector each.
4. Remove two screws each.
5. Remove the lift motor 1 and 2.
6. Check or replace the lift motor and refit all the removed parts.

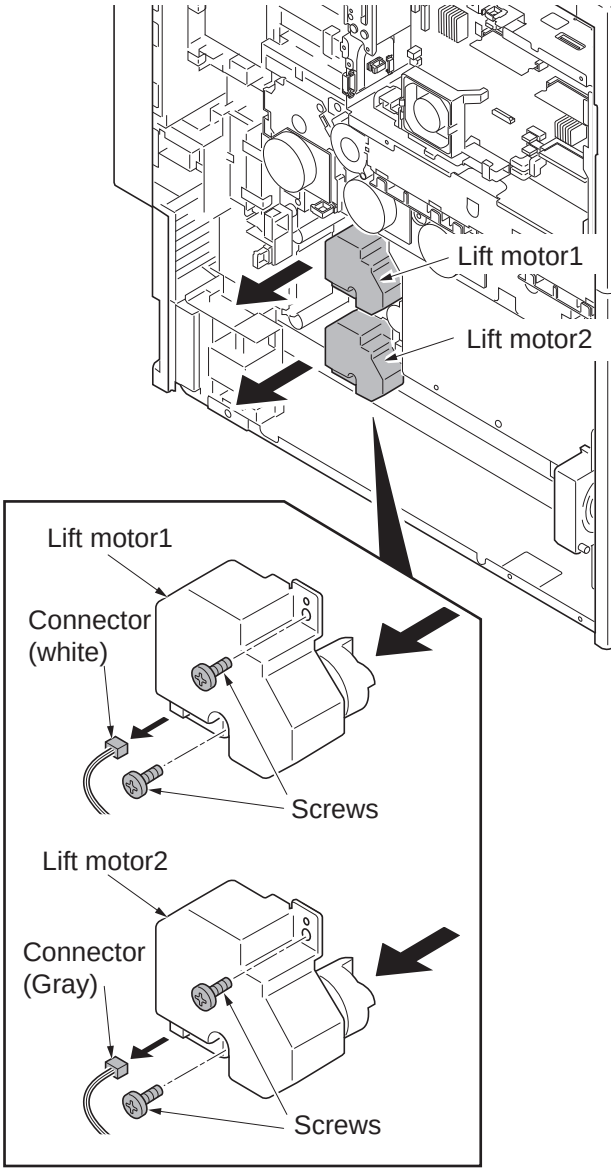

Figure 1-5-123

1-5-9 Others

(1) Detaching the eject filter

Procedure

1. Unhook the hook each and remove two eject filter units.
2. Remove the eject filter from the eject cover.
3. Clean or replace the eject filter and refit the filter.

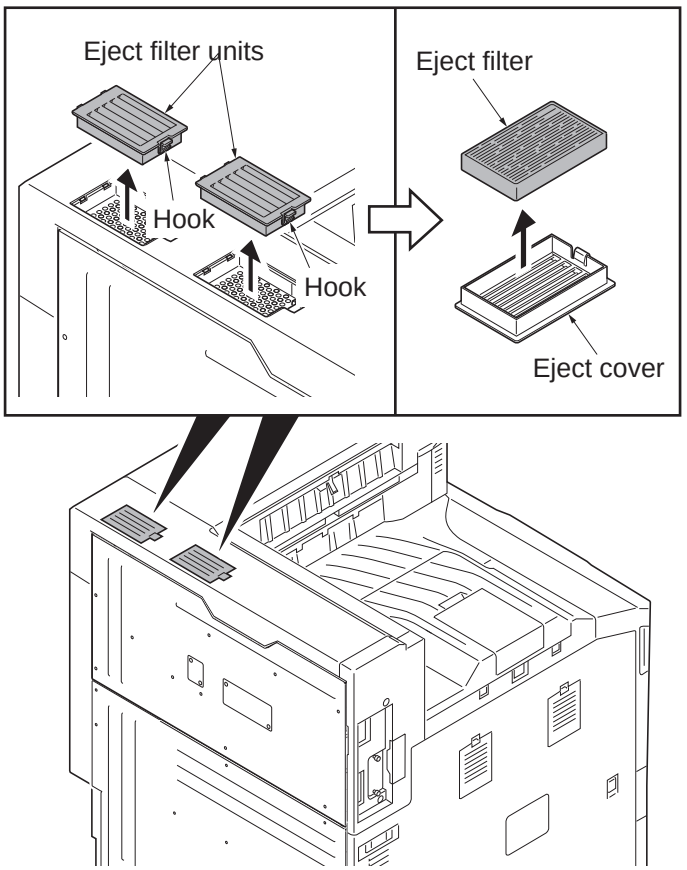

Figure 1-5-124

(2) Detaching and refitting the toner filter

Procedure

1. Remove the toner filter unit while gripping the levers.
2. Clean or replace the toner filter unit and refit the filter.

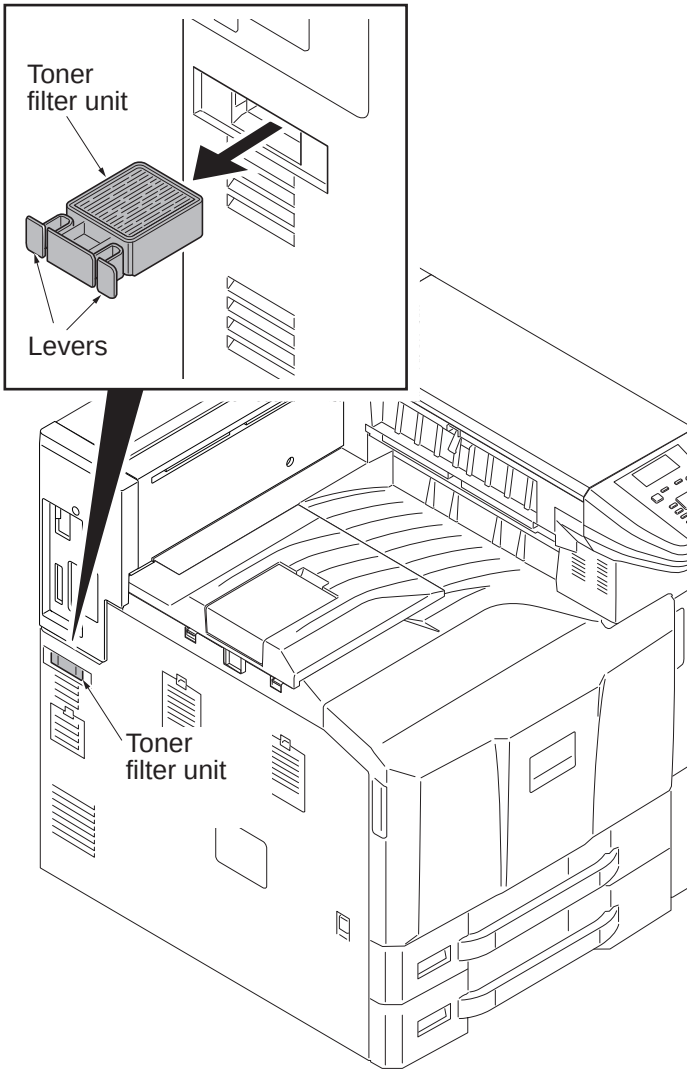

Figure 1-5-125

(3) Detaching and refitting the fan filter

Procedure

1. Open the front cover.
2. Remove the fan filter by releasing the lever.
3. Clean the fan filter.
4. Refit the fan filter.

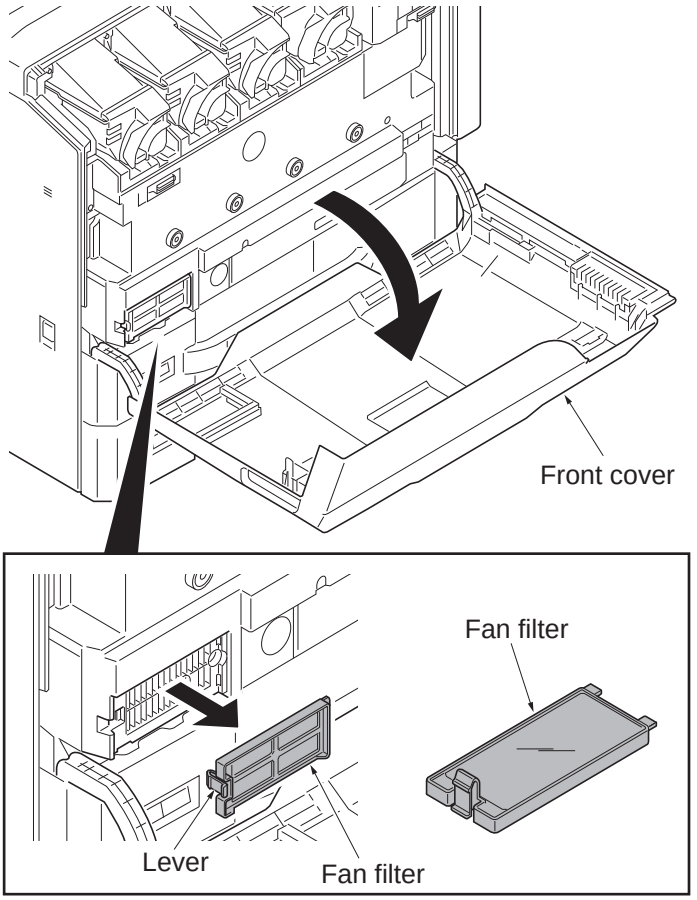

Figure 1-5-126

(4) Detaching and refitting the transfer belt filter

Procedure

1. Remove two transfer belt filters by releasing the lever.
2. Clean the transfer belt filter.
3. Refit the transfer belt filter.

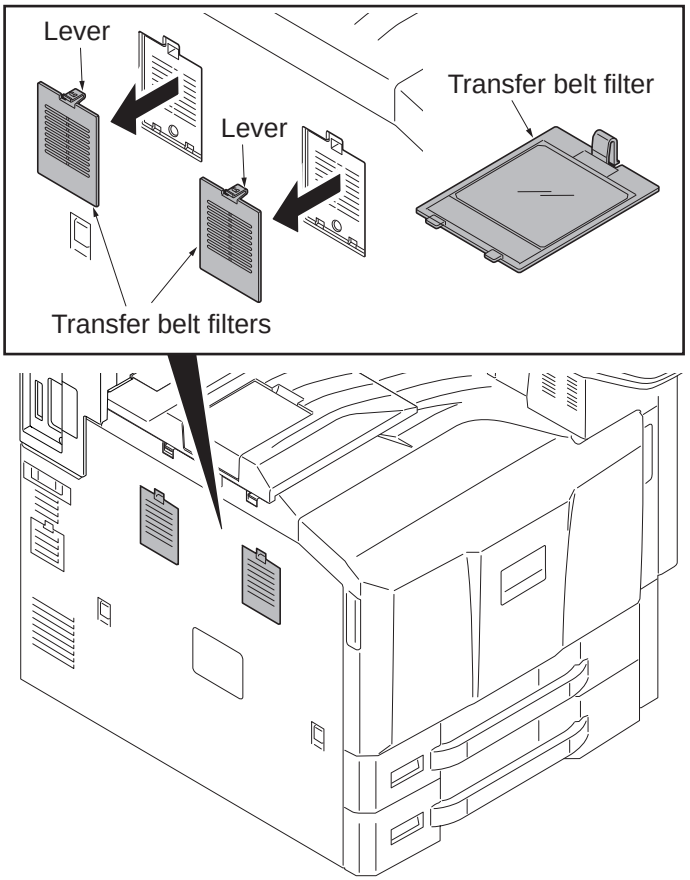

Figure 1-5-127

(5) Detaching and refitting the left filter

Procedure

1. Remove the left filter cover by releasing the lever.
2. Remove the left filter.
3. Clean or replace the left filter and refit the filter.

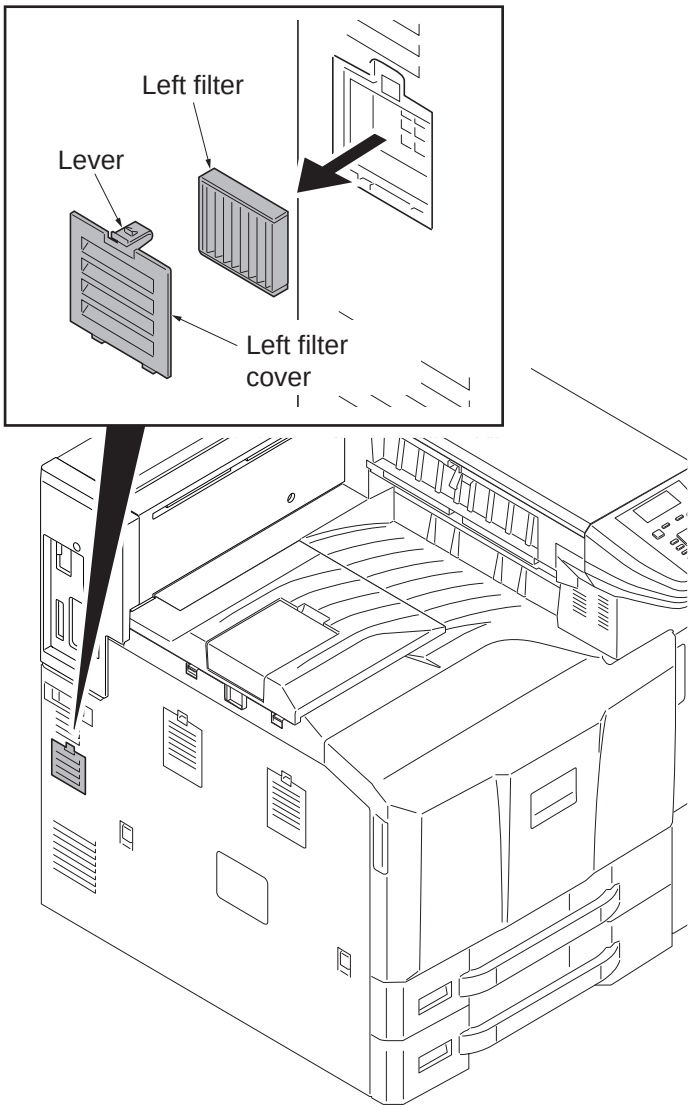

Figure 1-5-128

(6) Detaching and refitting the developer filter

Procedure

1. Remove the developer filter cover by releasing the lever.
2. Remove the developer filter.
3. Clean the developer filter and refit the filter.

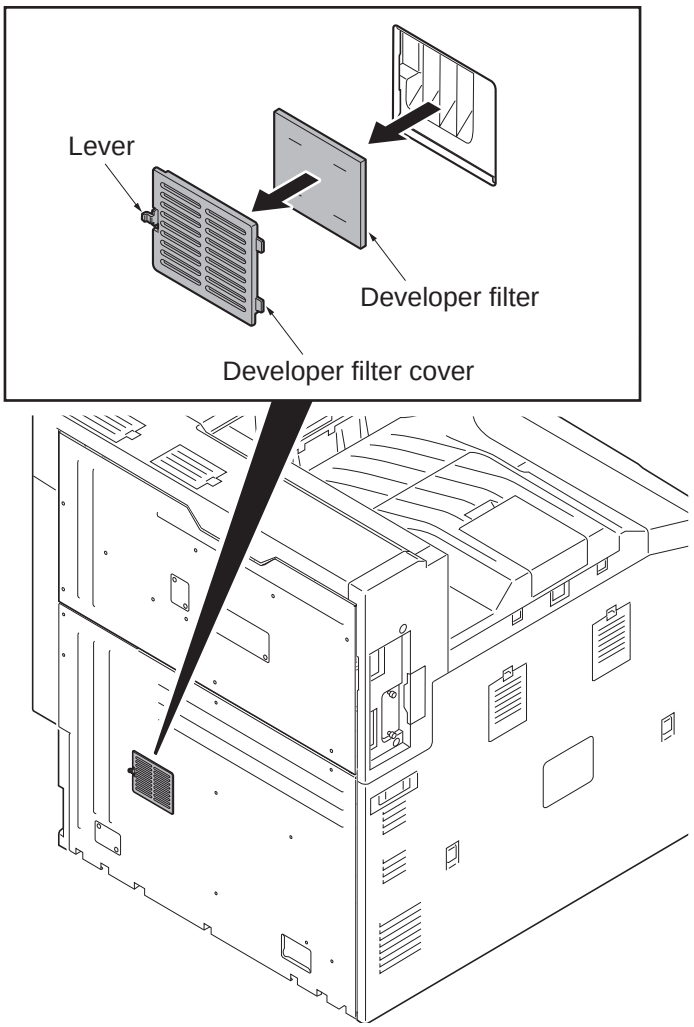

Figure 1-5-129

(7) Detaching and refitting the hard disk unit

Procedure

1. Perform maintenance mode U917 (backup data reading) (see page 1-3-141).
2. Remove the rear upper cover (see page 1-5-59).
3. Release the wire saddle.
4. Remove two screws.

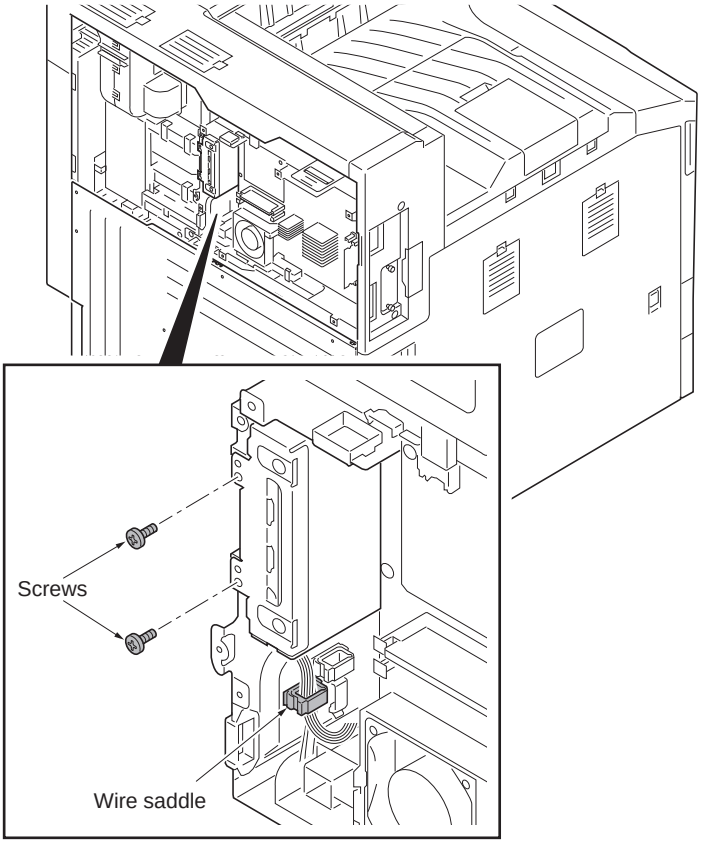

Figure 1-5-130

5. Unhook two hooks and pull out the HDD bracket a little.

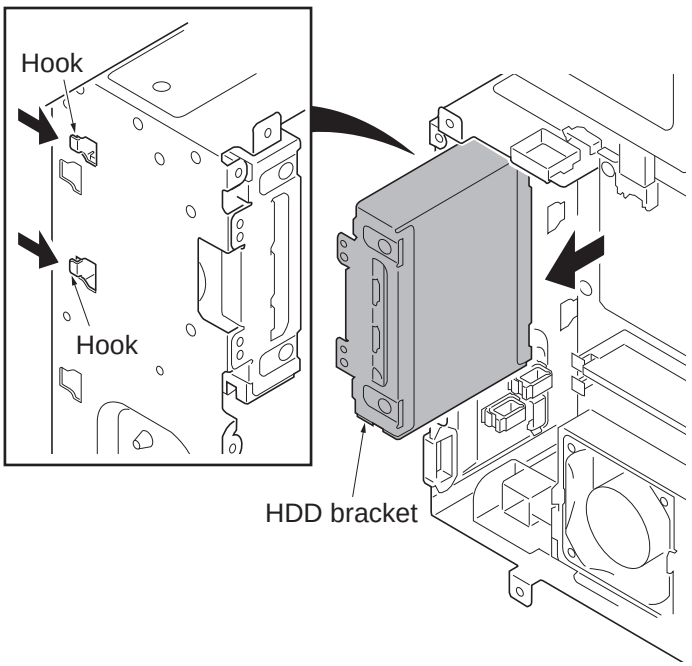

Figure 1-5-131

6. Remove two connectors from the hard disk unit while pushing the lock lever. Number of hard disk unit equipmentl: 1

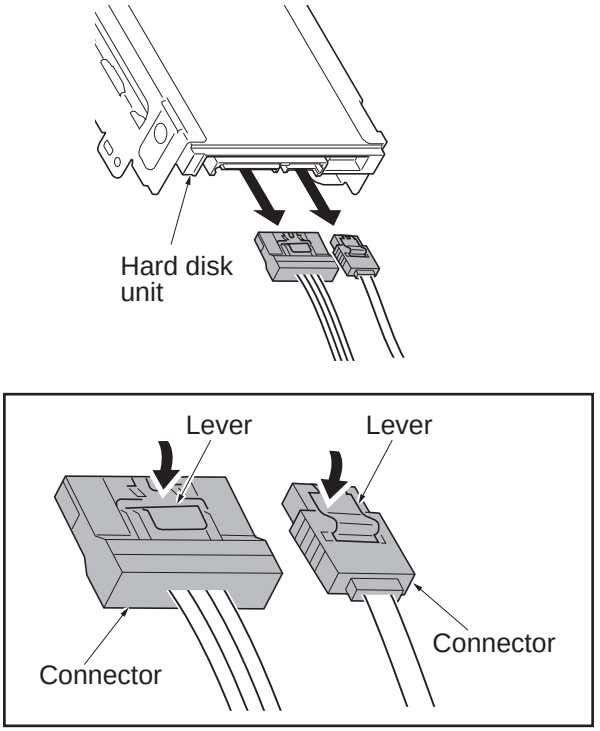

Figure 1-5-132

7. Remove four screws and then remove the hard disk unit from the HDD bracket.
8. Replace the hard disk unit and refit all the removed parts.
9. Perform maintenance mode U024 (HDD formatting) (see page 1-3-27).
10. Install the firmwares by the following procedure.
    1)Connects to the machine the USB memory that preserved Software LANGUAGE BR, JP (Opt Font,Opt Msg), and the PDF1.7 resource. The firmware is installed by switching the main power switch to ON/OFF.

11. Perform maintenance mode U917 (backup data writing) (see page 1-3-141).

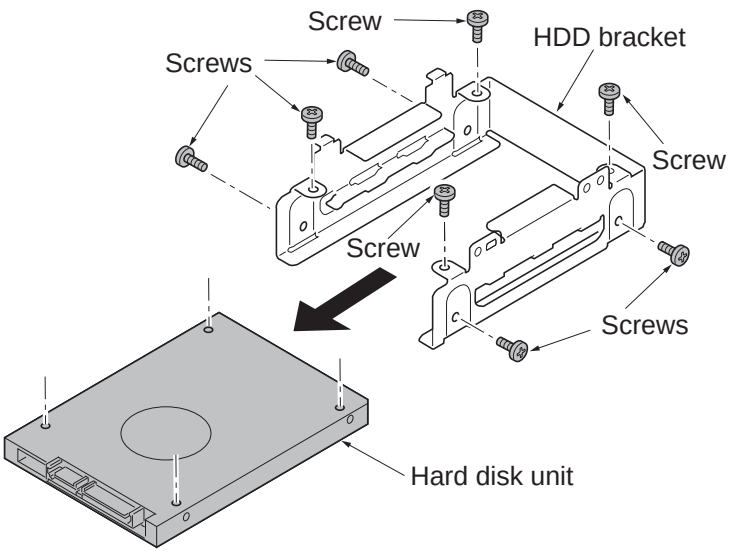

Figure 1-5-133

(8) Detaching and refitting the eject unit

Procedure

1. Pull out the paper conveying unit.
2. Remove the fuser unit (see page 1-5-43).
3. Remove the connector.
4. Remove four screws and then remove the eject unit.
5. Check or replace the eject unit and refit all the removed parts.

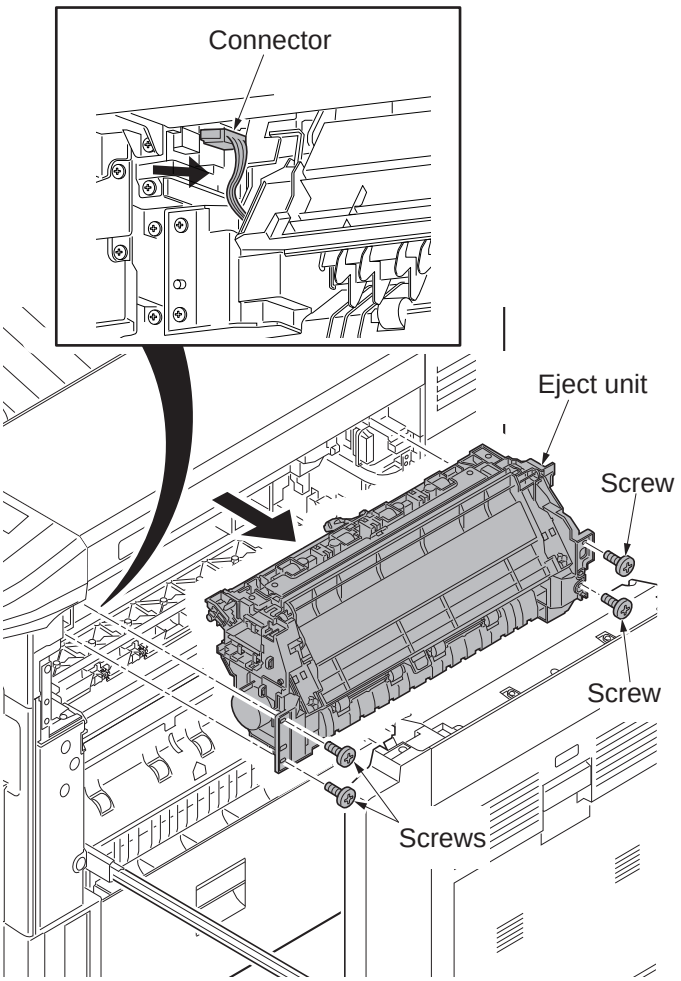

Figure 1-5-134

Cautions on installing the eject unit

When an additional actuator is installed at the upper actuator while installing the bridge unit, inserting the eject unit into the device, use care that the eject unit does not get in contact with the eject guide, by keeping its actuator lifted while inserting.

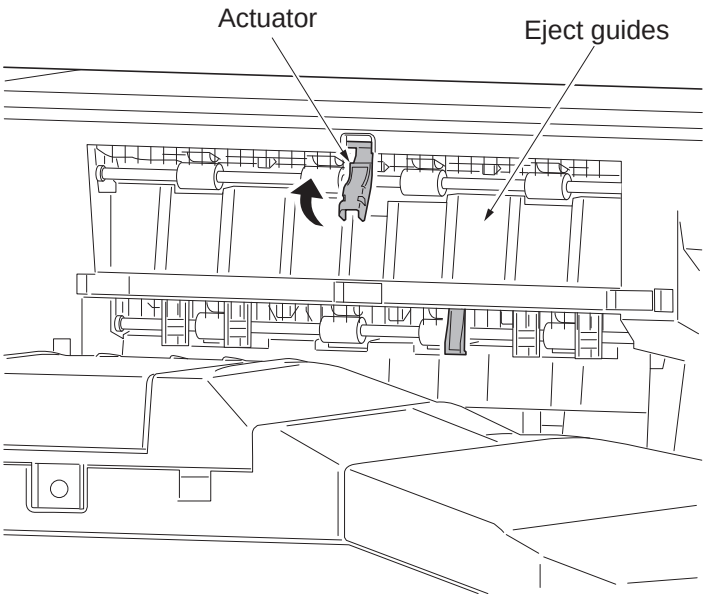

Figure 1-5-135

(9) Direction of installing the principal fan motors

When detaching or refitting the fan motors, be careful of the airflow direction (intake or exhaust).

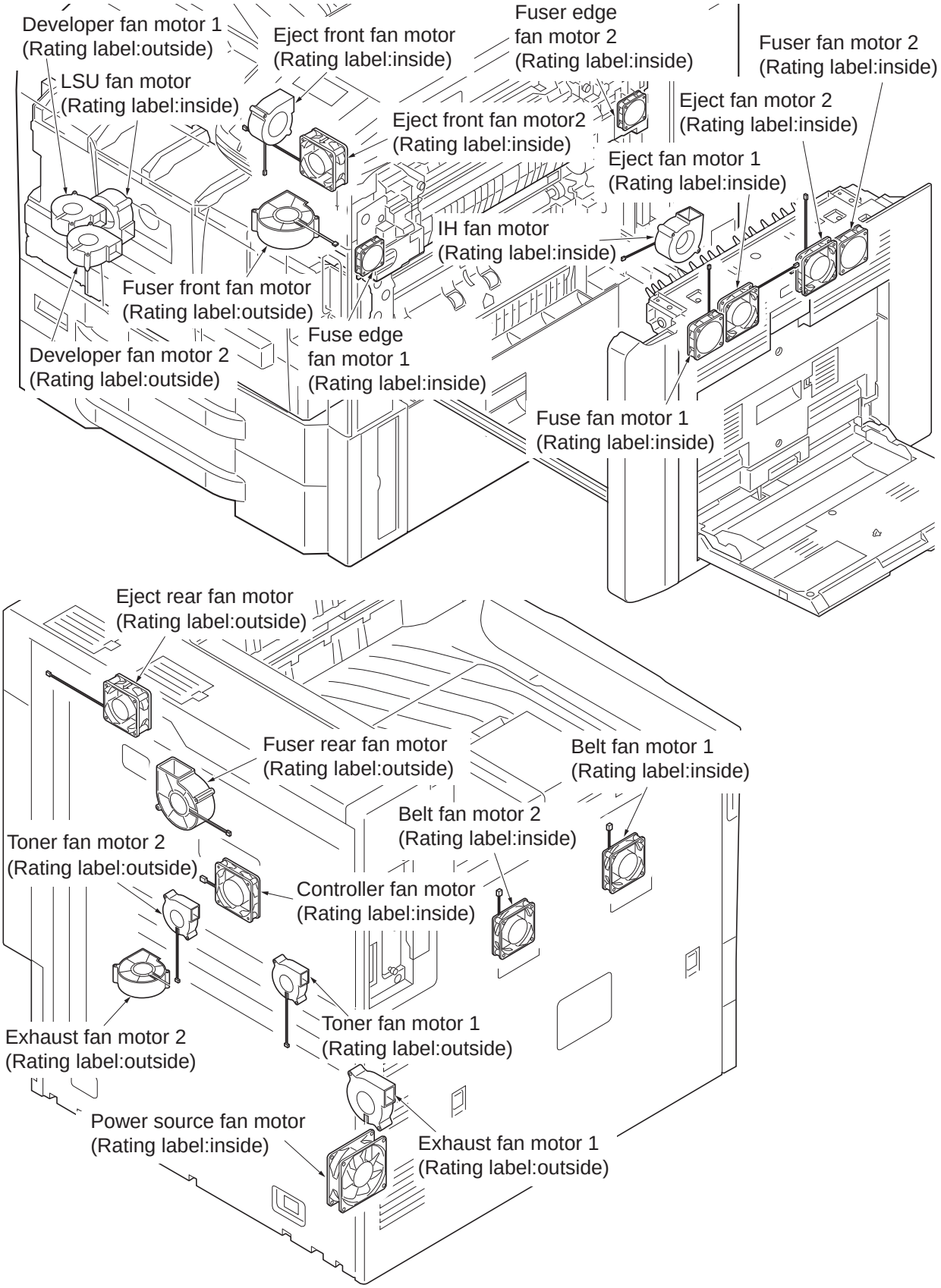

Figure 1-5-136

(10) Skewed paper feeding check/adjustment

At the paper feed source which a sheet of wrinkled paper has caused, check how the paper is fed askew.
Run U051 to reduce the curvature of paper at the regist roller and measure how the paper is fed askew.

1. Print a maintenance report and note the U051 value.
2. Reduce the value by 10 for the paper source in question.(See page -1-5-49.)

3. Press the system menu button to print a test chart.

Check the skew value (balance of left and right, B-A).
Less than 1mm: OK
1mm or more:
Correct the skew by using the paper angle adjusting mechanism (in cassette) that modifies the angle of the paper width guides.

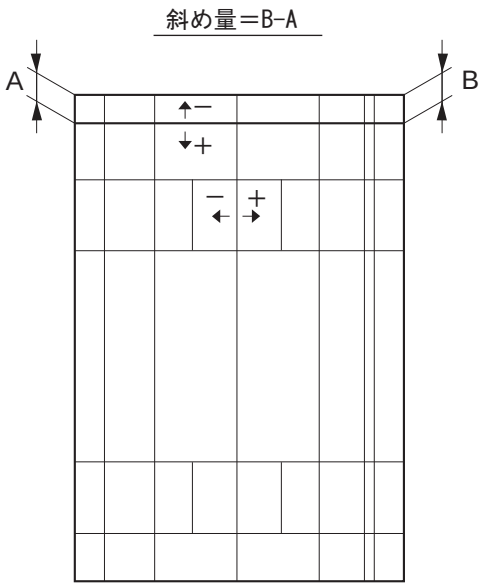

Figure 1-5-137

Procedure

1. Unsecure the fixing screws (screw 1 to 4) and adjust the angle of the paper width guide by the skew feed adjustment screw.
   If the B-A is negative, rotate clockwise.
   If the B-A is positive, rotate counter-clockwise.
2. Tighten the four screw.
   *: Secure the screws in the order of screws 1, 2, 3, then 4.
3. Run U051 and reset the curvature the regist roller.

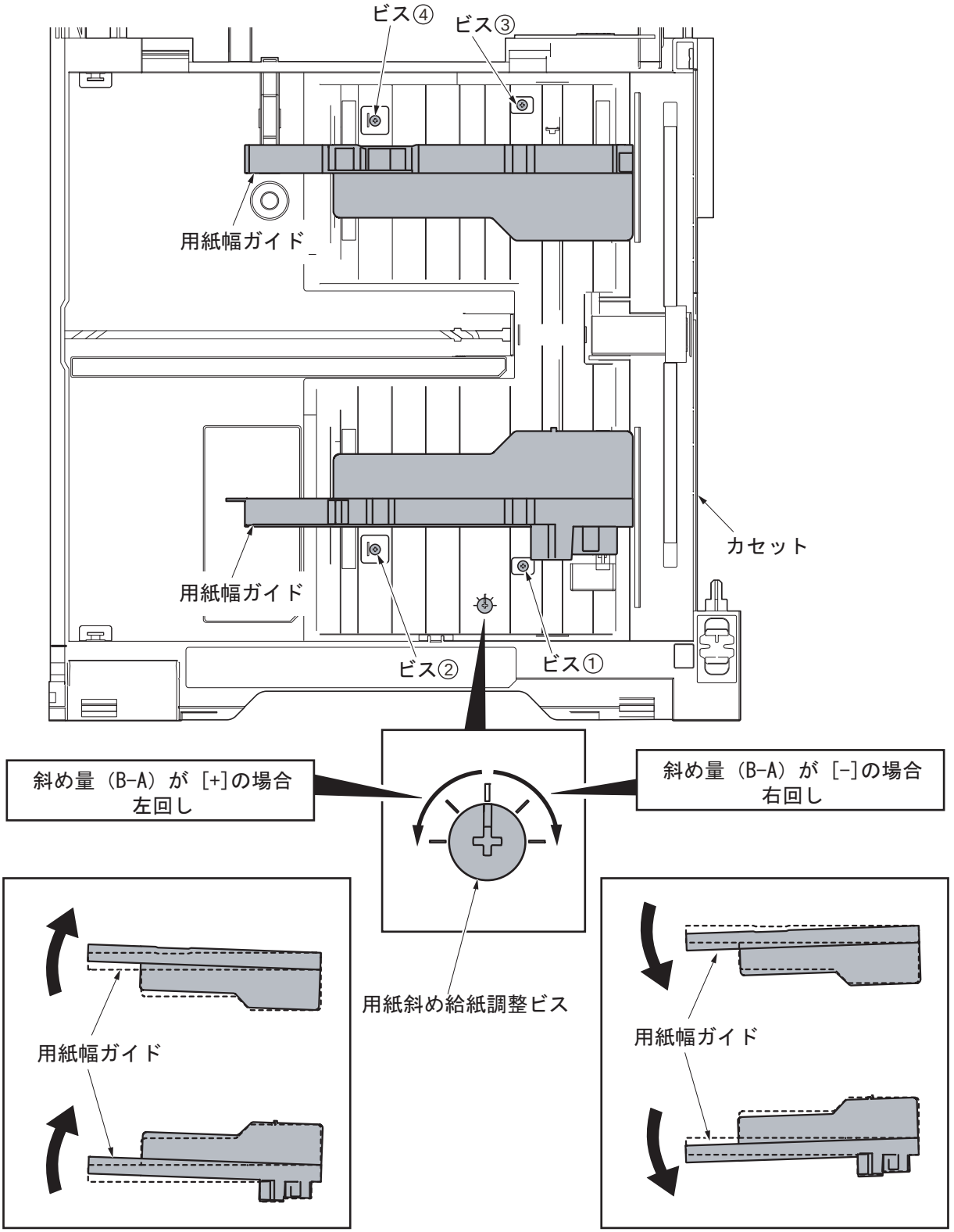

Figure 1-5-138

1-6-1 Upgrading the firmware

Follow the procedure below to upgrade the firmware of main PWB, engine PWB, fuser IH PWB, motor control PWB, PDF Resource, optional language, color table and optional devices.

Preparation

Extract the file that has the download firmware and put them in the USB flash device.

Procedure

1. Perform maintenance item U000 (maintenance report output) and check U019 ROM version.
2. After confirming the data lamp is turned off, perform shut-down on the operation panel, turn power off, and unplug the power receptacle (see page P.1-2-19).
3. Insert the USB flash device in which the firmware has been written into a notch hole of the machine.
4. Turn the main power switch on. Upgrading firmware starts (blinking the memory LED).
   Caution:
   Never turn off the power switch or remove the USB flash device during upgrading.
5. [ROM version] is displayed on the touch panel when upgrading is complete.
6. Perform shut-down, and turn the main power switch to off.
7. Wait for several seconds and then remove the USB flash device from the machine.
8. Turn the main power switch on.
9. Perform maintenance item U000 (maintenance report output) and check that U019 ROM version has been upgraded.

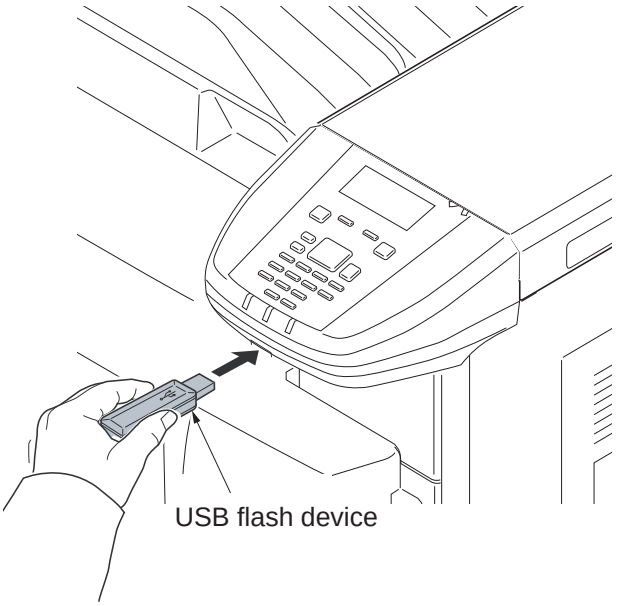

Figure 1-6-1

Emergency-UPDATE

If the device is accidentally switched off and upgrading was incomplete, upgrade becomes impossible from a USB flash device.
In that case, retry upgrading after recovering the software by following the procedure below.

Preparation

The CF memory card must be formatted in FAT or FAT32 in advance.
Extract the main firmware to download from the file.
Rename the file which was extracted from the archive. [DL_CTRL.2MN] to [KM_EMRG.2MN]
Copy the all extracted files to the root of the CF memory.

Procedure

1. Turn the main power switch off.
2. Install the CF memory card which contains the firmware onto the main PWB.
3. Turn the main power switch on.
4. Rewriting of the PWB software will start for restoration.
   The Data and Attention LEDs will be blinking.
5. Only the Data LED will be blinking when rewriting is successful.
   * : Only the Attention LED will be blinking when rewriting is failed.
6. Turn the main power switch off.
7. Wait for several seconds and then remove the CF memory from the main PWB.
8. Extract the firmware to download from the archive and copy to the root of the USB flash device.
9. Insert the USB flash device in which the firmware was copied into the slot on the machine.
10. Perform steps 4 to 7 on the previous page.

11. Turn the main power switch on.
12. Perform maintenance item U000 (Print a maintenance report) to check that the version of ROM U109 has been upgraded.

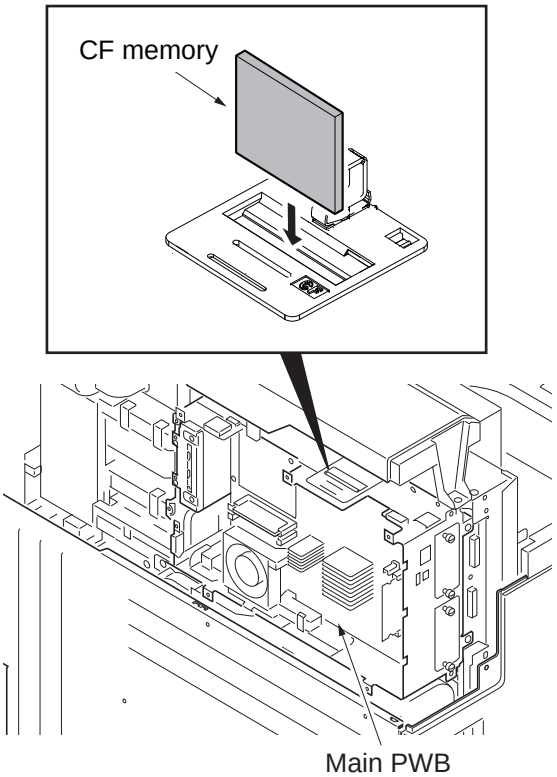

Figure 1-6-2

1-6-2 Remarks on main PWB replacement

When replacing the main PWB, remove the EEPROM (YC14) and code DIMM (YS4) from the main PWB that has been removed and then reattach it to the new main PWB.

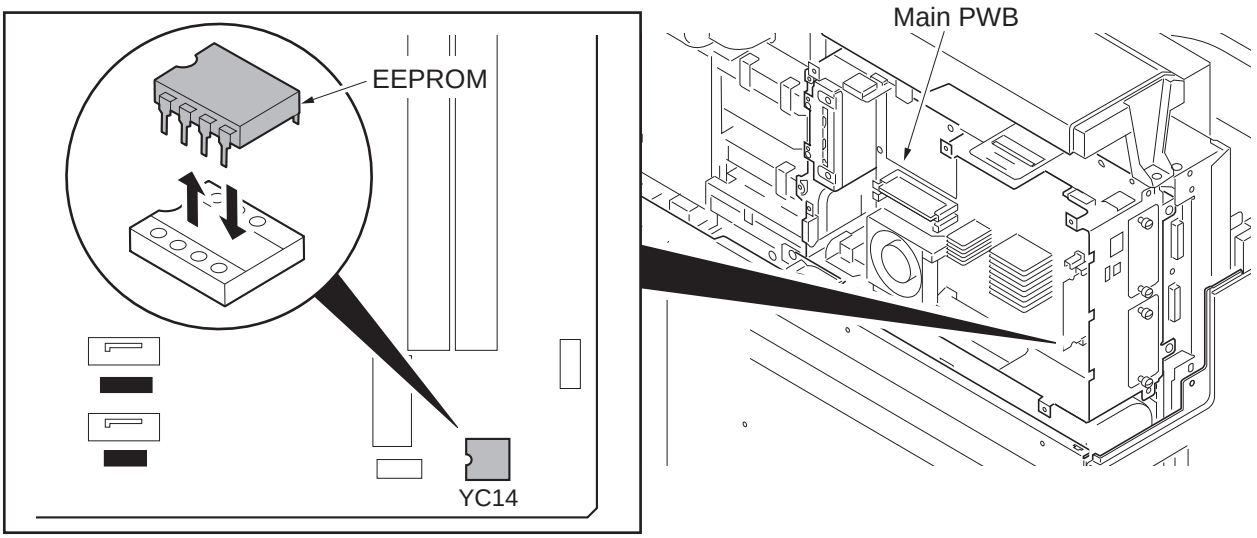

Figure 1-6-3

When refitting DIMM, check “CODE” marked on the PWB and refit them to the original position.

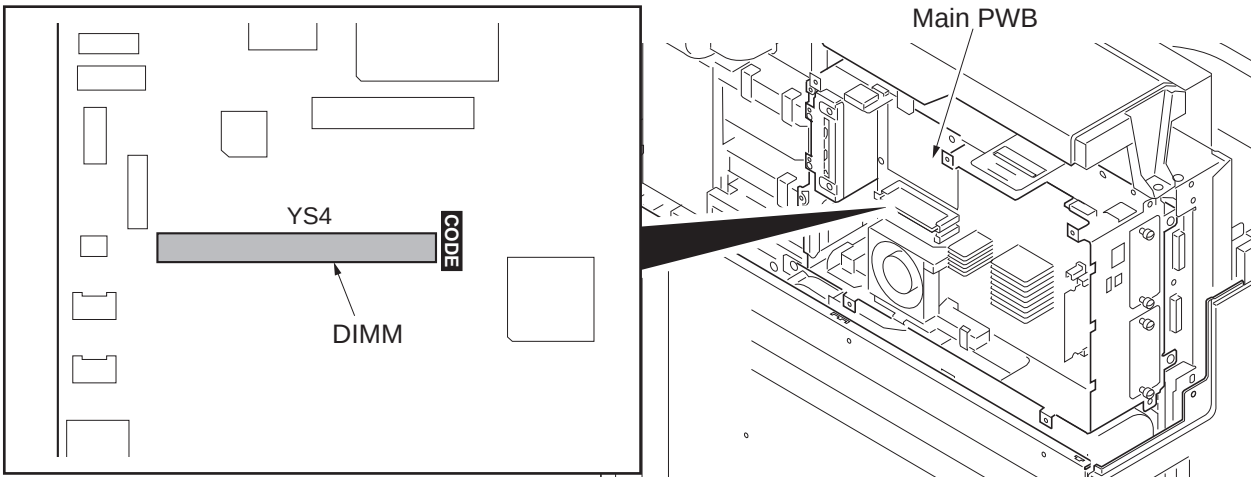

Figure 1-6-4

If the code DIMM (YS4) was replaced with a service supplied part, perform the following.

1. Insert the USB flash device in which the latest firmware was copied, into the slot on the machine and turn power on.(see page P.1-6-1)
2. Referring to the U000 maintenance report printed previously, enter the following values.
   U278 Setting the delivery date
   U952 Maintenance mode workflow
3. Reset machine settings.(Resets system menu settings modified at setup to their defaults.)
   Main items for settings
   [Date Setting] - Date and time settings.
   [User/Job accounting] - Defaults for user authentication and job accounting only.
   Resettings are not required as the data are stored in harddisk.
   [Network] - Network settings (IP address)
   [Adjustment/Maintenance] - Silent Mode setting

4. Run the maintenance mode for image adjustments which follows.
   1. Performs maintenance mode U464 (Calibration) (see page P.1-3-118).
   2. Performs maintenance mode U469 (Auto color registration correction) (see page P.1-3-126).

1-6-3 Remarks on engine PWB replacement

When replacing the engine PWB, remove the EEPROM (U100) from the engine PWB that has been removed and then reattach it to the new engine PWB.

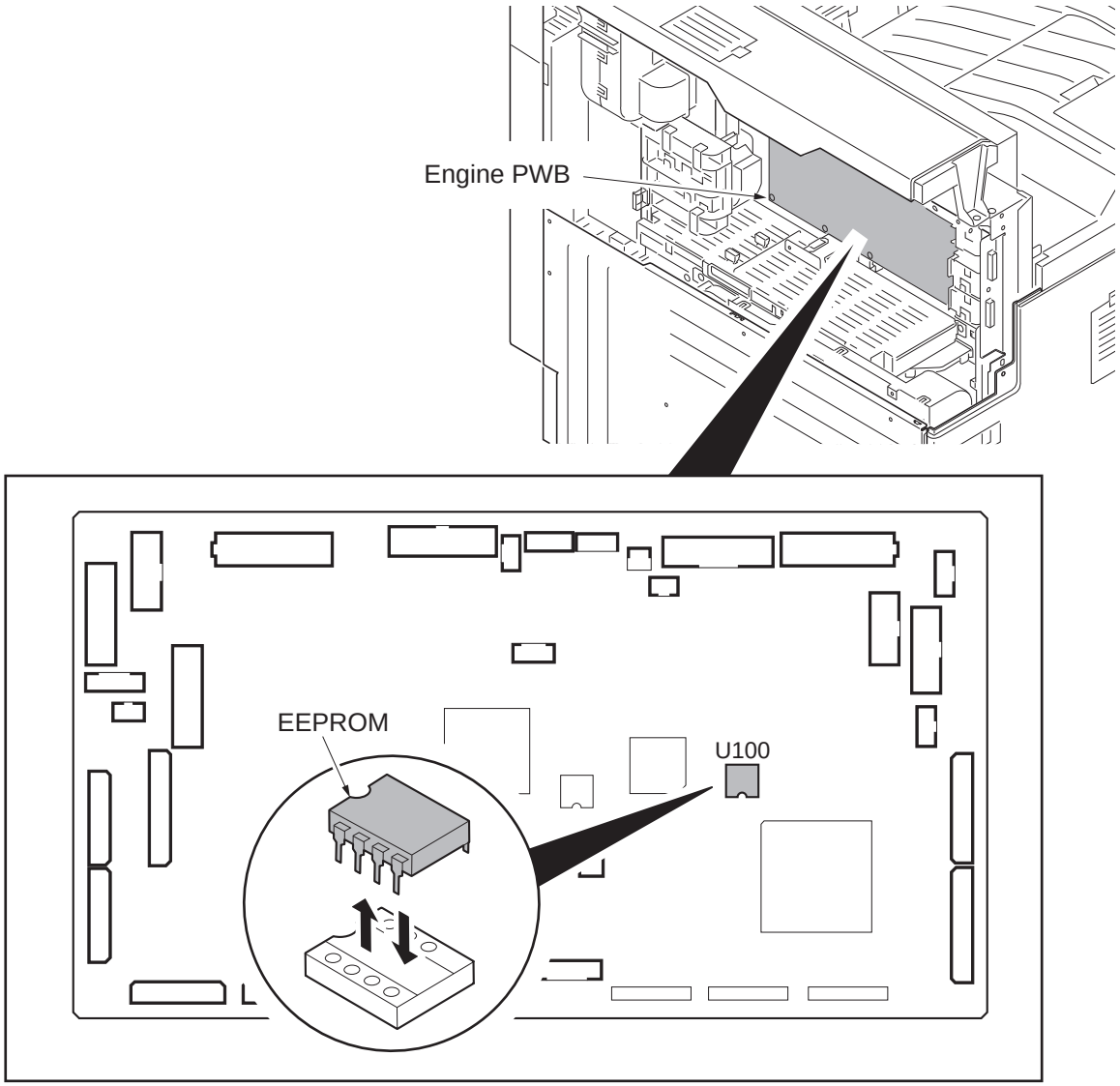

Figure 1-6-5

This page is intentionally left blank.

2-1-1 Paper feed/conveying section

Paper feed/conveying section consists of the paper feed unit that feeds paper from the cassette and the MP tray paper feed unit that feeds paper from the MP tray, and the paper conveying section that conveys the fed paper to the transfer/separation section.

(1) Cassette paper feed section

Cassette paper feed section consists of the paper holder with the cassette operation plate activated by lift motor 1 and 2, and the pulleys, such as the forwarding pulley, the paper feed pulley and the separation pulley, for extracting and conveying the paper. Paper is fed out of the cassette by the rotation of the forwarding pulley, paper feed pulley and separation pulley.

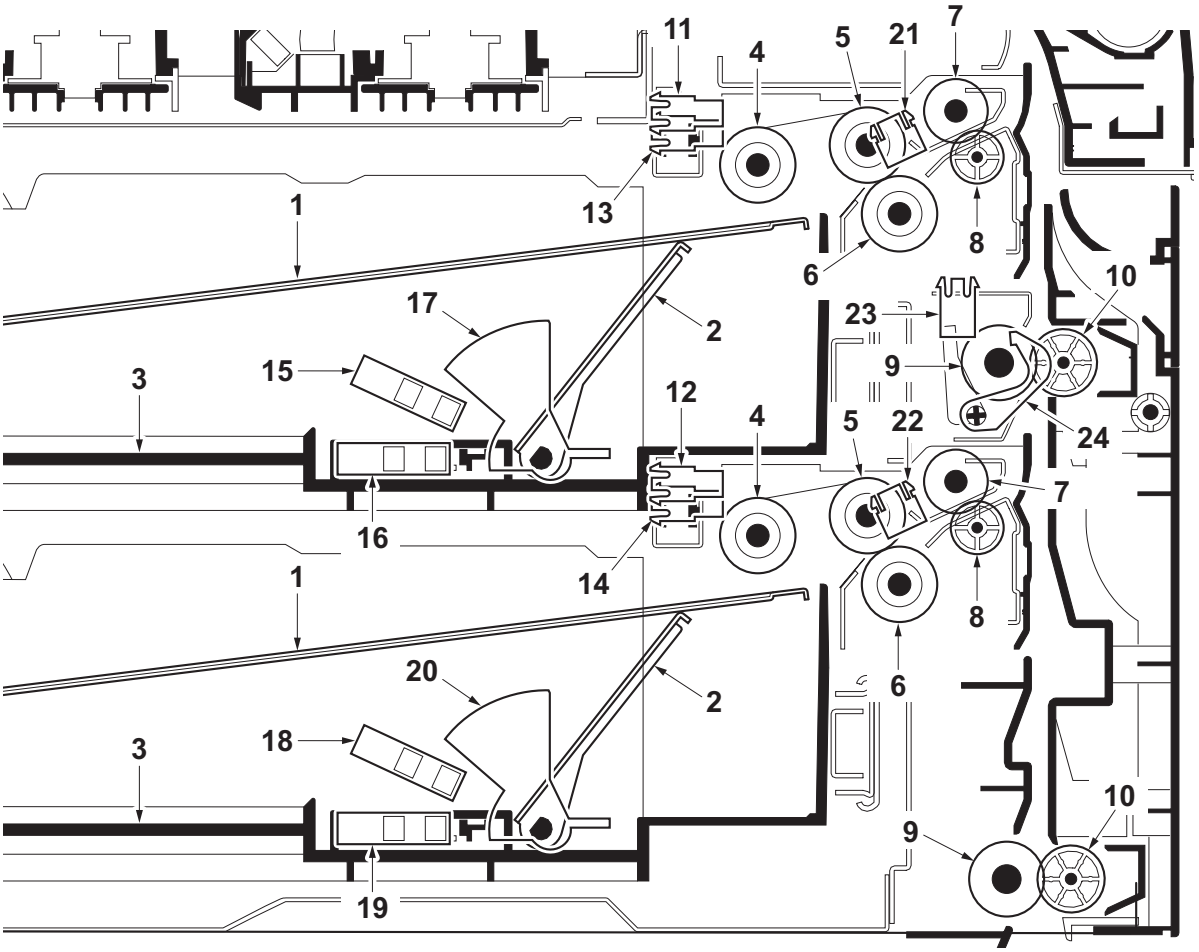

Figure 2-1-1 Cassette paper feed section

1. Cassette base
2. Cassette operation plate
3. Cassette
4. Forwarding pulleys
5. Paper feed pulleys
6. Separation pulleys
7. Assist rollers
8. Assist pulleys
9. Paper conveying roller
10. Paper conveying pulley
11. Paper sensor 1 (PS1)
12. Paper sensor 2 (PS2)
13. Lift sensor 1 (LS1)
14. Lift sensor 2 (LS2)
15. Paper gauge sensor 1 (U) (PGS1(U))
16. Paper gauge sensor 1 (L) (PGS1(L))
17. Actuator (Paper gauge sensor 1)
18. Paper gauge sensor 2 (U) (PGS2(U))
19. Paper gauge sensor 2 (L) (PGS2(L))
20. Actuator (Paper gauge sensor 2)
21. Feed sensor 1 (FS1)
22. Feed sensor 2 (FS2)
23. Paper conveying sensor (PCS)
24. Actuator (Paper conveying sensor)

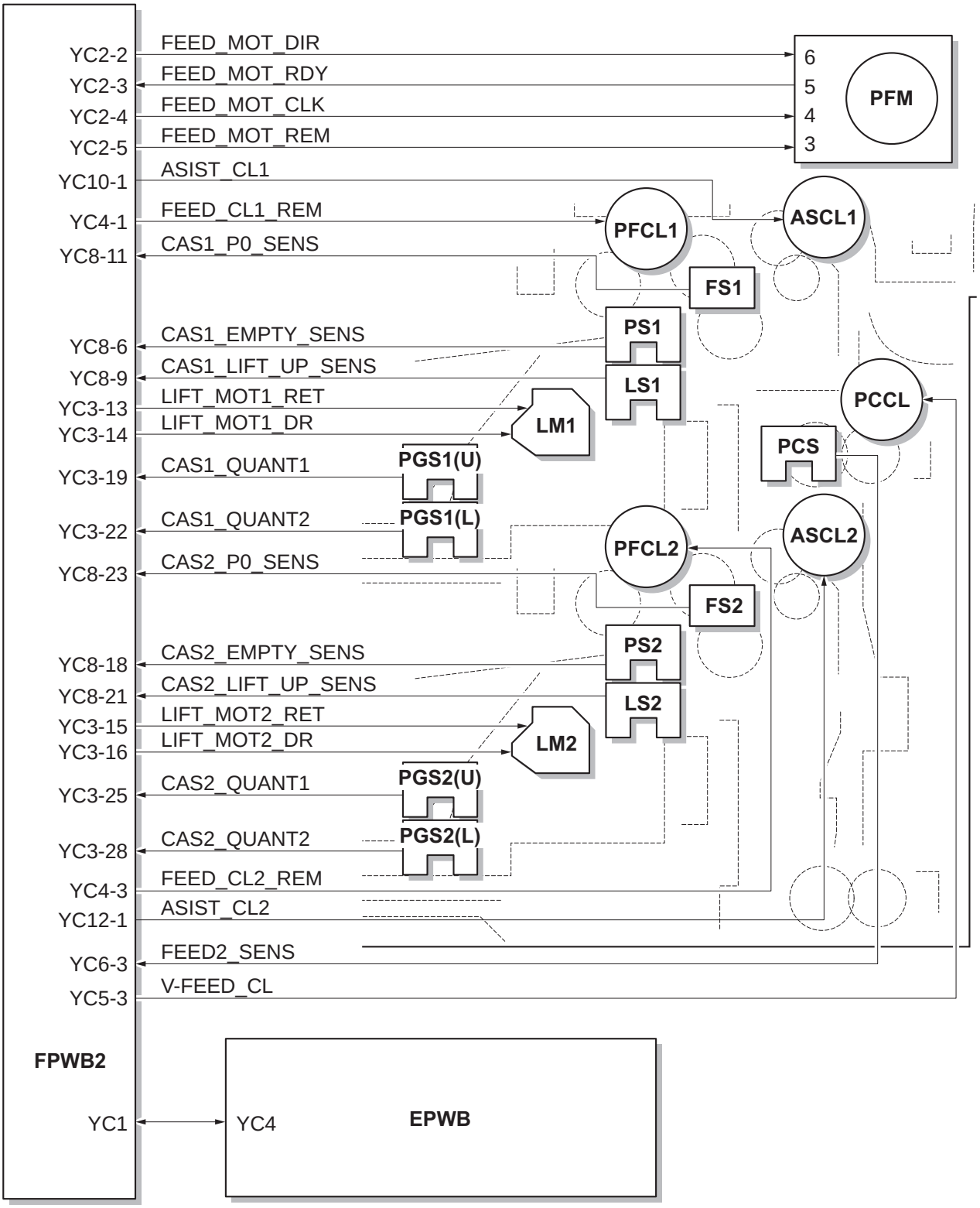

Figure 2-1-2 Cassette paper feed section block diagram

(2) MP tray paper feed section

Paper is fed out of the MP tray by the rotation of the MP forwarding pulley, MP paper feed pulley and MP separation pulley. The MP separation pulley prevents multiple sheets from being fed at one time by the torque limiter.

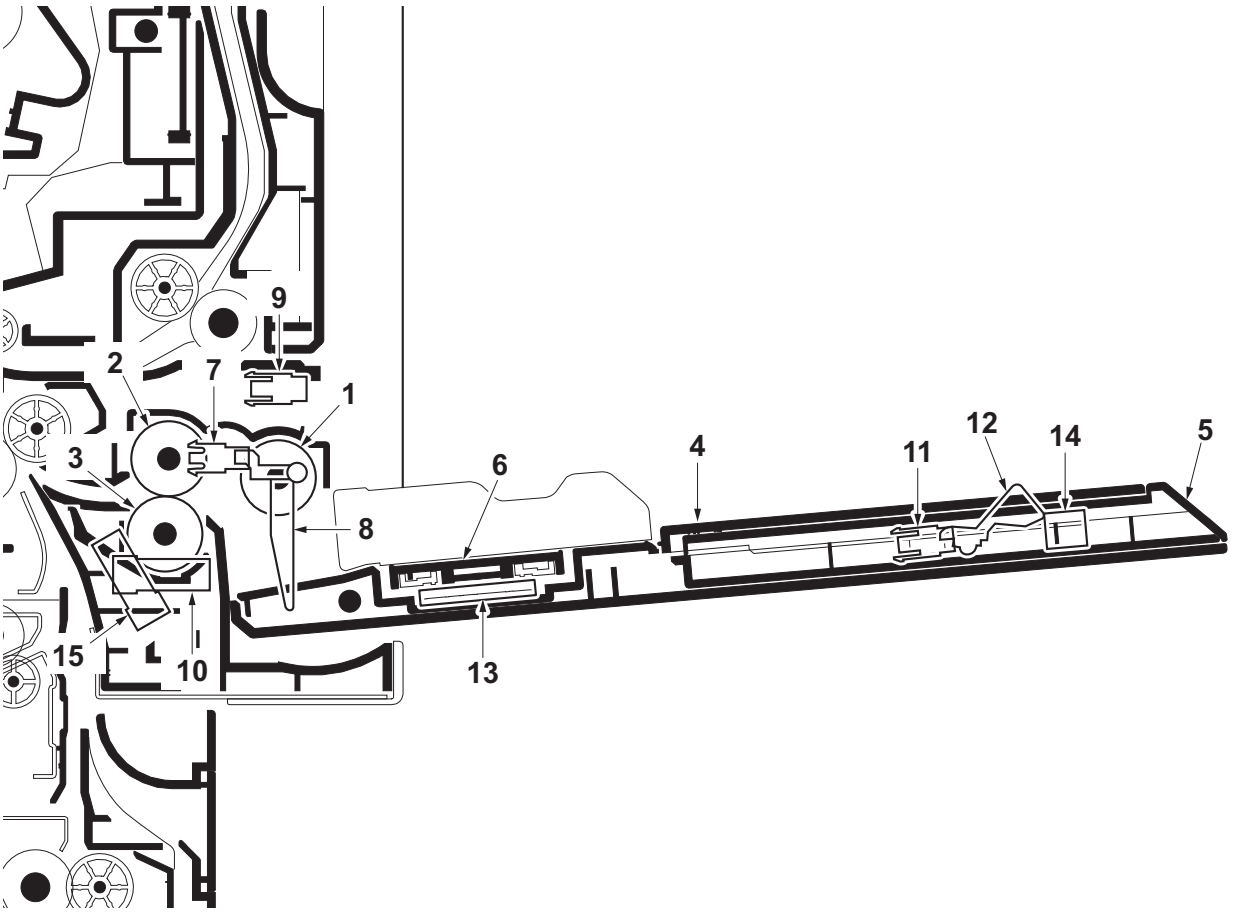

Figure 2-1-3 MP tray paper feed section

1. MP forwarding pulley
2. MP paper feed pulley
3. MP separate pulley
4. MP table
5. MP support Tray
6. MP lift base
7. MP paper sensor (MPPS)
8. Actuator (MP paper sensor)
9. MP lift sensor 1 (MPLS1)
10. MP lift sensor 2 (MPLS2)
11. MP paper length switch (MPPLSW)
12. Actuator (MP paper length switch)
13. MP paper width switch (MPPWSW)
14. MP tray switch (MPTSW)
15. MP feed sensor (MPFS)

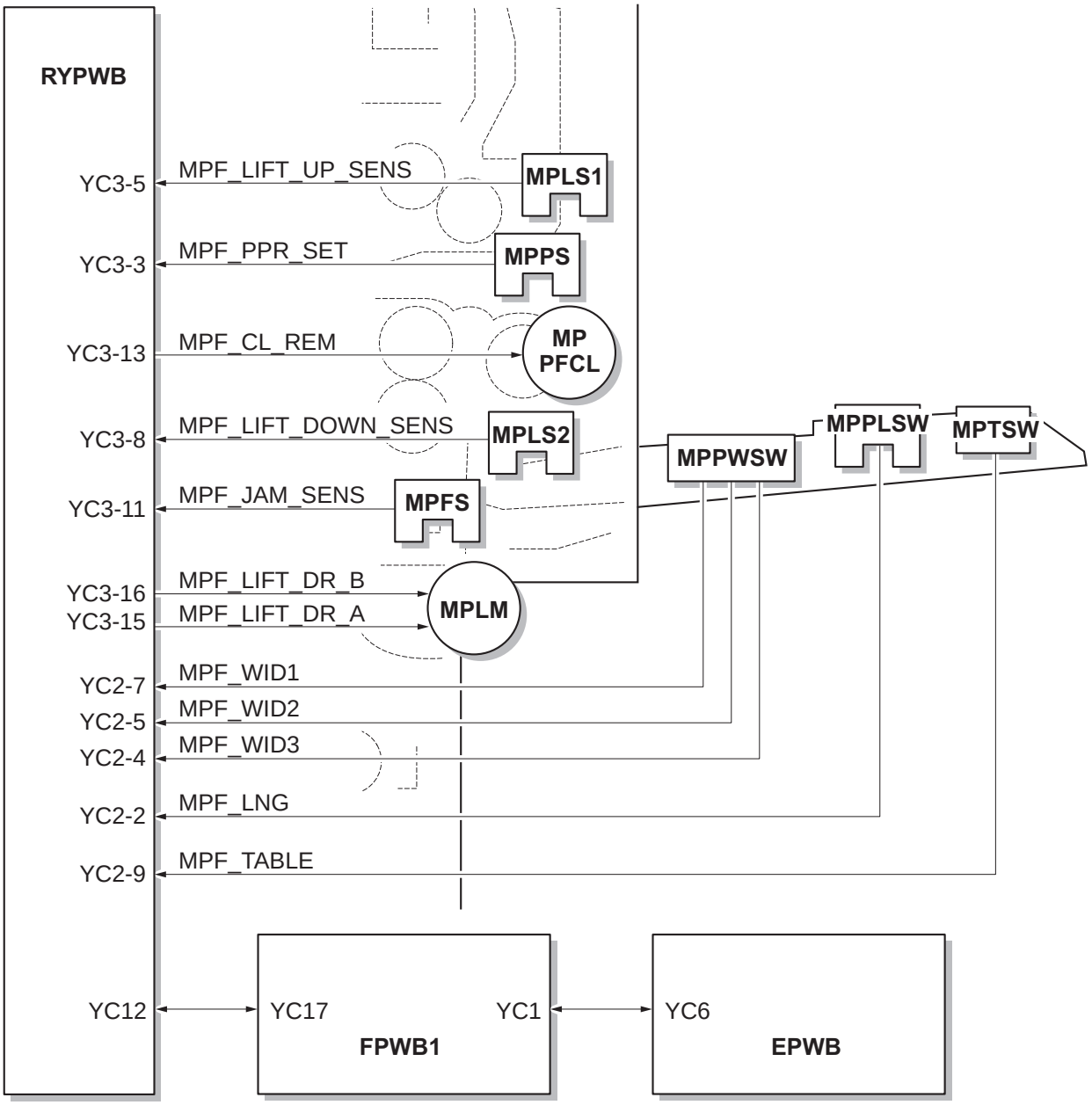

Figure 2-1-4 MP tray paper feed section block diagram

(3) Paper conveying section

The paper conveying section conveys paper to the transfer/separation section as paper feeding from the cassette or MP tray, or as paper refeeding for duplex printing. Paper by feeding is conveyed by the middle roller to the position where the registration sensor (RS) is turned on, and then sent to the transfer/separation section by the right registration roller and left registration roller.

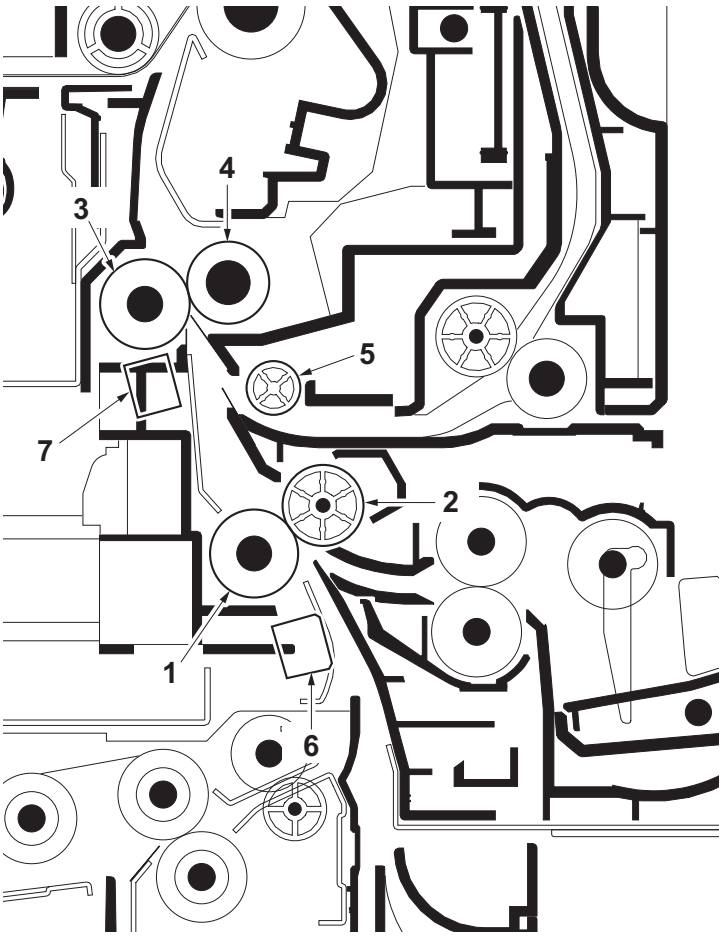

Figure 2-1-5 Paper conveying section

1. Middle roller
2. Middle pulley
3. Left registration roller
4. Right registration roller
5. Paper conveying pulley
6. Middle sensor (MS)
7. Registration sensor (RS)

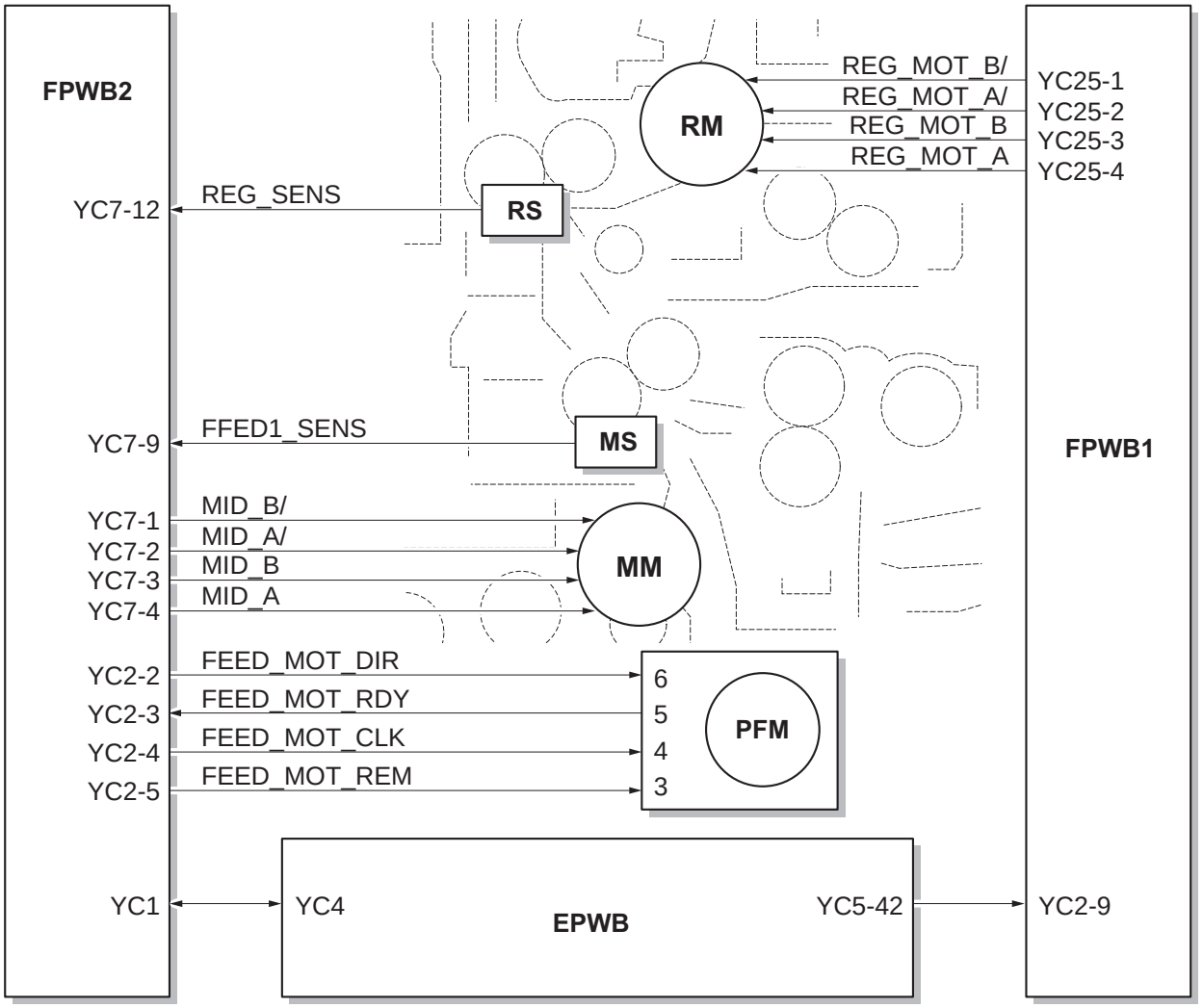

Figure 2-1-6 Paper conveying section block diagram

2-1-2 Drum section

The drum section consists of the charger roller unit, drum and cleaning section. The drum is electrically charged uniformly by means of a charger roller to form a latent image on the surface. The cleaning section consists of the cleaning blade and the cleaning roller which remove residual toner from the drum surface after transfer. The cleaning lamp (CL) consists of LEDs and removes residual charge on the drum before main charging.

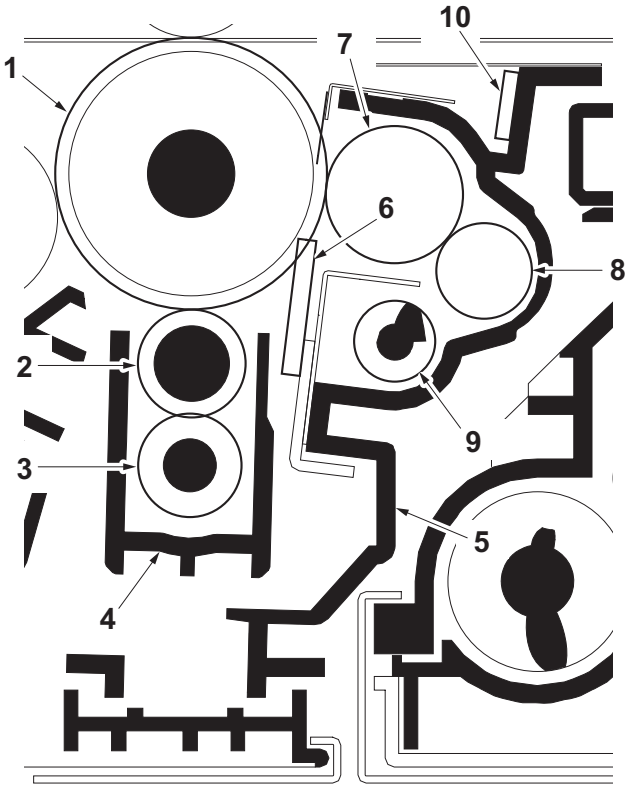

Figure 2-1-7 Drum section

1. Drum
2. Charger roller
3. Charger cleaning roller
4. Charger case
5. Drum frame
6. Cleaning blade
7. Cleaning roller
8. Control roller
9. Drum screw
10. Cleaning lamp (CL)

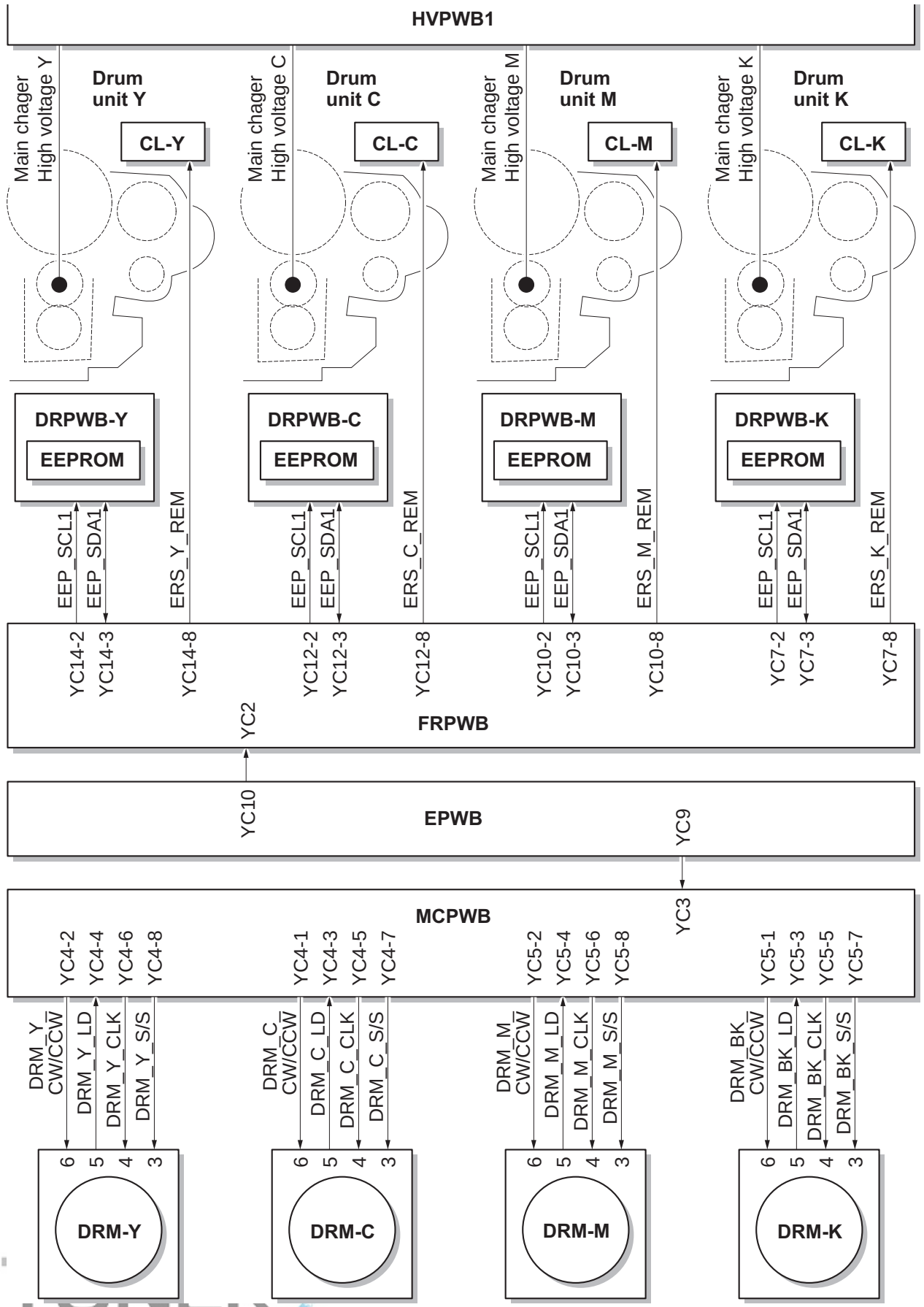

Figure 2-1-8 Drum section block diagram

2-1-3 Developer section

The developer unit consists of the sleeve roller that forms the magnetic brush, the magnet roller, the developer blade and the developer screws that agitate the toner. Also, the toner sensor (TS) checks whether or not toner remains in the developer unit.

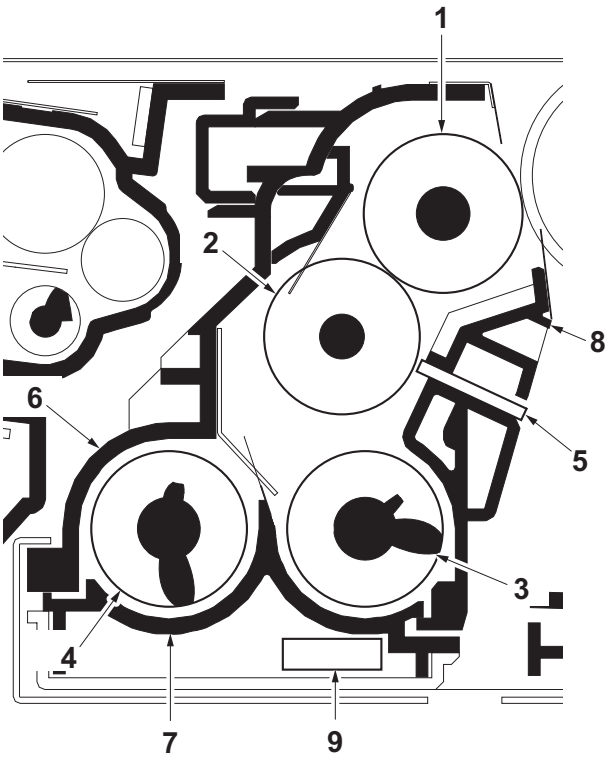

Figure 2-1-9 Developer section

1. Sleeve roller
2. Magnet roller
3. Developer screw A
4. Developer screw B
5. Developer blade
6. Developer case
7. Developer cover
8. Magnet cover
9. Toner sensor (TS)

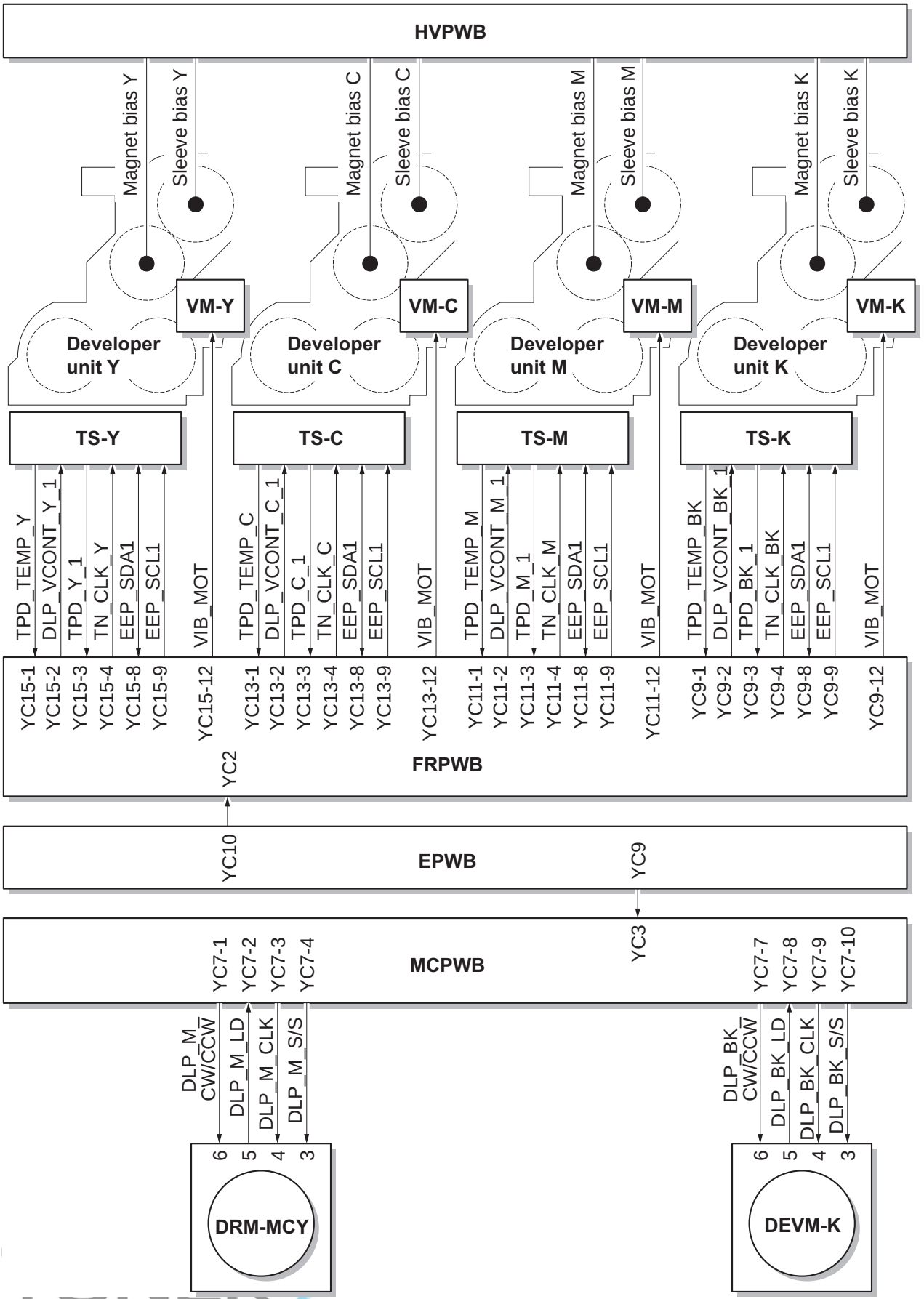

Figure 2-1-10 Developer section block diagram

2-1-4 Laser scanner section

The charged surface of the drum is then scanned by the laser beam from the laser scanner unit. The laser beam is dispersed as the polygon motor (PM) revolves to reflect the laser beam over the drum. Various lenses and mirror are housed in the laser scanner unit, adjust the diameter of the laser beam, and focalize it at the drum surface. Also the LSU cleaning motor (LSUCM) is activated to conduct automatically cleaning of the LSU dust shield glass.

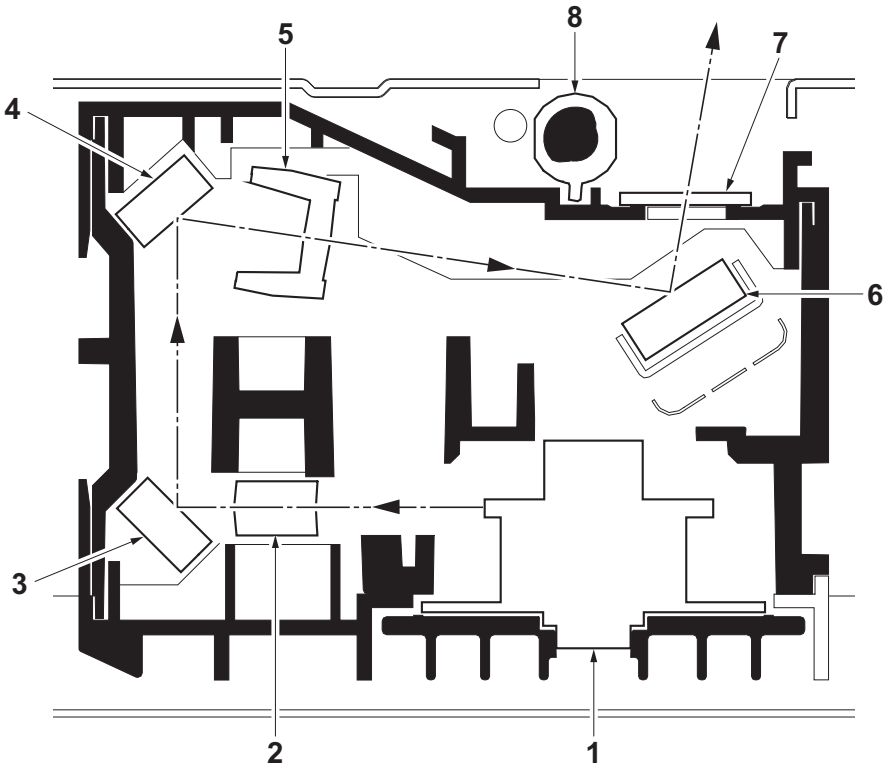

Figure 2-1-11 Laser scanner section

1. Polygon motor (PM)
2. f-θ lens A
3. Mirror A
4. Mirror B
5. f-θ lens B
6. Mirror C
7. LSU dust shield glass
8. LSU spiral

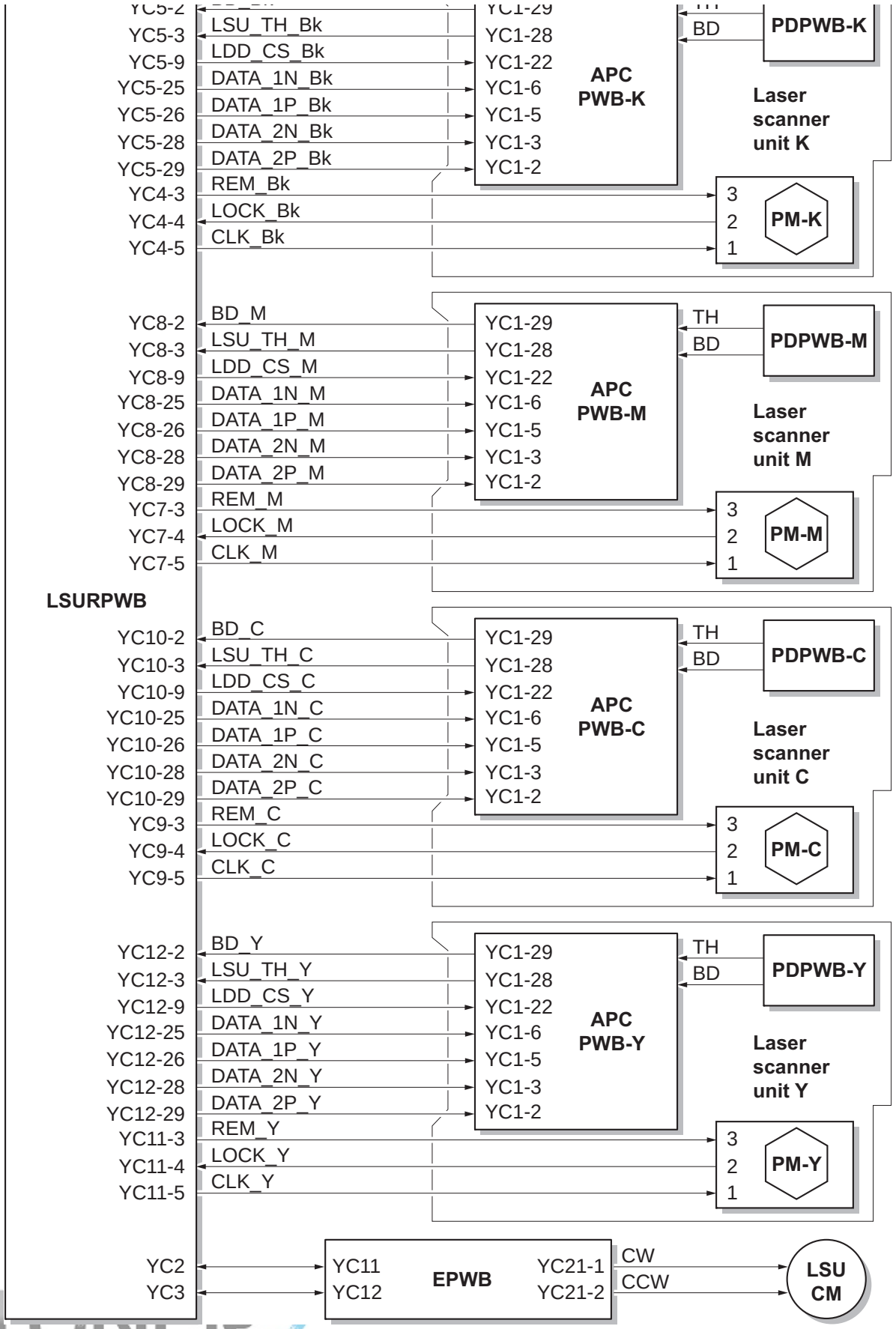

Figure 2-1-12 Laser scanner unit block diagram

2-1-5 Transfer/Separation section

The transfer/separation section consists of the intermediate transfer unit section and the secondary transfer roller section.

(1) Intermediate transfer unit section

The intermediate transfer unit section consists of the transfer cleaning unit, the transfer belt, and the four primary transfer rollers for respective color drums, and forms a full-color toner image by superimposing and transferring single-color toner images formed on each drum onto the transfer belt. Also with the ID sensors (IDS) mounted on the machine frame, the toner density on the transfer belt is measured.
The transfer cleaning unit collects toner remaining on the transfer belt after secondary transfer and forwards it as waste toner to the waste toner box.

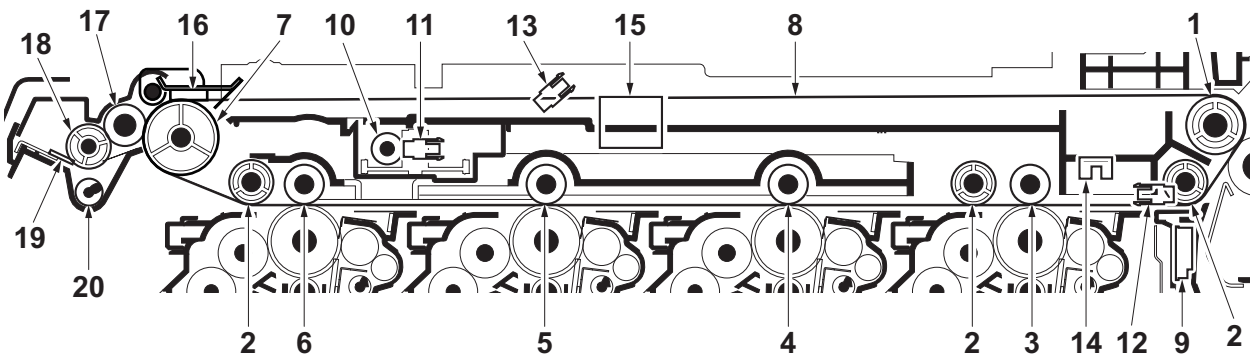

Figure 2-1-13 Intermediate transfer unit section

1. Drive roller
2. Backup roller
3. Primary transfer roller K
4. Primary transfer roller M
5. Primary transfer roller C
6. Primary transfer roller Y
7. Tension roller
8. Transfer belt
9. ID sensor (IDS)
10. Color release motor (CRM)
11. Color release sensor (CRS)
12. Transfer belt sensor (TRBLS)
13. Transfer skew sensor (TRSS)
14. Transfer edge sensor (TRES)
15. Transfer skew motor (TRSM)
16. Cleaning pre brush
17. Cleaning fur brush
18. Cleaning roller
19. Cleaning blade
20. Cleaning screw

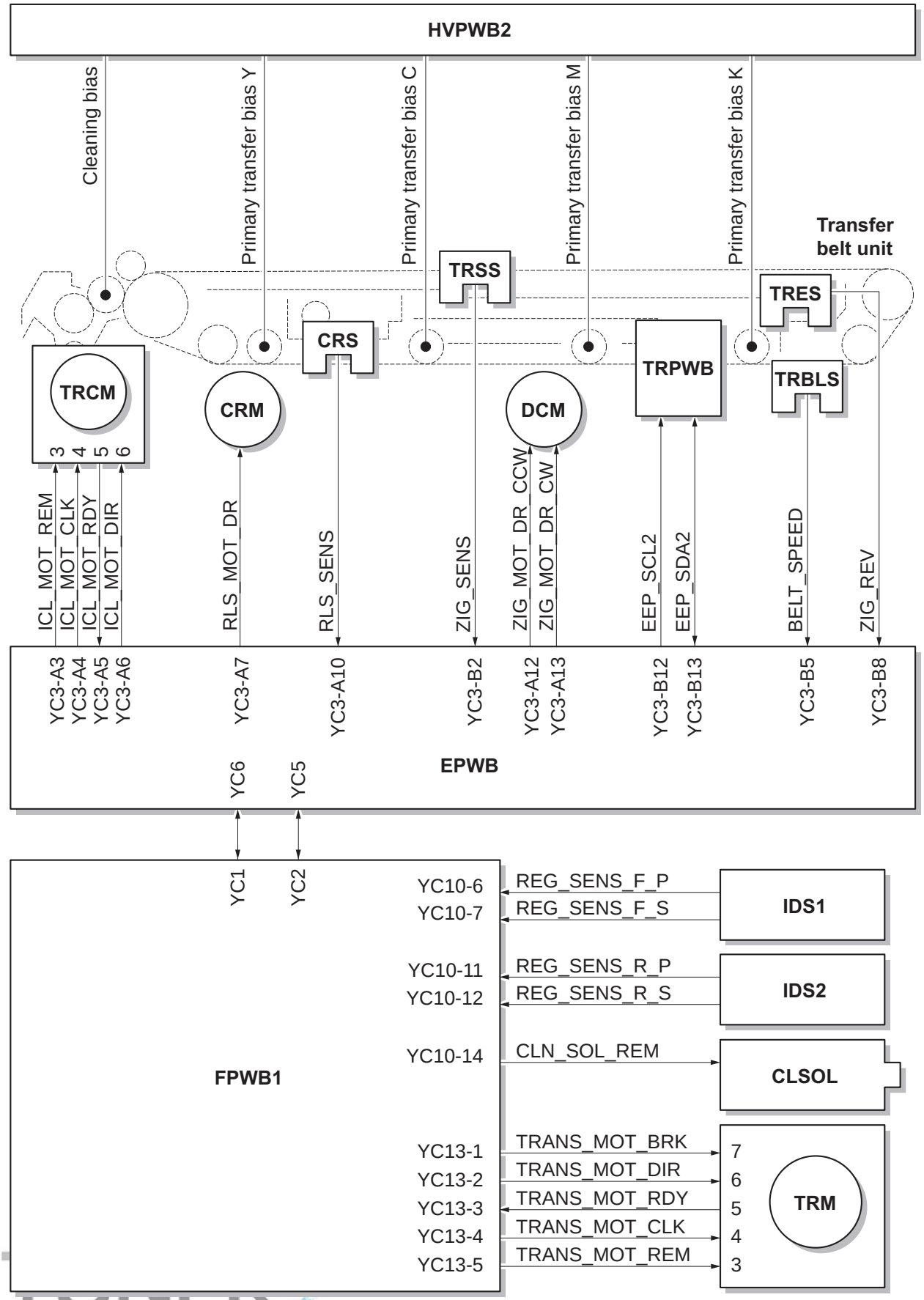

Figure 2-1-14 Intermediate transfer unit section block diagram

(2) Secondary transfer roller section

The secondary transfer roller section consists of the secondary transfer roller mounted to the paper conveying unit and the separation brush. To the secondary transfer roller, DC bias is applied from the high voltage PWB 2 (HVPWB2). The toner image formed on the transfer belt is transferred to the paper by the potential difference and the paper is separated by curvature separation.

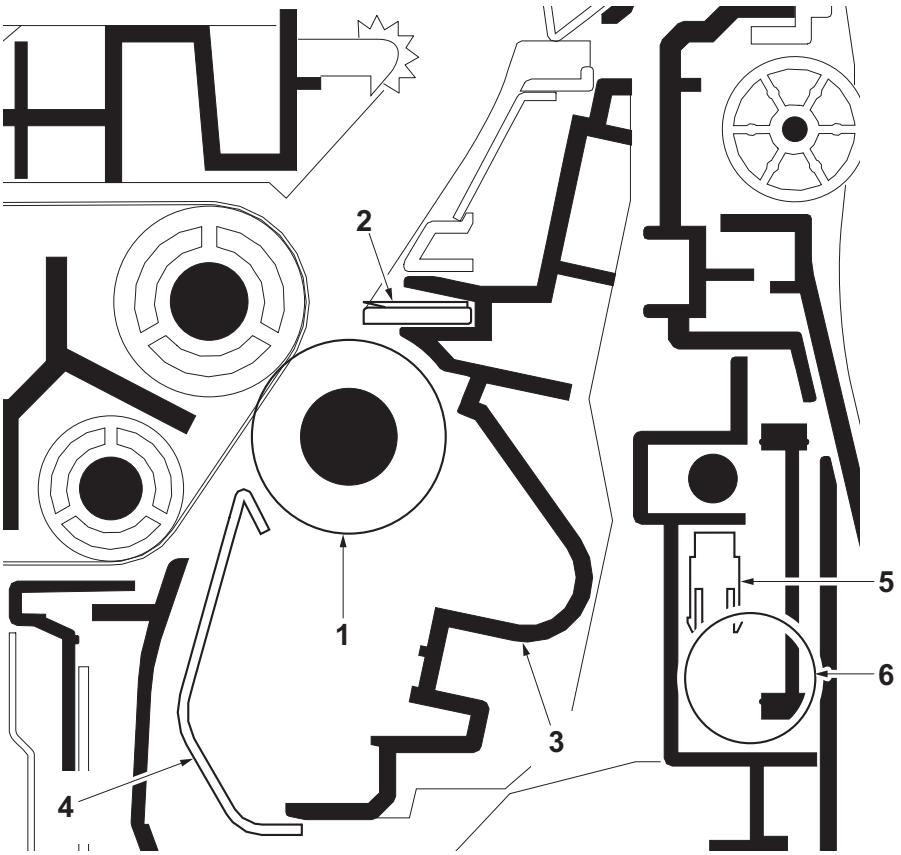

Figure 2-1-15 Secondary transfer roller section

1. Secondary transfer roller
2. Separation brush
3. Secondary transfer frame
4. Transfer guide
5. Transfer release sensor (TRRS)
6. Transfer release motor (TRRM)

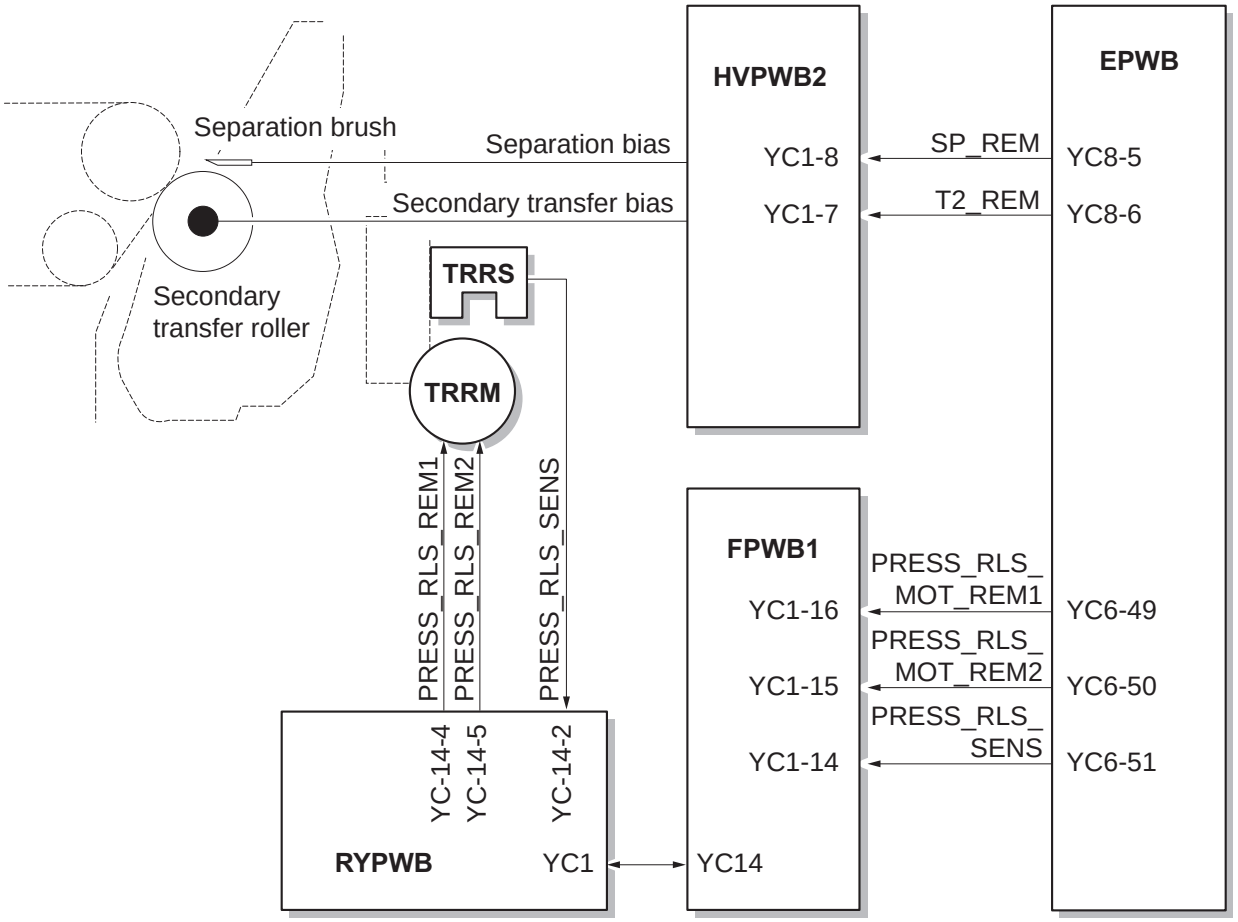

Figure 2-1-16 Secondary transfer roller section block diagram

2-1-6 Fuser section

The paper sent from the transfer/separation section is interleaved between the heat roller and the press roller. The heat roller (fuser belt) is heated by the fuser IH (FIH), and the toner is fused by heat and pressure and fixed onto the paper because the press roller is pressed by the fuser press spring. The surface temperature of heat roller and press roller are detected by the fuser thermistor (FTH) and controlled by the engine PWB (EPWB).

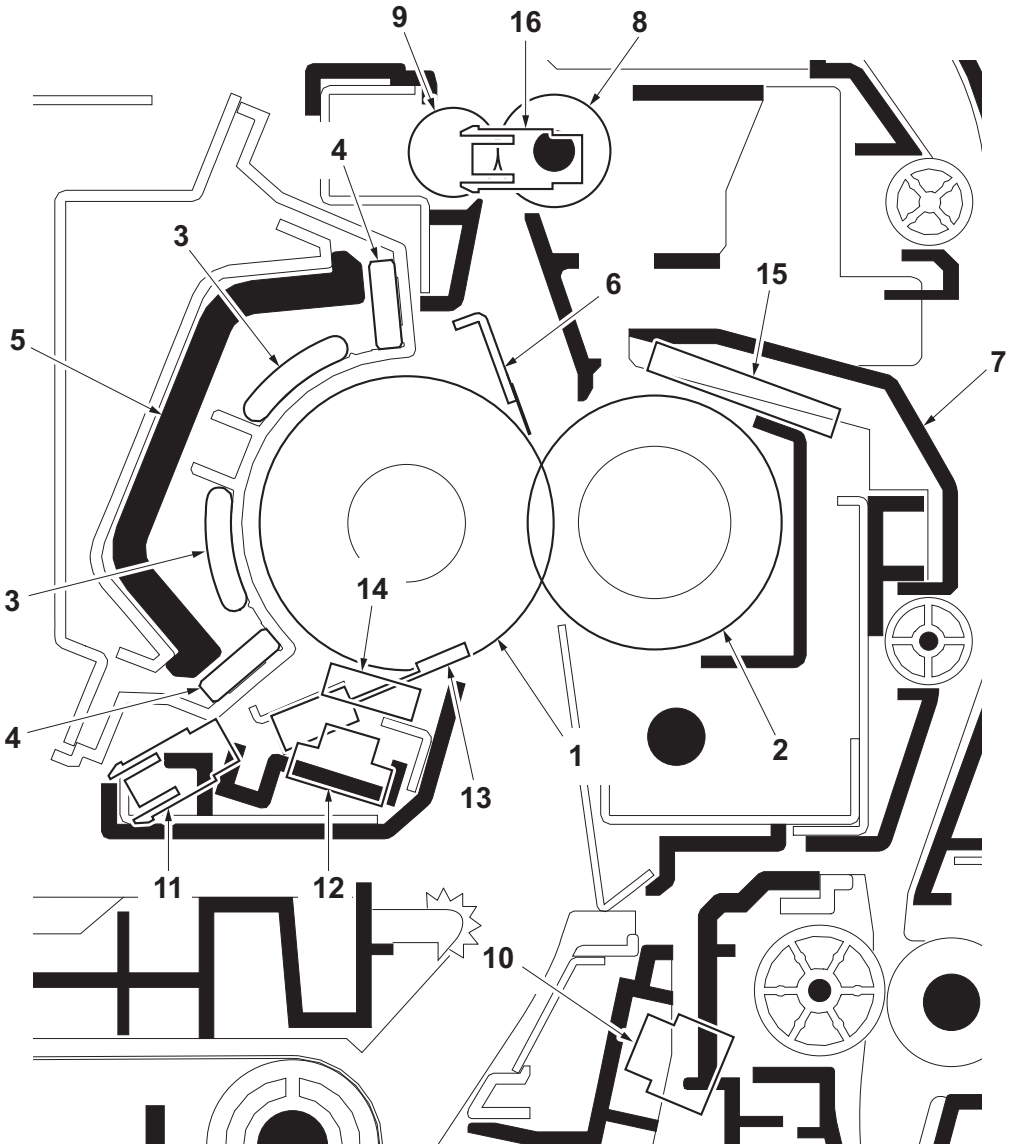

Figure 2-1-17 Fuser section

1. Heat roller (Fuser belt)
2. Press roller
3. IH coils
4. Side core
5. Arch core
6. Separators
7. Right fuser cover
8. Fuser eject pulley
9. Fuser eject roller
10. Loop sensor (LPS)
11. Fuser belt sensor (FUBLS)
12. Fuser thermistor 1 (FTH1)
13. Fuser thermistor 2 (FTH2)
14. Fuser thermistor 3 (FTH3)
15. Fuser thermistor 4 (FTH4)
16. Fuser eject sensor (FUES)

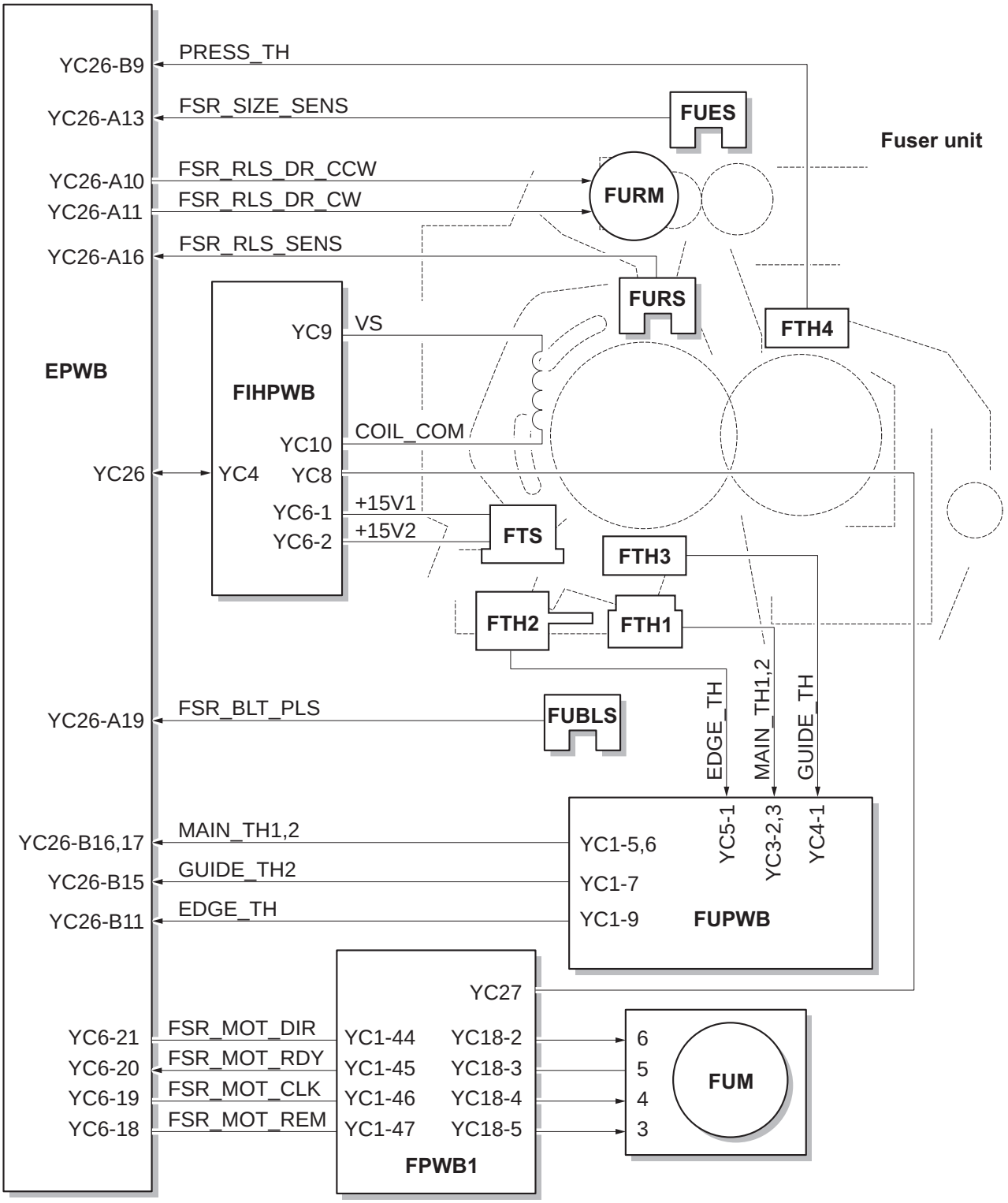

Figure 2-1-18 Fuser section block diagram

2-1-7 Eject/Feedshift section

The paper eject/feedshift section consists of the conveying path which sends the paper that has passed the fuser section to the top tray, duplex conveying section or job separator.

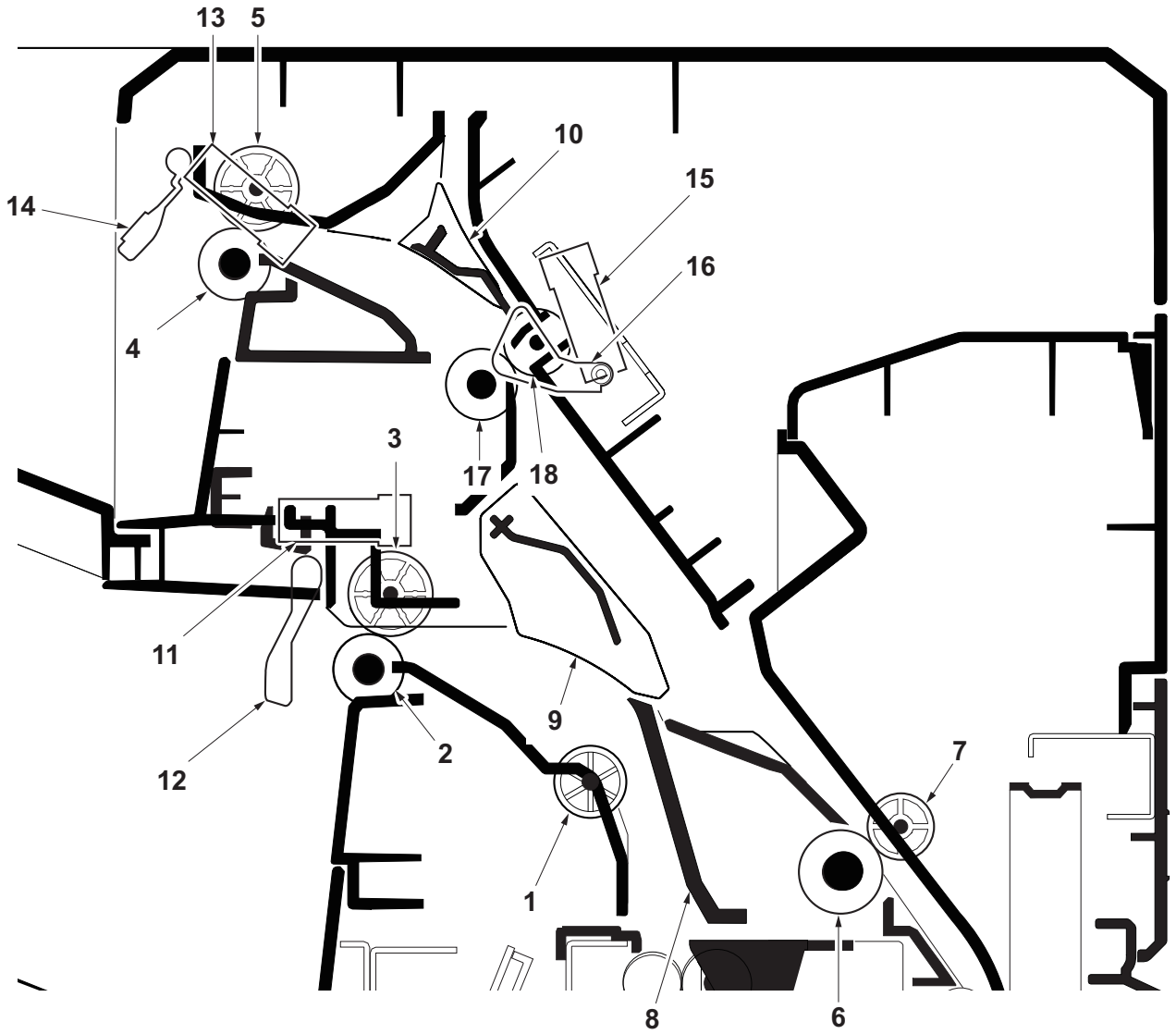

Figure 2-1-19 Eject/Feed shift section

1. Middle pulley
2. Eject roller
3. Eject pulley
4. Eject roller B
5. Eject pulley B
6. Upper duplex roller
7. Duplex pulley
8. Lower duplex roller
9. Lower change guide
10. Upper change guide
11. Eject full sensor 1 (EFS1)
12. Actuator (eject full sensor 1)
13. Eject full sensor 2 (EFS2)
14. Actuator (eject full sensor 2)
15. Switchback sensor (SBS)
16. Actuator (switchback sensor)
17. Eject roller C
18. Eject pulley C

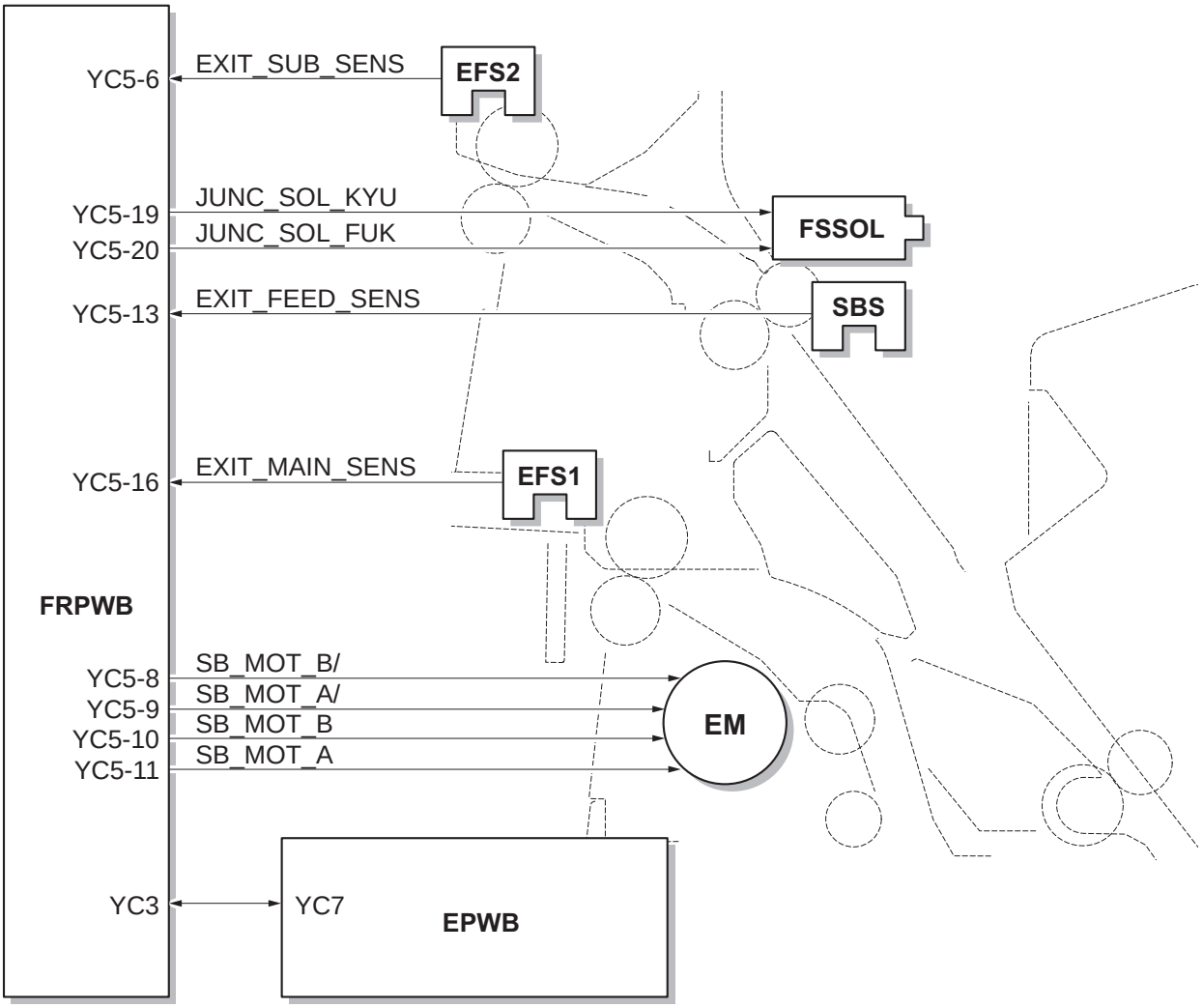

Figure 2-1-20 Eject/Feed shift section block diagram

2-1-8 Duplex conveying section

The duplex conveying section consists of conveying path which sends the paper sent from the eject/feedshift section to the paper feed/conveying section when duplex printing.

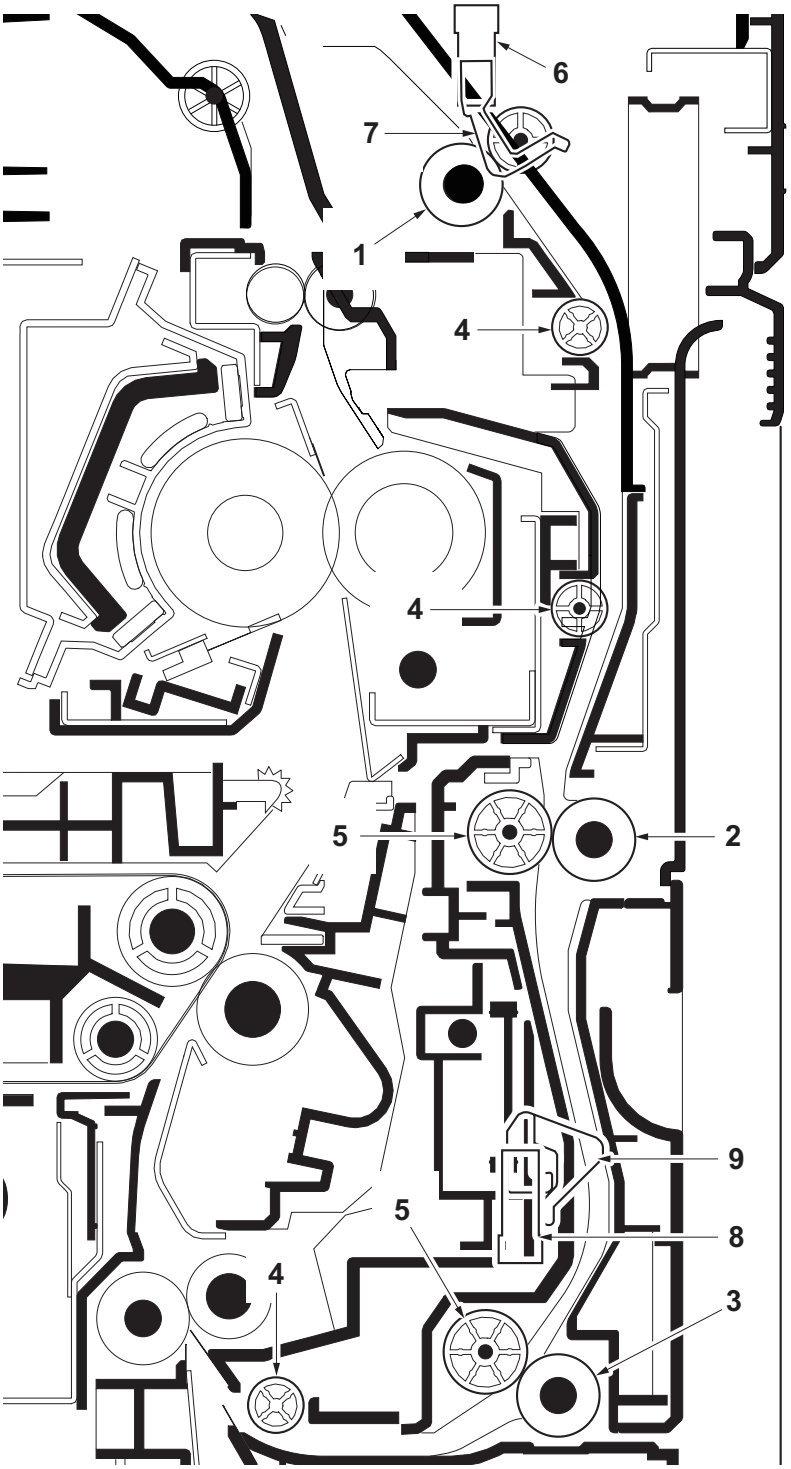

Figure 2-1-21 Duplex conveying section

1. Upper duplex roller
2. Middle duplex roller
3. Lower duplex roller
4. Duplex pulleys A
5. Duplex pulleys B
6. Duplex sensor 1 (DUS1)
7. Actuator (duplex sensor 1)
8. Duplex sensor 2 (DUS2)
9. Actuator (duplex sensor 2)

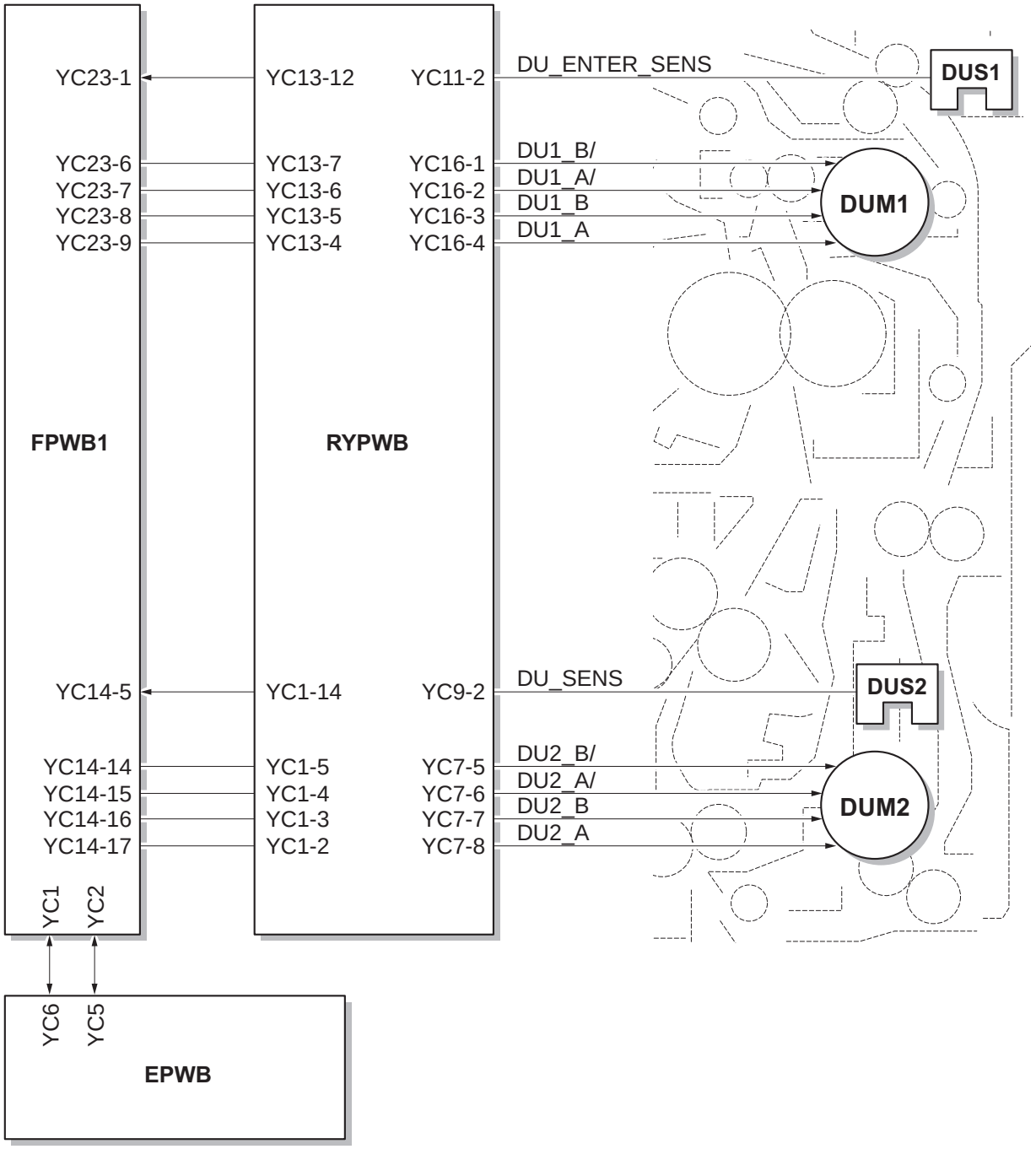

Figure 2-1-22 Duplex conveying section block diagram

2-2-1 Electrical parts layout

(1) PWBs

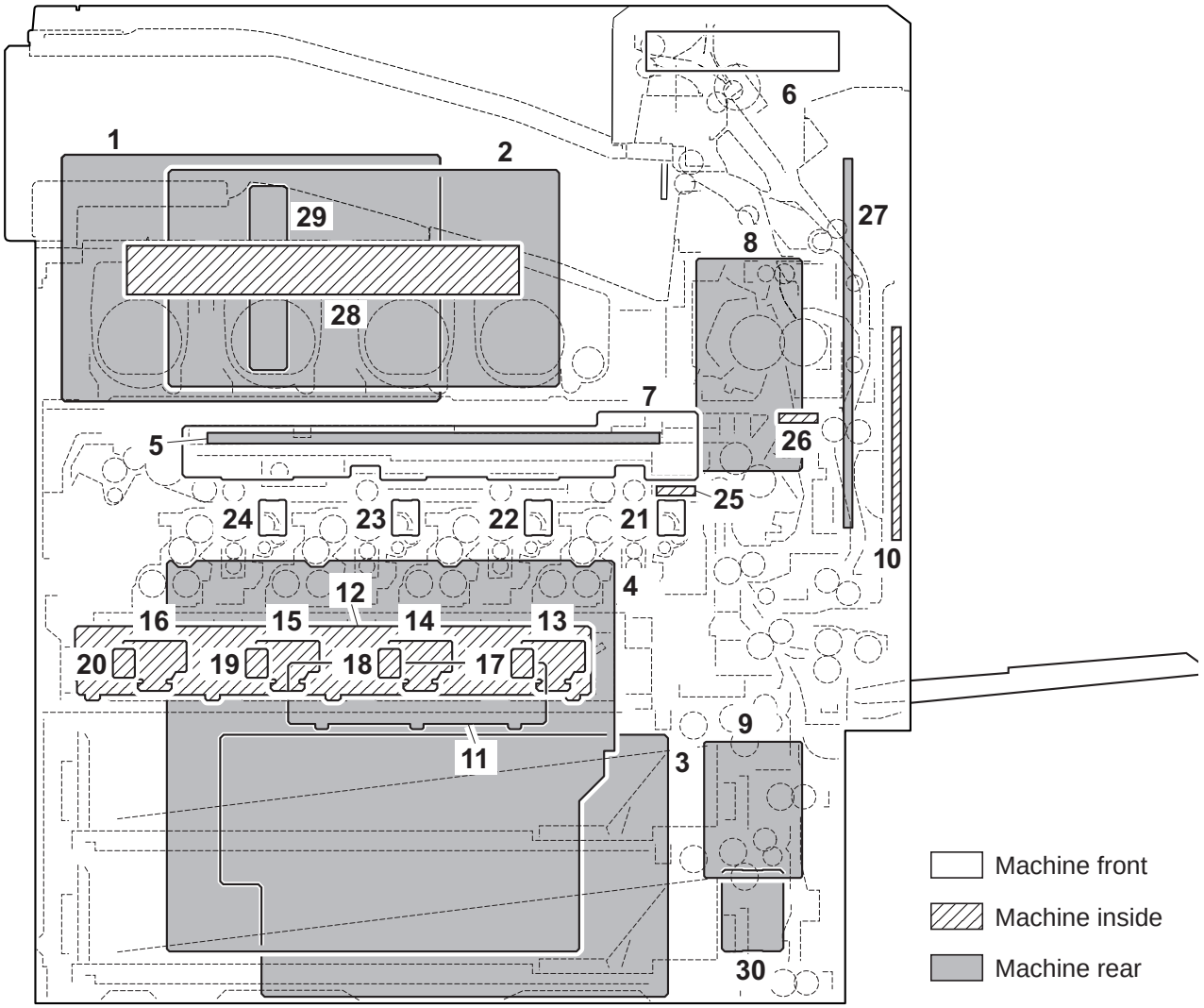

Figure 2-2-1 PWBs

1. Main PWB (MPWB) ..... Controls the software such as the print data processing and provides the interface with computers.
2. Engine PWB (EPWB)..... Controls printer hardware such as high voltage/bias output control, paper conveying system control, and fuser temperature control, etc.
3. Power source PWB (PSPWB) ..... After full-wave rectification of AC power source input, switching for converting to 24 V DC and 12 V DC for output.
4. High voltage PWB 1 (HVPWB1) ..... Generates main charging and developer bias.
5. High voltage PWB 2 (HVPWB2) ..... Generates transfer bias and separation bias.
6. Operation PWB (OPWB)..... Controls keys and LCD indication.
7. Front PWB (FRPWB) ..... Consists of wiring relay circuit between engine PWB and drum units, developer units, eject unit.
8. Feed PWB 1 (FPWB1)..... Consists of wiring relay circuit between engine PWB and fuser drive unit, relay PWB.

9. Feed PWB 2 (FPWB2)..... Consists of wiring relay circuit between engine PWB and paper conveying section, drive section.
10. Relay PWB (RPWB) ..... Consists of wiring relay circuit between feed PWB 1 and paper conveying unit.
11. Motor control PWB (MCPWB)..... Consists of wiring relay circuit between engine PWB and drum motors, developer motors.
12. LSU relay PWB (LSURPWB)..... Consists of wiring relay circuit between engine PWB and laser scanner unit.
13. APC PWB K (APCPWB-K) ..... Generates and controls the laser beam (black).
14. APC PWB M (APCPWB-M) ..... Generates and controls the laser beam (magenta).
15. APC PWB C (APCPWB-C)..... Generates and controls the laser beam (cyan).
16. APC PWB Y (APCPWB-Y) ..... Generates and controls the laser beam (yellow).
17. PD PWB K (PDPWB-K) ..... Controls horizontal synchronizing timing of laser beam (black).
18. PD PWB M (PDPWB-M)..... Controls horizontal synchronizing timing of laser beam (magenta).
19. PD PWB C (PDPWB-C)..... Controls horizontal synchronizing timing of laser beam (cyan).
20. PD PWB Y (PDPWB-Y) ..... Controls horizontal synchronizing timing of laser beam (yellow).
21. Drum PWB K (DRPWB-K) ..... Drum individual information in EEPROM storage.
22. Drum PWB M (DRPWB-M)..... Drum individual information in EEPROM storage.
23. Drum PWB C (DRPWB-C)..... Drum individual information in EEPROM storage.
24. Drum PWB Y (DRPWB-Y) ..... Drum individual information in EEPROM storage.
25. Transfer PWB (TRPWB) ..... Transfer belt individual information in EEPROM storage.
26. Fuser PWB (FUPWB) ..... Relays wirings from electrical components on the fuser unit.
27. Fuser IH PWB (FIHPWB)..... Controls the fuser IH.
28. RFID PWB (RFPWB) ..... Reads the container information.
29. Interface PWB (IFPWB) ..... Consists of wiring relay circuits between main PWB and Fax control PWB.
30. Current PWB (CRPWB) ..... Changes and outputs the AC current input to an analog signal.

List of correspondences of PWB names

No.	Name used in service manual	Name used in parts list
1	Main PWB (MPWB)	PARTS PWB MAIN ASSY SP
2	Engine PWB (EPWB)	PARTS PWB ENGINE ASSY SP
3	Power source PWB (PSPWB)	PARTS UNIT LOW VOLTAGE SP
4	High voltage PWB 1 (HVPWB1)	PARTS UNIT HIGH VOLTAGE MAIN SP
5	High voltage PWB 2 (HVPWB2)	PARTS UNIT HIGH VOLTAGE TRANSFER SP
6	Operation PWB (OPWB)	PARTS PWB PANEL ASSY SP
7	Front PWB (FRPWB)	PARTS PWB FRONT CLR ASSY SP
8	Feed PWB 1 (FPWB1)	PARTS PWB FEED 1 ASSY SP
9	Feed PWB 2 (FPWB2)	PARTS PWB FEED 2 ASSY SP
10	Relay PWB (RPWB)	PARTS PWB JUNCTION ASSY SP
11	Motor control PWB (MCPWB)	PARTS PWB MOTOR CONTROL ASSY SP
12	LSU relay PWB (LSURPWB)	PARTS PWB LSU JUNC CLR ASSY SP
13	APC PWB K (APCPWB-K)	-
14	APC PWB M (APCPWB-M)	-
15	APC PWB C (APCPWB-C)	-
16	APC PWB Y (APCPWB-Y)	-
17	PD PWB K (PDPWB-K)	-
18	PD PWB M (PDPWB-M)	-
19	PD PWB C (PDPWB-C)	-
20	PD PWB Y (PDPWB-Y)	-
21	Drum PWB K (DRPWB-K)	-
22	Drum PWB M (DRPWB-M)	-
23	Drum PWB C (DRPWB-C)	-
24	Drum PWB Y (DRPWB-Y)	-
25	Transfer PWB (TRPWB)	-
26	Fuser PWB (FUPWB)	-
27	Fuser IH PWB (FIHPWB)	-
28	RFID PWB (RFPWB)	PARTS PWB RFID ASSY SP
29	Interface PWB (IFPWB)	PARTS PWB KUIO ASSY SP
30	Current PWB (CRPWB)	PARTS PWB CURRENT AVE ASSY SP

(2) Switches and sensors

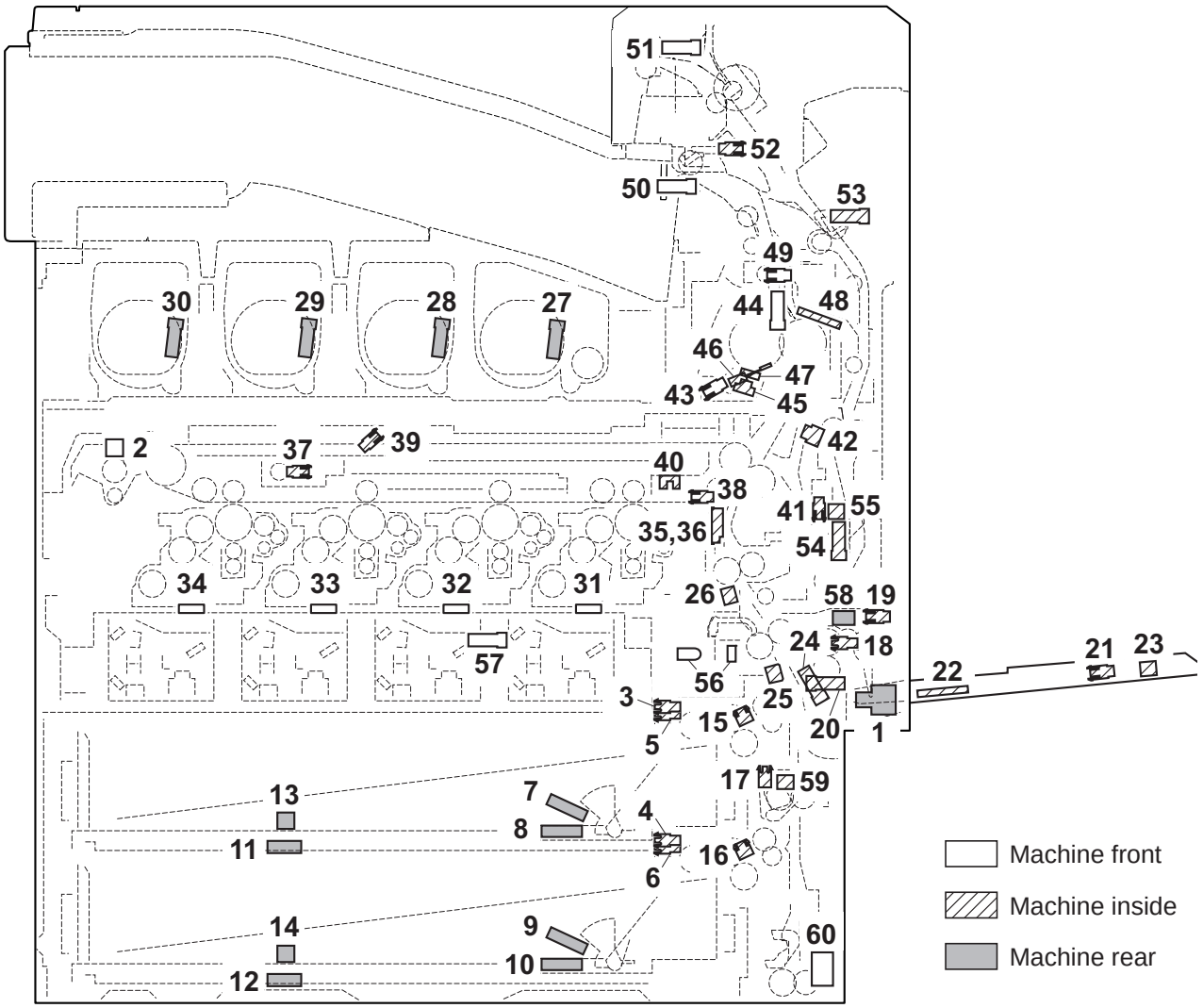

Figure 2-2-2 Switches and sensors

1. Main power switch (MSW) ..... Turns ON/OFF the AC power source.
2. Front cover switch (FRCSW) ..... Detects the opening and closing of the front cover.
3. Paper sensor 1 (PS1) ..... Detects the presence of paper (cassette 1).
4. Paper sensor 2 (PS2) ..... Detects the presence of paper (cassette 2).
5. Lift sensor 1 (LS1)..... Detects activation of upper limit of the bottom plate (cassette 1).
6. Lift sensor 2 (LS2)..... Detects activation of upper limit of the bottom plate (cassette 2).
7. Paper gauge sensor 1 (U) (PGS1(U))... Detects the paper gauge (cassette 1).
8. Paper gauge sensor 1 (L) (PGS1(L))..... Detects the paper gauge (cassette 1).
9. Paper gauge sensor 2 (U) (PGS2(U))... Detects the paper gauge (cassette 2).
10. Paper gauge sensor 2 (L) (PGS2(L))..... Detects the paper gauge (cassette 2).
11. Paper length switch 1 (PLSW1)..... Detects the length of paper (cassette 1).
12. Paper length switch 2 (PLSW2)..... Detects the length of paper (cassette 2).
13. Paper width switch 1 (PWSW1)..... Detects the width of paper (cassette 1).
14. Paper width switch 2 (PWSW2)..... Detects the width of paper (cassette 2).
15. Feed sensor 1 (FS1)..... Detects a paper misfeed in the paper feed section (cassette 1).
16. Feed sensor 2 (FS2)..... Detects a paper misfeed in the paper feed section (cassette 2).
17. Paper conveying sensor (PCS)..... Detects a paper misfeed in the vertical conveying section.

18. MP paper sensor (MPPS) ..... Detects the presence of paper (MP tray).
19. MP lift sensor 1 (MPLS1) ..... Detects activation of upper limit of the MP plate.
20. MP lift sensor 2 (MPLS2) ..... Detects activation of lower limit of the MP plate.
21. MP paper length switch (MPPLSW)..... Detects the length of paper (MP tray).
22. MP paper width switch (MPPWSW)..... Detects the width of paper (MP tray).
23. MP tray switch (MPTSW)..... Detects the MP tray extension is extend.
24. MP feed sensor (MPFS) ..... Detects a paper misfeed in the MP paper feed section.
25. Middle sensor (MS)..... Detects a paper misfeed in the paper conveying section.
26. Registration sensor (RS)..... Controls the secondary paper feed start timing.
27. Screw sensor K (SRS-K) ..... Controls the toner replenishing for the toner container K.
28. Screw sensor M (SRS-M) ..... Controls the toner replenishing for the toner container M.
29. Screw sensor C (SRS-C) ..... Controls the toner replenishing for the toner container C.
30. Screw sensor Y (SRS-Y) ..... Controls the toner replenishing for the toner container Y.
31. Toner sensor K (TS-K) ..... Detects the toner density in the developer unit K.
32. Toner sensor M (TS-M) ..... Detects the toner density in the developer unit M.
33. Toner sensor C (TS-C)..... Detects the toner density in the developer unit C.
34. Toner sensor Y (TS-Y) ..... Detects the toner density in the developer unit Y.
35. ID sensor 1 (IDS1) ..... Measures image density for color calibration.
36. ID sensor 2 (IDS2) ..... Measures image density for color calibration.
37. Color release sensor (CRS)..... Detects separation of primary transfer rollers M, C, and Y.
38. Transfer belt sensor (TRBLS) ..... Detects positioning of transfer belt rotation.
39. Transfer skew sensor (TRSS)..... Detects skew of transfer belt center position.
40. Transfer edge sensor (TRES)..... Detects edge position of the transfer belt.
41. Transfer release sensor (TRRS)..... Detects separation of secondary transfer roller.
42. Loop sensor (LPS)..... Detects a paper misfeed. Controls the fuser motor by detecting deflection in the paper.
43. Fuser belt sensor (FUBLS) ..... Detects positioning of fuser belt rotation.
44. Fuser release sensor (FURS) ..... Detects fuser pressure release setting (envelope mode).
45. Fuser thermistor 1 (FTH1) ..... Detects the heat roller (fuser belt) temperature.
46. Fuser thermistor 2 (FTH2) ..... Detects the heat roller (fuser belt) temperature.
47. Fuser thermistor 3 (FTH3) ..... Detects the heat roller (fuser belt) temperature.
48. Fuser thermistor 4 (FTH4) ..... Detects the press roller temperature.
49. Fuser eject sensor (FUES) ..... Detects a paper misfeed in the fuser section.
50. Eject full sensor 1 (EFS1) ..... Detects a paper misfeed in the eject section. Detects when the main tray is full.
51. Eject full sensor 2 (EFS2) ..... Detects a paper misfeed in the eject section. Detects when the sub tray is full.
52. Switchback sensor (SBS) ..... Detects a paper misfeed in the eject and switchback sections.
53. Duplex sensor 1 (DUS1)..... Detects a paper misfeed in the duplex section.
54. Duplex sensor 2 (DUS2)..... Detects a paper misfeed in the duplex section.
55. Duplex cover switch (DUCSW)..... Detects the opening and closing of the duplex cover.
56. Waste toner sensor 1 (WTS1)..... Detects when the waste toner box is full.
57. Waste toner sensor 2 (WTS2)..... Detects when the waste toner box is near end.
58. Paper conveying unit switch (PCUSW) ..... Detects the opening and closing of the paper conveying unit.
59. Paper conveying cover switch (DUCSW)..... Detects the opening and closing of the paper conveying cover.
60. Outer temperature sensor (OTEMS)..... Detects the outside temperature and humidity.

(3) Motors

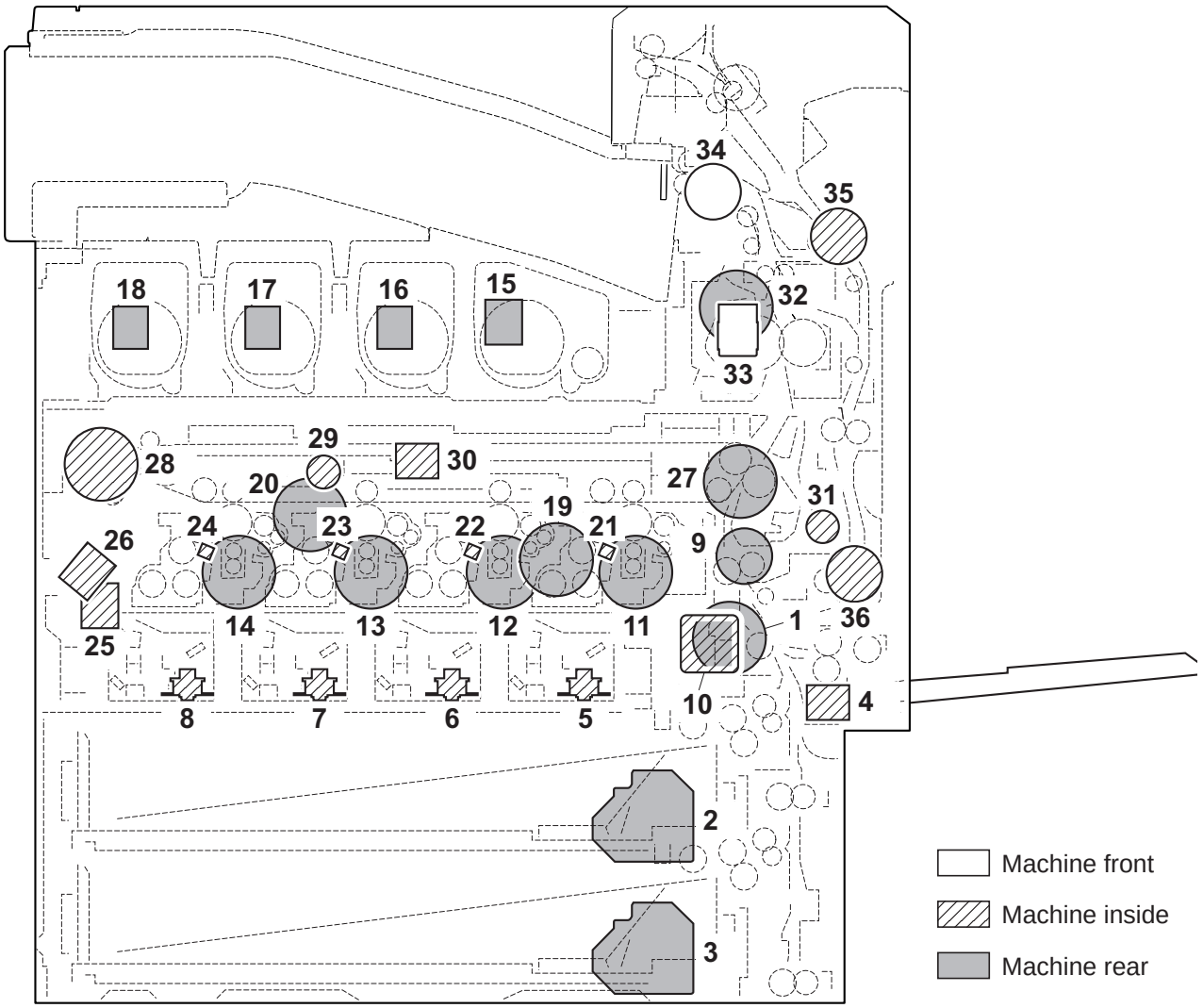

Figure 2-2-3 Motors

1. Paper feed motor (PFM) ..... Drives the paper feed section.
2. Lift motor 1 (LM1)..... Operates the bottom plate (cassette 1).
3. Lift motor 2 (LM2)..... Operates the bottom plate (cassette 2).
4. MP lift motor (MPLM) ..... Operates the MP plate.
5. Polygon motor K (PM-K) ..... Drives the polygon mirror K.
6. Polygon motor M (PM-M)..... Drives the polygon mirror M.
7. Polygon motor C (PM-C)..... Drives the polygon mirror C.
8. Polygon motor Y (PM-Y) ..... Drives the polygon mirror Y.
9. Registration motor (RM)..... Drives the registration section.
10. Middle motor (MM)..... Drives the paper conveying section.
11. Drum motor K (DRM-K) ..... Drives the drum unit K.
12. Drum motor M (DRM-M) ..... Drives the drum unit M.
13. Drum motor C (DRM-C) ..... Drives the drum unit C.
14. Drum motor Y (DRM-Y) ..... Drives the drum unit Y.
15. Toner motor K (TM-K)..... Replenishes toner to the developer unit K.
16. Toner motor M (TM-M) ..... Replenishes toner to the developer unit M.
17. Toner motor C (TM-C)..... Replenishes toner to the developer unit C.

18. Toner motor Y (TM-Y) ..... Replenishes toner to the developer unit Y.
19. Developer motor K (DEVM-K)..... Drives the developer unit K.
20. Developer motor MCY (DEVM-MCY) ... Drives the developer units M, C and Y.
21. Vibration motor K (VM-K)..... Toner lump in the developer unit K vibrates.
22. Vibration motor M (VM-M)..... Toner lump in the developer unit M vibrates.
23. Vibration motor C (VM-C) ..... Toner lump in the developer unit C vibrates.
24. Vibration motor Y (VM-Y)..... Toner lump in the developer unit Y vibrates.
25. LSU cleaning motor (LSUCM) ..... Drives LSU dust shield glass cleaning system.
26. Waste toner motor (WTM)..... Drives waste toner system.
27. Transfer motor (TRM) ..... Drives the transfer section.
28. Transfer cleaning motor (TRCM) ..... Drives the transfer cleaning section.
29. Color release motor (CRM)..... Drives separation of primary transfer rollers M, C, and Y.
30. Transfer skew motor (TRSM)..... Drives skew of transfer tension roller.
31. Transfer release motor (TRRM)..... Drives separation of secondary transfer roller.
32. Fuser motor (FUM) ..... Drives the fuser section.
33. Fuser release motor (FURM)..... Drives fuser pressure release.
34. Eject motor (EM)..... Drives the eject section.
35. Duplex motor 1 (DUM1)..... Drives the duplex section.
36. Duplex motor 2 (DUM2)..... Drives the duplex section.

(4) Fan motors

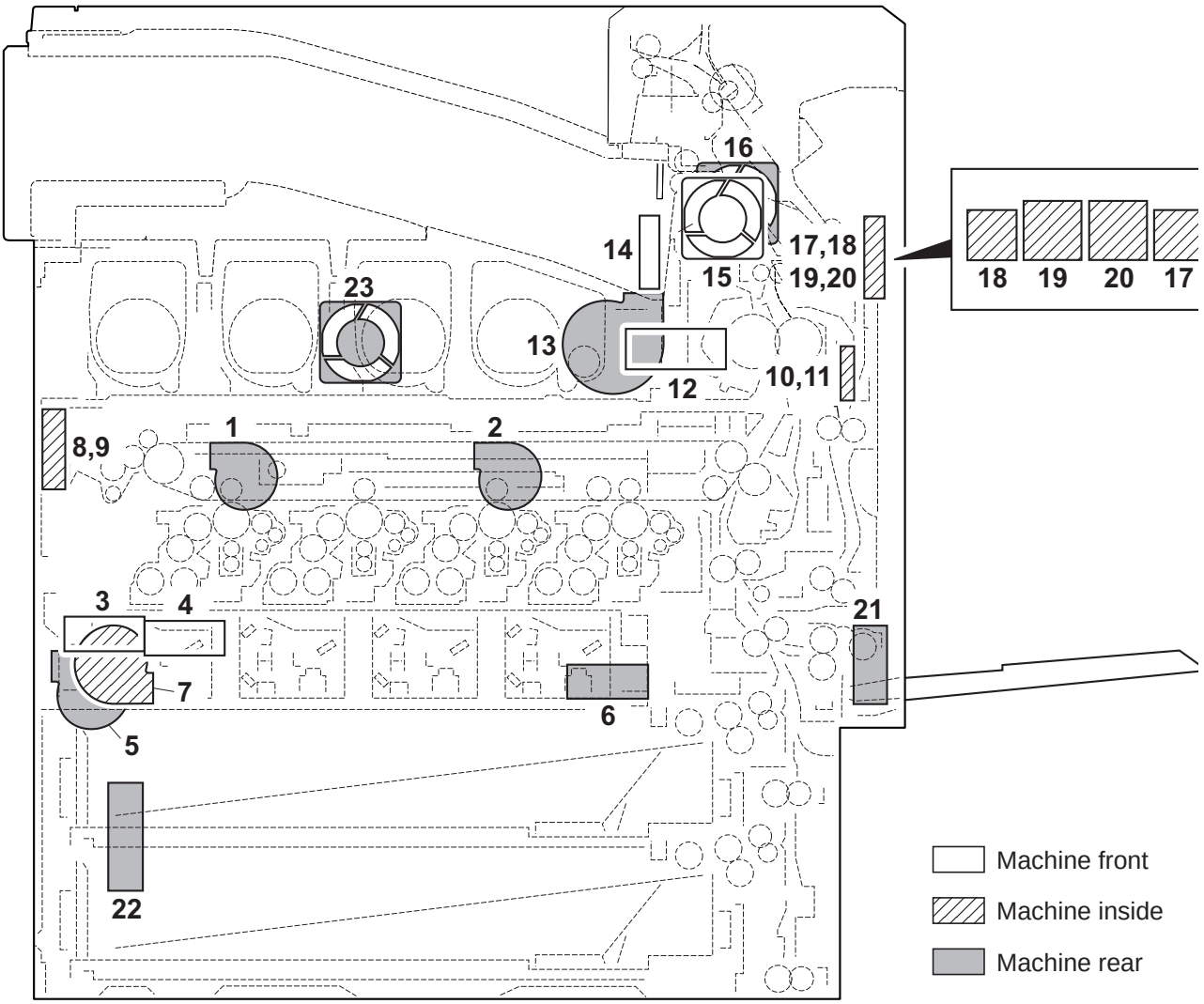

Figure 2-2-4 Motors

1. Toner fan motor 1 (TFM1) ..... Cools the toner container section.
2. Toner fan motor 2 (TFM2) ..... Cools the toner container section.
3. Developer fan motor 1 (DEVFM1) ..... Cools the developer section.
4. Developer fan motor 2 (DEVFM2) ..... Cools the developer section.
5. Exhaust fan motor 1 (EXFM1) ..... Cools the machine inside.
6. Exhaust fan motor 2 (EXFM2) ..... Cools the machine inside.
7. LSU fan motor (LSUFM) ..... Cools the laser scanner unit section.
8. Belt fan motor 1 (BLFM1)..... Cools the transfer belt section.
9. Belt fan motor 2 (BLFM2)..... Cools the transfer belt section.
10. Fuser edge fan motor 1 (FUEFM1)..... Cools the fuser section (edge).
11. Fuser edge fan motor 2 (FUEFM2)..... Cools the fuser section (edge).
12. Fuser front fan motor (FUFFM)..... Cools the fuser section (front side).
13. Fuser rear fan motor (FURFM) ..... Cools the fuser section (rear side).
14. Eject front fan motor 1 (EFFM1) ..... Cools the eject section (front side).
15. Eject front fan motor 2 (EFFM2) ..... Cools the eject section (front side).
16. Eject rear fan motor (ERFM)..... Cools the eject section (rear side).

17. Fuser fan motor 1 (FUFM1) ..... Cools the fuser section.
18. Fuser fan motor 2 (FUFM2) ..... Cools the fuser section.
19. Eject fan motor 1 (EFM1)..... Cools the eject section.
20. Eject fan motor 2 (EFM2)..... Cools the eject section.
21. IH fan motor (IHFM)..... Cools the fuser IH PWB.
22. Power source fan motor (PSFM) ..... Cools the power source section.
23. Controller fan motor (CONFM)..... Cools the controller section.

(5) Others

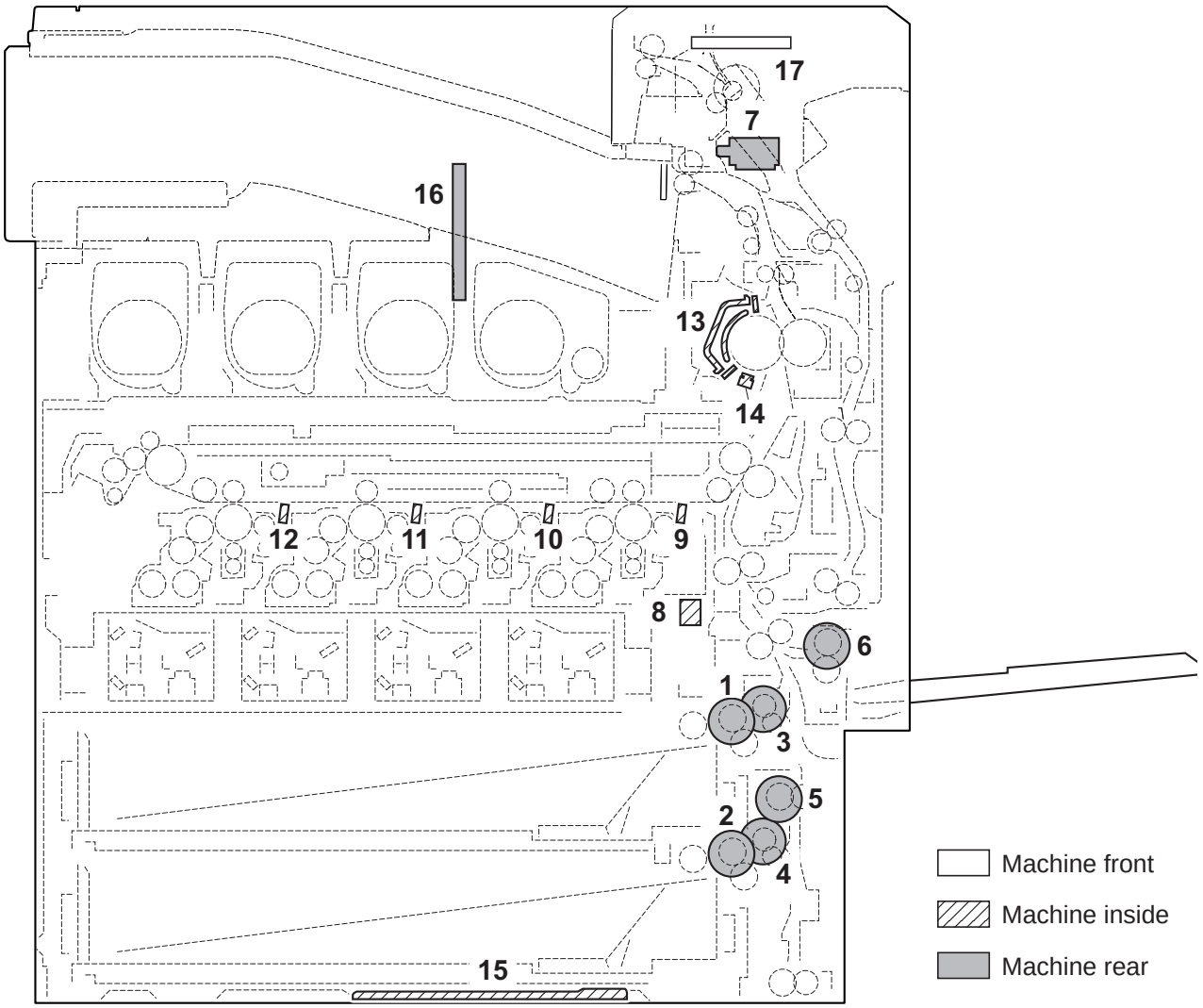

Figure 2-2-5 Others

1. Paper feed clutch 1 (PFCL1) ..... Primary paper feed from cassette 1.
2. Paper feed clutch 1 (PFCL1) ..... Primary paper feed from cassette 2.
3. Assist clutch 1 (ASCL1) ..... Controls the drive of the assist roller.
4. Assist clutch 2 (ASCL2) ..... Controls the drive of the assist roller.
5. Paper conveying clutch (PCCL)..... Controls the drive of vertical conveying section.
6. MP paper feed clutch (MPPFCL) ..... Controls primary paper feed from the MP tray.
7. Feedshift solenoid (FSSOL)..... Controls the feedshift guide.
8. Cleaning solenoid (CLSOL) ..... Controls the ID sensor cleaning.
9. Cleaning lamp K (CL-K) ..... Eliminates the residual electrostatic charge on the drum (black).
10. Cleaning lamp M (CL-M)..... Eliminates the residual electrostatic charge on the drum (magenta).
11. Cleaning lamp C (CL-C)..... Eliminates the residual electrostatic charge on the drum (cyan).
12. Cleaning lamp Y (CL-Y) ..... Eliminates the residual electrostatic charge on the drum (yellow).
13. Fuser IH (FIH) ..... Heats the heat roller (fuser belt).
14. Fuser thermostat (FTS)..... Prevents overheating of the heat roller (fuser belt).
15. Cassette heater (CH) ..... Dehumidifies the cassette section (option).
16. Hard disk (HDD)..... Storages the image data and information of job accounting mode.
17. LCD back light (LCDBL)..... Back lighting of LCD.

2-3-1 Main PWB

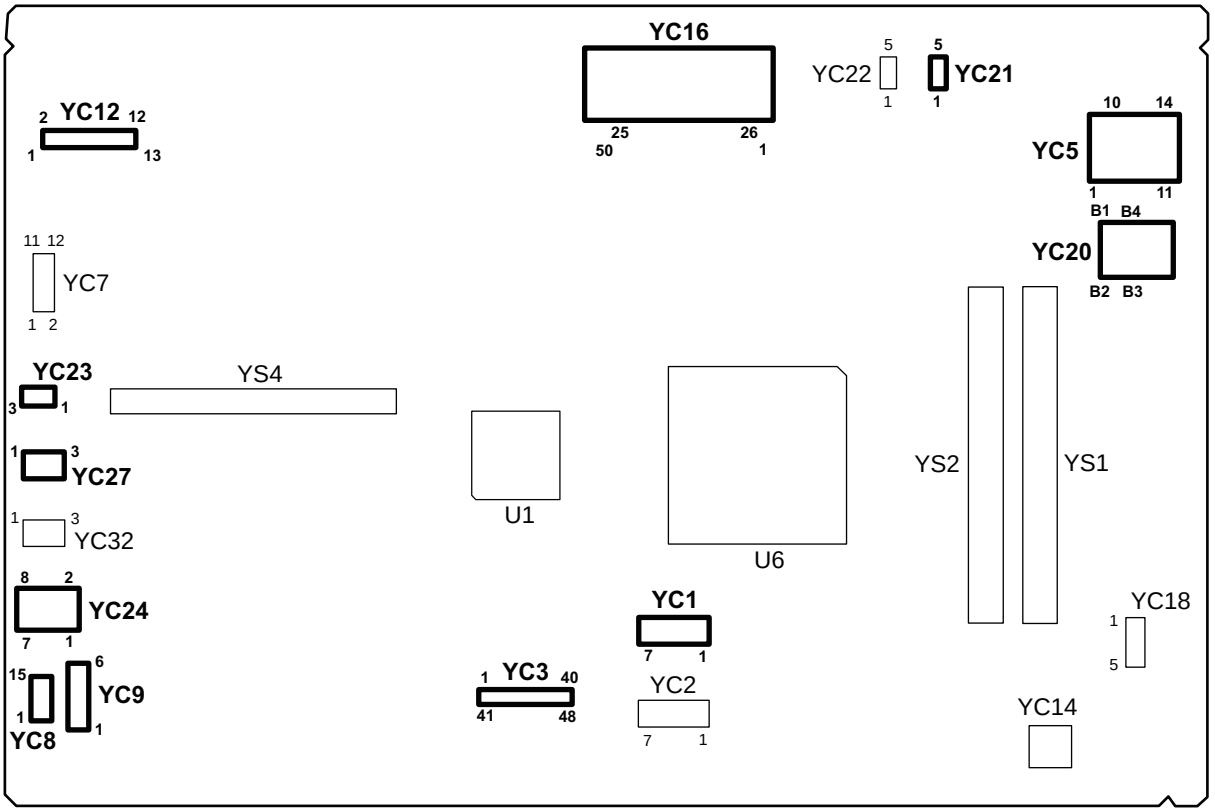

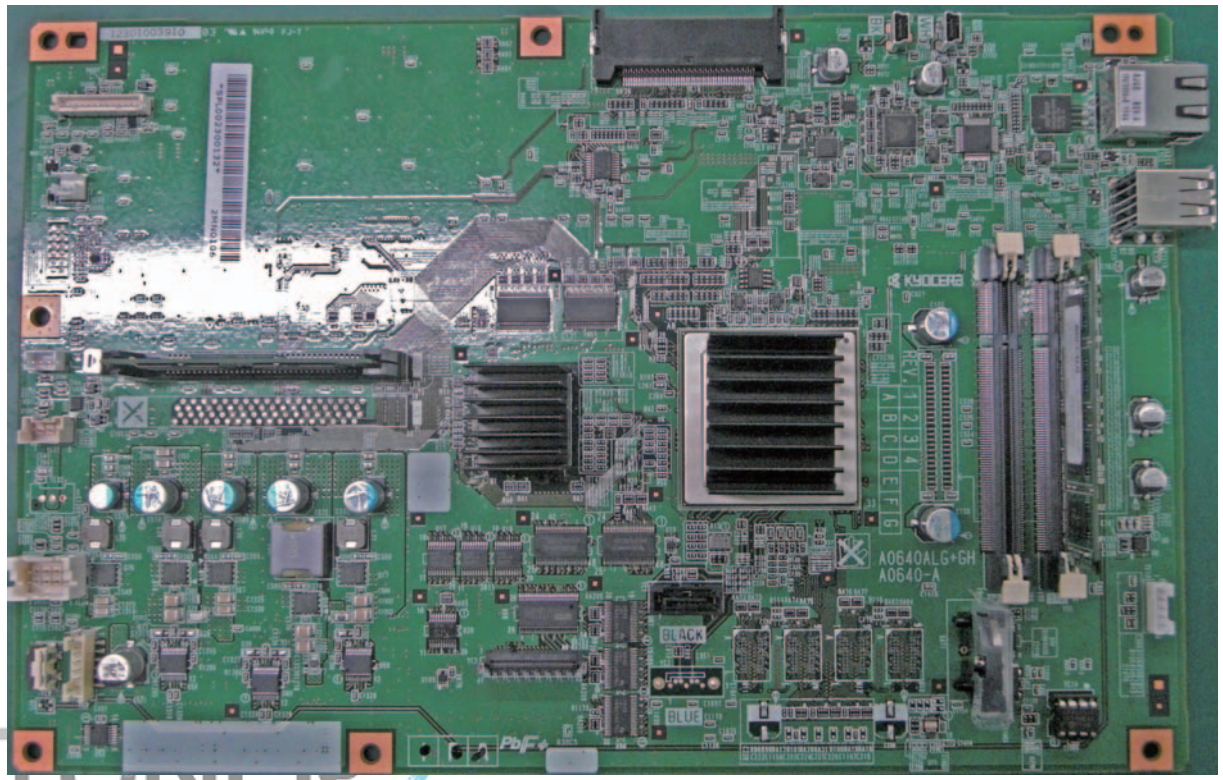

* : Refer to the picture.

Figure 2-3-1 Main PWB silk-screen diagram and photograph

Connector	Pin	Signal	I/O	Voltage	Description
YC1	1	GND	-	-	Ground
Connected to hard disk	2	SATATXDP_C2H	O	-	HDD data signal
	3	SATATXDN_C2H	O	-	HDD data signal
	4	GND	-	-	Ground
	5	SATARXDN_H2C	I	-	HDD data signal
	6	SATARXDP_H2C	I	-	HDD data signal
	7	GND	-	-	Ground
YC3	1	GND	-	-	Ground
Connected to engine PWB	2	EGSCLK	O	0/3.3 V DC	Clock signal
	3	EGSI	I	0/3.3 V DC (pulse)	Serial communication data signal
	4	EGSDIR	O	0/3.3 V DC	Engine communication direction signal
	5	EGSBSY	O	0/3.3 V DC	Engine busy signal
	6	EGSO	I	0/3.3 V DC (pulse)	Serial communication data signal
	7	EGSIRN	O	0/3.3 V DC	Engine interrupt signal
	8	GND	-	-	Ground
	9	GND	-	-	Ground
	10	HOLD_ENG	O	0/3.3 V DC	Engine hold signal
	11	SLEEP	O	0/3.3 V DC	Sleep signal
	12	HSYNDD_P	O	0/3.3 V DC (pulse)	Image control signal
	13	HSYNDD_N	O	0/3.3 V DC (pulse)	Image control signal
	14	HSYNCC_P	O	0/3.3 V DC (pulse)	Image control signal
	15	HSYNCC_N	O	0/3.3 V DC (pulse)	Image control signal
	16	HSYNCB_P	O	0/3.3 V DC (pulse)	Image control signal
	17	HSYNCB_N	O	0/3.3 V DC (pulse)	Image control signal
	18	HSYNCA_P	O	0/3.3 V DC (pulse)	Image control signal
	19	HSYNCA_N	O	0/3.3 V DC (pulse)	Image control signal
	20	VSYNDD_P	O	0/3.3 V DC (pulse)	Image control signal
	21	VSYNDD_N	O	0/3.3 V DC (pulse)	Image control signal
	22	VSYNCD_P	O	0/3.3 V DC (pulse)	Image control signal
		VSYNCD_N	O	0/3.3 V DC (pulse)	Image control signal
	23	VSYNCB_P	O	0/3.3 V DC (pulse)	Image control signal
	24	VSYNCB_N	O	0/3.3 V DC (pulse)	Image control signal
	25	VSYNCA_P	O	0/3.3 V DC (pulse)	Image control signal
	26	VSYNCA_N	O	0/3.3 V DC (pulse)	Image control signal
	27	GND	-	-	Ground

Connector	Pin	Signal	I/O	Voltage	Description
YC3	28	TCLKP	O	0/3.3 V DC (pulse)	Image control signal
Connected to engine PWB	29	TCLKN	O	0/3.3 V DC (pulse)	Image control signal
	30	GND	-	-	Ground
	31	TCP	O	0/3.3 V DC (pulse)	Image control signal
	32	TCN	O	0/3.3 V DC (pulse)	Image control signal
	33	GND	-	-	Ground
	34	TBP	O	0/3.3 V DC (pulse)	Image control signal
	35	TBN	O	0/3.3 V DC (pulse)	Image control signal
	36	GND	-	-	Ground
	37	TAP	O	0/3.3 V DC (pulse)	Image control signal
	38	TAN	O	0/3.3 V DC (pulse)	Image control signal
	39	GND	-	-	Ground
	40	SGND	-	-	Ground
YC5	1	TD1+	O	0/3.3 V DC (pulse)	Transmission data
Connected to ethernet	2	TD1-	O	0/3.3 V DC (pulse)	Transmission data
	3	TD2+	O	0/3.3 V DC (pulse)	Transmission data
	4	TD2-	O	0/3.3 V DC (pulse)	Transmission data
	5	CT1	O	3.3 V DC	3.3 V DC power output
	6	CT2	O	3.3 V DC	3.3 V DC power output
	7	TD3+	O	0/3.3 V DC (pulse)	Transmission data
	8	TD3-	O	0/3.3 V DC (pulse)	Transmission data
	9	TD4+	O	0/3.3 V DC (pulse)	Transmission data
	10	TD4-	O	0/3.3 V DC (pulse)	Transmission data
	11	GRLED_A1	O	0/3.3 V DC	LED emitter signal
	12	GRLED_K1	O	0/3.3 V DC	LED emitter signal
	13	YWLED_A2	O	0/3.3 V DC	LED emitter signal
	14	YWLED_K2	O	0/3.3 V DC	LED emitter signal

Connector	Pin	Signal	I/O	Voltage	Description
YC8	1	RESET0	I	0/3.3 V DC	Reset signal
Connected to interface PWB	2	WAKEUP0	O	0/3.3 V DC	Control signal
	3	AUDIO0	I	Analog	Audio signal
	4	GND	-	-	Ground
	5	USB_DP0	I/O	-	USB data signal
	6	USB_DN0	I/O	-	USB data signal
	7	VBUS0	O	3.3 V DC	3.3 V DC power to IFPWB
	8	GND	-	-	Ground
	9	RESET1	I	0/3.3 V DC	Reset signal
	10	WAKEUP1	O	0/3.3 V DC	Control signal
	11	AUDIO1	I	Analog	Audio signal
	12	GND	-	-	Ground
	13	USB_DP1	I/O	-	USB data signal
	14	USB_DN1	I/O	-	USB data signal
	15	VBUS1	O	3.3 V DC	3.3 V DC power to IFPWB
YC9	1	GND	-	-	Ground
Connected to interface PWB	2	5V_CUT0	I	0/3.3 V DC	5 V DC cut signal
	3	GND	-	-	Ground
	4	5V	O	5 V DC	5 V DC power to IFPWB
	5	GND	-	-	Ground
	6	5V_CUT1	I	0/3.3 V DC	5 V DC cut signal
YC12	1	5V	O	5 V DC	5 V DC power output
Connected to operation PWB	2	LED	-	-	Not used
	3	GND	-	-	Ground
	4	C2P_SDAT	O	0/3.3 V DC (pulse)	OPWB transmission signal
	5	WETCLK	-	-	Not used
	6	P2C_SDAT	I	0/3.3 V DC (pulse)	OPWB received signal
	7	AIRWET	-	-	Not used
	8	C2P_MODE1	O	0/3.3 V DC	LCD control signal
	9	AIRTEMP	-	-	Not used
	10	C2P_MODE2	O	0/3.3 V DC	Buzzer control signal
	11	P2C_OK_KEY	I	0/3.3 V DC	OK key signal
	12	PRESTN	O	0/3.3 V DC	Reset signal
	13	3.3V	O	3.3 V DC	3.3 V DC power output

Connector	Pin	Signal	I/O	Voltage	Description
YC16	1	GND	-	-	Ground
Connected to CF card	2	D3	I/O	0/3.3 V DC (pulse)	Data bus signal
	3	D4	I/O	0/3.3 V DC (pulse)	Data bus signal
	4	D5	I/O	0/3.3 V DC (pulse)	Data bus signal
	5	D6	I/O	0/3.3 V DC (pulse)	Data bus signal
	6	D7	I/O	0/3.3 V DC (pulse)	Data bus signal
	7	/CE1	O	0/3.3 V DC	Control signal
	8	A10	O	0/3.3 V DC (pulse)	Address bus signal
	9	/OE	O	0/3.3 V DC	Control signal
	10	A9	O	0/3.3 V DC (pulse)	Address bus signal
	11	A8	O	0/3.3 V DC (pulse)	Address bus signal
	12	A7	O	0/3.3 V DC (pulse)	Address bus signal
	13	VCC	O	0/3.3 V DC	Control signal
	14	A6	O	0/3.3 V DC (pulse)	Address bus signal
	15	A5	O	0/3.3 V DC (pulse)	Address bus signal
	16	A4	O	0/3.3 V DC (pulse)	Address bus signal
	17	A3	O	0/3.3 V DC (pulse)	Address bus signal
	18	A2	O	0/3.3 V DC (pulse)	Address bus signal
	19	A1	O	0/3.3 V DC (pulse)	Address bus signal
	20	A0	O	0/3.3 V DC (pulse)	Address bus signal
	21	D0	I/O	0/3.3 V DC (pulse)	Data bus signal
	22	D1	I/O	0/3.3 V DC (pulse)	Data bus signal
	23	D2	I/O	0/3.3 V DC (pulse)	Data bus signal
	24	WP	O	0/3.3 V DC	Control signal
	25	/CD2	O	0/3.3 V DC	Control signal
	26	/CD1	O	0/3.3 V DC	Control signal
	27	D11	I/O	0/3.3 V DC (pulse)	Data bus signal
	28	D12	I/O	0/3.3 V DC (pulse)	Data bus signal
	29	D13	I/O	0/3.3 V DC (pulse)	Data bus signal
	30	D14	I/O	0/3.3 V DC (pulse)	Data bus signal
	31	D15	I/O	0/3.3 V DC (pulse)	Data bus signal
	32	/CE2	O	0/3.3 V DC	Control signal
	33	/VS1	O	0/3.3 V DC	Control signal
	34	/IORD	O	0/3.3 V DC	Control signal
	35	/IOWD	O	0/3.3 V DC	Control signal
	36	/WE	O	0/3.3 V DC	Control signal
	37	RDY/BSY	I	0/3.3 V DC	Control signal

Connector	Pin	Signal	I/O	Voltage	Description
YC16	38	VCC	O	0/3.3 V DC	Control signal
Connected to CF card	39	CSEL	O	0/3.3 V DC	Control signal
	40	VS2	O	0/3.3 V DC	Control signal
	41	RESET	I	0/3.3 V DC	Reset signal
	42	/WAIT	O	0/3.3 V DC	Control signal
	43	INPACK	O	0/3.3 V DC	Control signal
	44	/REG	I	0/3.3 V DC	REG signal
	45	BVD2	O	0/3.3 V DC	Control signal
	46	BVD1	O	0/3.3 V DC	Control signal
	47	D8	I/O	0/3.3 V DC (pulse)	Data bus signal
	48	D9	I/O	0/3.3 V DC (pulse)	Data bus signal
	49	D10	I/O	0/3.3 V DC (pulse)	Data bus signal
	50	GND	-	-	Ground
YC20	D1	VBUS	O	5 V DC	5 V DC power output
Connected to USB	D2	D-_D	I/O	-	USB data signal
	D3	D+_D	I/O	-	USB data signal
	D4	GND	-	-	Ground
	H1	GND_D	-	-	Ground
	H2	VBUS_H	O	5 V DC	5 V DC power output
	H3	D-_H	I/O	-	USB data signal
	H4	D+_H	I/O	-	USB data signal
YC21	1	VBUS	O	5 V DC	5 V DC power output
Connected to USB host	2	DATA -	I/O	-	USB data signal
	3	DATA +	I/O	-	USB data signal
	4	ID	-	-	Not used
	5	GND	-	-	Ground
YC23	1	SPEED_CONTROL	O	0/5 V DC	CONFM: On/Off
Connected to controller fan motor	2	GND	-	-	Ground
	3	5V	O	5 V DC	5 V DC power output to CONFM

Connector	Pin	Signal	I/O	Voltage	Description
YC24	1	+12V	I	12 V DC	12 V DC power from PSPWB
Connected to power source PWB	2	+12V	I	12 V DC	12 V DC power from PSPWB
	3	+12V	I	12 V DC	12 V DC power from PSPWB
	4	+12V	I	12 V DC	12 V DC power from PSPWB
	5	GND	-	-	Ground
	6	GND	-	-	Ground
	7	GND	-	-	Ground
	8	GND	-	-	Ground
YC27	1	GND	-	-	Ground
Connected to hard disk	2	+5V_HDD	O	5 V DC	5 V DC power to HDD1
	3	GND	-	-	Ground

2-3-2 Engine PWB

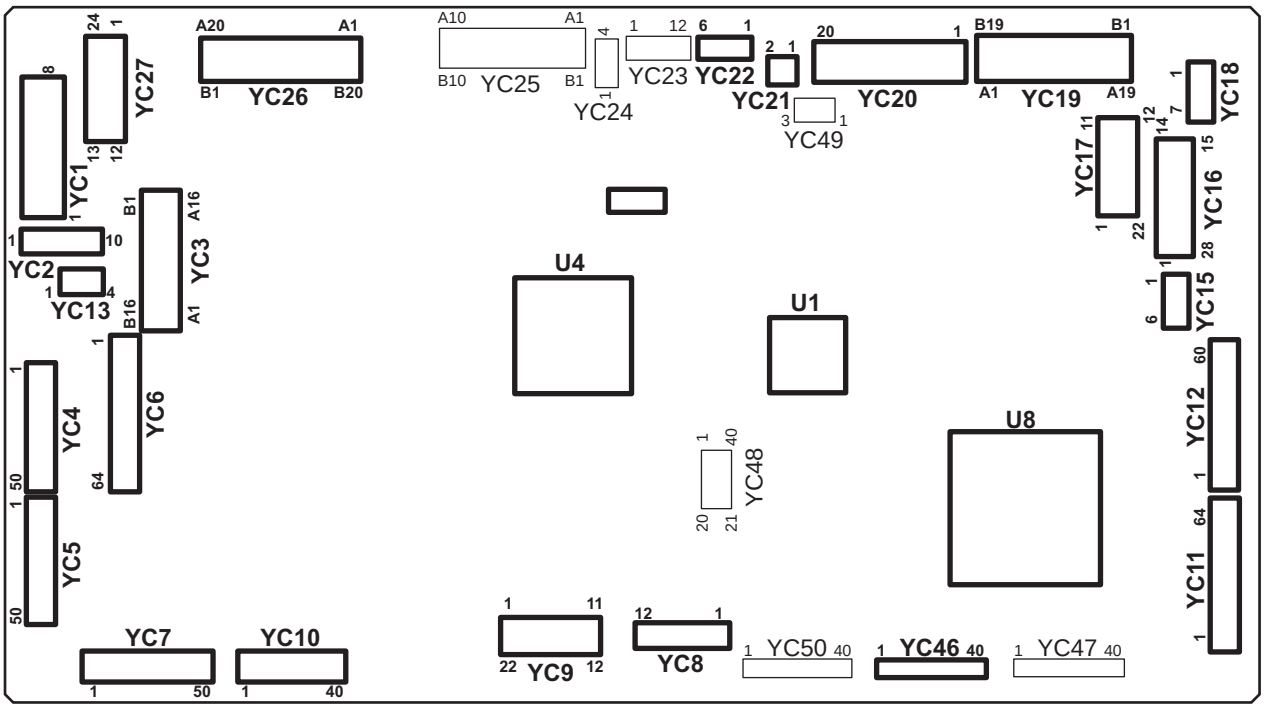

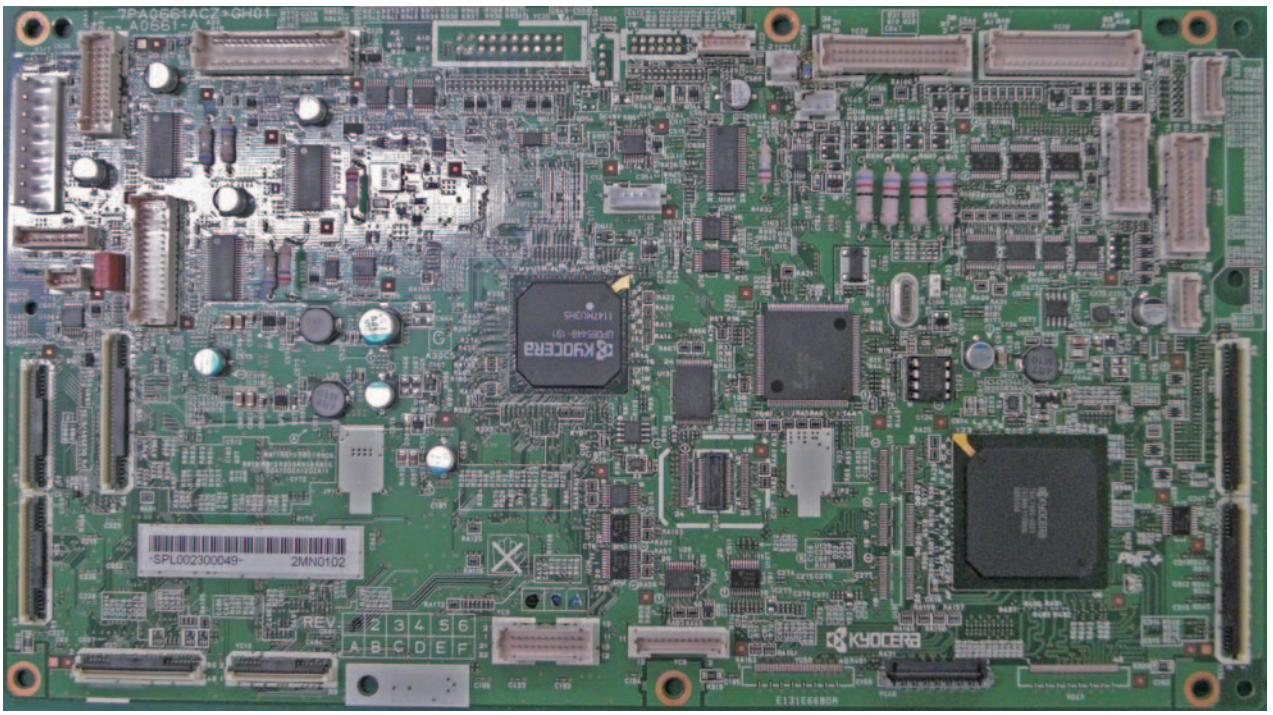

* : Refer to the picture.

Figure 2-3-2 Engine PWB silk-screen diagram and photograph

Connector	Pin	Signal	I/O	Voltage	Description
YC1	1	GND	-	-	Ground
Connected to feed PWB 1	2	5V	I	5 V DC	5 V DC power from FPWB1
	3	GND	-	-	Ground
	4	12V	I	12 V DC	12 V DC power from FPWB1
	5	GND	-	-	Ground
	6	GND	-	-	Ground
	7	24V1	I	24 V DC	24 V DC power from FPWB1
	8	24V1	I	24 V DC	24 V DC power from FPWB1
YC2	1	GND	-	-	Ground
Connected to front PWB	2	GND	-	-	Ground
	3	GND	-	-	Ground
	4	GND	-	-	Ground
	5	GND	-	-	Ground
	6	+24V	O	24 V DC	24 V DC power to FRPWB
	7	+24V	O	24 V DC	24 V DC power to FRPWB
	8	+5V	O	5 V DC	5 V DC power to FRPWB
	9	+3.3V2	O	3.3 V DC	3.3 V DC power to FRPWB
	10	+3.3V1	O	3.3 V DC	3.3 V DC power to FRPWB
YC3	A1	+24V1	O	24 V DC	24 V DC power to TRCM
Connected to transfer belt unit	A2	GND	-	-	Ground
	A3	ICL_MOT_REM	I	0/3.3 V DC	TRCM: On/Off
	A4	ICL_MOT_CLK	O	0/3.3 V DC (pulse)	TRCM clock signal
	A5	ICL_MOT_RDY	I	0/3.3 V DC	TRCM ready signal
	A6	ICL_MOT_DIR	O	0/3.3 V DC	TRCM drive switch signal
	A7	RLS_MOT_DR	O	0/24 V DC	CRM: On/Off
	A8	24V1	O	24 V DC	24 V DC power to CRM
	A9	GND	-	-	Ground
	A10	RLS_SENS	I	0/3.3 V DC	CRS: On/Off
	A11	5V	O	5 V DC	5 V DC power to CRS
	A12	ZIG_MOT_DR_CCW	O	0/24 V DC	TRSM: On/Off (CCW)
	A13	ZIG_MOT_DR_CW	O	0/24 V DC	TRSM: On/Off (CW)
	A14	GND	-	-	Ground
	A15	BLT_INDEX	-	-	Not used

Connector	Pin	Signal	I/O	Voltage	Description
YC3	A16	5V	-	-	Ground
Connected to transfer belt unit	B1	GND	-	-	Ground
	B2	ZIG_SENS	I	0/3.3 V DC	TRSS: On/Off
	B3	5V	O	5 V DC	5 V DC power to TRSS
	B4	GND	-	-	Ground
	B4	GND	-	-	Ground
	B5	BLT_SPEED	I	0/3.3 V DC	TRBLS: On/Off
	B6	+5V	O	5 V DC	5 V DC power to TRBLS
	B7	TEMP	I	Analog	TEMP signal
	B8	ZIG_REV_SENS	I	0/3.3 V DC	TRES: On/Off
	B9	GND	-	-	Ground
	B10	5V	O	5 V DC	5 V DC power to TRES
	B11	3.3V2	O	3.3 V DC	3.3 V DC power to TRPWB
	B12	EEP_SCL2	O	0/3.3 V DC (pulse)	EEPROM clock signal
	B13	EEP_SDA2	I/O	0/3.3 V DC (pulse)	EEPROM data signal
	B14	GND	-	-	Ground
	B15	A0	-	-	Not used
	B16	A1	-	-	Not used
YC4	1	GND	-	-	Ground
Connected to feed PWB 2	2	FEED_MOT_REM	O	0/3.3 V DC	PFM: On/Off
	3	FEED_MOT_CLK	O	0/3.3 V DC (pulse)	PFM clock signal
	4	FEED_MOT_RDY	I	0/3.3 V DC	PFM ready signal
	5	FEED_MOT_DIR	O	0/3.3 V DC	PFM drive switch signal
	6	FEED_CL1_REM	O	0/24 V DC	PFCL1: On/Off
	7	FEED_CL2_REM	O	0/24 V DC	PFCL2: On/Off
	8	ASIST_CL2	O	0/24 V DC	ASCL2: On/Off
	9	LIFT_MOT2_REM	O	0/24 V DC	LM2: On/Off
	10	GND	-	-	Ground
	11	LIFT_MOT1_REM 1	O	0/24 V DC	LM1: On/Off
	12	CAS2_WID	I	0/3.3 V DC	PWSW2: On/Off
	13	CAS2_LNG3	I	0/3.3 V DC	PLSW2: On/Off
	14	CAS2_LNG2	I	0/3.3 V DC	PLSW2: On/Off
	15	CAS2_LNG1	I	0/3.3 V DC	PLSW2: On/Off
	16	CAS1_WID	I	0/3.3 V DC	PWSW1: On/Off

Connector	Pin	Signal	I/O	Voltage	Description
YC4	17	CAS1_LNG3	I	0/3.3 V DC	PLSW1: On/Off
Connected to feed PWB 2	18	CAS1_LNG2	I	0/3.3 V DC	PLSW1: On/Off
	19	CAS1_LNG1	I	0/3.3 V DC	PLSW1: On/Off
	20	GND	-	-	Ground
	21	CAS2_QUANT2	I	0/3.3 V DC	PGS2(L): On/Off
	22	CAS2_QUANT1	I	0/3.3 V DC	PGS2(U): On/Off
	23	CAS1_QUANT2	I	0/3.3 V DC	PGS1(L): On/Off
	24	CAS1_QUANT1	I	0/3.3 V DC	PGS1(U): On/Off
	25	LIFT_MOT1_LOCK	I	0/3.3 V DC	LM1 lock signal
	26	LIFT_MOT2_LOCK	I	0/3.3 V DC	LM2 lock signal
	27	CURRENT_SIG	I	0/3.3 V DC	Current signal
	28	V-FEED_CL	O	0/24 V DC	PCCL: On/Off
	29	COVER_OPEN	I	0/3.3 V DC	PCCSW: On/Off
	30	FEED2_SENS	I	0/3.3 V DC	PFPCS1: On/Off
	31	CAS1_P0	I	0/3.3 V DC	FS1: On/Off
	32	CAS1_LIFT_UP	I	0/3.3 V DC	LS1: On/Off
	33	GND	-	-	Ground
	34	CAS1_EMPTY	I	0/3.3 V DC	PS1: On/Off
	35	PICK_SOL1_RET	O	0/24 V DC	PUSOL1: On/Off (RET)
	36	PICK_SOL1_REM	O	0/24 V DC	PUSOL1: On/Off (ACT)
	37	CAS2_P0	I	0/3.3 V DC	FS2: On/Off
	38	CAS2_LIFT_UP	I	0/3.3 V DC	LS2: On/Off
	39	CAS2_EMPTY	I	0/3.3 V DC	PS2: On/Off
	40	PICK_SOL2_RET	O	0/24 V DC	PUSOL2: On/Off (RET)
	41	PICK_SOL2_REM	O	0/24 V DC	PUSOL2: On/Off (ACT)
	42	GND	-	-	Ground
	43	REG_SENS	I	0/3.3 V DC	RS: On/Off
	44	FEED1_SENS	I	0/3.3 V DC	PCS: On/Off
	45	BEND_SENS	I	0/3.3 V DC	RDS: On/Off
	46	MID_MOT_PH	O	0/3.3 V DC	MM control signal
	47	MID_MOT_REM(ROL_CL)	O	0/3.3 V DC	MM/MCL: On/Off
	48	MID_MOT_CLK	O	0/3.3 V DC (pulse)	MM clock signal
	49	MID_MOT_PD	O	0/3.3 V DC	MM control signal
	50	ASIST_CL1	O	0/24 V DC	ASCL1: On/Off

Connector	Pin	Signal	I/O	Voltage	Description
YC5	1	GND	-	-	Ground
Connected to feed PWB 1	2	M_TEMP	-	-	Not used
	3	LOOP_SENS	I	0/3.3 V DC	LPS: On/Off
	4	GND	-	-	Ground
	5	EDGE_FAN_H	O	0/24 V DC	FUFM: On/Off
	6	DU1_MOT_PD	O	0/3.3 V DC	DUM1 control signal
	7	DU1_MOT_CLK	O	0/3.3 V DC (pulse)	DUM1 clock signal
	8	DU1_MOT_REM(CL_H)	O	0/3.3 V DC	DUM1/DUCL1: On/Off
	9	GND	-	-	Ground
	10	EXIT_FAN	O	0/24 V DC	EFM: On/Off
	11	DU_ENTER_SENS	I	0/3.3 V DC	DUS1: On/Off
	12	TCON_SET	-	-	Not used
	13	GND	-	-	Ground
	14	TRANS_REM	O	0/3.3 V DC	TRCM: On/Off
	15	TRANS_CLK	O	0/3.3 V DC (pulse)	TRCM clock signal
	16	TRANS_RDY	I	0/3.3 V DC	TRCM ready signal
	17	TRANS_DIR	O	0/3.3 V DC	TRCM drive switch signal
	18	TRANS_BRK	O	0/3.3 V DC	TRCM break signal
	19	GND	-	-	Ground
	20	DRM_BK_REM	-	-	Not used
	21	DRM_BK_RDY	-	-	Not used
	22	DRM_BK_DIR	-	-	Not used
	23	DRM_BK_BRK	-	-	Not used
	24	GND	-	-	Ground
	25	DLP_BK_REM	-	-	Not used
	26	DLP_BK_CLK	-	-	Not used
	27	DLP_BK_RDY	-	-	Not used
	28	DLP_BK_DIR	-	-	Not used
	29	GND	-	-	Ground
	30	DRM_CLR_REM	-	-	Not used
	31	DRM_BK_CLR_CLK	-	-	Not used
	32	DRM_CLR_RDY	-	-	Not used
	33	DRM_CLR_DIR	-	-	Not used
	34	GND	-	-	Ground
	35	DLP_CLR_REM	-	-	Not used

Connector	Pin	Signal	I/O	Voltage	Description
YC5	36	DLP_CLR_CLK	-	-	Not used
Connected to feed PWB 1	37	DLP_CLR_RDY	-	-	Not used
	38	DLP_CLR_DIR	-	-	Not used
	39	GND	-	-	Ground
	40	REG_MOT_PD	O	0/3.3 V DC	RM control signal
	41	REG_MOT_CLK	O	0/3.3 V DC (pulse)	RM clock signal
	42	REG_MOT_REM(CL)	O	0/3.3 V DC	RM/RCL: On/Off
	43	GND	-	-	Ground
	44	IH_FAN_L	O	0/24 V DC	IHFM: On/Off
	45	IH_FAN_H	O	0/24 V DC	IHFM: On/Off
	46	IH_PWB_FAN_ALM	I	0/3.3 V DC	IHFM alarm signal
	47	POWER_OFF	O	0/3.3 V DC	Power off signal
	48	DRM_HEAT	-	-	Not used
	49	IH_PWB_FAN_ALM(U)	-	-	Not used
	50	GND	-	-	Ground
YC6	1	GND	-	-	Ground
Connected to feed PWB 1	2	MAIL_SDI	I	0/3.3 V DC (pulse)	MAIL serial communication data signal
	3	NC	-	-	Not used
	4	MAIL_CLK	O	0/3.3 V DC (pulse)	MAIL clock signal
	5	MAIL_SDO	O	0/3.3 V DC (pulse)	MAIL serial communication data signal
	6	MAIL_RDY	I	0/3.3 V DC	MAIL ready signal
	7	MAIL_SEL	O	0/24 V DC	MAIL select signal
	8	GND	-	-	Ground
	9	MAIN_HEAT	-	-	Not used
	10	SUB_HEAT	-	-	Not used
	11	ZEROC	-	-	Not used
	12	FSR_RELAY	O	0/3.3 V DC	Fuser relay signal
	13	PRESS_REM	-	-	Not used
	14	EXIT_REAR_FAN_L	O	0/24 V DC	ERFM: On/Off
	15	EXIT_REAR_FAN_H	O	0/24 V DC	ERFM: On/Off
	16	GND	-	-	Ground

Connector	Pin	Signal	I/O	Voltage	Description
YC6	17	FSR_CL_REM	-	-	Not used
Connected to feed PWB 1	18	FSR_MOT_REM	O	0/3.3 V DC	FUM: On/Off
	19	FSR_MOT_CLK		0/3.3 V DC (pulse)	FUM clock signal
	20	FSR_MOT_RDY	O	0/3.3 V DC	FUM ready signal
	21	FSR_MOT_DIR	O	0/3.3 V DC	FUM drive switch signal
	22	FSR_MOT_BRK	O	0/3.3 V DC	FUM break signal
	23	GND	-	-	Ground
	24	MPF_TABLE	I	0/3.3 V DC	MPTSW: On/Off
	25	MPF_WID1	I	0/3.3 V DC	MPPWSW: On/Off
	26	MPF_WID2	I	0/3.3 V DC	MPPWSW: On/Off
	27	MPF_WID3	I	0/3.3 V DC	MPPWSW: On/Off
	28	MPF_LNG	I	0/3.3 V DC	MPPLSW: On/Off
	29	GND	-	-	Ground
	30	MPF_PPR	I	0/3.3 V DC	MPPS: On/Off
	31	MPF_UP	I	0/3.3 V DC	MPLS1: On/Off
	32	MPF_DOWN	I	0/3.3 V DC	MPLS2: On/Off
	33	MPF_JAM	I	0/3.3 V DC	MPFS: On/Off
	34	MPF_CL	O	0/24 V DC	MPPFCL: On/Off
	35	MPF_LIF2	O	0/24 V DC	MPLM: On/Off
	36	MPF_LIFT1	O	0/24 V DC	MPLM: On/Off
	37	GND	-	-	Ground
	38	TC_MOT_LOCK	-	-	Not used
	39	TC_TONER_LED	-	-	Not used
	40	TONER_FULL	-	-	Not used
	41	TC_TONER_VCONT	-	-	Not used
	42	INTER_LOCK	-	-	Not used
	43	DU2_MOT_PD	O	0/3.3 V DC	DUM2 control signal
	44	DU2_MOT_CLK	O	0/3.3 V DC (pulse)	DUM2 clock signal
	45	DU2_MOT_REM	O	0/3.3 V DC	DUM2/DUCL2: On/Off
	46	GND	-	-	Ground
	47	DU_OPEN	I	0/3.3 V DC	DUCSW: On/Off
	48	DU_FAN	-	-	Not used
	49	PRESS_MOT_REM1	O	0/24 V DC	TRRM: On/Off
	50	PRESS_MOT_REM2	O	0/24 V DC	TRRM: On/Off
	51	PRESS_RLS_SENS	I	0/3.3 V DC	TRRS: On/Off

Connector	Pin	Signal	I/O	Voltage	Description
YC6	52	DU_SENS	I	0/3.3 V DC	DUS2: On/Off
Connected to feed PWB 1	53	BELT_JAM_SENS	-	-	Not used
	54	GND	-	-	Ground
	55	CLN_SOL_RET	O	0/24 V DC	CLSOL: On/Off (RET)
	56	CLN_SOL_REM	O	0/24 V DC	CLSOL: On/Off (ACT)
	57	REG_SENS_R_S	I	Analog	IDS2 detection signal
	58	REG_SENS_R_P	I	Analog	IDS2 detection signal
	59	REG_R_LED	O	Analog	IDS2 control signal
	60	GND	-	-	Ground
	61	REG_SENS_F_S	I	Analog	IDS1 detection signal
	62	REG_SENS_F_P	I	Analog	IDS1 detection signal
	63	REG_F_LED	O	Analog	IDS1 control signal
	64	GND	-	-	Ground
YC7	1	GND	-	-	Ground
Connected to front PWB	2	WTNR_SET	-	-	Not used
	3	INTER_LOCK	-	-	Not used
	4	IH_CORE_SENS	-	-	Not used
	5	IH_CORE_MOT_REM	-	-	Not used
	6	IH_CORE_CLK	-	-	Not used
	7	WTNR_LED	O	0/3.3 V DC (pulse)	WTS1 LED emitter signal
	8	IH_COIL_FAN_ALM	I	0/3.3 V DC	FUFFM alarm signal
	9	IH_COIL_FAN_H	O	0/24 V DC	FUFFM: On/Off
	10	IH_COIL_FAN_L	O	0/24 V DC	FUFFM: On/Off
	11	EXIT_FAN	O	0/24 V DC	EFFM: On/Off
	12	VIB_MOT_REM	O	0/24 V DC	VM: On/Off
	13	JUNC_SOL_REM	O	0/24 V DC	FSSOL: On/Off (ACT)
	14	JUNC_SOL_RET	O	0/24 V DC	FSSOL: On/Off (RET)
	15	GND	-	-	Ground
	16	EXIT_MAIN_SENS	I	0/3.3 V DC	EFS1: On/Off
	17	EXIT_FEED_SENS	I	0/3.3 V DC	SBS: On/Off
	18	SB_MOT_REM	O	0/3.3 V DC	EM: On/Off
	19	SB_MOT_PH	O	0/3.3 V DC	EM control signal
	20	SB_MOT_CLK	O	0/3.3 V DC (pulse)	EM clock signal

Connector	Pin	Signal	I/O	Voltage	Description
YC7	21	SB_MOT_PD	O	0/3.3 V DC	EM control signal
Connected to front PWB	22	SB_MOT_DIR	O	0/3.3 V DC	EM drive switch signal
	23	GND	-	-	Ground
	24	WTNR_FULL	I	Analog	WTS1 detection signal
	25	THOP_DIR	-	-	Not used
	26	DLP_FAN_CLR_H	O	0/24 V DC	DEVFM1: On/Off
	27	DLP_FAN_CLR_L	O	0/24 V DC	DEVFM1: On/Off
	28	WTNR_SET	I	Analog	WTS2 detection signal
	29	WTNR_NEAR(M)	I	Analog	WTS2 detection signal
	30	WTNR_NEAR_V CONT	O	0/3.3 V DC	WTS2 control signal
	31	GND	-	-	Ground
	32	ROT_MOT_REM	-	-	Not used
	33	ROT_MOT_CLK	-	-	Not used
	34	ROT_MOT_PD	-	-	Not used
	35	ROT_MOT_DIR	-	-	Not used
	36	ROT_SUB_SENS	-	-	Not used
	37	THOP_MOT_Bk	-	-	Not used
	38	THOP_MOT_M	-	-	Not used
	39	THOP_MOT_C	-	-	Not used
	40	THOP_MOT_Y	-	-	Not used
	41	GND	-	-	Ground
	42	ENCODE_ Bk	-	-	Not used
	43	ENCODE_M	-	-	Not used
	44	ENCODE_C	-	-	Not used
	45	ENCODE_Y	-	-	Not used
	46	THOP_ Bk	-	-	Not used
	47	THOP_M	-	-	Not used
	48	THOP_C	-	-	Not used
	49	THOP_Y	-	-	Not used
	50	GND	-	-	Ground

Connector	Pin	Signal	I/O	Voltage	Description
YC8	1	SGND	-	-	Ground
Connected to high voltage PWB 2	2	SGND	-	-	Ground
	3	SP_CNT	O	Analog	Separation bias control voltage
	4	T2_CNT	O	Analog	Secondary transfer bias control voltage
	5	T2_OFF_REM	O	0/3.3 V DC	Separation bias: On/Off
	6	T_REM	O	0/3.3 V DC	Secondary transfer bias: On/Off
	7	FB_CONT	O	0/3.3 V DC	Primary transfer cleaning bias: On/Off
	8	T1_CONT_Bk	O	Analog	Primary transfer bias K control voltage
	9	T1_CONT_M	O	Analog	Primary transfer bias M control voltage
	10	T1_CONT_C	O	Analog	Primary transfer bias C control voltage
	11	T1_CONT_Y	O	Analog	Primary transfer bias Y control voltage
	12	T1_CLR_OFF_REM	O	0/3.3 V DC	Primary transfer control signal
YC9	1	MOT_CLK	O	0/3.3 V DC (pulse)	MCPWB clock signal
Connected to motor control PWB	2	MOT_SDO	O	0/3.3 V DC (pulse)	MCPWB serial communication data signal
	3	MOT_SEL	O	0/3.3 V DC	MCPWB select signal
	4	MOT_SDI	I	0/3.3 V DC (pulse)	MCPWB serial communication data signal
	5	MOT_RDY	I	0/3.3 V DC	MCPWB ready signal
	6	EMERGENCY	O	0/3.3 V DC	MCPWB control signal
	7	BLT_SPEED	O	0/3.3 V DC	TBLS: On/Off
	8	BLT_INDEX	-	-	Not used
	9	DRM_INDEX_BK	O	0/3.3 V DC	DRM-K control signal
	10	DRM_INDEX_M	O	0/3.3 V DC	DRM-M control signal
	11	DRM_INDEX_C	O	0/3.3 V DC	DRM-C control signal
	12	DRM_INDEX_Y	O	0/3.3 V DC	DRM-Y control signal
	13	GND	-	-	Ground
	14	GND	-	-	Ground
	15	+5V	O	5 V DC	5 V DC power to MCPWB
	16	+5V	O	5 V DC	5 V DC power to MCPWB
	17	BLT_BRAKE	-	-	Not used
	18	BLT_VM	-	-	Not used

Connector	Pin	Signal	I/O	Voltage	Description
YC9	19	BLT_REM	-	-	Not used
Connected to motor control PWB	20	MOT_DATA_SET	O	0/3.3 V DC	MCPWB control signal
	21	DRM_ON	O	0/3.3 V DC	MCPWB control signal
	22	BLT_FG	-	-	Not used
YC10	1	GND	-	-	Ground
Connected to front PWB	2	DRM_INDEX_Bk	I	0/3.3 V DC	DRM-K control signal
	3	ERS_Bk	O	0/24 V DC	CL-K: On/Off
	4	TPD_Bk_1	I	Analog	TS-K detection signal
	5	DLP_VCONT_Bk_1	O	0/3.3 V DC	TS-K control signal
	6	TPD_TEMP_Bk	I	Analog	Developer thermistor K detection signal
	7	GND	-	-	Ground
	8	DRM_INDEX_M	I	0/3.3 V DC	DRM-M control signal
	9	ERS_M	O	0/24 V DC	CL-M: On/Off
	10	TPD_M_1	I	Analog	TS-M detection signal
	11	DLP_VCONT_M_1	O	0/3.3 V DC	TS-M control signal
	12	TPD_TEMP_M	I	Analog	Developer thermistor M detection signal
	13	GND	-	-	Ground
	14	DRM_INDEX_C	I	0/3.3 V DC	DRM-C control signal
	15	ERS_C	O	0/24 V DC	CL-C: On/Off
	16	TPD_C_1	I	Analog	TS-C detection signal
	17	DLP_VCONT_C_1	O	0/3.3 V DC	TS-C control signal
	18	TPD_TEMP_C	I	Analog	Developer thermistor C detection signal
	19	GND	-	-	Ground
	20	TN_CLK	O	0/3.3 V DC (pulse)	Clock signal
	21	GND	-	-	Ground
	22	EEP_SCL1	O	0/3.3 V DC (pulse)	EEPROM clock signal
	23	GND	-	-	Ground
	24	EEP_SDA1	I/O	0/3.3 V DC (pulse)	EEPROM data signal
	25	GND	-	-	Ground
	26	TPD_Y_1	I	Analog	TS-Y detection signal
	27	DLP_VCONT_Y_1	O	0/3.3 V DC	TS-Y control signal

Connector	Pin	Signal	I/O	Voltage	Description
YC10	28	TPD_TEMP_Y	I	Analog	Developer thermistor Y detection signal
Connected to front PWB	29	ERS_Y	O	0/24 V DC	CL-Y: On/Off
	30	DRM_INDEX_Y	I	0/3.3 V DC	DRM-Y control signal
	31	FRONT_OPEN	I	0/3.3 V DC	FRCSW: On/Off
	32	GND	-	-	Ground
	33	I2C_SCL	O	0/3.3 V DC (pulse)	EEPROM clock signal
	34	GND	-	-	Ground
	35	I2C_SDA	I/O	0/3.3 V DC (pulse)	EEPROM data signal
	36	GND	-	-	Ground
	37	LSU_FAN	O	0/24 V DC	LSUFM: On/Off
	38	CLEAN_MOT_LOCK	I	0/3.3 V DC	WTM lock signal
	39	CLEAN_MOT_REM	O	0/24 V DC	WTM: On/Off
	40	GND	-	-	Ground
YC11	1	GND	-	-	Ground
Connected to LSU relay PWB	2	DATA_2PBK(LVDS)	O	0/3.3 V DC (pulse)	Video data signal K (P)
	3	DATA_2NBK(LVDS)	O	0/3.3 V DC (pulse)	Video data signal K (N)
	4	GND	-	-	Ground
	5	GAIN_FIX_BK	O	0/3.3 V DC	APCPWB-K control signal
	6	PARA_SIG_P2_BK	O	0/3.3 V DC	APCPWB-K control signal
	7	PARA_SIG_P1_BK	O	0/3.3 V DC	APCPWB-K control signal
	8	PARA_SIG_P0_BK	O	0/3.3 V DC	APCPWB-K control signal
	9	INT_ST_1_BK	O	0/3.3 V DC	APCPWB-K control signal
	10	INT_ST_2_BK	O	0/3.3 V DC	APCPWB-K control signal
	11	PARA_SIG_P3_2BK	O	0/3.3 V DC	APCPWB-K control signal
	12	GND	-	-	Ground
	13	DATA_4PBK(LVDS)	O	0/3.3 V DC (pulse)	Video data signal K (P)
	14	DATA_4NBK(LVDS)	O	0/3.3 V DC (pulse)	Video data signal K (N)

Connector	Pin	Signal	I/O	Voltage	Description
YC11	15	GND	-	-	Ground
Connected to LSU relay PWB	16	DATA_3PBK(LVDS)	O	0/3.3 V DC (pulse)	Video data signal K (P)
	17	DATA_3NBK(LVDS)	O	0/3.3 V DC (pulse)	Video data signal K (N)
	18	GND	-	-	Ground
	19	DATA_2P_M(LVDS)	O	0/3.3 V DC (pulse)	Video data signal M (P)
	20	DATA_2N_M(LVDS)	O	0/3.3 V DC (pulse)	Video data signal M (N)
	21	GND	-	-	Ground
	22	GAIN_FIX_M	O	0/3.3 V DC	APCPWB-M control signal
	23	PALA_STG_P2_M	O	0/3.3 V DC	APCPWB-M control signal
	24	PALA_STG_P1_M	O	0/3.3 V DC	APCPWB-M control signal
	25	PALA_STG_P0_M	O	0/3.3 V DC	APCPWB-M control signal
	26	INT_ST_M	O	0/3.3 V DC	APCPWB-M control signal
	27	GND	-	-	Ground
	28	DATA_2P_C(LVDS)	O	0/3.3 V DC (pulse)	Video data signal C (P)
	29	DATA_2N_C(LVDS)	O	0/3.3 V DC (pulse)	Video data signal C (N)
	30	GND	-	-	Ground
	31	GAIN_FIX_C	O	0/3.3 V DC	APCPWB-C control signal
	32	PALA_STG_P2_C	O	0/3.3 V DC	APCPWB-C control signal
	33	PALA_STG_P1_C	O	0/3.3 V DC	APCPWB-C control signal
	34	PALA_STG_P0_C	O	0/3.3 V DC	APCPWB-C control signal
	35	INT_ST_C	O	0/3.3 V DC	APCPWB-C control signal
	36	GND	-	-	Ground
	37	DATA_2P_Y(LVDS)	O	0/3.3 V DC (pulse)	Video data signal Y (P)
	38	DATA_2N_Y(LVDS)	O	0/3.3 V DC (pulse)	Video data signal Y (N)
	39	GND	-	-	Ground
	40	GAIN_FIX_Y	O	0/3.3 V DC	APCPWB-Y control signal
	41	PALA_STG_P2_Y	O	0/3.3 V DC	APCPWB-Y control signal
	42	PALA_STG_P1_Y	O	0/3.3 V DC	APCPWB-Y control signal
	43	PALA_STG_P0_Y	O	0/3.3 V DC	APCPWB-Y control signal
	44	INT_ST_Y	O	0/3.3 V DC	APCPWB-Y control signal
	45	GND	-	-	Ground

Connector	Pin	Signal	I/O	Voltage	Description
YC11	46	EEPROM_CS_1_BK	I/O	0/3.3 V DC (pulse)	APCPWB-K EEPROM data signal
Connected to LSU relay PWB	47	IDD_CS_1_BK	O	0/3.3 V DC	APCPWB-K control signal
	48	EEPROM_CS_2_BK	I/O	0/3.3 V DC (pulse)	APCPWB-K EEPROM data signal
	49	IDD_CS_2_BK	O	0/3.3 V DC	APCPWB-K control signal
	50	EEPROM_CS_M	I/O	0/3.3 V DC (pulse)	APCPWB-M EEPROM data signal
	51	IDD_CS_M	O	0/3.3 V DC	APCPWB-M control signal
	52	EEPROM_CS_C	I/O	0/3.3 V DC (pulse)	APCPWB-C EEPROM data signal
	53	IDD_CS_C	O	0/3.3 V DC	APCPWB-C control signal
	54	EEPROM_CS_Y	I/O	0/3.3 V DC (pulse)	APCPWB-Y EEPROM data signal
	55	IDD_CS_Y	O	0/3.3 V DC	APCPWB-Y control signal
	56	SGND	-	-	Ground
	57	MSET_N	O	0/3.3 V DC	Control signal
	58	SGND	-	-	Ground
	59	SDO	O	0/3.3 V DC (pulse)	Serial communication data signal
	60	SGND	-	-	Ground
	61	SDI	I	0/3.3 V DC (pulse)	Serial communication data signal
	62	SGND	-	-	Ground
	63	CLK	O	0/3.3 V DC (pulse)	Clock signal
	64	SGND	-	-	Ground
YC12	1	-			
Connected to LSU relay PWB	2	LOCK_BK	I	0/3.3 V DC	PM-K lock signal
	3	REM_BK	O	0/24 V DC	PM-K: On/Off
	4	GND	-	-	Ground
	5	DATA_1PBK	O	0/3.3 V DC (pulse)	Video data signal K (P)
	6	DATA_1NBK	O	0/3.3 V DC (pulse)	Video data signal K (N)
	7	GND	-	-	Ground
	8	SDCLK_BK	O	0/3.3 V DC (pulse)	APCPWB-K clock signal
	9	GND	-	-	Ground
	10	PARA_SIG_P4_BK	O	0/3.3 V DC	APCPWB-K control signal
	11	PARA_SIG_P3_BK	O	0/3.3 V DC	APCPWB-K control signal
	12	CUALM_BK	I	0/3.3 V DC	APCPWB-K alarm signal

Connector	Pin	Signal	I/O	Voltage	Description
YC12	13	LSU_TH_BK	I	Analog	LSU thermistor K detection signal
Connected to LSU relay PWB	14	BD_BK	I	0/3.3 V DC (pulse)	Horizontal synchronization signal K
	15	GND	-	-	Ground
	16	CLK_M	O	0/3.3 V DC (pulse)	PM-M clock signal
	17	LOCK_M	I	0/3.3 V DC	PM-M lock signal
	18	REM_M	O	0/24 V DC	PM-M: On/Off
	19	GND	-	-	Ground
	20	DATA_1P_M	O	0/3.3 V DC (pulse)	Video data signal M (P)
	21	DATA_1N_M	O	0/3.3 V DC (pulse)	Video data signal M (N)
	22	GND	-	-	Ground
	23	SDCLK_M	O	0/3.3 V DC (pulse)	APCPWB-M clock signal
	24	SGND	-	-	Ground
	25	PARA_SIG_P4_M	O	0/3.3 V DC	APCPWB-M control signal
	26	PARA_SIG_P3_M	O	0/3.3 V DC	APCPWB-M control signal
	27	CUALM_M	I	0/3.3 V DC	APCPWB-M alarm signal
	28	LSU_TH_M	I	Analog	LSU thermistor M detection signal
	29	BD_M	I	0/3.3 V DC (pulse)	Horizontal synchronization signal M
	30	GND	-	-	Ground
	31	CLK_C	O	0/3.3 V DC (pulse)	PM-C clock signal
	32	LOCK_C	I	0/3.3 V DC	PM-C lock signal
	33	REM_C	O	0/24 V DC	PM-C: On/Off
	34	GND	-	-	Ground
	35	DATA_1P_C	O	0/3.3 V DC (pulse)	Video data signal C (P)
	36	DATA_1N_C	O	0/3.3 V DC (pulse)	Video data signal C (N)
	37	GND	-	-	Ground
	38	SDCLK_C	O	0/3.3 V DC (pulse)	APCPWB-C clock signal
	39	GND	-	-	Ground
	40	PARA_SIG_P4_C	O	0/3.3 V DC	APCPWB-C control signal
	41	PARA_SIG_P3_C	O	0/3.3 V DC	APCPWB-C control signal
	42	CUALM_C	I	0/3.3 V DC	APCPWB-C alarm signal
	43	LSU_TH_C	I	Analog	LSU thermistor C detection signal
	44	BD_C	I	0/3.3 V DC (pulse)	Horizontal synchronization signal C
	45	GND	-	-	Ground
	46	CLK_Y	O	0/3.3 V DC (pulse)	PM-Y clock signal
	47	LOCK_Y	I	0/3.3 V DC	PM-Y lock signal
	48	REM_Y	O	0/24 V DC	PM-Y: On/Off
	49	GND	-	-	Ground

Connector	Pin	Signal	I/O	Voltage	Description
YC12	50	DATA_1P_Y	O	0/3.3 V DC (pulse)	Video data signal Y (P)
Connected to LSU relay PWB	51	DATA_1N_Y	O	0/3.3 V DC (pulse)	Video data signal Y (N)
	52	GND	-	-	Ground
	53	SDCLK_Y	O	0/3.3 V DC (pulse)	APCPWB-Y clock signal
	54	GND	-	-	Ground
	55	PARA_SIG_P4_Y	O	0/3.3 V DC	APCPWB-Y control signal
	56	PARA_SIG_P3_Y	O	0/3.3 V DC	APCPWB-Y control signal
	57	CUALM_Y	I	0/3.3 V DC	APCPWB-Y alarm signal
	58	LSU_TH_Y	I	Analog	LSU thermistor Y detection signal
	59	BD_Y	I	0/3.3 V DC (pulse)	Horizontal synchronization signal Y
	60	GND	-	-	Ground
YC13	1	GND	-	-	Ground
Connected to feed PWB 1	2	GND	-	-	Ground
	3	3.3V3	I	3.3 V DC	3.3 V DC power from FPWB1
	4	3.3V2	I	3.3 V DC	3.3 V DC power from FPWB1
YC15	1	GND	-	-	Ground
Connected to the LSU relay PWB	2	+3.3V2	O	3.3 V DC	3.3 V DC power to LSURPWB
	3	GND	-	-	Ground
	4	GND	-	-	Ground
	5	+5V_AN	O	5 V DC	5 V DC power to LSURPWB
	6	+5V_AN	O	5 V DC	5 V DC power to LSURPWB

Connector	Pin	Signal	I/O	Voltage	Description
YC16	1	GND	-	-	Ground
Connected to high voltage PWB 1	2	AC_MAIN_CLK	O	0/3.3 V DC (pulse)	AC charger roller Y clock signal
	3	DC_MAIN_REM	O	0/3.3 V DC	DC main charger Y: On/Off
	4	DC_MAIN_CNT_Y	O	PWM	DC charger roller Y control signal
	5	MAIN_IDC_Y	O	PWM	DC charger roller Y control signal
	6	AC_SLV_CLK_Y	O	0/3.3 V DC (pulse)	AC sleeve bias Y clock signal
	7	DC_SLV_CNT_Y	O	PWM	DC sleeve bias Y control voltage
	8	DC_MAG_CNT_Y	O	PWM	DC magnet bias Y control voltage
	9	AC_SLV_CNT_Y	O	PWM	AC sleeve bias Y control voltage
	10	AC_MAIN_CNT_Y	O	PWM	AC charger roller Y control signal
	11	DISCHARGE_Y	I	PWM	Main charger Y control signal
	12	AC_MAG_CNT_Y	O	0/3.3 V DC (pulse)	AC magnet bias Y control voltage
	13	AC_MAG_CLK_Y	O	0/3.3 V DC (pulse)	AC magnet bias Y clock signal
	14	DC_REC_CNT	O	PWM	DC bias Y control voltage
	15	N.C	-	-	Not used
	16	DC_REC_REM	O	PWM	DC bias C control voltage
	17	AC_MAG_CLK_C	O	0/3.3 V DC (pulse)	AC magnet bias C clock signal
	18	AC_MAG_CNT_C	O	0/3.3 V DC (pulse)	AC magnet bias C control voltage
	19	DISCHARGE_C	I	PWM	Main charger C control signal
	20	AC_MAIN_CNT_C	O	PWM	AC charger roller C control signal
	21	AC_SLV_CNT_C	O	PWM	AC sleeve bias C control voltage
	22	DC_MAG_CNT_C	O	PWM	DC magnet bias C control voltage
	23	DC_SLV_CNT_C	O	PWM	DC sleeve bias C control voltage
	24	AC_SLV_CLK_C	O	0/3.3 V DC (pulse)	AC sleeve bias C clock signal
	25	DC_MAG_REM	O	0/3.3 V DC	DC main charger C: On/Off
	26	MAIN_IDC_C	O	PWM	DC charger roller C control signal
	27	DC_MAIN_CNT_C	O	PWM	DC charger roller C control signal
	28	GND	-	-	Ground

Connector	Pin	Signal	I/O	Voltage	Description
YC17	1	GND	-	-	Ground
Connected to high voltage PWB 1	2	DC_MAIN_CNT_M	O	PWM	DC charger roller Y control signal
	3	MAIN_IDC_M	O	PWM	DC charger roller M control signal
	4	AC_SLV_CLK_M	O	0/3.3 V DC (pulse)	AC sleeve bias M clock signal
	5	DC_SLV_CNT_M	O	PWM	DC sleeve bias M control voltage
	6	DC_MAG_CNT_M	O	PWM	DC magnet bias M control voltage
	7	AC_SLV_CNT_M	O	PWM	AC sleeve bias M control voltage
	8	AC_MAIN_CNT_M	O	PWM	AC charger roller M control signal
	9	DISCHARGE_M	I	PWM	Main charger M control signal
	10	AC_MAG_CNT_M	O	0/3.3 V DC (pulse)	AC magnet bias M control voltage
	11	AC_MAG_CLK_M	O	0/3.3 V DC (pulse)	AC magnet bias M clock signal
	12	AC_MAG_CLK_Bk	O	PWM	DC charger roller K control signal
	13	AC_MAG_CNT_Bk	O	PWM	DC charger roller K control signal
	14	DISCHARGE_Bk	I	PWM	Main charger K control signal
	15	AC_SLV_CNT_Bk	O	0/3.3 V DC (pulse)	AC sleeve bias K clock signal
	16	DC_MAG_CNT_Bk	O	PWM	DC sleeve bias K control voltage
	17	DC_SLV_CNT_Bk	O	PWM	DC magnet bias K control voltage
	18	AC_SLV_CLK_Bk	O	PWM	AC sleeve bias K control voltage
	19	AC_MAIN_CNT_Bk	O	PWM	AC charger roller K control signal
	20	MAIN_IDC_Bk	O	PWM	DC charger roller K control signal
	21	DC_MAIN_CNT_Bk	O	PWM	DC charger roller K control signal
	22	GND	-	-	Ground
YC18	1	DF_CLK	O	0/3.3 V DC (pulse)	DFMPWB clock signal
Connected to 1000-sheet/ 4000-sheet finisher	2	DF_SDO	O	0/3.3 V DC (pulse)	DFMPWB serial communication data signal
	3	DF_SEL	O	0/3.3 V DC	DFMPWB select signal
	4	DF_SDI	O	0/3.3 V DC (pulse)	DFMPWB serial communication data signal
	5	DF_RDY	I	0/3.3 V DC	DFMPWB ready signal
	6	DF_DET	O	0/3.3 V DC	DFMPWB detection signal
	7	GND	-	-	Ground

Connector	Pin	Signal	I/O	Voltage	Description
YC19	A1	PF_CLK	O	0/3.3 V DC (pulse)	PFMPWB clock signal
Connected to paper feeder/ large capacity feeder, toner fan motor 1/2, belt fan motor 1/2 and exhaust fan motor 1/2	A2	PF_SDO	O	0/3.3 V DC (pulse)	PFMPWB serial communication data signal
	A3	PF_SEL	O	0/3.3 V DC	PFMPWB select signal
	A4	PF_SDI	I	0/3.3 V DC (pulse)	PFMPWB serial communication data signal
	A5	PF_RDY	I	0/3.3 V DC	PFMPWB ready signal
	A6	PF_PAUSE	O	0/3.3 V DC	PFMPWB pause signal
	A7	PF_CAS1_OPEN	I	0/3.3 V DC	PFMPWB control signal
	A8	PF_CAS2_OPEN	I	0/3.3 V DC	PFMPWB control signal
	A9	3.3V4	O	3.3 V DC	3.3 V DC power to PFMPWB
	A10	GND	-	-	Ground
	A11	GND	-	-	Ground
	A12	TN_FAN1	O	0/24 V DC	TFM1: On/Off
	A13	24V1	O	24 V DC	24 V DC power to TFM1
	A14	TN_FAN2	O	0/24 V DC	TFM2: On/Off
	A15	24V1	O	24 V DC	24 V DC power to TFM2
	A16	LVU_FAN1	-	-	Not used
	A17	24V1	-	-	Not used
	A18	LVU_FAN2	-	-	Not used
	A19	24V1	-	-	Not used
	B1	SIDE_CLK	O	0/3.3 V DC (pulse)	PFMPWB clock signal (side)
	B2	SIDE_SDO	O	0/3.3 V DC (pulse)	PFMPWB serial communication data signal (side)
	B3	SIDE_SEL	O	0/3.3 V DC	PFMPWB select signal (side)
	B4	SIDE_SDI	I	0/3.3 V DC (pulse)	PFMPWB serial communication data signal (side)
	B5	SIDE_RDY	I	0/3.3 V DC	PFMPWB ready signal (side)
	B6	SIDE_PAUSE	O	0/3.3 V DC	PFMPWB pause signal (side)
	B7	CAS1_OPEN	I	0/3.3 V DC	PFMPWB control signal (side)
	B8	CAS2_OPEN	I	0/3.3 V DC	PFMPWB control signal (side)
	B9	MULTI_OPEN	O	0/3.3 V DC	PFMPWB control signal (side)
	B10	3.3V4	O	3.3 V DC	3.3 V DC power to PFMPWB (side)
	B11	GND	-	-	Ground
	B12	24V1	O	24 V DC	24 V DC power to BLFM1

Connector	Pin	Signal	I/O	Voltage	Description
YC19	B13	BELT_FAN1	O	0/24 V DC	BLFM1: On/Off
Connected to paper feeder/ large capac-ity feeder, toner fan motor 1/2, belt fan motor 1/2 and exhaust fan motor 1/2	B14	24V1	O	24 V DC	24 V DC power to BLFM2
	B15	BELT_FAN2	O	0/24 V DC	BLFM2: On/Off
	B16	DLP_FAN1	O	0/24 V DC	EXFM1: On/Off
	B17	24V1	O	24 V DC	24 V DC power to EXFM1
	B18	DLP_FAN2	O	0/24 V DC	EXFM2: On/Off
	B19	24V1	O	24 V DC	24 V DC power to EXFM2
YC20	1	DECAL_HP	-	-	Not used
Connected to bridge unit	2	GUIDE_REM	-	-	Not used
	3	GUIDE_CLK	-	-	Not used
	4	GUIDE_PD	-	-	Not used
	5	GUIDE_DIR	-	-	Not used
	6	DECAL_REM	-	-	Not used
	7	DECAL_PH	-	-	Not used
	8	DECAL_CLK	-	-	Not used
	9	DECAL_PD	-	-	Not used
	10	DECAL_DIR	-	-	Not used
	11	24V1	O	24 V DC	24 V DC power to BRSOL
	12	MAIL_SOL_REM	O	0/24 V DC	BRSOL: On/Off (ACT)
	13	MAIL_SOL_RET	O	0/24 V DC	BRSOL: On/Off (RET)
	14	GND	-	-	Ground
	15	EXIT_COV_OPE N	I	0/3.3 V DC	BRECSW: On/Off
	16	GND	-	-	Ground
	17	EXIT_SENS	I	0/3.3 V DC	BRES: On/Off
	18	5V	O	5 V DC	5 V DC power to BRES
	19	5V	O	5 V DC	5 V DC power to BRES
	20	BRIDGE2 REM	O	0/3.3 V DC	BRCM2: On/Off
	21	BRIDGE2 PH	O	0/3.3 V DC	BRCM2 control signal
	22	BRIDGE2 CLK	O	0/3.3 V DC (pulse)	BRCM2 clock signal
	23	BRIDGE2 PD	O	0/3.3 V DC	BRCM2 control signal
	24	BRIDGE2 DIR	O	0/3.3 V DC	BRCM2 drive switch signal
	25	BRIDGE1 REM	O	0/3.3 V DC	BRCM2: On/Off
	26	BRIDGE1 PH	O	0/3.3 V DC	BRCM1 control signal
	27	BRIDGE1 CLK	O	0/3.3 V DC (pulse)	BRCM1 clock signal
	28	BRIDGE1 PD	O	0/3.3 V DC	BRCM1 control signal

Connector	Pin	Signal	I/O	Voltage	Description
YC20	29	BRIDGE1 DIR	O	0/3.3 V DC	BRCM1 drive switch signal
Connected to bridge unit	30	BRIDGE_SENS 2	I	0/3.3 V DC	BRCS2: On/Off
	31	BRIDGE_OPEN	I	0/3.3 V DC	BRCSW: On/Off
	32	BRIDGE_SENS 1	I	0/3.3 V DC	BRCS1: On/Off
	33	GND	-	-	Ground
	34	5V	O	5 V DC	5 V DC power to BRPWB
	35	GND	-	-	Ground
	36	GND	-	-	Ground
	37	24V1	O	24 V DC	24 V DC power to BRPWB
	38	24V1	O	24 V DC	24 V DC power to BRPWB
YC21	1	CCW	O	0/24 V DC	LSUCM: On/Off (CCW)
Connected to LSU cleaning motor	2	CW	O	0/24 V DC	LSUCM: On/Off (CW)
YC22	1	LVU_FAN	O	0/24 V DC	PSFM: On/Off
Connected to power source fan motor	2	+24V1	O	24 V DC	24 V DC power to PSFM
YC26	A1	EDGE_FAN_ALM (F)	I	0/3.3 V DC	FUEFM2 alarm signal
Connected to fuser unit and fuser IH PWB	A2	GND	-	-	Ground
	A3	EDGE_FAN	O	0/24 V DC	FUEFM2: On/Off
	A4	EDGE_FAN_ALM (R)	I	0/3.3 V DC	FUEFM1 alarm signal
	A5	GND	-	-	Ground
	A6	EDGE_FAN	O	0/24 V DC	FUEFM1: On/Off
	A7	FSR_FAN_ALM	I	0/3.3 V DC	FURFM alarm signal
	A8	GND	-	-	Ground
	A9	FSR_FAN	O	0/24 V DC	FURFM: On/Off
	A10	FSR_RLS_DR_CCW	O	0/24 V DC	FURM: On/Off (CCW)

Connector	Pin	Signal	I/O	Voltage	Description
YC26	A11	FSR_RLS_DR_CW	O	0/24 V DC	FURM: On/Off (CW)
Connected to fuser unit and fuser IH PWB	A12	GND	-	-	Ground
	A13	FSR_SIZE_SENS	I	0/3.3 V DC	FUES: On/Off
	A14	+5V	O	5 V DC	5 V DC power to FUES
	A15	GND	-	-	Ground
	A16	FSR_RLS_SENS	I	0/3.3 V DC	FURS: On/Off
	A17	+5V	O	5 V DC	5 V DC power to FURS
	A18	GND	-	-	Ground
	A19	FSR_BLT_PLS	I	0/3.3 V DC	FUBLS: On/Off
	A20	+5V	O	5 V DC	5 V DC power to FUBLS
	B1	PRESS_HEART_REM	-	-	Not used
	B2	IH_RXD	I	0/3.3 V DC (pulse)	Serial communication data signal
	B3	IH_TXD	O	0/3.3 V DC (pulse)	Serial communication data signal
	B4	ROTATION	O	0/3.3 V DC	FIH control signal
	B5	IH_HEAT_REM	O	0/3.3 V DC	FIH: On/Off
	B6	+3.3V2	O	3.3 V DC	5 V DC power to FIH
	B7	GND	-	-	Ground
	B8	GND	-	-	Ground
	B9	PRESS_TH	I	Analog	FTH4 detection signal
	B10	GND	-	-	Ground
	B11	EDGE_TH	I	Analog	FTH2 detection signal
	B12	GND	-	-	Ground
	B13	GUIDE_TH1	-	-	Not used
	B14	GND	-	-	Ground
	B15	GUIDE_TH2	I	Analog	FTH3 detection signal
	B16	MAIN_TH2	I	Analog	FTH1 detection signal
	B17	MAIN_TH1	I	Analog	FTH1 detection signal
	B18	GND	-	-	Ground
	B19	+24V1	O	24 V DC	24 V DC power to BRFM
	B20	BRIDGE_FAN	O	0/24 V DC	BRFM: On/Off
YC27	1	GND	-	-	Ground
Connected to RFID PWB, toner motor K/M/C/Y and screw sensor K/M/C/Y	2	SDA	I/O	0/3.3 V DC (pulse)	EEPROM data signal
	3	SCL	I	0/3.3 V DC (pulse)	EEPROM clock signal
	4	3.3V2	O	3.3 V DC	3.3 V DC power to RFPWB
	5	24V1	O	24 V DC	24 V DC power to TM-Y

Connector	Pin	Signal	I/O	Voltage	Description
YC27	6	TMOT_Y_DR	O	0/24 V DC	TM-Y: On/Off
Connected to RFID PWB, toner motor K/M/C/Y and screw sensor K/M/C/Y	7	24V1	O	24 V DC	24 V DC power to TM-C
	8	TMOT_C_DR	O	0/24 V DC	TM-C: On/Off
	9	24V1	O	24 V DC	24 V DC power to TM-M
	10	TMOT_M_DR	O	0/24 V DC	TM-M: On/Off
	11	24V1	I	24 V DC	24 V DC power to TM-K
	12	TMOT_K_DR	O	0/24 V DC	TM-K: On/Off
	13	GND	-	-	Ground
	14	ENCODE_Y	I	0/3.3 V DC	SRS-Y: On/Off
	15	5V	O	5 V DC	5 V DC power to SRS-Y
	16	GND	-	-	Ground
	17	ENCODE_C	I	0/3.3 V DC	SRS-C: On/Off
	18	5V	O	5 V DC	5 V DC power to SRS-C
	19	GND	-	-	Ground
	20	ENCODE_M	I	0/3.3 V DC	SRS-M: On/Off
	21	5V	O	5 V DC	5 V DC power to SRS-M
	22	GND	-	-	Ground
	23	ENCODE_K	I	0/3.3 V DC	SRS-K: On/Off
	24	5V	O	5 V DC	5 V DC power to SRS-K
YC46	1	SLLEP_INT	I	0/3.3 V DC	Sleep signal
Connected to main PWB	2	G6_EG_SCLK	I	0/3.3 V DC (pulse)	Engine clock signal
	3	G6_EG_SI	I	0/3.3 V DC (pulse)	Serial communication data signal
	4	G6_EG_SDIR	I	0/3.3 V DC	Engine communication direct signal
	5	G6_EG_SBSY	I	0/3.3 V DC	Engine busy signal
	6	G6_EG_SO	O	0/3.3 V DC (pulse)	Serial communication data signal
	7	G6_EG_IRN	I	0/3.3 V DC	Engine interrupt signal
	8	I2C_SCL	I	0/3.3 V DC (pulse)	Clock signal
	9	I2C_SDA	I	0/3.3 V DC (pulse)	Serial communication data signal
	10	HLD_ENG	I	0/3.3 V DC	Engine hold signal
	11	SLEEP_ENG	I	0/3.3 V DC	Engine sleep signal
	12	HSYNC_DP	I	0/3.3 V DC (pulse)	Image control signal
	13	HSYNC_DN	I	0/3.3 V DC (pulse)	Image control signal
	14	HSYNC_CP	I	0/3.3 V DC (pulse)	Image control signal
	15	HSYNC_CN	I	0/3.3 V DC (pulse)	Image control signal
	16	HSYNC_BP	I	0/3.3 V DC (pulse)	Image control signal
	17	HSYNC_BN	I	0/3.3 V DC (pulse)	Image control signal

Connector	Pin	Signal	I/O	Voltage	Description
YC46	18	HSYNC_AP	I	0/3.3 V DC (pulse)	Image control signal
Connected to main PWB	19	HSYNC_AN	I	0/3.3 V DC (pulse)	Image control signal
	20	VSYNC_DP	I	0/3.3 V DC (pulse)	Image control signal
	21	VSYNC_DN	I	0/3.3 V DC (pulse)	Image control signal
	22	VSYNC_CP	I	0/3.3 V DC (pulse)	Image control signal
	23	VSYNC_CN	I	0/3.3 V DC (pulse)	Image control signal
	24	VSYNC_BP	I	0/3.3 V DC (pulse)	Image control signal
	25	VSYNC_BN	I	0/3.3 V DC (pulse)	Image control signal
	26	VSYNC_AP	I	0/3.3 V DC (pulse)	Image control signal
	27	VSYNC_AN	I	0/3.3 V DC (pulse)	Image control signal
	28	GND	-	-	Ground
	29	SAR_VCLK_P	I	0/3.3 V DC (pulse)	Clock signal
	30	SAR_VCLK_N	I	0/3.3 V DC (pulse)	Clock signal
	31	GND	-	-	Ground
	32	SAR_CH3_P	I	0/3.3 V DC (pulse)	Image control signal
	33	SAR_CH3_N	I	0/3.3 V DC (pulse)	Image control signal
	34	GND	-	-	Ground
	35	SAR_CH2_P	I	0/3.3 V DC (pulse)	Image control signal
	36	SAR_CH2_N	I	0/3.3 V DC (pulse)	Image control signal
	37	GND	-	-	Ground
	38	SAR_CH1_P	I	0/3.3 V DC (pulse)	Image control signal
	39	SAR_CH1_N	I	0/3.3 V DC (pulse)	Image control signal
	40	GND	-	-	Ground

2-3-3 Power source PWB

I

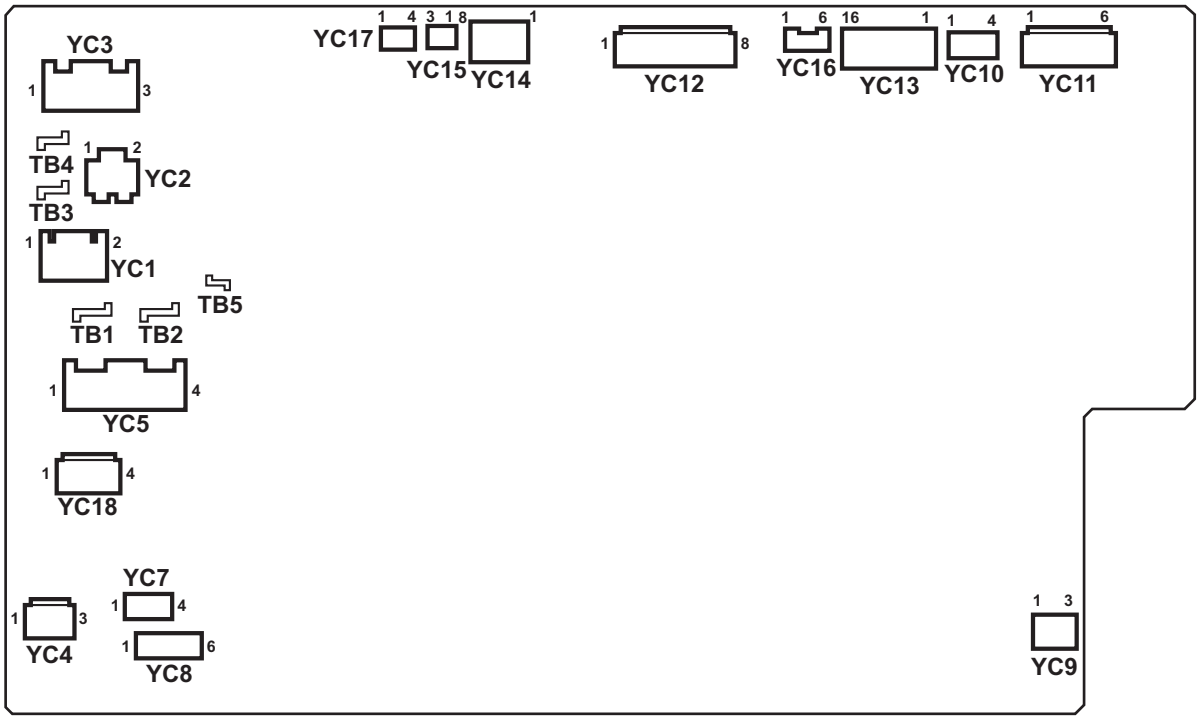

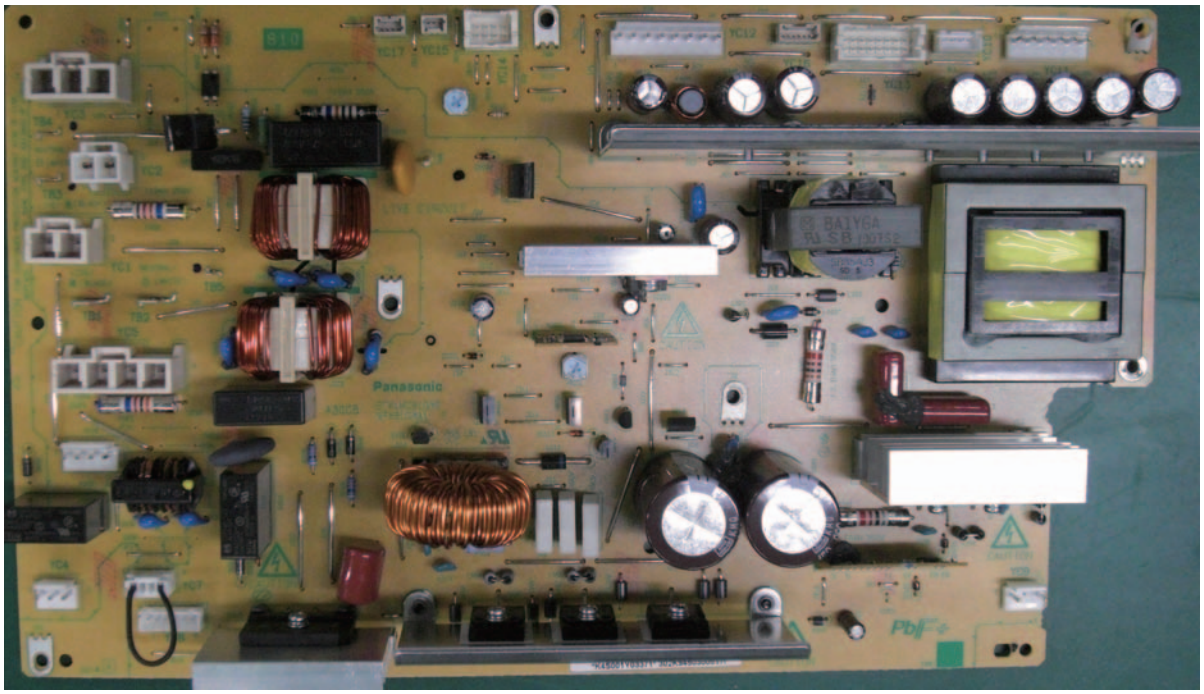

* : Refer to the picture.

Figure 2-3-3 Power source PWB silk-screen diagram and photograph

Connector	Pin	Signal	I/O	Voltage	Description
TB	1	LIVE	I	120 V AC 220-240 V AC	AC power input
Connected to AC inlet and main power switch	2	NEUTRAL	I	120 V AC 220-240 V AC	AC power input
	3	LIVE	-	-	Not used
	4	NEUTRAL	-	-	Not used
	5	DH_LIVE	I	120 V AC 220-240 V AC	AC power input
YC1	1	MSW_OUT	O	120 V AC 220-240 V AC	AC power output to MSW
Connected to main power switch	2	MSW_IN	I	120 V AC 220-240 V AC	AC power input from MSW
YC3	1	IH_NEUTRAL	O	120 V AC 220-240 V AC	AC power output to FIHPWB
Connected to fuser IH PWB	2	NC	-	-	Not used
	3	IH_LIVE	O	120 V AC 220-240 V AC	AC power output to FIHPWB
YC8	1	DH_LIVE	O	120 V AC 220-240 V AC	AC power output to CH
Connected to cassette heater	2	DH_LIVE	O	120 V AC 220-240 V AC	AC power output to CH
	3	NC	-	-	Not used
	4	NC	-	-	Not used
	5	DH_NEUTRAL	O	120 V AC 220-240 V AC	AC power output to CH
	6	DH_NEUTRAL	O	120 V AC 220-240 V AC	AC power output to CH
YC9	1	DH_LIVE	O	120 V AC 220-240 V AC	AC power output to PFCH
Connected to paper feeder/ large capac-ity feeder	2	DH_NEUTRAL	O	120 V AC 220-240 V AC	AC power output to PFCH
YC10	1	+24V1	O	24 V DC	24 V DC power to LSURPWB
Connected to LSU relay PWB	2	+24V1	O	24 V DC	24 V DC power to LSURPWB
	3	GND	-	-	Ground
	4	GND	-	-	Ground

Connector	Pin	Signal	I/O	Voltage	Description
YC11	1	24V1	O	24 V DC	24 V DC power to MCPWB
Connected to motor control PWB	2	24V1	O	24 V DC	24 V DC power to MCPWB
	3	24V1	O	24 V DC	24 V DC power to MCPWB
	4	GND	-	-	Ground
	5	GND	-	-	Ground
	6	GND	-	-	Ground
YC12	1	24V1	O	24 V DC	24 V DC power to FPWB1
Connected to feed PWB 1	2	24V1	O	24 V DC	24 V DC power to FPWB1
	3	24V1	O	24 V DC	24 V DC power to FPWB1
	4	12V	O	12 V DC	12 V DC power to FPWB1
	5	GND	-	-	Ground
	6	GND	-	-	Ground
	7	GND	-	-	Ground
	8	GND	-	-	Ground
YC13	1	24V1	O	24 V DC	24 V DC power to paper feeder/large capacity feeder
Connected to paper feeder/ large capacity feeder, 1000-sheet/ 4000-sheet finisher and ISC PWB	2	24V1	O	24 V DC	24 V DC power to paper feeder/large capacity feeder
	3	24V1	O	24 V DC	24 V DC power to 1000-sheet/4000-sheet finisher
	4	24V1	O	24 V DC	24 V DC power to 1000-sheet/4000-sheet finisher
	5	24V1	O	24 V DC	24 V DC power to ISCPWB
	6	24V1	O	24 V DC	24 V DC power to ISCPWB
	7	24V1	-	-	Not used
	8	24V1	-	-	Not used
	9	GND	-	-	Ground
	10	GND	-	-	Ground
	11	GND	-	-	Ground
	12	GND	-	-	Ground
	13	GND	-	-	Ground
	14	GND	-	-	Ground
	15	GND	-	-	Ground
	16	GND	-	-	Ground

Connector	Pin	Signal	I/O	Voltage	Description
YC16	1	24V1	O	24 V DC	24 V DC power to HVPWB1
Connected to high voltage PWB 1	2	24V1	O	24 V DC	24 V DC power to HVPWB1
	3	24V1	O	24 V DC	24 V DC power to HVPWB1
	4	PGND	-	-	Ground
	5	PGND	-	-	Ground
	6	PGND	-	-	Ground
YC17	1	POWER_OFF	I	0/3.3 V DC	Sleep mode signal: On/Off
Connected to feed PWB 1	2	DRUM_HEAT_REM	I	0/3.3 V DC	FH: On/Off
	3	GND	-	-	Ground
	4	FSR_RELAY_REM	-	-	Not used

2-3-4 Front PWB

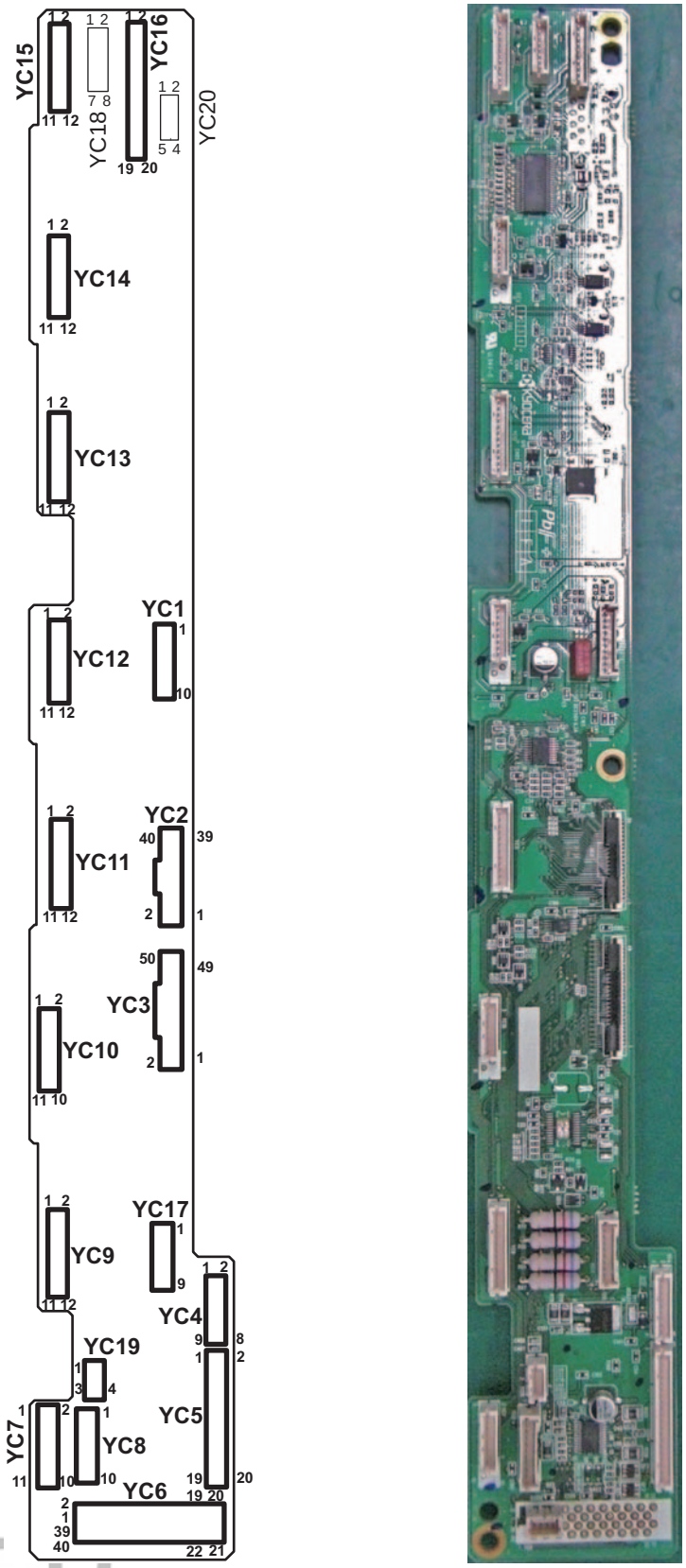

* : Refer to the picture.

Figure 2-3-4 Front PWB silk-screen diagram and photograph

Connector	Pin	Signal	I/O	Voltage	Description
YC1	1	+3.3V1	I	3.3 V DC	3.3 V DC power from EPWB
Connected to engine PWB	2	+3.3V2	I	3.3 V DC	3.3 V DC power from EPWB
	3	+5V	I	5 V DC	5 V DC power from EPWB
	4	+24V	I	24 V DC	24 V DC power from EPWB
	5	+24V	I	24 V DC	24 V DC power from EPWB
	6	GND	-	-	Ground
	7	GND	-	-	Ground
	8	GND	-	-	Ground
	9	GND	-	-	Ground
	10	GND	-	-	Ground
YC2	1	GND	-	-	Ground
Connected to engine PWB	2	DRM_INDEX_Bk	O	0/3.3 V DC	DRM-K control signal
	3	ERS_Bk_REM	I	0/24 V DC	CL-K: On/Off
	4	TPD_ Bk_1	O	Analog	TS-K detection signal
	5	DLP_VCONT_Bk_1	I	0/3.3 V DC	TS-K control signal
	6	TPD_TEMP_Bk	O	Analog	Developer thermistor K detection signal
	7	GND	-	-	Ground
	8	DRM_INDEX_M	O	0/3.3 V DC	DRM-M control signal
	9	ERS_ M_REM	I	0/24 V DC	CL-M: On/Off
	10	TPD_M_1	O	Analog	TS-M detection signal
	11	DLP_VCONT_M_1	I	0/3.3 V DC	TS-M control signal
	12	TPD_TEMP_M	O	Analog	Developer thermistor M detection signal
	13	GND	-	-	Ground
	14	DRM_INDEX_C	O	0/3.3 V DC	DRM-C control signal
	15	ERS_C_REM	I	0/24 V DC	CL-C: On/Off
	16	TPD_C_1	O	Analog	TS-C detection signal
	17	DLP_VCONT_C_1	I	0/3.3 V DC	TS-C control signal
	18	TPD_TEMP_C	O	Analog	Developer thermistor C detection signal
	19	GND	-	-	Ground
	20	TN_CLK	I	0/3.3 V DC (pulse)	Clock signal
	21	GND	-	-	Ground
	22	EEP_SCL1	I	0/3.3 V DC (pulse)	EEPROM clock signal

Connector	Pin	Signal	I/O	Voltage	Description
YC2	23	GND	-	-	Ground
Connected to engine PWB	24	EEP_SDA1	I/O	0/3.3 V DC (pulse)	EEPROM data signal
	25	GND	-	-	Ground
	26	TPD_Y_1	O	Analog	TS-Y detection signal
	27	DLP_VCONT_Y_1	I	0/3.3 V DC	TS-Y control signal
	28	TPD_TEMP_Y	O	Analog	Developer thermistor Y detection signal
	29	ERS_Y_REM	I	0/24 V DC	CL-Y: On/Off
	30	DRM_INDEX_ Y	O	0/3.3 V DC	DRM-Y control signal
	31	FRONT_OPEN	O	0/3.3 V DC	FRCSW: On/Off
	32	GND	-	-	Ground
	33	I2C_SCL	I	0/3.3 V DC (pulse)	EEPROM clock signal
	34	GND	-	-	Ground
	35	I2C_SDA	I/O	0/3.3 V DC (pulse)	EEPROM data signal
	36	GND	-	-	Ground
	37	LSU_FAN_REM	I	0/24 V DC	LSUFM: On/Off
	38	CLEAN_MOT_LOCK	O	0/3.3 V DC	WTM lock signal
	39	CLEAN_MOT_REM	I	0/24 V DC	WTM: On/Off
	40	GND	-	-	Ground
YC3	1	GND	-	-	Ground
Connected to engine PWB	2	WTNR_SET	-	-	Not used
	3	INTER_LOCK	-	-	Not used
	4	IH_CORE_SENS	-	-	Not used
	5	IH_CORE_MOT_REM	-	-	Not used
	6	IH_CORE_CLK	-	-	Not used
	7	WTNR_LED	I	0/3.3 V DC (pulse)	WTS1 LED emitter signal
	8	IH_COIL_FAN_ALM	O	0/3.3 V DC	FUFFM alarm signal
	9	IH_COIL_FAN_H	I	0/24 V DC	FUFFM: On/Off
	10	IH_COIL_FAN_L	I	0/24 V DC	FUFFM: On/Off
	11	EXIT_FAN	I	0/24 V DC	EFFM: On/Off
	12	VIB_MOT__FAN	I	0/24 V DC	VM: On/Off
	13	JUNC_SOL_REM	I	0/24 V DC	FSSOL: On/Off (ACT)
	14	JUNC_SOL_RET	I	0/24 V DC	FSSOL: On/Off (RET)

Connector	Pin	Signal	I/O	Voltage	Description
YC3	15	GND	-	-	Ground
Connected to engine PWB	16	EXIT_MAIN_SENS	O	0/3.3 V DC	EFS1: On/Off
	17	EXIT_FEED_SENS	O	0/3.3 V DC	SBS: On/Off
	18	SB_MOT_REM	I	0/3.3 V DC	EM: On/Off
	19	SB_MOT_PH	I	0/3.3 V DC	EM control signal
	20	SB_MOT_CLK	I	0/3.3 V DC (pulse)	EM clock signal
	21	SB_MOT_PD	I	0/3.3 V DC	EM control signal
	22	SB_MOT_DIR	I	0/3.3 V DC	EM drive switch signal
	23	GND	-	-	Ground
	24	WT_VCONT_FULL	I	0/3.3 V DC	WTS1 control signal
	25	THOP_DIR	-	-	Not used
	26	DLP_FAN_CLR_H	I	0/24 V DC	DEVFM1: On/Off
	27	DLP_FAN_CLR_L	I	0/24 V DC	DEVFM1: On/Off
	28	WTNR_FULL	O	Analog	WTS1 detection signal
	29	WTNR_NEAR	O	Analog	WTS2 detection signal
	30	WTNR_VCONT	I	0/3.3 V DC	WTS2 control signal
	31	GND	-	-	Ground
	32	WTNR_LED	I	0/3.3 V DC	WTS1 control signal
	33	THOP_MOT_Y_DIR	-	-	Not used
	34	THOP_MOT_C_DIR	-	-	Not used
	35	THOP_MOT_BK_DIR	-	-	Not used
	36	EXIT_SUB_SENS	O	0/3.3 V DC	EFS2: On/Off
	37	THOP_MOT_Bk_REM	-	-	Not used
	38	THOP_MOT_M_REM	-	-	Not used
	39	THOP_MOT_C_REM	-	-	Not used
	40	THOP_MOT_Y_REM	-	-	Not used
	41	GND	-	-	Ground
	42	ENCODE_ Bk	-	-	Not used
	43	ENCODE_M	-	-	Not used

Connector	Pin	Signal	I/O	Voltage	Description
YC3	44	ENCODE_C	-	-	Not used
Connected to engine PWB	45	ENCODE_Y	-	-	Not used
	46	THOP_ Bk	-	-	Not used
	47	THOP_M	-	-	Not used
	48	THOP_C	-	-	Not used
	49	THOP_Y	-	-	Not used
	50	GND	-	-	Ground
YC4	1	5V	-	-	Not used
Connected to fuser front fan motor and eject front fan motor	2	LED1	-	-	Not used
	3	5V	-	-	Not used
	4	LED2	-	-	Not used
	5	IH_COIL_FAN_ALM	I	0/3.3 V DC	FUFFM alarm signal
	6	GND	-	-	Ground
	7	IH_COIL_FAN	O	0/24 V DC	FUFFM: On/Off
	8	24V	O	24 V DC	24 V DC power to EFFM
	9	EXIT FAN	O	0/24 V DC	EFFM: On/Off
YC5	1	ROT_CORE A	-	-	Not used
Connected to eject unit	2	ROT_CORE B	-	-	Not used
	3	ROT_CORE A/	-	-	Not used
	4	ROT_CORE B/	-	-	Not used
	5	GND	-	-	Ground
	6	EXIT_SUB_SENS	I	0/3.3 V DC	EFS2: On/Off
	7	5V	O	DC5V	5V DC power to EFS2
	8	SB_MOT B/	O	0/24 V DC (pulse)	EM drive control signal
	9	SB_MOT A/	O	0/24 V DC (pulse)	EM drive control signal
	10	SB_MOT B	O	0/24 V DC (pulse)	EM drive control signal
	11	SB_MOT A	O	0/24 V DC (pulse)	EM drive control signal
	12	GND	-	-	Ground
	13	EXIT_FEED_SENS	I	0/3.3 V DC	SBS: On/Off
	14	5V	O	5 V DC	5 V DC power to SBS
	15	GND	-	-	Ground
	16	EXIT_PAPER_SENS	I	0/3.3 V DC	EFS1: On/Off

Connector	Pin	Signal	I/O	Voltage	Description
YC5	17	5V	O	5 V DC	5 V DC power to EFS1
Connected to eject unit	18	+24V1	O	24 V DC	24 V DC power to FSSOL
	19	JUNC_SOL_KYU	O	0/24 V DC	FSSOL: On/Off (ACT)
	20	JUNC_SOL_FUK	O	0/24 V DC	FSSOL: On/Off (RET)
YC6	1	24V	O	24 V DC	24 V DC power to DEVFM2
Connected to developer fan motor 1/2	2	DLP_FAN_Bk	O	0/24 V DC	DEVFM2: On/Off
	3	24V	O	24 V DC	24 V DC power to DEVFM1
	4	DLP_FAN_M	O	0/24 V DC	DEVFM1: On/Off
YC7	1	3.3V2	O	3.3 V DC	3.3 V DC power to DRPWB-K
Connected to drum unit K	2	EEP_SCL1	O	0/3.3 V DC (pulse)	EEPROM clock signal
	3	EEP_SDA1	I/O	0/3.3 V DC (pulse)	EEPROM data signal
	4	GND	-	-	Ground
	5	DRM_ADR0_Bk	-	-	Not used
	6	DRM_ADR1_Bk	-	-	Not used
	7	24V	O	24 V DC	24 V DC power to CL-K
	8	ERS_Bk_REM	O	0/24 V DC	CL-K: On/Off
YC8	1	5V	O	5 V DC	5 V DC power to WTS1
Connected to waste toner sensor 1/2	2	WTNR_FULL	I	Analog	WTS1 detection signal
	3	WTNR_LED	O	0/3.3 V DC (pulse)	WTS1 LED emitter signal
	4	5V_LED	O	5 V DC	5 V DC power to WTS1
	5	GND	-	-	Ground
	6	WTNR_NEAR	I	Analog	WTS2 detection signal
	7	5V	O	5 V DC	5 V DC power to WTS2
	8	WTNR_SP	-	-	Not used
	9	WTNR_LED	-	-	Not used
	10	5V_LED	-	-	Not used

Connector	Pin	Signal	I/O	Voltage	Description
YC9	1	TPD_TEMP_BK	I	Analog	Developer thermistor K detection signal
Connected to developer unit K	2	DLP_VCONT_BK_1	O	0/3.3 V DC	DEVPWB-K control signal
	3	TPD_BK_1	I	Analog	DEVPWB-K detection signal
	4	TN_CLK_BK	O	0/3.3 V DC (pulse)	Clock signal
	5	GND	-	-	Ground
	6	DLP_ADR1_BK	-	-	Not used
	7	DLP_ADR0_BK	-	-	Not used
	8	EEP_SDA1	I/O	0/3.3 V DC (pulse)	EEPROM data signal
	9	EEP_SCL1	O	0/3.3 V DC (pulse)	EEPROM clock signal
	10	3.3V2	O	3.3 V DC	3.3 V DC power to TS-K
	11	3V	O	3.3 V DC	3.3 V DC power to VM-K
	12	VIB_MOT	O	0/24 V DC	VM-K: On/Off
YC10	1	3.3V2	O	3.3 V DC	3.3 V DC power to DRPWB-M
Connected to drum unit M	2	EEP_SCL1	O	0/3.3 V DC (pulse)	EEPROM clock signal
	3	EEP_SDA1	I/O	0/3.3 V DC (pulse)	EEPROM data signal
	4	GND	-	-	Ground
	5	DRM_ADR0_M	-	-	Not used
	6	DRM_ADR1_M	-	-	Not used
	7	24V	O	24 V DC	24 V DC power to CL-M
	8	ERS_M_REM	O	0/24 V DC	CL-M: On/Off
YC11	1	TPD_TEMP_M	I	Analog	Developer thermistor M detection signal
Connected to developer unit M	2	DLP_VCONT_M_1	O	0/3.3 V DC	DEVPWB-M control signal
	3	TPD_M_1	I	Analog	DEVPWB-M detection signal
	4	TN_CLK_M	O	0/3.3 V DC (pulse)	Clock signal
	5	GND	-	-	Ground
	6	DLP_ADR1_M	-	-	Not used
	7	DLP_ADR0_M	-	-	Not used
	8	EEP_SDA1	I/O	0/3.3 V DC (pulse)	EEPROM data signal
	9	EEP_SCL1	O	0/3.3 V DC (pulse)	EEPROM clock signal
	10	3.3V2	O	3.3 V DC	3.3 V DC power to TS-M
	11	3V	O	3.3 V DC	3.3 V DC power to VM-M
	12	VIB_MOT	O	0/24 V DC	VM-M: On/Off

Connector	Pin	Signal	I/O	Voltage	Description
YC12	1	3.3V2	O	3.3 V DC	3.3 V DC power to DRPWB-C
Connected to drum unit C	2	EEP_SCL1	O	0/3.3 V DC (pulse)	EEPROM clock signal
	3	EEP_SDA1	I/O	0/3.3 V DC (pulse)	EEPROM data signal
	4	GND	-	-	Ground
	5	DRM_ADR0_C	-	-	Not used
	6	DRM_ADR1_C	-	-	Not used
	7	24V	O	24 V DC	24 V DC power to CL-C
	8	ERS_C_REM	O	0/24 V DC	CL-C: On/Off
YC13	1	TPD_TEMP_C	I	Analog	Developer thermistor C detection signal
Connected to developer unit C	2	DLP_VCONT_C_1	O	0/3.3 V DC	DEVPWB-C control signal
	3	TPD_C_1	I	Analog	DEVPWB-C detection signal
	4	TN_CLK_C	O	0/3.3 V DC (pulse)	Clock signal
	5	GND	-	-	Ground
	6	DLP_ADR1_C	-	-	Not used
	7	DLP_ADR0_C	-	-	Not used
	8	EEP_SDA1	I/O	0/3.3 V DC (pulse)	EEPROM data signal
	9	EEP_SCL1	O	0/3.3 V DC (pulse)	EEPROM clock signal
	10	3.3V2	O	3.3 V DC	3.3 V DC power to TS-C
	11	3V	O	3.3 V DC	3.3 V DC power to VM-C
	12	VIB_MOT	O	0/24 V DC	VM-C: On/Off
YC14	1	3.3V2	O	3.3 V DC	3.3 V DC power to DRPWB-Y
Connected to drum unit Y	2	EEP_SCL1	O	0/3.3 V DC (pulse)	EEPROM clock signal
	3	EEP_SDA1	I/O	0/3.3 V DC (pulse)	EEPROM data signal
	4	GND	-	-	Ground
	5	DRM_ADR0_ Y	-	-	Not used
	6	DRM _ADR1_ Y	-	-	Not used
	7	24V	O	24 V DC	24 V DC power to CL-Y
	8	ERS_ Y _REM	O	0/24 V DC	CL-Y: On/Off

Connector	Pin	Signal	I/O	Voltage	Description
YC15	1	TPD_TEMP_Y	I	Analog	Developer thermistor Y detection signal
Connected to developer unit Y	2	DLP_VCONT_Y_1	O	0/3.3 V DC	DEVPWB-Y control signal
	3	TPD_Y_1	I	Analog	DEVPWB-Y detection signal
	4	TN_CLK_Y	O	0/3.3 V DC (pulse)	Clock signal
	5	GND	-	-	Ground
	6	DLP_ADR1_Y	-	-	Not used
	7	DLP_ADR0_Y	-	-	Not used
	8	EEP_SDA1	I/O	0/3.3 V DC (pulse)	EEPROM data signal
	9	EEP_SCL1	O	0/3.3 V DC (pulse)	EEPROM clock signal
	10	3.3V2	O	3.3 V DC	3.3 V DC power to TS-Y
	11	3V	O	3.3 V DC	3.3 V DC power to VM-Y
	12	VIB_MOT	O	0/24 V DC	VM-Y: On/Off
YC16	1	NC	-	-	Not used
Connected to outer temperature sensor 1, front cover switch, LSU fan motor and waste toner motor	2	NC	-	-	Not used
	3	NC	-	-	Not used
	4	NC	-	-	Not used
	5	FRONT_OPEN	I	0/3.3 V DC	FRCSW: On/Off
	6	GND	-	-	Ground
	7	24V	O	24 V DC	24 V DC power to LSUFM
	8	LSU_FAN_OUT	O	DC0V/24V	LSUFM: On/Off
	9	CL_MOT1	O	DC0V/24V	WTM: On/Off
	10	CL_MOT2	O	24 V DC	24 V DC power to WTM
	11	GND	-	-	Ground
YC17	1	GND	-	-	Not used
Connected to eject front fan motor 2	2	LED1	-	-	Not used
	3	5V	-	-	Not used
	4	LED2	-	-	Not used
	5	IH_COIL_FAN_ALM	-	-	Not used
	6	GND	-	-	Not used
	7	IH_COIL_FAN	-	-	Not used
	8	24V	O	DC24V	24 V DC power to EFFM2
	9	EXIT_FAN	O	DC0V/24V	EFFM2: On/Off

Connector	Pin	Signal	I/O	Voltage	Description
YC19	1	3.3V1	O	3.3 V DC	3.3 V DC power to OTEMS2
Connected to outer temperature sensor 2	2	I2C_SDA	I	0/3.3 V DC (pulse)	EEPROM data signal
	3	GND	-	-	Ground
	4	I2C_SCL	O	0/3.3 V DC (pulse)	EEPROM clock signal

2-3-5 Feed PWB 1

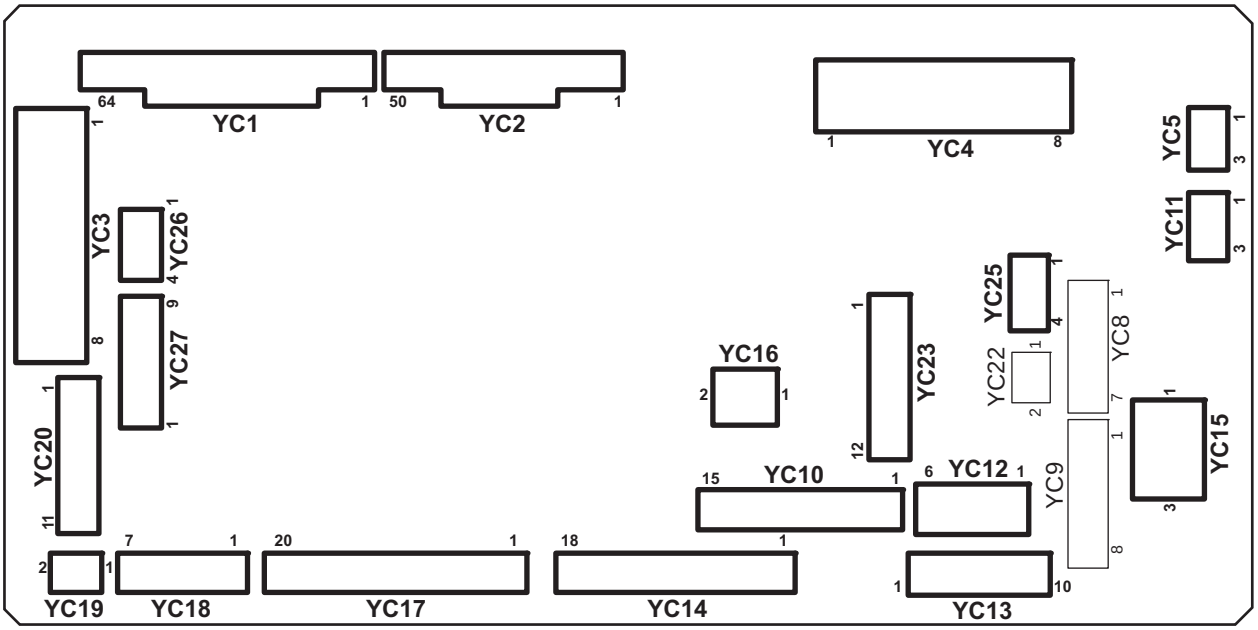

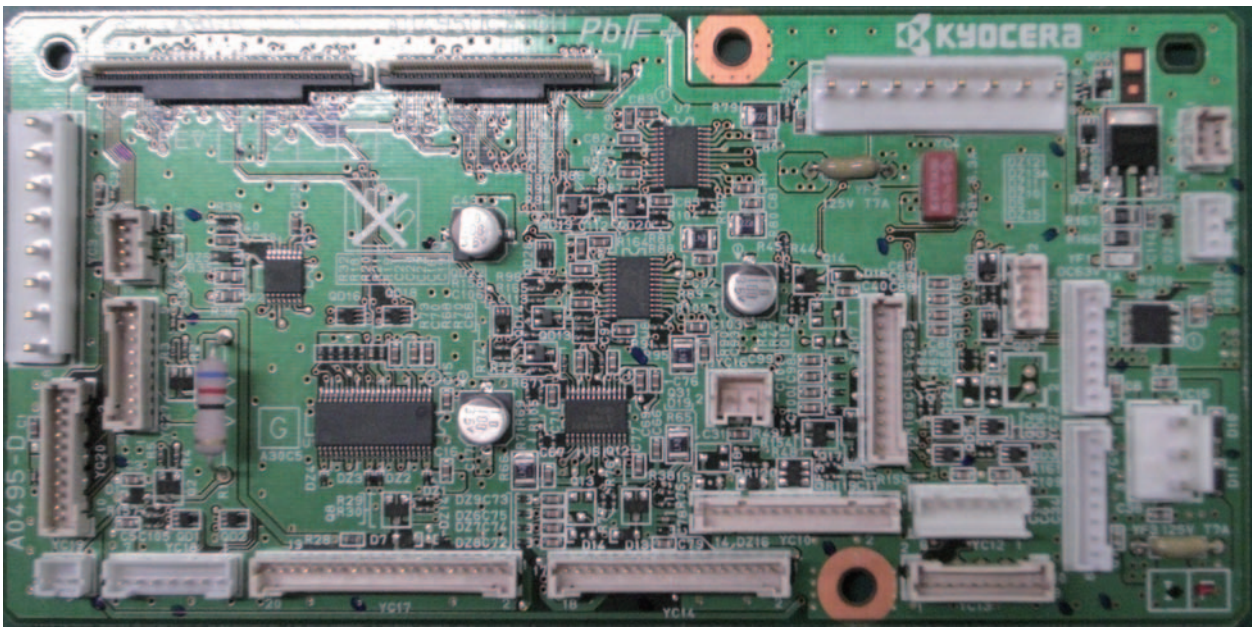

* : Refer to the picture.

Figure 2-3-5 Feed PWB 1 silk-screen diagram and photograph

Connector	Pin	Signal	I/O	Voltage	Description
YC1	1	GND	-	-	Ground
Connected to engine PWB	2	REG_F_LED	I	Analog	IDS1 control signal
	3	REG_SENS_F_P	O	Analog	IDS1 detection signal
	4	REG_SENS_F_S	O	Analog	IDS1 detection signal
	5	GND	-	-	Ground
	6	REG_R_LED	I	Analog	IDS2 control signal
	7	REG_SENS_RP(BK)	O	Analog	IDS2 detection signal
	8	REG_SENS_RS(BK)	O	Analog	IDS2 detection signal
	9	CLN_SOL_REM	I	0/24 V DC	CLSOL: On/Off (ACT)
	10	CLN_SOL_RET	I	0/24 V DC	CLSOL: On/Off (RET)
	11	GND	-	-	Ground
	12	BELT_JAM_SENS	-	-	Not used
	13	DU_SENS	O	0/3.3 V DC	DUS2: On/Off
	14	PRESS_RLS_SENS	O	0/3.3 V DC	TRRS: On/Off
	15	PRESS_MOT_REM2	I	0/24 V DC	TRRM: On/Off
	16	PRESS_MOT_REM1	I	0/24 V DC	TRRM: On/Off
	17	DU_FAN	-	-	Not used
	18	DU_OPEN	O	0/3.3 V DC	DUCSW: On/Off
	19	GND	-	-	Ground
	20	DU2_REM(CL_LOW)	I	0/3.3 V DC	DUM2/DUCL2: On/Off
	21	DU2_CLK	I	0/3.3 V DC (pulse)	DUM2 clock signal
	22	DU2_PD	I	0/3.3 V DC	DUM2 control signal
	23	INTER_LOCK	-	-	Not used
	24	GND	-	-	Not used
	25	GND	-	-	Not used
	26	GND	-	-	Not used
	27	GND	-	-	Not used
	28	GND	-	-	Ground
	29	MPF_LIFT1	I	0/24 V DC	MPLM: On/Off
	30	MPF_LIF2	I	0/24 V DC	MPLM: On/Off
	31	MPF_CL	I	0/24 V DC	MPPFCL: On/Off
	32	MPF_JAM	O	0/3.3 V DC	MPFS: On/Off

Connector	Pin	Signal	I/O	Voltage	Description
YC1	33	MPF_DOWN	O	0/3.3 V DC	MPLS2: On/Off
Connected to engine PWB	34	MPF_UP	O	0/3.3 V DC	MPLS1: On/Off
	35	MPF_PPR	O	0/3.3 V DC	MPPS: On/Off
	36	GND	-	-	Ground
	37	MPF_LNG	O	0/3.3 V DC	MPPLSW: On/Off
	38	MPF_WID3	O	0/3.3 V DC	MPPWSW: On/Off
	39	MPF_WID2	O	0/3.3 V DC	MPPWSW: On/Off
	40	MPF_WID1	O	0/3.3 V DC	MPPWSW: On/Off
	41	MPF_TABLE	O	0/3.3 V DC	MPTSW: On/Off
	42	GND	-	-	Ground
	43	FSR_MOT_BRK	I	0/3.3 V DC	FUM break signal
	44	FSR_MOT_DIR	I	0/3.3 V DC	FUM drive switch signal
	45	FSR_MOT_RDY	O	0/3.3 V DC	FUM ready signal
	46	FSR_MOT_CLK	I	0/3.3 V DC (pulse)	FUM clock signal
	47	FSR_MOT_REM	I	0/3.3 V DC	FUM: On/Off
	48	GND	-	-	Ground
	49	GND	-	-	Ground
	50	EXIT_REAR_FAN_H	I	0/24 V DC	ERFM: On/Off
	51	EXIT_REAR_FAN_L	I	0/24 V DC	ERFM: On/Off
	52	PRESS_REM	-	-	Not used
	53	FSR_RELAY	I	0/3.3 V DC	Fuser relay signal
	54	ZEROC	-	-	Not used
	55	SUB_HEAT_REM	-	-	Not used
	56	MAIN_HEAT_REM	-	-	Not used
	57	GND	-	-	Ground
	58	JOB_SOL_REM	I	0/24 V DC	JSFSSOL: On/Off
	59	JOB_OPEN_SENS	O	0/3.3 V DC	JSOCS: On/Off
	60	JOB_MOT_DIR	I	0/3.3 V DC	JSEM drive switch signal
	61	JOB_MOT_CLK	I	0/3.3 V DC (pulse)	JSEM clock signal
	62	JOB_MOT_REM	I	0/3.3 V DC	JSEM: On/Off
	63	JOB_SET	O	0/3.3 V DC	Job separator set signal
	64	GND	-	-	Ground

Connector	Pin	Signal	I/O	Voltage	Description
YC2	1	GND	-	-	Ground
Connected to engine PWB	2	GND	-	-	Ground
	3	DRM_HEAT_REM	-	-	Not used
	4	POWER_OFF	I	0/3.3 V DC	Power off signal
	5	IH_PWB_FAN_ALM	O	0/3.3 V DC	IHFM alarm signal
	6	IH_PWB_FAN_H	I	0/24 V DC	IHFM: On/Off
	7	IH_PWB_FAN_L	-	-	Not used
	8	GND	-	-	Ground
	9	REG_MOT_REM(CL)	I	0/3.3 V DC	RM/RCL: On/Off
	10	REG_MOT_CLK	I	0/3.3 V DC (pulse)	RM clock signal
	11	REG_MOT_PD	I	0/3.3 V DC	RM control signal
	12	GND	-	-	Ground
	13	DLP_MOT_CLR_DIR	-	-	Not used
	14	DLP_MOT_CLR_RDY	-	-	Not used
	15	DLP_MOT_CLR_CLK	-	-	Not used
	16	DLP_MOT_CLR_REM	-	-	Not used
	17	GND	-	-	Ground
	18	DRM_MOT_CLR_DIR	-	-	Not used
	19	DRM_MOT_CLR_RDY	-	-	Not used
	20	DRM_MOT_BK_CLR_CLK	-	-	Not used
	21	DRM_MOT_CLR_REM	-	-	Not used
	22	GND	-	-	Ground
	23	DLP_MOT_BK_DIR	-	-	Not used
	24	DLP_MOT_BK_RDY	-	-	Not used
	25	DLP_MOT_BK_CLK	-	-	Not used
	26	DLP_MOT_BK_REM	-	-	Not used

Connector	Pin	Signal	I/O	Voltage	Description
YC2	27	GND	-	-	Ground
Connected to engine PWB	28	DRM_MOT_BK_BRK	-	-	Not used
	29	DRM_MOT_BK_DIR	-	-	Not used
	30	DRM_MOT_BK_RDY	-	-	Not used
	31	DRM_MOT_BK_REM	-	-	Not used
	32	GND	-	-	Ground
	33	TRANS_MOT_BRK	I	0/3.3 V DC	TRCM break signal
	34	TRANS_MOT_DIR	I	0/3.3 V DC	TRCM drive switch signal
	35	TRANS_MOT_RDY	O	0/3.3 V DC	TRCM ready signal
	36	TRANS_MOT_CLK	I	0/3.3 V DC (pulse)	TRCM clock signal
	37	TRANS_MOT_REM	I	0/3.3 V DC	TRCM: On/Off
	38	GND	-	-	Ground
	39	TCON_SET	-	-	Not used
	40	DU_ENTER_SENS	O	0/3.3 V DC	DUS1: On/Off
	41	EXIT_FAN	I	0/24 V DC	EFM: On/Off
	42	GND	-	-	Ground
	43	DU1_MOT_REM(CL_H)	I	0/3.3 V DC	DUM1/DUCL1: On/Off
	44	DU1_MOT_CLK	I	0/3.3 V DC (pulse)	DUM1 clock signal
	45	DU1_MOT_PD	I	0/3.3 V DC	DUM1 control signal
	46	EDGE_FAN_H	I	0/24 V DC	FUFM: On/Off
	47	GND	-	-	Ground
	48	LOOP_SENS	O	0/3.3 V DC	LPS: On/Off
	49	M_TEMP	-	-	Not used
	50	GND	-	-	Ground

Connector	Pin	Signal	I/O	Voltage	Description
YC3	1	24V1	O	24 V DC	24 V DC power to EPWB
Connected to engine PWB	2	24V1	O	24 V DC	24 V DC power to EPWB
	3	GND	-	-	Ground
	4	GND	-	-	Ground
	5	12V	O	12 V DC	12 V DC power to EPWB
	6	GND	-	-	Ground
	7	5V	O	5 V DC	5 V DC power to EPWB
	8	GND	-	-	Ground
YC4	1	24V1	I	24 V DC	24 V DC power from PSPWB
Connected to power source PWB	2	24V1	I	24 V DC	24 V DC power from PSPWB
	3	24V1	I	24 V DC	24 V DC power from PSPWB
	4	12V	I	12 V DC	12 V DC power from PSPWB
	5	GND	-	-	Ground
	6	GND	-	-	Ground
	7	GND	-	-	Ground
	8	GND	-	-	Ground
YC5	1	GND	-	-	Ground
Connected to power source PWB	2	DRM_HEAT_REM	O	0/3.3 V DC	FH: On/Off
	3	POWER_OFF	O	0/3.3 V DC	Sleep mode signal: On/Off
YC10	1	GND	-	-	Ground
Connected to ID sensor1/2 and cleaning solenoid	2	M_TEMP	-	-	Not used
	3	3.3V	O	3.3 V DC	3.3 V DC power to IDS1
	4	REG_F_LED	O	Analog	IDS1 control signal
	5	GND	-	-	Ground
	6	REG_SENS_F_P	I	Analog	IDS1 detection signal
	7	REG_SENS_F_S	I	Analog	IDS1 detection signal
	8	3.3V	O	3.3 V DC	3.3 V DC power to IDS2
	9	REG_R_LED	O	Analog	IDS2 control signal
	10	GND	-	-	Ground
	11	REG_SENS_R_P	I	Analog	IDS2 detection signal
	12	REG_SENS_R_S	I	Analog	IDS2 detection signal
	13	24V	O	24 V DC	24 V DC power to CLSOL
	14	CLN_SOL_REM	O	0/24 V DC	CLSOL: On/Off (ACT)
	15	CLN_SOL_RET	O	0/24 V DC	CLSOL: On/Off (RET)

Connector	Pin	Signal	I/O	Voltage	Description
YC11	1	IH_PWB_FAN	O	0/24 V DC	IHFM: On/Off
Connected to IH fan motor	2	GND	-	-	Ground
	3	IH_PWB_FAN_ALM	I	0/3.3 V DC	IHFM alarm signal
YC12	1	24V2	O	24 V DC	24 V DC power to FPWB2
Connected to feed PWB 2	2	24V2	O	24 V DC	24 V DC power to FPWB2
	3	5V	O	5 V DC	5 V DC power to FPWB2
	4	GND	-	-	Ground
	5	GND	-	-	Ground
	6	GND	-	-	Ground
YC13	1	TRANS_MOT_BRK	O	0/3.3 V DC	TRM break signal
Connected to transfer motor	2	TRANS_MOT_DIR	O	0/3.3 V DC	TRM drive switch signal
	3	TRANS_MOT_RDY	I	0/3.3 V DC	TRM ready signal
	4	TRANS_MOT_CLK	O	0/3.3 V DC (pulse)	TRM clock signal
	5	TRANS_MOT_REM	O	0/24 V DC	TRM: On/Off
	6	GND	-	-	Ground
	7	24V2	O	24 V DC	24 V DC power to TRM
	8	GND	-	-	Not used
	9	24V2	-	-	Not used
	10	TANK_SET	-	-	Not used
YC14	1	REG_BK_LED	-	-	Not used
Connected to relay PWB	2	REG_BK_SENS1_P	-	-	Not used
	3	REG_BK_SENS1_S	-	-	Not used
	4	BELT_JAM_SENS	-	-	Not used
	5	DU_SENS	I	0/3.3 V DC	DUS2: On/Off
	6	PRESS_RLS_SENS	I	0/3.3 V DC	TRRS: On/Off
	7	5V	O	5 V DC	5 V DC power to RYPWB
	8	PRESS_RLSMOT1	O	0/24 V DC	TRRM: On/Off
	9	PRESS_RLSMOT2	O	0/24 V DC	TRRM: On/Off

Connector	Pin	Signal	I/O	Voltage	Description
YC14	10	24V2	O	24 V DC	24 V DC power to RYPWB
Connected to relay PWB	11	DU_FAN	-	-	Not used
	12	DU_CL_LOWER_REM	O	0/24 V DC	DUCL2: On/Off
	13	DU_OPEN_SW	I	0/3.3 V DC	DUCSW: On/Off
	14	DU2_B/	O	0/24 V DC (pulse)	DUM2 drive control signal
	15	DU2_A/	O	0/24 V DC (pulse)	DUM2 drive control signal
	16	DU2_B	O	0/24 V DC (pulse)	DUM2 drive control signal
	17	DU2_A	O	0/24 V DC (pulse)	DUM2 drive control signal
	18	GND	-	-	Not used
YC15	1	24V1	O	24 V DC	24 V DC power to PCUSW
Connected to paper conveying unit switch	2	N.C	-	-	Not used
	3	24V2	I	24 V DC	24 V DC power from PCUSW
YC16	1	24V2	O	24 V DC	24 V DC power to HVPWB2
Connected to high voltage PWB 2	2	GND	-	-	Ground
YC17	1	GND	-	-	Ground
Connected to relay PWB	2	GND	-	-	Ground
	3	CLN_SOL_REM	-	-	Not used
	4	24V2	-	-	Not used
	5	MPF_LIFT_MOT_B	O	0/24 V DC	MPLM: On/Off
	6	MPF_LIFT_MOT_A	O	0/24 V DC	MPLM: On/Off
	7	24V2	O	24 V DC	24 V DC power to RYPWB
	8	MPF_CL_REM	O	0/24 V DC	MPPFCL: On/Off
	9	MPF_JAM_SENS	I	0/3.3 V DC	MPFS: On/Off
	10	MPF_LIFT_DOWN_SENS	I	0/3.3 V DC	MPLS2: On/Off
	11	MPF_LIFT_UP_SENS	I	0/3.3 V DC	MPLS1: On/Off
	12	MPF_PPR_SET	I	0/3.3 V DC	MPPS: On/Off
	13	LED_3.3V3	O	3.3 V DC	3.3 V DC power to RYPWB
	14	MPF_LNG	I	0/3.3 V DC	MPPLSW: On/Off

Connector	Pin	Signal	I/O	Voltage	Description
YC17	15	MPF_WID3	I	0/3.3 V DC	MPPWSW: On/Off
Connected to relay PWB	16	MPF_WID2	I	0/3.3 V DC	MPPWSW: On/Off
	17	MPF_WID1	I	0/3.3 V DC	MPPWSW: On/Off
	18	MPF_TABLE	I	0/3.3 V DC	MPTSW: On/Off
	19	GND	-	-	Ground
	20	GND	-	-	Ground
YC18	1	FSR_MOT_BRK	O	0/3.3 V DC	FUM break signal
Connected to fuser motor	2	FSR_MOT_DIR	O	0/3.3 V DC	FUM drive switch signal
	3	FSR_MOT_RDY	I	0/3.3 V DC	FUM ready signal
	4	FSR_MOT_CLK	O	0/3.3 V DC (pulse)	FUM clock signal
	5	FSR_MOT_REM	O	0/24 V DC	FUM: On/Off
	6	GND	-	-	Ground
	7	24V2	O	24 V DC	24 V DC power to FUM
YC19	1	EXIT_REAR_FAN	O	0/24 V DC	ERFM: On/Off
Connected to eject rear fan motor	2	24V1	O	24 V DC	24 V DC power to ERFM
YC20	1	MAIL_SDI	I	0/3.3 V DC (pulse)	MAIL serial communication data
Connected to job separator	2	GND	-	-	Ground
	3	GND	-	-	Ground
	4	NC	-	-	Not used
	5	24V1	O	24 V DC	24 V DC power to MAIL
	6	MAIL_CLK	O	0/3.3 V DC (pulse)	MAIL clock signal
	7	5V	O	5 V DC	5 V DC power to MAIL
	8	MAIL_SDO	O	0/3.3 V DC (pulse)	MAIL serial communication data
	9	MAIL_RDY	O	0/3.3 V DC	MAIL ready signal
	10	MAIL_SEL	O	0/3.3 V DC	MAIL select signal
	11	NC	-	-	Not used

Connector	Pin	Signal	I/O	Voltage	Description
YC23	1	DU_ENTER_SENS	I	0/3.3 V DC	DUS1: On/Off
Connected to relay PWB	2	EXIT_FAN	O	0/24 V DC	EFM: On/Off
	3	24V2	O	24 V DC	24 V DC power to RYPWB
	4	DU_CL_UPPER_REM	O	0/24 V DC	DUCL1: On/Off
	5	GND	-	-	Ground
	6	DU1_B/	O	0/24 V DC (pulse)	DUM1 drive control signal
	7	DU1_A/	O	0/24 V DC (pulse)	DUM1 drive control signal
	8	DU1_B	O	0/24 V DC (pulse)	DUM1 drive control signal
	9	DU1_A	O	0/24 V DC (pulse)	DUM1 drive control signal
	10	EDGE_FAN_REM	O	0/24 V DC	FUFM: On/Off
	11	LOOP_SENS	I	0/3.3 V DC	LPS: On/Off
	12	3.3V	O	3.3 V DC	3.3 V DC power to RYPWB
YC25	1	REG_MOT_B/	O	0/24 V DC (pulse)	RM drive control signal
Connected to registration motor	2	REG_MOT_A/	O	0/24 V DC (pulse)	RM drive control signal
	3	REG_MOT_B	O	0/24 V DC (pulse)	RM drive control signal
	4	REG_MOT_A	O	0/24 V DC (pulse)	RM drive control signal
YC26	1	3.3V2	O	3.3 V DC	3.3 V DC power to EPWB
Connected to engine PWB	2	3.3V3	O	3.3 V DC	3.3 V DC power to EPWB
	3	GND	-	-	Ground
	4	GND	-	-	Ground
YC27	1	MAIN_HEAT_REM	-	-	Not used
Connected to fuser IH PWB	2	SUB_HEAT_REM	-	-	Not used
	3	24V2	-	-	Not used
	4	ZEROC	-	-	Not used
	5	GND	-	-	Not used
	6	GND	-	-	Ground
	7	FSR_RELAY	O	0/3.3 V DC	Fuser relay signal
	8	24V1	O	24 V DC	24 V DC power to IHPWB
	9	PRESS_REM	-	-	Not used

2-3-6 Feed PWB 2

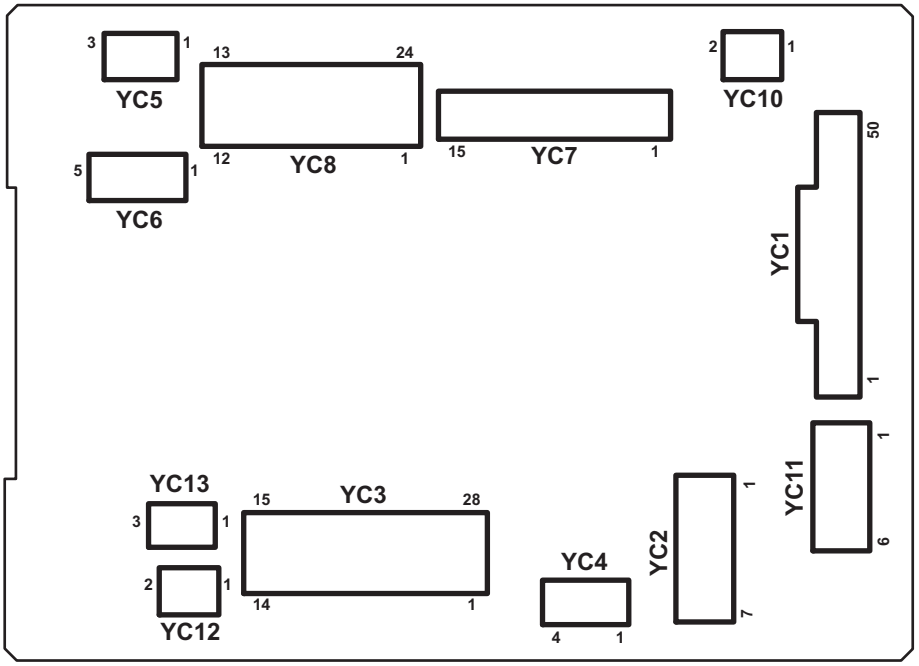

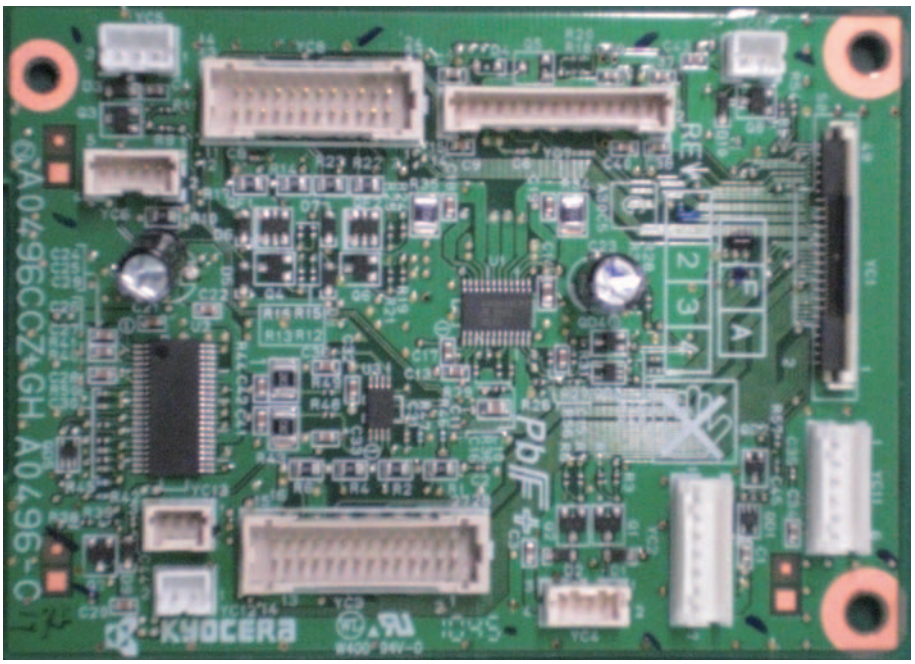

* : Refer to the picture.

Figure 2-3-6 Feed PWB 2 silk-screen diagram and photograph

Connector	Pin	Signal	I/O	Voltage	Description
YC1	1	GND	-	-	Ground
Connected to engine PWB	2	FEED_MOT_REM	I	0/3.3 V DC	PFM: On/Off
	3	FEED_MOT_CLK	I	0/3.3 V DC (pulse)	PFM clock signal
	4	FEED_MOT_RDY	O	0/3.3 V DC	PFM ready signal
	5	FEED_MOT_DIR	I	0/3.3 V DC	PFM drive switch signal
	6	FEED_CL1_REM	I	0/24 V DC	PFCL1: On/Off
	7	FEED_CL2_REM	I	0/24 V DC	PFCL2: On/Off
	8	ASIST_CL2	I	0/24 V DC	ASCL2: On/Off
	9	LIFT_MOT2_REM	I	0/24 V DC	LM2: On/Off
	10	GND	-	-	Ground
	11	LIFT_MOT1_REM 1	I	0/24 V DC	LM1: On/Off
	12	CAS2_WID	O	0/3.3 V DC	PWSW2: On/Off
	13	CAS2_LNG3	O	0/3.3 V DC	PLSW2: On/Off
	14	CAS2_LNG2	O	0/3.3 V DC	PLSW2: On/Off
	15	CAS2_LNG1	O	0/3.3 V DC	PLSW2: On/Off
	16	CAS1_WID	O	0/3.3 V DC	PWSW1: On/Off
	17	CAS1_LNG3	O	0/3.3 V DC	PLSW1: On/Off
	18	CAS1_LNG2	O	0/3.3 V DC	PLSW1: On/Off
	19	CAS1_LNG1	O	0/3.3 V DC	PLSW1: On/Off
	20	GND	-	-	Ground
	21	CAS2_QUANT2	O	0/3.3 V DC	PGS2(L): On/Off
	22	CAS2_QUANT1	O	0/3.3 V DC	PGS2(U): On/Off
	23	CAS1_QUANT2	O	0/3.3 V DC	PGS1(L): On/Off
	24	CAS1_QUANT1	O	0/3.3 V DC	PGS1(U): On/Off
	25	LIFT_MOT1_LOCK	O	0/3.3 V DC	LM1 lock signal
	26	LIFT_MOT2_LOCK	O	0/3.3 V DC	LM2 lock signal
	27	CURRENT_SIG	O	0/3.3 V DC	Current signal
	28	V-FEED_CL	I	0/24 V DC	PCCL: On/Off
	29	COVER_OPEN	O	0/3.3 V DC	PCCSW: On/Off
	30	FEED2_SENS	O	0/3.3 V DC	PFPCS1: On/Off
	31	CAS1_P0	O	0/3.3 V DC	FS1: On/Off
	32	CAS1_LIFT_UP	O	0/3.3 V DC	LS1: On/Off
	33	GND	-	-	Ground
	34	CAS1_EMPTY	O	0/3.3 V DC	PS1: On/Off

Connector	Pin	Signal	I/O	Voltage	Description
YC1	35	PICK_SOL1_RET	I	0/24 V DC	PUSOL1: On/Off (RET)
Connected to engine PWB	36	PICK_SOL1_REM	I	0/24 V DC	PUSOL1: On/Off (ACT)
	37	CAS2_P0	O	0/3.3 V DC	FS2: On/Off
	38	CAS2_LIFT_UP	O	0/3.3 V DC	LS2: On/Off
	39	CAS2_EMPTY	O	0/3.3 V DC	PS2: On/Off
	40	PICK_SOL2_RET	I	0/24 V DC	PUSOL2: On/Off (RET)
	41	PICK_SOL2_REM	I	0/24 V DC	PUSOL2: On/Off (ACT)
	42	GND	-	-	Ground
	43	REG_SENS	O	0/3.3 V DC	RS: On/Off
	44	FEED1_SENS	O	0/3.3 V DC	PCS: On/Off
	45	BEND_SENS	O	0/3.3 V DC	RDS: On/Off
	46	MID_MOT_PH	I	0/3.3 V DC	MM control signal
	47	MID_MOT_REM(ROL_CL)	I	0/3.3 V DC	MM/MCL: On/Off
	48	MID_MOT_CLK	I	0/3.3 V DC (pulse)	MM clock signal
	49	MID_MOT_PD	I	0/3.3 V DC	MM control signal
	50	ASIST_CL1	I	0/24 V DC	ASCL1: On/Off
YC2	1	FEED_MOT_GAIN	-	-	Not used
Connected to paper feed motor	2	FEED_MOT_DIR	O	0/3.3 V DC	PFM drive switch signal
	3	FEED_MOT_RDY	I	0/3.3 V DC	PFM ready signal
	4	FEED_MOT_CLK	O	0/3.3 V DC (pulse)	PFM clock signal
	5	FEED_MOT_REM	O	0/24 V DC	PFM: On/Off
	6	GND	-	-	Ground
	7	24V2	O	24 V DC	24 V DC power to PFM
YC3	1	CAS1_LNG1	I	0/3.3 V DC	PLSW1: On/Off
Connected to paper length switch 1/2, paper width switch 1/2, lift motor 1/2, paper gauge sensor 1(U)/(L) and paper gauge sensor 2(U)/(L)	2	CAS1_LNG2	I	0/3.3 V DC	PLSW1: On/Off
	3	GND	-	-	Ground
	4	CAS1_LNG3	I	0/3.3 V DC	PLSW1: On/Off
	5	CAS1_WID	I	0/3.3 V DC	PWSW1: On/Off
	6	GND	-	-	Ground
	7	CAS2_LNG1	I	0/3.3 V DC	PLSW2: On/Off
	8	CAS2_LNG2	I	0/3.3 V DC	PLSW2: On/Off
	9	GND	-	-	Ground
	10	CAS2_LNG3	I	0/3.3 V DC	PLSW2: On/Off
	11	CAS2_WID	I	0/3.3 V DC	PWSW2: On/Off

Connector	Pin	Signal	I/O	Voltage	Description
YC3	12	GND	-	-	Ground
Connected to paper length switch 1/2, paper width switch 1/2, lift motor 1/2, paper gauge sensor 1(U)/(L) and paper gauge sensor 2(U)/(L)	13	LIFT_MOT1_RET	O	0/24 V DC	LM1: On/Off
	14	LIFT_MOT1_DR	O	0/24 V DC	LM1: On/Off
	15	LIFT_MOT2_RET	O	0/24 V DC	LM2: On/Off
	16	LIFT_MOT2_DR	O	0/24 V DC	LM2: On/Off
	17	LED_5V	O	5 V DC	5 V DC power to PGS1(U)
	18	GND	-	-	Ground
	19	CAS1_QUANT1	I	0/3.3 V DC	PGS1(U): On/Off
	20	LED_5V	O	5 V DC	5 V DC power to PGS1(L)
	21	GND	-	-	Ground
	22	CAS1_QUANT2	I	0/3.3 V DC	PGS1(L): On/Off
	23	LED_5V	O	5 V DC	5 V DC power to PGS2(U)
	24	GND	-	-	Ground
	25	CAS2_QUANT1	I	0/3.3 V DC	PGS2(U): On/Off
	26	LED_5V	O	5 V DC	5 V DC power to PGS2(L)
	27	GND	-	-	Ground
	28	CAS2_QUANT2	I	0/3.3 V DC	PGS2(L): On/Off
YC4	1	FEED_CL1_REM	O	0/24 V DC	PFCL1: On/Off
Connected to paper feed clutch 1/2	2	24V2	O	24 V DC	PFCL124 V DC power to PFCL1
	3	FEED_CL2_REM	O	0/24 V DC	PFCL2: On/Off
	4	24V2	O	24 V DC	24 V DC power to PFCL2
YC5	1	NC	-	-	Not used
Connected to paper conveying clutch	2	24V2	O	24 V DC	24 V DC power to PCCL
	3	V-FEED_CL	O	0/24 V DC	PCCL: On/Off
YC6	1	LED_5V	O	5 V DC	5 V DC power to PCS
Connected to paper conveying sensor and paper conveying cover switch	2	GND	-	-	Ground
	3	FEED2_SENS	I	0/3.3 V DC	PCS: On/Off
	4	FEED_COVER_OPEN	I	0/3.3 V DC	PCCSW: On/Off
	5	GND	-	-	Ground

Connector	Pin	Signal	I/O	Voltage	Description
YC7	1	MID_B/	O	0/24 V DC (pulse)	MM drive control signal
Connected to middle motor, regist deflection sensor, middle sensor and registration sensor	2	MID_A/	O	0/24 V DC (pulse)	MM drive control signal
	3	MID_B	O	0/24 V DC (pulse)	MM drive control signal
	4	MID_A	O	0/24 V DC (pulse)	MM drive control signal
	5	BEND_SENS	-	-	Not used
	6	GND	-	-	Not used
	7	5V	-	-	Not used
	8	GND	-	-	Ground
	9	FEED1_SENS	I	0/3.3 V DC	MS: On/Off
	10	5V	O	5 V DC	5 V DC power to MS
	11	GND	-	-	Ground
	12	REG_SENS	I	0/3.3 V DC	RS: On/Off
	13	5V	O	5 V DC	5 V DC power to RS
	14	MID_CL_REM	O	0/24 V DC	MCL: On/Off
	15	24V2	O	24 V DC	24 V DC power to MCL
YC8	1	24V2	-	-	Not used
Connected to primary paper feed unit	2	PICK_SOL1_REM	-	-	Not used
	3	PICK_SOL1_RET	-	-	Not used
	4	LED_5V	O	5 V DC	5 V DC power to PS1
	5	GND	-	-	Ground
	6	CAS1_EMPTY_SENS	I	0/3.3 V DC	PS1: On/Off
	7	LED_5V	O	5 V DC	5 V DC power to LS1
	8	GND	-	-	Ground
	9	CAS1_LIFT_UP_SENS	I	0/3.3 V DC	LS1: On/Off
	10	5V	O	5 V DC	5 V DC power to FS1
	11	CAS1_P0_SENS	I	0/3.3 V DC	FS1: On/Off
	12	GND	-	-	Ground
	13	24V2	-	-	Not used
	14	PICK_SOL2_REM	-	-	Not used
	15	PICK_SOL2_RET	-	-	Not used
	16	LED_5V	O	5 V DC	5 V DC power to PS2
	17	GND	-	-	Ground
	18	CAS2_EMPTY_SENS	I	0/3.3 V DC	PS2: On/Off
	19	LED_5V	O	5 V DC	5 V DC power to LS2

Connector	Pin	Signal	I/O	Voltage	Description
YC8	20	GND	-	-	Ground
Connected to primary paper feed unit	21	CAS2_LIFT_UP_SENS	I	0/3.3 V DC	LS2: On/Off
	22	5V	O	5 V DC	5 V DC power to FS2
	23	CAS2_P0_SENS	I	0/3.3 V DC	FS2: On/Off
	24	GND	-	-	Ground
YC10	1	ASIST_CL1	O	0/24 V DC	ASCL1: On/Off
Connected to assist clutch 1	2	24V2	O	24 V DC	24 V DC power to ASCL1
YC11	1	GND	-	-	Ground
Connected to feed PWB 1	2	GND	-	-	Ground
	3	GND	-	-	Ground
	4	5V	O	5 V DC	5 V DC power to FPWB1
	5	24V2	O	24 V DC	24 V DC power to FPWB1
	6	24V2	O	24 V DC	24 V DC power to FPWB1
YC12	1	ASIST_CL2	O	0/24 V DC	ASCL2: On/Off
Connected to assist clutch 2	2	24V2	O	24 V DC	24 V DC power to ASCL2
YC13	1	CURRENT_SIG	I	0/3.3 V DC	Current signal
Connected to current PWB	2	GND	-	-	Ground
	3	5V1	I	5 V DC	5 V DC power from CRPWB

2-3-7 Relay PWB

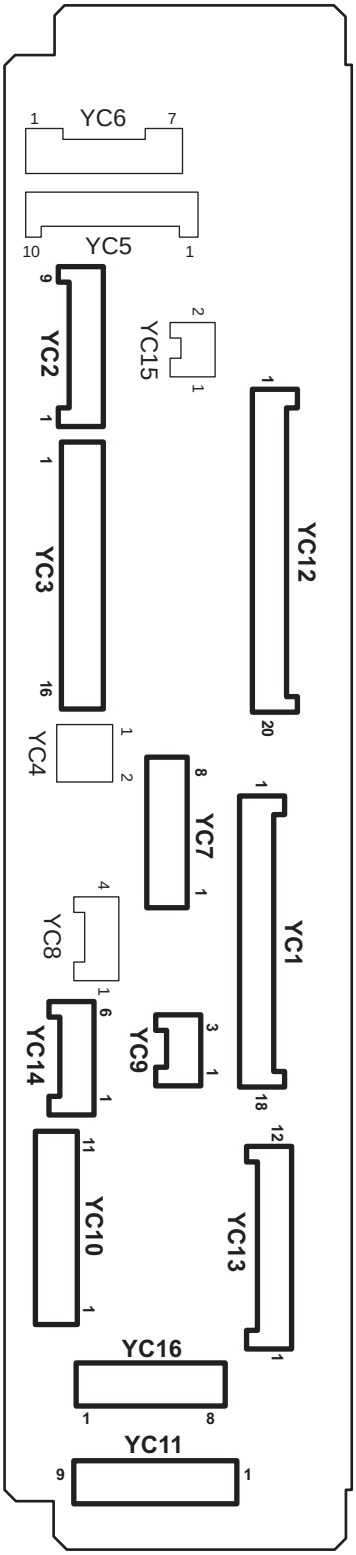

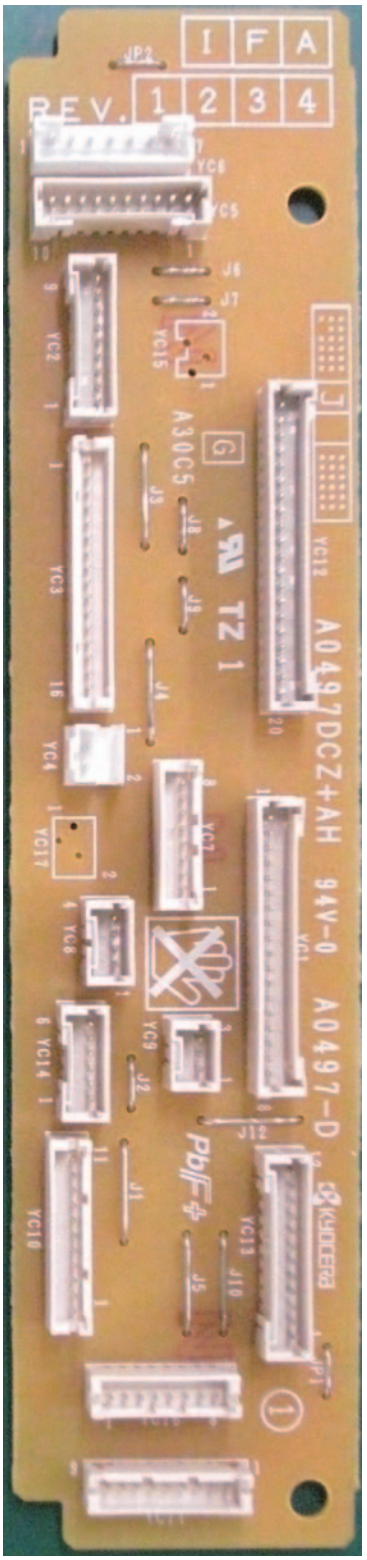

* : Refer to the picture.

Figure 2-3-7 Relay PWB silk-screen diagram and photograph

Connector	Pin	Signal	I/O	Voltage	Description
YC1	1	GND	-	-	Not used
Connected to feed PWB 1	2	DU2_A	I	0/24 V DC (pulse)	DUM2 drive control signal
	3	DU2_B	I	0/24 V DC (pulse)	DUM2 drive control signal
	4	DU2_A/	I	0/24 V DC (pulse)	DUM2 drive control signal
	5	DU2_B/	I	0/24 V DC (pulse)	DUM2 drive control signal
	6	DU_OPEN_SW	O	0/3.3 V DC	DUCSW: On/Off
	7	DU_CL_LOWER_REM	I	0/24 V DC	DUCL2: On/Off
	8	DU_FAN	-	-	Not used
	9	24V2	I	24 V DC	24 V DC power from FPWB1
	10	PRESS_RLS_REM2	I	0/24 V DC	TRRM: On/Off
	11	PRESS_RLS_REM1	I	0/24 V DC	TRRM: On/Off
	12	5V	I	5 V DC	5 V DC power from FPWB1
	13	PRESS_RLS_SENS	O	0/3.3 V DC	TRRS: On/Off
	14	DU_SENS	O	0/3.3 V DC	DUS2: On/Off
	15	BELT_JAM_SENS	-	-	Not used
	16	REG_BK_SENS1_S	-	-	Not used
	17	REG_BK_SENS1_P	-	-	Not used
	18	REG_BK_LED	-	-	Not used
YC2	1	GND	-	-	Ground
Connected to MP tray unit	2	MPF_LNG	I	0/3.3 V DC	MPPLSW: On/Off
	3	5V	O	5 V DC	5 V DC power to MPPLSW
	4	MPF_WID3	I	0/3.3 V DC	MPPWSW: On/Off
	5	MPF_WID2	I	0/3.3 V DC	MPPWSW: On/Off
	6	GND	-	-	Ground
	7	MPF_WID1	I	0/3.3 V DC	MPPWSW: On/Off
	8	GND	-	-	Ground
	9	MPF_TABLE	I	0/3.3 V DC	MPTSW: On/Off

Connector	Pin	Signal	I/O	Voltage	Description
YC3	1	LED_3.3V3	O	3.3 V DC	3.3 V DC power to MPPLSW
Connected to MP tray unit	2	GND	-	-	Ground
	3	MPF_PPR_SET	I	0/3.3 V DC	MPPS: On/Off
	4	GND	-	-	Ground
	5	MPF_LIFT_UP_SENS	I	0/3.3 V DC	MPLS1: On/Off
	6	5V	O	5 V DC	5 V DC power to MPLS1
	7	GND	-	-	Ground
	8	MPF_LIFT_DOWN_SENS	I	0/3.3 V DC	MPLS2: On/Off
	9	5V	O	5 V DC	5 V DC power to MPLS1
	10	GND	-	-	Ground
	11	MPF_JAM_SENS	I	0/3.3 V DC	MPFS: On/Off
	12	5V	O	5 V DC	5 V DC power to MPFS
	13	MPF_CL_REM	O	0/24 V DC	MPPFCL: On/Off
	14	24V2	O	24 V DC	24 V DC power to MPPFCL
	15	MPF_LIFT_DR_A	O	0/24 V DC	MPLM: On/Off
	16	MPF_LIFT_DR_B	O	0/24 V DC	MPLM: On/Off
YC7	1	24V2	-	-	Not used
Connected to duplex clutch 2, duplex cover switch and duplex motor 2	2	DU_CL2_REM	-	-	Not used
	3	DU_OPEN	I	0/3.3 V DC	DUCSW: On/Off
	4	GND	-	-	Ground
	5	DU2_B/	O	0/24 V DC (pulse)	DUM2 drive control signal
	6	DU2_A/	O	0/24 V DC (pulse)	DUM2 drive control signal
	7	DU2_B	O	0/24 V DC (pulse)	DUM2 drive control signal
	8	DU2_A	O	0/24 V DC (pulse)	DUM2 drive control signal
YC9	1	GND	-	-	Ground
Connected to duplex sensor 2	2	DU_SENS	I	0/3.3 V DC	DUS2: On/Off
	3	5V	O	5 V DC	5 V DC power to DUS2

Connector	Pin	Signal	I/O	Voltage	Description
YC10	1	LOOP_SENS	I	0/3.3 V DC	LPS: On/Off
Connected to loop sensor	2	GND	-	-	Ground
	3	5V	O	5 V DC	5 V DC power to LPS
	4	3.3V	-	-	Not used
	5	REG_BK_LED	-	-	Not used
	6	GND	-	-	Not used
	7	REG_BK_SENS1_P	-	-	Not used
	8	REG_BK_SENS1_S	-	-	Not used
	9	GND	-	-	Not used
	10	BELT_JAM_SENS	-	-	Not used
	11	5V	-	-	Not used
YC11	1	GND	-	-	Ground
Connected to duplex sensor 1, eject fan motor and duplex clutch 1	2	DU_ENTER_SENS	I	0/3.3 V DC	DUS1: On/Off
	3	5V	O	5 V DC	5 V DC power to DUS1
	4	EXIT_FAN_REM	O	0/24 V DC	EFM1: On/Off
	5	24V2	O	24 V DC	24 V DC power to EFM1
	6	EXIT_FAN_REM	O	0/24 V DC	EFM2: On/Off
	7	24V2	O	24 V DC	24 V DC power to EFM2
	8	24V2	-	-	Not used
	9	DU_CL_UPPER_REM	-	-	Not used
YC12	1	GND	-	-	Ground
Connected to feed PWB 1	2	GND	-	-	Ground
	3	MPF_TABLE	O	0/3.3 V DC	MPTSW: On/Off
	4	MPF_WID1	O	0/3.3 V DC	MPPWSW: On/Off
	5	MPF_WID2	O	0/3.3 V DC	MPPWSW: On/Off
	6	MPF_WID3	O	0/3.3 V DC	MPPWSW: On/Off
	7	MPF_LNG	O	0/3.3 V DC	MPPLSW: On/Off
	8	LED_3.3V3	I	3.3 V DC	3.3 V DC power from FPWB1
	9	MPF_PPR_SET	O	0/3.3 V DC	MPPS: On/Off
	10	MPF_LIFT_UP_SENS	O	0/3.3 V DC	MPLS1: On/Off

Connector	Pin	Signal	I/O	Voltage	Description
YC12	11	MPF_LIFT_DOWN_SENS	O	0/3.3 V DC	MPLS2: On/Off
Connected to feed PWB 1	12	MPF_JAM_SENS	O	0/3.3 V DC	MPFS: On/Off
	13	MPF_CL_REM	I	0/24 V DC	MPPFCL: On/Off
	14	24V2	I	24 V DC	24 V DC power from FPWB1
	15	MPF_LIFT_MOT_A	I	0/24 V DC	MPLM: On/Off
	16	MPF_LIFT_MOT_B	I	0/24 V DC	MPLM: On/Off
	17	24V2	-	-	Not used
	18	ID_SOL_ACT	-	-	Not used
	19	GND	-	-	Not used
	20	GND	-	-	Not used
YC13	1	3.3V	I	3.3 V DC	3.3 V DC power from FPWB1
Connected to feed PWB 1	2	LOOP_SENS	O	0/3.3 V DC	LPS: On/Off
	3	EDGE_FAN_REM	I	0/24 V DC	FUFM: On/Off
	4	DU1_A	I	0/24 V DC (pulse)	DUM1 drive control signal
	5	DU1_B	I	0/24 V DC (pulse)	DUM1 drive control signal
	6	DU1_A/	I	0/24 V DC (pulse)	DUM1 drive control signal
	7	DU1_B/	I	0/24 V DC (pulse)	DUM1 drive control signal
	8	GND	-	-	Ground
	9	DU_CL_UPPER_REM	I	0/24 V DC	DUCL1: On/Off
	10	24V2	I	24 V DC	24 V DC power from FPWB1
	11	EXIT_FAN	I	0/24 V DC	EFM: On/Off
	12	DU_ENTER_SENS	O	0/3.3 V DC	DUS1: On/Off
YC14	1	GND	-	-	Ground
Connected to transfer release sensor and transfer release motor	2	PRESS_RLS_SENS	I	0/3.3 V DC	TRRS: On/Off
	3	5V	O	5 V DC	5 V DC power to TRRS
	4	PRESS_RLS_REM1	O	0/24 V DC	TRRM: On/Off
	5	PRESS_RLS_REM2	O	0/24 V DC	TRRM: On/Off
	6	NC	-	-	Not used

Connector	Pin	Signal	I/O	Voltage	Description
YC16	1	DU1_B/	O	0/24 V DC (pulse)	DUM1 drive control signal
Connected to duplex motor 1 and fuser fan motor 1/2	2	DU1_A/	O	0/24 V DC (pulse)	DUM1 drive control signal
	3	DU1_B	O	0/24 V DC (pulse)	DUM1 drive control signal
	4	DU1_A	O	0/24 V DC (pulse)	DUM1 drive control signal
	5	EDGE_FAN_REM	O	0/24 V DC	FUFM1: On/Off
	6	24V2	O	24 V DC	24 V DC power to FUFM1
	7	EDGE_FAN_REM	O	0/24 V DC	FUFM2: On/Off
	8	24V2	O	24 V DC	24 V DC power to FUFM2

2-3-8 Motor control PWB

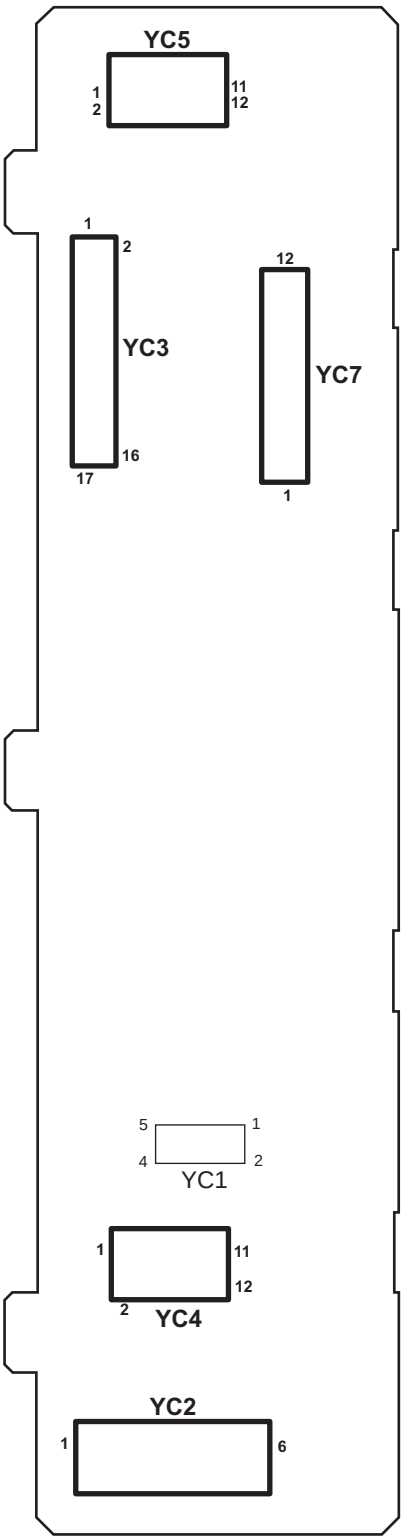

* : Refer to the picture.

Figure 2-3-8 Motor control PWB silk-screen diagram and photograph

Connector	Pin	Signal	I/O	Voltage	Description
YC2	1	PGND	-	-	Ground
Connected to power source PWB	2	PGND	-	-	Ground
	3	PGND	-	-	Ground
	4	+24V1	I	24 V DC	24 V DC power from PSPWB
	5	+24V1	I	24 V DC	24 V DC power from PSPWB
	6	+24V1	I	24 V DC	24 V DC power from PSPWB
YC3	1	BLT_SPEED	I	0/3.3 V DC	TBLS: On/Off
Connected to engine PWB	2	EMERGENCY	I	0/3.3 V DC	MCPWB control signal
	3	ENG_RDY	O	0/3.3 V DC	MCPWB ready signal
	4	ENG_SDO	O	0/3.3 V DC (pulse)	MCPWB serial communication data signal
	5	ENG_SEL	I	0/3.3 V DC	MCPWB select signal
	6	ENG_SDI	I	0/3.3 V DC (pulse)	MCPWB serial communication data signal
	7	ENG_CLK	I	0/3.3 V DC (pulse)	MCPWB clock signal
	8	BLT_FG	-	-	Not used
	9	MOT_ON	I	0/3.3 V DC	MCPWB control signal
	10	MOT_DATA_SET	I	0/3.3 V DC	MCPWB control signal
	11	BLT_REM	-	-	Not used
	12	BLT_VM	-	-	Not used
	13	BLT_BRAKE	-	-	Not used
	14	+5V	I	5 V DC	5 V DC power to MCPWB
	15	+5V	I	5 V DC	5 V DC power to MCPWB
	16	SGND	-	-	Ground
	17	SGND	-	-	Ground

Connector	Pin	Signal	I/O	Voltage	Description
YC4	1	DRM_C_CW/ CCW	O	0/24 V DC	DRM-C: On/Off
Connected to drum motor C/Y	2	DRM_Y_CW/ CCW	O	0/24 V DC	DRM-Y: On/Off
	3	DRM_C_LD	O	0/3.3 V DC	DRM-C control signal
	4	DRM_Y_LD	O	0/3.3 V DC	DRM-Y control signal
	5	DRM_C_CLK	O	0/3.3 V DC (pulse)	DRM-C clock signal
	6	DRM_Y_CLK	O	0/3.3 V DC (pulse)	DRM-Y clock signal
	7	DRM_C_Start/ Stop	O	0/3.3 V DC	DRM-C control signal
	8	DRM_Y_Start/ Stop	O	0/3.3 V DC	DRM-Y control signal
	9	PGND	-	-	Ground
	10	PGND	-	-	Ground
	11	+24V1	O	24 V DC	24 V DC power to DRM-C
	12	+24V1	O	24 V DC	24 V DC power to DRM-Y
YC5	1	DRM_BK_CW/ CCW	O	0/24 V DC	DRM-Bk: On/Off
Connected to drum motor K/M	2	DRM_M_CW/ CCW	O	0/24 V DC	DRM-M: On/Off
	3	DRM_BK_LD	O	0/3.3 V DC	DRM-Bk control signal
	4	DRM_M_LD	O	0/3.3 V DC	DRM-M control signal
	5	DRM_BK_CLK	O	0/3.3 V DC (pulse)	DRM-Bk clock signal
	6	DRM_M_CLK	O	0/3.3 V DC (pulse)	DRM-M clock signal
	7	DRM_BK_Start/ Stop	O	0/3.3 V DC	DRM-Bk control signal
	8	DRM_M_Start/ Stop	O	0/3.3 V DC	DRM-M control signal
	9	PGND	-	-	Ground
	10	PGND	-	-	Ground
	11	+24V1	O	24 V DC	24 V DC power to DRM-K
	12	+24V1	O	24 V DC	24 V DC power to DRM-M

Connector	Pin	Signal	I/O	Voltage	Description
YC7	1	DLP_CL_CW/ CCW	O	0/24 V DC	DEVM-CL: On/Off
Connected to developer motor CL/BK	2	DLP_CL_LD	O	0/3.3 V DC	DEVM-CL control signal
	3	DLP_CL_CLK	O	0/3.3 V DC (pulse)	DEVM-CL clock signal
	4	DLP_CL_Start/ Stop	O	0/3.3 V DC	DEVM-CL control signal
	5	PGND	-	-	Ground
	6	+24V1	O	24 V DC	24 V DC power to DEVM-CL
	7	DLP_BK_CW/ CCW	O	0/24 V DC	DEVM-BK: On/Off
	8	DLP_BK_LD	O	0/3.3 V DC	DEVM-BK control signal
	9	DLP_BK_CLK	O	0/3.3 V DC (pulse)	DEVM-BK clock signal
	10	DLP_BK_Start/ Stop	O	0/3.3 V DC	DEVM-BK control signal
	11	PGND	-	-	Ground
	12	+24V1	O	24 V DC	24 V DC power to DEVM-BK

2-3-9 LSU relay PWB

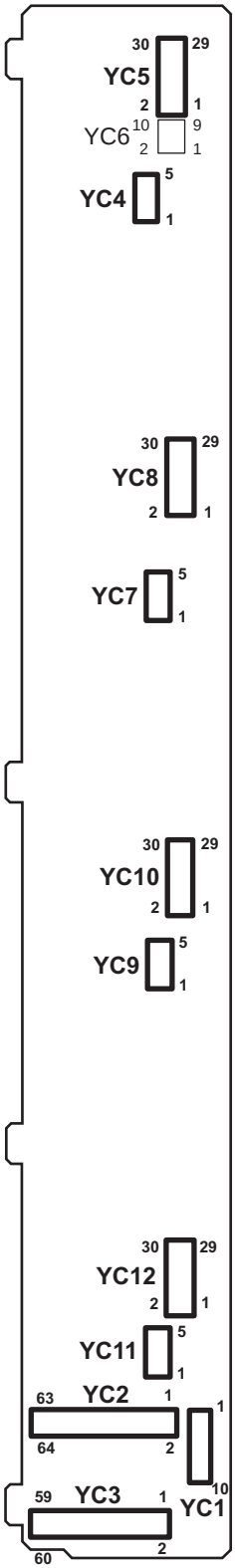

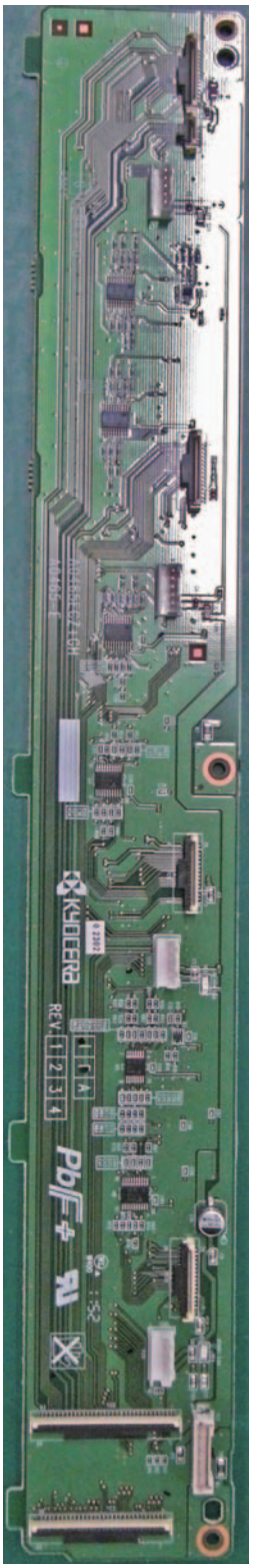

* : Refer to the picture.

Figure 2-3-9 LSU relay PWB silk-screen diagram and photograph

Connector	Pin	Signal	I/O	Voltage	Description
YC1	1	+24V1	O	24 V DC	24 V DC power from PSPWB
Connected to power source PWB and engine PWB	2	+24V1	O	24 V DC	24 V DC power from PSPWB
	3	PGND	-	-	Ground
	4	PGND	-	-	Ground
	5	+5V1	O	5 V DC	5 V DC power from EPWB
	6	+5V1	O	5 V DC	5 V DC power from EPWB
	7	GND	-	-	Ground
	8	GND	-	-	Ground
	9	+3.3V2	O	3.3 V DC	3.3 V DC power from EPWB
	10	PGND	-	-	Ground
YC2	1	SGND	-	-	Ground
Connected to engine PWB	2	CLK	I	0/3.3 V DC (pulse)	Clock signal
	3	SGND	-	-	Ground
	4	SDI	O	0/3.3 V DC (pulse)	Serial communication data signal
	5	SGND	-	-	Ground
	6	SDO	I	0/3.3 V DC (pulse)	Serial communication data signal
	7	SGND	-	-	Ground
	8	MSET_N	I	0/3.3 V DC	Control signal
	9	SGND	-	-	Ground
	10	LDD_CS Y	I	0/3.3 V DC	APCPWB-Y control signal
	11	EEPROM CS Y	I/O	0/3.3 V DC (pulse)	APCPWB-Y EEPROM data signal
	12	LDD_CS C	I	0/3.3 V DC	APCPWB-C control signal
	13	EEPROM CS C	I/O	0/3.3 V DC (pulse)	APCPWB-C EEPROM data signal
	14	LDD_CS M	I	0/3.3 V DC	APCPWB-M control signal
	15	EEPROM CS M	I/O	0/3.3 V DC (pulse)	APCPWB-M EEPROM data signal
	16	LDD_CS 2 Bk	I	0/3.3 V DC	APCPWB-K control signal
	17	EEPROM CS 2 Bk	I/O	0/3.3 V DC (pulse)	APCPWB-K EEPROM data signal
	18	LDD_CS 1 Bk	I	0/3.3 V DC	APCPWB-K control signal
	19	EEPROM CS 1 Bk	I/O	0/3.3 V DC (pulse)	APCPWB-K EEPROM data signal
	20	SGND	-	-	Ground
	21	INT_ST Y	I	0/3.3 V DC	APCPWB-Y control signal
	22	PALA_SIG P0 Y	I	0/3.3 V DC	APCPWB-Y control signal
	23	PALA_SIG P1 Y	I	0/3.3 V DC	APCPWB-Y control signal
	24	PALA_SIG P2 Y	I	0/3.3 V DC	APCPWB-Y control signal
	25	GAIN FIX Y	I	0/3.3 V DC	APCPWB-Y control signal
	26	SGND	-	-	Ground

Connector	Pin	Signal	I/O	Voltage	Description
YC2	27	DATA_2N_Y(LVDS)	I	0/3.3 V DC (pulse)	Video data signal Y (N)
Connected to engine PWB	28	DATA_2P_Y(LVDS)	I	0/3.3 V DC (pulse)	Video data signal Y (P)
	29	SGND	-	-	Ground
	30	INT_ST 1 C	I	0/3.3 V DC	APCPWB-C control signal
	31	PALA_SIG P0 C	I	0/3.3 V DC	APCPWB-C control signal
	32	PALA_SIG P1 C	I	0/3.3 V DC	APCPWB-C control signal
	33	PALA_SIG P2 C	I	0/3.3 V DC	APCPWB-C control signal
	34	GAIN FIX C	I	0/3.3 V DC	APCPWB-C control signal
	35	SGND	-	-	Ground
	36	DATA_2N_C(LVDS)	I	0/3.3 V DC (pulse)	Video data signal C (N)
	37	DATA_2P_C(LVDS)	I	0/3.3 V DC (pulse)	Video data signal C (P)
	38	SGND	-	-	Ground
	39	INT_ST M	I	0/3.3 V DC	APCPWB-M control signal
	40	PALA_SIG P0 M	I	0/3.3 V DC	APCPWB-M control signal
	41	PALA_SIG P1 M	I	0/3.3 V DC	APCPWB-M control signal
	42	PALA_SIG P2 M	I	0/3.3 V DC	APCPWB-M control signal
	43	GAIN FIX M	I	0/3.3 V DC	APCPWB-M control signal
	44	SGND	-	-	Ground
	45	DATA_2N_M(LVDS)	I	0/3.3 V DC (pulse)	Video data signal M (N)
	46	DATA_2P_M(LVDS)	I	0/3.3 V DC (pulse)	Video data signal M (P)
	47	SGND	-	-	Ground
	48	DATA_3NBk(LVDS)	I	0/3.3 V DC (pulse)	Video data signal K (N)
	49	DATA_3PBk(LVDS)	I	0/3.3 V DC (pulse)	Video data signal K (P)
	50	SGND	-	-	Ground
	51	DATA_4NBk(LVDS)	I	0/3.3 V DC (pulse)	Video data signal K (N)
	52	DATA_4PBk(LVDS)	I	0/3.3 V DC (pulse)	Video data signal K (P)
	53	SGND	-	-	Ground
	54	PALA_SIG P3_2Bk	I	0/3.3 V DC	APCPWB-K control signal

Connector	Pin	Signal	I/O	Voltage	Description
YC2	55	INT_ST 2 Bk	I	0/3.3 V DC	APCPWB-K control signal
Connected to engine PWB	56	INT_ST 1 Bk	I	0/3.3 V DC	APCPWB-K control signal
	57	PALA_SIG P0 Bk	I	0/3.3 V DC	APCPWB-K control signal
	58	PALA_SIG P1 Bk	I	0/3.3 V DC	APCPWB-K control signal
	59	PALA_SIG P2 Bk	I	0/3.3 V DC	APCPWB-K control signal
	60	GAIN FIX Bk	I	0/3.3 V DC	APCPWB-K control signal
	61	SGND	-	-	Ground
	62	DATA_2NBk(LVDS)	I	0/3.3 V DC (pulse)	Video data signal K (N)
	63	DATA_2PBk(LVDS)	I	0/3.3 V DC (pulse)	Video data signal K (P)
	64	SGND	-	-	Ground
YC3	1	SGND	-	-	Ground
Connected to engine PWB	2	BD Y	O	0/3.3 V DC (pulse)	Horizontal synchronization signal Y
	3	LSU_TH Y	O	Analog	LSU thermistor Y detection signal
	4	CUALM Y	O	0/3.3 V DC	APCPWB-Y alarm signal
	5	PALA_SIG P3 Y	I	0/3.3 V DC	APCPWB-Y control signal
	6	PALA_SIG P4 Y	I	0/3.3 V DC	APCPWB-Y control signal
	7	SGND	-	-	Ground
	8	SDCLK Y	I	0/3.3 V DC (pulse)	APCPWB-Y clock signal
	9	SGND	-	-	Ground
	10	DATA_1N_Y(LVDS)	I	0/3.3 V DC (pulse)	Video data signal Y (N)
	11	DATA_1P_Y(LVDS)	I	0/3.3 V DC (pulse)	Video data signal Y (P)
	12	SGND	-	-	Ground
	13	REM Y	I	0/24 V DC	PM-Y: On/Off
	14	LOCK Y	O	0/3.3 V DC	PM-Y lock signal
	15	CLK Y	I	0/3.3 V DC (pulse)	PM-Y clock signal
	16	SGND	-	-	Ground
	17	BD C	O	0/3.3 V DC (pulse)	Horizontal synchronization signal C
	18	LSU_TH C	O	Analog	LSU thermistor C detection signal
	19	CUALM C	O	0/3.3 V DC	APCPWB-C alarm signal
	20	PALA_SIG P3 C	I	0/3.3 V DC	APCPWB-C control signal
	21	PALA_SIG P4 C	I	0/3.3 V DC	APCPWB-C control signal
	22	SGND	-	-	Ground
	23	SDCLK C	I	0/3.3 V DC (pulse)	APCPWB-C clock signal

Connector	Pin	Signal	I/O	Voltage	Description
YC3	24	SGND	-	-	Ground
Connected to engine PWB	25	DATA_1N_C(LVDS)	I	0/3.3 V DC (pulse)	Video data signal C (N)
	26	DATA_1P_C(LVDS)	I	0/3.3 V DC (pulse)	Video data signal C (P)
	27	SGND	-	-	Ground
	28	REM C	I	0/24 V DC	PM-C: On/Off
	29	LOCK C	O	0/3.3 V DC	PM-C lock signal
	30	CLK C	I	0/3.3 V DC (pulse)	PM-C clock signal
	31	SGND	-	-	Ground
	32	BD M	O	0/3.3 V DC (pulse)	Horizontal synchronization signal M
	33	LSU_TH M	O	Analog	LSU thermistor M detection signal
	34	CUALM M	O	0/3.3 V DC	APCPWB-M alarm signal
	35	PALA_SIG P3 M	I	0/3.3 V DC	APCPWB-M control signal
	36	PALA_SIG P4 M	I	0/3.3 V DC	APCPWB-M control signal
	37	SGND	-	-	Ground
	38	SDCLK M	I	0/3.3 V DC (pulse)	APCPWB-M clock signal
	39	SGND	-	-	Ground
	40	DATA_1N_M(LVDS)	I	0/3.3 V DC (pulse)	Video data signal M (N)
	41	DATA_1P_M(LVDS)	I	0/3.3 V DC (pulse)	Video data signal M (P)
	42	SGND	-	-	Ground
	43	REM M	I	0/24 V DC	PM-M: On/Off
	44	LOCK M	O	0/3.3 V DC	PM-M lock signal
	45	CLK M	I	0/3.3 V DC (pulse)	PM-M clock signal
	46	SGND	-	-	Ground
	47	BD Bk	O	0/3.3 V DC (pulse)	Horizontal synchronization signal K
	48	LSU_TH Bk	O	Analog	LSU thermistor K detection signal
	49	CUALM Bk	O	0/3.3 V DC	APCPWB-K alarm signal
	50	PALA_SIG P3 Bk	I	0/3.3 V DC	APCPWB-K control signal
	51	PALA_SIG P4 Bk	I	0/3.3 V DC	APCPWB-K control signal
	52	SGND	-	-	Ground
	53	SDCLK Bk	I	0/3.3 V DC (pulse)	APCPWB-K clock signal
	54	SGND	-	-	Ground
	55	DATA_1NBk(LVDS)	I	0/3.3 V DC (pulse)	Video data signal K (N)
	56	DATA_1PBk(LVDS)	I	0/3.3 V DC (pulse)	Video data signal K (P)

Connector	Pin	Signal	I/O	Voltage	Description
YC3	57	SGND	-	-	Ground
Connected to engine PWB	58	REM Bk	I	0/24 V DC	PM-K: On/Off
	59	LOCK Bk	O	0/3.3 V DC	PM-K lock signal
	60	CLK Bk	I	0/3.3 V DC (pulse)	PM-K clock signal
YC4	1	+24V	O	24 V DC	24 V DC power to PM-K
Connected to polygon motor K	2	PGND	-	-	Ground
	3	P_REM Bk	O	0/24 V DC	PM-K: On/Off
	4	P_LOCK Bk	I	0/3.3 V DC	PM-K lock signal
	5	P_CLK Bk	O	0/3.3 V DC (pulse)	PM-K clock signal
YC5	1	SGND	-	-	Ground
Connected to APC PWB K	2	BD Bk	I	0/3.3 V DC (pulse)	Horizontal synchronization signal K
	3	LSU_TH Bk	I	Analog	LSU thermistor K detection signal
	4	PALA_SIG P3_2Bk	-	-	Not used
	5	LDD_CS 2 Bk	-	-	Not used
	6	+5V	O	5 V DC	5 V DC power to APCPWB-K
	7	+5V	O	5 V DC	5 V DC power to APCPWB-K
	8	+5V	O	5 V DC	5 V DC power to APCPWB-K
	9	LDD_CS 1 Bk	O	0/3.3 V DC	APCPWB-K control signal
	10	SDI1 BK	I	0/3.3 V DC (pulse)	Serial communication data signal
	11	SDO1 BK	O	0/3.3 V DC (pulse)	Serial communication data signal
	12	CLK1 BK	O	0/3.3 V DC (pulse)	APCPWB-K clock signal
	13	EEPROM CS 1 Bk	I/O	0/3.3 V DC (pulse)	APCPWB-K EEPROM data signal
	14	MSET_N	O	0/3.3 V DC	APCPWB-K control signal
	15	CUALM Bk	I	0/3.3 V DC	APCPWB-K alarm signal
	16	INT_ST 2 Bk	O	0/3.3 V DC	APCPWB-K control signal
	17	INT_ST 1 Bk	O	0/3.3 V DC	APCPWB-K control signal
	18	PALA_SIG P0 Bk	O	0/3.3 V DC	APCPWB-K control signal
	19	PALA_SIG P1 Bk	O	0/3.3 V DC	APCPWB-K control signal
	20	PALA_SIG P2 Bk	O	0/3.3 V DC	APCPWB-K control signal
	21	PALA_SIG P3 Bk	O	0/3.3 V DC	APCPWB-K control signal
	22	PALA_SIG P4 Bk	O	0/3.3 V DC	APCPWB-K control signal
	23	SDCLK Bk	O	0/3.3 V DC (pulse)	APCPWB-K clock signal
	24	GAIN FIX Bk	O	0/3.3 V DC	APCPWB-K control signal

Connector	Pin	Signal	I/O	Voltage	Description
YC5	25	DATA_1NBk(LVDS)	O	0/3.3 V DC (pulse)	Video data signal K (N)
Connected to APC PWB K	26	DATA_1PBk(LVDS)	O	0/3.3 V DC (pulse)	Video data signal K (P)
	27	SGND	-	-	Ground
	28	DATA_2NBk(LVDS)	O	0/3.3 V DC (pulse)	Video data signal K (N)
	29	DATA_2PBk(LVDS)	O	0/3.3 V DC (pulse)	Video data signal K (P)
	30	SGND	-	-	Ground
YC7	1	24V	O	24 V DC	24 V DC power to PM-M
Connected to polygon motor M	2	PGND	-	-	Ground
	3	P_REM M	O	0/24 V DC	PM-M: On/Off
	4	P_LOCK M	I	0/3.3 V DC	PM-M lock signal
	5	P_CLK M	O	0/3.3 V DC (pulse)	PM-M clock signal
YC8	1	SGND	-	-	Ground
Connected to APC PWB M	2	BD M	I	0/3.3 V DC (pulse)	Horizontal synchronization signal M
	3	LSU_TH M	I	Analog	LSU thermistor M detection signal
	4	-	-	-	Not used
	5	-	-	-	Not used
	6	+5V	O	5 V DC	5 V DC power to APCPWB-M
	7	+5V	O	5 V DC	5 V DC power to APCPWB-M
	8	+5V	O	5 V DC	5 V DC power to APCPWB-M
	9	LDD_CS M	O	0/3.3 V DC	APCPWB-M control signal
	10	SDI M	I	0/3.3 V DC (pulse)	Serial communication data signal
	11	SDO M	O	0/3.3 V DC (pulse)	Serial communication data signal
	12	CLK M	O	0/3.3 V DC (pulse)	APCPWB-M clock signal
	13	EEPROM CS 0 M	I/O	0/3.3 V DC (pulse)	APCPWB-M EEPROM data signal
	14	MSET_N	O	0/3.3 V DC	APCPWB-M control signal
	15	CUALM M	I	0/3.3 V DC	APCPWB-M alarm signal
	16	-	-	-	-
	17	INT_ST M	O	0/3.3 V DC	APCPWB-M control signal
	18	PALA_SIG P0 M	O	0/3.3 V DC	APCPWB-M control signal
	19	PALA_SIG P1 M	O	0/3.3 V DC	APCPWB-M control signal
	20	PALA_SIG P2 M	O	0/3.3 V DC	APCPWB-M control signal

Connector	Pin	Signal	I/O	Voltage	Description
YC8	21	PALA_SIG P3 M	O	0/3.3 V DC	APCPWB-M control signal
Connected to APC PWB M	22	PALA_SIG P4 M	O	0/3.3 V DC	APCPWB-M control signal
	23	SDCLK M	O	0/3.3 V DC (pulse)	APCPWB-M clock signal
	24	GAIN FIX M	O	0/3.3 V DC	APCPWB-M control signal
	25	DATA_1N_M(LVDS)	O	0/3.3 V DC (pulse)	Video data signal M (N)
	26	DATA_1P_M(LVDS)	O	0/3.3 V DC (pulse)	Video data signal M (P)
	27	SGND	-	-	Ground
	28	DATA_2N_M(LVDS)	O	0/3.3 V DC (pulse)	Video data signal M (N)
	29	DATA_2P_M(LVDS)	O	0/3.3 V DC (pulse)	Video data signal M (P)
	30	SGND	-	-	Ground
YC9	1	24V	O	24 V DC	24 V DC power to PM-C
Connected to polygon motor C	2	PGND	-	-	Ground
	3	P_REM C	O	0/24 V DC	PM-C: On/Off
	4	P_LOCK C	I	0/3.3 V DC	PM-C lock signal
	5	P_CLK C	O	0/3.3 V DC (pulse)	PM-C clock signal
YC10	1	SGND	-	-	Ground
Connected to APC PWB C	2	BD C	I	0/3.3 V DC (pulse)	Horizontal synchronization signal C
	3	LSU_TH C	I	Analog	LSU thermistor C detection signal
	4	-	-	-	Not used
	5	-	-	-	Not used
	6	+5V	O	5 V DC	5 V DC power to APCPWB-C
	7	+5V	O	5 V DC	5 V DC power to APCPWB-C
	8	+5V	O	5 V DC	5 V DC power to APCPWB-C
	9	LDD_CS C	O	0/3.3 V DC	APCPWB-C control signal
	10	SDI C	I	0/3.3 V DC (pulse)	Serial communication data signal
	11	SDO C	O	0/3.3 V DC (pulse)	Serial communication data signal
	12	CLK C	O	0/3.3 V DC (pulse)	APCPWB-C clock signal
	13	EEPROM CS 0 C	I/O	0/3.3 V DC (pulse)	APCPWB-C EEPROM data signal
	14	MSET_N	O	0/3.3 V DC	APCPWB-C control signal
	15	CUALM C	I	0/3.3 V DC	APCPWB-C alarm signal

Connector	Pin	Signal	I/O	Voltage	Description
YC10	16	-	-	-	-
Connected to APC PWB C	17	INT_ST C	O	0/3.3 V DC	APCPWB-C control signal
	18	PALA_SIG P0 C	O	0/3.3 V DC	APCPWB-C control signal
	19	PALA_SIG P1 C	O	0/3.3 V DC	APCPWB-C control signal
	20	PALA_SIG P2 C	O	0/3.3 V DC	APCPWB-C control signal
	21	PALA_SIG P3 C	O	0/3.3 V DC	APCPWB-C control signal
	22	PALA_SIG P4 C	O	0/3.3 V DC	APCPWB-C control signal
	23	SDCLK C	O	0/3.3 V DC (pulse)	APCPWB-C clock signal
	24	GAIN FIX C	O	0/3.3 V DC	APCPWB-C control signal
	25	DATA_1N_C(LVDS)	O	0/3.3 V DC (pulse)	Video data signal C (N)
	26	DATA_1P_C(LVDS)	O	0/3.3 V DC (pulse)	Video data signal C (P)
	27	SGND	-	-	Ground
	28	DATA_2N_C(LVDS)	O	0/3.3 V DC (pulse)	Video data signal C (N)
	29	DATA_2P_C(LVDS)	O	0/3.3 V DC (pulse)	Video data signal C (P)
	30	SGND	-	-	Ground
YC11	1	24V	O	24 V DC	24 V DC power to PM-Y
Connected to polygon motor Y	2	PGND	-	-	Ground
	3	P_REM Y	O	0/24 V DC	PM-Y: On/Off
	4	P_LOCK Y	I	0/3.3 V DC	PM-Y lock signal
	5	P_CLK Y	O	0/3.3 V DC (pulse)	PM-Y clock signal
YC12	1	SGND	-	-	Ground
Connected to APC PWB Y	2	BD Y	I	0/3.3 V DC (pulse)	Horizontal synchronization signal Y
	3	LSU_TH Y	I	Analog	LSU thermistor Y detection signal
	4	-	-	-	Not used
	5	-	-	-	Not used
	6	+5V	O	5 V DC	5 V DC power to APCPWB-Y
	7	+5V	O	5 V DC	5 V DC power to APCPWB-Y
	8	+5V	O	5 V DC	5 V DC power to APCPWB-Y
	9	LDD_CS Y	O	0/3.3 V DC	APCPWB-Y control signal
	10	SDI Y	I	0/3.3 V DC (pulse)	Serial communication data signal

Connector	Pin	Signal	I/O	Voltage	Description
YC12	11	SDO Y	O	0/3.3 V DC (pulse)	Serial communication data signal
Connected to APC PWB Y	12	CLK Y	O	0/3.3 V DC (pulse)	APCPWB-Y clock signal
	13	EEPROM CS Y	I/O	0/3.3 V DC (pulse)	APCPWB-Y EEPROM data signal
	14	MSET_N	O	0/3.3 V DC	APCPWB-Y control signal
	15	CUALM Y	I	0/3.3 V DC	APCPWB-Y alarm signal
	16	-	-	-	-
	17	INT_ST Y	O	0/3.3 V DC	APCPWB-Y control signal
	18	PALA_SIG P0 Y	O	0/3.3 V DC	APCPWB-Y control signal
	19	PALA_SIG P1 Y	O	0/3.3 V DC	APCPWB-Y control signal
	20	PALA_SIG P2 Y	O	0/3.3 V DC	APCPWB-Y control signal
	21	PALA_SIG P3 Y	O	0/3.3 V DC	APCPWB-Y control signal
	22	PALA_SIG P4 Y	O	0/3.3 V DC	APCPWB-Y control signal
	23	SDCLK Y	O	0/3.3 V DC (pulse)	APCPWB-Y clock signal
	24	GAIN FIX Y	O	0/3.3 V DC	APCPWB-Y control signal
	25	DATA_1N_Y(LVDS)	O	0/3.3 V DC (pulse)	Video data signal Y (N)
	26	DATA_1P_Y(LVDS)	O	0/3.3 V DC (pulse)	Video data signal Y (P)
	27	SGND	-	-	Ground
	28	DATA_2N_Y(LVDS)	O	0/3.3 V DC (pulse)	Video data signal Y (N)
	29	DATA_2P_Y(LVDS)	O	0/3.3 V DC (pulse)	Video data signal Y (P)
	30	SGND	-	-	Ground

This page is intentionally left blank.

2-4-1 Appendixes

(1) List of maintenance parts

Maintenance part name		Part No.	Alternative part No.
Name used in service manual	Name used in parts list		
Paper feed pulley	PULLEY FEED	302N406030	2N406030
Separation pulley	PULLEY RETARD	302N406040	2N406040
Forwarding pulley	PULLEY PICKUP	302N406030	2N406030
Lower duplex roller	PARTS ROLLER DU LOW SP	302K994470	2K994470
Middle duplex roller	PARTS ROLLER DU MID SP	302K994480	2K994480
Upper duplex roller	PARTS ROLLER DU UP SP	302K994491	2K994491
Eject roller	PARTS ROLLER EXIT SP	302MN94140	2MN94140
Eject roller B	PARTS ROLLER EXIT SP	302MN94140	2MN94140
Fan filter	PARTS FILTER FAN ASSY(V) SP	302LC94170	2LC94170
Developer filter	FILTER DLP COOLING	302LC33500	2LC33500
Transfer belt filter	PARTS FILTER BELT UNIT(V) SP	302LC94130	2LC94130
Toner filter	FILTER LEFT SIDE	302LC33370	2LC33370
Left filter	FILTER LEFT SIDE	302LC33370	2LC33370
Eject filter	PARTS FILTER EXIT UNIT SP	302K994101	2K994101

(2) Maintenance kits

Maintenance part name		Parts No.	Alternative part No.
Name used in service	Name used in parts list		
MK-8505A/Maintenance kit (600,000 pages)	MK-8505A/MAINTENANCE KIT	1702LC0UN0	072LC0UN
Drum unit K	DK-8505 (K)	-	-
Developer unit K	DV-8505K	-	-
Transfer belt unit	TR-8505	-	-
Transfer roller	PARTS ROLLER SECONDLY TRANSFER SP	-	-
MK-8505B/Maintenance kit (600,000 pages)	MK-8505B/MAINTENANCE KIT	1702LC0UN1	072LC0U1
Drum unit C	DK-8505 (C)	-	-
Drum unit M	DK-8505 (M)	-	-
Drum unit Y	DK-8505 (Y)	-	-
Developer unit C	DV-8505C	-	-
Developer unit M	DV-8505M	-	-
Developer unit Y	DV-8505Y	-	-
MK-8505C/Maintenance kit (300,000 pages)	MK-8505C/MAINTENANCE KIT	1702LC0UN2	072LC0U2
Fuser unit	FK-8500	-	-
Eject filter	PARTS FILTER EXIT UNIT SP		
Toner filter / Left filter	FILTER LEFT SIDE		

(3) Periodic maintenance procedures

Section	Maintenance part/location	User call	300K/600K/ 900K/1200K	Points and cautions	Page
Test print	Perform at the maximum print size	Test print	Test print		

Section	Maintenance part/location	User call	300K/600K/ 900K/1200K	Points and cautions	Page
Paper feed ,conveying-section	Paper feed pulley	Check Clean	Check Replace	Clean with alcohol or a dry cloth. CH:performing U901 and check feeding count: Target to replace at 150K.	P.1-5-7
	Separation pulley	Check Clean	Check Replace	Clean with alcohol or a dry cloth. CH:performing U901 and check feeding count: Target to replace at 150K.	P.1-5-7
	Forwarding pulley	Check Clean	Check Replace	Clean with alcohol or a dry cloth. CH:performing U901 and check feeding count: Target to replace at 150K.	P.1-5-7
	Guides	Clean	Clean	Clean with alcohol or a dry cloth.	

Section	Maintenance part/location	User call	600K/1200K	Points and cautions	Page
Transfer section	Transfer belt unit	-	Replace	Every 600k Replace.	P.1-5-37
	Transfer roller	-	Replace	Every 600k Replace.	P.1-5-41

Section	Maintenance part/location	User call	600K/1200K	Points and cautions	Page
Developer section	Developer unit K	Clean	Replace	Vacuum. Every 600k Replace.	P.1-5-31
	Developer unit C	Clean	Replace	Vacuum. Every 600k Replace.	P.1-5-31
	Developer unit M	Clean	Replace	Vacuum. Every 600k Replace.	P.1-5-31
	Developer unit Y	Clean	Replace	Vacuum. Every 600k Replace.	P.1-5-31

Section	Maintenance part/location	User call	600K/1200K	Points and cautions	Page
Drum section	Drum unit K	Clean	Replace	Vacuum. Every 600k Replace.	P.1-5-31
	Drum unit C	Clean	Replace	Vacuum. Every 600k Replace.	P.1-5-31
	Drum unit M	Clean	Replace	Vacuum. Every 600k Replace.	P.1-5-31
	Drum unit Y	Clean	Replace	Vacuum. Every 600k Replace.	P.1-5-31

Section	Maintenance part/location	User call	300K/600K/ 900K/1200K	Points and cautions	Page
Fuser section	Fuser unit	-	Replace	Every 300k Replace.	P.1-5-43

Section	Maintenance part/location	User call	300K/600K/ 900K/1200K	Points and cautions	Page
Eject,Duplex section	Lower duplex roller	-	Clean	Clean with alcohol or a dry cloth.	
	Middle duplex roller	-	Clean	Clean with alcohol or a dry cloth.	
	Upper duplex roller	-	Clean	Clean with alcohol or a dry cloth.	
	Eject roller	-	Clean	Clean with alcohol or a dry cloth.	

Section	Maintenance part/location	User call	300K/600K/ 900K/1200K	Points and cautions	Page
Outer, Cover	Outer Covers, Tray	-	Clean	Clean with alcohol or a dry cloth.	

Section	Maintenance part/location	User call	300K/600K/ 900K/1200K	Points and cautions	Page
Driving, Other	Fan filter	Clean	Clean	Vacuum. 1pcs	P.1-5-79
	Developer filter	Clean	Clean	Vacuum. 1pcs	P.1-5-82
	Transfer belt filter	Clean	Clean	Vacuum. 2pcs	P.1-5-80
	Toner filter Left filter	Replace	Replace	Every 300k Replace. (MK KIT) 2pcs	P.1-5-78 P.1-5-81
	Eject filter	Replace	Replace	Every 300k Replace. (MK KIT) 2pcs	P.1-5-77
	Each Clutches	Check Replace	Check	Check the image registration and paper feed conveying condition on paper feed conveying (regis-tration) part.	
	Sensors	Check	Check	Clean with alcohol or a dry cloth. (lighting part and light reception part.)	
	Image quality	Check Adjust	Check Adjust		

Section	Maintenance part/location	User call	300K/600K/ 900K/1200K	Points and cautions	Page
Option	Duct unit	Clean	Clean	Vacuum.	

* : Please do not use spray containing flamable gas for air-blow or air-brush purposes.

(4) Repetitive defects gauge

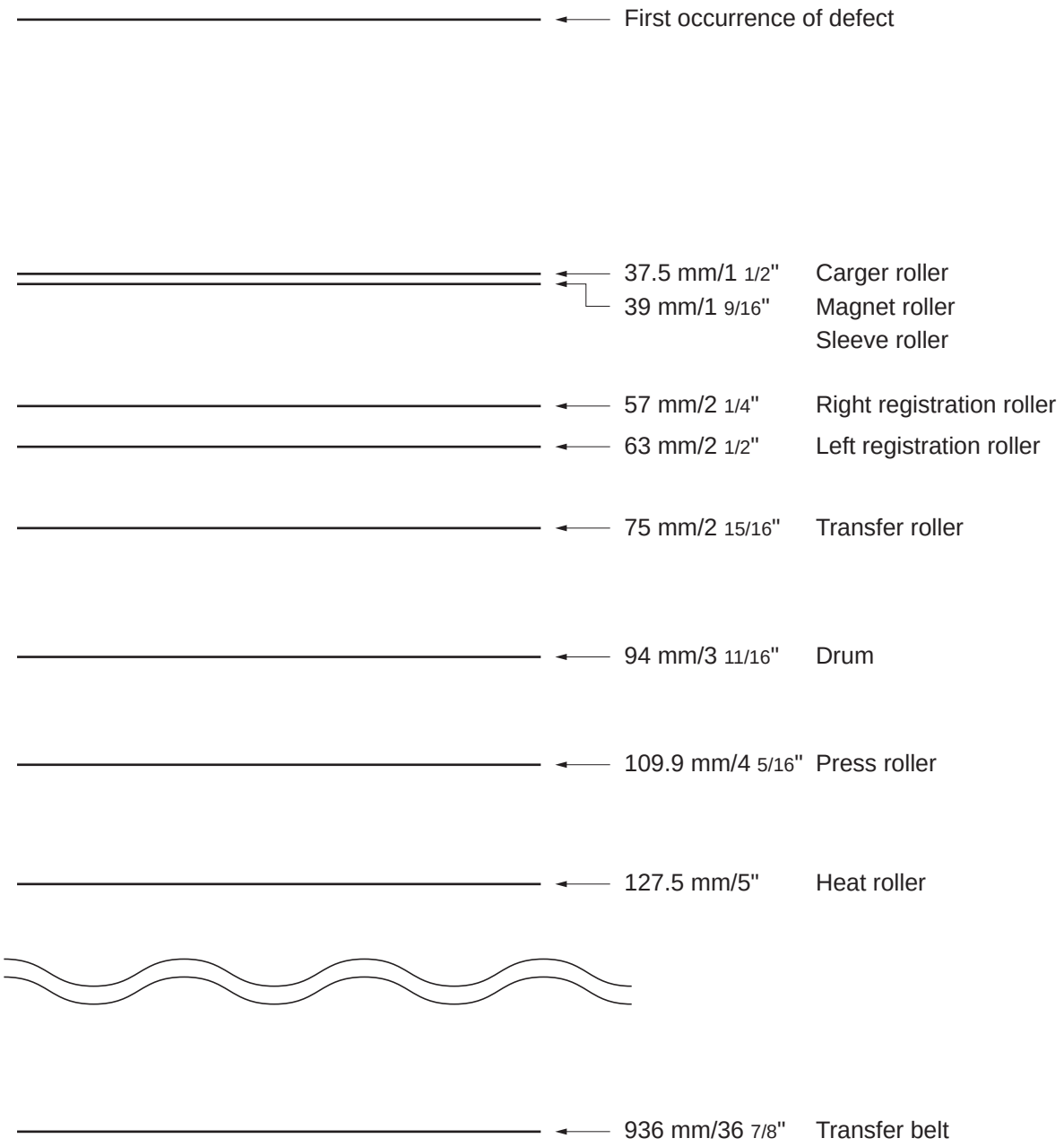

* : The repetitive marks interval may vary depending on operating conditions.

(5) Firmware environment commands

The printer maintains a number of printing parameters in its memory. There parameters may be changed permanently with the FRPO (Firmware RePrOgram) commands.
This section provides information on how to use the FRPO command and its parameters using examples.

Using FRPO commands for reprogramming firmware

The current settings of the FRPO parameters are listed as optional values on the service status page.

Note: Before changing any FRPO parameter, print out a service status page, so you will know the parameter values before the changes are made. To return FRPO parameters to their factory default values, send the FRPO INIT (FRPO-INITialize) command.(!R! FRPO INIT; EXIT;)

The FRPO command is sent to the printer in the following sequence:
!R! FRPO parameter, value; EXIT;
Example: Changing emulation mode to PCL6
!R! FRPO P1, 6; EXIT;

FRPO parameters

Item	FRPO	Setting values	Factory setting
Top margin	A1	Integer value in inches	0
	A2	Fraction value in 1/100 inches	0
Left margin	A3	Integer value in inches	0
	A4	Fraction value in 1/100 inches	0
Page length	A5	Integer value in inches	17
	A6	Fraction value in 1/100 inches	30
Page width	A7	Integer value in inches	17
	A8	Fraction value in 1/100 inches	30
Default pattern resolution	B8	0: 300 dpi 1: 600 dpi	0
Page orientation	C1	0: Portrait 1: Landscape	0
Default font No. *	C2	Middle two digits of power-up font	0
	C3	Last two digits of power-up font	0
	C5	First two digits of power-up font	0
PCL font switch	C8	0: HP compatibility mode 32: Conventional compatibility mode	0
Total host buffer size	H8	0 to 99 in units of the size defined by FRPO S5	5
Form feed time-out value	H9	Value in units of 5 seconds (1 to 99)	6(30s)
Duplex mode	N4	0: Off 1: Long edge binding 2: Short edge binding	0
Sleep timer time-out time	N5	Value in units of 1 minute (1 to 240)	60

Item	FRPO	Setting values	Factory setting
Ecoprint level	N6	0: Off 2: On	0
Default emulation mode	P1	6: PCL 6 9: KPDL	120V: 9 220-240V: 6
Carriage-return action	P2	0: Ignores 1: Carriage-return 2: Carriage-return + linefeed	1
Linefeed action	P3	0: Ignores 1: Linefeed 2: Linefeed + carriage-return	1
Automatic emulation switching	P4	0: AES disabled 1: AES enabled	120V: 1 220-240V: 0
Alternative emulation (For KPDL3)	P5	Same as the P1 values except that 9 is ignored.	6
Automatic emulation switching trigger	P7	0: Page eject commands 1: None 2: Page eject and prescribe EXIT commands 3: Prescribe EXIT commands 4: Formfeed (^L) commands 6: Prescribe EXIT and formfeed commands 10: Page eject commands; if AES fails, resolves to KPDL	120V: 11 220-240V: 10
Command recognition character	P9	ASCII code of 33 to 126	82 (R)
Default stacker	R0	1 (inner tray)	1

Item	FRPO	Setting values	Factory setting
Default paper size	R2	0: Size of the default paper cassette (See R4.) 1: Monarch (3-7/8 × 7-1/2 inches) 2: Business (4-1/8 × 9-1/2 inches) 3: International DL (11 × 22 cm) 4: International C5 (16.2 × 22.9 cm) 5: Executive (7-1/4 × 10-1/2 inches) 6: US Letter (8-1/2 × 11 inches) 7: US Legal (8-1/2 × 14 inches) 8: A4 (21.0 × 29.7 cm) 9: JIS B5 (18.2 × 25.7 cm) 10: A3 (29.7 ´ 42 cm) 11: B4 (25.7 ´ 36.4 cm) 12: US Ledger (11 ´ 17 inches) 13: ISO A5 14: A6 (10.5 × 14.8 cm) 15: JIS B6 (12.8 × 18.2 cm) 16: Commercial #9 (3-7/8 × 8-7/8 inches) 17: Commercial #6 (3-5/8 × 6-1/2 inches) 18: ISO B5 (17.6 × 25 cm) 19: Custom (11.7 × 17.7 inches) 20: 21: 22: 23: 24: 30: C4 (22.9 ´ 32.4 cm) 31: Hagaki (10 × 14.8 cm) 32: Ofuku-hagaki (14.8 × 20 cm) 33: Officio II 38: 39: 8K 40: 16K 42: 8.5 × 13.5 inches 50: Statement 51: Folio 52: Youkei 2 53: Youkei 4	0
Default cassette	R4	0: MP tray 1: Cassette 1 2: Cassette 2 3: Cassette 3 4: Cassette 4 5: Cassette 5 6: Cassette 6 7: Cassette 7	1
MP tray paper size	R7	Same as the R2 values except: 0	8 (A4)
Sorter full action	S3	0: Stop operation with detecting tray-full 1: Switching to the eject-able destinations when bin becomes tray full	0

Item	FRPO	Setting values	Factory setting
A4/letter equation	S4	0: Off 1: On	1
Host buffer size	S5	0: 10 KB 1: 100 KB 2: 1024 KB	1
Wide A4	T6	0: Off 1: On	0
Line spacing *	U0	Lines per inch (integer value)	6
	U1	Lines per inch (decimal value)	0
Character spacing *	U2	Characters per inch (integer value)	10
	U3	Characters per inch (decimal value)	0
Country code	U6	0: US-ASCII 1: France 2: Germany 3: UK 4: Denmark 5: Sweden 6: Italy 7: Spain 8: Japan 9: US Legal 10: IBM PC-850 (Multilingual) 11: IBM PC-860 (Portuguese) 12: IBM PC-863 (Canadian French) 13: IBM PC-865 (Norwegian) 14: Norway 15: Denmark 2 16: Spain 2 17: Latin America 50 - 99: HP PCL symbol set coding	41
Code set at power up in daisywheel emulation	U7	0: Same as the default emulation mode (P1) 1: IBM 6: PCL 7 - 99: HP PCL symbol set coding	53
Font pitch for fixedpitch scalable font *	U8	Default font pitch (integer value)	10
	U9	Default font pitch (decimal value)	0
Font height for the default scalable font *	V0	Integer value in 100 points: 0 to 9	0
	V1	Integer value in points: 0 to 99	12
	V2	decimal value in 1/100 points: 0, 25, 50, 75	0

Item	FRPO	Setting values	Factory setting
Default scalable font *	V3	Name of typeface of up to 32 characters, enclosed with single or double quotation marks	Courier
Default weight (courier and letter Gothic)	V9	0: Courier = darkness Letter Gothic = darkness 1: Courier = regular Letter Gothic = darkness 4: Courier = darkness Letter Gothic = regular 5: Courier = regular Letter Gothic = regular	5
Color mode	W1	0: Black & white 1: Color	1
Gloss mode	W6	0: Low (normal) 1: High	0
Paper type for the MP tray	X0	1: Plain 2: Transparency 3: Preprinted 4: Label 5: Bond 6: Recycle 7: Vellum 9: Letterhead 10: Color 11: Prepunched 12: Envelope 13: Cardstock 14: Coated 16: Thick 17: High quality 21 to 28: Custom1 to 8	1

Item	FRPO	Setting values	Factory setting
Paper type for cassettes 1 and 2	X1 X2	1: Plain 3: Preprinted 5: Bond 6: Recycled 7: Vellum 9: Letterhead 10: Color 11: Prepunched 16: Thick 17: High quality 21 to 28: Custom1 to 8	1
Paper type for optional cassettes 3 to 7	X3 X4 X5 X6 X10	1: Plain 3: Preprinted 5: Bond 6: Recycled 9: Letterhead 10: Color 11: Prepunched 17: High quality 21 to 28: Custom1 to 8	1
PCL paper source	X9	0: Paper selection depending on an escape sequence compatible with HP-LJ5Si. 2: Paper selection depending on an escape sequence compatible with HP-LJ8000.	0
Automatic continue for ‘Press GO’	Y0	0: Off 1: On	0
Automatic continue timer	Y1	Value in units of 5 seconds (1 to 99)	6 (30 s)
Error message for device error	Y3	0: Not detect 64: Detect	64
Duplex operation for specified paper type (Prepunched, Preprintedand Letterhead)	Y4	0: Off 1: On	0

Item	FRPO	Setting values	Factory setting
Default operation for PDF direct printing	Y5	0: Enlarges or reduces the image to fit in the current paper size. Loads paper from the current paper cassette. 1: Through the image. Loads paper which is the same size as the image. 2: Enlarges or reduces the image to fit in the current paper size. Loads Letter, A4 size paper depending on the image size. 3: Through the image. Loads Letter, A4 size paper depending on the image size. 8: Through the image. Loads paper from the current paper cassette. 9: Through the image. Loads Letter, A4 size paper depending on the image size. 10: Enlarges or reduces the image to fit in the current paper size. Loads Letter, A4 size paper depending on the image size.	0
e-MPS error	Y6	0: Does not print the error report and display the error message. 1: Prints the error report. 2: Displays the error message. 3: Prints the error report and displays the error message.	3

*: Ignored in some emulation modes.

This page is intentionally left blank.

(6) System Error (Fxxxx) Outline

The document is subscribed to describe the outline of the factors of the Fxxx errors that are not described in the
service manual. Please utilize it to refer to checking the factors.
Please utilize it as the measures when the system is not recovered after power off/on
or it frequently occurs.
It may be from the hardware factor while the error (Fxxx) is indicated.
Please initially check the following.

Check the DDR2 memory and neighboring parts:
Check the contact of YS1 or YS2 with the memory. Replace the memory if the error repeats.
Check the HDD if the error repeats after replacing the main board.
Take care, however, of handling the data when formatting or replacing the HDD.
Check the HDD : Replace the HDD if the error repeats after formatting the HDD.

No.	Content	Check procedure & check point	Remark 1	FS-C8650DN, FS-C8600DN
-	Lock-up at Welcome display (TASKalfa/Ecosys) (The display unchages after a certain time (Note 1: *** seconds))	1) Check connection of the harness (Panel to Main board), (Main board to HDD) and connectors and check function. 2) Check contact of the DDR memory by detaching and reattaching. and check function. replace it if available and check function. 3) Format the HDD and check function. (U024 FULL formatting) (*1) 4) Execute the U021Memory initializing to initialize the controller backup memory and check function. 5) Replace the panelmain board and check function. 6) Replace the main board and check function. 7) Retrieve the USBLOG and contact the Service Administrative Division. (*1) For the HDD standard model only.	*User data and installed software is deleted if executing the U024. Reinstallation is required.	[Main-Panel Interface] Main board: YC12 Panel board: YC1 [Main-HDD] Main board: YC1 (Note 1) 60 seconds.
F000	CF000 appears in a certain time (Note 2: *** seconds) after the Welcome display continues Panel－Main board communication error	1) Check connection of the harness (Panel to Main board), (Main board to HDD) and connectors and check function. 2) Check contact of the DDR memory by detaching and reattaching. and check function. replace it if available and check function. 3) Format the HDD and check function. (U024 FULL formatting) (*1) 4) Execute the U021 Memory initializing to initialize the controller backup memory and check function. 5) Replace the main board and check function. 6) Replace the panelmain board and check function. 7) Retrieve the USBLOG and contact the Service Administrative Division. (*1) For the HDD standard model only.		[Main-Panel Interface] Main board: YC12 Panel board: YC1 (Note 2) 60 seconds.
F10X F11X	An error is detected at OS or some of device drivers.	1) Format the HDD and check function. (U024 FULL formatting) (*1) 2) Execute the U021 Memory initializing to initialize the controller backup memory and check function. 3) Replace the main board and check function. 4) Replace the HDD and check function. (*1) 5) Retrieve the USBLOG and contact the Service Administrative Division. (*1) For the HDD standard model only.		
F12X	An error is detected at the Scan control section	1) Check connection of the harness (Scan/DP - Main board) and connectors and check function. 2) Format the HDD and check function. (U024 FULL formatting) (*1) 3) Execute the U021 Memory initializing to initialize the controller backup memory and check function. 4) Replace the Scan/DP board and check function. 5) Replace the main board and check function. 6) Retrieve the USBLOG and contact the Service Administrative Division. (*1) For the HDD standard model only.		-
F13X	An error is detected at the Panel control section	1) Check connection of the harness (Panel - Main board) and connectors and check function. 2) Format the HDD and check function. (U024 FULL formatting) (*1) 3) Execute the U021 Memory initializing to initialize the controller backup memory and check function. 4) Replace the panel board and check function. (*2) 5) Replace the main board and check function. 6) Retrieve the USBLOG and contact the Service Administrative Division. (*1) For the HDD standard model only. (*2) For the model separating the main/panel PWBs.		[Main-Panel Interface] Main board: YC12 Panel board: YC1
F14X	An error is detected at the FAX control section	1) Check connection of the harness (FAX - Main board) and connectors and check function. 2) Format the HDD and check function. (U024 FULL formatting) (*1) 3) Execute the U021 Memory initializing to initialize the controller backup memory and check function. 4) Execute the U671 Clear FAX back up data (FAX DIMM clear) and check function. (*3) (Take cae of the received data since it is cleared) 5) Replace the FAX_DIMM and check function. 6) Replace the FAX board and check function. 7) Replace the main board and check function. 8) Retrieve the USBLOG and contact the Service Administrative Division. (*1) For the HDD standard model only. (*3) For the models using the main PWB with the flash for the FAX data.		-
F15X	An error is detected at the authentication device control section	1) Check connection of the harness (Authentication device - Main board) and connectors and check function. 2) Format the HDD and check function. (U024 FULL formatting) (*1) 3) Execute the U021 Memory initializing to initialize the controller backup memory and check function. 4) Replace the main board and check function. 5) Replace the HDD and check function. (*1) 6) Retrieve the USBLOG and contact the Service Administrative Division. (*1) For the HDD standard model only.	Authentication device: Card Reader, etc.	
F16X	An error is detected at the KMAS control section	1) Check connection of the harness (KMAS - Main board) and connectors and check function. 2) Format the HDD and check function. (U024 FULL formatting) (*1) 3) Execute the U021 Memory initializing to initialize the controller backup memory and check function. 3) Replace the main board and check function. 4) Replace the HDD and check function. (*1) 5) Retrieve the USBLOG and contact the Service Administrative Division. (*1) For the HDD standard model only.		-
F17X	An error is detected at the print data control section	1) Format the HDD and check function. (U024 FULL formatting) (*1) 2) Execute the U021 Memory initializing to initialize the controller backup memory and check function. 3) Replace the main board and check function. 4) Replace the HDD and check function. (*1) 5) Retrieve the USBLOG and contact the Service Administrative Division. (*1) For the HDD standard model only.		

No.	Content	Check procedure & check point	Remark 1	FS-C8650DN, FS-C8600DN
F18X	An error is detected at the Video control secion	1) Check connection of the harness (Engine - Main board) and connectors and check function. 2) Format the HDD and check function. (U024 FULL formatting) (*1) 3) Execute the U021 Memory initializing to initialize the controller backup memory and check function. 4) Replace the engine board and check function. 5) Replace the main board and check function. 6) Retrieve the USBLOG and contact the Service Administrative Division. (*1) For the HDD standard model only.		[Main-ENGINE Interface] Main board: YC3 Engine board: YC46 or YC50
F19X F1AX	An error is detected at the OS or some of device drivers	1) Format the HDD and check function. (U024 FULL formatting) (*1) 2) Execute the U021 Memory initializing to initialize the controller backup memory and check function. 3) Replace the main board and check function. 4) Replace the HDD and check function. (*1) 5) Retrieve the USBLOG and contact the Service Administrative Division. (*1) For the HDD standard model only.		
F1BX	An error is detected at the Security management section	1) Format the HDD and check function. (U024 FULL formatting) (*1) 2) Execute the U021 Memory initializing to initialize the controller backup memory and check function. 3) Replace the main board and check function. 4) Replace the HDD and check function. (*1) 5) Retrieve the USBLOG and contact the Service Administrative Division. (*1) For the HDD standard model only.		
F1CX	An error is detected at the File System management section	1) Format the HDD and check function. (U024 FULL formatting) (*1) 2) Execute the U021 Memory initializing to initialize the controller backup memory and check function. 3) Replace the main board and check function. 4) Replace the HDD and check function. (*1) 5) Retrieve the USBLOG and contact the Service Administrative Division. (*1) For the HDD standard model only.	*The F1C4 error appears with the HDD security kit at work.	
F1DX	An error is detected at the Image memory management section	1) Format the HDD and check function. (U024 FULL formatting) (*1) 2) Execute the U021 Memory initializing to initialize the controller backup memory and check function. 3) Replace the main board and check function. 4) Replace the HDD and check function. (*1) 5) Retrieve the USBLOG and contact the Service Administrative Division. (*1) For the HDD standard model only.	*The F1D4 error is RAM allocation error. 1. Check it with the U340 2. Initialize the setting valued with the U021	
F1EX F1FX F20X	An error is detected at the OS or some of device drivers	1) Format the HDD and check function. (U024 FULL formatting) (*1) 2) Execute the U021 Memory initializing to initialize the controller backup memory and check function. 3) Replace the main board and check function. 4) Replace the HDD and check function. (*1) 5) Retrieve the USBLOG and contact the Service Administrative Division. (*1) For the HDD standard model only.		
F21X F22X F23X	An error is detected at the Image processing section	1) Check contact of the DDR memory and check function. 2) Format the HDD and check function. (U024 FULL formatting) (*1) 3) Execute the U021 Memory initializing to initialize the controller backup memory and check function. 4) Replace the main board and check function. 5) Replace the HDD and check function. (*1) 6) Retrieve the USBLOG and contact the Service Administrative Division. (*1) For the HDD standard model only.		
F24X	An error is detected at the System management section	1) Check contact of the DDR memory and check function. 2) Format the HDD and check function. (U024 FULL formatting) (*1) 3) Execute the U021 Memory initializing to initialize the controller backup memory and check function. 4) Replace the main board and check function. 5) Replace the HDD and check function. (*1) 6) Retrieve the USBLOG and contact the Service Administrative Division. (*1) For the HDD standard model only.	*The F248 eror is printer process error. if it repeats with a certain print data, retrieve the capture data and USBLOG.	
F25X	An error is detected at the Network management section	1) Format the HDD and check function. (U024 FULL formatting) (*1) 2) Execute the U021 Memory initializing to initialize the controller backup memory and check function. 3) Replace the main board and check function. 4) Retrieve the USBLOG and contact the Service Administratuve Division. (or retrieve the packet capture data depending on the reult of analysis) (*1) For the HDD standard model only.	*This may be owing to the users network environment.	
F26X F27X F28X F29X F2AX	An error is detected at the System management section	1) Format the HDD and check function. (U024 FULL formatting) (*1) 2) Execute the U021 Memory initializing to initialize the controller backup memory and check function. 3) Replace the main board and check function. 4) Replace the HDD and check function. (*1) 5) Retrieve the USBLOG and contact the Service Administrative Division. (*1) For the HDD standard model only.		
F2BX F2CX F2DX F2EX F2FX F30X F31X F32X	An error is detected at the Network control section	1) Format the HDD and check function. (U024 FULL formatting) (*1) 2) Execute the U021 Memory initializing to initialize the controller backup memory and check function. 3) Replace the main board and check function. 4) Retrieve the USBLOG and contact the Service Administratuve Division. (or retrieve the packet capture data depending on the reult of analysis) (*1) For the HDD standard model only.		

No.	Content	Check procedure & check point	Remark 1	FS-C8650DN, FS-C8600DN
F33X	An error is detected at the Scan management section	1) Check connection of the harness (Scan/DP board - main board) and connectors and check function. 2) Format the HDD and check function. (U024 FULL formatting) (*1) 3) Execute the U021 Memory initializing to initialize the controller backup memory and check function. 4) Replace the Scan/DP board and check function. 5) Replace the main board and check function. 6) Retrieve the USBLOG and contact the Service Administrative Division. (*1) For the HDD standard model only.		-
F34X	An error is detected at the Panel management section	1) Check connection of the harness (Panel board - main board) and connectors and check function. 2) Format the HDD and check function. (U024 FULL formatting) (*1) 3) Execute the U021 Memory initializing to initialize the controller backup memory and check function. 4) Replace the panel board and check function. (*2) 5) Replace the main board and check function. 6) Retrieve the USBLOG and contact the Service Administrative Division. (*1) For the HDD standard model only. (*2) For the models separating the panel/main PWBs.		
F35X	An error is detected at the Print control section	1) Format the HDD and check function. (U024 FULL formatting) (*1) 2) Execute the U021 Memory initializing to initialize the controller backup memory and check function. 3) Replace the main board and check function. 4) Replace the HDD and check function. (*1) 5) Retrieve the USBLOG and contact the Service Administrative Division. (*1) For the HDD standard model only.		
F36X	An error is detected at the Print management section	1) Format the HDD and check function. (U024 FULL formatting) (*1) 2) Execute the U021 Memory initializing to initialize the controller backup memory and check function. 3) Replace the main board and check function. 4) Replace the HDD and check function. (*1) 5) Retrieve the USBLOG and contact the Service Administrative Division. (*1) For the HDD standard model only.		
F37X	An error is detected at the FAX management section	1) Format the HDD and check function. (U024 FULL formatting) (*1) 2) Execute the U021 Memory initializing to initialize the controller backup memory and check function. 3) Execute the U671 Clear FAX back up data (FAX DIMM clear) and check function. (*3) (Take cae of the received data since it is cleared) 4) Replace the FAX_DIMM and check function. 5) Replace the main board and check function. 6) Replace the HDD and check function. (*1) 7) Retrieve the USBLOG and contact the Service Administrative Division. (*1) For the HDD standard model only. (*3) For the models using the main PWB with the flash for the FAX data.		-
F38X	An error is detected at the Authentication/permit management section	1) Format the HDD and check function. (U024 FULL formatting) (*1) 2) Execute the U021 Memory initializing to initialize the controller backup memory and check function. 3) Replace the main board and check function. 4) Replace the HDD and check function. (*1) 5) Retrieve the USBLOG and contact the Service Administrative Division. (*1) For the HDD standard model only.		
F39X	An error is detected at the KMAS control section	1) Check connection of the harness (KMAS - Main board) and connectors and check function. 2) Format the HDD and check function. (U024 FULL formatting) (*1) 3) Execute the U021 Memory initializing to initialize the controller backup memory and check function. 3) Replace the main board and check function. 4) Replace the HDD and check function. (*1) 5) Retrieve the USBLOG and contact the Service Administrative Division. (*1) For the HDD standard model only.		-
F3AX F3BX F3CX F3DX F3EX F3FX F40X F41X F42X F43X F44X F45X	An error is detected at the Entity management section	1) Format the HDD and check function. (U024 FULL formatting) (*1) 2) Execute the U021 Memory initializing to initialize the controller backup memory and check function. 3) Replace the main board and check function. 4) Replace the HDD and check function. (*1) 5) Retrieve the USBLOG and contact the Service Administrative Division. (*1) For the HDD standard model only.		
F46X	An error is detected at the Print image process section	1) Replace the main board and check function. 2) Retrieve the USBLOG (or retrieve the print capture data by case)	*The F46F is printer process error. If it repeats with a certain print data, retrieve the capture data and USBLOG.	
F47X F48X F49X	An error is detected at the Image edit process control section	1) Format the HDD and check function. (U024 FULL formatting) (*1) 2) Execute the U021 Memory initializing to initialize the controller backup memory and check function. 3) Replace the main board and check function. 4) Replace the HDD and check function. (*1) 5) Retrieve the USBLOG and contact the Service Administrative Division. (*1) For the HDD standard model only.		

No.	Content	Check procedure & check point	Remark 1	FS-C8650DN, FS-C8600DN
F4AX F4CX	An error is detected at the Print image process section	1) Format the HDD and check function. (U024 FULL formatting) (*1) 2) Execute the U021 Memory initializing to initialize the controller backup memory and check function. 3) Replace the main board and check function. 4) Replace the HDD and check function. (*1) 5) Retrieve the USBLOG and contact the Service Administrative Division. (*1) For the HDD standard model only.		
F4DX F4EX	An error is detected at the Entity control section	1) Format the HDD and check function. (U024 FULL formatting) (*1) 2) Execute the U021 Memory initializing to initialize the controller backup memory and check function. 3) Replace the main board and check function. 4) Replace the HDD and check function. (*1) 5) Retrieve the USBLOG and contact the Service Administrative Division. (*1) For the HDD standard model only.		
F4FX	An error is detected at the Job control section	1) Format the HDD and check function. (U024 FULL formatting) (*1) 2) Execute the U021 Memory initializing to initialize the controller backup memory and check function. 3) Replace the main board and check function. 4) Replace the HDD and check function. (*1) 5) Retrieve the USBLOG and contact the Service Administrative Division. (*1) For the HDD standard model only.		
F50X	An error is detected at the FAX control section	1) Format the HDD and check function. (U024 FULL formatting) (*1) 2) Execute the U021 Memory initializing to initialize the controller backup memory and check function. 3) Replace the main board and check function. 4) Replace the HDD and check function. (*1) 5) Retrieve the USBLOG and contact the Service Administrative Division. (*1) For the HDD standard model only.		-
F51X F52X F53X F55X F56X F57X	An error is detected at the Job execution section	1) Format the HDD and check function. (U024 FULL formatting) (*1) 2) Execute the U021 Memory initializing to initialize the controller backup memory and check function. 3) Replace the main board and check function. 4) Replace the HDD and check function. (*1) 5) Retrieve the USBLOG and contact the Service Administrative Division. (*1) For the HDD standard model only.		
F58X F59X F5AX F5BX F5CX F5DX F5EX	An error is detected at the Service management section	1) Format the HDD and check function. (U024 FULL formatting) (*1) 2) Execute the U021 Memory initializing to initialize the controller backup memory and check function. 3) Replace the main board and check function. 4) Replace the HDD and check function. (*1) 5) Retrieve the USBLOG and contact the Service Administrative Division. (*1) For the HDD standard model only.		
F5FX	An error is detected at the Service execution section	1) Format the HDD and check function. (U024 FULL formatting) (*1) 2) Execute the U021 Memory initializing to initialize the controller backup memory and check function. 3) Replace the main board and check function. 4) Replace the HDD and check function. (*1) 5) Retrieve the USBLOG and contact the Service Administrative Division. (*1) For the HDD standard model only.		
F60X	An error is detected at the Maintenance mode management section	1) Format the HDD and check function. (U024 FULL formatting) (*1) 2) Execute the U021 Memory initializing to initialize the controller backup memory and check function. 3) Replace the main board and check function. 4) Replace the HDD and check function. (*1) 5) Retrieve the USBLOG and contact the Service Administrative Division. (*1) For the HDD standard model only.		
F61X	An error is detected at the Report compiling section	1) Format the HDD and check function. (U024 FULL formatting) (*1) 2) Execute the U021 Memory initializing to initialize the controller backup memory and check function. 3) Replace the main board and check function. 4) Replace the HDD and check function. (*1) 5) Retrieve the USBLOG and contact the Service Administrative Division. (*1) For the HDD standard model only.		
F62X	An error is detected at the Service execution section	1) Format the HDD and check function. (U024 FULL formatting) (*1) 2) Execute the U021 Memory initializing to initialize the controller backup memory and check function. 3) Replace the main board and check function. 4) Replace the HDD and check function. (*1) 5) Retrieve the USBLOG and contact the Service Administrative Division. (*1) For the HDD standard model only.		
F63X	An error is detected at the Device control section	1) Format the HDD and check function. (U024 FULL formatting) (*1) 2) Execute the U021 Memory initializing to initialize the controller backup memory and check function. 3) Replace the main board and check function. 4) Replace the HDD and check function. (*1) 5) Retrieve the USBLOG and contact the Service Administrative Division. (*1) For the HDD standard model only.		
F64X F65X F66X F67X	An error is detected at the Print image process section	1) Format the HDD and check function. (U024 FULL formatting) (*1) 2) Execute the U021 Memory initializing to initialize the controller backup memory and check function. 3) Replace the main board and check function. 4) Replace the HDD and check function. (*1) 5) Retrieve the USBLOG and contact the Service Administrative Division. (*1) For the HDD standard model only.		

No.	Content	Check procedure & check point	Remark 1	FS-C8650DN, FS-C8600DN
F68X	An error is detected at the Storage device control section	1) Format the HDD and check function. (U024 FULL formatting) (*1) 2) Execute the U021 Memory initializing to initialize the controller backup memory and check function. 3) Replace the main board and check function. 4) Replace the HDD and check function. (*1) 5) Retrieve the USBLOG and contact the Service Administrative Division. (*1) For the HDD standard model only.	*F684 is overwrite error with the HDD security kit	
F69X	An error is detected at the HyPAS control section	1) Format the HDD and check function. (U024 FULL formatting) (*1) 2) Execute the U021 Memory initializing to initialize the controller backup memory and check function. 3) Replace the main board and check function. 4) Replace the HDD and check function. (*1) 5) Retrieve the USBLOG and contact the Service Administrative Division. (*1) For the HDD standard model only.		-
F6AX				
F6BX				
F6CX				
F6DX	An error is detected at the External Server management section	1) Check the external server and check function. 2) Chekc the connection to the external server and check function. 3) Check the network settings and check function. 4) Replace the bridge board and check function. 5) Replace the main board and check function. 6) Retrieve the USBLOG and contact the Service Administrative Division.	*FieryOption related	-
F6EX				
F6FX				
F70X				
F71X				
F72X				
F73X				
F74X				
F75X				

(7) Wiring diagram

No.1)

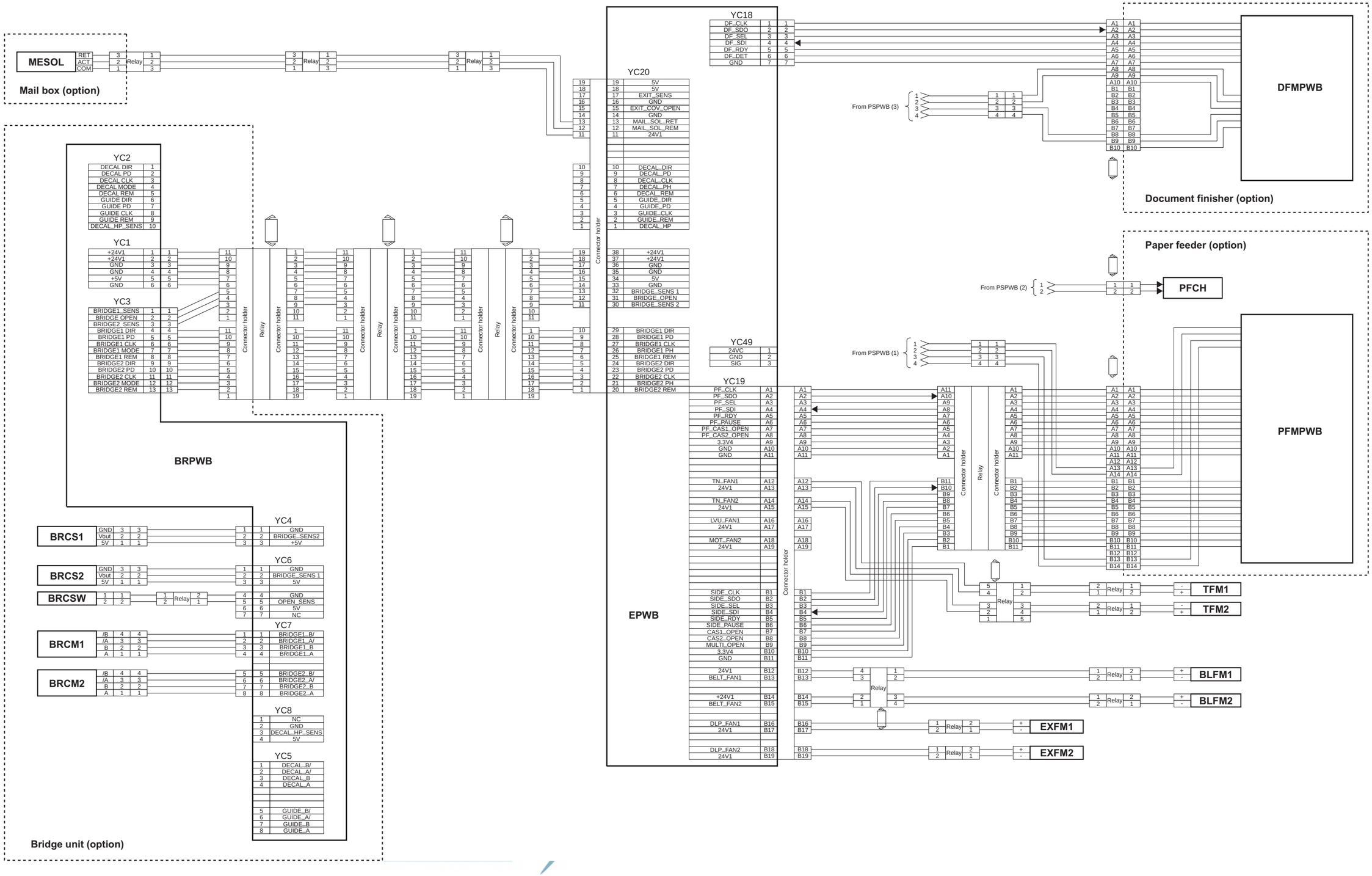

No.2

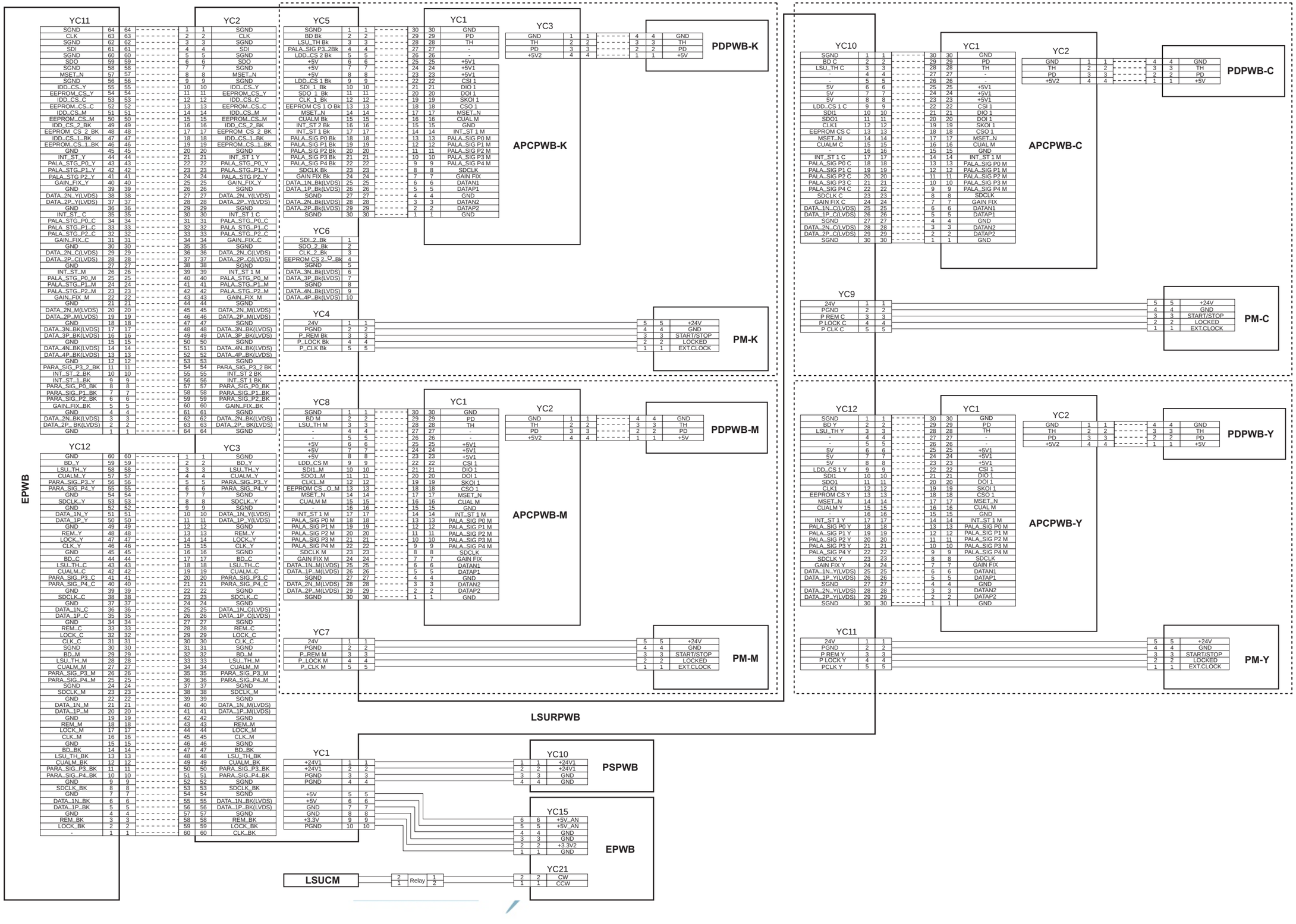
EPWB
YC11
YC12
YC2
YC3
YC5
YC6
YC4
YC1
YC3
PDPWB-K
APCPWB-K
PM-K
YC8
YC1
YC2
PDPWB-M
APCPWB-M
YC7
PM-M
YC10
YC1
YC2
PDPWB-C
APCPWB-C
YC9
PM-C
YC12
YC1
YC2
PDPWB-Y
APCPWB-Y
YC11
PM-Y
LSURPWB
YC1
YC10
PSPWB
YC15
EPWB
YC21
LSUCM
Relay

No.3

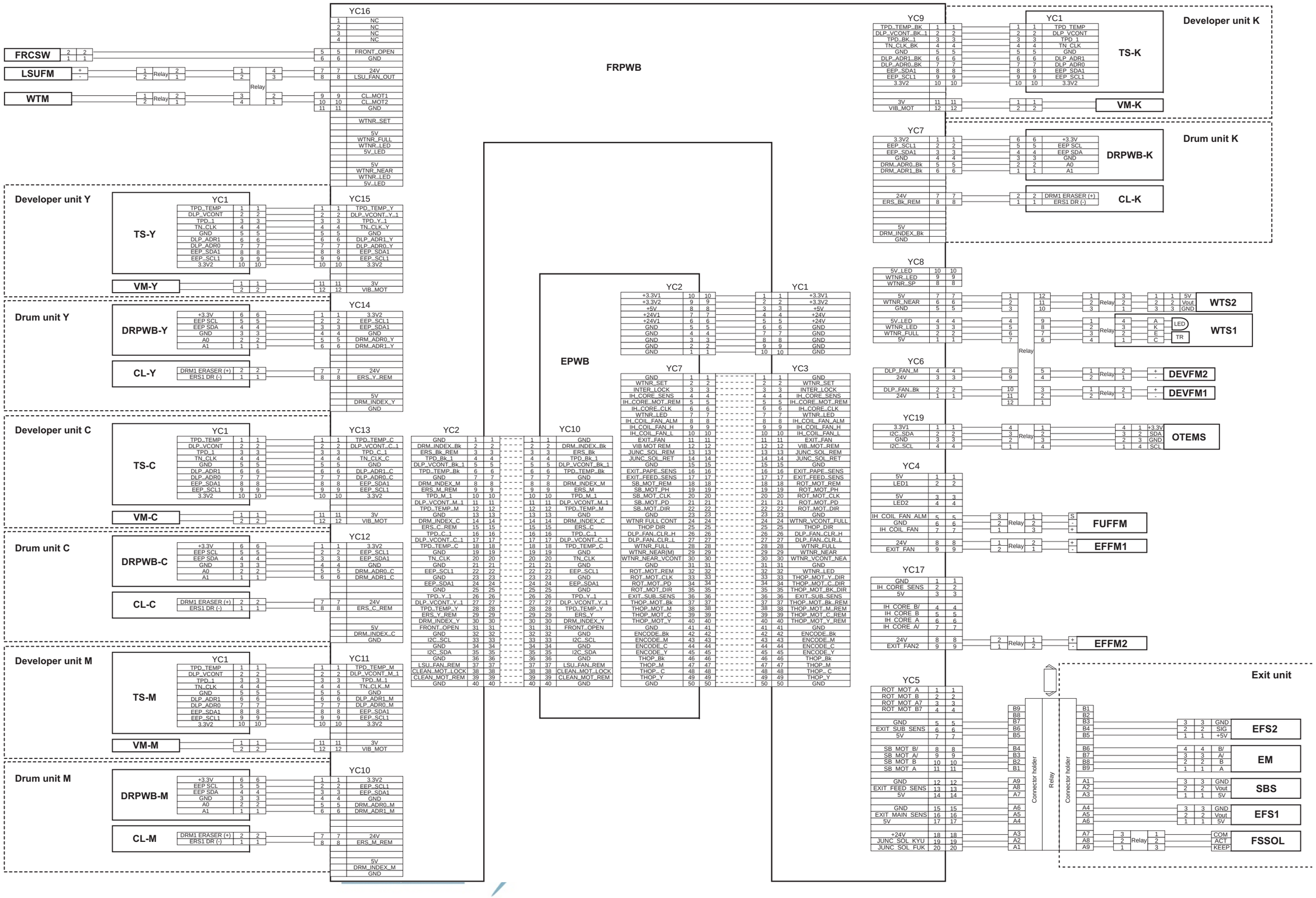
FRPWB
EPWB
FRCSW
LSUFM
WTM
Relay
YC16
NC
FRONT_OPEN
GND
24V
LSU_FAN_OUT
CL_MOT1
CL_MOT2
WTNR_SET
5V
WTNR_FULL
WTNR_LED
5V_LED
WTNR_NEAR
Developer unit Y
TS-Y
YC1
YC15
TPD_TEMP_Y
DLP_VCONT_Y_1
TPD_Y_1
TN_CLK_Y
DLP_ADR1_Y
DLP_ADR0_Y
EEP_SDA1
EEP_SCL1
3.3V2
VM-Y
3V
VIB_MOT
Drum unit Y
DRPWB-Y
YC14
3.3V2
EEP_SCL1
EEP_SDA1
DRM_ADR0_Y
DRM_ADR1_Y
CL-Y
DRM1 ERASER (+)
ERS1 DR (-)
24V
ERS_Y_REM
DRM_INDEX_Y
Developer unit C
TS-C
YC13
TPD_TEMP_C
DLP_VCONT_C_1
TPD_C_1
TN_CLK_C
DLP_ADR1_C
DLP_ADR0_C
VM-C
Drum unit C
DRPWB-C
YC12
DRM_ADR0_C
DRM_ADR1_C
CL-C
ERS_C_REM
DRM_INDEX_C
Developer unit M
TS-M
YC11
TPD_TEMP_M
DLP_VCONT_M_1
TPD_M_1
TN_CLK_M
DLP_ADR1_M
DLP_ADR0_M
VM-M
Drum unit M
DRPWB-M
YC10
DRM_ADR0_M
DRM_ADR1_M
CL-M
ERS_M_REM
DRM_INDEX_M
YC2
YC1
YC7
YC3
YC10
YC9
TS-K
VM-K
Developer unit K
YC7
DRPWB-K
CL-K
Drum unit K
YC8
WTS2
WTS1
YC6
DEVFM2
DEVFM1
YC19
OTEMS
YC4
FUFFM
EFFM1
YC17
EFFM2
YC5
Exit unit
EFS2
EM
SBS
EFS1
FSSOL
Connector holder

No.4

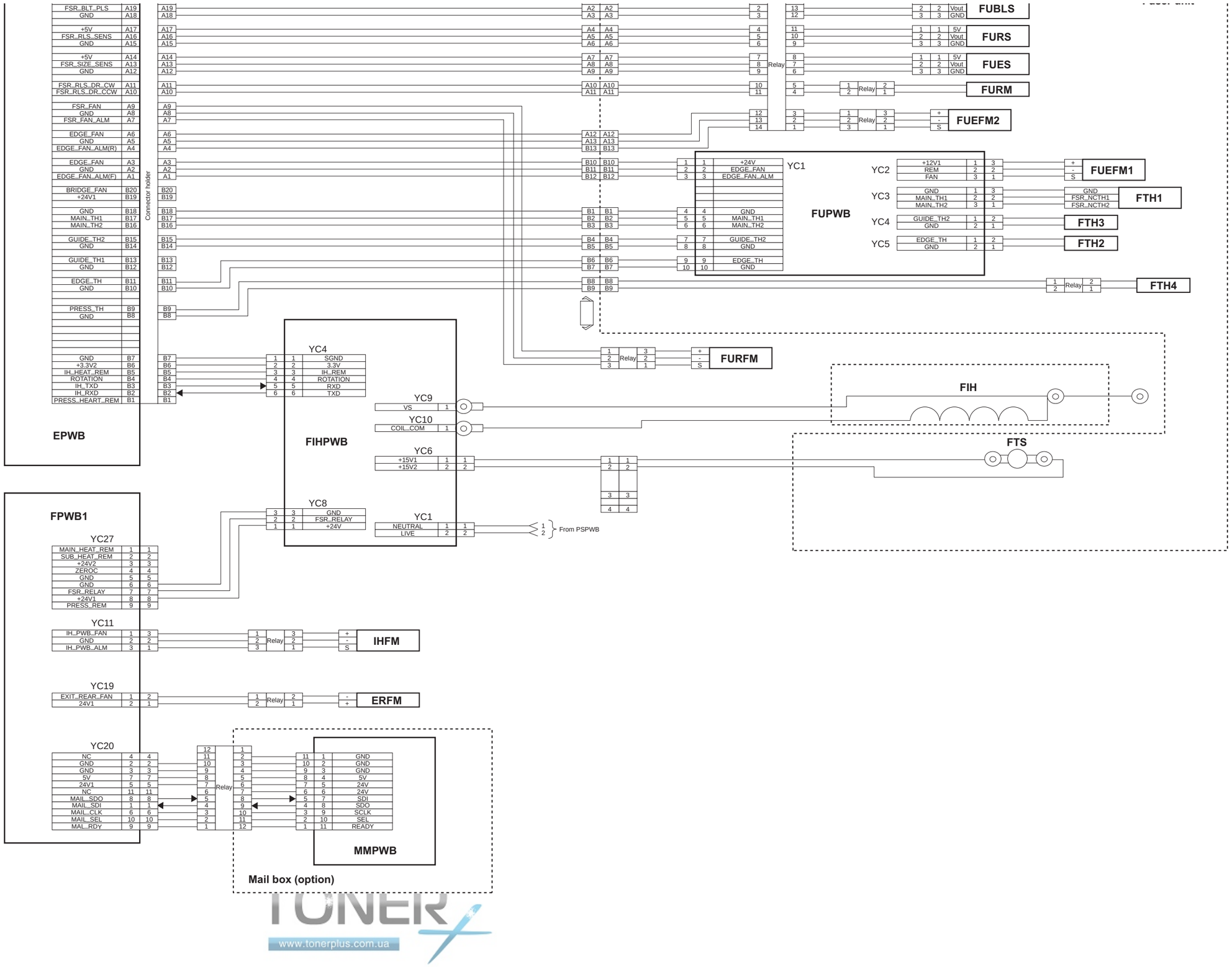

No.5

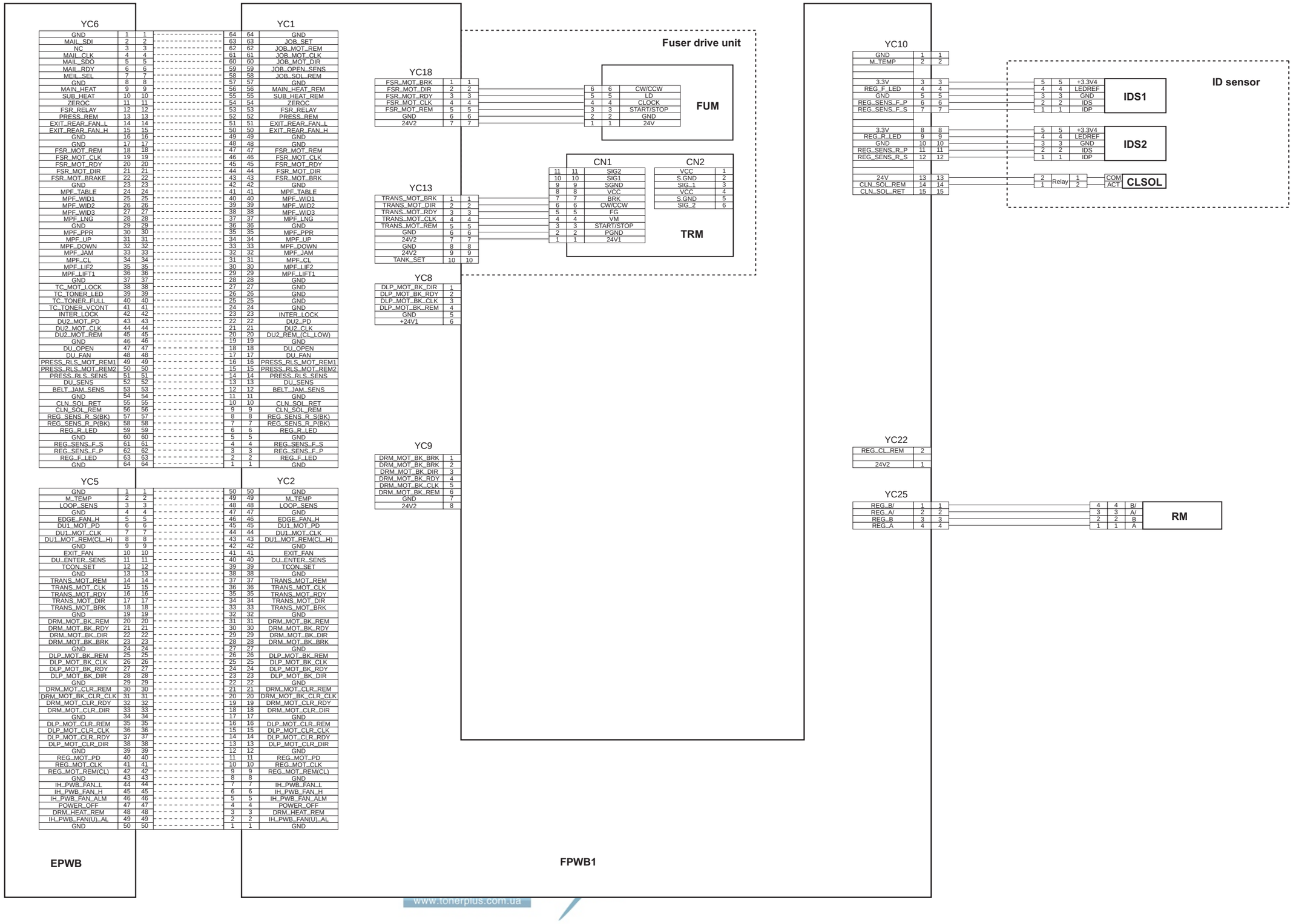

No.6

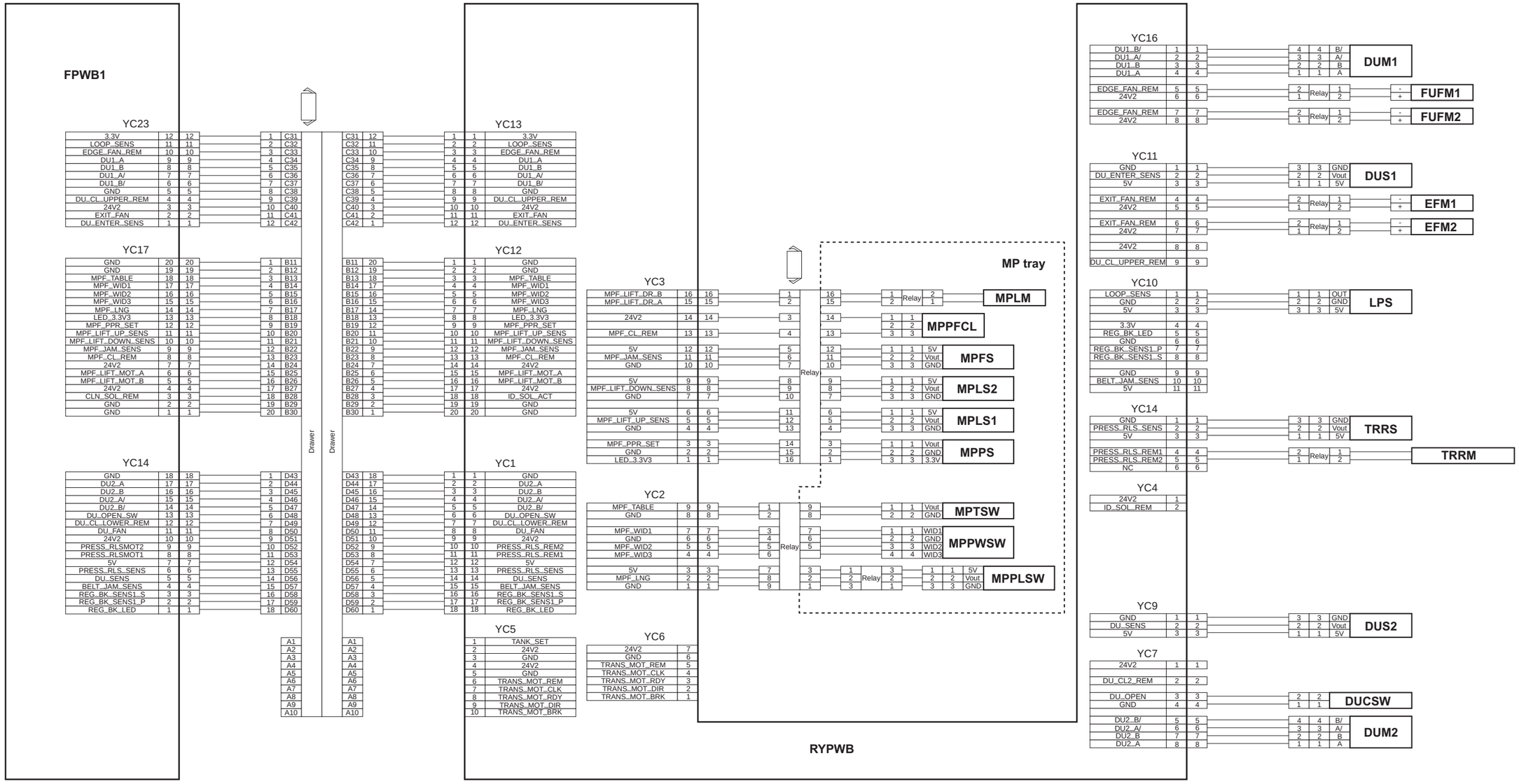

No.7

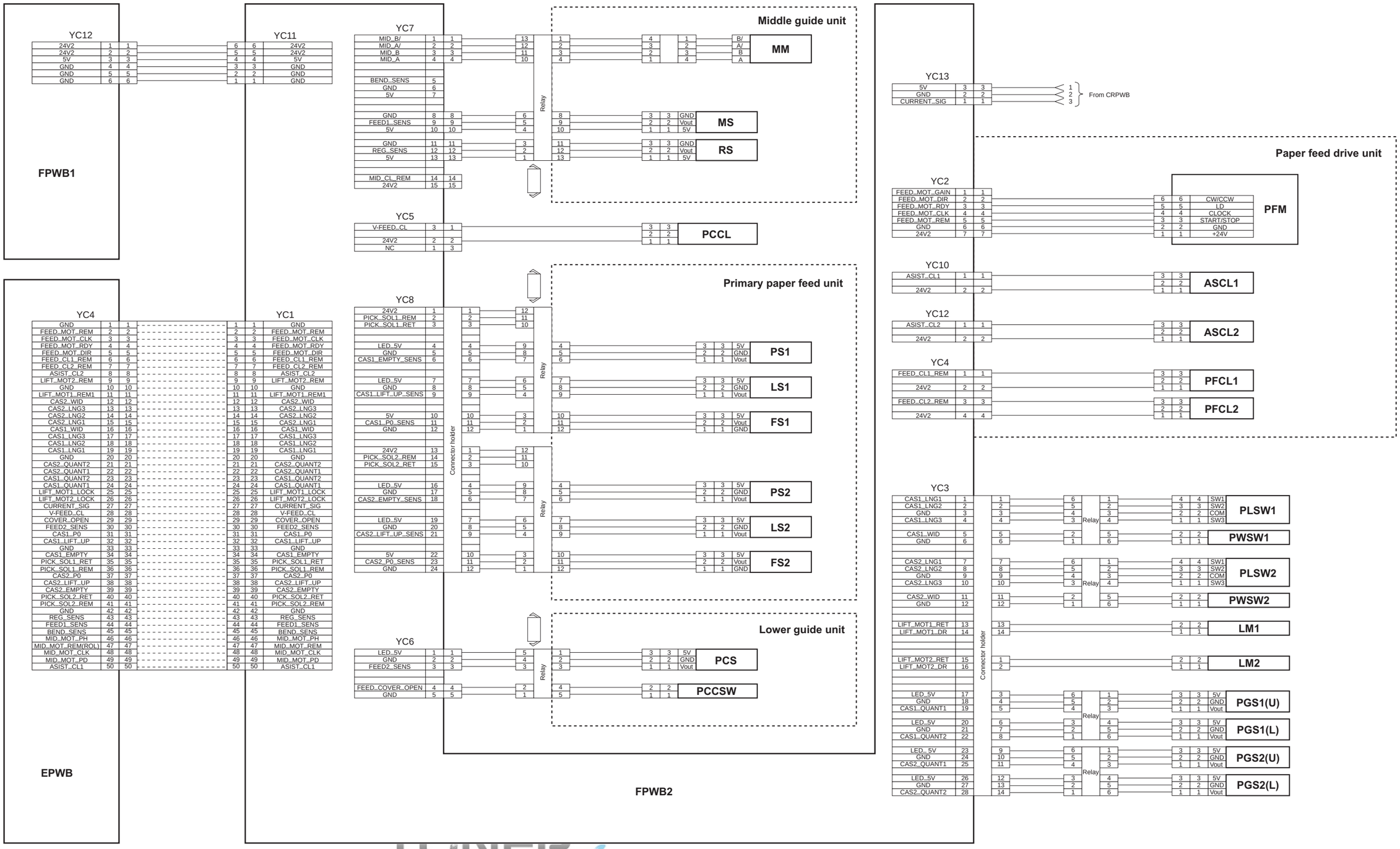

No.8

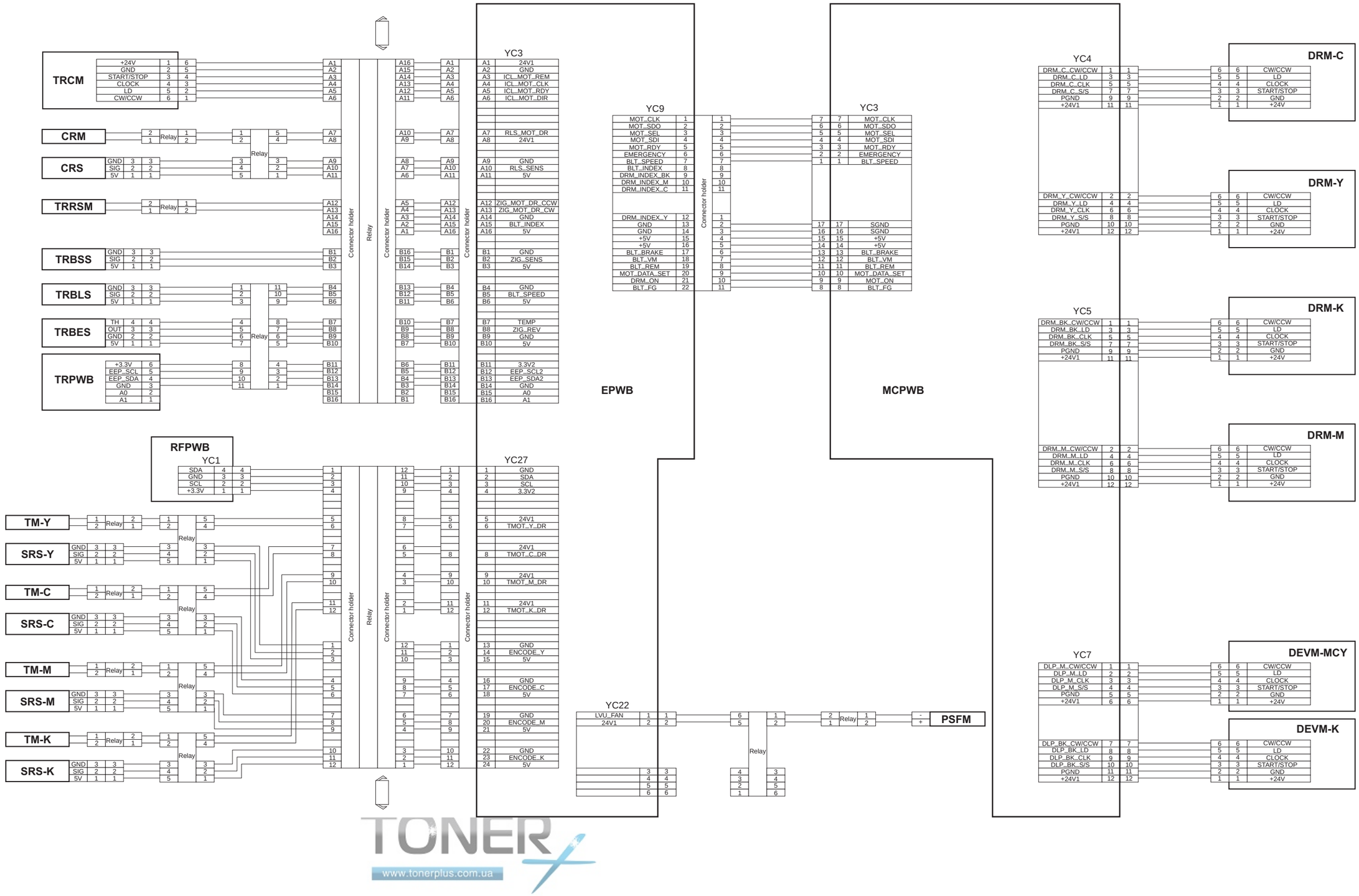

No.9

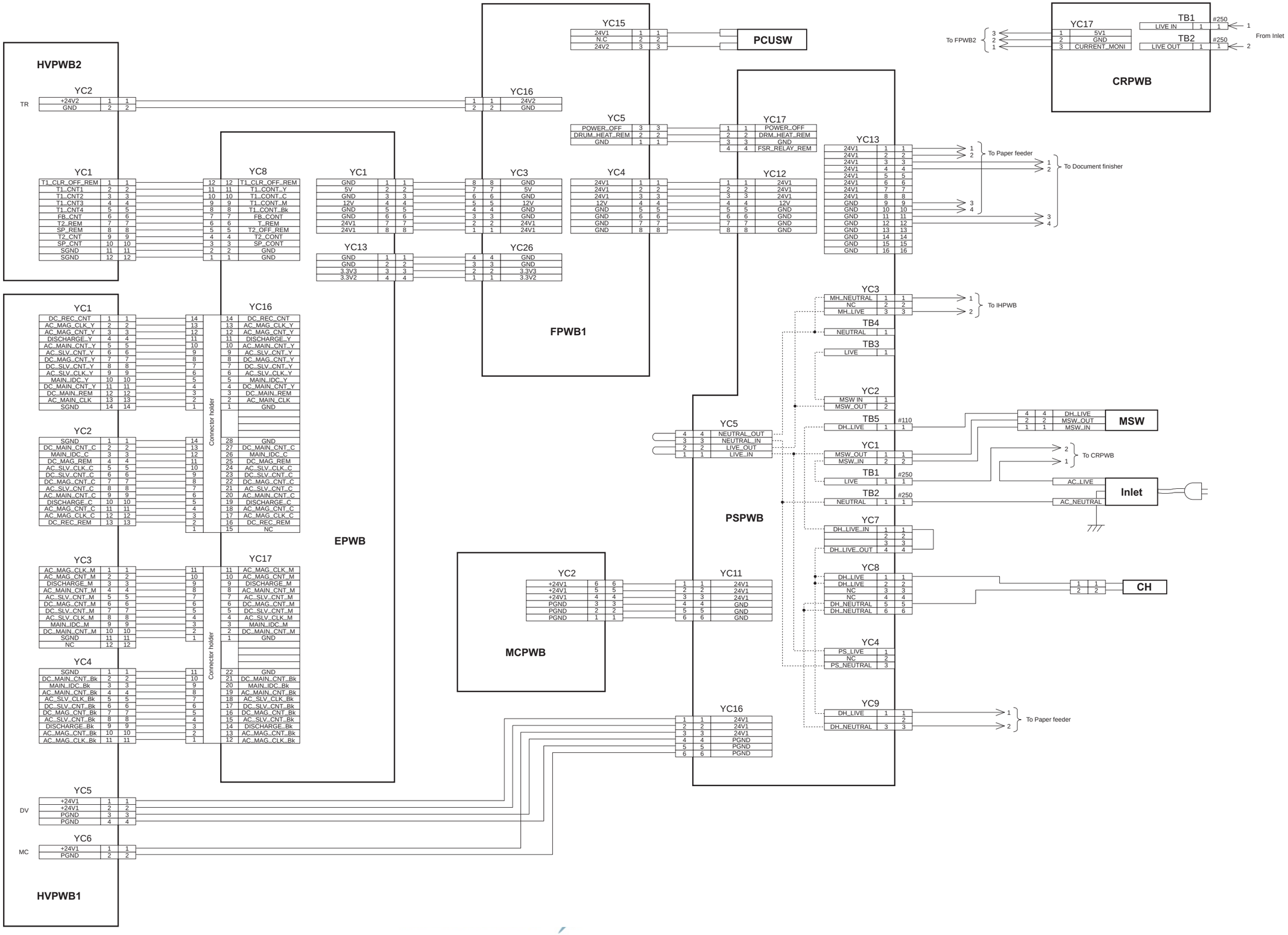
HVPWB2
YC2
TR
+24V2 1 1
GND 2 2
YC1
T1_CLR_OFF_REM 1 1
T1_CNT1 2 2
T1_CNT2 3 3
T1_CNT3 4 4
T1_CNT4 5 5
FB_CNT 6 6
T2_REM 7 7
SP_REM 8 8
T2_CNT 9 9
SP_CNT 10 10
SGND 11 11
SGND 12 12
YC8
12 12 T1_CLR_OFF_REM
11 11 T1_CONT_Y
10 10 T1_CONT_C
9 9 T1_CONT_M
8 8 T1_CONT_Bk
7 7 FB_CONT
6 6 T_REM
5 5 T2_OFF_REM
4 4 T2_CONT
3 3 SP_CONT
2 2 GND
1 1 GND
YC1
GND 1 1
5V 2 2
GND 3 3
12V 4 4
GND 5 5
GND 6 6
24V1 7 7
24V1 8 8
YC13
GND 1 1
GND 2 2
3.3V3 3 3
3.3V2 4 4
YC15
24V1 1 1
N.C 2 2
24V2 3 3
PCUSW
YC16
1 1 24V2
2 2 GND
YC5
POWER_OFF 3 3
DRUM_HEAT_REM 2 2
GND 1 1
YC3
8 8 GND
7 7 5V
6 6 GND
5 5 12V
4 4 GND
3 3 GND
2 2 24V1
1 1 24V1
YC4
24V1 1 1
24V1 2 2
24V1 3 3
12V 4 4
GND 5 5
GND 6 6
GND 7 7
GND 8 8
YC26
4 4 GND
3 3 GND
2 2 3.3V3
1 1 3.3V2
FPWB1
YC17
1 1 POWER_OFF
2 2 DRM_HEAT_REM
3 3 GND
4 4 FSR_RELAY_REM
YC12
1 1 24V1
2 2 24V1
3 3 24V1
4 4 12V
5 5 GND
6 6 GND
7 7 GND
8 8 GND
YC13
24V1 1 1
24V1 2 2
24V1 3 3
24V1 4 4
24V1 5 5
24V1 6 6
24V1 7 7
24V1 8 8
GND 9 9
GND 10 10
GND 11 11
GND 12 12
GND 13 13
GND 14 14
GND 15 15
GND 16 16
To Paper feeder
To Document finisher
To FPWB2
YC17
1 5V1
2 GND
3 CURRENT_MONI
TB1
LIVE IN 1 1 #250
TB2
LIVE OUT 1 1 #250
From Inlet
CRPWB
YC1
DC_REC_CNT 1 1
AC_MAG_CLK_Y 2 2
AC_MAG_CNT_Y 3 3
DISCHARGE_Y 4 4
AC_MAIN_CNT_Y 5 5
AC_SLV_CNT_Y 6 6
DC_MAG_CNT_Y 7 7
DC_SLV_CNT_Y 8 8
AC_SLV_CLK_Y 9 9
MAIN_IDC_Y 10 10
DC_MAIN_CNT_Y 11 11
DC_MAIN_REM 12 12
AC_MAIN_CLK 13 13
SGND 14 14
YC2
SGND 1 1
DC_MAIN_CNT_C 2 2
MAIN_IDC_C 3 3
DC_MAG_REM 4 4
AC_SLV_CLK_C 5 5
DC_SLV_CNT_C 6 6
DC_MAG_CNT_C 7 7
AC_SLV_CNT_C 8 8
AC_MAIN_CNT_C 9 9
DISCHARGE_C 10 10
AC_MAG_CNT_C 11 11
AC_MAG_CLK_C 12 12
DC_REC_REM 13 13
YC16
14 DC_REC_CNT
13 AC_MAG_CLK_Y
12 AC_MAG_CNT_Y
11 DISCHARGE_Y
10 AC_MAIN_CNT_Y
9 AC_SLV_CNT_Y
8 DC_MAG_CNT_Y
7 DC_SLV_CNT_Y
6 AC_SLV_CLK_Y
5 MAIN_IDC_Y
4 DC_MAIN_CNT_Y
3 DC_MAIN_REM
2 AC_MAIN_CLK
1 GND
28 GND
27 DC_MAIN_CNT_C
26 MAIN_IDC_C
25 DC_MAG_REM
24 AC_SLV_CLK_C
23 DC_SLV_CNT_C
22 DC_MAG_CNT_C
21 AC_SLV_CNT_C
20 AC_MAIN_CNT_C
19 DISCHARGE_C
18 AC_MAG_CNT_C
17 AC_MAG_CLK_C
16 DC_REC_REM
15 NC
Connector holder
EPWB
YC3
AC_MAG_CLK_M 1 1
AC_MAG_CNT_M 2 2
DISCHARGE_M 3 3
AC_MAIN_CNT_M 4 4
AC_SLV_CNT_M 5 5
DC_MAG_CNT_M 6 6
DC_SLV_CNT_M 7 7
AC_SLV_CLK_M 8 8
MAIN_IDC_M 9 9
DC_MAIN_CNT_M 10 10
SGND 11 11
NC 12 12
YC17
11 AC_MAG_CLK_M
10 AC_MAG_CNT_M
9 DISCHARGE_M
8 AC_MAIN_CNT_M
7 AC_SLV_CNT_M
6 DC_MAG_CNT_M
5 DC_SLV_CNT_M
4 AC_SLV_CLK_M
3 MAIN_IDC_M
2 DC_MAIN_CNT_M
1 GND
YC4
SGND 1 1
DC_MAIN_CNT_Bk 2 2
MAIN_IDC_Bk 3 3
AC_MAIN_CNT_Bk 4 4
AC_SLV_CLK_Bk 5 5
DC_SLV_CNT_Bk 6 6
DC_MAG_CNT_Bk 7 7
AC_SLV_CNT_Bk 8 8
DISCHARGE_Bk 9 9
AC_MAG_CNT_Bk 10 10
AC_MAG_CLK_Bk 11 11
22 GND
21 DC_MAIN_CNT_Bk
20 MAIN_IDC_Bk
19 AC_MAIN_CNT_Bk
18 AC_SLV_CLK_Bk
17 DC_SLV_CNT_Bk
16 DC_MAG_CNT_Bk
15 AC_SLV_CNT_Bk
14 DISCHARGE_Bk
13 AC_MAG_CNT_Bk
12 AC_MAG_CLK_Bk
YC5
DV
+24V1 1 1
+24V1 2 2
PGND 3 3
PGND 4 4
YC6
MC
+24V1 1 1
PGND 2 2
HVPWB1
MCPWB
YC2
+24V1 6 6
+24V1 5 5
+24V1 4 4
PGND 3 3
PGND 2 2
PGND 1 1
YC11
1 1 24V1
2 2 24V1
3 3 24V1
4 4 GND
5 5 GND
6 6 GND
YC16
1 1 24V1
2 2 24V1
3 3 24V1
4 4 PGND
5 5 PGND
6 6 PGND
PSPWB
YC3
MH_NEUTRAL 1 1
NC 2 2
MH_LIVE 3 3
To IHPWB
TB4
NEUTRAL 1
TB3
LIVE 1
YC2
MSW IN 1
MSW_OUT 2
TB5
DH_LIVE 1 1 #110
YC5
4 4 NEUTRAL_OUT
3 3 NEUTRAL_IN
2 2 LIVE_OUT
1 1 LIVE_IN
YC1
MSW_OUT 1 1
MSW_IN 2 2
TB1
LIVE 1 1 #250
TB2
NEUTRAL 1 1 #250
YC7
DH_LIVE_IN 1 1
2 2
3 3
DH_LIVE_OUT 4 4
YC8
DH_LIVE 1 1
DH_LIVE 2 2
NC 3 3
NC 4 4
DH_NEUTRAL 5 5
DH_NEUTRAL 6 6
YC4
PS_LIVE 1
NC 2
PS_NEUTRAL 3
YC9
DH_LIVE 1 1
2
DH_NEUTRAL 3 3
To Paper feeder
4 4 DH_LIVE
2 2 MSW_OUT
1 1 MSW_IN
MSW
To CRPWB
AC_LIVE
AC_NEUTRAL
Inlet
1 1
2 2
CH

No.10

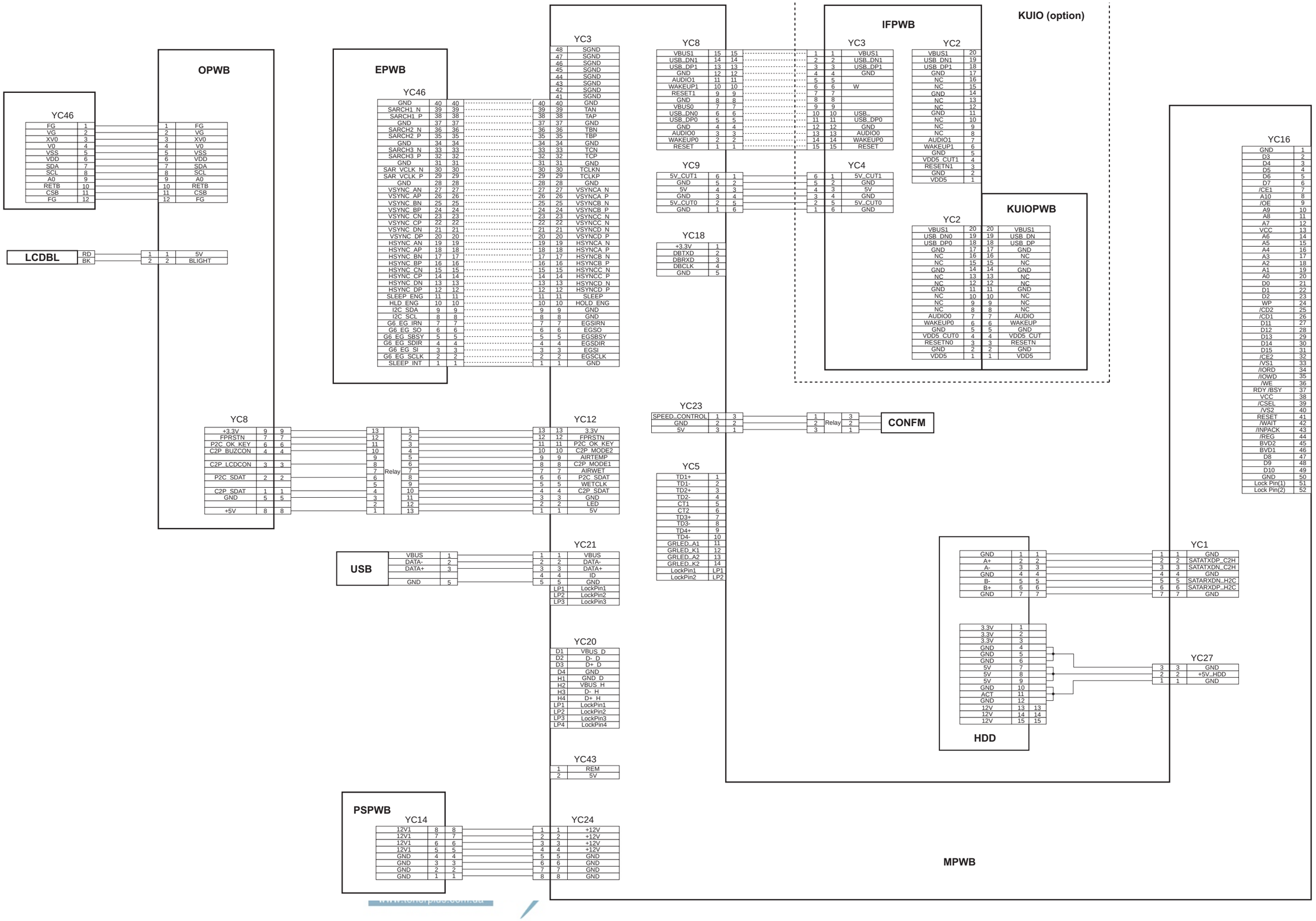
OPWB
EPWB
IFPWB
KUIO (option)
KUIOPWB
CONFM
HDD
USB
PSPWB
MPWB
LCDBL
Relay
YC46
YC3
YC8
YC9
YC4
YC18
YC23
YC5
YC2
YC16
YC12
YC21
YC20
YC43
YC14
YC24
YC1
YC27

INSTALLATION GUIDE FOR PAPER FEEDER

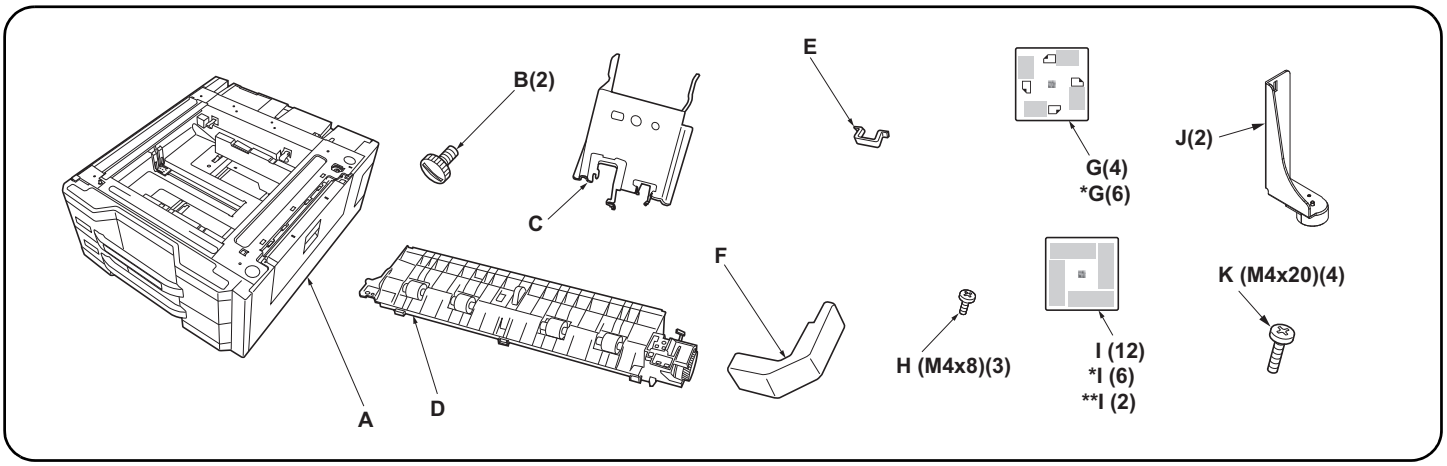

English

Supplied parts

A. Paper feeder 1
B. Pin 2
C. Retainer 1
D. Intermediate paper conveying unit 1
E. Clamp 1
F. Wire cover 1
G. Paper size plate 4
H. S Tite screw M4 × 8 3
***I.** Media type plate(120V model only) 6
****I.** Media type plate(110V model only) 2
I. Media type plate (except for above models) 12
J. Stopper 2
K. S Tite screws M4 × 20 4

Be sure to remove any tape and/or cushioning materials from the parts supplied.

Français

Pièces fournies

A. Chargeur de papier 1
B. Broche 2
C. Élément de retenue 1
D. Unité de transport du papier intermédiaire 1
E. Collier 1
F. Couvercle de câble 1
G. Plaquette du format de papier 4
H. Vis S Tite M4 × 8 3
I. Plaquette du type de support 12
J. Butée 2
K. Vis S Tite M4 × 20 4

Veillez à retirer les morceaux de bande adhésive et/ou les matériaux de rembourrage des pièces fournies.

Español

Partes suministradas

A. Depósito de papel 1
B. Clavija 2
C. Retén 1
D. Unidad de transporte de papel intermedia. 1
E. Sujetador 1
F. Cubierta para el cable 1
G. Placa de tamaño de papel 4
H. Tornillo S Tite M4 × 8 3
I. Placa de tipo de medio 12
J. Tope 2
K. Tornillos S Tite M4 × 20 4

Asegúrese de despegar todas las cintas y/o material amortiguador de las partes suministradas.

Deutsch

Enthaltene Teile

A. Papiereinzug 1
B. Stift 2
C. Halterung 1
D. Eingesetzte Papierfördereinheit 1
E. Klemme 1
F. Kabelabdeckung 1
G. Papierformatkarte 4
H. S-Tite-Schraube M4 × 8 3
I. Medientypkarte 12
J. Anschlag 2
K. S-Tite-Schrauben M4 × 20 4

Stellen Sie sicher, dass sämtliche Klebebänder und/oder Polstermaterial von den gelieferten Teilen entfernt wurden.

Italiano

Parti fornite

A. Unità di alimentazione della carta 1
B. Perno 2
C. Fermo 1
D. Unità intermediale di trasporto carta 1
E. Morsetto 1
F. Coperchio cavi 1
G. Piastra formato carta 4
H. Vite S Tite M4 × 8 3
I. Piastra tipo carta 12
J. Fermo 2
K. Vite S Tite M4 × 20 4

Rimuovere tutti i nastri adesivi e/o i materiali di protezione dalle parti fornite.

简体中文

附属品

A. 供纸工作台 1
B. 固定插销 2
C. 安装板 1
D. 中间搬运单元 1
E. 束线夹 1
F. 电线盖板 1
*G. 纸张尺寸标识片 6
H. 紧固型 S 螺丝 M4×8 3
**I. 纸张种类标识片 2
J. 限位器 2
K. 紧固型 S 螺丝 M4×20 4

如果附属品上带有固定胶带，缓冲材料时务必揭下。

한국어

동봉품

A. 급지대 1
B. 핀 2
C. 부착판 1
D. 중간반송유니트 1
E. 크램프 1
F. 전선커버 1
G. 용지크기 플레이트 4
H. 나사 M4×8 S 타이트 3
**I. 용지종류 플레이트 2
J. 전도방지쇠 2
K. 나사 M4×20 S 타이트 4

동봉품에 고정 테이프 , 완충재가 붙어 있는 경우에는 반드시 제거할 것 .

日本語

同梱品

A. ペーパーフィーダ 1
B. ピン 2
C. 取付板 1
D. 中間搬送ユニット 1
E. クランプ 1
F. 電線カバー 1
G. 用紙サイズプレート 4
H. ビス M4×8 S タイト 3
**I. 用紙種類プレート 2
J. 転倒防止金具 2
K. ビス M4×20 S タイト 4

同梱品に固定テープ、緩衝材が付いている場合は必ず取り外すこと。

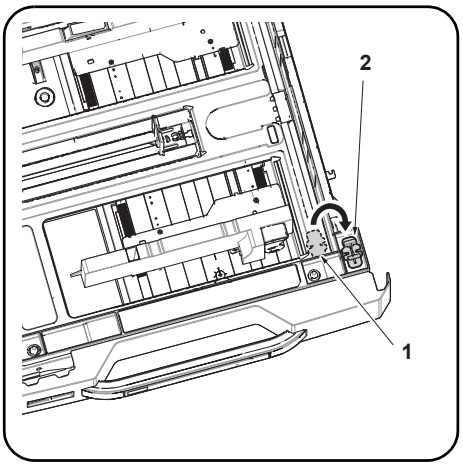

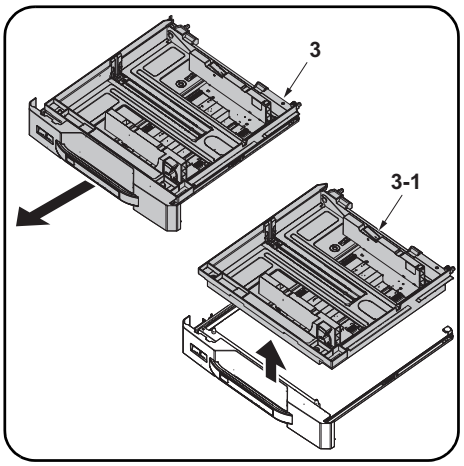

Procedure
Before starting installation, be sure to turn the main power switch of the machine off, and unplug the power plug from the wall outlet.

1. Pull each cassette out from the paper feeder (A). Remove the lift plate stopper (1) from each cassette and attach it to the storage location (2).
2. Gently close each cassette.
3. Pull out the lower paper cassette (3) from the machine.
4. Remove the paper cassette (3-1).

Procédure
Avant de commencer l'installation, s'assurer de mettre la machine hors tension et de débrancher la fiche d'alimentation de la prise murale.

1. Sortez chaque magasin du chargeur de papier (A). Retirez la butée de la plaque de levage (1) de chaque magasin et fixez-la dans l'emplacement de stockage (2).
2. Refermer progressivement chaque tiroir.
3. Sortez le magasin de papier inférieur (3) de la machine.
4. Retirez le magasin de papier (3-1).

Procedimiento
Antes de iniciar la instalación, asegúrese de apagar el interruptor de encendido de la máquina y desenchufar el cable de alimentación de la toma de pared.

1. Saque cada uno de los depósitos del depósito de papel (A). Quite el tope de placa de elevación (1) de cada depósito y póngalo en el espacio reservado para guardarlo (2).
2. Cierre suavemente cada bandeja.
3. Extraiga el depósito inferior (3) de la máquina.
4. Quite el depósito de papel (3-1).

Verfahren
Bevor Sie mit der Installation beginnen überzeugen Sie sich, dass der Netzschalter des Geräts ausgeschaltet und das Stromkabel aus der Steckdose gezogen ist.

1. Ziehen Sie jede Kassette aus dem Papiereinzug (A) heraus. Entfernen Sie die Verriegelung des Papierlifts (1) aus jeder Kassette und setzen Sie die Verriegelung in die Parkposition (2) ein.
2. Alle Kassetten sachte schließen.
3. Ziehen Sie die untere Kassette (3) aus dem Gerät heraus.
4. Nehmen Sie die Papierkassette (3-1) heraus.

Procedura
Prima di iniziare l'installazione, spegnere la macchina e scollegare la spina dalla presa di corrente.

1. Estrarre ciascun cassetto dall'unità di alimentazione carta (A). Rimuovere il fermo della piastra di sollevamento (1) da ogni cassetto e fissarlo sulla posizione a riposo (2).
2. Chiudere delicatamente ciascun cassetto.
3. Estrarre il cassetto carta inferiore (3) dalla macchina.
4. Rimuovere il cassetto carta (3-1).

安装步骤
安装前务必关闭机器的主电源开关，并从墙壁插座拔下电源插头。

1. 拉出供纸工作台 (A) 的各个供纸盒，拆下各 1 个升降板限位器 (1)，并安装在保管场所 (2) 上。
2. 轻轻地推入各供纸盒。
3. 拉出机器的下部供纸盒 (3)。
4. 取下纸盒 (3-1)。

설치순서
설치를 시작하기 전에 반드시 본체의 주 전원 스위치를 끄고 벽 콘센트에서 전원 플러그를 분리하십시오 .

1. 급지대 (A) 의 각 카세트를 빼냅니다 . 리프트판 스토퍼 (1) 각 1 개를 빼내 보관장소 (2) 에 부착합니다 .
2. 각 카세트를 조용히 밀어 넣습니다 .
3. 본체의 하단 용지 카세트 (3) 를 빼냅니다 .
4. 용지 카세트 (3-1) 를 제거합니다 .

取付手順
必ず機械本体の主電源スイッチを OFF にし、機械本体の電源プラグを抜いてから作業すること。

1. ペーパーフィーダー(A) の各カセットを引き出す。リフト板ストッパー(1) 各 1 個を外して保管場所 (2) に取り付ける。
2. 各カセットを静かに押し込む。
3. 機械本体の下段カセット (3) を引き出す。
4. カセット (3-1) を取り外す。

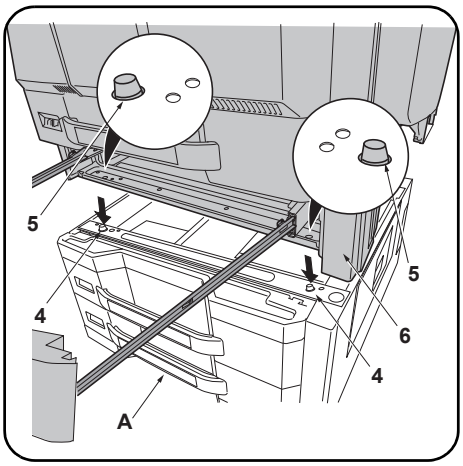

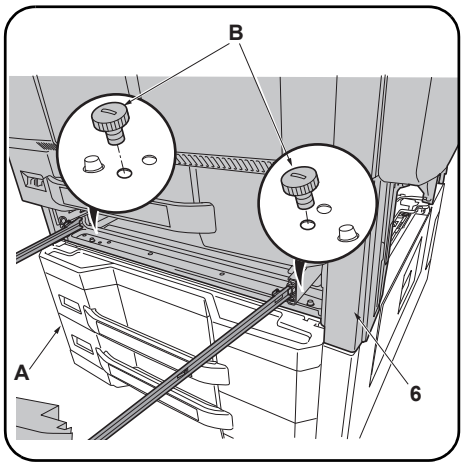

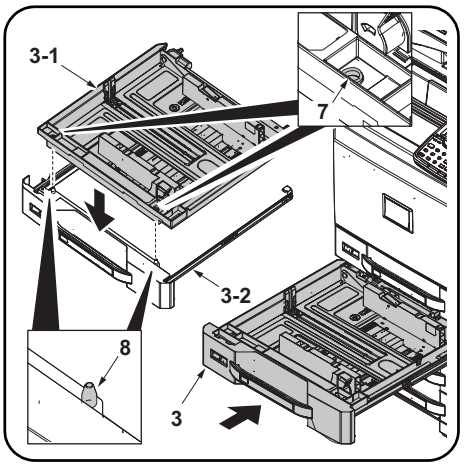

5. Place the machine (6) on the paper feeder (A) so that the pins (4) at the front left and front right of the paper feeder (A) are aligned with the holes (5) in the base of the machine.

6. Secure the machine (6) to the paper feeder (A) with the 2 pins (B).

7. Align the holes (7) of the lower cassette (3-1) for the machine with the pins (8) in the cassette slider (3-2). Put the paper cassette (3-1).

8. Push the lower paper cassette (3) in fully.

---

5. Monter la machine (6) sur le chargeur de papier (A) de sorte que les broches (4) à l'avant gauche et à l'avant droit du chargeur de papier (A) soient alignés avec les trous (5) dans la base du machine.

6. Fixer la machine (6) au chargeur de papier (A) avec les 2 broches (B).

7. Alignez les trous (7) du magasin inférieur (3-1) pour la machine avec les ergots (8) dans le tiroir du magasin (3-2). Placez le magasin de papier (3-1).

8. Enfoncez à fond le magasin de papier inférieur (3).

---

5. Coloque la máquina (6) sobre el depósito de papel (A) de forma que los pasadores (4) en los lados frontales izquierdo y derecho del depósito de papel (A) estén alineados con los orificios (5) de la base de la máquina.

6. Fije la máquina (6) al depósito de papel (A) con los dos pasadores (B).

7. Alinee los orificios (7) del depósito inferior (3-1) de la máquina con los pasadores (8) del deslizador del depósito (3-2). Coloque el depósito de papel (3-1).

8. Ejerza presión sobre el depósito de papel inferior (3) hasta introducirlo por completo.

---

5. Setzen Sie das Gerät (6) so auf den Papiereinzug (A), dass die Stifte (4) vorne links und vorne rechts am Papiereinzug (A) auf die Öffnungen (5) im Boden des Geräts ausgerichtet sind.

6. Sichern Sie das Gerät (6) mit den 2 Stiften (B) am Papiereinzug (A).

7. Richten Sie die Löcher (7) der Kassette (3-1) des Geräts mit den Stiften (8) im Kassettenanschlag (3-2) aus. Setzen Sie die Papierkassette (3-1) wieder ein.

8. Schieben Sie die Papierkassette (3) bis zum Anschlag ein.

---

5. Posizionare la macchina (6) sull'alimentatore carta (A) in modo che i perni (4) sul lato destro e sinistro anteriore dell'alimentatore carta (A) siano allineati con i fori (5) presenti sulla base della macchina..

6. Fissare la macchina (6) sull'alimentatore carta (A) con i 2 perni (B).

7. Allineare i fori (7) del cassetto inferiore (3-1) per la macchina con perni (8) della guida cassetto (3-2). Inserire il cassetto carta (3-1).

8. Spingere il cassetto carta inferiore (3) fino in fondo.

---

5. 供纸工作台 (A) 的左右前面的各插销 (4) 分别对准机器 主机底面的孔 (5) 后，将机器 (6) 放在供纸工作台 (A) 上。

6. 用 2 个固定插销 (B) 将机器 主机 (6) 固定在供纸工作台 (A) 上。

7. 将机器下部供纸盒 (3-1) 的孔 (7) 和供纸盒导轨 (3-2) 的插销 (8) 对齐。放置纸盒 (3-1)。

8. 完全推入下部供纸盒 (3)。

---

5. 급지대 (A) 의 전면 좌측과 전면 우측에 있는 각 핀 (4) 이 본체의 바닥면에 있는 구멍 (5) 에 맞도록 본체 (6) 를 급지대 (A) 위에 놓습니다 .

6. 핀 (B) 2 개로 본체 (6) 를 급지대 (A) 에 고정합니다 .

7. 본체의 하단 용지 카세트 (3-1) 의 구멍 (7) 과 카세트 슬라이더 (3-2) 의 핀 (8) 을 맞춥니다 . 용지 카세트 (3-1) 를 배치합니다 .

8. 하단 용지 카세트 (3) 를 완전히 밀어 넣습니다 .

---

5. ペーパーフィーダー(A) の左右前方の各ピン (4) と機械本体のベースの穴 (5) が合うように、ペーパーフィーダー(A) に機械本体 (6) を載せる。

6. ピン (B)2 本で 機械本体 (6) をペーパーフィーダー(A) に固定する。

7. 機械本体の下段カセット (3-1) の穴 (7) とカセットスライダー(3-2) のピン (8) を合わせる。カセット (3-1) を置く。

8. 下段カセット (3) を奥まで押し込む。

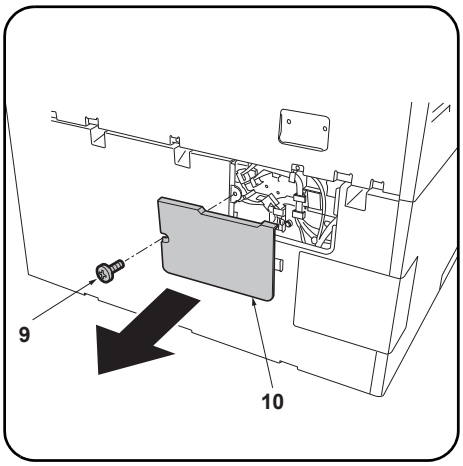

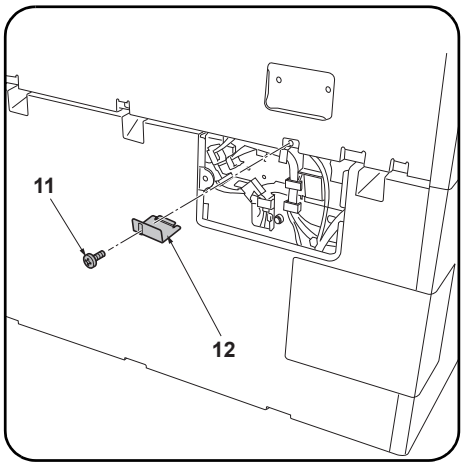

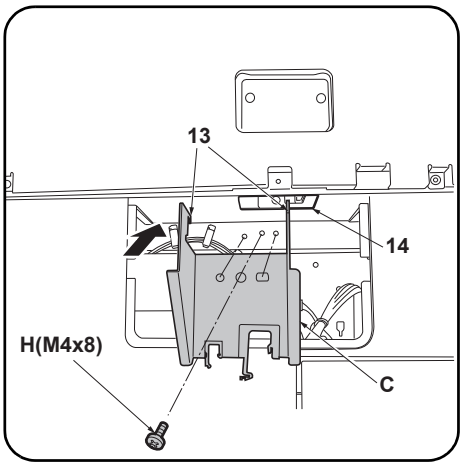

9. Remove the screw (9) in the rear of the paper feeder and remove the cover (10).

10. Remove the screw (11) to remove the metal plate (12).

11. Fit the hook (13) on the mounting plate (C) into the opening (14) and then align the 2 positioning projections.
12. Secure the mounting plate (C) with the S Tite screw M4 × 8 (H).

---

9. Déposer la vis (9) à l'arrière du chargeur de papier et déposer le couvercle (10).

10. Déposer la vis (11) pour enlever la plaque métallique (12).

11. Insérer le crochet (13) du plateau de montage (C) dans l'ouverture (14) et aligner les 2 saillies de positionnement.
12. Fixer le plateau de montage (C) avec la vis S Tite M4 × 8 (H).

---

9. Quite el tornillo (9) del lado trasero del depósito de papel y quite la cubierta (10).

10. Quite el tornillo (11) para desmontar la placa de metal (12).

11. Coloque el gancho (13) de la placa de montaje (C) en la abertura (14) y, después, alinee los 2 resaltos de posición.
12. Asegure la placa de montaje (C) con el tornillo S Tite M4 x 8 (H).

---

9. Die Schraube (9) an der Rückseite des Papiereinzugs entfernen und die Abdeckung (10) abnehmen.

10. Die Schraube (11) herausdrehen, um die Metallplatte (12) abzunehmen.

11. Den Haken (13) auf der Montageplatte (C) in die Öffnung (14) einpassen und dann die 2 Positionierungsnasen ausrichten.
12. Die Montageplatte (C) mit der S-Tite-Schraube M4 x 8 verwenden (H) befestigen.

---

9. Rimuovere la vite (9) nel retro dell'unità di alimentazione della carta e quindi rimuovere il coperchio (10).

10. Rimuovere la vite (11), per rimuovere la piastra di metallo (12).

11. Inserire il gancio (13) sulla piastra di montaggio (C) nell'apertura (14) e quindi allineare le 2 sporgenze di posizionamento.
12. Fissare la piastra di montaggio (C) con la vite S Tite M4 × 8 (H).

---

9. 拆除供纸工作台后部的 1 颗螺丝 (9)，拆下盖板 (10)。

10. 拆除 1 颗螺丝 (11)，拆下金属件 (12)。

11. 将安装板 (C) 的挂钩 (13) 挂在开口部 (14) 上，并与定位用的 2 处突出部对齐。
12. 使用 1 颗紧固型 S 螺丝 M4×8 (H) 来固定安装板 (C)。

---

9. 급지대 후면의 뒤쪽 나사 (9) 1 개를 제거하고 커버 (10) 를 떼어 냅니다 .

10. 나사 (11) 1 개를 제거하고 쇠 (12) 를 제거합니다 .

11. 부착판 (C) 의 후크 (13) 를 개구부 (14) 에 걸고 위치고정 돌기 2 곳을 맞춥니다 .
12. 나사 M4×8 S 타이트 (H) 1 개로 부착판 (C) 을 고정합니다 .

---

9. ペーパーフィーダー後側のビス (9)1 本を外し、カバー (10) を取り外す。

10. ビス (11)1 本を外し、金具 (12) を取り外す。

11. 取付板 (C) のフック (13) を開口部 (14) に引っ掛けてから、位置決めの突起 2 箇所を合わせる。
12. ビス M4×8 S タイト (H)1 本で取付板 (C) を固定する。

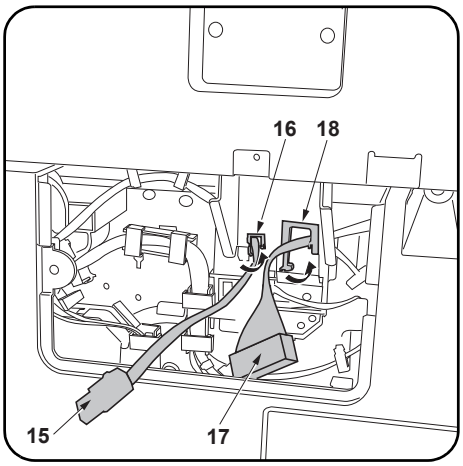

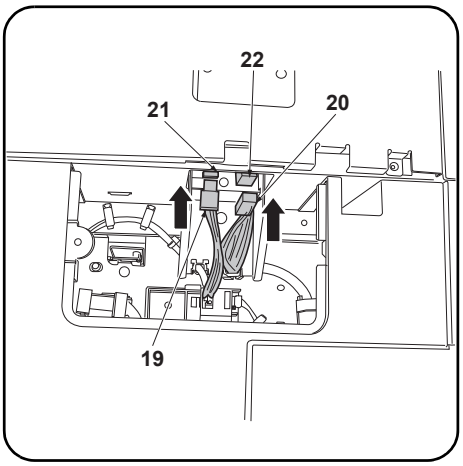

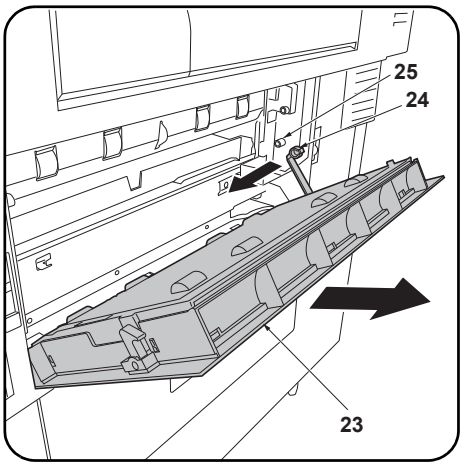

13. Pass the power cord (15) through the edging (small) (16) and the signal cable (17) through the edging (large) (18) and then close the edging

14. Connect the power cord (19) and the signal cable (20) to connectors (21) (22) respectively on the machine.

15. Replace the cover (10) using the screw (9) removed in step 9.

16. Open the lower right cover (23) on the machine.
Remove the strap (24) from the shaft (25) and remove lower right cover (23).

---

13. Faire passer le cordon d'alimentation (15) dans le (petit) passage (16) et le câble du signal (17) dans le (grand) passage (18) puis fermer le passage.

14. Raccorder respectivement le cordon d'alimentation (19) et le câble de signal (20) aux connecteurs (21) (22) de la machine.

15. Reposer le couvercle (10) à l'aide de la vis (9) déposée à l'étape 9.

16. Ouvrir le capot inférieur droit (23) de la machine.
Déposer la courroie (24) de l'arbre (25) et déposer le couvercle inférieur droit (23).

---

13. Pase el cable de alimentación (15) a través de la pestaña (pequeña) (16) y el cable de señales (17) a través de la pestaña (grande) (18) y, después, cierre la pestaña.

14. Conecte el cable de alimentación (19) y el cable de señal (20) a los conectores (21) (22) respectivamente de la máquina.

15. Vuelva a colocar la cubierta (10) usando el tornillo (9) quitado en el paso 9.

16. Abra la cubierta derecha inferior (23) de la máquina.
Quite la correa (24) del eje (25) y quite la cubierta frontal inferior (23).

---

13. Das Netzkabel (15) durch den Kantenschutz (klein) (16) und das Signalkabel (17) durch den Kantenschutz (groß) (18) führen und dann den Kantenschutz schließen.

14. Schließen Sie das Netzkabel (19) und das Signalkabel (20) an den entsprechenden Steckverbindern (21) (22) des Geräts an.

15. Die Abdeckung (10) mittels der in Schritt 9 entfernten Schraube (9) wieder anbringen.

16. Öffnen Sie die untere rechte Abdeckung (23) des Geräts.
Den Riemen (24) von der Welle (25) abnehmen und dann die untere rechte Abdeckung (23) abnehmen.

---

13. Passare il cavo di alimentazione (15) attraverso il bordo (piccolo) (16) e il cavo del segnale (17) attraverso il bordo (grande) (18), e quindi chiudere il bordo.

14. Collegare il cavo di alimentazione (19) e il cavo del segnale (20) ai connettori della macchina (21) e (22), rispettivamente.

15. Ricollocare il coperchio (10) utilizzando la vite (9) rimossa nel passo 9.

16. Aprire il pannello destro inferiore (23) sulla macchina.
Rimuovere la cinghietta (24) dall'asta (25) e quindi rimuovere il pannello destro inferiore (23).

---

13. 将 AC 电线（15）从束线孔（小）(16)，信号线（17）从束线孔（大）(18) 中分别穿过，关闭束线孔。

14. 将 AC 电线（19）以及信号线（20）分别与主机的接插件（21）、(22) 连接。

15. 使用在步骤 9 中拆除的 1 颗螺丝（9）按原样安装盖板（10）。

16. 打开机器的右下部盖板（23）。
将带子（24）从轴（25）上拆除，拆下右下部盖板（23）。

---

13. AC 전선 (15) 을 에징 (소) (16) 에 , 신호선 (17) 을 에징 (대) (18) 에 각각 지나가게 하고 에징을 닫습니다 .

14. 전원 코드 (19) 및 신호 케이블 (20) 을 본체 커넥터 (21), (22) 에 각각 연결합니다 .

15. 순서 9 에서 제거한 나사 (9) 1 개로 커버 (10) 를 원래대로 부착합니다 .

16. 본체의 오른쪽 하단 커버 (23) 를 엽니다 .
스트라프 (24) 를 축 (25) 에서 떼어내 오른쪽 아래 커버 (23) 를 제거합니다 .

---

13. AC 電線（15）をエッジング（小）(16) に、信号線（17）をエッジング（大）(18) にそれぞれ通し、エッジングを閉じる。

14. AC 電線（19）および信号線（20）を本体のコネクター (21)、(22) にそれぞれ接続する。

15. 手順 9 で取り外したビス（9）1 本でカバー（10）を元通りに取り付ける。

16. 機械本体の右下カバー (23) を開く。
ストラップ（24）を軸（25）から外し、右下カバー (23) を取り外す。

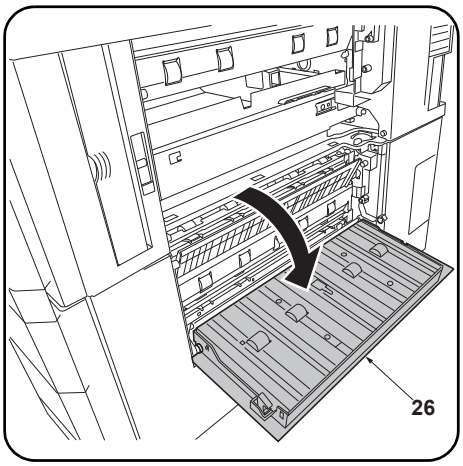

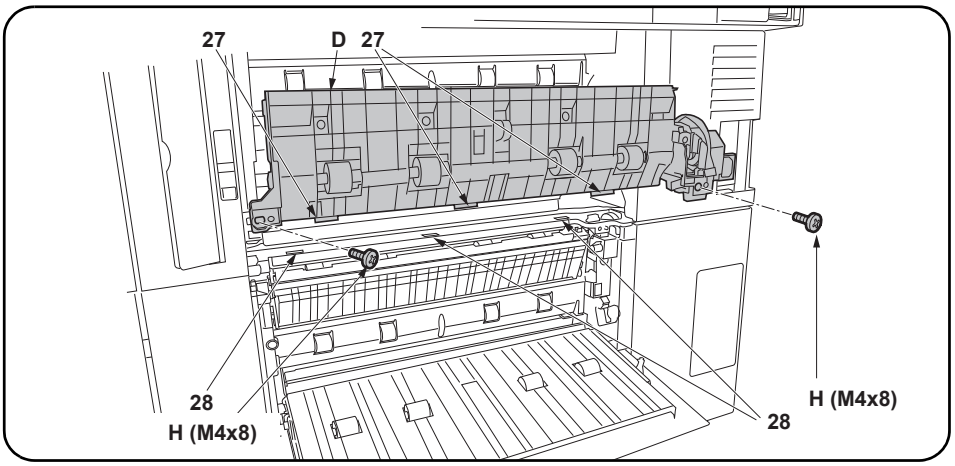

17. Open the paper feeder right cover (26).

18. Fit the 3 hooks (27) on the intermediate paper conveying unit (D) into the 3 holes (28) in the guide.

19. Secure the intermediate paper conveying unit (D) with the 2 S Tite screw M4 × 8 (H).

NOTICE

Be sure to use S Tite screw M4 × 8.

Using longer screws, such as S Tite screws M4 × 20, may damage wires.

---

17. Ouvrir le couvercle droit du chargeur de papier (26).

18. Insérer les 3 crochets (27) de l'unité de transport du papier intermédiaire (D) dans les 3 trous (28) du guide.

19. Fixer l'unite de transport du papier intermediaire (D) a l'aide des 2 Vis S Tite M4 × 8 (H).

REMARQUE

S'assurer d'utiliser la vis S Tite M4 × 8.

L'utilisation de vis plus longues, comme les vis S Tite M4 × 20, peut endommager les fils.

---

17. Abra la cubierta derecha del depósito de papel (26).

18. Coloque los 3 ganchos (27) de la unidad de transporte de papel intermedia (D) en los 3 orificios (28) de la guía.

19. Asegure la unidad de transporte de papel intermedia (D) con los 2 Tornillo S Tite M4 × 8 (H).

AVISO

Asegúrese de usar tornillos S Tite M4 x 8.

El uso de tornillos más largos, como tornillos S Tite M4 x 20, puede dañar los cables.

---

17. Die rechte Abdeckung (26) des Papiereinzugs öffnen.

18. Die 3 Haken (27) an der eingesetzten Papierfördereinheit (D) in die 3 Öffnungen (28) in der Führung einpassen.

19. Die eingesetzte Papierfordereinheit (D) mit den 2 S-Tite-Schraube M4 × 8 (H) sichern.

ANMERKUNG

Stellen Sie sicher, dass Sie die S-Tite-Schraube M4 x 8 verwenden.

Die Verwendung von längeren Schrauben als den S-Tite-Schrauben M4 x 20 kann Kabel beschädigen.

---

17. Aprire il pannello destro (26) dell'unità di alimentazione della carta.

18. Inserire i 3 ganci (27) sull'unità intermediale di trasporto carta (D) nei 3 fori (28) nella guida.

19. Fissare l'unita intermediale di trasporto carta (D) con le 2 Vite S Tite M4 × 8 (H).

AVVISO

Utilizzare solo la vite S Tite M4 × 8.

Se si utilizzano viti più lunghe, come le viti S Tite M4 × 20, si possono danneggiare i fili.

---

17. 打开供纸工作台的右部盖板 (26)。

18. 将中间搬运单元 (D) 的 3 个挂钩 (27) 嵌入导向板的 3 个孔 (28) 中。

19. 使用 2 颗紧固型 S 螺丝 M4×8(H) 来固定中间搬运单元 (D)。

注意

必须使用紧固型 S 螺丝 M4×8。

如使用长螺丝 (紧固型 S 螺丝 M4×20)，可能会使电线受到损伤。

---

17. 급지대 오른쪽 커버 (26) 를 엽니다 .

18. 중간반송유니트 (D) 의 후크 (27) 3 개를 가이드 구멍 (28) 3 곳에 꽂습니다 .

19. 나사 M4×8 S 타이트 (H) 2 개로 중간반송유니트 (D) 를 고정합니다 .

주의

반드시 나사 M4×8 S 타이트를 사용하십시오 .

더 긴 나사 (예 : 나사 M4×20 S 타이트) 를 사용할 경우 와이어가 손상될 수 있습니다 .

---

17. ペーパーフィーダーの右カバー(26) を開く。

18. 中間搬送ユニット (D) のフック (27)3 個をガイドの穴 (28)3 カ所にはめ込む。

19. ビス M4×8 S タイト (H)2 本で中間搬送ユニット (D) を固定する。

注意

必ずビス M4×8 S タイトを使用すること。

長いビス (M4×20 S タイト) を使用すると電線を傷付けることがあります。

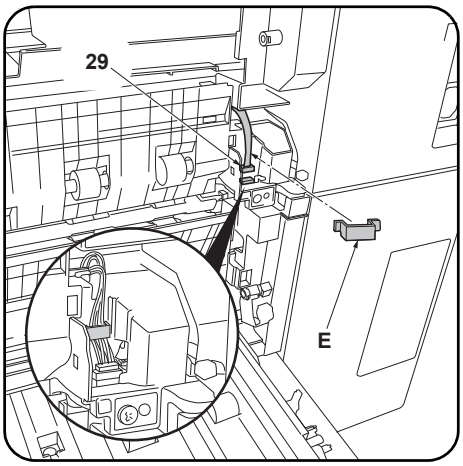

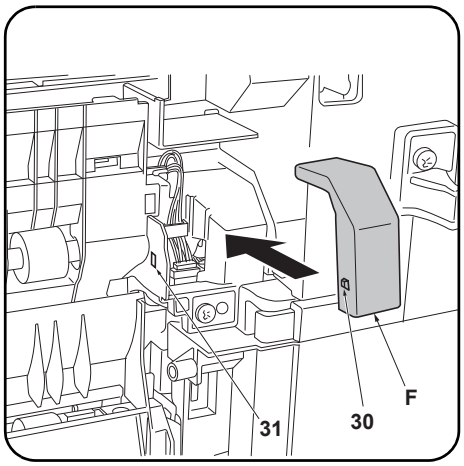

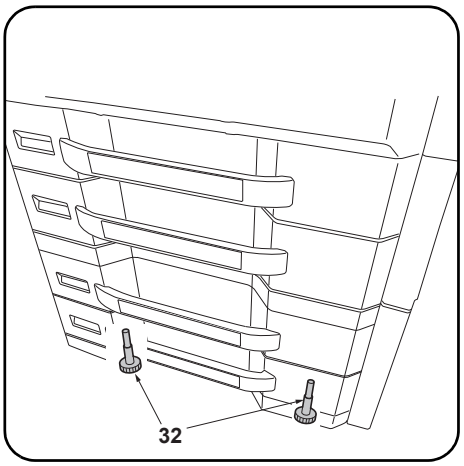

20. Connect the intermediate paper conveying unit connector (29).
21. Attach the clamp (E) and secure the connector wire.

22. Insert the projection (30) on the wire cover (F) into the hole (31) in the paper feeder and install the wire cover (F).
23. Close the paper feeder right cover (26) and replace the lower right cover (23) on the machine.

24. Turn the adjusters on each corner (32) until they reach the floor and then secure the paper feeder.

---

20. Raccorder le connecteur (29) de l'unité de transport du papier intermédiaire.
21. Monter le collier (E) et fixer le câble du connecteur.

22. Insérer la saillie (30) du couvercle du câble (F) dans le trou (31) du chargeur de papier et reposer le couvercle du câble (F).
23. Fermer le couvercle droit du chargeur de papier (26) et reposer le capot inférieur droit (23) sur la machine.

24. Faire tourner les dispositifs de réglage de chacun des coins (32) jusqu'à ce qu'ils touchent le sol et fixer ensuite le chargeur de papier.

---

20. Conecte el conector de la unidad de transporte de papel intermedia (29).
21. Fije el sujetador (E) y asegure el cable del conector.

22. Inserte el resalto (30) de la cubierta para el cable (F) en el orificio (31) del depósito de papel e instale la cubierta para el cable (F).
23. Cierre la cubierta derecha del depósito de papel (26) y vuelva a colocar la cubierta derecha inferior (23) en la máquina.

24. Gire los reguladores en cada esquina (32) hasta que lleguen al piso y, a continuación, asegure el depósito de papel.

---

20. Den Steckverbinder (29) der eingesetzten Papierfördereinheit anschließen.
21. Die Klemme (E) anbringen und das Kabel des Steckverbinders sichern.

22. Die Nase (30) der Kabelabdeckung (F) in die Öffnung (31) des Papiereinzugs einsetzen und die Kabelabdeckung (F) anbringen.
23. Schließen Sie die rechte Abdeckung (26) des Papiereinzugs und setzen Sie die untere rechte Abdeckung (23) wieder im Gerät ein.

24. Die Einsteller an jeder Ecke (32) drehen, bis sie den Boden berühren, und dann den Papiereinzug sichern.

---

20. Collegare il connettore (29) dell'unità intermediale di trasporto carta.
21. Applicare il morsetto (E) e fissare il cavo del connettore.

22. Inserire la sporgenza (30) del coperchio cavi (F) nel foro (31) nell'unità di alimentazione della carta ed installare il coperchio cavi (F).
23. Chiudere il pannello destro (26) dell'alimentatore carta e rimontare il pannello destro inferiore (23) sulla macchina.

24. Ruotare i regolatori (32) presenti su ciascun angolo finché vengano a contatto con il pavimento, e quindi fissare l'unità di alimentazione della carta.

---

20. 连接中间搬运单元的接插件 (29)。
21. 安装束线夹 (E)，以固定接插件电线。

22. 将电线盖板 (F) 的突出部 (30) 插入供纸工作台的孔 (31) 中，安装电线盖板 (F)。
23. 关闭供纸工作台的右部盖板 (26)，按原样安装机器的右下部盖板 (23)。

24. 转动四角上的调节器 (32) 直至与地面接触，然后再固定供纸工作台。

---

20. 중간반송유니트의 커넥터 (29) 를 접속합니다 .
21. 클램프 (E) 를 부착 , 커넥터 전선을 고정합니다 .

22. 전선커버 (F) 의 돌기 (30) 를 급지대의 구멍 (31) 에 넣고 전선커버 (F) 를 부착합니다 .
23. 급지대 오른쪽 커버 (26) 를 닫고 본체의 오른쪽 하단 커버 (23) 를 다시 부착합니다 .

24. 네 곳의 어져스터 (32) 를 맨 밑에 닿을 위치까지 돌려 급지대를 고정합니다 .

---

20. 中間搬送ユニットのコネクター(29) を接続する。
21. クランプ (E) を取り付け、コネクター電線を固定する。

22. 電線カバー(F) の突起 (30) をペーパーフィーダーの穴 (31) に入れて、電線カバー (F) を取り付ける。
23. ペーパーフィーダーの右カバー(26) を閉じ、機械本体の右下カバー(23) を元通りに取り付ける。

24. 四隅のアジャスター(32) を床に接触する位置まで回し、ペーパーフィーダーを固定する。

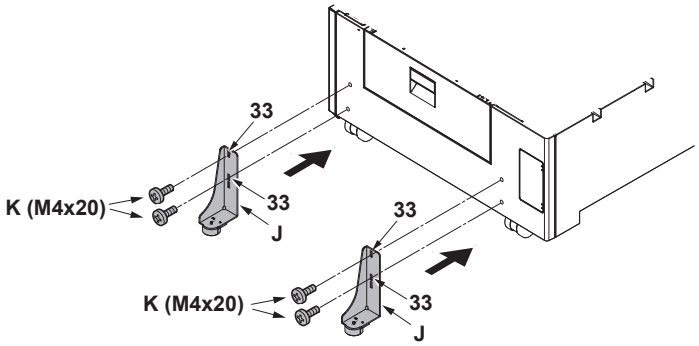

25. Select holes (33) and install each stopper (J) with 2 S Tite screws M4 × 20 (K) so that the stoppers will be grounded on the floor.

---

25. Sélectionner les trous (33) et installer chaque butée (J) avec 2 vis S Tite M4 × 20 (K) de sorte que les butées reposent sur le sol.

---

25. Seleccione los orificios (33) e instale cada tope (J) con los 2 tornillos S Tite M4 × 20 (K) de manera que los topes se conecten a tierra en el suelo.

---

25. Wählen Sie die Öffnungen (33) und befestigen Sie jeden Anschlag (J) mit den 2 S-Tite-Schrauben M4 × 20 (K) so an, dass die Anschläge am Boden aufsitzen.

---

25. Selezionare i fori (33) ed installare ogni fermo (J) con le 2 viti S Tite M4 × 20 (K) in modo che i fermi siano posti a terra sul pavimento.

---

25. 在孔（33）处各用 2 颗 M4×20 紧固型 S 螺丝（K）安装限位器（J），使之和地板接触。

---

25. 전도방지쇠 (J) 가 바닥면에 접지될 수 있도록 구멍 (33) 을 선택해 나사 M4×20 S 타이트 (K) 각 2 개로 설치합니다 .

---

25. 転倒防止金具 (J) が床面に接地するように、穴(33)を選択してビス M4×20 S タイト (K) 各 2 本で取り付ける。

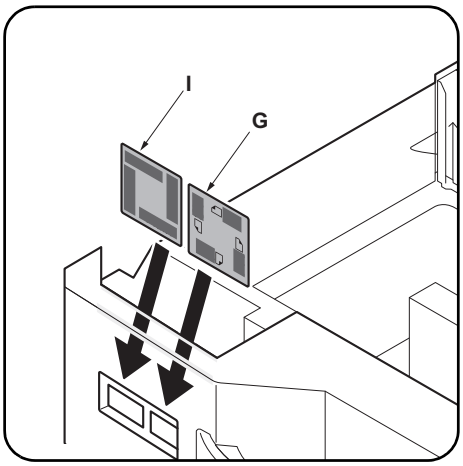

Setting the paper size plate and media type plate
Insert the paper size plate (G) and media type plate (I) into the each slots respectively.

Skewed paper feed adjustment
1. Connect the machine power plug to the wall outlet and turn the machine main power switch on.
2. Load paper into the cassette and make a test copy to check the image.
3. If the image is skewed (skewed paper feed), make the adjustments described below.
   <Reference value> Left-right difference of 1.5 mm or less

Disposition des plaquettes du format de papier et du type de support
Introduire la plaquette du format de papier (G) et la plaquette du type de support (I) dans leur logement respectif.

Réglage de l'entraînement du papier en biais
1. Insérer la fiche d'alimentation de la machine dans la prise murale et mettre la machine sous tension.
2. Mettre du papier dans le tiroir et effectuer une copie d'essai pour vérifier l'image.
3. Si l'image est en biais (entraînement du papier en biais), régler en procédant comme décrit ci-dessous.
   <Valeur de référence> Différence de droite à gauche de 1,5 mm ou moins.

Ajuste de la placa de tamaño de papel y la placa de tipo de medio
Inserte la placa de tamaño de papel (G) y la placa de tipo de medio (I) en cada uno de las ranuras, respectivamente.

Ajuste de alimentación de papel torcida
1. Conecte el enchufe de la máquina en el receptáculo de pared y encienda el interruptor principal de la máquina.
2. Introduzca papel en el cajón y haga una copia de prueba para verificar la imagen.
3. Si la imagen está torcida (alimentación del papel torcida) haga los ajustes que se describen a continuación.
   <Valor de referencia> diferencia izquierda-derecha de 1,5 mm o menor.

Einsetzen der Papierformatkarte und der Medientypkarte
Setzen Sie die Papierformatkarte (G) und die Medientypkarte (I) in die jeweiligen Führungen.

Einstellung bei verkantetem Papiereinzug
1. Stecken Sie den Netzstecker des Geräts in die Wandsteckdose und schalten Sie das Gerät am Hauptschalter ein.
2. Legen Sie Papier in die Papierlade ein und machen Sie eine Testkopie, um das Bild zu prüfen.
3. Nehmen Sie nachstehende Einstellungen vor, falls das Bild verkantet ist (verkanteter Papiereinzug).
   <Bezugswert> Links-rechts-Differenz maximal 1,5 mm.

Impostazione della piastra di formato carta e della piastra del tipo di supporto
Inserire la piastra del formato carta (G) e la piastra del tipo di supporto (I) nei rispettivi alloggiamenti.

Regolazione alimentazione obliqua carta
1. Collegare la spina della macchina alla presa di corrente a muro e accendere l'interruttore di alimentazione della macchina.
2. Caricare carta nel cassetto ed eseguire una copia di prova per controllare l'immagine.
3. Se l'immagine risulta obliqua (alimentazione obliqua della carta), eseguire le regolazioni descritte sotto.
   <Valore di riferimento> Differenza tra destra e sinistra di 1,5 mm o inferiore

---

纸张尺寸标识片和纸张种类标识片的安装
将纸张尺寸标识片（G）和纸张种类标识片（I）分别插入到图示的插槽中。

歪斜进纸调节
1. 将机器上的电源插头插入电源插座中，打开主电源开关。
2. 在纸盒中放入纸张。进行测试复印以确认图像。
3. 图像倾斜（歪斜进纸）时进行以下调节。
   ＜基准值＞左右差 1.5㎜ 以下

용지크기 플레이트와 용지종류 플레이트의 세트
용지크기 플레이트 (G) 와 용지종류 플레이트 (I) 를 각표시 슬롯에 각각 삽입한다 .

경사급지 조정
1. 본체 전원 플러그를 벽 콘센트에 연결하고 본체의 주 전원 스위치를 켭니다 .
2. 카세트에 용지를 장착합니다 . 시험복사를 하고 화상을 확인합니다 .
3. 화상이 기울어져 있는 (경사급지) 경우에는 다음 조정을 합니다 .
   ＜기준치＞ 좌우차 1.5mm 이하

用紙サイズプレートと用紙種類プレートのセット
用紙サイズプレート (G) と用紙種類プレート (I) を各表示スロットにそれぞれ挿入する。

斜め給紙調整
1. 機械本体の電源プラグをコンセントに差し込み、主電源スイッチを ON にする。
2. カセットに用紙をセットする。テストコピーをおこない、画像を確認する。
3. 画像が傾いている(斜め給紙)場合は次の調整をおこなう。
   ＜基準値＞左右差 1.5㎜ 以下

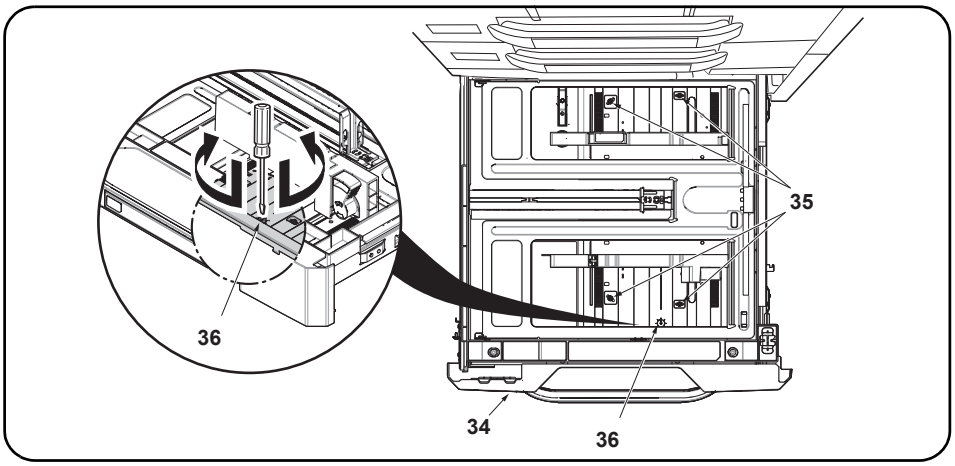

4. Pull out the cassette (34) in the paper feeder and loosen the 4 screws (35).
5. Turn the adjusting screw (36) to adjust the cursor skew.
6. Retighten the 4 screws (35).
7. Make another test copy to check the image.

---

4. Sortir le tiroir (34) du chargeur de papier et desserrer les 4 vis (35).
5. Faire tourner la vis de réglage (36) pour régler la déviation du curseur.
6. Resserrer les 4 vis (35).
7. Faire une autre copie d'essai pour vérifier l'image.

---

4. Extraiga el cajón (34) del depósito de papel y afloje los 4 tornillos (35).
5. Gire el tornillo de ajuste (36) para ajustar la desviación del cursor.
6. Vuelva a apretar los 4 tornillos (35).
7. Haga otra copia de prueba para verificar la imagen.

---

4. Ziehen Sie die Papierlade (34) aus dem Papiereinzug und lösen Sie die 4 Schrauben (35).
5. Drehen Sie die Einstellschraube (36), um die Cursor-Verkantung zu korrigieren.
6. Ziehen Sie die 4 Schrauben (35) wieder an
7. Erstellen Sie zur Überprüfung des Bilds noch einmal eine Testkopie.

---

4. Estrarre il cassetto (34) dell'unità di alimentazione della carta e quindi allentare le 4 viti (35).
5. Ruotare la vite di regolazione (36) per regolare l'inclinazione del cursore.
6. Ristringere le 4 viti (35).
7. Eseguire un'altra copia di prova per controllare l'immagine.

---

4. 拉出供纸盒（34），拧松 4 颗螺丝（35）。
5. 旋转调节螺丝（36），以调节游标的倾斜。
6. 拧紧 4 颗螺丝（35）。
7. 再次进行测试复印，确认图像。

---

4. 급지 카세트 (34) 를 빼 내어 나사 (35) 4 개를 느슨하게 합니다 .
5. 조정나사 (36) 을 돌려 커서 경사조정을 합니다 .
6. 나사 (35) 4 개를 조입니다 .
7. 다시 시험복사를 하고 화상을 확인합니다 .

---

4. ペーパーフィーダーのカセット（34）を引き出し、ビス（35）4 本を緩める。
5. 調整ネジ（36）を回し、カーソルの傾き調整をおこなう。
6. ビス（35）4 本を締め付ける。
7. 再度、テストコピーをおこない、画像を確認する。

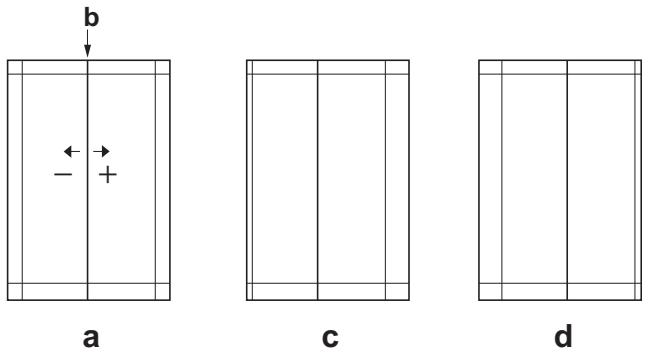

Adjusting the center line

The reference value for the center line is ±0.5 mm or less at position (b) in the correct image (a). If the center line position is outside this range, perform the following adjustment.

1. Set maintenance mode U034, select LSU Out Left and Cassette3 or Cassette4.
2. Adjust the values.
   Test pattern (c): Increase the setting value. Test pattern (d): Decrease the setting value.
3. Press the Start key to confirm the setting value.

Réglage de l'axe

La valeur de référence pour l'axe est de ±0,5 mm ou moins à la position (b) d'une image correcte (a). Si la position de l'axe est hors de cette plage, effectuez le réglage suivant.

1. Passer en mode maintenance U034, sélectionner LSU Out Left et Cassette3 ou Cassette4.
2. Régler les valeurs.
   Mire d' essai (c): Augmentez la valeur de réglage. Mire d' essai (d): Diminuez la valeur de réglage.
3. Appuyer sur la touche de Start pour confirmer la valeur de réglage.

Ajuste de la línea central

El valor de referencia de la línea central es de ±0,5 mm o menor, en la posición (b) de la imagen correcta (a). Si la posición de la línea central estuviera fuera de este rango, haga el siguiente ajuste.

1. Entre al modo de mantenimiento U034, seleccione LSU Out Left y Cassette3 o Cassette4.
2. Ajuste los valores.
   Patrón de prueba (c): Aumente el valor de configuración. Patrón de prueba (d): Reduzca el valor de configuración.
3. Pulse la tecla de Start para confirmar el valor de configuración.

Einstellen der Mittenlinie

Der Bezugswert für die Mittenlinie ist ±0,5 mm oder weniger an Position (b) des korrekten Bilds (a). Falls die Mittenlinie außerhalb dieses Bereichs liegt, ist folgende Einstellung vorzunehmen.

1. Schalten Sie in den Wartungsmodus U034, wählen Sie LSU Out Left und Cassette3 oder Cassette4.
2. Die Werte einstellen.
   Testmuster (c): Den Einstellwert erhöhen. Testmuster (d): Den Einstellwert verringern.
3. Den Einstellwert durch Drücken der Start-Taste bestätigen.

Regolazione della linea centrale

Il valore di riferimento per la linea centrale è ±0,5 mm o inferiore alla posizione (b) nell'immagine corretta (a). Se la posizione della linea centrale è all'infuori di questa gamma, effettuare la regolazione seguente.

1. Impostare la modalità manutenzione U034, selezionare LSU Out Left e Cassette3 o Cassette4.
2. Regolare i valori.
   Modello di prova (c): Aumentare il valore dell'impostazione. Modello di prova (d): Diminuire il valore dell'impostazione.
3. Premere il tasto di Start per confermare il valore dell'impostazione.

中心线调节

中心线的基准值在矫正图像 (a) 的 (b) 位置为 ±0.5mm 以内。超出该范围时，须进行以下调节。

1. 设置维护模式 U034，选择 LSU Out Left、Cassette3 或 Cassette4。
2. 调整设定值。
   测试图案 (c) ：调高设定值。 测试图案 (d) ：调低设定值。
3. 按 Start 键，以确定设定值。

센터라인 조정

센터라인은 적정화상 (a) 의 (b) 위치에서 기준치는 ±0.5mm 이내 . 여기에서 벗어나는 것은 이하의 조정을 합니다 .

1. 메인터넌스 모드 U034 를 세트하고 LSU Out Left, Cassette3 또는 Cassette4 를 선택합니다 .
2. 설정치를 조정합니다 .
   테트스 패턴 (c) :설정치를 높입니다 . 테스트 패턴 (d) :설정치를 내립니다 .
3. 시작키를 누르고 설정치를 확인합니다 .

センターライン調整

センターラインは、適正画像 (a) の (b) の位置で基準値は ±0.5mm 以内。これから外れるときは以下の調整をおこなう。

1. メンテナンスモード U034 をセットし、LSU Out Left、Cassette3 または Cassette4 を選択する。
2. 設定値を調整する。
   テストパターン (c) :設定値を上げる。 テストパターン (d) :設定値を下げる。
3. スタートキーを押し、設定値を確定する。

INSTALLATION GUIDE FOR LARGE CAPACITY FEEDER

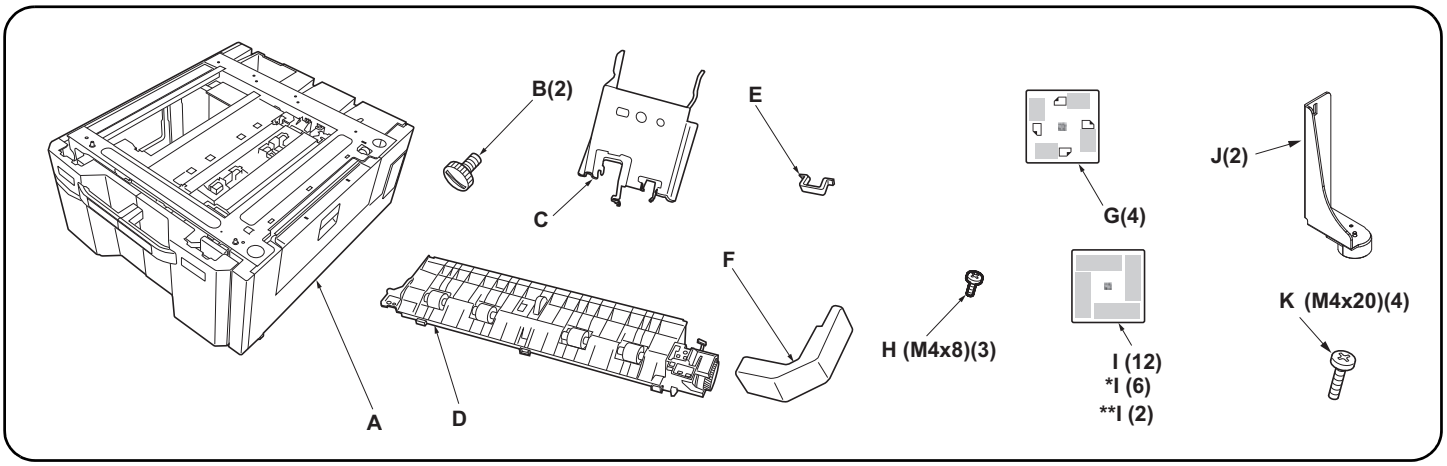

English

Supplied parts

A. Paper feeder 1
B. Pin 2
C. Retainer 1
D. Intermediate paper conveying unit 1
E. Clamp 1
F. Wire cover 1
G. Paper size plate 4
H. S Tite screw M4 × 8 3
I. Media type plate(except for 120V model) 12
***I.** Media type plate(120V model only) 6
J. Stopper 2
K. S Tite screws M4 × 20 4

Be sure to remove any tape and/or cushioning materials from the parts supplied.

Français

Pièces fournies

A. Chargeur de papier 1
B. Broche 2
C. Élément de retenue 1
D. Unité de transport du papier intermédiaire 1
E. Collier 1
F. Couvercle de câble 1
G. Plaquette du format de papier 4
H. Vis S Tite M4 × 8 3
I. Plaquette du type de support 12
J. Butée 2
K. Vis S Tite M4 × 20 4

Veillez à retirer les morceaux de bande adhésive et/ou les matériaux de rembourrage des pièces fournies.

Español

Partes suministradas

A. Depósito de papel 1
B. Clavija 2
C. Retén 1
D. Unidad de transporte de papel intermedia. 1
E. Sujetador 1
F. Cubierta para el cable 1
G. Placa de tamaño de papel 4
H. Tornillo S Tite M4 × 8 3
I. Placa de tipo de medio 12
J. Tope 2
K. Tornillos S Tite M4 × 20 4

Asegúrese de despegar todas las cintas y/o material amortiguador de las partes suministradas.

Deutsch

Enthaltene Teile

A. Papiereinzug 1
B. Stift 2
C. Halterung 1
D. Eingesetzte Papierfördereinheit 1
E. Klemme 1
F. Kabelabdeckung 1
G. Papierformatkarte 4
H. S-Tite-Schraube M4 × 8 3
I. Medientypkarte 12
J. Anschlag 2
K. S-Tite-Schrauben M4 × 20 4

Stellen Sie sicher, dass sämtliche Klebebänder und/oder Polstermaterial von den gelieferten Teilen entfernt wurden.

Italiano

Parti fornite

A. Unità di alimentazione della carta 1
B. Perno 2
C. Fermo 1
D. Unità intermediale di trasporto carta 1
E. Morsetto 1
F. Coperchio cavi 1
G. Piastra formato carta 4
H. Vite S Tite M4 × 8 3
I. Piastra tipo carta 12
J. Fermo 2
K. Vite S Tite M4 × 20 4

Rimuovere tutti i nastri adesivi e/o i materiali di protezione dalle parti fornite.

简体中文

附属品

A. 供纸工作台 1
B. 固定插销 2
C. 安装板 1
D. 中间搬运单元 1
E. 束线夹 1
F. 电线盖板 1
G. 纸张尺寸标识片 4
H. 紧固型 S 螺丝 M4×8 3
**I. 纸张种类标识片 2
J. 限位器 2
K. 紧固型 S 螺丝 M4×20 4

如果附属品上带有固定胶带，缓冲材料时务必揭下。

한국어

동봉품

A. 급지대 1
B. 핀 2
C. 부착판 1
D. 중간반송유니트 1
E. 크램프 1
F. 전선커버 1
G. 용지크기 플레이트 4
H. 나사 M4×8 S 타이트 3
**I. 용지종류 플레이트 2
J. 전도방지쇠 2
K. 나사 M4×20 S 타이트 4

동봉품에 고정 테이프 , 완충재가 붙어 있는 경우에는 반드시 제거할 것 .

日本語

同梱品

A. ペーパーフィーダ 1
B. ピン 2
C. 取付板 1
D. 中間搬送ユニット 1
E. クランプ 1
F. 電線カバー 1
G. 用紙サイズプレート 4
H. ビス M4×8 S タイト 3
**I. 用紙種類プレート 2
J. 転倒防止金具 2
K. ビス M4×20 S タイト 4

同梱品に固定テープ、緩衝材が付いている場合は必ず取り外すこと。

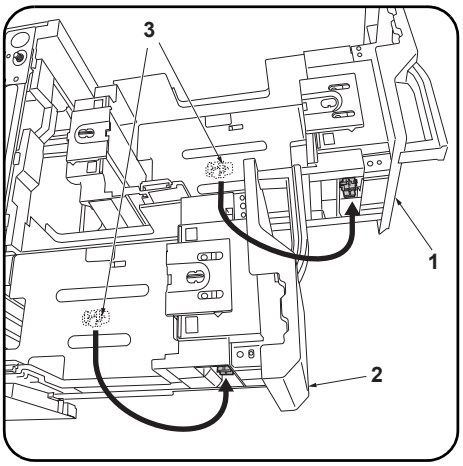

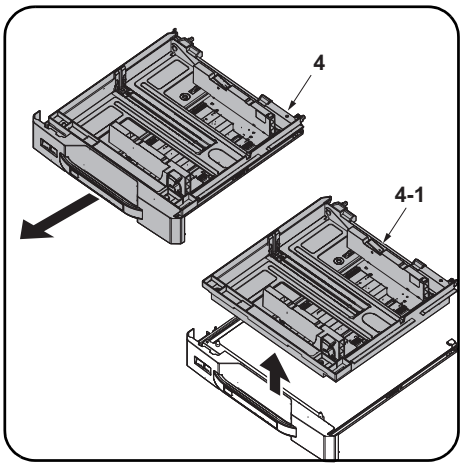

Procedure
Before starting installation, be sure to turn the main power switch of the machine off, and unplug the power plug from the wall outlet.

1. Pull out the right cassette (1) and the left cassette (2) from the paper feeder (A). Remove the lift plate stopper (3) from each cassette and attach it to the storage location.
2. Gently close each cassette.
3. Pull out the lower paper cassette (4) from the machine.
4. Remove the paper cassette (4-1).

Procédure
Avant de commencer l'installation, s'assurer de mettre la machine hors tension et de débrancher la fiche d'alimentation de la prise murale.

1. Sortez le magasin droit (1) et le magasin gauche (2) du chargeur de papier (A). Retirez la butée de la plaque de levage (3) de chaque magasin et fixez-la dans l'emplacement de stockage.
2. Refermer progressivement chaque tiroir.
3. Sortez le magasin de papier inférieur (4) de la machine.
4. Retirez le magasin de papier (4-1).

Procedimiento
Antes de iniciar la instalación, asegúrese de apagar el interruptor de encendido de la máquina y desenchufar el cable de alimentación de la toma de pared.

1. Extraiga el depósito derecho (1) y el depósito izquierdo (2) del depósito de papel (A). Quite el tope de placa de elevación (3) de cada depósito y póngalo en el espacio reservado para guardarlo.
2. Cierre suavemente cada bandeja.
3. Extraiga el depósito inferior (4) de la máquina.
4. Quite el depósito de papel (4-1).

Verfahren
Bevor Sie mit der Installation beginnen überzeugen Sie sich, dass der Netzschalter des Geräts ausgeschaltet und das Stromkabel aus der Steckdose gezogen ist.

1. Ziehen Sie die rechte Kassette (1) und die linke Kassette (2) aus dem Papiereinzug (A) heraus. Entfernen Sie die Verriegelung des Papierlifts (3) aus jeder Kassette und setzen Sie die Verriegelung in die Parkposition ein.
2. Alle Kassetten sachte schließen.
3. Ziehen Sie die untere Kassette (4) aus dem Gerät heraus.
4. Nehmen Sie die Papierkassette (4-1) heraus.

Procedura
Prima di iniziare l'installazione, spegnere la macchina e scollegare la spina dalla presa di corrente.

1. Estrarre il cassetto destro (1) e il cassetto sinistro (2) dall'unità di alimentazione carta (A). Rimuovere il fermo della piastra di sollevamento (3) da ogni cassetto e fissarlo sulla posizione a riposo.
2. Chiudere delicatamente ciascun cassetto.
3. Estrarre il cassetto carta inferiore (4) dalla macchina.
4. Nehmen Sie die Papierkassette (4-1) heraus.

安装步骤
安装前务必关闭机器的主电源开关，并从墙壁插座拔下电源插头。

1. 拉出供纸工作台 (A) 的右侧供纸盒 (1) 以及左侧供纸盒 (2)。拆下各 1 个升降板限位器 (3)，并安装在保管场所上。
2. 轻轻地推入各供纸盒。
3. 拉出机器主机的下部供纸盒 (4)。
4. 取下纸盒 (4-1)。

설치순서
설치를 시작하기 전에 반드시 본체의 주 전원 스위치를 끄고 벽 콘센트에서 전원 플러그를 분리하십시오 .

1. 급지대 (A) 의 카세트 오른쪽 (1) 및 카세트 왼쪽 (2) 을 꺼내니다 . 리프트판 스토퍼 (3) 각 1 개를 제거하고 보관장소에 부착합니다 .
2. 각 카세트를 조용히 밀어 넣습니다 .
3. 본체의 하단 용지 카세트 (4) 를 빼냅니다 .
4. 용지 카세트 (4-1) 를 제거합니다 .

取付手順
必ず機械本体の主電源スイッチを OFF にし、機械本体の電源プラグを抜いてから作業すること。

1. ペーパーフィーダー(A) のカセット右 (1) およびカセット左 (2) を引き出す。リフト板ストッパー(3) 各 1 個を取り外し、保管場所に取り付ける。
2. 各カセットを静かに押し込む。
3. 機械本体の下段カセット (4) を引き出す。
4. カセット (4-1) を取り外す。

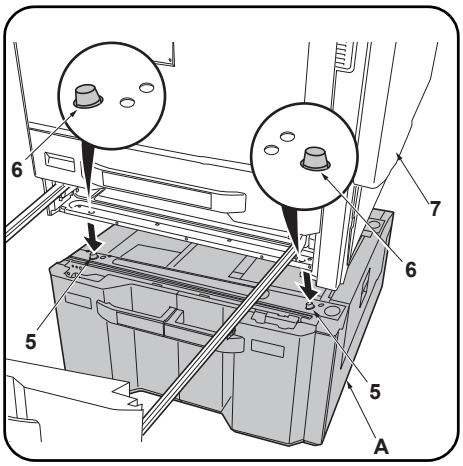

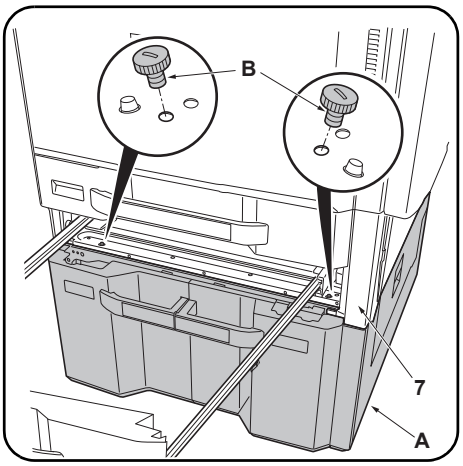

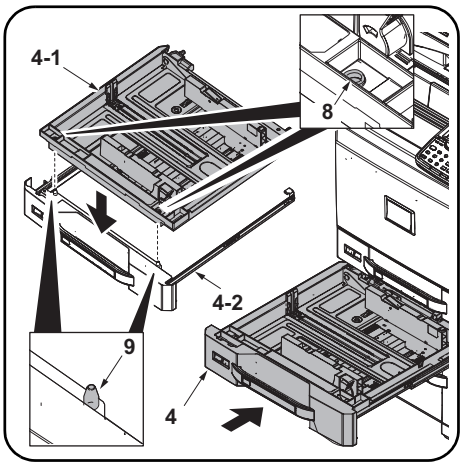

5. Place the machine (7) on the paper feeder (A) so that the pins (5) at the front left and front right of the paper feeder (A) are aligned with the holes (6) in the base of the machine.

6. Secure the machine (7) to the paper feeder (A) with the 2 pins (B).

7. Align the holes (8) of the lower cassette (4-1) for the machine with the pins (9) in the cassette slider (4-2). Put the paper cassette (4-1).

8. Push the lower paper cassette (4) in fully.

---

5. Monter la machine (7) sur le chargeur de papier (A) de sorte que les broches (5) à l'avant gauche et à l'avant droit du chargeur de papier (A) soient alignés avec les trous (6) dans la base du machine.

6. Fixer la machine (7) au chargeur de papier (A) avec les 2 broches (B).

7. Alignez les trous (8) du magasin inférieur (4-1) pour la machine avec les ergots (9) dans le tiroir du magasin (4-2). Placez le magasin de papier (4-1).

8. Enfoncez à fond le magasin de papier inférieur (4).

---

5. Coloque la máquina (7) sobre el depósito de papel (A) de forma que los pasadores (5) en los lados frontales izquierdo y derecho del depósito de papel (A) estén alineados con los orificios (6) de la base de la máquina.

6. Fije la máquina (7) al depósito de papel (A) con los dos pasadores (B).

7. Alinee los orificios (8) del depósito inferior (4-1) de la máquina con los pasadores (9) del deslizador del depósito (4-2). Coloque el depósito de papel (4-1).

8. Ejerza presión sobre el depósito de papel inferior (4) hasta introducirlo por completo.

---

5. Setzen Sie das Gerät (7) so auf den Papiereinzug (A), dass die Stifte (5) vorne links und vorne rechts am Papiereinzug (A) auf die Öffnungen (6) im Boden des Geräts ausgerichtet sind.

6. Sichern Sie das Gerät (7) mit den 2 Stiften (B) am Papiereinzug (A).

7. Richten Sie die Löcher (8) der Kassette (4-1) des Geräts mit den Stiften (9) im Kassettenanschlag (4-2) aus. Setzen Sie die Papierkassette (4-1) wieder ein.

8. Schieben Sie die Papierkassette (4) bis zum Anschlag ein.

---

5. Posizionare la macchina (7) sull'alimentatore carta (A) in modo che i perni (5) sul lato destro e sinistro anteriore dell'alimentatore carta (A) siano allineati con i fori (6) presenti sulla base della macchina.

6. Fissare la macchina (7) sull'alimentatore carta (A) con i 2 perni (B).

7. Allineare i fori (8) del cassetto inferiore (4-1) per la macchina con perni (9) della guida cassetto (4-2). Inserire il cassetto carta (4-1).

8. Spingere il cassetto carta inferiore (4) fino in fondo.

---

5. 供纸工作台 (A) 的左右前面的各插销 (5) 分别对准机器 主机底面的孔 (6) 后，将机器主机 (7) 放在供纸工作台 (A) 上。

6. 用 2 个固定插销 (B) 将机器主机 (7) 固定在供纸工作台 (A) 上。

7. 将机器下部供纸盒 (4-1) 的孔 (8) 和供纸盒导轨 (4-2) 的插销 (9) 对齐。 放置纸盒 (4-1)。

8. 完全推入下部供纸盒 (4)。

---

5. 급지대 (A) 의 전면 좌측과 전면 우측에 있는 각 핀 (5) 이 본체의 바닥면에 있는 구멍 (6) 에 맞도록 본체 (7) 를 급지대 (A) 위에 놓습니다 .

6. 핀 (B) 2 개로 본체 (7) 를 급지대 (A) 에 고정합니다 .

7. 본체의 하단 용지 카세트 (4-1) 의 구멍 (8) 과 카세트 슬라이더 (4-2) 의 핀 (9) 을 맞춥니다 . 용지 카세트 (4-1) 를 배치합니다 .

8. 하단 용지 카세트 (4) 를 완전히 밀어 넣습니다 .

---

5. ペーパーフィーダー(A) の左右前方の各ピン (5) と機械本体のベースの穴 (6) が合うように、ペーパーフィーダー(A) に機械本体 (7) を載せる。

6. ピン (B) 2 本で機械本体 (7) をペーパーフィーダー(A) に固定する。

7. 機械本体の下段カセット (4-1) の穴 (8) とカセットスライダー(4-2) のピン (9) を合わせる。カセット (4-1) を置く。

8. 下段カセット (4) を奥まで押し込む。

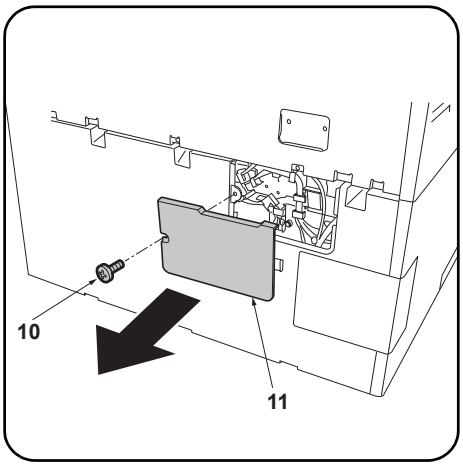

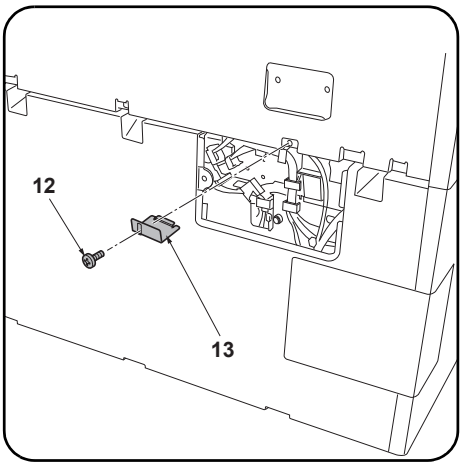

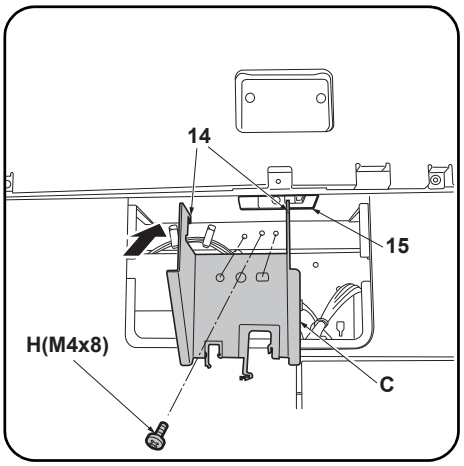

9. Remove the screw (10) in the rear of the paper feeder and remove the cover (11).

10. Remove the screw (12) to remove the metal plate (13).

11. Fit the hook (14) on the mounting plate (C) into the opening (15) and then align the 2 positioning projections.

12. Secure the mounting plate (C) with the S Tite screw M4 × 8 (H).

---

9. Déposer la vis (10) à l'arrière du chargeur de papier et déposer le couvercle (11).

10. Déposer la vis (12) pour enlever la plaque métallique (13).

11. Insérer le crochet (14) du p5ateau de montage (C) dans l'ouverture (15) et aligner les 2 saillies de positionnement.

12. Fixer le plateau de montage (C) avec la vis S Tite M4 × 8 (H).

---

9. Quite el tornillo (10) del lado trasero del depósito de papel y quite la cubierta (11).

10. Quite el tornillo (12) para desmontar la placa de metal (13).

11. Coloque el gancho (14) de la placa de montaje (C) en la abertura (15) y, después, alinee los 2 resaltos de posición.

12. Asegure la placa de montaje (C) con el tornillo S Tite M4 x 8 (H).

---

9. Die Schraube (10) an der Rückseite des Papiereinzugs entfernen und die Abdeckung (11) abnehmen.

10. Die Schraube (12) herausdrehen, um die Metallplatte (13) abzunehmen.

11. Den Haken (14) auf der Montageplatte (C) in die Öffnung (15) einpassen und dann die 2 Positionierungsnasen ausrichten.

12. Die Montageplatte (C) mit der S-Tite-Schraube M4 x 8 verwenden (H) befestigen.

---

9. Rimuovere la vite (10) nel retro dell'unità di alimentazione della carta e quindi rimuovere il coperchio (11).

10. Rimuovere la vite (12), per rimuovere la piastra di metallo (13).

11. Inserire il gancio (14) sulla piastra di montaggio (C) nell'apertura (15) e quindi allineare le 2 sporgenze di posizionamento.

12. Fissare la piastra di montaggio (C) con la vite S Tite M4×8 (H).

---

9. 拆除供纸工作台后部的 1 颗螺丝 (10)，拆下盖板 (11) 。

10. 拆除 1 颗螺丝 (12)，拆下金属件 (13)。

11. 将安装板 (C) 的挂钩 (14) 挂在开口部 (15) 上，并与定位用的 2 处突出部对齐。

12. 使用 1 颗紧固型 S 螺丝 M4×8 (H) 来固定安装板 (C)。

---

9. 급지대 후면의 뒤쪽 나사 (10) 1 개를 제거하고 커버 (11) 를 떼어 냅니다 .

10. 나사 (12) 1 개를 제거하고 쇠 (13) 를 제거합니다 .

11. 부착판 (C) 의 후크 (14) 를 개구부 (15) 에 걸고 위치고정 돌기 2 곳을 맞춥니다 .

12. 나사 M4×8 S 타이트 (H) 1 개로 부착판 (C) 을 고정합니다 .

---

9. ペーパーフィーダー後側のビス (10) 1 本を外し、カバー (11) を取り外す。

10. ビス (12) 1 本を外し、金具 (13) を取り外す。

11. 取付板 (C) のフック (14) を開口部 (15) に引っ掛けてから、位置決めの突起 2 箇所を合わせる。

12. ビス M4×8 S タイト (H) 1 本で取付板 (C) を固定する。

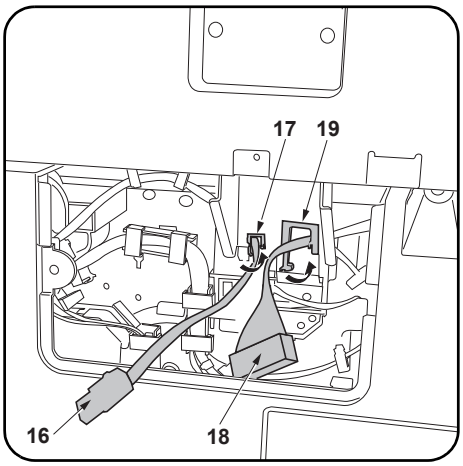

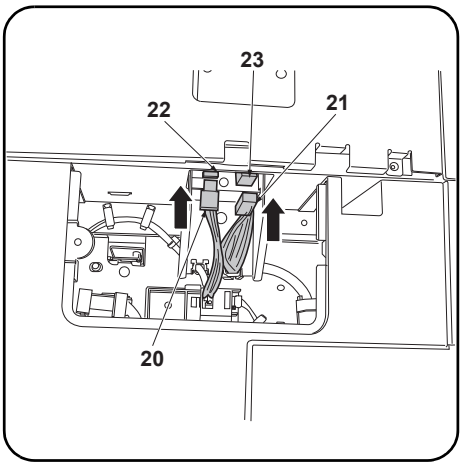

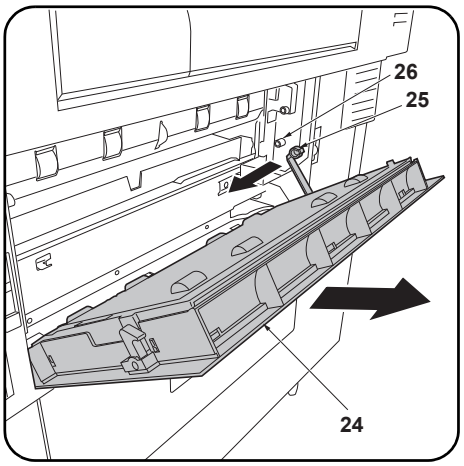

13. Pass the power cord (16) through the edging (small) (17) and the signal cable (18) through the edging (large) (19) and then close the edging

14. Connect the power cord (20) and the signal cable (21) to connectors (22) (23) respectively on the machine.

15. Replace the cover (11) using the screw (10) removed in step 9.

16. Open the lower right cover (24) on the machine.
Remove the strap (25) from the shaft (26) and remove lower right cover (24).

---

13. Faire passer le cordon d'alimentation (16) dans le (petit) passage (17) et le câble du signal (18) dans le (grand) passage (19) puis fermer le passage.

14. Raccorder respectivement le cordon d'alimentation (20) et le câble de signal (21) aux connecteurs (22) (23) de la machine.

15. Reposer le couvercle (11) à l'aide de la vis (10) déposée à l'étape 9.

16. Ouvrir le capot inférieur droit (24) de la machine.
Déposer la courroie (25) de l'arbre (26) et déposer le couvercle inférieur droit (24).

---

13. Pase el cable de alimentación (16) a través de la pestaña (pequeña) (17) y el cable de señales (18) a través de la pestaña (grande) (19) y, después, cierre la pestaña.

14. Conecte el cable de alimentación (20) y el cable de señal (21) a los conectores (22) (23) respectivamente de la máquina.

15. Vuelva a colocar la cubierta (11) usando el tornillo (10) quitado en el paso 9.

16. Abra la cubierta derecha inferior (24) de la máquina.
Quite la correa (25) del eje (26) y quite la cubierta frontal inferior (24).

---

13. Das Netzkabel (16) durch den Kantenschutz (klein) (17) und das Signalkabel (18) durch den Kantenschutz (groß) (19) führen und dann den Kantenschutz schließen.

14. Schließen Sie das Netzkabel (20) und das Signalkabel (21) an den entsprechenden Steckverbindern (22) (23) des Geräts an.

15. Die Abdeckung (11) mittels der in Schritt 9 entfernten Schraube (10) wieder anbringen.

16. Öffnen Sie die untere rechte Abdeckung (24) des Geräts.
Den Riemen (25) von der Welle (26) abnehmen und dann die untere rechte Abdeckung (24) abnehmen.

---

13. Passare il cavo di alimentazione (16) attraverso il bordo (piccolo) (17) e il cavo del segnale (18) attraverso il bordo (grande) (19), e quindi chiudere il bordo.

14. Collegare il cavo di alimentazione (20) e il cavo del segnale (21) ai connettori della macchina (22) e (23), rispettivamente.

15. Ricollocare il coperchio (11) utilizzando la vite (10) rimossa nel passo 9.

16. Aprire il pannello destro inferiore (24) sulla macchina.
Rimuovere la cinghietta (25) dall'asta (26) e quindi rimuovere il pannello destro inferiore (24).

---

13. 将 AC 电线 (16) 从束线孔 （小）(17)，信号线 (18) 从束线孔 （大）(19) 中分别穿过，关闭束线孔 。

14. 将 AC 电线 (20) 以及信号线 (21) 分别与主机的接插件 (22)、(23) 连接。

15. 使用在步骤 9 中拆除的 1 颗螺丝 (10) 按原样安装盖板 (11)。

16. 打开机器主机的右下部盖板 (24)。
将带子 (25) 从轴 (26) 上拆除，拆下右下部盖板 (24)。

---

13. AC 전선 (16) 을 에징 (소) (17) 에 , 신호선 (18) 을 에징 (대) (19) 에 각각 지나가게 하고 에징을 닫습니다 .

14. 전원 코드 (20) 및 신호 케이블 (21) 을 본체 커넥터 (22), (23) 에 각각 연결합니다 .

15. 순서 9 에서 제거한 나사 (10) 1 개로 커버 (11) 를 원래대로 부착합니다 .

16. 본체의 오른쪽 하단 커버 (24) 를 엽니다 .
스트라프 (25) 를 축 (26) 에서 떼어내 오른쪽 아래 커버 (24) 를 제거합니다 .

---

13. AC 電線 (16) をエッジング (小) (17) に、信号線 (18) をエッジング (大) (19) にそれぞれ通し、エッジングを閉じる。

14. AC 電線 (20) および信号線 (21) を本体のコネクター (22)、(23) にそれぞれ接続する。

15. 手順 9 で取り外したビス (10) 1 本でカバー (11) を元通りに取り付ける。

16. 機械本体の右下カバー (24) を開く。
ストラップ (25) を軸 (26) から外し、右下カバー (24) を取り外す。

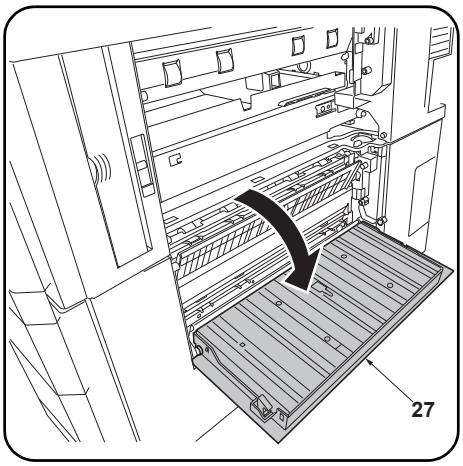

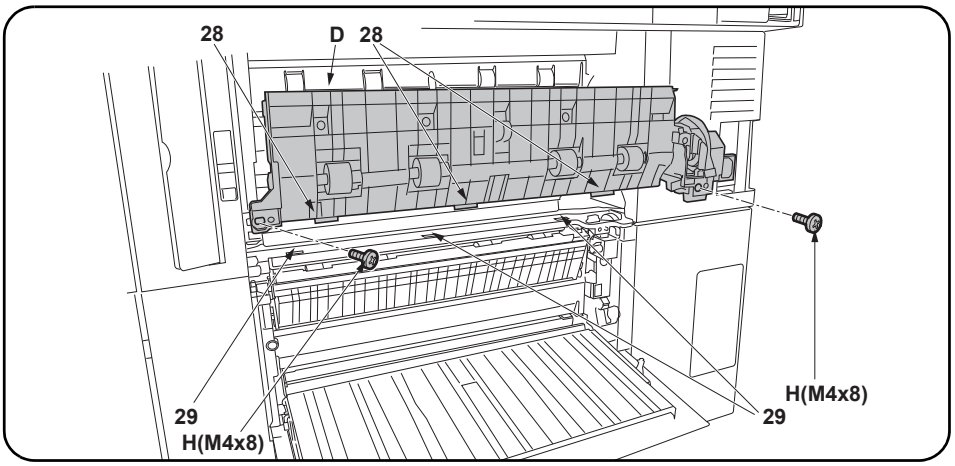

17. Open the paper feeder right cover (27).

18. Fit the 3 hooks (28) on the intermediate paper conveying unit (D) into the 3 holes (29) in the guide.

19. Secure the intermediate paper conveying unit (D) with the 2 S Tite screw M4 × 8 (H).

NOTICE

Be sure to use S Tite screw M4 × 8.

Using longer screws, such as S Tite screws M4 × 20, may damage wires.

---

17. Ouvrir le couvercle droit du chargeur de papier (27).

18. Insérer les 3 crochets (28) de l'unité de transport du papier intermédiaire (D) dans les 3 trous (29) du guide.

19. Fixer l'unite de transport du papier intermediaire (D) a l'aide des 2 Vis S Tite M4 × 8 (H).

REMARQUE

S'assurer d'utiliser la vis S Tite M4 × 8.

L'utilisation de vis plus longues, comme les vis S Tite M4 × 20, peut endommager les fils.

---

17. Abra la cubierta derecha del depósito de papel (27).

18. Coloque los 3 ganchos (28) de la unidad de transporte de papel intermedia (D) en los 3 orificios (29) de la guía.

19. Asegure la unidad de transporte de papel intermedia (D) con los 2 Tornillo S Tite M4 × 8 (H).

AVISO

Asegúrese de usar tornillos S Tite M4 x 8.

El uso de tornillos más largos, como tornillos S Tite M4 x 20, puede dañar los cables.

---

17. Die rechte Abdeckung (27) des Papiereinzugs öffnen.

18. Die 3 Haken (28) an der eingesetzten Papierfördereinheit (D) in die 3 Öffnungen (29) in der Führung einpassen.

19. Die eingesetzte Papierfordereinheit (D) mit den 2 S-Tite-Schraube M4 × 8 (H) sichern.

ANMERKUNG

Stellen Sie sicher, dass Sie die S-Tite-Schraube M4 x 8 verwenden.

Die Verwendung von längeren Schrauben als den S-Tite-Schrauben M4 x 20 kann Kabel beschädigen.

---

17. Aprire il pannello destro (27) dell'unità di alimentazione della carta.

18. Inserire i 3 ganci (28) sull'unità intermediale di trasporto carta (D) nei 3 fori (29) nella guida.

19. Fissare l'unita intermediale di trasporto carta (D) con le 2 Vite S Tite M4 × 8 (H).

AVVISO

Utilizzare solo la vite S Tite M4 × 8.

Se si utilizzano viti più lunghe, come le viti S Tite M4 × 20, si possono danneggiare i fili.

---

17. 打开供纸工作台的右部盖板 (27)。

18. 将中间搬运单元 (D) 的 3 个挂钩 (28) 嵌入导向板的 3 个孔 (29) 中。

19. 使用 2 颗紧固型 S 螺丝 M4×8(H) 来固定中间搬运单元 (D)。

注意

必须使用紧固型 S 螺丝 M4×8。

如使用长螺丝 (紧固型 S 螺丝 M4×20)，可能会使电线受到损伤。

---

17. 급지대 오른쪽 커버 (27) 를 엽니다 .

18. 중간반송유니트 (D) 의 후크 (28) 3 개를 가이드 구멍 (29) 3 곳에 꽂습니다 .

19. 나사 M4×8 S 타이트 (H) 2 개로 중간반송유니트 (D) 를 고정합니다 .

주의

반드시 나사 M4×8 S 타이트를 사용하십시오 .

더 긴 나사 (예 : 나사 M4×20 S 타이트) 를 사용할 경우 와이어가 손상될 수 있습니다 .

---

17. ペーパーフィーダーの右カバー(27) を開く。

18. 中間搬送ユニット (D) のフック (28)3 個をガイドの穴 (29)3 カ所にはめ込む。

19. ビス M4×8 S タイト (H)2 本で中間搬送ユニット (D) を固定する。

注意

必ずビス M4×8 S タイトを使用すること。

長いビス (M4×20 S タイト) を使用すると電線を傷付けることがあります。

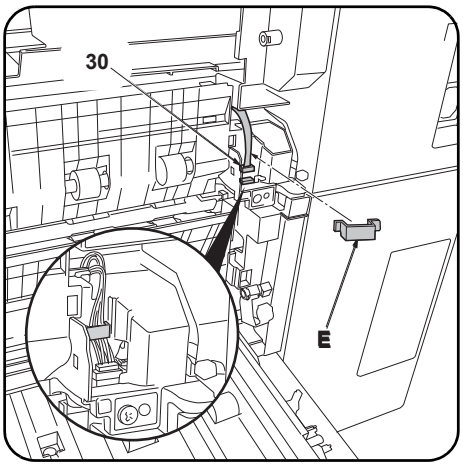

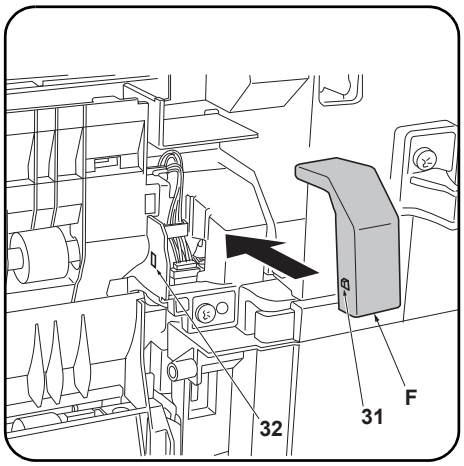

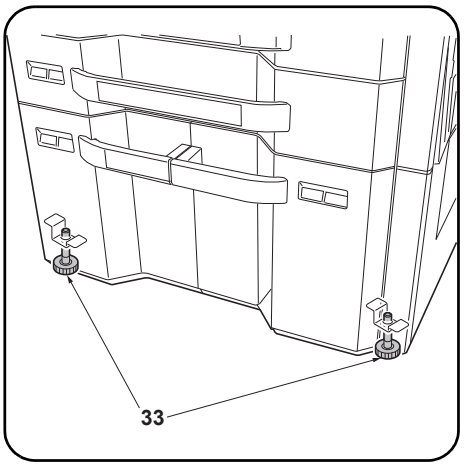

20. Connect the intermediate paper conveying unit connector (30).
21. Attach the clamp (E) and secure the connector wire.

22. Insert the projection (31) on the wire cover (F) into the hole (32) in the paper feeder and install the wire cover (F).
23. Close the paper feeder right cover (27) and replace the lower right cover (24) on the machine.

24. Turn the adjusters on each corner (33) until they reach the floor and then secure the paper feeder.

---

20. Raccorder le connecteur (30) de l'unité de transport du papier intermédiaire.
21. Monter le collier (E) et fixer le câble du connecteur.

22. Insérer la saillie (31) du couvercle du câble (F) dans le trou (32) du chargeur de papier et reposer le couvercle du câble (F).
23. Fermer le couvercle droit du chargeur de papier (27) et reposer le capot inférieur droit (24) sur la machine.

24. Faire tourner les dispositifs de réglage de chacun des coins (33) jusqu'à ce qu'ils touchent le sol et fixer ensuite le chargeur de papier.

---

20. Conecte el conector de la unidad de transporte de papel intermedia (30).
21. Fije el sujetador (E) y asegure el cable del conector.

22. Inserte el resalto (31) de la cubierta para el cable (F) en el orificio (32) del depósito de papel e instale la cubierta para el cable (F).
23. Cierre la cubierta derecha del depósito de papel (27) y vuelva a colocar la cubierta derecha inferior (24) en la máquina.

24. Gire los reguladores en cada esquina (33) hasta que lleguen al piso y, a continuación, asegure el depósito de papel.

---

20. Den Steckverbinder (30) der eingesetzten Papierfördereinheit anschließen.
21. Die Klemme (E) anbringen und das Kabel des Steckverbinders sichern.

22. Die Nase (31) der Kabelabdeckung (F) in die Öffnung (32) des Papiereinzugs einsetzen und die Kabelabdeckung (F) anbringen.
23. Schließen Sie die rechte Abdeckung (27) des Papiereinzugs und setzen Sie die untere rechte Abdeckung (24) wieder im Gerät ein.

24. Die Einsteller an jeder Ecke (33) drehen, bis sie den Boden berühren, und dann den Papiereinzug sichern.

---

20. Collegare il connettore (30) dell'unità intermediale di trasporto carta.
21. Applicare il morsetto (E) e fissare il cavo del connettore.

22. Inserire la sporgenza (31) del coperchio cavi (F) nel foro (32) nell'unità di alimentazione della carta ed installare il coperchio cavi (F).
23. Chiudere il pannello destro (27) dell'alimentatore carta e rimontare il pannello destro inferiore (24) sulla macchina.

24. Ruotare i regolatori (33) presenti su ciascun angolo finché vengano a contatto con il pavimento, e quindi fissare l'unità di alimentazione della carta.

---

20. 连接中间搬运单元的接插件 (30)。
21. 安装束线夹 (E)，以固定接插件电线。

22. 将电线盖板 (F) 的突出部 (31) 插入供纸工作台的孔 (32) 中，安装电线盖板 (F)。
23. 关闭供纸工作台的右部盖板 (27)，按原样安装机器主机的右下部盖板 (24)。

24. 转动四角上的调节器 (33) 直至与地面接触，然后再固定供纸工作台。

---

20. 중간반송유니트의 커넥터 (30) 를 접속합니다 .
21. 클램프 (E) 를 부착 , 커넥터 전선을 고정합니다 .

22. 전선커버 (F) 의 돌기 (31) 를 급지대의 구멍 (32) 에 넣고 전선커버 (F) 를 부착합니다 .
23. 급지대 오른쪽 커버 (27) 를 닫고 본체의 오른쪽 하단 커버 (24) 를 다시 부착합니다 .

24. 네 곳의 어져스터 (33) 를 맨 밑에 닿을 위치까지 돌려 급지대를 고정합니다 .

---

20. 中間搬送ユニットのコネクター(30) を接続する。
21. クランプ (E) を取り付け、コネクター電線を固定する。

22. 電線カバー(F) の突起 (31) をペーパーフィーダーの穴 (32) に入れて、電線カバー (F) を取り付ける。
23. ペーパーフィーダーの右カバー(27) を閉じ、機械本体の右下カバー(24) を元通りに取り付ける。

24. 四隅のアジャスター(33) を床に接触する位置まで回し、ペーパーフィーダーを固定する。

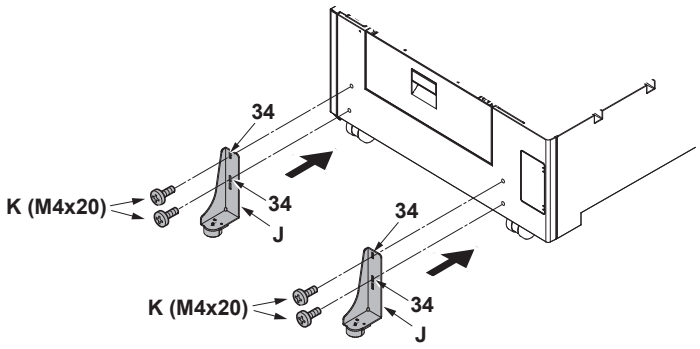

25. Select holes (34) and install each stopper (J) with 2 S Tite screws M4 × 20 (K) so that the stoppers will be grounded on the floor.

---

25. Sélectionner les trous (34) et installer chaque butée (J) avec 2 vis S Tite M4 × 20 (K) de sorte que les butées reposent sur le sol.

---

25. Seleccione los orificios (34) e instale cada tope (J) con los 2 tornillos S Tite M4 × 20 (K) de manera que los topes se conecten a tierra en el suelo.

---

25. Wählen Sie die Öffnungen (34) und befestigen Sie jeden Anschlag (J) mit den 2 S-Tite-Schrauben M4 × 20 (K) so an, dass die Anschläge am Boden aufsitzen.

---

25. Selezionare i fori (34) ed installare ogni fermo (J) con le 2 viti S Tite M4 × 20 (K) in modo che i fermi siano posti a terra sul pavimento.

---

25. 在孔（34）处各用 2 颗 M4×20 紧固型 S 螺丝（K）安装限位器（J），使之和地板接触。

---

25. 전도방지쇠 (J) 가 바닥면에 접지될 수 있도록 구멍 (34) 을 선택해 나사 M4×20 S 타이트 (K) 각 2 개로 설치합니다 .

---

25. 転倒防止金具 (J) が床面に接地するように、穴(34)を選択してビス M4×20 S タイト (K) 各 2 本で取り付ける。

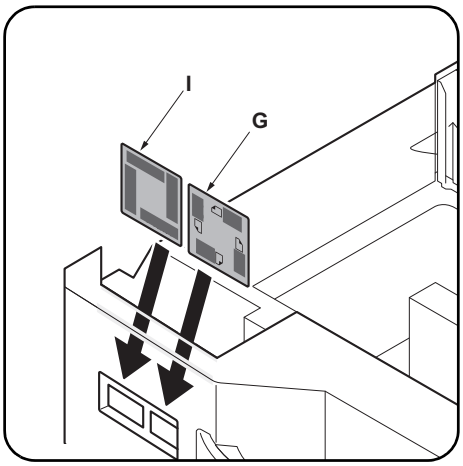

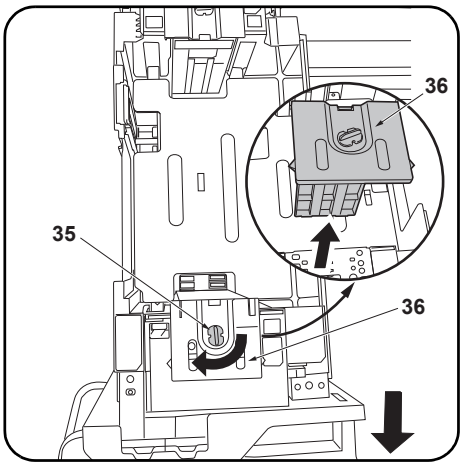

Setting the paper size plate and media type plate
Insert the paper size plate (G) and media type plate (I) into the each slots respectively.

Changing paper size (metric specifications only)
At shipment, Letter is set for inch models and A4 is set for metric models. Use the procedure below to change the size to B5.

1. Pull out the cassette of the paper feeder.
2. Turn the front lock lever (35) 90° and remove the front deck cursor (36).

Disposition des plaquettes du format de papier et du type de support
Introduire la plaquette du format de papier (G) et la plaquette du type de support (I) dans leur logement respectif.

Modification du format du papier (pour spécifications métriques seulement)
À expédition, les modèles à mesure en pouces sont réglés sur le format Letter et les modèles à mesure métrique sur le format A4. Pour passer au format B5, procéder de la manière suivante.

1. Tirer le magasin du chargeur de papier vers soi.
2. Faire tourner le levier de verrouillage avant (35) de 90º et déposer le curseur de platine avant (36).

Ajuste de la placa de tamaño de papel y la placa de tipo de medio
Inserte la placa de tamaño de papel (G) y la placa de tipo de medio (I) en cada uno de las ranuras, respectivamente.

Cómo cambiar el tamaño de papel (sólo para las especificaciones métricas)
En el momento de salida de fábrica, se configura Carta para los modelos en pulgadas y A4 para los modelos en sistema métrico. Siga este procedimiento para cambiar el tamaño a B5.

1. Abra el casete del depósito de papel.
2. Gire la palanca de bloqueo frontal (35) 90º y quite el cursor frontal de la plataforma (36).

Einsetzen der Papierformatkarte und der Medientypkarte
Setzen Sie die Papierformatkarte (G) und die Medientypkarte (I) in die jeweiligen Führungen.

Ändern des Papierformats (nur metrische Spezifikationen)
Beim Werksversand ist bei Modellen mit Zollmaß das Format Letter voreingestellt und bei Modellen mit metrischem Maß das Format A4.
Das Format kann wie folgend auf B5 umgeschaltet werden.

1. Ziehen Sie die Papierlade aus dem Papiereinzug.
2. Den vorderen Verriegelungshebel (35) um 90° drehen und den vorderen Konsole-Cursor (36) abnehmen.

Impostazione della piastra di formato carta e della piastra del tipo di supporto
Inserire la piastra del formato carta (G) e la piastra del tipo di supporto (I) nei rispettivi alloggiamenti.

Cambio del formato della carta (solo per le specifiche metriche)
Al momento della spedizione, Letter è impostato per le specifiche in pollici e A4 è impostato per le specifiche metriche. Usare la procedura riportata sotto per cambiare il formato a B5.

1. Estrarre il cassetto dell'unità di alimentatore della carta.
2. Ruotare la leva frontale di blocco (35) di 90° e rimuovere il cursore frontale del deck (36).

纸张尺寸标识片和纸张种类标识片的安装
将纸张尺寸标识片（G）和纸张种类标识片（I）分别插入到图示的插槽中。

纸张尺寸更改（仅限公制规格）
产品出厂时，英制规格设定为 Letter、公制规格设定为 A4。要将尺寸更改为 B5 时，请按以下步骤进行操作。

1. 拉出供纸工作台的供纸盒。
2. 将前部锁定杆（35）旋转 90°，拆下堆纸板前部游标（36）。

용지크기 플레이트와 용지종류 플레이트의 세트
용지크기 플레이트 (G) 와 용지종류 플레이트 (I) 를 각표시 슬롯에 각각 삽입한다 .

용지크기 변경 (센치 사양만)
출하시 , 인치사양은 Letter, 센치사양은 A4 로 설정되어 있습니다 . 크기를 B5 로 변경하는 경우에는 다음 순서를 진행해 주십시오 .

1. 급지대 카세트를 빼 냅니다 .
2. 잠금레버 앞 (35) 을 90° 회전시켜 데크커서 앞 (36) 을 제거합니다 .

用紙サイズプレートと用紙種類プレートのセット
用紙サイズプレート（G）と用紙種類プレート（I）を各表示スロットにそれぞれ挿入する。

用紙サイズ変更（センチ仕様のみ）
出荷時、インチ仕様は Letter、センチ仕様は A4 に設定されています。サイズを B5 に変更する場合は次の手順をおこなってください。

1. ペーパーフィーダーのカセットを引き出す。
2. ロックレバー前（35）を 90° 回転させ、デッキカーソル前(36)を取り外す。

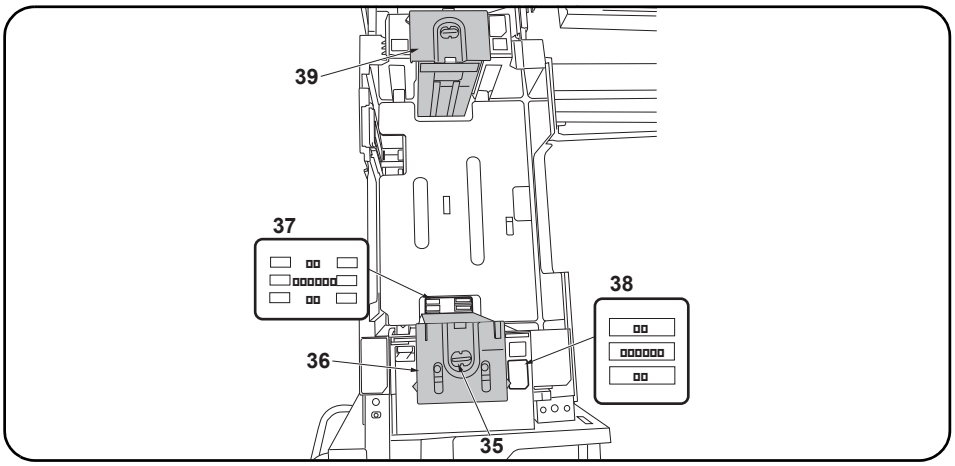

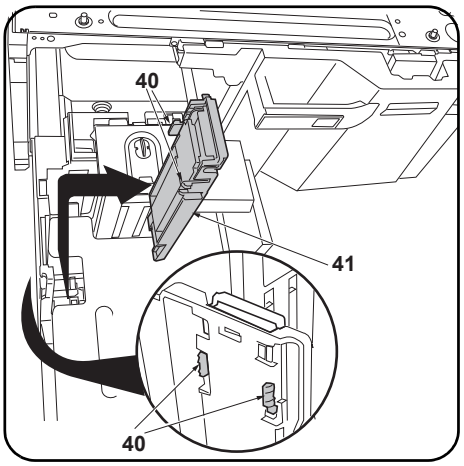

3. Move the front deck cursor (36) so that it is aligned with the size indicators on the top (38) and bottom (37) of the cassette.
4. Turn the front lock lever (35) 90° to lock it.
5. Move the rear deck cursor (39) in the same way.

6. Release the hook (40) and remove the deck trailing edge cursor (41).

---

3. Déplacer le curseur de platine avant (36) de sorte qu'il soit aligné avec les indicateurs de format en haut (38) et en bas (37) du tiroir.
4. Faire tourner le levier de verrouillage avant (35) de 90º pour le verrouiller.
5. Déplacer le curseur de platine arrière (39) en procédant de la même manière.

6. Libérer le crochet (40) et déposer le curseur du bord arrière de la platine (41).

---

3. Mueva el cursor frontal de la plataforma (36) para que quede alineado con las indicadores de tamaño de la parte superior (38) e inferior (37) del cajón.
4. Gire la palanca de bloqueo frontal (35) 90º para bloquearla.
5. Mueva el cursor trasero de la plataforma (39) de la misma forma.

6. Libere el gancho (40) y quite el cursor del borde inferior de la plataforma (41).

---

3. Den vorderen Konsole-Cursor (36) so verschieben, dass er mit den Formatanzeigen oben (38) und unten (37) an der Kassette fluchtet.
4. Den vorderen Verriegelungshebel (35) zum Verriegeln um 90° drehen.
5. Den hinteren Konsole-Cursor (39) auf gleiche Weise verschieben.

6. Den Haken (40) lösen und den Hinterkante-Cursor (41) der Konsole abnehmen.

---

3. Spostare il cursore frontale del deck (36) in modo che esso risulti allineato con gli indicatori di formato sulla parte superiore (38) e inferiore (37) del cassetto.
4. Ruotare la leva frontale di blocco (35) di 90°, per bloccarla.
5. Spostare il cursore posteriore del deck (39) allo stesso modo.

6. Rilasciare il gancio (40) e rimuovere il cursore del bordo di uscita del deck (41).

---

3. 移动堆纸板前部游标 (36)，使供纸盒下部的尺寸标记 (37) 与供纸盒上部的尺寸标记 (38) 对齐。
4. 将前部锁定杆 (35) 旋转 90° 以固定。
5. 按同样方式移动后部堆纸板后部游标 (39)。

6. 解除挂钩 (40)，拆下堆纸板后部游标 (41)。

---

3. 카세트 밑의 크기표시 (37) 와 카세트 위의 크기 표시 (38) 에 맞춰 데크커서 앞 (36) 을 이동시킵니다 .
4. 잠금레버 앞 (35) 을 90° 회전시켜 고정합니다 .
5. 똑같이 데크커서 뒤 (39) 를 이동시킵니다 .

6. 후크 (40) 를 해제하고 데크 뒷단커서 (41) 를 제거합니다 .

---

3. カセット下のサイズ表示 (37) とカセット上のサイズ表示 (38) に合わせてデッキカーソル前 (36) を移動させる。
4. ロックレバー前 (35) を 90° 回転させ固定する。
5. 同様にデッキカーソル後 (39) を移動させる。

6. フック (40) を解除し、デッキ後端カーソル (41) を取り外す。

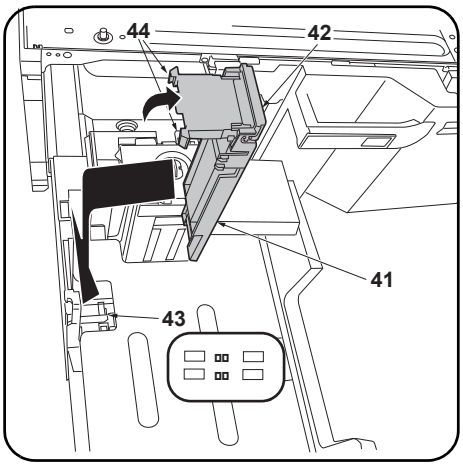

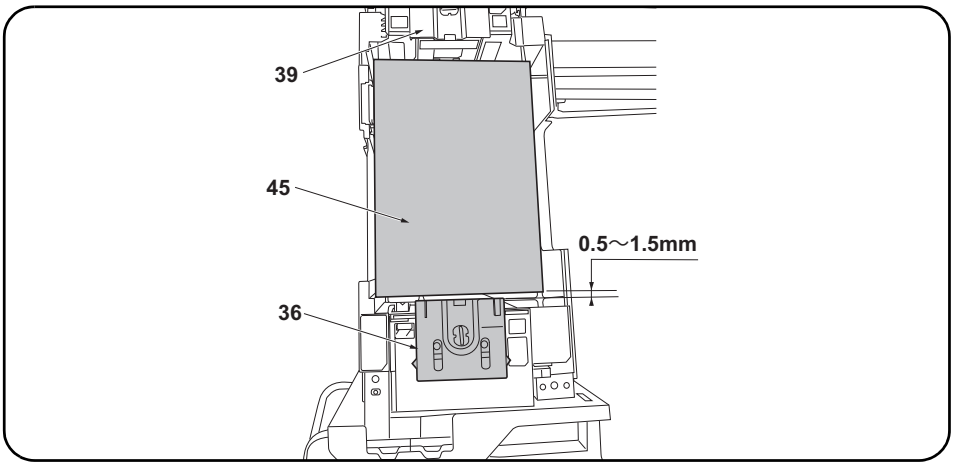

7. Lift up the sub-cursor (42).
8. Align with the size indicator (43), engage the hook (44) and install the deck trailing edge cursor (41).

Adjusting the cursor width

1. Load paper in the cassettes.
2. If the gap between the front deck cursor (36) and the paper (45) is outside the 0.5 to 1.5 mm range when the paper (45) is touching up against the rear deck cursor (39), perform the following adjustment.
* A cursor width that is too small can hinder paper feeding, while a cursor width that is too large can lead to problems such as skewed paper feed.

---

7. Lever le curseur secondaire (42).
8. Aligner avec l'indicateur de format (43), engager le crochet (44) et reposer le curseur du bord arrière de la platine (41).

Réglage de la largeur du curseur

1. Charger les tiroirs en papier.
2. Si l'écartement entre le curseur de platine avant (36) et le papier (45) est hors des limites de 0,5 à 1,5 mm quand le papier (45) touche le curseur de platine arrière (39), procéder au réglage suivant.
* Une largeur trop faible du curseur risque d'empêcher l'entraînement du papier et une largeur trop grande risque d'entraîner des problèmes du type entraînement du papier de biais.

---

7. Levante el cursor secundario (42).
8. Alinee con el indicador de tamaño (43), enganche el gancho (44) e instale el cursor del borde inferior de la plataforma. (41).

Cómo ajustar la anchura del cursor

1. Cargue papel en los cajones.
2. Si la separación entre el cursor frontal de la plataforma (36) y el papel (45) está fuera del rango de 0,5 a 1,5 mm cuando el papel (45) toca el cursor trasero de la plataforma (39), haga el siguiente ajuste.
* Una anchura del cursor demasiado pequeña puede impedir la alimentación de papel; una anchura del cursor demasiado grande puede provocar problemas con la alimentación torcida de papel.

---

7. Den Unter-Cursor (42) anheben.
8. Auf die Formatanzeige (43) ausrichten, den Haken (44) einsetzen und den Hinterkante-Cursor (41) der Konsole anbringen.

Einstellen der Cursor-Breite

1. Papier in die Papierladen einlegen.
2. Falls der Abstand zwischen dem vorderen Konsole-Cursor (36) und dem Papier (45) außerhalb des Bereichs 0,5 bis 1,5 mm liegt, wenn das Papier (45) am hinteren Konsole-Cursor (39) anliegt, ist folgende Einstellung vorzunehmen.
* Eine zu kleine Cursor-Breite kann den Papiereinzug behindern, wogegen eine zu große Cursor-Breite verkanteten Papiereinzug und ähnliche Probleme verursachen kann.

---

7. Sollevare il cursore secondario (42).
8. Allineare con l'indicatore formato (43), fissare il gancio (44) e installare il cursore del bordo di uscita del deck (41).

Regolazione della larghezza del cursore

1. Caricare carta nei cassetti.
2. Se lo spazio tra il cursore frontale del deck (36) e la carta (45) è fuori della gamma da 0,5 a 1,5 mm quando la carta (45) tocca il cursore postertiore del deck (39), eseguire la regolazione seguente.
* Una larghezza dei cursori troppo piccola può ostacolare l'alimentazione della carta, mentre unalarghezza dei cursori troppo grande può essere causa di problemi, come ad esempio l'alimentazione obbliqua della carta.

---

7. 抬起副游标（42）。
8. 对齐尺寸标记（43），将挂钩 （44）嵌入以安装堆纸板后部游标（41）。

游标宽度的调节

1. 在供纸盒中装入纸张。
2. 在堆纸板后部游标（39）与纸张（45）接触的状态下，如果堆纸板前部游标（36）与纸张（45）的间隙超出了 0.5 ～ 1.5㎜ 的范围，须进行以下调节。
※ 如果游标宽度过小，可能造成不供纸，游标宽度过大，则可能发生歪斜进纸等情况。

---

7. 서브커서 (42) 를 세웁니다 .
8. 크기표시 (43) 에 맞춰 후크 (44) 를 판벽데크 후단커서 (41) 를 부착합니다 .

커서 폭 조정

1. 카세트에 용지를 장착합니다 .
2. 데크커서 뒤 (39) 에 용지 (45) 가 접하고 있는 상태에서 데크커서 앞 (36) 과 용지 (45) 의 틈이 0.5 ~ 1.5mm 의 범위외의 경우에는 이하의 조정을 합니다 .
※ 커서 폭이 작으면 무급지 , 커서 폭이 크면 경사급지 등이 발생할 가능성이 있습니다 .

---

7. サブカーソル（42）を起こす。
8. サイズ表示（43）に合わせて、フック(44)をはめデッキ後端カーソル（41）を取り付ける。

カーソル幅の調整

1. カセットに用紙をセットする。
2. デッキカーソル後（39）に用紙（45）が接している状態で、デッキカーソル前（36）と用紙（45）の隙間が 0.5 ～ 1.5㎜ の範囲外の場合は、以下の調整をおこなう。
※ カーソル幅が小さいと無給紙、カーソル幅が大きいと斜め給紙などが発生する可能性がある。

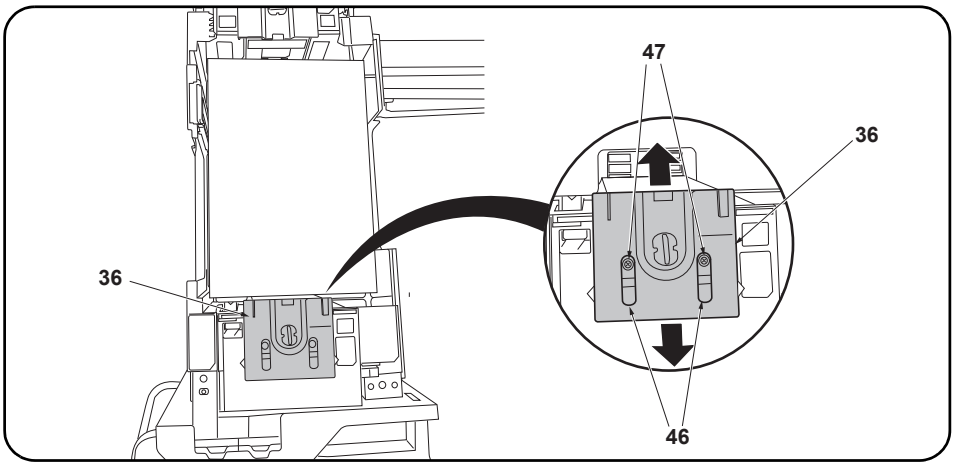

3. Insert a Philips-head screwdriver into the 2 long slots (46) in the front deck cursor (36) and loosen the 2 adjusting screws (47). Then move the front deck cursor (36).

4. Retighten the 2 adjusting screws (47).
5. Check that the gap between the front deck cursor (36) and the paper is between 0.5 and 1.5 mm.

---

3. Insérer un tournevis cruciforme dans les 2 longues fentes (46) du curseur de platine avant (36) et desserrer les 2 vis de réglage (47). Déplacer ensuite le curseur de platine avant (36).

4. Resserrer les 2 vis de réglage (47).
5. Vérifier que l'écartement entre le curseur de platine avant (36) et le papier est entre 0,5 et 1,5 mm.

---

3. Inserte un destornillador de cabeza Philips en las dos ranuras largas (46) en el cursor frontal de la plataforma (36) y afloje los 2 tornillos de ajuste (47). Después, mueva el cursor frontal de la plataforma (36).

4. Vuelva a apretar los 2 tornillos de ajuste (47).
5. Verifique que la separación entre el cursor frontal de la plataforma (36) y el papel sea de entre 0,5 y 1,5 mm.

---

3. Einen Kreuzschlitzschraubendreher in die 2 langen Öffnungen (46) im vorderen Konsole-Cursor (36) stecken und die 2 Einstellschrauben (47) lösen. Danach den vorderen Konsole-Cursor (36) verschieben.

4. Die 2 Einstellschrauben (47) wieder anziehen.
5. Vergewissern Sie sich, dass der Abstand zwischen dem vorderen Konsole-Cursor (36) und dem Papier im Bereich 0,5 bis 1,5 mm liegt.

---

3. Inserire un cacciavite con testa a croce tipo Philips nelle 2 fessure lunghe (46) nel cursore frontale del deck (36) e allentare le 2 viti di regolazione (47). Quindi spostare il cursore frontale del deck (36).

4. Ristringere le 2 viti di regolazione (47).
5. Controllare che lo spazio tra il cursore frontale del deck (36) e la carta sia compreso nella gamma tra 0,5 e 1,5 mm.

---

3. 将十字螺丝刀从堆纸板前部游标 (36) 的 2 处长孔 (46) 处插入，拧松 2 颗调节螺丝 (47)，移动堆纸板前部游标 (36)。

4. 拧紧 2 颗调节螺丝 (47)。
5. 确认堆纸板前部游标 (36) 与纸张的间隙在 0.5 ～ 1.5㎜ 的范围内。

---

3. 데크커서 앞 (36) 2 곳의 긴 구멍 (46) 에서 플러스 드라이버를 넣어 조정나사 (47) 2 개를 느슨하게 하고 데크커서 앞 (46) 을 이동시킵니다 .

4. 조정나사 (47) 2 개를 조입니다 .
5. 데크커서 앞 (36) 과 용지의 틈이 0.5 ~ 1.5 mm 범위내가 되어 있는 것을 확인합니다 .

---

3. デッキカーソル前 (36) の 2 箇所の長穴 (46) からプラスドライバー挿入し、調整ビス (47)2 本を緩め、デッキカーソル前 (36) を移動させる。

4. 調整ビス (47)2 本を締め付ける。
5. デッキカーソル前 (36) と用紙の隙間が 0.5 ～ 1.5㎜ の範囲内になっていることを確認する

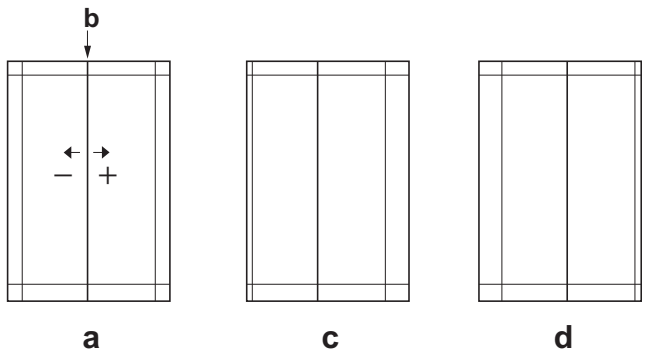

Adjusting the center line

The reference value for the center line is ±0.5 mm or less at position (b) in the correct image (a). If the center line position is outside this range, perform the following adjustment.

1. Set maintenance mode U034, select LSU Out Left and Cassette3 or Cassette4.
2. Adjust the values.
   Test pattern (c): Increase the setting value. Test pattern (d): Decrease the setting value.
3. Press the Start key to confirm the setting value.

Réglage de l'axe

La valeur de référence pour l'axe est de ±0,5 mm ou moins à la position (b) d'une image correcte (a). Si la position de l'axe est hors de cette plage, effectuez le réglage suivant.

1. Passer en mode maintenance U034, sélectionner LSU Out Left et Cassette3 ou Cassette4.
2. Régler les valeurs.
   Mire d' essai (c): Augmentez la valeur de réglage. Mire d' essai (d): Diminuez la valeur de réglage.
3. Appuyer sur la touche de Start pour confirmer la valeur de réglage.

Ajuste de la línea central

El valor de referencia de la línea central es de ±0,5 mm o menor, en la posición (b) de la imagen correcta (a). Si la posición de la línea central estuviera fuera de este rango, haga el siguiente ajuste.

1. Entre al modo de mantenimiento U034, seleccione LSU Out Left y Cassette3 o Cassette4.
2. Ajuste los valores.
   Patrón de prueba (c): Aumente el valor de configuración. Patrón de prueba (d): Reduzca el valor de configuración.
3. Pulse la tecla de Start para confirmar el valor de configuración.

Einstellen der Mittenlinie

Der Bezugswert für die Mittenlinie ist ±0,5 mm oder weniger an Position (b) des korrekten Bilds (a). Falls die Mittenlinie außerhalb dieses Bereichs liegt, ist folgende Einstellung vorzunehmen.

1. Schalten Sie in den Wartungsmodus U034, wählen Sie LSU Out Left und Cassette3 oder Cassette4.
2. Die Werte einstellen.
   Testmuster (c): Den Einstellwert erhöhen. Testmuster (d): Den Einstellwert verringern.
3. Den Einstellwert durch Drücken der Start-Taste bestätigen.

Regolazione della linea centrale

Il valore di riferimento per la linea centrale è ±0,5 mm o inferiore alla posizione (b) nell'immagine corretta (a). Se la posizione della linea centrale è all'infuori di questa gamma, effettuare la regolazione seguente.

1. Impostare la modalità manutenzione U034, selezionare LSU Out Left e Cassette3 o Cassette4.
2. Regolare i valori.
   Modello di prova (c): Aumentare il valore dell'impostazione. Modello di prova (d): Diminuire il valore dell'impostazione.
3. Premere il tasto di Start per confermare il valore dell'impostazione.

中心线调节

中心线的基准值在矫正图像 (a) 的 (b) 位置为 ±0.5mm 以内。超出该范围时，须进行以下调节。

1. 设置维护模式 U034，选择 LSU Out Left、Cassette3 或 Cassette4。
2. 调整设定值。
   测试图案 (c) ：调高设定值。 测试图案 (d) ：调低设定值。
3. 按 Start 键，以确定设定值。

센터라인 조정

센터라인은 적정화상 (a) 의 (b) 위치에서 기준치는 ±0.5mm 이내 . 여기에서 벗어나는 것은 이하의 조정을 합니다 .

1. 메인터넌스 모드 U034 를 세트하고 LSU Out Left, Cassette3 또는 Cassette4 를 선택합니다 .
2. 설정치를 조정합니다 .
   테트스 패턴 (c) :설정치를 높입니다 . 테스트 패턴 (d) :설정치를 내립니다 .
3. 시작키를 누르고 설정치를 확인합니다 .

センターライン調整

センターラインは、適正画像 (a) の (b) の位置で基準値は ±0.5mm 以内。これから外れるときは以下の調整をおこなう。

1. メンテナンスモード U034 をセットし、LSU Out Left、Cassette3 または Cassette4 を選択する。
2. 設定値を調整する。
   テストパターン (c) :設定値を上げる。 テストパターン (d) :設定値を下げる。
3. スタートキーを押し、設定値を確定する。

INSTALLATION GUIDE FOR SIDE DECK

English

References to medium-speed MFPs in this document denote 30/30, 35/35, 45/45 and 55/50 ppm color machines, and 35, 45 and 55 ppm monochrome machines.
References to high-speed MFPs in this document denote 65/65 and 75/70 ppm color machines, and 65 and 80 ppm monochrome machines.

Français

Dans le présent document, les références aux MFP à vitesse moyenne renvoient aux machines couleurs 30/30, 35/35, 45/45 et 55/50 ppm et aux machines monochromes 35, 45 et 55 ppm.
Dans le présent document, les références aux MFP à grande vitesse renvoient aux machines couleurs 65/65 et 75/70 ppm et aux machines monochromes 65 et 80 ppm.

Español

Las referencias a las MFP de velocidad media de este documento corresponden a las máquinas a color de 30/30, 35/35, 45/45 y 55/50 ppm y a las máquinas monocromáticas de 35, 45 y 55 ppm.
Las referencias a las MFP de alta velocidad de este documento corresponden a las máquinas a color de 65/65 y 75/70 ppm y a las máquinas monocromáticas de 65 y 80 ppm.

Deutsch

Angaben für MFP der mittleren Leistungsklasse in dieser Anleitung gelten für die 30/30, 35/35, 45/45 und 55/50 ppm Vollfarbenkopierer sowie für die 35, 45 und 55 ppm Monochrommaschinen.
Angaben für MFP der Hochleistungsklasse in dieser Anleitung gelten für die 65/65 und 75/70 ppm Vollfarbenkopierer sowie für die 65 und 80 ppm Monochrommaschinen.

Italiano

I riferimenti per le MFP a velocità media riportati in questo documento indicano le macchine a colori 30/30, 35/35, 45/45 e 55/50 ppm, e le macchine monocromatiche 35, 45 e 55 ppm.
I riferimenti per le MFP a velocità alta riportati in questo documento indicano le macchine a colori 65/65 e 75/70 ppm, e le macchine monocromatiche 65 e 80 ppm.

简体中文

本文中的中速 MFP 代表彩色 30/30 页机型、35/35 页机型、45/45 页机型、55/50 页机型、黑白 35 页机型、45 页机型、55 页机型。
本文中的高速 MFP 代表彩色 65/65 页机型、75/70 页机型、黑白 65 页机型、80 页机型。

한국어

본문 중 중속 MFP 는 컬러 30/30 매기 , 35/35 매기 , 45/45 매기 , 55/50 매기 , 흑백 35 매기 , 45 매기 , 55 매기를 나타냅니다 .
본문 중 고속 MFP 는 컬러 65/65 매기 , 75/70 매기 , 흑백 65 매기 , 80 매기를 나타냅니다 .

日本語

本文中の中速 MFP はカラー機の 30/30 枚機、35/35 枚機、45/45 枚機、55/50 枚機、モノクロ機の 35 枚機、45 枚機、55 枚機を表す。
本文中の高速 MFP はカラー機の 65/65 枚機、75/70 枚機、モノクロ機の 65 枚機、80 枚機を表す。

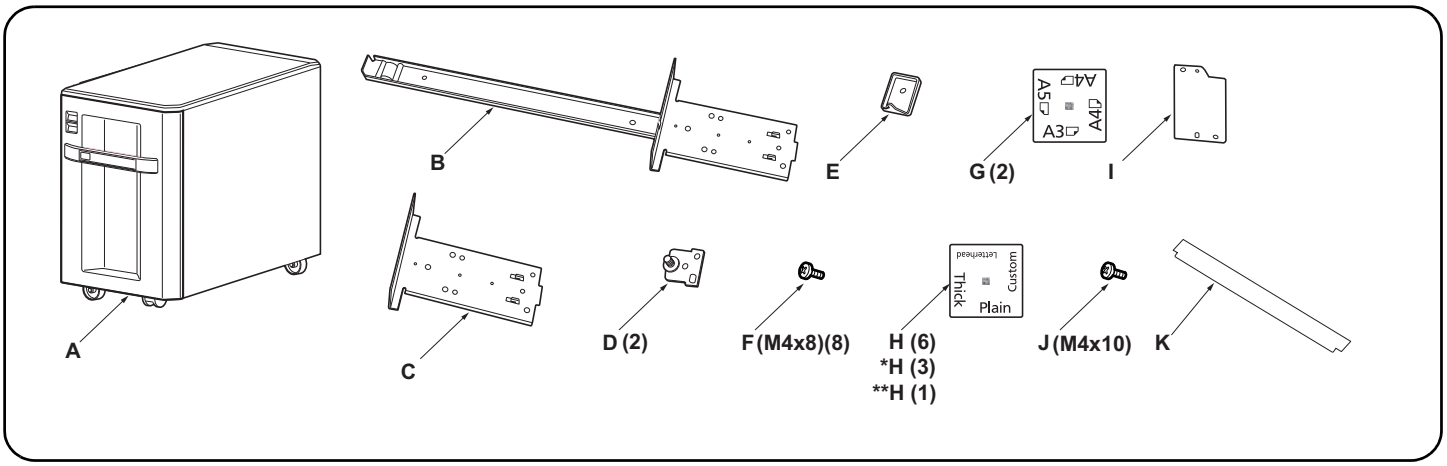

Supplied parts

A. Side feeder 1
B. Large base slider 1
C. Small base slider 1
D. Lock pin 2
E. Switch press plate 1
F. M4 × 8 screw 8
G. Paper size plate 2
H. Media type plate(except for 120V model) .. 6
***H.** Media type plate(120V model only) 3
I. Cover plate 1
J. M4 × 10 tapping screw 1
K. Film 1

Be sure to remove any tape and/or cushioning material from supplied parts.

Pièces fournies

A. Plateau d'alimentation latéral 1
B. Grande règle de base 1
C. Petite règle de base 1
D. Broche de verrouillage 2
E. Plaque de pression de l'interrupteur 1
F. Vis M4 × 8 8
G. Plaquette du format de papier 2
H. Plaquette du type de support 6
I. Capot 1
J. Vis de connexion M4 × 10 1
K. Film 1

Veillez à retirer les morceaux de bande adhésive et/ou les matériaux de rembourrage des pièces fournies.

Partes suministradas

A. Alimentador lateral 1
B. Deslizador de base grande 1
C. Deslizador de base pequeño 1
D. Clavija de bloqueo 2
E. Placa de presión del interruptor 1
F. Tornillo M4 × 8 8
G. Placa de tamaño de papel 2
H. Placa de tipo de medio 6
I. Tapa 1
J. Tornillo de roscado M4 × 10 1
K. Película 1

Asegúrese de despegar todas las cintas y/o material amortiguador de las partes suministradas.

Gelieferte Teile

A. Seitlicher Einzug 1
B. Großer Basis-Schieber 1
C. Kleiner Basis-Schieber 1
D. Arretierstift 2
E. Schalterdruckplatte 1
F. M4 × 8 Schraube 8
G. Papierformatkarte 2
H. Medientypkarte 6
I. Abdeckplatte 1
J. M4 × 10 Schneidschraube 1
K. Film 1

Entfernen Sie Klebeband und/oder Dämpfungsmaterial vollständig von den mitgelieferten Teilen.

Parti di fornitura

A. Unità di alimentazione laterale 1
B. Scivolo di base grande 1
C. Scivolo di base piccolo 1
D. Perno di bloccaggio 2
E. Piastra spingi interruttore 1
F. Vite M4 × 8 8
G. Piastra formato carta 2
H. Piastra tipo carta 6
I. Coperchio 1
J. Vite autofilettante M4 × 10 1
K. Pellicola 1

Accertarsi di rimuovere tutti i nastri adesivi e/o il materiale di imbottitura dalle parti fornite.

附属品

A. 侧供纸盒 1
B. 底座滑板（大）..... 1
C. 底座滑板（小）..... 1
D. 锁定插销 2
E. 开关挡板 1
F. M4×8 螺丝 8
G. 纸张尺寸标示 2
**H. 纸张种类标示 1
I. 盖板 1
J. M4×10 自攻螺丝 1
K. 胶片 1

如果附属品上带有固定胶带，缓冲材料时务必揭下。

동봉품

A. 사이드피더 1
B. 베이스 슬라이더 대 1
C. 베이스 슬라이더 소 1
D. 잠금 핀 2
E. 스위치 판 1
F. 나사 M4×8 8
G. 용지크기 플레이트 2
**H. 용지종류 플레이트 1
I. 커버 플레이트 1
J. 탑핑 나사 M4×10 1
K. 필름 1

동봉품에 고정 테이프 , 완충재가 붙어 있는 경우에는 반드시 제거할 것 .

同梱品

A. サイドフィーダー 1
B. ベーススライダー大 1
C. ベーススライダー小 1
D. ロックピン 2
E. スイッチ当たり板 1
F. ビス M4×8 8
G. 用紙サイズプレート 2
**H. 用紙種類プレート 1
I. カバープレート 1
J. タッピングビス M4×10 1
K. フィルム 1

同梱品に固定テープ、緩衝材がついている場合は、必ず取り外すこと。

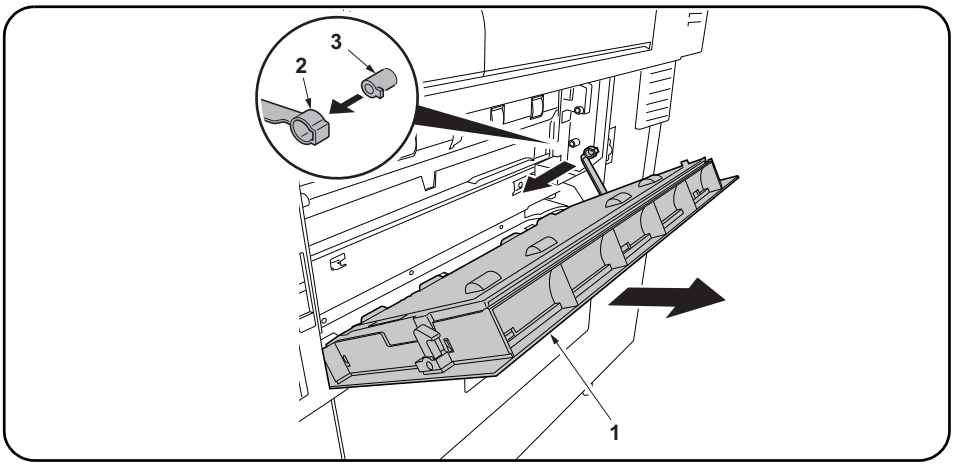

Procedure
Be sure to turn the MFP main power switch off and disconnect the MFP power plug from the wall outlet before starting to install the side feeder.

Installation on medium-speed MFPs
If installing on a high-speed MFP, proceed to step 10.
1. Open the lower right cover (1) on the MFP.
Remove the strap (2) from the shaft (3) and remove lower right cover (1).

Procédure
Veiller à bien mettre l'interrupteur principal du MFP hors tension et à débrancher la fiche d'alimentation du MFP de la prise murale avant de commencer l'installation du plateau d'alimentation latéral.

Montage sur des MFP à vitesse moyenne
Si le montage est fait sur un MFP à grande vitesse, passer à l'étape 10.
1. Ouvrir le couvercle inférieur droit (1) du MFP.
Déposer la courroie (2) de l'arbre (3) et déposer le couvercle inférieur droit (1).

Procedimiento
Asegúrese de apagar el interruptor principal del MFP y de desconectar el enchufe del MFP del receptáculo de pared antes de empezar a instalar el alimentador lateral.

Instalación en las MFP de velocidad media
Si se instala en una MFP de alta velocidad, vaya al paso 10.
1. Abra la cubierta frontal inferior (1) del MFP.
Quite la correa (2) del eje (3) y quite la cubierta frontal inferior (1).

Verfahren
Schalten Sie unbedingt den Hauptschalter des MFP aus, und ziehen Sie den Netzstecker des MFP von der Netzsteckdose ab, bevor Sie mit der Installation des seitlichen Einzugs beginnen.

Installation an MFP der mittleren Leistungsklasse
Gehen Sie zur Installation an einem MFP der Hochleistungsklasse weiter zu Schritt 10.
1. Die untere rechte Abdeckung (1) am MFP öffnen.
Den Riemen (2) von der Welle (3) abnehmen und dann die untere rechte Abdeckung (1) abnehmen.

Procedura
Prima di iniziare la procedura di installazione dell'unità di alimentazione laterale, assicurarsi di spegnere l'interruttore principale di alimentazione dell'MFP, e di scollegare la spina del cavo di alimentazione dalla presa elettrica a muro.

Installazione sulle MFP a velocità media
Se si installa su una MFP a velocità alta, procedere al passo 10.
1. Aprire il coperchio destro inferiore (1) sull'MFP.
Rimuovere la cinghietta (2) dall'asta (3) e quindi rimuovere il coperchio destro inferiore (1).

安装步骤
安装侧供纸盒时，必须先关闭 MFP 主机上的主电源开关，并拔出电源插头后方可进行工作。

安装于中速 MFP 上时
安装于高速 MFP 上时，进至步骤 10。
1. 打开 MFP 主机的右下部盖板 (1)。
将带子 (2) 从轴 (3) 上拆除，拆下右下部盖板 (1)。

설치순서
사이드피더를 설치할 때에는 반드시 MFP 본체의 주전원 스위치를 OFF 로 하고 전원 프러그를 뺀 후 작업을 할 것 .

중속 MFP 에 설치하는 경우
고속 MFP 에 설치하는 경우에는 순서 10 로 진행합니다 .
1. MFP 본체의 오른쪽 아래 커버 (1) 를 엽니다 .
스트라프 (2) 를 축 (3) 에서 떼어내 오른쪽 아래 커버 (1) 를 제거합니다 .

取付手順
サイドフィーダーを設置するときは、必ず MFP 本体の主電源スイッチを OFF にし、電源プラグを抜いてから作業すること。

中速 MFP に設置の場合
高速 MFP に設置の場合は手順 10 に進む。
1. MFP 本体の右下カバー(1) を開く。
ストラップ (2) を軸 (3) から外し、右下カバー(1) を取り外す。

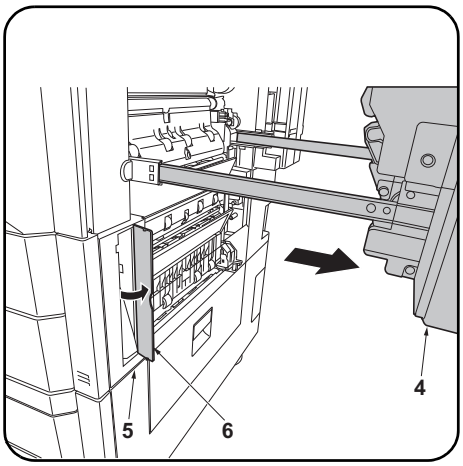

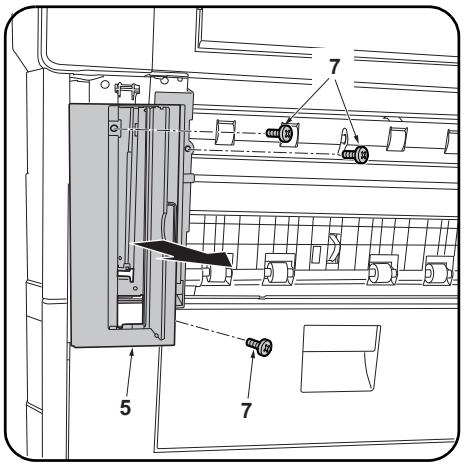

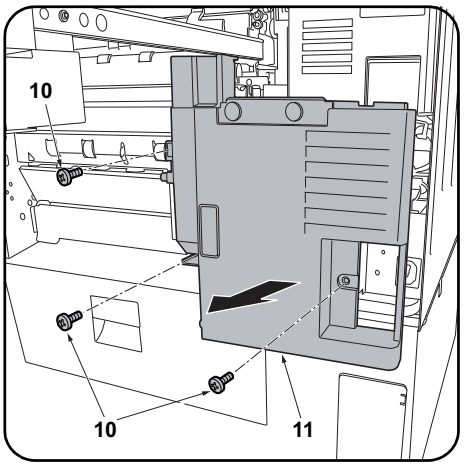

2. Open the MFP paper conveying cover (4).
3. Open the panel (6) on the MFP front right cover (5).

4. Remove 3 screws (7) and remove the front right cover (5).

5. Remove 3 screws (10). Remove the lower right rear cover (11).

---

2. Ouvrir le capot du transport du papier du MFP (4).
3. Ouvrir le panneau (6) sur le capot avant droit du MFP (5).

4. Déposer les 3 vis (7) et déposer le capot avant droit (5).

5. Déposer les 3 vis (10). Déposer le capot arrière droit inférieur (11).

---

2. Abra la cubierta de transporte del papel del MFP (4).
3. Abra el panel (6) en la cubierta delantera derecha (5).

4. Quite los 3 tornillos (7) y quite la cubierta delantera derecha (5).

5. Quite los 3 tornillos (10). Quite la cubierta trasera inferior derecha (11).

---

2. Öffnen Sie die Papierförderabdeckung (4) des MFP.
3. Öffnen Sie die Platte (6) der vorderen rechten Abdeckung (5) des MFP.

4. Entfernen Sie 3 Schrauben (7) und nehmen Sie die vordere rechte Abdeckung (5) ab.

5. Entfernen Sie 3 Schrauben (10). Nehmen Sie die untere rechte hintere Abdeckung (11) ab.

---

2. Aprire il coperchio (4) dell'unità di trasporto carta dell'MFP.
3. Aprire il pannello (6) sul coperchio destro anteriore (5) dell'MFP.

4. Rimuovere le 3 viti (7), e quindi rimuovere il coperchio destro posteriore (5).

5. Rimuovere le 3 viti (10). Rimuovere il coperchio posteriore inferiore destro (11).

---

2. 打开 MFP 主机的供纸盖板 (4)。
3. 打开 MFP 主机的右前部盖板 (5) 的盖子 (6)。

4. 拆除 3 颗螺丝 (7)，拆下右前部盖板 (5)。

5. 拆除 3 颗螺丝 (10)。 拆下右下后部盖板 (11)。

---

2. MFP 본체의 반송커버 (4) 를 엽니다 .
3. MFP 본체의 우측 전면커버 (5) 의 뚜껑 (6) 을 엽니다 .

4. 나사 (7) 3 개를 제거하고 우측 전면커버 (5) 를 떼어 냅니다 .

5. 나사 (10) 3 개를 제거합니다 . 우측 하단 뒷커버 (11) 를 제거합니다 .

---

2. MFP 本体の搬送カバー(4) を開く。
3. MFP 本体の右前カバー(5) のふた (6) を開く。

4. ビス (7)3 本を外し､右前カバー(5) を取り外す。

5. ビス (10)3 本を外す｡右下後カバー(11) を取り外す。

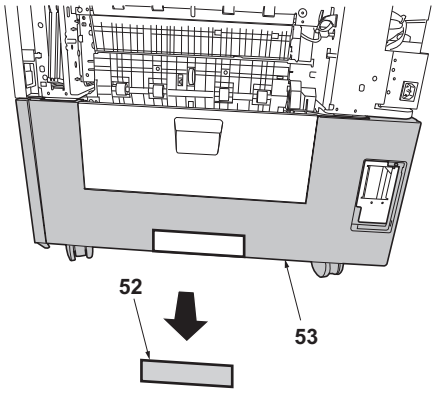

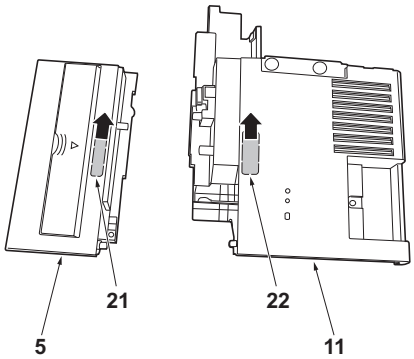

6. Remove the breakaway cover (52) from the paper feeder lower right cover (53).

7. Remove the breakaway cover (21) from the front right cover (5) and the breakaway cover (22) from the lower right rear cover (11).

---

6. Retirez le capot détachable (52) du capot inférieur droit du chargeur de papier (53).

7. Déposer le couvercle amovible (21) du capot avant droit (5) et le couvercle amovible (22) du capot arrière inférieur droit (11).

---

6. Quite la cubierta de separación (52) de la cubierta inferior derecha del depósito de papel (53).

7. Quite la cubierta divisoria (21) de la cubierta delantera derecha (5) y la cubierta divisoria (22) de la cubierta trasera inferior derecha (11).

---

6. Nehmen Sie die Ablösungsabdeckung (52) von der untere rechte Abdeckung (53) des Papiereinzugs ab.

7. Nehmen Sie die Ablösungsabdeckung (21) von der vorderen rechten Abdeckung (5) ab und die Ablösungsabdeckung (22) von der unteren rechten hinteren Abdeckung (11).

---

6. Rimuovere il coperchio di distacco (52) dal coperchio destro inferiore (53) dell'unità di alimentazione carta.

7. Rimuovere il coperchio di distacco (21) dal coperchio destro anteriore (5), e il coperchio di distacco (22) dal coperchio posteriore inferiore destro (11).

---

6. 去除供纸盒的右下部盖板（53）上的可去除部（52）。

7. 切除右前部盖板（5）的切割盖板（21）和右下后部盖板（11）的切割盖板（22）。

---

6. 용지 급지대의 우측 하단커버 (53) 의 분할커버부 (52) 를 떼어 냅니다 .

7. 우측 전면커버 (5) 의 분할커버 (21) 와 오른쪽 하단 뒷커버 (11) 의 분할커버 (22) 를 떼어 냅니다 .

---

6. ペーパーフィーダーの右下カバー（53）の割りカバー部（52）を切り取る。

7. 右前カバー(5) の割りカバー(21) と右下後カバー(11) の割りカバー(22) を切り取る。

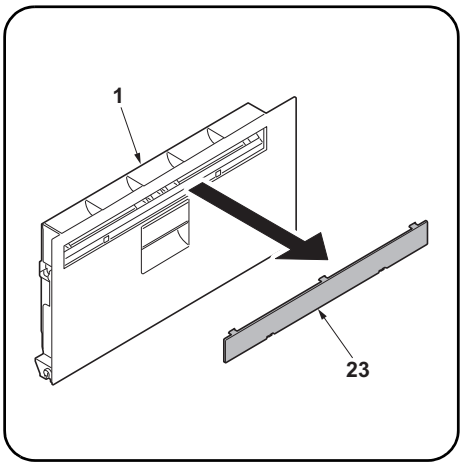

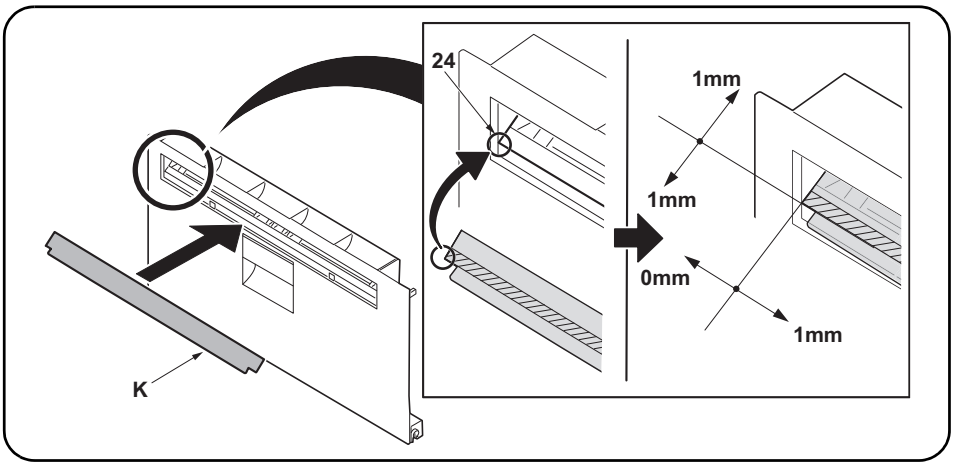

8. Remove the panel (23) from the MFP lower right cover (1) with a flat blade screwdriver.

9. After using alcohol to clean place adhering the film, adhere the film (K) in the position (24) indicated in the illustration.
Proceed to step 21

---

8. Déposer le panneau (23) du capot inférieur droit du MFP (1) en procédant à l'aide d'un tournevis à lame.

9. Coller le film (K) sur l'emplacement (24) indiqué dans l'illustration, après avoir soigneusement nettoyé cet emplacement à l'alcool.
Passer à l'étape 21.

---

8. Extraiga el panel (23) de la cubierta derecha inferior del MFP (1) con un destornillador de pala plana.

9. Después de utilizar alcohol para limpiar la zona donde se va a pegar la película, pegue la película (K) en el lugar (24) que se indica en la ilustración.
Vaya al paso 21.

---

8. Nehmen Sie mit einem flachen Schraubendreher die Platte (23) von der unteren rechten Abdeckung (1) des MFP ab.

9. Zum Anbringen des Films (K) die Stelle zuvor mit Alkohol reinigen und den Film (K) dann in der in der Abbildung angegebenen Position (24) anbringen.
Gehen Sie weiter zu Schritt 21.

---

8. Rimuovere il pannello (23) dal coperchio destro inferiore (1) dell'MFP con un cacciavite a testa piana.

9. Dopo aver utilizzato alcol per pulire la piastra che aderisce alla pellicola, far aderire la pellicola (K) nella posizione (24) indicata nell'illustrazione.
Procedere al passo 21.

---

8. 使用一字螺丝刀将 MFP 主机的右下部盖板 (1) 的盖子 (23) 拆下。

9. 使用酒精对薄膜粘贴位置进行清洁后，按插图位置 (24) 粘贴薄膜（K）。
进至步骤 21。

---

8. MFP 본체의 우측 뒷커버 (1) 의 뚜껑 (23) 을 마이너스 드라이버로 제거합니다 .

9. 필름 부착위치를 알코올 청소 후 , 일러스트의 위치 (24) 에 맞춰 필름 (K) 을 부착합니다 .
순서 21 로 진행합니다 .

---

8. MFP 本体の右下カバー(1) のふた (23) をマイナスドライバーで取り外す。

9. フィルム貼り付け位置をアルコール清掃後、イラストの位置 (24) にあわせて、フィルム(K)を貼り付ける。
手順 21 に進む。

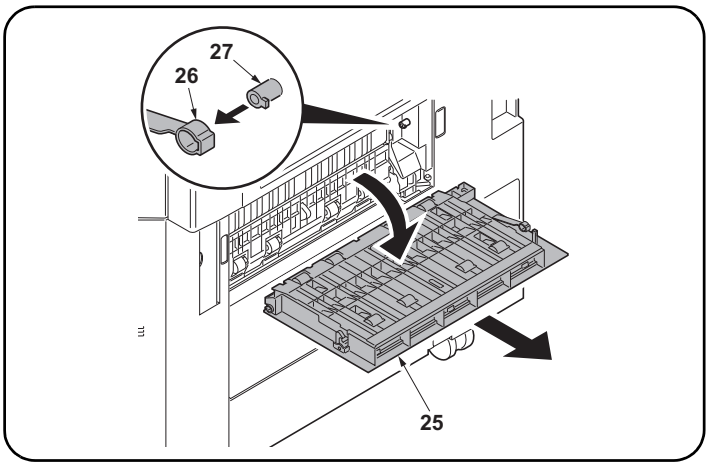

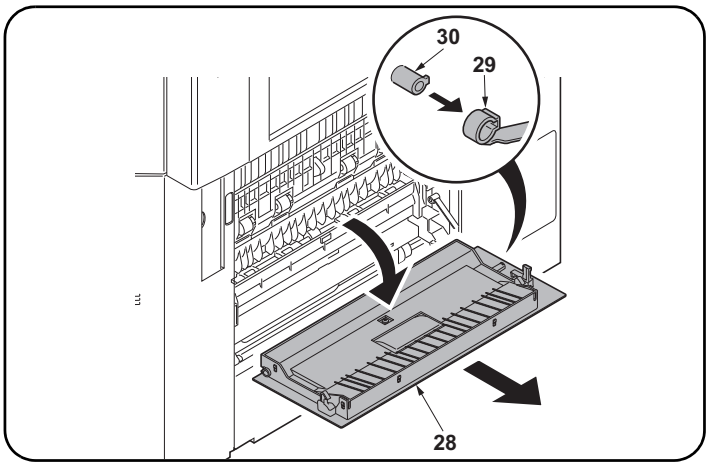

Installation on high-speed MFPs

10. Open the right cover 1 (25) on the MFP.
Remove the strap (26) from the shaft (27) and remove right cover 1 (25).

11. Open the right cover 2 (28) on the MFP.
Remove the strap (29) from the right cover shaft (30) and remove the right cover 2 (28).

Montage sur des MFP à grande vitesse

10. Ouvrir le capot droit 1 (25) du MFP.
Déposer la courroie (26) de l'arbre (27) et déposer le capot droit 1 (25).

11. Ouvrir le capot droit 2 (28) du MFP.
Déposer la courroie (29) de l'axe du capot droit (30) et déposer le capot droit 2 (28).

Instalación en las MFP de alta velocidad

10. Abra la cubierta derecha 1 (25) del MFP.
Quite la correa (26) del eje (27) y quite la cubierta derecha 1 (25).

11. Abra la cubierta derecha 2 (28) del MFP.
Quite la correa (29) del eje de la cubierta derecha (30) y quite la cubierta derecha 2 (28).

Installation an MFP der Hochleistungsklasse

10. Die rechte Abdeckung 1 (25) am MFP öffnen.
Den Riemen (26) von der Welle (27) abnehmen und dann die rechte Abdeckung 1 (25) abnehmen.

11. Die rechte Abdeckung 2 (28) am MFP öffnen.
Nehmen Sie den Riemen (29) von der Welle (30) der rechten Abdeckung und dann die rechte Abdeckung 2 (28) ab.

Installazione sulle MFP a velocità alta

10. Aprire il coperchio destro 1 (25) sull'MFP.
Rimuovere la cinghietta (26) dall'asta (27) e quindi rimuovere il coperchio destro 1 (25).

11. Aprire il coperchio destro 2 (28) sull'MFP.
Rimuovere la cinghietta (29) dall'asta (30) del coperchio destro e quindi rimuovere il coperchio destro 2 (28).

安装于高速 MFP 上时

10. 打开 MFP 主机的右部盖板 1(25)。
将带子 (26) 从轴 (27) 上拆除，拆下右部盖板 1(25)。

11. 打开 MFP 主机的右部盖板 2(28)。
从右盖板的轴 (30) 上拆除挂绳 (29)，拆下右盖板 2(28)。

고속 MFP 에 설치하는 경우

10. MFP 본체의 우측커버 1 (25) 를 엽니다 .
스트라프 (26) 를 축 (27) 에서 떼어내 우측커버 1 (25) 를 제거합니다 .

11. MFP 본체의 우측커버 2 (28) 를 엽니다 .
스트랩 (29) 을 우측커버의 축 (30) 에서 떼어내고 우측커버 2 (28) 를 제거합니다 .

高速 MFP に設置の場合

10. MFP 本体の右カバー1(25) を開く。
ストラップ (26) を軸 (27) から外し、右カバー1(25) を取り外す。

11. MFP 本体の右カバー2(28) を開く。
ストラップ (29) を右カバーの軸 (30) から外し、右カバー2(28) を取り外す。

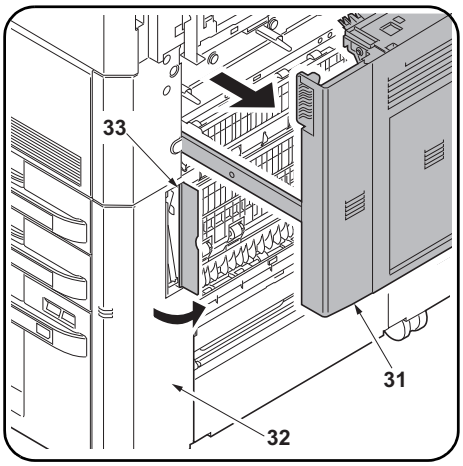

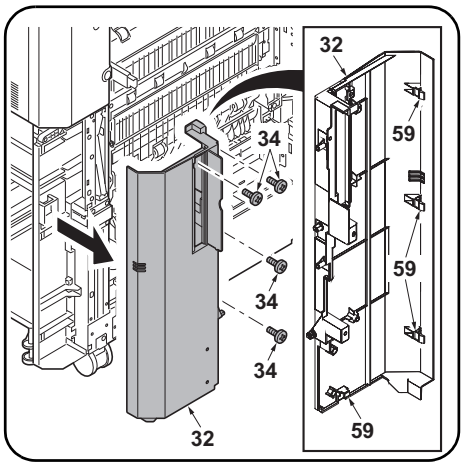

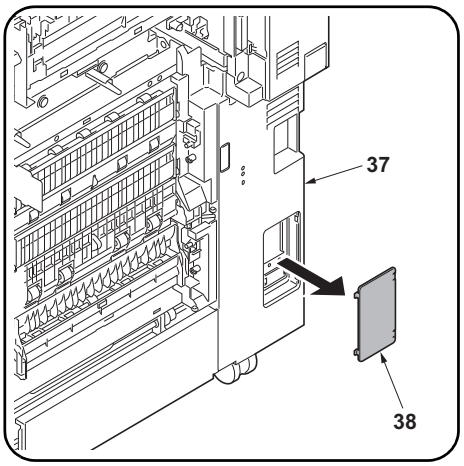

12. Open the MFP paper conveying cover (31).
13. Open the panel (33) on the MFP front right cover (32).

14. Remove the 4 screws (34) and release the 4 hooks (59). Then remove the front right cover (32).

15. Remove the panel (38) from the lower right rear cover (37) with a flat blade screwdriver.

---

12. Ouvrir le capot du transport du papier du MFP (31).
13. Ouvrir le panneau (33) sur le capot avant droit du MFP (32).

14. Retirer les 4 vis (34) et libérer les 4 crochets (59). Retirer ensuite le capot avant droit (32).

15. Déposer le panneau (38) du capot arrière inférieur droit (37) en procédant à l'aide d'un tournevis à lame.

---

12. Abra la cubierta de transporte del papel del MFP (31).
13. Abra el panel (33) en la cubierta delantera derecha (32).

14. Quite los 4 tornillos (34) y libere los 4 ganchos (59). Después, quite la cubierta frontal derecha (32).

15. Extraiga el panel (38) de la cubierta trasera inferior derecha (37) con un destornillador de pala plana.

---

12. Öffnen Sie die Papierförderabdeckung (31) des MFP.
13. Öffnen Sie die Platte (33) der vorderen rechten Abdeckung (32) des MFP.

14. Entfernen Sie die 4 Schrauben (34) und lösen Sie die 4 Haken (59). Danach nehmen Sie die rechte vordere Abdeckung (32) ab.

15. Nehmen Sie mit einem flachen Schraubendreher die Platte (38) von der unteren rechten hinteren Abdeckung (37) ab.

---

12. Aprire il coperchio (31) dell'unità di trasporto carta dell'MFP.
13. Aprire il pannello (33) sul coperchio destro anteriore (32) dell'MFP.

14. Rimuovere le 4 viti (34) e rilasciare i 4 ganci (59). Rimuovere quindi il coperchio anteriore destro (32).

15. Rimuovere il pannello (38) dal coperchio posteriore inferiore destro (37) con un cacciavite a testa piana.

---

12. 打开 MFP 主机的供纸盖板 (31)。
13. 打开 MFP 主机的右前部盖板 (32) 的盖子 (33)。

14. 卸下 4 颗螺丝（34）并松开 4 个卡扣（59）。然后卸下右前盖板（32）。

15. 用一字螺丝刀等取下右下盖板（37）的盖子（38）。

---

12. MFP 본체의 반송커버 (31) 를 엽니다 .
13. MFP 본체의 우측 전면커버 (32) 의 뚜껑 (33) 을 엽니다 .

14. 나사 (34) 4 개를 제거하고 후크 (59) 4 개를 풉니다 . 그런 다음 우측 전면 커버 (32) 를 제거합니다 .

15. 우측 아래뒷면 커버 (37) 의 뚜껑 (38) 을 마이너스 드라이버 등으로 풉니다 .

---

12. MFP 本体の搬送カバー(31) を開く。
13. MFP 本体の右前カバー(32) のふた (33) を開く。

14. ビス (34)4 本およびフック (59)4 箇所を外し、右前カバー(32) を取り外す。

15. 右下後カバー(37) のふた (38) をマイナスドライバーなどで取る。

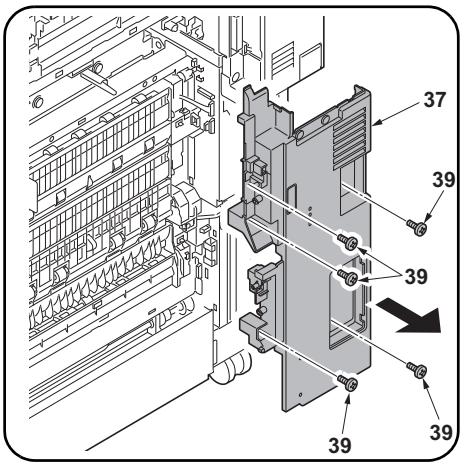

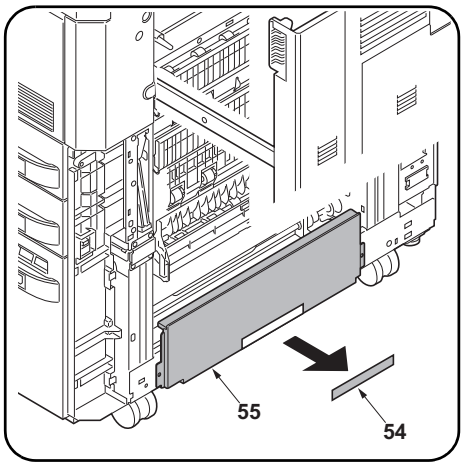

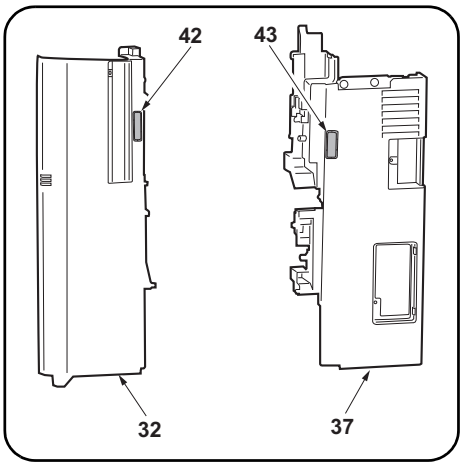

16. Remove 5 screws (39).Remove the lower right rear cover (37).

17. Remove the breakaway cover (54) from the lower right cover (55) .

18. Remove the breakaway cover (42) from the front right cover (32) and the breakaway cover (43) from the lower right rear cover (37).

---

16. Déposer les 5 vis (39). Déposer le capot arrière inférieur droit (37).

17. Retirez le capot détachable (54) du capot inférieur droit (55).

18. Déposer le couvercle amovible (42) du capot avant droit (32) et le couvercle amovible (43) du capot arrière inférieur droit (37).

---

16. Quite los 5 tornillos (39). Quite la cubierta trasera inferior derecha (37).

17. Quite la cubierta de separación (54) de la cubierta inferior derecha (55).

18. Quite la cubierta divisoria (42) de la cubierta delantera derecha (32) y la cubierta divisoria (43) de la cubierta trasera inferior derecha (37).

---

16. Entfernen Sie 5 Schrauben (39). Nehmen Sie die untere rechte hintere Abdeckung (37) ab.

17. Nehmen Sie die Ablösungsabdeckung (54) von untere rechte Abdeckung (55) ab.

18. Nehmen Sie die Ablösungsabdeckung (42) von der vorderen rechten Abdeckung (32) ab und die Ablösungsabdeckung (43) von der unteren rechten hinteren Abdeckung (37).

---

16. Rimuovere le 5 viti (39). Rimuovere il coperchio posteriore inferiore destro (37).

17. Rimuovere il coperchio di distacco (54) dal coperchio destro inferiore (55) .

18. Rimuovere il coperchio di distacco (42) dal coperchio destro anteriore (32), e il coperchio di distacco (43) dal coperchio posteriore inferiore destro (37).

---

16. 拆除 5 颗螺丝（39）。拆下右下后部盖板（37）。

17. 去除右下部盖板（55）上的可去除部（54）。

18. 切除右前部盖板（32）的切割盖板（42）和右下后部盖板（37）的切割盖板（43）。

---

16. 나사 (39) 5 개를 제거합니다 . 우측 하단 뒷커버 (37) 를 제거합니다 .

17. 우측 하단커버 (55) 의 분할커버부 (54) 를 떼어 냅니다 .

18. 우측 전면커버 (32) 의 분할커버 (42) 와 오른쪽 하단 뒷커버 (37) 의 분할커버 (43) 를 떼어 냅니다 .

---

16. ビス（39）5 本を外す。右下後カバー（37）を取り外す。

17. 右下カバー（55）の割りカバー部（54）を切り取る。

18. 右前カバー（32）の割りカバー（42）と右下後カバー（37）の割りカバー（43）を切り取る。

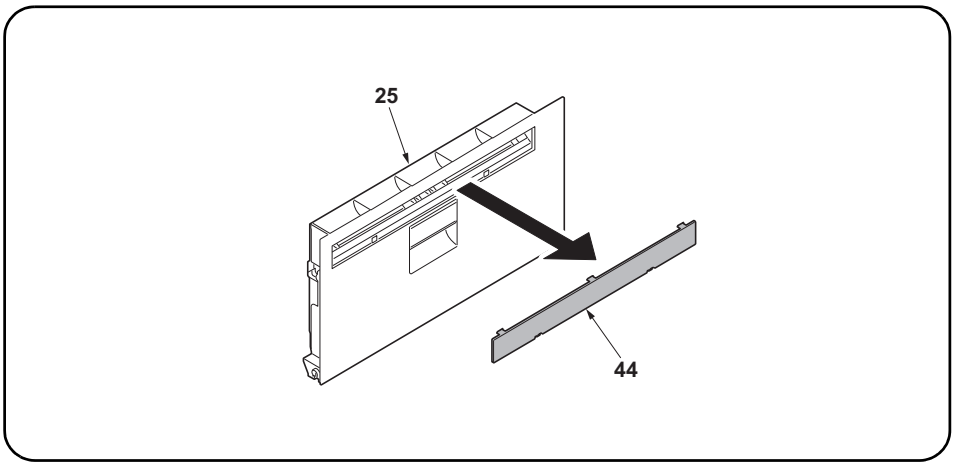

19. Remove the panel (44) from the MFP right cover 1 (25) with a flat blade screwdriver.

---

19. Déposer le panneau (44) du capot droit 1 du MFP (25) en procédant à l'aide d'un tournevis à lame.

---

19. Extraiga el panel (44) de la cubierta derecha 1 del MFP (25) con un destornillador de pala plana.

---

19. Nehmen Sie mit einem flachen Schraubendreher die Platte (44) von der rechten Abdeckung 1 (25) des MFP ab.

---

19. Rimuovere il pannello (44) dal coperchio destro 1 (25) dell'MFP con un cacciavite a testa piana.

---

19. 使用一字螺丝刀将 MFP 主机的右部盖板 1(25) 的盖子 (44) 拆下。

---

19. MFP 본체의 우측커버 1 (25) 의 뚜껑 (44) 을마이너스 드라이버로 제거합니다 .

---

19. MFP 本体の右カバー1(25) のふた (44) をマイナスドライバーで取り外す。

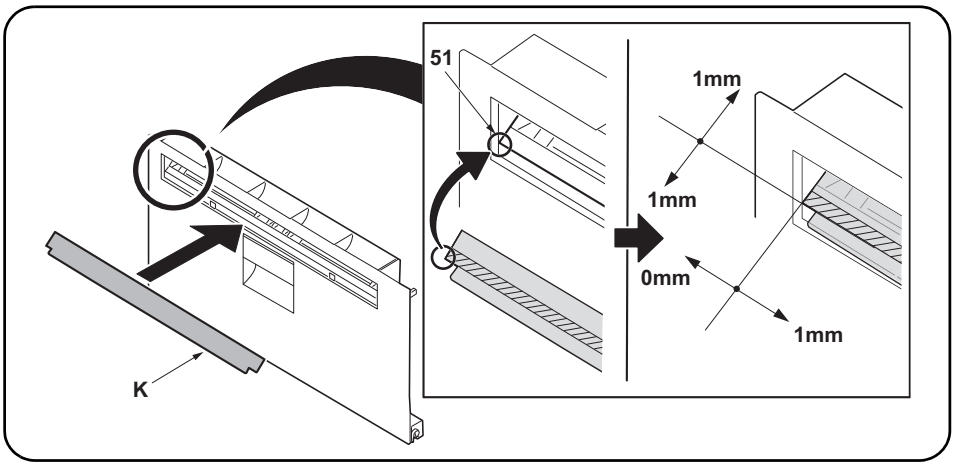

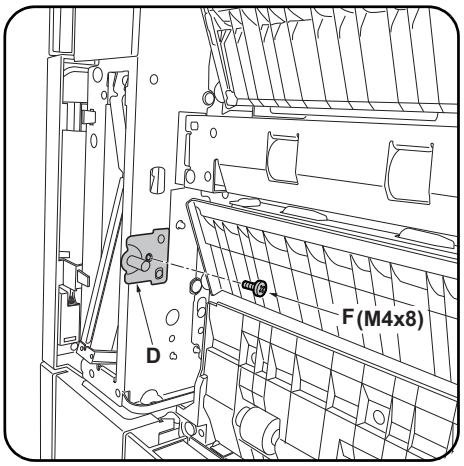

20. After using alcohol to clean place adhering the film, adhere the film (K) in the position (51) indicated in the illustration.

21. Install a lock pin (D) on the front right of the MFP using an M4 × 8 screw (F).

---

20. Coller le film (K) sur l'emplacement (51) indiqué dans l'illustration, après avoir soigneusement nettoyé cet emplacement à l'alcool.

21. Monter une broche de verrouillage (D) à droite et à l'avant du MFP en procédant à l'aide d'une vis M4 × 8 (F).

---

20. Después de utilizar alcohol para limpiar la zona donde se va a pegar la película, pegue la película (K) en el lugar (51) que se indica en la ilustración.

21. Instale una clavija de bloqueo (D) en la parte derecha frontal del MFP usando un tornillo M4 × 8 (F).

---

20. Zum Anbringen des Films (K) die Stelle zuvor mit Alkohol reinigen und den Film (K) dann in der in der Abbildung angegebenen Position (51) anbringen.

21. Bringen Sie mit einer M4 × 8 Schraube (F) den Arretierungsstift (D) vorne rechts am MFP an.

---

20. Dopo aver utilizzato alcol per pulire la piastra che aderisce alla pellicola, far aderire la pellicola (K) nella posizione (51) indicata nell'illustrazione.

21. Installare un perno di bloccaggio (D) sulla parte anteriore destra dell'MFP utilizzando una vite M4 × 8 (F).

---

20. 使用酒精对薄膜粘贴位置进行清洁后，按插图位置 (51) 粘贴薄膜（K）。

21. 使用 1 颗 M4×8 螺丝 (F) 将锁定插销 (D) 安装到 MFP 主机的右前侧。

---

20. 필름 부착위치를 알코올 청소 후 , 일러스트의 위치 (51) 에 맞춰 필름 (K) 을 부착합니다 .

21. 나사 M4×8(F) 1 개로 잠금 핀 (D) 을 MFP 본체 우측 전면쪽에 설치합니다 .

---

20. フィルム貼り付け位置をアルコール清掃後、イラストの位置(51)にあわせて、フィルム(K)を貼り付ける。

21. ビス M4×8(F)1 本で、ロックピン (D) を MFP 本体右前側に取り付ける。

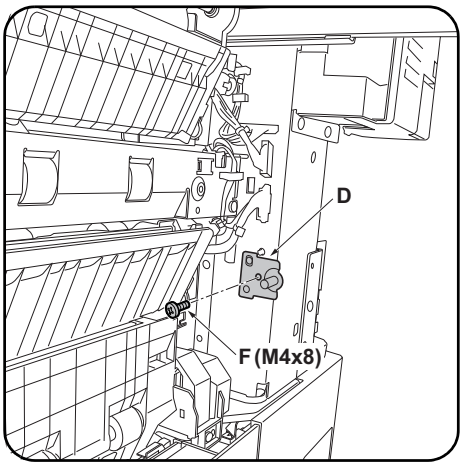

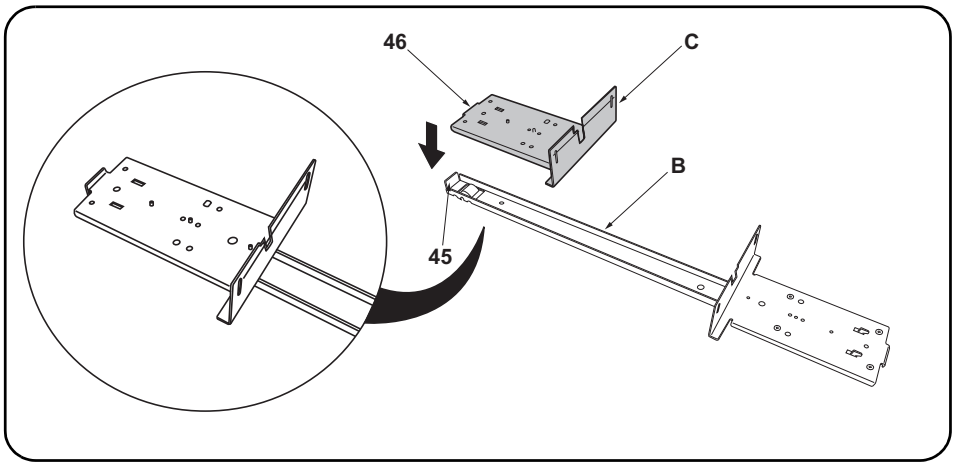

22. Install a lock pin (D) on the rear right of the MFP using an M4 × 8 screw (F) in the same way.

23. Place the small base slider (C) on the large base slider (B). Place so that the bend (46) on the small base slider (C) abuts inside the rest (45) at the end of the large base slider (B).

---

22. Monter une broche de verrouillage (D) à droite et à l'arrière du MFP en procédant de la même manière à l'aide d'une vis M4 × 8 (F).

23. Placer la petite règle de base (C) sur la grande règle de base (B). Disposer la petite règle de base (C) de sorte que son extrémité repliée (46) s'encastre dans la butée (45) à l'extrémité de la grande règle de base (B).

---

22. Instale una clavija de bloqueo (D) en la parte derecha frontal del MFP usando un tornillo M4 × 8 (F).

23. Coloque el deslizador de base pequeño (C) sobre el deslizador de base grande (B). Haga que la dobladura (46) del deslizador de base pequeño (C) quede en el interior del apoyo (45) del extremo del deslizador de base grande (B).

---

22. Bringen Sie auf gleiche Weise mit einer M4 × 8 Schraube (F) den Arretierungsstift (D) hinten rechts am MFP an.

23. Setzen Sie den kleinen Basis-Schieber (C) auf den großen Basis-Schieber (B). Setzen Sie ihn so auf, dass die Biegung (46) am kleinen Basis-Schieber (C) innerhalb der Auflage (45) am Ende des großen Basis-Schiebers (B) anliegt.

---

22. Installare un perno di bloccaggio (D) sulla parte posteriore destra dell'MFP utilizzando una vite M4 × 8 (F) alla stessa maniera.

23. Posizionare lo scivolo di base piccolo (C) sullo scivolo di base grande (B). Posizionare in modo che la piegatura (46) sullo scivolo di base piccolo (C) si attesti all'interno del sostegno (45) all'estremità dello scivolo di base grande (B).

---

22. 按相同方法，使用 1 颗 M4×8 螺丝 (F) 将锁定插销 (D) 安装到 MFP 主机的右后侧。

23. 将底座滑板（小）(C) 放在底座滑板（大）(B)。此时底座滑板（小）(C) 的弯曲部 (46) 应处于底座滑板（大）(B) 的前端折弯部 (45) 的内侧。

---

22. 같은 방식으로 나사 M4×8(F) 1 개로 잠금 핀 (D) 을 MFP 본체 우측 뒤쪽에 설치합니다 .

23. 베이스 슬라이더 대 (B) 의 위에 베이스 슬라이더 소 (C) 를 얹습니다 . 그 때 , 베이스 슬라이더 소 (C) 의 곡선부 (46) 가 베이스 슬라이더 대 (B) 의 맨 앞쪽의 꺾이고 구부러진 부분 (45) 의 안쪽으로 오도록 세트합니다 .

---

22. 同様にビス M4×8(F) 1 本で、ロックピン (D) を MFP 本体右後側に取り付ける。

23. ベーススライダー大 (B) の上にベーススライダー小 (C) を乗せる。その際、ベーススライダー小 (C) の曲げ (46) がベーススライダー大 (B) の先端折り曲げ部 (45) の内側にくるようにセットする。

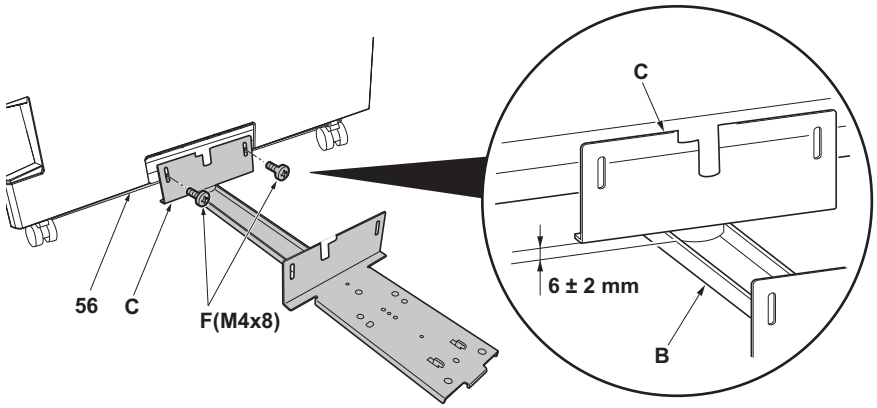

24. Insert the small base slider (C) under the paper feeder. Install to the base (56) using 2 M4 × 8 screws (F) so that the gap between the small base slider (C) and the large base slider (B) is 6 ± 2 mm.
* For PF-730, install to the screw holes marked “R”.

---

24. Insérer la petite règle de base (C) sous le bureau papier. Fixer à la base (56) à l'aide de 2 vis M4 × 8 (F) de sorte que le battement entre la petite règle de base (C) et la grande règle de base (B) soit de 6 ± 2 mm.
* Pour le PF-730, fixer aux trous de vis marqués "R".

---

24. Inserte el deslizador de base pequeño (C) debajo del alimentador de papel. Instálelo en la base (56) usando 2 tornillos M4 × 8 (F) de manera tal que el huelgo entre el deslizador de base pequeño (C) y el deslizador de base grande (B) sea de 6 ± 2 mm.
* En el caso de PF-730, instale en los orificios para tornillo “R”.

---

24. Stecken Sie den kleinen Basis-Schieber (C) unter den Papiereinzug. Befestigen Sie ihn mit 2 M4 × 8 Schrauben (F) so an der Basis (56), dass der Abstand zwischen dem kleinen Basis-Schieber (C) und dem großen Basis-Schieber (B) 6 ± 2 mm beträgt.
* Bei Modell PF-730 an den mit "R" markierten Schraublöchern befestigen.

---

24. Inserire lo scivolo di base piccolo (C) sotto l'unità di alimentazione carta. Installare alla base (56) utilizzando 2 viti M4 × 8 (F) in modo che lo spazio tra lo scivolo di base piccolo (C) e lo scivolo di base grande (B) sia di 6 ± 2 mm.
* Per PF-730, installare ai fori per viti segnalati con “R”.

---

24. 将底座滑板（小）(C) 装入供纸盒的下方。使用 2 颗 M4×8(F) 螺丝将底座滑板（小）(C) 安装到底板 (56) 上，确保底座滑板（小）(C) 与底座滑板（大）(B) 之间的间隙为 6±2mm。
※PF-730 时，安装到带有 R 刻印的螺纹孔上。

---

24. 베이스 슬라이더 소 (C) 를 용지 급지대 밑에 넣습니다 . 베이스 슬라이더 소 (C) 와 베이스 슬라이더 대 (B) 의 틈이 6±2mm 가 되도록 나사 M4×8(F) 2 개로 바닥판 (56) 에 장착합니다 .
※PF-730 은 R 의 각인이 있는 나사구멍에 장착합니다 .

---

24. ベーススライダー小 (C) をペーパーフィーダーの下に入れる。ベーススライダー小 (C) とベーススライダー大 (B) の隙間が、6±2mm になるようにビス M4×8(F)2 本で底板 (56) に取り付ける。
※PF-730 は R の刻印のあるビス穴に取り付ける。

Installation on medium-speed MFPs
If installing on a high-speed MFP, proceed to step 28.
25. Reinstall the lower right rear cover (11).
26. Reinstall the front right cover (5).
27. Reinstall the lower right cover (1).
Proceed to step 32.

Installation on high-speed MFPs
28. Reinstall the lower right rear cover (37).
29. Reinstall the front right cover (32).
30. Reinstall the right cover 2 (28).
31. Reinstall the right cover 1 (25).

Montage sur des MFP à vitesse moyenne
Si le montage est fait sur un MFP à grande vitesse, passer à l'étape 28.
25. Reposer le capot arrière inférieur droit (11).
26. Reposer le capot avant droit (5).
27. Reposer le capot inférieur droit (1).
Passer à l'étape 32.

Montage sur des MFP à grande vitesse
28. Reposer le capot arrière inférieur droit (37).
29. Reposer le capot avant droit (32).
30. Reposer le capot droit 2 (28).
31. Reposer le capot droit 1 (25).

Instalación en las MFP de velocidad media
Si se instala en una MFP de alta velocidad, vaya al paso 28.
25. Reinstale la cubierta trasera inferior derecha (11).
26. Reinstale la cubierta delantera derecha (5).
27. Reinstale la cubierta derecha inferior (1).
Vaya al paso 32.

Instalación en las MFP de alta velocidad
28. Reinstale la cubierta trasera inferior derecha (37).
29. IReinstale la cubierta delantera derecha (32).
30. Reinstale la cubierta derecha 2 (28).
31. Reinstale la cubierta derecha 1 (25).

Installation an MFP der mittleren Leistungsklasse
Gehen Sie zur Installation an einem MFP der Hochleistungsklasse weiter zu Schritt 28.
25. Bringen Sie die untere rechte hintere Abdeckung (11) wieder an.
26. Bringen Sie die vordere rechte Abdeckung (5) wieder an.
27. Bringen Sie die untere rechte Abdeckung (1) wieder an.
Gehen Sie weiter zu Schritt 32.

Installation an MFP der Hochleistungsklasse
28. Bringen Sie die untere rechte hintere Abdeckung (37) wieder an.
29. Bringen Sie die vordere rechte Abdeckung (32) wieder an.
30. Bringen Sie die rechte Abdeckung 2 (28) wieder an.
31. Bringen Sie die rechte Abdeckung 1 (25) wieder an.

Installazione sulle MFP a velocità media
Se si installa su una MFP a velocità alta, procedere al passo 28.
25. Reinstallare il coperchio posteriore inferiore destro (11).
26. Reinstallare il coperchio destro anteriore (5).
27. Reinstallare il coperchio destro inferiore (1).
Procedere al passo 32.

Installazione sulle MFP a velocità alta
28. Reinstallare il coperchio posteriore inferiore destro (37).
29. Reinstallare il coperchio destro anteriore (32).
30. Reinstallare il coperchio destro 2 (28).
31. Reinstallare il coperchio destro 1 (25).

安装于中速 MFP 上时
安装于高速 MFP 上时，进至步骤 28。

25. 按原样安装右下后部盖板 (11)。
26. 按原样安装右前部盖板 (5)。
27. 按原样安装右下部盖板 (1)。
进至步骤 32。

安装于高速 MFP 上时
28. 按原样安装右下后部盖板 (37)。
29. 按原样安装右前部盖板 (32)。
30. 按原样安装右部盖板 2(28)。
31. 按原样安装右部盖板 1(25)。

중속 MFP 에 설치하는 경우
고속 MFP 에 설치하는 경우에는 순서 28 로 진행합니다 .
25. 우측하단 뒷커버 (11) 를 원래대로 장착합니다 .
26. 우측 전면커버 (5) 를 원래대로 장착합니다 .
27. 우측 하단커버 (1) 를 원래대로 장착합니다 .
순서 32 로 진행합니다 .

고속 MFP 에 설치하는 경우
28. 우측하단 뒷커버 (37) 를 원래대로 장착합니다 .
29. 우측 전면커버 (32) 를 원래대로 장착합니다 .
30. 우측커버 2 (28) 를 원래대로 장착합니다 .
31. 우측커버 1 (25) 를 원래대로 장착합니다 .

中速 MFP に設置の場合
高速 MFP に設置の場合は手順 28 に進む。
25. 右下後カバー(11) を元通り取り付ける。
26. 右前カバー(5) を元通り取り付ける。
27. 右下カバー(1) を元通り取り付ける。
手順 32 に進む。

高速 MFP に設置の場合
28. 右下後カバー(37) を元通り取り付ける。
29. 右前カバー(32) を元通り取り付ける。
30. 右カバー2 (28) を元通り取り付ける。
31. 右カバー1 (25) を元通り取り付ける。

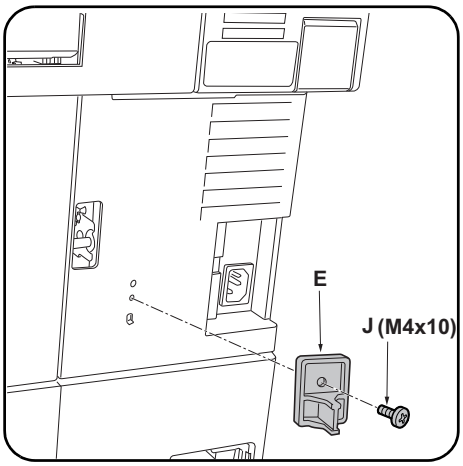

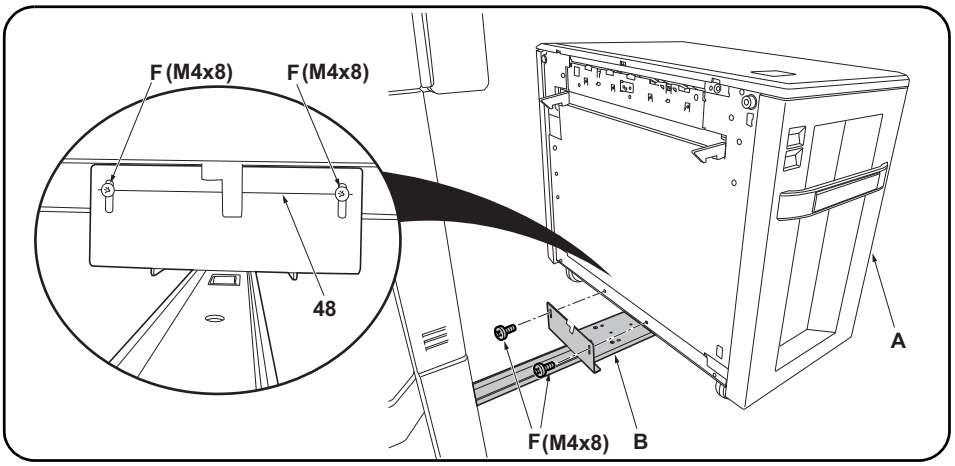

32. Install the switch press plate (E) using the M4 × 10 tapping screw (J).

33. Install the side feeder (A) to the large base slider (B) using 2 M4 × 8 screws (F). Install so that the center of the M4 × 8 screws (F) comes over the horizontal line (48) of the mounting plate on the large base slider (B).

---

32. Fixer la plaque de pression du contacteur (E) à l'aide d'une vis de connexion M4 × 10 (J).

33. Fixer le dispositif du plateau d'alimentation latéral (A) à la grande règle de base (B) à l'aide de 2 vis M4 × 8 (F). Procéder de sorte que l'axe des vis M4 × 8 (F) recouvre la ligne horizontale (48) du plateau de montage sur la grande règle de base (B).

---

32. Instale la placa de presión del interruptor (E) usando el tornillo de roscado M4 × 10 (J).

33. Instale el alimentador lateral (A) en el deslizador de base grande (B) usando 2 tornillos M4 × 8 (F). Instale de manera que el centro de los tornillos M4 × 8 (F) queden sobre la línea horizontal (48) de la placa de montaje del deslizador de base (B) grande.

---

32. Befestigen Sie mit der M4 × 10 Schneidschraube (J) die Schalterdruckplatte (E).

33. Befestigen Sie den seitlichen Einzug (A) mit 2 M4 × 8 Schrauben (F) am großen Basis-Schieber (B). Befestigen Sie ihn so, dass die Mitte der M4 × 8 Schrauben (F) über der Waagrechtlinie (48) der Montageplatte am großen Basis-Schieber (B) liegt.

---

32. Installare la piastra spingi interruttore (E) utilizzando la vite autofilettante M4 × 10 (J).

33. Installare l'unità di alimentazione laterale (A) allo scivolo di base grande (B) utilizzando 2 viti M4 × 8 (F). Installare in modo che il centro delle viti M4 × 8 (F) sia sulla linea orizzontale (48) della piastra di montaggio sullo scivolo di base grande (B).

---

32. 使用 1 颗 M4×10 自攻螺丝 (J) 安装开关挡板 (E)。

33. 使用 2 颗 M4×8 螺丝 (F) 将侧供纸盒 (A) 安装到底座滑板（大）(B) 上。此时，应确保 M4×8 螺丝 (F) 的中心处于底座滑板（大）(B) 的安装板的平行线 (48) 上。

---

32. 탑핑나사 M4×10(J) 1 개로 스위치 판 (E) 을 장착합니다 .

33. 나사 M4×8(F) 2 개로 베이스 슬라이더 대 (B) 에 사이드 피더 (A) 를 장착합니다 . 그 때 , 베이스 슬라이더 대 (B) 의 설치판의 평행선 (48) 에 나사 M4×8(F) 의 센터가 오도록 장착합니다 .

---

32. タッピングビス M4×10(J)1 本でスイッチ当たり板 (E) を取り付ける。

33. ビス M4×8(F)2 本でベーススライダー大 (B) にサイドフィーダー(A) を取り付ける。その際、ベーススライダー大 (B) の取付板の平行線 (48) にビス M4×8(F) のセンターがくるように取り付ける。

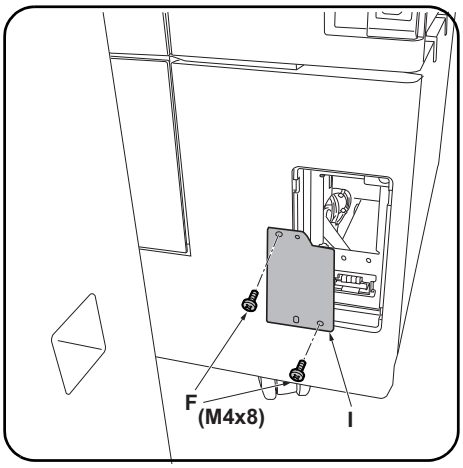

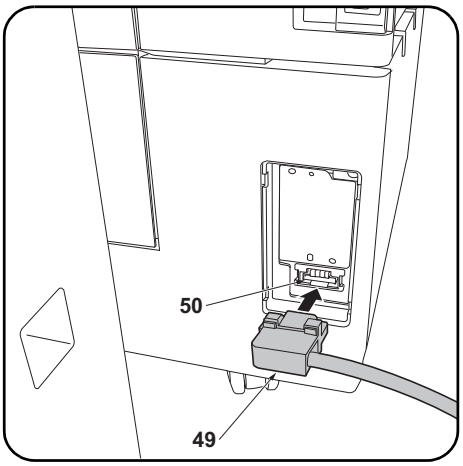

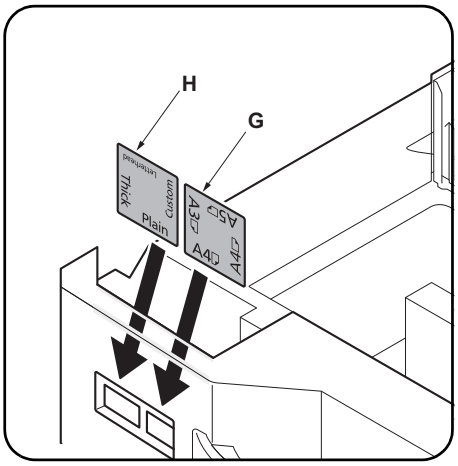

34. Install the cover plate (I) using 2 M4 × 8 screws (F).

35. Plug the signal cable (49) for the side feeder into the paper feeder connector (50).
36. Push the side feeder to connect it to the MFP.

Setting the paper size plate and media type plate
Insert the paper size plate (G) and media type plate (H) into the each slots respectively

---

34. Fixer le capot (I) à l'aide de 2 vis M4 × 8 (F).

35. Enficher le câble de signal (49) du dispositif du plateau d'alimentation latéral dans le connecteur (50) du bureau papier.
36. Pousser le dispositif du plateau d'alimentation latéral pour le raccorder au MFP.

Disposition des plaquettes du format de papier et du type de support
Introduire la plaquette du format de papier (G) et la plaquette du type de support (H) dans leur logement respectif.

---

34. Instale la tapa (I) usando los 2 tornillos M4 × 8 (F).

35. Conecte el cable de señal (49) del alimentador lateral en el conector del alimentador de papel (50).
36. Empuje el alimentador lateral para conectarlo al MFP.

Ajuste de la placa de tamaño de papel y la placa de tipo de medio
Inserte la placa de tamaño de papel (G) y la placa de tipo de medio (H) en cada uno de las ranuras, respectivamente.

---

34. Bringen Sie die Abdeckungsplatte (I) mit 2 M4 × 8 Schrauben (F) an.

35. Schließen Sie das Signalkabel (49) für den seitlichen Einzug am Papiereinzug-Steckverbinder (50) an.
36. Drücken Sie auf den seitlichen Einzug, um ihn mit dem MFP zu verbinden.

Einsetzen der Papierformatkarte und der Medientypkarte
Setzen Sie die Papierformatkarte (G) und die Medientypkarte (H) in die jeweiligen Führungen.

---

34. Installare il coperchio (I) utilizzando 2 viti M4 × 8 (F).

35. Collegare il cavo del segnale (49) per l'unità di alimentazione laterale nel connettore dell'unità di alimentazione carta (50).
36. Spingere l'unità di alimentazione laterale per collegarla all'MFP.

Impostazione della piastra di formato carta e della piastra del tipo di supporto
Inserire la piastra del formato carta (G) e la piastra del tipo di supporto (H) nei rispettivi alloggiamenti.

---

34. 使用 2 颗 M4×8 螺丝 (F) 安装盖板 (I)。

35. 将侧供纸盒的信号线 (49) 连接到供纸盒的接口 (50) 上。
36. 按住侧供纸盒，将其与 MFP 主机连接。

纸张尺寸标示和纸张种类标示的安装
将纸张尺寸标示 (G) 和纸张种类标示 (H) 分别插入到图示的插槽中。

---

34. 나사 M4×8(F) 2 개로 커버 플레이트 (I) 를 장착합니다 .

35. 사이드 피더의 신호선 (49) 을 용지 급지대의 커넥터 (50) 에 접속합니다 .
36. 사이드 피더를 밀어 MFP 본체에 접속합니다 .

용지크기 플레이트와 용지종류 플레이트의 세트
용지크기 플레이트 (G) 와 용지종류 플레이트 (H) 를 각표시 슬롯에 각각 삽입한다 .

---

34. ビス M4×8(F)2 本でカバープレート (I) を取り付ける。

35. サイドフィーダーの信号線 (49) をペーパーフィーダーのコネクター(50) に接続する。
36. サイドフィーダーを押し、MFP 本体に接続する。

用紙サイズプレートと用紙種類プレートのセット
用紙サイズプレート (G) と用紙種類プレート (H) を各表示スロットにそれぞれ挿入する。

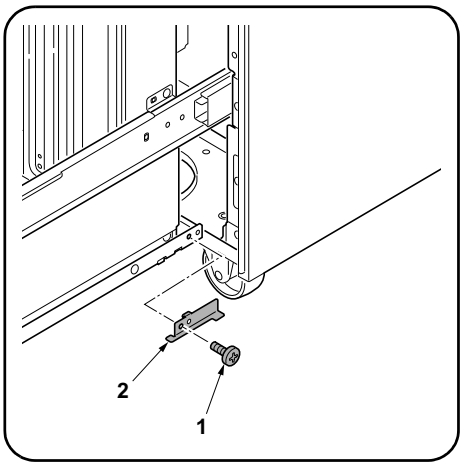

Changing paper size (metric specifications only)
At shipment, Letter is set for inch models and A4 is set for metric models. Use the procedure below to change the size to B5.

1. Pull out the side feeder cassette.
2. Remove a screw (1) and remove the stopper (2).

Modification du format du papier (pour spécifications métriques seulement)
À expédition, les modèles à mesure en pouces sont réglés sur le format Letter et les modèles à mesure métrique sur le format A4. Pour passer au format B5, procéder de la manière suivante.

1. Sortir le tiroir du dispositif du plateau d'alimentation latéral.
2. Déposer la vis (1) et la butée (2).

Cómo cambiar el tamaño de papel (sólo para las especificaciones métricas)
En el momento de salida de fábrica, se configura Carta para los modelos en pulgadas y A4 para los modelos en sistema métrico. Siga este procedimiento para cambiar el tamaño a B5.

1. Extraiga el cajón del alimentador lateral.
2. Quite el tornillo (1) y quite el tope (2).

Ändern des Papierformats (nur metrische Spezifikationen)
Beim Werksversand ist bei Modellen mit Zollmaß das Format Letter voreingestellt und bei Modellen mit metrischem Maß das Format A4.
Das Format kann wie folgend auf B5 umgeschaltet werden.

1. Ziehen Sie die Papierlade des seitlichen Einzugs heraus.
2. Entfernen Sie eine Schraube (1) und nehmen Sie den Anschlag (2) heraus.

Cambio del formato della carta (solo per le specifiche metriche)
Al momento della spedizione, Letter è impostato per le specifiche in pollici e A4 è impostato per le specifiche metriche. Usare la procedura riportata sotto per cambiare il formato a B5.

1. Estrarre il cassetto dell'unità di alimentazione laterale.
2. Rimuovere la vite (1) e quindi rimuovere il fermo (2).

纸张尺寸更改（仅限公制规格）
产品出厂时，英制规格设定为 Letter、公制规格设定为 A4。要将尺寸更改为 B5 时，请按以下步骤进行操作。

1. 拉出侧供纸盒的纸盒。
2. 拆除 1 颗螺丝 (1)，拆下挡块 (2)。

용지크기 변경 (센치 사양만)
출하시 , 인치사양은 Letter, 센치사양은 A4 로 설정되어 있습니다 . 크기를 B5 로 변경하는 경우에는 다음 순서를 진행해 주십시오 .

1. 사이드 피더의 카세트를 빼 냅니다 .
2. 나사 (1) 1 개를 제거하고 스토퍼 (2) 를 떼어 냅니다 .

[用紙サイズ変更(センチ仕様のみ)]
出荷時、インチ仕様は Letter、センチ仕様は A4 に設定されています。サイズを B5 に変更する場合は次の手順をおこなってください。

1. サイドフィーダーのカセットを引き出す。
2. ビス (1)1 本を外し、ストッパー (2) を取り外す。

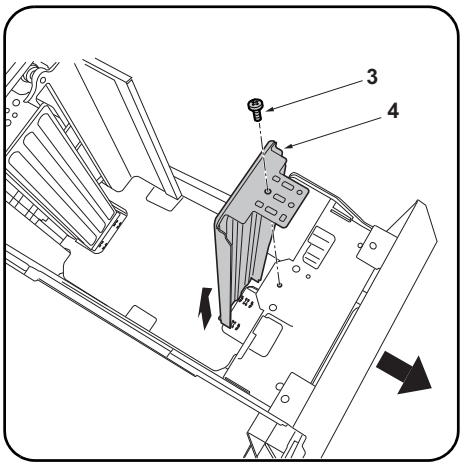

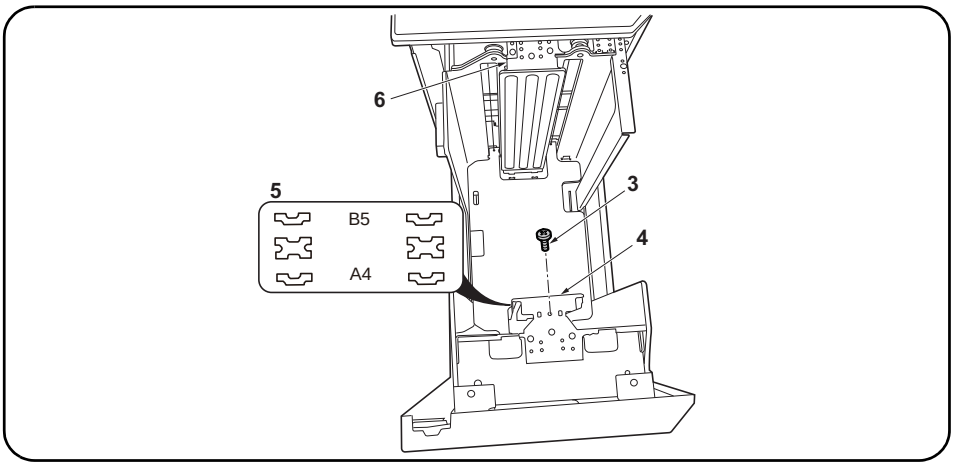

3. Remove a screw (3) and remove the front deck cursor (4).

4. Move the front deck cursor (4) to match the size marking (5) (the outermost is A4, the innermost is B5) at the bottom of the cassette.
5. Fix the front deck cursor (4) using the screw (3).
6. Move the rear deck cursor (6) in the same way.

---

3. Déposer la vis (3) et le curseur de platine avant (4).

4. Déplacer le curseur de platine avant (4) en fonction du repère de format papier (5) (le repère le plus à l'extérieur est celui du format A4, celui le plus à l'intérieur, celui du format B5) se trouvant au fond de le tiroir.
5. Fixer le curseur de platine avant (4) à l'aide de la vis (3).
6. Déplacer le curseur de platine arrière (6) en procédant de la même manière.

---

3. Quite el tornillo (3) y quite el cursor frontal de la plataforma (4).

4. Mueva el cursor frontal de la plataforma (4) para que corresponda con la marca de tamaño (5) (la más externa es A4, la más interna es B5) en la parte inferior del cajón.
5. Fije el cursor frontal de la plataforma (4) usando el tornillo (3).
6. Mueva el cursor trasero de la plataforma (6) de la misma forma.

---

3. Entfernen Sie eine Schraube (3) und nehmen Sie den vorderen Konsole-Cursor (4) heraus.

4. Versetzen Sie den vorderen Konsole-Cursor (4), um die Formatmarkierung (5) am Boden der Papierlade anzupassen (die äußerste ist A4, die innerste ist B5).
5. Befestigen Sie den vorderen Konsole-Cursor (4) mit der Schraube (3).
6. Versetzen Sie den hinteren Konsole-Cursor (6) auf gleiche Weise.

---

3. Rimuovere la vite (3) e quindi rimuovere il cursore frontale del deck (4).

4. Spostare il cursore frontale del deck (4) per farlo corrispondere al segno del formato (5) (il più esterno è A4, il più interno è B5) alla parte inferiore del cassetto.
5. Fissare il cursore frontale del deck (4) utilizzando la vite (3).
6. Spostare il cursore posteriore del deck (6) alla stessa maniera.

---

3. 拆除 1 颗螺丝 (3)，拆下前部纸张长度调节片 (4)。

4. 根据纸盒下部的刻印 (5) （最外侧为 A4、最内侧为 B5）移动前部纸张长度调节片 (4)。
5. 使用 1 颗螺丝 (3) 固定前部纸张长度调节片 (4)。
6. 按相同方法移动后部纸张长度调节片 (6)。

---

3. 나사 (3) 1 개를 제거하고 데크커서앞 (4) 을 제거합니다 .

4. 카세트 아래의 사이즈각인 (5) (가장 바깥쪽이 A4, 가장 안쪽이 B5) 에 맞춰 데크커서앞 (4) 을 이동시킵니다 .
5. 나사 (3) 1 개로 데크커서앞 (4) 을 고정합니다 .
6. 같은 방식으로 데크커서뒤 (6) 를 이동시킵니다 .

---

3. ビス (3)1 本を外し、デッキカーソル前 (4) を取り外す。

4. カセット下のサイズ刻印 (5) （一番外側が A4、一番内側が B5）に合わせてデッキカーソル前 (4) を移動させる。
5. ビス (3)1 本で、デッキカーソル前 (4) を固定する。
6. 同様にデッキカーソル後 (6) を移動させる。

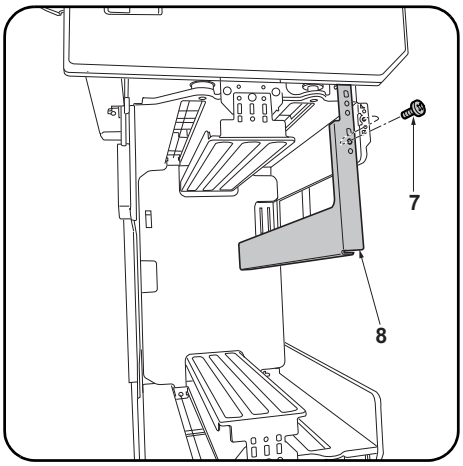

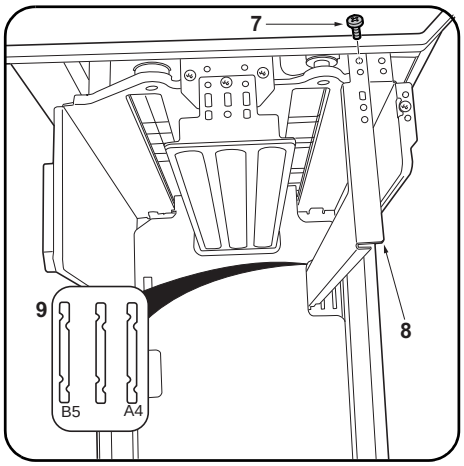

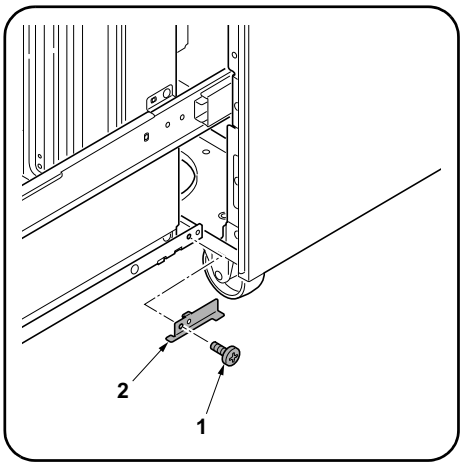

7. Remove a screw (7) and remove the deck trailing edge cursor (8).

8. Move the deck trailing edge cursor (8) to match the size marking (9) at the bottom of the cassette.
9. Fix the deck trailing edge cursor (8) with the screw (7).

10. Reinstall the stopper (2) using the screw (1).
11. Run maintenance mode U208 and set the paper size.

---

7. Déposer la vis (7) et déposer le curseur du bord arrière de la platine (8).

8. Déplacer le curseur du bord arrière de la platine (8) en fonction du repère de format papier (9) se trouvant au fond de le tiroir.
9. Fixer le curseur du bord arrière de la platine (8) à l'aide de la vis (7).

10. Reposer la butée (2) à l'aide de la vis (1).
11. Exécuter le mode maintenance U208 et définir le format du papier.

---

7. Quite el tornillo (7) y quite el cursor del borde inferior de la plataforma (8).

8. Mueva el cursor del borde inferior de la plataforma (8) para que corresponda con la marca de tamaño (9) en la parte inferior del cajón.
9. Fije el cursor del borde inferior de la plataforma (8) con el tornillo (7).

10. Reinstale el tope (2) usando el tornillo (1).
11. Active el modo de mantenimiento U208 y ajuste el tamaño de papel.

---

7. Entfernen Sie eine Schraube (7) und nehmen Sie den Hinterkante-Cursor (8) heraus.

8. Versetzen Sie den Hinterkante-Cursor (8), um die Formatmarkierung (9) am Boden der Papierlade anzupassen.
9. Befestigen Sie den Hinterkante-Cursor (8) mit der Schraube (7).

10. Bringen Sie den Anschlag (2) wieder mit der Schraube (1) an.
11. Führen Sie den Wartungsmodus U208 aus und stellen Sie das Papierformat ein.

---

7. Rimuovere la vite (7) e quindi rimuovere il cursore del bordo finale del deck (8).

8. Spostare il cursore del bordo finale del deck (8) per farlo corrispondere al segno di formato (9) alla parte inferiore del cassetto.
9. Fissare il cursore del bordo finale del deck (8) con la vite (7).

10. Reinstallare il fermo (2) utilizzando la vite (1).
11. Eseguire la modalita manutenzione U208 e impostare il formato carta.

---

7. 拆除 1 颗螺丝 (7)，拆下后端纸张长度调节片 (8)。

8. 根据纸盒下部的刻印 (9) 移动后端纸张长度调节片 (8)。
9. 使用 1 颗螺丝 (7) 固定后端纸张长度调节片 (8)。

10. 使用 1 颗螺丝 (1)，按原样安装挡块 (2)。
11. 执行维修模式 U208，进行纸张尺寸的设定。

---

7. 나사 (7) 1 개를 제거하고 데크뒤커서 (8) 를 제거합니다 .

8. 카세트 아래의 사이즈각인 (9) 에 맞춰서 데크뒤커서 (8) 를 이동시킵니다 .
9. 나사 (7) 1 개로 데크뒤커서 (8) 를 고정합니다 .

10. 나사 (1) 1 개로 스토퍼 (2) 를 원래대로 장착합니다 .
11. 메인터넌스 모드 U208 을 실행해 용지크기 설정을 합니다 .

---

7. ビス (7)1 本を外し、デッキ後端カーソル (8) を取り外す。

8. カセット下のサイズ刻印 (9) に合わせて、デッキ後端カーソル (8) を移動させる。
9. ビス (7)1 本で、デッキ後端カーソル (8) を固定する。

10. ビス (1)1 本で、ストッパー(2) を元通り取り付ける。
11. メンテナンスモード U208 を実行し、用紙サイズの設定をおこなう。

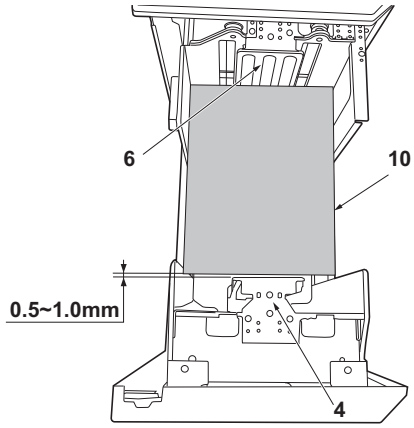

Adjusting the cursor width

1. Load paper in the cassettes.
2. If the gap between the front deck cursor (4) and the paper (10) is outside the 0.5 to 1.0 mm range when the paper (10) is touching up against the rear deck cursor (6), perform the following adjustment.
   * A cursor width that is too small can hinder paper feeding, while a cursor width that is too large can lead to problems such as skewed paper feed.

Réglage de la largeur du curseur

1. Charger les tiroirs en papier.
2. Si l'écartement entre le curseur de platine avant (4) et le papier (10) est hors des limites de 0,5 à 1,0 mm quand le papier (10) touche le curseur de platine arrière (6), procéder au réglage suivant.
   * Une largeur trop faible du curseur risque d'empêcher l'entraînement du papier et une largeur trop grande risque d'entraîner des problèmes du type entraînement du papier de biais.

Cómo ajustar la anchura del cursor

1. Cargue papel en los cajones.
2. Si la separación entre el cursor frontal de la plataforma (4) y el papel (10) está fuera del rango de 0,5 a 1,0 mm cuando el papel (10) toca el cursor trasero de la plataforma (6), haga el siguiente ajuste.
   * Una anchura del cursor demasiado pequeña puede impedir la alimentación de papel; una anchura del cursor demasiado grande puede provocar problemas con la alimentación torcida de papel.

Einstellen der Cursor-Breite

1. Papier in die Papierladen einlegen.
2. Falls der Abstand zwischen dem vorderen Konsole-Cursor (4) und dem Papier (10) außerhalb des Bereichs 0,5 bis 1,0 mm liegt, wenn das Papier (10) am hinteren Konsole-Cursor (6) anliegt, ist folgende Einstellung vorzunehmen.
   * Eine zu kleine Cursor-Breite kann den Papiereinzug behindern, wogegen eine zu große Cursor-Breite verkanteten Papiereinzug und ähnliche Probleme verursachen kann.

Regolazione della larghezza del cursore

1. Caricare carta nei cassetti.
2. Se lo spazio tra il cursore frontale del deck (4) e la carta (10) è fuori della gamma da 0,5 a 1,0 mm quando la carta (10) tocca il cursore postertiore del deck (6), eseguire la regolazione seguente.
   * Una larghezza dei cursori troppo piccola può ostacolare l'alimentazione della carta, mentre unalarghezza dei cursori troppo grande può essere causa di problemi, come ad esempio l'alimentazione obbliqua della carta.

游标宽度的调节

1. 在供纸盒中装入纸张。
2. 在堆纸板后部游标（6）与纸张（10）接触的状态下，如果堆纸板前部游标（4）与纸张（10）的间隙超出了 0.5 ～ 1.0㎜ 的范围，须进行以下调节。
   ※ 如果游标宽度过小，可能造成不供纸，游标宽度过大，则可能发生歪斜进纸等情况。

커서 폭 조정

1. 카세트에 용지를 장착합니다 .
2. 데크커서 뒤 (6) 에 용지 (10) 가 접하고 있는 상태에서 데크커서 앞 (4) 과 용지 (10) 의 틈이 0.5 ～ 1.0mm 의 범위외의 경우에는 이하의 조정을 합니다 .
   ※ 커서 폭이 작으면 무급지 , 커서 폭이 크면 경사급지 등이 발생할 가능성이 있습니다 .

[カーソル幅の調整]

1. カセットに用紙をセットする。
2. デッキカーソル後（6）に用紙（10）が接している状態で、デッキカーソル前（4）と用紙（10）の隙間が 0.5 ～ 1.0㎜ の範囲外の場合は、以下の調整をおこなう。
   ※ カーソル幅が小さいと無給紙、カーソル幅が大きいと斜め給紙などが発生する可能性がある。

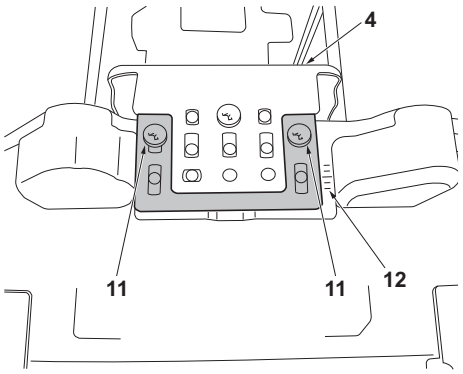

3. Loosen 2 adjusting screws (11) on the front deck cursor (4) and move the cursor (4) while checking with the scale (12).
4. Retighten the 2 adjusting screws (11).
5. Check that the gap between the front deck cursor (4) and the paper is between 0.5 and 1.0 mm.

---

3. Desserrer les 2 vis de réglage (11) sur le curseur de platine avant (4) et déposer le curseur (4) tout en vérifiant à l'aide de l'échelle (12).
4. Resserrer les 2 vis de réglage (11).
5. Vérifier que l'écartement entre le curseur de platine avant (4) et le papier est entre 0,5 et 1,0 mm.

---

3. Afloje 2 tornillos de ajuste (11) en el cursor frontal de la plataforma (4) y mueva el cursor (4) mientras verifica con la escala (12).
4. Vuelva a apretar los 2 tornillos de ajuste (11).
5. Verifique que la separación entre el cursor frontal de la plataforma (4) y el papel sea de entre 0,5 y 1,0 mm.

---

3. Lösen Sie 2 Einstellschrauben (11) am vorderen Konsole-Cursor (4) und versetzen Sie den Cursor (4) unter Beobachtung der Skale (12).
4. Die 2 Einstellschrauben (11) wieder anziehen.
5. Vergewissern Sie sich, dass der Abstand zwischen dem vorderen Konsole-Cursor (4) und dem Papier im Bereich 0,5 bis 1,0 mm liegt.

---

3. Allentare le 2 viti di regolazione (11) sul cursore frontale del deck (4), e quindi rimuovere il cursore (4) controllando la scala (12).
4. Ristringere le 2 viti di regolazione (11).
5. Controllare che lo spazio tra il cursore frontale del deck (4) e la carta sia compreso nella gamma tra 0,5 e 1,0 mm.

---

3. 拧松前部纸张长度调节片 (4) 的 2 颗调节螺丝 (11)，边确认刻度 (12) 边移动前部纸张长度调节片 (4)。
4. 拧紧 2 颗调节螺丝 (11)。
5. 确认堆纸板前部游标 (4) 与纸张的间隙在 0.5 ～ 1.0㎜ 的范围内。

---

3. 데크커서앞 (4) 의 조정나사 (11) 2 개를 풀어 눈금 (12) 을 확인하면서 데크커서앞 (4) 을 이동시킵니다 .
4. 조정나사 (11) 2 개를 조입니다 .
5. 데크커서 앞 (4) 과 용지의 틈이 0.5 ～ 1.0 mm 범위내가 되어 있는 것을 확인합니다 .

---

3. デッキカーソル前 (4) の調整ビス (11)2 本を緩め、目盛り (12) を確認しながらデッキカーソル前 (4) を移動させる。
4. 調整ビス (11)2 本を締め付ける。
5. デッキカーソル前 (4) と用紙の隙間が 0.5 ～ 1.0㎜ の範囲内になっていることを確認する。

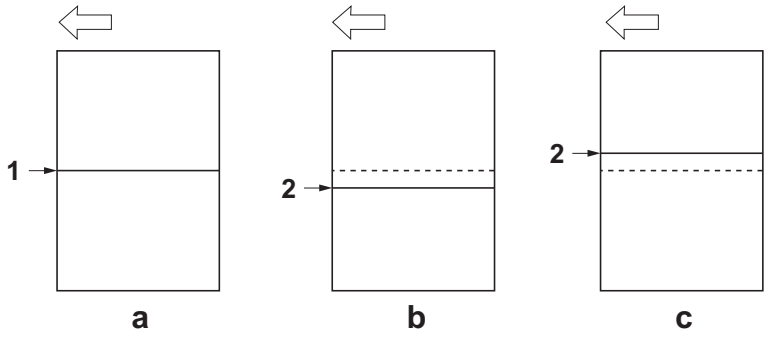

Adjusting the center line
Check the deviation between the center (1) of a correct image (a) and the center (2) of a test pattern.
<Reference value> Wthin ± 2.0 mm
1. Set the maintenance mode U034. Select LSU Out Left and Cassette5.
2. Adjust the values.
   Test pattern (b): Increase the setting value.
   Test pattern (c): Decrease the setting value.
3. Press the Start key to confirm the setting value.

Réglage de l'axe
Vérifier la déviation entre l'axe (1) d'une image correcte (a) et l'axe (2) d'une forme d'essai.
<Valeur de référence> ±2,0 mm max.
1. Passer au mode maintenance U034. Sélectionner LSU Out Left et Cassette5.
2. Régler les valeurs.
   Mire d' essai (b): Augmentez la valeur de réglage.
   Mire d' essai (c): Diminuez la valeur de réglage.
3. Appuyer sur la touche de Start pour confirmer la valeur de réglage.

Ajuste de la línea central
Compruebe la desviación entre el centro (1) de una imagen correcta (a) y el centro (2) de un patrón de prueba.
<Valor de referencia> Dentro de ± 2,0 mm
1. Entre en el modo de mantenimiento U034. Seleccione LSU Out Left y Cassette5.
2. Ajuste los valores.
   Patrón de prueba (b): Aumente el valor de configuración.
   Patrón de prueba (c): Reduzca el valor de configuración.
3. Pulse la tecla de Start para confirmar el valor de configuración.

Einstellen der Mittenlinie
Überprüfen Sie die Abweichung zwischen der Mitte (1) eines korrekten Bilds (a) und der Mitte (2) eines Prüfmusters.
<Bezugswert> Innerhalb ± 2,0 mm
1. Stellen Sie den Wartungsmodus U034 ein. Wählen Sie LSU Out Left und Cassette5.
2. Die Werte einstellen.
   Testmuster (b): Den Einstellwert erhöhen.
   Testmuster (c): Den Einstellwert verringern.
3. Den Einstellwert durch Drücken der Start-Taste bestätigen.

Regolazione della linea centrale
Controllare la deviazione tra il centro (1) di un'immagine corretta (a) e il centro (2) di un modello di prova.
<Valore di riferimento> Entro ± 2,0 mm
1. Impostare la modalità manutenzione U034. Selezionare LSU Out Left e Cassette5.
2. Regolare i valori.
   Modello di prova (b): Aumentare il valore dell'impostazione.
   Modello di prova (c): Diminuire il valore dell'impostazione.
3. Premere il tasto di Start per confermare il valore dell'impostazione.

中心线调节
确认标准图像 (a) 的中心位置 (1) 与测试图案的中心位置 (2) 的偏移。
< 标准值 >±2.0mm 以内
1. 设置维修模式 U034，选择 LSU Out Left、Cassette5。
2. 调整设定值。
   测试图案 (b)：调高设定值。
   测试图案 (c)：调低设定值。
3. 按 Start 键，以确定设定值。

센터라인 조정
적정화상 (a) 의 센터 (1) 와 테스트패턴의 센터 (2) 의 차이를 확인합니다 .
< 기준치 > ±2.0mm 이내
1. 메인터넌스 모드 U034 을 세트하고 LSU Out Left, Cassette5 를 선택합니다 .
2. 설정치를 조정합니다 .
   테트스 패턴 (b) :설정치를 높입니다 .
   테스트 패턴 (c) :설정치를 내립니다 .
3. 시작키를 누르고 설정치를 확인합니다 .

センターライン調整
適正画像 (a) のセンター(1) とテストパターンのセンター(2) のずれを確認する。ずれが基準値外の場合は調整をおこなう。
＜基準値＞ ±2.0mm 以内。
1. メンテナンスモード U034 をセットし、LSU Out Left、Cassette5 を選択する。
2. 設定値を調整する。
   テストパターン (b) :設定値を上げる。
   テストパターン (c) :設定値を下げる。
3. スタートキーを押し、設定値を確定する。

INSTALLATION GUIDE FOR SIDE MULTI TRAY

English

References to medium-speed MFPs in this document denote 45/45 and 55/50 ppm color machines.
References to high-speed MFPs in this document denote 65/65 and 75/70 ppm color machines, and 65 and 80 ppm monochrome machines.

Français

Dans le présent document, les références aux MFP à vitesse moyenne renvoient aux machines couleurs 45/45 et 55/50 ppm.
Dans le présent document, les références aux MFP à grande vitesse renvoient aux machines couleurs 65/65 et 75/70 ppm et aux machines monochromes 65 et 80 ppm.

Español

Las referencias a las MFP de velocidad media de este documento corresponden a las máquinas a color de 45/45 y 55/50 ppm.
Las referencias a las MFP de alta velocidad de este documento corresponden a las máquinas a color de 65/65 y 75/70 ppm y a las máquinas monocromáticas de 65 y 80 ppm.

Deutsch

Angaben für MFP der mittleren Leistungsklasse in dieser Anleitung gelten für die 45/45 und 55/50 ppm Vollfarbenkopierer.
Angaben für MFP der Hochleistungsklasse in dieser Anleitung gelten für die 65/65 und 75/70 ppm Vollfarbenkopierer sowie für die 65 und 80 ppm Monochrommaschinen.

Italiano

I riferimenti per le MFP a velocità media riportati in questo documento indicano le macchine a colori 45/45 e 55/50 ppm.
I riferimenti per le MFP a velocità alta riportati in questo documento indicano le macchine a colori 65/65 e 75/70 ppm, e le macchine monocromatiche 65 e 80 ppm.

简体中文

本文中的中速 MFP 代表彩色 45/45 页机型、55/50 页机型。
本文中的高速 MFP 代表彩色 65/65 页机型、75/70 页机型、黑白 65 页机型、80 页机型。

한국어

본문 중 중속 MFP 는 컬러 45/45 매기 , 55/50 매기 .
본문 중 고속 MFP 는 컬러 65/65 매기 , 75/70 매기 , 흑백 65 매기 , 80 매기를 나타냅니다 .

日本語

本文中の中速 MFP はカラー機の 45/45 枚機、55/50 枚機を表す。
本文中の高速 MFP はカラー機の 65/65 枚機、75/70 枚機、モノクロ機の 65 枚機、80 枚機を表す。

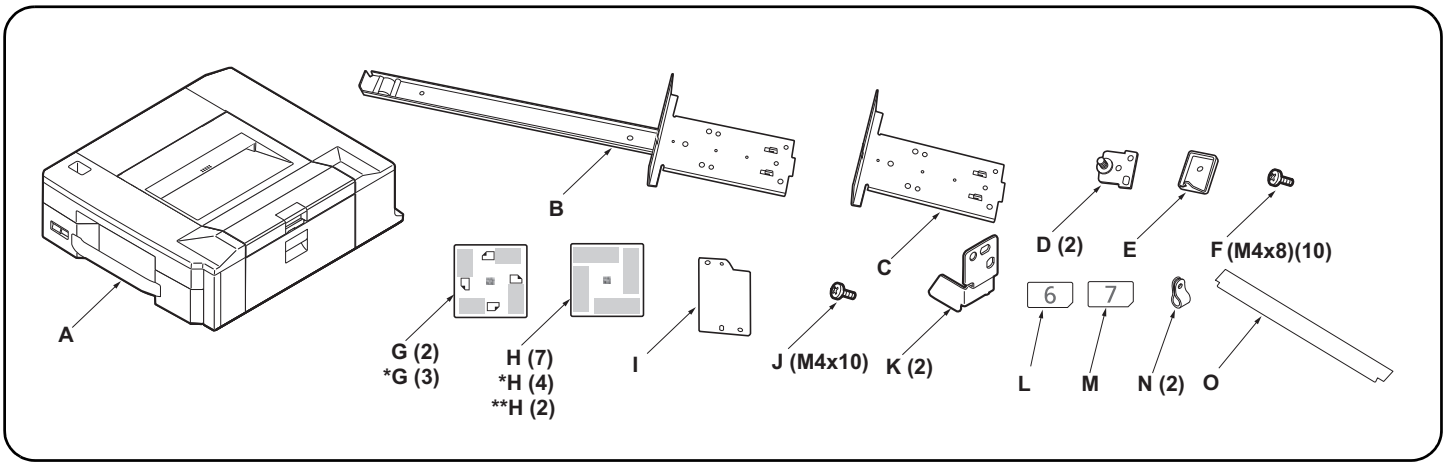

Supplied parts

A. Side multi-tray 1
B. Large base slider 1
C. Small base slider 1
D. Lock pin 2
E. Switch press plate 1
F. M4 × 8 screw 10
G. Paper size plate 2
H. Media type plate(except for 120V model) .. 7
***H.** Media type plate(120V model only) 4
I. Cover plate 1
J. M4 × 10 tapping screw 1
K. Stopper 2
L. Cassette Number Label 6 1
M. Cassette Number Label 7 1
N. Clamp 2
O. Film 1

Be sure to remove any tape and/or cushioning materials from the parts supplied.

Pièces fournies

A. Bac multiples usages latéral 1
B. Grande règle de base 1
C. Petite règle de base 1
D. Broche de verrouillage 2
E. Plaque de pression de l'interrupteur 1
F. Vis M4 × 8 10
G. Plaquette du format de papier 2
H. Plaquette du type de support 7
I. Capot 1
J. Vis de connexion M4 × 10 1
K. Butée 2
L. Étiquette de numéro de cassette 6 1
M. Étiquette de numéro de cassette 7 1
N. Collier 2
O. Film 1

Veillez à retirer les morceaux de bande adhésive et/ou les matériaux de rembourrage des pièces fournies.

Partes suministradas

A. Bypass lateral 1
B. Deslizador de base grande 1
C. Deslizador de base pequeño 1
D. Clavija de bloqueo 2
E. Placa de presión del interruptor 1
F. Tornillo M4 × 8 10
G. Placa de tamaño de papel 2
H. Placa de tipo de medio 7
I. Tapa 1
J. Tornillo de roscado M4 × 10 1
K. Tope 2
L. Etiqueta de casete con el número 6 1
M. Etiqueta de casete con el número 7 1
N. Abrazadera 2
O. Película 1

Asegúrese de despegar todas las cintas y/o material amortiguador de las partes suministradas.

Enthaltene Teile

A. Seitliches Mehrzweck-Papierfach 1
B. Großer Basis-Schieber 1
C. Kleiner Basis-Schieber 1
D. Arretierstift 2
E. Schalterdruckplatte 1
F. M4 × 8 Schraube 10
G. Papierformatkarte 2
H. Medientypkarte 7
I. Abdeckplatte 1
J. M4 × 10 Schneidschraube 1
K. Anschlag 2
L. Aufkleber Kassettennummer 6 1
M. Aufkleber Kassettennummer 7 1
N. Schelle 2
O. Film 1

Stellen Sie sicher, dass sämtliche Klebebänder und/oder Polstermaterial von den gelieferten Teilen entfernt wurden.

Parti fornite

A. Vassoio multiplo laterale 1
B. Scivolo di base grande 1
C. Scivolo di base piccolo 1
D. Perno di bloccaggio 2
E. Piastra spingi interruttore 1
F. Vite M4 × 8 10
G. Piastra formato carta 2
H. Piastra tipo carta 7
I. Coperchio 1
J. Vite autofilettante M4 × 10 1
K. Fermo 2
L. Etichetta numero cassetta 6 1
M. Etichetta numero cassetta 7 1
N. Fascetta 2
O. Pellicola 1

Rimuovere tutti i nastri adesivi e/o i materiali di protezione dalle parti fornite.

附属品

A. 侧手送纸盘 1
B. 底座滑板（大）..... 1
C. 底座滑板（小）..... 1
D. 锁定插销 2
E. 开关挡板 1
F. M4×8 螺丝 10
*G. 纸张尺寸标示 3
**H. 纸张种类标示 2
I. 盖板 1
J. M4×10 自攻螺丝 1
K. 挡块 2
L. 纸盒编号标签 6 1
M. 纸盒编号标签 7 1
N. 束线夹 2
O. 胶片 1

如果附属品上带有固定胶带，缓冲材料时务必揭下。

동봉품

A. 사이드 멀티 트레이 1
B. 베이스 슬라이더 대 1
C. 베이스 슬라이더 소 1
D. 잠금 핀 2
E. 스위치 판 1
F. 나사 M4×8 10
G. 용지크기 플레이트 2
**H. 용지종류 플레이트 2
I. 커버 플레이트 1
J. 탑핑 나사 M4×10 1
K. 스토퍼 2
L. 카세트 넘버 라벨 6 1
M. 카세트 넘버 라벨 7 1
N. 클램프 2
O. 필름 1

동봉품에 고정 테이프，완충재가 붙어 있는 경우에는 반드시 제거할 것 .

PF-780 同梱品

A. サイドマルチトレイ 1
B. ベーススライダー大 1
C. ベーススライダー小 1
D. ロックピン 2
E. スイッチ当たり板 1
F. ビス M4×8 10
G. 用紙サイズプレート 2
**H. 用紙種類プレート 2
I. カバープレート 1
J. タッピングビス M4×10 1
K. ストッパー 2
L. カセットナンバーラベル 6 1
M. カセットナンバーラベル 7 1
N. クランプ 2
O. フィルム 1

同梱品に固定テープ、緩衝材がついている場合は、必ず取り外すこと。

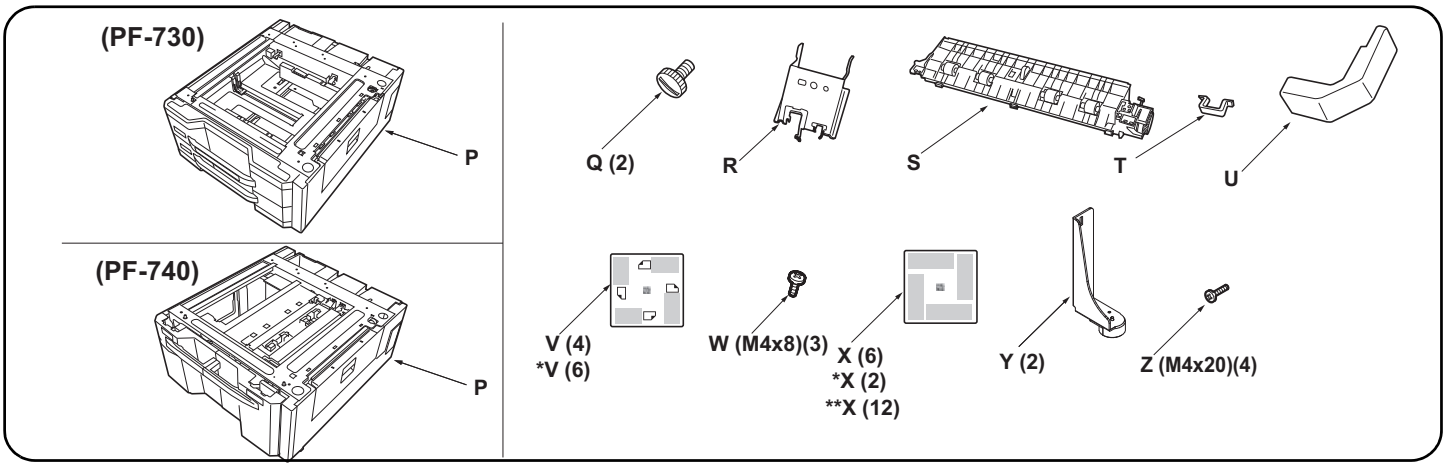

PF-730/740 Supplied parts

P. Paper feeder 1
Q. Pin 2
R. Retainer 1
S. Intermediate paper conveying unit 1
T. Clamp 1
U. Wire cover 1
V. Paper size plate 4
W. S Tite screw M4 × 8 3
X. Media type plate(120V model only) 6
***X.** Media type plate (PF-730:110V model only) 2
****X.** Media type plate (except for above models) 12
Y. Stopper 2
Z. S Tite screws M4 × 20 4

Be sure to remove any tape and/or cushioning materials from the parts supplied.

Do not use the following parts when installing PF-780: (R), (Y), (Z) and one (W).

PF-730/740 Pièces fournies

P. Chargeur de papier 1
Q. Broche 2
R. Élément de retenue 1
S. Unité de transport du papier intermédiaire 1
T. Collier 1
U. Couvercle de câble 1
V. Plaquette du format de papier 4
W. Vis S Tite M4 × 8 3
****X.** Plaquette du type de support 12
Y. Butée 2
Z. Vis S Tite M4 × 20 4

Veillez à retirer les morceaux de bande adhésive et/ou les matériaux de rembourrage des pièces fournies

Ne pas utiliser les pièces suivantes pour l'installation de la PF-780 : (R), (Y), (Z) et un (W).

PF-730/740 Enthaltene Teile

P. Depósito de papel 1
Q. Clavija 2
R. Retén 1
S. Unidad de transporte de papel intermedia. 1
T. Sujetador 1
U. Cubierta para el cable 1
V. Placa de tamaño de papel 4
W. Tornillo S Tite M4 × 8 3
****X.** Placa de tipo de medio 12
Y. Tope 2
Z. Tornillos S Tite M4 × 20 4

Asegúrese de despegar todas las cintas y/o material amortiguador de las partes suministradas.

No utilice las piezas siguientes cuando instale la PF-780: (R), (Y), (Z) y una (W).

PF-730/740 Gelieferte Teile

P. Papiereinzug 1
Q. Stift 2
R. Halterung 1
S. Eingesetzte Papierfördereinheit 1
T. Klemme 1
U. Kabelabdeckung 1
V. Papierformatkarte 4
W. S-Tite-Schraube M4 × 8 3
****X.** Medientypkarte 12
Y. Anschlag 2
Z. S-Tite-Schrauben M4 × 20 4

Stellen Sie sicher, dass sämtliche Klebebänder und/oder Polstermaterial von den gelieferten Teilen entfernt wurden.

Die folgenden Teile bei der Installation von PF-780 nicht verwenden: (R), (Y), (Z) und ein (W).

PF-730/740 Parti fornite

P. Unità di alimentazione della carta 1
Q. Perno 2
R. Fermo 1
S. Unità intermediale di trasporto carta 1
T. Morsetto 1
U. Coperchio cavi 1
V. Piastra formato carta 4
W. Vite S Tite M4 × 8 3
****X.** Piastra tipo carta 12
Y. Fermo 2
Z. Vite S Tite M4 × 20 4

Rimuovere tutti i nastri adesivi e/o i materiali di protezione dalle parti fornite.

Non utilizzare le seguenti parti quando si installa PF-780: (R), (Y), (Z) e uno (W).

PF-730/740 附属品

P. 供纸工作台 1
Q. 固定插销 2
R. 安装板 1
S. 中间搬运单元 1
T. 夹钳 1
U. 电线盖板 1
*V. 纸张尺寸标示 (PF-730) 6
V. 纸张尺寸标示 (PF-740) 4
W. 紧固型 S 螺丝 M4×8 3
*X. 纸张种类标示 2
Y. 限位器 2
Z. 紧固型 S 螺丝 M4×20 4

如果附属品上带有固定胶带，缓冲材料时务必揭下。

设置 PF-780 时，不使用以下部件：(R) (Y) (Z) 和 1 颗 (W)

PF-730/740 동봉품

P. 급지대 1
Q. 핀 2
R. 부착판 1
S. 중간반송유니트 1
T. 크램프 1
U. 전선커버 1
V. 용지크기 플레이트 4
W. 나사 M4×8 S 타이트 3
*X. 용지종류 플레이트 2
Y. 전도방지쇠 2
Z. 나사 M4×20 S 타이트 4

동봉품에 고정 테이프 , 완충재가 붙어 있는 경우에는 반드시 제거할 것 .

PF-780 을 설치할 경우에는 하기 부품은 사용하지 않음 : (R) (Y) (Z) 과 (W) 1 개

PF-730/740 同梱品

P. ペーパーフィーダー 1
Q. ピン 2
R. 取付板 1
S. 中間搬送ユニット 1
T. クランプ 1
U. 電線カバー 1
V. 用紙サイズプレート 4
W. ビス M4×8 S タイト 3
*X. 用紙種類プレート 2
Y. 転倒防止金具 2
Z. ビス M4×20 S タイト 4

同梱品に固定テープ、緩衝材が付いている場合は必ず取り外すこと。

PF-780 を設置する場合は、下記のパーツは使用しない:(R)(Y)(Z) と(W)1 本

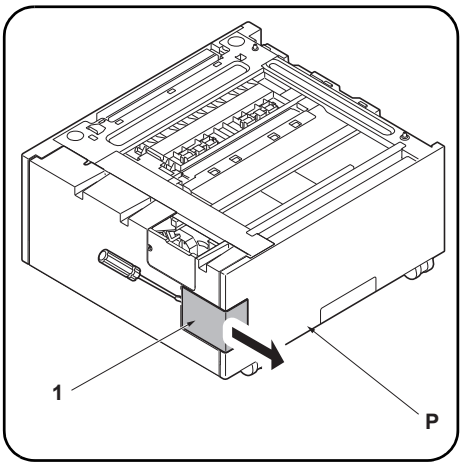

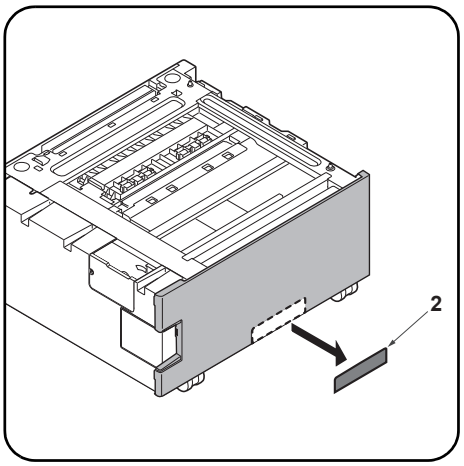

Procedure
Before starting installation, be sure to turn the main power switch of the machine off, and unplug the power plug from the wall outlet.

[Side feeder assembly]
1. Remove the cover (1) of the paper feeder (P).
(Do not use cover (1).)

2. Cut the ribs with a nipper, and then remove the breakaway cover (2).

Procédure
Avant de commencer l'installation, s'assurer de mettre la machine hors tension et de débrancher la fiche d'alimentation de la prise murale.

[Ensemble plateau d'alimentation latéral]
1. Déposer le capot (1) du chargeur de papier (P).
(Ne pas utiliser le capot (1).)

2. Couper les nervures avec une pince, puis déposer le couvercle amovible (2)

Procedimiento
Antes de iniciar la instalación, asegúrese de apagar el interruptor de encendido de la máquina y desenchufar el cable de alimentación de la toma de pared.

[Ensamblaje del alimentador lateral]
1. Quite la cubierta (1) del depósito de papel (P).
(No utilice la cubierta (1).)

2. Recorte las nervaduras con unos alicates de corte y, a continuación, retire la cubierta divisoria (2).

Verfahren
Bevor Sie mit der Installation beginnen überzeugen Sie sich, dass der Netzschalter des Geräts ausgeschaltet und das Stromkabel aus der Steckdose gezogen ist.

[Seitlicher Einzug]
1. Die Abdeckung (1) des Papiereinzugs (P) abnehmen.
(Die Abdeckung (1) nicht verwenden.)

2. Die Rippen mit einer Zange schneiden und dann die Ablösungsabdeckung (2) entfernen.

Procedura
Prima di iniziare l'installazione, spegnere la macchina e scollegare la spina dalla presa di corrente.

[Assemblaggio unità di alimentazione laterale]
1. Rimuovere il coperchio (1) dall'unità di alimentazione della carta (P).
(Non usare il coperchio (1).)

2. Tagliare le pieghe con una pinzetta e poi rimuovere il coperchio di distacco (2).

安装步骤
安装前务必关闭机器的主电源开关，并从墙壁插座拔下电源插头。

[侧供纸盒的装配]
1. 拆下供纸工作台（P）的盖板（1）。
（不使用盖板（1）。）

2. 使用剪钳切断肋板，切除切割盖板（2）。

설치순서
설치를 시작하기 전에 반드시 본체의 주 전원 스위치를 끄고 벽 콘센트에서 전원 플러그를 분리하십시오 .

[사이드 피더 조립]
1. 용지 급지대 (P) 의 커버 (1) 을 제거합니다 .
(커버 (1) 은 사용하지 않습니다 .)

2. 니퍼로 리브를 자르고 분할커버 (2) 를 떼어냅니다 .

取付手順
必ず機械本体の主電源スイッチを OFF にし、機械本体の電源プラグを抜いてから作業すること。

[サイドフィーダーの組み立て]
1. ペーパーフィーダー(P)のカバー(1) を取り外す。
（カバー(1)は使用しません。）

2. ニッパーでリブを切り、割りカバー(2)を切り取る。

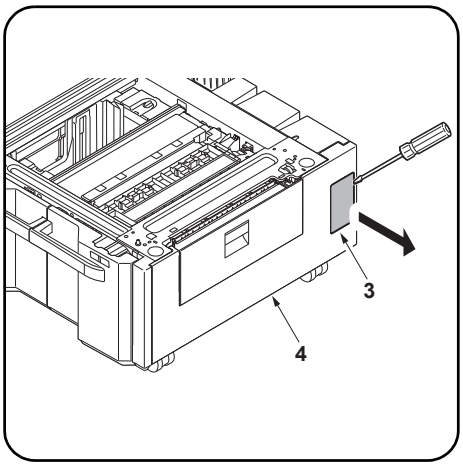

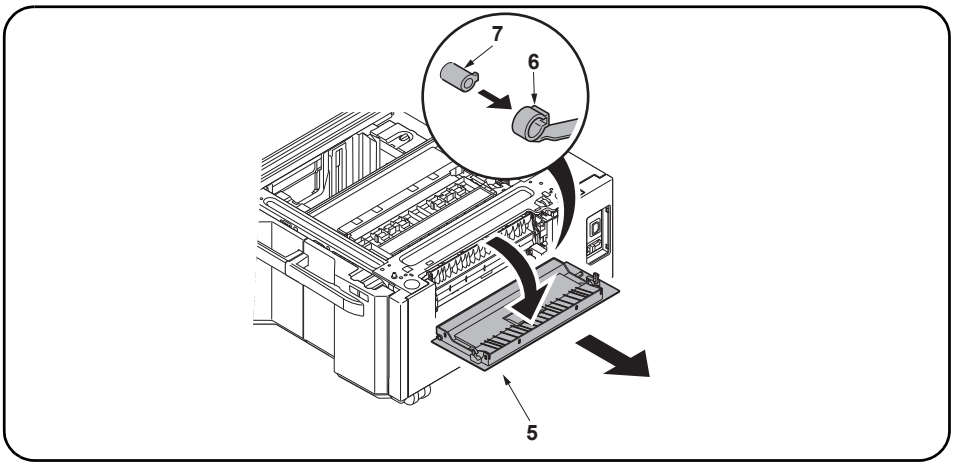

3. Remove the panel (3) from the lower right cover (4) on the paper feeder using a flat blade screwdriver.

4. Open the paper feeder right cover (5).
Remove the strap (6) from the right cover shaft (7) and remove the right cover (5).

---

3. Déposer le panneau (3) du capot inférieur droit (4) du chargeur de papier en procédant à l'aide d'un tournevis à lame.

4. Ouvrir le couvercle droit du chargeur de papier (5).
Déposer la courroie (6) de l'axe du capot droit (7) et déposer le capot droit (5).

---

3. Quite el panel (3) de la cubierta derecha inferior (4) del depósito de papel con un destornillador de pala plana.

4. Abra la cubierta derecha del depósito de papel (5).
Quite la correa (6) del eje de la cubierta derecha (7) y quite la cubierta derecha (5).

---

3. Nehmen Sie mit einem flachen Schraubendreher die Platte (3) von der unteren rechten Abdeckung (4) des Papiereinzugs ab.

4. Die rechte Abdeckung (5) des Papiereinzugs öffnen.
Nehmen Sie den Riemen (6) von der Welle (7) der rechten Abdeckung und dann die rechte Abdeckung (5) ab.

---

3. Rimuovere il pannello (3) dal coperchio destro inferiore (4) sull'unità di alimentazione carta utilizzando un cacciavite a testa piana.

4. Aprire il coperchio destro (5) dell'unità di alimentazione della carta.
Rimuovere la cinghietta (6) dall'asta (7) del coperchio destro e quindi rimuovere il coperchio destro (5).

---

3. 使用一字螺丝刀等将供纸盒的右下部盖板 (4) 的盖子 (3) 拆下。

4. 打开供纸盒的右部盖板 (5)。
从右盖板的轴 (7) 上拆除挂绳 (6)，拆下右盖板 (5)。

---

3. 용지 급지대의 우측 하단커버 (4) 의 뚜껑 (3) 을 마이너스 드라이버 등으로 떼어 냅니다 .

4. 급지대 우측커버 (5) 를 엽니다 .
스트랩 (6) 을 우측커버의 축 (7) 에서 떼어내고 우측커버 (5) 를 제거합니다 .

---

3. ペーパーフィーダーの右下カバー (4) のふた (3) をマイナスドライバーなどで取り外す。

4. ペーパーフィーダーの右カバー (5) を開く。
ストラップ (6) を右カバーの軸 (7) から外し、右カバー (5) を取り外す。

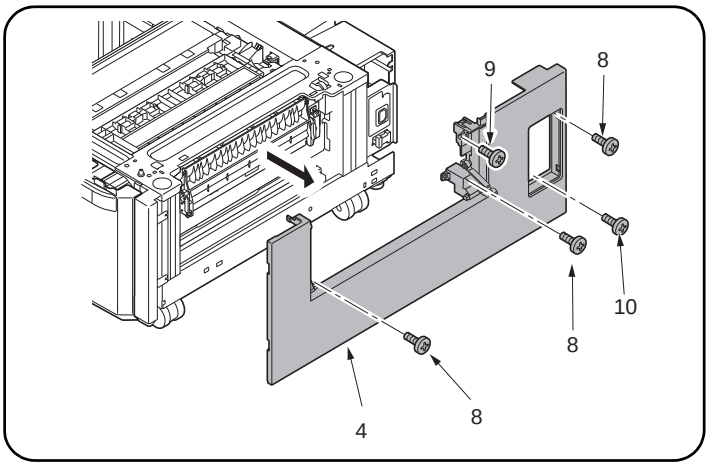

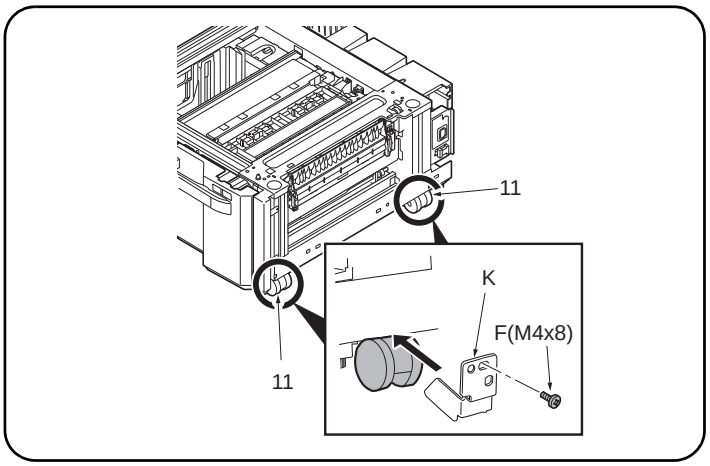

For PF-730

5. Remove 3 screws (8) and a screw (9) and remove the paper feeder lower right cover (4).

For PF-740

5. Remove 3 screws (8) and a screw (10) and remove the paper feeder lower right cover (4).

6. Align the 2 paper feeder casters (11) in the direction shown in the illustration, and fasten each of them to stopper (K) using an M4 × 8 screw (F).

7. Reinstall the paper feeder lower right cover (4).

8. Reinstall the paper feeder right cover (5).

Pour PF-730

5. Déposer les 3 vis (8) et la vis (9) puis déposer le capot inférieur droit du chargeur de papier (4).

Pour PF-740

5. Déposer les 3 vis (8) et la vis (10) puis déposer le capot inférieur droit du chargeur de papier (4).

6. Aligner les 2 roulettes (11) du chargeur de papier selon la direction indiquée sur l'illustration, et les fixer sur la butée (K) à l'aide d'une vis M4 × 8 (F).

7. Reposer le capot inférieur droit du chargeur de papier (4).

8. Reposer le capot droit du chargeur de papier (5).

Para PF-730

5. Quite los 3 tornillos (8) y el tornillo (9) y quite la cubierta derecha inferior del depósito de papel (4).

Para PF-740

5. Quite los 3 tornillos (8) y el tornillo (10) y quite la cubierta derecha inferior del depósito de papel (4).

6. Alinee las 2 ruedas del depósito de papel (11) en el sentido que se indica en la ilustración, y apriételas hasta llegar al tope (K) con un tornillo M4 × 8 (F).

7. Reinstale la cubierta derecha inferior del depósito de papel (4).

8. Reinstale la cubierta derecha del depósito de papel (5).

Für PF-730

5. Entfernen Sie 3 Schrauben (8) und eine Schraube (9) und nehmen Sie die untere rechte Abdeckung (4) des Papiereinzugs ab.

Für PF-740

5. Entfernen Sie 3 Schrauben (8) und eine Schraube (10) und nehmen Sie die untere rechte Abdeckung (4) des Papiereinzugs ab.

6. Die 2 Laufrollen des Papiereinzugs (11) in der in der Abbildung angezeigten Richtung ausrichten und jede von ihnen mithilfe einer M4 × 8 Schraube (F) am Anschlag (K) befestigen.

7. Bringen Sie die untere rechte Abdeckung (4) des Papiereinzugs wieder an.

8. Bringen Sie die rechte Abdeckung (5) des Papiereinzugs wieder an.

Per PF-730

5. Rimuovere le 3 viti (8) e una vite (9), e quindi rimuovere il coperchio destro inferiore (4) dell'unità di alimentazione carta.

Per PF-740

5. Rimuovere le 3 viti (8) e una vite (10), e quindi rimuovere il coperchio destro inferiore (4) dell'unità di alimentazione carta.

6. Allineare le ruote orientabili dell'unità di alimentazione della carta (11) nella direzione mostrata nell'illustrazione e stringere ognuno al fermo (K) con una vite M4 × 8 (F).

7. Reinstallare il coperchio destro inferiore dell'unità di alimentazione carta (4).

8. Reinstallare il coperchio destro (5) dell'unità di alimentazione carta.

PF-730 时

5. 拆除 3 颗螺丝 (8) 和 1 颗螺丝 (9)，拆下供纸盒的右下部盖板 (4)。

PF-740 时

5. 拆除 3 颗螺丝 (8) 和 1 颗螺丝 (10)，拆下供纸盒的右下部盖板 (4)。

6. 将供纸工作台的 2 个脚轮 (11) 与图示方向对齐，各使用 1 颗 M4×8 螺丝 (F) 来安装挡块 (K)。

7. 按原样安装供纸盒的右下部盖板 (4)。

8. 按原样安装供纸盒的右盖板 (5)。

PF-730 의 경우

5. 나사 (8) 3 개와 나사 (9) 1 개를 제거하고 , 용지 급지대의 우측 하단커버 (4) 를 제거합니다 .

PF-740 의 경우

5. 나사 (8) 3 개와 나사 (10) 1 개를 제거하고 , 용지 급지대의 우측 하단커버 (4) 를 제거합니다 .

6. 용지 급지대의 캐스터 (11) 2 개를 일러스트의 방향에 맞춰 각각 스토퍼 (K) 를 나사 M4×8 (F) 1 개로 장착합니다 .

7. 용지 급지대의 우측 하단커버 (4) 를 원래대로 장착합니다 .

8. 용지 급지대의 우측커버 (5) 를 원래대로 장착합니다 .

PF-730 の場合

5. ビス (8)3 本とビス (9)1 本を外して、ペーパーフィーダーの右下カバー(4) を取り外す。

PF-740 の場合

5. ビス (8)3 本とビス (10)1 本を外して、ペーパーフィーダーの右下カバー(4) を取り外す。

6. ペーパーフィーダーのキャスター(11)2 個をイラストの方向に合わせ、それぞれストッパー(K)をビス M4×8(F)1 本で取り付ける。

7. ペーパーフィーダーの右下カバー(4) を元通り取り付ける。

8. ペーパーフィーダーの右カバー(5) を元通り取り付ける。

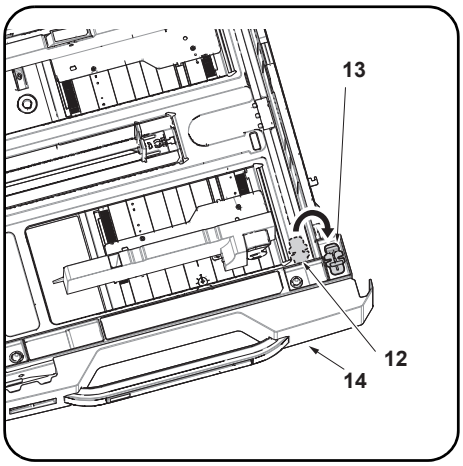

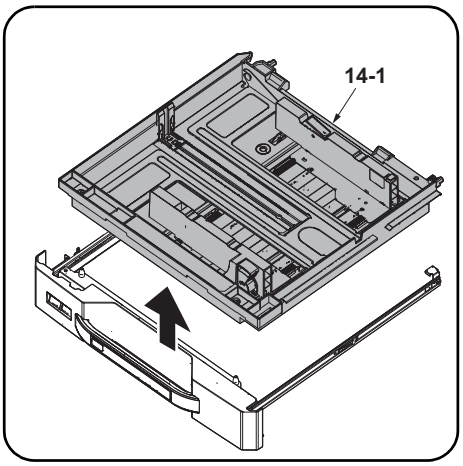

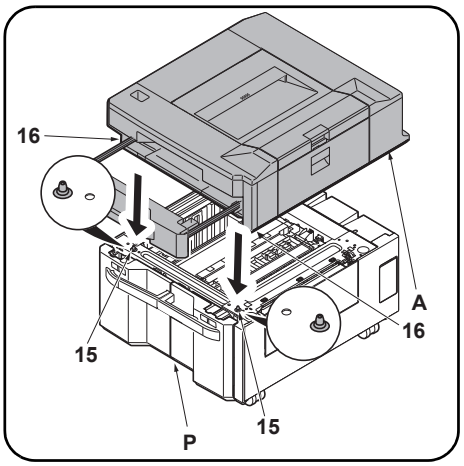

9. Pull out the cassette (14) of the side multi-tray (A), remove a lift plate stopper (12) and attach it in the storage location (13).

10. Remove the cassette (14-1) of the side multi-tray (A).

11. Place the side multi-tray on the paper feeder (P) so that each pin (15) on the right and left sides of the front of the paper feeder (P) matches with the holes(16) in the base of the side multi-tray (A).

---

9. Tirer la cassette (14) du bac multiples usages latéral (A) vers l'extérieur, retirer la butée de plaque d'élévation (12) et la fixer à l'emplacement de rangement (13).

10. Retirez le magasin (14-1) du bac multiples usages latéral (A).

11. Placer le bac multiples usages latéral sur le chargeur de papier (P) de sorte à aligner chacune des broches (15) situées sur les côtés droit et gauche du devant du chargeur de papier (P) avec les orifices(16) de la base du bac multiples usages latéral (A).

---

9. Saque el casete (14) del bypass lateral (A), quite el tope de placa de elevación (12) y póngalo en el espacio reservado para guardarlo (13).

10. Quite el depósito (14-1) del bypass lateral (A).

11. Coloque el bypass lateral sobre el depósito de papel (P) de tal manera que los pasadores (15) que se encuentran a izquierda y derecha en la parte delantera del depósito de papel (P) coincidan con los agujeros(16) que hay en la base del bypass lateral (A).

---

9. Die Kassette (14) aus dem seitlichen Mehrzweck-Papierfach herausziehen (A), den Hebeplattenanschlag (12) entfernen und an der Speicherposition (13) anbringen.

10. Entfernen Sie die Kassette (14-1) des seitlichen Mehrfacheinzugs (A).

11. Das seitliche Mehrzweck-Papierfach auf dem Papiereinzug (P) so platzieren, dass jeder Stift (15) auf der linken und rechten Vorderseite des Papiereinzugs (P) mit den Öffnungen(16) am Boden des seitlichen Mehrzweck-Papierfachs (A) übereinstimmt.

---

9. Estrarre il cassetto (14) del vassoio multiplo laterale (A), rimuovere il fermo della piastra di sollevamento (12) e collegarlo nella posizione di stoccaggio (13).

10. Rimuovere il cassetto (14-1) del vassoio multiplo laterale (A).

11. Porre il vassoio multiplo laterale sull'unità di alimentazione della carta (P) in modo che ogni punta (15) a destra e sinistra davanti all'unità di alimentazione della carta (P) corrisponda i fori(16) nella base del vassoio multiplo laterale (A).

---

9. 拉出侧手送纸盘 (A) 的纸盒 (14)，拆除 1 个升降板挡块 (12) 并将其安装到保存场所 (13)。

10. 取出侧手送纸盘 (A) 的纸盒 (14-1) 上。

11. 将供纸工作台 (P) 左右前方的各插销 (15) 与侧手送纸盘 (A) 的底座的孔 (16) 对齐，将侧手送纸盘 (A) 放在供纸工作台 (P) 上。

---

9. 사이드 멀티 트레이 (A) 의 카세트 (14) 를 빼내고 리프트판 스토퍼 (12) 1 개를 빼 내어 보관장소 (13) 에 장착합니다 .

10. 사이드 멀티 트레이 (A) 의 카세트 (14-1) 를 제거합니다 .

11. 용지 급지대 (P) 의 좌우전방의 각 핀 (15) 과 사이드 멀티 트레이 (A) 의 베이스 구멍 (16) 이 맞도록 용지 급지대 (P) 에 사이드 멀티 트레이 (A) 를 얹습니다 .

---

9. サイドマルチトレイ (A) のカセット (14) を引き出し、リフト板ストッパー (12) 1 個を外して保管場所 (13) に取り付ける。

10. サイドマルチトレイ (A) のカセット (14-1) を取り外す。

11. ペーパーフィーダー (P) の左右前方の各ピン (15) とサイドマルチトレイ (A) のベースの穴 (16) が合うように、ペーパーフィーダー (P) にサイドマルチトレイ (A) を載せる。

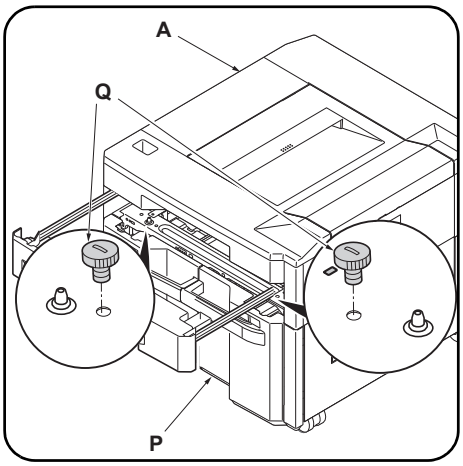

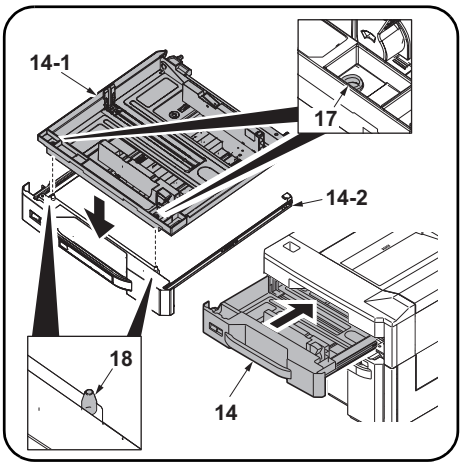

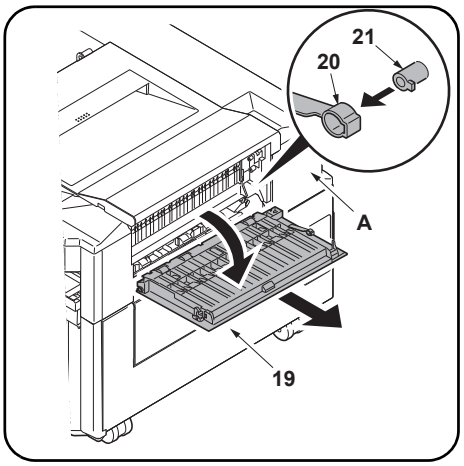

12. Attach side multi-tray (A) to paper feeder (P) using 2 pins (Q).

13. Align the holes (17) of the cassette (14-1) for the side multi-tray (A) with the pins (18) in the cassette slider (14-2). Put the paper cassette (14-1).
14. Push the cassette (14) in fully.

15. Open the right cover (19) of the side multi-tray (A).
16. Remove the strap (20) from the right cover shaft (21) and remove the right cover (19).

---

12. Fixer le bac multiples usages latéral (A) au chargeur de papier (P) à l'aide de 2 broches (Q).

13. Alignez les trous (17) du magasin (14-1) pour le bac multiples usages latéral (A) avec les ergots (18) dans le tiroir du magasin (14-2).Placez le magasin de papier (14-1).
14. Enfoncez à fond le magasin de papier (14).

15. Ouvrir le capot de droite (19) du bac multiples usages latéral (A).
16. Déposer la courroie (20) de l'axe du capot droit (21) et déposer le capot droit (19).

---

12. Sujete el bypass lateral (A) al depósito de papel (P) utilizando 2 pasadores (Q).

13. Alinee los orificios (18) del depósito (14-1) del bypass lateral (A) con los pasadores (19) del deslizador del depósito (14-2).
14. Ejerza presión sobre el depósito de papel (14) hasta introducirlo por completo.

15. Abra la cubierta derecha (19) del bypass lateral (A).
16. Quite la correa (20) del eje de la cubierta derecha (21) y quite la cubierta derecha(19).

---

12. Das seitliche Mehrzweck-Papierfach (A) mithilfe der 2 Stifte (Q) am Papiereinzug (P) befestigen.

13. Richten Sie die Löcher (17) der Kassette (14-1) des seitlichen Mehrzweck-Papierfachs (A) mit den Stiften (18) im Kassettenanschlag (14-2) aus. Setzen Sie die Papierkassette (14-1) wieder ein.
14. Schieben Sie die Papierkassette (14) bis zum Anschlag ein.

15. Die rechte Abdeckung (19) des seitlichen Mehrzweck-Papierfachs (A) öffnen.
16. Nehmen Sie den Riemen (20) von der Welle (21) der rechten Abdeckung und dann die rechte Abdeckung (19) ab.

---

12. Collegare il vassoio multiplo laterale (A) all'unità di alimentazione della carta (P) utilizzando 2 puntine (Q).

13. Allineare i fori (17) del cassetto (14-1) per il vassoio multiplo laterale (A) con i perni (18) della guida cassetto (14-2). Inserire il cassetto carta (14-1).
14. Spingere il cassetto (14) fino in fondo.

15. Aprire il pannello destro (19) del vassoio multiplo laterale (A).
16. Rimuovere la cinghietta (20) dall'asta (21) del coperchio destro e quindi rimuovere il coperchio destro (19).

---

12. 使用 2 枚插销 (Q) 将侧手送纸盘 (A) 固定在供纸工作台 (P) 上。

13. 将侧手送纸盘 (A) 的供纸盒 (14-1) 的孔 (17) 和供纸盒导轨 (14-2) 的插销 (18) 对齐。 放置纸盒 (14-1)。
14. 完全推入纸盒 (14)。

15. 打开侧手送纸盘 (A) 的右部盖板 (19)。
16. 从右盖板的轴 (21) 上拆除挂绳 (20)，拆下右盖板 (19)

---

12. 핀 (Q) 2 개로 사이드 멀티 트레이 (A) 를 용지 급지대 (P) 에 고정합니다 .

13. 사이드 멀티 트레이 (A) 의 카세트 (14-1) 의 구멍 (17) 과 카세트 슬라이더 (14-2) 의 핀 (18) 을 맞춥니다 . 용지 카세트 (14-1) 를 배치합니다 .
14. 카세트 (14) 를 완전히 밀어 넣습니다 .

15. 사이드 멀티 트레이 (A) 의 우측커버 (19) 를 엽니다 .
16. 스트랩 (20) 을 우측커버의 축 (21) 에서 떼어내고 우측커버 (19) 를 제거합니다 .

---

12. ピン (Q) 2 本でサイドマルチトレイ (A) をペーパーフィーダー (P) に固定する。

13. サイドマルチトレイ (A) のカセット (14-1) の穴 (17) とカセットスライダー (14-2) のピン (18) を合わせる。カセット (14-1) を置く。
14. カセット (14) を奥まで押し込む。

15. サイドマルチトレイ (A) の右カバー (19) を開く。
16. ストラップ (20) を右カバーの軸 (21) から外し、右カバー (19) を取り外す。

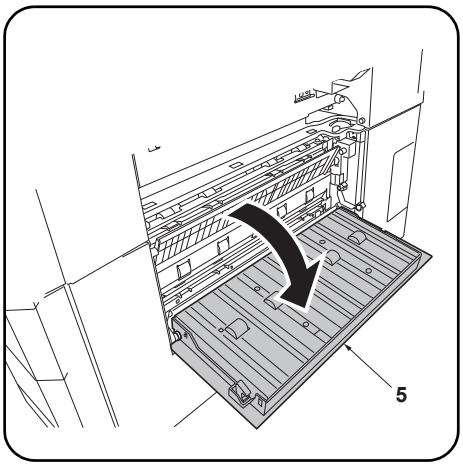

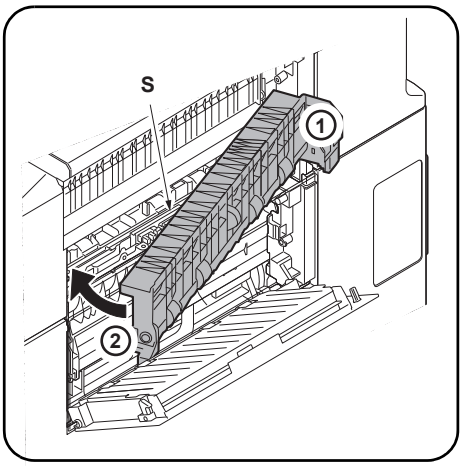

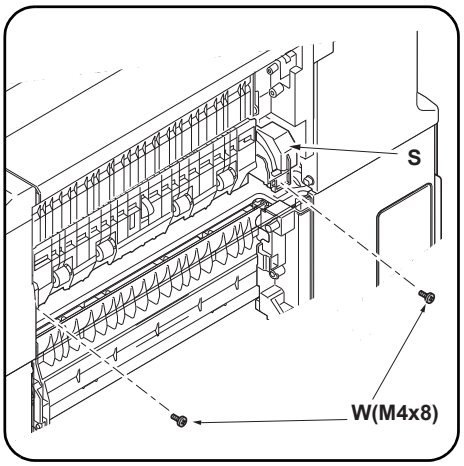

17. Open the paper feeder right cover (5).

18. Insert the intermediate paper conveying unit (S) in order of 1 to 2 on the illustration.

19. Secure the intermediate paper conveying unit (S) with the 2 S Tite screw M4 × 8 (W).

---

17. Ouvrir le couvercle droit du chargeur de papier (5).

18. Insérer l'unité de transport du papier intermédiaire (S) en suivant l'ordre 1 à 2 indiqué sur l'illustration.

19. Fixer l'unite de transport du papier intermediaire (S) a l'aide des 2 Vis S Tite M4 × 8 (W).

---

17. Abra la cubierta derecha del depósito de papel (5).

18. Inserte la unidad de transporte de papel intermedia (S) siguiendo el orden de 1 a 2 de la ilustración.

19. Asegure la unidad de transporte de papel intermedia (S) con los 2 Tornillo S Tite M4 × 8 (W).

---

17. Die rechte Abdeckung (5) des Papiereinzugs öffnen.

18. Die eingesetzte Papierfördereinheit (S) in der in der Abbildung gezeigten Reihenfolge 1 bis 2 einbauen.

19. Die eingesetzte Papierfordereinheit (S) mit den 2 S-Tite-Schraube M4 × 8 (W) sichern.

---

17. Aprire il pannello destro (5) dell'unità di alimentazione della carta.

18. Inserire l'unità intermediale di trasporto carta (S) da 1 a 2 sull'illustrazione.

19. Fissare l'unita intermediale di trasporto carta (S) con le 2 Vite S Tite M4 × 8 (W).

---

17. 打开供纸盒的右部盖板 (5)。

18. 将中间搬运单元(S)按如图所示先插入①，再插到②。

19. 使用 2 颗紧固型 S 螺丝 M4×8(W) 来固定中间搬运单元 (S)。

---

17. 급지대 우측커버 (5) 를 엽니다 .

18. 중간반송 유니트 (S) 를 일러스트 와 같이 ①, ②의 순으로 삽입합니다 .

19. 나사 M4×8 S 타이트 (W) 2 개로 중간반송 유니트 (S) 를 고정합니다 .

---

17. ペーパーフィーダーの右カバー(5)を開く。

18. 中間搬送ユニット(S)をイラストのように①から②の順で挿入する。

19. ビス M4×8 S タイト (W)2 本で中間搬送ユニット (S) を固定する。

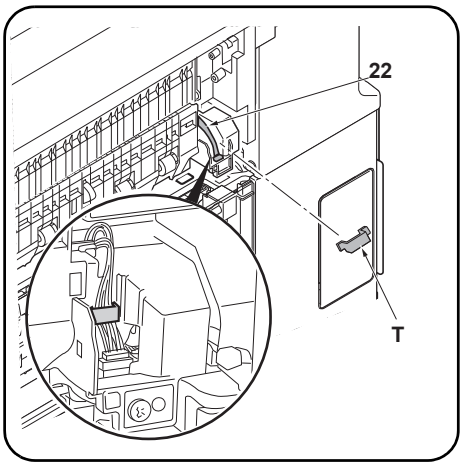

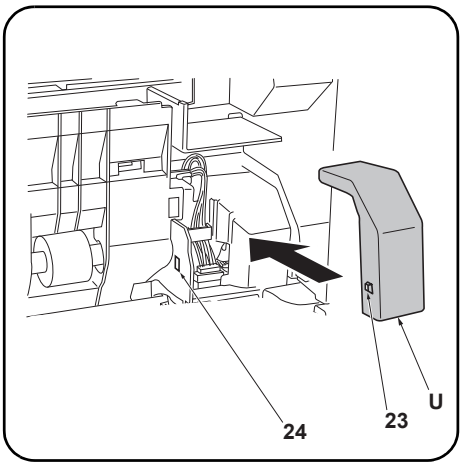

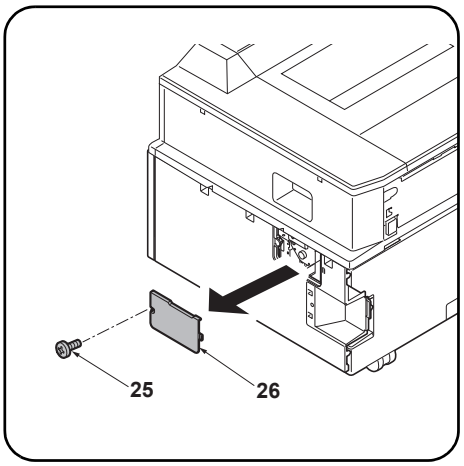

20. Connect the intermediate paper conveying unit(S) connector (22).
21. Attach the clamp (T) and secure the connector wire.

22. Insert the projection (23) of the wire cover (U) into the hole (24) in the intermediate paper conveying unit, and attach the wire cover (U).
23. Replace the right cover (19) of the side multi-tray (A).
24. Close the right cover of the paper feeder (5).

25. Remove the screw (25) in the rear of the paper feeder and remove the cover (26).

---

20. Raccorder le connecteur (22) de l'unité de transport du papier intermédiaire(S).
21. Monter le collier (T) et fixer le câble du connecteur.

22. Insérer la saillie (23) du couvercle de câble (U) dans l'orifice (24) de l'unité de transport du papier intermédiaire, et fixer le couvercle de câble (U).
23. Remettre le capot de droite (19) du bac multiples usages latéral (A) en place.
24. Fermer le capot de droite du chargeur de papier (5).

25. Déposer la vis (25) à l'arrière du chargeur de papier et déposer le couvercle (26).

---

20. Conecte el conector(22) de la unidad de transporte de papel intermedia (S).
21. Fije el sujetador (T) y asegure el cable del conector.

22. Introduzca el resalto (23) de la cubierta para el cable (U) por el agujero (24) de la unidad de transporte de papel intermedia y sujete la cubierta para el cable (U).
23. Sustituya la cubierta derecha (19) del bypass lateral (A).
24. Cierre la cubierta derecha del depósito de papel (5).

25. Quite el tornillo (25) del lado trasero del depósito de papel y quite la cubierta (26).

---

20. Den Steckverbinder (22) der eingesetzten Papierfördereinheit anschließen(S).
21. Die Klemme (T) anbringen und das Kabel des Steckverbinders sichern.

22. Die Nase (23) der Kabelabdeckung (U) in die Öffnung (24) in der eingesetzten Papierfördereinheit einsetzen und die Kabelabdeckung (U) befestigen.
23. Die rechte Abdeckung (19) des seitlichen Mehrzweck-Papierfachs (A) wieder anbringen.
24. Die rechte Abdeckung des Papiereinzugs (5) schließen.

25. Die Schraube (25) an der Rückseite des Papiereinzugs entfernen und die Abdeckung (26) abnehmen.

---

20. Collegare il connettore (22) dell'unità intermediale di trasporto carta(S).
21. Applicare il morsetto (T) e fissare il cavo del connettore.

22. Inserire la proiezione (23) del coperchio cavi (U) nel foro (24) dell'unità intermediale di trasporto carta e collegare il coperchio cavi (U).
23. Sostituire il pannello destro (19) del vassoio multiplo laterale (A).
24. Chiudere il pannello destro dell'unità di alimentazione della carta (5).

25. Rimuovere la vite (25) nel retro dell'unità di alimentazione della carta e quindi rimuovere il coperchio (26).

---

20. 连接中间搬运单元 (S) 的接插件 (22)。
21. 安装夹钳 (T)，以固定接插件电线。

22. 将电线盖板 (U) 的突起 (23) 插入中间搬运单元的孔 (24) 中，安装电线盖板 (U)。
23. 按原样安装侧手送纸盘 (A) 的右部盖板 (19)。
24. 关闭供纸工作台的右部盖板 (5)。

25. 拆除供纸盒后部的 1 颗螺丝 (25)，拆下盖板 (26) 。

---

20. 중간반송유니트 (S) 의 커넥터 (22) 를 접속합니다 .
21. 클램프 (T) 를 부착 , 커넥터 전선을 고정합니다 .

22. 전선커버 (U) 의 돌기 (23) 를 중간반송 유니트의 구멍 (24) 에 넣고 전선커버 (U) 를 장착합니다 .
23. 사이드 멀티 트레이 (A) 의 우측커버 (19) 를 원래대로 장착합니다 .
24. 용지 급지대의 우측커버 (5) 를 닫습니다 .

25. 급지대 후면의 뒤쪽 나사 (25) 1 개를 제거하고 커버 (26) 를 떼어 냅니다 .

---

20. 中間搬送ユニット (S) のコネクター(22) を接続する。
21. クランプ (T) を取り付け、コネクター電線を固定する。

22. 電線カバー(U) の突起 (23) を中間搬送ユニットの穴 (24) に入れて、電線カバー(U) を取り付ける。
23. サイドマルチトレイ (A) の右カバー(19)を元通りに取り付ける。
24. ペーパーフィーダーの右カバー(5)を閉じる。

25. ペーパーフィーダー後側のビス (25)1 本を外し、カバー(26) を取り外す。

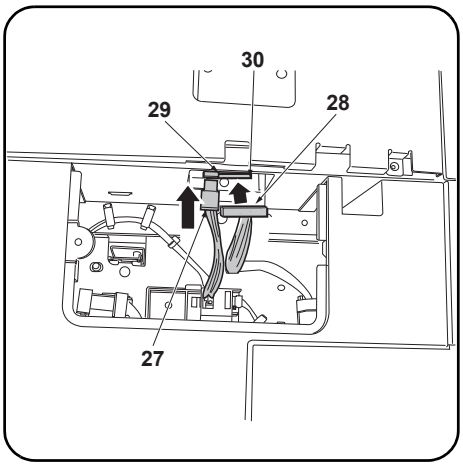

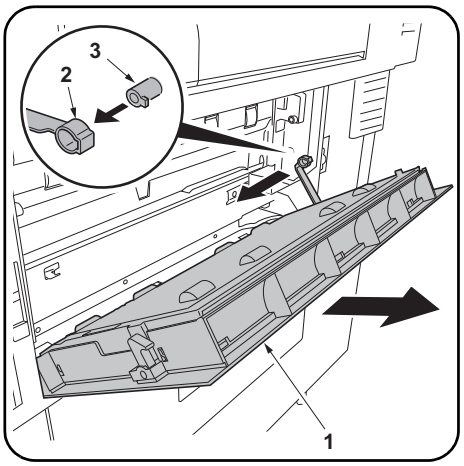

26. Connect the power cord (27) and the signal cable (28) to connectors (29) (30) respectively on the Side multi-tray.

27. Replace the cover (26) using the screw (25) removed in step 25.

[Connecting the side feeder to the machine]
Installation with medium-speed MFPs and printers
If installing on a high-speed MFP, proceed to step 12.
1. Open the lower right cover (1) on the machine.Remove the strap (2) from the shaft (3) and remove lower right cover (1).

---

26. Raccorder respectivement le cordon d'alimentation (27) et le câble à signal (28) aux connecteurs (29) (30) du Bac multiples usages latéral.

27. Reposer le couvercle (26) à l'aide de la vis (25) déposée à l'étape 25.

[Connexion du chargeur latéral à la machine]
Installation avec les imprimantes multifonctions et les imprimantes à vitesse moyenne
Si le montage est fait sur un MFP à grande vitesse, passer à l'étape 12.
1. Ouvrir le capot inférieur droit (1) de la machine. Déposer la courroie (2) de l'arbre (3) et déposer le couvercle inférieur droit (1).

---

26. Conecte el cable de alimentación (27) y el cable de señales (28) a los conectores (29) (30) del bypass lateral, respectivamente.

27. Vuelva a colocar la cubierta (26) usando el tornillo (25) quitado en el paso 25.

[Conexión del depósito lateral a la máquina]
Instalación con unidades MFP e impresoras de velocidad media
Si se instala en una MFP de alta velocidad, vaya al paso 12.
1. Abra la cubierta derecha inferior (1) de la máquina. Quite la correa (2) del eje (3) y quite la cubierta frontal inferior (1).

---

26. Das Netzkabel (27) und das Signalkabel (28) an den entsprechenden Steckverbindern (29) (30) des Seitliches Mehrzweck-Papierfach anschließen.

27. Die Abdeckung (26) mittels der in Schritt 25 entfernten Schraube (25) wieder anbringen.

[Anschluss des seitlichen Einzugs am Gerät.]
Installation an mittelschnellen MFPs und Druckern
Gehen Sie zur Installation an einem MFP der Hochleistungsklasse weiter zu Schritt 12.
1. Öffnen Sie die untere rechte Abdeckung (1) des Geräts.
Den Riemen (2) von der Welle (3) abnehmen und dann die untere rechte Abdeckung (1) abnehmen.

---

26. Collegare il cavo di alimentazione (27) e il cavo del segnale (28) rispettivamente ai connettori (29) e (30) sull'vassoio multiplo laterale.

27. Ricollocare il coperchio (26) utilizzando la vite (25) rimossa nel passo 25.

[Collegare l'alimentatore laterale alla macchina.]
Installazione con MFP e stampanti di media velocità
Se si installa su una MFP a velocità alta, procedere al passo 12.
1. Aprire il coperchio destro inferiore (1) sulla macchina.
Rimuovere la cinghietta (2) dall'asta (3) e quindi rimuovere il coperchio destro inferiore (1).

---

26. 将 AC 电线 (27) 以及信号线 (28) 分别与侧手送纸盘的接插件 (29)、(30) 连接。

27. 使用在步骤 25 中拆除的 1 颗螺丝 (25) 按原样安装盖板 (26)。

[侧供纸盒与机器主机的连接]
当安装到中速 MFP 和打印机上时
安装于高速 MFP 上时，进至步骤 12。
1. 打开机器主机的右下部盖板 (1)。
将带子 (2) 从轴 (3) 上拆除，拆下右下部盖板 (1)。

---

26. AC 전선 (27) 및 신호선 (28) 을 사이드 멀티 트레이제 커넥터 (29), (30) 에 각각 접속합니다 .

27. 순서 25 에서 제거한 나사 (25) 1 개로 커버 (26) 를 원래대로 부착합니다 .

[사이드 피더와 본체 연결]
중속 MFP 또는 프린터에 설치하는 경우
고속 MFP 에 설치하는 경우에는 순서 12 로 진행합니다 .
1. 본체의 우측 하단커버 (1) 를 엽니다 .
스트라프 (2) 를 축 (3) 에서 떼어내 오른쪽 아래 커버 (1) 를 제거합니다 .

---

26. AC 電線 (27) および信号線 (28) をサイドマルチトレイのコネクター(29)、(30) にそれぞれ接続する。

27. 手順 25 で取り外したビス (25)1 本でカバー (26) を元通りに取り付ける。

[サイドフィーダーと機械本体の接続]
中速 MFP またはプリンターに設置の場合
高速 MFP に設置の場合は手順 12 に進む。
1. 機械本体の右下カバー(1) を開く。
ストラップ (2) を軸 (3) から外し、右下カバー(1) を取り外す。

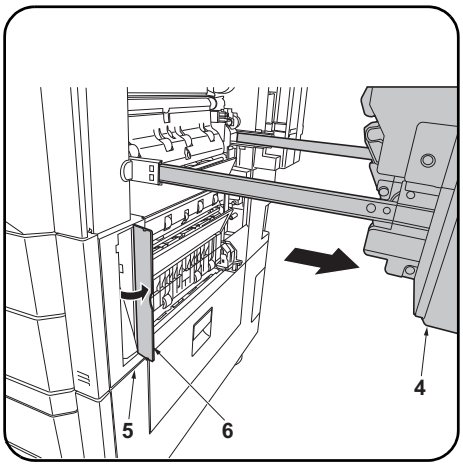

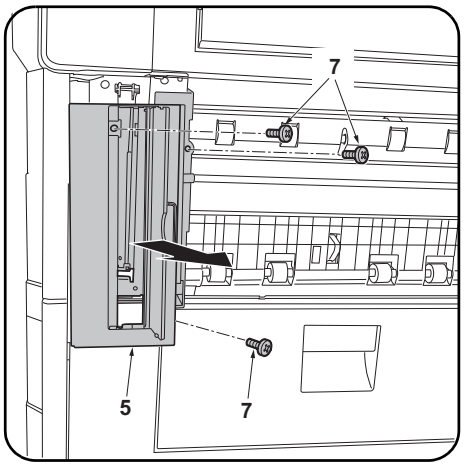

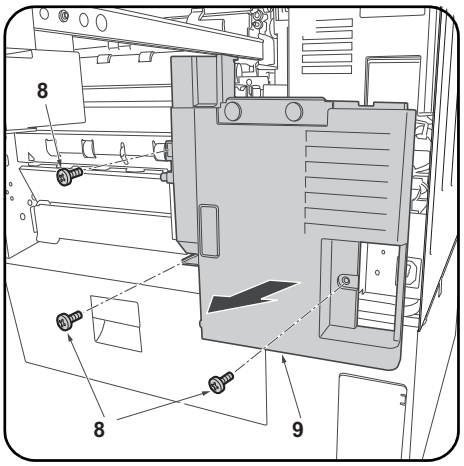

2. Open the machine paper conveying cover (4).
3. Open the panel (6) on the machine front right cover (5).

4. Remove 3 screws (7) and remove the front right cover (5).

5. Remove 3 screws (8). Remove the lower right rear cover (9).

---

2. Ouvrir le capot du transport du papier de la machine (4).
3. Ouvrir le panneau (6) sur le capot avant droit de la machine (5).

4. Déposer les 3 vis (7) et déposer le capot avant droit (5).

5. Déposer les 3 vis (8). Déposer le capot arrière droit inférieur (9).

---

2. Abra la cubierta de transporte del papel de la máquina (4).
3. Abra el panel (6) en la cubierta delantera derecha (5) de la máquina.

4. Quite los 3 tornillos (7) y quite la cubierta delantera derecha (5).

5. Quite los 3 tornillos (8). Quite la cubierta trasera inferior derecha (9).

---

2. Öffnen Sie die Papiertransportabdeckung (4) des Geräts.
3. Öffnen Sie die Platte (6) der vorderen rechten Abdeckung (5) des Geräts.

4. Entfernen Sie 3 Schrauben (7) und nehmen Sie die vordere rechte Abdeckung (5) ab.

5. Entfernen Sie 3 Schrauben (8). Nehmen Sie die untere rechte hintere Abdeckung (9) ab.

---

2. Aprire il coperchio (4) dell'unità di trasporto carta della macchina.
3. Aprire il pannello (6) sul coperchio destro anteriore (5) della macchina.

4. Rimuovere le 3 viti (7), e quindi rimuovere il coperchio destro posteriore (5).

5. Rimuovere le 3 viti (8). Rimuovere il coperchio posteriore inferiore destro (9).

---

2. 打开机器主机的传输盖板 (4)。
3. 打开机器主机的右前部盖板 (5) 的盖子 (6)。

4. 拆除 3 颗螺丝 (7)，拆下右前部盖板 (5)。

5. 拆除 3 颗螺丝 (8)。 拆下右下后部盖板 (9)。

---

2. 본체의 반송 커버 (4) 를 엽니다 .
3. 본체 우측 하단커버 (5) 의 뚜껑 (6) 을 엽니다 .

4. 나사 (7) 3 개를 제거하고 우측 전면커버 (5) 를 떼어 냅니다 .

5. 나사 (8) 3 개를 제거합니다 . 우측 하단 뒷커버 (9) 를 제거합니다 .

---

2. 機械本体の搬送カバー (4) を開く。
3. 機械本体の右前カバー (5) のふた (6) を開く。

4. ビス (7) 3 本を外し、右前カバー (5) を取り外す。

5. ビス (8) 3 本を外す。右下後カバー (9) を取り外す。

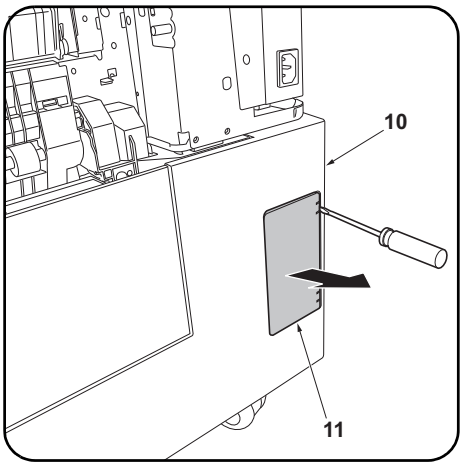

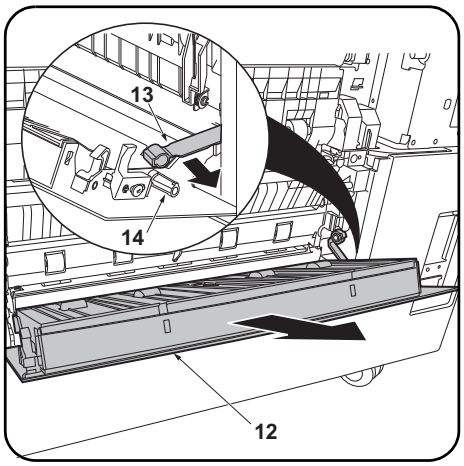

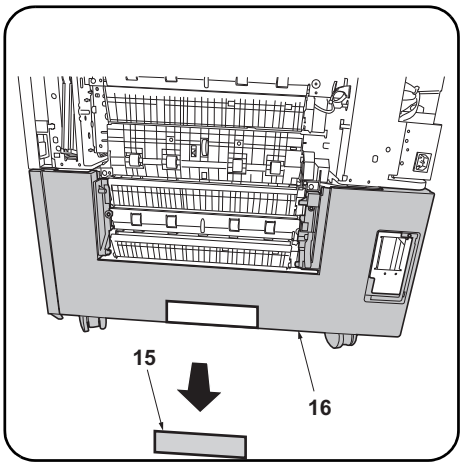

6. Remove the panel (11) from the lower right cover (10) on the paper feeder using a flat blade screwdriver.

7. Open the paper feeder right cover (12). Remove the strap (13) from the right cover shaft (14) and remove the right cover (12).

8. Remove the breakaway cover (15) from the paper feeder lower right cover (16).

---

6. Déposer le panneau (11) du capot inférieur droit (10) du chargeur de papier en procédant à l'aide d'un tournevis à lame.

7. Ouvrir le couvercle droit du chargeur de papier (12).
Déposer la courroie (13) de l'axe du capot droit (14) et déposer le capot droit (12).

8. Retirez le capot détachable (15) du capot inférieur droit du chargeur de papier (16).

---

6. Quite el panel (11) de la cubierta derecha inferior (10) del depósito de papel con un destornillador de pala plana.

7. Abra la cubierta derecha del depósito de papel (12).
Quite la correa (13) del eje de la cubierta derecha (14) y quite la cubierta derecha (12).

8. Quite la cubierta de separación (15) de la cubierta inferior derecha del depósito de papel (16).

---

6. Nehmen Sie mit einem flachen Schraubendreher die Platte (11) von der unteren rechten Abdeckung (10) des Papiereinzugs ab.

7. Die rechte Abdeckung (12) des Papiereinzugs öffnen.
Nehmen Sie den Riemen (13) von der Welle (14) der rechten Abdeckung und dann die rechte Abdeckung (12) ab.

8. Nehmen Sie die Ablösungsabdeckung (15) von der untere rechte Abdeckung (16) des Papiereinzugs ab.

---

6. Rimuovere il pannello (11) dal coperchio destro inferiore (10) sull'unità di alimentazione carta utilizzando un cacciavite a testa piana.

7. Aprire il coperchio destro (12) dell'unità di alimentazione della carta.
Rimuovere la cinghietta (13) dall'asta (14) del coperchio destro e quindi rimuovere il coperchio destro (12).

8. Rimuovere il coperchio di distacco (15) dal coperchio destro inferiore (16) dell'unità di alimentazione carta.

---

6. 使用一字螺丝刀等将供纸盒的右下部盖板（10）的盖子（11）拆下。

7. 打开供纸盒的右部盖板（12）。
从右盖板的轴（14）上拆除挂绳（13），拆下右盖板（12）。

8. 去除供纸盒的右下部盖板（16）上的可去除部（15）。

---

6. 용지 급지대의 우측 하단커버 (10) 의 뚜껑 (11) 을 마이너스 드라이버 등으로 떼어 냅니다 .

7. 급지대 우측커버 (12) 를 엽니다 .
스트랩 (13) 을 우측커버의 축 (14) 에서 떼어 내고 우측커버 (12) 를 제거합니다 .

8. 용지 급지대의 우측 하단커버 (16) 의 분할커버부 (15) 를 떼어 냅니다 .

---

6. ペーパーフィーダーの右下カバー（10）のふた（11）をマイナスドライバーなどで取り外す。

7. ペーパーフィーダーの右カバー（12）を開く。
ストラップ（13）を右カバーの軸（14）から外し、右カバー（12）を取り外す。

8. ペーパーフィーダーの右下カバー（16）の割りカバー部（15）を切り取る。

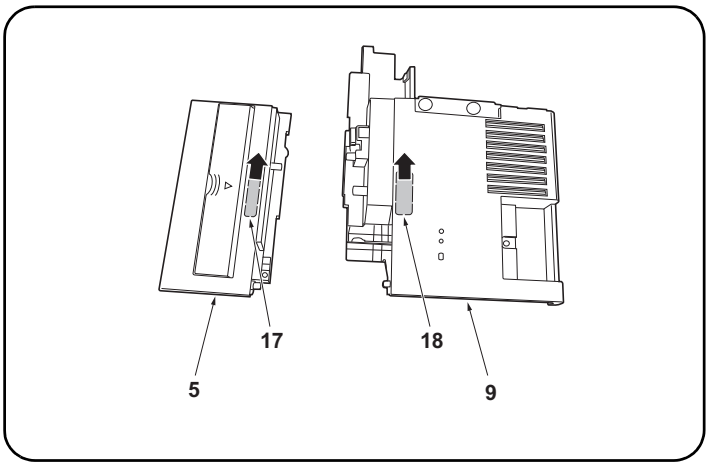

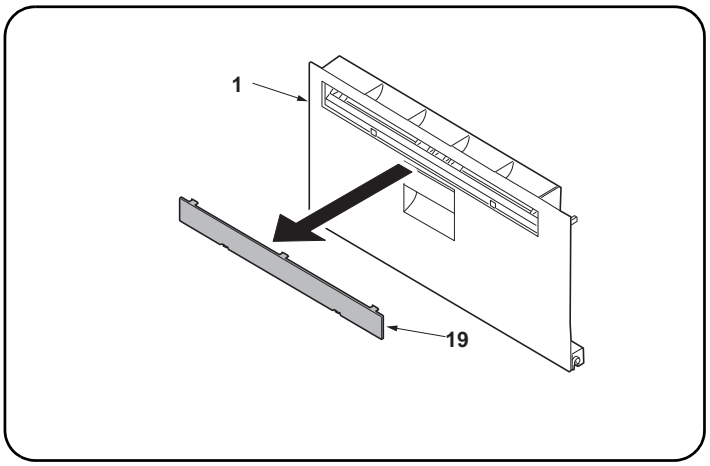

9. Remove the breakaway cover (17) from the front right cover (5) and the breakaway cover (18) from the lower right rear cover (9).

10. Remove the panel (19) from the machine lower right cover (1) with a flat blade screwdriver.

---

9. Déposer le couvercle amovible (17) du capot avant droit (5) et le couvercle amovible (18) du capot arrière inférieur droit (9).

10. Retirer le panneau (19) du capot inférieur droit de la machine (1) à l'aide d'un tournevis à lame plate.

---

9. Quite la cubierta divisoria (17) de la cubierta delantera derecha (5) y la cubierta divisoria (18) de la cubierta trasera inferior derecha (9).

10. Extraiga el panel (19) de la cubierta derecha inferior de la máquina (1) con un destornillador de pala plana.

---

9. Nehmen Sie die Ablösungsabdeckung (17) von der vorderen rechten Abdeckung (5) ab und die Ablösungsabdeckung (18) von der unteren rechten hinteren Abdeckung (9).

10. Nehmen Sie mit einem flachen Schraubendreher die Platte (19) von der unteren rechten Abdeckung (1) des Geräts ab.

---

9. Rimuovere il coperchio di distacco (17) dal coperchio destro anteriore (5), e il coperchio di distacco (18) dal coperchio posteriore inferiore destro (9).

10. Rimuovere il pannello (19) dal coperchio destro inferiore (1) della macchina con un cacciavite a testa piatta.

---

9. 切除右前部盖板 (5) 的切割盖板 (17) 和右下后部盖板 (9) 的切割盖板 (18)。

10. 使用一字螺丝刀将机器主机的右下部盖板 (1) 的盖子 (19) 拆下。

---

9. 우측 전면커버 (5) 의 분할커버 (17) 와 우측 하단 뒷커버 (9) 의 분할커버 (18) 를 떼어 냅니다 .

10. 마이너스 드라이버를 사용하여 본체 우측 하단커버 (1) 에서 뚜껑 (19) 을 제거합니다 .

---

9. 右前カバー (5) の割りカバー (17) と右下後カバー (9) の割りカバー (18) を切り取る。

10. 機械本体の右下カバー (1) のふた (19) をマイナスドライバーで取り外す。

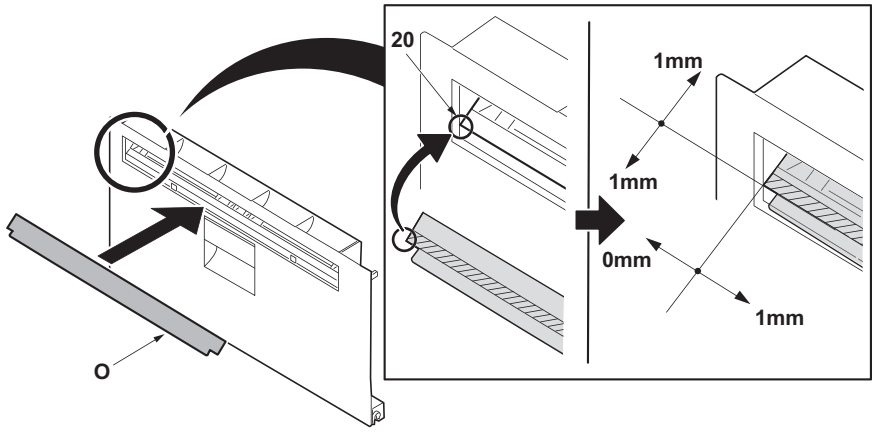

11. After using alcohol to clean place adhering the film, adhere the film (O) in the position (20) indicated in the illustration.
Proceed to step 23.

---

11. Coller le film (O) sur l'emplacement (20) indiqué dans l'illustration, après avoir soigneusement nettoyé cet emplacement à l'alcool.
Passer à l'étape 23.

---

11. Después de utilizar alcohol para limpiar la zona donde se va a pegar la película, pegue la película (O) en el lugar (20) que se indica en la ilustración.
Vaya al paso 23.

---

11. Zum Anbringen des Films (O) die Stelle zuvor mit Alkohol reinigen und den Film (O) dann in der in der Abbildung angegebenen Position (20) anbringen.
Gehen Sie weiter zu Schritt 23.

---

11. Dopo aver utilizzato alcol per pulire la piastra che aderisce alla pellicola, far aderire la pellicola (O) nella posizione (20) indicata nell'illustrazione.
Procedere al passo 23.

---

11. 使用酒精对薄膜粘贴位置进行清洁后，按插图位置（20）粘贴薄膜（0）。
进至步骤 23。

---

11. 필름 부착위치를 알코올 청소 후 , 일러스트의 위치 (20) 에 맞춰 필름 (O) 을 부착합니다 .
순서 23 로 진행합니다 .

---

11. フィルム貼り付け位置をアルコール清掃後、イラストの位置（20）にあわせて、フィルム(0)を貼り付ける。
手順 23 進む。

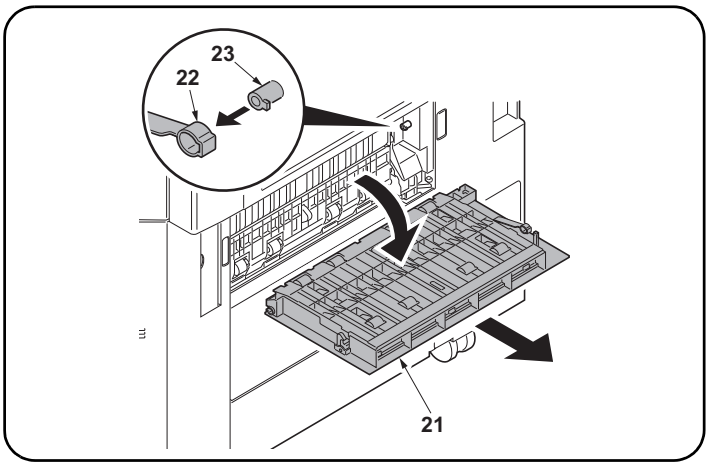

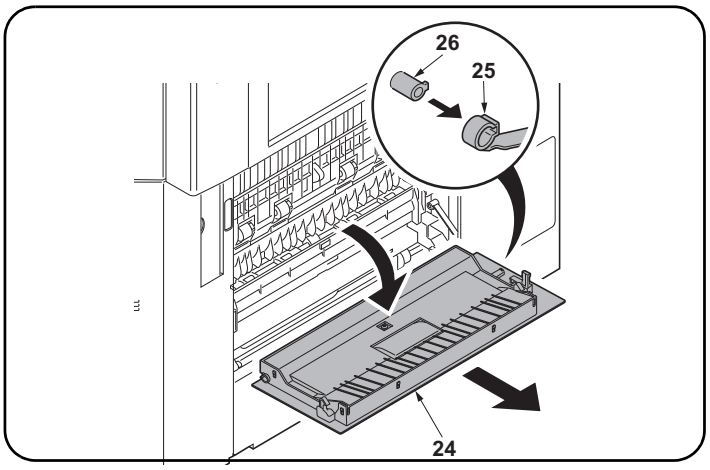

Installation on high-speed MFPs

12. Open the right cover 1 (21) on the machine.
Remove the strap (22) from the shaft (23) and remove right cover 1 (21).

13. Open the right cover 2 (24) on the machine.
Remove the strap (25) from the right cover shaft (26) and remove the right cover 2 (24).

Montage sur des MFP à grande vitesse

12. Ouvrir le capot droit 1 (21) de la machine.
Déposer la courroie (22) de l'arbre (23) et déposer le capot droit 1 (21).

13. Ouvrir le capot droit 2 (24) de la machine.
Déposer la courroie (25) de l'axe du capot droit (26) et déposer le capot droit 2 (24).

Instalación en las MFP de alta velocidad

12. Abra la cubierta derecha 1 (21) de la máquina.
Quite la correa (22) del eje (23) y quite la cubierta derecha 1 (21).

13. Abra la cubierta derecha 2 (24) de la máquina.
Quite la correa (25) del eje de la cubierta derecha (26) y quite la cubierta derecha 2 (24).

Installation an MFP der Hochleistungs1lasse

12. Öffnen Sie die rechte Abdeckung 1 (21) des Geräts.
Den Riemen (22) von der Welle (23) abnehmen und dann die rechte Abdeckung 1 (21) abnehmen.

13. Öffnen Sie die rechte Abdeckung 2 (24) des Geräts.
Nehmen Sie den Riemen (25) von der Welle (26) der rechten Abdeckung und dann die rechte Abdeckung 2 (24) ab.

Installazione sulle MFP a velocità alta

12. Aprire il coperchio destro 1 (21) sulla macchina.
Rimuovere la cinghietta (22) dall'asta (23) e quindi rimuovere il coperchio destro 1 (21).

13. Aprire il coperchio destro 2 (24) sulla macchina.
Rimuovere la cinghietta (25) dall'asta (26) del coperchio destro e quindi rimuovere il coperchio destro 2 (24).

安装于高速 MFP 上时

12. 打开机器主机的右部盖板 1(21)。
将带子 (22) 从轴 (23) 上拆除，拆下右部盖板 1(21)。

13. 打开机器主机的右部盖板 2(24)。
从右盖板的轴 (26) 上拆除挂绳 (25)，拆下右盖板 2(24)。

고속 MFP 에 설치하는 경우

12. 본체의 우측 커버 1(21) 을 엽니다 .
스트라프 (22) 를 축 (23) 에서 떼어내 우측커버 1 (21) 를 제거합니다 .

13. 본체의 우측 커버 2(24) 을 엽니다 .
스트랩 (25) 을 우측커버의 축 (26) 에서 떼어내고 우측커버 2 (24) 를 5
제거합니다 .

高速 MFP に設置の場合

12. 機械本体の右カバー1(21) を開く。
ストラップ (22) を軸 (23) から外し、右カバー1(21) を取り外す。

13. 機械本体の右カバー2(24) を開く。
ストラップ (25) を右カバーの軸 (26) から外し、右カバー2(24) を取り外す。

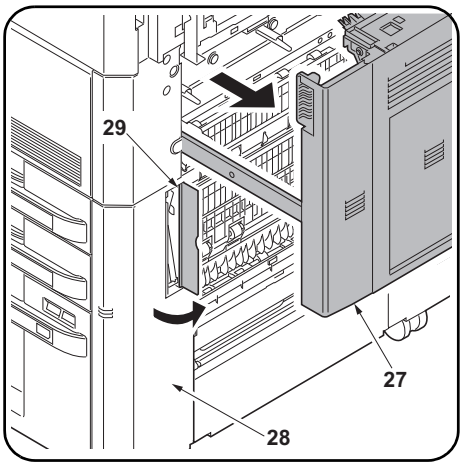

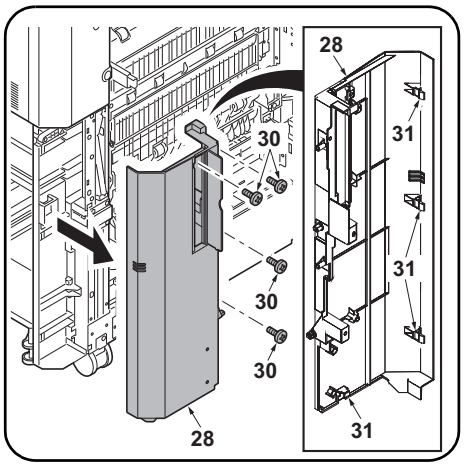

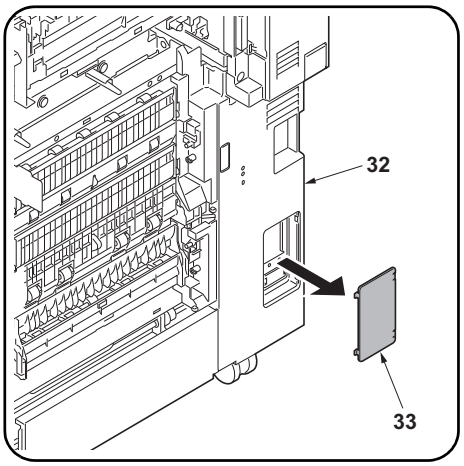

14. Open the machine paper conveying cover (27).
15. Open the panel (29) on the machine front right cover (28).

16. Remove the 4 screws (30) and release the 4 hooks (31). Then remove the front right cover (28).

17. Remove the panel (33) from the lower right rear cover (32) with a flat blade screwdriver.

---

14. Ouvrir le capot du transport du papier de la machine (27).
15. Ouvrir le panneau (29) sur le capot avant droit de la machine (28).

16. Retirer les 4 vis (30) et libérer les 4 crochets (31). Retirer ensuite le capot avant droit (28).

17. Déposer le panneau (33) du capot arrière inférieur droit (32) en procédant à l'aide d'un tournevis à lame.

---

14. Abra la cubierta de transporte del papel de la máquina (27).
15. Abra el panel (29) en la cubierta delantera derecha (28) de la máquina.

16. Quite los 4 tornillos (30) y libere los 4 ganchos (31). Después, quite la cubierta frontal derecha (28).

17. Extraiga el panel (33) de la cubierta trasera inferior derecha (32) con un destornillador de pala plana.

---

14. Öffnen Sie die Abdeckung des Papiertransports (27) des Geräts.
15. Öffnen Sie die Platte (29) der vorderen rechten Abdeckung (28) des Geräts.

16. Entfernen Sie die 4 Schrauben (30) und lösen Sie die 4 Haken (31). Danach nehmen Sie die rechte vordere Abdeckung (28) ab.

17. Nehmen Sie mit einem flachen Schraubendreher die Platte (33) von der unteren rechten hinteren Abdeckung (32) ab.

---

14. Aprire il coperchio (27) dell'unità di trasporto carta della macchina.
15. Aprire il pannello (29) sul coperchio destro anteriore (28) della macchina.

16. Rimuovere le 4 viti (30) e rilasciare i 4 ganci (31). Rimuovere quindi il coperchio anteriore destro (28).

17. Rimuovere il pannello (33) dal coperchio posteriore inferiore destro (32) con un cacciavite a testa piana.

---

14. 打开机器主机的传输盖板 (27)。
15. 打开机器主机的右前部盖板 (28) 的盖子 (29)。

16. 卸下 4 颗螺丝（30）并松开 4 个卡扣（31）。然后卸下右前盖板（28）。

17. 用一字螺丝刀等取下右下盖板（32）的盖子（33）。

---

14. 본체의 반송 커버 (27) 를 엽니다 .
15. 본체 우측 하단커버 (28) 의 뚜껑 (29) 을 엽니다 .

16. 나사 (30) 4 개를 제거하고 후크 (31) 4 개를 풉니다 . 그런 다음 우측 전면 커버 (28) 를 제거합니다 .

17. 우측 아래뒷면 커버 (32) 의 뚜껑 (33) 을 마이너스 드라이버 등으로 풉니다 .

---

14. 機械本体の搬送カバー(27) を開く。
15. 機械本体の右前カバー(28) のふた (29) を開く。

16. ビス (30)4 本およびフック (31)4 箇所を外し､右前カバー(28) を取り外す。

17. 右下後カバー(32) のふた (33) をマイナスドライバーなどで取り外す。

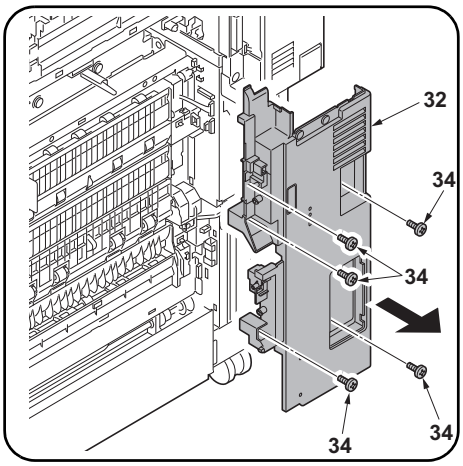

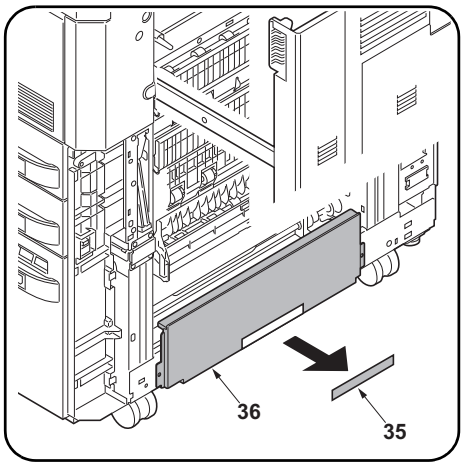

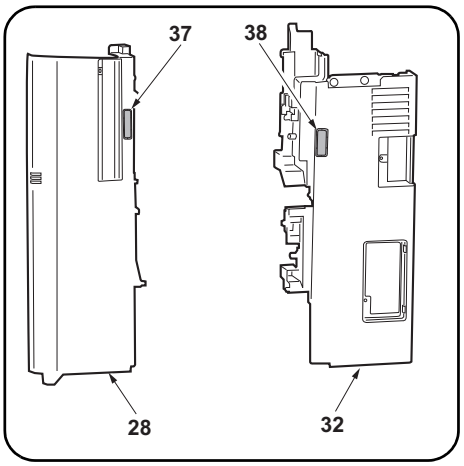

18. Remove 5 screws (34).Remove the lower right rear cover (32).

19. Remove the breakaway cover (35) from the lower right cover (36) .

20. Remove the breakaway cover (37) from the front right cover (28) and the breakaway cover (38) from the lower right rear cover (32).

---

18. Déposer les 5 vis (34) . Déposer le capot arrière inférieur droit (32).

19. Retirez le capot détachable (35) du capot inférieur droit (36).

20. Déposer le couvercle amovible (37) du capot avant droit (28) et le couvercle amovible (38) du capot arrière inférieur droit (32).

---

18. Quite los 5 tornillos (34). Quite la cubierta trasera inferior derecha (32).

19. Quite la cubierta de separación (35) de la cubierta inferior derecha (36).

20. Quite la cubierta divisoria (37) de la cubierta delantera derecha (28) y la cubierta divisoria (38) de la cubierta trasera inferior derecha (32).

---

18. Entfernen Sie 5 Schrauben (34). Nehmen Sie die untere rechte hintere Abdeckung (32) ab.

19. Nehmen Sie die Ablösungsabdeckung (35) von untere rechte Abdeckung (36) ab.

20. Nehmen Sie die Ablösungsabdeckung (37) von der vorderen rechten Abdeckung (28) ab und die Ablösungsabdeckung (38) von der unteren rechten hinteren Abdeckung (32).

---

18. Rimuovere le 5 viti (34). Rimuovere il coperchio posteriore inferiore destro (32).

19. Rimuovere il coperchio di distacco (35) dal coperchio destro inferiore (36) .

20. Rimuovere il coperchio di distacco (37) dal coperchio destro anteriore (28), e il coperchio di distacco (38) dal coperchio posteriore inferiore destro (32).

---

18. 拆除 5 颗螺丝 (34)。拆下右下后部盖板 (32)。

19. 去除右下部盖板 (36) 上的可去除部 (35)。

20. 切除右前部盖板 (28) 的切割盖板 (37) 和右下后部盖板 (32) 的切割盖板 (38)。

---

18. 나사 (34) 5 개를 제거합니다 . 우측 하단 뒷커버 (32) 를 제거합니다 .

19. 우측 하단커버 (36) 의 분할커버부 (35) 를 떼어 냅니다 .

20. 우측 전면커버 (28) 의 분할커버 (37) 와 우측 하단 뒷커버 (32) 의 분할커버 (38) 를 떼어 냅니다 .

---

18. ビス (34) 5 本を外す。右下後カバー (32) を取り外す。

19. 右下カバー (36) の割りカバー部 (35) を切り取る。

20. 右前カバー (28) の割りカバー (37) と右下後カバー (32) の割りカバー (38) を切り取る。

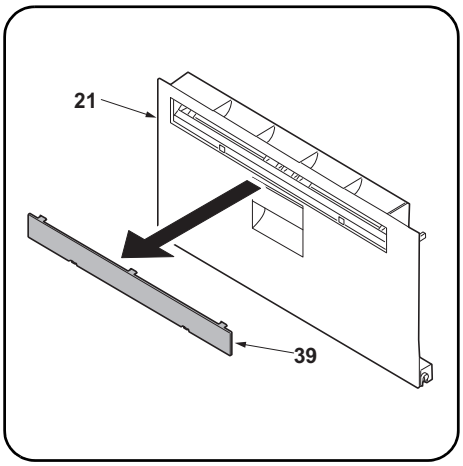

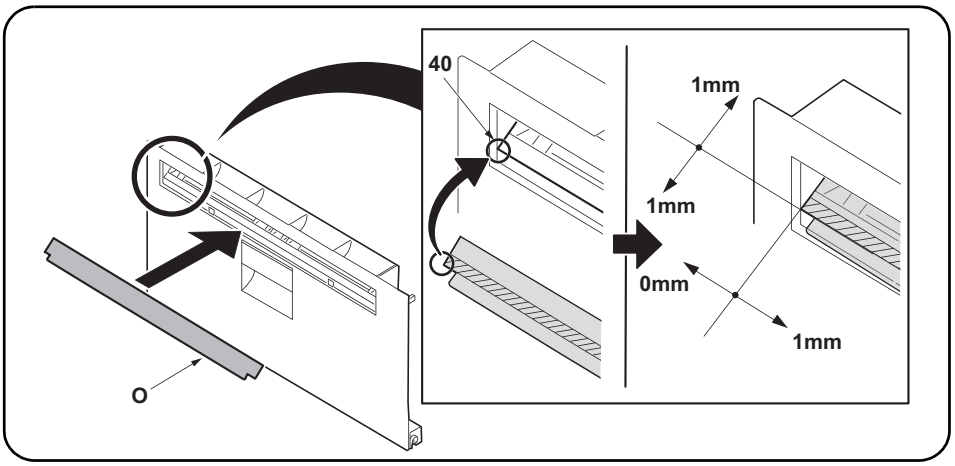

21. Remove the panel (39) from the machine right cover 1 (21) with a flat blade screwdriver.

22. After using alcohol to clean place adhering the film, adhere the film (O) in the position (40) indicated in the illustration.

---

21. Retirer le panneau (39) du capot droit 1 de la machine (21) à l'aide d'un tournevis à lame plate.

22. Coller le film (O) sur l'emplacement (40) indiqué dans l'illustration, après avoir soigneusement nettoyé cet emplacement à l'alcool.

---

21. Extraiga el panel (39) de la cubierta derecha 1 de la máquina (21) con un destornillador de pala plana.

22. Después de utilizar alcohol para limpiar la zona donde se va a pegar la película, pegue la película (O) en el lugar (40) que se indica en la ilustración.

---

21. Nehmen Sie mit einem flachen Schraubendreher die Platte (39) von der rechten Abdeckung 1 (21) des Geräts ab.

22. Zum Anbringen des Films (O) die Stelle zuvor mit Alkohol reinigen und den Film (O) dann in der in der Abbildung angegebenen Position (40) anbringen.

---

21. Rimuovere il pannello (39) dal coperchio destro 1 (21) della macchina con un cacciavite a testa piatta.

22. Dopo aver utilizzato alcol per pulire la piastra che aderisce alla pellicola, far aderire la pellicola (O) nella posizione (40) indicata nell'illustrazione.

---

21. 使用一字螺丝刀将机器主机的右部盖板 1 (21) 的盖子 (39) 拆下。

22. 使用酒精对薄膜粘贴位置进行清洁后，按插图位置 (40) 粘贴薄膜 (0)。

---

21. 마이너스 드라이버를 사용하여 본체 우측 커버 1(21) 에서 뚜껑 (39) 을 제거합니다 .

22. 필름 부착위치를 알코올 청소 후 , 일러스트의 위치 (40) 에 맞춰 필름 (O) 을 부착합니다 .

---

21. 機械本体の右カバー1(21) のふた (39) をマイナスドライバーで取り外す。

22. フィルム貼り付け位置をアルコール清掃後、イラストの位置(40)にあわせて、フィルム(0)を貼り付ける。

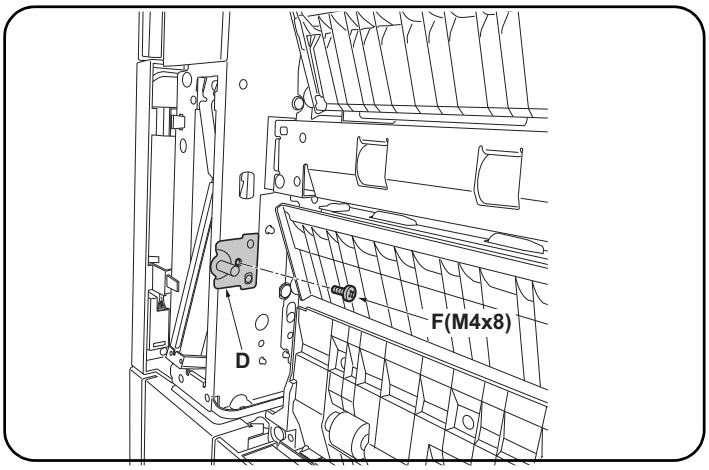

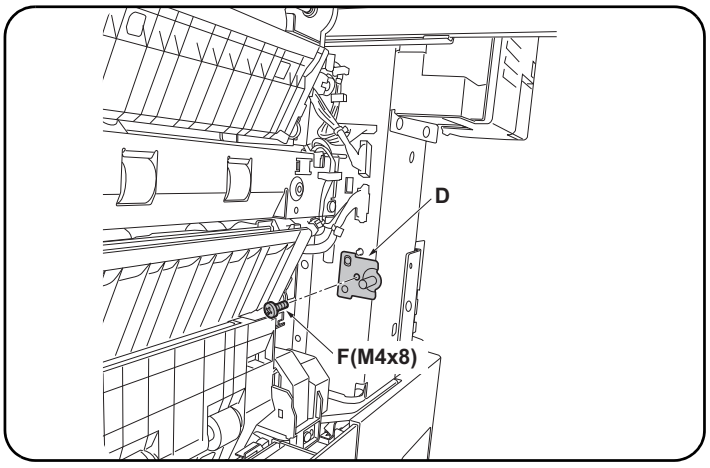

23. Install a lock pin (D) on the front right of the machine using an M4 × 8 screw (F).

24. Install a lock pin (D) on the rear right of the machine using an M4 × 8 screw (F) in the same way.

---

23. Monter une broche de verrouillage (D) sur l'avant droit de la machine à l'aide d'une vis M4 × 8 (F).

24. Monter une broche de verrouillage (D) sur l'arrière droit de la machine de la même manière à l'aide d'une vis M4 × 8 (F).

---

23. Instale una clavija de bloqueo (D) en la parte derecha frontal de la máquina usando un tornillo M4 × 8 (F).

24. Instale una clavija de bloqueo (D) en la parte derecha posterior de la máquina usando un tornillo M4 × 8 (F).

---

23. Bringen Sie mit einer M4 × 8 Schraube (F) den Arretierungsstift (D) vorne rechts am Gerät an.

24. Bringen Sie auf gleiche Weise mit einer M4 × 8 Schraube (F) den Arretierungsstift (D) hinten rechts am Gerät an.

---

23. Installare un perno di blocco (D) sul lato destro anteriore della macchina utilizzando una vite M4 × 8 (F).

24. Analogamente, installare un perno di blocco (D) sul lato destro posteriore della macchina utilizzando una vite M4 × 8 (F).

---

23. 使用 1 颗 M4×8 螺丝 (F) 将锁定插销 (D) 安装到机器主机的右前侧。

24. 按相同方法，使用 1 颗 M4×8 螺丝 (F) 将锁定插销 (D) 安装到机器主机的右后侧。

---

23. 나사 M4 × 8(F) 를 사용하여 잠금 핀 (D) 을 본체의 오른쪽 전면에 설치합니다 .

24. 나사같은 방식으로 M4 × 8(F) 를 사용하여 잠금 핀 (D) 을 본체의 오른쪽 뒷면에 설치합니다 .

---

23. ビス M4×8(F) 1 本で、ロックピン (D) を機械本体右前側に取り付ける。

24. 同様にビス M4×8(F) 1 本で、ロックピン (D) を機械本体右後側に取り付ける。

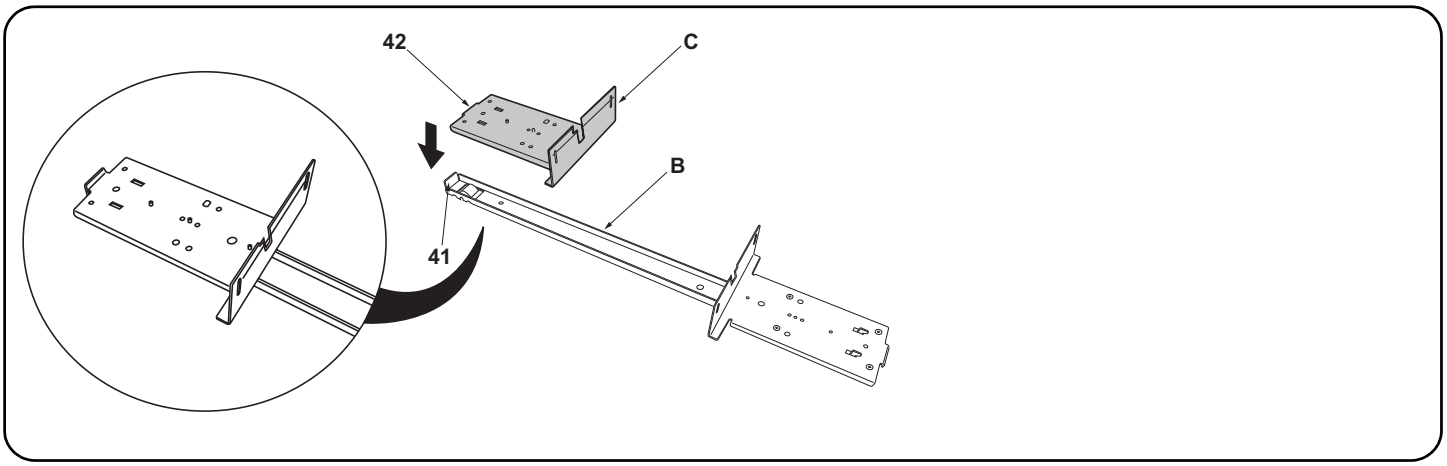

25. Place the small base slider (C) on the large base slider (B). Place so that the bend (42) on the small base slider (C) abuts inside the rest (41) at the end of the large base slider (B).

---

25. Placer la petite règle de base (C) sur la grande règle de base (B). Disposer la petite règle de base (C) de sorte que son extrémité repliée (42) s'encastre dans la butée (41) à l'extrémité de la grande règle de base (B).

---

25. Coloque el deslizador de base pequeño (C) sobre el deslizador de base grande (B). Haga que la dobladura (42) del deslizador de base pequeño (C) quede en el interior del apoyo (41) del extremo del deslizador de base grande (B).

---

25. Setzen Sie den kleinen Basis-Schieber (C) auf den großen Basis-Schieber (B). Setzen Sie ihn so auf, dass die Biegung (42) am kleinen Basis-Schieber (C) innerhalb der Auflage (41) am Ende des großen Basis-Schiebers (B) anliegt.

---

25. Posizionare lo scivolo di base piccolo (C) sullo scivolo di base grande (B). Posizionare in modo che la piegatura (42) sullo scivolo di base piccolo (C) si attesti all'interno del sostegno (41) all'estremità dello scivolo di base grande (B).

---

25. 将底座滑板（小）(C) 放在底座滑板（大）(B)。此时底座滑板（小）(C) 的弯曲部 (42) 应处于底座滑板（大）(B) 的前端折弯部 (41) 的内侧。

---

25. 베이스 슬라이더 대 (B) 의 위에 베이스 슬라이더 소 (C) 를 얹습니다 . 그 때 , 베이스 슬라이더 소 (C) 의 곡선부 (42) 가 베이스 슬라이더 대 (B) 의 맨 앞쪽의 꺾이고 구부러진 부분 (41) 의 안쪽으로 오도록 세트합니다 .

---

25. ベーススライダー大 (B) の上にベーススライダー小 (C) を乗せる。その際、ベーススライダー小 (C) の曲げ (42) がベーススライダー大 (B) の先端折り曲げ部 (41) の内側にくるようにセットする。

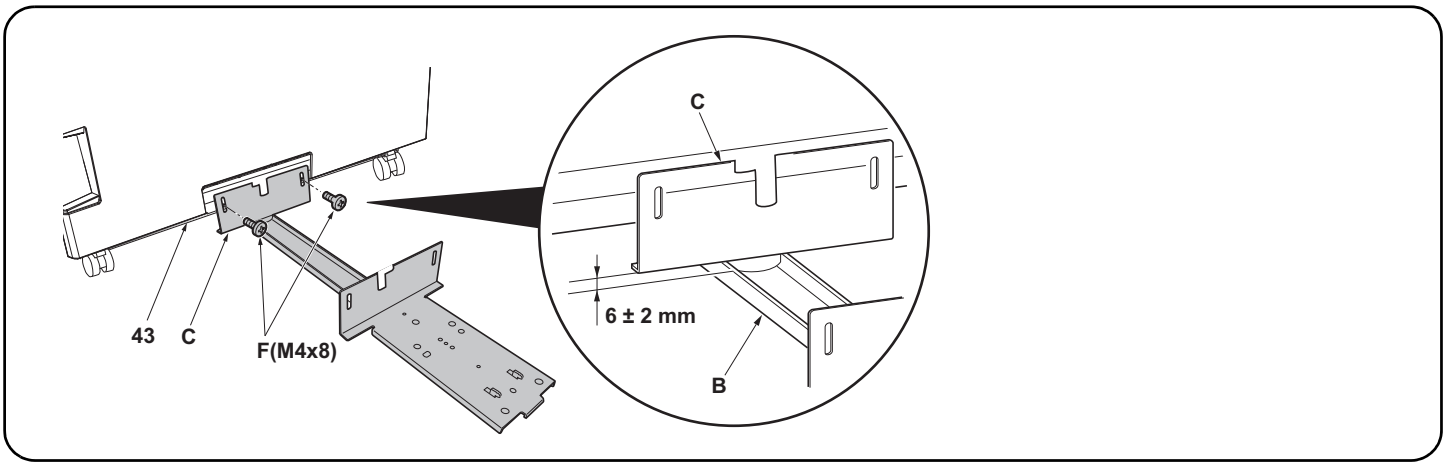

26. Insert the small base slider (C) under the machine. Install to the base (43) using 2 M4 × 8 screws (F) so that the gap between the small base slider (C) and the large base slider (B) is 6 ± 2 mm.
* For PF-730, install to the screw holes marked “R”.

---

26. Insérer la petite règle de base (C) sous l'appareil. Fixer à la base (43) à l'aide de 2 vis M4 × 8 (F) de sorte que l'interstice entre la petite règle de base (C) et la grande règle de base (B) soit de 6 ± 2 mm.
* Pour le PF-730, fixer aux trous de vis marqués "R".

---

26. Introduzca el deslizador de base pequeño (C) por debajo de la máquina. Instálelo en la base (43) usando 2 tornillos M4 × 8 (F) de modo que el espacio entre el deslizador de base pequeño (C) y el deslizador de base grande (B) sea de 6 ± 2 mm.
* En el caso de PF-730, instale en los orificios para tornillo “R”.

---

26. Setzen Sie die Führungsschiene (C) unter das Gerät. Befestigen Sie sie mit zwei M4 × 8 Schrauben (F) so an der Basis (43), dass der Abstand zwischen der kleinen Führungsschiene (C) und der großen Führungsschiene (B) 6 ± 2 mm beträgt.
* Bei Modell PF-730 an den mit "R" markierten Schraublöchern befestigen.

---

26. Inserire lo scivolo di base piccolo (C) sotto la macchina. Installare sulla base (43) utilizzando 2 viti M4 × 8 (F) in modo che lo spazio tra lo scivolo di base piccolo (C) e lo scivolo di base grande (B) sia di 6 ± 2 mm.
* Per PF-730, installare ai fori per viti segnalati con “R”.

---

26. 将底座滑板（小）(C) 插入机器主机侧的供纸工作台的下方。使用 2 颗 M4×8(F) 螺丝将底座滑板（小）(C) 安装到底板 (43) 上，确保底座滑板（小）(C) 与底座滑板（大）(B) 之间的间隙为 6±2mm。
※PF-730 时，安装到带有 R 刻印的螺纹孔上。

---

26. 소형 베이스 슬라이더 (C) 를 본체 하단에 삽입합니다 . 소형 베이스 슬라이더 (C) 와 대형 베이스 슬라이더 (B) 사이의 틈이 6 ± 2 mm 가 되도록 M4 × 8 나사 (F) 2 개를 사용하여 바닥판 (43) 에 장착합니다 .
※PF-730 은 R 의 각인이 있는 나사구멍에 장착합니다 .

---

26. ベーススライダー小 (C) を機械本体側のペーパーフィーダーの下に入れる。ベーススライダー小 (C) とベーススライダー大 (B) の隙間が、6±2mm になるようにビス M4×8(F)2 本で底板 (43) に取り付ける。
※PF-730 は R の刻印のあるビス穴に取り付ける。

Installation with medium-speed MFPs and printers
If installing on a high-speed MFP, proceed to step 31.
27. Reinstall the paper feeder right cover (12).
28. Reinstall the lower right rear cover (9).
29. Reinstall the front right cover (5).
30. Reinstall the lower right cover (1).
Proceed to step 35.

Installation avec les imprimantes multifonctions et les imprimantes à vitesse moyenne
Si le montage est fait sur un MFP à grande vitesse, passer à l'étape 31.
27. Reposer le capot droit du chargeur de papier (12).
28. Reposer le capot arrière inférieur droit (9).
29. Reposer le capot avant droit (5).
30. Reposer le capot inférieur droit (1).
Passer à l'étape 35.

Instalación con unidades MFP e impresoras de velocidad media
Si se instala en una MFP de alta velocidad, vaya al paso 31.
27. Reinstale la cubierta derecha del depósito de papel (12).
28. Reinstale la cubierta trasera inferior derecha (9).
29. Reinstale la cubierta delantera derecha (5).
30. Reinstale la cubierta derecha inferior (1).
Vaya al paso 35.

Installation an mittelschnellen MFPs und Druckern
Gehen Sie zur Installation an einem MFP der Hochleistungsklasse weiter zu Schritt 31.
27. Bringen Sie die rechte Abdeckung (12) des Papiereinzugs wieder an.
28. Bringen Sie die untere rechte hintere Abdeckung (9) wieder an.
29. Bringen Sie die vordere rechte Abdeckung (5) wieder an.
30. Bringen Sie die untere rechte Abdeckung (1) wieder an.
Gehen Sie weiter zu Schritt 35.

Installazione con MFP e stampanti di media velocità
Se si installa su una MFP a velocità alta, procedere al passo 31.
27. Reinstallare il coperchio destro (12) dell'unità di alimentazione carta.
28. Reinstallare il coperchio posteriore inferiore destro (9).
29. Reinstallare il coperchio destro anteriore (5).
30. Reinstallare il coperchio destro inferiore (1).
Procedere al passo 35.

当安装到中速 MFP 和打印机上时
安装于高速 MFP 上时，进至步骤 31。
27. 按原样安装供纸盒的右盖板 (12)。
28. 按原样安装右下后部盖板 (9)。
29. 按原样安装右前部盖板 (5)。
30. 按原样安装右下部盖板 (1)。
进至步骤 35。

중속 MFP 또는 프린터에 설치하는 경우
고속 MFP 에 설치하는 경우에는 순서 31 로 진행합니다 .
27. 용지 급지대의 우측커버 (12) 를 원래대로 장착합니다 .
28. 우측하단 뒷커버 (9) 를 원래대로 장착합니다 .
29. 우측 전면커버 (5) 를 원래대로 장착합니다 .
30. 우측 하단커버 (1) 를 원래대로 장착합니다 .
순서 35 로 진행합니다 .

中速 MFP またはプリンターに設置の場合
高速 MFP に設置の場合は手順 31 に進む。
27. ペーパーフィーダーの右カバー (12) を元通り取り付ける。
28. 右下後カバー (9) を元通り取り付ける。
29. 右前カバー (5) を元通り取り付ける。
30. 右下カバー (1) を元通り取り付ける。
手順 35 に進む。

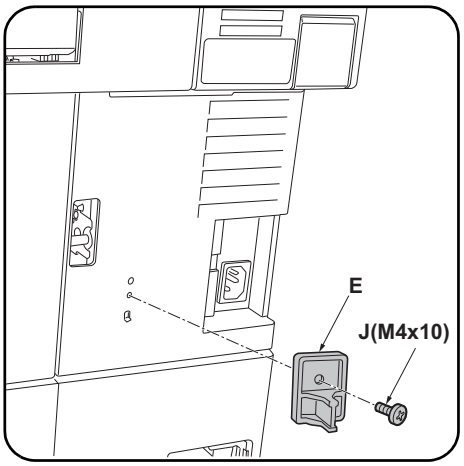

Installation on high-speed MFPs

31. Reinstall the lower right rear cover (32).
32. Reinstall the front right cover (28).
33. Reinstall the right cover 2 (24).
34. Reinstall the right cover 1 (21).
35. Install the switch press plate (E) using the M4 × 10 tapping screw (J).

Montage sur des MFP à grande vitesse

31. Reposer le capot arrière inférieur droit (32).
32. Reposer le capot avant droit (28).
33. Reposer le capot droit 2 (24).
34. Reposer le capot droit 1 (21).
35. Fixer la plaque de pression du contacteur (E) à l'aide d'une vis de connexion M4 × 10 (J).

Instalación en las MFP de alta velocidad

31. Reinstale la cubierta trasera inferior derecha (32).
32. Reinstale la cubierta delantera derecha (28).
33. Reinstale la cubierta derecha 2 (24).
34. Reinstale la cubierta derecha 1 (21).
35. Instale la placa de presión del interruptor (E) usando el tornillo de roscado M4 × 10 (J).

Installation an MFP der Hochleistungsklasse

31. Bringen Sie die untere rechte hintere Abdeckung (32) wieder an.
32. Bringen Sie die vordere rechte Abdeckung (28) wieder an.
33. Bringen Sie die rechte Abdeckung 2 (24) wieder an.
34. Bringen Sie die rechte Abdeckung 1 (21) wieder an.
35. Befestigen Sie mit der M4 × 10 Schneidschraube (J) die Schalterdruckplatte (E).

Installazione sulle MFP a velocità alta

31. Reinstallare il coperchio posteriore inferiore destro (32).
32. Reinstallare il coperchio destro anteriore (28).
33. Reinstallare il coperchio destro 2 (24).
34. Reinstallare il coperchio destro 1 (21).
35. Installare la piastra spingi interruttore (E) utilizzando la vite autofilettante M4 × 10 (J).

安装于高速 MFP 上时

31. 按原样安装右下后部盖板 (32)。
32. 按原样安装右前部盖板 (28)。
33. 按原样安装右部盖板 2(24)。
34. 按原样安装右部盖板 1(21)。
35. 使用 1 颗 M4×10 自攻螺丝 (J) 安装开关挡板 (E)。

고속 MFP 에 설치하는 경우

31. 우측하단 뒷커버 (32) 를 원래대로 장착합니다 .
32. 우측 전면커버 (28) 를 원래대로 장착합니다 .
33. 우측커버 2 (24) 를 원래대로 장착합니다 .
34. 우측커버 1 (21) 를 원래대로 장착합니다 .
35. 탑핑나사 M4×10(J) 1 개로 스위치 판 (E) 을 장착합니다 .

高速 MFP に設置の場合

31. 右下後カバー(32) を元通り取り付ける。
32. 右前カバー(28) を元通り取り付ける。
33. 右カバー2 (24) を元通り取り付ける。
34. 右カバー1 (21) を元通り取り付ける。
35. タッピングビス M4×10(J)1 本でスイッチ当たり板 (E) を取り付ける。

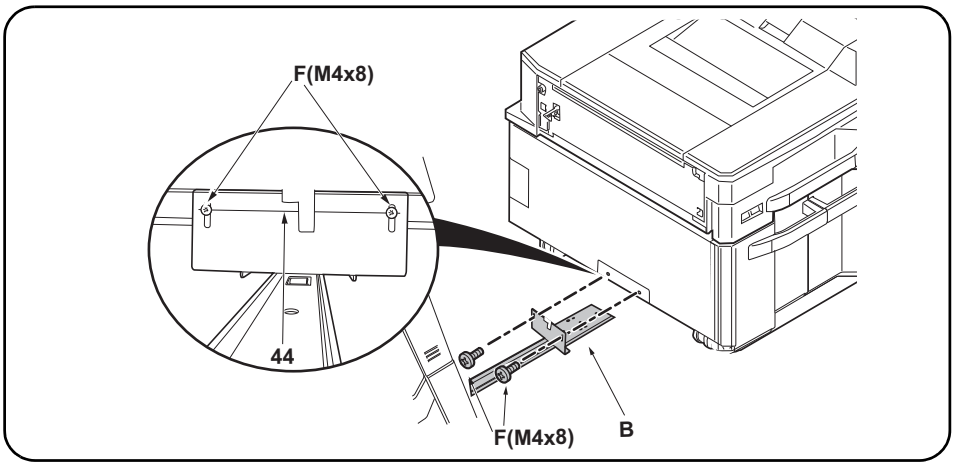

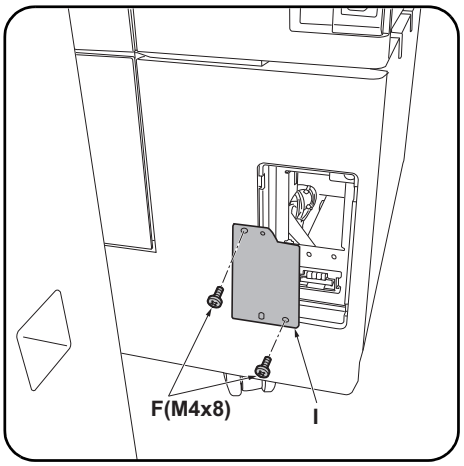

36. Attach the side feeder to the large base slider (B) using 2 M4 × 8 screws (F).Install so that the center of the M4 × 8 screws (F) comes over the horizontal line (44) of the mounting plate on the large base slider (B).

37. Install the cover plate (I) using 2 M4 × 8 screws (F).

---

36. Fixer le plateau d'alimentation latéral à la grande règle de base (B) à l'aide de 2 vis M4 × 8 (F). Procéder de sorte que l'axe des vis M4 × 8 (F) recouvre la ligne horizontale (44) du plateau de montage sur la grande règle de base (B).

37. Fixer le capot (I) à l'aide de 2 vis M4 × 8 (F).

---

36. Sujete el alimentador lateral al deslizador de base grande (B) con 2 tornillos M4 × 8 (F). Instale de manera que el centro de los tornillos M4 × 8 (F) queden sobre la línea horizontal (44) de la placa de montaje del deslizador de base (B) grande.

37. Instale la tapa (I) usando los 2 tornillos M4 × 8 (F).

---

36. Den seitlichen Einzug am großen Basis-Schieber (B) mithilfe der 2 Schrauben 2 M4 × 8 (F) befestigen. Befestigen Sie ihn so, dass die Mitte der M4 × 8 Schrauben (F) über der Waagrechtlinie (44) der Montageplatte am großen Basis-Schieber (B) liegt.

37. Bringen Sie die Abdeckungsplatte (I) mit 2 M4 × 8 Schrauben (F) an.

---

36. Collegare l'unità di alimentazione laterale allo scivolo di base grande (B) usando 2 viti M4 × 8 (F). Installare in modo che il centro delle viti M4 × 8 (F) sia sulla linea orizzontale (44) della piastra di montaggio sullo scivolo di base grande (B).

37. Installare il coperchio (I) utilizzando 2 viti M4 × 8 (F).

---

36. 使用 2 颗 M4×8 螺丝 (F) 将侧供纸盒安装到底座滑板 (大) (B) 上。此时，应确保 M4×8 螺丝 (F) 的中心处于底座滑板 (大) (B) 的安装板的平行线 (44) 上。

37. 使用 2 颗 M4×8 螺丝 (F) 安装盖板 (I)。

---

36. 나사 M4×8(F) 2 개로 베이스 슬라이더 대 (B) 에 사이드 피더를 장착합니다 . 그 때 , 베이스 슬라이더 대 (B) 의 설치판의 평행선 (44) 에 나사 M4×8(F) 의 센터가 오도록 장착합니다 .

37. 나사 M4×8(F) 2 개로 커버 플레이트 (I) 를 장착합니다 .

---

36. ビス M4×8(F)2 本でベーススライダー大 (B) にサイドフィーダーを取り付ける。その際、ベーススライダー大 (B) の取付板の平行線 (44) にビス M4×8(F) のセンターがくるように取り付ける。

37. ビス M4×8(F)2 本でカバープレート (I) を取り付ける。

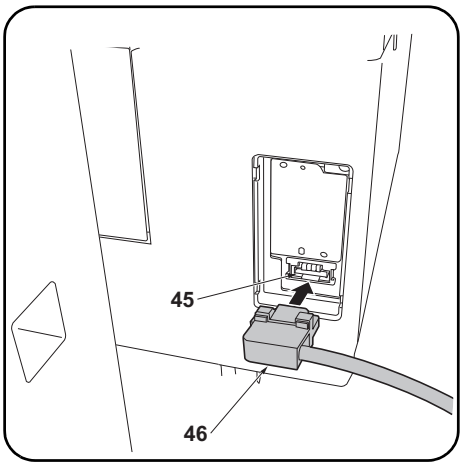

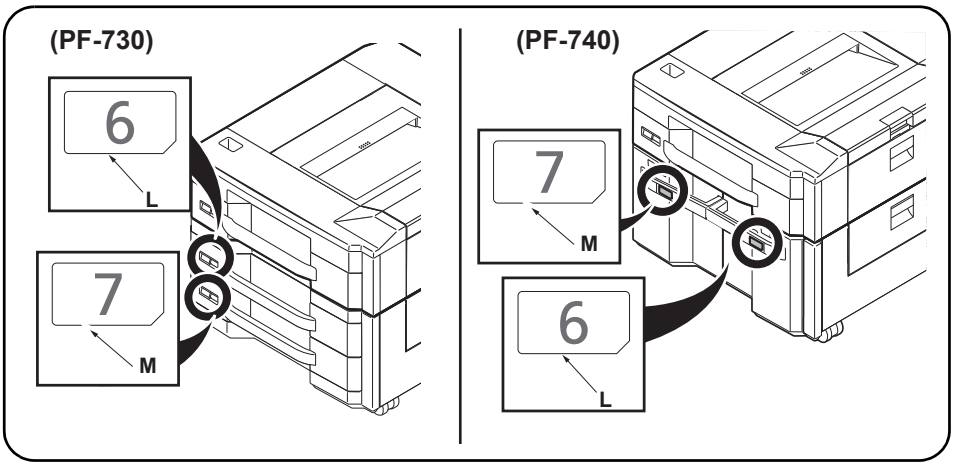

38. Connect the signal cable (46) of the side feeder to the connector (45) of the machine.
39. Push the side feeder to connect it to the machine.

40. After using alcohol to clean place adhering the cassette number label 6 (L) and the cassette number label 7 (M), adhere them in the positions indicated in the illustration.

---

38. Connecter le câble de signal (46) du chargeur latéral au connecteur (45) de la machine.
39. Pousser le chargeur latéral pour le raccorder à la machine.

40. Coller l'étiquette de numéro de cassette 6 (L) et l'étiquette de numéro de cassette 7 (M) sur les emplacements indiqués dans l'illustration, après avoir soigneusement nettoyé ces derniers à l'alcool.

---

38. Conecte el cable de señal (46) del depósito lateral al conector (45) de la máquina.
39. Empuje el depósito lateral para conectarlo a la máquina.

40. Después de utilizar alcohol para limpiar la zona donde se va a pegar la etiqueta de casete con el número 6 (L) y la etiqueta de casete con el número 7 (M), péguelas en los lugares que se indican en la ilustración.

---

38. Das Signalkabel (46) des seitlichen Einzugs an den Stecker (45) des Geräts anschließen.
39. Schieben Sie den seitlichen Einzug, um ihn mit dem Gerät zu verbinden.

40. Zum Anbringen der Aufkleber Kassettennummer 6 (L) und Kassettennummer 7 (M) die Stellen zuvor mit Alkohol reinigen und die Aufkleber dann an den in der Abbildung angegebenen Positionen anbringen.

---

38. Collegare il cavo del segnale (46) dell'alimentatore laterale al connettore (45) della macchina.
39. Spingere l'alimentatore laterale per collegarlo alla macchina.

40. Dopo aver utilizzato alcol per pulire la piastra che aderisce all'etichetta numero cassetta 6 (L) e l'etichetta numero cassetta 7 (M), farli aderire nelle posizioni indicate nell'illustrazione.

---

38. 将侧供纸盒的信号线（46）与机器主机的接插件（45）相连。
39. 按住侧供纸盒，将其与机器主机连接。

40. 使用酒精清洁要粘贴纸盒编号标签 6（L）、纸盒编号标签 7（M）的位置后，按图示位置粘贴。

---

38. 사이드 피더의 신호 케이블 (46) 을 본체 커넥터 (45) 에 연결합니다 .
39. 사이드 피더가 본체에 연결되도록 사이드 피더를 밀어 넣습니다 .

40. 카세트 넘버라벨 6 (L) , 카세트 넘버라벨 7 (M) 의 부착위치를 알코올 청소 후 , 일러스트의 위치에 부착합니다 .

---

38. サイドフィーダーの信号線（46）を機械本体のコネクター（45）に接続する。
39. サイドフィーダーを押し、機械本体に接続する。

40. カセットナンバーラベル 6(L)、カセットナンバーラベル 7(M)をアルコール清掃後、イラストの位置に貼り付ける。

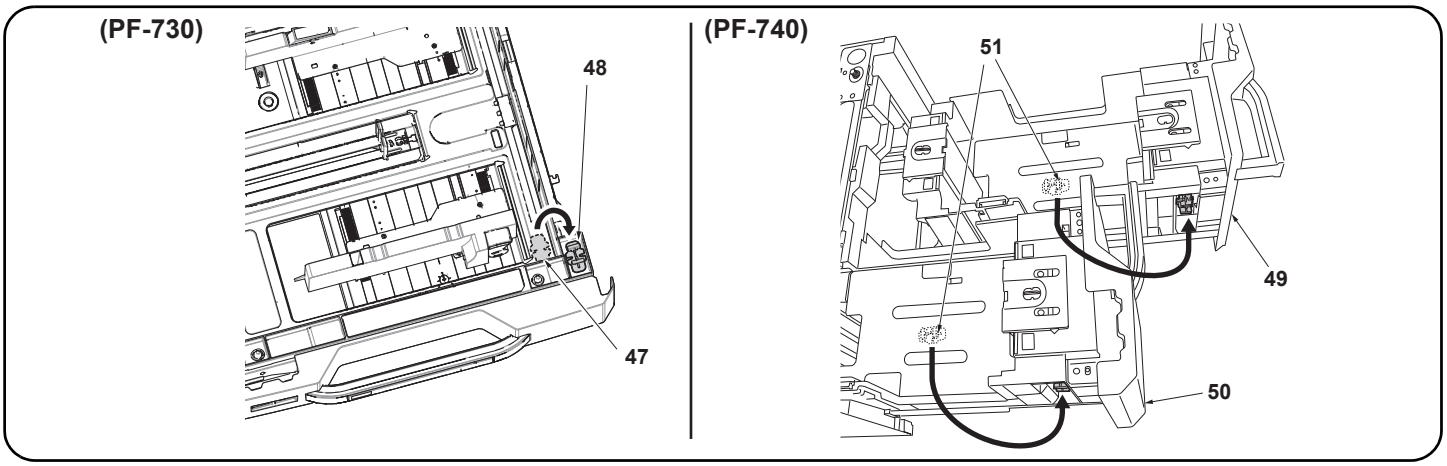

For PF-730

41. Pull each cassette out and then remove the lift plate stopper (47) from each cassette and attach it to the storage location (48).

For PF-740

41. Pull out the right cassette (49) and the left cassette (50), remove each of the lift plate stoppers (51) and attach them in the storage location.

42. Gently close each cassette.

Pour PF-730

41. Sortez chaque magasin puis retirer la butée de plaque d'élévation (47) de chaque tiroir et la fixer à l'emplacement de rangement (48).

Pour PF-740

41. Sortez le magasin droit (49) et le magasin gauche (50), déposer toutes les butées du plateau de levage (51) et les ranger soigneusement.

42. Refermer progressivement chaque tiroir.

Para PF-730

41. Saque cada uno de los depósitos y quite el tope de la placa de elevación (47) de cada bandeja y colóquela en su lugar de depósito (48).

Para PF-740

41. Extraiga el depósito derecho (49) y el depósito izquierdo (50) , quite cada uno de los topes de placa de elevación (51) y fíjelos en el lugar de almacenamiento.

42. Cierre suavemente cada bandeja.

Für PF-730

41. Ziehen Sie jede Kassette aus, dann den Hebeplattenanschlag (47) von jeder Kassette entfernen und an der Speicherposition (48) anbringen.

Für PF-740

41. Ziehen Sie die rechte Kassette (49) und die linke Kassette (50) aus, jeden der Hebeplattenanschläge (51) entfernen und in der vorgesehenen Position verstauen.

42. Alle Kassetten sachte schließen.

Per PF-730

41. Estrarre ciascun cassetto e poi rimuovere il fermo della piastra di sollevamento (47) da ciascun cassetto e fissarlo nella posizione di immagazzinaggio (48).

Per PF-740

41. Estrarre il cassetto destro (49) e il cassetto sinistro (50), rimuovere ciascuno dei fermi (51) della piastra di sollevamento ed applicarli nella posizione di conservazione.

42. Chiudere delicatamente ciascun cassetto.

PF-730 时

41. 拉出各供纸盒，拆下各 1 个升降板挡块 (47)，并安装在保管场所 (48) 上。

PF-740 时

41. 拉出右侧供纸盒 (49) 以及左侧供纸盒 (50)，拆下各 1 个升降板挡块 (51)，并安装在保管场所上。

42. 轻轻地推入各供纸盒。

PF-730 의 경우

41. 각 카세트를 빼고 리프트판 스토퍼 (47) 각 1 개를 빼내 보관장소 (48) 에 부착합니다 .

PF-740 의 경우

41. 카세트 오른쪽 (49) 및 카세트 왼쪽 (50) 을 꺼내어 리프트판 스토퍼 (51) 각 1 개를 제거하고 보관장소에 부착합니다

42. 각 카세트를 조용히 밀어 넣습니다 .

PF-730 の場合

41. 各カセットを引き出し、リフト板ストッパー(47) 各 1 個を外して保管場所 (48) に取り付ける。

PF-740 の場合

41. カセット右 (49) およびカセット左 (50) を引き出し、リフト板ストッパー(51) 各 1 個を取り外し、保管場所に取り付ける。

42. 各カセットを静かに押し込む。

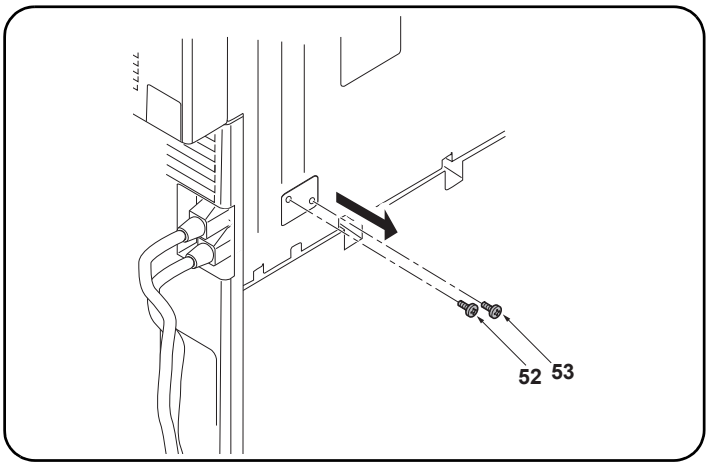

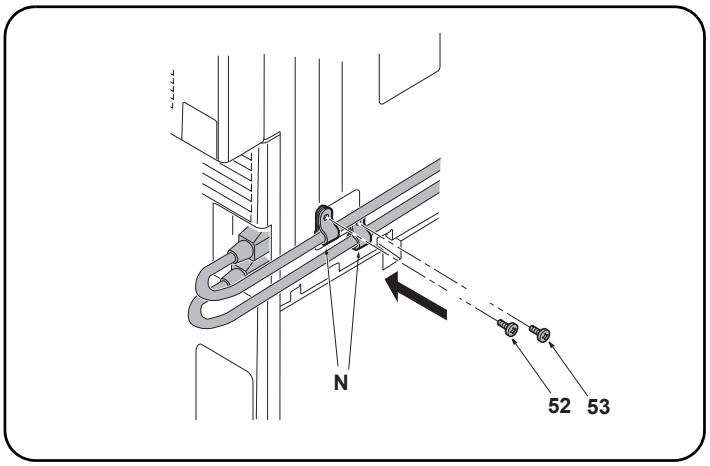

When there is 1 power cable
43. Remove a screw (53).
When there are 2 power cables
43. Remove 2 screws (52) and (53).

When there is 1 power cable
44. Pass the power cable through the clamp (N) and fasten it using a screw (53) removed in step 43.
When there are 2 power cables
44. Pass the power cable through clamp (N) and fasten it using 2 screws (52) (53) removed in step 43.

En cas d'utilisation de 1 seul cordon d'alimentation
43. Retirer la vis (53).
En cas d'utilisation de 2 cordons d'alimentation
43. Retirer les 2 vis (52) et (53).

En cas d'utilisation de 1 seul cordon d'alimentation
44. Faire passer le cordon d'alimentation au travers de collier (N) et le fixer à l'aide de la vis (53) déposée à l'étape 43.
En cas d'utilisation de 2 cordons d'alimentation
44. Faire passer les cordons d'alimentation au travers des colliers (N) et les fixer à l'aide des 2 vis (52) et (53) déposées à l'étape 43.

Si hay 1 cable eléctrico
43. Quite un tornillo (53).
Si hay 2 cables eléctricos
43. Quite 2 tornillos (52) y (53).

Si hay 1 cable eléctrico
44. Pase el cable eléctrico por el sujetador (N) y apriételo con el tornillo (53) que quitó en el paso 43.
Si hay 2 cables eléctricos
44. Pase el cable eléctrico por el sujetador (N) y apriételo con los 2 tornillos (52) y (53) que quitó en el paso 43.

Wenn 1 Netzkabel vorhanden ist
43. Die Schraube (53) entfernen.
Wenn 2 Netzkabel vorhanden sind
43. Die 2 Schrauben (52) und (53) entfernen.

Wenn 1 Netzkabel vorhanden ist
44. Das Netzkabel durch die Klemme (N) führen und es mit der in Schritt 43 entfernten Schraube (53) befestigen.
Wenn 2 Netzkabel vorhanden sind
44. Das Netzkabel durch die Klemme (N) führen und es mit den in Schritt 43 entfernten 2 Schrauben (52) (53) befestigen.

Quando esiste 1 cavo di alimentazione
43. Rimuovere una vite (53).
Quando esistono 2 cavi di alimentazione
43. Rimuovere 2 viti (52) e (53).

Quando esiste 1 cavo di alimentazione
44. Passare il cavo di alimentazione attraverso il morsetto (N) e stringerlo usando una vite (53) rimossa nel passo 43.
Quando esistono 2 cavi di alimentazione
44. Passare il cavo di alimentazione attraverso il morsetto (N) e stringerlo usando 2 viti (52) (53) rimosse nel passo 43.

---

1 根电源线时
43. 拆除 1 颗螺丝（53）。
2 根电源线时
43. 拆除 2 颗螺丝（52）（53）。

1 根电源线时
44. 将电源线穿过束线夹（N），使用在步骤 43 中拆除的 1 颗螺丝（53）固定电源线。
2 根电源线时
44. 将电源线穿过束线夹（N），使用在步骤 43 中拆除的 2 颗螺丝（52）(53) 固定电源线。

전선 코드가 1 개인 경우
43. 나사 (53) 1 개를 제거합니다 .
전선 코드가 2 개인 경우
43. 나사 (52) (53) 2 개를 제거합니다 .

전선 코드가 1 개인 경우
44. 전선 코드를 클램프 (N) 에 통과시키고 순서 43 에서 제거한 나사 (53) 1 개로 고정합니다 .
전선 코드가 2 개인 경우
44. 전선 코드를 클램프 (N) 에 통과시키고 순서 43 에서 제거한 나사 (52) (53) 2 개로 고정합니다 .

電源コードが 1 本の場合
43. ビス(53)1 本を外す。
電源コードが 2 本の場合
43. ビス(52)(53)2 本を外す。

電源コードが 1 本の場合
44. 電源コードをクランプ(N)に通し、手順 43 で外したビス(53)1 本で固定する。
電源コードが 2 本の場合
44. 電源コードをクランプ(N)に通し、手順 43 で外したビス(52)(53)2 本で固定する。

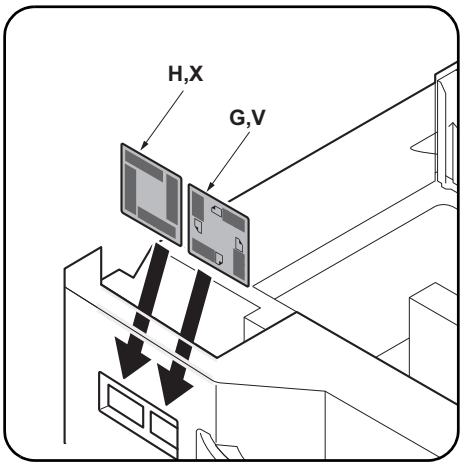

Setting the paper size plate and media type plate
Insert the paper size plate (G,V) and media type plate (H,X) into the each slots respectively.

Skewed paper feed adjustment (PF-730 only)
1. Connect the machine power plug to the wall outlet and turn the machine main power switch on.
2. Load paper into the cassette and make a test copy to check the image.
3. If the image is skewed (skewed paper feed), make the adjustments described below.
   <Reference value> Left-right difference of 1.5 mm or less

Disposition des plaquettes du format de papier et du type de support
Introduire la plaquette du format de papier (G,V) et la plaquette du type de support (H,X) dans leur logement respectif.

Réglage de l'entraînement du papier en biais (PF-730 uniquement)
1. Insérer la fiche d'alimentation de la machine dans la prise murale et mettre la machine sous tension.
2. Mettre du papier dans le tiroir et effectuer une copie d'essai pour vérifier l'image.
3. Si l'image est en biais (entraînement du papier en biais), régler en procédant comme décrit ci-dessous.
   <Valeur de référence> Différence de droite à gauche de 1,5 mm ou moins.

Ajuste de la placa de tamaño de papel y la placa de tipo de medio
Inserte la placa de tamaño de papel (G,V) y la placa de tipo de medio (H,X) en cada uno de las ranuras, respectivamente.

Ajuste de alimentación de papel torcida (PF-730 solamente)
1. Conecte el enchufe de la máquina en el receptáculo de pared y encienda el interruptor principal de la máquina.
2. Introduzca papel en el cajón y haga una copia de prueba para verificar la imagen.
3. Si la imagen está torcida (alimentación del papel torcida) haga los ajustes que se describen a continuación.
   <Valor de referencia> diferencia izquierda-derecha de 1,5 mm o menor.

Einsetzen der Papierformatkarte und der Medientypkarte
Setzen Sie die Papierformatkarte (G,V) und die Medientypkarte (H,X) in die jeweiligen Führungen.

Einstellung bei verkantetem Papiereinzug (nur PF-730)
1. Stecken Sie den Netzstecker des Geräts in die Wandsteckdose und schalten Sie das Gerät am Hauptschalter ein.
2. Legen Sie Papier in die Papierlade ein und machen Sie eine Testkopie, um das Bild zu prüfen.
3. Nehmen Sie nachstehende Einstellungen vor, falls das Bild verkantet ist (verkanteter Papiereinzug).
   <Bezugswert> Links-rechts-Differenz maximal 1,5 mm.

Impostazione della piastra di formato carta e della piastra del tipo di supporto
Inserire la piastra del formato carta (G,V) e la piastra del tipo di supporto (H,X) nei rispettivi alloggiamenti.

Regolazione alimentazione obliqua carta (solo PF-730)
1. Collegare la spina della macchina alla presa di corrente a muro e accendere l'interruttore di alimentazione della macchina.
2. Caricare carta nel cassetto ed eseguire una copia di prova per controllare l'immagine.
3. Se l'immagine risulta obliqua (alimentazione obliqua della carta), eseguire le regolazioni descritte sotto.
   <Valore di riferimento> Differenza tra destra e sinistra di 1,5 mm o inferiore

---

纸张尺寸标示和纸张种类标示的安装
将纸张尺寸标示 (G,V) 和纸张种类标示 (H,X) 分别插入到图示的插槽中。

歪斜进纸调节（仅限 PF-730）
1. 将机器主机上的电源插头插入电源插座中，打开主电源开关。
2. 在纸盒中放入纸张。进行测试复印以确认图像。
3. 图像倾斜（歪斜进纸）时进行以下调节。
   ＜基准值＞左右差 1.5㎜ 以下

용지크기 플레이트와 용지종류 플레이트의 세트
용지크기 플레이트 (G,V) 와 용지종류 플레이트 (H,X) 를 각표시 슬롯에 각각 삽입한다 .

경사급지 조정 (PF-730 만)
1. 본체 전원 플러그를 벽 콘센트에 연결하고 본체의 주 전원 스위치를 켭니다 .
2. 카세트에 용지를 장착합니다 . 시험복사를 하고 화상을 확인합니다 .
3. 화상이 기울어져 있는 (경사급지) 경우에는 다음 조정을 합니다 .
   ＜기준치＞ 좌우차 1.5mm 이하

用紙サイズプレートと用紙種類プレートのセット
用紙サイズプレート (G,V) と用紙種類プレート (H,X) を各表示スロットにそれぞれ挿入する。

斜め給紙調整 (PF-730 のみ)
1. 機械本体の電源プラグをコンセントに差し込み、主電源スイッチを ON にする。
2. カセットに用紙をセットする。テストコピーをおこない、画像を確認する。
3. 画像が傾いている(斜め給紙)場合は次の調整をおこなう。
   ＜基準値＞左右差 1.5㎜ 以下

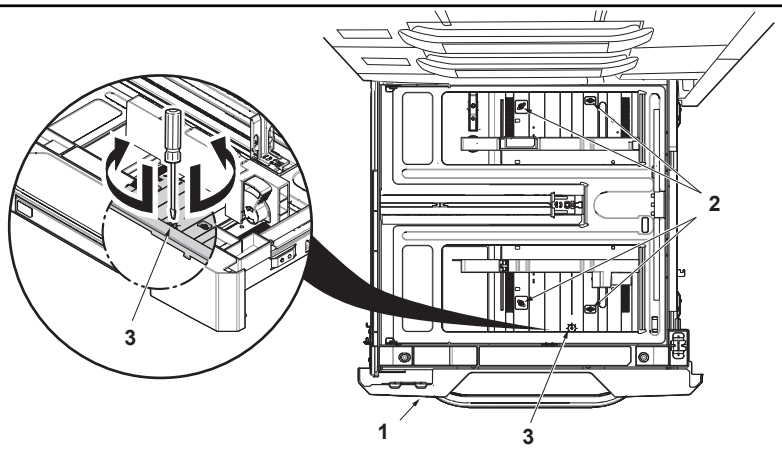

4. Pull out the cassette (1) in the paper feeder and loosen the 4 screws (2).
5. Turn the adjusting screw (3) to adjust the cursor skew.
6. Retighten the 4 screws (2).
7. Make another test copy to check the image.

---

4. Sortir le tiroir (1) du bureau papier et desserrer les 4 vis (2).
5. Faire tourner la vis de réglage (3) pour régler la déviation du curseur.
6. Resserrer les 4 vis (2).
7. Faire une autre copie d'essai pour vérifier l'image.

---

4. Extraiga el cajón (1) del alimentador de papel y afloje los 4 tornillos (2).
5. Gire el tornillo de ajuste (3) para ajustar la desviación del cursor.
6. Vuelva a apretar los 4 tornillos (2).
7. Haga otra copia de prueba para verificar la imagen.

---

4. Ziehen Sie die Papierlade (1) aus dem Papiereinzug und lösen Sie die 4 Schrauben (2).
5. Drehen Sie die Einstellschraube (3), um die Cursor-Verkantung zu korrigieren.
6. Ziehen Sie die 4 Schrauben (2) wieder an
7. Erstellen Sie zur Überprüfung des Bilds noch einmal eine Testkopie.

---

4. Estrarre il cassetto (1) dell'unità di alimentazione della carta e quindi allentare le 4 viti (2).
5. Ruotare la vite di regolazione (3) per regolare l'inclinazione del cursore.
6. Ristringere le 4 viti (2).
7. Eseguire un'altra copia di prova per controllare l'immagine.

---

4. 拉出供纸盒（1），拧松 4 颗螺丝（2）。
5. 旋转调节螺丝（3），以调节游标的倾斜。
6. 拧紧 4 颗螺丝（2）。
7. 再次进行测试复印，确认图像。

---

4. 급지 카세트 (1) 를 빼 내어 나사 (2) 4 개를 느슨하게 합니다 .
5. 조정나사 (3) 을 돌려 커서 경사조정을 합니다 .
6. 나사 (2) 4 개를 조입니다 .
7. 다시 시험복사를 하고 화상을 확인합니다 .

---

4. ペーパーフィーダーのカセット (1) を引出し、ビス (2)4 本を緩める。
5. 調整ネジ (3) を回し、カーソルの傾き調整をおこなう。
6. ビス (2)4 本を締め付ける。
7. 再度、テストコピーをおこない、画像を確認する。

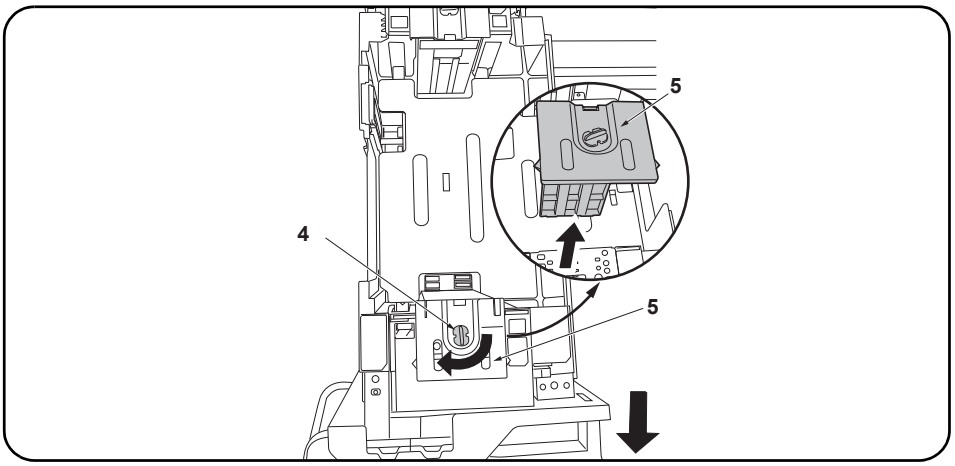

Changing paper size (PF-740, metric specifications only)
At shipment, Letter is set for inch models and A4 is set for metric models. Use the procedure below to change the size to B5.

1. Pull out the cassette of the paper feeder.
2. Turn the front lock lever (4) 90° and remove the front deck cursor (5).

Modification du format du papier (PF-740, pour spécifications métriques seulement)
À expédition, les modèles à mesure en pouces sont réglés sur le format Letter et les modèles à mesure métrique sur le format A4. Pour passer au format B5, procéder de la manière suivante.

1. Tirer le magasin du bureau papier vers soi.
2. Faire tourner le levier de verrouillage avant (4) de 90º et déposer le curseur de platine avant (5).

Cómo cambiar el tamaño de papel (PF-740, sólo para las especificaciones métricas)
En el momento de salida de fábrica, se configura Carta para los modelos en pulgadas y A4 para los modelos en sistema métrico. Siga este procedimiento para cambiar el tamaño a B5.

1. Abra el casete del alimentador de papel.
2. Gire la palanca de bloqueo frontal (4) 90º y quite el cursor frontal de la plataforma (5).

Ändern des Papierformats (PF-740, nur metrische Spezifikationen)
Beim Werksversand ist bei Modellen mit Zollmaß das Format Letter voreingestellt und bei Modellen mit metrischem Maß das Format A4.
Das Format kann wie folgend auf B5 umgeschaltet werden.

1. Ziehen Sie die Papierlade aus dem Papiereinzug.
2. Den vorderen Verriegelungshebel (4) um 90° drehen und den vorderen Konsole-Cursor (5) abnehmen.

Cambio del formato della carta (PF-740, solo per le specifiche metriche)
Al momento della spedizione, Letter è impostato per le specifiche in pollici e A4 è impostato per le specifiche metriche. Usare la procedura riportata sotto per cambiare il formato a B5.

1. Estrarre il cassetto dell'unità di alimentatore della carta.
2. Ruotare la leva frontale di blocco (4) di 90° e rimuovere il cursore frontale del deck (5).

纸张尺寸更改（PF-740，仅限公制规格）
产品出厂时，英制规格设定为 Letter、公制规格设定为 A4。要将尺寸更改为 B5 时，请按以下步骤进行操作。

1. 拉出供纸工作台的供纸盒。
2. 将前部锁定杆 (4) 旋转 90°，拆下堆纸板前部游标（5）。

용지크기 변경 (PF-740, 센치 사양만)
출하시 , 인치사양은 Letter, 센치사양은 A4 로 설정되어 있습니다 . 크기를 B5 로 변경하는 경우에는 다음 순서를 진행해 주십시오 .

1. 급지대 카세트를 빼 냅니다 .
2. 잠금레버 앞 (4) 을 90° 회전시켜 데크커서 앞 (5) 을 제거합니다 .

用紙サイズ変更(PF-740, センチ仕様のみ)
出荷時、インチ仕様はLetter、センチ仕様はA4に設定されています。サイズをB5に変更する場合は次の手順をおこなってください。

1. ペーパーフィーダーのカセットを引き出す。
2. ロックレバー前 (4) を 90° 回転させ、デッキカーソル前(5)を取り外す。

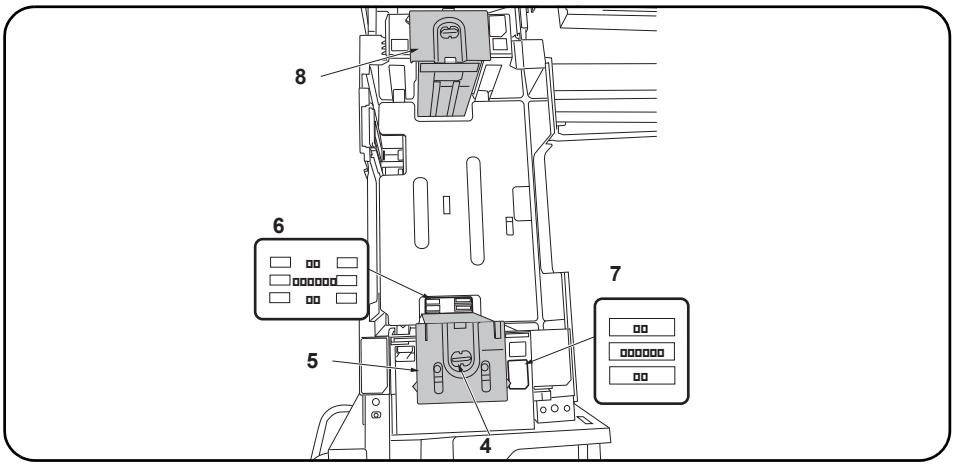

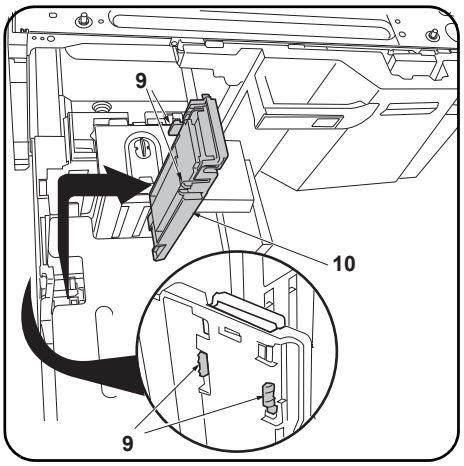

3. Move the front deck cursor (5) so that it is aligned with the size indicators on the top (7) and bottom (6) of the cassette.
4. Turn the front lock lever (4) 90° to lock it.
5. Move the rear deck cursor (8) in the same way.

6. Release the hook (9) and remove the deck trailing edge cursor (10).

---

3. Déplacer le curseur de platine avant (5) de sorte qu'il soit aligné avec les indicateurs de format en haut (7) et en bas (6) du tiroir.
4. Faire tourner le levier de verrouillage avant (4) de 90º pour le verrouiller.
5. Déplacer le curseur de platine arrière (8) en procédant de la même manière.

6. Libérer le crochet (9) et déposer le curseur du bord arrière de la platine (10).

---

3. Mueva el cursor frontal de la plataforma (5) para que quede alineado con las indicadores de tamaño de la parte superior (7) e inferior (6) del cajón.
4. Gire la palanca de bloqueo frontal (4) 90º para bloquearla.
5. Mueva el cursor trasero de la plataforma (8) de la misma forma.

6. Libere el gancho (9) y quite el cursor del borde inferior de la plataforma (10).

---

3. Den vorderen Konsole-Cursor (5) so verschieben, dass er mit den Formatanzeigen oben (7) und unten (6) an der Kassette fluchtet.
4. Den vorderen Verriegelungshebel (4) zum Verriegeln um 90° drehen.
5. Den hinteren Konsole-Cursor (8) auf gleiche Weise verschieben.

6. Den Haken (9) lösen und den Hinterkante-Cursor (10) der Konsole abnehmen.

---

3. Spostare il cursore frontale del deck (5) in modo che esso risulti allineato con gli indicatori di formato sulla parte superiore (7) e inferiore (6) del cassetto.
4. Ruotare la leva frontale di blocco (4) di 90°, per bloccarla.
5. Spostare il cursore posteriore del deck (8) allo stesso modo.

6. Rilasciare il gancio (9) e rimuovere il cursore del bordo di uscita del deck (10).

---

3. 移动堆纸板前部游标 (5)，使供纸盒下部的尺寸标记 (6) 与供纸盒上部的尺寸标记 (7) 对齐。
4. 将前部锁定杆 (4) 旋转 90° 以固定。
5. 按同样方式移动后部堆纸板后部游标 (8)。

6. 解除卡扣 (9)，拆下堆纸板后部游标 (10)。

---

3. 카세트 밑의 크기표시 (6) 와 카세트 위의 크기 표시 (7) 에 맞춰 데크커서 앞 (5) 을 이동시킵니다 .
4. 잠금레버 앞 (4) 을 90° 회전시켜 고정합니다 .
5. 똑같이 데크커서 뒤 (8) 를 이동시킵니다 .

6. 후크 (9) 를 해제하고 데크 뒷단커서 (10) 를 제거합니다 .

---

3. カセット下のサイズ表示 (6) とカセット上のサイズ表示 (7) に合わせてデッキカーソル前 (5) を移動させる。
4. ロックレバー前 (4) を 90° 回転させ固定する。
5. 同様にデッキカーソル後 (8) を移動させる。

6. フック (9) を解除し、デッキ後端カーソル (10) を取り外す。

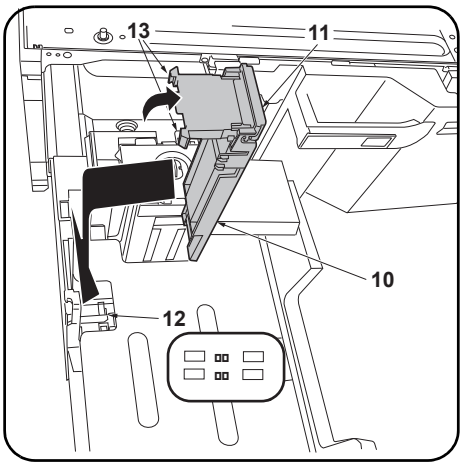

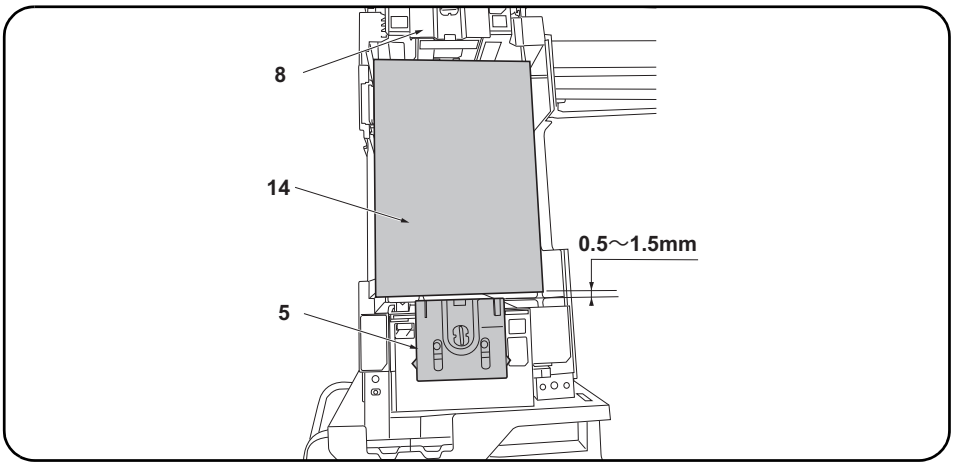

7. Lift up the sub-cursor (11).
8. Align with the size indicator (12), engage the hook (13) and install the deck trailing edge cursor (10).

Adjusting the cursor width (PF-740 only)
1. Load paper in the cassettes.
2. If the gap between the front deck cursor (5) and the paper (14) is outside the 0.5 to 1.5 mm range when the paper (14) is touching up against the rear deck cursor (8), perform the following adjustment.
* A cursor width that is too small can hinder paper feeding, while a cursor width that is too large can lead to problems such as skewed paper feed.

---

7. Lever le curseur secondaire (11).
8. Aligner avec l'indicateur de format (12), engager le crochet (13) et reposer le curseur du bord arrière de la platine (10).

Réglage de la largeur du curseur (PF-740 uniquement)
1. Charger les tiroirs en papier.
2. Si l'écartement entre le curseur de platine avant (5) et le papier (14) est hors des limites de 0,5 à 1,5 mm quand le papier (14) touche le curseur de platine arrière (8), procéder au réglage suivant.
* Une largeur trop faible du curseur risque d'empêcher l'entraînement du papier et une largeur trop grande risque d'entraîner des problèmes du type entraînement du papier de biais.

---

7. Levante el cursor secundario (11).
8. Alinee con el indicador de tamaño (12), enganche el gancho (13) e instale el cursor del borde inferior de la plataforma. (10).

Cómo ajustar la anchura del cursor (PF-740 solamente)
1. Cargue papel en los cajones.
2. Si la separación entre el cursor frontal de la plataforma (5) y el papel (14) está fuera del rango de 0,5 a 1,5 mm cuando el papel (14) toca el cursor trasero de la plataforma (8), haga el siguiente ajuste.
* Una anchura del cursor demasiado pequeña puede impedir la alimentación de papel; una anchura del cursor demasiado grande puede provocar problemas con la alimentación torcida de papel.

---

7. Den Unter-Cursor (11) anheben.
8. Auf die Formatanzeige (12) ausrichten, den Haken (13) einsetzen und den Hinterkante-Cursor (10) der Konsole anbringen.

Einstellen der Cursor-Breite (nur PF-740)
1. Papier in die Papierladen einlegen.
2. Falls der Abstand zwischen dem vorderen Konsole-Cursor (5) und dem Papier (14) außerhalb des Bereichs 0,5 bis 1,5 mm liegt, wenn das Papier (14) am hinteren Konsole-Cursor (8) anliegt, ist folgende Einstellung vorzunehmen.
* Eine zu kleine Cursor-Breite kann den Papiereinzug behindern, wogegen eine zu große Cursor-Breite verkanteten Papiereinzug und ähnliche Probleme verursachen kann.

---

7. Sollevare il cursore secondario (11).
8. Allineare con l'indicatore formato (12), fissare il gancio (13) e installare il cursore del bordo di uscita del deck (10).

Regolazione della larghezza del cursore (solo PF-740)
1. Caricare carta nei cassetti.
2. Se lo spazio tra il cursore frontale del deck (5) e la carta (14) è fuori della gamma da 0,5 a 1,5 mm quando la carta (14) tocca il cursore postertiore del deck (8), eseguire la regolazione seguente.
* Una larghezza dei cursori troppo piccola può ostacolare l'alimentazione della carta, mentre unalarghezza dei cursori troppo grande può essere causa di problemi, come ad esempio l'alimentazione obbliqua della carta.

---

7. 抬起副游标（11）。
8. 对齐尺寸标记（12），将卡扣（13）嵌入以安装堆纸板后部游标（10）。

游标宽度的调节 （仅限 PF-740）
1. 在供纸盒中装入纸张。
2. 在堆纸板后部游标（8）与纸张（14）接触的状态下，如果堆纸板前部游标（5）与纸张（14）的间隙超出了 0.5 ～ 1.5㎜ 的范围，须进行以下调节。
※ 如果游标宽度过小，可能造成不供纸，游标宽度过大，则可能发生歪斜进纸等情况。

---

7. 서브커서 (11) 를 세웁니다 .
8. 크기표시 (12) 에 맞춰 후크 (13) 를 판벽데크 후단커서 (10) 를 부착합니다 .

커서 폭 조정 (PF-740 만)
1. 카세트에 용지를 장착합니다 .
2. 데크커서 뒤 (8) 에 용지 (14) 가 접하고 있는 상태에서 데크커서 앞 (5) 과 용지 (14) 의 틈이 0.5 ~ 1.5mm 의 범위외의 경우에는 이하의 조정을 합니다 .
※ 커서 폭이 작으면 무급지 , 커서 폭이 크면 경사급지 등이 발생할 가능성이 있습니다 .

---

7. サブカーソル（11）を起こす。
8. サイズ表示（12）に合わせて、フック（13）をはめデッキ後端カーソル（10）を取り付ける。

カーソル幅の調整（PF-740 のみ）
1. カセットに用紙をセットする。
2. デッキカーソル後（8）に用紙（14）が接している状態で、デッキカーソル前（5）と用紙（14）の隙間が 0.5 ～ 1.5㎜ の範囲外の場合は、以下の調整をおこなう。
※ カーソル幅が小さいと無給紙、カーソル幅が大きいと斜め給紙などが発生する可能性がある。

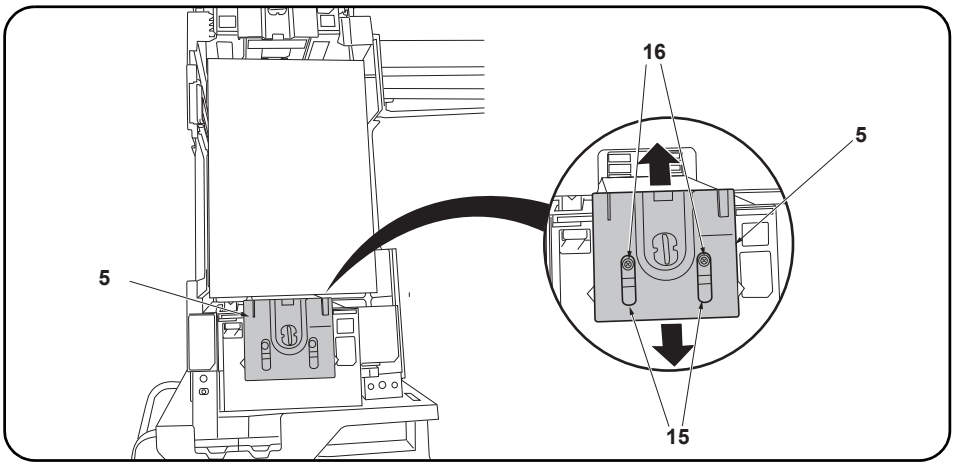

3. Insert a Philips-head screwdriver into the 2 long slots (15) in the front deck cursor (5) and loosen the 2 adjusting screws (16). Then move the front deck cursor (5).

4. Retighten the 2 adjusting screws (16).
5. Check that the gap between the front deck cursor (5) and the paper is between 0.5 and 1.5 mm.

---

3. Insérer un tournevis cruciforme dans les 2 longues fentes (15) du curseur de platine avant (5) et desserrer les 2 vis de réglage (16). Déplacer ensuite le curseur de platine avant (5).

4. Resserrer les 2 vis de réglage (16).
5. Vérifier que l'écartement entre le curseur de platine avant (5) et le papier est entre 0,5 et 1,5 mm.

---

3. Inserte un destornillador de cabeza Philips en las dos ranuras largas (15) en el cursor frontal de la plataforma (5) y afloje los 2 tornillos de ajuste (16). Después, mueva el cursor frontal de la plataforma (5).

4. Vuelva a apretar los 2 tornillos de ajuste (16).
5. Verifique que la separación entre el cursor frontal de la plataforma (5) y el papel sea de entre 0,5 y 1,5 mm.

---

3. Einen Kreuzschlitzschraubendreher in die 2 langen Öffnungen (15) im vorderen Konsole-Cursor (5) stecken und die 2 Einstellschrauben (16) lösen. Danach den vorderen Konsole-Cursor (5) verschieben.

4. Die 2 Einstellschrauben (16) wieder anziehen.
5. Vergewissern Sie sich, dass der Abstand zwischen dem vorderen Konsole-Cursor (5) und dem Papier im Bereich 0,5 bis 1,5 mm liegt.

---

3. Inserire un cacciavite con testa a croce tipo Philips nelle 2 fessure lunghe (15) nel cursore frontale del deck (5) e allentare le 2 viti di regolazione (16). Quindi spostare il cursore frontale del deck (5).

4. Ristringere le 2 viti di regolazione (16).
5. Controllare che lo spazio tra il cursore frontale del deck (5) e la carta sia compreso nella gamma tra 0,5 e 1,5 mm.

---

3. 将十字螺丝刀从堆纸板前部游标 (5) 的 2 处长孔 (15) 处插入，拧松 2 颗调节螺丝 (16)，移动堆纸板前部游标 (5)。

4. 拧紧 2 颗调节螺丝 (16)。
5. 确认堆纸板前部游标 (5) 与纸张的间隙在 0.5 ～ 1.5㎜ 的范围内。

---

3. 데크커서 앞 (5) 2 곳의 긴 구멍 (15) 에서 플러스 드라이버를 넣어 조정나사 (16) 2 개를 느슨하게 하고 데크커서 앞 (5) 을 이동시킵니다 .

4. 조정나사 (16) 2 개를 조입니다 .
5. 데크커서 앞 (5) 과 용지의 틈이 0.5 ~ 1.5 mm 범위내가 되어 있는 것을 확인합니다 .

---

3. デッキカーソル前 (5) の 2 箇所の長穴 (15) からプラスドライバー挿入し、調整ビス (16)2 本を緩め、デッキカーソル前 (5) を移動させる。

4. 調整ビス (16)2 本を締め付ける。
5. デッキカーソル前 (5) と用紙の隙間が 0.5 ～ 1.5㎜ の範囲内になっていることを確認する。

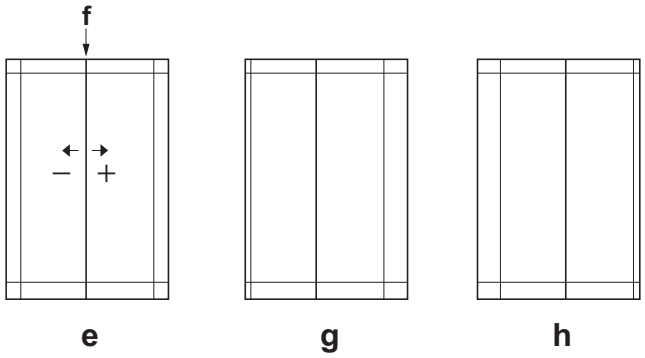

Adjusting the center line

The reference value for the center line is ±0.5 mm or less at position (f) in the correct image (e). If the center line position is outside this range, perform the following adjustment.

1. Set maintenance mode U034, select LSU Out Left and Cassette 5, Cassette 6 or Cassette 7.
2. Adjust the values.
   Test pattern (g): Increase the setting value. Test pattern (h): Decrease the setting value.
3. Press the Start key to confirm the setting value.

Réglage de l'axe

La valeur de référence pour l'axe est de ±0,5 mm ou moins à la position (f) d'une image correcte (e). Si la position de l'axe est hors de cette plage, effectuez le réglage suivant.

1. Passer au mode maintenance U034, sélectionner LSU Out Left et Cassette 5, Cassette 6 ou Cassette 7.
2. Régler les valeurs.
   Mire d' essai (g): Augmentez la valeur de réglage. Mire d' essai (h): Diminuez la valeur de réglage.
3. Appuyer sur la touche de Start pour confirmer la valeur de réglage.

Ajuste de la línea central

El valor de referencia de la línea central es de ±0,5 mm o menor, en la posición (f) de la imagen correcta (e). Si la posición de la línea central estuviera fuera de este rango, haga el siguiente ajuste.

1. Entre al modo mantenimiento U034, seleccione LSU Out Left y Cassette 5, Cassette 6 o Cassette 7.
2. Ajuste los valores.
   Patrón de prueba (g): Aumente el valor de configuración. Patrón de prueba (h): Reduzca el valor de configuración.
3. Pulse la tecla de Start para confirmar el valor de configuración.

Einstellen der Mittenlinie

Der Bezugswert für die Mittenlinie ist ±0,5 mm oder weniger an Position (f) des korrekten Bilds (e). Falls die Mittenlinie außerhalb dieses Bereichs liegt, ist folgende Einstellung vorzunehmen.

1. In den Wartungsmodus U034 schalten und LSU Out Left und Cassette 5, Cassette 6 oder Cassette 7 wählen.
2. Die Werte einstellen.
   Testmuster (g): Den Einstellwert erhöhen. Testmuster (h): Den Einstellwert verringern.
3. Den Einstellwert durch Drücken der Start-Taste bestätigen.

Regolazione della linea centrale

Il valore di riferimento per la linea centrale è ±0,5 mm o inferiore alla posizione (f) nell'immagine corretta (e). Se la posizione della linea centrale è all'infuori di questa gamma, effettuare la regolazione seguente.

1. Impostare la modalità di manutenzione U034, selezionare LSU Out Left e Cassette 5, Cassette 6 o Cassette 7.
2. Regolare i valori.
   Modello di prova (g): Aumentare il valore dell'impostazione. Modello di prova (h): Diminuire il valore dell'impostazione.
3. Premere il tasto di Start per confermare il valore dell'impostazione.

中心线调节

中心线的基准值在矫正图像 (e) 的 (f) 位置为 ±0.5mm 以内。超出该范围时，须进行以下调节。

1. 设置维护模式 U034，选择 LSU Out Left、Cassette5、Cassette6 或 Cassette7。
2. 调整设定值。
   测试图案 (g)：调高设定值。 测试图案 (h)：调低设定值。
3. 按 Start 键，以确定设定值。

센터라인 조정

센터라인은 적정화상 (e) 의 (f) 위치에서 기준치는 ±0.5mm 이내 . 여기에서 벗어나는 것은 이하의 조정을 합니다 .

1. 메인터넌스 모드 U034 을 세트하고 LSU Out Left, Cassette5, Cassette6 또는 Cassette7 을 선택합니다 .
2. 설정치를 조정합니다 .
   테트스 패턴 (g) :설정치를 높입니다 . 테스트 패턴 (h) :설정치를 내립니다 .
3. 시작키를 누르고 설정치를 확인합니다 .

センターライン調整

センターラインは、適正画像 (e) の (f) の位置で基準値は ±0.5mm 以内。これから外れるときは以下の調整をおこなう。

1. メンテナンスモード U034 をセットし、LSU Out Left、Cassette5、Cassette6 または Cassette7 を選択する。
2. 設定値を調整する。
   テストパターン (g) :設定値を上げる。 テストパターン (h) :設定値を下げる。
3. スタートキーを押し、設定値を確定する。

INSTALLATION GUIDE FOR 1000-SHEETS FINISHER

English A different procedure is required depending on the product which is installed with this unit.Each procedure is described in the following pages.
For installation with a MFP, see Page 1 to Page 6.
For installation with a Printer, see Page 7 to Page 13.

Français Une procédure différente est requise selon le produit qui est installé avec cette unité.Chaque procédure est décrite dans les pages suivantes.
Pour l'installation avec une imprimante multifonction, voir Page 1 à Page 6.
Pour l'installation avec une imprimante, voir Page 7 à Page 13.

Español El procedimiento es diferente según el producto que se instale con esta unidad.En las siguientes páginas, se describe cada procedimiento.
Para la instalación con un MFP, consulte las páginas de la 1 a la 6.
Para la instalación con una impresora, consulte las páginas de la 7 a la 13.

Deutsch Je nach verwendetem Modell ist eine andere Vorgehensweise zur Installation dieses Teils erforderlich.Die unterschiedlichen Vorgehensweisen werden auf den folgenden Seiten erläutert.
Bei Installation an einem MFP siehe Seiten 1 bis 6.
Bei Installation an einem Drucker siehe Seiten 7 bis 13.

Italiano Si richiede una procedura diversa in funzione del prodotto su cui è installata l'unità.Le singole procedure sono descritte nelle pagine seguenti.
Per l'installazione con un MFP, vedere le pagine da 1 a 6.
Per l'installazione con una stampante, vedere le pagine da 7 a 13.

简体中文 根据安装对象，安装步骤略有不同。各个步骤记载在下面的页面。
安装到 MFP 上时，请参见 P1-P6。
安装到打印机上时，请参见 P7-P13。

한국어 이 장치에 설치되는 제품에 따라 절차가 다릅니다 . 다음 페이지에서 각 절차를 설명합니다 .
MFP 에 설치하는 경우 1 페이지 ~6 페이지를 참조하십시오 .
프린터에 설치하는 경우 7 페이지 ~13 페이지를 참조하십시오 .

日本語 装着する対象によって、取付手順は異なります。それぞれ、以下のページに記載しています。
MFP に設置する場合;1 ページ～ 6 ページ
プリンターに設置する場合;7 ページ～ 13 ページ

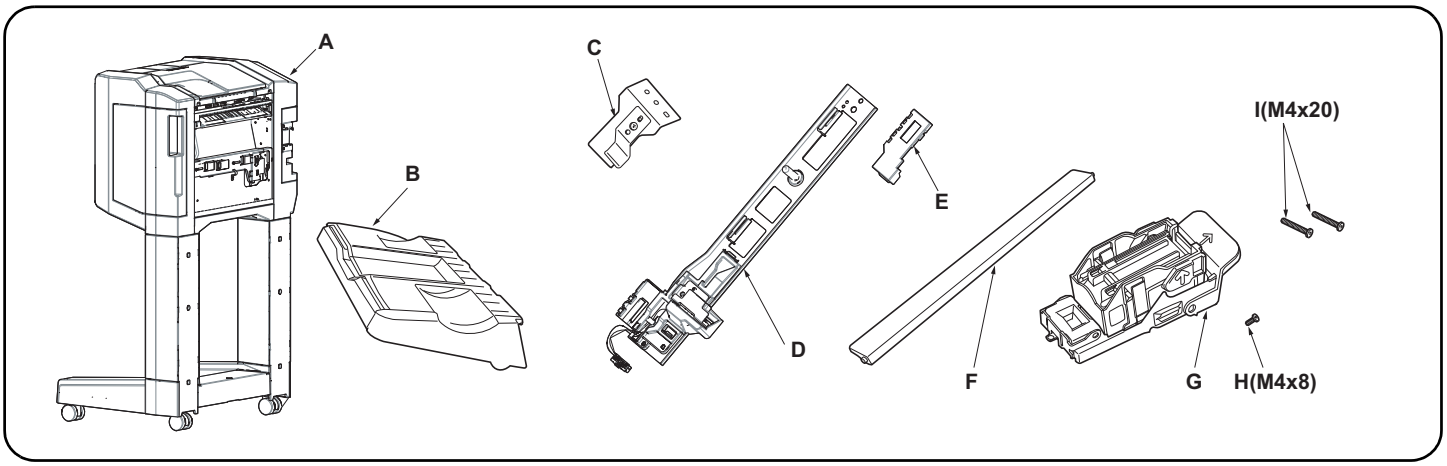

Supplied parts
A. Document finisher 1
B. Eject tray 1
C. Lower earth plate 1
D. Connecting plate 1
E. Connector cover 1
F. Eject guide 1
G. Staple cartridge 1
H. M4 × 8 screw 1
I. M4 × 20 screw 2

Be sure to remove any tape and/or cushioning materials from the parts supplied.

Pièces fournies
A. Finisseur de document 1
B. Bac d'éjection 1
C. Plaque de terre inférieure 1
D. Plaque de connexion 1
E. Cache de connecteur 1
F. Guide d'éjection 1
G. Cartouche d'agrafes 1
H. Vis M4 × 8 1
I. Vis M4 × 20 2

Veillez à retirer les morceaux de bande adhésive et/ou les matériaux de rembourrage des pièces fournies.

Partes suministradas
A. Finalizador de documentos 1
B. Bandeja de salida 1
C. Placa de conexión a tierra inferior 1
D. Placa de conexión 1
E. Cubierta del conector 1
F. Guía de salida 1
G. Cartucho de grapas 1
H. Tornillo M4 × 8 1
I. Tornillo M4 × 20 2

Asegúrese de despegar todas las cintas y/o material amortiguador de las partes suministradas.

Enthaltene Teile
A. Finisher 1
B. Auswerffach 1
C. Untere Grundplatte 1
D. Verbindungsplatte 1
E. Stecker-Abdeckung 1
F. Ausgabeführung 1
G. Heftklammer-Magazin 1
H. M4 × 8 Schraube 1
I. M4 × 20 Schraube 2

Stellen Sie sicher, dass sämtliche Klebebänder und/oder Polstermaterial von den gelieferten Teilen entfernt wurden.

Parti fornite
A. Finisher documenti 1
B. Vassoio di espulsione 1
C. Piastra di messa a terra inferiore 1
D. Piastra di connessione 1
E. Copri connettore 1
F. Guida di espulsione 1
G. Contenitore punti 1
H. Vite M4 × 8 1
I. Vite M4 × 20 2

Rimuovere tutti i nastri adesivi e/o i materiali di protezione dalle parti fornite.

附属品
A. 装订器 1
B. 排纸托盘 1
C. 下部接地板 1
D. 连接板 1
E. 接插件盖板 1
F. 排纸导向板 1
G. 装订针盒 1
H. M4×8 螺丝 1
I. M4×20 螺丝 2

如果附属品上带有固定胶带，缓冲材料时务必揭下。

동봉품
A. 도큐먼트 피니셔 1
B. 배출 트레이 1
C. 접지판 하 1
D. 연결판 1
E. 커넥터 커버 1
F. 배출 가이드 1
G. 스테이플 카트리지 1
H. 나사 M4×8 1
I. 나사 M4×20 2

동봉품에 고정 테이프 , 완충재가 붙어 있는 경우에는 반드시 제거하십시오 .

同梱品
A. ドキュメントフィニッシャー 1
B. 排出トレイ 1
C. アース板下 1
D. 連結板 1
E. コネクターカバー 1
F. 排出ガイド 1
G. ステープルカートリッジ 1
H. ビス M4×8 1
I. ビス M4×20 2

同梱品に固定テープ、緩衝材がついている場合は、必ず取り外すこと。

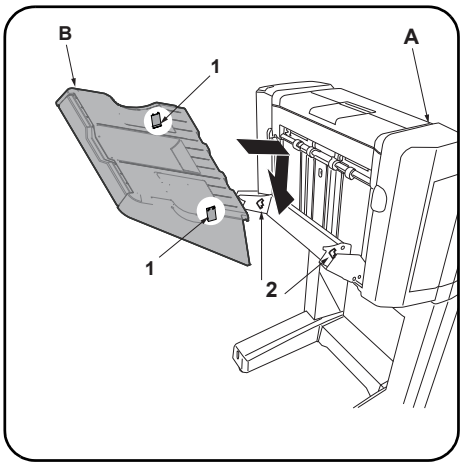

NOTICE
The Attachment Kit (AK-730 or AK-731) must be installed before the document finisher is installed.

Procedure
Before starting installation, be sure to turn the main power switch of the machine off, and unplug the power plug from the wall outlet.

1. Install eject tray (B) to document finisher (A) by inserting the 2 hooks (1) on the back of the tray in the holes (2) of the finisher lift plate.

REMARQUE
Le kit de fixation (AK-730 ou AK-731) doit être installé avant d'installer le finisseur de document.

Procédure
Avant de commencer l'installation, s'assurer de mettre la machine hors tension et de débrancher la fiche d'alimentation de la prise murale.

1. Installez le bac d'éjection (B) sur le finisseur de document (A) en insérant les 2 crochets (1) au dos du bac d'éjection (B) dans les trous (2) du dispositif de levage du finisseur.

AVISO
El Kit de conexión (AK-730 o AK-731) se debe instalar antes de instalarse el finalizador de documentos.

Procedimiento
Antes de iniciar la instalación, asegúrese de apagar el interruptor de encendido de la máquina y desenchufar el cable de alimentación de la toma de pared.

1. Instale la bandeja de salida (B) en el finalizador de documentos (A); para ello, inserte los 2 enganches (1) de la parte posterior de la bandeja en los orificios (2) de la placa de elevación del finalizador.

ANMERKUNG
Das Attachment Kit (AK-730 oder AK-731) muss installiert werden, bevor der Finisher installiert wird.

Vorgehensweise
Bevor Sie mit der Installation beginnen überzeugen Sie sich, dass der Netzschalter des Geräts ausgeschaltet und das Stromkabel aus der Steckdose gezogen ist.

1. Setzen Sie das Ausgabefach (B) in den Finisher (A), indem Sie die 2 Haken (1) auf der Rückseite des Fachs in die beiden Löcher (2) der Finisher-Lift-Platte einsetzen.

AVVISO
Installare l'unità Attachment Kit (AK-730 o AK-731) prima di collegare il finisher documenti.

Procedura
Prima di iniziare l'installazione, spegnere la macchina e scollegare la spina dalla presa di corrente.

1. Installare il vassoio di uscita (B) sul finisher documenti (A) inserendo i 2 ganci (1) sul retro del vassoio nei fori (2) della piastra di elevazione del finisher.

注意
安装装订器前，必须先安装连接组件 (AK-730 或 AK-731)。

安装步骤
安装前务必关闭机器的主电源开关，并从墙壁插座拔下电源插头。

1. 将排纸托盘 (B) 内侧的 2 个挂钩 (1) 装入装订器 (A) 的升降板的孔 (2) 中。

주의
도큐먼트 피니셔를 설치하기 전에 어태치먼트 키트 (AK-730 또는 AK-731) 를 설치해야 합니다 .

장착순서
설치를 시작하기 전에 반드시 본체의 주 전원 스위치를 끄고 벽 콘센트에서 전원 플러그를 분리하십시오 .

1. 배출 트레이 (B) 의 후면 후크 (1) 2 개를 문서 피니셔 (A) 의 리프트 플레이트 구멍 (2) 에 장착합니다 .

注意
ドキュメントフィニッシャーを取り付ける前に、アタッチメントキット(AK-730 または AK-731) の取り付けをおこなうこと。

取付手順
必ず機械本体の主電源スイッチを OFF にし、機械本体の電源プラグを抜いてから作業すること。

1. 排出トレイ (B) の裏側のフック (1)2 個をドキュメントフィニッシャー(A) の昇降板の穴 (2) に入れて、取り付ける。

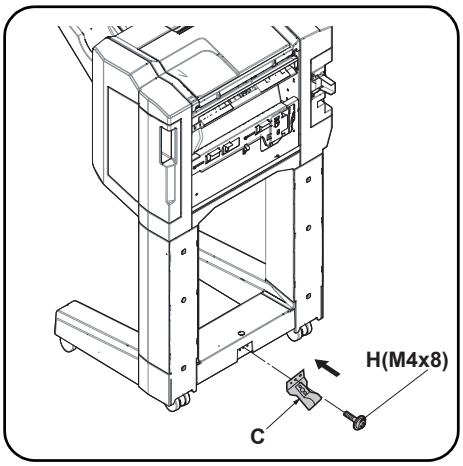

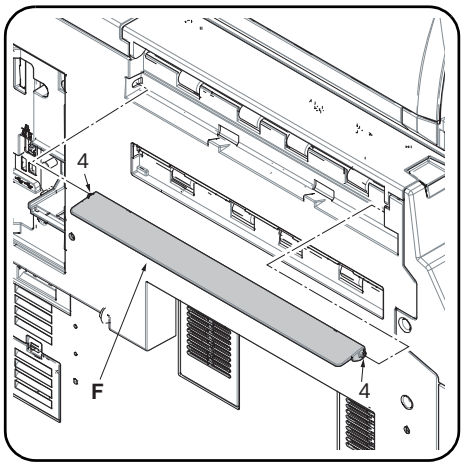

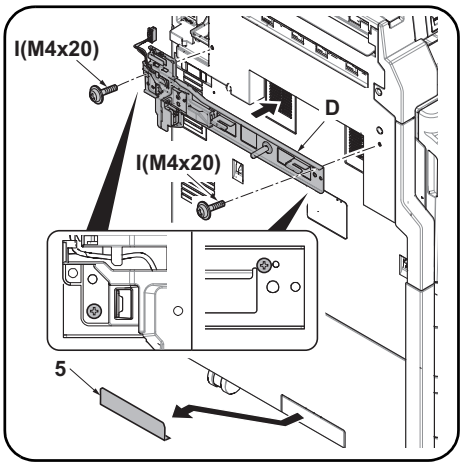

2. Secure the lower earth plate (C) with M4 × 8 screws (H).

3. Install the eject guide (F) by fitting the 2 eject guide pins (4) into the holes in the machine.

4. Attach the connecting plate (D) to the machine using 2 M4 × 20 screws (I). Attach it at the point as shown above.

5. Remove the breakaway cover (5) from the left cover.

---

2. Fixez la plaque de terre inférieure (C) avec des vis M4 × 8 (H).

3. Installer le guide d'éjection (F) en insérant les 2 ergots du guide d'éjection (4) dans les trous de la machine.

4. Fixez la plaque de connexion (D) à la machine à l'aide de 2 vis M4 × 20 (I). Raccordez-le au point indiqué ci-dessus.

5. Déposer le capot amovible (5) du capot gauche.

---

2. Fije la placa de conexión a tierra inferior (C) con tornillos M4 × 8 (H).

3. Instale la guía de salida (F) encajando los 2 clavijas de la guía de salida (4) en los orificios de la máquina.

4. Fije la placa de conexión (D) a la máquina mediante 2 tornillos M4 × 20 (I). Conéctela en el punto que se muestra arriba.

5. Quite la cubierta divisoria (5) de la cubierta izquierda.

---

2. Befestigen Sie die untere Grundplatte (C) mit den M4 x 8 Schrauben (H).

3. Installieren Sie die Ausgabeführung (F), indem Sie die beiden Stifte (4) der Auswerfführung in die Aufnahmen des Geräts einsetzen.

4. Bringen Sie die Verbindungsplatte (D) mit 2 M4 × 20 Schrauben (I) am Gerät an. Bringen Sie diese an der in der Abbildung gezeigten Stelle an.

5. Nehmen Sie die Ablösungsabdeckung (5) von der linken Abdeckung ab.

---

2. Fissare la piastra di messa a terra inferiore (C) con le viti M4 × 8 (H).

3. Installare la guida di espulsione (F) inserendo i 2 perni (4) della guida di espulsione nei fori della macchina.

4. Applicare la piastra di connessione (D) alla macchina utilizzando le 2 viti M4 × 20 (I). Fissare nella posizione sopra indicata.

5. Rimuovere il coperchio di distacco (5) dal coperchio sinistro.

---

2. 使用 M4×8(H) 螺丝来固定下部接地板 (C)。

3. 将排纸导向板 (F) 的 2 根销钉 (4) 插入机器的孔中。

4. 使用 2 颗 M4×20(I) 螺丝将连接板 (D) 安装到机器上。按图示位置来安装。

5. 去除左侧盖板上的可去除部 (5)。

---

2. 지판 하 (C) 를 나사 M4×8(H) 로 고정합니다 .

3. 배출 가이드 (F) 의 핀 (4) 2 개를 본체의 구멍에 맞추어 끼워서 부착합니다 .

4. 나사 M4 × 20(I) 2 개를 사용하여 연결판 (D) 을 본체에 부착합니다 . 위에 표시된 위치에 부착합니다 .

5. 좌측 커버의 분할커버부 (5) 를 떼어 냅니다 .

---

2. アース板下 (C) をビス M4×8(H) で固定する。

3. 排出ガイド (F) のピン (4)2 本を機械本体の穴に差し込み取り付ける。

4. 連結板 (D) をビス M4×20(I)2 本で、機械本体に取り付ける。図の位置で取り付けること。

5. 左カバーの割りカバー部 (5) を切り取る。

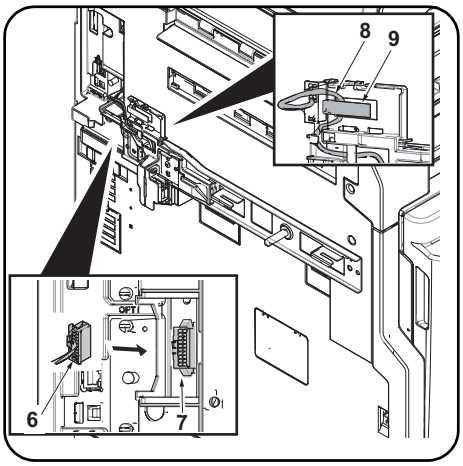

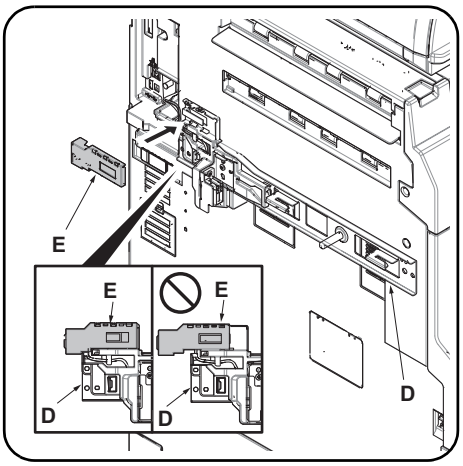

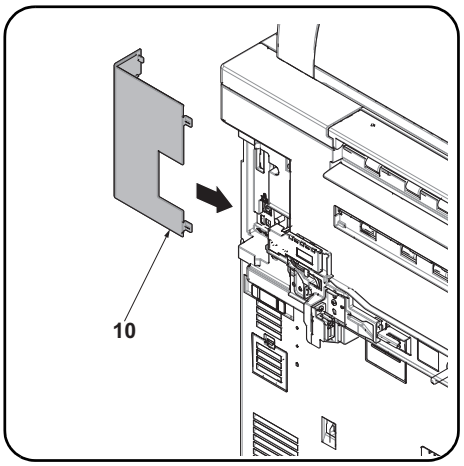

6. Connect the signal line connector (6) to the connector (7) on the machine.Hook the signal line wire (8) onto the hook (9).

7. Fit the connector cover (E) in the connecting plate (D).Take care not to get the cable pinched by objects.Attach it at the point as shown above.Check that the signal line connector is covered by the connector cover (E).

8. Attach the interface cover (10)* on the machine.
* The cover which was removed while installing the AK-730 or AK-731.

---

6. Raccorder le connecteur de ligne de signal (6) sur le connecteur (7) de la machine. Accrocher le fil de ligne de signal (8) sur le crochet (9).

7. Placer le cache de connecteur (E) dans la plaque de connexion (D). Prendre soin à ne pas pincer le câble. Raccordez-le au point indiqué ci-dessus. Vérifier que le connecteur de ligne de signal est couvert par le cache de connecteur (E).

8. Raccordez le capot d'interface (10)* à la machine.
* Le cache qui a été retiré lors de l'installation de l'AK-730 ou AK-731.

---

6. Conecte el conector de línea de señales (6) al conector (7) de la máquina. Enganche el cable de la línea de señales (8) en el enganche (9).

7. Acople la cubierta del conector (E) en la placa de conexión (D). Tenga cuidado de que el cable no quede atrapado por objetos. Conéctela en el punto que se muestra arriba. Compruebe que el conector de la línea de señales quede cubierto por la cubierta del conector (E).

8. Conecte la cubierta de interfaz (10)* de la máquina.
* La cubierta que se quitó al instalar el kit AK-730 o AK-731.

---

6. Verbinden Sie den Stecker der Signalleitung (6) mit dem Steckverbinder im Gerät (7). Hängen Sie das Kabel der Signalleitung (8) in den Befestigungshaken (9) ein.

7. Setzen Sie die Stecker-Abdeckung (E) in die Verbindungsplatte (D) ein. Stellen Sie sicher, dass das Kabel nicht eingeklemmt wird. Bringen Sie diese an der in der Abbildung gezeigten Stelle an. Überprüfen Sie, ob der Stecker der Signalleitung von der Stecker-Abdeckung (E) abgedeckt ist.

8. Bringen Sie die Schnittstellenabdeckung (10)* am Gerät an.
* Die Abdeckung, die zur Installation des AK-730 oder AK-731 entfernt wurde

---

6. Collegare il connettore di linea del segnale (6) al connettore (7) sulla periferica. Agganciare il cavo di linea del segnale (8) al gancio (9).

7. Inserire il copri connettore (E) nella piastra di connessione (D). Fare attenzione a non impigliare il cavo. Fissare nella posizione sopra indicata. Controllare che il connettore della linea del segnale sia coperto dal copri connettore (E).

8. Fissare la copertura di interfaccia (10)* sulla macchina.
* Il coperchio che è stato rimosso per installare il kit AK-730 o AK-731

---

6. 把信号线的接插件 (6) 和机器本体的接插件 (7) 相连接。 把信号线 (8) 挂到挂钩 (9) 上。

7. 将接插件盖板 (E) 嵌入到连接板 (D)。 请注意不要夹住电线。 按图示位置来安装。 请确认信号线的接插件是否完全隐藏在接插件盖板中 (E)。

8. 将接口盖板 (10)＊安装到机器主机。
＊ 安装 AK-730 或 AK-731 时，取下的盖板

---

6. 시그널 라인 연결커넥터 (6) 를 본체의 커넥터 (7) 에 연결합니다 . 시그널 라인 와이어 (8) 를 후크 (9) 에 겁니다 .

7. 커넥터 커버 (E) 를 연결판 (D) 에 맞추어 끼웁니다 . 케이블이 커넥터 커버 (E) 에 끼이지 않도록 주의합니다 . 위에 표시된 위치에 부착합니다 . 시그널라인 커넥터가 커넥터 커버 (E) 에 덮여있는지 확인합니다 .

8. 인터페이스 커버 (10)* 를 본체에 부착합니다 .
* AK-730 또는 AK-731 설치 시 분리한 커버 .

---

6. 信号線のコネクター(6) を機械本体のコネクター(7) に接続する。信号線 (8) は、フック (9) に掛けること。

7. コネクターカバー(E) を連結板 (D) にはめ込む。電線を挟み込まない様注意すること。図の位置で取り付けること。信号線のコネクターがコネクターカバー(E) で隠れていることを確認する。

8. 機械本体にインターフェイスカバー(10)＊を取り付ける。
＊ AK-730 または AK-731 設置時に取り外したカバー

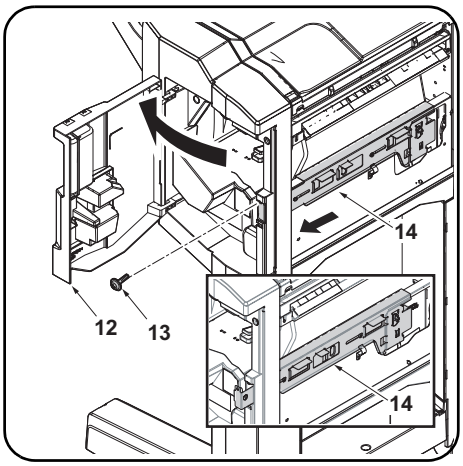

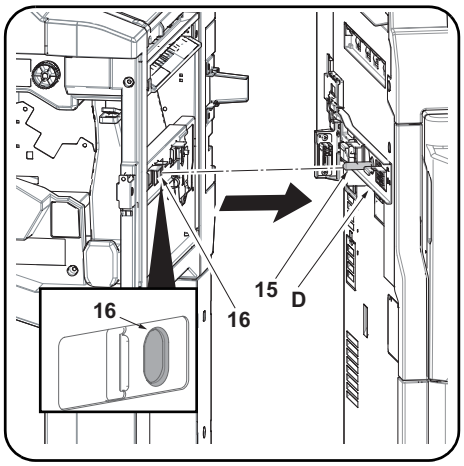

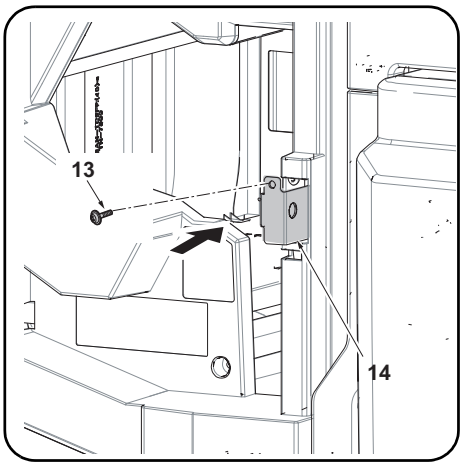

9. Open the document finisher front cover (12).Remove the screw (13).Pull the lock frame (14) frontwards.

10. Insert the pin (15) on the connecting plate (D) into the hole (16) on the document finisher. Connect the document finisher to the machine.
* If the document finisher doesn't comply with the reference of the height as described on page 14, adjust the height.

11. Slowly push the lock frame (14) fully into the machine so that the connectors at the far end are connected.
12. Secure the lock frame (14) using the screw (13) removed in step 9.

---

9. Ouvrir le capot avant du finisseur de document (12). Retirez la vis (13). Tirer le cadre de verrouillage (14) vers le bas.

10. Introduire l'ergot (15) sur la plaque de connexion (D) dans le trou (16) sur le finisseur de document. Connecter le finisseur de document sur la machine.
* Si le finisseur de document n'est pas conforme à la référence de hauteur comme décrit à la page 14, ajustez la hauteur.

11. Pousser doucement le cadre de verrouillage (14) à fond dans la machine de sorte que les connecteurs à l'extrémité soient raccordés.
12. Fixez le bâti de verrouillage (14) à l'aide de la vis (13) déposée à l'étape 9.

---

9. Abra la cubierta frontal del finalizador de documentos (12). Quite el tornillo (13). Empuje el marco de cierre (14) hacia delante.

10. Inserte la clavija (15) de la placa de conexión (D) en el orificio (16) del finalizador de documentos. Conecte el finalizador de documentos a la máquina.
* Si el finalizador de documentos no cumple con la referencia de altura como se describe en la página 14, ajuste la altura.

11. Empuje lentamente y hasta el fondo el marco del cierre (14) hacia la máquina de modo que se conecten los conectores en el extremo más lejano.
12. Asegure la carcasa de bloqueo (14) por medio del tornillo (13) quitado en el paso 9.

---

9. Öffnen Sie die vordere Abdeckung des Finishers (12). Entfernen Sie die Schraube (13). Ziehen Sie die Verriegelung (14) nach vorne.

10. Setzen Sie den Stift (15) der Verbindungsplatte (D) in die Öffnung (16) des Finishers. Verbinden Sie den Finisher mit dem Gerät.
* Falls die Höhe des Finishers nicht mit der auf Seite 14 in der Referenz beschriebenen Höhe übereinstimmt, justieren Sie die Höhe.

11. Schieben Sie die Verriegelung (14) wieder langsam ins Gerät, so dass die Verbindungen am anderen Ende des Geräts geschlossen werden.
12. Befestigen Sie den Fixierrahmen (14) mit der in Schritt 9 entfernten Schraube (13).

---

9. Aprire il coperchio frontale del finisher documenti (12). Togliere la vite (13). Tirare in avanti la frame di blocco (14).

10. Inserire il perno (15) della piastra di connessione (D) nel foro (16) del finisher documenti. Collegare il finisher documenti alla macchina.
* Se il finisher documenti non è conforme con il riferimento altezza come descritto a pagina 14, regolare l'altezza.

11. Spingere lentamente la frame di blocco (14) nella macchina in modo che i connettori all'estremità risultino collegati.
12. Fissare il telaio di bloccaggio (14) utilizzando la vite (13) rimossa nel passo 9.

---

9. 打开装订器的前盖板（12）。 取下螺丝（13）。 向身体前侧拉出固定架（14）。

10. 将连接板 (D) 的销钉（15）插入装订器的孔（16）中。 把装订器连接到机器本体。
※ 若不符合 P14 的【高度调整】的基准时，执行【高度调整】。

11. 慢慢的把固定架（14）完全推入机器，这样机器里侧的接插件就可以顺利连接。
12. 使用步骤 9 中取下的 1 颗螺丝 (13) 来固定锁框 (14)。

---

9. 도큐먼트 피니셔의 상단 프론트 커버 (12) 를 엽니다 . 나사 (13) 를 제거합니다 . 잠금 프레임 (14) 을 앞으로 뺍니다 .

10. 연결판 (D) 의 핀 (15) 을 두큐먼트 피니셔의 구멍 (16) 에 삽입합니다 . 도큐먼트 피니셔를 본체에 연결합니다 .
※ 연결할 도큐먼트 피니셔가 14 페이지에 설명된 높이 기준에 부합하지 않으면 높이를 조정하십시오 .

11. 본체 뒷쪽의 커넥터가 연결되도록 잠금 프레임 (14) 을 본체 안으로 천천히 밀어 넣습니다 .
12. 스텝 9 에서 뺀 나사 (13)1 개로 잠금 프레임 (14) 을 고정합니다 .

---

9. ドキュメントフィニッシャーの前カバー (12) を開く。ビス (13) を外す。ロックフレーム (14) を手前に引く。

10. 連結板 (D) のピン (15) をドキュメントフィニッシャーの穴 (16) に挿入する。ドキュメントフィニッシャーを機械本体に接続する。
※P14 の「高さ調整」の基準に適合しない場合は、「高さ調整」を行う。

11. 機械奥側のコネクタが接続されるように、ロックフレーム (14) をゆっくり奥に押す。
12. 手順 9 で外したビス (13) で、ロックフレーム (14) を固定する。

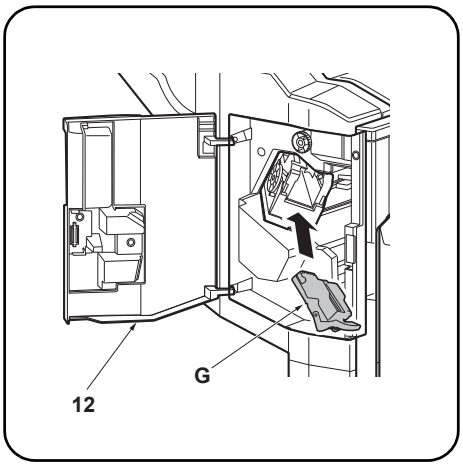

13. Install the staple cartridge (G).
14. Close the front cover (12).

Proceed to adjusting the stapling position on page 18.

---

13. Installer la cartouche d'agrafes (G).
14. Refermer le capot avant (12).

Passez à l'ajustement de la position d'agrafage page 18.

---

13. Instale el cartucho de grapas (G).
14. Cierre la cubierta frontal (12).

Proceda al ajuste de la posición de grapado en la página 18.

---

13. Installieren Sie das Heftklammer-Magazin (G).
14. Schließen Sie die vordere Abdeckung (12).

Fahren Sie mit der Justage der Heftposition auf Seite 18 fort.

---

13. Installare il contenitore punti (G).
14. Chiudere il pannello anteriore (12).

Proseguire con la regolazione della posizione di pinzatura a pagina 18.

---

13. 安装装订针盒 (G)。
14. 关闭前盖板 (12)。

跳至 P18「调节装订位置」。

---

13. 스테이플 카트리지 (G) 를 설치합니다 .
14. 상단 프론트 커버 (12) 를 닫습니다 .

18 페이지의 스테이플 위치 조정을 진행합니다 .

---

13. ステープルカートリッジ (G) を取り付ける。
14. 前カバー (12) を閉じる。

P18「ステープル位置の調整」に進む。

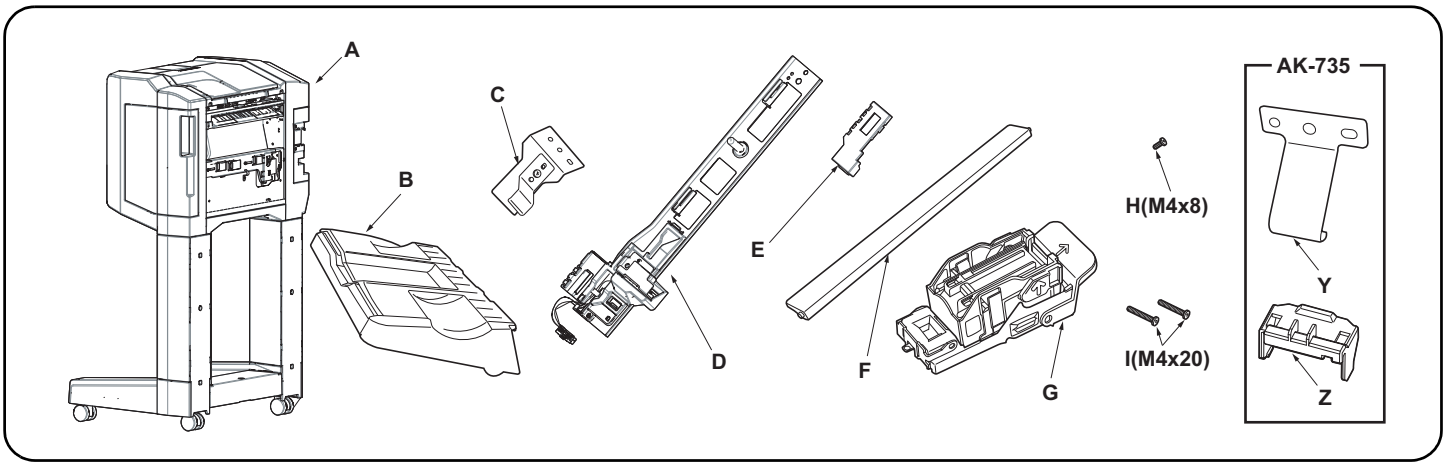

Supplied parts

A. Document finisher 1
B. Eject tray 1
C. Lower earth plate 1
D. Connecting plate 1
E. Connector cover 1
F. Eject guide 1
G. Staple cartridge 1
H. M4 × 8 screw 1
I. M4 × 20 screw 2
Y. Earth Plate 1
Z. Cover 1

(C) and (Z) are not used.

Be sure to remove any tape and/or cushioning materials from the parts supplied.

Pièces fournies

A. Finisseur de document 1
B. Bac d'éjection 1
C. Plaque de terre inférieure 1
D. Plaque de connexion 1
E. Cache de connecteur 1
F. Guide d'éjection 1
G. Cartouche d'agrafes 1
H. Vis M4 × 8 1
I. Vis M4 × 20 2
Y. Plaque de terre 1
Z. Capot 1

(C) et (Z) ne sont pas utilisés.

Veillez à retirer les morceaux de bande adhésive et/ou les matériaux de rembourrage des pièces fournies.

Partes suministradas

A. Finalizador de documentos 1
B. Bandeja de salida 1
C. Placa de conexión a tierra inferior 1
D. Placa de conexión 1
E. Cubierta del conector 1
F. Guía de salida 1
G. Cartucho de grapas 1
H. Tornillo M4 × 8 1
I. Tornillo M4 × 20 2
Y. Placa de conexión a tierra 1
Z. Cubierta 1

(C) y (Z) no se utilizan.

Asegúrese de despegar todas las cintas y/o material amortiguador de las partes suministradas.

Enthaltene Teile

A. Finisher 1
B. Auswerffach 1
C. Untere Grundplatte 1
D. Verbindungsplatte 1
E. Stecker-Abdeckung 1
F. Ausgabeführung 1
G. Heftklammer-Magazin 1
H. M4 × 8 Schraube 1
I. M4 × 20 Schraube 2
Y. Grundplatte 1
Z. Abdeckung 1

(C) und (Z) werden nicht benötigt.

Stellen Sie sicher, dass sämtliche Klebebänder und/oder Polstermaterial von den gelieferten Teilen entfernt wurden.

Parti fornite

A. Finisher documenti 1
B. Vassoio di espulsione 1
C. Piastra di messa a terra inferiore 1
D. Piastra di connessione 1
E. Copri connettore 1
F. Guida di espulsione 1
G. Contenitore punti 1
H. Vite M4 × 8 1
I. Vite M4 × 20 2
Y. Piastra di messa a terra 1
Z. Coperchio 1

(C) e (Z) non sono utilizzati.

Rimuovere tutti i nastri adesivi e/o i materiali di protezione dalle parti fornite.

附属品

A. 装订器 1
B. 排纸托盘 1
C. 下部接地板 1
D. 连接板 1
E. 接插件盖板 1
F. 排纸导向板 1
G. 装订针盒 1
H. M4×8 螺丝 1
I. M4×20 螺丝 2
Y. 接地板 1
Z. 盖板 1

不使用 (C) 和 (Z)。

如果附属品上带有固定胶带，缓冲材料时务必揭下。

동봉품

A. 도큐먼트 피니셔 1
B. 배출 트레이 1
C. 접지판 하 1
D. 연결판 1
E. 커넥터 커버 1
F. 배출 가이드 1
G. 스테이플 카트리지 1
H. 나사 M4×8 1
I. 나사 M4×20 2
Y. 접지판 1
Z. 커버 1

(C) 와 (Z) 는 사용되지 않습니다 .

동봉품에 고정 테이프 , 완충재가 붙어 있는 경우에는 반드시 제거하십시오 .

同梱品

A. ドキュメントフィニッシャー 1
B. 排出トレイ 1
C. アース板下 1
D. 連結板 1
E. コネクターカバー 1
F. 排出ガイド 1
G. ステープルカートリッジ 1
H. ビス M4×8 1
I. ビス M4×20 2
Y. アース板 1
Z. カバー 1

(C), (Z) は使用しない。

同梱品に固定テープ、緩衝材がついている場合は、必ず取り外すこと。

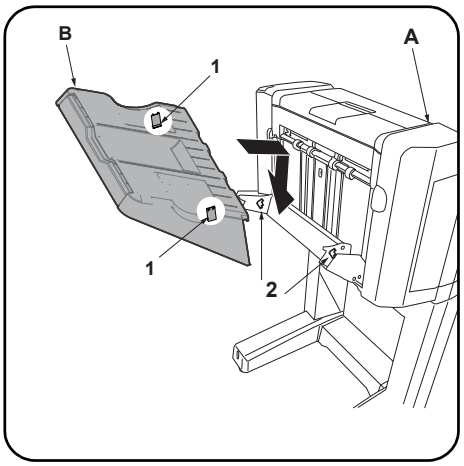

NOTICE
The Attachment Kit (AK-735) must be installed before the document finisher is installed.

Procedure
Before starting installation, be sure to turn the main power switch of the machine off, and unplug the power plug from the wall outlet.

1. Install eject tray (B) to document finisher (A) by inserting the 2 hooks (1) on the back of the tray in the holes (2) of the finisher lift plate.

REMARQUE
Le kit de fixation (AK-735) doit être installé avant d'installer le finisseur de document.

Procédure
Avant de commencer l'installation, s'assurer de mettre la machine hors tension et de débrancher la fiche d'alimentation de la prise murale.

1. Installez le bac d'éjection (B) sur le finisseur de document (A) en insérant les 2 crochets (1) au dos du bac d'éjection (B) dans les trous (2) du dispositif de levage du finisseur.

AVISO
El Kit de conexión (AK-735) se debe instalar antes de instalarse el finalizador de documentos.

Procedimiento
Antes de iniciar la instalación, asegúrese de apagar el interruptor de encendido de la máquina y desenchufar el cable de alimentación de la toma de pared.

1. Instale la bandeja de salida (B) en el finalizador de documentos (A); para ello, inserte los 2 enganches (1) de la parte posterior de la bandeja en los orificios (2) de la placa de elevación del finalizador.

ANMERKUNG
Das Attachment Kit (AK-735) muss installiert werden, bevor der Finisher installiert wird.

Verfahren
Bevor Sie mit der Installation beginnen überzeugen Sie sich, dass der Netzschalter des Geräts ausgeschaltet und das Stromkabel aus der Steckdose gezogen ist.

1. Setzen Sie das Ausgabefach (B) in den Finisher (A), indem Sie die 2 Haken (1) auf der Rückseite des Fachs in die beiden Löcher (2) der Finisher-Lift-Platte einsetzen.

AVVISO
Installare l'unità Attachment Kit (AK-735) prima di collegare il finisher documenti.

Procedura
Prima di iniziare l'installazione, spegnere la macchina e scollegare la spina dalla presa di corrente.

1. Installare il vassoio di uscita (B) sul finisher documenti (A) inserendo i 2 ganci (1) sul retro del vassoio nei fori (2) della piastra di elevazione del finisher.

注意
安装装订器之前，必须先安装连接组件（AK-735）。

安装步骤
安装前务必关闭机器的主电源开关，并从墙壁插座拔下电源插头。

1. 将排纸托盘 (B) 内侧的 2 个挂钩 (1) 装入装订器 (A) 的升降板的孔 (2) 中。

주의
도큐먼트 피니셔를 설치하기 전에 어태치먼트 키트 (AK-735) 를 설치해야 합니다 .

장착순서
설치를 시작하기 전에 반드시 본체의 주 전원 스위치를 끄고 벽 콘센트에서 전원 플러그를 분리하십시오 .

1. 배출 트레이 (B) 의 후면 후크 (1) 2 개를 문서 피니셔 (A) 의 리프트 플레이트 구멍 (2) 에 장착합니다 .

注意
ドキュメントフィニッシャーを取り付ける前に、アタッチメントキット(AK-735) の取り付けをおこなうこと。

取付手順
必ず機械本体の主電源スイッチを OFF にし、機械本体の電源プラグを抜いてから作業すること。

1. 排出トレイ (B) の裏側のフック (1)2 個をドキュメントフィニッシャー(A) の昇降板の穴 (2) に入れて、取り付ける。

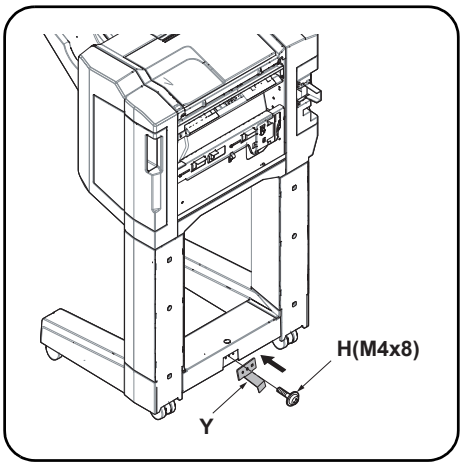

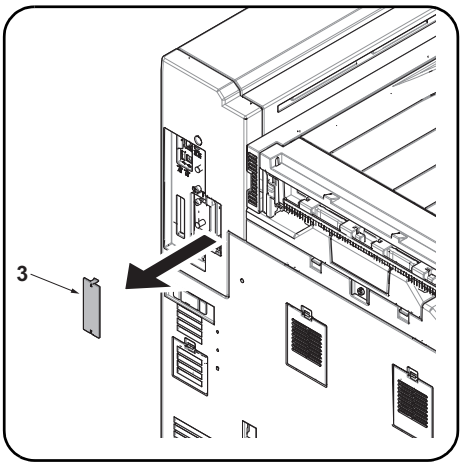

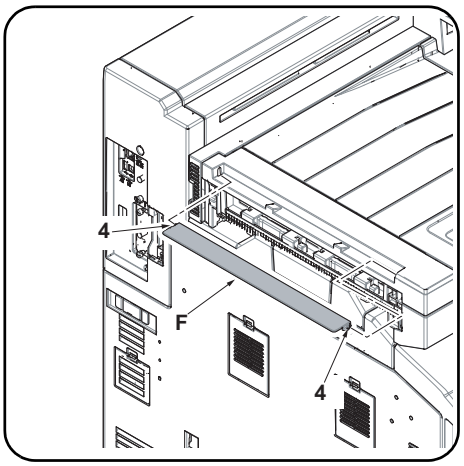

2. Secure the earth plate (Y)* with M4 × 8 screws (H).
*The part was supplied with the AK-735.

3. Remove the machine interface cover (3).

4. Install the eject guide (F) by fitting the 2 eject guide pins (4) into the holes in the machine.

---

2. Fixez la plaque de terre (Y)* avec des vis M4 × 8 (H).
*La pièce a été fournie avec l'AK-735

3. Déposer le couvercle d'interface (3) de la machine.

4. Installer le guide d'éjection (F) en insérant les 2 ergots du guide d'éjection (4) dans les trous de la machine.

---

2. Fije la placa de conexión a tierra (Y)* con tornillos M4 × 8 (H).
*La pieza se proporcionó con AK-735

3. Quite la cubierta de la interfaz (3) de la máquina.

4. Instale la guía de salida (F) encajando los 2 clavijas de la guía de salida (4) en los orificios de la máquina.

---

2. Befestigen Sie die Grundplatte (Y)* mit den M4 x 8 Schrauben (H).
*Dieses Teil ist im AK-735 enthalten.

3. Nehmen Sie die Schnittstellenabdeckung (3) des Geräts ab.

4. Installieren Sie die Ausgabeführung (F), indem Sie die beiden Stifte (4) der Auswerfführung in die Aufnahmen des Geräts einsetzen.

---

2. Fissare la piastra di messa a terra (Y)* con le viti M4 × 8 (H).
*Parte fornita con AK-735

3. Rimuovere la copertura di interfaccia (3) della macchina.

4. Installare la guida di espulsione (F) inserendo i 2 perni (4) della guida di espulsione nei fori della macchina.

---

2. 使用 M4×8(H) 螺丝来固定接地板 (Y)*。
*AK-735 的附属品

3. 拆下机器的接口盖板 (3)。

4. 将排纸导向板 (F) 的 2 根销钉 (4) 插入机器的孔中。

---

2. 나사 M4 × 8(H) 로 접지판 (Y)* 을 고정합니다 .
*AK-735 동봉 부품

3. 본체의 인터페이스 커버 (3) 를 제거합니다 .

4. 배출 가이드 (F) 의 핀 (4) 2 개를 본체의 구멍에 맞추어 끼워서 부착합니다 .

---

2. アース板 (Y)* をビス M4×8(H) で固定する。
*AK-735 の同梱品

3. 機械本体のインターフェイスカバー(3) を取り外す。

4. 排出ガイド (F) のピン (4)2 本を機械本体の穴に差し込み取り付ける。

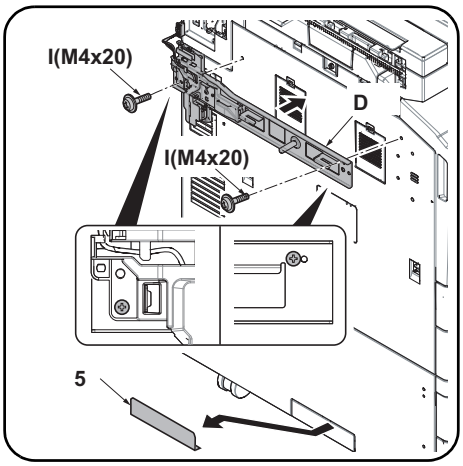

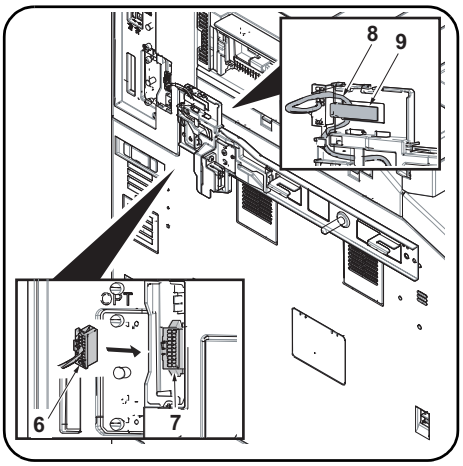

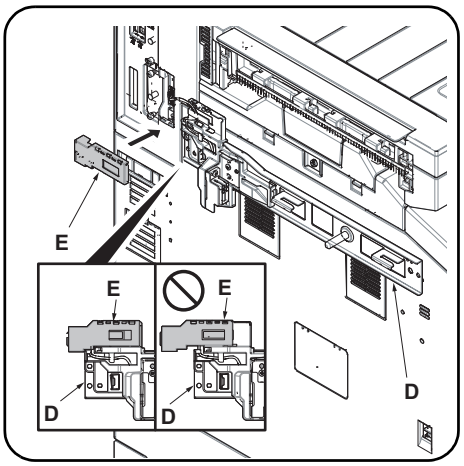

5. Attach the connecting plate (D) to the machine using 2 M4 × 20 screws (I). Attach it at the point as shown above.
6. Remove the breakaway cover (5) from the left cover.

7. Connect the signal line connector (6) to the connector (7) on the machine. Hook the signal line wire (8) onto the hook (9).

8. Fit the connector cover (D) in the connecting plate (E). Take care not to get the cable pinched by objects.Attach it at the point as shown above.Check that the signal line connector is covered by the connector cover (E).

---

5. Fixez la plaque de connexion (D) à la machine à l'aide de 2 vis M4 × 20 (I). Raccordez-le au point indiqué ci-dessus.
6. Déposer le capot amovible (5) du capot gauche.

7. Raccorder le connecteur de ligne de signal (6) sur le connecteur (7) de la machine. Accrocher le fil de ligne de signal (8) sur le crochet (9).

8. Placer le cache de connecteur (D) dans la plaque de connexion (E). Prendre soin à ne pas pincer le câble. Raccordez-le au point indiqué ci-dessus. Vérifier que le connecteur de ligne de signal est couvert par le cache de connecteur (E).

---

5. Fije la placa de conexión (D) a la máquina mediante 2 tornillos M4 × 20 (I). Conéctela en el punto que se muestra arriba.
6. Quite la cubierta divisoria (5) de la cubierta izquierda.

7. Conecte el conector de línea de señales (6) al conector (7) de la máquina. Enganche el cable de la línea de señales (8) en el enganche (9).

8. Acople la cubierta del conector (D) en la placa de conexión (E). Tenga cuidado de que el cable no quede atrapado por objetos. Conéctela en el punto que se muestra arriba. Compruebe que el conector de la línea de señales quede cubierto por la cubierta del conector (E).

---

5. Bringen Sie die Verbindungsplatte (D) mit 2 M4 × 20 Schrauben (I) am Gerät an. Bringen Sie diese an der in der Abbildung gezeigten Stelle an.
6. Nehmen Sie die Ablösungsabdeckung (5) von der linken Abdeckung ab.

7. Verbinden Sie den Stecker der Signalleitung (6) mit dem Steckverbinder im Gerät (7). Hängen Sie das Kabel der Signalleitung (8) in den Befestigungshaken (9) ein.

8. Setzen Sie die Stecker-Abdeckung (D) in die Verbindungsplatte (E) ein. Stellen Sie sicher, dass das Kabel nicht eingeklemmt wird. Bringen Sie diese an der in der Abbildung gezeigten Stelle an. Überprüfen Sie, ob der Stecker der Signalleitung von der Stecker-Abdeckung (E) abgedeckt ist.

---

5. Applicare la piastra di connessione (D) alla macchina utilizzando le 2 viti M4 × 20 (I). Fissare nella posizione sopra indicata.
6. Rimuovere il coperchio di distacco (5) dal coperchio sinistro.

7. Collegare il connettore di linea del segnale (6) al connettore (7) sulla periferica. Agganciare il cavo di linea del segnale (8) al gancio (9).

8. Inserire il copri connettore (D) nella piastra di connessione (E). Fare attenzione a non impigliare il cavo. Fissare nella posizione sopra indicata. Controllare che il connettore della linea del segnale sia coperto dal copri connettore (E).

---

5. 使用 2 颗 M4×20(I) 螺丝将连接板 (D) 安装到机器上。 按图示位置来安装。
6. 去除左侧盖板上的可去除部 (5)。

7. 把信号线的接插件 (6) 和机器本体的接插件 (7) 相连接。 把信号线 (8) 挂到挂钩 (9) 上。

8. 将接插件盖板 (E) 嵌入到连接板 (D)。 请注意不要夹住电线。 按图示位置来安装。 请确认信号线的接插件是否完全隐藏在接插件盖板中 (E)。

---

5. 나사 M4 × 20(I) 2 개를 사용하여 연결판 (D) 을 본체에 부착합니다 . 위에 표시된 위치에 부착합니다 .
6. 좌측 커버의 분할커버부 (5) 를 떼어 냅니다 .

7. 시그널 라인 연결커넥터 (6) 를 본체의 커넥터 (7) 에 연결합니다 . 시그널 라인 와이어 (8) 를 후크 (9) 에 겁니다 .

8. 커넥터 커버 (E) 를 연결판 (D) 에 맞추어 끼웁니다 . 케이블이 커넥터 커버 (E) 에 끼이지 않도록 주의합니다 . 위에 표시된 위치에 부착합니다 . 시그널라인 커넥터가 커넥터 커버 (E) 에 덮여있는지 확인합니다 .

---

5. 連結板 (D) をビス M4×20(I)2 本で、機械本体に取り付ける。図の位置で取り付けること。
6. 左カバーの割りカバー部 (5) を切り取る。

7. 信号線のコネクター(6) を機械本体のコネクター(7) に接続する。信号線 (8) は、フック (9) に掛けること。

8. コネクターカバー(E) を連結板 (D) にはめ込む。電線を挟み込まない様注意すること。図の位置で取り付けること。信号線のコネクターがコネクターカバー(E) で隠れていることを確認する。

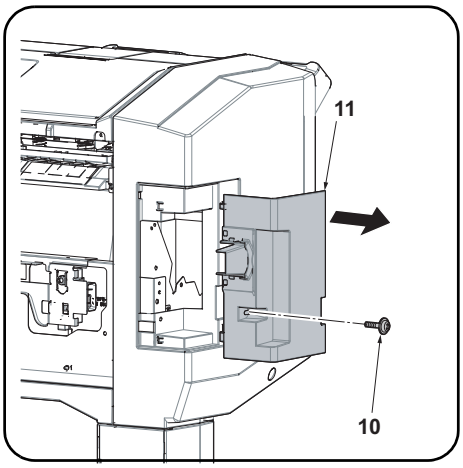

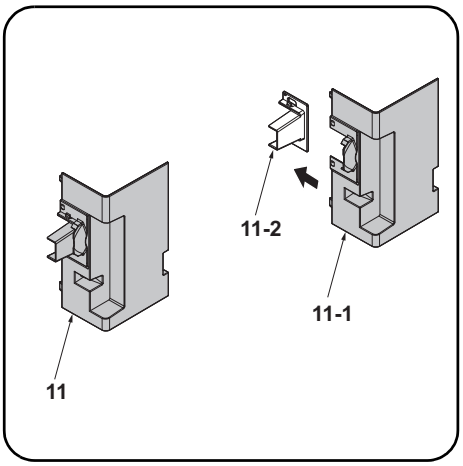

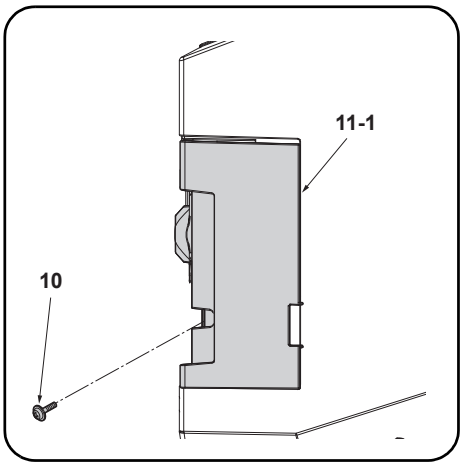

9. Remove the screw (10).Remove the rear cover (11) .

10. Separate the rear cover(11) into the two covers(11-1,11-2).
The cover (11-2) is not used.

11. Install the cover (11-1) using the screw (10) removed in step 9.

---

9. Retirez la vis (10). Retire le capot arrière (11).

10. Séparez le capot arrière (11) en deux capots (11-1, 11-2).
Le capot (11-2) n'est pas utilisé.

11. Installez le capot (11-1) à l'aide de la vis (10) déposée à l'étape 9.

---

9. Quite el tornillo (10). Quite la cubierta posterior (11).

10. Separe la cubierta posterior (11) en las dos cubiertas (11-1, 11-2).
La cubierta (11-2) no se utiliza.

11. Instale la cubierta (11-1) con un tornillo (10) quitado en el paso 9.

---

9. Entfernen Sie die Schraube (10). Entfernen Sie die hintere Abdeckung (11).

10. Teilen Sie die hintere Abdeckung (11) in zwei Abdeckungen (11-1, 11-2) auf.
Die Abdeckung (11-2) wird nicht benötigt.

11. Installieren Sie die Abdeckung (11-1) mit der in Schritt 9 entfernten Schrauben (10).

---

9. Togliere la vite (10). Rimuovere il coperchio posteriore (11).

10. Separare il coperchio posteriore (11) in due coperchi (11-1,11-2).
Il coperchio (11-2) non viene utilizzato.

11. Installare il coperchio (11-1) utilizzando la vite (10) rimossa nel passo 9.

---

9. 取下螺丝（10）。 取下后盖板（11）。

10. 将后盖板（11）分成 2 个盖板（11-1, 11-2）。
不需要盖板（11-2）。

11. 使用在步骤 9 中取下的螺丝（10）来安装盖板（11-1）。

---

9. 나사 (10) 를 제거합니다 . 후면 커버 (11) 를 제거합니다 .

10. 후면 커버 (11) 를 2 개의 커버 (11-1, 11-2) 로 분리합니다 .
커버 (11-2) 는 사용되지 않습니다 .

11. 순서 9 에서 뺀 나사 (10) 를 사용하여 커버 (11-1) 를 장착합니다 .

---

9. ビス（10）を外す。後カバー(11）を取り外す。

10. 後カバー(11）を 2 つのカバー(11-1, 11-2）に分ける。
カバー(11-2）は不要。

11. 手順 9 で外したビス（10）でカバー(11-1)を取り付ける。

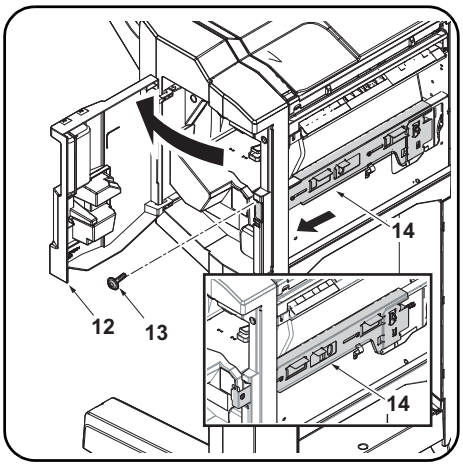

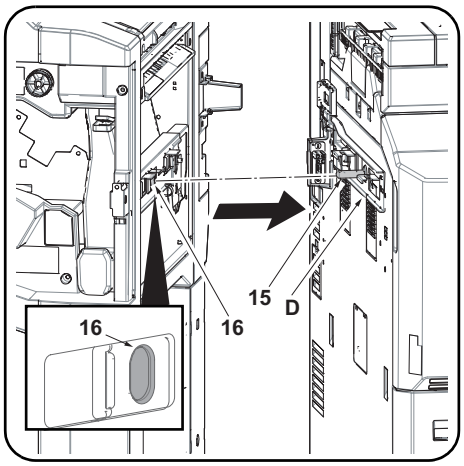

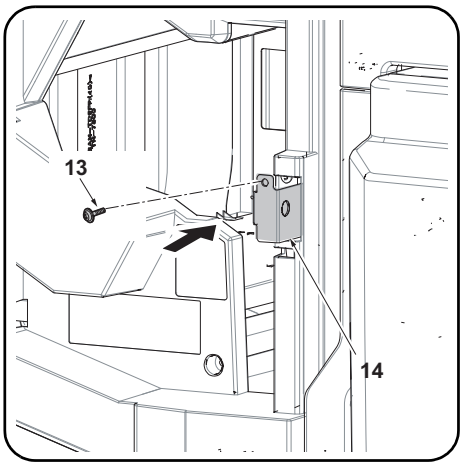

12. Open the document finisher front cover (12).Remove the screw (13). Pull the lock frame (14) frontwards.

13. Insert the pin (15) on the connecting plate (D) into the hole (16) on the document finisher. Connect the document finisher to the machine.
* If the document finisher doesn't comply with the reference of the height as described on page 14, adjust the height.

14. Slowly push the lock frame (14) fully into the machine so that the connectors at the far end are connected.

15. Secure the lock frame (14) using the screw (13) removed in step 12.

---

12. Ouvrir le capot avant du finisseur de document (12). Retirez la vis (13). Tirer le cadre de verrouillage (14) vers le bas.

13. Introduire l'ergot (15) sur la plaque de connexion (D) dans le trou (16) sur le finisseur de document. Connecter le finisseur de document sur la machine.
* Si le finisseur de document n'est pas conforme à la référence de hauteur comme décrit à la page 14, ajustez la hauteur.

14. Pousser doucement le cadre de verrouillage (14) à fond dans la machine de sorte que les connecteurs à l'extrémité soient raccordés.

15. Fixez le bâti de verrouillage (14) à l'aide de la vis (13) déposée à l'étape 12.

---

12. Abra la cubierta frontal del finalizador de documentos (12). Quite el tornillo (13). Empuje el marco de cierre (14) hacia delante.

13. Inserte la clavija (15) de la placa de conexión (D) en el orificio (16) del finalizador de documentos. Conecte el finalizador de documentos a la máquina.
* Si el finalizador de documentos no cumple con la referencia de altura como se describe en la página 14, ajuste la altura.

14. Empuje lentamente y hasta el fondo el marco del cierre (14) hacia la máquina de modo que se conecten los conectores en el extremo más lejano.

15. Asegure la carcasa de bloqueo (14) por medio del tornillo (13) quitado en el paso 12.

---

12. Öffnen Sie die vordere Abdeckung des Finishers (12). Entfernen Sie die Schraube (13). Ziehen Sie die Verriegelung (14) nach vorne.

13. Setzen Sie den Stift (15) der Verbindungsplatte (D) in die Öffnung (16) des Finishers. Verbinden Sie den Finisher mit dem Gerät.
* Falls die Höhe des Finishers nicht mit der auf Seite 14 in der Referenz beschriebenen Höhe übereinstimmt, justieren Sie die Höhe.

14. Schieben Sie die Verriegelung (14) wieder langsam ins Gerät, so dass die Verbindungen am anderen Ende des Geräts geschlossen werden.

15. Befestigen Sie den Fixierrahmen (14) mit der in Schritt 12 entfernten Schraube (13).

---

12. Aprire il coperchio frontale del finisher documenti (12). Togliere la vite (13). Tirare in avanti la frame di blocco (14).

13. Inserire il perno (15) della piastra di connessione (D) nel foro (16) del finisher documenti. Collegare il finisher documenti alla macchina.
* Se il finisher documenti non è conforme con il riferimento altezza come descritto a pagina 14, regolare l'altezza.

14. Spingere lentamente la frame di blocco (14) nella macchina in modo che i connettori all'estremità risultino collegati.

15. Fissare il telaio di bloccaggio (14) utilizzando la vite (13) rimossa nel passo 12.

---

12. 打开装订器的前盖板（12）。 取下螺丝（13）。 向身体前侧拉出固定架（14）。

13. 将连接板（D）的销钉（15）插入装订器的孔（16）中。 把装订器连接到机器本体。
※ 若不符合 P14 的【高度调整】的基准时，执行【高度调整】。

14. 慢慢的把固定架（14）完全推入机器，这样机器里侧的接插件就可以顺利连接。

15. 使用步骤 12 中取下的 1 颗螺丝（13）来固定锁框（14）。

---

12. 도큐먼트 피니셔의 상단 프론트 커버 (12) 를 엽니다 . 나사 (13) 를 제거합니다 . 잠금 프레임 (14) 을 앞으로 뺍니다 .

13. 연결판 (D) 의 핀 (15) 을 두큐먼트 피니셔의 구멍 (16) 에 삽입합니다 . 도큐먼트 피니셔를 본체에 연결합니다 .
※ 연결할 도큐먼트 피니셔가 14 페이지에 설명된 높이 기준에 부합하지 않으면 높이를 조정하십시오 .

14. 본체 뒷쪽의 커넥터가 연결되도록 잠금 프레임 (14) 을 본체 안으로 천천히 밀어 넣습니다 .

15. 스텝 12 에서 뺀 나사 (13)1 개로 잠금 프레임 (14) 을 고정합니다 .

---

12. ドキュメントフィニッシャーの前カバー (12) を開く。ビス (13) を外す。ロックフレーム (14) を手前に引く。

13. 連結板 (D) のピン (15) をドキュメントフィニッシャーの穴 (16) に挿入する。ドキュメントフィニッシャーを機械本体に接続する。
※P14 の「高さ調整」の基準に適合しない場合は、「高さ調整」を行う。

14. 機械奥側のコネクタが接続されるように、ロックフレーム (14) をゆっくり奥に押す。

15. 手順 12 で外したビス (13) で、ロックフレーム (14) を固定する。

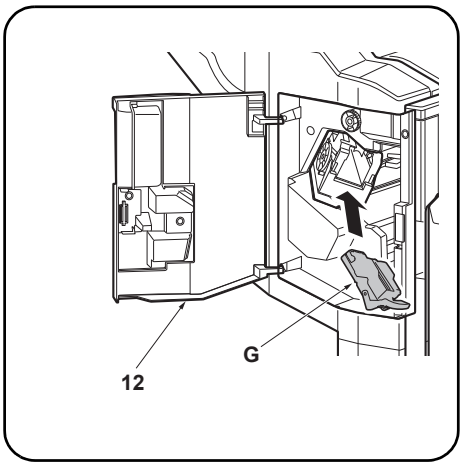

16. Install the staple cartridge (G).
17. Close the front cover (12).

Proceed to adjusting the stapling position on page 18.

---

16. Installer la cartouche d'agrafes (G).
17. Refermer le capot avant (12).

Passez à l'ajustement de la position d'agrafage page 18.

---

16. Instale el cartucho de grapas (G).
17. Cierre la cubierta frontal (12).

Proceda al ajuste de la posición de grapado en la página 18.

---

16. Installieren Sie das Heftklammer-Magazin (G).
17. Schließen Sie die vordere Abdeckung (12).

Fahren Sie mit der Justage der Heftposition auf Seite 18 fort.

---

16. Installare il contenitore punti (G).
17. Chiudere il pannello anteriore (12).

Proseguire con la regolazione della posizione di pinzatura a pagina 18.

---

16. 安装装订针盒 (G)。
17. 关闭前盖板 (12)。

跳至 P18「调节装订位置」。

---

16. 스테이플 카트리지 (G) 를 설치합니다 .
17. 상단 프론트 커버 (12) 를 닫습니다 .

18 페이지의 스테이플 위치 조정을 진행합니다 .

---

16. ステープルカートリッジ (G) を取り付ける。
17. 前カバー (12) を閉じる。

P18「ステープル位置の調整」に進む。

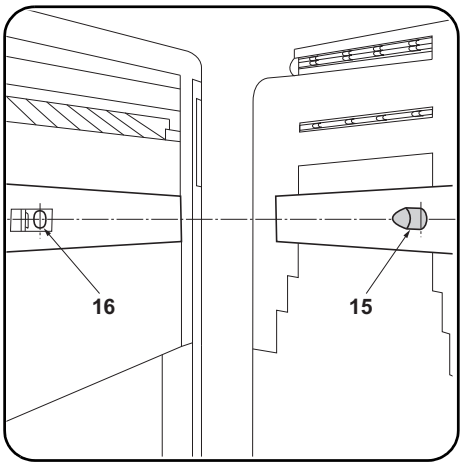

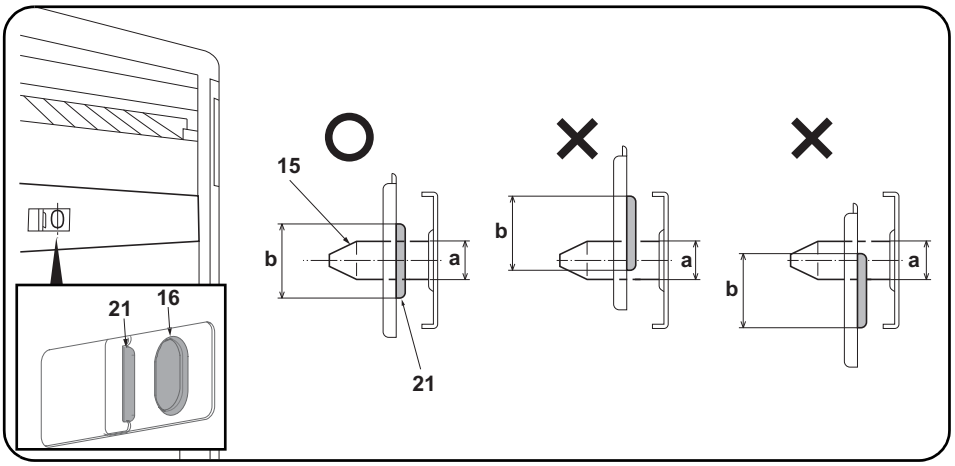

Adjusting the height

1. Check that the respective heights of the pins (15) on the connecting plate installed on the machine and the connecting holes (16) on the document finisher comply with the standards below.

Compliant: The diameter (a) of the pin (15) is within the height range (b) of the curved section (21).
Non-compliant: The diameter (a) of the pin (15) is extends beyond the height range (b) of the curved section (21).
If the heights are non-compliant, use the procedure below to adjust the height.

Réglage de la hauteur

1. Vérifiez que les hauteurs respectives des ergots (15) sur la plaque de connexion installée sur la machine et les trous de connexion (16) sur le finisseur de document sont conformes aux références ci-dessous.

Bon : Le diamètre (a) de l'ergot (15) est dans les limites de hauteur (b) de la partie courbée (21).
Mauvais : Le diamètre (a) de l'ergot (15) dépasse les limites de hauteur (b) de la partie courbée (21).
Si la hauteur n'est pas conforme, l'ajuster en procédant comme indiqué ci-dessous.

Ajuste de la altura

1. Compruebe que las alturas correspondientes de las clavijas (15) de la placa de fijación instalados en la máquina y los orificios de conexión (16) del finalizador de documentos cumplen las referencias de abajo.

Cumple: el diámetro (a) de la clavija (15) está dentro del rango de altura (b) de la sección curvada (21).
No cumple: el diámetro (a) de la clavija (15) sobrepasa el rango de altura (b) de la sección curvada (21).
Si las alturas no cumplen con las especificaciones, utilice el siguiente procedimiento para ajustar la altura.

Einstellen der Höhe

1. Überprüfen Sie, dass die jeweilige Göhe der Stifte (15) der am Gerät installierten Verbindungsplatte und Verbindungsöffnungen (16) des Finishers mit den unten angegebenen Werten übereinstimmen.

Korrekt: Der Durchmesser (a) des Stifts (15) befindet sich im Höhenbereich (b) des Kurvenabschnitts (21).
Nicht korrekt: Der Durchmesser (a) des Stifts (15) ragt über den Höhenbereich (b) des Kurvenabschnitts (21) hinaus.
Falls die Höhen nicht korrekt sind, müssen Sie sie wie folgend einstellen.

Regolazione dell'altezza

1. Controllare che le rispettive altezze dei perni (15) sulla piastra di connessione installata sulla macchina e i fori di connessione (16) sulla finisher documenti corrispondano ai riferimenti mostrati sotto.

Conformità: Il diametro (a) del perno (15) è compreso nella gamma di altezza (b) della sezione curvata (21).
Non conformità: Il diametro (a) del perno (15) si estende oltre la gamma di altezza (b) della sezione curvata (21).
Se le altezze sono non corrispondenti, utilizzare la procedura riportata sotto per regolare l'altezza.

高度调节

1. 确认机器主机上安装的连接板的销钉（15）和装订器的连接用的孔（16）的高度是否符合以下标准。

符　合：销钉（15）的直径 a 在弯曲部（21）的高度 b 的范围内。
不符合：销钉（15）的直径 a 超出了弯曲部（21）的高度 b 的范围。
不符合时，通过以下步骤进行调节。

높이조정

1. 본체에 설치된 연결판의 핀(15)과 도큐먼트 피니셔의 연결용 구멍 (16) 의 각 높이가 아래의 기준에 부합하는지 확인합니다 .

적 합 :핀 (15) 의 직경 a 가 곡선부 (21) 의 높이 b 의 범위에 들어간다 .
부적합:핀 (15) 의 직경 a 가 곡선부 (21) 의 높이 b 의 범위를 넘는다 .
부적합의 경우에는 이하의 순서대로 조정합니다 .

高さ調整

1. 機械本体に取り付けた連結板のピン（15）とドキュメントフィニッシャーの連結用の穴（16）の高さが以下の基準に適合するか確認する。

適　合:ピン（15）の直径（a）が曲げ部（21）の高さ（b）の範囲に収まっている。
不適合:ピン（15）の直径（a）が曲げ部（21）の高さ（b）の範囲からはみだしている。
不適合の場合は、以下の手順で調整する。

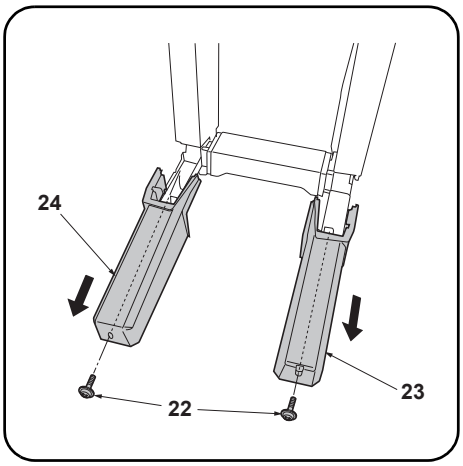

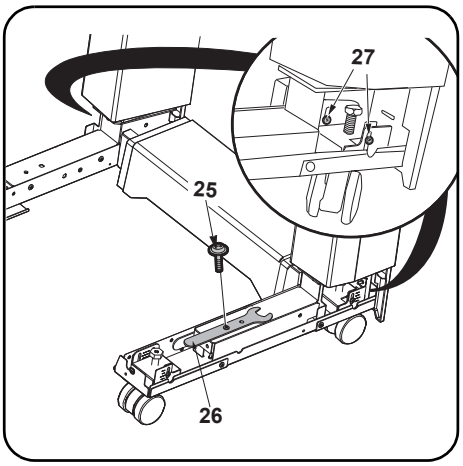

2. Remove each of the screws (22) and remove the front foot cover (23) and rear foot cover (24).

3. Remove the screw (25) to remove the spanner (26).
4. Loosen the 2 screws (27) on the front right and on the rear right of the document finisher.

---

2. Déposer toutes les vis (22) puis le capot du pied avant (23) et le capot du pied arrière (24).

3. Déposer la vis (25) pour libérer la clé (26).
4. Desserrer les 2 vis (27) du côté avant droit et arrière droit du finisseur de document.

---

2. Quite cada uno de los tornillos (22) y quite la cubierta de la pata frontal (23) y la cubierta de la pata posterior (24).

3. Quite el tornillo (25) para extraer la llave inglesa (26).
4. Afloje los 2 tornillos (27) en los lados derecho frontal y derecho posterior del finalizador de documentos.

---

2. Entfernen Sie sämtliche Schrauben (22) und nehmen Sie die Vorderfußabdeckung (23) und die Hinterfußabdeckung (24).

3. Entfernen Sie die Schraube (25), um den Schlüssel (26) abzunehmen
4. Lösen Sie die 2 Schrauben (27) vorne rechts und hinten rechts am Finisher.

---

2. Rimuovere ciascuna delle viti (22) e quindi rimuovere la copertura del piede anteriore (23) e la copertura del piede posteriore (24).

3. Rimuovere la vite (25) per rimuovere la chiave (26).
4. Allentare le 2 viti (27) sulla parte anteriore destra e posteriore destra della finisher documenti.

---

2. 拆除各 1 颗螺丝 (22)，取下前脚座盖板 (23)、后脚座盖板 (24)。

3. 取下螺丝 (25) 以便拆下扳手 (26)。
4. 拧松装订器右前侧与右后侧的各 2 颗螺丝 (27)。

---

2. 나사 (22) 각 1 개를 빼고 풋커버 앞 (23), 풋커버 뒤 (24) 를 뺍니다 .

3. 나사 (25) 1 개를 빼고 , 스패너 (26) 를 떼어 냅니다 .
4. 도큐먼트 피니셔 우측 앞과 뒤의 나사 (27) 각 2 개를 느슨하게 합니다 .

---

2. ビス (22) 各 1 本を外し、フットカバー前 (23)、フットカバー後 (24) を取り外す。

3. ビス (25) 1 本を外し、スパナー (26) を取り外す。
4. ドキュメントフィニッシャー右前と右後のビス (27) 各 2 本を緩める。

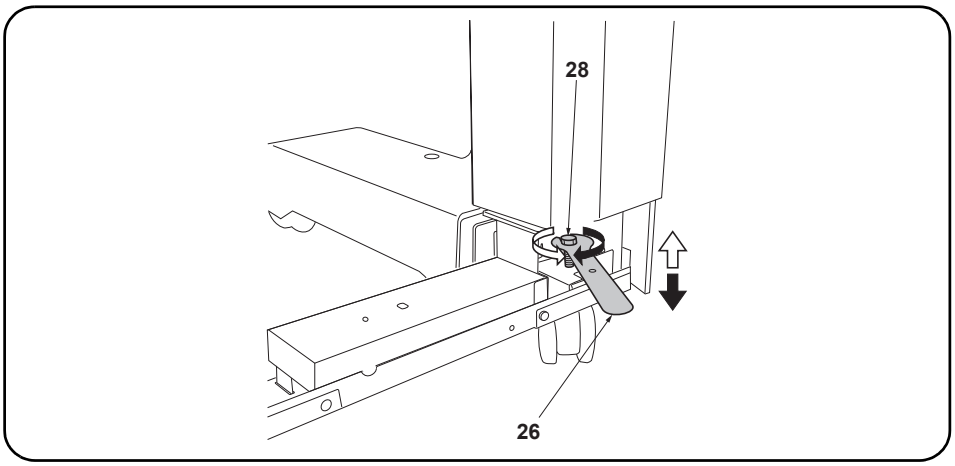

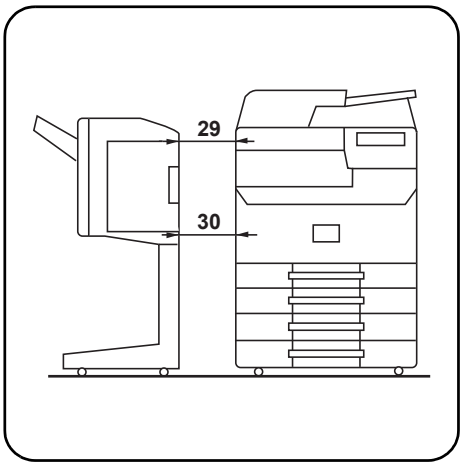

5. Turn the adjustment bolts (28) with the spanner (26) to adjust the height of the document finisher. Turning the adjustment bolt clockwise lifts the document finisher, and turning it counterclockwise lowers the document finisher.
6. Retighten each of the 2 screws (27) and replace the spanner (26).

7. If the distances between the document finisher and the machine (29, 30) are unequal, use the procedure below to adjust the spacing.

---

5. Faire tourner les boulons de réglage (28) avec la clé (26) pour ajuster la hauteur du finisseur de document.
Tourner le boulon de réglage dans le sens horloger pour lever le finisseur de document, et dans le sens contraire au sens horloger pour le descendre.
6. Resserrer les 2 vis (27) et repositionner la clé (26) au même endroit.

7. Si les distances entre le finisseur de document et la machine (29, 30) sont inégales, régler l'espacement en procédant de la manière suivante.

---

5. Gire los pernos de ajuste (28) con la llave inglesa (26) para ajustar la altura del finalizador de documentos.
Al girar el perno de ajuste en la dirección de las manecillas del reloj se levanta el finalizador de documentos y al girar en sentido contrario a las manecillas del reloj baja el finalizador de documentos.
6. Vuelva a apretar los 2 tornillos (27) y coloque la llave inglesa en su lugar (26).

7. Si las distancias entre el finalizador de documentos y la máquina (29, 30) no son iguales, utilice el siguiente procedimiento para ajustar la separación.

---

5. Drehen Sie die Einstellschrauben (28) mit dem Schlüssel (26), um die Höhe des Finishers einzustellen.
Durch Drehen der Einstellschraube im Uhrzeigersinn wird der Finisher angehoben, während er durch Drehen entgegen dem Uhrzeigersinn abgesenkt wird.
6. Ziehen Sie die 2 Schrauben (27) wieder an und verstauen Sie den Schlüssel (26) wieder.

7. Falls die Abstände zwischen dem Finisher und dem Gerät (29, 30) ungleich sind, führen Sie die unten angegebenen Schritte aus, um den Abstand zu korrigieren.

---

5. Ruotare i bulloni di regolazione (28) con la chiave (26) per regolare l'altezza della finisher documenti.
Ruotando il bullone di regolazione in senso orario si solleva la finisher documenti, mentre ruotandolo in senso antiorario si abbassa la finisher documenti.
6. Ristringere ciascuna delle 2 viti (27) e riporre la chiave (26).

7. Se le distanze tra la finisher documenti e la macchina (29, 30) sono diverse, attenersi alla sottostante procedura per regolare la spaziatura.

---

5. 使用扳手 (26) 旋转调节螺栓 (28)，以调节装订器的高度。
将调节螺栓向顺时针方向旋转，装订器的高度升高，逆时针方向旋转则装订器的高度降低。
6. 拧紧各 2 颗螺丝 (27)，按原样安装扳手 (26)。

7. 装订器与机器的间隙 (29、30) 不等时，按以下步骤进行调节。

---

5. 스패너 (26) 로 조정 볼트 (28) 를 돌려 도큐먼트 피니셔의 높이를 조정한다 .
조정 볼트를 시계방향으로 돌리면 도큐먼트 피니셔의 높이가 높아지고, 반 시계방향으로 돌리면 낮아 집니다 .
6. 나사 (27) 각 2 개를 조이고 스패너 (26) 를 원래 자리에 장착합니다 .

7. 도큐먼트 피니셔와 본체의 거리 (29, 30) 가 동일하지 않는 경우 아래의 절차에 따라 간격을 조정합니다 .

---

5. スパナー (26) で調整ボルト (28) を回し、ドキュメントフィニッシャーの高さを調整する。
調整ボルトを時計方向に回すとドキュメントフィニッシャーの高さが高くなり、反時計方向に回すと低くなる。
6. ビス (27) 各 2 本を締め付け、スパナー (26) を元通り取り付ける。

7. ドキュメントフィニッシャーと機械本体の間隔 (29、30) が等しくない場合は、以下の手順で調整を行う。

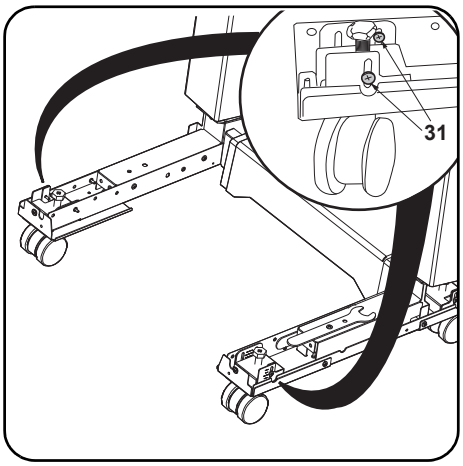

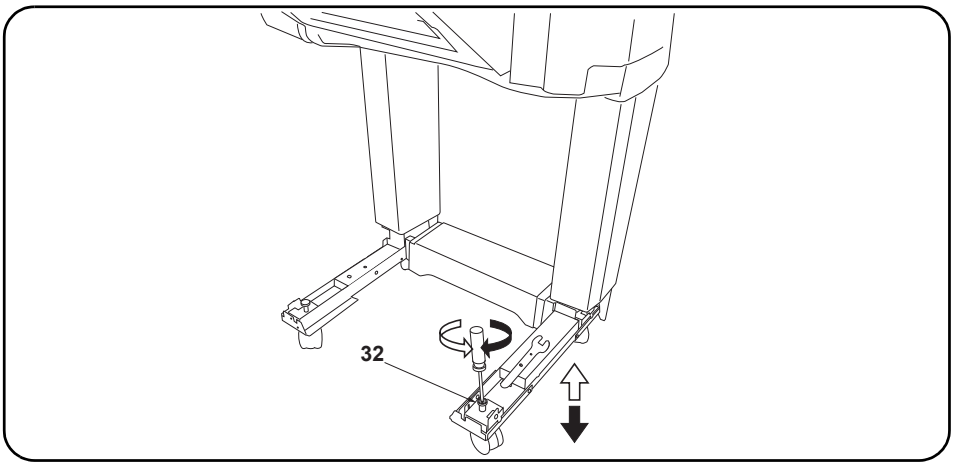

8. Loosen the 2 screws (31) on the front left and on the rear left of the document finisher.

9. Turn the adjustment bolts (32) with a Philips-head screwdriver to adjust the height of the document finisher.
Turning the adjustment bolt clockwise lifts the document finisher, and turning it counterclockwise lowers the document finisher.
10. Retighten each of the 2 screws (31).
11. Replace the front foot cover (23) and rear foot cover (24).

---

8. Desserrer les 2 vis (31) du côté avant gauche et arrière gauche du finisseur de document.

9. Faire tourner les boulons de réglage (32) à l'aide d'un tournevis cruciforme pour ajuster la hauteur du finisseur de document.
Tourner le boulon de réglage dans le sens horloger pour lever le finisseur de document, et dans le sens contraire au sens horloger pour le descendre.
10. Resserrer les 2 vis (31).
11. Reposer le capot du pied avant (23) et le capot du pied arrière (24).

---

8. Afloje los 2 tornillos (31) en los lados izquierdo frontal e izquierdo posterior del finalizador de documentos.

9. Gire los pernos de ajuste (32) con un destornillador de cabeza Philips para ajustar la altura del finalizador de documentos.
Al girar el perno de ajuste en la dirección de las manecillas del reloj se levanta el finalizador de documentos y al girar en sentido contrario a las manecillas del reloj baja el finalizador de documentos.
10. Vuelva a apretar los 2 tornillos (31).
11. Vuelva a colocar la cubierta de la pata frontal (23) y la cubierta de la pata posterior (24).

---

8. Lösen Sie die 2 Schrauben (31) vorne links und hinten links am Finisher.

9. Stellen Sie die Einstellschrauben (32) mit einem Kreuzschlitzschraubendreher ein, um die Höhe des Finishers zu korrigieren.
Durch Drehen der Einstellschraube im Uhrzeigersinn wird der Finisher angehoben, während er durch Drehen entgegen dem Uhrzeigersinn abgesenkt wird.
10. Ziehen Sie die 2 Schrauben (31) nach.
11. Setzen Sie die Vorderfußabdeckung (23) und die Hinterfußabdeckung (24) wieder ein.

---

8. Allentare le 2 viti (31) sulla parte anteriore sinistra e posteriore sinistra della finisher documenti.

9. Ruotare i bulloni di regolazione (32) con un cacciavite con testa a croce tipo Philips per regolare l'altezza della finisher documenti.
Ruotando il bullone di regolazione in senso orario si solleva la finisher documenti, mentre ruotandolo in senso antiorario si abbassa la finisher documenti.
10. Ristringere ciascuna delle 2 viti (31).
11. Ricollocare la copertura del piede anteriore (23) e la copertura del piede posteriore (24).

---

8. 拧松装订器左前侧与左后侧的各 2 颗螺丝 (31)。

9. 使用十字螺丝刀旋转调节螺栓 (32)，以调节装订器的高度。
将调节螺栓向顺时针方向旋转，装订器的高度升高，逆时针方向旋转则装订器的高度降低。
10. 拧紧各 2 颗螺丝 (31)。
11. 将前脚座盖板 (23)、后脚座盖板 (24) 按原样安装

---

8. 도큐먼트 피니셔 좌측 앞과 뒤의 나사 (31) 각 2 개를 느슨하게 합니다 .

9. 플러스 드라이버로 조정 볼트 (32) 를 돌려 도큐먼트 피니셔 높이를 조정합니다 .
조정 볼트를 시계방향으로 돌리면 도큐먼트 피니셔의 높이가 높아지고, 반 시계방향으로 돌리면 낮아 집니다 .
10. 나사 (31) 각 2 개를 조입니다 .
11. 풋커버 앞 (23), 풋커버 뒤 (24) 를 원래대로 장착합니다 .

---

8. ドキュメントフィニッシャー左前と左後のビス (31) 各 2 本を緩める。

9. プラスドライバーで調整ボルト (32) を回し、ドキュメントフィニッシャーの高さを調整する。
調整ボルトを時計方向に回すとドキュメントフィニッシャーの高さが高くなり、反時計方向に回すと低くなる。
10. ビス (31) 各 2 本を締め付ける。
11. フットカバー前 (23)、フットカバー後 (24) を元通りに取り付ける。

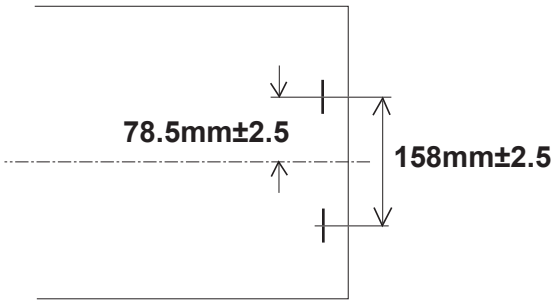

Adjusting the stapling position

1. Connect the machine power plug to the wall outlet and turn the machine main power switch on.
2. Make a test copy using staple mode (double stapled).
3. Check whether the stapling position is off-center.If the staple position is off-center, follow the procedure below to adjust the position.
   <Reference value> 78.5 mm ±2.5 mm from the center of the paper

---

Ajustement de la position d'agrafage

1. Insérer la fiche d'alimentation de la machine dans la prise murale et mettre la machine sous tension.
2. Procéder à une copie d'essai en mode agrafage (double agrafage).
3. Vérifier que la position d'agrafage n'est pas en décalage. Si la position d'agrafage est décalée, la régler en procédant de la manière suivante.
   <Valeur de référence> 78,5 mm ±2,5 mm depuis le milieu de la feuille de papier.

Ajuste de la posición de grapado

1. Conecte el enchufe de la máquina al receptáculo de pared y encienda el interruptor principal de la máquina.
2. Haga una copia de prueba en el modo de grapado (grapado doble).
3. Compruebe si la posición de grapado está descentrada. Si la posición de grapado está descentrada, realice el siguiente procedimiento para ajustar la posición.
   <Valor de referencia> 78,5 mm ± 2,5 mm del centro del papel

---

Justage der Heftposition

1. Stecken Sie den Netzstecker des Geräts in die Wandsteckdose und schalten Sie das Gerät am Gauptschalter ein.
2. Erstellen Sie eine Probekopie im Heftmodus (doppelt geheftet).
3. Prüfen Sie, ob die Heftposition außermittig ist. Falls die Heftposition außermittig ist, müssen Sie sie wie folgend einstellen.
   <Bezugswert> 78,5 mm ±2,5 mm von der Blattmitte

Regolazione della posizione di pinzatura

1. Collegare la spina alla presa di corrente a muro e accendere l'interruttore di alimentazione della macchina.
2. Eseguire una copia di prova utilizzando la modalità di spillatura con punti metallici (spillatura doppia).
3. Verificare che la posizione di spillatura non sia fuori centro. Se la posizione di spillatura è fuori centro, seguire la procedura riportata sotto per regolare la posizione.
   <Valore di riferimento> 78,5 mm ± 2,5 mm dal centro del foglio

---

调节装订位置

1. 将机器上的电源插头插入电源插座中，打开主电源开关。
2. 在装订模式（2 点固定）下进行测试复印。
3. 确认装订位置的中心偏差。 装订位置偏离中心时，按以下步骤进行调节。
   ＜基准值＞ 距离纸张中心 78.5mm± 2.5mm

스테이플 위치 조정

1. 본체 전원플러그를 콘센트에 꽂고 주 전원 스위치를 ON 으로 합니다 .
2. 스테이플 모드 (2 곳) 에서 시험복사를 합니다 .
3. 스테이플 위치의 센터 어긋남을 확인합니다 . 스테이플 위치가 중심에서 벗어난 경우다음 순서로 조정을 합니다 .
   ＜기준치＞ 용지 센터에서 78.5mm± 2.5mm

ステープル位置の調整

1. 機械本体の電源プラグをコンセントに差し込み、主電源スイッチを ON にする。
2. ステープルモード(2 箇所止め)でテストコピーを行う。
3. ステープル位置のセンターずれを確認する。ステープル位置が中心からずれていた場合、次の手順で調整を行う。
   ＜基準値＞ 用紙センターより 78.5mm± 2.5mm

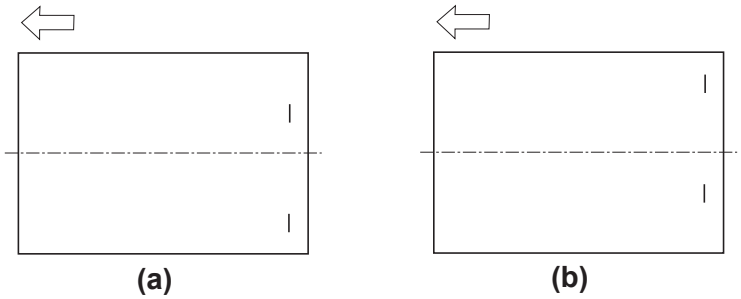

4. Set maintenance mode U246, select [Finisher] and [Staple HP].
5. Adjust the values.
If the paper is stapled too close to the front of the machine (a): Increase the setting value.
If the paper is stapled too close to the rear of the machine (b): Decrease the setting value.
6. Perform a test copy.
7. Repeat steps 4 to 6 until the staple position is within the reference value.
<Reference value> 78.5 mm ±2.5 mm from the center of the paper

---

4. Passer en mode maintenance U246, sélectionner [Finisher] et [Staple HP].
5. Régler les valeurs.
Si le papier est agrafé trop près de l'avant de la machine (a): augmenter la valeur de réglage.
Si le papier est agrafé trop près de l'arrière de la machine (b): réduire la valeur de réglage.
6. Effectuer une copie de test.
7. Recommencer les étapes 4 à 6 jusqu'à ce que la position d'agrafe soit conforme à la valeur de référence
<Valeur de référence> 78,5 mm ±2,5 mm depuis le milieu de la feuille de papier.

---

4. Entre en el modo de mantenimiento U246, seleccione [Finisher] y [Staple HP].
5. Ajuste los valores.
Si el grapado del papel se encuentra demasiado cerca del frente de la máquina (a): aumente el valor de configuración.
Si el grapado del papel se encuentra demasiado cerca de la parte posterior de la máquina (b): disminuya el valor de configuración.
6. Haga una copia de prueba.
7. Repita los pasos 4 a 6 hasta que la posición de grapado se encuentre dentro del valor de referencia.
<Valor de referencia> 78,5 mm ± 2,5 mm del centro del pape

---

4. Schalten Sie in den Wartungsmodus U246, wählen Sie [Finisher] und [Staple HP].
5. Die Werte einstellen.
Falls das Papier zu nahe am vorderen Rand des Geräts (a) abgestapelt wird: Vergrößern Sie den Stellwert.
Falls das Papier zu nahe am hinteren Rand des Geräts (b) abgestapelt wird: Verkleinern Sie den Stellwert.
6. Eine Testkopie erstellen.
7. Wiederholen Sie die Schritte 4 bis 6, bis die Heftposition im Bereich des Bezugswerts liegt.
<Bezugswert> 78,5 mm ±2,5 mm von der Blattmitte

---

4. Impostare la modalità manutenzione U246, selezionare [Finisher] e [Staple HP].
5. Regolare i valori.
Se il foglio viene spillato troppo vicino alla parte anteriore della macchina (a): Aumentare il valore di impostazione.
Se il foglio viene spillato troppo vicino alla parte posteriore della macchina (b): Diminuire il valore di impostazione.
6. Eseguire una copia di prova.
7. Ripetere i passi 4 to 6 finché la posizione di spillatura risulta all'interno del valore di riferimento.
<Valore di riferimento> 78,5 mm ± 2,5 mm dal centro del foglio

---

4. 设置维护模式 U246，选择 [Finisher]、[Staple HP]。
5. 调整设定值。
装订位置向机器前部偏移时 (a)：调高设定值。
装订位置向机器后部偏移时 (b)：调低设定值。
6. 进行测试复印。
7. 重复步骤 4 ～ 6，直到装订位置在基准范围内为止。
＜基准值＞ 距离纸张中心 78.5mm± 2.5mm

---

4. 메인터넌스 모드 U246 을 세트하고 [Finisher], [Staple HP] 를 선택합니다 .
5. 설정치를 조정합니다 .
스테이플 위치가 기기앞측으로 벗어난 경우 (a):설정치를 높입니다 .
스테이플 위치가 기기뒷측으로 벗어난 경우 (b):설정치를 내입니다 .
6. 시험복사를 합니다 .
7. 스테이플 위치가 기준치내가 될 때까지 순서 4 ~ 6 을 반복합니다 .
＜기준치＞ 용지 센터에서 78.5mm± 2.5mm

---

4. メンテナンスモードU246をセットし、[Finisher]、[Staple HP] を選択する。
5. 設定値を調整する。
ステープル位置が機械前側にずれている場合 (a):設定値を上げる。
ステープル位置が機械後側にずれている場合 (b):設定値を下げる。
6. テストコピーを行う。
7. ステープル位置が基準値内になるまで、手順 4 ～ 6 を繰り返す。
＜基準値＞ 用紙センターより 78.5mm± 2.5mm

INSTALLATION GUIDE FOR 4000-SHEETS FINISHER

English

A different procedure is required depending on the product which is installed with this unit.Each procedure is described in the following pages.
For installation with a MFP, see Page 1 to Page 7.
For installation with a Printer, see Page 8 to Page 14.
References to medium-speed MFPs in this document denote 30/30, 35/35, 45/45 and 55/50 ppm color machines, and 35, 45 and 55 ppm monochrome machines.
References to high-speed MFPs in this document denote 65/65 and 75/70 ppm color machines, and 65 and 80 ppm monochrome machines.

Français

Une procédure différente est requise selon le produit qui est installé avec cette unité.Chaque procédure est décrite dans les pages suivantes.
Pour l'installation avec une imprimante multifonction, voir Page 1 à Page 7.
Pour l'installation avec une imprimante, voir Page 8 à Page 14.
Dans le présent document, les références aux MFP à vitesse moyenne renvoient aux machines couleurs 30/30, 35/35, 45/45 et 55/50 ppm et aux machines monochromes 35, 45 et 55 ppm.
Dans le présent document, les références aux MFP à grande vitesse renvoient aux machines couleurs 65/65 et 75/70 ppm et aux machines monochromes 65 et 80 ppm.

Español

El procedimiento es diferente según el producto que se instale con esta unidad.En las siguientes páginas, se describe cada procedimiento.
Para la instalación con un MFP, consulte las páginas de la 1 a la 7.
Para la instalación con una impresora, consulte las páginas de la 8 a la 14
.
Las referencias a las MFP de velocidad media de este documento corresponden a las máquinas a color de 30/30, 35/35, 45/45 y 55/50 ppm y a las máquinas monocromáticas de 35, 45 y 55 ppm.
Las referencias a las MFP de alta velocidad de este documento corresponden a las máquinas a color de 65/65 y 75/70 ppm y a las máquinas

Deutsch

Je nach verwendetem Modell ist eine andere Vorgehensweise zur Installation dieses Teils erforderlich.Die unterschiedlichen Vorgehensweisen werden auf den folgenden Seiten erläutert.
Bei Installation an einem Dokumentenfinisher siehe Seiten 1 bis 7.
Bei Installation an einem Drucker siehe Seiten 8 bis 14.
Angaben für MFP der mittleren Leistungsklasse in dieser Anleitung gelten für die 30/30, 35/35, 45/45 und 55/50 ppm Vollfarbenkopierer sowie für die 35, 45 und 55 ppm Monochrommaschinen.
Angaben für MFP der Hochleistungsklasse in dieser Anleitung gelten für die 65/65 und 75/70 ppm Vollfarbenkopierer sowie für die 65 und 80 ppm Monochrommaschinen.

Italiano

Si richiede una procedura diversa in funzione del prodotto su cui è installata l'unità.Le singole procedure sono descritte nelle pagine seguenti.
Per l'installazione con un MFP, vedere le pagine da 1 a 7.
Per l'installazione con una stampante, vedere le pagine da 8 a 14.
I riferimenti per le MFP a velocità media riportati in questo documento indicano le macchine a colori 30/30, 35/35, 45/45 e 55/50 ppm, e le macchine monocromatiche 35, 45 e 55 ppm.
I riferimenti per le MFP a velocità alta riportati in questo documento indicano le macchine a colori 65/65 e 75/70 ppm, e le macchine monocromatiche 65 e 80 ppm.

简体中文

根据安装对象，安装步骤略有不同。各个步骤记载在下面的页面。
安装到 MFP 上时，请参见 P1-P7。
安装到打印机上时，请参见 P8-P14。
本文中的中速 MFP 代表彩色 30/30 页机型、35/35 页机型、45/45 页机型、55/50 页机型、黑白 35 页机型、45 页机型、55 页机型。
本文中的高速 MFP 代表彩色 65/65 页机型、75/70 页机型、黑白 65 页机型、80 页机型。

한국어

이 장치에 설치되는 제품에 따라 절차가 다릅니다 . 다음 페이지에서 각 절차를 설명합니다 .
MFP 에 설치하는 경우 1 페이지 ~7 페이지를 참조하십시오 .
프린터에 설치하는 경우 8 페이지 ~14 페이지를 참조하십시오 .
본문 중 중속 MFP 는 컬러 30/30 매기 , 35/35 매기 , 45/45 매기 , 55/50 매기 , 흑백 35 매기 , 45 매기 , 55 매기를 나타냅니다 .
본문 중 고속 MFP 는 컬러 65/65 매기 , 75/70 매기 , 흑백 65 매기 , 80 매기를 나타냅니다 .

日本語

装着する対象によって、取付手順は異なります。それぞれ、以下のページに記載しています。
MFP に設置する場合;1 ページ～ 7 ページ
プリンターに設置する場合;8 ページ～ 14 ページ
本文中の中速 MFP はカラー機の 30/30 枚機、35/35 枚機、45/45 枚機、55/50 枚機、モノクロ機の 35 枚機、45 枚機、55 枚機を表す。
本文中の高速 MFP はカラー機の 65/65 枚機、75/70 枚機、モノクロ機の 65 枚機、80 枚機を表す。

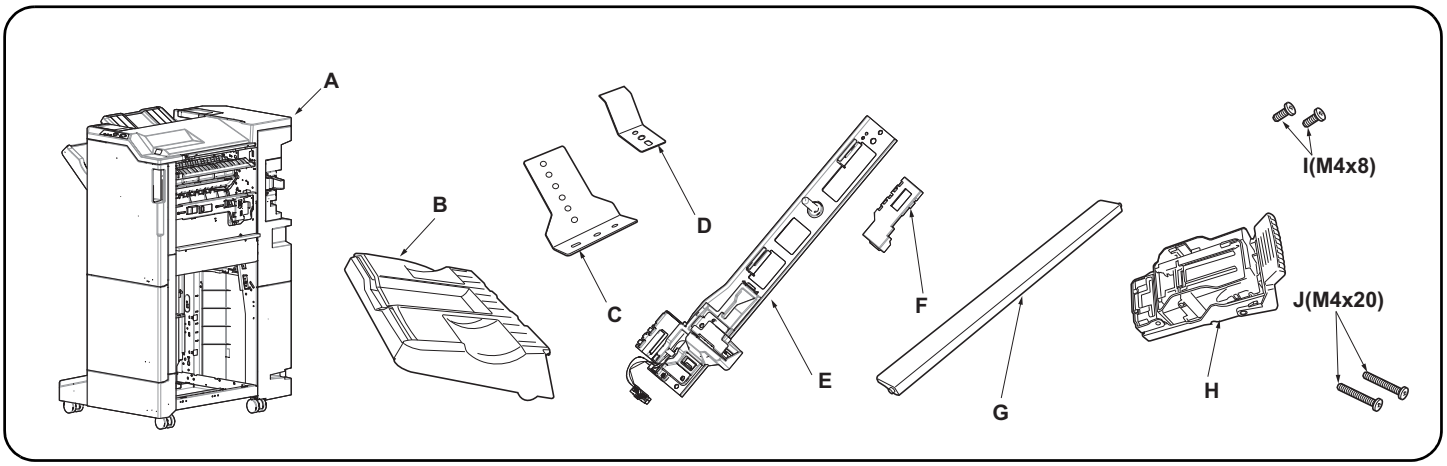

Supplied parts
A. Document finisher 1
B. Eject tray 1
C. Earth connection plate 1
D. Earth spring 1
E. Connecting plate 1
F. Connector cover 1
G. Eject guide 1
H. Staple cartridge 1
I. M4 × 8 screw 2
J. M4 × 20 screw 2

Be sure to remove any tape and/or cushioning materials from the parts supplied.

Pièces fournies
A. Finisseur de document 1
B. Bac d'éjection 1
C. Plaque de raccordement de mise à la terre 1
D. Ressort de mise à la terre 1
E. Plaque de connexion 1
F. Cache de connecteur 1
G. Guide d'éjection 1
H. Cartouche d'agrafes 1
I. Vis M4 × 8 2
J. Vis M4 × 20 2

Veillez à retirer les morceaux de bande adhésive et/ou les matériaux de rembourrage des pièces fournies.

Partes suministradas
A. Finalizador de documentos 1
B. Bandeja de salida 1
C. Placa de conexión a tierra 1
D. Resorte de conexión a tierra 1
E. Placa de conexión 1
F. Cubierta del conector 1
G. Guía de salida 1
H. Cartucho de grapas 1
I. Tornillo M4 × 8 2
J. Tornillo M4 × 20 2

Asegúrese de despegar todas las cintas y/o material amortiguador de las partes suministradas.

Enthaltene Teile
A. Finisher 1
B. Auswerffach 1
C. Grundanschlussplatte 1
D. Grundfeder 1
E. Verbindungsplatte 1
F. Stecker-Abdeckung 1
G. Ausgabeführung 1
H. Heftklammermagazin 1
I. M4 × 8 Schraube 2
J. M4 × 20 Schraube 2

Stellen Sie sicher, dass sämtliche Klebebänder und/oder Polstermaterial von den gelieferten Teilen entfernt wurden.

Parti fornite
A. Finisher documenti 1
B. Vassoio di espulsione 1
C. Piastra di connessione per messa a terra . 1
D. Molla di messa a terra 1
E. Piastra di connessione 1
F. Copri connettore 1
G. Guida di espulsione 1
H. Contenitore punti 1
I. Vite M4 × 8 2
J. Vite M4 × 20 2

Rimuovere tutti i nastri adesivi e/o i materiali di protezione dalle parti fornite.

附属品
A. 装订器 1
B. 排纸托盘 1
C. 接地安装板 1
D. 接地弹簧 1
E. 连接板 1
F. 接插件盖板 1
G. 排纸导向板 1
H. 装订针盒 1
I. M4×8 螺丝 2
J. M4×20 螺丝 2

如果附属品上带有固定胶带，缓冲材料时务必揭下。

동봉품
A. 문서 피니셔 1
B. 배출 트레이 1
C. 접지 부착판 1
D. 접지 스프링 1
E. 연결판 1
F. 커넥터 커버 1
G. 배출 가이드 1
H. 스테이플 카트리지 1
I. 나사 M4×8 2
J. 나사 M4×20 2

동봉품에 고정 테이프, 완충재가 붙어 있는 경우에는 반드시 제거할 것.

同梱品
A. ドキュメントフィニッシャー 1
B. 排出トレイ 1
C. アース取付板 1
D. アースバネ 1
E. 連結板 1
F. コネクターカバー 1
G. 排出ガイド 1
H. ステープルカートリッジ 1
I. ビス M4×8 2
J. ビス M4×20 2

同梱品に固定テープ、緩衝材がついている場合は、必ず取り外すこと。

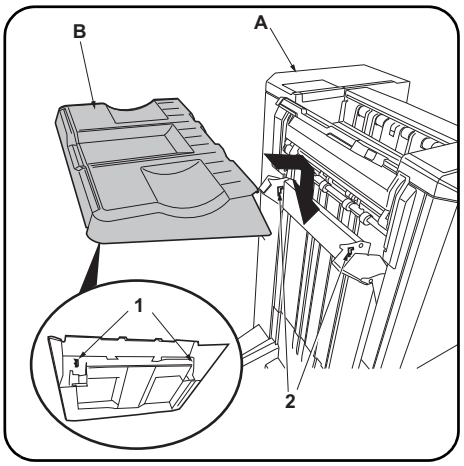

NOTICE
When installing on a medium-speed MFP, the Attachment Kit (AK-730 or AK-731) must be installed before the document finisher is installed.

Procedure
Before starting installation, be sure to turn the main power switch of the machine off, and unplug the power plug from the wall outlet.

1. Install by inserting the 2 hooks (1) on the back of the eject tray (B) into the holes (2) in the document finisher (A) lift.

REMARQUE
Lors de l'installation sur une imprimante multi-fonction à vitesse moyenne, le kit de fixation (AK-730 ou AK-731) doit être installé avant d'installer le finisseur de document.

Procédure
Avant de commencer l'installation, s'assurer de mettre la machine hors tension et de débrancher la fiche d'alimentation de la prise murale.

1. Procéder en insérant les 2 crochets (1) au dos du bac d'éjection (B) dans les trous (2) du dispositif de levage du finisseur de document (A).

AVISO
Si se instala en un MFP de velocidad media, el Kit de conexión (AK-730 o AK-731) se debe instalar antes de instalarse el finalizador de documentos.

Procedimiento
Antes de iniciar la instalación, asegúrese de apagar el interruptor de encendido de la máquina y desenchufar el cable de alimentación de la toma de pared.

1. Instale insertando los 2 ganchos (1) de la parte posterior de la bandeja de salida (B) en los orificios (2) del elevador del finalizador de documentos (A).

ANMERKUNG
Bei der Installation an einem mittelschnellen MFP muss das Attachment-Kit (AK-730 oder AK-731) vor dem Finisher installiert werden.

Verfahren
Bevor Sie mit der Installation beginnen überzeugen Sie sich, dass der Netzschalter des Geräts ausgeschaltet und das Stromkabel aus der Steckdose gezogen ist.

1. Setzen Sie die 2 Haken (1) zur Befestigung an der Rückseite des Auswerffachs (B) in die Öffnungen (2) an der Hebeplatte des Finishers (A) ein.

AVVISO
Quando si installa un MFP di fascia media, prima di installare il finisher documenti occorre installare l'unità Attachment Kit (AK-730 o AK-731).

Procedura
Prima di iniziare l'installazione, spegnere la macchina e scollegare la spina dalla presa di corrente.

1. Installare inserendo i 2 ganci (1) sul retro del vassoio di espulsione (B) nei fori (2) sul sollevatore della finisher documenti (A).

注意
安装到中速 MFP 上时，在安装装订器前，请先安装连接组件（AK-730 或 AK-731）。

安装步骤
安装前务必关闭机器的主电源开关，并从墙壁插座拔下电源插头。

1. 将排纸托盘 (B) 内侧的 2 个挂钩 (1) 装入装订器 (A) 的升降板的孔 (2) 中。

주의
중속 MFP 에 설치하는 경우 문서 피니셔를 장착하기 전에 부착 키트 (AK-730 또는 AK-731) 를 설치해야 합니다 .

장착순서
설치를 시작하기 전에 반드시 본체의 주 전원 스위치를 끄고 벽 콘센트에서 전원 플러그를 분리하십시오 .

1. 배출 트레이 (B) 의 후면 후크 (1) 2 개를 문서 피니셔 (A) 의 승강판 구멍 (2) 에 넣고 장착합니다 .

注意
中速 MFP に設置する場合、ドキュメントフィニッシャーを取り付ける前に、アタッチメントキット(AK-730 または AK-731) の取り付けをおこなうこと。

取付手順
必ず機械本体の主電源スイッチを OFF にし、機械本体の電源プラグを抜いてから作業すること。

1. 排出トレイ (B) の裏側のフック (1)2 個をドキュメントフィニッシャー(A) の昇降板の穴 (2) に入れて、取り付ける。

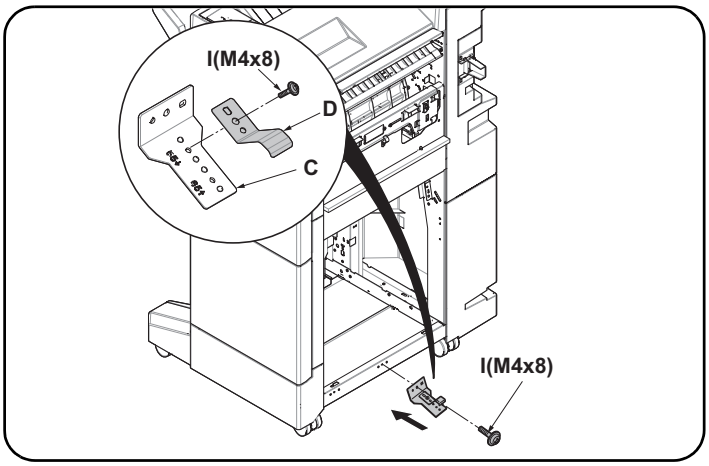

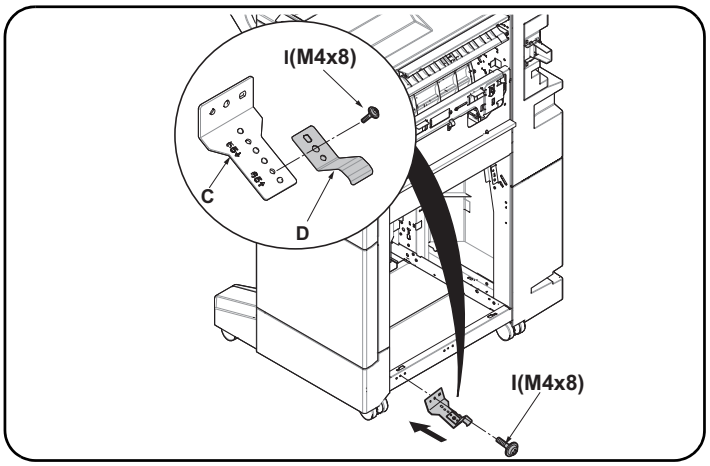

Installation on medium-speed MFPs

2. Using an M4 × 8 screw (I), secure the earth spring (D) in the location indicated by the "55↓" marking on the earth connection plate (C).
3. Attach the earth connection plate (C) to the center of the bottom of the document finisher using an M4 × 8 screw (I).
   Proceed to step 6.The procedure for installing the kit on a high-speed MFP is described on the following steps.

Installation on high-speed MFPs

2. Using an M4 × 8 screw (I), secure the earth spring (D) in the location indicated by the "65↑" marking on the earth connection plate (C).
3. Attach the earth connection plate (C) to the front side of the bottom of the document finisher using an M4 × 8 screw (I).

Montage sur des MFP à vitesse moyenne

2. En procédant à l'aide d'une vis M4 × 8 (I), fixez le ressort de mise à la terre (D) à l'endroit indiqué par la marque "55↓" sur la plaque de raccordement de mise à la terre (C).
3. Fixez la plaque de raccordement de mise à la terre (C) au milieu de la partie inférieure du finisseur de document avec une vis M4 × 8 (I).
   Passer à l'étape 6. La procédure d'installation du kit sur l'imprimante multifonction à grande vitesse est décrite dans les étapes suivantes.

Montage sur des MFP à grande vitesse

2. En procédant à l'aide d'une vis M4 × 8 (I), fixez le ressort de mise à la terre (D) à l'endroit indiqué par la marque "65↑" sur la plaque de raccordement de mise à la terre (C).
3. Fixez la plaque de raccordement de mise à la terre (C) à l'avant de la partie inférieure du finisseur de document avec une vis M4 × 8 (I).

Instalación en las MFP de velocidad media

2. Con un tornillo M4 × 8 (I), asegure el resorte de conexión a tierra (D) en el lugar indicado por la marca "55↓" de la placa de conexión a tierra (C).
3. Fije la placa de conexión a tierra (C) en el centro de la parte inferior del finalizador de documentos usando un tornillo M4 × 8 (I).
   Vaya al paso 6.En los siguientes pasos se describe el procedimiento de instalación del kit en un MFP de velocidad alta.

Instalación en las MFP de alta velocidad

2. Con un tornillo M4 × 8 (I), asegure el resorte de conexión a tierra (D) en el lugar indicado por la marca "65↑" de la placa de conexión a tierra (C).
3. Fije la placa de conexión a tierra (C) en el lado frontal de la parte inferior del finalizador de documentos usando un tornillo M4 × 8 (I).

Installation an MFP der mittleren Leistungsklasse

2. Befestigen Sie die Grundfeder (D) mit einer M4 × 8 Schraube (I) an der mit "55↓" bezeichneten Stelle der Grundanschlussplatte (C).
3. Bringen Sie die Grundanschlussplatte (C) mit einer M4 × 8 Schraube (I) mittig an der Unterseite des Finishers an.
   Gehen Sie weiter zu Schritt 6.Die Vorgehensweise zur Installation des Kits an einem schnellen MFP wird in den folgenden Schritten beschrieben.

Installation an MFP der Hochleistungsklasse

2. Befestigen Sie die Grundfeder (D) mit einer M4 × 8 Schraube (I) an der mit "65↑" bezeichneten Stelle der Grundanschlussplatte (C).
3. Bringen Sie die Grundanschlussplatte (C) mit einer M4 × 8 Schraube (I) vorne an der Unterseite des Finishers an.

Installazione sulle MFP a velocità media

2. Utilizzando una vite M4 × 8 (I), fissare la molla di messa a terra (D) nella posizione indicata dal segno "55↓" sulla piastra di connessione per messa a terra (C).
3. Applicare la piastra di connessione per messa a terra (C) al centro in basso della finisher documenti utilizzando una vite M4 × 8 (I).
   Procedere al passo 6. La procedura di installazione del Kit su un MFP di fascia alta è descritta nelle pagine successive.

Installazione sulle MFP a velocità alta

2. Utilizzando una vite M4 × 8 (I), fissare la molla di messa a terra (D) nella posizione indicata dal segno "65↑" sulla piastra di connessione per messa a terra (C).
3. Applicare la piastra di connessione per messa a terra (C) al lato anteriore in basso della finisher documenti utilizzando una vite M4 × 8 (I).

安装于中速 MFP 上时

2. 在接地安装板 (C) 上刻有 55 ↓的位置使用 1 颗 M4×8(I) 螺丝来固定接地弹簧 (D)。
3. 使用 M4×8(I) 螺丝将接地安装板 (C) 安装到装订器下部中心位置。
   进至步骤 6。安装到高速 MFP 时，请参照下面的内容。

安装于高速 MFP 上时

2. 在接地安装板 (C) 上刻有 65 ↑的位置使用 1 颗 M4×8(I) 螺丝来固定接地弹簧 (D)。
3. 使用 M4×8(I) 螺丝将接地安装板 (C) 安装到装订器下部前侧位置。

중속 MFP 에 설치하는 경우

2. 접지 부착판 (C) 의 각인 55 ↓의 위치에 나사 M4×8(I) 1 개로 접지스프링 (D) 을 고정합니다 .
3. 나사 M4×8(I) 로 접지 부착판 (C) 을 문서 피니셔 하부중앙에 부착합니다 .
   순서 6 로 진행합니다 .고속 MFP 에 키트를 설치하는 절차는 다음 단계에 설명되어 있습니다 .

고속 MFP 에 설치하는 경우

2. 접지 부착판 (C) 의 각인 65 ↑의 위치에 나사 M4×8(I) 1 개로 접지스프링 (D) 을 고정합니다 .
3. 나사 M4×8(I) 로 접지 부착판 (C) 을 문서 피니셔 하부앞측에 부착합니다 .

中速 MFP に設置の場合

2. アース取付板 (C) の刻印 55 ↓の位置にビス M4×8(I) でアースバネ (D) を固定する。
3. ビス M4×8(I) でアース取付板 (C) をドキュメントフィニッシャー下部センターに取り付ける。
   手順 6 に進む。高速 MFP に設置の場合は次に記載しています。

高速 MFP に設置の場合

2. アース取付板 (C) の刻印 65 ↑の位置にビス M4×8(I) でアースバネ (D) を固定する。
3. ビス M4×8(I) でアース取付板 (C) をドキュメントフィニッシャー下部前側に取り付ける。

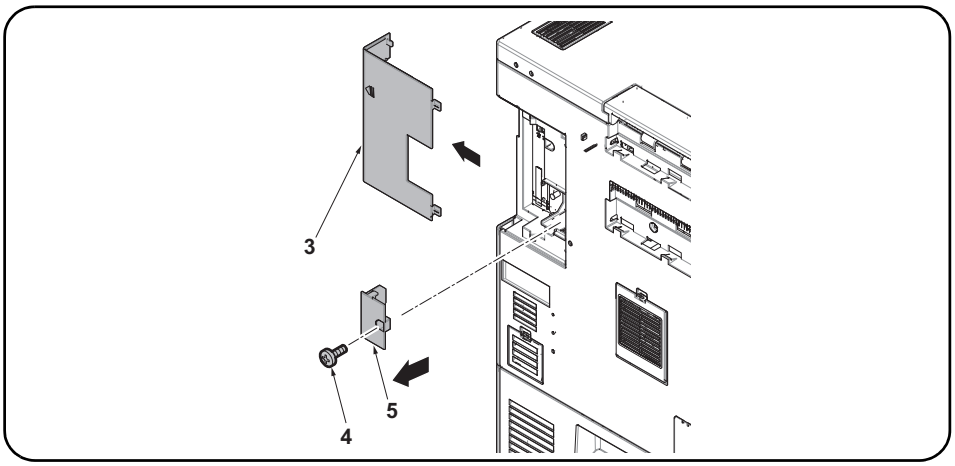

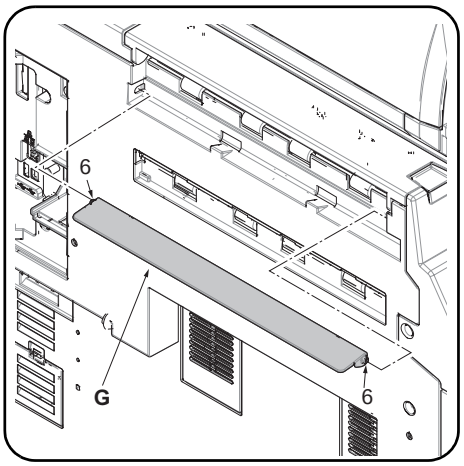

Only for installation on high-speed MFPs
If installing on a medium-speed MFP, proceed to step 6.
4. Remove the machine interface cover (3).
5. Remove the screw (4) and remove the controller cover (5).

6. Install the eject guide (G) by fitting the 2 eject guide pins (6) into the holes in the machine.

Pour montage sur des MFP à grande vitesse uniquement
Si le montage est fait sur un MFP à vitesse moyenne, passer à l'étape 6.
4. Déposer le couvercle d'interface (3) de la machine.
5. Déposer la vis (4) puis le couvercle du contrôleur (5).

6. Installer le guide d'éjection (G) en insérant les 2 ergots du guide d'éjection (6) dans les trous de la machine.

Solo para la instalación en las MFP de alta velocidad
Si se instala en una MFP de velocidad media, vaya al paso 6.
4. Quite la cubierta de la interfaz (3) de la máquina.
5. Quite el tornillo (4) y quite la cubierta del controlador (5).

6. Instale la guía de salida (G) encajando los 2 pasadores de la guía de salida (6) en los orificios de la máquina.

Nur bei Installation an MFP der Hochleistungsklasse
Gehen Sie zur Installation an einem MFP der mittleren Leistungsklasse weiter zu Schritt 6.
4. Nehmen Sie die Schnittstellenabdeckung (3) des Geräts ab.
5. Entfernen Sie die Schraube (4) und nehmen Sie die Controller-Abdeckung (5) ab.

6. Installieren Sie die Ausgabeführung (G), indem Sie die beiden Stifte (6) der Auswerfführung in die Aufnahmen des Geräts einsetzen.

Solo per l'installazione sulle MFP a velocità alta
Se si installa su una MFP a velocità media, procedere al passo 6.
4. Rimuovere la copertura di interfaccia (3) della macchina.
5. Rimuovere la vite (4) e quindi rimuovere il coperchio del controller (5).

6. Installare la guida di espulsione (G) inserendo i 2 perni (6) della guida di espulsione nei fori della macchina.

仅限安装于高速 MFP 上时
安装于中速 MFP 上时，进至步骤 6。
4. 拆下机器的接口盖板 (3)。
5. 拆除 1 颗螺丝 (4)，拆下控制器盖板 (5)。

6. 将排纸导向板 (G) 的 2 根销钉 (6) 插入机器的孔中。

고속 MFP 에 설치하는 경우만
중속 MFP 에 설치하는 경우에는 순서 6 로 진행합니다 .
4. 본체의 인터페이스 커버 (3) 를 제거합니다 .
5. 나사 (4) 1 개를 빼고 컨트롤러덮개 (5) 를 제거합니다 .

6. 배출 가이드 (G) 핀 (6) 2 개를 본체의 구멍에 맞추어 끼워서 부착합니다 .

高速 MFP に設置の場合のみ
中速 MFP に設置の場合は手順 6 に進む。
4. 機械本体のインターフェイスカバー (3) を取り外す。
5. ビス (4) を外し、コントローラーフタ (5) を取り外す。

6. 排出ガイド (G) のピン (6) 2 本を機械本体の穴に差し込み取り付ける。

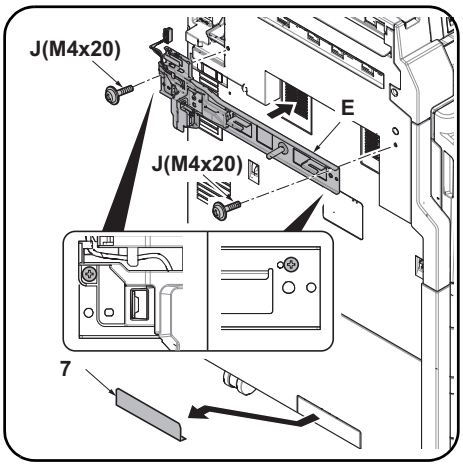

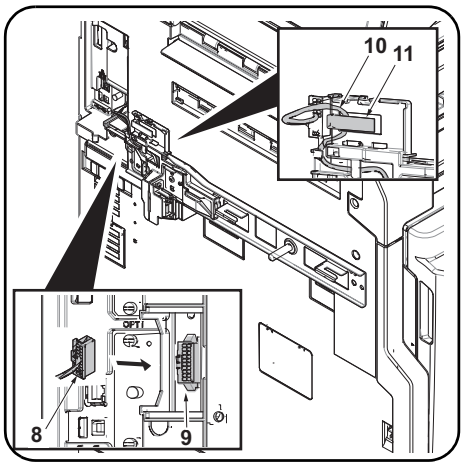

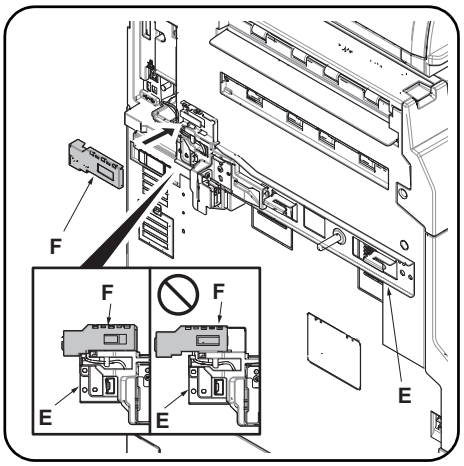

7. Attach the connecting plate (E) to the machine using 2 M4 × 20 screws (J). Attach them at the point as shown above.

Only if installing to a medium-speed MFP

If installing on a high-speed MFP, proceed to step 9.

8. Remove the breakaway cover (7) from the left cover.

9. Connect the signal line connector (8) to the connector (9) on the machine. Hook the signal line wire (10) onto the hook (11).

10. Fit the connector cover (F) in the connecting plate (E). Take care not to get the cable pinched by objects. Attach it at the point as shown above. Check that the signal line connector is covered by the connector cover (F).

---

7. Fixez la plaque de connexion (E) à la machine à l'aide de 2 vis M4 × 20 (J).Raccordez-les au point indiqué ci-dessus.

Uniquement en cas d'installation sur un MFP à vitesse moyenne

Si le montage est fait sur un MFP à grande vitesse, passer à l'étape 9.

8. Déposer le couvercle amovible (7) du couvercle gauche.

9. Raccorder le connecteur de ligne de signal (8) sur le connecteur (9) de la machine. Accrocher le fil de ligne de signal (10) sur le crochet (11).

10. Placer le cache de connecteur (F) dans la plaque de connexion (E).Prendre soin à ne pas pincer le câble. Raccordez-les au point indiqué ci-dessus. Vérifier que le connecteur de ligne de signal est couvert par le cache de connecteur (F).

---

7. Fije la placa de conexión (E) a la máquina mediante 2 tornillos M4 × 20 (J).Conéctelas en el punto que se muestra arriba.

Solo si instala en una MFP de velocidad media

Si se instala en una MFP de alta velocidad, vaya al paso 9.

8. Quite la cubierta divisoria (7) de la cubierta izquierda.

9. Conecte el conector de línea de señales (8) al conector (9) de la máquina. Enganche el cable de la línea de señales (10) en el enganche (11).

10. Acople la cubierta del conector (F) en la placa de conexión (E).Tenga cuidado de que el cable no quede atrapado por objetos. Conéctelas en el punto que se muestra arriba. Compruebe que el conector de la línea de señales quede cubierto por la cubierta del conector (F).

---

7. Bringen Sie die Verbindungsplatte (E) mit 2 M4 × 20 Schrauben (J) am Gerät an.Bringen Sie diese an der in der Abbildung gezeigten Stelle an.

Nur bei Installation eines MFP der mittleren Leistungsklasse

Gehen Sie zur Installation an einem MFP der Hochleistungsklasse weiter zu Schritt 9.

8. Nehmen Sie die Ablösungsabdeckung (7) von der linken Abdeckung ab.

9. Verbinden Sie den Stecker der Signalleitung (8) mit dem Steckverbinder im Gerät (9). Hängen Sie das Kabel der Signalleitung (10) in den Befestigungshaken (11) ein.

10. Setzen Sie die Stecker-Abdeckung (F) in die Verbindungsplatte (E) ein. Stellen Sie sicher, dass das Kabel nicht eingeklemmt wird. Bringen Sie diese an der in der Abbildung gezeigten Stelle an. Überprüfen Sie, ob der Stecker der Signalleitung von der Stecker-Abdeckung (F) abgedeckt ist.

---

7. Applicare la piastra di connessione (E) alla macchina utilizzando le 2 viti M4 × 20 (J).Fissare nella posizione sopra indicata.

Solo se si installa ad un'MFP a velocità media

Se si installa su una MFP a velocità alta, procedere al passo 9.

8. Rimuovere il coperchio di distacco (7) dal coperchio sinistro.

9. Collegare il connettore di linea del segnale (8) al connettore (9) sulla periferica. Agganciare il cavo di linea del segnale (10) al gancio (11).

10. Inserire il copri connettore (F) nella piastra di connessione (E).Fare attenzione a non impigliare il cavo.Fissare nella posizione sopra indicata.Controllare che il connettore della linea del segnale sia coperto dal copri connettore (F).

---

7. 使用 2 颗 M4×20(J) 螺丝将连接板 (E) 安装到机器上。按图示位置来安装。

仅限安装于中速机上时

安装于高速 MFP 上时，进至步骤 9。

8. 去除左侧盖板上的可去除部（7）。

9. 把信号线的接插件（8）和机器本体的接插件（9）相连接。 把信号线（10）挂到挂钩（11）上。

10. 将接插件盖板 (F) 嵌入到连接板 (E)。请注意不要夹住电线。按图示位置来安装。请确认信号线的接插件是否完全隐藏在接插件盖板中 (F)。

---

7. 나사 M4 × 20(J) 2 개를 사용하여 연결판 (E) 을 본체에 부착합니다 . 위에 표시된 위치에 부착합니다 . 위에 표시된 위치에 부착합니다 .

중속 MFP 에 설치할 경우만

고속 MFP 에 설치하는 경우에는 순서 9 로 진행합니다 .

8. 좌측커버의 분할커버부 (7) 를 떼어 냅니다 .

9. 신호선 커넥터 (8) 를 본체의 커넥터 (9) 에 연결합니다 . 신호선 와이어 (10) 를 후크 (11) 에 걷니다 .

10. 커넥터 커버 (F) 를 연결판 (E) 에 맞추어 끼웁니다 . 전선이 커넥터 커버 (F) 에 끼이지 않도록 주의합니다 . 위에 표시된 위치에 부착합니다 . 신호선 커넥터가 커넥터 커버 (F) 에 덮여있는지 확인합니다 .

---

7. 連結板 (E) をビス M4×20(J)2 本で、機械本体に取り付ける。図の位置で取り付けること。

中速 MFP に設置の場合のみ

高速 MFP に設置の場合は手順 9 に進む。

8. 左カバーの割りカバー部 (7) を切り取る。

9. 信号線のコネクター(8) を機械本体のコネクター(9) に接続する。信号線 (10) は、フック (11) に掛けること。

10. コネクターカバー(F) を連結板 (E) にはめ込む。電線を挟み込まない様注意すること。図の位置で取り付けること。信号線のコネクターがコネクターカバー(F) で隠れていることを確認する。

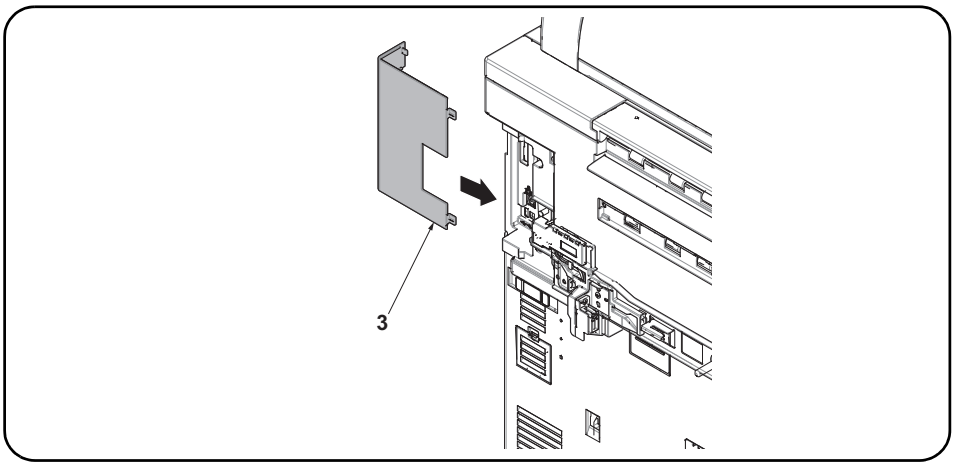

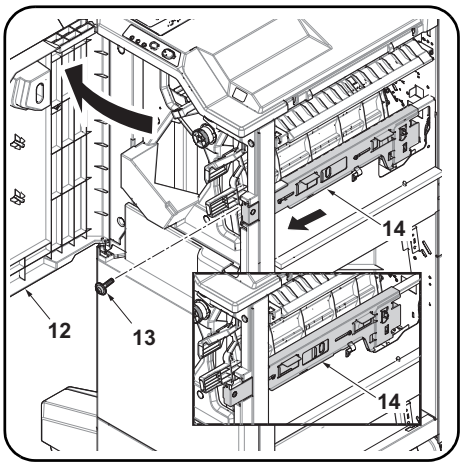

11. Attach the interface cover (3)* on the machine.
* Installing with a high-speed MFP : the cover which was removed in step 4.
Installing with a medium-speed MFP : the cover which was removed while installing the AK-730 or AK-731.

12. Open the document finisher upper front cover (12). Remove the screw (13). Pull the lock frame (14) frontwards.

---

11. Raccordez le couvercle d'interface (3)* à la machine.
* Installation avec une imprimante multifonction à grande vitesse : le cache qui a été retiré à l'étape 4.
Installation avec une imprimante multifonction à moyenne vitesse : le cache qui a été retiré lors de l'installation de l'AK-730 ou AK-731.

12. Ouvrir le couvercle avant supérieur du finisseur de document (12). Retirez la vis (13). Tirer le cadre de verrouillage (14) vers le bas.

---

11. Conecte la cubierta de interfaz (3)* de la máquina.
* Instalación con un MFP de velocidad alta : la cubierta que se quitó en el paso 4.
Instalación con un MFP de velocidad media : la cubierta que se quitó al instalar el kit AK-730 o AK-731.

12. Abra la cubierta frontal superior del finalizador de documentos (12). Quite el tornillo (13). Empuje el marco de cierre (14) hacia delante.

---

11. Bringen Sie die Schnittstellenabdeckung (3)* am Gerät an.
*Installation an einem MFP der Hochleistungsklasse : die Abdeckung, die in Schritt 4 entfernt wurde
Installation an einem MFP der mittleren Leistungsklasse : die Abdeckung, die zur Installation des AK-730 oder AK-731 entfernt wurde

12. Öffnen Sie die obere vordere Abdeckung des Finishers (12). Entfernen Sie die Schraube (13). Ziehen Sie die Verriegelung (14) nach vorne.

---

11. Fissare la copertura di interfaccia (3)* sulla macchina.
* Installazione su un MFP di fascia alta : il coperchio che è stato rimosso al punto 4
Installazione su un MFP di fascia media : il coperchio che è stato rimosso per installare il kit AK-730 o AK-731

12. Aprire il coperchio frontale superiore del finisher documenti (12). Togliere la vite (13). Tirare in avanti la frame di blocco (14).

---

11. 将接口盖板 (3)＊安装到机器主机。
＊安装到高速 MFP 时 ： 在步骤 4 中取下的盖板
安装到中速 MFP 时 ： 在安装 AK-730 或 AK-731 时取下的盖板

12. 打开装订器的前上盖板（12）。取下螺丝（13）。 向身体前侧拉出固定架（14）。

---

11. 인터페이스 커버 (3)* 를 본체에 부착합니다 .
* 고속 MFP 설치의 경우 : 순서 4 에서 제거한 커버
중속 MFP 설치의 경우 : AK-730 또는 AK-731 설치 시 분리한 커버

12. 문서 피니셔의 전면 상커버 (12) 를 엽니다 . 나사 (13) 를 제거합니다 . 잠금 프레임 (14) 을 앞으로 뺍니다 .

---

11. 機械本体にインターフェイスカバー(3)＊を取り付ける。
＊高速 MFP に設置の場合 : 手順 4 で外したカバー
中速 MFP に設置の場合 : AK-730 または AK-731 設置時に取り外したカバー

12. ドキュメントフィニッシャーの前上カバー (12) を開く。ビス (13) を外す。ロックフレーム (14) を手前に引く。

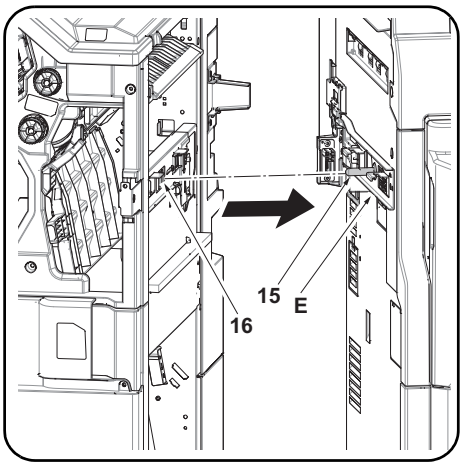

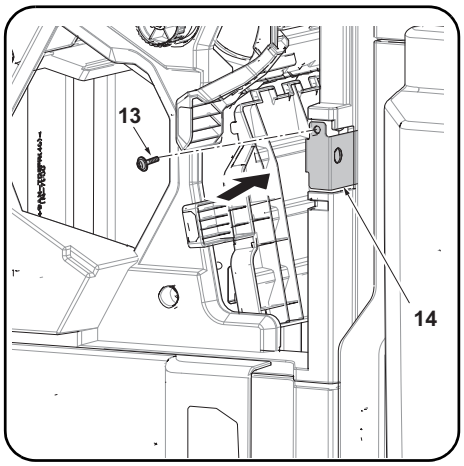

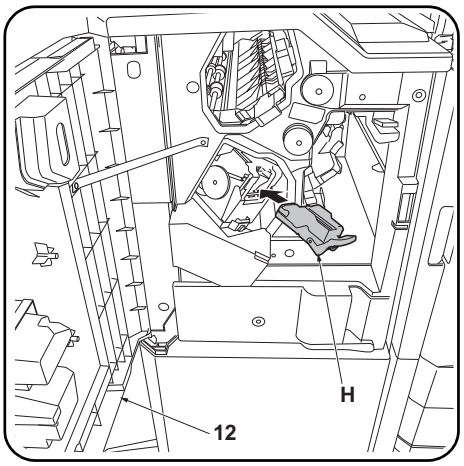

13. Insert the pin (15) on the connecting plate (E) into the hole (16) on the document finisher. Connect the document finisher to the machine.
* If you cannot connect the document finisher, adjust the height as described on page 15.

14. Slowly push the lock frame (14) fully into the machine so that the connectors at the far end are connected.
15. Secure the lock frame (14) using the screw (13) removed in step 12.

16. Install the staple cartridge (H).
17. Close the upper front cover (12).

Proceed to adjusting the stapling position on page 20.

---

13. Introduire la broche (15) sur la plaque de connexion (E) dans le trou (16) sur le finisseur de document. Connecter le finisseur de document sur la machine.
* S'il s'avère impossible de connecter le finisseur de document, en régler la hauteur comme décrit en page 15.

14. Pousser doucement le cadre de verrouillage (14) à fond dans la machine de sorte que les connecteurs à l'extrémité soient raccordés.
15. Fixez le bâti de verrouillage (14) à l'aide de la vis (13) déposée à l'étape 12.

16. Installer la cartouche d'agrafes (H).
17. Refermer le couvercle avant supérieur (12).

Passez à l'ajustement de la position d'agrafage page 20.

---

13. Inserte el pasador (15) de la placa de conexión (E) en el orificio (16) del finalizador de documentos. Conecte el finalizador de documentos a la máquina.
* Si no puede conectar el finalizador de documentos, ajuste la altura como se describe en la página 15.

14. Empuje lentamente y hasta el fondo el marco del cierre (14) hacia la máquina de modo que se conecten los conectores en el extremo más lejano.
15. Asegure la carcasa de bloqueo (14) por medio del tornillo (13) quitado en el paso 12.

16. Instale el cartucho de grapas (H).
17. Cierre la cubierta frontal superior (12).

Proceda al ajuste de la posición de grapado en la página 20.

---

13. Setzen Sie den Stift (15) der Verbindungsplatte (E) in die Öffnung (16) des Finishers. Verbinden Sie den Finisher mit dem Gerät.
* Falls Sie den Finisher nicht anschließen können, sollten Sie die Höhe wie auf Seite 15 beschrieben einstellen.

14. Schieben Sie die Verriegelung (14) wieder langsam ins Gerät, so dass die Verbindungen am anderen Ende des Geräts geschlossen werden.
15. Befestigen Sie den Fixierrahmen (14) mit der in Schritt 12 entfernten Schraube (13).

16. Installieren Sie das Heftklammer-Magazin (H).
17. Schließen Sie die obere vordere Abdeckung (12).

Fahren Sie mit der Justage der Heftposition auf Seite 20 fort.

---

13. Inserire il perno (15) della piastra di connessione (E) nel foro (16) del finisher documenti. Collegare il finisher documenti alla macchina.
* Se non è possibile collegare la finisher documenti, regolare l'altezza come descritto a pagina 15.

14. Spingere lentamente la frame di blocco (14) nella macchina in modo che i connettori all'estremità risultino collegati.
15. Fissare il telaio di bloccaggio (14) utilizzando la vite (13) rimossa nel passo 12.

16. Installare il contenitore punti (H).
17. Chiudere il coperchio superiore anteriore (12).

Proseguire con la regolazione della posizione di pinzatura a pagina 20.

---

13. 将连接板 (E) 的销钉 (15) 插入装订器的孔 (16) 中。 把装订器连接到机器本体。
※ 如果无法连接，请进行 P15 的 “ 高度调节 ”。

14. 慢慢的把固定架 (14) 完全推入机器，这样机器里侧的接插件就可以顺利连接。
15. 使用在步骤 12 中取下的 1 颗螺丝 (13) 来固定锁框 (14)。

16. 安装装订针盒 (H)。
17. 关闭前部上盖板 (12)。

跳至 P20「调节装订位置」。

---

13. 연결판 (E) 의 핀 (15) 을 문서 피니셔의 구멍 (16) 에 삽입합니다 . 문서 피니셔를 본체에 연결합니다 .
※ 연결할 수 없는 경우에는 P15 의 「높이조정」을 할 것 .

14. 본체 뒷쪽의 커넥터가 연결되도록 잠금 프레임 (14) 을 본체 안으로 천천히 밀어 넣습니다 .
15. 순서 12 에서 뺀 나사 (13) 1 개로 잠금 프레임 (14) 을 고정합니다 .

16. 스테이플 카트리지 (H) 를 설치합니다 .
17. 앞 상커버 (12) 를 닫습니다 .

20 페이지의 스테이플 위치 조정으로 진행합니다 .

---

13. 連結板 (E) のピン (15) をドキュメントフィニッシャーの穴 (16) に挿入する。ドキュメントフィニッシャーを機械本体に接続する。
※ 連結できない場合は、P15 の「高さ調整」を行う。

14. 機械奥側のコネクタが接続されるように、ロックフレーム (14) をゆっくり奥に押す。
15. 手順 12 で外したビス (13) で、ロックフレーム (14) を固定する。

16. ステープルカートリッジ (H) を取り付ける。
17. 前上カバー (12) を閉じる。

P20「ステープル位置の調整」に進む。

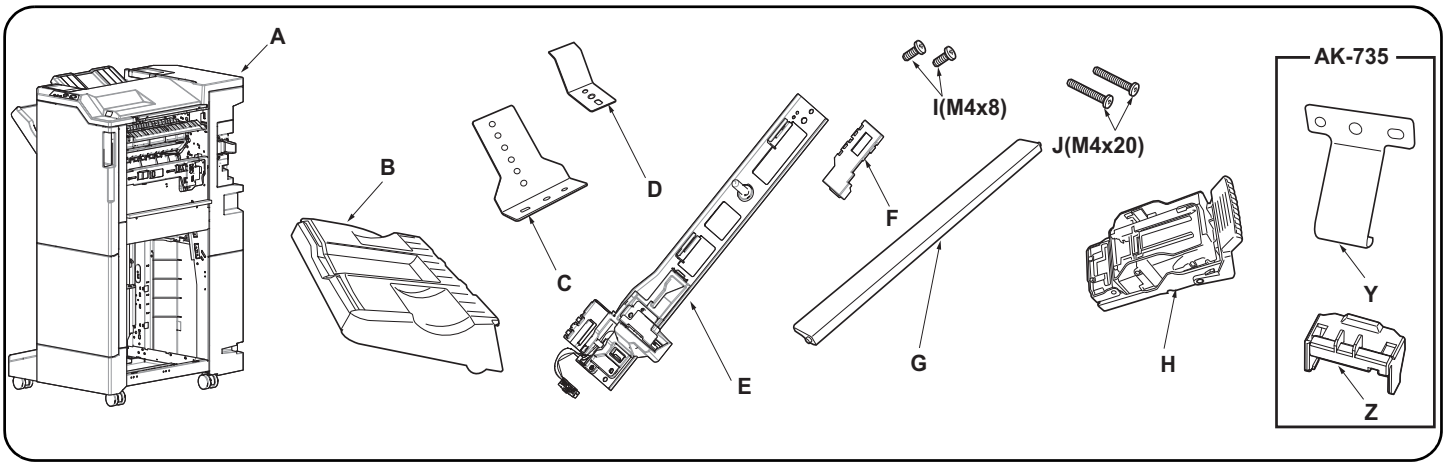

Supplied parts

A. Document finisher 1
B. Eject tray 1
C. Earth connection plate 1
D. Earth spring 1
E. Connecting plate 1
F. Connector cover 1
G. Eject guide 1
H. Staple cartridge 1
I. M4 × 8 screw 3
J. M4 × 20 screw 2
K. Earth Plate 1
L. Cover 1

C ,D and Z are not used.

Be sure to remove any tape and/or cushioning materials from the parts supplied.

Pièces fournies

A. Finisseur de document 1
B. Bac d'éjection 1
C. Plaque de raccordement de mise à la terre 1
D. Ressort de mise à la terre 1
E. Plaque de connexion 1
F. Cache de connecteur 1
G. Guide d'éjection 1
H. Cartouche d'agrafes 1
I. Vis M4 × 8 2
J. Vis M4 × 20 2
Y. Plaque de terre 1
Z. Couvercle 1

C, D et Z ne sont pas utilisés.

Veillez à retirer les morceaux de bande adhésive et/ou les matériaux de rembourrage des pièces fournies.

Partes suministradas

A. Finalizador de documentos 1
B. Bandeja de salida 1
C. Placa de conexión a tierra 1
D. Resorte de conexión a tierra 1
E. Placa de conexión 1
F. Cubierta del conector 1
G. Guía de salida 1
H. Cartucho de grapas 1
I. Tornillo M4 × 8 2
J. Tornillo M4 × 20 2
Y. Placa de conexión a tierra 1
Z. Cubierta 1

C, D y Z no se utilizan.

Asegúrese de despegar todas las cintas y/o material amortiguador de las partes suministradas.

Enthaltene Teile

A. Finisher 1
B. Auswerffach 1
C. Grundanschlussplatte 1
D. Grundfeder 1
E. Verbindungsplatte 1
F. Stecker-Abdeckung 1
G. Ausgabeführung 1
H. Heftklammermagazin 1
I. M4 × 8 Schraube 2
J. M4 × 20 Schraube 2
Y. Grundplatte 1
Z. Abdeckung 1

C, D und Z werden nicht benötigt.

Stellen Sie sicher, dass sämtliche Klebebänder und/oder Polstermaterial von den gelieferten Teilen entfernt wurden.

Parti fornite

A. Finisher documenti 1
B. Vassoio di espulsione 1
C. Piastra di connessione per messa a terra . 1
D. Molla di messa a terra 1
E. Piastra di connessione 1
F. Copri connettore 1
G. Guida di espulsione 1
H. Contenitore punti 1
I. Vite M4 × 8 2
J. Vite M4 × 20 2
Y. Piastra di messa a terra 1
Z. Coperchio 1

C, D e Z non sono utilizzati.

Rimuovere tutti i nastri adesivi e/o i materiali di protezione dalle parti fornite.

附属品

A. 装订器 1
B. 排纸托盘 1
C. 接地安装板 1
D. 接地弹簧 1
E. 连接板 1
F. 接插件盖板 1
G. 排纸导向板 1
H. 装订针盒 1
I. M4×8 螺丝 2
J. M4×20 螺丝 2
Y. 接地板 1
Z. 盖板 1

不使用 C、D 和 Z。

如果附属品上带有固定胶带，缓冲材料时务必揭下。

동봉품

A. 문서 피니셔 1
B. 배출 트레이 1
C. 접지 부착판 1
D. 접지 스프링 1
E. 연결판 1
F. 커넥터 커버 1
G. 배출 가이드 1
H. 스테이플 카트리지 1
I. 나사 M4×8 2
J. 나사 M4×20 2
Y. 접지판 1
Z. 커버 1

C, D 와 Z 는 사용되지 않습니다 .

동봉품에 고정 테이프 , 완충재가 붙어 있는 경우에는 반드시 제거할 것 .

同梱品

A. ドキュメントフィニッシャー 1
B. 排出トレイ 1
C. アース取付板 1
D. アースバネ 1
E. 連結板 1
F. コネクターカバー 1
G. 排出ガイド 1
H. ステープルカートリッジ 1
I. ビス M4×8 2
J. ビス M4×20 2
Y. アース板 1
Z. カバー 1

C,D,Z は使用しない。

同梱品に固定テープ、緩衝材がついている場合は、必ず取り外すこと。

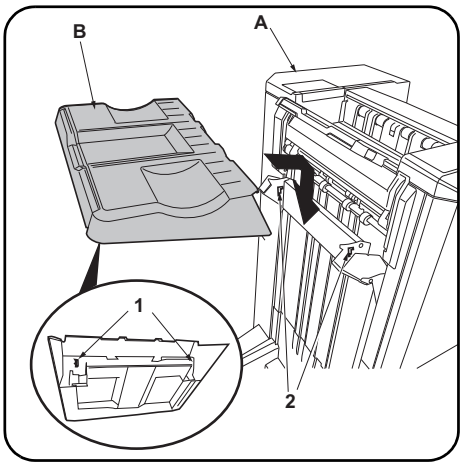

NOTICE
The Attachment Kit (AK-735) must be installed before the document finisher is installed.

Procedure
Before starting installation, be sure to turn the main power switch of the machine off, and unplug the power plug from the wall outlet.

1. Install by inserting the 2 hooks (1) on the back of the eject tray (B) into the holes (2) in the document finisher (A) lift.

REMARQUE
Le gabarit de fixation (AK-735) doit être en place avant de procéder à l'installation du finisseur de document.

Procédure
Avant de commencer l'installation, s'assurer de mettre la machine hors tension et de débrancher la fiche d'alimentation de la prise murale.

1. Procéder en insérant les 2 crochets (1) au dos du bac d'éjection (B) dans les trous (2) du dispositif de levage du finisseur document (A).

AVISO
El Kit de instalación (AK-735) debe instalarse antes de instalar el finalizador de documentos.

Procedimiento
Antes de iniciar la instalación, asegúrese de apagar el interruptor de encendido de la máquina y desenchufar el cable de alimentación de la toma de pared.

1. Instale insertando los 2 ganchos (1) de la parte posterior de la bandeja de salida (B) en los orificios (2) del elevador del finalizador de documentos (A).

ANMERKUNG
Das Gerätezusatz (AK-735) muss installiert werden, bevor man den Finisher installiert.

Verfahren
Bevor Sie mit der Installation beginnen überzeugen Sie sich, dass der Netzschalter des Geräts ausgeschaltet und das Stromkabel aus der Steckdose gezogen ist.

1. Setzen Sie die 2 Haken (1) zur Befestigung an der Rückseite des Auswerffachs (B) in die Öffnungen (2) an der Hebeplatte des Finishers (A) ein.

AVVISO
Il kit accessorio (AK-735) deve essere installato prima che sia installata la finisher documenti.

Procedura
Prima di iniziare l'installazione, spegnere la macchina e scollegare la spina dalla presa di corrente.

1. Installare inserendo i 2 ganci (1) sul retro del vassoio di espulsione (B) nei fori (2) sul sollevatore della finisher documenti (A).

注意
安装装订器之前，必须先安装连接组件（AK-735）。

安装步骤
安装前务必关闭机器的主电源开关，并从墙壁插座拔下电源插头。

1. 将排纸托盘（B）内侧的 2 个挂钩（1）装入装订器（A）的升降板的孔（2）中。

주의
문서 피니셔를 장착하기 전에 연결킷 (AK-735) 의 장착을 선행할 것 .

장착순서
설치를 시작하기 전에 반드시 본체의 주 전원 스위치를 끄고 벽 콘센트에서 전원 플러그를 분리하십시오 .

1. 배출 트레이 (B) 의 후면 후크 (1) 2 개를 문서 피니셔 (A) 의 승강판 구멍 (2) 에 넣고 장착합니다 .

注意
ドキュメントフィニッシャーを取り付ける前に、アタッチメントキット(AK-735) の取り付けをおこなうこと。

取付手順
必ず機械本体の主電源スイッチを OFF にし、機械本体の電源プラグを抜いてから作業すること。

1. 排出トレイ (B) の裏側のフック (1)2 個をドキュメントフィニッシャー(A) の昇降板の穴 (2) に入れて、取り付ける。

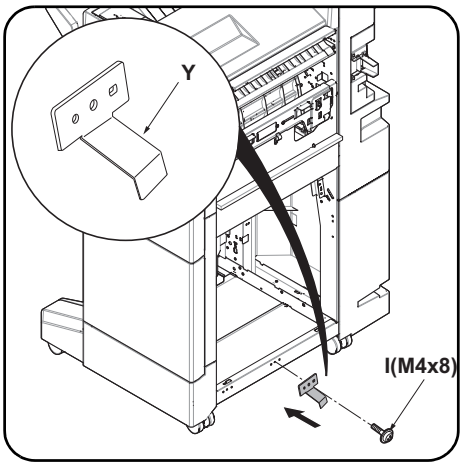

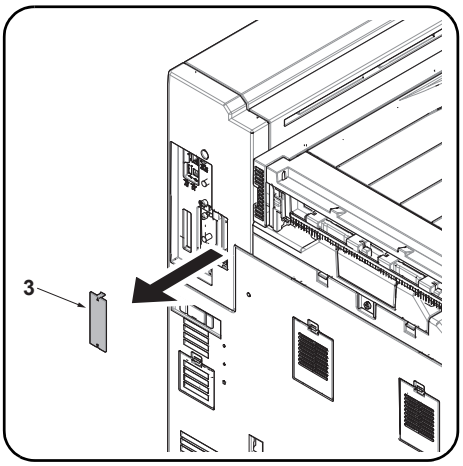

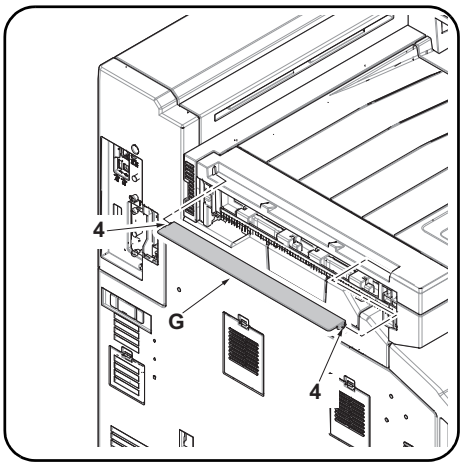

2. Attach the earth plate (Y)* to the center of the bottom of the document finisher using an M4 × 8 screw (I).
*The part was supplied with AK-735

3. Remove the cover (3) from the machine.

4. Install the eject guide (G) by fitting the 2 eject guide pins (4) into the holes in the machine.

---

2. Raccordez la plaque de terre (Y)* en bas au centre du finisseur de document en utilisant une vis M4 × 8 (I).
*La pièce a été fournie avec l'AK-735

3. Retirer le couvercle (3) de la machine.

4. Installer le guide d'éjection (G) en insérant les 2 ergots du guide d'éjection (4) dans les trous de la machine.

---

2. Conecte la placa de conexión a tierra (Y)* al centro de la parte inferior del finalizador de documentos con un tornillo M4 × 8 (I).
*La pieza se proporcionó con AK-735

3. Quite la cubierta (3) de la máquina.

4. Instale la guía de salida (G) encajando los 2 pasadores de la guía de salida (4) en los orificios de la máquina.

---

2. Bringen Sie die Grundplatte (Y)* in der Mitte des Bodens des Finishers mit den M4 x 8 Schrauben (I) an.
*Dieses Teil ist im AK-735 enthalten.

3. Entfernen Sie die Abdeckung (3) vom Gerät.

4. Installieren Sie die Ausgabeführung (G), indem Sie die beiden Stifte (4) der Auswerfführung in die Aufnahmen des Geräts einsetzen.

---

2. Applicare la piastra di messa a terra (Y)* al centro dell'area inferiore della finisher documenti utilizzando una vite M4 × 8 (I).
*Parte fornita con AK-735

3. Rimuovere il coperchio (3) dalla macchina.

4. Installare la guida di espulsione (G) inserendo i 2 perni (4) della guida di espulsione nei fori della macchina.

---

2. 使用 M4×8(I) 螺丝将接地板 (Y)* 安装到装订器下部中央。
*AK-735 的附属品

3. 从机器上拆下盖板（3）。

4. 将排纸导向板 (G) 的 2 根销钉 (4) 插入机器的孔中。

---

2. 나사 M4 × 8(I) 를 사용하여 접지판 (Y)* 을 문서 피니셔의 하단 중앙에 부착합니다 .
*AK-735 동봉 부품

3. 본체에서 커버 (3) 를 분리합니다 .

4. 배출 가이드 (G) 의 핀 (4) 2 개를 본체의 구멍에 맞추어 끼워서 부착합니다 .

---

2. ビス M4×8(I) でアース板 (Y)* をドキュメントフィニッシャー下部センターに取り付ける。
*AK-735 の同梱品

3. 機械本体からカバー(3) を取り外す。

4. 排出ガイド (G) のピン (4)2 本を機械本体の穴に差し込み取り付ける。

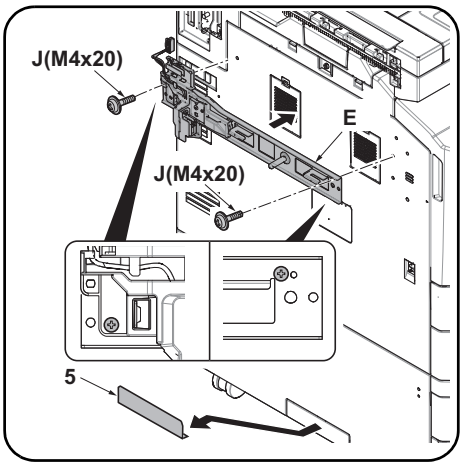

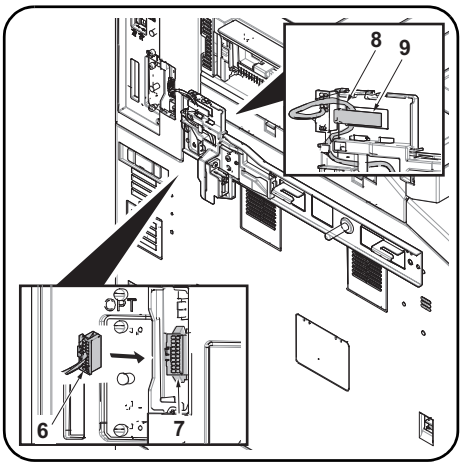

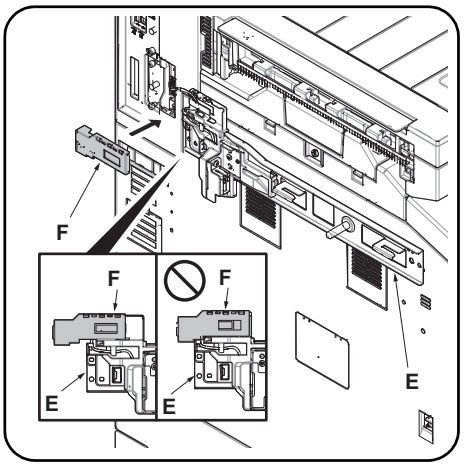

5. Attach the connecting plate (E) to the machine using 2 M4 × 20 screws (J).Attach them at the point as shown above.
6. Remove the breakaway cover (5) from the left cover.

7. Connect the signal line connector (6) to the connector (7) on the machine. Hook the signal line wire (8) onto the hook (9).

8. Fit the connector cover (F) in the connecting plate (E).Take care not to get the cable pinched by objects.Attach it at the point as shown above.Check that the signal line connector is covered by the connector cover (F).

---

5. Fixez la plaque de connexion (E) à la machine à l'aide de 2 vis M4 × 20 (J). Raccordez-les au point indiqué ci-dessus.
6. Déposer le couvercle amovible (5) du couvercle gauche.

7. Raccorder le connecteur de ligne de signal (6) sur le connecteur (7) de la machine. Accrocher le fil de ligne de signal (8) sur le crochet (9).

8. Placer le cache de connecteur (F) dans la plaque de connexion (E). Prendre soin à ne pas pincer le câble. Raccordez-les au point indiqué ci-dessus. Vérifier que le connecteur de ligne de signal est couvert par le cache de connecteur (F).

---

5. Fije la placa de conexión (E) a la máquina mediante 2 tornillos M4 × 20 (J). Conéctelas en el punto que se muestra arriba.
6. Quite la cubierta divisoria (5) de la cubierta izquierda.

7. Conecte el conector de línea de señales (6) al conector (7) de la máquina. Enganche el cable de la línea de señales (8) en el enganche (9).

8. Acople la cubierta del conector (F) en la placa de conexión (E). Tenga cuidado de que el cable no quede atrapado por objetos. Conéctelas en el punto que se muestra arriba. Compruebe que el conector de la línea de señales quede cubierto por la cubierta del conector (F).

---

5. Bringen Sie die Verbindungsplatte (E) mit 2 M4 × 20 Schrauben (J) am Gerät an. Bringen Sie diese an der in der Abbildung gezeigten Stelle an.
6. Nehmen Sie die Ablösungsabdeckung (5) von der linken Abdeckung ab.

7. Verbinden Sie den Stecker der Signalleitung (6) mit dem Steckverbinder im Gerät (7). Hängen Sie das Kabel der Signalleitung (8) in den Befestigungshaken (9) ein.

8. Setzen Sie die Stecker-Abdeckung (F) in die Verbindungsplatte (E) ein. Stellen Sie sicher, dass das Kabel nicht eingeklemmt wird. Bringen Sie diese an der in der Abbildung gezeigten Stelle an. Überprüfen Sie, ob der Stecker der Signalleitung von der Stecker-Abdeckung (F) abgedeckt ist.

---

5. Applicare la piastra di connessione (E) alla macchina utilizzando le 2 viti M4 × 20 (J). Fissare nella posizione sopra indicata.
6. Rimuovere il coperchio di distacco (5) dal coperchio sinistro.

7. Collegare il connettore di linea del segnale (6) al connettore (7) sulla periferica. Agganciare il cavo di linea del segnale (8) al gancio (9).

8. Inserire il copri connettore (F) nella piastra di connessione (E). Fare attenzione a non impigliare il cavo. Fissare nella posizione sopra indicata. Controllare che il connettore della linea del segnale sia coperto dal copri connettore (F).

---

5. 使用 2 颗 M4×20(J) 螺丝将连接板 (E) 安装到机器上。 按图示位置来安装。
6. 去除左侧盖板上的可去除部(5)。

7. 把信号线的接插件 (6) 和机器本体的接插件 (7) 相连接。 把信号线 (8) 挂到挂钩 (9) 上。

8. 将接插件盖板 (F) 嵌入到连接板 (E)。 请注意不要夹住电线。 按图示位置来安装。请确认信号线的接插件是否完全隐藏在接插件盖板中 (F)。

---

5. 나사 M4 × 20(J) 2 개를 사용하여 연결판 (E) 을 본체에 부착합니다 . 위에 표시된 위치에 부착합니다 .
6. 좌측커버의 분할커버부 (5) 를 떼어 냅니다 .

7. 신호선 커넥터 (6) 를 본체의 커넥터 (7) 에 연결합니다 . 신호선 와이어 (8) 를 후크 (9) 에 겁니다 .

8. 커넥터 커버 (F) 를 연결판 (E) 에 맞추어 끼웁니다 . 전선이 커넥터 커버 (F) 에 끼이지 않도록 주의합니다 . 위에 표시된 위치에 부착합니다 . 신호선 커넥터가 커넥터 커버 (F) 에 덮여있는지 확인합니다 .

---

5. 連結板 (E) をビス M4×20(J)2 本で、機械本体に取り付ける。図の位置で取り付けること。
6. 左カバーの割りカバー部 (5) を切り取る。

7. 信号線のコネクター(6) を機械本体のコネクター(7) に接続する。信号線 (8) は、フック (9) に掛けること。

8. コネクターカバー(F) を連結板 (E) にはめ込む。電線を挟み込まない様注意すること。図の位置で取り付けること。信号線のコネクターがコネクターカバー(F) で隠れていることを確認する。

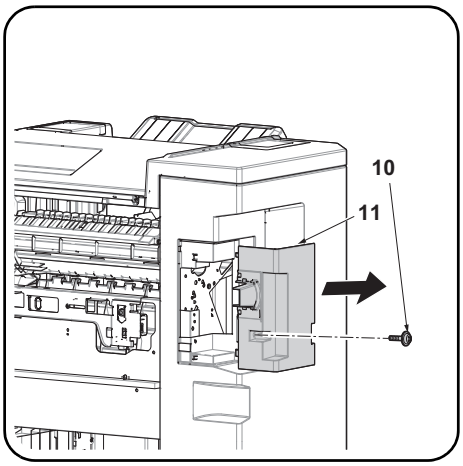

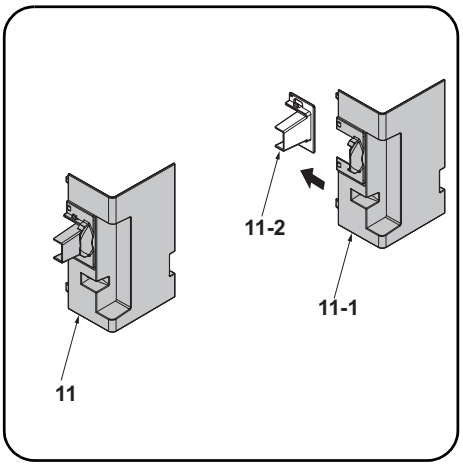

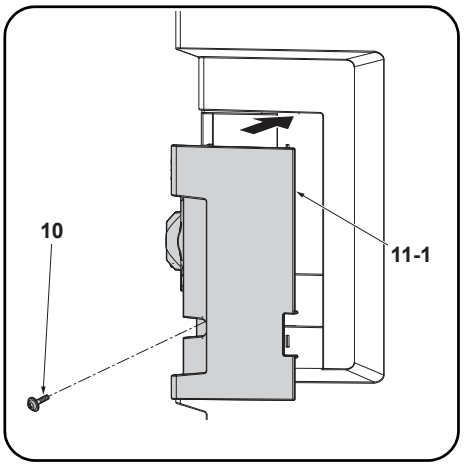

9. Remove the screw (10).Remove the rear cover (11) .

10. Separate the rear cover (11) into the two covers(11-1,11-2).
The cover(11-2) isnot used.

11. Install the cover (11-1) using the screw (10).

---

9. Retirez la vis (10). Retire le capot arrière (11).

10. Séparez le couvercle arrière (11) en deux couvercles (11-1, 11-2).
Le couvercle (11-2) n'est pas utilisé.

11. Installez le couvercle (11-1) à l'aide de la vis (10).

---

9. Quite el tornillo (10). Quite la cubierta posterior (11).

10. Separe la cubierta posterior (11) en las dos cubiertas (11-1, 11-2).
La cubierta (11-2) no se utiliza.

11. Instale la cubierta (11-1) con un tornillo (10).

---

9. Entfernen Sie die Schraube (10). Entfernen Sie die hintere Abdeckung (11).

10. Teilen Sie die hintere Abdeckung (11) in zwei Abdeckungen (11-1, 11-2) auf.
Die Abdeckung (11-2) wird nicht benötigt.

11. Installieren Sie die Abdeckung (11-1) mit den Schrauben (10).

---

9. Togliere la vite (10). Rimuovere il coperchio posteriore (11).

10. Separare il coperchio posteriore (11) in due coperchi (11-1,11-2).
Il coperchio (11-2) non viene utilizzato.

11. Installare il coperchio (11-1) utilizzando la vite (10).

---

9. 取下螺丝（10）。 取下后盖板（11）。

10. 将后盖板（11）分成 2 个盖板（11-1, 11-2）。
不需要盖板（11-2）。

11. 使用螺丝（10）来安装盖板（11-1）。

---

9. 나사 (10) 를 제거합니다 . 후면 커버 (11) 를 제거합니다 .

10. 후면 커버 (11) 를 2개의 커버 (11-1, 11-2) 로 분리합니다 .
커버 (11-2) 는 사용되지 않습니다 .

11. 나사 (10) 를 사용하여 커버 (11-1) 를 장착합니다 .

---

9. ビス（10）を外す。後カバー(11) を取り外す。

10. 後カバー(11) を 2 つのカバー(11-1, 11-2) に分ける。
カバー(11-2) は不要。

11. ビス（10）でカバー(11-1)を取り付ける。

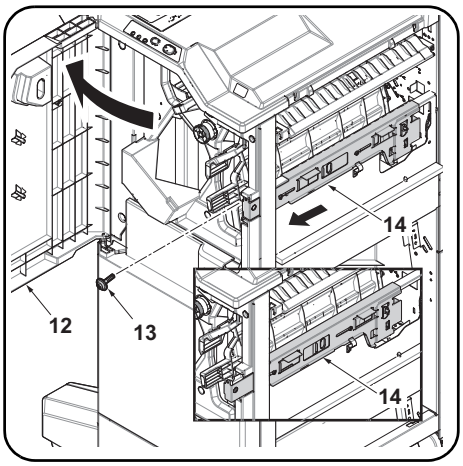

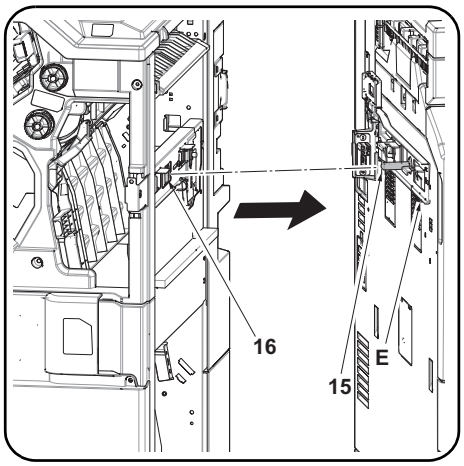

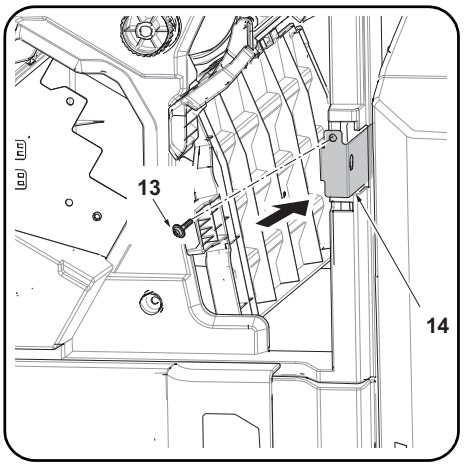

12. Open the document finisher upper front cover (12). Remove the screw (13).Pull the lock frame (14) frontwards.

13. Insert the pin (15) on the connecting plate (E) into the hole (16) on the document finisher.Connect the document finisher to the machine.
* If you cannot connect the document finisher, adjust the height as described on page 15.

14. Slowly push the lock frame (14) fully into the machine so that the connectors at the far end are connected.

15. Secure the lock frame (14) using the screw (13) removed in step 12.

---

12. Ouvrir le couvercle avant supérieur du finisseur de document (12). Retirez la vis (13). Tirer le cadre de verrouillage (14) vers le bas.

13. Introduire la broche (15) sur la plaque de connexion (E) dans le trou (16) sur le finisseur de document.Connecter le finisseur de document sur la machine.
* S'il s'avère impossible de connecter le finisseur de document, en régler la hauteur comme décrit en page 15.

14. Pousser doucement le cadre de verrouillage (14) à fond dans la machine de sorte que les connecteurs à l'extrémité soient raccordés.

15. Fixez le bâti de verrouillage (14) à l'aide de la vis (13) déposée à l'étape 12.

---

12. Abra la cubierta frontal superior del finalizador de documentos (12). Quite el tornillo (13). Empuje el marco de cierre (14) hacia delante.

13. Inserte el pasador (15) de la placa de conexión (E) en el orificio (16) del finalizador de documentos.Conecte el finalizador de documentos a la máquina.
* Si no puede conectar el finalizador de documentos, ajuste la altura como se describe en la página 15.

14. Empuje lentamente y hasta el fondo el marco del cierre (14) hacia la máquina de modo que se conecten los conectores en el extremo más lejano.

15. Asegure la carcasa de bloqueo (14) por medio del tornillo (13) quitado en el paso 12.

---

12. Öffnen Sie die obere vordere Abdeckung des Finishers (12). Entfernen Sie die Schraube (13). Ziehen Sie die Verriegelung (14) nach vorne.

13. Setzen Sie den Stift (15) der Verbindungsplatte (E) in die Öffnung (16) des Finishers. Verbinden Sie den Finisher mit dem Gerät.
* Falls Sie den Finisher nicht anschließen können, sollten Sie die Höhe wie auf Seite 15 beschrieben einstellen.

14. Schieben Sie die Verriegelung (14) wieder langsam ins Gerät, so dass die Verbindungen am anderen Ende des Geräts geschlossen werden.

15. Befestigen Sie den Fixierrahmen (14) mit der in Schritt 12 entfernten Schraube (13).

---

12. Aprire il coperchio frontale superiore del finisher documenti (12). Togliere la vite (13). Tirare in avanti la frame di blocco (14).

13. Inserire il perno (15) della piastra di connessione (E) nel foro (16) del finisher documenti. Collegare il finisher documenti alla macchina.
* Se non è possibile collegare la finisher documenti, regolare l'altezza come descritto a pagina 15.

14. Spingere lentamente la frame di blocco (14) nella macchina in modo che i connettori all'estremità risultino collegati.

15. Fissare il telaio di bloccaggio (14) utilizzando la vite (13) rimossa nel passo 12.

---

12. 打开装订器的前上盖板（12）。 取下螺丝（13）。 向身体前侧拉出固定架（14）。

13. 将连接板 (E) 的销钉（15）插入装订器的孔（16）中。把装订器连接到机器本体。
※ 如果无法连接，请进行 P15 的 “ 高度调节 ” 。

14. 慢慢的把固定架（14）完全推入机器，这样机器里侧的接插件就可以顺利连接。

15. 使用在步骤 12 中取下的 1 颗螺丝 (13) 来固定锁框 (14)。

---

12. 문서 피니셔의 전면 상커버 (12) 를 엽니다 . 나사 (13) 를 제거합니다 . 잠금 프레임 (14) 을 앞으로 뺍니다 .

13. 연결판 (E) 의 핀 (15) 을 문서 피니셔의 구멍 (16) 에 삽입합니다 . 문서 피니셔를 본체에 연결합니다 .
※ 연결할 수 없는 경우에는 P15 의「높이조정」을 할 것 .

14. 본체 뒷쪽의 커넥터가 연결되도록 잠금 프레임 (14) 을 본체 안으로 천천히 밀어 넣습니다 .

15. 순서 12 에서 뺀 나사 (13) 1 개로 잠금 프레임 (14) 을 고정합니다 .

---

12. ドキュメントフィニッシャーの前上カバー (12) を開く。ビス (13) を外す。ロックフレーム (14) を手前に引く。

13. 連結板 (E) のピン (15) をドキュメントフィニッシャーの穴 (16) に挿入する。ドキュメントフィニッシャーを機械本体に接続する。
※ 連結できない場合は、P15 の「高さ調整」を行う。

14. 機械奥側のコネクタが接続されるように、ロックフレーム (14) をゆっくり奥に押す。

15. 手順 12 で外したビス (13) で、ロックフレーム (14) を固定する。

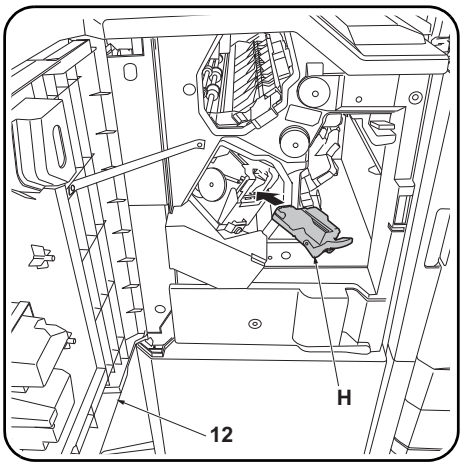

16. Install the staple cartridge (H).
17. Close the upper front cover (12).

Proceed to adjusting the stapling position on page 20.

---

16. Installer la cartouche d'agrafes (H).
17. Refermer le couvercle avant supérieur (12).

Passez à l'ajustement de la position d'agrafage page 20.

---

16. Instale el cartucho de grapas (H).
17. Cierre la cubierta frontal superior (12).

Proceda al ajuste de la posición de grapado en la página 20.

---

16. Installieren Sie das Heftklammer-Magazin (H).
17. Schließen Sie die obere vordere Abdeckung (12).

Fahren Sie mit der Justage der Heftposition auf Seite 20 fort.

---

16. Installare il contenitore punti (H).
17. Chiudere il coperchio superiore anteriore (12).

Proseguire con la regolazione della posizione di pinzatura a pagina 20.

---

16. 安装装订针盒 (H)。
17. 关闭前部上盖板 (12)。

跳至 P20「调节装订位置」。

---

16. 스테이플 카트리지 (H) 를 설치합니다 .
17. 앞 상커버 (12) 를 닫습니다 .

20 페이지의 스테이플 위치 조정으로 진행합니다 .

---

16. ステープルカートリッジ (H) を取り付ける。
17. 前上カバー(12) を閉じる。

P20「ステープル位置の調整」に進む。

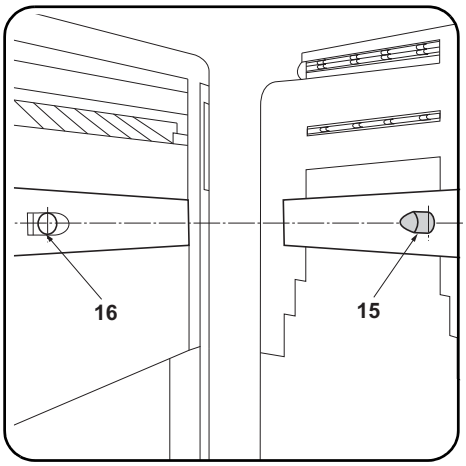

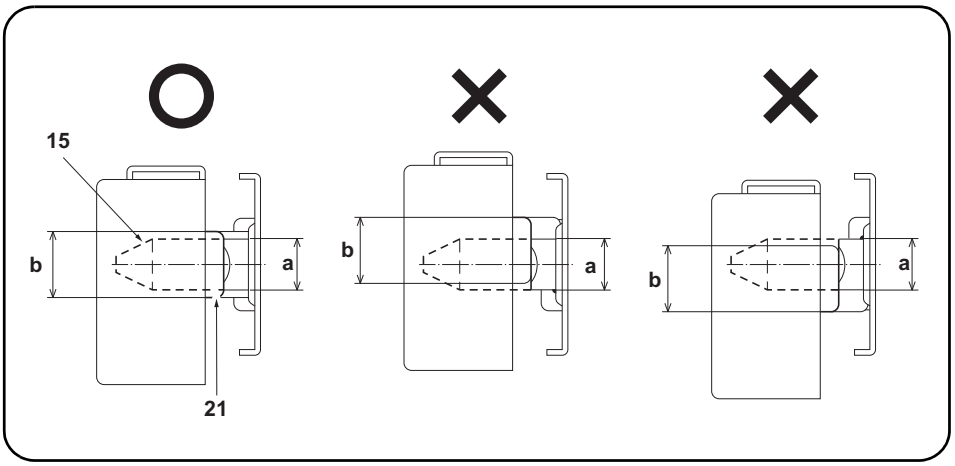

Adjusting the height

1. Check that the respective heights of the pins (15) on the connecting plate installed on the machine and the connecting holes (16) on the document finisher comply with the references below.

Compliant: The diameter (a) of the pin (15) is within the height range (b) of the curved section (21).
Non-compliant: The diameter (a) of the pin (15) is extends beyond the height range (b) of the curved section (21).
If the heights are non-compliant, use the procedure below to adjust the height.

Réglage de la hauteur

1. Vérifiez que les hauteurs respectives des ergots (15) sur la plaque de connexion installée sur la machine et les trous de connexion (16) sur le finisseur de document sont conformes aux références ci-dessous.

Bon : Le diamètre (a) de l'ergot (15) est dans les limites de hauteur (b) de la partie courbée (21).
Mauvais : Le diamètre (a) de l'ergot (15) dépasse les limites de hauteur (b) de la partie courbée (21).
Si la hauteur n'est pas conforme, l'ajuster en procédant comme indiqué ci-dessous.

Ajuste de la altura

1. Compruebe que las alturas correspondientes de los pasadores (15) de la placa de fijación instalados en la máquina y los orificios de conexión (16) del finalizador de documentos cumplen las referencias de abajo.

Cumple: el diámetro (a) del pasador (15) está dentro del rango de altura (b) de la sección curvada (21).
No cumple: el diámetro (a) del pasador (15) sobrepasa el rango de altura (b) de la sección curvada (21).
Si las alturas no cumplen con las especificaciones, utilice el siguiente procedimiento para ajustar la altura.

Einstellen der Höhe

1. Überprüfen Sie, dass die jeweilige Höhe der Stifte (15) der am Gerät installierten Verbindungsplatte und Verbindungsöffnungen (16) des Finishers mit den unten angegebenen Werten übereinstimmen.

Korrekt: Der Durchmesser (a) des Stifts (15) befindet sich im Höhenbereich (b) des Kurvenabschnitts (21).
Nicht korrekt: Der Durchmesser (a) des Stifts (15) ragt über den Höhenbereich (b) des Kurvenabschnitts (21) hinaus.
Falls die Höhen nicht korrekt sind, müssen Sie sie wie folgend einstellen.

Regolazione dell'altezza

1. Controllare che le rispettive altezze dei perni (15) sulla piastra di connessione installata sulla macchina e i fori di connessione (16) sulla finisher documenti corrispondano ai riferimenti mostrati sotto.

Conformità: Il diametro (a) del perno (15) è compreso nella gamma di altezza (b) della sezione curvata (21).
Non conformità: Il diametro (a) del perno (15) si estende oltre la gamma di altezza (b) della sezione curvata (21).
Se le altezze sono non corrispondenti, utilizzare la procedura riportata sotto per regolare l'altezza.

高度调节

1. 确认机器主机上安装的连接板的销钉 (15) 和装订器的连接用的孔 (16) 的高度是否符合以下标准。

符　合: 销钉 (15) 的直径 (a) 在弯曲部 (21) 的高度 (b) 的范围内。
不符合: 销钉 (15) 的直径 (a) 超出了弯曲部 (21) 的高度 (b) 的范围。
不符合时，通过以下步骤进行调节。

높이조정

1. 본체에 설치된 연결판의 핀 (15) 과 문서 피니셔의 연결용 구멍 (16) 의 각 높이가 아래의 기준에 부합하는지 확인합니다 .

적 합 :핀 (15) 의 직경 (a) 가 곡선부 (21) 의 높이 (b) 의 범위에 들어간다 .
부적합:핀 (15) 의 직경 (a) 가 곡선부 (21) 의 높이 (b) の 범위를 넘는다 .
부적합의 경우에는 이하의 순서대로 조정합니다 .

高さ調整

1. 機械本体に取り付けた連結板のピン (15) とドキュメントフィニッシャーの連結用の穴 (16) の高さが以下の基準に適合するか確認する。

適　合:ピン (15) の直径 (a) が曲げ部 (21) の高さ (b) の範囲に収まっている。
不適合:ピン (15) の直径 (a) が曲げ部 (21) の高さ (b) の範囲からはみだしている。
不適合の場合は、以下の手順で調整する。

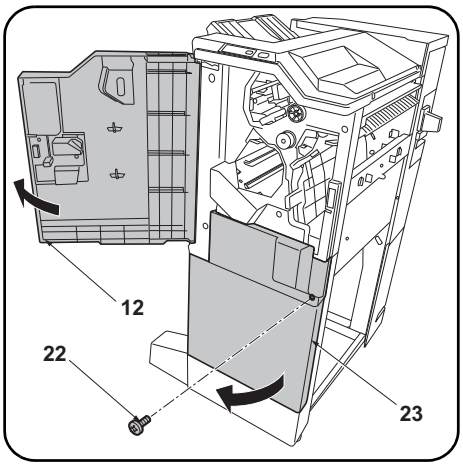

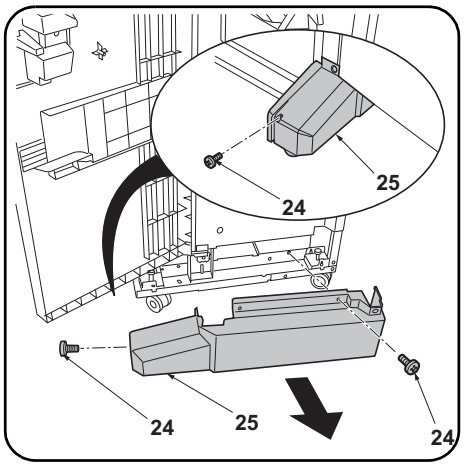

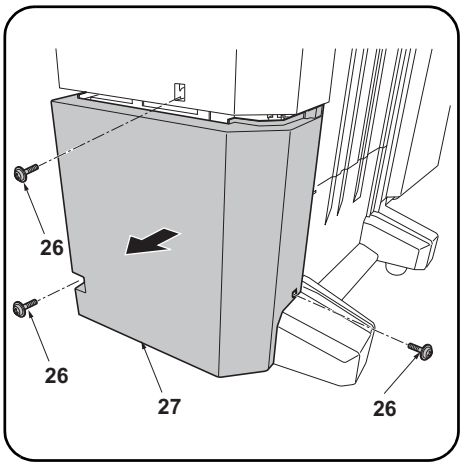

2. Open the upper front cover (12) of the document finisher.
3. Remove the screw (22) and open the lower front cover (23).

4. Remove the 2 screws (24) and remove the foot cover (25).

5. Remove the 3 screws (26) and remove the lower rear cover (27).

---

2. Ouvrir le couvercle avant supérieur (12) du finisseur de document.
3. Déposer la vis (22) et ouvrir le couvercle avant inférieur (23).

4. Déposer les 2 vis (24) puis le couvercle du pied (25).

5. Déposer les 3 vis (26) puis le couvercle arrière inférieur (27).

---

2. Abra la cubierta frontal superior (12) del finalizador de documentos.
3. Quite el tornillo (22) y abra la cubierta frontal inferior (23).

4. Quite los 2 tornillos (24) y quite la cubierta de la pata (25).

5. Quite los 3 tornillos (26) y quite la cubierta posterior inferior (27).

---

2. Öffnen Sie die obere vordere Abdeckung (12) des Finishers.
3. Entfernen Sie die Schraube (22) und öffnen Sie die untere vordere Abdeckung (23).

4. Entfernen Sie die 2 Schrauben (24) und nehmen Sie die Fußabdeckung (25) ab.

5. Entfernen Sie die 3 Schrauben (26) und nehmen Sie die untere hintere Abdeckung (27) ab.

---

2. Aprire il coperchio superiore anteriore (12) della finisher documenti.
3. Rimuovere la vite (22) ed aprire il coperchio inferiore anteriore (23).

4. Rimuovere le 2 viti (24) e quindi rimuovere la copertura del piede (25).

5. Rimuovere le 3 viti (26) e quindi rimuovere il coperchio inferiore posteriore (27).

---

2. 打开装订器的前部上盖板 (12)。
3. 拆除 1 颗螺丝 (22)，打开前部下盖板 (23)。

4. 拆除 2 颗螺丝 (24)，拆下脚座盖板 (25)。

5. 拆除 3 颗螺丝 (26)，拆下后部下盖板 (27)。

---

2. 문서 피니셔 앞 상커버 (12) 를 엽니다 .
3. 나사 (22) 1 개를 제거하고 앞 하커버 (23) 를 엽니다 .

4. 나사 (24) 2 개를 제거하고 , 풋커버 (25) 를 제거합니다 .

5. 나사 (26) 3 개를 제거하고 , 뒤 하커버 (27) 를 제거합니다 .

---

2. ドキュメントフィニッシャーの前上カバー (12) を開く。
3. ビス (22) 1 本を外し、前下カバー (23) を開く。

4. ビス (24) 2 本を外し、フットカバー (25) を取り外す。

5. ビス (26) 3 本を外し、後下カバー (27) を取り外す。

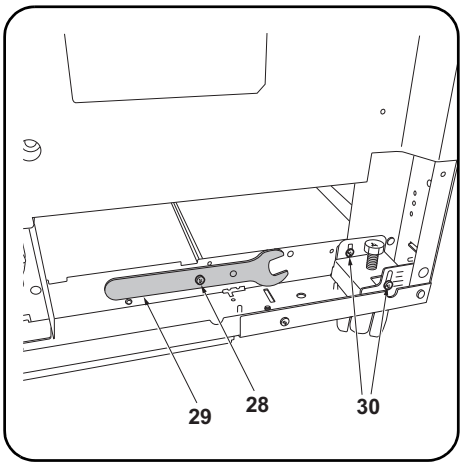

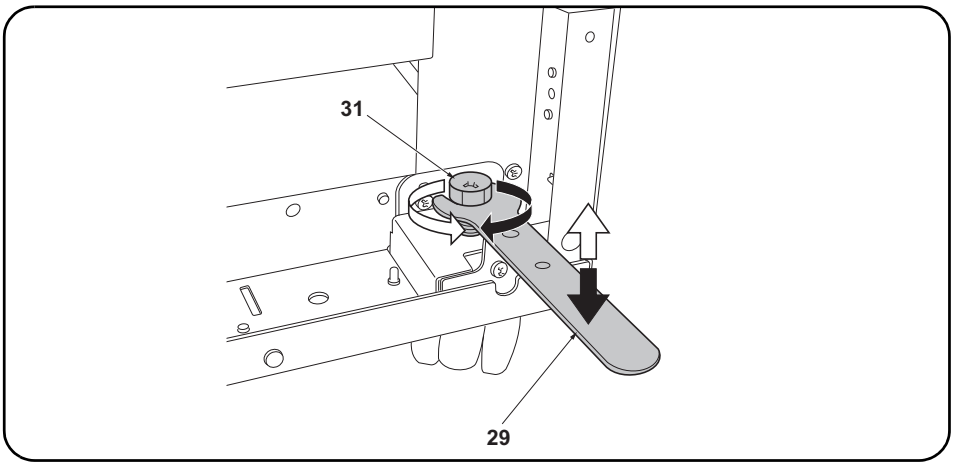

6. Remove the screw (28) to remove the spanner (29).
7. Loosen the 2 screws (30) on the front right and on the rear right of the document finisher.
8. Turn the adjustment bolts (31) with the spanner (29) to adjust the height of the document finisher. Turning the adjustment bolt clockwise lifts the document finisher, and turning it counterclockwise lowers the document finisher.
9. Retighten each of the 2 screws (30) and replace the spanner (29).

---

6. Déposer la vis (28) pour libérer la clé (29).
7. Desserrer les 2 vis (30) du côté avant droit et arrière droit du finisseur de document.
8. Faire tourner les boulons de réglage (31) avec la clé (29) pour ajuster la hauteur du finisseur de document.
Tourner le boulon de réglage dans le sens horloger pour lever le finisseur de document, et dans le sens contraire au sens horloger pour le descendre.
9. Resserrer les 2 vis (30) et repositionner la clé (29) au même endroit.

---

6. Quite el tornillo (28) para extraer la llave inglesa (29).
7. Afloje los 2 tornillos (30) en los lados derecho frontal y derecho posterior del finalizador de documentos.
8. Gire los pernos de ajuste (31) con la llave inglesa (29) para ajustar la altura del finalizador de documentos.
Al girar el perno de ajuste en la dirección de las manecillas del reloj se levanta el finalizador de documentos y al girar en sentido contrario a las manecillas del reloj baja el finalizador de documentos.
9. Vuelva a apretar los 2 tornillos (30) y coloque la llave inglesa en su lugar (29).

---

6. Entfernen Sie die Schraube (28), um den Schlüssel (29) abzunehmen
7. Lösen Sie die 2 Schrauben (30) vorne rechts und hinten rechts am Finisher.
8. Drehen Sie die Einstellschrauben (31) mit dem Schlüssel (29), um die Höhe des Finishers einzustellen.
Durch Drehen der Einstellschraube im Uhrzeigersinn wird der Finisher angehoben, während er durch Drehen entgegen dem Uhrzeigersinn abgesenkt wird.
9. Ziehen Sie die 2 Schrauben (30) wieder an und verstauen Sie den Schlüssel (29) wieder.

---

6. Rimuovere la vite (28) per rimuovere la chiave (29).
7. Allentare le 2 viti (30) sulla parte anteriore destra e posteriore destra della finisher documenti.
8. Ruotare i bulloni di regolazione (31) con la chiave (29) per regolare l'altezza della finisher documenti.
Ruotando il bullone di regolazione in senso orario si solleva la finisher documenti, mentre ruotandolo in senso antiorario si abbassa la finisher documenti.
9. Ristringere ciascuna delle 2 viti (30) e riporre la chiave (29).

---

6. 取下螺丝（28）以便拆下扳手（29）。
7. 拧松装订器右前侧与右后侧的各 2 颗螺丝（30）。
8. 使用扳手（29）旋转调节螺栓（31），以调节装订器的高度。
将调节螺栓向顺时针方向旋转，装订器的高度升高，逆时针方向旋转则装订器的高度降低。
9. 拧紧各 2 颗螺丝（30），按原样安装扳手（29）。

---

6. 나사 (28) 1 개를 빼고 , 스패너 (29) 를 떼어 냅니다 .
7. 문서 피니셔 우측 앞과 뒤의 나사 (30) 각 2 개를 느슨하게 합니다 .
8. 스패너 (29) 로 조정 볼트 (31) 를 돌려 문서 피니셔의 높이를 조정한다 .
조정 볼트를 시계방향으로 돌리면 문서 피니셔의 높이가 높아지고 , 반 시계방향으로 돌리면 낮아 집니다 .
9. 나사 (30) 각 2 개를 조이고 스패너 (29) 를 원래 자리에 장착합니다 .

---

6. ビス（28）1 本を外し、スパナー（29）を取り外す。
7. ドキュメントフィニッシャー右前と右後のビス（30）各 2 本を緩める。
8. スパナー（29）で調整ボルト（31）を回し、ドキュメントフィニッシャーの高さを調整する。
調整ボルトを時計方向に回すとドキュメントフィニッシャーの高さが高くなり、反時計方向に回すと低くなる。
9. ビス（30）各 2 本を締め付け、スパナー（29）を元通り取り付ける。

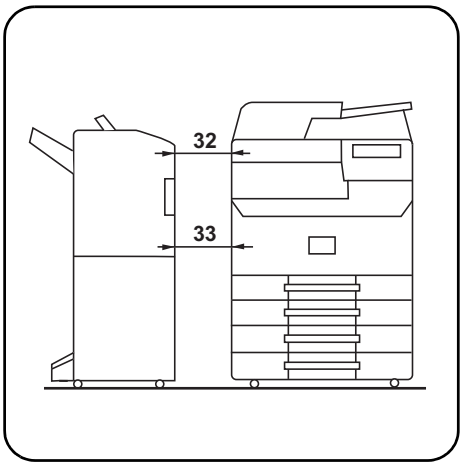

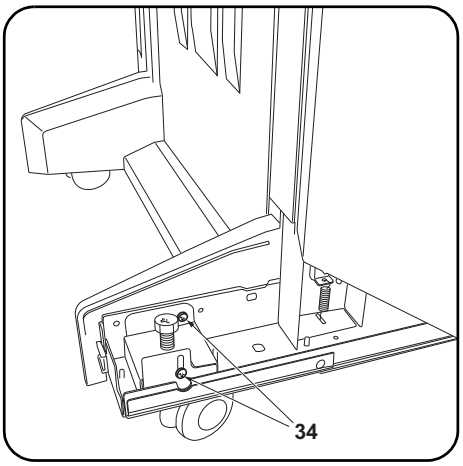

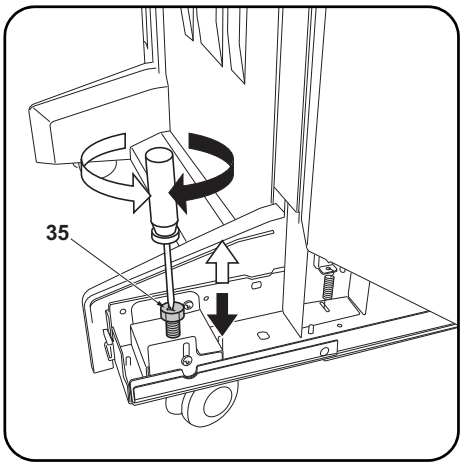

10. If the distances between the document finisher and the machine (32, 33) are unequal, use the procedure below to adjust the spacing.

11. Loosen the 2 screws (34) on the front left and on the rear left of the document finisher.

12. Turn the adjustment bolts (35) with a Philips-head screwdriver to adjust the height of the document finisher.
Turning the adjustment bolt clockwise lifts the document finisher, and turning it counterclockwise lowers the document finisher.

---

10. Si les distances entre le finisseur de document et la machine (32, 33) sont inégales, régler l'espacement en procédant de la manière suivante.

11. Desserrer les 2 vis (34) du côté avant gauche et arrière gauche du finisseur de document.

12. Faire tourner les boulons de réglage (35) à l'aide d'un tournevis cruciforme pour ajuster la hauteur du finisseur de document.
Tourner le boulon de réglage dans le sens horloger pour lever le finisseur de document, et dans le sens contraire au sens horloger pour le descendre.

---

10. Si las distancias entre el finalizador de documentos y la máquina (32, 33) no son iguales, utilice el siguiente procedimiento para ajustar la separación.

11. Afloje los 2 tornillos (34) en los lados izquierdo frontal e izquierdo posterior del finalizador de documentos.

12. Gire los pernos de ajuste (35) con un destornillador de cabeza Philips para ajustar la altura del finalizador de documentos.
Al girar el perno de ajuste en la dirección de las manecillas del reloj se levanta el finalizador de documentos y al girar en sentido contrario a las manecillas del reloj baja el finalizador de documentos.

---

10. Falls die Abstände zwischen dem Finisher und dem Gerät (32, 33) ungleich sind, führen Sie die unten angegebenen Schritte aus, um den Abstand zu korrigieren.

11. Lösen Sie die 2 Schrauben (34) vorne links und hinten links am Finisher.

12. Stellen Sie die Einstellschrauben (35) mit einem Kreuzschlitzschraubendreher ein, um die Höhe des Finishers zu korrigieren.
Durch Drehen der Einstellschraube im Uhrzeigersinn wird der Finisher angehoben, während er durch Drehen entgegen dem Uhrzeigersinn abgesenkt wird.

---

10. Se le distanze tra la finisher documenti e la macchina (32, 33) sono diverse, attenersi alla sottostante procedura per regolare la spaziatura.

11. Allentare le 2 viti (34) sulla parte anteriore sinistra e posteriore sinistra della finisher documenti.

12. Ruotare i bulloni di regolazione (35) con un cacciavite con testa a croce tipo Philips per regolare l'altezza della finisher documenti.
Ruotando il bullone di regolazione in senso orario si solleva la finisher documenti, mentre ruotandolo in senso antiorario si abbassa la finisher documenti.

---

10. 装订器与机器的间隙 (32、33) 不等时，按以下步骤进行调节。

11. 拧松装订器左前侧与左后侧的各 2 颗螺丝 (34)。

12. 使用十字螺丝刀旋转调节螺栓 (35)，以调节装订器的高度。
将调节螺栓向顺时针方向旋转，装订器的高度升高，逆时针方向旋转则装订器的高度降低。

---

10. 문서 피니셔와 본체의 거리 (32, 33) 가 동일하지 않는 경우 아래의 절차에 따라 간격을 조정합니다 .

11. 문서 피니셔 좌측 앞과 뒤의 나사 (34) 각 2 개를 느슨하게 합니다 .

12. 플러스 드라이버로 조정 볼트 (35) 를 돌려 문서 피니셔 높이를 조정합니다 .
조정 볼트를 시계방향으로 돌리면 문서 피니셔의 높이가 높아지고 , 반 시계방향으로 돌리면 낮아 집니다 .

---

10. ドキュメントフィニッシャーと機械本体の間隔(32、33)が等しくない場合は、以下の手順で調整を行う。

11. ドキュメントフィニッシャー左前と左後のビス (34) 各 2 本を緩める。

12. プラスドライバーで調整ボルト (35) を回し、ドキュメントフィニッシャーの高さを調整する。
調整ボルトを時計方向に回すとドキュメントフィニッシャーの高さが高くなり、反時計方向に回すと低くなる。

13. Retighten each of the 2 screws (34).
14. Reinstall the foot cover (25) and lower rear cover (27).

---

13. Resserrer les 2 vis (34).
14. Reposer le couvercle du pied (25) et le couvercle arrière inférieur (27).

---

13. Vuelva a apretar los 2 tornillos (34).
14. Vuelva a instalar la cubierta de la pata (25) y la cubierta posterior inferior (27).

---

13. Ziehen Sie die 2 Schrauben (34) nach.
14. Setzen Sie die Fußabdeckung (25) und die untere hintere Abdeckung (27) wieder ein.

---

13. Ristringere ciascuna delle 2 viti (34).
14. Reinstallare la copertura del piede (25) e il coperchio inferiore posteriore (27).

---

13. 拧紧各 2 颗螺丝 (34)。
14. 按原样安装脚座盖板 (25)、后部下盖板 (27)。

---

13. 나사 (34) 각 2 개를 조입니다 .
14. 풋커버 (25), 뒤 하커버 (27) 를 원래대로 제거합니다 .

---

13. ビス (34) 各 2 本を締め付ける。
14. フットカバー(25)、後下カバー (27) を元通りに取り付ける。

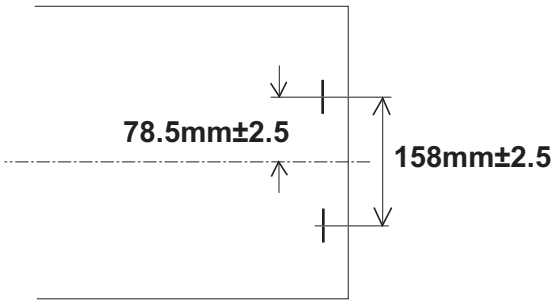

Adjusting the stapling position

1. Connect the machine power plug to the wall outlet and turn the machine main power switch on.
2. Make a test copy using staple mode (double stapled).
3. Check whether the stapling position is off-center. If the staple position is off-center, follow the procedure below to adjust the position.
   <Reference value> 78.5 mm ±2.5 mm from the center of the paper

---

Ajustement de la position d'agrafage

1. Insérer la fiche d'alimentation de la machine dans la prise murale et mettre la machine sous tension.
2. Procéder à une copie d'essai en mode agrafage (double agrafage).
3. Vérifier que la position d'agrafage n'est pas en décalage.Si la position d'agrafage est décalée, la régler en procédant de la manière suivante.
   <Valeur de référence> 78,5 mm ±2,5 mm depuis le milieu de la feuille de papier.

Ajuste de la posición de grapado

1. Conecte el enchufe de la máquina al receptáculo de pared y encienda el interruptor principal de la máquina.
2. Haga una copia de prueba en el modo de grapado (grapado doble).
3. Compruebe si la posición de grapado está descentrada.Si la posición de grapado está descentrada, realice el siguiente procedimiento para ajustar la posición.
   <Valor de referencia> 78,5 mm ± 2,5 mm del centro del papel

---

Justage der Heftposition

1. Stecken Sie den Netzstecker des Geräts in die Wandsteckdose und schalten Sie das Gerät am Hauptschalter ein.
2. Erstellen Sie eine Probekopie im Heftmodus (doppelt geheftet).
3. Prüfen Sie, ob die Heftposition außermittig ist.Falls die Heftposition außermittig ist, müssen Sie sie wie folgend einstellen.
   <Bezugswert> 78,5 mm ±2,5 mm von der Blattmitte

Regolazione della posizione di pinzatura

1. Collegare la spina alla presa di corrente a muro e accendere l'interruttore di alimentazione della macchina.
2. Eseguire una copia di prova utilizzando la modalità di spillatura con punti metallici (spillatura doppia).
3. Verificare che la posizione di spillatura non sia fuori centro.Se la posizione di spillatura è fuori centro, seguire la procedura riportata sotto per regolare la posizione.
   <Valore di riferimento> 78,5 mm ± 2,5 mm dal centro del foglio

---

调节装订位置

1. 将机器上的电源插头插入电源插座中，打开主电源开关。
2. 在装订模式（2 点固定）下进行测试复印。
3. 确认装订位置的中心偏差。装订位置偏离中心时，按以下步骤进行调节。
   ＜基准值＞ 距离纸张中心 78.5mm± 2.5mm

스테이플 위치 조정

1. 본체 전원플러그를 콘센트에 꽂고 주 전원 스위치를 ON 으로 합니다 .
2. 스테이플 모드 (2 곳) 에서 시험복사를 합니다 .
3. 스테이플 위치의 센터 어긋남을 확인합니다 . 스테이플 위치가 중심에서 벗어난 경우다음 순서로 조정을 합니다 .
   ＜기준치＞ 용지 센터에서 78.5mm± 2.5mm

ステープル位置の調整

1. 機械本体の電源プラグをコンセントに差し込み、主電源スイッチを ON にする。
2. ステープルモード(2 箇所止め)でテストコピーを行う。
3. ステープル位置のセンターずれを確認する。ステープル位置が中心からずれていた場合、次の手順で調整を行う。
   ＜基準値＞ 用紙センターより 78.5mm± 2.5mm

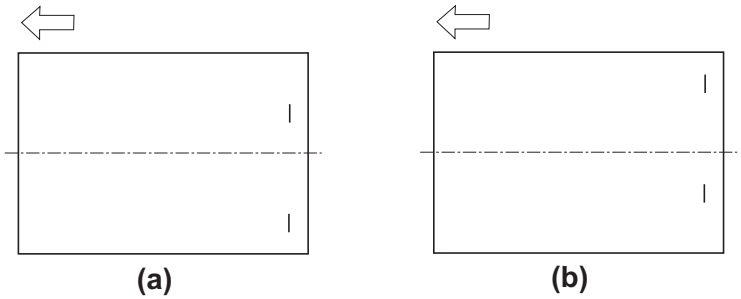

4. Set maintenance mode U246, select Finisher and Staple HP.
5. Adjust the values.
If the paper is stapled too close to the front of the machine (a): Increase the setting value.
If the paper is stapled too close to the rear of the machine (b): Decrease the setting value.
6. Perform a test copy.
7. Repeat steps 4 to 6 until the staple position is within the reference value.
<Reference value> 78.5 mm ±2.5 mm from the center of the paper

---

4. Passer en mode maintenance U246, sélectionner Finisher et Staple HP.
5. Régler les valeurs.
Si le papier est agrafé trop près de l'avant de la machine (a): augmenter la valeur de réglage.
Si le papier est agrafé trop près de l'arrière de la machine (b): réduire la valeur de réglage.
6. Effectuer une copie de test.
7. Recommencer les étapes 4 à 6 jusqu'à ce que la position d'agrafe soit conforme à la valeur de référence
<Valeur de référence> 78,5 mm ±2,5 mm depuis le milieu de la feuille de papier.

---

4. Entre en el modo de mantenimiento U246, seleccione Finisher y Staple HP.
5. Ajuste los valores.
Si el grapado del papel se encuentra demasiado cerca del frente de la máquina (a): aumente el valor de configuración.
Si el grapado del papel se encuentra demasiado cerca de la parte posterior de la máquina (b): disminuya el valor de configuración.
6. Haga una copia de prueba.
7. Repita los pasos 4 a 6 hasta que la posición de grapado se encuentre dentro del valor de referencia.
<Valor de referencia> 78,5 mm ± 2,5 mm del centro del papel

---

4. Schalten Sie in den Wartungsmodus U246, wählen Sie Finisher und Staple HP.
5. Die Werte einstellen.
Falls das Papier zu nahe am vorderen Rand des Geräts (a) abgestapelt wird: Vergrößern Sie den Stellwert.
Falls das Papier zu nahe am hinteren Rand des Geräts (b) abgestapelt wird: Verkleinern Sie den Stellwert.
6. Eine Testkopie erstellen.
7. Wiederholen Sie die Schritte 4 bis 6, bis die Heftposition im Bereich des Bezugswerts liegt.
<Bezugswert> 78,5 mm ±2,5 mm von der Blattmitte

---

4. Impostare la modalità manutenzione U246, selezionare Finisher e Staple HP.
5. Regolare i valori.
Se il foglio viene spillato troppo vicino alla parte anteriore della macchina (a): Aumentare il valore di impostazione.
Se il foglio viene spillato troppo vicino alla parte posteriore della macchina (b): Diminuire il valore di impostazione.
6. Eseguire una copia di prova.
7. Ripetere i passi 4 to 6 finché la posizione di spillatura risulta all'interno del valore di riferimento.
<Valore di riferimento> 78,5 mm ± 2,5 mm dal centro del foglio

---

4. 设置维护模式 U246，选择 Finisher、Staple HP。
5. 调整设定值。
装订位置向机器前部偏移时 (a)：调高设定值。
装订位置向机器后部偏移时 (b)：调低设定值。
6. 进行测试复印。
7. 重复步骤 4 ～ 6，直到装订位置在基准范围内为止。
＜基准值＞ 距离纸张中心 78.5mm± 2.5mm

---

4. 메인터넌스 모드 U246 을 세트하고 Finisher, Staple HP 를 선택합니다 .
5. 설정치를 조정합니다 .
스테이플 위치가 기기앞측으로 벗어난 경우 (a):설정치를 높입니다 .
스테이플 위치가 기기뒷측으로 벗어난 경우 (b):설정치를 내입니다 .
6. 시험복사를 합니다 .
7. 스테이플 위치가 기준치내가 될 때까지 순서 4 ~ 6 을 반복합니다 .
＜기준치＞ 용지 센터에서 78.5mm± 2.5mm

---

4. メンテナンスモードU246をセットし、Finisher、Staple HPを選択する。
5. 設定値を調整する。
ステープル位置が機械前側にずれている場合 (a):設定値を上げる。
ステープル位置が機械後側にずれている場合 (b):設定値を下げる。
6. テストコピーを行う。
7. ステープル位置が基準値内になるまで、手順 4 ～ 6 を繰り返す。
＜基準値＞ 用紙センターより 78.5mm± 2.5mm

INSTALLATION GUIDE FOR FINISHER ATTACHMENT KIT

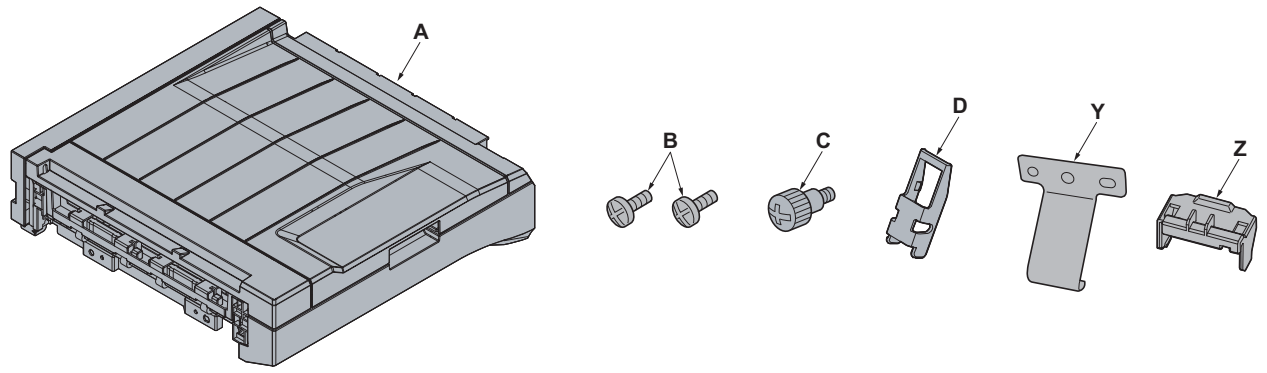

English

Supplied parts

A. Paper conveying unit 1
B. Pin 2
C. Pin 1
D. Cover 1

Y. Earth Plate 1
Z. Cover 1

The procedures for installing Y and Z are described in the installation guide for the finisher.

Be sure to remove any tape and/or cushioning materials from the parts supplied.

Français

Pièces fournies

A. Unité de transport du papier 1
B. Goupille 2
C. Goupille 1
D. Couvercle 1

Y. Prise de terre 1
Z. Couvercle 1

Les procédures pour installer Y et Z sont décrites dans le manuel d'installation du module de finition.

Veillez à retirer les morceaux de bande adhésive et/ou les matériaux de rembourrage des pièces fournies.

Español

Partes suministradas

A. Unidad de transporte de papel 1
B. Pasador 2
C. Pasador 1
D. Cubierta 1

Y. Placa de conexión a tierra 1
Z. Cubierta 1

Los procedimientos de instalación de Y y Z se describen en la guía de instalación del finalizador.

Asegúrese de quitar todas las cintas y/o material amortiguador de las partes suministradas.

Deutsch

Enthaltene Teile

A. Papierführung 1
B. Stift 2
C. Stift 1
D. Abdeckung 1

Y. Grundplatte 1
Z. Abdeckung 1

Die Vorgehensweise zur Installation von Y und Z wird in der Installationsanweisung des Finishers beschrieben.

Stellen Sie sicher, dass sämtliche Klebebänder und/oder Polstermaterial von den gelieferten Teilen entfernt wurden.

Italiano

Parti fornite

A. Unità di trasporto carta 1
B. Perno 2
C. Perno 1
D. Coperchio 1

Y. Piastra di messa a terra 1
Z. Coperchio 1

Le procedure di installazione Y e Z sono descritte nella guida di installazione del finisher.

Rimuovere tutti i nastri adesivi e/o i materiali di protezione dalle parti fornite.

简体中文

附属品

A. 纸张传输单元 1
B. 销钉 2
C. 销钉 1
D. 盖板 1

Y. 接地板 1
Z. 盖板 1

Y 和 Z 的安装步骤见装订器的安装手册。

如果附属品上带有固定胶带，缓冲材料时务必揭下。

한국어

동봉품

A. 반송 유니트 1
B. 핀 2
C. 핀 1
D. 커버 1

Y. 접지판 1
Z. 커버 1

Y 및 Z 설치 절차는 피니셔의 설치 설명서에 설명되어 있습니다 .

동봉품에 고정 테이프 , 완충재가 붙어 있는 경우에는 반드시 제거하십시오 .

日本語

同梱品

A. 搬送ユニット 1
B. ピン 2
C. ピン 1
D. カバー 1

Y. アース板 1
Z. カバー 1

Y, Z の取付手順は、フィニッシャー設置手順書に記載されています。

同梱品に固定テープ、緩衝材がついている場合は、必ず取り外すこと。

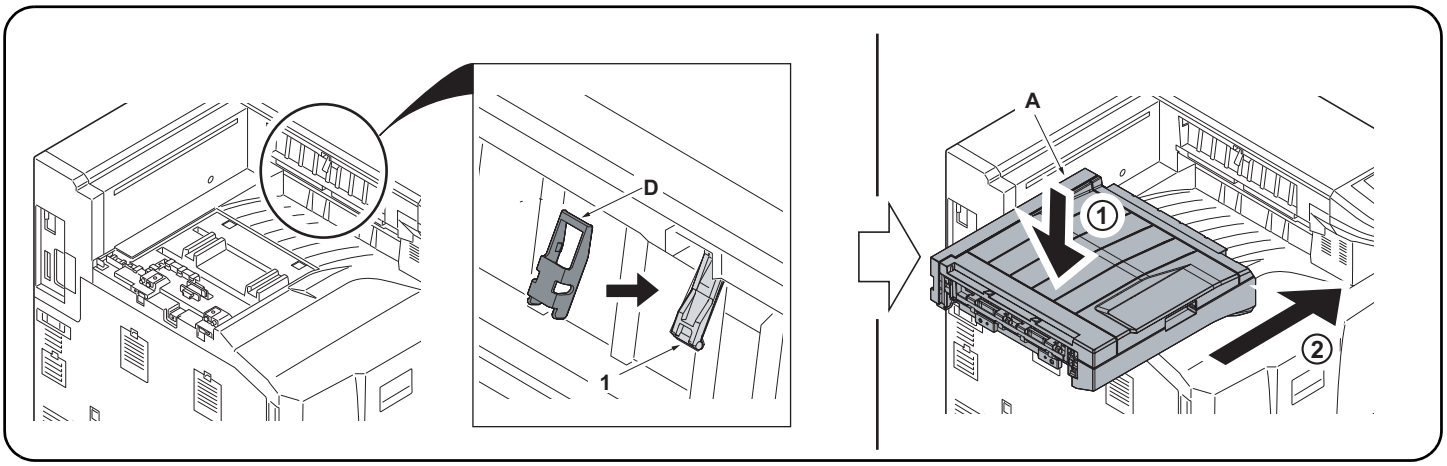

Procedure
Before starting installation, be sure to turn the main power switch of the machine off, and unplug the power plug from the wall outlet.

1. Install the cover (D) to the actuator (1).
2. Place the paper conveying unit (A) on top of the machine and slide to the right.

Procédure
Avant de commencer l'installation, s'assurer de mettre la machine hors tension et de débrancher la fiche d'alimentation de la prise murale.

1. Installer le couvercle (D) sur l'actionneur (1).
2. Placer l'unité de transport du papier (A) au-dessus de la machine et la faire coulisser vers la droite.

Procedimiento
Antes de iniciar la instalación, asegúrese de apagar el interruptor de encendido de la máquina y desenchufar el cable de alimentación de la toma de pared.

1. Instale la cubierta (D) en el accionador (1).
2. Coloque la unidad de transporte de papel (A) sobre la parte superior de la máquina y deslícela hacia la derecha.

Vorgehensweise
Bevor Sie mit der Installation beginnen überzeugen Sie sich, dass der Netzschalter des Geräts ausgeschaltet und das Stromkabel aus der Steckdose gezogen ist.

1. Installieren Sie die Abdeckung (D) über den Sensor (1).
2. Legen Sie die Papierführung (A) oben auf das Gerät und schieben diese nach rechts.

Procedura
Prima di iniziare l'installazione, spegnere la macchina e scollegare la spina dalla presa di corrente.

1. Installare il coperchio (D) sull'attuatore (1).
2. Posizionare l'unità di trasporto carta (A) sulla parte superiore della macchina e inserirla sulla destra.

安装步骤
安装前务必关闭机器的主电源开关，并从墙壁插座拔下电源插头。

1. 把盖板 （D）安装至挡臂 （1）。
2. 将纸张传输单元 （A） 放在机器上部并向右滑动。

설치순서
설치를 시작하기 전에 반드시 본체의 주 전원 스위치를 끄고 벽 콘센트에서 전원 플러그를 분리하십시오 .

1. 커버 (D) 를 액추에이터 (1) 에 장착합니다 .
2. 반송 유니트 (A) 를 본체의 상단에 올리고 오른쪽으로 밉니다 .

取付手順
必ず機械本体の主電源スイッチを OFF にし、機械本体の電源プラグを抜いてから作業すること。

1. カバー （D） をアクチュエーター （1） に取り付ける。
2. 搬送ユニット （A） を機械本体に載せ、機械右側へスライドさせる。

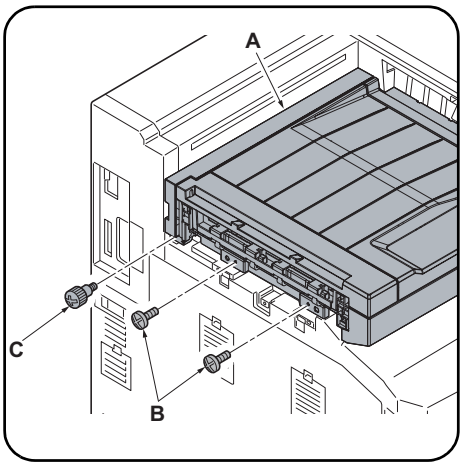

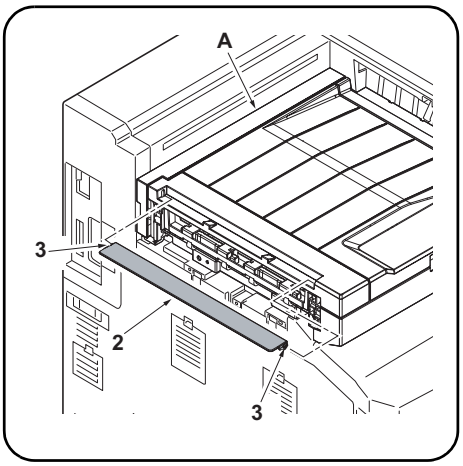

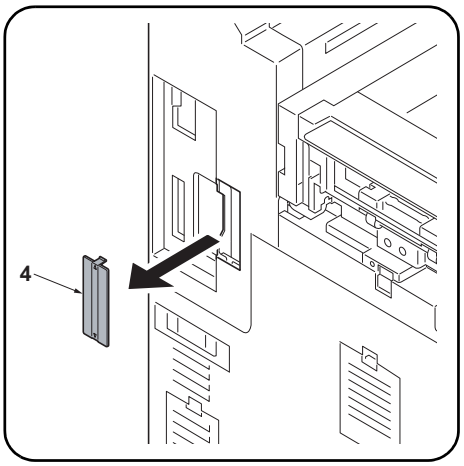

3. Secure the paper conveying unit (A) using the three pins (B,C).

4. Install the eject guide (2) by fitting the two eject guide projections (3) into the holes of the paper conveying unit (A).
Eject guide (2) is supplied with the finisher.
DF-770(B): Eject guide (G)
DF-790(B): Eject guide (H)

5. Remove the cover (4) from the machine.
The cover (4) is not used.

---

3. Fixer l'unité de transport du papier (A) à l'aide des trois goupilles (B,C).

4. Installer le guide d'éjection (2) en montant les deux projections du guide d'éjection (3) dans les trous de l'unité de transport du papier (A).
Le guide d'éjection (2) est fourni avec le module de finition.
DF-770(B): Guide d'éjection (G)
DF-790(B): Guide d'éjection (H)

5. Retirer le couvercle (4) de la machine.
Le capot (4) n'est pas utilisé.

---

3. Fije la unidad de transporte de papel (A) con los tres pasadores (B,C).

4. Instale la guía de salida (2) ajustando las dos proyecciones (3) de la guía de salida en los orificios de la unidad de transporte de papel (A).
La guía de salida (2) se proporciona con el finalizador.
DF-770(B): Guía de salida (G)
DF-790(B): Guía de salida (H)

5. Retire la cubierta (4) de la máquina.
La cubierta (4) no se utiliza.

---

3. Sichern Sie die Papiertransporteinheit (A) mit drei Stiften (B,C).

4. Installieren Sie die Auswerfführung (2), indem Sie die beiden Nasen (3) der Auswerfführung in die Aufnahmen der Papierführung (A) einsetzen.
Die Auswerfführung (2) wird mit dem Finisher geliefert.
DF-770(B): Auswerfführung (G)
DF-790(B): Auswerfführung (H)

5. Entfernen Sie die Abdeckung (4) vom Gerät.
Die Abdeckung (4) wird nicht benötigt.

---

3. Fissare l'unità di trasporto carta (A) utilizzando i tre perni (B,C).

4. Installare la guida di espulsione (2) fissando le due protezioni (3) nei fori dell'unità di trasporto carta (A).
La guida di espulsione (2) è fornita con il finisher.
DF-770(B): Guida di espulsione (G)
DF-790(B): Guida di espulsione (H)

5. Rimuovere il coperchio (4) dalla macchina.
Il coperchio (4) non viene utilizzato.

---

3. 使用三个销钉 (B,C) 固定纸张传输单元 (A)。

4. 把排纸导向板 (2) 的 2 个突出部 (3) 插入纸张传输单元 (A) 的孔中。
排纸导向板 (2) 附带在装订器中。
DF-770(B): 排纸导向板 (G)
DF-790(B): 排纸导向板 (H)

5. 从机器上拆下盖板 (4)。
不需要盖板 (4)。

---

3. 핀 (B,C) 세 개를 사용하여 반송 유니트 (A) 를 고정합니다 .

4. 배출 가이드 돌출부 (3) 2 개를 반송 유니트 (A) 의 구멍에 맞추어 끼워서 배출 가이드 (2) 를 설치합니다 .
배출 가이드 (2) 는 피니셔와 함께 제공됩니다 .
DF-770(B): 배출 가이드 (G)
DF-790(B): 배출 가이드 (H)

5. 본체에서 커버 (4) 를 분리합니다 .
커버 (4) 는 사용되지 않습니다 .

---

3. ピン (B,C) 3 本で搬送ユニット (A) を固定する。

4. 排出ガイド (2) のピン (3) 2 本を搬送ユニット (A) の穴に差し込み取り付ける。
排出ガイド (2) はフィニッシャーに同梱されています。
DF-770(B): 排出ガイド (G)
DF-790(B): 排出ガイド (H)

5. 機械本体からカバー (4) を取り外す。
カバー (4) は不要。

INSTALLATION GUIDE FOR CENTER-FOLDING UNIT

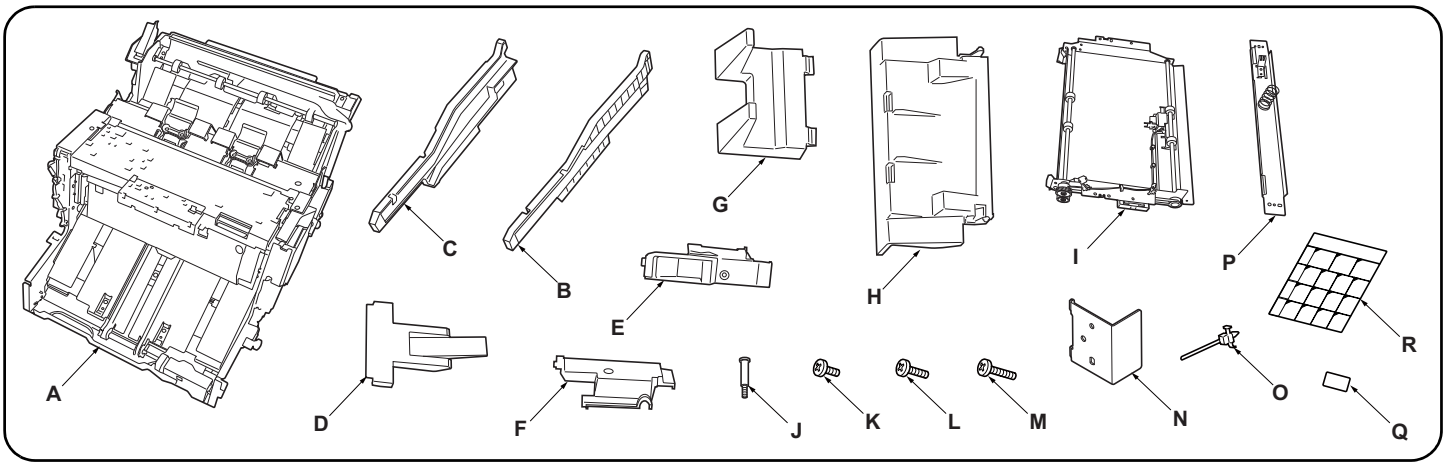

English

Supplied parts

A. Center-Folding unit 1
B. Front rail 1
C. Rear rail 1
D. Output stopper 1
E. Front side cover 1
F. Rear side cover 1
G. Output stock tray 1
H. Output tray 1
I. Relay paper conveying unit 1
J. Pin 1
K. M4 × 8 screw 11
L. M4 × 10 screw (black) 2
M. M4 × 12 screw 4
N. Lock plate 2
O. Binding band 1
P. Guide 1
Q. D7 label 1
R. Operation label 1

Français

Pièces fournies

A. Plieuse 1
B. Glissière avant 1
C. Glissière arrière 1
D. Butée de sortie 1
E. Capot latéral avant 1
F. Capot latéral arrière 1
G. Plateau de sortie du papier 1
H. Plateau de sortie 1
I. Unité de transport du papier de relais 1
J. Goupille 1
K. Vis M4 × 8 11
L. Vis M4 × 10 (noire) 2
M. Vis M4 × 12 4
N. Plaque de verrouillage 2
O. Collier de fixation 1
P. Guide 1
Q. Étiquette D7 1
R. Étiquette de fonctionnement 1

Español

Partes suministradas

A. Unidad de plegado 1
B. Carril frontal 1
C. Carril posterior 1
D. Tope de salida 1
E. Cubierta lateral frontal 1
F. Cubierta lateral posterior 1
G. Bandeja de recolección de papel de salida 1
H. Bandeja de salida 1
I. Unidad de transporte de papel por relevador 1
J. Pasador 1
K. Tornillo M4 × 8 11
L. Tornillo M4 × 10 (negro) 2
M. Tornillo M4 × 12 4
N. Placa de cierre 2
O. Correa de sujeción 1
P. Guía 1
Q. Etiqueta D7 1
R. Etiqueta de funcionamiento 1

Deutsch

Gelieferte Teile

A. Mittenfalteinheit 1
B. Vordere Schiene 1
C. Hintere Schiene 1
D. Ausgabeanschlag 1
E. Vordere Seitenabdeckung 1
F. Hintere Seitenabdeckung 1
G. Ausgabestapelfach 1
H. Ausgabefach 1
I. Eingesetzte Papierfördereinheit 1
J. Stift 1
K. M4 × 8 Schraube 11
L. M4 × 10 Schraube (schwarz) 2
M. M4 × 12 Schraube 4
N. Sperrplatte 2
O. Schellenband 1
P. Führung 1
Q. D7 Aufkleber 1
R. Bedienungsaufkleber 1

Italiano

Parti di fornitura

A. Unità di piegatura centrale 1
B. Rotaia anteriore 1
C. Rotaia posteriore 1
D. Fermo di uscita 1
E. Coperchio laterale anteriore 1
F. Coperchio laterale posteriore 1
G. Vassoio di uscita stoccaggio 1
H. Vassoio di uscita 1
I. Unità relay di trasporto carta 1
J. Perno 1
K. Vite M4 × 8 11
L. Vite M4 × 10 (nera) 2
M. Vite M4 × 12 4
N. Piastra di bloccaggio 2
O. Fascetta di legatura 1
P. Guida 1
Q. Etichetta D7 1
R. Etichetta di operazione 1

简体中文

附属品

A. 中缝装订一折页单元 1
B. 前部导轨 1
C. 后部导轨 1
D. 排纸挡板 1
E. 前部侧盖板 1
F. 后部侧盖板 1
G. 堆纸托盘 1
H. 排纸托盘 1
I. 中间搬运单元 1
J. 销钉 1
K. M4×8 螺丝 11
L. M4×10 螺丝（黑） 2
M. M4×12 螺丝 4
N. 锁定板 2
O. 束线带 1
P. 导板 1
Q. D7 标签 1
R. 操作标签 1

한국어

동봉품

A. 접기 유니트 1
B. 레일 앞 1
C. 레일 뒤 1
D. 배지 스토퍼 1
E. 사이드 커버 앞 1
F. 사이드 커버 뒤 1
G. 배지 저장트레이 1
H. 배지 트레이 1
I. 중계 반송유니트 1
J. 핀 1
K. 나사 M4×8 11
L. 나사 M4×10 (흑) 2
M. 나사 M4×12 4
N. 잠금 플레이트 2
O. 결속 밴드 1
P. 가이드 1
Q. D7 라벨 1
R. 조작라벨 1

日本語

同梱品

A. 中折りユニット 1
B. レール前 1
C. レール後 1
D. 排紙ストッパー 1
E. サイドカバー前 1
F. サイドカバー後 1
G. 排紙ストックトレイ 1
H. 排紙トレイ 1
I. 中継搬送ユニット 1
J. ピン 1
K. ビス M4×8 11
L. ビス M4×10(黒) 2
M. ビス M4×12 4
N. ロックプレート 2
O. 結束バンド 1
P. ガイド 1
Q. D7 ラベル 1
R. 操作ラベル 1

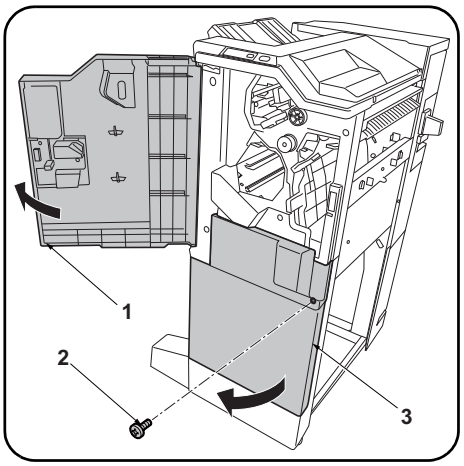

Be sure to remove any tape and/or cushioning material from supplied parts.

Procedure
Before installing the center-folding unit, turn the MFP's main power switch off and unplug the power cable from the power supply.
Install the document finisher, and then install the center-folding unit.

1. Open the upper front cover (1) of the document finisher.
2. Remove the screw (2) and open the lower front cover (3).
   (NOTICE)
   Discard the screw (2) and do not fasten the lower front cover (3).

Veillez à retirer les morceaux de bande adhésive et/ou les matériaux de rembourrage des pièces fournies.

Procédure
Avant d'installer la plieuse mettre l'interrupteur d'alimentation principal du MFP hors tension et débrancher le câble d'alimentation de la prise de courant.
Installer le finisseur de document, puis installer la plieuse.

1. Ouvrir le couvercle avant supérieur (1) du retoucheur de document.
2. Déposer la vis (2) et ouvrir le couvercle avant inférieur (3).
   (AVIS)
   Jeter la vis (2) et ne pas fixer le capot inférieur avant (3).

Asegúrese de despegar todas las cintas y/o material amortiguador de las partes suministradas.

Procedimiento
Antes de instalar la unidad de plegado, desconecte el interruptor de alimentación principal de la MFP y desenchufe el cable de alimentación de la toma de corriente.
Instale primero el finalizador de documentos y luego instale la unidad de plegado.

1. Abra la cubierta frontal superior (1) del finalizador de documentos.
2. Quite el tornillo (2) y abra la cubierta frontal inferior (3).
   (AVISO)
   Descarte el tornillo (2) y no ajuste la cubierta frontal inferior (3).

Entfernen Sie Klebeband und/oder Dämpfungsmaterial vollständig von den mitgelieferten Teilen.

Verfahren
Bevor Sie mit dem Einbau der Mittenfalteinheit beginnen, stellen Sie sicher, dass der Hauptschalter des Kopierers ausgeschaltet und das Netzkabel aus der Steckdose gezogen ist.
Bringen Sie den Dokument-Finisher zuerst und dann erst die Mittenfalteinheit an.

1. Öffnen Sie die obere vordere Abdeckung (1) des Dokument-Finishers.
2. Entfernen Sie die Schraube (2) und öffnen Sie die untere vordere Abdeckung (3).
   (HINWEIS)
   Entsorgen Sie die Schraube (2) und befestigen Sie nicht die untere vordere Abdeckung (3).

Accertarsi di rimuovere tutti i nastri adesivi e/o il materiale di imbottitura dalle parti fornite.

Procedura
Prima di installare l'unità di piegatura centrale, assicurarsi che l'interruttore principale della fotocopiatrice sia spento e che il cavo di alimentazione non sia inserito nella presa.
Installare prima la finitrice e poi procedere all'installazione dell'unità di piegatura centrale.

1. Aprire il coperchio superiore anteriore (1) della finitrice di documenti.
2. Rimuovere la vite (2) ed aprire il coperchio inferiore anteriore (3).
   (NOTIFICA)
   Eliminare le viti (2) e non fissare il coperchio inferiore anteriore (3).

如果附属品上带有固定胶带，缓冲材料时务必揭下。

安装步骤
安装中缝装订 — 折页单元前，请关闭 MFP 的主电源开关并从电源拔下电源线。
安装装订器，然后安装中缝装订 — 折页单元。

1. 打开装订器的前部上盖板（1）。
2. 拆除 1 颗螺丝（2），打开前部下盖板（3）。
   （注意）
   废除螺丝（2），前部下盖板（3）不需固定。

동봉품에 고정 테이프 , 완충재가 붙어 있는 경우에는 반드시 제거할 것 .

장착순서
중철 유니트를 설치할 때에는 반드시 MFP 본체의 주전원 스위치를 OFF 로 하고 전원플러그를 뺀 후 작업을 할 것 .
문서 피니셔를 설치 후 , 중철 유니트를 설치 할 것 .

1. 문서 피니셔 앞 상커버 (1) 를 엽니다 .
2. 나사 (2) 1 개를 제거하고 앞 하커버 (3) 를 엽니다 .
   (주의)
   나사 (2) 는 폐기하고 전면 아래커버 (3) 는 고정하지 않습니다 .

同梱品に固定テープ、緩衝材がついている場合は、必ず取り外すこと。

取付手順
中折りユニットを設置するときは、必ず MFP 本体の主電源スイッチを OFF にし、電源プラグを抜いてから作業すること。
ドキュメントフィニッシャーを設置後、中折りユニットを設置すること。

1. ドキュメントフィニッシャーの前上カバー (1) を開く。
2. ビス (2)1 本を外し、前下カバー (3) を開く。
   (注意)
   ビス (2) は廃棄とし、前下カバー (3) は固定しない。

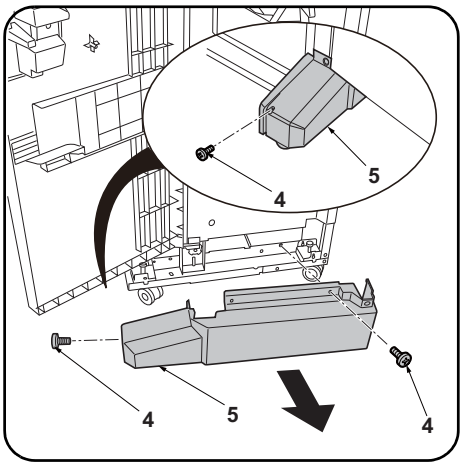

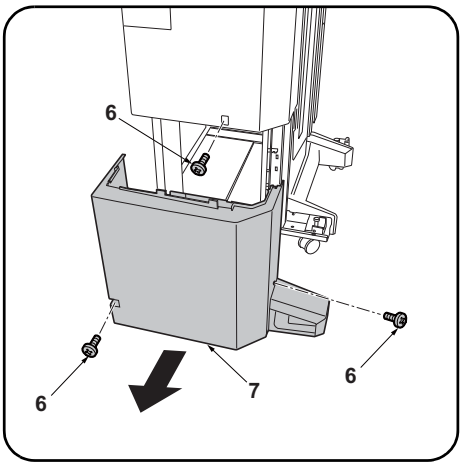

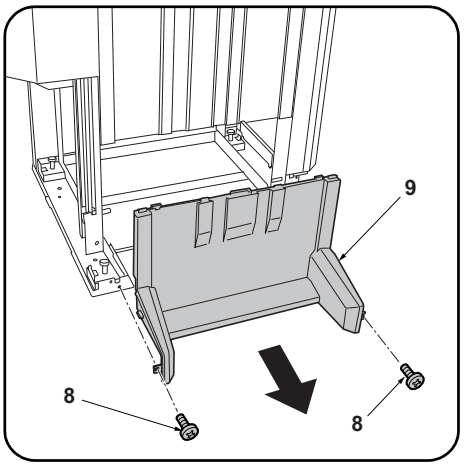

3. Remove the 2 screws (4) and remove the foot cover (5).

4. Remove the 3 screws (6) and remove the lower rear cover (7).

5. Remove 2 screws (8) and remove the lower middle cover (9).

---

3. Déposer les 2 vis (4) puis le couvercle du pied (5).

4. Déposer les 3 vis (6) puis le couvercle arrière inférieur (7).

5. Déposer les 2 vis (8) et le couvercle intermédiaire inférieur (9).

---

3. Quite los 2 tornillos (4) y quite la cubierta de la pata (5).

4. Quite los 3 tornillos (6) y quite la cubierta posterior inferior (7).

5. Quite los 2 tornillos (8) y quite la cubierta intermedia inferior (9).

---

3. Entfernen Sie die 2 Schrauben (4) und nehmen Sie die Fußabdeckung (5) ab.

4. Entfernen Sie die 3 Schrauben (6) und nehmen Sie die untere hintere Abdeckung (7) ab.

5. Entfernen Sie die 2 Schrauben (8) und nehmen Sie die untere mittlere Abdeckung (9) ab.

---

3. Rimuovere le 2 viti (4) e quindi rimuovere la copertura del piede (5).

4. Rimuovere le 3 viti (6) e quindi rimuovere il coperchio inferiore posteriore (7).

5. Rimuovere le 2 viti (8) e quindi rimuovere il pannello centrale inferiore (9).

---

3. 拆除 2 颗螺丝（4），拆下脚座盖板（5）。

4. 拆除 3 颗螺丝（6），拆下后部下盖板（7）。

5. 拆除 2 颗螺钉 (8)，拆下中部下盖板 (9)。

---

3. 나사 (4) 2 개를 제거하고 , 풋커버 (5) 를 제거합니다 .

4. 나사 (6) 3 개를 제거하고 , 뒤 하커버 (7) 를 제거합니다 .

5. 나사 (8) 2 개를 제거하고 중하 커버 (9) 를 떼어 냅니다 .

---

3. ビス (4)2 本を外し、フットカバー(5) を取り外す。

4. ビス (6)3 本を外し、後下カバー(7) を取り外す。

5. ビス (8)2 本を外し、中下カバー(9) を取り外す。

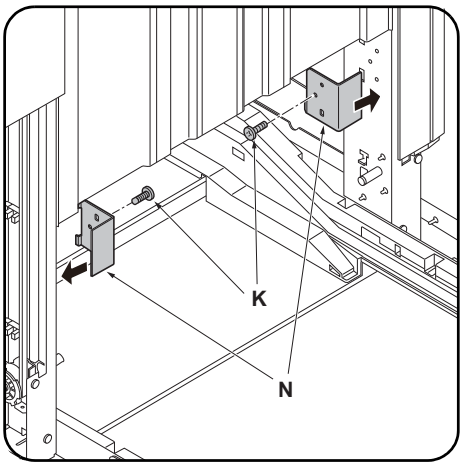

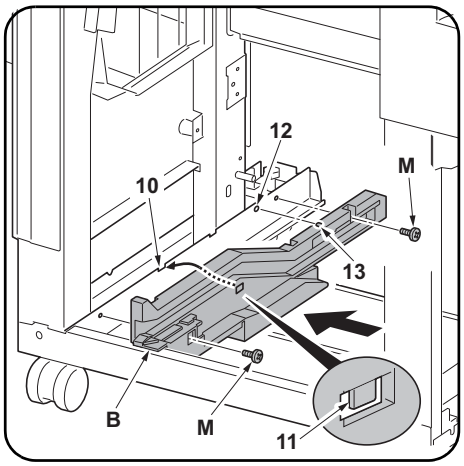

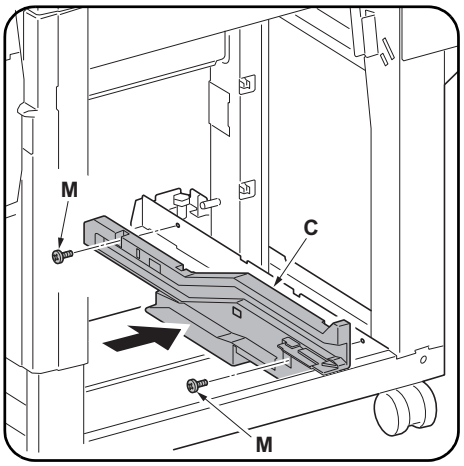

6. Install the lock plates (N) on the front and rear supports using an M4 × 8 screw (K) each.

7. Place the hook (11) of the front rail (B) on the notch (10) at the front of the document finisher, at the same time inserting the projection (13) on the front rail (B) in the hole (12) in the document finisher.
8. Fix the front rail (B) using 2 M4 × 12 screws (M).

9. Install the rear rail (C) at the rear of the document finisher using 2 M4 × 12 screws (M) in the same way.

---

6. Monter les plaques de verrouillage (N) sur les supports avant et arrière en procédant à l'aide d'une vis M4 × 8 (K) dans les deux cas.

7. Placer le crochet (11) de la glissière avant (B) dans l'encoche (10) à l'avant du retoucheur de document tout en insérant la saillie (13) de la glisière avant (B) dans le trou (12) du retoucheur de document.
8. Fixer la glissière avant (B) à l'aide de 2 vis M4 × 12 (M).

9. Monter la glissière arrière (C) au dos du retoucheur de document en procédant de la même façon et à l'aide de 2 vis M4 × 12 (M).

---

6. Instale las placas de cierre (N) en los soportes frontal y posterior usando un tornillo M4 × 8 (K) en cada uno.

7. Coloque el gancho (11) del carril frontal (B) en la muesca (10) de la parte frontal del finalizador de documentos al mismo tiempo que inserta el resalto (13) del carril frontal (B) en el orificio (12) del finalizador de documentos.
8. Fije el carril frontal (B) usando 2 tornillos M4 × 12 (M).

9. Instale el carril posterior (C) en la parte posterior del finalizador de documentos usando 2 tornillos M4 × 12 (M) de la misma forma.

---

6. Montieren Sie die Sperrplatten (N) an den vorderen und hinteren Stützen mit jeweils einer M4 × 8 Schraube (K).

7. Setzen Sie den Haken (11) der vorderen Schiene (B) in die Aussparung (10) vorne am Dokument-Finisher ein, und setzen Sie dabei auch den Vorsprung (13) an der vorderen Schiene (B) in die Öffnung (12) des Dokument-Finishers ein.
8. Befestigen Sie die vordere Schiene (B) mit den 2 M4 × 12 Schrauben (M).

9. Montieren Sie die hintere Schiene (C) auf gleiche Weise mit 2 M4 × 12 Schrauben (M) an der Rückseite des Dokument-Finishers.

---

6. Installare le piastre di bloccaggio (N) sui supporti anteriore e posteriore utilizzando una vite M4 × 8 (K) ciascuna.

7. Posizionare il gancio (11) della rotaia anteriore (B) sull'incavo (10) alla parte anteriore della finitrice di documenti, contemporaneamente inserire la la sporgenza (13) sulla rotaia anteriore (B) nel foro (12) nella finitrice di documenti.
8. Fissare la rotaia anteriore (B) utilizzando 2 viti M4 × 12 (M).

9. Installare la rotaia posteriore (C) alla parte posteriore della finitrice di documenti utilizzando 2 viti M4 × 12 (M) alla stessa maniera.

---

6. 使用各 1 颗 M4×8(K) 螺钉将锁定板 (N) 安装在前后的支柱上。

7. 将前部导轨 (B) 的挂钩 (11) 嵌入装订器前部的缺口 (10)，同时将前部导轨 (B) 的卡销 (13) 插入到装订器的孔 (12) 中。
8. 使用 2 颗 M4×12(M) 螺钉来固定前部导轨 (B)。

9. 按相同方法，使用 2 颗 M4×12(M) 螺钉将后部导轨 (C) 安装在装订器后部。

---

6. 잠금 플레이트 (N) 를 앞뒤 지주에 나사 M4×8(K) 각 1 개로 장착합니다 .

7. 문서 피니셔 앞의 이음부분 (10) 에 레일 앞 (B) 의 후크 (11) 를 걸고 동시에 문서 피니셔 구멍 (12) 에 레일 앞 (B) 의 보스 (13) 를 넣습니다 .
8. 나사 M4×12(M) 2 개로 레일 앞 (B) 을 고정합니다 .

9. 같은 방식으로 나사 M4×12(M) 2 개로 문서 피니셔 뒤에 레일 뒤 (C) 를 장착합니다 .

---

6. ロックプレート (N) を前後の支柱にビス M4×8(K) 各 1 本で取り付ける。

7. ドキュメントフィニッシャー前の切り欠き (10) にレール前 (B) のフック (11) を引っかけ、同時にドキュメントフィニッシャーの穴 (12) にレール前 (B) のボス (13) を入れる。
8. ビス M4×12(M)2 本でレール前 (B) を固定する。

9. 同様に、ビス M4×12(M)2 本で、ドキュメントフィニッシャー後にレール後 (C) を取り付ける。

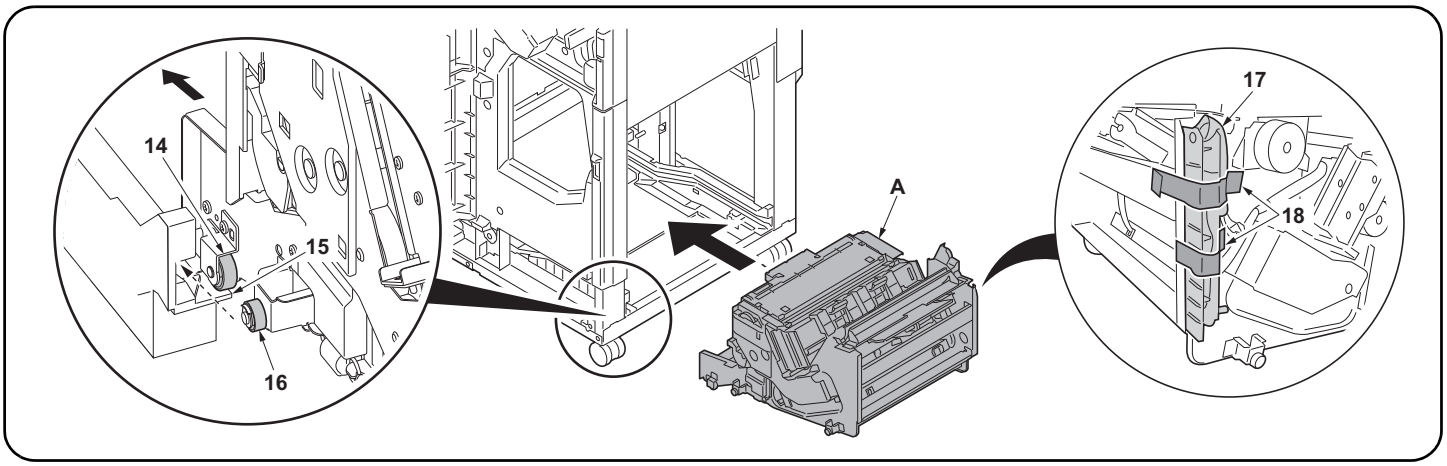

10. Place the left rollers (14) at the front and rear of the center-folding unit (A) on the tracks (15) on the inner sides of the rails, and roll in the direction shown. The middle rollers (16) will roll onto the rails.

11. Insert the center-folding unit (A) into the document finisher along the rails.

(NOTICE)

Insert without removing the fixing tape (18) for the wire guide (17). (The fixing tape (18) is removed at step 15)

---

10. Disposer les rouleaux gauche (14) à l'avant et à l'arrière de la plieuse (A) sur les voies (15) de côté interne des glissières et faire rouler dans la direction indiquée. Les rouleaux intermédiaires (16) vont se placer d'eux-mêmes sur les glissières.

11. Insérer la plieuse (A) dans le retoucheur de document le long des glissières.

(AVIS)

Insérer sans enlever la bande adhésive de fixation (18) pour le guide câble (17). (La bande adhésive de fixation (18) est enlevée à l'étape 15).

---

10. Coloque los rodillos izquierdos (14) en las partes frontal y posterior de la unidad de plegado (A) en las pistas (15) de los lados internos de los carriles y hágalos rodar en la dirección de la ilustración. Los rodillos intermedios (16) rodarán sobre los carriles.

11. Inserte la unidad de plegado (A) en el finalizador de documentos a lo largo de los carriles.

(AVISO)

Inserte sin quitar la cinta de fijación (18) de la guía para el cable (17). (La cinta de fijación (18) se quita en el paso 15.)

---

10. Setzen Sie die linken Rollen (14) an der Vorderseite und Rückseite der Mittenfalteinheit (A) auf die Bahnen (15) an den Innenseiten der Schienen, und rollen Sie sie in der dargestellten Richtung. Die mittleren Rollen (16) rollen nun auf die Schienen.

11. Schieben Sie die Mittenfalteinheit (A) entlang den Schienen in den Dokument-Finisher ein.

(HINWEIS)

Schieben Sie sie ein, ohne das Klebeband (18) für die Kabelführung (17) zu entfernen. (Das Klebeband (18) wird bei Schritt 15 entfernt.)

---

10. Posizionare i rulli di sinistra (14) alla parte anteriore e posteriore dell'unità di piegatura centrale (A) sulle piste (15) sui lati interni delle rotaie, e farli scorrere nella direzione mostrata. I rulli intermedi (16) scorreranno sulle rotaie.

11. Inserire l'unità di piegatura centrale (A) nella finitrice di documenti lungo le rotaie.

(NOTIFICA)

Inserire senza rimuovere il nastro di fissaggio (18) per la guida cavi (17). (Il nastro di fissaggio (18) viene rimosso al punto 15)

---

10. 将中缝装订－折页单元 (A) 前后的左侧滑轮 (14) 放在导轨内侧的转动部 (15) 上，并按箭头方向转动。将中间滑轮 (16) 插入到导轨上。

11. 将中缝装订－折页单元 (A) 沿着导轨插入到装订器中。

（注意）

插入时不需剥除电线导板（17）的固定胶带（18）。（在步骤 15 时剥除固定胶带（18））

---

10. 접기 유니트 (A) 의 앞뒤에 있는 좌측 코로 (14) 를 레일 내측에 있는 굴림부 (15) 에 얹고 화살표 방향으로 굴립니다 . 중간코로 (16) 가 레일에 삽입됩니다 .

11. 접기 유니트 (A) 를 레일에 붙여 문서 피니셔에 삽입합니다 .

(주의)

전선 가이드 (17) 의 고정 테이프 (18) 를 떼어 내지 않고 삽입할 것 . (고정 테이프 (18) 는 순서 15 에서 떼어 냅니다 .)

---

10. 中折りユニット (A) の前後にある左コロ (14) を、レールより内側にある転がし部 (15) に乗せ、矢印方向に転がす。中間コロ (16) がレールに挿入される。

11. 中折りユニット (A) をレールに沿ってドキュメントフィニッシャーに挿入する。

（注意）

電線ガイド (17) の固定テープ (18) を剥がさずに挿入すること。(固定テープ (18) は手順 15 で剥がす)

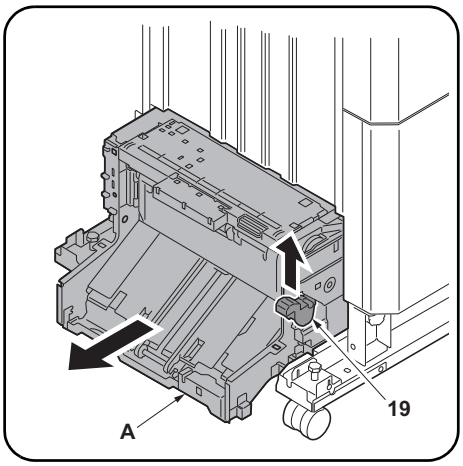

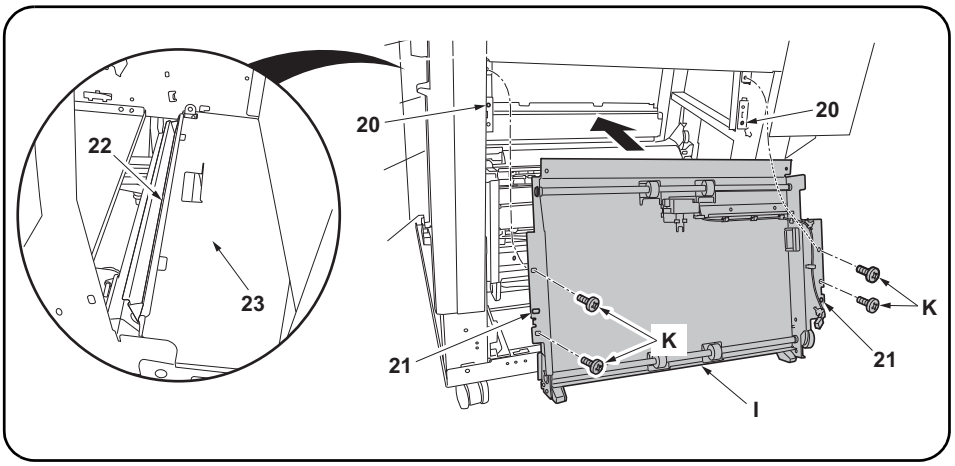

12. Release the lock lever (19) and pull out the center-folding unit (A) to the left of the document finisher.

13. Align the holes (21) in the relay paper conveying unit (I) with the 2 projections (20) on the document finisher. Install so that the lip (22) on the top frame of the relay paper conveying unit rests on the document finisher's frame (23).

14. Install the relay paper conveying unit (I) using 4 M4 × 8 screws (K).

---

12. Libérer le levier de verrouillage (19) et sortir la plieuse (A) par la gauche du retoucheur de document.

13. Aligner les trous (21) de l'unité de transport de relais (I) avec les 2 saillies (20) du retoucheur de document. Procéder de sorte que la lèvre (22) du châssis supérieur de l'unité de transport de relais repose sur le châssis du retoucheur de document (23).

14. Installer l'unité de transport de relais (I) à l'aide de 4 vis M4 × 8 (K).

---

12. Libere la palanca de bloqueo (19) y extraiga la unidad de plegado (A) hacia la izquierda del finalizador de documentos.

13. Alinee los orificios (21) de la unidad de transporte de papel (I) con los dos resaltos (20) del finalizador de documentos. Instale de forma tal que el reborde (22) del marco superior de la unidad de transporte de papel apoye en el marco del finalizador de documentos (23).

14. Instale la unidad de transporte de papel por relevador (I) usando 4 tornillos M4 × 8 (K).

---

12. Lösen Sie den Verriegelungshebel (19) und ziehen Sie die Mittenfalteinheit (A) zur linken Seite des Dokument-Finishers heraus.

13. Richten Sie die Öffnungen (21) der eingesetzten Papierfördereinheit (I) auf die 2 Vorsprünge (20) des Dokument-Finishers aus. Montieren Sie so, dass die Lippe (22) am oberen Rahmen der eingesetzten Papierfördereinheit auf dem Rahmen des Dokument-Finishers (23) ruht.

14. Montieren Sie die eingesetzte Papierfördereinheit (I) mit 4 M4 × 8 Schrauben (K).

---

12. Rilasciare la leva di blocco (19) e quindi estrarre l'unità di piegatura centrale (A) alla sinistra della finitrice di documenti.

13. Allineare i fori (21) nell'unità relay di trasporto carta (I) con le 2 sporgenze (20) sulla finitrice di documenti. Installare in modo che il bordo (22) sulla struttura superiore dell'unità relay di trasporto carta rimanga sulla struttura (23) della finitrice di documenti.

14. Installare l'unità relay di trasporto carta (I) utilizzando 4 viti M4 × 8 (K).

---

12. 解除锁定杆（19），将中缝装订－折页单元（A）从文档整理器的左侧拉出。

13. 将装订器的 2 处突出部（20）与中间搬运单元（I）的孔（21）对齐。将中间搬运单元上部框架的弯曲部（22）放在装订器的框架上（23）以进行安装。

14. 使用 4 颗 M4×8(K) 螺钉来安装后中间搬运单元（I）。

---

12. 잠금레버 (19) 를 해제하고 중철 유니트 (A) 를 문서 피니셔 좌측으로 이동시킵니다 .

13. 문서 피니셔의 돌기 (20) 2 개로 중계반송 유니트 (I) 의 구멍 (21) 을 맞춥니다 . 중계반송 유니트 상부 플레임의 구부러진 부분 (22) 이 문서 피니셔의 플레임 (23) 에 얹히게 장착합니다 .

14. 나사 M4×8(K) 4 개로 중계반송 유니트 (I) 를 장착합니다 .

---

12. ロックレバー（19）を解除し、中折りユニット（A）をドキュメントフィニッシャー左側へ引き出す。

13. ドキュメントフィニッシャーの突起（20）2 個に中継搬送ユニット（I）の穴（21）を合わせる。中継搬送ユニット上部フレームの折曲がり部（22）がドキュメントフィニッシャーのフレーム（23）に乗るように取り付ける。

14. ビス M4×8(K) 4 本で、中継搬送ユニット（I）を取り付ける。

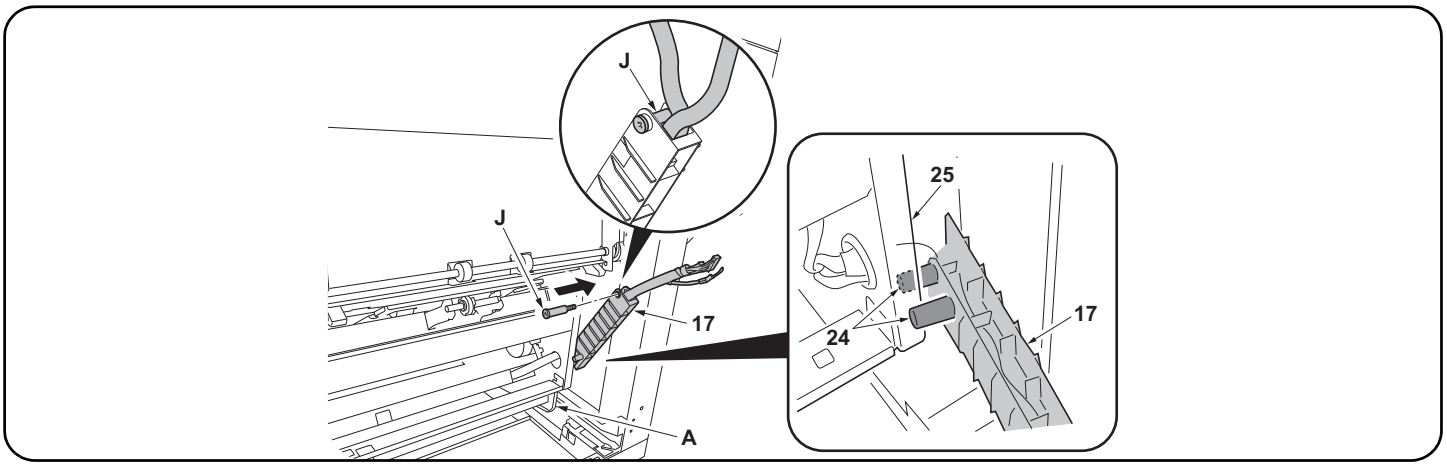

15. Remove the fixing tape (18) for the wire guide (17) and insert the pin (J) into the wire guide (17), with the 2 projections (24) on either side of the frame (25).
(NOTICE)
Insert the pin (J) to keep wires in the wire guide (17).
16. Screw the pin (J) into the document finisher to anchor the wire guide (17).

---

15. Enlever la bande adhésive de fixation (18) du guide câble (17) et insérer la goupille (J) dans le guide câble (17) avec les 2 saillies (24) de chaque côté du bâti (25).
(AVIS)
Insérer la goupille (J) pour que les câbles demeurent dans le guide câble (17).
16. Visser la goupille (J) dans le retoucheur de document pour fixer le guide câble (17) en place.

---

15. Quite la cinta de fijación (18) de la guía para el cable (17) e inserte el pasador (J) en la guía para el cable (17) con los 2 resaltos (24) a cada lado del marco (25).
(AVISO)
Inserte el pasador (J) para mantener los cables en la guía para el cable (17).
16. Atornille el pasador (J) en el finalizador de documentos para anclar la guía para el cable (17).

---

15. Entfernen Sie das Klebeband (18) für die Kabelführung (17) und stecken Sie die Rändelschraube (J) in die Kabelführung (17), wobei der Rahmen (25) zwischen den 2 Vorsprüngen (24) liegen muss.
(HINWEIS)
Stecken Sie die Rändelschraube (J) ein, um die Kabel in der Kabelführung (17) zu halten.
16. Schrauben Sie die Rändelschraube (J) in den Dokument-Finisher, um die Kabelführung (17) zu verankern.

---

15. Rimuovere il nastro di fissaggio (18) per la guida cavi (17) e quindi inserire il perno (J) nella guida cavi (17), con le 2 sporgenze (24) su ciascun lato della struttura (25).
(NOTIFICA)
Inserire il perno (J) per mantenere i cavi nella guida cavi (17).
16. Avvitare il perno (J) nella finitrice di documenti per ancorare la guida cavi (17).

---

15. 剥除电线导板（17）的固定胶带（18），使框架（25）处于 2 个卡销（24）之间，将 1 个销子（J）从电线导板（17）上穿过。
（注意）
将销钉（J）穿过电线导板（17）时，注意避免电线露出电线导板（17）外。
16. 将销钉（J）的螺纹部分安装到装订器上，以固定电线导板（17）。

---

15. 전선 가이드 (17) 의 고정 테이프 (18) 를 떼어 내고 보스 (24) 2 개의 사이에 프레임 (25) 이 들어 있는 상태에서 핀 (J) 1 개를 전선 가이드 (17) 에 통과시킵니다 .
(주의)
핀 (J) 은 전선이 전선 가이드 (17) 에서 나오지 않도록 통하게 합니다 .
16. 핀 (J) 의 나사부분을 문서 피니셔에 장착하고 전선 가이드 (17) 를 고정합니다 .

---

15. 電線ガイド（17）の固定テープ（18）を剥がし、ボス（24）2 本の間にフレーム（25）が入っている状態で、ピン（J）1 本を電線ガイド（17）に通す。
（注意）
ピン（J）は電線が電線ガイド（17）から出ないように通す。
16. ピン（J）のネジ部分をドキュメントフィニッシャーに取り付け、電線ガイド（17）を固定する。

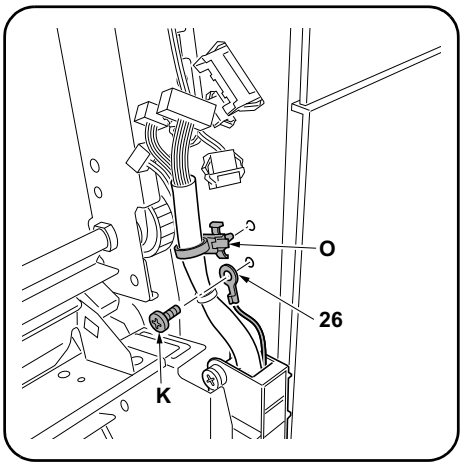

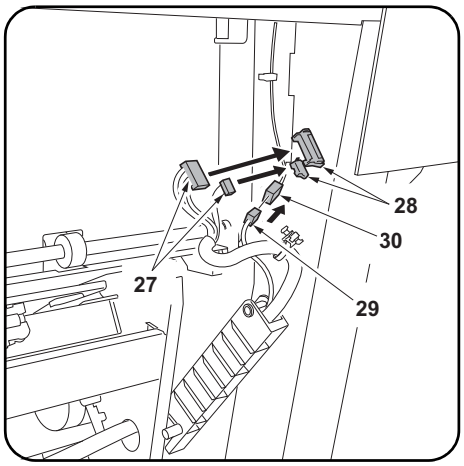

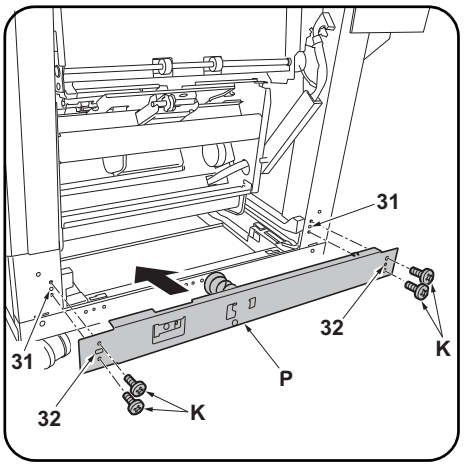

17. Install the ground wire (26) to the frame using an M4 × 8 screw (K).
18. Install the binding band (O) to the wires and fit the band into the frame.

19. Plug the 2 connectors (27) into the connectors (28) on the document finisher.
20. Plug the connector (29) into the connector (30) on the relay paper conveying unit (I).

21. Align holes (32) at 2 locations in the guide (P) with projections (31) on the document finisher.
22. Install the guide (P) on the document finisher using 4 M4 × 8 screws (K).

---

17. Fixer le câble de terre (26) au châssis en procédant à l'aide d'une vis M4 × 8 (K).
18. Monter le collier de fixation (O) sur les câbles et assujettir le collier au châssis.

19. Enficher les 2 connecteurs (27) dans les connecteurs (28) du retoucheur de document.
20. Enficher le connecteur (29) dans le connecteur (30) de l'unité de transport de relais (I).

21. Aligner les trous (32) en 2 endroits du guide (P) avec les saillies (31) du retoucheur de document.
22. Monter le guide (P) sur le retoucheur de document à l'aide de 4 vis M4 × 8 (K).

---

17. Instale el cable de conexión a tierra (26) en el marco usando un tornillo M4 × 8 (K).
18. Instale la correa de sujeción (O) en los cables y coloque la correa en el marco.

19. Enchufe los 2 conectores (27) en los conectores (28) del finalizador de documentos.
20. Enchufe el conector (29) en el conector (30) de la unidad de transporte de papel por relevador (I).

21. Alinee los orificios (32) de los 2 lugares de la guía (P) con los resaltos (31) del finalizador de documentos.
22. Instale la guía (P) en el finalizador de documentos usando 4 tornillos M4 × 8 (K).

---

17. Montieren Sie das Massekabel (26) mit einer M4 × 8 Schraube (K) an den Rahmen.
18. Bringen Sie das Schellenband (O) an den Kabeln an und setzen Sie das Band in den Rahmen ein.

19. Verbinden Sie die 2 Steckverbinder (27) mit den Steckverbindern (28) des Dokument-Finishers.
20. Verbinden Sie den Steckverbinder (29) mit dem Steckverbinder (30) der eingesetzten Papierfördereinheit (I).

21. Richten Sie die Öffnungen (32) an 2 Stellen in der Führung (P) auf die Vorsprünge (31) des Dokument-Finishers aus.
22. Montieren Sie die Führung (P) mit 4 M4 × 8 Schrauben (K) am Dokument-Finisher.

---

17. Installare il cavo di terra (26) alla struttura utilizzando una vite M4 × 8 (K).
18. Installare la fascetta di legatura (O) ai cavi e quindi fissare la fascetta nella struttura.

19. Inserire i 2 connettori (27) nei connettori (28) sulla finitrice di documenti.
20. Inserire il connettore (29) nel connettore (30) sull'unità relay di trasporto carta (I).

21. Allineare i fori (32) alle 2 posizioni nella guida (P) con le sporgenze (31) sulla finitrice di documenti.
22. Installare la guida (P) sulla finitrice di documenti utilizzando 4 viti M4 × 8 (K).

---

17. 使用 M4×8(K) 螺钉将装接地线 (26) 安装到框架上。
18. 在电线上安装束线带 (O)，将束线带 (O) 嵌入到框架上。

19. 将 2 个连接器 (27) 与装订器的连接器 (28) 相连接。
20. 将连接器 (29) 与中间搬运单元 (H) 的连接器 (30) 相连接。

21. 将装订器的 2 处突出部 (31) 与导板 (P) 的孔 (32) 对齐。
22. 使用 4 颗螺钉 M4×8(K) 将导板 (P) 安装到装订器上。

---

17. 나사 M4×8(K) 로 접지선 (26) 을 플레임에 장착합니다 .
18. 전선에 결속 밴드 (O) 를 장착하고 플레임에 결속 밴드 (O) 를 꽂습니다 .

19. 커넥터 (27) 2 개를 문서 피니셔의 커넥터 (28) 에 접속합니다 .
20. 커넥터 (29) 를 중계 유니트 (I) 의 커넥터 (30) 에 접속합니다 .

21. 문서 피니셔의 돌기 (31) 2 곳을 가이드 (P) 의 구멍 (32) 에 맞춥니다 .
22. 나사 M4×8(K) 4 개로 문서 피니셔에 가이드 (P) 를 장착합니다 .

---

17. ビス M4×8(K) でアース線 (26) をフレームに取り付ける。
18. 電線に結束バンド (O) を取り付け、フレームに結束バンド (O) をはめ込む。

19. コネクター(27)2 個をドキュメントフィニッシャーのコネクター(28) に接続する。
20. コネクター(29) を中継搬送ユニット (I) のコネクター(30) に接続する。

21. ドキュメントフィニッシャーの突起 (31)2 箇所にガイド (P) の穴 (32) に合わせる。
22. ビス M4×8(K)4 本でドキュメントフィニッシャーにガイド (P) を取り付ける。

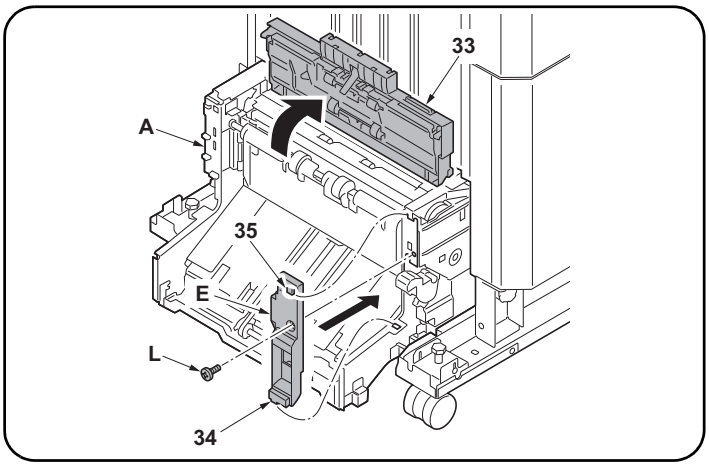

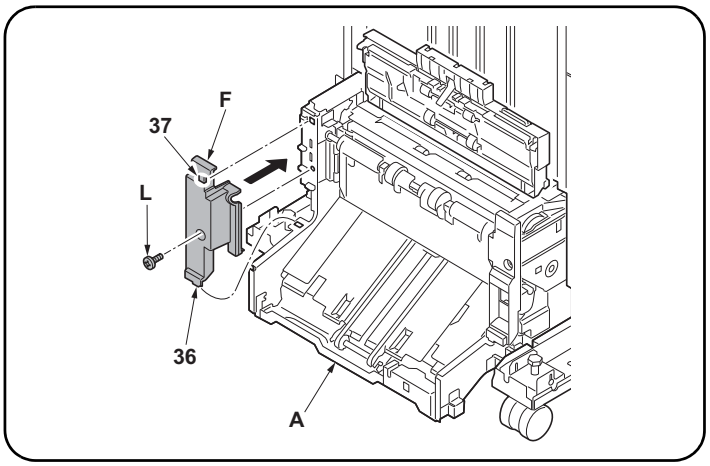

23. Open the eject cover (33).
24. Engage the projection (34) and hook (35) on the front side cover (E) with the center-folding unit (A). Complete installation of the front side cover (E) using an M4 × 10 screw (black) (L).

25. Engage the projection (36) and hook (37) on the rear side cover (F) with the center-folding unit (A). Complete installation of the rear side cover (F) using an M4 × 10 screw (black) (L).

---

23. Ouvrir le capot d'éjection (33).
24. Engager la saillie (34) et le crochet (35) du capot latéral avant (E) dans la plieuse (A). Finaliser l'installation du capot latéral avant (E) à l'aide d'une vis M4 × 10 (noire) (L).

25. Engager la saillie (36) et le crochet (37) du capot latéral arrière (F) dans la plieuse (A). Finaliser l'installation du capot latéral arrière (F) à l'aide d'une vis M4 × 10 (noire) (L).

---

23. Abra la cubierta de expulsión (33).
24. Enganche el resalto (34) y el gancho (35) de la cubierta lateral frontal (E) con la unidad de plegado (A). Complete la instalación de la cubierta lateral frontal (E) usando un tornillo M4 × 10 (negro) (L).

25. Enganche el resalto (36) y el gancho (37) de la cubierta lateral posterior (F) con la unidad de plegado (A). Complete la instalación de la cubierta lateral posterior (F) usando un tornillo M4 × 10 (negro) (L).

---

23. Öffnen Sie die Auswurfabdeckung (33).
24. Hängen Sie den Vorsprung (34) und den Haken (35) der vorderen Seitenabdeckung (E) in die Mittenfalteinheit (A) ein. Befestigen Sie die vordere Seitenabdeckung (E) mit einer M4 × 10 Schraube (schwarz) (L).

25. Hängen Sie den Vorsprung (36) und den Haken (37) der hinteren Seitenabdeckung (F) in die Mittenfalteinheit (A) ein. Befestigen Sie die hintere Seitenabdeckung (F) mit einer M4 × 10 Schraube (schwarz) (L).

---

23. Aprire il coperchio di espulsione carta (33).
24. Innestare la sporgenza (34) e il gancio (35) sul coperchio laterale anteriore (E) con l'unità di piegatura centrale (A). Completare l'installazione del coperchio laterale anteriore (E) utilizzando una vite M4 × 10 (nera) (L).

25. Innestare la sporgenza (36) e il gancio (37) sul coperchio laterale posteriore (F) con l'unità di piegatura centrale (A). Completare l'installazione del coperchio laterale posteriore (F) utilizzando una vite M4 × 10 (nera) (L).

---

23. 打开排纸盖板 (33)。
24. 将前部侧盖板 (E) 的突出部 (34) 以及挂钩 (35) 嵌入到中缝装订一折页单元 (A) 中，使用 1 颗 M4×10（黑）(L) 螺钉来安装前部侧盖板 (E)。

25. 将后部侧盖板 (F) 的突出部 (36) 以及挂钩 (37) 嵌入到中缝装订一折页单元 (A) 中，使用 1 颗 M4×10（黑）(L) 螺钉来安装后部侧盖板 (F)。

---

23. 배출 커버 (33) 를 엽니다 .
24. 사이드 커버 앞 (E) 의 돌기 (34) 및 후크 (35) 를 접기 유니트 (A) 에 꽂습니다 . 나사 M4×10 (흑) (L) 1 개로 사이드 커버 앞 (E) 을 장착합니다 .

25. 사이드 커버 뒤 (F) 의 돌기 (36) 및 후크 (37) 를 접기 유니트 (A) 에 꽂습니다 . 나사 M4×10 (흑) (L) 1 개로 사이드 커버 뒤 (F) 를 장착합니다 .

---

23. 排出カバー(33) を開く。
24. サイドカバー前 (E) の突起 (34) およびフック (35) を、中折りユニット (A) にはめ込む。
ビス M4×10(黒)(L)1 本で、サイドカバー前 (E) を取り付ける。

25. サイドカバー後 (F) の突起 (36) およびフック (37) を、中折りユニット (A) にはめ込む。
ビス M4×10(黒)(L)1 本で、サイドカバー後 (F) を取り付ける。

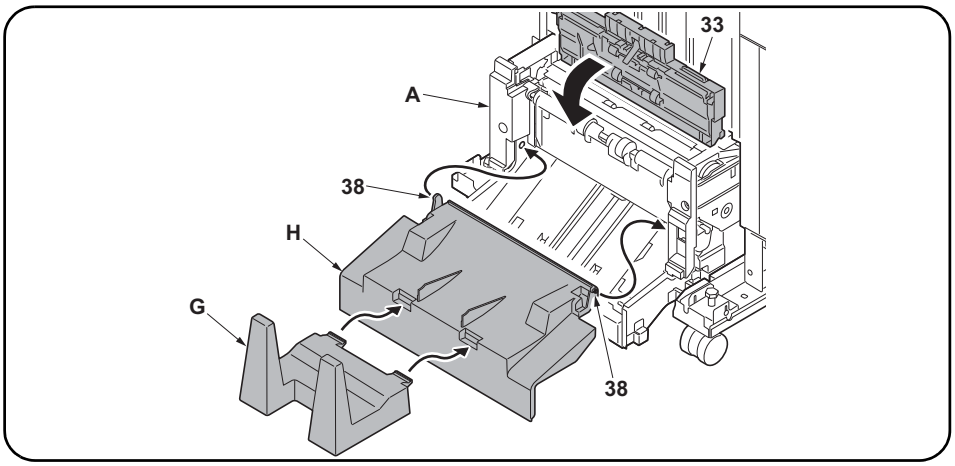

26. Insert the 2 pins (38) on the output tray (H) in the holes in the center-folding unit (A) to install the tray.
27. Install the output stock tray (G) on the output tray (H).
28. Close the eject cover (33).

---

26. Insérer les 2 goupilles (38) du plateau de sortie (H) dans les trous de la plieuse (A) pour installer le plateau.
27. Installer la butée de sortie du papier (G) sur le plateau de sortie (H).
28. Fermer le capot d'éjection (33).

---

26. Inserte los 2 pasadores (38) de la bandeja de salida (H) en los orificios de la unidad de plegado (A) para instalar la bandeja.
27. Instale la bandeja de recolección de papel de salida (G) en la bandeja de salida (H).
28. Cierre la cubierta de expulsión (33).

---

26. Stecken Sie die 2 Rändelschrauben (38) des Ausgabefachs (H) in die Öffnungen der Mittenfalteinheit (A) ein, um das Fach zu installieren.
27. Bringen Sie das Ausgabestapelfach (G) am Ausgabefach (H) an.
28. Schließen Sie die Auswurfabdeckung (33).

---

26. Inserire i 2 perni (38) sul vassoio di uscita (H) nei fori sull'unità di piegatura centrale (A) per installare il vassoio.
27. Installare il vassoio di uscita stoccaggio (G) sul vassoio di uscita (H).
28. Chiudere il coperchio di esplusione carta (33).

---

26. 将排纸托盘 (H) 的 2 根销钉 (38) 插入中缝装订一折页单元 (A) 的孔中，以安装排纸托盘 (H)。
27. 将堆纸托盘 (G) 安装到排纸托盘 (H) 上。
28. 关闭排纸盖板 (33)。

---

26. 배지트레이 (H) 의 핀 (38) 2 개를 접기 유니트 (A) 의 구멍에 넣고 배지 트레이 (H) 를 장착합니다 .
27. 배지 저장 트레이 (G) 를 배지 트레이 (H) 에 장착합니다 .
28. 배출커버 (33) 를 닫습니다 .

---

26. 排紙トレイ (H) のピン (38) 2 本を中折りユニット (A) の穴に入れ、排紙トレイ (H) を取り付ける。
27. 排紙ストックトレイ (G) を排紙トレイ (H) に取り付ける。
28. 排出カバー (33) を閉じる。

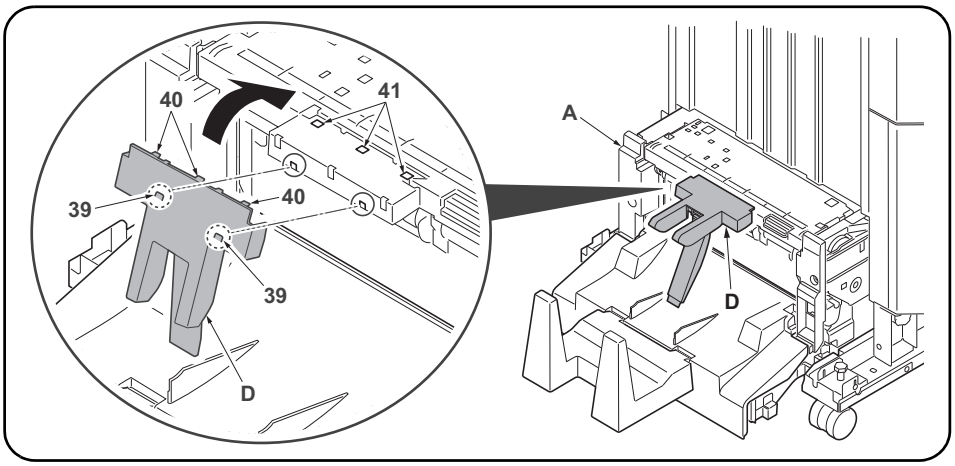

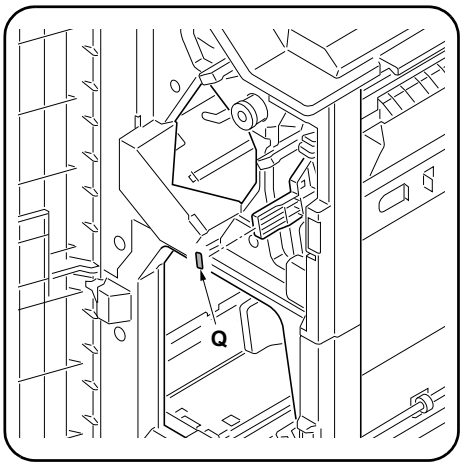

29. Insert the 2 projections (39) on the back of the output stopper (D) in the portions circled on the center-folding unit (A).
Fit the 3 hooks (40) on the output stopper (D) in the holes (41) in the center-folding unit (A).

30. Adhere the D7 label (Q) at the location shown in the figure.

---

29. Insérer les 2 saillies (39) au dos de la butée de sortie (D) dans les parties encerclées de la plieuse (A).
Assujettir les 3 crochets (40) de la butée de sortie (D) dans les trous (41) de la plieuse (A).

30. Apposer l'étiquette D7 (Q) à l'endroit repéré sur la figure.

---

29. Inserte los 2 resaltos (39) de la parte posterior del tope de salida (D) en las porciones marcadas con un círculo de la unidad de plegado (A).
Coloque los 3 ganchos (40) del tope de salida (D) en los orificios (41) de la unidad de plegado (A).

30. Adhiera la etiqueta D7 (Q) en el lugar que se muestra en la ilustración.

---

29. Setzen Sie die 2 Vorsprünge (39) auf der Rückseite des Ausgabeanschlags (D) in die mit Kreis bezeichneten Positionen der Mittenfalteinheit (A) ein.
Setzen Sie die 3 Haken (40) des Ausgabeanschlags (D) in die Öffnungen (41) der Mittenfalteinheit (A) ein.

30. Kleben Sie den D7 Aufkleber (Q) an der abgebildeten Stelle an.

---

29. Inserire le 2 sporgenze (39) sulla parte posteriore del fermo di uscita (D) nelle porzioni cerchiate sull'unità di piegatura centrale (A).
Fissare i 3 ganci (40) sul fermo di uscita (D) nei fori (41) nell'unità di piegatura centrale (A).

30. Far aderire l'etichetta D7 (Q) alla posizione mostrata nella figura.

---

29. 将排纸挡板 (D) 内侧的 2 处突出部 (39) 插入到中缝装订－折页单元 (A) 的圆框部。
将排纸挡板 (D) 的 3 个挂钩 (40) 嵌入到中缝装订－折页单元 (A) 的孔 (41) 中。

30. 在图示位置黏贴 D7 标签 (Q)。

---

29. 배지 스토퍼 (D) 의 안쪽에 있는 돌기 (39) 2 곳을 접기 유니트 (A) 의에 삽입합니다 .
배지 스토퍼 (D) 의 후크 (40) 3 곳을 접기 유니트 (A) 의 구멍 (41) 에 끼웁니다 .

30. D7 라벨 (Q) 을 그림의 위치에 붙입니다 .

---

29. 排紙ストッパー(D) の裏側にある突起 (39)2 箇所を中折ユニット (A) の丸枠部に挿入する。
排紙ストッパー(D) のフック (40)3 箇所を中折りユニット (A) の穴 (41) にはめ込む。

30. D7 ラベル (Q) を図の位置に貼り付ける。

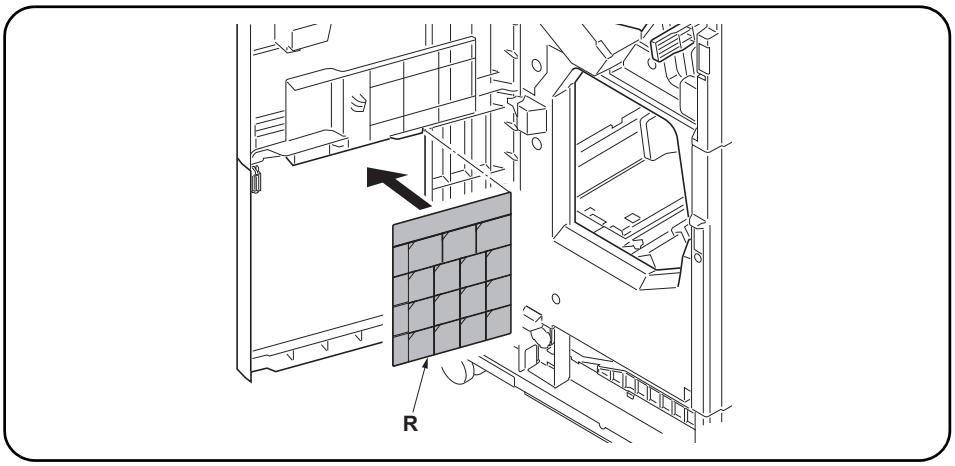

31. Adhere the Operation label (R) at the location shown in the figure.
32. Reinstall the foot cover (5) and lower rear cover (7).
33. Close the lower front cover (3) and the upper front cover (1).

---

31. Apposer l'étiquette de fonctionnement (R) à l'endroit repéré sur la figure.
32. Reposer le couvercle du pied (5) et le couvercle arrière inférieur (7).
33. Fermer le capot inférieur avant (3) et le couvercle avant supérieur (1).

---

31. Adhiera la etiqueta de funcionamiento (R) en el lugar que se muestra en la ilustración.
32. Vuelva a instalar la cubierta de la pata (5) y la cubierta posterior inferior (7).
33. Cierre la cubierta frontal inferior (3) y la cubierta frontal superior (1).

---

31. Kleben Sie den Bedienungsaufkleber (R) an der abgebildeten Stelle an.
32. Bringen Sie die Fußabdeckung (5) und die untere hintere Abdeckung (7) wieder an.
33. Schließen Sie die untere vordere Abdeckung (3) und die obere vordere Abdeckung (1).

---

31. Far aderire l'etichetta di operazione (R) alla posizione mostrata nella figura.
32. Reinstallare la copertura del piede (5) e il coperchio inferiore posteriore (7).
33. Chiudere il coperchio inferiore anteriore (3) e il coperchio superiore anteriore (1).

---

31. 在图示位置黏贴操作标签 (R)。
32. 按原样安装脚座盖板 (5) 和后部下盖板 (7)。
33. 关闭前部下盖板 (3) 和前部上盖板 (1)。

---

31. 조작 라벨 (R) 을 그림의 위치에 붙입니다 .
32. 풋커버 (5) 및 뒤하 커버 (7) 를 원래대로 장착합니다 .
33. 전면 아래커버 (3) 및 전면 윗커버 (1) 를 닫습니다 .

---

31. 操作ラベル (R) を図の位置に貼り付ける。
32. フットカバー (5) および後下カバー (7) を元通りに取り付ける。
33. 前下カバー (3) および前上カバー (1) を閉じる。

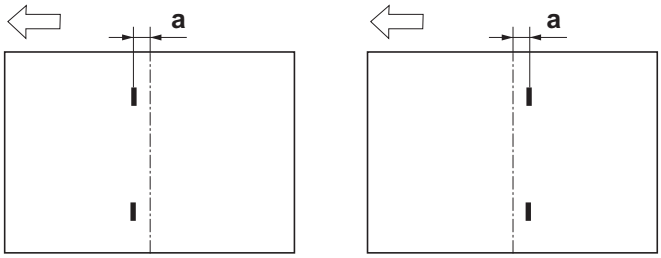

Adjustment of centerfold-stapling position
Check the distance (a) from the stapling position to the center of the paper. If the distance (a) is over the reference value, follow the procedure below to adjust the position.
<Reference value (a)> ±2 mm

1. Set maintenance mode U246, select Booklet and Staple Pos.
2. Adjust the values.
3. Press the Start key to confirm the setting value.

Réglage de la position d'agrafage des pages centrales dépliables
Vérifier la distance (a) entre la position d'agrafage et le milieu de la feuille de papier. Si cette distance (a) est supérieure à la valeur de référence, régler la position en procédant de la manière suivante.
<Valeur de référence (a)> ±2 mm

1. Passer en mode maintenance U246, sélectionner Booklet et Staple Pos.
2. Régler les valeurs.
3. Appuyer sur la touche de Start pour confirmer la valeur de réglage.

Ajuste de la posición de grapado de la unidad de plegado
Compruebe la distancia (a) desde la posición de grapado con respecto al centro del papel. Si dicha distancia (a) supera el valor de referencia, realice el siguiente procedimiento para ajustar la posición.
<Valor de referencia (a)> ±2 mm

1. Entre en el modo de mantenimiento U246, seleccione Booklet y Staple Pos.
2. Ajuste los valores.
3. Pulse la tecla de Start para confirmar el valor de configuración.

Einstellung der Mittenfalt-Heftposition
Überprüfen Sie den Abstand (a) zwischen der Heftposition und der Papiermitte. Falls der Abstand (a) größer als der Bezugswert ist, ist die Position gemäß der nachstehenden Prozedur nachzustellen.
<Bezugswert (a)> ±2 mm

1. Schalten Sie in den Wartungsmodus U246, wählen Sie Booklet und Staple Pos.
2. Die Werte einstellen.
3. Den Einstellwert durch Drücken der Start-Taste bestätigen.

Regolazione della posizione di cucitura dell'unità di piegatura centrale
Controllare la distanza (a) dalla posizione di spillatura al centro del foglio. Se la distanza (a) è superiore al valore di riferimento, seguire la procedura riportata sotto per regolare la posizione.
<Valore di riferimento (a)> ±2 mm

1. Impostare la modalità manutenzione U246, selezionare Booklet e Staple Pos.
2. Regolare i valori.
3. Premere il tasto di Start per confermare il valore dell'impostazione.

中缝装订位置调整
检查从装订位置到纸张中心的距离 (a)。如果距离 (a) 超出标准值范围，按照下列步骤调节装订位置。
＜标准值 (a) ＞ ±2mm

1. 设置维护模式 U246，选择 Booklet、Staple Pos。
2. 调整设定值。
3. 按 Start 键，以确定设定值。

접기 스테이플 위치조정
스테이플 위치에서 용지 중앙까지의 거리離 (a) 를 확인합니다 . 거리 (a) 가 기준치 외의 경우에는 다음 순서로 조정을 합니다 .
＜기준치 (a) ＞ ±2mm

1. 메인터넌스 모드 U246 을 세트하고 Booklet, Staple Pos 를 선택합니다 .
2. 설정치를 조정합니다 .
3. 시작키를 누르고 설정치를 확인합니다 .

中とじステープル位置調整
ステープル位置から用紙センターまでの距離 (a) を確認する。距離 (a) が基準値外の場合、次の手順で調整を行う。
＜基準値 (a) ＞ ±2mm

1. メンテナンスモード U246 をセットし、Booklet、Staple Pos を選択する。
2. 設定値を調整する。
3. スタートキーを押し、設定値を確定する。

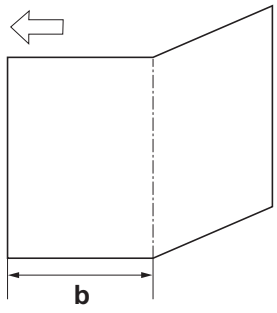

Adjustment of center folding position
Check the distance (b) from the edge of the paper to the center folding position. If the distance (b) is over the reference value, follow the procedure below to adjust the position.
<Reference value (b)>
A4, Letter: Length of paper × 1/2 ±2 mm
A3, Ledger, B4: Length of paper × 1/2 ±3 mm

1. Set maintenance mode U246, select Booklet and Booklet Pos.
2. Adjust the values.
3. Press the Start key to confirm the setting value.

Réglage de la position de pliage central
Vérifier la distance (b) entre le bord de la feuille de papier et la position de pliage central. Si cette distance (b) est supérieure à la valeur de référence, régler la position en procédant de la manière suivante.
<Valeur de référence (b)>
A4, Letter : Longueur de la feuille × 1/2 ±2 mm
A3, Ledger, B4: Longueur de la feuille × 1/2 ±3 mm

1. Passer en mode maintenance U246, sélectionner Booklet et Booklet Pos.
2. Régler les valeurs.
3. Appuyer sur la touche de Start pour confirmer la valeur de réglage.

Ajuste de la posición de plegado
Compruebe la distancia (b) desde el borde del papel a la posición de plegado. Si dicha distancia (b) supera el valor de referencia, realice el siguiente procedimiento para ajustar la posición.
<Valor de referencia (b)>
A4, Letter: Longitud del papel × 1/2 ±2 mm
A3, Ledger, B4: Longitud del papel × 1/2 ±3 mm

1. Entre en el modo de mantenimiento U246, seleccione Booklet y Booklet Pos.
2. Ajuste los valores.
3. Pulse la tecla de Start para confirmar el valor de configuración.

Einstellung der Mittenfaltposition
Überprüfen Sie den Abstand (b) zwischen der Papierkante und der Mittenfaltposition. Falls der Abstand (b) größer als der Bezugswert ist, ist die Position gemäß der nachstehenden Prozedur nachzustellen.
<Bezugswert (b)>
A4, Letter: Papierlänge × 1/2 ±2 mm
A3, Ledger, B4: Papierlänge × 1/2 ±3 mm

1. Schalten Sie in den Wartungsmodus U246, wählen Sie Booklet und Booklet Pos.
2. Die Werte einstellen.
3. Den Einstellwert durch Drücken der Start-Taste bestätigen.

Regolazione della posizione centrale di piegatura
Controllare la distanza (b) dal bordo della carta alla posizione centrale di piegatura. Se la distanza (b) è superiore al valore di riferimento, seguire la procedura riportata sotto per regolare la posizione.
<Valore di riferimento (b)>
A4, Letter: Lunghezza carta × 1/2 ±2 mm
A3, Ledger, B4: Lunghezza carta × 1/2 ±3 mm

1. Impostare la modalità manutenzione U246, selezionare Booklet e Booklet Pos.
2. Regolare i valori.
3. Premere il tasto di Start per confermare il valore dell'impostazione.

中缝折叠位置调整
检查从纸张头部到折叠位置的距离 (b)。如果距离 (b) 超出标准值范围，按照下列步骤调节折叠位置。
＜标准值 (b) ＞
A4,Letter: 纸张长度 ×1/2 ± 2mm
A3,Ledger,B4: 纸张长度 ×1/2 ± 3mm

1. 设置维护模式 U246，选择 Booklet、Booklet Pos。
2. 调整设定值。
3. 按 Start 键，以确定设定值。

접기 위치조정
용지 끝에서 접기 위치까지의 거리 (b) 를 확인합니다 . 거리 (b) 가 기준치 외의 경우에는 다음 순서로 조정을 합니다 .
＜기준치 (b) ＞
A4,Letter: 용지길이 ×1/2 ± 2mm
A3,Ledger,B4: 용지길이 ×1/2 ± 3mm

1. 메인터넌스 모드 U246 을 세트하고 Booklet, Booklet Pos 를 선택합니다 .
2. 설정치를 조정합니다 .
3. 시작키를 누르고 설정치를 확인합니다 .

中折り位置調整
用紙端から中折り位置までの距離 (b) を確認する。距離 (b) が基準値外の場合、次の手順で調整を行う。
＜基準値 (b) ＞
A4,Letter: 用紙長 ×1/2 ± 2mm
A3,Ledger,B4: 用紙長 ×1/2 ± 3mm

1. メンテナンスモード U246 をセットし、Booklet、Booklet Pos を選択する。
2. 設定値を調整する。
3. スタートキーを押し、設定値を確定する。

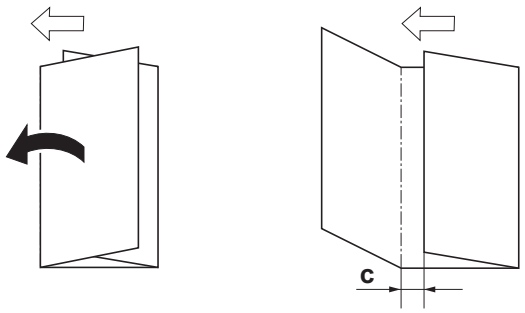

Adjustment of tri-folding position
Check the distance (c) from the edge of the paper to the second folding position. If the distance (c) is over the reference value, follow the procedure below to adjust the position.
<Reference value (c)> 7.0 ±2 mm

1. Set maintenance mode U246, select Booklet and Three Fold.
2. Adjust the values.
3. Press the Start key to confirm the setting value.

Réglage de la position de triple pliage
Vérifier la distance (c) entre le bord de la feuille de papier et la position du deuxième pliage. Si cette distance (c) est supérieure à la valeur de référence, régler la position en procédant de la manière suivante.
<Valeur de référence (c)> 7,0 ±2 mm

1. Passer en mode maintenance U246, sélectionner Booklet et Three Fold.
2. Régler les valeurs.
3. Appuyer sur la touche de Start pour confirmer la valeur de réglage.

Ajuste de la posición de plegado tríptico
Compruebe la distancia (c) desde el borde del papel a la segunda posición de plegado. Si dicha distancia (c) supera el valor de referencia, realice el siguiente procedimiento para ajustar la posición.
<Valor de referencia (c)> 7,0 ±2 mm

1. Entre en el modo de mantenimiento U246, seleccione Booklet y Three Fold.
2. Ajuste los valores.
3. Pulse la tecla de Start para confirmar el valor de configuración.

Einstellung der Dreilagenfaltposition
Überprüfen Sie den Abstand (c) zwischen der Papierkante und der zweiten Faltposition. Falls der Abstand (c) größer als der Bezugswert ist, ist die Position gemäß der nachstehenden Prozedur nachzustellen.
<Bezugswert (c)> 7,0 ±2 mm

1. Schalten Sie in den Wartungsmodus U246, wählen Sie Booklet und Three Fold.
2. Die Werte einstellen.
3. Den Einstellwert durch Drücken der Start-Taste bestätigen.

Regolazione della posizione di piegatura tripla
Controllare la distanza (c) dal bordo della carta alla posizione della seconda piegatura. Se la distanza (c) è superiore al valore di riferimento, seguire la procedura riportata sotto per regolare la posizione.
<Valore di riferimento (c)> 7,0 ±2 mm

1. Impostare la modalità manutenzione U246, selezionare Booklet e Three Fold.
2. Regolare i valori.
3. Premere il tasto di Start per confermare il valore dell'impostazione.

三折位置调整
检查从纸张头部到第 2 个折叠位置的距离（c）。如果距离（c）超出标准值范围，按照下列步骤调节折叠位置。
＜标准（c）＞7.0±2mm

1. 设置维护模式 U246，选择 Booklet、Three Fold。
2. 调整设定值。
3. 按 Start 键，以确定设定值。

두번 접기 위치 조정
용지끝과 두번째 접히는 위치까지의 거리 (c) 를 확인합니다 . 거리 (c) 가 기준치 외의 경우에는 다음 순서로 조정을 합니다 .
＜기준치 (c) ＞ 7.0±2mm

1. 메인터넌스 모드 U246 을 세트하고 Booklet, Three Fold 를 선택합니다 .
2. 설정치를 조정합니다 .
3. 시작키를 누르고 설정치를 확인합니다 .

三折り位置調整
用紙端と二つ目の折り位置までの距離（c）を確認する。距離（c）が基準値外の場合、次の手順で調整を行う。
＜基準値（c）＞7.0±2mm

1. メンテナンスモード U246 をセットし、Booklet、Three Fold を選択する。
2. 設定値を調整する。
3. スタートキーを押し、設定値を確定する。

NOTICE
This accessory is for use only with the following Applicant's Listed Machine.
Refer to the supplied guide to install the accessory in the field.
Machine: DF-790

AVIS
Cet accessoire est utilisable uniquement avec le copieur figurant dans la liste du demandeur suivant.
Se reporter au guide fourni pour installer l'accessoire dans le champ.
Modèle: DF-790

AVISO
Este accesorio es sólo para usar en las siguientes fotocopiadoras de la lista de solicitantes.
Consulte las instrucciones para la instalación de accesorios en el lugar del cliente.
Modelo: DF-790

HINWEIS
Dieses Zubehör ist nur für den Einsatz mit der folgenden Antragstellerlisten-Kopiermaschine vorgesehen.
Installieren Sie das Zubehör gemäß der mitgelieferten Anleitung im Feld.
Modell: DF-790

NOTIFICA
Questo accessorio deve essere usato solo con le seguenti fotocopiatrici nella lista dell’applicante.
Consultare la guida fornita in dotazione per il montaggio in campo dell’accessorio.
Modello: DF-790

注意
本产品适用于以下选购件。
安装时，请参照附带的说明书。
式样 :DF-790

주의
본 제품은 이하의 기종에 적용됩니다 .
설치할 때에는 동봉된 안내문을 참조해 주십시오 .
기종:DF-790

注意
本製品は、以下の機種に適用します。
設置する際は、同梱の手順書を参照してください。
機種:DF-790

INSTALLATION GUIDE FOR MAILBOX

English

A different procedure is required depending on the product which is installed with this unit.Each procedure is described in the following pages.
When installing to a document finisher, see Page 1 to Page 6.
When installing to a Printer, see Page 7 to Page 12.

Français

Une procédure différente est requise selon le produit qui est installé avec cette unité.Chaque procédure est décrite dans les pages suivantes.
Lors de l'installation sur un module finition de documents, voir Page 1 à Page 6.
Lors de l'installation sur une imprimante, voir Page 7 à Page 12.

Español

El procedimiento es diferente según el producto que se instale con esta unidad.En las siguientes páginas, se describe cada procedimiento.
Para la instalación con un finalizador de documentos, consulte las páginas de la 1 a la 6.
Para la instalación con una impresora, consulte las páginas de la 7 a la 12.

Deutsch

Je nach verwendetem Modell ist eine andere Vorgehensweise zur Installation dieses Teils erforderlich.Die unterschiedlichen Vorgehensweisen werden auf den folgenden Seiten erläutert.
Bei Installation an einem Dokumentenfinisher siehe Seiten 1 bis 6.
Bei Installation an einem Drucker siehe Seiten 7 bis 12.
.

Italiano

Si richiede una procedura diversa in funzione del prodotto su cui è installata l'unità.Le singole procedure sono descritte nelle pagine seguenti.
Quando si installa un finisher documenti, vedere le pagine da 1 a 6.
Quando si installa una stampante, vedere le pagine da 7 a 12.

简体中文

根据安装对象，安装步骤略有不同。各个步骤记载在下面的页面。
安装到装订器时，请参见第 1 ～ 6 页。
安装到打印机时，请参见第 7 ～ 12 页。

한국어

이 장치에 설치되는 제품에 따라 절차가 다릅니다 . 다음 페이지에서 각 절차를 설명합니다 .
문서 피니셔에 설치하는 경우 1 페이지 ~6 페이지를 참조하십시오 .
프린터에 설치하는 경우 7 페이지 ~12 페이지를 참조하십시오 .

日本語

装着する対象によって、取付手順は異なります。それぞれ、以下のページに記載しています。
ドキュメントフィニッシャーに設置する場合;1 ページ～ 6 ページ
プリンターに設置する場合;7 ページ～ 12 ページ

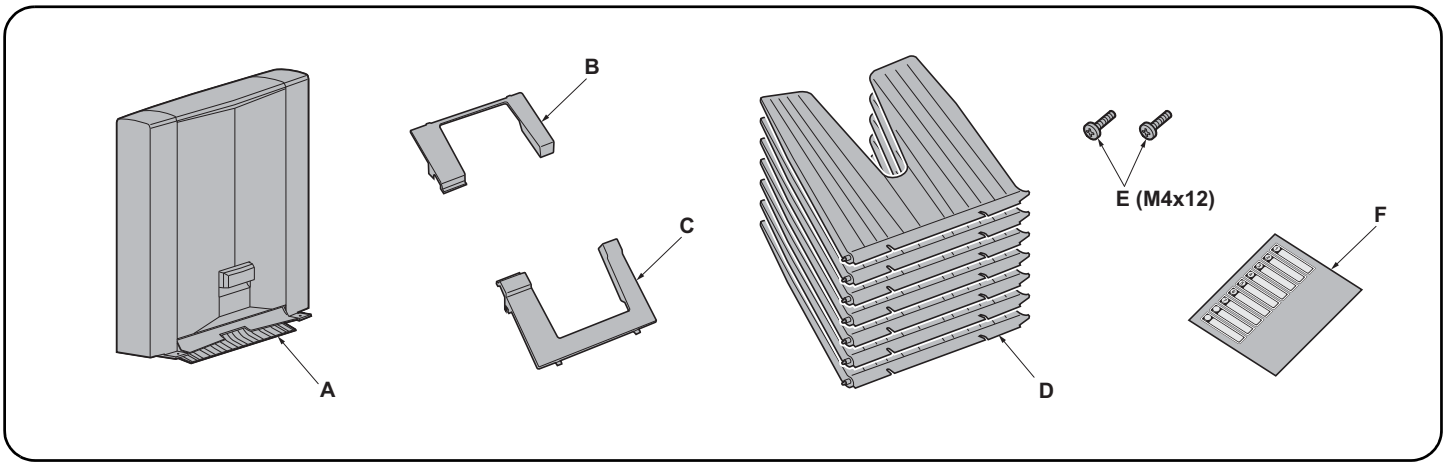

English

Supplied parts

A. Mailbox 1
B. Front mounting plate cover 1
C. Rear mounting plate cover 1
D. Copy eject bins 7
E. M4 × 12 screw 2
F. Tray name label (for users) 1

Be sure to remove any tape and/or cushioning materials from the parts supplied.

Français

Pièces fournies

A. Boîte à lettres 1
B. Couvercle de la plaque de montage avant 1
C. Couvercle de la plaque de montage arrière ... 1
D. Case d'éjection de copies 7
E. Vis M4 × 12 2
F. Étiquette de nom de plateau (pour les utilisateurs) 1

Veillez à retirer les morceaux de bande adhésive et/ou les matériaux de rembourrage des pièces fournies.

Español

Partes suministradas

A. Buzón de correo 1
B. Cubierta de la placa de montaje frontal 1
C. Cubierta de la placa de montaje trasera 1
D. Bandejas de expulsión de copias 7
E. Tornillo M4 × 12 2
F. Etiqueta de nombre de la bandeja (para usuarios) 1

Asegúrese de quitar todas las cintas y/o material amortiguador de las partes suministradas.

Deutsch

Enthaltene Teile

A. Mailbox 1
B. Vordere Abdeckung der Montageplatte 1
C. Hintere Abdeckung der Montageplatte 1
D. Kopienausgabefächer 7
E. Schraube M4 × 12 2
F. Fachnamenaufkleber (für Benutzer) 1

Stellen Sie sicher, dass sämtliche Klebebänder und/oder Polstermaterial von den gelieferten Teilen entfernt wurden.

Italiano

Parti fornite

A. Mailbox 1
B. Coperchio della piastra di montaggio anteriore .. 1
C. Coperchio della piastra di montaggio posteriore. 1
D. Scomparti di espulsione delle copie 7
E. Vite M4 × 12 2
F. Etichetta di nome del vassoio (per utenti) 1

Rimuovere tutti i nastri adesivi e/o i materiali di protezione dalle parti fornite.

简体中文

附属品

A. 邮箱..... 1
B. 支撑板前盖板..... 1
C. 支撑板后盖板..... 1
D. 接纸盘..... 7
E. M4×12 螺丝 2
F. 托盘名称标贴（用户用）..... 1

如果附属品上带有固定胶带，缓冲材料时务必揭下。

한국어

동봉품

A. 메일박스..... 1
B. 부착판커버 앞..... 1
C. 부착판커버 뒤..... 1
D. 배출핀..... 7
E. 나사 M4 × 12..... 2
F. 트레이 명칭 씰（사용자용）..... 1

동봉품에 고정 테이프，완충재가 붙어 있는 경우에는 반드시 제거하십시오.

日本語

同梱品

A. メールボックス..... 1
B. 取付板カバー前..... 1
C. 取付板カバー後..... 1
D. 排出ピン..... 7
E. ビス M4×12 2
F. トレイ名称シール(ユーザー用) 1

同梱品に固定テープ、緩衝材が付いている場合は必ず取り外すこと。

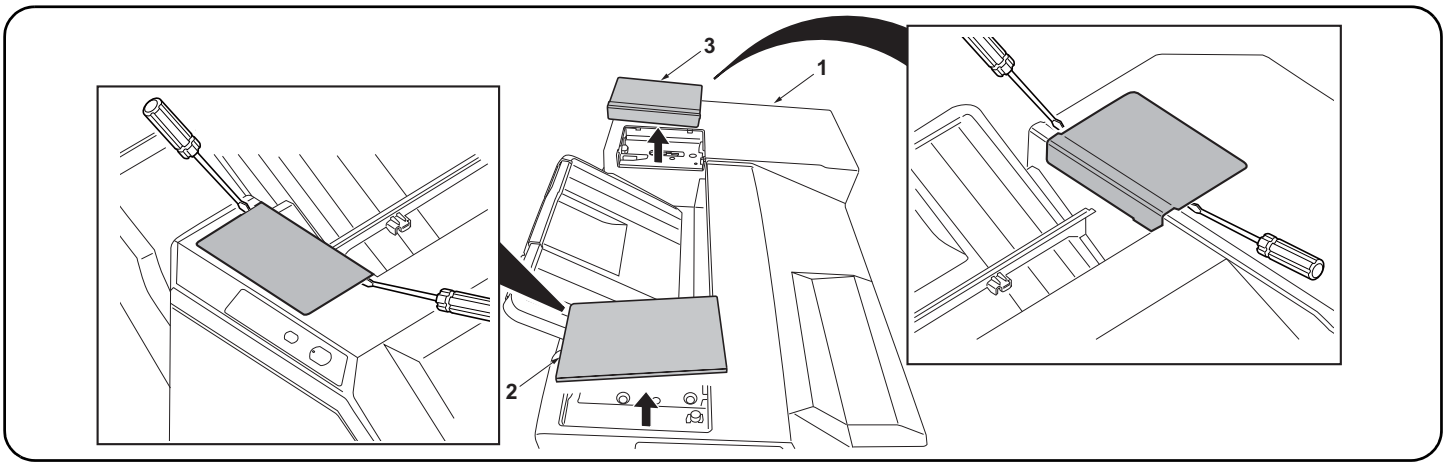

Procedure
Before starting installation, be sure to turn the main power switch of the machine off, and unplug the power plug from the wall outlet.

1. Remove the front top cover (2) and rear top cover (3) at the top of the finisher (1) using a flat-blade screwdriver or the like.

Procédure
Avant de commencer l'installation, s'assurer de mettre la machine hors tension et de débrancher la fiche d'alimentation de la prise murale.

1. Retirer le couvercle supérieur avant (2) et le couvercle supérieur arrière (3) situés en haut du retoucheur (1) à l'aide d'un tournevis à tête plate ou d'un outil équivalent.

Procedimiento
Antes de iniciar la instalación, asegúrese de apagar el interruptor de encendido de la máquina y desenchufar el cable de alimentación de la toma de pared.

1. Remueva la cubierta superior delantera (2) y la cubierta superior trasera (3) en la parte superior del finalizador (1) utilizando un destornillador de punta plana o similar.

Verfahren
Bevor Sie mit der Installation beginnen überzeugen Sie sich, dass der Netzschalter des Geräts ausgeschaltet und das Stromkabel aus der Steckdose gezogen ist.

1. Entfernen Sie die vordere obere Abdeckung (2) und die hintere obere Abdeckung (3) an der Oberseite des Finishers (1) mit einem Klingenschraubendreher oder dergleichen.

Procedura
Prima di iniziare l'installazione, spegnere la macchina e scollegare la spina dalla presa di corrente.

1. Rimuovere il coperchio superiore anteriore (2) e il coperchio superiore posteriore (3) dalla parte superiore del finitore (1) utilizzando un cacciavite a punta piatta, o un attrezzo simile.

安装步骤
安装前务必关闭机器的主电源开关，并从墙壁插座拔下电源插头。

1. 用一字形螺丝刀拆下装订器 (1) 上部的顶罩前盖板 (2) 和顶罩后盖板 (3)。

설치순서
설치를 시작하기 전에 반드시 본체의 주 전원 스위치를 끄고 벽 콘센트에서 전원 플러그를 분리하십시오 .

1. 피니셔 (1) 상부의 윗커버 앞 덮개 (2), 윗커버 뒤 덮개 (3) 를 마이너스 드라이버 등으로 제거합니다 .

取付手順
必ず機械本体の主電源スイッチを OFF にし、機械本体の電源プラグを抜いてから作業すること。

1. フィニッシャー（1）上部の天カバー前フタ（2）、天カバー後フタ（3）をマイナスドライバーなどで取り外す。

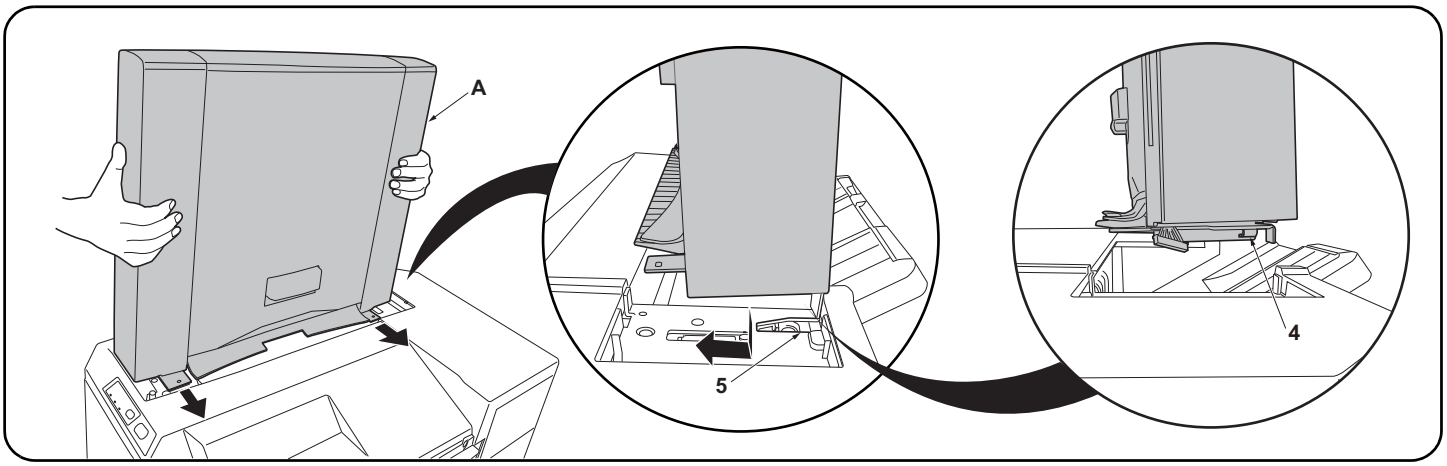

2. Fit the hooks (4) located at the front and rear of the bottom of the mailbox (A) into the notches (5) located at the front and rear of the top of the finisher (1) as shown in the illustration and attach the mailbox (A) to the finisher (1).
Note:
Lift the front and rear of the mailbox (A) lightly upward to make sure that no gap is made between the mailbox (A) and the machine.

---

2. Insérer les crochets (4) se trouvant à l'avant et à l'arrière au fond de la boîte à lettres (A) dans les encoches (5) situées à l'avant et à l'arrière en haut du retoucheur (1) comme illustré ici, puis fixer la boîte à lettres (A) au retoucheur (1).
Remarque:
Lever légèrement l'avant et l'arrière de la boîte à lettres (A) de sorte qu'il n'y ait aucun interstice entre la boîte à lettres (A) et la machine.

---

2. Coloque los ganchos (4) ubicados en la parte inferior frontal y trasera del buzón de correo (A) en las muescas (5) ubicadas en la parte superior frontal y trasera del finalizador (1), como se muestra en la ilustración, y coloque el buzón de correo (A) en el finalizador (1).
Nota:
Levante ligeramente la parte frontal y trasera del buzón de correo (A) para asegurarse de que no queda espacio entre el buzón de correo (A) y la máquina.

---

2. Setzen Sie die Haken (4) an der Vorder- und Rückseite der Mailbox (A) in die Öffnungen (5) vorne und hinten an der Oberseite des Finishers (1) ein, wie in der Abbildung dargestellt, und bringen Sie die Mailbox (A) am Finisher (1) an.
Hinweis:
Heben Sie die Vorder- und Rückseite der Mailbox (A) ein wenig an, damit sich kein Spalt zwischen der Mailbox (A) und dem Gerät bildet.

---

2. Inserire i ganci (4) posizionati sul davanti e sul dietro della parte di fondo della mailbox (A), negli incavi (5) posizionati sul davanti e sul dietro della parte superiore del finitore (1) come mostrato nell'illustrazione, e fissare la mailbox (A) al finitore (1).
Nota:
Sollevare leggermente la parte anteriore e posteriore della mailbox (A) verso l'alto per accertarsi che non vi sia dello spazio tra la mailbox (A) e la macchina.

---

2. 如图所示，将位于邮箱 (A) 底部前后侧的卡扣 (4) 嵌入位于装订器 (1) 顶部前后侧的凹口 (5)，并将邮箱 (A) 安装至装订器 (1)。
注：
轻轻向上提升邮箱 (A) 的前后侧，确保邮箱 (A) 未处于悬浮状态。

---

2. 메일박스 (A) 하부의 앞뒤에 있는 후크 (4) 를 피니셔 (1) 상부의 앞뒤에 있는 파인 홈에 (5) 에 일러스트와 같이 삽입하고 메일박스 (A) 를 피니셔측에 장착합니다 .
주
메일박스 (A) 의 앞뒤를 각각 상방향으로 가볍게 들어 메일박스 (A) 가 떠 있지 않은 것을 확인합니다 .

---

2. メールボックス (A) 下部の前後にあるフック (4) をフィニッシャー(1) 上部の前後にある切り欠き部 (5) にイラストのように挿入し、メールボックス (A) をフィニッシャー(1) に取り付ける。
注意
メールボックス (A) の前後をそれぞれ上方向に軽く持ち上げ、メールボックス (A) が浮かないことを確認する。

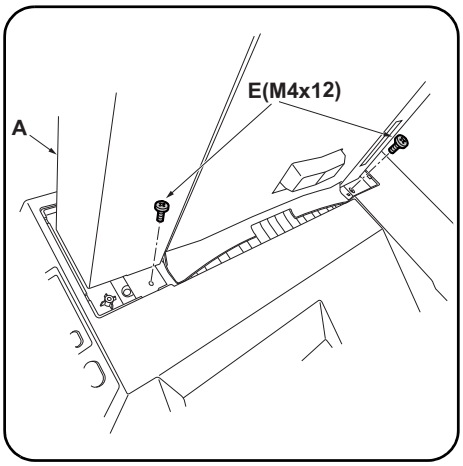

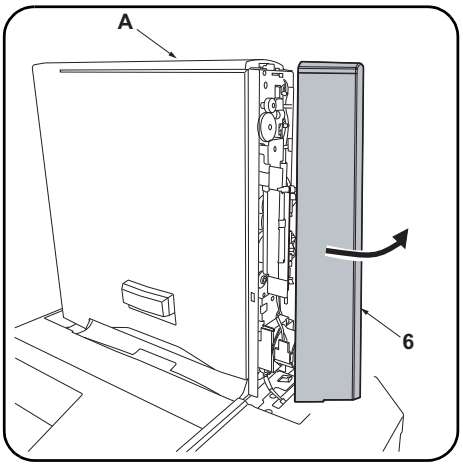

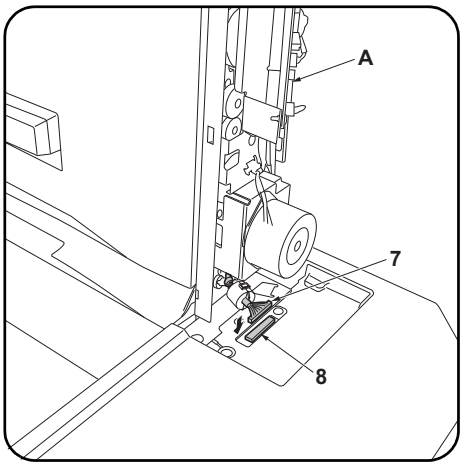

3. Secure the mailbox (A) using the two screws M4x12 (E).

4. Remove the rear cover (6) of the mailbox (A).

5. Plug the connector (7) of the mailbox (A) into the connector (8) of the machine body.
6. Reinstall the rear cover (6) of the mailbox (A).

---

3. Fixer la boîte à lettres (A) à l'aide de deux vis M4x12 (E).

4. Retirer le couvercle arrière (6) de la boîte à lettres (A).

5. Brancher le connecteur (7) de la boîte à lettres (A) dans le connecteur (8) du corps de la machine.
6. Remonter le couvercle arrière (6) de la boîte à lettres (A).

---

3. Fije el buzón de correo (A) con dos tornillos M4x12 (E).

4. Quite la cubierta posterior (6) del buzón de correo (A).

5. Enchufe el conector (7) del buzón de correo (A) al conector (8) del cuerpo de la máquina.
6. Vuelva a instalar la cubierta posterior (6) del buzón de correo (A).

---

3. Sichern Sie die Mailbox (A) mit zwei Schrauben M4x12 (E).

4. Entfernen Sie die hintere Abdeckung (6) der Mailbox (A).

5. Stecken Sie den Stecker (7) der Mailbox (A) in die Steckbuchse (8) des Gerätegehäuses.
6. Bringen Sie die hintere Abdeckung (6) der Mailbox (A) wieder an.

---

3. Fissare la mailbox (A) utilizzando le due viti M4x12 (E).

4. Rimuovere il coperchio posteriore (6) della mailbox (A).

5. Collegare il connettore (7) della mailbox (A) al connettore (8) del corpo macchina.
6. Reinstallare il coperchio posteriore (6) della mailbox (A).

---

3. 使用两个螺丝 M4x12（E）固定邮箱（A）。

4. 拆下邮箱 (A) 的后部盖板 (6)。

5. 将邮箱（A）的接插件（7）插入机器的接插件（8）。
6. 重新安装邮箱（A）的后盖板（6）。

---

3. M4x12 나사 (E) 두 개를 사용하여 메일박스 (A) 를 고정합니다 .

4. 메일박스 (A) 의 뒤커버 (6) 를 떼어냅니다 .

5. 메일박스 (A) 의 커넥터 (7) 를 본체의 커넥터 (8) 에 연결합니다
6. 메일박스 (A) 의 뒤커버 (6) 를 다시 장착합니다 .

---

3. ビス M4×12(E)2 本で、メールボックス (A) を固定する。

4. メールボックス (A) の後カバー(6) を取り外す。

5. メールボックス (A) のコネクター(7) を機械本体のコネクター (8) に接続する。
6. メールボックス (A) の後カバー(6) を元通りに取り付ける。

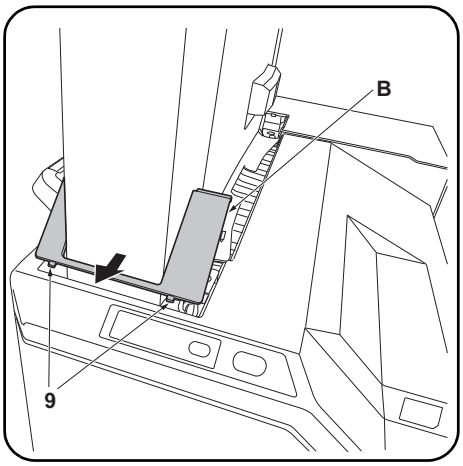

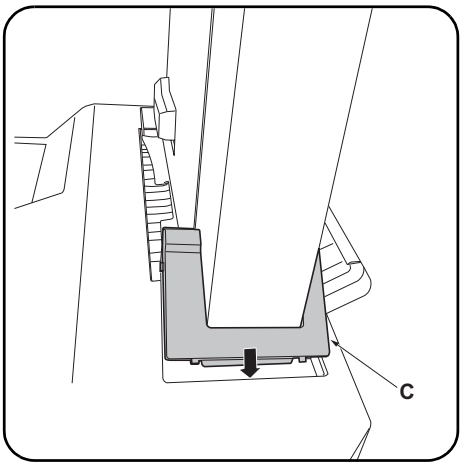

7. Insert the 2 hooks (9) on the front mounting plate cover (B) for the mailbox into the finisher to install the cover (B).

8. Install the rear mounting plate cover (C) on the finisher in the same way.

---

7. Insérer les 2 crochets (9) du couvercle de la plaque de montage avant (B) de la boîte à lettres dans le retourcheur pour installer ce couvercle (B).

8. Installer le couvercle de la plaque de montage arrière (C) sur le retoucheur en procédant de la même manière.

---

7. Para instalar la cubierta (B), inserte los 2 ganchos (9) de la cubierta de la placa de montaje frontal (B) para el buzón de correo en el finalizador.

8. Instale de la misma manera la cubierta de la placa de montaje trasera (C) en el finalizador.

---

7. Setzen Sie die 2 Haken (9) an der vorderen Abdeckung der Montageplatte (B) für die Mailbox in den Finisher ein, um die Abdeckung (B) zu installieren.

8. Bringen Sie auf gleiche Weise die hintere Abdeckung der Montageplatte (C) am Finisher an.

---

7. Inserire nel finitore i 2 ganci (9) posizionati sul coperchio della piastra di montaggio anteriore (B) per la mailbox, per installare il coperchio (B).

8. Installare il coperchio della piastra di montaggio posteriore (C) sul finitore nella stessa maniera.

---

7. 将邮箱的安装板前部盖板 (B) 的 2 个卡扣 (9) 插入到装订器中，以安装安装板前部盖板 (B)。

8. 按相同方法将安装板后部盖板 (C) 安装到装订器上。

---

7. 메일박스의 부착판 커버 앞 (B) 의 후크 (9) 2 곳을 피니셔에 삽입하고 부착판 커버 앞 (B) 을 장착합니다 .

8. 같은 방식으로 부착판 커버 뒤 (C) 를 피니셔에 장착합니다 .

---

7. メールボックスの取付板カバー前 (B) のフック (9)2 箇所をフィニッシャーに挿入し、取付板カバー前 (B) を取り付ける。

8. 同様に取付板カバー後 (C) をフィニッシャーに取り付ける。

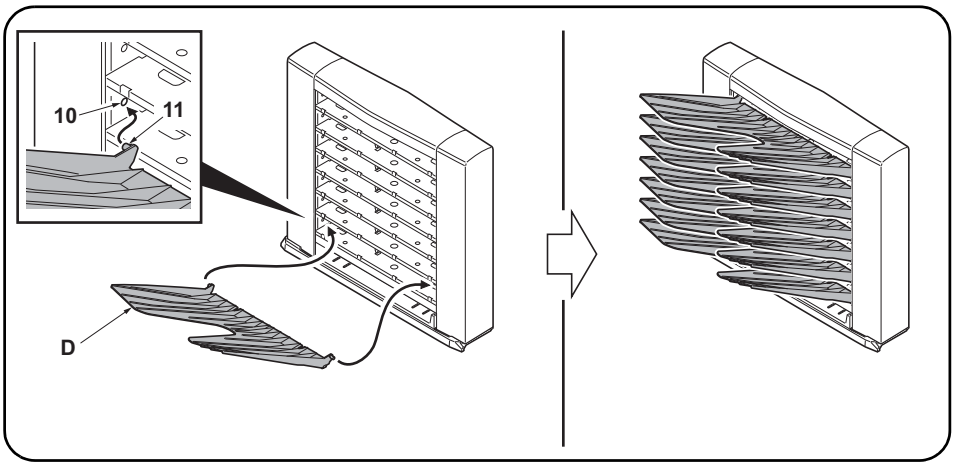

9. Fit the seven copy eject bins (D) to the ejection section of the mailbox (A) from the lowest bin to the highest.
Press both ends of each copy eject bin (D) to bend it a little, then fit the bin by inserting the front and rear pins (10) into the round holes (11) at the front and rear of the mailbox.

10. Insert the power plug from the machine into the outlet, turn the main power switch on, and verify the machine operates normally.

---

9. Fixer les sept cases d'éjection de copies (D) sur la section d'éjection de la boîte à lettres (A), en procédant de la case située tout en bas à celle située tout en haut.
Appuyer sur les deux extrémités de chaque case d'éjection des copies (D) pour cintrer légèrement cette pièce, puis monter la case en insérant les broches avant et arrière (10) dans les trous ronds (11) à l'avant et à l'arrière de la boîte à lettres.

10. Insérer la fiche d'alimentation de la machine dans la prise et mettre la machine sous tension, puis vérifier qu'elle fonctionne correctement.

---

9. Presione ambos extremos de cada bandeja de expulsión de copias (D) para doblarlas un poco; después, coloque la bandeja insertando los pasadores delantero y trasero (10) en los orificios redondos (11) en la parte frontal y posterior del buzón de correo.

10. Enchufe el cable de alimentación de la máquina en la toma de corriente y encienda el interruptor principal para comprobar que la máquina funciona correctamente.

---

9. Setzen Sie die sieben Kopienausgabefächer (D) in die Ausgabeöffnungen der Mailbox (A) ein, beginnend vom untersten Fach zum höchsten.
Drücken Sie beide Enden jedes Kopienausgabefachs (D) zusammen, um es etwas zu biegen. Setzen Sie das Fach ein, indem Sie die vorderen und hinteren Stifte (10) in die Rundlöcher (11) vorne und hinten an der Mailbox einsetzen.

10. Stecken Sie den Netzstecker des Geräts in eine Steckdose und schalten Sie den Hauptschalter des Geräts ein, um den Betrieb zu prüfen.

---

9. Installare i sette scomparti di espulsione delle copie (D) nella sezione di espulsione della mailbox (A), iniziando dallo scomparto più in basso fino a quello più in alto.
Premere le due estremità di ciascuno scomparto di espulsione delle copie (D) in modo da piegarlo leggermente, quindi installare lo scomparto inserendo i perni anteriore e posteriore (10) nei fori rotondi (11) presenti sul fronte e sul retro della mailbox.

10. Inserire la spina nella presa di corrente, accendere la macchina e controllare che funzioni correttamente.

---

9. 从邮箱（A）的排出部下面起按顺序安装 7 个接纸盘（D）。
按住接纸盘（D）的左右两侧并使其稍稍下垂，通过将前后的销钉（10）插入邮箱前后的圆孔（11）中来安装接纸盘。

10. 将机器的电源插头插入插座，然后打开主电源开关并确认机器能否正常操作。

---

9. 배출핀 (D) 7 개를 메일박스 (A) 의 배출부에 밑에서부터 순서대로 장착합니다 .
배출핀 (D) 의 좌우를 밀어 조금 휘게해 앞뒤의 핀 (10) 을 메일박스의 앞뒤의 둥근 구멍 (11) 에 삽입합니다 .

10. 기기본체의 전원 플러그를 콘센트에 꼽고 주전원 스위치를 ON 으로 해서 동작을 확인 합니다 .

---

9. 排出ビン (D) 7 枚をメールボックス (A) の排出部に下から順番に取り付ける。
排出ビン (D) の左右を押し少したわませ、前後のピン (10) をメールボックスの前後の丸穴 (11) に挿入する。

10. 機械本体の電源プラグをコンセントに差し込み、主電源スイッチを ON にして動作を確認する。

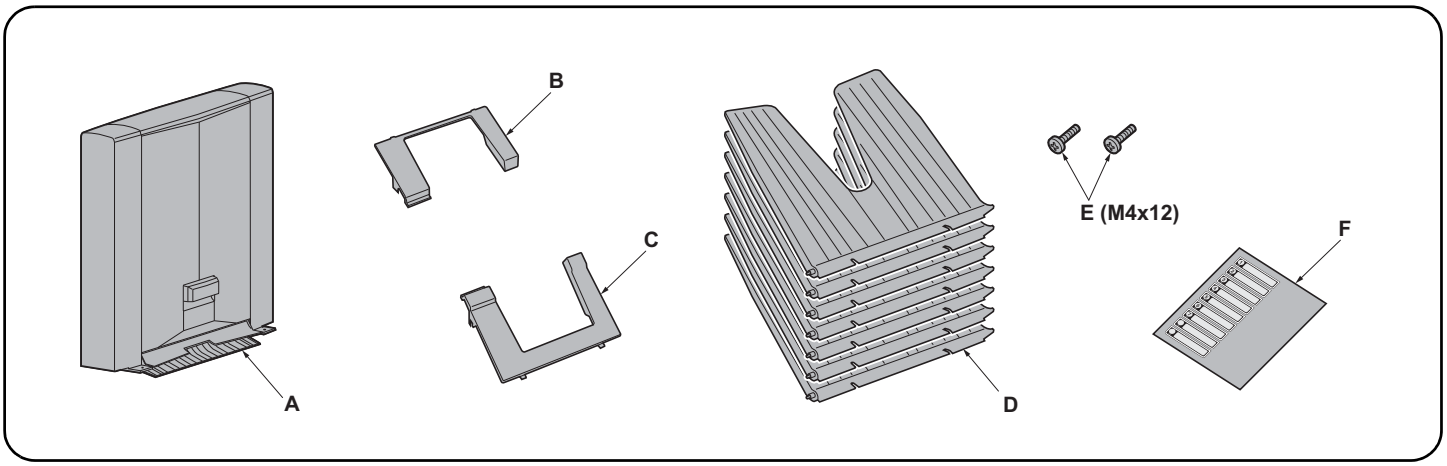

English

Supplied parts

A. Mailbox 1
B. Front mounting plate cover 1
C. Rear mounting plate cover 1
D. Copy eject bins 7
E. M4 × 12 screw 2
F. Tray name label (for users) 1

B and C are not used.

Be sure to remove any tape and/or cushioning materials from the parts supplied.

Français

Pièces fournies

A. Boîte à lettres 1
B. Couvercle de la plaque de montage avant 1
C. Couvercle de la plaque de montage arrière ... 1
D. Case d'éjection de copies 7
E. Vis M4 × 12 2
F. Étiquette de nom de plateau (pour les utilisateurs) 1

B et C ne sont pas utilisés.

Veillez à retirer les morceaux de bande adhésive et/ou les matériaux de rembourrage des pièces fournies.

Español

Partes suministradas

A. Buzón de correo 1
B. Cubierta de la placa de montaje frontal 1
C. Cubierta de la placa de montaje trasera 1
D. Bandejas de expulsión de copias 7
E. Tornillo M4 × 12 2
F. Etiqueta de nombre de la bandeja (para usuarios) 1

B y C no se utilizan.

Asegúrese de quitar todas las cintas y/o material amortiguador de las partes suministradas.

Deutsch

Enthaltene Teile

A. Mailbox 1
B. Vordere Abdeckung der Montageplatte 1
C. Hintere Abdeckung der Montageplatte 1
D. Kopienausgabefächer 7
E. Schraube M4 × 12 2
F. Fachnamenaufkleber (für Benutzer) 1

B und C werden nicht benötigt.

Stellen Sie sicher, dass sämtliche Klebebänder und/oder Polstermaterial von den gelieferten Teilen entfernt wurden.

Italiano

Parti fornite

A. Mailbox 1
B. Coperchio della piastra di montaggio anteriore .. 1
C. Coperchio della piastra di montaggio posteriore. 1
D. Scomparti di espulsione delle copie 7
E. Vite M4 × 12 2
F. Etichetta di nome del vassoio (per utenti) 1

B e C non sono utilizzati.

Rimuovere tutti i nastri adesivi e/o i materiali di protezione dalle parti fornite.

简体中文

附属品

A. 邮箱 1
B. 支撑板前盖板 1
C. 支撑板后盖板 1
D. 接纸盘 7
E. M4×12 螺丝 2
F. 托盘名称标贴（用户用）..... 1

不使用 B 和 C。

如果附属品上带有固定胶带，缓冲材料时务必揭下。

한국어

동봉품

A. 메일박스 1
B. 부착판커버 앞 1
C. 부착판커버 뒤 1
D. 배출핀 7
E. 나사 M4 × 12 2
F. 트레이 명칭 씰（사용자용）..... 1

B 와 C 는 사용되지 않습니다 .

동봉품에 고정 테이프，완충재가 붙어 있는 경우에는 반드시 제거하십시오 .

日本語

同梱品

A. メールボックス 1
B. 取付板カバー前 1
C. 取付板カバー後 1
D. 排出ピン 7
E. ビス M4×12 2
F. トレイ名称シール(ユーザー用) 1

B,C は使用しない。

同梱品に固定テープ、緩衝材がついている場合は、必ず取り外すこと。

Note
The Attachment Kit(AK-736) must be installed before the mailbox is installed.

Procedure
Before starting installation, be sure to turn the main power switch of the machine off, and unplug the power plug from the wall outlet.

Remarque
L'Attachment Kit (AK-736) doit être installé avant d'installer la boîte à lettres.

Procédure
Avant de commencer l'installation, s'assurer de mettre la machine hors tension et de débrancher la fiche d'alimentation de la prise murale.

Nota
El Attachment Kit (AK-736) se debe instalar antes de la instalación del buzón de correo.

Procedimiento
Antes de iniciar la instalación, asegúrese de apagar el interruptor de encendido de la máquina y desenchufar el cable de alimentación de la toma de pared.

Hinweis
Das Attachment Kit (AK-736) muss vor der Installation der Mailbox installiert werden.

Vorgehensweise
Bevor Sie mit der Installation beginnen überzeugen Sie sich, dass der Netzschalter des Geräts ausgeschaltet und das Stromkabel aus der Steckdose gezogen ist.

Nota
Installare l'Attachment Kit (AK-736) prima di installare il vassoio mailbox.

Procedura
Prima di iniziare l'installazione, spegnere la macchina e scollegare la spina dalla presa di corrente.

注
在安装邮箱前，请先安装连接组件（AK-736）。

安装步骤
安装前务必关闭机器的主电源开关，并从墙壁插座拔下电源插头。

주
메일박스를 설치하기 전에 부착 키트 (AK-736) 를 설치해야 합니다 .

설치순서
설치를 시작하기 전에 반드시 본체의 주 전원 스위치를 끄고 벽 콘센트에서 전원 플러그를 분리하십시오 .

注意
メールボックスを取付ける前にアタッチメントキット (AK-736) の取付けをおこなうこと。

取付手順
必ず機械本体の主電源スイッチを OFF にし、機械本体の電源プラグを抜いてから作業すること。

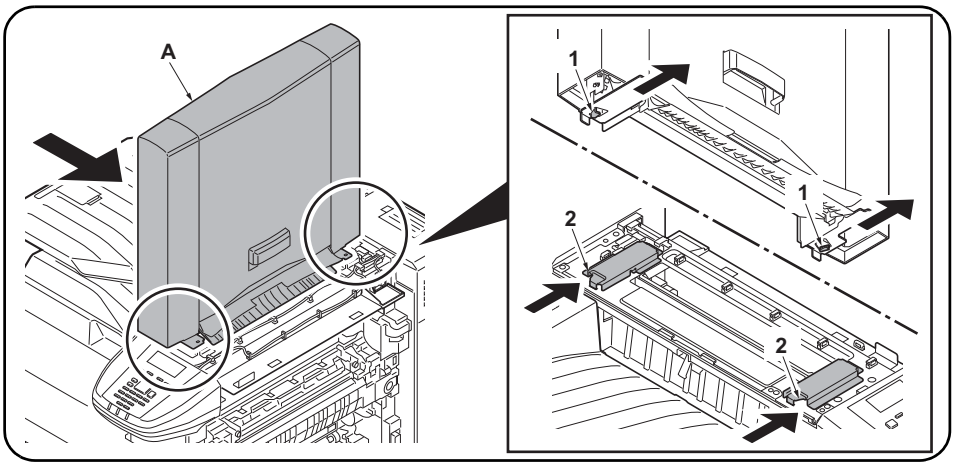

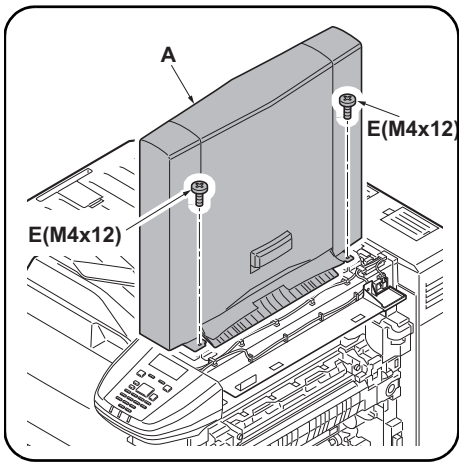

1. Insert the hooks (1) located at the front and rear of the bottom of the mailbox (A) into the notches (2) of the machine and attach the mailbox (A) to the machine.
Note
Lift the front and rear of the mailbox (A) lightly upward to make sure that no gap is made between the mailbox (A) and the machine.

2. Secure the mailbox (A) using the two screws M4x12 (E).

---

1. Insérer les crochets (1) situés à l'avant et à l'arrière du fond de la boîte à lettres (A) dans les encoches (2) de la machine et fixer la boîte aux lettres (A) à la machine.
Remarque
Lever légèrement l'avant et l'arrière de la boîte à lettres (A) de sorte qu'il n'y ait aucun interstice entre la boîte à lettres (A) et la machine.

2. Fixer la boîte à lettres (A) à l'aide de deux vis M4x12 (E).

---

1. Inserte los enganches (1) que se encuentran en la parte frontal y trasera de la parte inferior del buzón de correo (A) en las hendiduras (2) de la máquina y acople el buzón de correo (A) a la máquina.
Nota
Levante ligeramente la parte frontal y trasera del buzón de correo (A) para asegurarse de que no queda espacio entre el buzón de correo (A) y la máquina.

2. Fije el buzón de correo (A) con dos tornillos M4x12 (E).

---

1. Führen Sie die Haken (1), die sich hinten und vorne an der Unterseite der Mailbox (A) befinden, in die Aufnahmen (2) des Geräts ein und befestigen Sie die Mailbox (A) am Gerät.
Hinweis
Heben Sie die Vorder- und Rückseite der Mailbox (A) ein wenig an, damit sich kein Spalt zwischen der Mailbox (A) und dem Gerät bildet.

2. Sichern Sie die Mailbox (A) mit zwei Schrauben M4x12 (E).

---

1. Inserire i ganci (1) posti sul fronte e sul retro della sezione inferiore della mailbox (A) negli incavi (2) presenti sulla macchina e fissare la mailbox (A) sulla macchina.
Nota
Sollevare leggermente la parte anteriore e posteriore della mailbox (A) verso l'alto per accertarsi che non vi sia dello spazio tra la mailbox (A) e la macchina.

2. Fissare la mailbox(A) utilizzando le due viti M4x12 (E).

---

1. 将位于邮箱（A）底部前、后侧的挂钩（1）插入机器的凹槽（2），然后将邮箱（A）安装至机器。
注
轻轻向上提升邮箱（A）的前后侧，确保邮箱（A）未处于悬浮状态。

2. 使用两个螺丝 M4x12（E）固定邮箱（A）。

---

1. 메일박스 (A) 의 전후면 하단에 있는 후크 (1) 를 본체의 노치 (2) 에 삽입하여 메일박스 (A) 를 본체에 부착합니다 .
주
메일박스 (A) 의 앞뒤를 각각 상방향으로 가볍게 들어 메일박스 (A) 가 떠 있지 않은 것을 확인합니다 .

2. M4x12 나사 (E) 두 개를 사용하여 메일박스 (A) 를 고정합니다 .

---

1. メールボックス（A）下部の前後にあるフック（1）を機械本体の切り欠き（2）に挿入し、メールボックス（A）を機械本体に取り付ける。
注意
メールボックス（A）の前後をそれぞれ上方向に軽く持ち上げ、メールボックス（A）が浮かないことを確認する。

2. ビス M4×12(E)2 本で、メールボックス（A）を固定する。

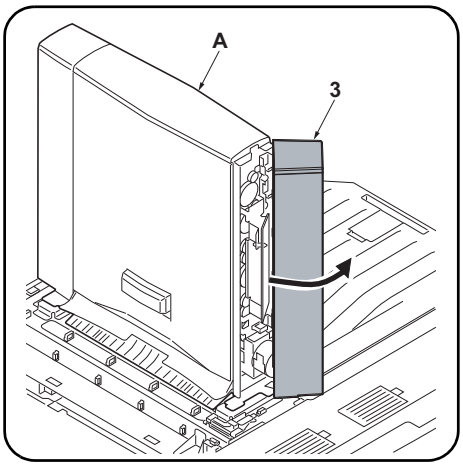

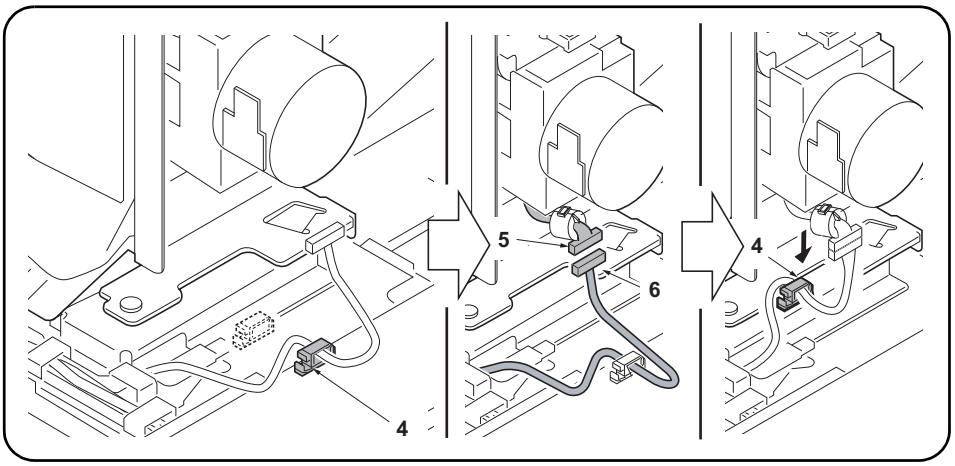

3. Remove the rear cover (3) of the mailbox (A).

4. Remove the wire saddle (4).
5. Plug the connector (5) of the mailbox (A) into the connector (6) of the machine body.
6. Install the wire saddle (4) in the position as shown in the figure.
7. Reinstall the rear cover (3) of the mailbox (A).

---

3. Retirer le couvercle arrière (3) de la boîte à lettres (A).

4. Retirer le serre-câble (4).
5. Brancher le connecteur (5) de la boîte à lettres (A) dans le connecteur (6) du corps de la machine.
6. Installer le serre-câble (4) dans la position illustrée sur la figure.
7. Remonter le couvercle arrière (3) de la boîte à lettres (A).

---

3. Quite la cubierta posterior (3) del buzón de correo (A).

4. Retire la abrazadera del cable (4).
5. Enchufe el conector (5) del buzón de correo (A) al conector (6) del cuerpo de la máquina.
6. Instale la abrazadera del cable (4) en la posición que se muestra en la imagen.
7. Vuelva a instalar la cubierta posterior (3) del buzón de correo (A).

---

3. Entfernen Sie die hintere Abdeckung (3) der Mailbox (A).

4. Entfernen Sie die Kabelbefestigung (4).
5. Stecken Sie den Stecker (5) der Mailbox (A) in die Steckbuchse (6) des Gerätegehäuses.
6. Installieren Sie die Kabelbefestigung (4) an der im Bild gezeigten Position.
7. Bringen Sie die hintere Abdeckung (3) der Mailbox (A) wieder an.

---

3. Rimuovere il coperchio posteriore (3) della mailbox (A).

4. Rimuovere l'unità sella (4).
5. Collegare il connettore (5) della mailbox (A) al connettore (6) del corpo macchina.
6. Installare l'unità sella (4) nella posizione indicata in figura.
7. Reinstallare il coperchio posteriore (3) della mailbox (A).

---

3. 拆下邮箱（A）的后部盖板（3）。

4. 取下束线夹（4）。
5. 将邮箱（A）的接插件（5）插入机器的接插件（6）。
6. 把束线夹（4）安装到图示位置。
7. 重新安装邮箱（A）的后盖板（3）。

---

3. 메일박스 (A) 의 뒤커버 (3) 를 떼어냅니다 .

4. 와이어 새들 (4) 을 분리합니다 .
5. 메일박스 (A) 의 커넥터 (5) 를 본체의 커넥터 (6) 에 연결합니다 .
6. 와이어 새들 (4) 을 그림에 표시된 위치에 설치합니다 .
7. 메일박스 (A) 의 뒤커버 (3) 를 다시 장착합니다 .

---

3. メールボックス (A) の後カバー(3) を取り外す。

4. ワイヤーサドル (4) を外す。
5. メールボックス (A) のコネクター(5) を機械本体のコネクター (6) に接続する。
6. ワイヤーサドル (4) を図の位置に取り付ける。
7. メールボックス (A) の後カバー(3) を元通りに取り付ける。

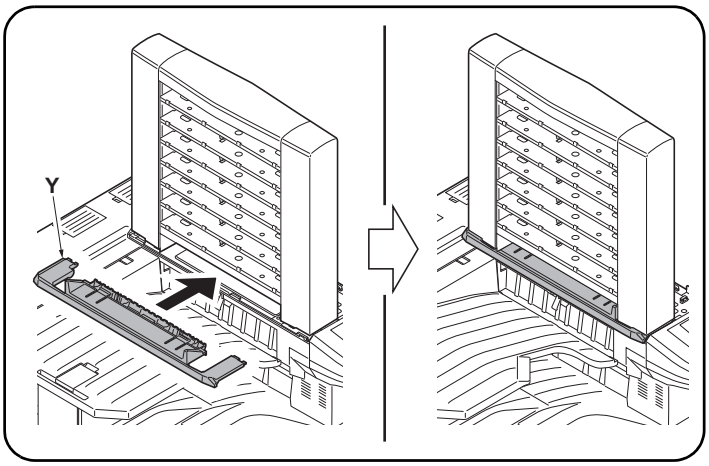

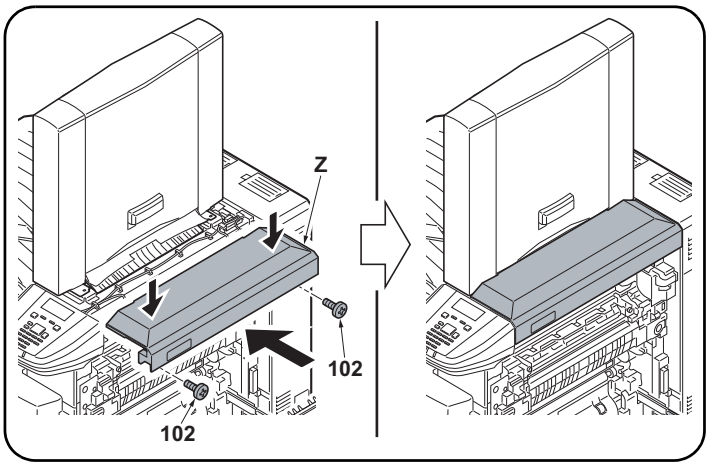

8. Install the left cover (Y) in place.

9. Using the two screws (102) removed in step 2 in the installation guide for the AK-736, install the right cover (Z).
*While pressing the right cover(Z) downwards, fix the right cover(J).

---

8. Monter le couvercle gauche (Y) en position.

9. À l'aide des deux vis (102) retirées à l'étape 2 du guide d'installation pour l'AK-736, installer le capot droit (Z).
*Fixer le capot droit (Z) en le maintenant enfoncé vers le bas.

---

8. Instale la cubierta izquierda (Y) en la ubicación prevista.

9. Con los dos tornillos (102) que quitó en el paso 2 de la guía de instalación para AK-736, instale la cubierta derecha (Z).
*A la vez que ejerce presión sobre la cubierta derecha (Z), fije la cubierta derecha (Z).

---

8. Installieren Sie die linke Abdeckung (Y).

9. Mit den zwei Schrauben (102), die Sie in Schritt 2 der Installationsanleitung für das AK-736 entfernt haben, bringen Sie die rechte Abdeckung (Z) wieder an.
*Drücken Sie die rechte Abdeckung (Z) leicht nach unten, während Sie diese befestigen.

---

8. Installare il coperchio di sinistra (Y) in posizione.

9. Utilizzando le due viti (102) rimosse al punto 2 della procedura descritta nella guida di installazione del kit AK-736, installare il coperchio destro (Z).
*Premere verso il basso il coperchio destro (Z) per fissarlo in posizione.

---

8. 将左盖板（Y）安装到位。

9. 请用 AK-736 安装手册步骤 2 中取下的 2 颗螺丝（102）来安装右盖板（Z）。
＊把右盖板（Z）边向下按，边固定。

---

8. 좌측 커버 (Y) 를 제자리에 장착합니다 .

9. AK-736 설치 설명서의 2 단계에서 분리한 나사 (102) 두 개를 사용하여 우측 커버 (Z) 를 장착합니다 .
＊우측 커버 (Z) 를 아래쪽으로 누르는 동시에 우측 커버 (Z) 를 고정하십시오 .

---

8. 左カバー(Y) を取り付ける。

9. AK-736 設置手順書の手順 2 で外したビス (102)2 本で、右カバー(Z) を取付ける。
＊右カバー(Z) を下方向に押さえながら、固定する。

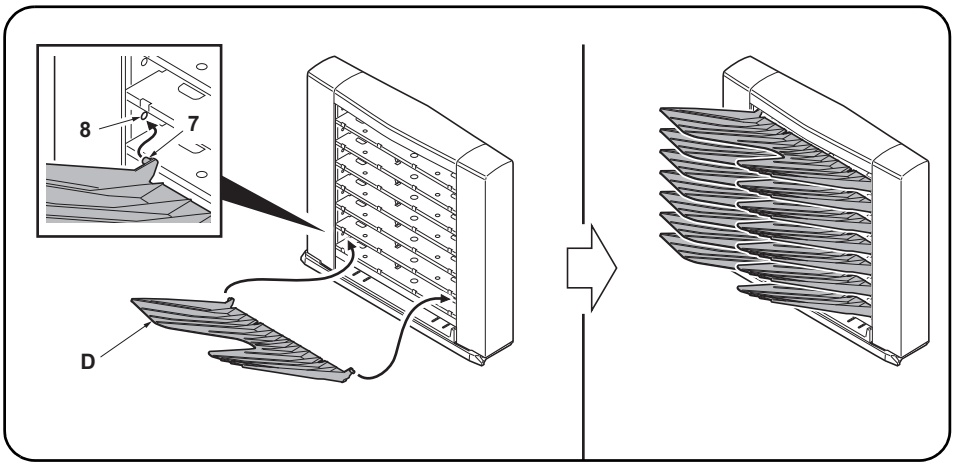

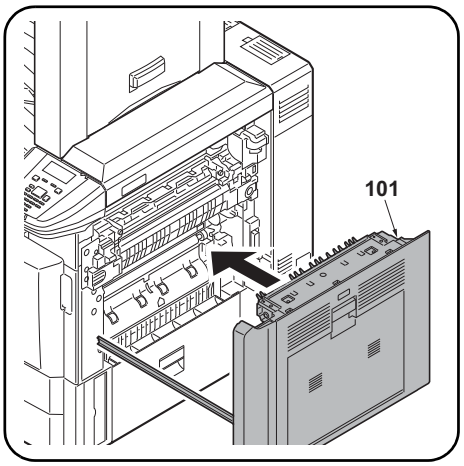

10. Fit the seven copy eject bins (D) to the ejection section of the mailbox (A) from the lowest bin to the highest.
Press both ends of each copy eject bin (D) to bend it a little, then fit the bin by inserting the front and rear pins (7) into the round holes (8) at the front and rear of the mailbox.

11. Close the paper conveying unit(101).
12. Insert the power plug from the machine into the outlet, turn the main power switch on, and verify the machine operates normally.

---

10. Fixer les sept cases d'éjection de copies (D) sur la section d'éjection de la boîte à lettres (A), en procédant de la case située tout en bas à celle située tout en haut.
Appuyer sur les deux extrémités de chaque case d'éjection des copies (D) pour cintrer légèrement cette pièce, puis monter la case en insérant les broches avant et arrière (7) dans les trous ronds (8) à l'avant et à l'arrière de la boîte à lettres.

11. Fermer l'unité de transport du papier (101).
12. Insérer la fiche d'alimentation de la machine dans la prise et mettre la machine sous tension, puis vérifier qu'elle fonctionne correctement.

---

10. Presione ambos extremos de cada bandeja de expulsión de copias (D) para doblarlas un poco; después, coloque la bandeja insertando los pasadores delantero y trasero (7) en los orificios redondos (8) en la parte frontal y posterior del buzón de correo.

11. Cierre la unidad de transporte de papel(101).
12. Enchufe el cable de alimentación de la máquina en la toma de corriente y encienda el interruptor principal para comprobar que la máquina funciona correctamente.

---

10. Setzen Sie die sieben Kopienausgabefächer (D) in die Ausgabeöffnungen der Mailbox (A) ein, beginnend vom untersten Fach zum höchsten.
Drücken Sie beide Enden jedes Kopienausgabefachs (D) zusammen, um es etwas zu biegen. Setzen Sie das Fach ein, indem Sie die vorderen und hinteren Stifte (7) in die Rundlöcher (8) vorne und hinten an der Mailbox einsetzen.

11. Schließen Sie die Papierführung (101).
12. Stecken Sie den Netzstecker des Geräts in eine Steckdose und schalten Sie den Hauptschalter des Geräts ein, um den Betrieb zu prüfen.

---

10. Installare i sette scomparti di espulsione delle copie (D) nella sezione di espulsione della mailbox (A), iniziando dallo scomparto più in basso fino a quello più in alto.
Premere le due estremità di ciascuno scomparto di espulsione delle copie (D) in modo da piegarlo leggermente, quindi installare lo scomparto inserendo i perni anteriore e posteriore (7) nei fori rotondi (8) presenti sul fronte e sul retro della mailbox.

11. Chiudere l'unità trasporto carta (101).
12. Inserire la spina nella presa di corrente, accendere la macchina e controllare che funzioni correttamente.

---

10. 从邮箱（A）的排出部下面起按顺序安装 7 个接纸盘（D）。
按住接纸盘（D）的左右两侧并使其稍稍下垂，通过将前后的销钉（7）插入邮箱前后的圆孔（8）中来安装接纸盘。

11. 关闭纸张传输单元（101）。
12. 将机器的电源插头插入插座，然后打开主电源开关并确认机器能否正常操作。

---

10. 배출핀 (D) 7 개를 메일박스 (A) 의 배출부에 밑에서부터 순서대로 장착합니다 .
배출핀 (D) 의 좌우를 밀어 조금 휘게해 앞뒤의 핀 (7) 을 메일박스의 앞뒤의 둥근 구멍 (8) 에 삽입합니다 .

11. 반송 유니트 (101) 를 닫습니다 .
12. 기기본체의 전원 플러그를 콘센트에 꼽고 주전원 스위치를 ON 으로 해서 동작을 확인 합니다 .

---

10. 排出ビン（D）7 枚をメールボックス（A）の排出部に下から順番に取り付ける。
排出ビン（D）の左右を押し少したわませ、前後のピン（7）をメールボックスの前後の丸穴（8）に挿入する。

11. 搬送ユニット（101）を閉じる。
12. 機械本体の電源プラグをコンセントに差し込み、主電源スイッチを ON にして動作を確認する。

INSTALLATION GUIDE FOR MAILBOX ATTACHMENT KIT

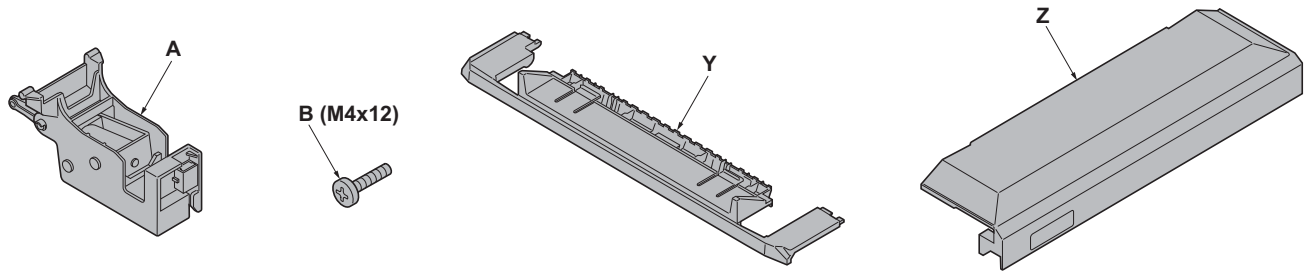

English

Supplied parts

A. Solenoid unit 1
B. M4 × 12 screw 1
Y. Left cover 1
Z. Right cover 1

Be sure to remove any tape and/or cushioning materials from the parts supplied.

The procedures for installing Y and Z are described in the installation guide for the mail-box.

Procedure
Before starting installation, be sure to turn the main power switch of the machine off, and unplug the power plug from the wall outlet.

Français

Pièces fournies

A. Unité solénoïde 1
B. Vis M4 × 12 1
Y. Couvercle gauche 1
Z. Couvercle droit 1

Veillez à retirer les morceaux de bande adhé-sive et/ou les matériaux de rembourrage des pièces fournies.

Les procédures pour installer Y et Z sont décrites dans le manuel d'installation de la boîte à lettres.

Procédure
Avant de commencer l'installation, s'assurer de mettre la machine hors tension et de débrancher la fiche d'alimentation de la prise murale.

Español

Partes suministradas

A. Unidad solenoide 1
B. Tornillo M4 × 12 1
Y. Cubierta izquierda 1
Z. Cubierta derecha 1

Asegúrese de quitar todas las cintas y/o mate-rial amortiguador de las partes suministradas.

Los procedimientos de instalación Y y Z se describen en la guía de instalación del buzón de correo.

Procedimiento
Antes de iniciar la instalación, asegúrese de apagar el interruptor de encendido de la máquina y desenchufar el cable de alimentación de la toma de pared.

Deutsch

Enthaltene Teile

A. Magnetspule 1
B. Schraube M4 x 12 1
Y. Linke Abdeckung 1
Z. Rechte Abdeckung 1

Stellen Sie sicher, dass sämtliche Klebebänder und/oder Polstermaterial von den gelieferten Teilen entfernt wurden.

Die Vorgehensweise zur Installation von Y und Z wird in der Installationsanweisung der Mailbox beschrieben.

Vorgehensweise
Bevor Sie mit der Installation beginnen überzeu-gen Sie sich, dass der Netzschalter des Geräts ausgeschaltet und das Stromkabel aus der Steckdose gezogen ist.

Italiano

Parti fornite

A. Unità solenoide 1
B. Vite M4 × 12 1
Y. Coperchio di sinistra 1
Z. Coperchio di destra 1

Rimuovere tutti i nastri adesivi e/o i materiali di protezione dalle parti fornite.

Le procedure di installazione Y e Z sono descritte nella guida di installazione del vassoio mailbox.

Procedura
Prima di iniziare l'installazione, spegnere la macchina e scollegare la spina dalla presa di corrente.

简体中文

附属品

A. 电磁铁单元 1
B. M4×12 螺丝 1
Y. 左盖板 1
Z. 右盖板 1

如果附属品上带有固定胶带，缓冲材料时务必揭下。

Y,Z 的安装步骤记载在邮箱的安装手册中。

安装步骤
安装前务必关闭机器的主电源开关，并从墙壁插座拔下电源插头。

한국어

동봉품

A. 솔레노이드 유니트 1
B. 나사 M4×12 1
Y. 좌측 커버 1
Z. 우측 커버 1

동봉품에 고정 테이프 , 완충재가 붙어 있는 경우에는 반드시 제거하십시오 .

Y 및 Z 설치 절차는 메일박스의 설치 설명서에 설명되어 있습니다 .

설치순서
설치를 시작하기 전에 반드시 본체의 주 전원 스위치를 끄고 벽 콘센트에서 전원 플러그를 분리하십시오 .

日本語

同梱品

A. ソレノイドユニット 1
B. ビス M4×12 1
Y. 左カバー 1
Z. 右カバー 1

同梱品に固定テープ、緩衝材がついている場合は、必ず取り外すこと。

Y,Z の取付け手順は、メールボックス設置手順書に記載されています。

取付手順
必ず機械本体の主電源スイッチを OFF にし、機械本体の電源プラグを抜いてから作業すること。

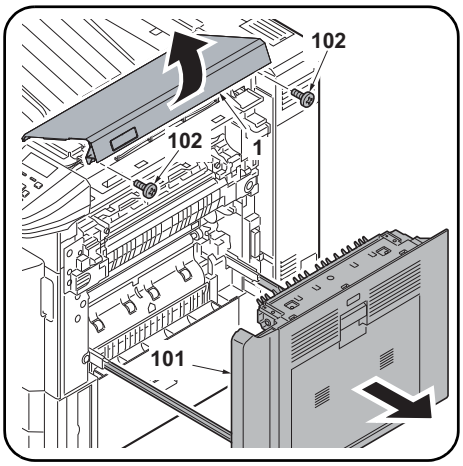

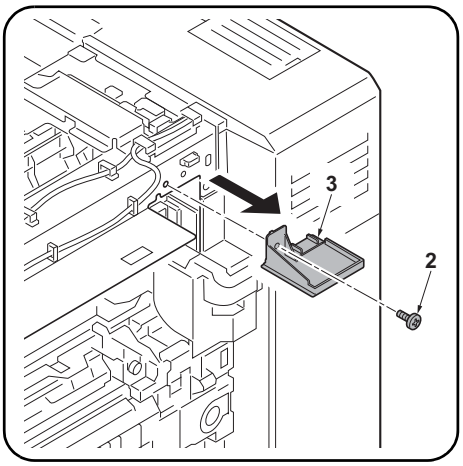

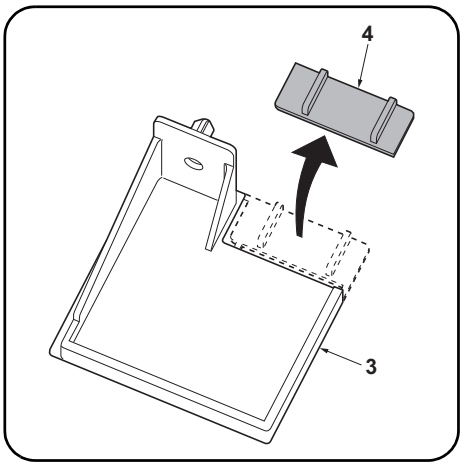

1. Pull out the paper conveying unit (101).
2. Remove the two screws (102) and remove the upper right cover (1).
(The upper right cover (1) which was removed is not used.)

3. Remove the screw (2) and remove the retainer (3).

4. Remove the breakaway part (4) from the retainer (3).

---

1. Sortir l'unité de transport du papier (101).
2. Retirer les deux vis (102) et retirer le couvercle supérieur droit (1).
(Le couvercle supérieur droit (1) qui a été retiré n'est pas utilisé.)

3. Retirer la vis (2) et retirer le dispositif de retenue (3).

4. Retirer la partie détachable (4) du dispositif de retenue (3).

---

1. Extraiga la unidad de transporte de papel (101).
2. Quite los dos tornillos (102) y retire la cubierta superior derecha (1).
(La cubierta superior derecha (1) que se ha retirado no se utiliza.)

3. Quite el tornillo (2) y retire el retén (3).

4. Aparte la parte de separación (4) del retén (3).

---

1. Ziehen Sie die Papierführung (101) heraus.
2. Entfernen Sie zwei Schrauben (102) und entfernen Sie die obere rechte Abdeckung (1).
(Die gerade entfernte obere rechte Abdeckung (1) wird nicht mehr benötigt.)

3. Entfernen Sie die Schraube (2) und entfernen Sie die Halterung (3).

4. Entfernen Sie die Sollbruchstelle (4) von der Halterung (3).

---

1. Estrarre l'unità trasporto carta (101).
2. Togliere le due viti (102) e rimuovere il coperchio destro superiore (1).
(Il coperchio destro superiore (1) rimosso non viene utilizzato.)

3. Togliere la vite (2) e rimuovere il fermo (3).

4. Rimuovere la parte di separazione (4) dal fermo (3).

---

1. 拉出纸张传输单元（101）。
2. 拆下两个螺丝（102）并拆下右上盖板（1）。
（不使用拆下的右上盖板（1）。）

3. 拆下螺丝（2）并拆下固定器（3）。

4. 从固定器（3）上拆下分离部件（4）。

---

1. 반송 유니트 (101) 를 밖으로 당깁니다 .
2. 나사 (102) 두 개를 제거하고 우측 상단 커버 (1) 를 제거합니다 .
(분리한 우측 상단 커버 (1) 는 사용되지 않습니다 .)

3. 나사 (2) 를 분리하고 리테이너 (3) 를 제거합니다 .

4. 리테이너 (3) 에서 분리된 부분 (4) 을 제거합니다 .

---

1. 搬送ユニット（101）を引き出す。
2. ビス（102）2 本を外し、右上カバー(1) を取り外す。
（取り外した右上カバー(1) は使用しない。）

3. ビス（2）1 本を外し、取付板（3）を取り外す。

4. 取付板（3）の割り部分（4）を切り取る。

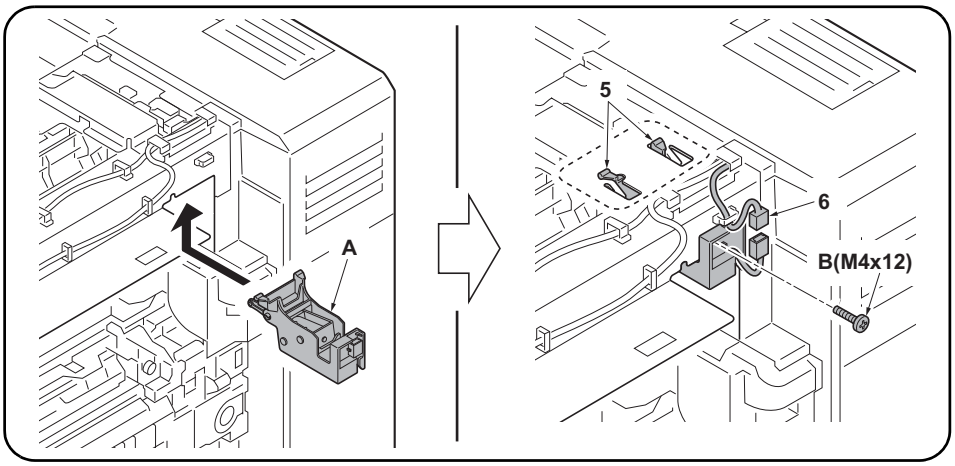

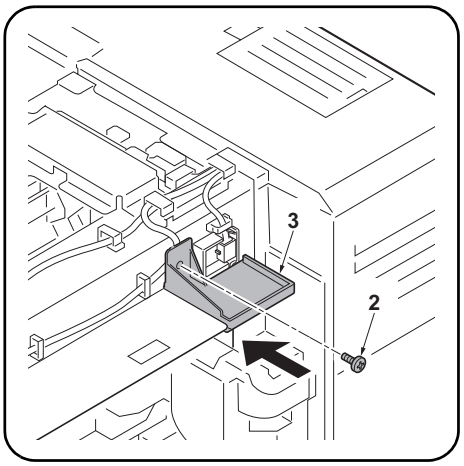

5. Install the solenoid unit (A) to the machine by inseting the two hooks (5) into the notches of the machine.

6. Secure the solenoid unit (A) using a screw M4x12 (B).
7. Plug the connector (6) of the machine into the connector of the solenoid unit (A).

8. Using the screw (2) removed in step 3, reinstall the retainer (3).

---

5. Installer l'unité solénoïde (A) sur la machine en insérant les deux crochets (5) dans les encoches de la machine.

6. Fixer l'unité solénoïde (A) à l'aide d'une vis M4x12 (B).
7. Brancher le connecteur (6) de la machine dans le connecteur de l'unité solénoïde (A).

8. À l'aide de la vis (2) retirée à l'étape 3, remonter le dispositif de retenue (3).

---

5. Instale la unidad solenoide (A) en la máquina insertando los dos enganches (5) en las hendiduras de la máquina.

6. Fije la unidad solenoide (A) con un tornillo M4x12 (B).
7. Enchufe el conector (6) de la máquina al conector de la unidad solenoide (A).

8. Con el tornillo (2) que quitó en el paso 3, vuelva a instalar el retén (3).

---

5. Installieren Sie die Magnetspule (A) im Gerät, indem Sie die zwei Haken (5) in die entsprechenden Aufnahmen im Gerät einführen.

6. Sichern Sie die Magnetspule (A) mit der Schraube M4x12 (B).
7. Stecken Sie den Stecker (6) des Geräts in die Steckbuchse der Magnetspule (A).

8. Mit der in Schritt 3 entfernten Schraube (2) bringen Sie die Halterung (3) wieder an.

---

5. Installare l'unità solenoide (A) sulla macchina inserendo i due ganci (5) negli incavi della macchina.

6. Fissare l'unità solenoide (A) utilizzando una vite M4x12 (B).
7. Collegare il connettore (6) della macchina al connettore dell'unità solenoide (A).

8. Utilizzando la vite (2) rimossa al punto 3, reinstallare il fermo (3).

---

5. 将两个挂钩（5）插入机器的凹槽，然后将电磁铁单元（A）安装至机器。

6. 使用螺丝 M4x12（B）固定电磁铁单元（A）。
7. 将机器的接插件（6）插入电磁铁单元（A）的接插件。

8. 使用步骤 3 中拆下的螺丝（2）重新安装固定器（3）。

---

5. 후크 (5) 두 개를 본체의 노치에 삽입하여 솔레노이드 유니트 (A) 를 본체에 장착합니다 .

6. M4x12 나사 (B) 를 사용하여 솔레노이드 유니트 (A) 를 고정합니다 .
7. 본체의 커넥터 (6) 를 솔레노이드 유니트 (A) 의 커넥터에 연결합니다 .

8. 3 단계에서 분리한 나사 (2) 를 사용하여 리테이너 (3) 를 다시 장착합니다 .

---

5. ソレノイドユニット (A) を機械本体に取り付ける。
引っ掛け部 (5)2 箇所を機械本体の切り欠きに挿入して取り付ける。

6. ビス M4×12(B)1 本でソレノイドユニット (A) を固定する。
7. 機械本体のコネクター(6) をソレノイドユニット (A) のコネクターに接続する。

8. 手順 3 で外したビス (2)1 本で、取付板 (3) を元通りに取り付ける。

INSTALLATION GUIDE FOR PUNCH UNIT

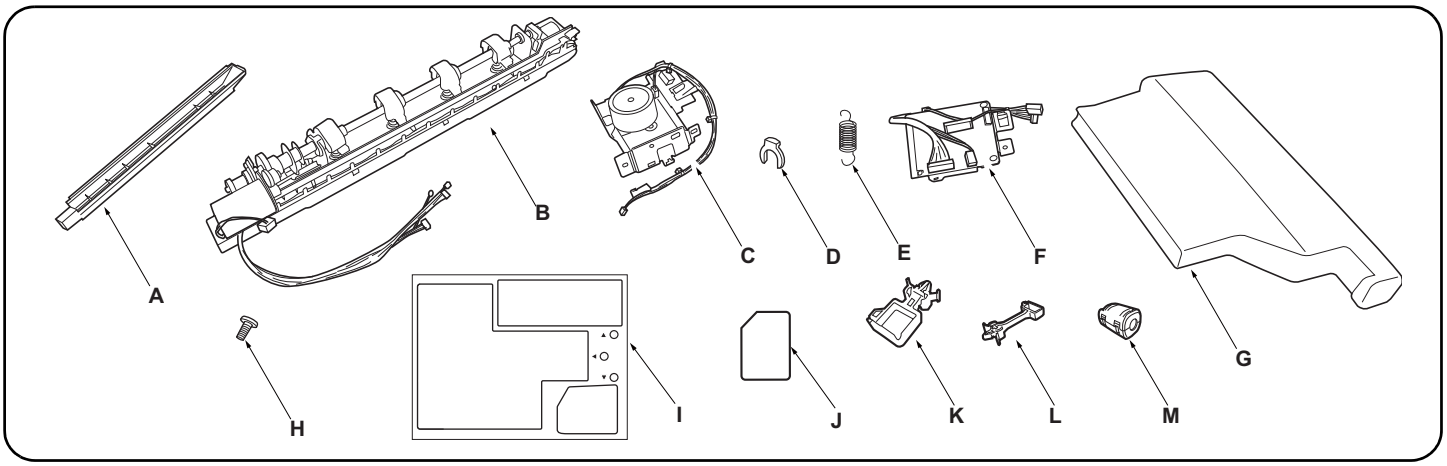

English

Supplied parts

A. Punch guide 1
B. Hole punch unit 1
C. Motor unit 1
D. Stop ring 1
E. Spring 1
F. Punch PWB 1
G. Waste hole punch box 1
H. M3 × 8 tap Tight S screw 3
I. Label sheet 1
J. Film 1
K. Small clamp (for DF-770) 1
L. Large clamp (for DF-790) 1
M. Ferrite core 1

Be sure to remove any tape and/or cushioning material from supplied parts.

Français

Pièces fournies

A. Guide de perforatrice 1
B. Perforatrice 1
C. Moteur 1
D. Bague d'arrêt 1
E. Ressort 1
F. PWB de la perforatrice 1
G. Bac de récupération de la perforatrice 1
H. Vis S taraudée M3 × 8 3
I. Feuillet d'étiquettes 1
J. Film 1
K. Petit collier (pour DF-770) 1
L. Grand collier (pour DF-790) 1
M. Noyau de ferrite 1

Veillez à retirer les morceaux de bande adhésive et/ou les matériaux de rembourrage des pièces fournies.

Español

Partes suministradas

A. Guía de perforación 1
B. Perforadora 1
C. Unidad motriz 1
D. Anillo de tope 1
E. Resorte 1
F. PWB de perforación 1
G. Caja para desechos de la perforación 1
H. Tornillo de ajuste M3 × 8 3
I. Hoja con etiqueta 1
J. Película 1
K. Sujetador pequeño (para DF-770) 1
L. Sujetador grande (para DF-790) 1
M. Núcleo de ferrita 1

Asegúrese de despegar todas las cintas y/o material amortiguador de las partes suministradas.

Deutsch

Gelieferte Teile

A. Locherführung 1
B. Lochereinheit 1
C. Motoreinheit 1
D. Anschlagring 1
E. Feder 1
F. Locher-PWB 1
G. Lochungsabfallbehälter 1
H. M3 × 8 Passstift-Verbundschrauben 3
I. Aufkleberbogen 1
J. Film 1
K. Kleine Klemme (für DF-770) 1
L. Große Klemme (für DF-790) 1
M. Ferritkern 1

Entfernen Sie Klebeband und/oder Dämpfungsmaterial vollständig von den mitgelieferten Teilen.

Italiano

Parti di fornitura

A. Guida perforazione 1
B. Unità di perforazione 1
C. Unità motore 1
D. Anello di bloccaggio 1
E. Molla 1
F. Scheda a circuiti stampati di perforazione 1
G. Scarto perforazione 1
H. Viti con testa a croce S M3 × 8 3
I. Foglio di etichette 1
J. Pellicola 1
K. Morsetto piccolo (per DF-770) 1
L. Morsetto grande (per DF-790) 1
M. Nucleo di ferrite 1

Accertarsi di rimuovere tutti i nastri adesivi e/o il materiale di imbottitura dalle parti fornite.

简体中文

附属品

A. 打孔导向板 1
B. 打孔单元 1
C. 电机单元 1
D. 止动环 1
E. 弹簧 1
F. 打孔单元电路板 1
G. 打孔纸屑盒 1
H. M3 X 8 攻丝紧固型 S 螺丝 3
I. 标签纸 1
J. 胶片 1
K. 固定夹 小（DF-770 用） 1
L. 固定夹 大（DF-790 用） 1
M. 磁环 1

如果附属品上带有固定胶带，缓冲材料时务必揭下。

한국어

동봉품

A. 펀치가이드 1
B. 펀치유니트 1
C. 모터유니트 1
D. 스톱링 1
E. 스프링 1
F. 펀치기판 1
G. 펀치폐기박스 1
H. 나사 M3×8 탭타이트 S 3
I. 라벨 시트 1
J. 필름 1
K. 클램프 소 (DF-770 용) 1
L. 클램프 대 (DF-790 용) 1
M. 페라이트 코어 1

동봉품에 고정 테이프，완충재가 붙어 있는 경우에는 반드시 제거할 것 .

日本語

同梱品

A. パンチガイド 1
B. パンチユニット 1
C. モーターユニット 1
D. ストップリング 1
E. バネ 1
F. パンチ基板 1
G. パンチくずボックス 1
H. ビス M3×8 タップタイト S 3
I. ラベルシート 1
J. フィルム 1
K. クランプ小(DF-770 用) 1
L. クランプ大(DF-790 用) 1
M. フェライトコア 1

同梱品に固定テープ、緩衝材が付いている場合は必ず取り外すこと。

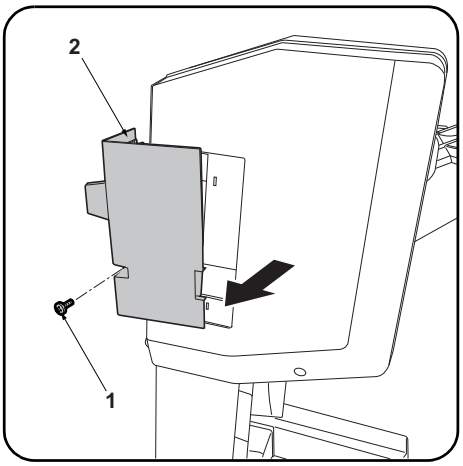

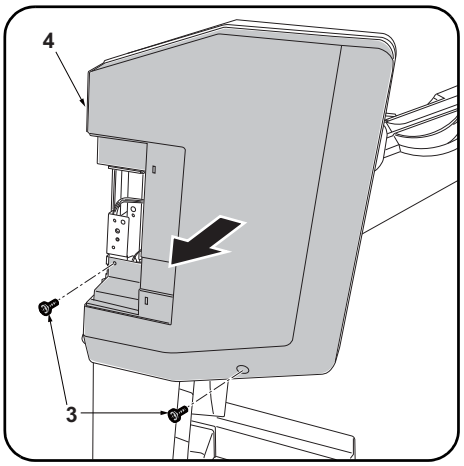

Procedure
Before installing the hole punch unit, make sure the MFP's main power switch is turned off and that its power cord is unplugged from the power outlet.
Install the document finisher first and then install the hole punch unit.

Removing the cover (DF-770)
If installing on the DF-790, proceed to step 1 on page 3.
1. Remove the screw (1) and remove the small rear cover (2).
2. Remove the 2 screws (3) and remove the upper rear cover (4).

Procédure
Avant d'installer la perforatrice, s'assurer que l'interrupteur d'alimentation principal du MFP est hors tension et que le câble d'alimentation est débranché de la prise secteur.
Installer d'abord le finisseur de document, puis installer la perforatrice.

Dépose du couvercle (DF-770)
Pour l'installation sur le modèle DF-790, passer à l'étape 1 de la page 3.
1. Déposer la vis (1) et déposer le petit couvercle arrière (2).
2. Déposer les 2 vis (3) et déposer le couvercle supérieur arrière (4).

Procedimiento
Antes de instalar la perforadora, asegúrese de que el interruptor principal de la alimentación del MFP esté desconectado y de que el cable de alimentación esté desenchufado de la toma de corriente de la pared.
Instale primero el finalizador de documentos y luego instale la perforadora.

Extracción de la cubierta (DF-770)
Si realiza la instalación en el DF-790, vaya al paso 1 de la página 3.
1. Quite el tornillo (1) y, después, quite la cubierta trasera pequeña (2).
2. Quite los 2 tornillos (3) y, después, quite la cubierta trasera superior (4).

Verfahren
Bevor Sie mit dem Einbau der Lochereinheit beginnen, stellen Sie sicher, dass der Hauptschalter des Kopierers ausgeschaltet und das Netzkabel aus der Steckdose gezogen ist.
Bringen Sie den Dokument-Finisher zuerst und dann erst die Lochereinheit an.

Entfernen der Abdeckung (DF-770)
Zur Installation des DF-790 weitergehen zu Schritt 1 auf Seite 3.
1. Die Schraube (1) entfernen und die kleine hintere Abdeckung (2) abnehmen.
2. Die 2 Schrauben (3) entfernen und die obere hintere Abdeckung (4) abnehmen.

Procedura
Prima di installate l'unità di perforazione, assicurarsi che l'interruttore principale dell'MFP sia spento e che il cavo di alimentazione sia scollegato dalla presa di corrente.
Installare prima la finitrice e poi procedere all'installazione dell'unità di perforazione.

Rimozione del coperchio (DF-770)
Se si installa sull'unità DF-790, procedere al passo 1 a pagina 3.
1. Rimuovere la vite (1) e quindi rimuovere il pannello posteriore piccolo (2).
2. Rimuovere le 2 viti (3) e quindi rimuovere il pannello superiore posteriore (4).

安装步骤
安装打孔单元时，必须事先关闭 MFP 主机的主电源开关，并拔下电源插头后再进行作业。
首先安装装订器，然后安装打孔单元。

拆下盖板（DF-770 时）
安装到 DF-790 上时，跳至 P3 的步骤 1。
1. 拆除 1 颗螺丝 (1)，拆下后部小盖板 (2)。
2. 拆除 2 颗螺丝 (3)，拆下后上部盖板 (4)。

설치순서
펀치유니트를 부착할 때에는 반드시 MFP 본체의 주 전원 스위치를 OFF 로 하고 전원플러그를 뺀 다음 작업을 할 것 .
문서 피니셔를 설치 후 , 펀치유니트를 설치 할 것 .

커버제거 (DF-770 의 경우)
DF-790 에 장착하는 경우에는 P3 의 순서 1 로 진행합니다 .
1. 나사 (1) 1 개를 제거하고 뒷 소커버 (2) 를 제거합니다 .
2. 나사 (3) 2 개를 제거하고 뒷 상커버 (4) 를 제거합니다 .

取付手順
パンチユニットを設置するときは、必ず MFP 本体の主電源スイッチを OFF にし、電源プラグを抜いてから作業すること。
ドキュメントフィニッシャーを設置後、パンチユニットを設置すること。

カバーの取り外し(DF-770 の場合)
DF-790 に装着の場合は、P3 の手順 1 へ進む。
1. ビス (1)1 本を外し、後小カバー(2) を取り外す。
2. ビス (3)2 本を外し、後上カバー(4) を取り外す。

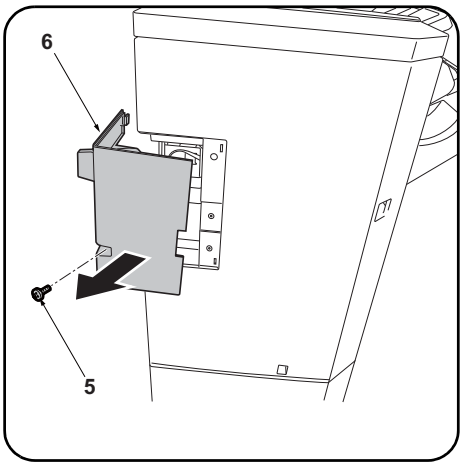

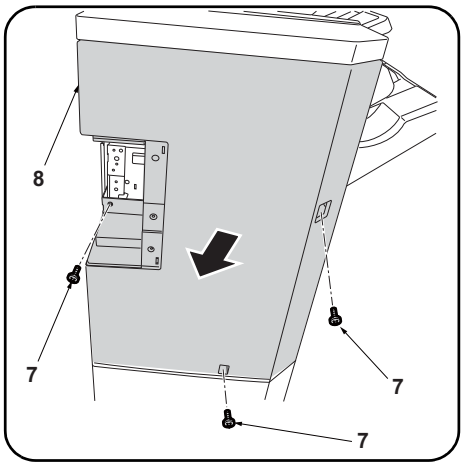

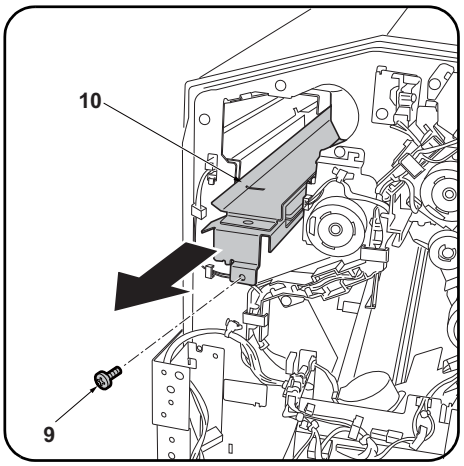

Removing the cover (DF-790)

1. Remove the screw (5) and remove the small rear cover (6).

2. Remove the 3 screws (7) and remove the upper rear cover (8).

Installing the hole punch unit

3. Remove the screw (9) and pull the guide (10) outwards.

Dépose du couvercle (DF-790)

1. Déposer la vis (5) et déposer le petit couvercle arrière (6).

2. Déposer les 3 vis (7) et déposer le couvercle supérieur arrière (8).

Installation de la perforatrice

3. Déposer la vis (9) et tirer le guide (10) vers l'extérieur.

Extracción de la cubierta (DF-790)

1. Quite el tornillo (5) y, después, quite la cubierta trasera pequeña (6).

2. Quite los 3 tornillos (7) y, después, quite la cubierta trasera superior (8).

Instalación de la perforadora

3. Quite el tornillo (9) y tire de la guía (10) hacia fuera.

Entfernen der Abdeckung (DF-790)

1. Die Schraube (5) entfernen und die kleine hintere Abdeckung (6) abnehmen.

2. Die 3 Schrauben (7) entfernen und die obere hintere Abdeckung (8) abnehmen.

Anbringen der Lochereinheit

3. Die Schraube (9) entfernen und die Führung (10) nach außen ziehen.

Rimozione del coperchio (DF-790)

1. Rimuovere la vite (5) e quindi rimuovere il pannello posteriore piccolo (6).

2. Rimuovere le 3 viti (7) e quindi rimuovere il pannello superiore posteriore (8).

Installare l'unità di perforazione

3. Rimuovere la vite (9) ed estrarre la guida (10) verso l'esterno.

拆下盖板（DF-790 时）

1. 拆除 1 颗螺丝 (5)，拆下后部小盖板 (6)。

2. 拆除 3 颗螺丝 (7)，拆下后上部盖板 (8)。

安装打孔单元

3. 拆除 1 颗螺丝 (9)，将导向板 (10) 向外拉出。

커버제거 (DF-790 의 경우)

1. 나사 (5) 1 개를 제거하고 뒷 소커버 (6) 를 제거합니다 .

2. 나사 (7) 3 개를 제거하고 뒷 상커버 (8) 를 제거합니다 .

펀치유니트 부착

3. 나사 (9) 1 개를 제거하고 가이드 (10) 을 앞으로 끌어 당깁니다 .

カバーの取り外し(DF-790 の場合)

1. ビス (5)1 本を外し、後小カバー (6) を取り外す。

2. ビス (7)3 本を外し、後上カバー (8) を取り外す。

パンチユニットの取り付け

3. ビス (9)1 本を外し、ガイド (10) を手前に引き出す。

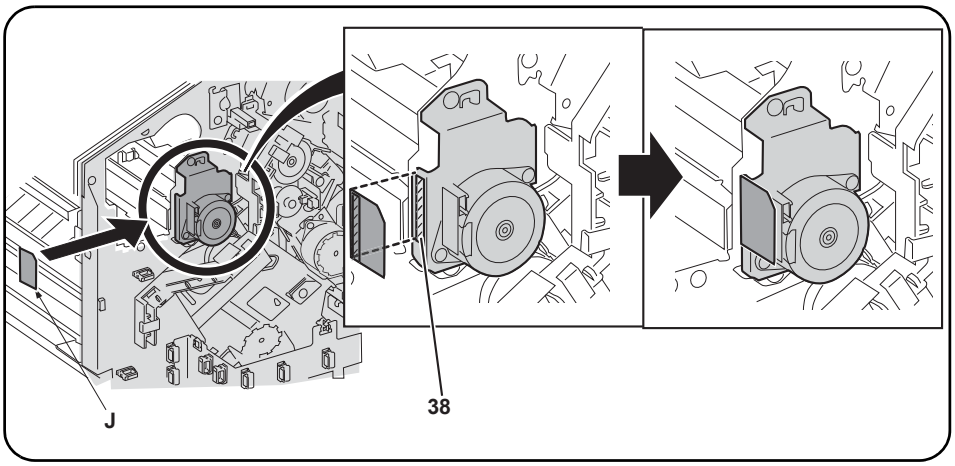

4. After using alcohol to clean the shaded portion (38) of the motor shown for adhering the film (J), adhere the film.

---

4. Après avoir utilisé de l'alcool pour nettoyer la partie du moteur hachurée (38) sur laquelle le film (J) est apposé, coller ce film.

---

4. Después de utilizar alcohol para limpiar la parte sombreada (38) del motor mostrada en la ilustración para pegar la película (J), pegue la película.

---

4. Den in der Abbildung grau dargestellten Teil (38) des Motors zum Anbringen des Films (J) mit Alkohol reinigen und dann den Film anbringen.

---

4. Dopo aver usato l'alcool per pulire la parte ombreggiata (38) del motore, illustrata per l'adesione della pellicola (J), far aderire la pellicola.

---

4. 用酒精清洁电机斜侧处（38）的粘贴位置后，粘贴胶片（J）。

---

4. 모터 사선부 (38) 의 부착위치를 알코올 청소 후 , 필름 (J) 을 부착합니다 .

---

4. モーター斜線部(38)の貼り付け位置をアルコール清掃後、フィルム(J)を貼り付ける。

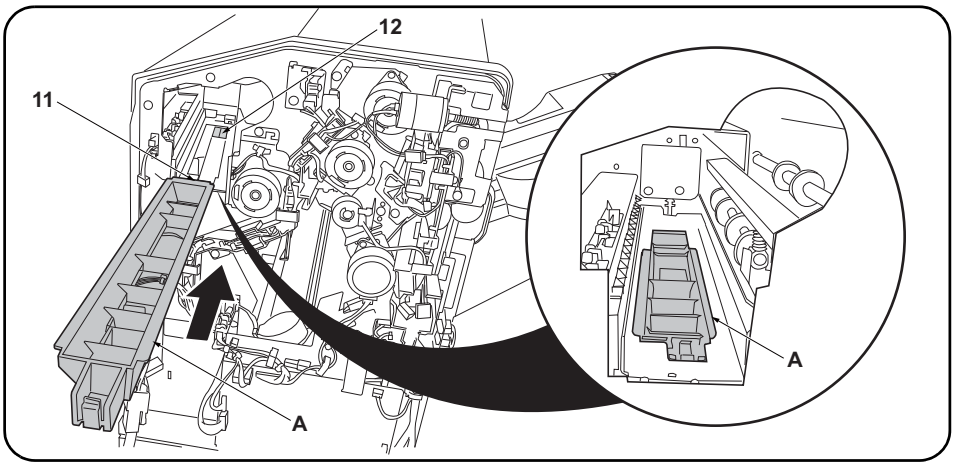

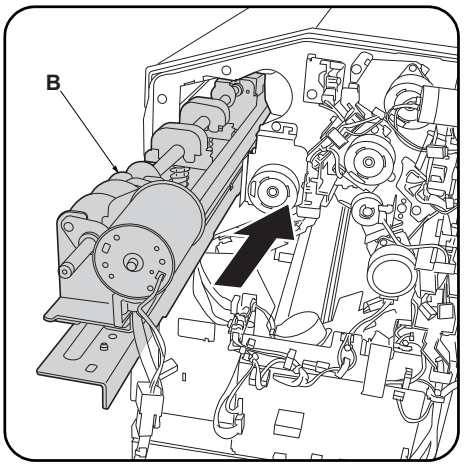

5. Install the punch guide (A) so that the leading edge of the guide (11) is below the document finisher frame (12).

6. Insert the hole punch unit (B) into the document finisher.

5. Monter le guide de la perforatrice (A) de sorte que le bord d'attaque du guide (11) se trouve sous le bâti du retoucheur de document (12).

6. Insérer la perforatrice (B) dans le retoucheur de document.

5. Instale la guía de perforación (A) de forma tal que el borde delantero de la guía (11) quede debajo de la carcasa del finalizador de documentos (12).

6. Inserte la perforadora (B) en el finalizador de documentos.

5. Die Locherführung (A) so einsetzen, dass die Vorderkante der Führung (11) unter dem Rahmen (12) des Dokument-Finishers liegt.

6. Die Lochereinheit (B) in den Dokument-Finisher einsetzen.

5. Installare la guida perforazione (A) in modo che il bordo principale della guida (11) sia sotto il telaio (12) della finitrice di documenti.

6. Inserire l'unità di perforazione (B) nella finitrice di documenti.

5. 将打孔导向板 (A) 的前端 (11) 安装在装订器的框架 (12) 的下部。

6. 将打孔单元 (B) 插入到装订器中。

5. 펀치가이드 (A) 의 끝 (11) 이 문서 피니셔의 프레임 (12) 밑으로 되도록 장착합니다 .

6. 펀치유니트 (B) 를 문서 피니셔에 삽입합니다 .

5. パンチガイド (A) の先端 (11) がドキュメントフィニッシャーのフレーム (12) の下になるように取り付ける。

6. パンチユニット (B) をドキュメントフィニッシャーに挿入する。

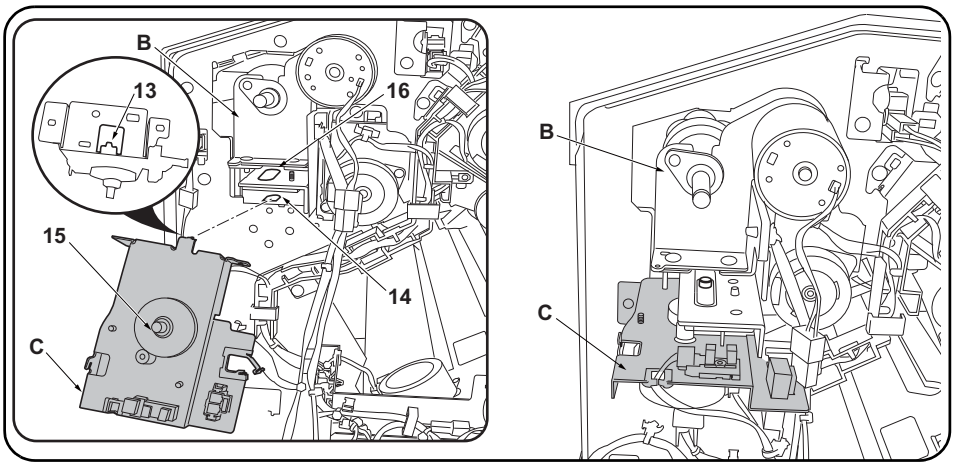

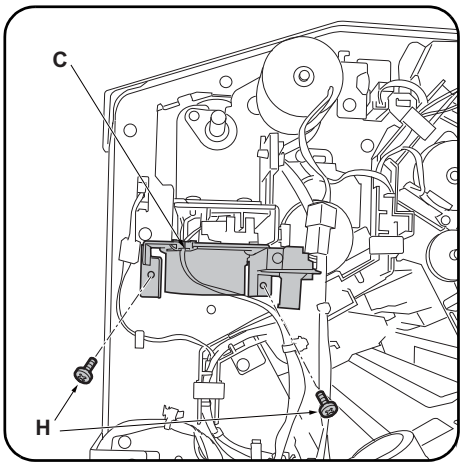

7. Raise the hole punch unit (B) slightly and fit the hook (13) on the motor unit (C) into the groove (14) in the document finisher. At the same time, insert the rod (15) on the motor unit (C) into the hole (16) in the hole punch unit (B).

8. Secure the motor unit (C) with the 2 screws (H).

---

7. Lever légèrement la perforatrice (B) et insérer le crochet (13) du moteur (C) dans la rainure (14) du retoucheur de document. Insérer en même temps la tige (15) du moteur (C) dans le trou (16) de la perforatrice (B).

8. Fixer le moteur (C) à l'aide de 2 vis (H).

---

7. Levante ligeramente la perforadora (B) y encaje el gancho (13) de la unidad motriz (C) en la ranura (14) del finalizador de documentos. Al mismo tiempo, inserte la varilla (15) de la unidad motriz (C) en el orificio (16) de la perforadora (B).

8. Asegure la unidad motriz (C) con los 2 tornillos (H).

---

7. Die Lochereinheit (B) leicht anheben und den Haken (13) an der Motoreinheit (C) in die Nut (14) des Dokument-Finishers einsetzen. Dabei auch die Stange (15) an der Motoreinheit (C) in die Öffnung (16) der Lochereinheit (B) einstecken.

8. Die Motoreinheit (C) mit den 2 Schrauben (H) sichern.

---

7. Sollevare leggermente l'unità di perforazione (B) ed inserire il gancio (13) sull'unità motore (C) nella scanalatura (14) della finitrice di documenti. Contemporaneamente, inserire l'asta (15) sull'unità motore (C) nel foro (16) dell'unità di perforazione (B).

8. Fissare l'unità motore (C) con le 2 viti (H).

---

7. 稍稍抬起打孔单元 (B)，将电机单元 (C) 的卡扣 (13) 嵌入装订器的沟槽 (14) 内。与此同时，将电机单元 (C) 的轴 (15) 插入打孔单元 (B) 的孔 (16) 中。

8. 使用 2 颗螺丝 (H) 来固定电机单元 (C)。

---

7. 펀치유니트 (B) 를 조금 들면서 모터유니트 (C) 후크 (13) 를 문서 피니셔의 구 (14) 에 꽂습니다 . 이것과 동시에 모터유니트 (C) 의 축 (15) 을 펀치유니트 (B) 구멍 (16) 에 삽입합니다 .

8. 나사 (H) 2 개로 모터유니트 (C) 를 고정합니다 .

---

7. パンチユニット (B) を少し持ち上げながら、モーターユニット (C) のフック (13) をドキュメントフィニッシャーの溝 (14) にはめ込む。これと同時に、モーターユニット (C) の軸 (15) をパンチユニット (B) の穴 (16) に挿入する。

8. ビス (H)2 本で、モーターユニット (C) を固定する。

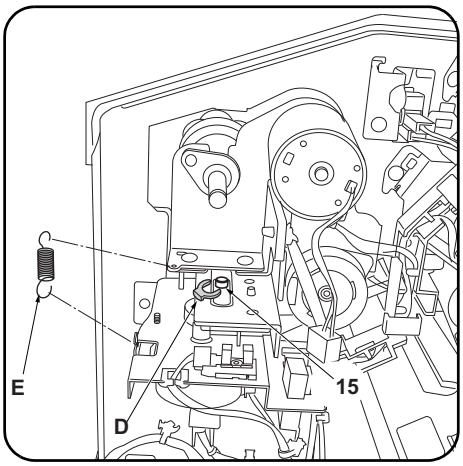

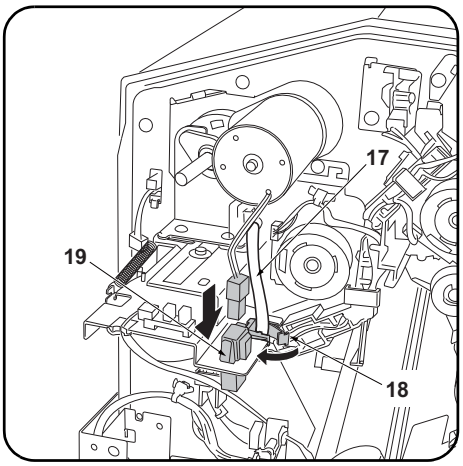

9. Fit the stop ring (D) over the motor unit rod (15) and fit the spring (E) between the hole punch unit and motor unit.

10. Run the hole punch unit wire (17) through the motor unit edging (18).
11. Plug the wire from the hole punch unit motor into the connector on the motor unit (19).

---

9. Monter la bague d'arrêt (D) sur la tige du moteur (15) et insérer le ressort (E) entre la perforatrice et le moteur.

10. Faire passer le câble de la perforatrice (17) dans le passage de câbles du moteur (18)
11. Raccorder le câble du moteur de la perforatrice au connecteur du moteur (19).

---

9. Coloque el anillo de tope (D) sobre la varilla de la unidad motriz (15) y coloque el resorte (E) entre la perforadora y la unidad motriz.

10. Tienda el cable de la perforadora (17) a través de la pestaña de la unidad motriz (18).
11. Enchufe el cable del motor de la perforadora al conector de la unidad motriz (19).

---

9. Den Anschlagring (D) auf die Stange (15) der Motoreinheit setzen und die Feder (E) zwischen Lochereinheit und Motoreinheit einsetzen.

10. Das Kabel (17) der Lochereinheit durch den Kantenschutz (18) der Motoreinheit führen.
11. Das Kabel vom Motor der Lochereinheit an den Steckverbinder der Motoreinheit (19) anschließen.

---

9. Inserire l'anello di bloccaggio (D) sull'asta (15) dell'unità motore ed inserire molla (E) tra l'unità di perforazione e l'unità motore.

10. Far passare il cavo dell'unità di perforazione (17) attraverso il bordo (18) dell'unità motore.
11. Collegare il cavo dal motore dell'unità di perforazione nel connettore sull'unità motore (19).

---

9. 将止动环 (D) 嵌入到电机单元的轴 (15) 上，在打孔单元与电机单元之间安装弹簧 (E)。

10. 将打孔单元的电线 (17) 穿过电机单元的包边孔 (18)。
11. 将来自打孔单元的电机的电线与电机单元的接插件 (19) 相连接。

---

9. 모터유니트 축 (15) 에 스톱링 (D) 을 꽂고 펀치유니트와 모터유니트 사이에 스프링 (E) 을설치합니다 .

10. 펀치유니트의 전선 (17) 을 모터유니트의 에징 (18) 에 지나가게 합니다 .
11. 펀치유니트 모터에서의 전선을 모터유니트 커넥터 (19) 에 접속합니다 .

---

9. モーターユニットの軸 (15) にストップリング (D) をはめ、パンチユニットとモーターユニットの間にバネ (E) を取り付ける。

10. パンチユニットの電線 (17) をモーターユニットのエッジング (18) に通す。
11. パンチユニットのモーターからの電線をモーターユニットのコネクター(19) に接続する。

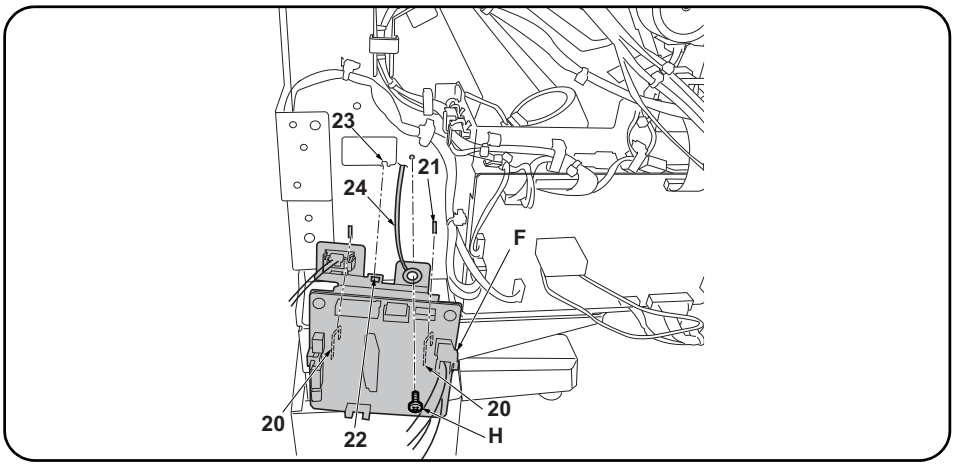

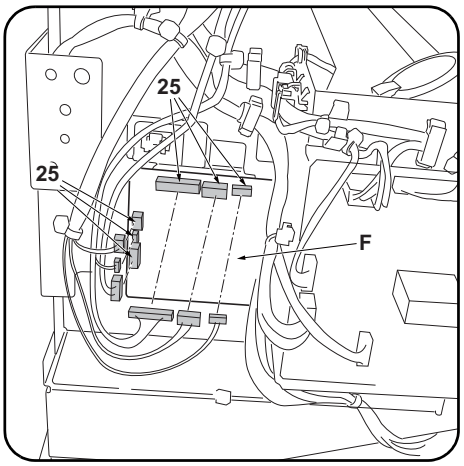

Installing the punch PWB and waste hole punch box (DF-770)
If installing on the DF-790, proceed to step 12 on page 12.

12. Fit the 2 hooks (20) in the punch PWB (F) into the cut (21) in the document finisher. At the same time, insert the projection (23) on the document finisher into the hole (22) in the punch PWB (F).

13. Using the screw (H), tighten the hole punch unit ground wire (24) and the punch PWB (F) together.

14. Plug the 6 hole punch unit wires into the connectors (25) on the punch PWB (F).

Installation de la PWB de la perforatrice et du bac de récupération de la perforatrice (DF-770).
Pour une installation sur le modèle DF-790, passer à l'étape 12 en page 12.

12. Insérer les 2 crochets (20) de la PWB de la perforatrice (F) dans la découpe (21) du retoucheur de document. Insérer en même temps la saillie (23) du retoucheur de document dans le trou (22) de la PWB de la perforatrice (F).

13. Fixer le câble de terre de la perforatrice (24) à la PWB de la perforatrice (F) à l'aide d'une vis (H).

14. Raccorder les 6 câbles de la perforatrice aux connecteurs (25) de la PWB de la perforatrice (F).

Instalación del PWB de perforación y la caja para desechos de la perforación (DF-770)
Si realiza la instalación en el DF-790, vaya al paso 12 de la página 12.

12. Coloque los 2 ganchos (20) del PWB de perforación (F) en el corte (21) del finalizador de documentos. Al mismo tiempo, inserte el resalto (23) del finalizador de documentos en el orificio (22) del PWB de perforación (F).

13. Usando el tornillo (H), apriete juntos el cable de conexión a tierra de la perforadora (24) y el PWB de perforación (F).

14. Enchufe los 6 cables de la perforadora a los conectores (25) del PWB de perforación (F).

Installation der Locher-PWB und des Lochungsabfallbehälters (DF-770)
Zur Installation des DF-790 weitergehen zu Schritt 12 auf Seite 12.

12. Die 2 Haken (20) in der Locher-PWB (F) in die Aussparung (21) am Dokument-Finisher einsetzen. Dabei auch den Vorsprung (23) am Dokument-Finisher in die Öffnung (22) auf der Locher-PWB (F) einsetzen.

13. Mit der Schraube (H) das Massekabel (24) der Lochereinheit an der Locher-PWB (F) festziehen.

14. Die 6 Kabel der Lochereinheit an die Steckverbinder (25) der Locher-PWB (F) anschließen.

Installazione della scheda a circuiti stampati di perforazione e dello scarto perforazione (DF-770)
Se si installa sull'unità DF-790, procedere al passo 12 a pagina 12.

12. Inserire i 2 ganci (20) della scheda a circuiti stampati di perforazione (F) nell'intaglio (21) della finitrice di documenti. Contemporaneamente, inserire la sporgenza (23) sulla finitrice di documenti nel foro (22) della scheda a circuiti stampati di perforazione (F).

13. Utilizzando la vite (H), stringere insieme il cavo di terra (24) dell'unità di perforazione e la scheda a circuiti stampati di perforazione (F).

14. Collegare i 6 cavi dell'unità di perforazione nei connettori (25) sulla scheda a circuiti stampati di perforazione (F).

安装电路板与打孔纸屑盒（DF-770 时）
安装到 DF-790 上时，跳至 P12 的步骤 12。

12. 将打孔电路板 (F) 的 2 个卡扣 (20) 挂在装订器的缺口 (21) 上。同时，将打孔电路板 (F) 的孔 (22) 卡入装订器的突出部 (23)。

13. 使用 1 颗螺丝 (H) 将打孔单元的接地线 (24) 与打孔电路板 (F) 一起固定。

14. 将打孔单元的 6 根电线与打孔电路板 (F) 的接插件 (25) 相连接。

기판과 펀치폐기박스의 부착 (DF-770 의 경우)
DF-790 에 장착하는 경우에는 P12 의 순서 12 로 진행합니다 .

12. 펀치기판 (F) 의 후크 (20) 2 곳을 문서 피니셔의 구멍 (21) 에 겁니다 . 동시에 펀치기판 (F) 구멍 (22) 을 문서 피니셔의 돌기 (23) 에 넣습니다 .

13. 나사 (H) 1 개로 펀치유니트의 접지선 (24) 과 펀치기판 (F) 을 함께 조입니다 .

14. 펀치유니트의 전선 6 선을 펀치기판 (F) 커넥터 (25) 에 접속합니다 .

基板とパンチくずボックスの取り付け(DF-770 の場合)
DF-790 に装着の場合は､P12 の手順 12 へ進む。

12. パンチ基板 (F) のフック (20)2 箇所をドキュメントフィニッシャーの切り欠き (21) に引っ掛ける。同時に､パンチ基板 (F) の穴 (22) をドキュメントフィニッシャーの突起 (23) に入れる。

13. ビス (H)1 本で､パンチユニットのアース線 (24) とパンチ基板 (F) を共締めする。

14. パンチユニットの電線 6 本を､パンチ基板 (F) のコネクター(25) に接続する。

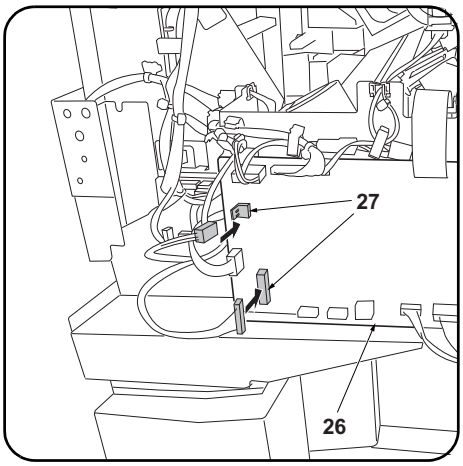

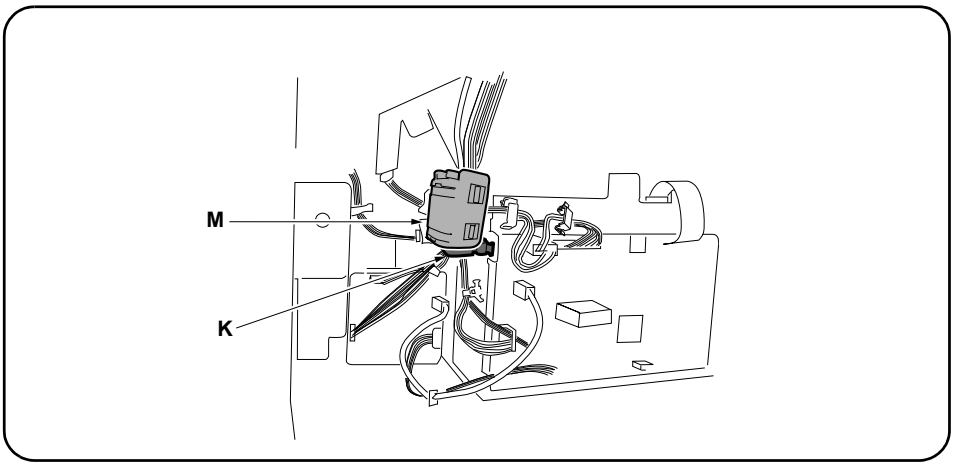

15. Plug the 2 punch PWB wires into the connectors (27) on the DF main PWB (26).

16. Install the small clamp (K) on the finisher, then pass and fasten the wires from the motor unit and hole punch unit.
17. Attach the ferrite core (M) to the wire.

---

15. Raccorder les 2 câbles de la PWB de la perforatrice aux connecteurs (27) de la PWB principale du DF (26).

16. Monter le petit collier (K) sur le retoucheur puis faire passer les câbles du moteur et de la perforatrice dans ce collier pour les fixer en place
17. Fixer le noyau en ferrite (M) au câble.

---

15. Enchufe los 2 cables del PWB de perforación a los conectores (27) del PWB principal del DF (26).

16. Instale el sujetador pequeño (K) en el finalizador, después tienda y ajuste los cables de la unidad motriz y la perforadora.
17. Fije el núcleo de ferrita (M) al cable.

---

15. Die 2 Kabel der Locher-PWB an die Steckverbinder (27) der DF-Haupt-PWB (26) anschließen.

16. Die kleine Klemme (K) am Finisher anbringen, dann die Kabel von der Motoreinheit und der Lochereinheit hindurchführen und befestigen.
17. Den Ferritkern (M) am Kabel befestigen.

---

15. Collegare i 2 cavi della scheda a circuiti stampati di perforazione nei connettori (27) sulla scheda principale PWB (26) della DF.

16. Installare il morsetto piccolo (K) sul finitore, e quindi passare e fissare i cavi dall'unità motore e dall'unità di perforazione.
17. Applicare il nucleo in ferrite (M) al cavo.

---

15. 将打孔电路板的 2 根电线与 DF 主电路板 (26) 的接插件 (27) 连接。

16. 把小固定夹 (K) 安装在装订器上，从电机单元和打孔单元出来的导线穿过固定夹来固定。
17. 用磁环 (M) 套住导线。

---

15. 펀치기판의 전선 2 선을 DF 주 회로기판 (26) 의 커넥터 (27) 에 접속합니다 .

16. 클램프 소 (K) 를 피니셔에 장착 , 모터 유니트와 펀치 유니트에서부터 전선을 통과시키고 고정합니다 .
17. 페라이트 코어 (M) 를 전선으로 장착합니다 .

---

15. パンチ基板の電線 2 本を DF 主回路基板 (26) のコネクター(27) に接続する。

16. クランプ小(K)をフィニッシャーに取り付け、モーターユニットとパンチユニットからの電線を通し、固定する。
17. フェライトコア(M)を電線に取り付ける。

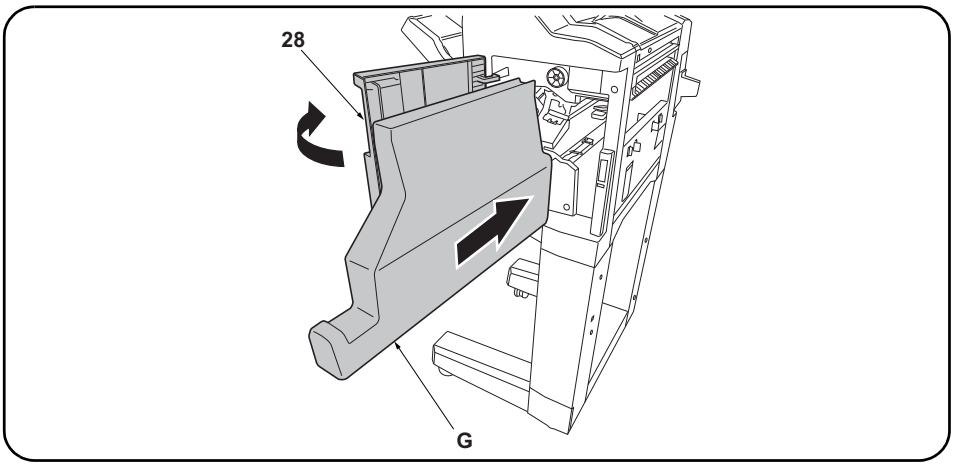

18. Replace the upper rear cover (4) and small rear cover (2).

19. Open the upper front cover (28) and insert the waste hole punch box (G).

---

18. Reposer le couvercle supérieur arrière (4) et le petit couvercle arrière (2).

19. Ouvrir le couvercle supérieur avant (28) et insérer le bac de récupération de la perforatrice (G).

---

18. Vuelva a colocar la cubierta trasera superior (4) y la cubierta trasera pequeña (2).

19. Abra la cubierta delantera superior (28) e inserte la caja para desechos de la perforación (G).

---

18. Die obere hintere Abdeckung (4) und die kleine hintere Abdeckung (2) wieder einsetzen.

19. Die obere vordere Abdeckung (28) öffnen und den Lochungsabfallbehälter (G) einsetzen.

---

18. Ricollocare il pannello superiore posteriore (4) e il pannello posteriore piccolo (2).

19. Aprire il pannello superiore anteriore (28) ed inserire lo scarto perforazione (G).

---

18. 按原样安装后上部盖板 (4) 与后部小盖板 (2)。

19. 打开前上部盖板 (28)，插入打孔纸屑盒 (G)。

---

18. 뒷 상커버 (4) 와 후 소커버 (2) 를 원래대로 부착합니다 .

19. 앞 상커버 (28) 를 열고 펀치폐기박스 (G) 를 삽입합니다 .

---

18. 後上カバー(4) と後小カバー(2) を元通り取り付ける。

19. 前上カバー(28) を開き、パンチくずボックス (G) を挿入する。

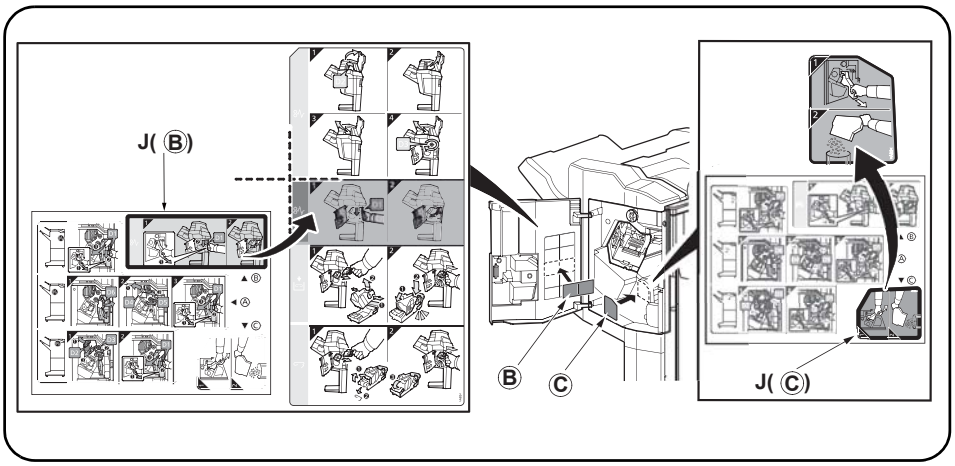

20. After cleaning each area with alcohol, adhere the following labels from the label sheet (J) at the locations shown in the illustration: B, C..

21. Close the upper front cover (28).

---

20. Après avoir nettoyé chaque zone à l'alcool, apposer les étiquettes suivantes du feuillet d'étiquettes (J) aux emplacements indiqués dans l'illustration : B, C.

21. Fermer le couvercle supérieur avant (28).

---

20. Después de limpiar todas las zonas con alcohol, despegue de la hoja de etiquetas (J) las etiquetas siguientes, y péguelas en los sitios que se indican en la ilustración: B, C.

21. Cierre la cubierta delantera superior (28).

---

20. Nachdem Sie alle Flächen mit Alkohol gereinigt haben, kleben Sie bitte die folgenden Aufkleber vom Aufkleberbogen (J) an die in der Abbildung angegebenen Stellen: B, C.

21. Die obere vordere Abdeckung (28) schließen.

---

20. Dopo aver pulito ciascuna zona con alcol, applicare le seguenti etichette del foglio di etichette (J) sui punti mostrati nell'illustrazione: B, C.

21. Chiudere il pannello superiore anteriore (28).

---

20. 用酒精清洁各区域后，请在如图所示位置粘贴从标签纸上（J）撕下的下列标签：B、C。

21. 关闭前上部盖板（28）。

---

20. 라벨 시트 (J) 내의 하기 라벨을 일러스트의 위치에 알코올청소 후 붙입니다: B, C .

21. 앞 상커버 (28) 를 닫습니다 .

---

20. ラベルシート（J）内のB、Cをイラストの位置にアルコール清掃後貼り付ける。

21. 前上カバー(28) を閉じる。

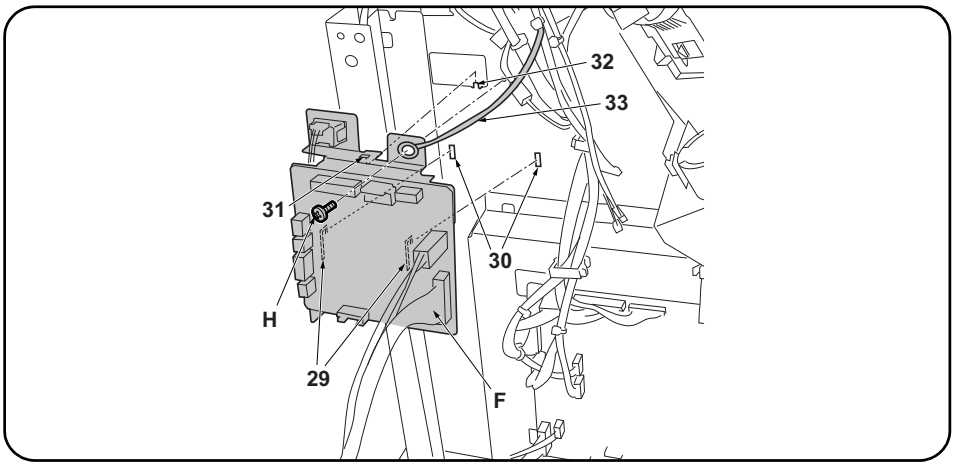

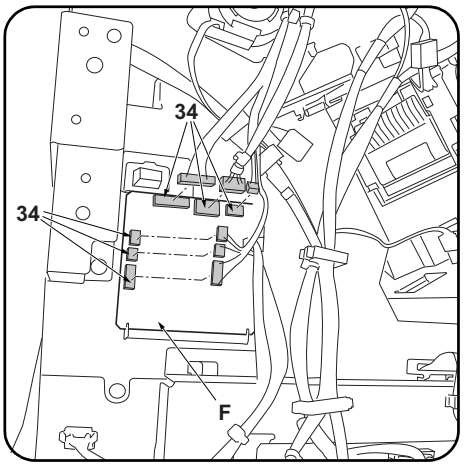

Installing the punch PWB and waste hole punch box (DF-790)

12. Fit the 2 hooks (29) in the punch PWB (F) into the cut (30) in the document finisher. At the same time, insert the projection (32) on the document finisher into the hole (31) in the punch PWB (F).

13. Using the screw (H), tighten the hole punch unit ground wire (33) and the punch PWB (F) together.

14. Plug the 6 hole punch unit wires into the connectors (34) on the punch PWB (F).

Installation de la PWB de la perforatrice et du bac de récupération de la perforatrice (DF-790).

12. Insérer les 2 crochets (29) de la PWB de la perforatrice (F) dans la découpe (30) du retoucheur de document. Insérer en même temps la saillie (32) du retoucheur de document dans le trou (31) de la PWB de la perforatrice (F).

13. Fixer le câble de terre de la perforatrice (33) à la PWB de la perforatrice (F) à l'aide d'une vis (H).

14. Raccorder les 6 câbles de la perforatrice aux connecteurs (34) de la PWB de la perforatrice (F).

Instalación del PWB de perforación y la caja para desechos de la perforación (DF-790)

12. Coloque los 2 ganchos (29) del PWB de perforación (F) en el corte (30) del finalizador de documentos. Al mismo tiempo, inserte el resalto (32) del finalizador de documentos en el orificio (31) del PWB de perforación (F).

13. Usando el tornillo (H), apriete juntos el cable de conexión a tierra de la perforadora (33) y el PWB de perforación (F).

14. Enchufe los 6 cables de la perforadora a los conectores (34) del PWB de perforación (F).

Installation der Locher-PWB und des Lochungsabfallbehälters (DF-790)

12. Die 2 Haken (29) in der Locher-PWB (F) in die Aussparung (30) am Dokument-Finisher einsetzen. Dabei auch den Vorsprung (32) am Dokument-Finisher in die Öffnung (31) auf der Locher-PWB (F) einsetzen.

13. Mit der Schraube (H) das Massekabel (33) der Lochereinheit an der Locher-PWB (F) festziehen.

14. Die 6 Kabel der Lochereinheit an die Steckverbinder (34) der Locher-PWB (F) anschließen.

Installazione della scheda a circuiti stampati di perforazione e dello scarto perforazione (DF-790)

12. Inserire i 2 ganci (29) della scheda a circuiti stampati di perforazione (F) nell'intaglio (30) della finitrice di documenti. Contemporaneamente, inserire la sporgenza (32) sulla finitrice di documenti nel foro (31) della scheda a circuiti stampati di perforazione (F).

13. Utilizzando la vite (H), stringere insieme il cavo di terra (33) dell'unità di perforazione e la scheda a circuiti stampati di perforazione (F).

14. Collegare i 6 cavi dell'unità di perforazione nei connettori (34) sulla scheda a circuiti stampati di perforazione (F).

安装电路板与打孔纸屑盒（DF-790 时）

12. 将打孔电路板 (F) 的 2 个卡扣 (29) 挂在装订器的缺口 (30) 上。同时，将打孔电路板 (F) 的孔 (31) 卡入装订器的突出部 (32)。

13. 使用 1 颗螺丝 (H) 将打孔单元的接地线 (33) 与打孔电路板 (F) 一起固定。

14. 将打孔单元的 6 根电线与打孔电路板 (F) 的接插件 (34) 相连接。

기판과 펀치폐기박스의 부착 (DF-790 의 경우)

12. 펀치기판 (F) 의 후크 (29) 2 곳을 문서 피니셔의 구멍 (30) 에 겁니다 . 동시에 펀치기판 (F) 구멍 (31) 을 문서 피니셔의 돌기 (32) 에 넣습니다 .

13. 나사 (H) 1 개로 펀치유니트의 접지선 (33) 과 펀치기판 (F) 을 함께 조입니다 .

14. 펀치유니트의 전선 6 선을 펀치기판 (F) 커넥터 (34) 에 접속합니다 .

基板とパンチくずボックスの取り付け(DF-790 の場合)

12. パンチ基板 (F) のフック (29)2 箇所をドキュメントフィニッシャーの切り欠き (30) に引っ掛ける。同時に、パンチ基板 (F) の穴 (31) をドキュメントフィニッシャーの突起 (32) に入れる。

13. ビス (H)1 本で、パンチユニットのアース線 (33) とパンチ基板 (F) を共締めする。

14. パンチユニットの電線 6 本を、パンチ基板 (F) のコネクター(34) に接続する。

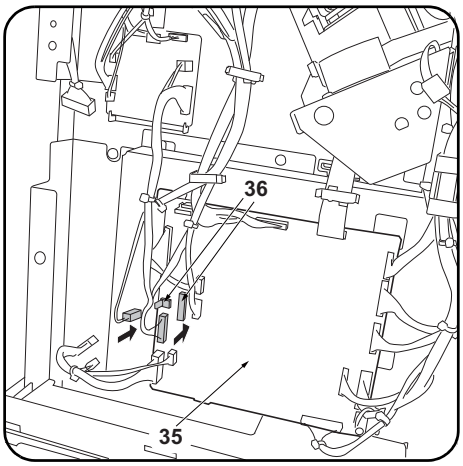

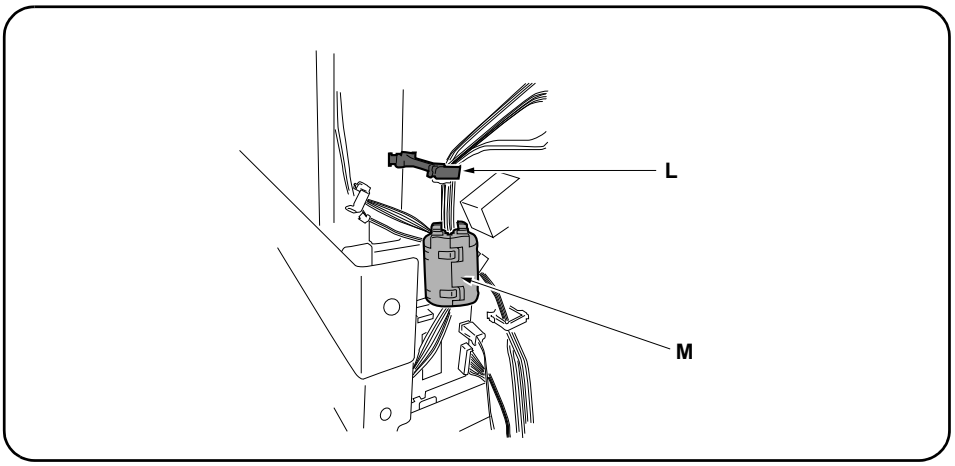

15. Plug the 2 punch PWB wires into the connectors (36) on the DF main PWB (35).

16. Install the small clamp (L) on the finisher, then pass and fasten the wires from the motor unit and hole punch unit.
17. Attach the ferrite core (M) to the wire.

---

15. Raccorder les 2 câbles de la PWB de la perforatrice aux connecteurs (36) de la PWB principale du DF (35).

16. Installer le grand collier (L) sur le retoucheur puis faire passer les câbles du moteur et de la perforatrice dans ce collier pour les fixer en place.
17. Fixer le noyau en ferrite (M) au câble.

---

15. Enchufe los 2 cables del PWB de perforación a los conectores (36) del PWB principal del DF (35).

16. Instale el sujetador grande (L) en el finalizador, después tienda y ajuste los cables de la unidad motriz y la perforadora.
17. Fije el núcleo de ferrita (M) al cable.

---

15. Die 2 Kabel der Locher-PWB an die Steckverbinder (36) der DF-Haupt-PWB (35) anschließen.

16. Die große Klemme (L) am Finisher anbringen, dann die Kabel von der Motoreinheit und der Lochereinheit hindurchführen und befestigen.
17. Den Ferritkern (M) am Kabel befestigen.

---

15. Collegare i 2 cavi della scheda a circuiti stampati di perforazione nei connettori (36) sulla scheda principale PWB (35) della DF.

16. Installare il morsetto grante (L) sul finitore, e quindi passare e fissare i cavi dall'unità motore e dall'unità di perforazione.
17. Applicare il nucleo in ferrite (M) al cavo.

---

15. 将打孔电路板的 2 根电线与 DF 主电路板 (35) 的接插件 (36) 连接。

16. 把大固定夹 (L) 安装在装订器上，从电机单元和打孔单元出来的导线穿过固定夹来固定。
17. 用磁环 (M) 套住导线。

---

15. 펀치기판의 전선 2 선을 DF 주 회로기판 (35) 의 커넥터 (36) 에 접속합니다 .

16. 클램프 대 (L) 를 피니셔에 장착 , 모터 유니트와 펀치 유니트에서부터 전선을 통과시키고 고정합니다 .
17. 페라이트 코어 (M) 를 전선으로 장착합니다 .

---

15. パンチ基板の電線 2 本を DF 主回路基板 (35) のコネクター(36) に接続する。

16. クランプ大(L)をフィニッシャーに取り付け、モーターユニットとパンチユニットからの電線を通し、固定する。
17. フェライトコア(M)を電線に取り付ける。

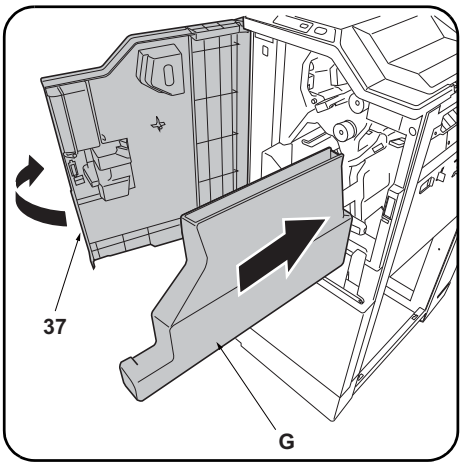

18. Replace the upper rear cover (8) and small rear cover (6).

19. Open the upper front cover (37) and insert the waste hole punch box (G).

---

18. Reposer le couvercle supérieur arrière (8) et le petit couvercle arrière (6).

19. Ouvrir le couvercle supérieur avant (37) et insérer le bac de récupération de la perforatrice (G).

---

18. Vuelva a colocar la cubierta trasera superior (8) y la cubierta trasera pequeña (6).

19. Abra la cubierta delantera superior (37) e inserte la caja para desechos de la perforación (G).

---

18. Die obere hintere Abdeckung (8) und die kleine hintere Abdeckung (6) wieder einsetzen.

19. Die obere vordere Abdeckung (37) öffnen und den Lochungsabfallbehälter (G) einsetzen.

---

18. Ricollocare il pannello superiore posteriore (8) e il pannello posteriore piccolo (6).

19. Aprire il pannello superiore anteriore (37) ed inserire lo scarto perforazione (G).

---

18. 按原样安装后上部盖板 (8) 与后部小盖板 (6)。

19. 打开前上部盖板 (37)，插入打孔纸屑盒 (G)。

---

18. 뒷 상커버 (8) 와 후 소커버 (6) 를 원래대로 부착합니다 .

19. 앞 상커버 (37) 를 열고 펀치폐기박스 (G) 를 삽입합니다 .

---

18. 後上カバー(8) と後小カバー(6) を元通り取り付ける。

19. 前上カバー(37) を開き、パンチくずボックス (G) を挿入する。

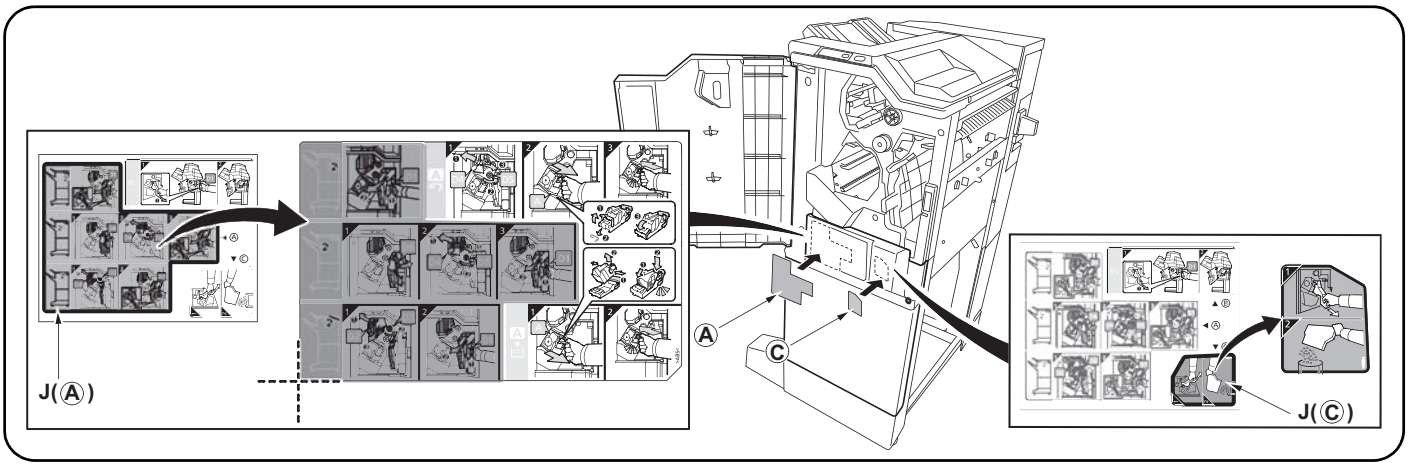

20. After cleaning each area with alcohol, adhere the following labels from the label sheet (J) at the locations shown in the illustration: A, C.
21. Close the upper front cover (37).

---

20. Après avoir nettoyé chaque zone à l'alcool, apposer les étiquettes suivantes du feuillet d'étiquettes (J) aux emplacements indiqués dans l'illustration : A, C.
21. Fermer le couvercle supérieur avant (37).

---

20. Después de limpiar todas las zonas con alcohol, despegue de la hoja de etiquetas (J) las etiquetas siguientes, y péguelas en los sitios que se indican en la ilustración: A, C.
21. Cierre la cubierta delantera superior (37).

---

20. Nachdem Sie alle Flächen mit Alkohol gereinigt haben, kleben Sie bitte die folgenden Aufkleber vom Aufkleberbogen (J) an die in der Abbildung angegebenen Stellen: A, C.
21. Die obere vordere Abdeckung (37) schließen.

---

20. Dopo aver pulito ciascuna zona con alcol, applicare le seguenti etichette del foglio di etichette (J) sui punti mostrati nell'illustrazione: A, C.
21. Chiudere il pannello superiore anteriore (37).

---

20. 用酒精清洁各区域后，请在如图所示位置粘贴从标签纸上（J）撕下的下列标签：A、C。
21. 关闭前上部盖板（37）。

---

20. 라벨 시트 (J) 내의 하기 라벨을 일러스트의 위치에 알코올청소 후 붙입니다:A, C .
21. 앞 상커버 (37) 를 닫습니다 .

---

20. ラベルシート（J）内のA、Cをイラストの位置にアルコール清掃後貼り付ける。
21. 前上カバー(37) を閉じる。

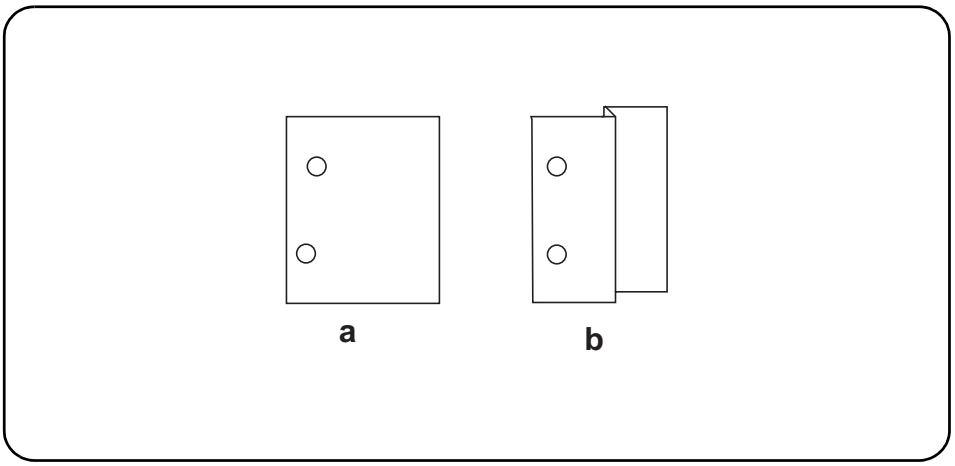

[Adjusting the hole punch position]

1. Connect the MFP power plug to the wall outlet and turn the MFP main power switch on.
2. Make a test copy in punch mode.
3. If any off-centering is observed, follow the procedure below to adjust the hole position.

Adjusting the hole punch entry registration

1. Enter the maintenance mode U246, select Finisher and Punch Regist.
2. Adjust the values.
   When the paper fed in skewed copy example (a): Increase the setting value.
   When the paper crimped copy example (b): Decrease the setting value.
3. Press the Start key to confirm the setting value.

[Réglage de la position des perforations]

1. Insérer la fiche d'alimentation du MFP dans la prise murale et mettre l'interrupteur principal du MFP sous tension.
2. Effectuer une copie d'essai en mode perforation.
3. Si les perforations sont décentrées, suivre la procédure ci-dessous pour ajuster la position de perforation.

Réglage de l'enregistrement de l'entrée des perforations

1. Passer en mode maintenance U246, sélectionner Finisher et Punch Regist.
2. Régler les valeurs.
   Si le papier est alimenté de travers exemple de copie (a): Augmentez la valeur de réglage.
   Si le papier est froissé exemple de copie (b): Diminuez la valeur de réglage.
3. Appuyer sur la touche de Start pour confirmer la valeur de réglage.

[Ajuste de la posición de perforación]

1. Conecte el enchufe del MFP en el receptáculo de pared y encienda el interruptor principal del MFP.
2. Haga una copia de prueba en el modo de perforación.
3. Si observa descentrado, siga el procedimiento de abajo para ajustar la posición del agujero.

Ajuste del registro de entrada de perforación

1. Entre en el modo de mantenimiento U246, seleccione Finisher y Punch Regist.
2. Ajuste los valores.
   Cuando el papel alimentado está torcido copia de muestra (a): Aumente el valor de configuración.
   Cuando el papel se dobló copia de muestra (b): Reduzca el valor de configuración.
3. Pulse la tecla de Start para confirmar el valor de configuración.

[Einstellen der Lochungsposition]

1. Stecken Sie den Netzstecker des MFP in die Wandsteckdose und schalten Sie den MFP am Hauptschalter ein.
2. Eine Testkopie im Lochungsmodus erstellen.
3. Falls eine außermittige Lochung erfolgte, ist die Lochungsposition wie folgend nachzustellen.

Einstellen der Lochungsregistrierung

1. Schalten Sie in den Wartungsmodus U246, wählen Sie Finisher und Punch Regist.
2. Die Werte einstellen.
   Wenn Papier verkantet eingezogen wird Kopiebeispiel (a): Den Einstellwert erhöhen.
   Wenn Papier verknittert wird Kopiebeispiel (b): Den Einstellwert verringern.
3. Den Einstellwert durch Drücken der Start-Taste bestätigen.

[Regolazione di posizione dei fori di perforazione]

1. Collegare la spina del cavo di alimentazione dell'MFP alla presa a muro della rete elettrica e accendere l'interruttore principale di alimentazione.
2. Eseguire una copia di prova in modalità di perforazione.
3. Nel caso in cui non lo siano, eseguire la procedura indicata qui di seguito per regolarne la posizione.

Regolazione del registro del foro di perforazione

1. Entrare in modalità manutenzione U246, selezionare Finisher e Punch Regist.
2. Regolare i valori.
   Quando l'alimentazione della carta risulta obliqua esempio di copia (a): Aumentare il valore dell'impostazione.
   Quando la carta risulta increspata esempio di copia (b): Diminuire il valore dell'impostazione.
3. Premere il tasto di Start per confermare il valore dell'impostazione.

[打孔位置的调节]

1. 将 MFP 主机上的电源插头插入电源插座中，打开主电源开关。
2. 在打孔模式下进行测试复印。
3. 打孔位置有偏差时，按以下步骤进行调节。

打孔装入定位调节

1. 设置维护模式 U246，选择 Finisher、Punch Regist。
2. 调整设定值。
   纸张斜向搬运时的复印样本 (a)：调高设定值。
   纸张作 Z 字折时的复印样本 (b)：调低设定值。
3. 按 Start 键，以确定设定值。

[펀치위치의 조정]

1. MFP 본체 전원플러그를 콘센트에 꽂고 주 전원 스위치를 ON 으로 합니다 .
2. 펀치모드에서 시험복사를 합니다 .
3. 펀치위치가 벗어난 경우에는 다음 순서로 조정합니다 .

펀치반입 레지스트 조정

1. 메인터넌스 모드 U246 를 세트하고 Finisher, Punch Regist 를 선택합니다 .
2. 설정치를 조정합니다 .
   용지가 경사로 반송되는 경우의 복사샘플 (a):설정치를 높입니다 .
   용지가 Z 꺾임이 있는 경의 복사샘플 (b):설정치를 내립니다 .
3. 시작키를 누르고 설정치를 확인합니다 .

[パンチ位置の調整]

1. MFP 本体の電源プラグをコンセントに差し込み、主電源スイッチを ON にする。
2. パンチモードでテストコピーを行う。
3. パンチ位置がずれていた場合、次の手順で調整を行う。

パンチ搬入レジスト調整

1. メンテナンスモード U246 をセットし、Finisher、Punch Regist を選択する。
2. 設定値を調整する。
   用紙が斜めに搬送される場合コピーサンプル (a):設定値を上げる。
   用紙が Z 折れする場合コピーサンプル (b):設定値を下げる。
3. スタートキーを押し、設定値を確定する。

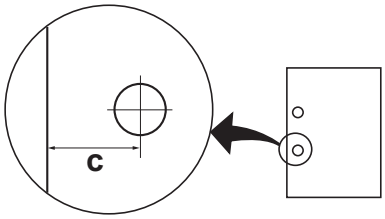

Adjusting the hole punch position feed

1. Enter the maintenance mode U246, select Finisher and Punch Feed.
2. Adjust the values.
   If the punch hole position is closer to the edge than the reference value (c): Increase the setting value.
   If the punch hole position is further from the edge than the reference value (c): Decrease the setting value.
3. Press the Start key to confirm the setting value.
   <Reference value (c)>
   Metric specification: 13 mm; Inch specification: 9.5 mm

Réglage de la position du point de perforation

1. Passer en mode maintenance U246, sélectionner Finisher et Punch Feed.
2. Régler les valeurs.
   Si la perforation est plus proche du bord de la feuille que défini par la valeur de référence (c): Augmentez la valeur de réglage.
   Si la perforation est plus loin du bord de la feuille que défini par la valeur de référence (c): Diminuez la valeur de réglage.
3. Appuyer sur la touche de Start pour confirmer la valeur de réglage.
   <Valeur de référence (c)>
   Spécifications métriques: 13 mm; Spécifications en pouces: 9,5 mm

Ajuste de la alimentación de la posición de perforación

1. Entre en el modo de mantenimiento U246, seleccione Finisher y Punch Feed.
2. Ajuste los valores.
   Si la posición de perforación está más cerca del borde que el valor de referencia (c): Aumente el valor de configuración.
   Si la posición de perforación está más alejada del borde que el valor de referencia (c): Reduzca el valor de configuración.
3. Pulse la tecla de Start para confirmar el valor de configuración.
   <Valor de referencia (c)>
   Sistema métrico: 13 mm; en pulgadas: 9,5 mm

Einstellen des Transports der Lochungsposition

1. Schalten Sie in den Wartungsmodus U246, wählen Sie Finisher und Punch Feed.
2. Die Werte einstellen.
   Falls die Lochungsposition näher an der Kante liegt als der Bezugswert (c) erlaubt: Den Einstellwert erhöhen.
   Falls die Lochungsposition ferner von der Kante liegt als der Bezugswert (c) erlaubt: Den Einstellwert verringern.
3. Den Einstellwert durch Drücken der Start-Taste bestätigen.
   <Bezugswert (c)>
   Metrischer Abstand: 13 mm; Abstand in Zoll: 9,5 mm

Regolazione spostamento di posizione dei fori di perforazione

1. Entrare in modalità manutenzione U246, selezionare Finisher e Punch Feed.
2. Regolare i valori.
   Se la posizione dei fori di perforazione è più vicina al bordo rispetto al valore di riferimento (c): Aumentare il valore dell'impostazione.
   Se la posizione dei fori di perforazione è più lontana dal bordo rispetto al valore di riferimento (c): Diminuire il valore dell'impostazione.
3. Premere il tasto di Start per confermare il valore dell'impostazione.
   <Valore di riferimento (c)>
   Specificazione in unità metrica: 13 mm; Specificazione in pollici: 9,5 mm

打孔位置搬运调节

1. 设置维护模式 U246，选择 Finisher、Punch Feed。
2. 调整设定值。
   打孔位置比基准值（c）短时：调高设定值。
   打孔位置比基准值（c）长时：调低设定值。
3. 按 Start 键，以确定设定值。
   ＜基准值（c）＞
   公制规格：13㎜、英制规格：9.5㎜

펀치위치 반송조정

1. 메인터넌스 모드 U246 를 세트하고 Finisher, Punch Feed 를 선택합니다 .
2. 설정치를 조정합니다 .
   펀치구멍의 위치가 기준치 (c) 보다 짧은 경우:설정치를 높입니다 .
   펀치구멍의 위치가 기준치 (c) 보다 긴 경우:설정치를 내립니다 .
3. 시작키를 누르고 설정치를 확인합니다 .
   ＜기준치 (c) ＞
   센치사양:13mm, 인치사양:9.5mm

パンチ位置搬送調整

1. メンテナンスモード U246 をセットし、Finisher、Punch Feed を選択する。
2. 設定値を調整する。
   パンチ穴の位置が基準値（c）より短い場合:設定値を上げる。
   パンチ穴の位置が基準値（c）より長い場合:設定値を下げる。
3. スタートキーを押し、設定値を確定する。
   ＜基準値（c）＞
   センチ仕様:13㎜、インチ仕様:9.5㎜

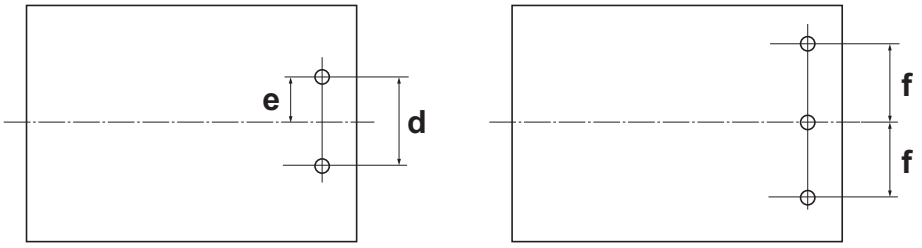

Centering the hole punch position

1. Enter the maintenance mode U246, select Finisher and Punch Width.
2. Adjust the values.
   If the punch hole is too close to the front of the machine: Decrease the setting value.
   If the punch hole is too close to the rear of the machine: Increase the setting value.
3. Press the Start key to confirm the setting value.
   <Reference value>
   Metric specification: d = 80 mm ± 0.5, e = 40 mm ± 2
   Inch specification: d = 2.75 inch ± 0.5, e = 1.375 inch ± 2, f = 4.25 inch ± 0.5

Centrage de la position de perforation

1. Passer en mode maintenance U246, sélectionner Finisher et Punch Width.
2. Régler les valeurs.
   Si la perforation est trop proche de l'avant de la machine: Diminuez la valeur de réglage.
   Si la perforation est trop proche de l'arrière de la machine: Augmentez la valeur de réglage.
3. Appuyer sur la touche de Start pour confirmer la valeur de réglage.
   <Valeur de référence>
   Spécifications métriques: d = 80 mm ± 0,5, e = 40 mm ± 2
   Spécifications en pouces: d = 2,75 pouces ± 0,5, e = 1,375 pouces ± 2, f = 4.25 pouces ± 0,5

Centrado de la posición de perforación

1. Entre en el modo de mantenimiento U246, seleccione Finisher y Punch Width.
2. Ajuste los valores.
   Si la perforación se encuentra demasiado cerca del frente de la máquina: Reduzca el valor de configuración.
   Si la perforación se encuentra demasiado cerca de la parte trasera de la máquina: Aumente el valor de configuración.
3. Pulse la tecla de Start para confirmar el valor de configuración.
   <Valor de referencia>
   Sistema métrico: d = 80 mm ± 0,5, e = 40 mm ± 2
   En pulgadas: d = 2,75 pulgada ± 0,5, e = 1,375 pulgada ± 2, f = 4.25 ± 0,5 pulgada

Zentrieren der Stanzlochposition

1. Schalten Sie in den Wartungsmodus U246, wählen Sie Finisher und Punch Width.
2. Die Werte einstellen.
   Falls die Lochung zu nah an der Gerätefront liegt: Den Einstellwert verringern.
   Falls die Lochung zu weit weg von der Gerätefront liegt: Den Einstellwert erhöhen.
3. Den Einstellwert durch Drücken der Start-Taste bestätigen.
   <Bezugswert>
   Metrischer Abstand: d = 80 mm ± 0,5; e = 40 mm ± 2
   Abstand in Zoll: d = 2,75 Zoll ± 0,5, e = 1,375 Zoll ± 2, f = 4.25 Zoll ± 0,5

Centratura della posizione dei fori di perforazione

1. Entrare in modalità manutenzione U246, selezionare Finisher e Punch Width.
2. Regolare i valori.
   Se la posizione dei fori di perforazione è troppo vicina alla parte anteriore della macchina: Diminuire il valore dell'impostazione.
   Se la posizione dei fori di perforazione è troppo vicina alla parte posteriore della macchina: Aumentare il valore dell'impostazione.
3. Premere il tasto di Start per confermare il valore dell'impostazione.
   <Valore di riferimento>
   Specificazione in unità metrica: d = 80 mm ± 0,5, e = 40 mm ± 2
   Specificazione in pollici: d = 2,75 pollici ± 0.5, e = 1,375 pollici ± 2, f = 4.25 pollici ± 0.5

打孔位置中心调节

1. 设置维护模式 U246，选择 Finisher、Punch Width。
2. 调整设定值。
   打孔位置向机器前部偏移时: 调低设定值。
   打孔位置向机器后部偏移时: 调高设定值。
3. 按 Start 键，以确定设定值。
   ＜基准值＞
   公制规格：d=80mm±0.5、e=40mm±2
   英制规格：d=2.75inch±0.5、e=1.375inch±2、f=4.25inch±0.5

펀치위치 센터조정

1. 메인터넌스 모드 U246 를 세트하고 Finisher, Punch Width 를 선택합니다 .
2. 설정치를 조정합니다 .
   펀치구멍이 기기 앞측으로 벗어난 경우:설정치를 내립니다 .
   펀치구멍의 위치가 기기 뒷측으로 벗어난 경우:설정치를 높입니다 .
3. 시작키를 누르고 설정치를 확인합니다 .
   ＜기준치＞
   센치 사양:d=80mm±0.5, e=40mm±2
   인치사양:d=2.75inch±0.5, e=1.375inch±2, f=4.25inch±0.5

パンチ位置センター調整

1. メンテナンスモード U246 をセットし、Finisher、Punch Width を選択する。
2. 設定値を調整する。
   パンチ穴の位置が機械前側にずれている場合:設定値を下げる。
   パンチ穴の位置が機械後側にずれている場合:設定値を上げる。
3. スタートキーを押し、設定値を確定する。
   ＜基準値＞
   センチ仕様:d=80mm±0.5、e=40mm±2
   インチ仕様:d=2.75inch±0.5、e=1.375inch±2、f=4.25inch±0.5

NOTICE
This accessory is for use only with the following Applicant's Listed Machine.
Refer to the supplied guide to install the accessory in the field.
Machine: DF-770, DF-790

AVIS
Cet accessoire est utilisable uniquement avec le copieur figurant dans la liste du demandeur suivant.
Se reporter au guide fourni pour installer l'accessoire dans le champ.
Modèle: DF-770, DF-790

AVISO
Este accesorio es sólo para usar en las siguientes fotocopiadoras de la lista de solicitantes.
Consulte las instrucciones para la instalación de accesorios en el lugar del cliente.
Modelo: DF-770, DF-790

HINWEIS
Dieses Zubehör ist nur für den Einsatz mit der folgenden Antragstellerlisten-Kopiermaschine vorgesehen.
Installieren Sie das Zubehör gemäß der mitgelieferten Anleitung im Feld.
Modell: DF-770, DF-790

NOTIFICA
Questo accessorio deve essere usato solo con le seguenti fotocopiatrici nella lista dell’applicante.
Consultare la guida fornita in dotazione per il montaggio in campo dell’accessorio.
Modello: DF-770, DF-790

注意
本产品适用于以下选购件。
安装时，请参照附带的说明书。
式样 :DF-770,DF-790

주의
본 제품은 이하의 기종에 적용됩니다 .
설치할 때에는 동봉된 안내문을 참조해 주십시오 .
기종:DF-770,DF-790

注意
本製品は、以下の機種に適用します。
設置する際は、同梱の手順書を参照してください。
機種:DF-770, DF-790

INSTALLATION GUIDE FOR BANNER GUIDE

INSTALLATION GUIDE

GUIDE D'INSTALLATION

GUÍA DE INSTALACION

INSTALLATIONSANLEITUNG

GUIDA ALL'INSTALLAZIONE

安装手册

설치안내서

設置手順書

302K95672001

Banner Guide(A)

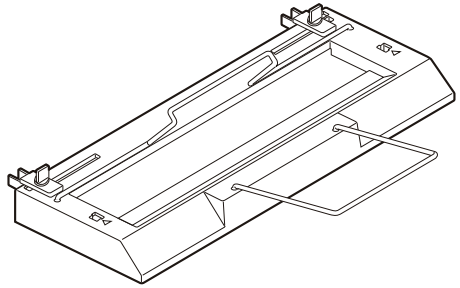

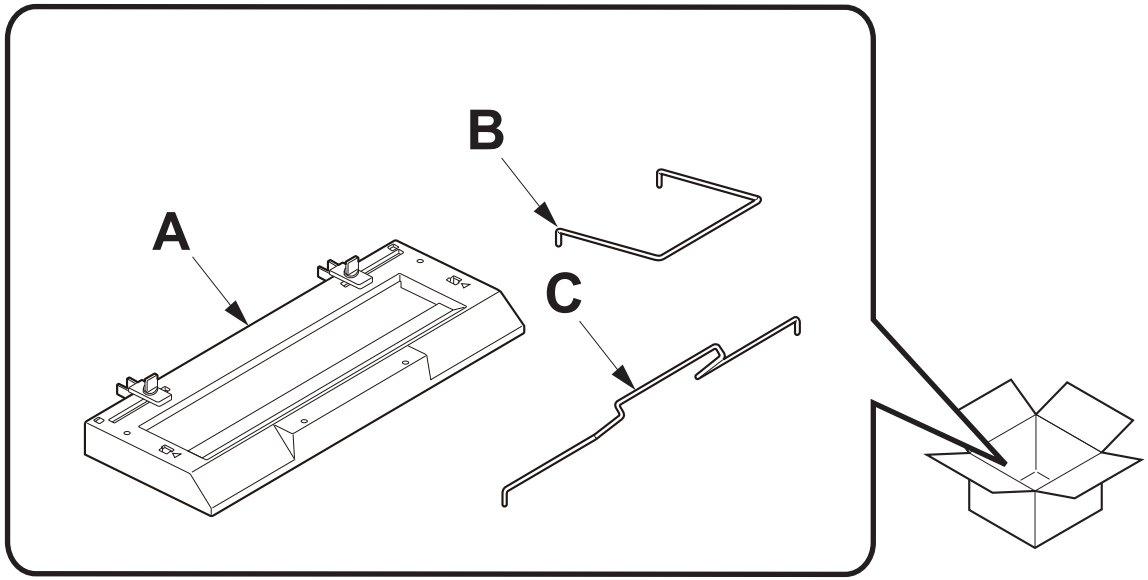

ENG Precautions
The illustrations of the machine in the Installation Guide are for color MFP. (30,35,45,55ppm)

FR Précautions
L'appareil représenté dans les illustrations du présent guide d'installation est le MFP couleur. (30,35,45,55ppm)

ES Precauciones
Las ilustraciones de la máquina que aparecen en la Guía de instalación corresponden a una MFP en color. (30,35,45,55ppm)

DE Vorsichtsmaßnahmen
Die Abbildungen der Maschine in der Installationsanleitung gelten für den Farb-MFP. (30,35,45,55ppm)

IT Precauzioni
Le illustrazioni della macchina nella guida di installazione sono per colore MFP. (30,35,45,55ppm)

CN 注意事项
安装手册中记载的机器主机的插图是彩色机。(30, 35, 45, 55 页机型)

KO 주의사항
설치순서에 기재되어 있는 기기본체 일러스트는 컬러기 입니다 . (30,35,45,55매기)

JP 注意事項
設置手順書に記載している機械本体のイラストはカラー機（30, 35, 45, 55枚機）です。

2011.12
302K956720-01

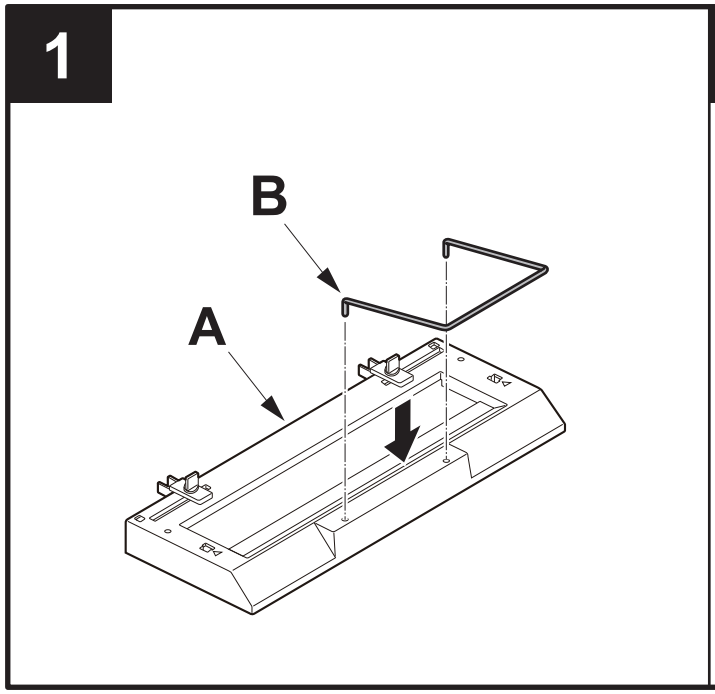

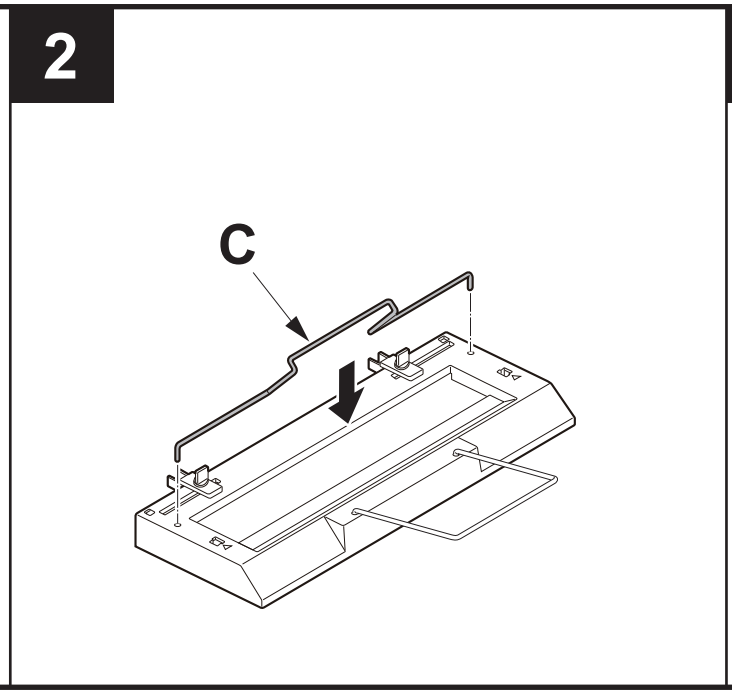

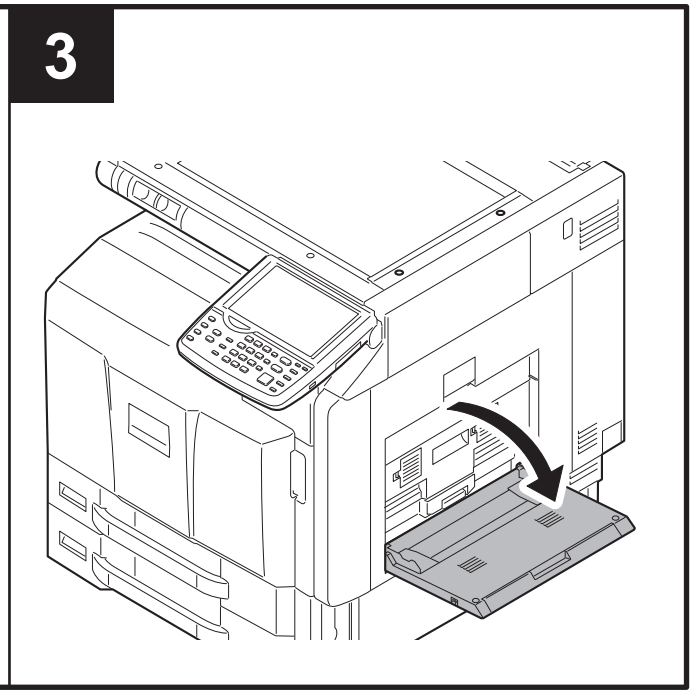

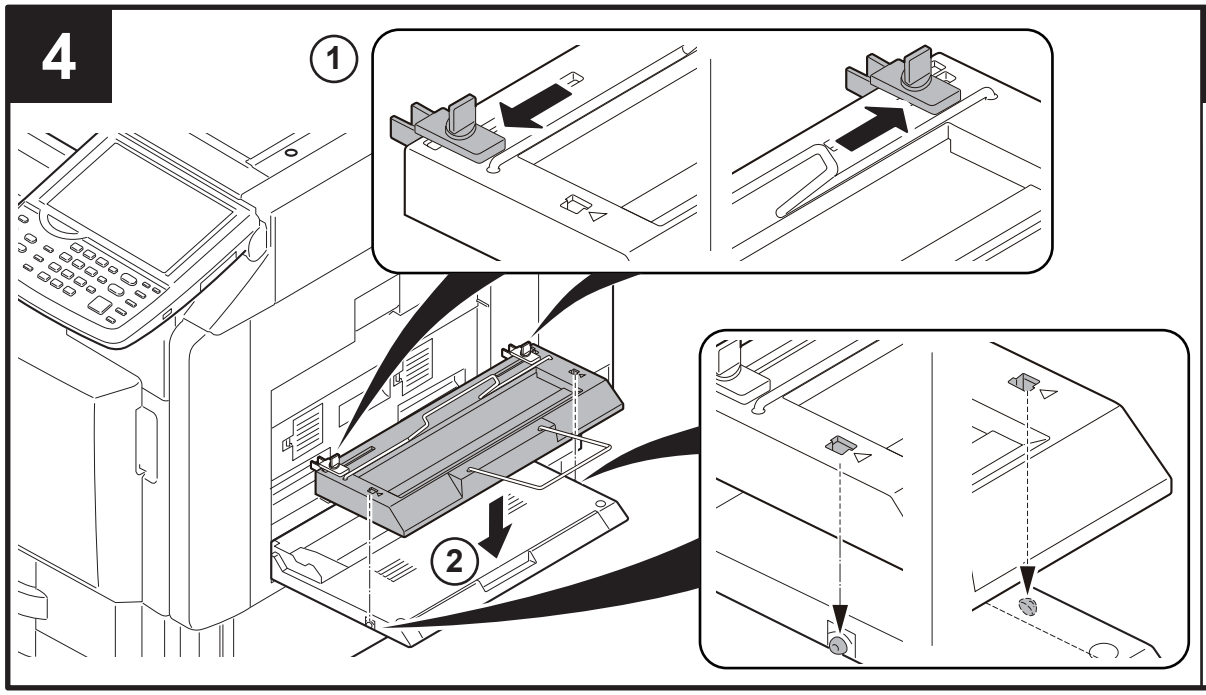

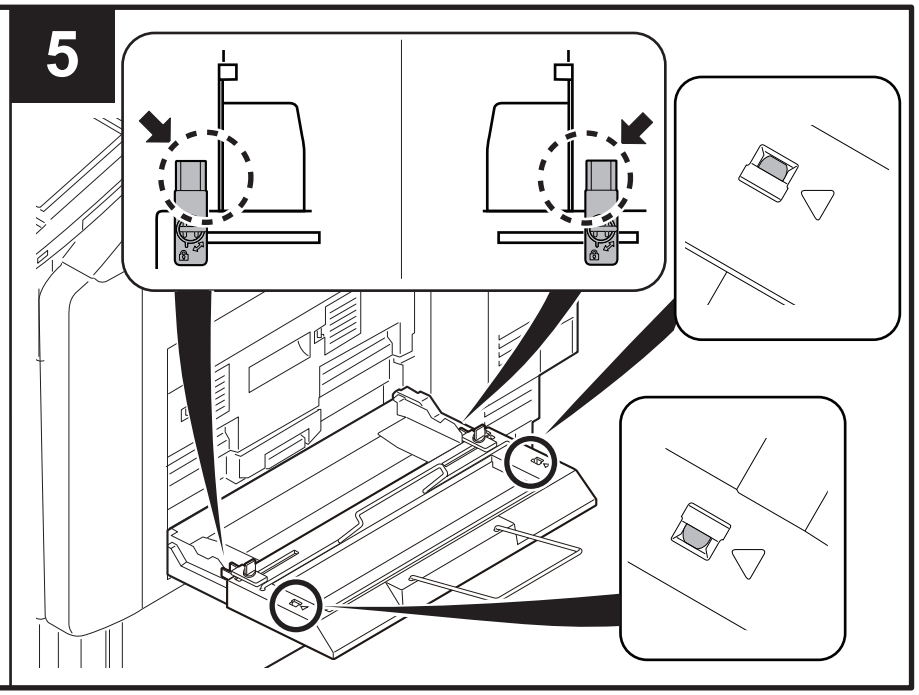

2011.12
302K956720-01

KYOCERA Document Solutions America, Inc.

Headquarters
225 Sand Road,
Fairfield, New Jersey 07004-0008, USA
Phone: +1-973-808-8444
Fax: +1-973-882-6000

Latin America
8240 NW 52nd Terrace Dawson Building, Suite 100
Miami, Florida 33166, USA
Phone: +1-305-421-6640
Fax: +1-305-421-6666

KYOCERA Document Solutions Canada, Ltd.
6120 Kestrel Rd., Mississauga, ON L5T 1S8,
Canada
Phone: +1-905-670-4425
Fax: +1-905-670-8116

KYOCERA Document Solutions Mexico, S.A. de C.V.
Calle Arquimedes No. 130, 4 Piso, Colonia Polanco
Chapultepec, Delegacion Miguel Hidalgo,
Distrito Federal, C.P. 11560, México
Phone: +52-555-383-2741
Fax: +52-555-383-7804

KYOCERA Document Solutions Brazil, Ltda.
Alameda África, 545, Pólo Empresarial Consbrás,
Tamboré, Santana de Parnaíba-SP, CEP 06543-306,
Brazil
Phone: +55-11-4195-8496
Fax: +55-11-4195-6167

KYOCERA Document Solutions Australia Pty. Ltd.
Level 3, 6-10 Talavera Road North Ryde N.S.W, 2113,
Australia
Phone: +61-2-9888-9999
Fax: +61-2-9888-9588

KYOCERA Document Solutions New Zealand Ltd.
Ground Floor, 19 Byron Avenue, Takapuna, Auckland,
New Zealand
Phone: +64-9-415-4517
Fax: +64-9-415-4597

KYOCERA Document Solutions Asia Limited
16/F.,Mita Centre, 552-566, Castle Peak Road
Tsuenwan, NT, Hong Kong
Phone: +852-2610-2181
Fax: +852-2610-2063

KYOCERA Document Solutions (China) Corporation
8F, No. 288 Nanjing Road West, Huangpu District,
Shanghai,200003, China
Phone: +86-21-5301-1777
Fax: +86-21-5302-8300

KYOCERA Document Solutions (Thailand) Corp., Ltd.
335 Ratchadapisek Road, Bangsue, Bangkok 10800,
Thailand
Phone: +66-2-586-0333
Fax: +66-2-586-0278

KYOCERA Document Solutions Singapore Pte. Ltd.
12 Tai Seng Street #04-01A,
Luxasia Building, Singapore 534118
Phone: +65-6741-8733
Fax: +65-6748-3788

KYOCERA Document Solutions Hong Kong Limited
16/F.,Mita Centre, 552-566, Castle Peak Road
Tsuenwan, NT, Hong Kong
Phone: +852-3582-4000
Fax: +852-3185-1399

KYOCERA Document Solutions Taiwan Corporation
6F., No.37, Sec. 3, Minquan E. Rd.,
Zhongshan Dist., Taipei 104, Taiwan R.O.C.
Phone: +886-2-2507-6709
Fax: +886-2-2507-8432

KYOCERA Document Solutions Korea Co., Ltd.
18F, Kangnam bldg, 1321-1,
Seocho-Dong, Seocho-Gu, Seoul, Korea
Phone: +822-6933-4050
Fax: +822-747-0084

KYOCERA Document Solutions India Private Limited
First Floor, ORCHID CENTRE
Sector-53, Golf Course Road, Gurgaon 122 002,
India
Phone: +91-0124-4671000
Fax: +91-0124-4671001

KYOCERA Document Solutions Europe B.V.
Bloemlaan 4, 2132 NP Hoofddorp,
The Netherlands
Phone: +31-20-654-0000
Fax: +31-20-653-1256

KYOCERA Document Solutions Nederland B.V.
Beechavenue 25, 1119 RA Schiphol-Rijk,
The Netherlands
Phone: +31-20-5877200
Fax: +31-20-5877260

KYOCERA Document Solutions (U.K.) Limited
Eldon Court, 75-77 London Road,
Reading, Berkshire RG1 5BS,
United Kingdom
Phone: +44-118-931-1500
Fax: +44-118-931-1108

KYOCERA Document Solutions Italia S.p.A.
Via Verdi, 89/91 20063 Cernusco s/N.(MI),
Italy
Phone: +39-02-921791
Fax: +39-02-92179-600

KYOCERA Document Solutions Belgium N.V.
Sint-Martinusweg 199-201 1930 Zaventem,
Belgium
Phone: +32-2-7209270
Fax: +32-2-7208748

KYOCERA Document Solutions France S.A.S.
Espace Technologique de St Aubin
Route de l'Orme 91195 Gif-sur-Yvette CEDEX,
France
Phone: +33-1-69852600
Fax: +33-1-69853409

KYOCERA Document Solutions Espana, S.A.
Edificio Kyocera, Avda. de Manacor No.2,
28290 Las Matas (Madrid), Spain
Phone: +34-91-6318392
Fax: +34-91-6318219

KYOCERA Document Solutions Finland Oy
Atomitie 5C, 00370 Helsinki,
Finland
Phone: +358-9-47805200
Fax: +358-9-47805390

KYOCERA Document Solutions Europe B.V., Amsterdam (NL) Zürich Branch
Hohlstrasse 614, 8048 Zürich,
Switzerland
Phone: +41-44-9084949
Fax: +41-44-9084950

KYOCERA Document Solutions Deutschland GmbH
Otto-Hahn-Strasse 12, 40670 Meerbusch,
Germany
Phone: +49-2159-9180
Fax: +49-2159-918100

KYOCERA Document Solutions Austria GmbH
Eduard-Kittenberger-Gasse 95, 1230 Vienna,
Austria
Phone: +43-1-863380
Fax: +43-1-86338-400

KYOCERA Document Solutions Nordic AB
Esbogatan 16B 164 75 Kista, Sweden
Phone: +46-8-546-550-00
Fax: +46-8-546-550-10

KYOCERA Document Solutions Norge Nuf
Postboks 150 Oppsal, 0619 Oslo,
Norway
Phone: +47-22-62-73-00
Fax: +47-22-62-72-00

KYOCERA Document Solutions Danmark A/S
Ejby Industrivej 60, DK-2600 Glostrup,
Denmark
Phone: +45-70223880
Fax: +45-45765850

KYOCERA Document Solutions Portugal Lda.
Rua do Centro Cultural, 41 (Alvalade) 1700-106 Lisboa,
Portugal
Phone: +351-21-843-6780
Fax: +351-21-849-3312

KYOCERA Document Solutions South Africa (Pty) Ltd.
KYOCERA House, Hertford Office Park,
90 Bekker Road (Cnr. Allandale), Midrand, South Africa.
Phone: +27-11-540-2600
Fax: +27-11-466-3050

KYOCERA Document Solutions Russia LLC
Botanichesky pereulok 5, Moscow, 129090,
Russia
Phone: +7(495)741-0004
Fax: +7(495)741-0018

KYOCERA Document Solutions Middle East
Dubai Internet City, Bldg. 17,
Office 157 P.O. Box 500817, Dubai,
United Arab Emirates
Phone: +971-04-433-0412

KYOCERA Document Solutions Inc.
2-28, 1-chome, Tamatsukuri, Chuo-ku
Osaka 540-8585, Japan
Phone: +81-6-6764-3555
http://www.kyoceradocumentsolutions.com